www.maskinisten.net
www.classicmachinery.net
https://truckmanualshub.com/

# OPERATOR'S MANUAL

# KUBOTA EXCAVATOR

## MODELE KX 41-3

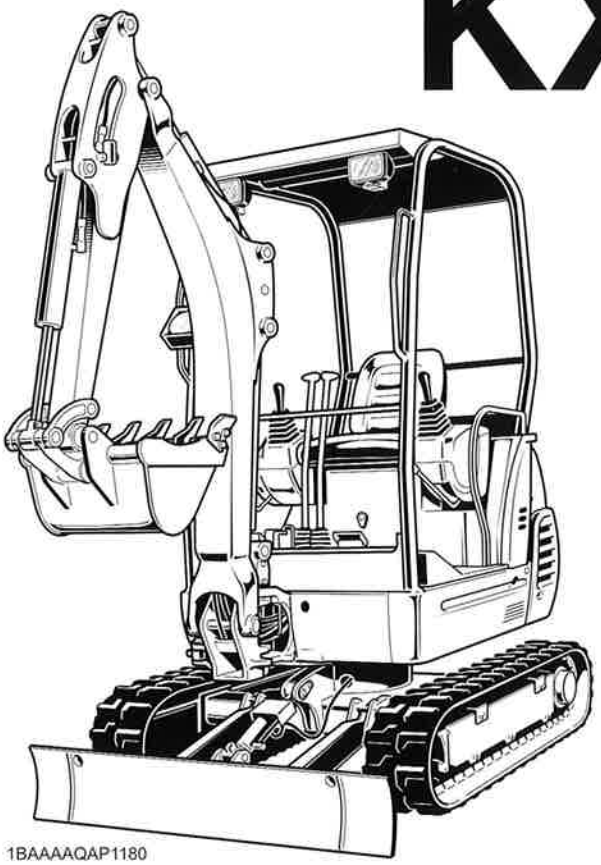


*READ AND SAVE THIS MANUAL*

Kubota

www.maskinisten.net
www.classicmachinery.net
https://truckmanualshub.com/

# CONTENTS

⚠SAFE OPERATION ..... 1
DEALER SERVICE ..... 1
TECHNICAL DATA ..... 2
DESCRIPTION OF MACHINE PARTS ..... 3
INSTRUMENT PANEL AND CONTROL ELEMENTS ..... 4
CHECKS BEFORE START ..... 6
DAILY CHECKS ..... 6
OPERATION OF THE ENGINE ..... 7
STARTING THE ENGINE ..... 7
Display Selector Switch ..... 8
Charge Lamp ..... 8
Oil Lamp ..... 8
Glow Lamp ..... 8
LCD Display for Normal Operation ..... 9
LCD Display for Warning ..... 10
Warning Lamp ..... 10
Checkpoints after Starting the Engine ..... 11
STARTING THE ENGINE UNDER COLD CONDITIONS ..... 11
Precautions in case of Overheat ..... 12
STOPPING THE ENGINE ..... 12
Emergency Engine Stop Fuse ..... 12
STARTING WITH AN AUXILIARY BATTERY ..... 13
Observe Following Guidelines when Starting with an Auxiliary Battery ..... 13
EXCAVATOR OPERATION ..... 14
RUNNING-IN OF THE NEW EXCAVATOR ..... 14
Do not Work with Full Engine Rpm's or Full Loads during the First 50 Working Hours ..... 14
Oil Change in the Run-in Stage ..... 14
Seat Belt ..... 14
STARTING ..... 15
Operator's Seat ..... 15
Lock Lever ..... 16
Working Light Switch ..... 16
Travel Buzzer ..... 16
OPERATION OF TRACK WIDTH CHANGE AND DOZER ..... 17
Adjustment of the Dozer Width ..... 18
DRIVING ..... 18
Drive Levers(Right,Left) ..... 20
Travel Speed Switch ..... 20
TURNS ..... 21
Pivot Turn ..... 21
Spin Turn ..... 22
UP AND DOWNHILL DRIVING ..... 23
OPERATION OF THE DOZER ..... 23

www.maskinisten.net
www.classicmachinery.net

https://truckmanualshub.com/

TWO PATTERN SELECTION SYSTEM(TPSS) ..... 24
Pattern Change ..... 24
OPERATION OF THE BOOM ..... 25
OPERATION OF THE ARM ..... 25
OPERATION OF THE BUCKET ..... 26
UNIT SWING AND BOOM SWING OPERATION ..... 26
Unit Swing Operation ..... 26
Boom Swing Operation ..... 27
SERVICE PORT OPERATION ..... 27
PARKING ON A SLOPE ..... 28
IMPORTANT INFORMATION ON EXCAVATOR OPERATION ..... 28

TRANSPORTING THE EXCAVATOR ON A VEHICLE ..... 29

LIFTING OF THE EXCAVATOR ..... 31

MAINTENANCE ..... 33
MAINTENANCE INTERVALS ..... 33
OPENING AND CLOSING OF PARTS ..... 35
Opening and Closing of the Fuel Tank Cap ..... 35
Opening/Closing of the Engine Bonnet ..... 35
Where to store the Grease Gun ..... 35
Where to keep Operators Manual ..... 35
DAILY CHECKS ..... 36
Checking Coolant Level ..... 36
Checking Fuel Level ..... 36
Checking Engine Oil Level ..... 37
Checking Hydraulic Oil Level ..... 37
Lubrication Points ..... 38
Check Fan Belt ..... 39
Checking Radiator and Oil Cooler ..... 39
Checking and Cleaning Engine and Electrical Wiring ..... 39
Washing Whole Machine ..... 39

REGULAR CHECKS AND MAINTENANCE WORK ..... 40
EVERY 50 SERVICE HOURS ..... 40
Draining Fuel Tank ..... 40
Draining Fuel Filter ..... 40
Battery ..... 41
Battery Charging ..... 42
Greasing Swing Bearing Teeth ..... 42
EVERY 200 SERVICE HOURS ..... 43
Checking Fan Belt Tension ..... 43
Checking Radiator Hoses and Clamps ..... 43
Inspection and Cleaning Air Filter Element ..... 44
Air Filter Maintenance ..... 44
Greasing Swing Bearing ..... 45
Checking Fuel Line and Intake Air Line ..... 45
EVERY 250 SERVICE HOURS ..... 45
Changing Engine Oil(First Engine Oil Change after 50 Service Hours) ..... 45
Replacing Engine Oil Filter ..... 46
EVERY 500 SERVICE HOURS ..... 46
Drive unit Oil Change(First Oil Change at 100 hours) ..... 46

www.maskinisten.net
www.classicmachinery.net
https://truckmanualshub.com/


Replacing Fuel Filter Element....47
Replacing Hydraulic Return Filter Element(first replacement after 250 service hours)..47
EVERY 1000 SERVICE HOURS....48
Hydraulic Oil Check for Machines with Hydraulic Breakers....48
Hydraulic Oil Change(Including Replacing Suction Filter in Hydraulic Tank)....48
EVERY 1000 SERVICE HOURS OR ONCE A YEAR....49
Replacing Air Filter Element....49
EVERY 1500 SERVICE HOURS....49
Checking Fuel Injection Nozzle(Injection Pressure)....49
EVERY 2000 SERVICE HOURS....49
Changing Front Idler and Track Roller Oil....49
Checking Alternator and Starter Motor....49
EVERY 3000 SERVICE HOURS....49
Checking Injection Pump....49
ANNUAL SERVICE....49
Electrical Wiring and Fuses....49
BIENNIAL SERVICING....49
Replacing of Radiator Hoses....50
Changing Radiator Coolant....50
Replacing Fuel Hose....51
Replacing Intake Air line....51

OTHER ADJUSTMENTS AND REPLACEMENTS....52
PURGING FUEL SYSTEM....52
ADJUSTMENT OF TRACKS....52
Rubber Tracks....52
Special Information when Using Rubber Tracks....53
CHANGING THE BUCKET....53
FUSES....54
Replacing Fuses....54
Fuse Capacities and Circuits....54
Auxiliary Electric....54
Slow Blow Fuse....54

TROUBLESHOOTING....55
KUBOTA I.C.S. NAVIGATION LIST OF MESSAGES....57

OPERATION UNDER COLD WEATHER CONDITIONS....59
PREPARATION FOR OPERATION IN COLD WEATHER....59
PROCEDURE AFTER DONE WORK....59

LONG STORAGE....60

RECOMMENDED OILS....62

APPENDICES....63
MAIN DIMENSIONS....63

LIFTING CAPACITY....64

www.maskinisten.net
www.classicmachinery.net

https://truckmanualshub.com/

www.maskinisten.net
www.classicmachinery.net
https://truckmanualshub.com/


# SAFE OPERATION

The best insurance against accidents is to abide by the safety regulations.
**Read and understand this manual carefully before operating the excavator.**
Every user, however experienced, should carefully read and understand this manual and those of the attachments and accessories before taking the excavator into operation. The owner is obliged to inform the operators of these instructions in detail.
Keep this manual in the pocket under the seat.

## 1. BEFORE OPERATION

1. Make yourself acquainted with the excavator and be aware of its limits. Read the operating instructions carefully before starting the excavator.
2. Obey the danger, warning and caution labels on the machine.
3. For your safety, ROPS/FOPS (Roll-Over Protective Structures, Falling Objects Protective Structures.) with a seat belt is installed by KUBOTA. Always use the seat belt when the machine is equipped with a ROPS/FOPS.
   Do not modify structural members of ROPS by welding, drilling, bending, grinding or cutting, as this may weaken the structure. If any component is damaged, replace it. Do not attempt repairs. If ROPS is loosened or removed for any reason, make sure all parts are reinstalled correctly. Tighten mounting bolts to proper torque.
4. The seat belt must be inspected regularly and replaced if damaged.

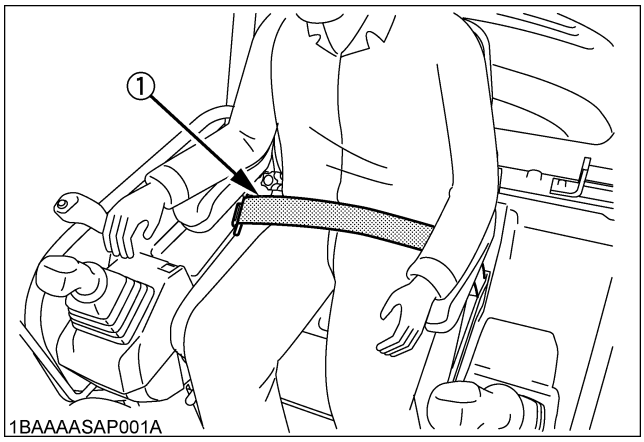


(1) Seat belt

5. Always sit in the operator's seat when starting engine or operating levers or controls.
6. Study control lever pattern A and pattern B. Then choose the one which is most familiar. Familiarize yourself with the pattern selected by operation slowly at low engine speed.

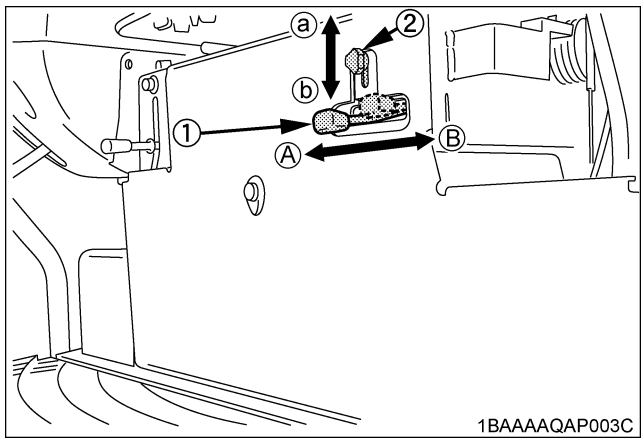


(1) Pattern selector lever (Two Pattern Selection System:TPSS)
(2) Lever lock Knob
(a) "UNLOCK"
(b) "LOCK"

7. Do not operate the excavator while under the influence of alcohol, medication, controlled substances or while fatigued.
8. Track can be set at the narrow width 990 mm and the standard width 1300 mm.
   (for details see "OPERATION OF TRACK WIDTH CHANGE AND DOZER")
   Operate always in standard track width 1300 mm, except to pass through narrow space.
   Do not operate in narrow track width 990 mm, it makes risk of the excavator tipping over.

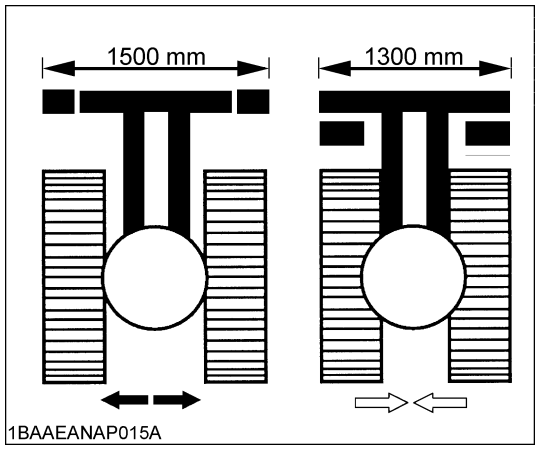

www.maskinisten.net
www.classicmachinery.net
https://truckmanualshub.com/



9. Check the surroundings carefully before using the excavator or when attachments are being attached.
- Pay attention to the overhead clearance with electric wires.

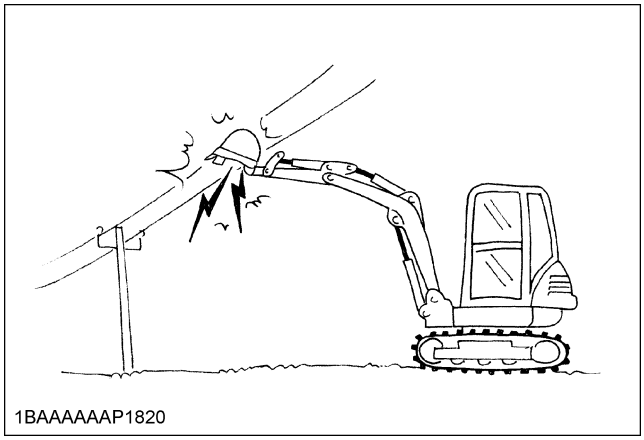
1BAAAAAAP1820

- Check for pipes and buried cables before digging.
- Check for hidden holes, hindrances, soft underground, and overhangs.

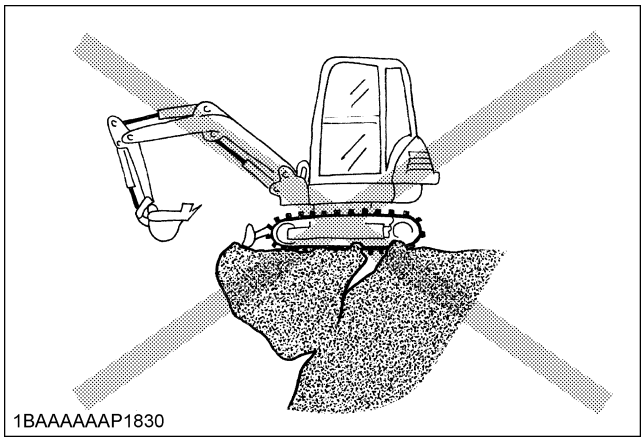
1BAAAAAAP1830

- During excavator use, do not allow any persons within the working range.

10. Do not allow other persons to use the machine before having informed him on the exact operation and work instructions, and be assured that the operator's manual has been read and completely understood.
11. Do not wear baggy, torn or oversized clothing when working with the excavator. Clothing can get caught in rotating parts or control elements which can cause accidents or injuries. Wear adequate safety clothing, e.g. safety helmet, safety shoes, eye protection, ear protection, working gloves, etc., as necessary and as prescribed by law or statutes.

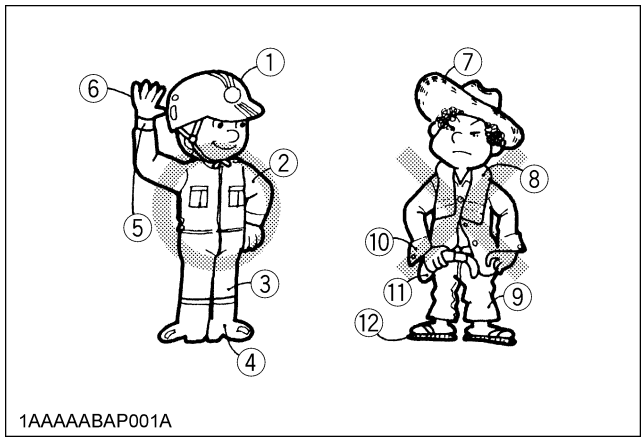

1AAAAABAP001A

(1) Helmet
(2) Clothing fit for work
(3) Tight seams
(4) Good grip footwear
(5) Well fitting cuffs
(6) Working gloves
(7) Straw hat
(8) Towel
(9) Baggy trousers
(10) Loose cuffs of the shirt
(11) Baggy shirt
(12) Rubber sandals

12. Do not allow passengers to ride on any part of the excavator at anytime. The operator must remain in the excavator seat during operation.
13. Check mechanical parts for correct adjustments and wear. Replace worn or damaged parts immediately. Check nuts and bolts regularly for correct torque. (for details see "Care and Maintenance").
14. Keep your excavator clean. Heavy soiling, grease, dust and grass can cause fires, accidents or injuries.
15. Use only KUBOTA authorized attachments.
16. Before starting the excavator, be absolutely sure that the excavator has been filled with fuel, lubricated, greased and undergone all necessary maintenance.
17. Do not modify the excavator, otherwise it could lead to unforeseen safety problems.
18. Do not hammer anything that is above the operator's seat level. Objects may fall into the operator station of mini-excavator from front.
19. Make sure attachments, particularly those utilizing quick attach systems, are securely mounted.
20. Install the protective guards on the excavator in work area that the objects may fall or come flying.
    In that case, contact your local KUBOTA dealer.

www.maskinisten.net
www.classicmachinery.net
https://truckmanualshub.com/


## 2. STARTING OF THE EXCAVATOR

1. Get into and out of the machine safely. Always face the machine. Always use handrails and available steps and keep yourself well balanced. Do not hold any of the control levers and switches. Do not jump on or off the machine, whether stationary or in motion.
2. Start and control the excavator only from the operator's seat. The driver should not lean out of his seat when the engine is running.
3. Before starting the engine, make sure that lock levers are in position "Lock" and all control levers and pedals are in their neutral positions and the seat belt is fastened correctly.
4. Make sure that the dozer blade is in front of you. (The dozer must be raised.) If the levers are activated with the dozer blade at the rear, the tracks will move in the opposite direction of the drive levers.

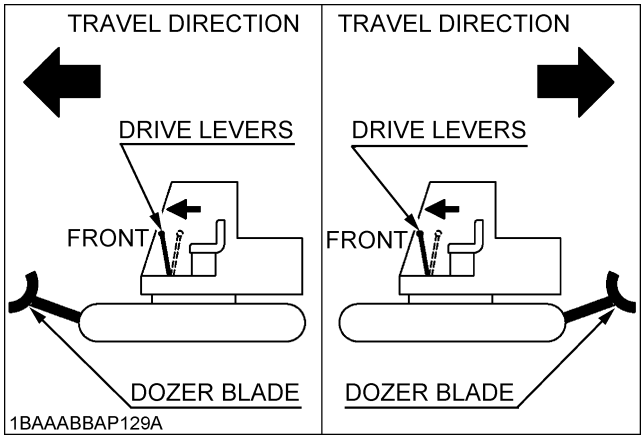


5. Do not operate or idle engine in a non-ventilated area. Carbon monoxide gas is colorless, odorless, and deadly.

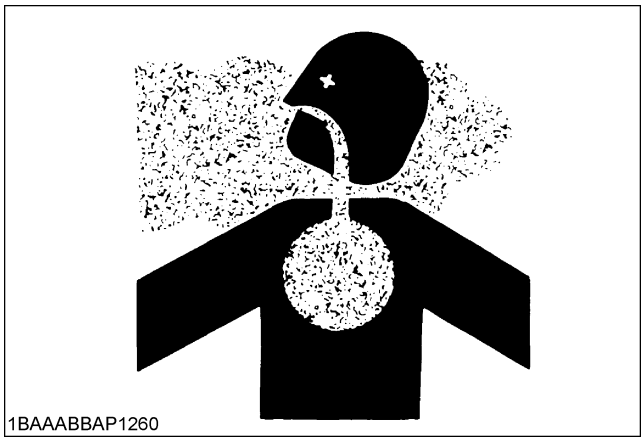


6. Keep all safety equipment and covers in place. Replace damaged or missing safety devices.
7. Precautions against tipping over. Keep away from steep slopes and embankments. Do not swing the bucket downhill. Lower the dozer during digging. Keep the bucket as low as possible while driving uphill. Turn slowly on slopes (at reduced speed). Do not place the excavator near the edges of trenches and banks, as the earth can give away due to the weight of the excavator.
   ALLOWABLE CLIMBING ANGLE: 27% (15 deg.)
   ALLOWABLE ANGLE IN CASE OF CROSSING SIDEWAY : 18% (10 deg.)
8. Watch out at all times for the area to which the excavator is being moved.
   Pay attention to any hindrances.
9. Keep enough distance from trench and bank edges.

◆ **Safety for children**

Tragedy can occur if the operator is not alert to the presence of children. Children generally are attracted to machines and the work they do.

1. Never assume that children will remain where you last saw them.
2. Keep children out of the work area and under the watchful eye of another responsible adult.
3. Be alert and shut your machine down if children enter the work area.
4. Never carry children on your machine. There is not a safe place for them to ride. They may fall off and be run over or interfere with your control of the machine.
5. Never allow children to operate the machine even under adult supervision.
6. Never allow children to play on the machine or not a the attachments.
7. Use extra caution when backing up. Look behind and down to make sure the area clear before moving.
8. When parking your machine, if at all possible, park on a firm, flat and level surface; if not, park across a slope. Lower the bucket and dozer to the ground, remove the key, place the control lock levers in the locked position from the ignition and lock the cab door (if equipped), before you leave.

www.maskinisten.net
www.classicmachinery.net
https://truckmanualshub.com/


## 3. AFTER OPERATION

Before leaving the machine,

- Park the excavator on a firm, flat and level surface.
- Lower the attachments and the dozer blade to the ground.
- Stop the engine.
- Release pressure trapped in the hydraulic system.
- Lock all control levers.
- Remove the key.

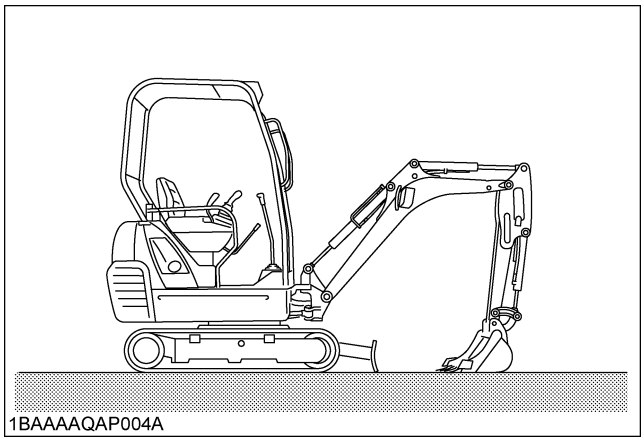
1BAAAAQAP004A

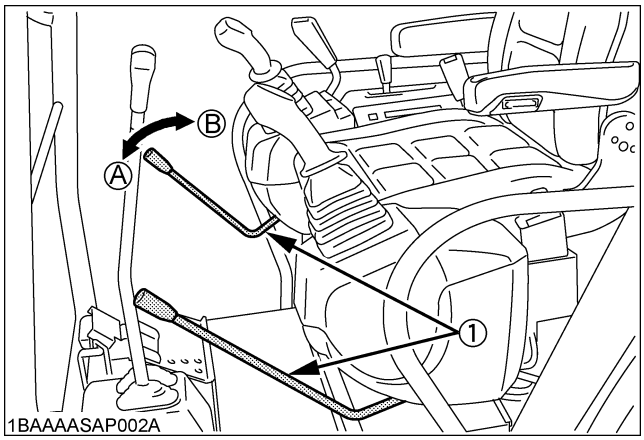

1BAAAASAP002A

(1) Lock lever for control lever (A) "Unlock"
(B) "Lock"

## 4. SAFE LOADING AND TRANSPORT OF THE EXCAVATOR

1. Observe all regulations concerning the transport of excavators on public roads.
2. Use adequately long and robust ramps when loading on the machine. (for details see "TRANSPORTING THE EXCAVATOR ON A VEHICLE")
3. Do not change the running direction and to avoid a tipping over, do not try to swing the attachment crosswise to the loading ramps.
4. After loading of the excavator on a truck, engage the swing lock pin.
   Lower the attachment on the loading bed and release the pressure from the hydraulic system.
   After loading the excavator on the truck, block the tracks with blocks and cable down the excavator.

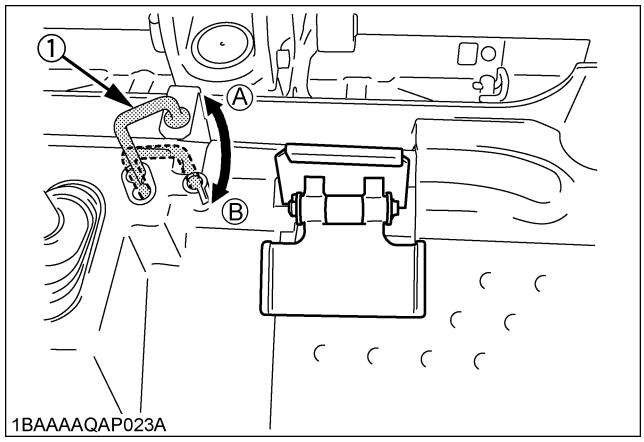

1BAAAAQAP023A

(1) Swing lock pin (A) "Unlock
(B) "Lock"

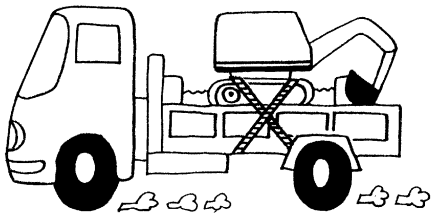
1AAABANAP032A

5. Avoid abrupt braking of the vehicle with the excavator loaded. Sudden braking cause the excavator to move and may cause a serious accident.
6. If the excavator is to tow another machine, make sure the load is smaller than the strength of the hook, tow chain or cable.

| | |
|---|---|
| Max. drawbar pull at coupling hook | 70450 N (7184 kgf) |
| Max. vertical load at coupling hook | 7210 N (735 kgf) |

www.maskinisten.net
www.classicmachinery.net
https://truckmanualshub.com/


7. Do not use hooks on the roof of canopy or CAB for lifting the excavator.

## 5. MAINTENANCE

Before doing maintenance work on the excavator, place the machine on even solid ground, lower the attachments to the ground, stop the engine and remove the key. When dismantling hydraulic parts, make sure that the hydraulic oil has cooled down sufficiently to avoid burns.
Start maintenance work carefully, e.g. loosen plug slowly so that oil will not squirt out.

1. Before doing work on the engine, the exhaust system, the radiator and the hydraulics, let the excavator cool down sufficiently.
2. Turn off the engine at all times when filling with fuel. Avoid spilling and over-filling of fuel.
3. Smoking is prohibited while refueling or handling the battery. Keep sparks and fire away from the fuel tank and battery. Flammable gases escape from the battery, especially during charging.
4. Do not use or charge the refillable type battery if the fluid level is below the LOWER (lower limit level) mark. Otherwise, the battery component parts may be prematurely deteriorated, which may shorten the battery's service life or cause an explosion. Check the fluid level regularly and add distilled water as required so that the fluid level is between the UPPER and LOWER levels.
5. Read and follow the directions "STARTING WITH AN AUXILIARY BATTERY" in "OPERATION OF THE ENGINE", when starting with an auxiliary battery.
6. Keep a first-aid box and a fire extinguisher at hand at all times.
7. Do not open the radiator cap before the radiator has cooled down sufficiently
   First loosen the cap to the first stop and allow the system enough time to release the remaining pressure. Then loosen the cap completely.
8. To avoid short-circuiting the battery, always remove the ground cable first and attach the positive cable first.
9. Leaking hydraulic fluid has enough pressure to penetrate the skin and cause serious injuries. Leakages from pin holes can be totally invisible. Do not use hands for checking for leaks. Always use a piece of wood or cardboard. It is strongly recommended to use a face mask or eye protection.
   Should injuries occur with leaking hydraulic fluid, contact a doctor immediately. This fluid can cause gangrene or serious allergic reactions.

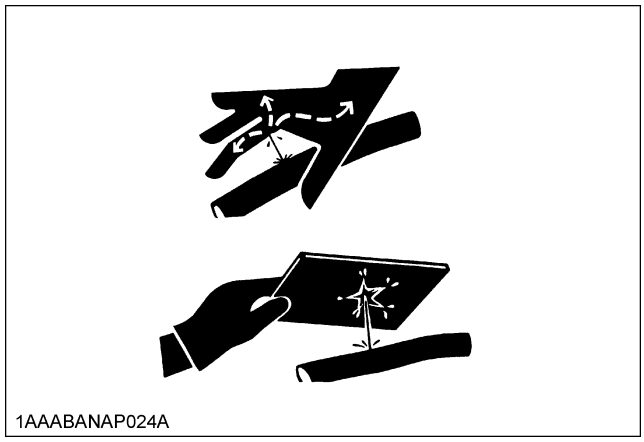
1AAABANAP024A

10. To avoid environmental damage from acid and heavy metals, do not throw the battery away.
11. Observe all laws and regulations concerning the disposal of used oil, coolants, solvents, hydraulic fluids, battery acids and batteries.
12. To avoid fire, do not heat the hydraulic components (tanks, pipes, hoses, cylinders) before they have been drained and washed.
13. Use a face mask or eye protection to protect the eyes and respiratory system against dust and other foreign particles.

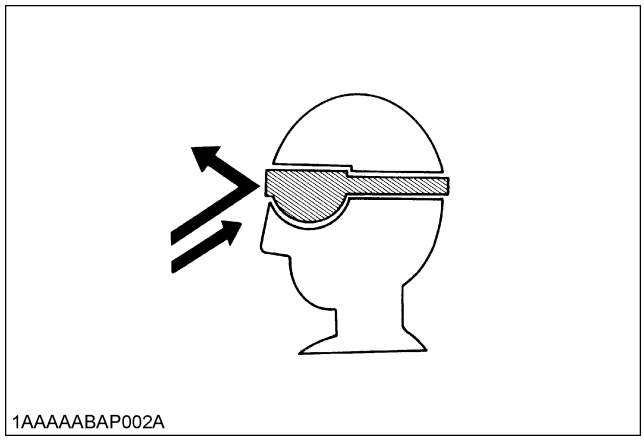
1AAAAABAP002A

14. Securely support excavator with stands or suitable blocking before working underneath. For your safety, do not work under any hydraulically supported devices. They can settle, suddenly leak down, or be accidentally lowered.
15. Do not dismantle the spring of the track tensioner. If dismantling is necessary, contact your KUBOTA dealer where the machine was purchased, or competent service shop. The assembly must be done according to the work shop manual of KUBOTA (W.S.M.) for the product involved.

www.maskinisten.net
www.classicmachinery.net
https://truckmanualshub.com/


16. When lifting the machine itself with an attachment, place a safety block or safety post to prevent the machine from turning over. Keep the lock lever for attachment control in the "LOCK" position.

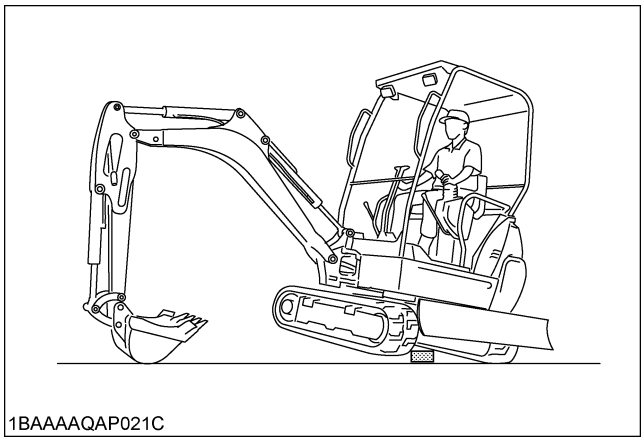
1BAAAAQAP021C

17. KUBOTA uses no parts which are lined with asbestos. Do not use these kind of parts even if they are available and can be installed.

www.maskinisten.net
www.classicmachinery.net
https://truckmanualshub.com/



## 6. DANGER, WARNING AND CAUTION LABELS

(1) Code No. RC418-5728-4

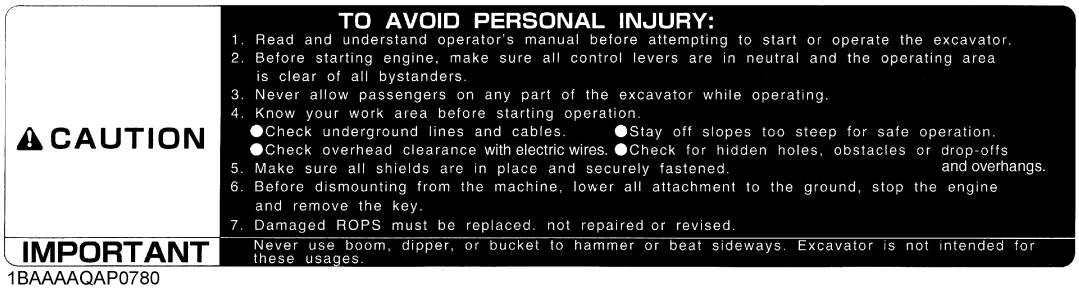


1BAAAAQAP0780

(2) Code No. RC418-5727-4

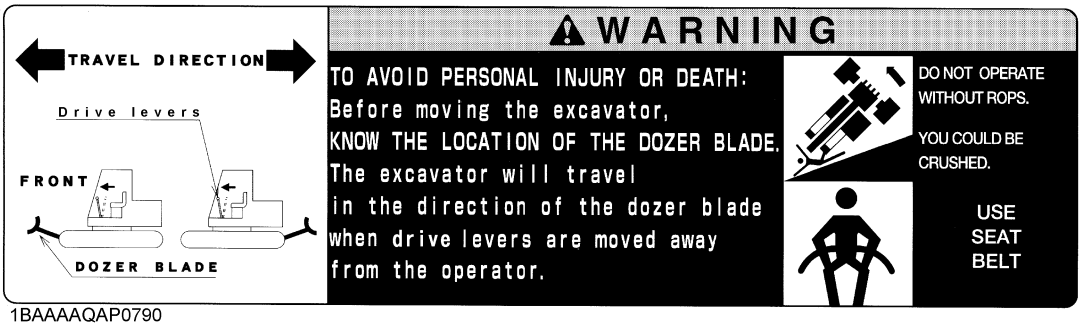


1BAAAAQAP0790

(3) Code No. RC418-5733-2

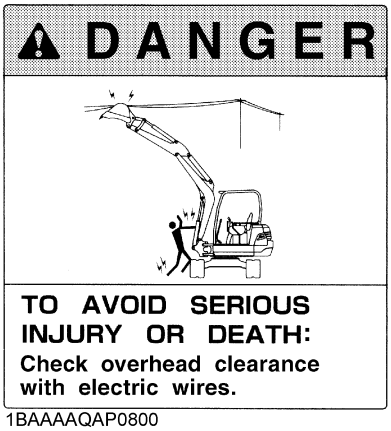


1BAAAAQAP0800

(4) Code No. RD517-5795-1 [Both sides]

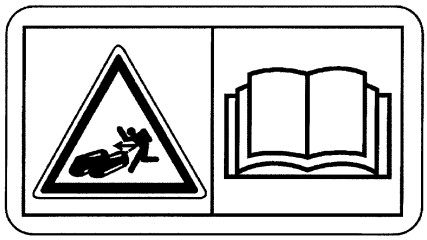

1BAABAMAP0010

(5) Code No. RB419-5796-1 [Both sides]

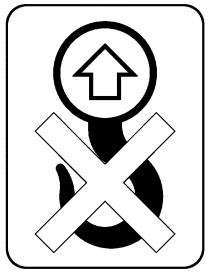

1BAABAUAP2720

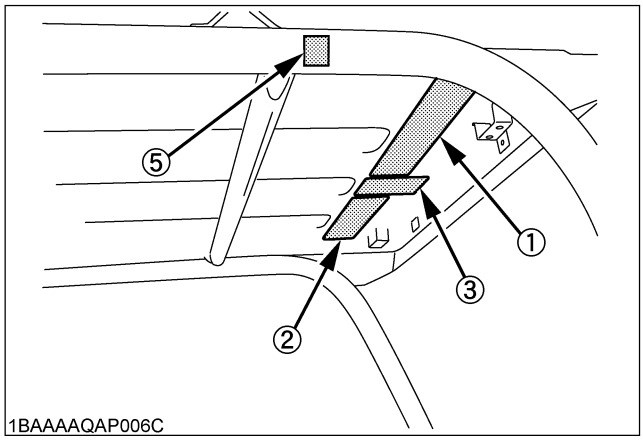


1BAAAAQAP006C

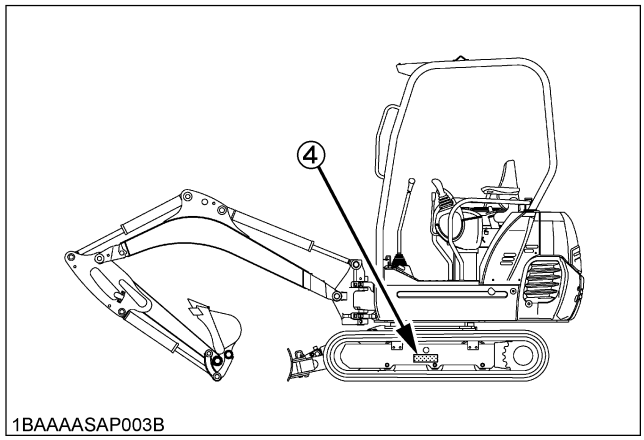


1BAAAASAP003B

www.maskinisten.net
www.classicmachinery.net
https://truckmanualshub.com/



(1) Code No. RB208-5762-1

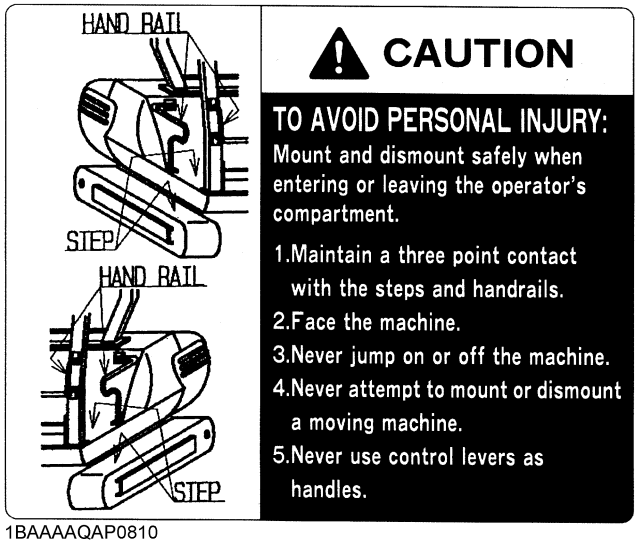


1BAAAAQAP0810

(2) Code No. RB238-5732-1

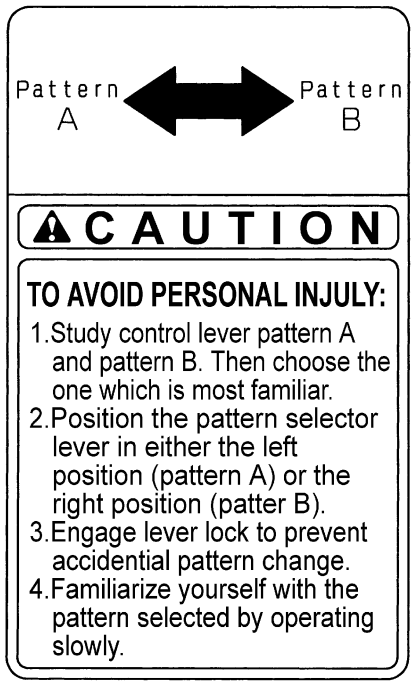


1BAAAAQAP0820

(3) Code No. RC418-5753-1

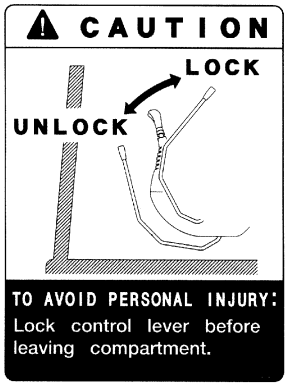


1BAAAAQAP0830

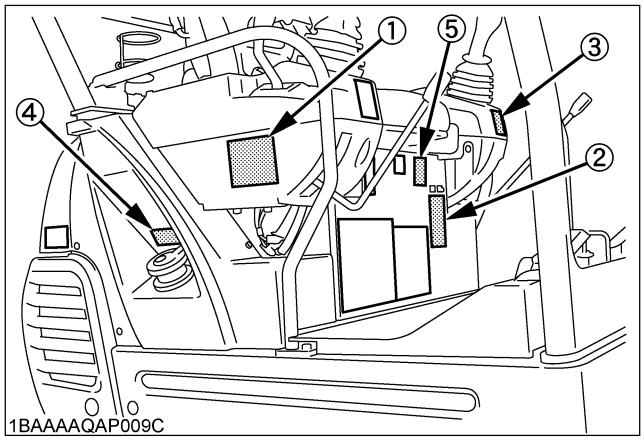


1BAAAAQAP009C

(4) Code No. RD148-5736-1

Diesel fuel only No fire

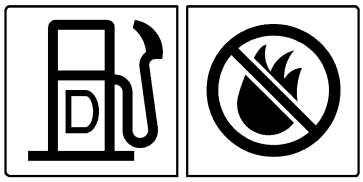

LOW SULFUR FUEL OR ULTRA LOW SULFUR FUEL ONLY

1BAAGAAAP1000

(5) Code No. RB238-5753-1

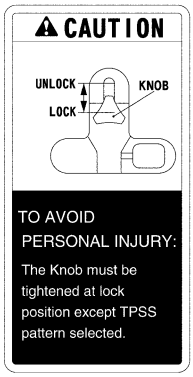


1BAAAAQAP0850

www.maskinisten.net
www.classicmachinery.net
https://truckmanualshub.com/



(1) Code No. TA040-4958-1
Do not touch hot parts such as exhaust etc.

1BAAAAQAP0860

(2) Code No. RB238-5754-1

1BAAAAQAP0870

(3) Code No. RC418-5737-2
Keep away from fan and fan belt.

1BAAAAQAP0880

(4) Code No. RC108-5754-1

1BAAAAQAP0890

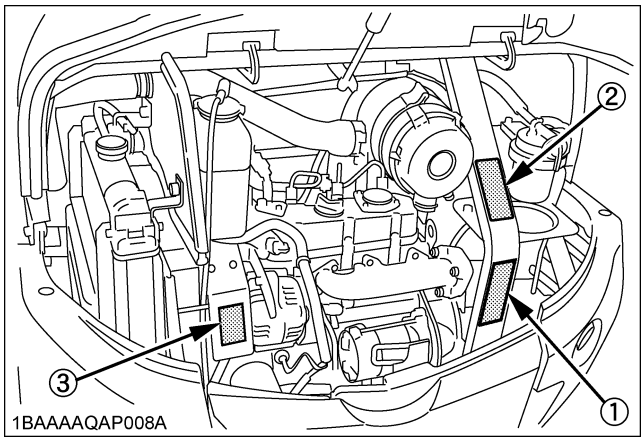


1BAAAAQAP008A

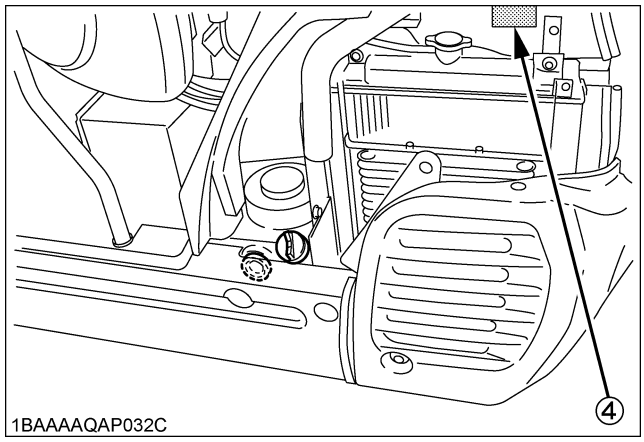


1BAAAAQAP032C

www.maskinisten.net
www.classicmachinery.net
https://truckmanualshub.com/



(1) Code No. RA028-5728-1
Do not allow any persons within the working range.

1BAAAAQAP0900

(2) Code No. RC108-5718-1

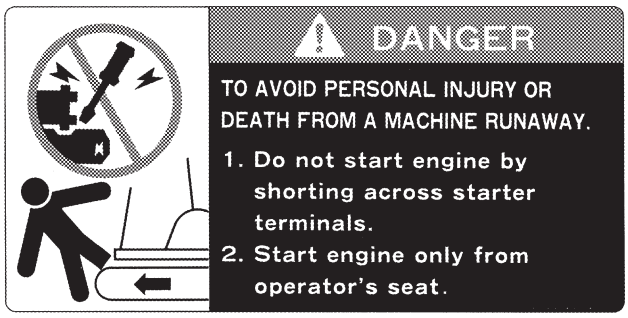


1BAAAAQAP0910

(3) Code No. RB238-5737-1

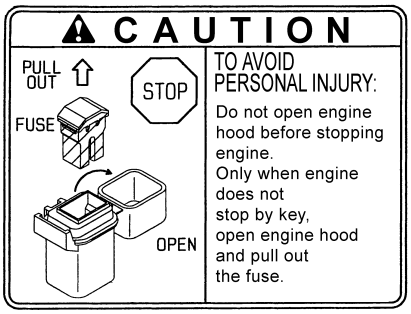


1BAAAAQAP0920

(4) Code No. 68328-5735-1 [Both sides]

1BAAAAQAP0930

(5) Code No. RC108-5796-1 [Both sides]

1BAAAAQAP0940

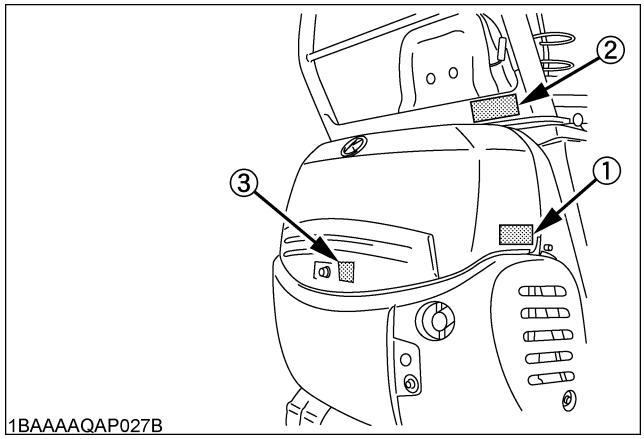


1BAAAAQAP027B

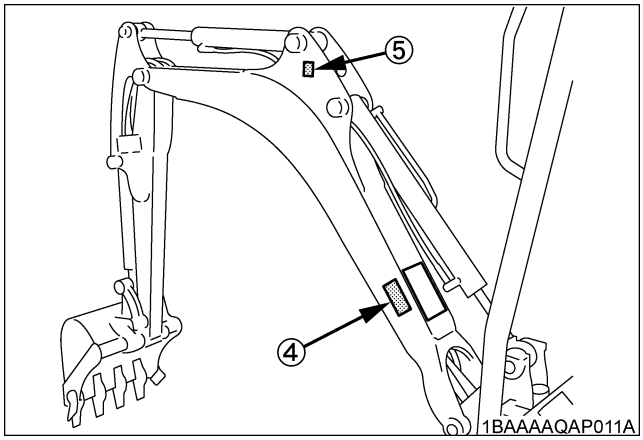


1BAAAAQAP011A

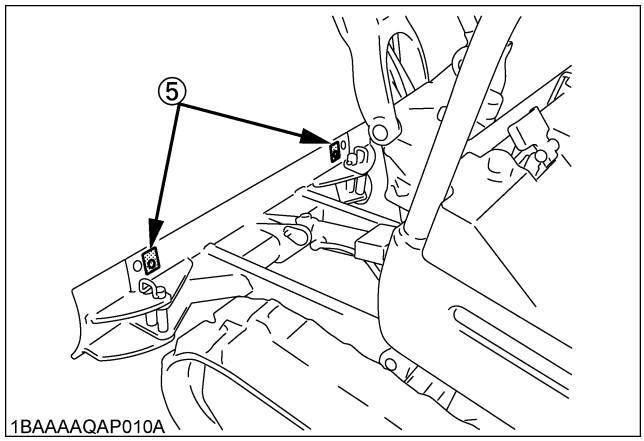


1BAAAAQAP010A

www.maskinisten.net
www.classicmachinery.net
https://truckmanualshub.com/



(1) Code No. RB238-5747-2

**⚠ WARNING**

**TO AVOID PERSONAL INJURY OR DEATH:**

- Do not move raised load over people.
- It is forbidden to lift loads greater than those values mentioned in the lifting capacity tables.
- The values mentioned in the table are valid only on even,hard grounds. When lifting on soft ground, the machine can tilt over due to the fact that the load is concentrated only on one side of the machine.
- The table values are calculated at the end of the arm without the bucket. In order to find the allowable loads for machines with bucket,the bucket weight must be subtracted from the values in the table.
- Operate always in standard track width 1300mm(51.2in),except topass through narrow space. Do not operate in narrow track width 990mm (39.0 in.),it makes risk ofthe excavator tipping over.

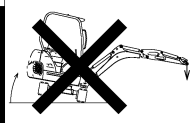

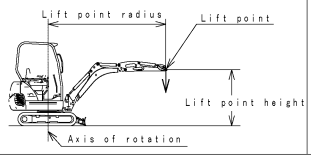


1. The lifting capacities are based on ISO 10567 and do not exceed 75% of the static tilt load of the machine or 87% of the hydraulic lifting capacity of the machine.
2. The strokes are as follows.
   1)The load point corresponds to the front bolt part of the arm.
   2)The machine positions are (i) over-front (Blade down), (ii) over-front (Blade up), and (iii) over-side.
   3)The operating cylinder is the boom cylinder.
3. The bucket of the excavator,the hook,the sling and other lifting accessories are taken into consideration for the loads.

| LIFT POINT HEIGHT (ft) | LIFTING CAPACITY OVER-FRONT BLADE DOWN Unit=1000 lbs. | | | | LIFTING CAPACITY OVER-FRONT BLADE UP Unit=1000 lbs. | | | | LIFTING CAPACITY OVER-SIDE TRACK WIDTH 1300mm Unit=1000 lbs. | | | | ONLY REFERENCE LIFTING CAPACITY OVER-SIDE TRACK WIDTH 990mm Unit=1000 lbs. | | | |
|---|---|---|---|---|---|---|---|---|---|---|---|---|---|---|---|---|
| | LIFT POINT RADIUS (ft) | | | | LIFT POINT RADIUS (ft) | | | | LIFT POINT RADIUS (ft) | | | | LIFT POINT RADIUS (ft) | | | |
| | MIN | 6 | 8 | MAX | MIN | 6 | 8 | MAX | MIN | 6 | 8 | MAX | MIN | 6 | 8 | MAX |
| GL 8 | | | 0.69 | | | | 0.68 | | | | 0.69 | | | | 0.48 | |
| 6 | | | 0.69 | 0.76 | | | 0.68 | 0.47 | | | 0.69 | 0.51 | | | 0.48 | 0.33 |
| 4 | | 0.97 | 0.88 | 0.78 | | 0.97 | 0.66 | 0.46 | | 0.97 | 0.71 | 0.51 | | 0.72 | 0.46 | 0.33 |
| 2 | | 1.65 | 1.08 | 0.82 | | 0.99 | 0.64 | 0.45 | | 1.05 | 0.69 | 0.50 | | 0.66 | 0.44 | 0.32 |
| 0 | | 1.76 | 1.13 | 0.80 | | 0.96 | 0.62 | 0.45 | | 1.02 | 0.67 | 0.49 | | 0.63 | 0.43 | 0.31 |
| −2 | 1.84 | 1.56 | 1.03 | 0.69 | 1.84 | 0.95 | 0.61 | 0.44 | 1.84 | 1.01 | 0.66 | 0.49 | 1.14 | 0.62 | 0.42 | 0.31 |
| −4 | 2.27 | 1.25 | 0.80 | | 1.97 | 0.95 | 0.62 | | 2.01 | 1.02 | 0.67 | | 1.16 | 0.63 | 0.42 | |

Machine with ROPS canopy and rubber crawler ,without bucket

1BAAAAQAP0950

(2) Code No. 6C040-5559-1

**DANGER EXPLOSIVE GASES**
Cigarettes, flames or sparks could cause battery to explode. Always shield eyes and face from battery. Do not charge or use booster cables or adjust post connections without proper instruction and training.
**KEEP VENT CAPS TIGHT AND LEVEL**
**POISON CAUSES SEVERE BURNS**
Contains sulfuric acid. Avoid contact with skin, eyes or clothing. In event of accident flush with water and call a physician immediately.
**KEEP OUT OF REACH OF CHILDREN**

1BAAAAQAP0960

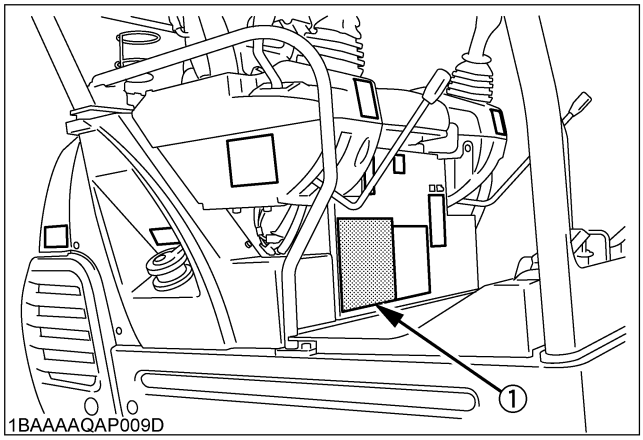


1BAAAAQAP009D

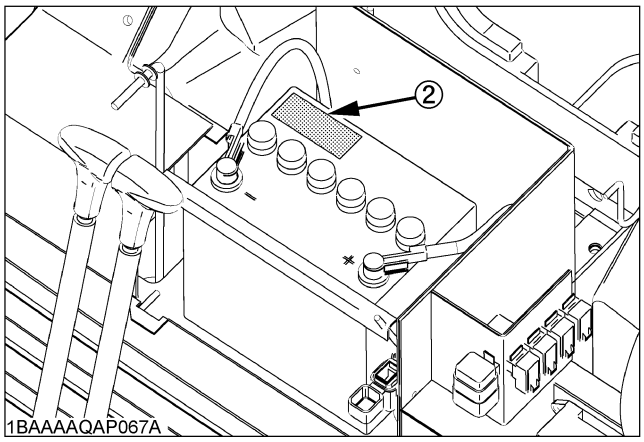


1BAAAAQAP067A

## 7. CARE OF DANGER, WARNING AND CAUTION LABELS

1. Keep danger, warning and caution labels, clean and free from obstructing material.
2. Clean danger, warning and caution labels with soap and water, dry with a soft cloth.
3. Replace damaged or missing danger, warning and caution labels with new labels from your KUBOTA dealer.
4. If a component with danger, warning and caution label(s) affixed is replaced with new part, make sure new label(s) is (are) attached in the same location(s) as the replaced component.
5. Mount new danger, warning and caution labels by applying on a clean dry surface and pressing any bubbles to outside edge.

www.maskinisten.net
www.classicmachinery.net

https://truckmanualshub.com/

www.maskinisten.net
www.classicmachinery.net
https://truckmanualshub.com/



# DEALER SERVICE

Your KUBOTA dealer is always ready to help so that your excavator offers the best performance. After having carefully read this manual, you will realize that much of the routine maintenance can be done by yourself. Your KUBOTA dealer is responsible for servicing and the delivery of spare parts. When ordering spare parts from your KUBOTA dealer, always mention the serial number of the excavator and the engine.
Note these numbers right away in the supplied lines.

| | Model | Serial No. |
|---|---|---|
| Excavator | | |
| Engine | | |
| Dealer's name<br>(To be filled in through the owner) | | |

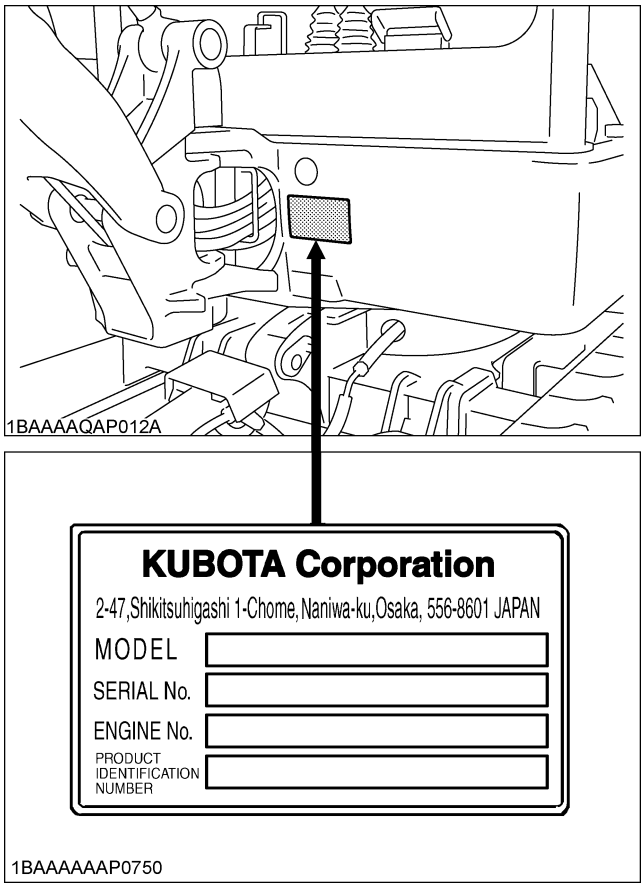

1BAAAAQAP012A

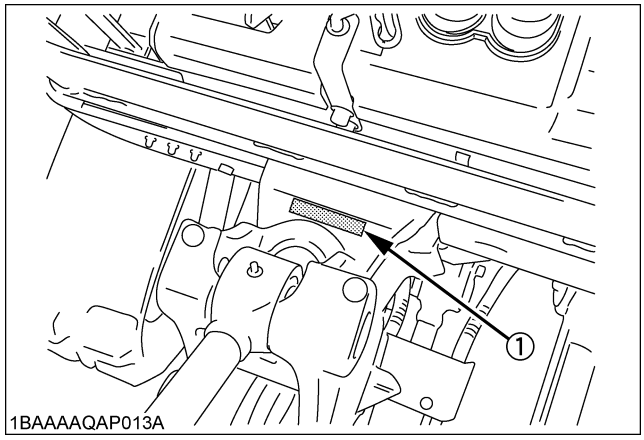

1BAAAAQAP013A

(1) Serial No.

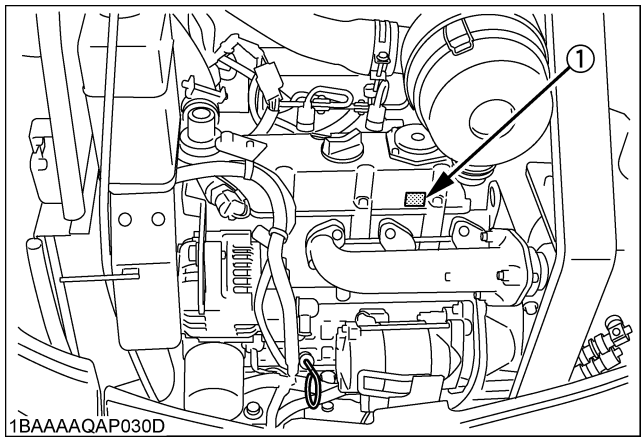

1BAAAAQAP030D

(1) Engine serial No.

www.maskinisten.net
www.classicmachinery.net

https://truckmanualshub.com/



# TECHNICAL DATA

| | | | KUBOTA EXCAVATOR |
|---|---|---|---|
| Model name | | | KX41-3 |
| Type | | | Canopy |
| Operating weight (including operator's) kg | | | 1675 |
| Engine | Type | | Water cooled 4 cycle diesel engine with 3 cylinder |
| | Model name | | *KUBOTA D902-EBH<br>**KUBOTA D902-E3-BH |
| | Total displacement cc | | 898 |
| | Engine power SAE gross kW(Hp) | | 12.7 (17.0) |
| | Rated speed rpm | | 2300 |
| Performance | Unit swing speed rpm | | 9.1 |
| | Travel speed | Fast km/h | 4.1 |
| | | Slow km/h | 2.3 |
| | Ground pressure (With operator) kPa (kgf/cm$^2$) | | 26.5<br>(0.27) |
| | Climbing angle %(deg) | | *27 (15) |
| | Angle in case of crossing slope %(deg) | | *18 (10) |
| Dozer | Width X Height mm | | 990 / 1300 x 230 |
| Boom swing angle | | Left rad(deg) | 1.27 (73) |
| | | Right rad(deg) | 0.87 (50) |
| Pressure connection for attachments | Max.displacement (Theoretical) L / min | | 27.6 |
| | Max. pressure Mpa (kgf/cm$^2$) | | 21.6<br>(220) |
| Fuel tank capacity L | | | 20 |

**NOTE :**

- Above dimensions are based on the machine with rubber tracks and JPN bucket.
  JPN = made in Japan
- Specifications subject to change without notice.

* With unloaded digging bucket.
* Firm compacted soil.
* Operators must exercise extra caution and follow instructions in the operator's manual.
* Worse condition or heavier attachment to the above will decrease climbing angle.
* "Tier2" will be installed on the engines of the machines from the January 2005 production lot.
  KX41-3 #/20817-

**"Tier4" will be installed on the engines of the machines from the January 2008 production lot.
  KX41-3 #/31886-

www.maskinisten.net
www.classicmachinery.net
https://truckmanualshub.com/


# DESCRIPTION OF MACHINE PARTS

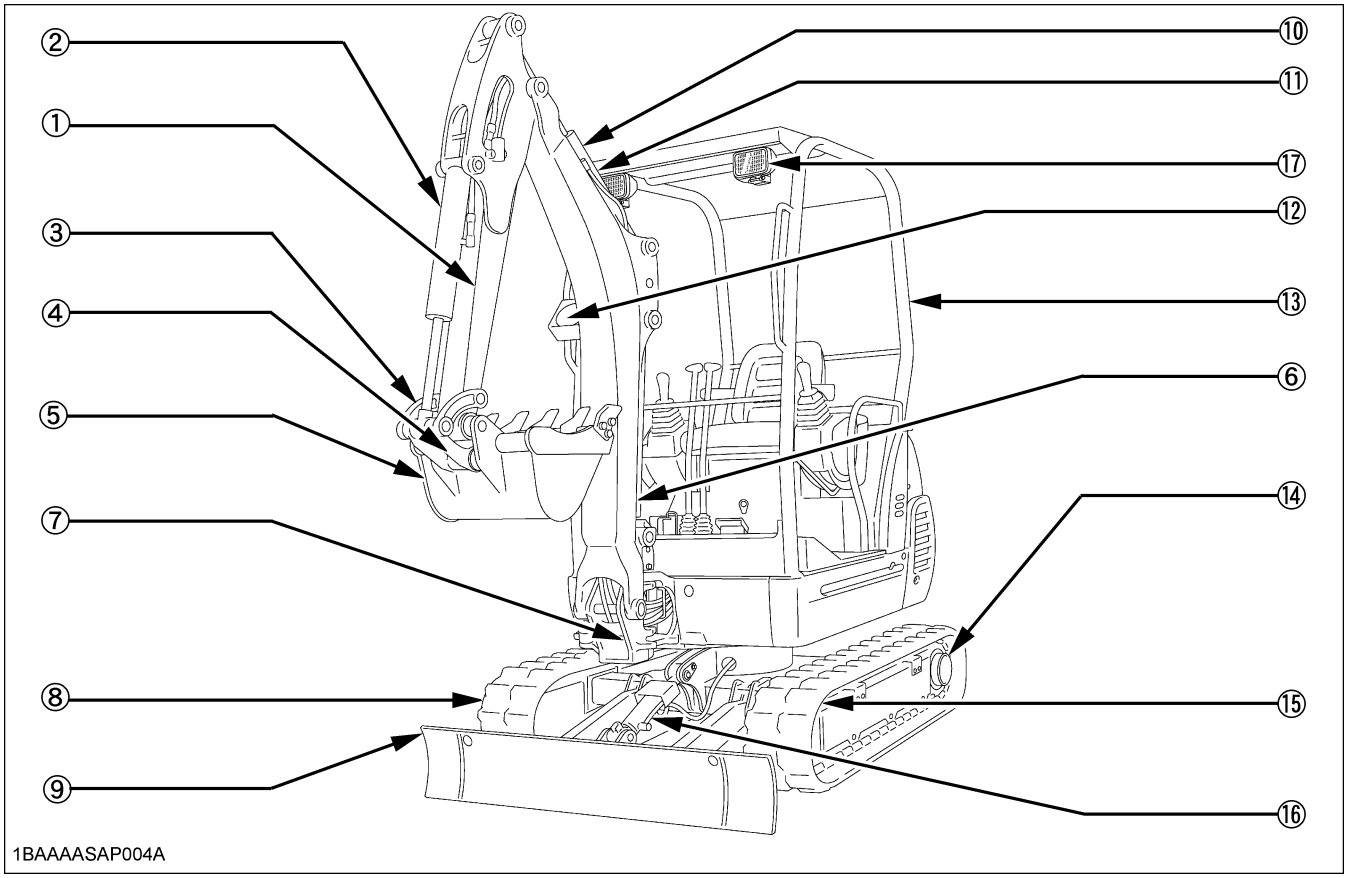


DEPICTED CONTENTS
(1) Arm
(2) Bucket cylinder
(3) Bucket link 2 and 3
(4) Bucket link 1
(5) Bucket
(6) Boom cylinder
(7) Swing bracket
(8) Track
(9) Dozer blade
(10) Boom
(11) Arm cylinder
(12) Working light
(13) Canopy(Rops / Fops)
(14) Drive sprocket
(15) Front idler
(16) Dozer cylinder
(17) Working light

www.maskinisten.net
www.classicmachinery.net
https://truckmanualshub.com/


# INSTRUMENT PANEL AND CONTROL ELEMENTS

## ■ Instrument Panel, Switches

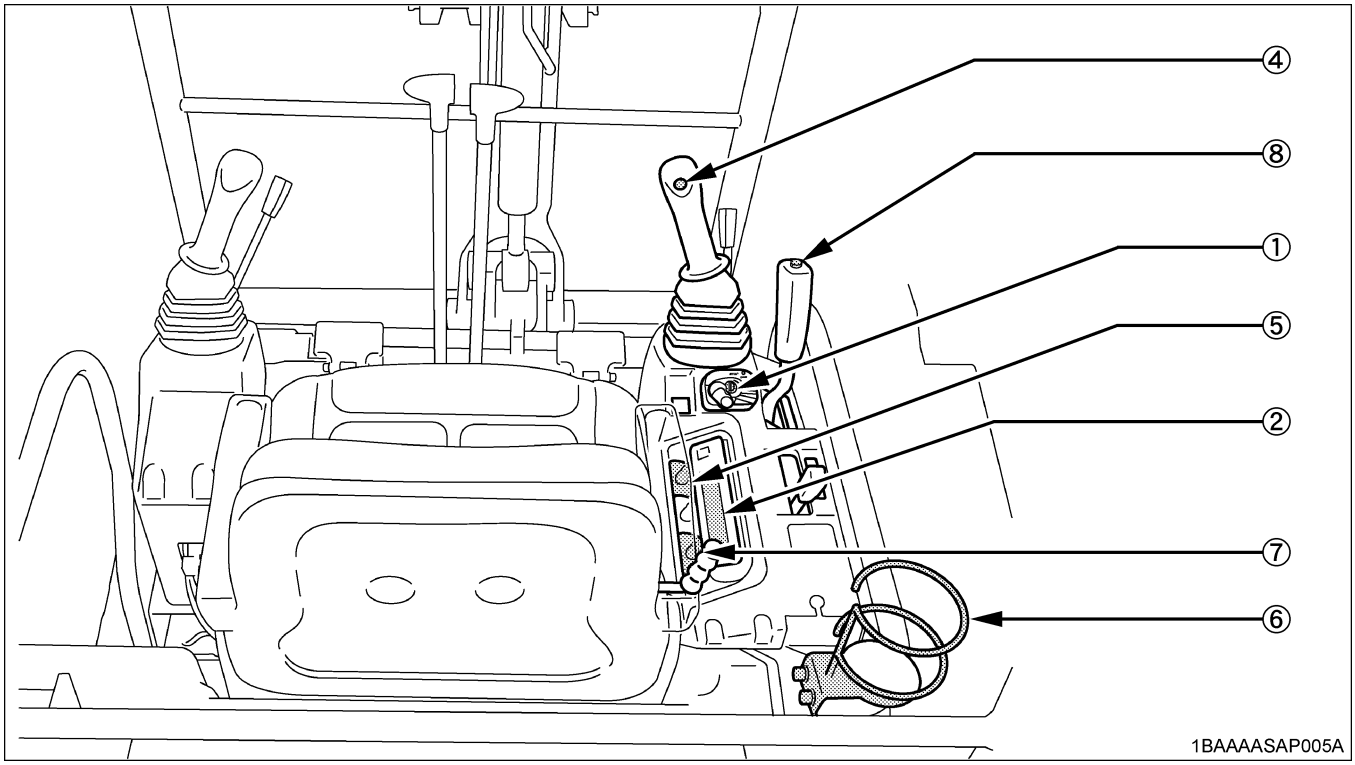


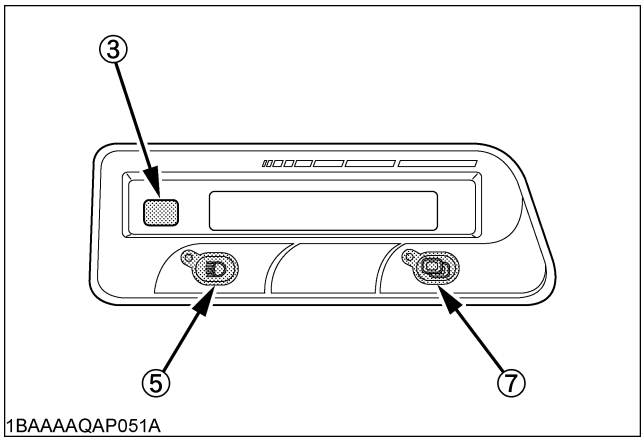


DEPICTED CONTENTS
(1) Starter switch
(2) LCD display
(3) Warning lamp
(4) Horn switch
(5) Working Light switch
(6) Cup holder
(7) Display selector switch
(8) Travel speed switch

www.maskinisten.net
www.classicmachinery.net
https://truckmanualshub.com/


## ■ Control Pedals and Levers

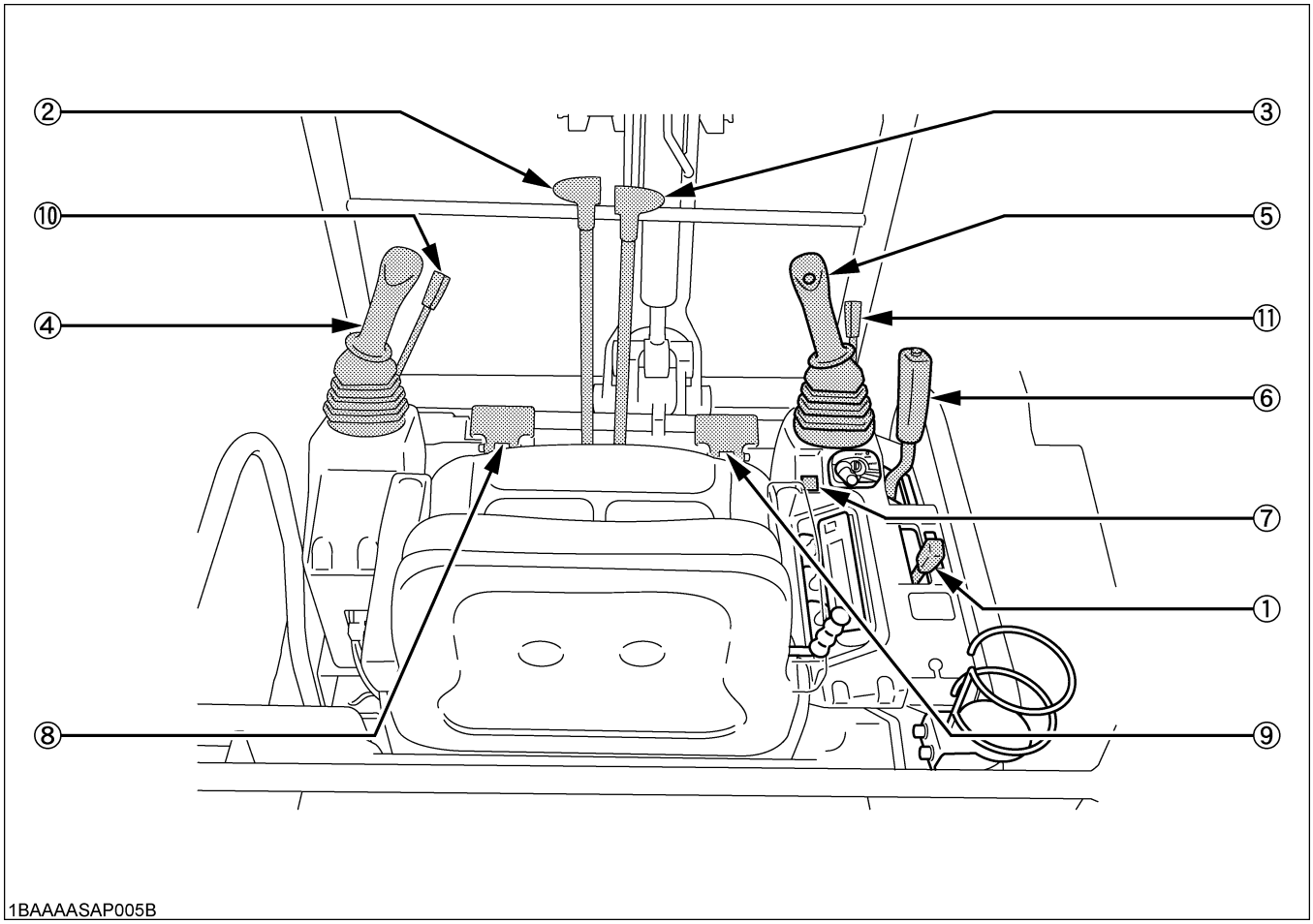


DEPICTED CONTENTS
(1) Throttle lever
(2) Drive lever (left)
(3) Drive lever (right)
(4) Control lever for front attachments (left)
(5) Control lever for front attachments (right)
(6) Dozer control lever
(7) Speed indicator light
(8) Service port pedal
(9) Boom swing pedal
(10) Lock lever*
(11) Lock lever*

**IMPORTANT :**
∗ When the lock lever pulled up prevents inadvertent machine movement.

www.maskinisten.net
www.classicmachinery.net
https://truckmanualshub.com/


# CHECKS BEFORE START

## DAILY CHECKS

In order to avoid damage, it is important to check the condition of the excavator before starting.

**CAUTION**

**To avoid personal injury:**

- **Do maintenance work on the excavator only on level ground with the engine off and the lock lever in the "Lock" position.**

**Checks**

Go around the excavator and check for visual damage and wear.
Check coolant level. (See regular checkpoints in the chapter on maintenance.)
Check fuel level.
Check engine oil level.
Check hydraulic fluid level.
Check air filter for clogging.
Check all control lamps, indicators, tachometer and hour meter.
Check the light system.
Check the seat belt and the ROPS/FOPS safety device.
Check the condition of the safety and warning labels.
(See "DANGER, WARNING AND CAUTION LABELS" in "SAFE OPERATION".)

www.maskinisten.net
www.classicmachinery.net
https://truckmanualshub.com/


# OPERATION OF THE ENGINE

**CAUTION**

**To avoid personal injury:**

- **Read "SAFE OPERATION" at the beginning of this operator's manual.**
- **Obey the danger, warning and caution labels on the excavator.**
- **To avoid the danger of exhaust fume poisoning, do not operate the machine in a closed building without proper ventilation.**
- **Always start the engine from the operator's seat. Do not start the engine while standing next to the excavator. Before starting the engine, sound the horn to get the attention of persons standing nearby.**

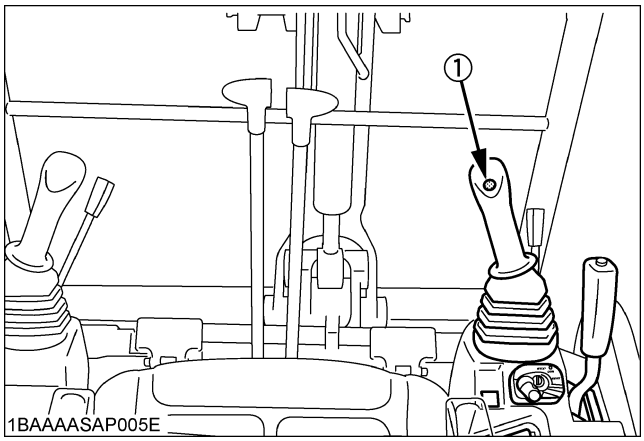


(1) Horn switch

**IMPORTANT :**

- Do not use starting fluid or ether.
- In order not to overload the battery and starter, avoid start-ups of more than 10 sec.
- When engine does not start in 10 sec., please wait 20 sec. or more, before attempting to restart.

## STARTING THE ENGINE

**CAUTION**

**To avoid personal injury:**

- **The operator should not depend solely on the warning lamps, but should always conduct the routine checks (see "MAINTENANCE").**

Start the engine in the following manner:

1. Before starting the engine, make sure that all control levers are in the neutral positions.

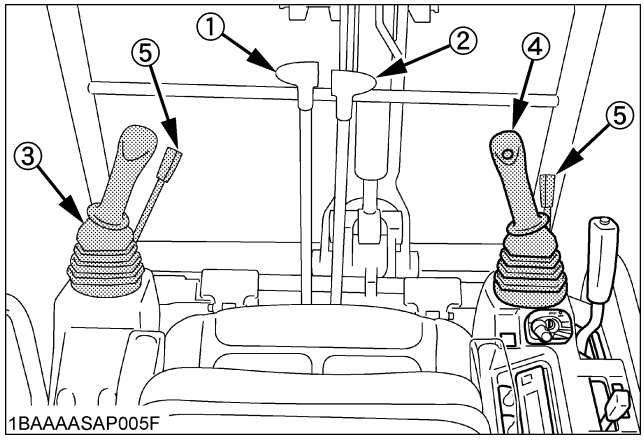


(1) Drive lever (left)
(2) Drive lever (right)
(3) Attachment control lever (left)
(4) Attachment control lever (right)
(5) Lock lever

2. Pull the lock levers all the way back. (lock position)
   - Put the throttle lever towards 🐢 .
3. Insert the key into the starter switch and turn it to the position "Run". The glow lamp indicator will light up while the engine is preheated and will go out automatically after preheating is finished.

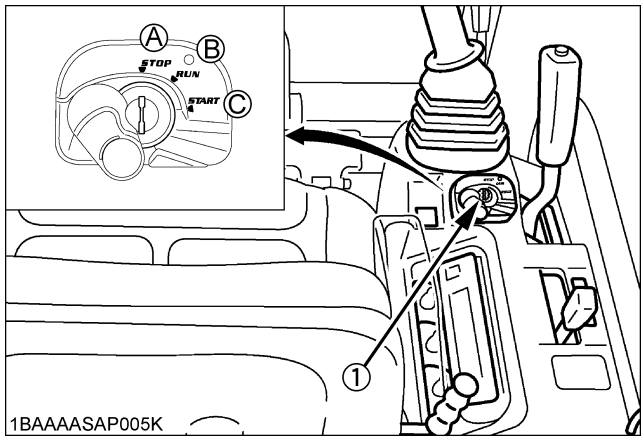


(1) Starter switch

(A) "STOP"
(B) "RUN"
(C) "START"

4. Turn the key to the position "START" and release after the engine has started.
5. Check if oil lamp and charge lamp have gone out. Should a warning lamp still be lit up, stop the engine then remove the key and check for the cause.

www.maskinisten.net
www.classicmachinery.net
https://truckmanualshub.com/


## ■Display Selector Switch

Press the display selector switch. The electronic meter's LCD display will change from one indication mode to the other.
Change the two-mode display according to your jobs.

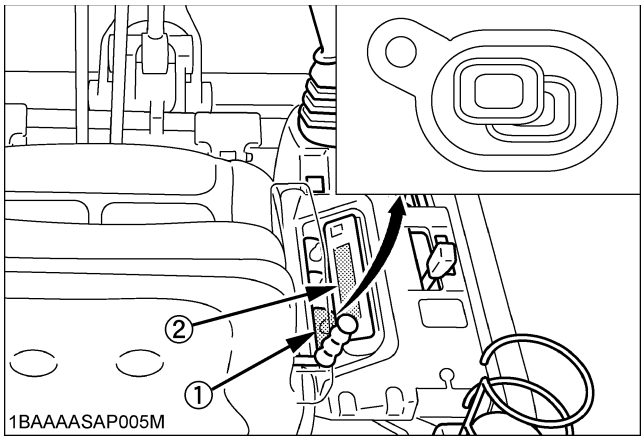


*(1) Display selector switch*
*(2) LCD display*

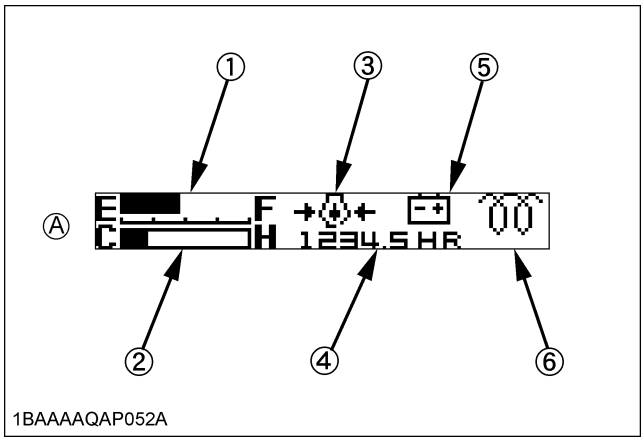


*(1) Fuel gauge*
*(2) Water temperature gauge*
*(3) Oil lamp*
*(4) Hour meter*
*(5) Charge lamp*
*(6) Glow lamp*
*(A) "INDICATION MODE 1"*

**NOTE :**
- With the starter key at the "**STOP**" position, press the electronic meter's display selector switch or the working light switch, and the LCD display shows the hour meter, fuel gauge and water temperature gauge for 10 seconds.

1BAAAAQAP0530

## ■Charge Lamp

This warning lamp lights up if the charging system fails the engine running. When the starter switch is turned **"RUN"** with the engine off, the lamp lights up, and when the engine gets started, the lamp goes out. If the lamp stays on with the engine running, stop the engine and check the fan belt.

**NOTE :**
- If there is disconnection or failure in the charging system when the key is turned to **"RUN"**, the following ☐ symbol will appear.

1BAAAAQAP0620

## ■Oil Lamp

The engine oil pressure warning lamp lights up due to failure of the lubricating system with the engine running. When the starter switch is turned **"RUN"** with the engine off, this lamp lights up, and when the engine starts, the lamp goes out. If the lamp stays on with the engine running, stop the engine and check the engine oil level.

**NOTE :**
- If there is disconnection, failure or breakdown in the lubricating system when the key is turned to **"RUN"**, the following ☐ symbol will appear.

1BAAAAQAP0610

## ■Glow Lamp

With the starter key at the **"RUN"** position, the engine's preheat status is indicated.

**NOTE :**
- When the starter switch is turned to the **"RUN"** position, the engine will be preheated for a given period of time and the lamp will turn on.
- The above indication appears momentarily when the engine is started, but it does not mean any trouble. (This is because the oil charge sensor output becomes unstable when the engine is started.)
- The ☐ symbol appears momentarily as the engine starts. This is not an error.

www.maskinisten.net
www.classicmachinery.net
https://truckmanualshub.com/


## ■LCD Display for Normal Operation

### ◆ Fuel gauge

**CAUTION**

**To avoid personal injury:**

- **Before adding fuel, be sure to stop the engine.**
- **Be sure to keep open flame away from the machine. Otherwise a fire may be caused.**

With the starter key at the "**RUN**" position, the fuel remaining in the fuel tank is indicated in the block.

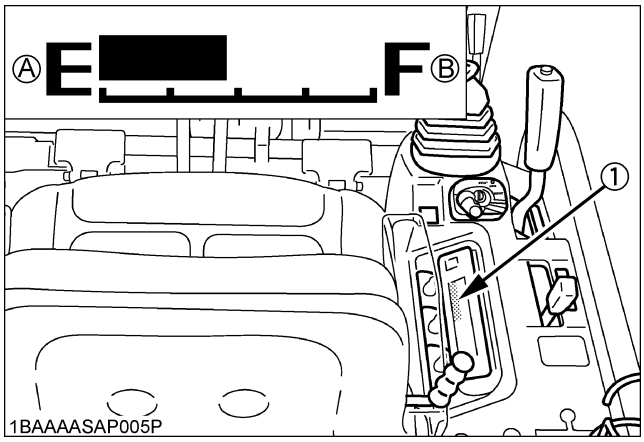


(1) Fuel gauge
(A) "Empty"
(B) "Full"

**NOTE :**

- If the fuel gauge indicator is near the "**E**" or the "**FUEL**" message appears, add fuel as soon as possible. If the indicator is near "**E**" and the machine runs on a slope, the engine may run out of fuel and get interrupted.

### ◆ Fuel supply

**CAUTION**

**To avoid personal injury:**

- **If the fuel is poured too fast, the buzzer may not sound according to the fueling process.**
- **The moment when the fuel tank is nearly full, the buzzer starts beeping.**
- **Look into the fuel tank when pouring the fuel. Listen to the buzzer sound for a rough estimate of the fill-up progress.**

The following functions are helpful when adding the fuel. The fueling process can be monitored by a buzzer sound.

Procedure

1. Press the work light switch or the display selector switch on the meter with the key OFF. (Keep the key at OFF.)

1BAAAAQAP0530

2. The message shown above appears.
3. Add fuel.
4. The buzzer sound interval changes according to the amount fuel added. As the fuel amount becomes close to full, the buzzer sound changes to continuous beeping.

### ◆ Water Temperature Gauge

**CAUTION**

**To avoid personal injury:**

- **Do not open the radiator cap during or just after operation. Hot water may gush out and scald you. Wait for the water to cool down before opening the cap.**

With the starter key at the "**RUN**" position, the cooling water temperature is indicated. If the water temperature indicator is near "**H**", take the steps below.

1. Discontinue the job.
2. Reduce engine rpm's to idle and keep it at idle for 5 minutes.
3. Stop the engine and check the following points (1)-(3).
   (1) Low coolant level or leak
   (2) Fan belt tension
   (3) Mud or dust deposits on radiator

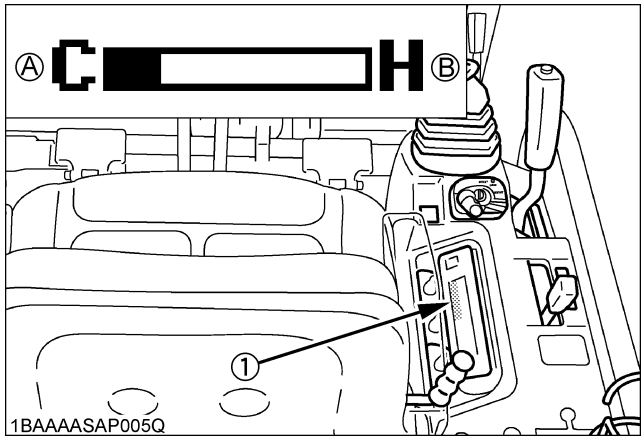


(1) Water temperature gauge
(A) "WATER TEMP LOW"
(B) "WATER TEMP HIGH"

www.maskinisten.net
www.classicmachinery.net
https://truckmanualshub.com/



### ◆ Hour-meter

Indicates the total operating hours of the machine.

How the indicator works

- The meter advances one hour after an hour of operation regardless of the engine rpm.

1BAAAAQAP0530

### ◆ Engine tachometer

Indicates the current rpm of the engine.

1BAAAAQAP0650

**NOTE :**

- The LCD display may be illegible when viewed from a certain angle. This is not a display failure.

## ■LCD Display for Warning

### ◆ Remaining fuel warning

When the fuel level is very low, the ⚠ lamp (yellow) starts flashing and the following message appears in the display.

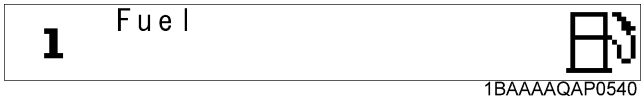


1BAAAAQAP0540

### ◆ Battery charge warning

If the charging system fails, the ⚠ lamp (red) starts flashing and the following message appears in the display.

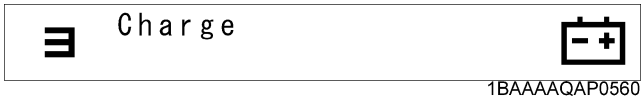


1BAAAAQAP0560

### ◆ Engine oil pressure low warning

When the engine oil pressure drops too low, the ⚠ lamp (red) starts flashing and the following message appears in the display.
Immediately stop the engine and check the engine oil level.

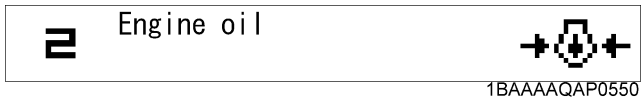


1BAAAAQAP0550

## ■Warning Lamp

The warning lamp is used to indicate broken wire, short-circuit, fuel shortage and other problems.
The warning lamp starts flashing in red if any trouble occurs. If the system gets in warning signal, the warning lamp starts flashing in yellow.

**IMPORTANT :**

- Do not just look at the meter, but also carry out the inspection and correction accordingly.

**NOTE :**

- Warnings and errors are displayed and an alarm buzzer beeps.
- Let your KUBOTA dealer inform you of details concerning care and maintenance.

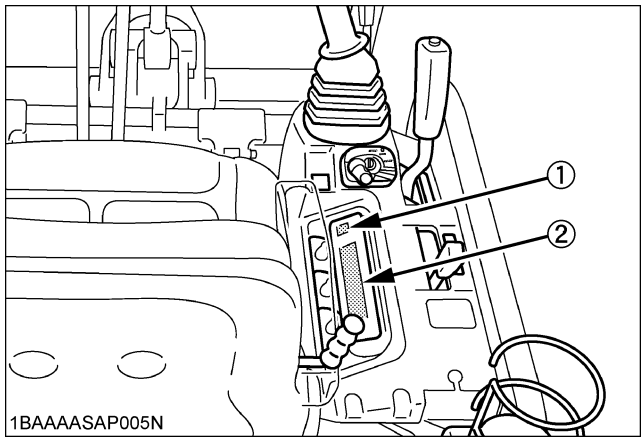


1BAAAASAP005N

(1) Warning lamp (red, yellow)
(2) LCD display

www.maskinisten.net
www.classicmachinery.net
https://truckmanualshub.com/


### ■Checkpoints after Starting the Engine

After starting the engine, but before starting operation, check the following points:

1. Put the throttle lever down and let the engine idle for approx. five minutes. This allows the engine lubricant to warm up and penetrate every part of the engine.

**NOTE :**
- This idling is usually called "Warm-up".

2. Once the engine has warmed up, check:
   - the warning lamp "Engine oil pressure" has gone out.
   - the warning lamp "Battery charge" goes out when engine speed is increased.
   - the color of the exhaust is normal and no abnormal noises or vibrations are heard or felt.
   - no fluid is leaking from pipes or hoses.

◆ **Should any following conditions occur, stop the engine immediately.**
- The engine rpm's increases or decreases suddenly.
- Sudden abnormal noises are heard.
- Exhaust is black.
- Warning lamp for engine oil lights up during operation.

**IMPORTANT :**
- In these cases, the excavator must be checked and serviced by your local the KUBOTA dealer.

## STARTING THE ENGINE UNDER COLD CONDITIONS

**CAUTION**

**To avoid personal injury:**
- **Make sure that the lock lever is in the lock position during warm up.**

**Start the engine in the following manner;**

1. Pull the lock levers all the way back (lock position).
2. Turn the starter switch to the position "RUN" (glow position) and keep until the indicator lamp has gone out.
3. Move the starter switch to the position "START"; to crank and start engine.
4. Release the starter switch after the engine has started; it will automatically return to the position "RUN ".

**IMPORTANT :**
- Let the engine warm up after start-up for approx. 10 minutes under no load conditions. If the hydraulic fluid temperature is too low, the operations will be affected. Do not operate the excavator under full load before the engine has warmed up enough.

www.maskinisten.net
www.classicmachinery.net
https://truckmanualshub.com/


### ■Precautions in case of Overheat

**CAUTION**

**To avoid personal injury:**

- **Do not open the radiator cap during and just after operation. Hot water may gush out and get you burned. Wait long enough until the radiator cools down.**

If by any chance cooling water gets heated up to the boiling point or over (overheated), the whistle at the reserve tank drain hose end blows. In such case, take the following steps.

1. Stop operation in a safe condition.
   (Disconnect the engine's load.)
2. Do not stop the engine suddenly. Keep the engine idling under no load for about 5 minutes and turn it off.
3. Keep yourself enough away from the machine for another 10 minutes or while steam is given off.
4. Make sure there is no hazard of getting burned. Pinpoint and remove the cause of overheat, referring to "TROUBLESHOOTING". Then get the engine restarted.

## STOPPING THE ENGINE

**WARNING**

**To avoid personal injury or death:**

- **Do not keep the bucket or dozer in the lifted position, as a person could accidentally touch the levers and cause serious accidents.**

1. **After slowing the engine to idle, turn the key to "STOP".**
2. **Remove the key.**

### ■Emergency Engine Stop Fuse

**CAUTION**

**To avoid personal injury:**

- **Do not open engine hood before stopping engine. Only when engine does not stop by key, open engine hood and pull out the fuse.**

The engine will stop when the cap is removed and the fuse inside is pulled out. The engine can be restarted when the fuse is pushed back into its original position.

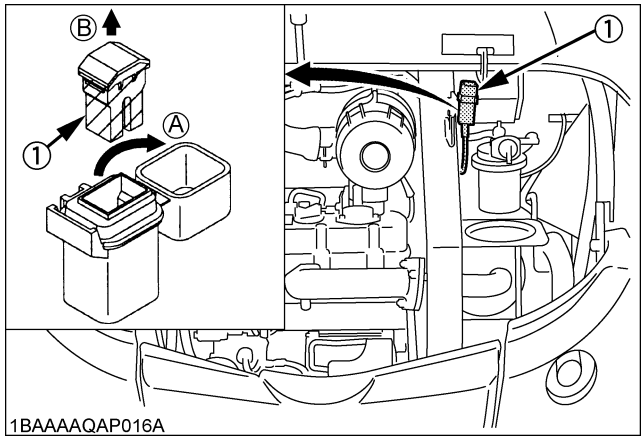


(1) Emergency engine stop fuse
(A) "OPEN"
(B) "PULL OUT"

**NOTE :**

- If the engine does not stop with the key, contact your KUBOTA dealer.

www.maskinisten.net
www.classicmachinery.net
https://truckmanualshub.com/


# STARTING WITH AN AUXILIARY BATTERY

## CAUTION

**To avoid personal injury:**

- **Battery gases can explode.**
  **Do not smoke and keep sparks and flames away.**
- **Do not start the engine with an auxiliary battery if excavator battery is frozen.**
- **Do not connect the black jumper cable to the negative (-) terminal of the excavator battery.**

## ■Observe Following Guidelines when Starting with an Auxiliary Battery

1. Bring the helping machine with the same battery voltage as near as possible to the excavator.
   THE MACHINES MUST NOT COME IN CONTACT WITH EACH OTHER.
2. Bring the levers and pedal of both vehicles in the neutral position and put the lock lever in the "Lock" position.
3. Wear eye protection and rubber gloves.
4. Ensure the vent caps are securely in place (if equipped).
5. Cover the battery opening with a cloth. Make sure that the cloth does not touch the battery terminals.
6. Connect the terminal of the red jumper cable with the plus (+) terminal of the low battery and connect the other end of the cable to the plus (+) terminal of the auxiliary battery.
7. Connect the black negative cable to the minus (-) terminal of the auxiliary battery.
8. Connect the other end of the black cable (coming from the auxiliary battery) to the excavator frame as far away as possible from the low battery.
9. Start the engine of the helping machine and let it run for a while. Start the excavator with the low battery.
10. Disconnect the jumper cables in the reverse sequence (Steps 8, 7, 6).
11. Remove the cloth and replace the vent caps.

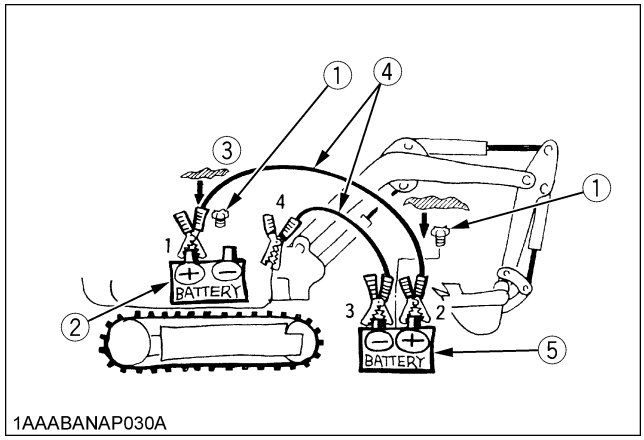


(1) Lay a damp rag over the vent caps
(2) Low battery
(3) Put a cloth over the battery openings
(4) Jumper cables
(5) Auxiliary battery

**IMPORTANT :**

- This excavator has a negative (-) earthed 12 Volt starting system.
- Only use the same voltage when using an auxiliary battery.
- Using a higher voltage will cause serious damage to the electrical system. When using an auxiliary battery, only the compatible (same) voltage is permissible.

www.maskinisten.net
www.classicmachinery.net
https://truckmanualshub.com/


# EXCAVATOR OPERATION

## RUNNING-IN OF THE NEW EXCAVATOR

The operation and care of the new excavator influences its life span. Your new excavator has been carefully checked and tested before leaving the factory. In spite of this, all movable components must run-in during the first 50 work hours. Do not work with full rpm's and full loads during this period. It is most important to run-in your excavator properly in order to achieve its full performance and longevity. During the running-in, the following points should be adhered to in all cases.

### ■Do not Work with Full Engine Rpm's or Full Loads during the First 50 Working Hours

- Let the engine warm up sufficiently in the cold season.
- Do not let the engine rev-up more than necessary.

### ■Oil Change in the Run-in Stage

The lubrication oil plays a specific and important role during the run-in phase of the excavator. The numerous movable parts are not yet run-in, so many fine metal particles are generated and cause damage and shorten the life of many components. Pay attention to the oil-change intervals and complete them sooner than later. See the subject "Care and Maintenance" for more details on the oil-change intervals.

### ■Seat Belt

**WARNING**

**To avoid personal injury or death:**

- **Always use the seat belt with a ROPS/FOPS protection structure. Adjust the seat to the optimal position and buckle up.**

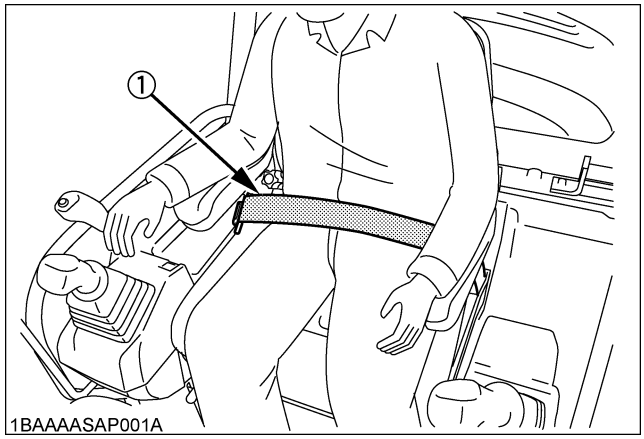


(1) Seat belt

www.maskinisten.net
www.classicmachinery.net
https://truckmanualshub.com/


# STARTING

## 1. Adjusting the Operator's Position.

### ■Operator's Seat

**CAUTION**

**To avoid personal injury:**

- **Make sure that the seat is completely secured after each adjustment.**
- **Do not allow any person other than the driver to ride on the excavator.**

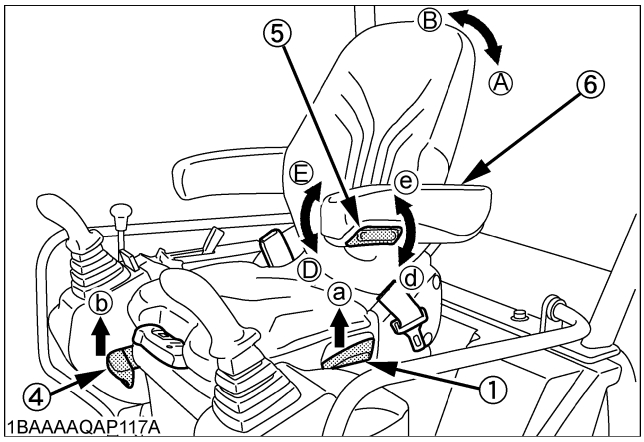


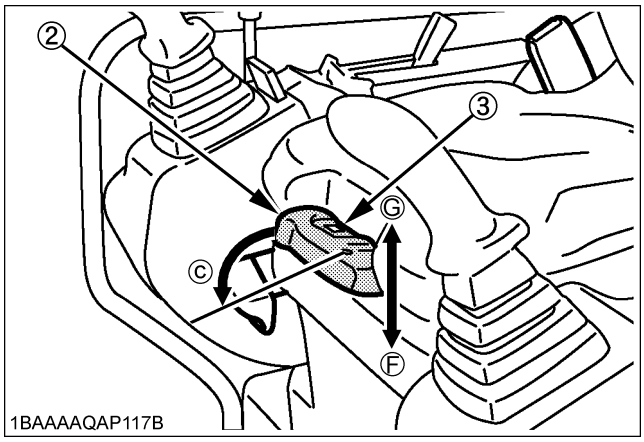


(1) Backrest angle adjust knob
(2) Weight adjust lever
(3) Weight indicator
(4) Travel adjust lever (Horizontal)
(5) Armrest angle adjust knob
(6) Armrest

(a) Unlock
(b) Unlock
(c) Swing 90°

◆ **Backrest angle adjust knob : (1)**

- Pull up and unlock the backrest angle adjust knob (1). Reposition the backrest in Direction A or B to an optimum angle.

◆ **Driver's weight adjustment : (2)**

- Sit on the seat and swing the weight adjust lever (2) 90° in Direction (c).
- Move up or down the lever (2) several times until the arrow mark comes to the center of the weight indicator (3).
- Move up the lever (2) toward G from the center (free state), and the spring force gets stronger. Move it down toward F, and the spring force gets weaker.

◆ **Travel adjustment (Horizontal ): (4)**

- Pull up and unlock the travel adjust lever (horizontal) (4). Slide the seat back and forth to an optimum position.
- Make sure the seat has got locked in the desired position.

◆ **Armrest angle adjustment : (5)**

- Turn up or down the armrest angle adjust knob (5) to position the armrests to an appropriate angle.
- Turn up the knob (5) toward (e) to tilt up the armrests toward E. Turn it down toward (d) to tilt them down toward D.

www.maskinisten.net
www.classicmachinery.net
https://truckmanualshub.com/


**2. After starting the engine, bring the lock levers into the "Unlock" position to use drive lever or control lever for front attachments.**

## ■Lock Lever

**CAUTION**

**To avoid personal injury:**

- **To avoid injuries, check safety features all around the excavator.**

**NOTE :**

- With the lever lock pulled down, the engine fails to start.

If you try to start the engine with the key with the lock lever down, the following message appears momentarily on the meter display.

| | |
|---|---|
| ∃1 | Lift up<br>unload lever |

1BAAAAQAP0570

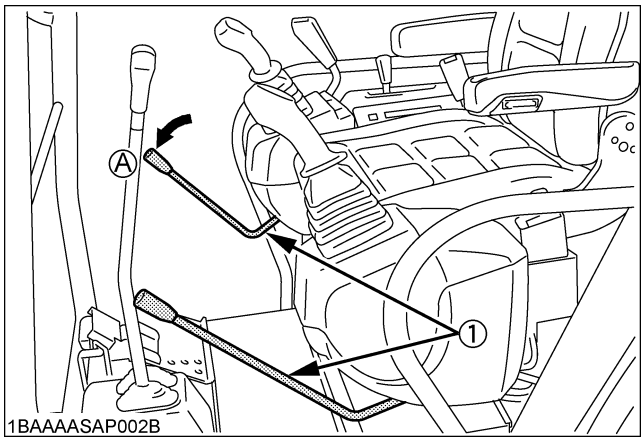


(1) Lock lever (Unload lever) (A) "Unlock"

## ■Working Light Switch

When the starter switch is in position "RUN", the light(s) can be switched on by pressing the switch.

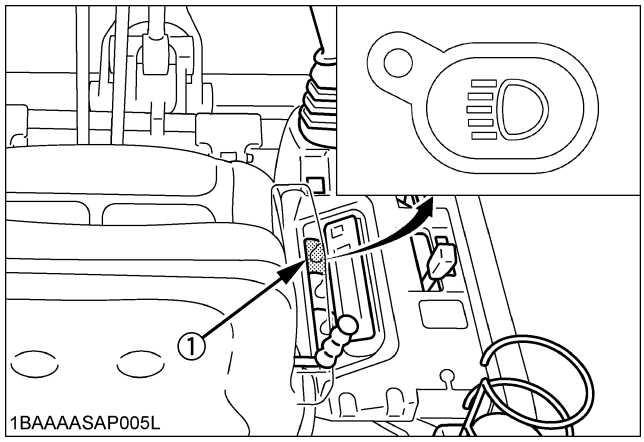


(1) Working light switch

### ◆ Night operation

**CAUTION**

**To avoid personal injury:**

- **Visibility is reduced in darkness, therefore the work light alone may not be enough. In which case, prepare additional stationary artificial lighting, observe safety rules as well as special regulations for night work.**

## ■Travel Buzzer

When you handle the drive levers, the buzzer sounds at the same time or before the excavator starts to run.

www.maskinisten.net
www.classicmachinery.net
https://truckmanualshub.com/


# OPERATION OF TRACK WIDTH CHANGE AND DOZER

## WARNING

**To avoid personal injury or death:**

- **Operate always in standard track width 1300mm, except to pass through narrow space. Do not operate in narrow track width 990mm, it makes risk of the excavator tipping over.**

## CAUTION

**To avoid personal injury:**

- **For changing the track width or using the dozer, set the track width change / dozer select lever fully.**
  **If not, the excavator may unintentionally move.**

1. Set the track width change / dozer select lever to the "Track width change" position (B).

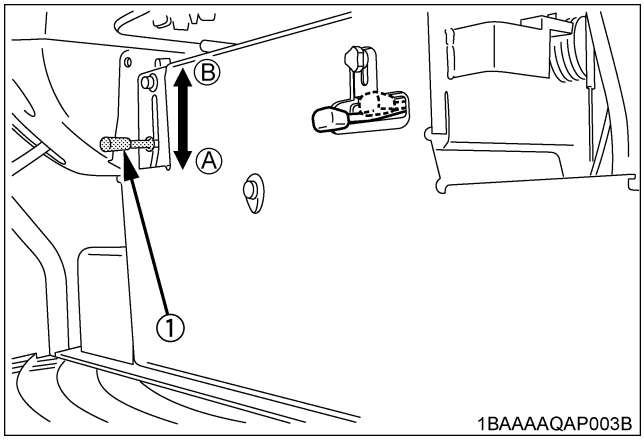


(1) Track width change / dozer select lever
(A) "Dozer"
(B) "Track width change"

2. Push the dozer control lever forward. ... The track width increases (from 990 mm to 1300 mm).
   Pull the dozer control lever backward. ...The track width reduces (from 1300 mm to 990 mm).

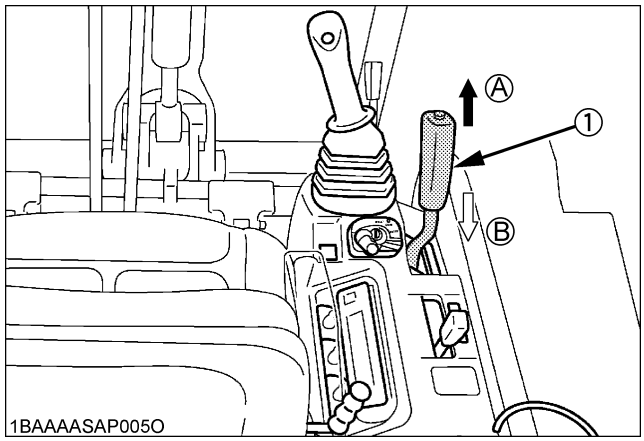


(1) Dozer control lever
(A) "Increase"
(B) "Reduce"

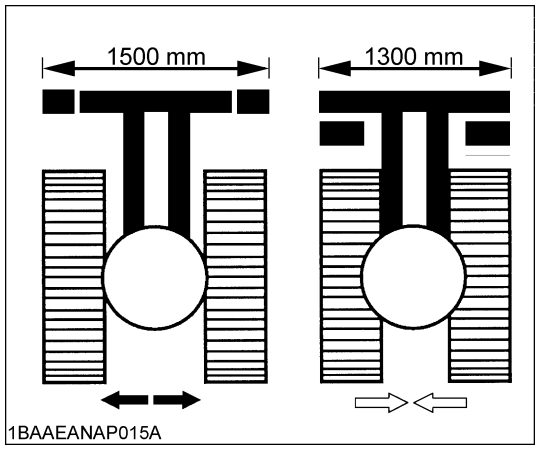


3. After track width change, be sure to set the track width change/dozer select lever to the "Dozer" position (A).

www.maskinisten.net
www.classicmachinery.net
https://truckmanualshub.com/


## ■Adjustment of the Dozer Width

For changing from standard width to narrow width:

1. Pull out the fixing pin (2) and remove the extension dozer (1).
2. Set as under illustration the extension dozer (1), insert fixing pin (2).
3. It is the same operations for opposite side (left or right), and also for changing from standard width to wide width.

Dozer width 1300mm (Standard)

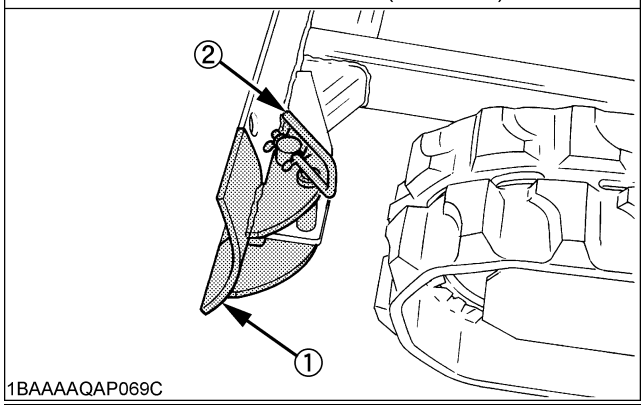


Dozer width 990mm (narrow)

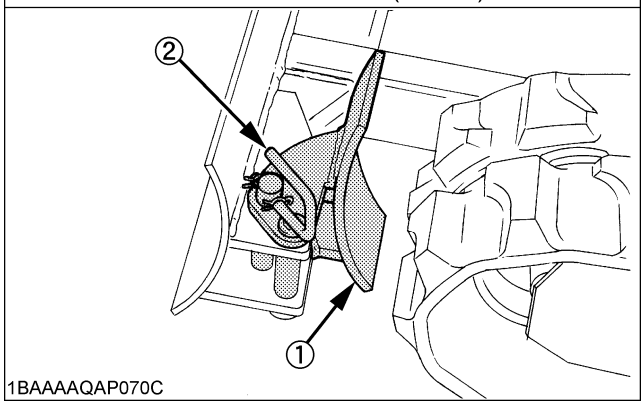


(1) Extension dozer
(2) Fixing pin

# DRIVING

## WARNING

**To avoid personal injury or death:**

- **Before starting the engine, make sure that no one is near the excavator.**
- **Before operating the excavator, check the track direction. (Front idler and dozer blade to the front of the excavator).**

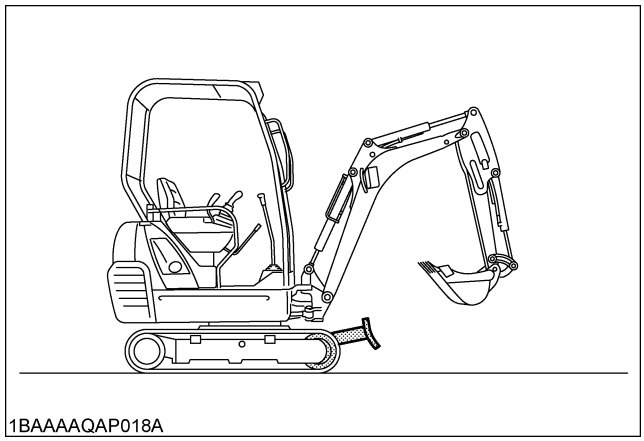


- **Use extra caution when traveling across a slope or working sideways on a slope.**

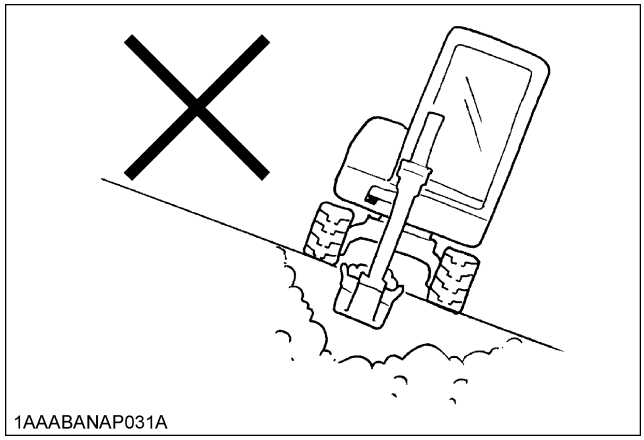

www.maskinisten.net
www.classicmachinery.net
https://truckmanualshub.com/


- **Recommended technique for working on a slope.**

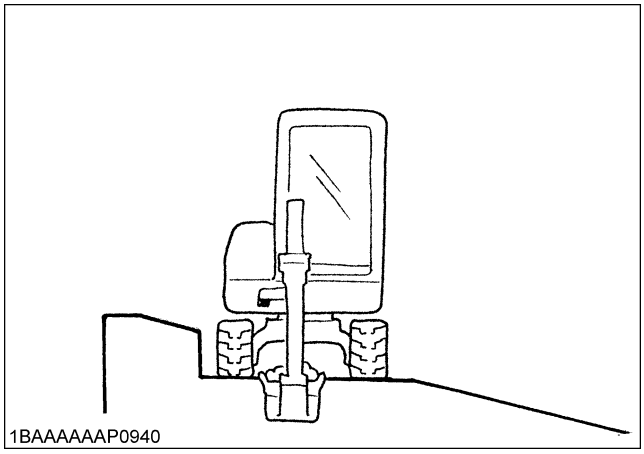


1. Adjust the engine speed from idling to an intermediate speed.
2. Unlock the lock levers and pull in the bucket and hold the bucket about 20 to 40cm above the ground.

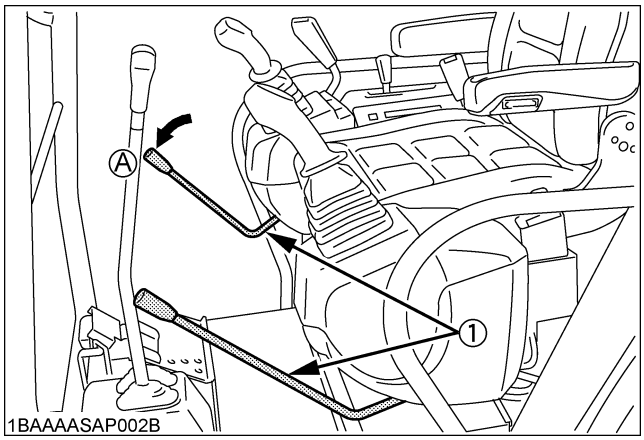


(1) Lock lever (A) "Unlock"

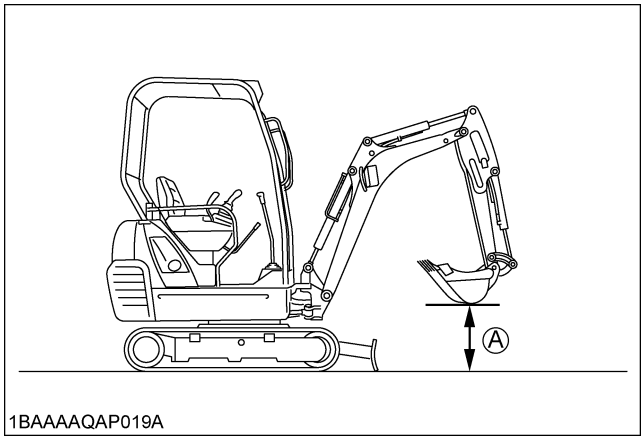


(A) 20 to 40 cm

3. Activate the dozer control lever to raise the dozer.

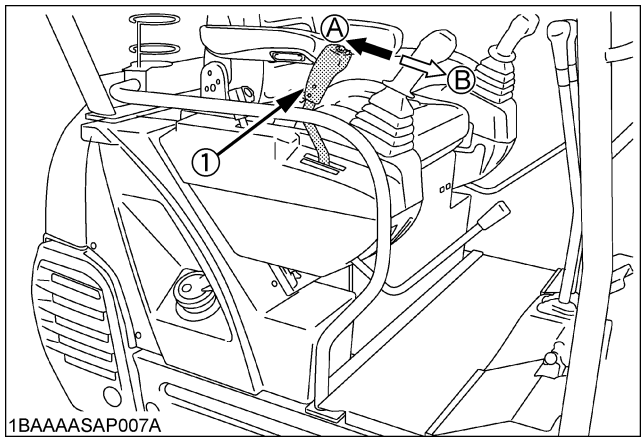


(1) Dozer control lever (A) "Raise"
(B) "Lower"

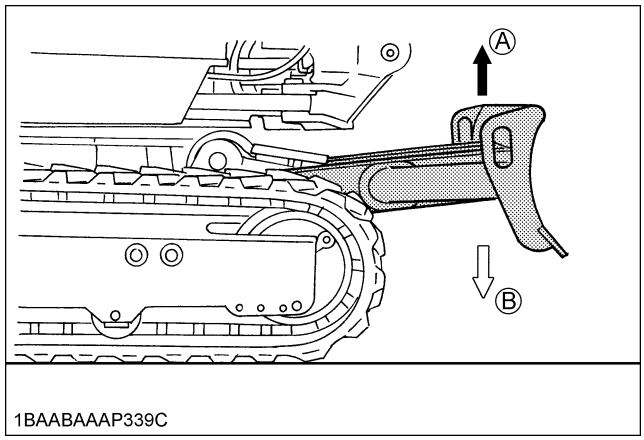


(A) "Raise"
(B) "Lower"

www.maskinisten.net
www.classicmachinery.net
https://truckmanualshub.com/


## ■Drive Levers(Right,Left)

**WARNING**

**To avoid personal injury or death:**

- **If the swing frame has been turn 180deg, i.e. the dozer in relation to the operator's seat is "behind", then the travel direction is opposite to the drive direction of the levers (when activating the drive lever forwards, the machine, in relation to the operator's seat, will move backwards).**

Pushing the drive lever forwards, moves the excavator forwards, and vice-versa. The front of the excavator is the side where the dozer is located; the drive sprocket is in the rear of the excavator.

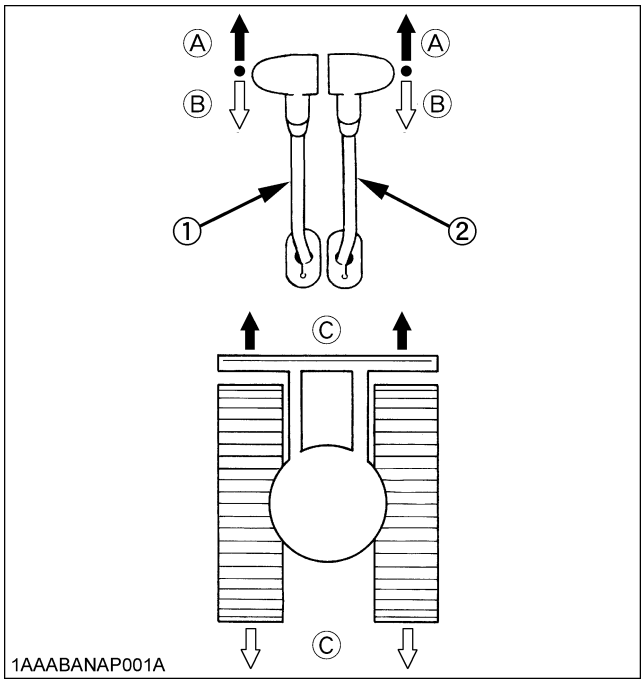


(1) Drive lever (left)
(2) Drive lever (right)

(A) "Forward"
(B) "Backward"
(C) "Straight"

## ■Travel Speed Switch

Travel speed will increase when this switch is pushed down.

Switching the dual travel speed:

1. Press the travel speed switch. The buzzer beeps and the travel speed changes from first speed to second. The symbol lights up.
2. Press the travel speed switch again, and the buzzer beeps and the travel speed changes from second speed to first. The symbol light goes out.

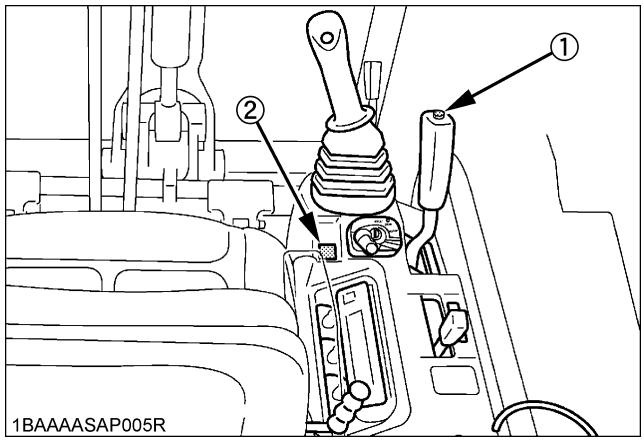


(1) Travel speed switch
(2) Speed indicator light

**NOTE :**

- When activating the travel speed switch, it must be pushed down completely.
- Each time the travel speed switch is pressed, the travel speed is switched between first and second.

**IMPORTANT :**

- Do not activate the travel speed switch when there is increased drive resistance (e.g. driving on inclines or on uneven grounds).
- If the tracks are clogged with sand or gravel while working on soft ground, lift up one track with the help of the boom, arm and bucket and let the track rotate to remove the sand and gravel.

www.maskinisten.net
www.classicmachinery.net
https://truckmanualshub.com/


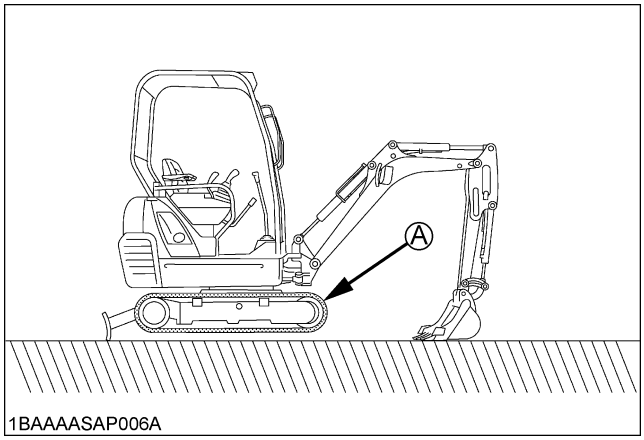


(A) "Rotate to remove sand and gravel"

**DANGER**

**To avoid serious injury or death:**

- **Do not work under the machine in this condition.**

# TURNS

**CAUTION**

**To avoid personal injury:**

- **Do not change direction on steep slopes, or the excavator could tip over.**
- **Before changing direction, beware of people in the work area.**

## ■Pivot Turn

**NOTE :**

- Movement as illustrated is done with the dozer blade in front of the operator.

### ◆ Change of Direction while Travelling

1. While travelling forwards, bring the left drive lever into the neutral position;
   the excavator will turn in the direction of the arrow of the illustration below.

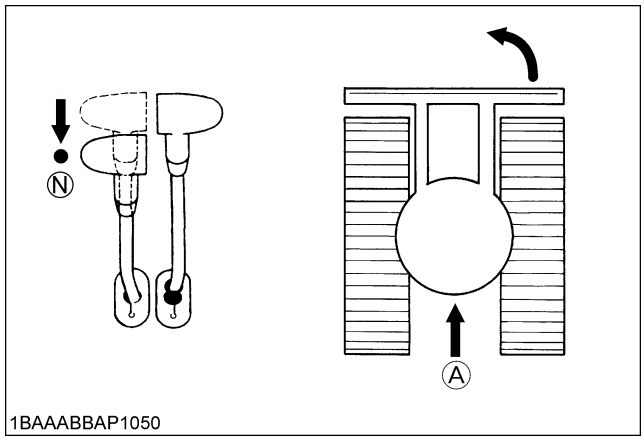


(A) "Travelling forward" (N) "Neutral position"

www.maskinisten.net
www.classicmachinery.net
https://truckmanualshub.com/


2. While travelling backwards, bring the left drive lever into the neutral position;
   the excavator will turn in the direction of the arrow of the illustration below.

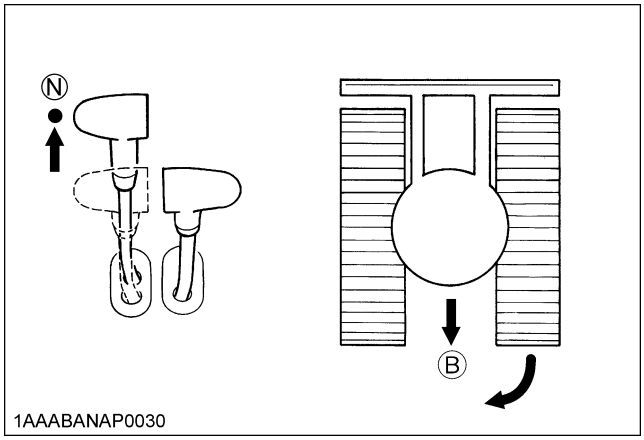


(B) "Travelling backward" (N) "Neutral position"

◆ **Change of Direction while Stationary**

1. Push the left drive lever forward;
   the excavator will turn in the direction of the arrow of the illustration below.

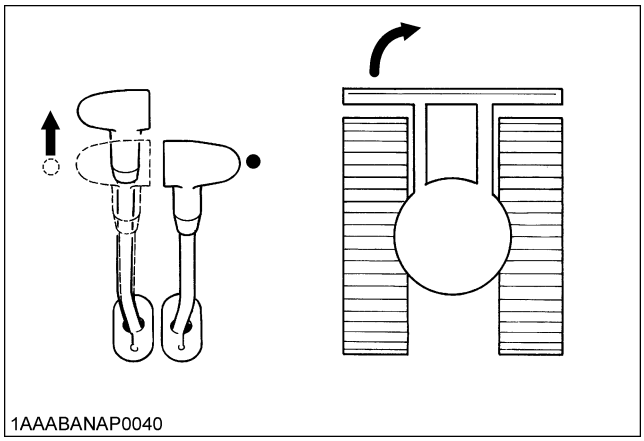


2. Pull the left drive lever backward;
   the excavator will turn in the direction of the arrow of the illustration below.

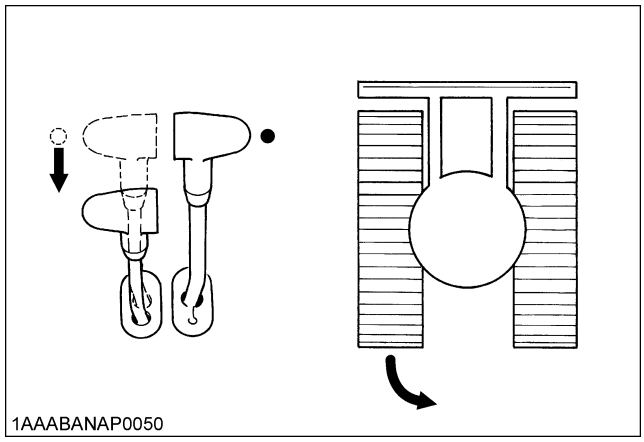


## ■Spin Turn

When both drive levers are activated in the opposite directions, both tracks will rotate with the same speed but in opposite directions. The center of rotation is the center of the excavator.

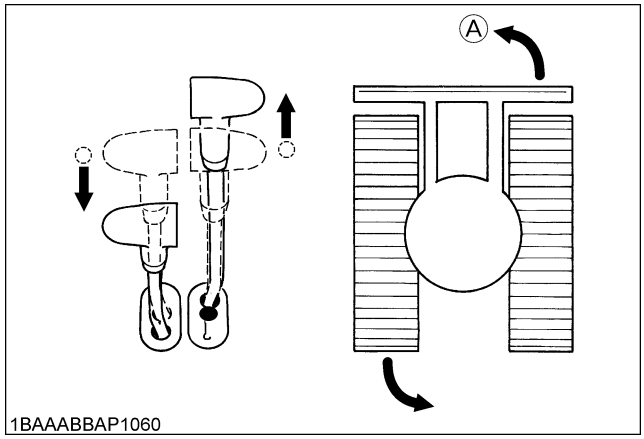


(A) "Left spin turn"

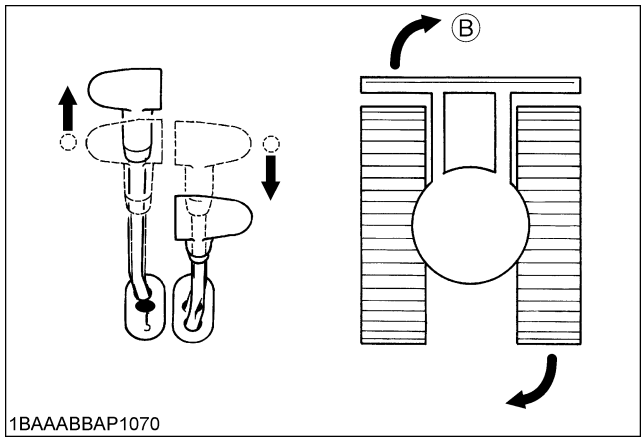


(B) "Right spin turn"

www.maskinisten.net
www.classicmachinery.net
https://truckmanualshub.com/


# UP AND DOWNHILL DRIVING

## CAUTION

**To avoid personal injury:**

- **Before travelling up and downhill, be sure to be in standard track width (1300mm).**
- **When travelling up or down a slope for long periods of time, be sure to engage the swing lock pin. Also engage the swing lock pin when standing on a slope for a long time or the excavator is being transported.**

While traveling uphill, keep the lower edge of the bucket approx. 20 to 40cm above the ground. Although the KUBOTA excavator will not slip easily because of the tracks, it is safer to let the bucket slide over the ground while traveling downhill. Always choose slow speed for uphill and downhill traveling.

**[UPHILL TRAVELING]**

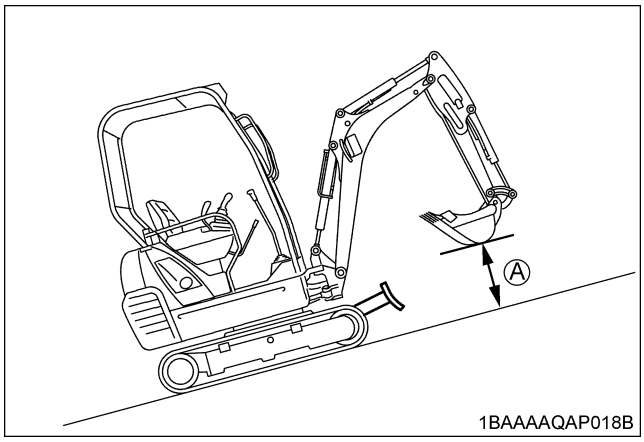


(A) 20 to 40 cm

**[DOWNHILL TRAVELING]**

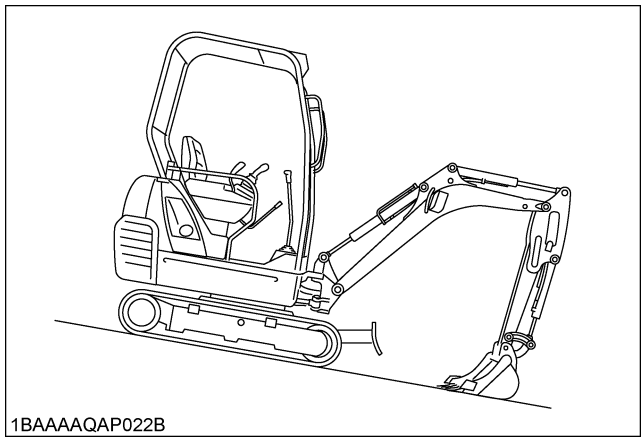


# OPERATION OF THE DOZER

1. To raise the dozer, set Dozer and Track selection lever in position of Dozer and pull back the control lever. Pushing the control lever forwards, lowers the dozer.

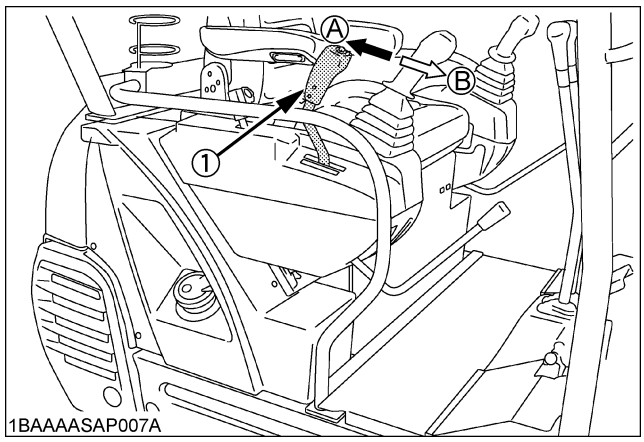


(1) Dozer control lever (A) "Raise"
(B) "Lower"

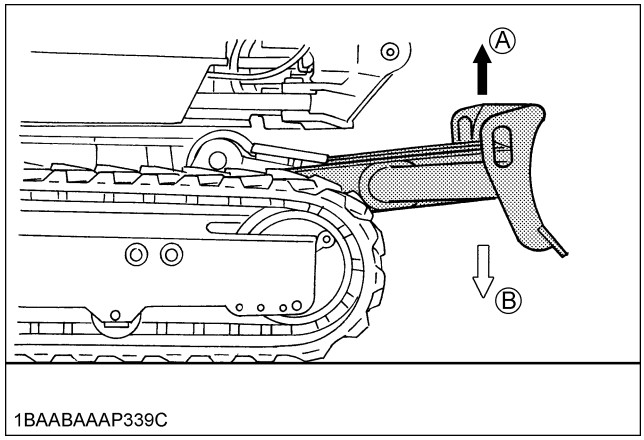


(A) "Raise" (B) "Lower"

2. While undertaking earth moving work, control both drive levers with the left hand and the dozer control lever with the right hand.

www.maskinisten.net
www.classicmachinery.net
https://truckmanualshub.com/


# TWO PATTERN SELECTION SYSTEM(TPSS)

## CAUTION

**To avoid personal injury:**

- **Study control lever pattern A and pattern B. Then choose the one which is most familiar**
- **Position the pattern selector lever (located on the right side of operator's seat) in either the full left hand side position (pattern A) or the full right hand side position (pattern B).**
- **Engage the lever lock to prevent accidental pattern change.**
- **Familiarize yourself with the pattern selected by operating slowly.**

## ■Pattern Change

1. Loosen the lever lock knob (2) and slide it to the direction (a), and position the pattern selector lever (1) to the desired position.
2. Slide the lever lock knob (2) to the direction (b) and tighten it.

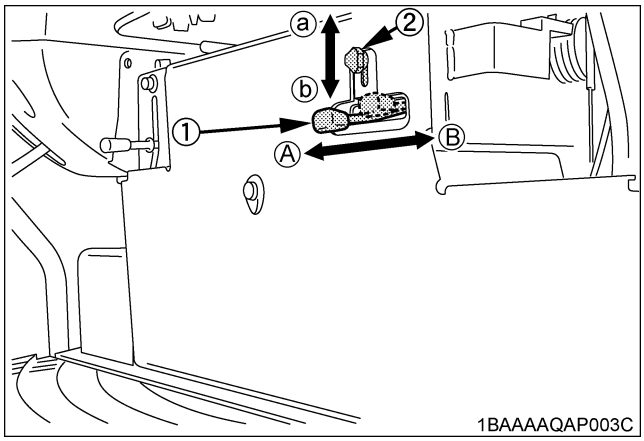


(1) Pattern selector lever (Two Pattern Selection System:TPSS)
(2) Lever lock knob
(a) "UNLOCK"
(b) "LOCK"

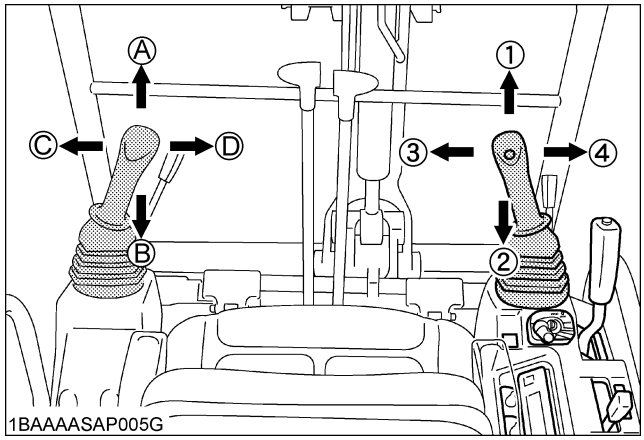


| Lever Position | | Pattern A | Pattern B |
|---|---|---|---|
| Attachment Control Lever (Left) | A | Boom down | Arm up |
| | B | Boom up | Arm crowd |
| | C | Swing left | Swing left |
| | D | Swing right | Swing right |
| Attachment Control Lever (Right) | 1 | Arm up | Boom down |
| | 2 | Arm crowd | Boom up |
| | 3 | Bucket crowd | Bucket crowd |
| | 4 | Bucket dump | Bucket dump |

www.maskinisten.net
www.classicmachinery.net
https://truckmanualshub.com/


# OPERATION OF THE BOOM

To raise the boom, pull the attachment control lever back. The boom is equipped with a cushion cylinder which helps prevent excavated material in the bucket from falling out. Low hydraulic oil temperature, (e.g. after starting the engine in cold weather) the cushioning function will be effected for a short period of time (approx. 3 to 5 seconds). This condition results from the viscosity of the hydraulic oil and is not a sign of malfunction.
The cushion cylinder will operate normally as the oil warms up.
To lower the boom, push the attachment control lever forward.

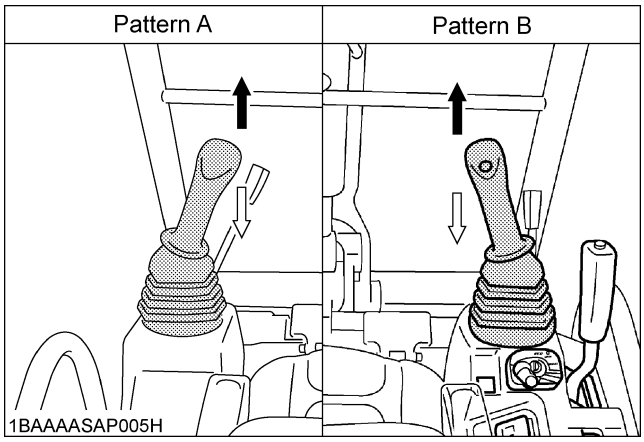


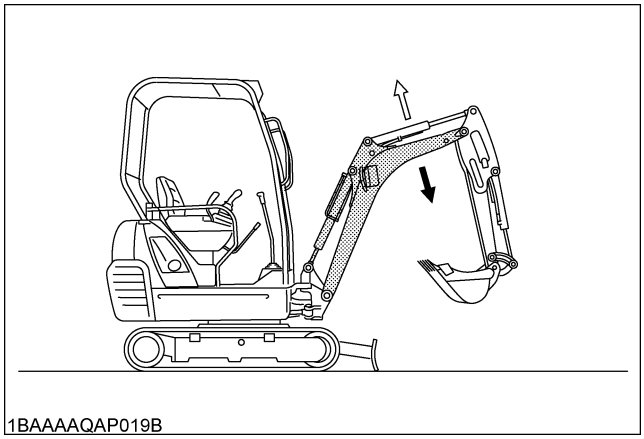


**IMPORTANT :**
- When lowering the boom, make sure that it does not hit the dozer and that the bucket teeth do not touch the dozer.

# OPERATION OF THE ARM

Pull back the attachment control lever and the arm will be pulled in. To move the arm out, push the control lever towards the front.

**NOTE :**
- When pulling in the arm, the movement may stop for a short moment when the arm is in its vertical position. This is caused by the combined load of the arm and bucket moving the cylinder piston away from the hydraulic flow causing a delay in the cylinder action, until the flow catches up with cylinder piston. This is a characteristic of the hydraulic system and is no sign of a malfunction.

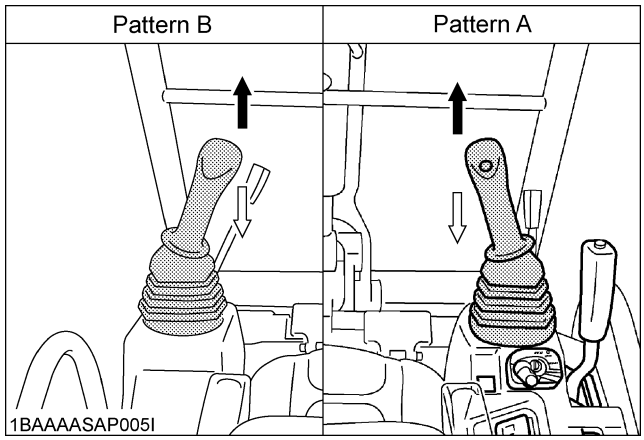


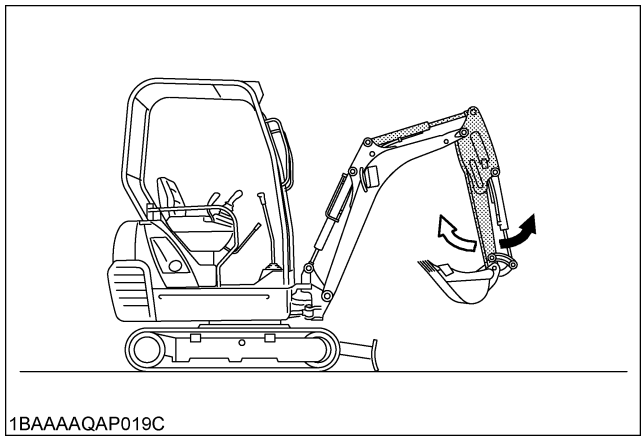

www.maskinisten.net
www.classicmachinery.net
https://truckmanualshub.com/


## OPERATION OF THE BUCKET

To dig using the bucket, move the right attachment control lever from the neutral position, left. Moving the control lever right, moves the bucket outwards and empties its contents.

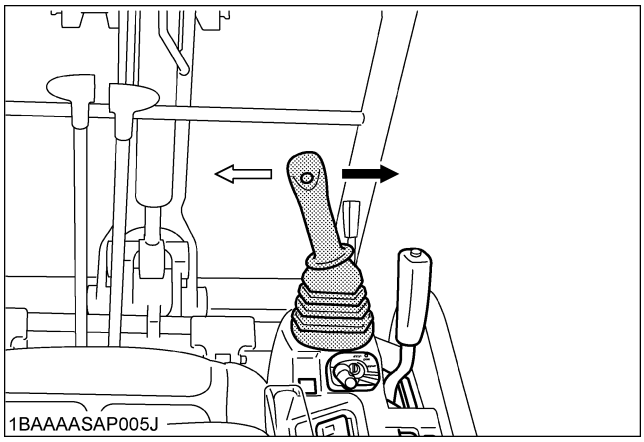
1BAAAASAP005J

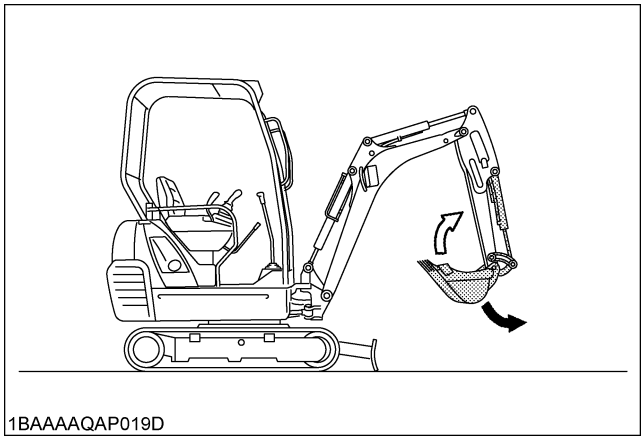
1BAAAAQAP019D

## UNIT SWING AND BOOM SWING OPERATION

### CAUTION

**To avoid personal injury:**

- **When working in groups, always let the others know what you are going to do before you do it.**
- **Keep others away from the machine working area.**
- **Be sure to lock the boom swing pedal when the boom swing function is not used.**

### ■Unit Swing Operation

1. Move the control lever to the left and the upper structure will turn to the left.
2. Move the control lever to the right and the upper structure will turn to the right.

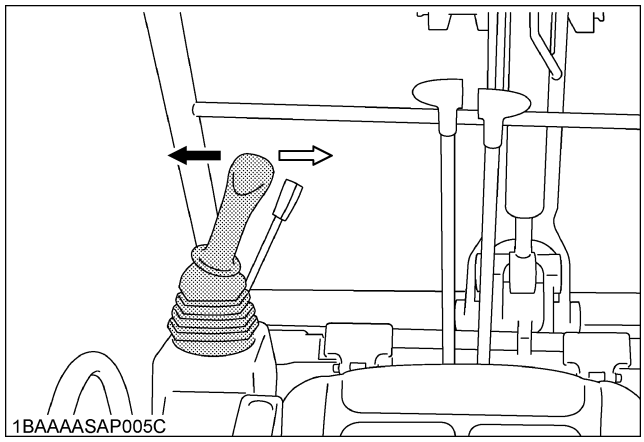
1BAAAASAP005C

Unit Swing

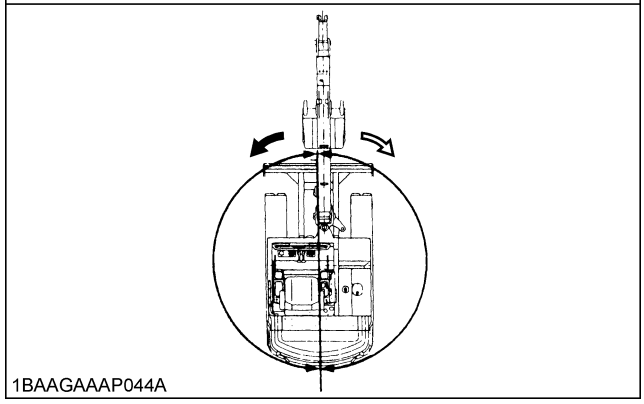
1BAAGAAAP044A

www.maskinisten.net
www.classicmachinery.net
https://truckmanualshub.com/


## ■Boom Swing Operation

1. Tilt the pedal lock forward to unlock the pedal.
2. Step on the left side of the pedal to swing the boom to the left.
3. Step on the right side of the pedal to swing the boom to the right.

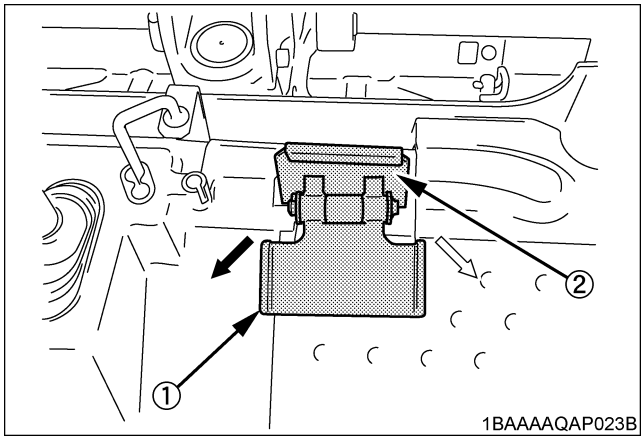


(1) Boom swing pedal
(2) Pedal lock

Boom Swing

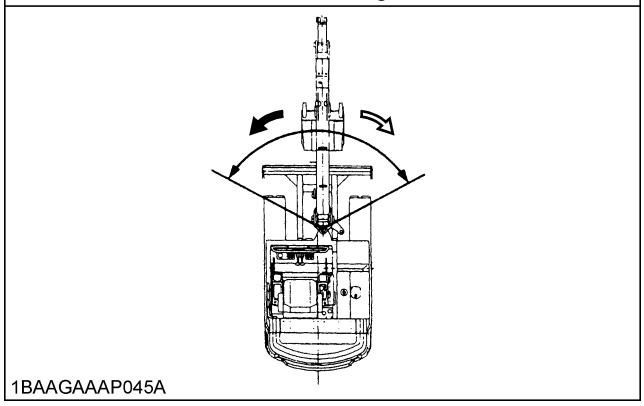


**IMPORTANT :**

- Do not operate the left attachment control lever abruptly from right to left (or vice versa). Because the low of inertia cause high impact load on the swing gear and the swing motor, shortening the life of the excavator.

# SERVICE PORT OPERATION

**CAUTION**

**To avoid personal injury:**

- **Tilt the service port pedal forward when the pedal is not used. Be sure to lock the pedal.**

This pedal is used to operate hydraulic attachments such as breakers.

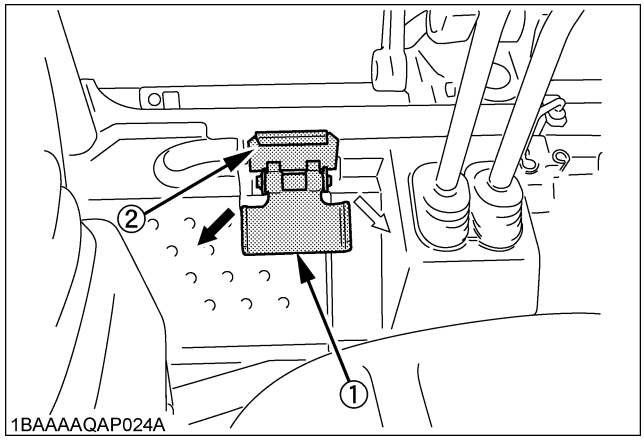


(1) Service port pedal
(2) Pedal lock

- Push the left part of the pedal (⬇), send oil to the pipe (1).
- Push the right part of the pedal (⇩), send oil to the pipe (2).

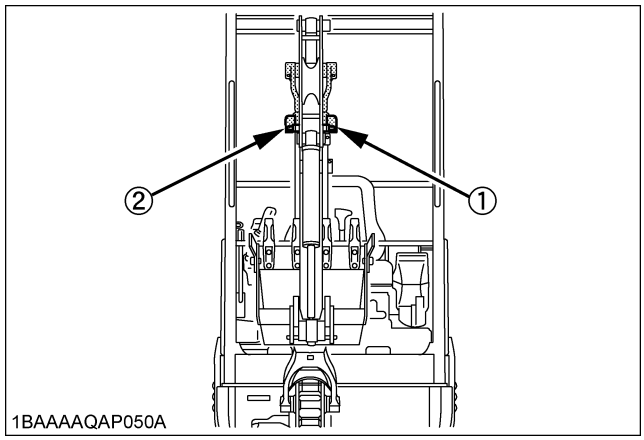


| | |
|---|---|
| Max. Flow Volume (Theoretical L/min.) | 27.6 |
| Max. Pressure MPa (kgf/cm²) | 21.6 MPa (220) |

www.maskinisten.net
www.classicmachinery.net
https://truckmanualshub.com/


**IMPORTANT :**

- When the service port is not used for a long period, dirt particles can settle in the lower part of the service port lines.
  When the plugs on the service port lines are removed to connect attachments, drain approx. 3.4 oz (100 cc) of oil per side before making connections.
  For breaker choices, contact your dealer.

# PARKING ON A SLOPE

## WARNING

**To avoid personal injury or death:**

- **When the excavator is parked or left unattended on a slope, be sure to put the bucket on the ground and place all control levers in neutral position, then brace the tracks with chocks.**

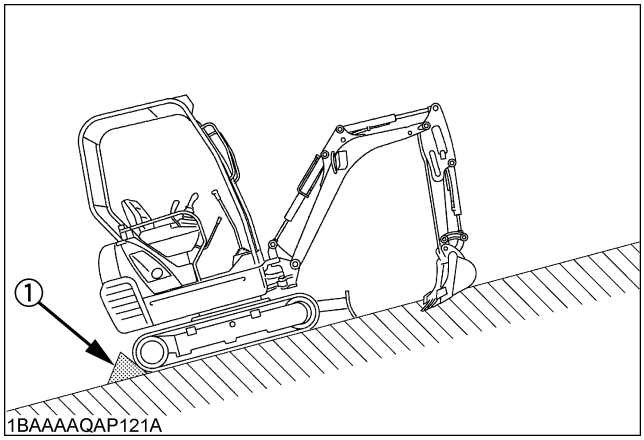


(1) Chock

# IMPORTANT INFORMATION ON EXCAVATOR OPERATION

- Do not try to crush concrete or boulders using side swings with the bucket. Also avoid using side sweeps of the bucket to move earth piles.
- Under all circumstances avoid the following operations:
  - Excavation using the gravitational impact of the machine.
  - Compacting of gravel or soil using the dropping action of the bucket.
  - Excavation using the traveling power of the machine.
- Do not try to drop or shake off soil adhering to the bucket in the manner given in the points below. This can cause damage to the machine.
  Adhering soil can be shaken off when the bucket is being emptied by moving the bucket out to the maximum stroke of the cylinder. Should this not suffice, swing out the arm as far as possible and operate the bucket back and forth.
- Do not hit the dozer with the boom cylinder!
  Make sure that the boom cylinder does not hit the dozer when doing deep excavation. If necessary swing around so that the dozer is in the back of the machine.
- Pay attention when pulling in the bucket!
  When pulling in the bucket (for driving or transportation) avoid hitting the dozer.
- Avoid collisions!
  When moving the excavator, pay attention that the dozer does not collide with obstructions such as boulders etc..
  Such collisions shorten the life of the dozer and the cylinder substantially.
- Support the machine correctly!
  When stabilizing the machine with the dozer, lower the dozer to engage the full width on the ground.
- If the water or mud level reaches higher than the top of the tracks, the swivel bearing, swivel motor gear and ring gear may be exposed to mud, water and other foreign objects.
  The excavator must be properly pressure washed after each use.
  - Thoroughly clean the area around the swivel bearing, swivel motor gear and ring gear to remove foreign objects.
  - Inspect the swivel motor oil sump (if equipped) for water contamination. If water is present, refer to operator's manual for lubricant replacement procedure.
  - Refer to operator's manual for proper swivel bearing, swivel motor gear and ring gear lubrication procedures.
  - Reinstall any protective covering if removed earlier.

www.maskinisten.net
www.classicmachinery.net
https://truckmanualshub.com/


# TRANSPORTING THE EXCAVATOR ON A VEHICLE

**DANGER**

**To avoid personal injury or death:**

- **No directional changes should be made when the excavator is on the ramp. Should a change of direction be necessary, drive off the ramp completely and make the turn.**
- **When driving forwards or backwards onto the vehicle, or when swinging the upper body, make sure that neither the CAB or the gates of the vehicle will be damaged.**

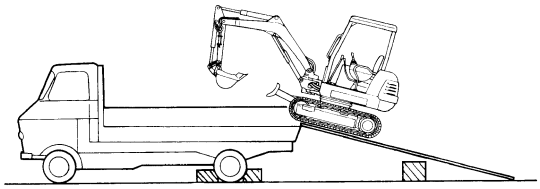

1AAABANAP0080

- **When the excavator reaches the point between the ramps and the bed, halt and then move very slowly until the excavator reaches the horizontal position.**
- **Move the excavator onto the vehicle only with the arm completely pulled in.**
- **Do not jack up the machine using its boom to load or unload the excavator from the vehicle. Doing this is dangerous.**
- **Make sure the ramps are of sufficient capacity and securely connected to the vehicle to safety support the machine throughout the loading / unloading operation.**

## ■ Transporting on a truck

**WARNING**

**To avoid personal injury or death:**

- **After loading the machine on the truck, lower the bucket and dozer onto the truck bed. Lock the swing frame with the swing lock pin.**

Prepare a platform to load or unload the excavator.

Take following steps when using ramps.

1. Apply the parking brakes of the vehicle, and block the drive wheels from both sides.

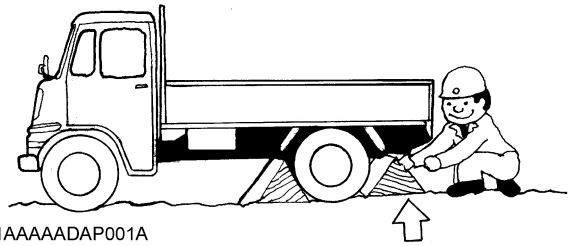

1AAAAADAP001A

2. Use mounting brackets to secure the ramp properly. Connect the ramps directly to the bed.

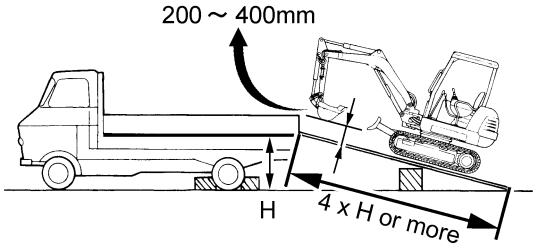


1BAAAAAAP185K

3. For additional safety, use blocks or supports under the ramps and the bed.

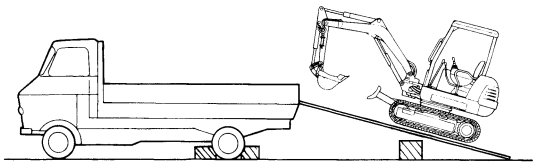

1BAAAAAAP1850

www.maskinisten.net
www.classicmachinery.net
https://truckmanualshub.com/


4. Align the ramps and the tracks and then drive the excavator slowly up the ramps with the dozer in the front. After ensuring that the tracks are completely on the bed, swing the upper body around to the back of the vehicle.
5. Block the tracks and cable down the excavator with suitable chains and approved method (check appropriate state regulation).

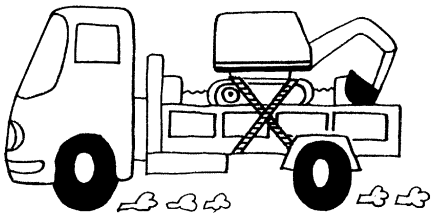

1AAABANAP032A

6. Before unloading, raise the dozer and bucket from the bed.

www.maskinisten.net
www.classicmachinery.net
https://truckmanualshub.com/


# LIFTING OF THE EXCAVATOR

**DANGER**

**To avoid serious injury or death:**

- **The correct instructions for safe handling are described here. Read these instructions carefully before moving the machine. Make sure that the operating personnel read the operator's manual carefully.**

## ■ Basics when Lifting with Cables or Straps

1. The lifting and crane operation is to be undertaken according to the safe operation guidelines described.
2. The equipment used for lifting mentioned in these instructions are only given as reference, the standards concerning strength, control and other details are based on the respective applicable guidelines.

## ■ Safety Aspects when Lifting with Cables or Straps

Abide by following steps when lifting:

1. Do not lift loads that exceed the maximum load capacity of the crane.
2. Choose correct equipment suitable to the weight, size and form of the load.
3. First assess the center of gravity of the load, position the hook directly over the load and lift the load so that the center of gravity of the load is as low as possible.
4. The steel cables or straps must be fixed in the middle of the hook.
5. The load must be lifted vertically from the ground.
6. Do not enter the working area under suspended loads and do not move the load over people. The load must only be moved in an area where the balance can be easily maintained.

## ■ Lifting Procedure for the Excavator

**WARNING**

**To avoid personal injury or death:**

- **Do not use the hooks on the roof of canopy and CAB for lifting the excavator.**
- **Never lift the machine with the angle blade placed at an angle.**

### ◆ General guidelines for lifting

1. Lifting position. (see the following illustration.)
   (1) Pull in the boom completely towards the CAB.
   (2) Pull in the arm completely.
   (3) Pull in the bucket completely.
   (4) Adjust the swing angle to the center. (to bring the boom in a position parallel to the machine frame)
   (5) Swing frame so that dozer blade is to the rear and frame is parallel with tracks.
   (6) Raise the dozer blade fully.

2. Attaching the steel cables or straps.
   (1) Always hook the excavator at three points. (one on the boom and left and right of the dozer)
   (2) Always use a shackle on each lifting hole when attaching the cables or straps.
   (3) Using protective material at all places where the cables or straps contact the machine.
   (4) Keep the angle between the front and rear cables or straps within 60° (1.05 rad.).

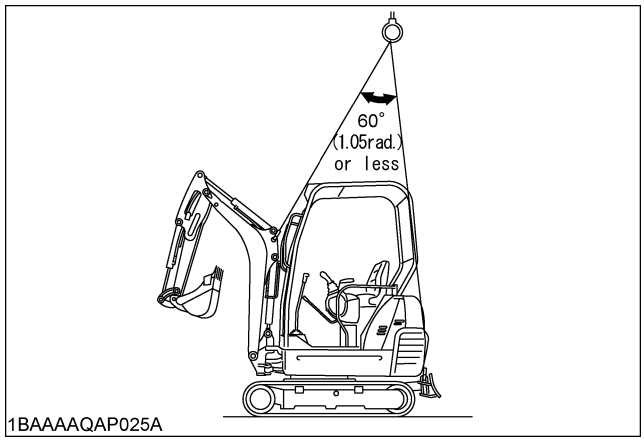

www.maskinisten.net
www.classicmachinery.net
https://truckmanualshub.com/


3. Tackle
   The weights of the excavators and the recommended tackle for lifting these loads are mentioned in the following table. Choose components having enough strength.

| | |
|---|---|
| Excavator Weight* | 1595 kg |
| Load / Cable | 6400 N |
| Minimum Cable Diameter (Safety factor=6) | 10 mm or more |

*Excavator Weight: With long arm.
Steel cable: 6 x 24

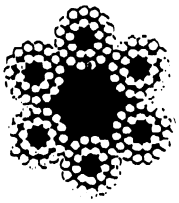
1AAABANAP034A

4. Lifting
   (1) Lift slowly and safely
   (2) Do not enter the excavator area when lifting.
   (3) Lift the excavator horizontally. (Modify cable or strap connections according to needs)

**Maximum strength**

for example : (JIS G 35 25) - "6 x24"

| Diameter | zinc-plated | not zinc-plated |
|---|---|---|
| 10 mm (3/8) | 45.8 KN | 49.3 KN |
| 12.5 mm (1/2) | 71.5 KN | 77 KN |
| 14 mm (9/16) | 89.7 KN | 96.6 KN |
| 16 mm (5/8) | 117 KN | 126 KN |
| 18 mm (45/64) | 148 KN | 160 KN |

1. Boom side
   Hook in the steel cable with a shackle into the lifting hole.

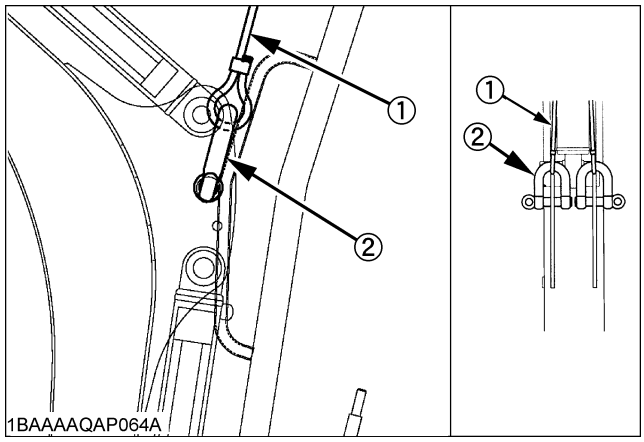

1BAAAAQAP064A

(1) Steel cable
(2) Shackle

2. Dozer side
   Hook in the steel cable with a shackle into the lifting hole around the canopy.

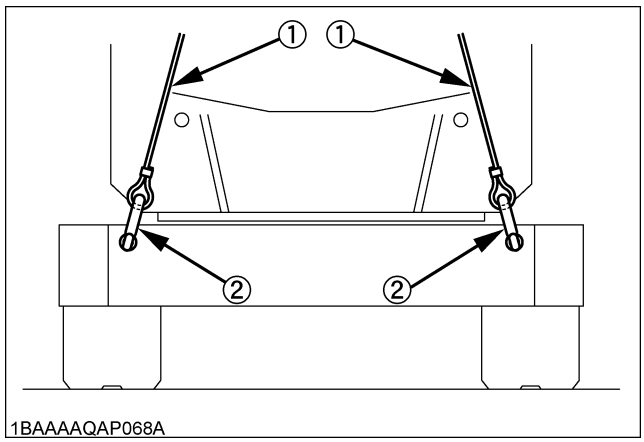

1BAAAAQAP068A

(1) Steel cable
(2) Shackle

www.maskinisten.net
www.classicmachinery.net
https://truckmanualshub.com/


# MAINTENANCE

## MAINTENANCE INTERVALS

| No. | Check points | | Intervals | Hour meter indicator | | | | | | | | | Consequently | Ref. page | | |
|---|---|---|---|---|---|---|---|---|---|---|---|---|---|---|---|---|
| | | | | 50 | 100 | 150 | 200 | 250 | 300 | 350 | 400 | 450 | | | | |
| 1 | Coolant | | check | Daily check | | | | | | | | | | 36 | | |
| | | | change | | | | | | | | | | every 2 years | 50 | | |
| 2 | Fuel | | check | Daily check | | | | | | | | | | 36 | | |
| 3 | Engine oil | | check | Daily check | | | | | | | | | | 37 | | |
| | | | change | ◉ | | | | | ○ | | | | every 250 hrs | 45 | | |
| 4 | Hydraulic oil | | check | Daily check | | | | | | | | | | 37 | | |
| | | | change | | | | | | | | | | every 1000 hrs | 48 | *1 | |
| 5 | Lubrication points | | - | Daily check | | | | | | | | | | 38 | | |
| 6 | Radiator and oil cooler | | check | Daily check | | | | | | | | | | 39 | | |
| 7 | Engine and electrical wiring | | check | Daily check | | | | | | | | | every year | 39 | | |
| 8 | Fuel tank, Fuel filter | | drain | ○ | ○ | ○ | ○ | ○ | ○ | ○ | ○ | ○ | every 50 hrs | 40 | | |
| 9 | Battery condition | | check | ○ | ○ | ○ | ○ | ○ | ○ | ○ | ○ | ○ | every 50 hrs | 41 | | |
| 10 | Greasing swing bearing teeth | | - | ○ | ○ | ○ | ○ | ○ | ○ | ○ | ○ | ○ | every 50 hrs | 42 | | |
| 11 | Fan belt tension | | check | Daily check | | | | | | | | | | 39 | | |
| | | | adjust | | | | ○ | | | | ○ | | every 200 hrs | 43 | | |
| 12 | Radiator hoses and clamps | | check | | | | ○ | | | | ○ | | every 200 hrs | 43 | | |
| | | | replace | | | | | | | | | | every 2 years | 50 | | |
| 13 | Air filter element | Outer element | clean | | | | ○ | | | | ○ | | every 200 hrs | 44 | *2 | @ |
| | | | replace | | | | | | | | | | every 1000 hrs | 49 | *2 | |
| | | Inner element | replace | | | | | | | | | | every 1000 hrs | 49 | *2 | |
| 14 | Greasing swing ball bearings | | - | | | | ○ | | | | ○ | | every 200 hrs | 45 | | |
| 15 | Fuel filter element | | replace | | | | | | | | | | every 500 hrs | 47 | | @ |
| 16 | Engine oil filter | | replace | ◉ | | | | | ○ | | | | every 250 hrs | 46 | | |
| 17 | Drive unit oil | | change | | ◉ | | | | | | | | every 500 hrs | 46 | | |
| 18 | Hydraulic return filter element | | replace | | | | | ◉ | | | | | every 500 hrs | 47 | | |
| 19 | Hydraulic suction filter element | | replace | | | | | | | | | | every 1000 hrs | 48 | | |
| 20 | Fuel injection nozzle injection pressure | | check | | | | | | | | | | every 1500 hrs | 49 | *4 | @ |
| 21 | Front idler and track roller oil | | change | | | | | | | | | | every 2000 hrs | 49 | | |
| 22 | Alternator and starter motor | | check | | | | | | | | | | every 2000 hrs | 49 | | |
| 23 | Injection pump | | check | | | | | | | | | | every 3000 hrs | 49 | *4 | @ |
| 24 | Radiator system | | rinse | | | | | | | | | | every 2 years | 50 | | |
| 25 | Fuel line and Intake air line | | check | | | | ○ | | | | ○ | | every 200 hrs | 45 | | @ |
| | | | replace | | | | | | | | | | every 2 years | 51 | *3 | |

＊ 500 thru 1000 continued to the following table.

www.maskinisten.net
www.classicmachinery.net

https://truckmanualshub.com/



| No. | Check points | | Intervals | Hour meter indicator | | | | | | | | Consequently | Ref. page | | |
|---|---|---|---|---|---|---|---|---|---|---|---|---|---|---|---|
| | | | | 500 | 550 | 600 | 650 | 700 | 750 | 800 | 1000 | | | | |
| 1 | Coolant | | check | Daily check | | | | | | | | | 36 | | |
| | | | change | | | | | | | | | every 2 years | 50 | | |
| 2 | Fuel | | check | Daily check | | | | | | | | | 36 | | |
| 3 | Engine oil | | check | Daily check | | | | | | | | | 37 | | |
| | | | change | | ○ | | | | | ○ | | every 250 hrs | 45 | | |
| 4 | Hydraulic oil | | check | Daily check | | | | | | | | | 37 | | |
| | | | change | | | | | | | | ○ | every 1000 hrs | 48 | *1 | |
| 5 | Lubrication points | | - | Daily check | | | | | | | | | 38 | | |
| 6 | Radiator and oil cooler | | check | Daily check | | | | | | | | | 39 | | |
| 7 | Engine and electrical wiring | | check | Daily check | | | | | | | | every year | 39 | | |
| 8 | Fuel tank, Fuel filter | | drain | ○ | ○ | ○ | ○ | ○ | ○ | ○ | ○ | every 50 hrs | 40 | | |
| 9 | Battery condition | | check | ○ | ○ | ○ | ○ | ○ | ○ | ○ | ○ | every 50 hrs | 41 | | |
| 10 | Greasing swing bearing teeth | | - | ○ | ○ | ○ | ○ | ○ | ○ | ○ | ○ | every 50 hrs | 42 | | |
| 11 | Fan belt tension | | check | Daily check | | | | | | | | | 39 | | |
| | | | adjust | | | ○ | | | | ○ | ○ | every 200 hrs | 43 | | |
| 12 | Radiator hoses and clamps | | check | | | ○ | | | | ○ | ○ | every 200 hrs | 43 | | |
| | | | replace | | | | | | | | | every 2 years | 50 | | |
| 13 | Air filter element | Outer element | clean | | | ○ | | | | ○ | ○ | every 200 hrs | 44 | *2 | @ |
| | | | replace | | | | | | | | ○ | every 1000 hrs | 49 | *2 | |
| | | Inner element | replace | | | | | | | | ○ | every 1000 hrs | 49 | *2 | |
| 14 | Greasing swing ball bearings | | - | | | ○ | | | | ○ | ○ | every 200 hrs | 45 | | |
| 15 | Fuel filter element | | replace | ○ | | | | | | | ○ | every 500 hrs | 47 | | @ |
| 16 | Engine oil filter | | replace | | ○ | | | | | ○ | | every 250 hrs | 46 | | |
| 17 | Drive unit oil | | change | | | | | | | | | every 500 hrs | 46 | | |
| 18 | Hydraulic return filter element | | replace | | | | | | ○ | | | every 500 hrs | 47 | | |
| 19 | Hydraulic suction filter element | | replace | | | | | | | | ○ | every 1000 hrs | 48 | | |
| 20 | Fuel injection nozzle injection pressure | | check | | | | | | | | | every 1500 hrs | 49 | *4 | @ |
| 21 | Front idler and track roller oil | | change | | | | | | | | | every 2000 hrs | 49 | | |
| 22 | Alternator and starter motor | | check | | | | | | | | | every 2000 hrs | 49 | | |
| 23 | Injection pump | | check | | | | | | | | | every 3000 hrs | 49 | *4 | @ |
| 24 | Radiator system | | rinse | | | | | | | | | every 2 years | 50 | | |
| 25 | Fuel line and Intake air line | | check | | | ○ | | | | ○ | ○ | every 200 hrs | 45 | | @ |
| | | | replace | | | | | | | | | every 2 years | 51 | *3 | |

**IMPORTANT :**

◉ First operation

*1 When using a hydraulic breaker, change hydraulic oil and return filter according to the table on "Hydraulic Oil Change (Including Exchange of the Suction Filter in the Hydraulic Tank) under "EVERY 1000 SERVICE HOURS" in the chapter "REGULAR CHECKS AND MAINTENANCE WORK".

*2 Clean and replace the air filter more frequently if used under dusty conditions. When the filter is very dirty from dusty conditions, replace the filter.

*3 Replace only if necessary.

*4 Consult your local KUBOTA Dealer for this service.

- The items listed above (@ marked) are registered as emission related critical parts by KUBOTA in the U.S.EPA non-road emission regulation. As the engine owner, you are responsible for the performance of the required maintenance on the engine according to the above instruction. Please see the Warranty Statement in detail.

www.maskinisten.net
www.classicmachinery.net
https://truckmanualshub.com/


# OPENING AND CLOSING OF PARTS

## ■Opening and Closing of the Fuel Tank Cap

1. Open the tank cap cover, insert the starter key and turn counterclockwise. Then turn the tank cap counter-clockwise to open.

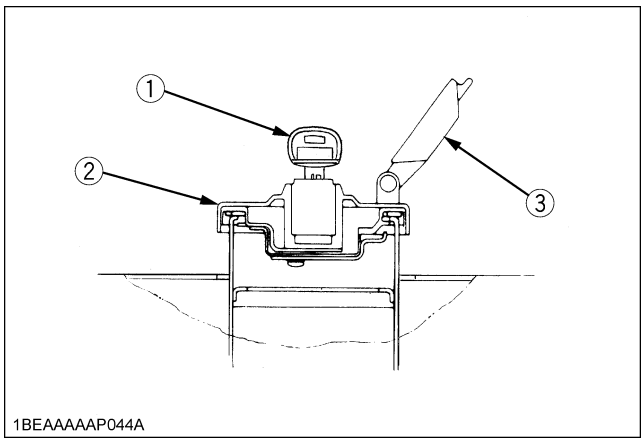


(1) Starter key
(2) Fuel tank cap
(3) Tank cap cover

2. To close the tank cap, turn clockwise and turn clockwise the starter key. Then close the tank cap cover.

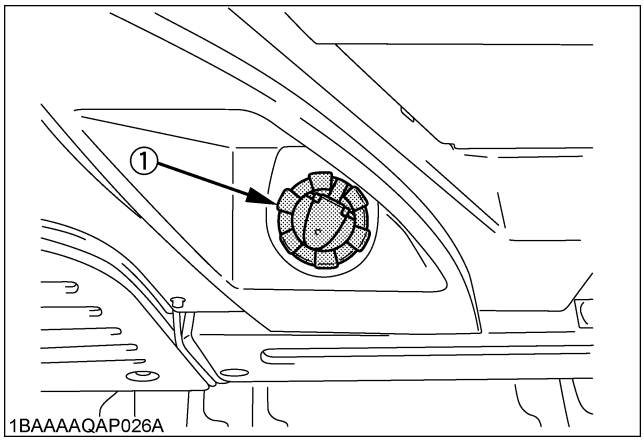


(1) Fuel tank cap

## ■Opening/Closing of the Engine Bonnet

**CAUTION**

**To avoid personal injury:**

- **Do not open the engine bonnet with the engine running unless in an emergency.**
- **Do not touch the exhaust muffler or the exhaust pipe; serious burns can occur.**

Insert the key into the key slot and turn it clockwise to open the bonnet. To close it, lower the bonnet and push it tightly. Turn the key counterclockwise to lock the bonnet.

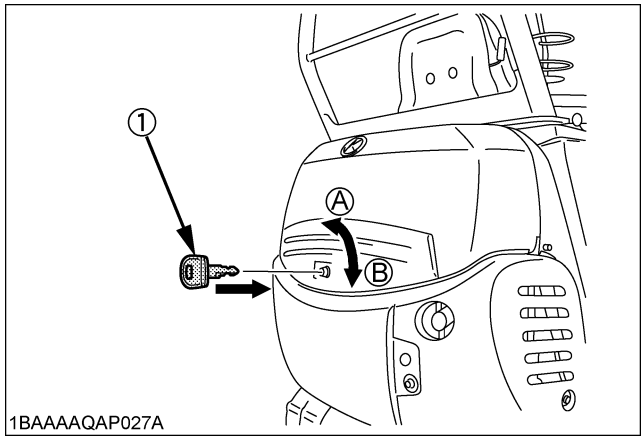


(1) Key
(A) "LOCK"
(B) "UNLOCK"

## ■Where to store the Grease Gun

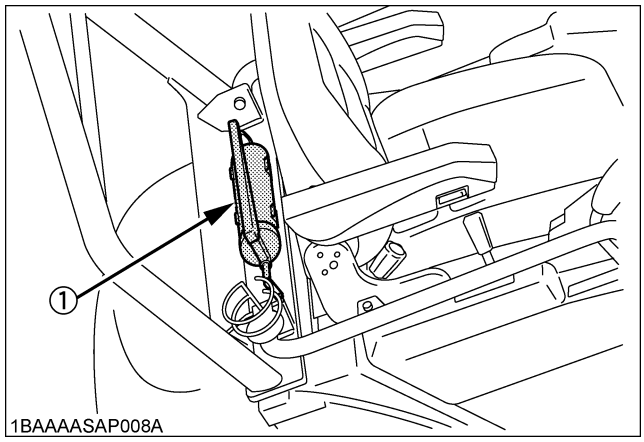


(1) Grease gun (Option)

## ■Where to keep Operators Manual

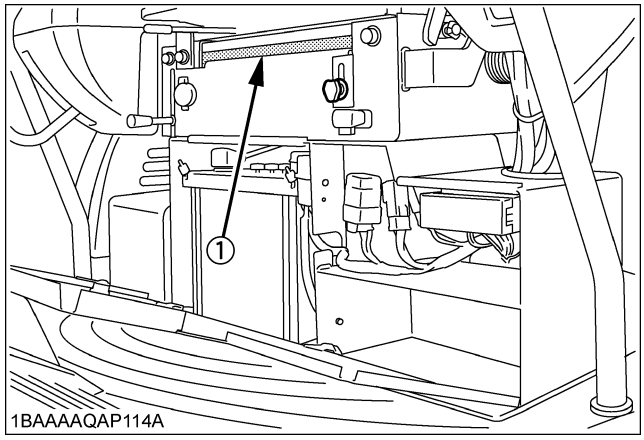


(1) Operator's manual storage

www.maskinisten.net
www.classicmachinery.net
https://truckmanualshub.com/


# DAILY CHECKS

For your own safety and to assure the long life of your machine, a careful check should be made before each operation.

## ■Checking Coolant Level

**CAUTION**

**To avoid personal injury:**

- **Move the excavator to even ground.**
- **Make sure that the engine is turned off.**
- **Do not open the radiator cap right after the engine has been stopped; Serious burns can occur from contact with escaping hot coolant fluid.**
- **Check the coolant level in the reserve tank only after the engine has cooled down.**
- **Remove the radiator cap only if absolutely necessary.**

1. Check to see that the coolant level is between the "FULL" and "LOW" marks of a reserve tank.
2. When the coolant level drops due to evaporation, add water only up to the full level.
   In case of leakage, add anti-freeze and water in the specified mixing ratio up to the full level.
   (See "Changing Radiator Coolant " in every 2 years maintenance.)

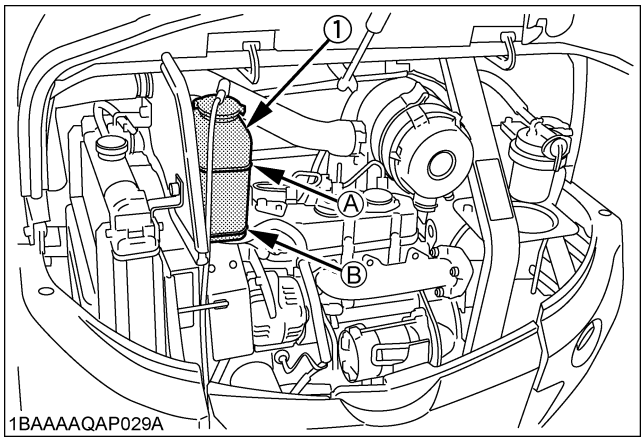


(1) Reserve tank
(A) "FULL"
(B) "LOW"

**IMPORTANT :**

- Do not fill the reserve tank over the "FULL" marking.
- Do not fill with dirty or salty water.

## ■Checking Fuel Level

**CAUTION**

**To avoid personal injury:**

- **Stop the engine and remove the key before fuelling.**
- **Do not smoke while fuelling.**

**IMPORTANT :**

- By temperatures over -5℃ (23℉), use No.2-D diesel fuel, when temperatures are under -5℃ (23℉), use No.1-D diesel fuel.
- Make sure that the fuel tank is not run empty. Air will enter the fuel system, and must be purged before restarting.
- See "PURGING OF THE FUEL SYSTEM" in "OTHER ADJUSTMENTS AND REPLACEMENTS"
- To prevent condensation (water) accumulations in the fuel tank, fill the fuel into the tank before parking overnight.

1. Check the fuel level by the fuel level indicator.

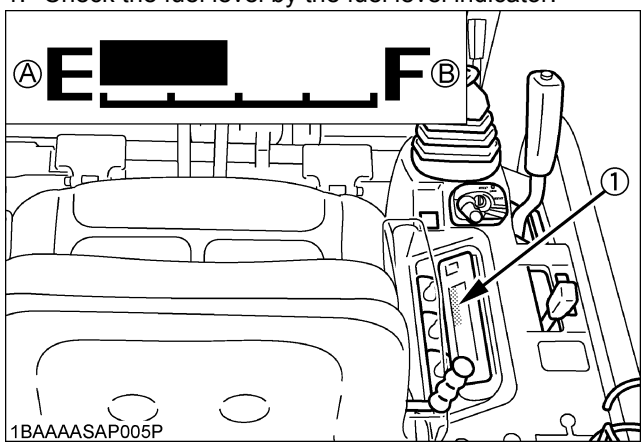


(1) Fuel gauge
(A) "EMPTY"
(B) "FULL"

www.maskinisten.net
www.classicmachinery.net
https://truckmanualshub.com/


2. Open the tank cap with the starter key, and add fuel.
- See "Opening and Closing of the Fuel Tank Cap" and see "LCD Display for Normal Operation".

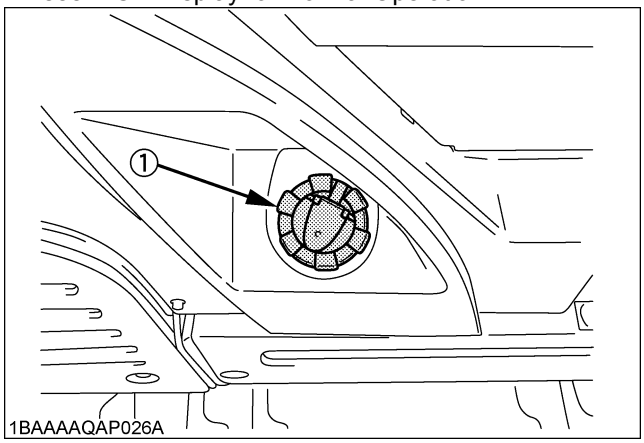


(1) Fuel tank cap

## ■Checking Engine Oil Level

**CAUTION**

**To avoid personal injury:**
- **Stop the engine and remove the key before checking the oil level.**

**IMPORTANT :**
- Use engine oil with the correct viscosity. (according to the outside temperature)
- After stopping the engine and remove the key, wait five minutes, then check oil level. (Excavator must be on level ground.)

Insert the engine oil dipstick fully into the respective port opening, remove again and check the oil level; if necessary fill with oil. The machine must be on level ground when checking the oil level.

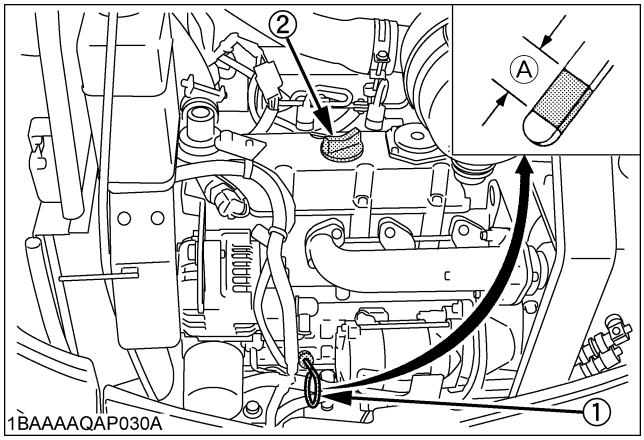


(1) Engine oil dipstick
(2) Filling port
(A) Oil level is acceptable within this range.

## ■Checking Hydraulic Oil Level

**CAUTION**

**To avoid personal injury:**
- **Stop the engine and remove the key before checking the oil level.**

**IMPORTANT :**
- Before filling oil, wipe away all sand and dust from around the oil port. Make sure to use an identical type of hydraulic fluid.
- The excavator has been filled with hydraulic fluid before delivery. See "RECOMMENDED OILS". (Do not mix different oils.)

1. Park the excavator on a firm, flat and level surface. Lower the attachments and dozer blade to the ground and stop the engine.

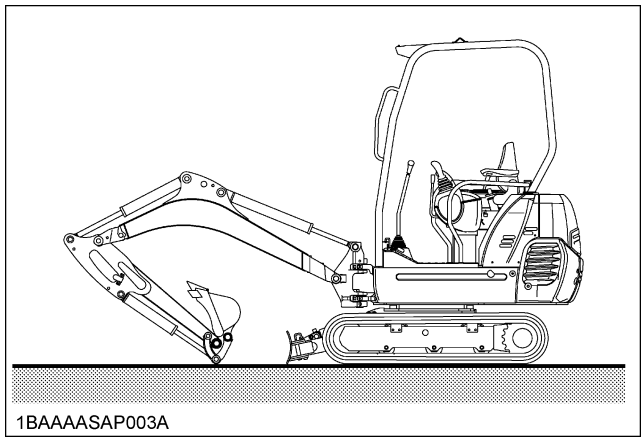


2. Check the oil level as to whether it lies on the center of the gauge at normal temperature (10 to 30℃ (50 to 80℉ )).
3. Enough oil is present if the oil level lies near the center of the gauge.
4. Should the oil level be too low, fill oil through the oil port before starting the engine. This step is important for the protection of the hydraulic system.

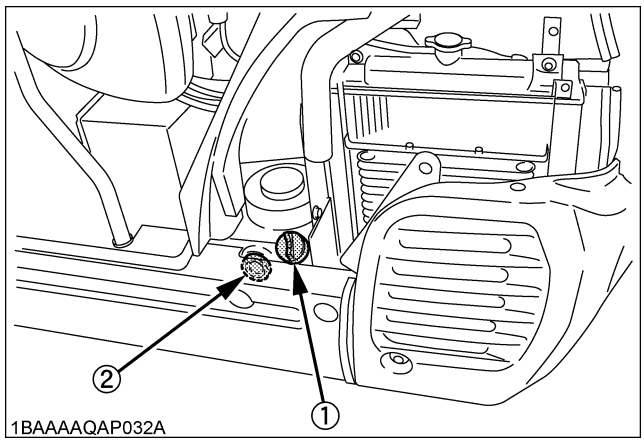


(1) Tank cap
(2) Gauge

www.maskinisten.net
www.classicmachinery.net
https://truckmanualshub.com/



## ■Lubrication Points

**CAUTION**

**To avoid personal injury:**

- **First lower all attachments to the ground then stop the engine and remove the key.**
- **While greasing, take caution not to step on the bucket teeth.**
- **When doing excavation work in water, generously grease the following points. After ending work, grease again.**

Grease the marked grease nipples shown by arrows in the illustration below.

| | | |
|---|---|---|
| 1. | Boom bottom linkage | 1 place |
| 2. | Arm bottom linkage | 1 place |
| 3. | Bucket link pin | 3 places |
| 4. | Boom cylinder boss | 2 places |
| 5. | Arm cylinder boss | 2 places |
| 6. | Bucket cylinder boss | 1 place |
| 7. | Fixing pin between arm and bucket | 1 place |
| 8. | Boom swing fulcrum | 1 place |
| 9. | Swing cylinder bottom | 1 place |
| 10. | Swing pin | 2 place |
| 11. | Dozer cylinder boss (or pin) | 2 places |
| 12. | Dozer linkage pin | 2 places |

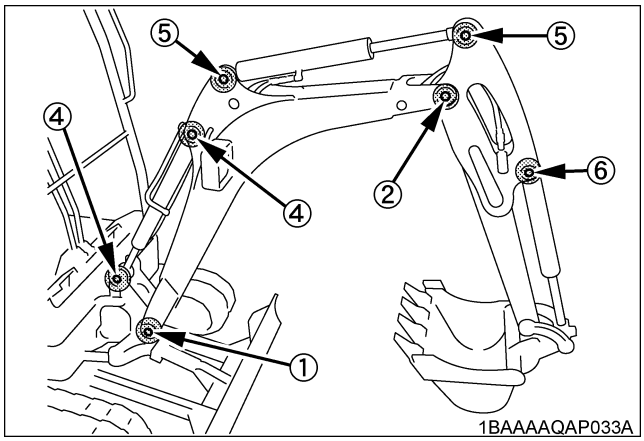

1BAAAAQAP033A

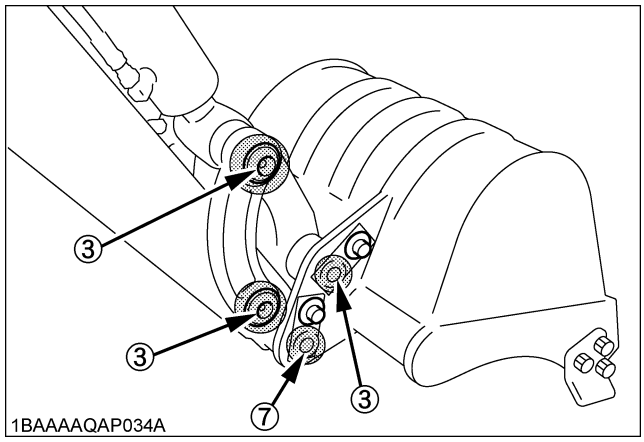

1BAAAAQAP034A

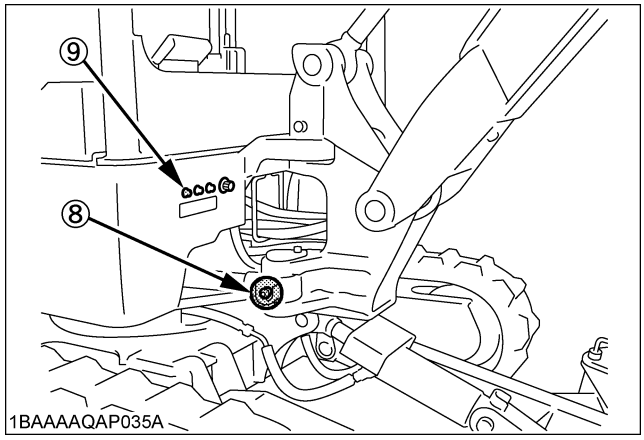

1BAAAAQAP035A

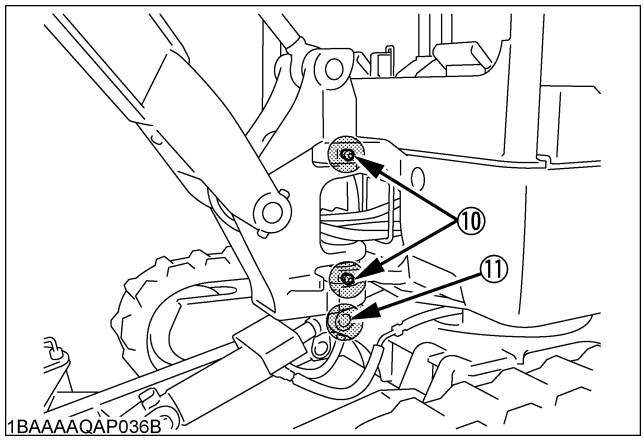

1BAAAAQAP036B

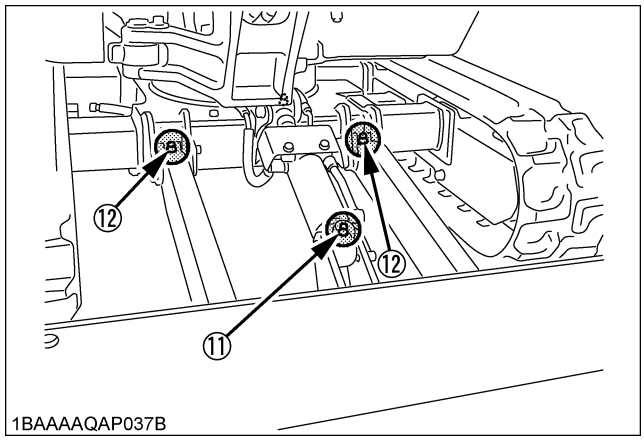

1BAAAAQAP037B

www.maskinisten.net
www.classicmachinery.net
https://truckmanualshub.com/


## ■Check Fan Belt

**CAUTION**

**To avoid personal injury:**

- **Stop the engine and remove the key before checking the fan belt.**
- **Check the fan belt for cracks and proper tension. (See "Checking Fan Belt Tension" in "REGULAR CHECKS AND MAINTENANCE WORK" section.)**

## ■Checking Radiator and Oil Cooler

**CAUTION**

**To avoid personal injury:**

- **Always stop the engine and remove the key before checking the radiator.**
- **Wear eye protection when cleaning with compressed air.**

1. Check if the fins and ribs are clogged.
   If so clean with compressed air or steam.
2. Check the rubber hoses for damage and replace if cracked or old. Check if the hose clamps are tight enough.

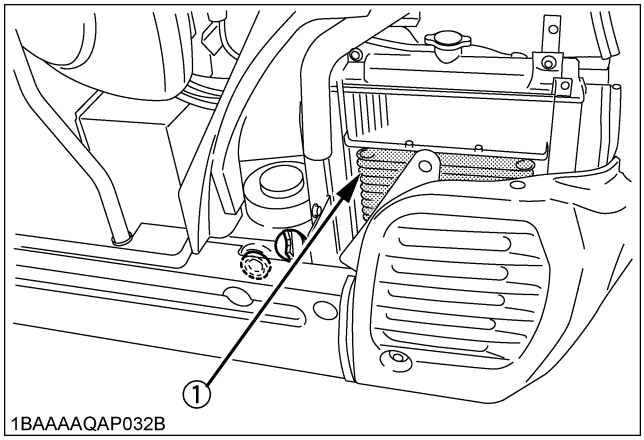


(1) Oil cooler

**IMPORTANT :**

- Radiator and oil cooler fins and ribs must be clean in order not to overheat the engine and allow free flow of air through the cooling elements.
- Pressure of compressed air must be under 205 kPa (2.1 kgf.cm$^2$).

## ■Checking and Cleaning Engine and Electrical Wiring

**CAUTION**

**To avoid personal injury:**

- **Always stop the engine and remove the key before cleaning the wiring, cables and engine.**

Before starting, check whether flammable substances have gathered on the battery, the cables and wiring, the muffler or on the engine. Remove thoroughly.
Check the electrical circuitry for disconnections, shorts or loose terminals.

## ■Washing Whole Machine

**IMPORTANT :**

- Do not wash the excavator with the engine running. Water could enter the air filter and damage the engine. Make sure that the air filter is kept dry.
- Remove the mud before washing the machine.

www.maskinisten.net
www.classicmachinery.net
https://truckmanualshub.com/


# REGULAR CHECKS AND MAINTENANCE WORK

## EVERY 50 SERVICE HOURS

### ■Draining Fuel Tank

**CAUTION**

**To avoid personal injury:**

- **Before draining the fuel tank, be sure to stop the engine and remove the key.**
- **Do not smoke during inspection.**

1. Remove the drain plug on the underside of the body and drain water.
2. Re-tighten the drain plug.

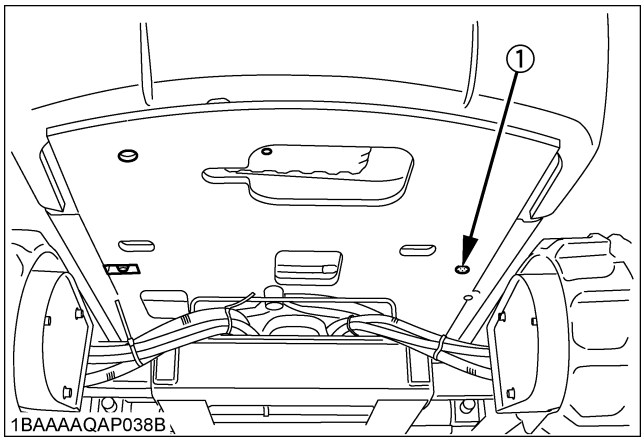


(1) Drain plug

### ■Draining Fuel Filter

1. Open the hood.
2. When the separated water is being drained, the red float moves upwards.
   When the float reaches the filter element, close the cock so that no fuel can run out. Now loosen the ring nut, and remove the cup and empty completely.
3. Clean carefully not to damage the filter element.
4. Finally, do not forget to open the cock and close the hood.

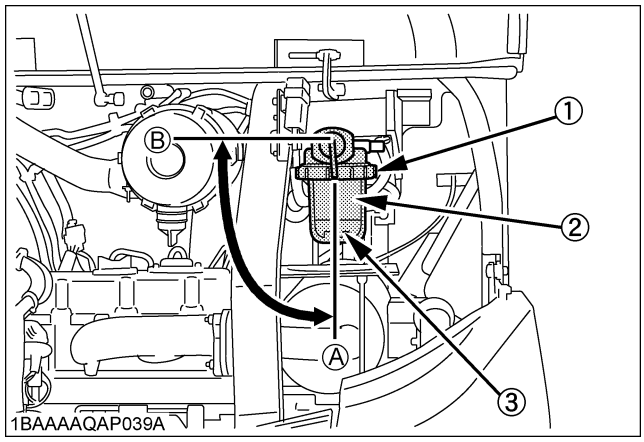


(1) Ring nut
(2) Filter element
(3) Float
(A) "Open"
(B) "Closed"

www.maskinisten.net
www.classicmachinery.net
https://truckmanualshub.com/


## ■Battery

**DANGER**

**To avoid the possibility of a battery explosion:**
**For refillable type battery, follow the instructions below.**

- **Do not use or charge the refillable type battery if the fluid level is below the LOWER (lower limit level) mark. Otherwise, the battery component parts may prematurely deteriorate, which may shorten the battery's service life or cause an explosion. Check the fluid level regularly and add distilled water as required so that the fluid level is between the UPPER and LOWER levels.**

**CAUTION**

**To avoid personal injury:**

- **Never remove the vent caps while the engine is running.**
- **Keep electrolyte away from eyes, hands and clothes. If you are spattered with it, wash it away completely with water immediately and get medical attention.**
- **Wear eye protection and rubber gloves when working around the battery.**
- **Before inspection or dismounting the battery, be sure to turn off the engine and turn the starter switch to the "OFF" position.**
- **When removing the battery, always disconnect the negative ground cable first. When installing a battery, always connect the ground cable last. This prevents a possible explosion caused by sparks.**
- **Always wear eye protection when working with the battery.**

1. Remove the battery from the storage and check the battery fluid level and add distilled water if necessary. Open the side cover, check the battery fluid level and add distilled water if necessary.
2. Clean the battery caps (ventilation holes) also.

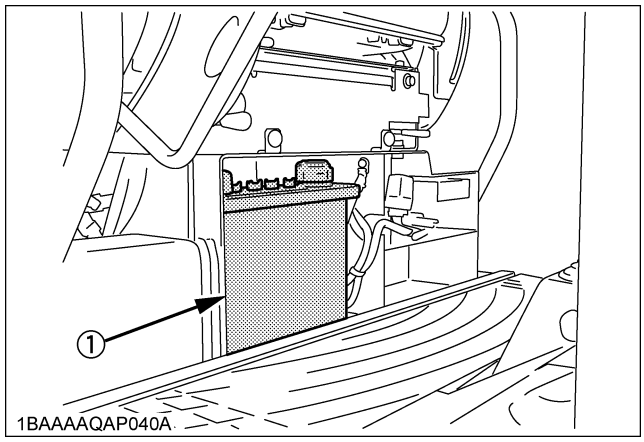


(1) Battery

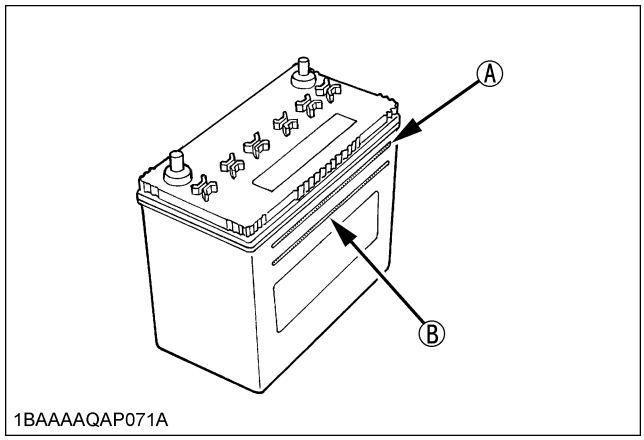


(A) "UPPER LEVEL"
(B) "LOWER LEVEL"

www.maskinisten.net
www.classicmachinery.net
https://truckmanualshub.com/


## ■Battery Charging

**CAUTION**

**To avoid personal injury:**

- **When the battery is being activated, hydrogen and oxygen gases in the battery are extremely explosive. Keep open sparks and flames away from the battery at all times, especially when charging the battery.**
- **When charging battery, make sure battery vent plugs are securely.**
- **When disconnecting the cable from the battery, start with the negative terminal first.**
  **When connecting the cable to the battery, start with the positive terminal first.**
- **Do not check battery charge by placing a metal object across the terminals.**
  **Use a voltmeter or hydrometer.**

1. Make sure each electrolyte level is to the bottom of vent wells. If necessary, add distilled water in a well-ventilated area.
2. The water in the electrolyte evaporates during recharging. Liquid shortage damages the battery. Excess liquid spillage damages the excavator.
3. To slow charge the battery, connect the battery positive terminal to the charge positive terminal and the negative to the negative, then recharge in the standard fashion.
4. A boost charge is only for emergencies. It will partially charge the battery at a high rate and in a short time.
   When using a boost-charged battery, it is necessary to recharge the battery as early as possible.
   Failure to do this will shorten the battery's service life.
5. When the specific gravity of electrolyte falls between 1.27 and 1.29 charge has completed.
6. When exchanging an old battery for a new one, use a battery of equal specification.

## ■Greasing Swing Bearing Teeth

1. Pump grease with grease gun through the grease nipple (at the right end side).
2. Grease at each 90° (1.58 rad.) position of the swing frame.
3. Fill with approx. 50g of grease (approx. 20 to 30 pumps with the grease gun at each position).

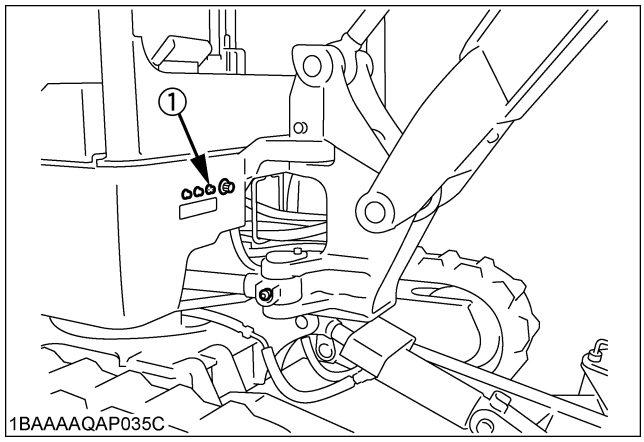


(1) Grease nipple

www.maskinisten.net
www.classicmachinery.net
https://truckmanualshub.com/


# EVERY 200 SERVICE HOURS

Do all 50-hour servicing at the same time.

## ■Checking Fan Belt Tension

◆ **Check and adjustment of the fan belt tension**

**CAUTION**

**To avoid personal injury:**

- **First stop the engine and remove the key.**
- **After servicing, make sure to replace the belt cover in its original position.**

1. Press the fan belt down in the middle, with a force of approx. 10kg. The belt tension is correct if it deflects about 8mm. If otherwise, loosen bolt (1) shift the alternator (2) in the direction shown by the arrow.
2. Replace the fan belt if worn out, cracked or torn.

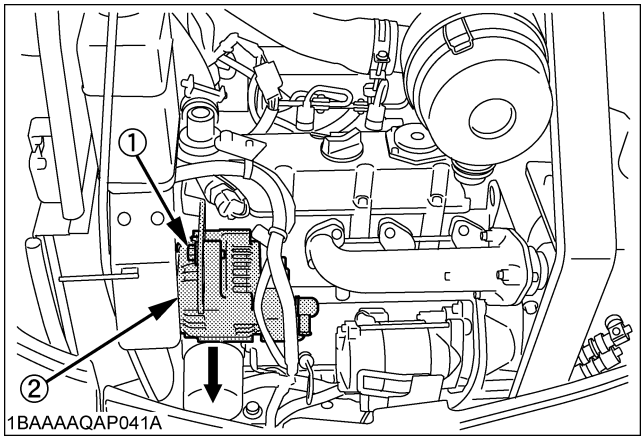


(1) Bolt
(2) Alternator

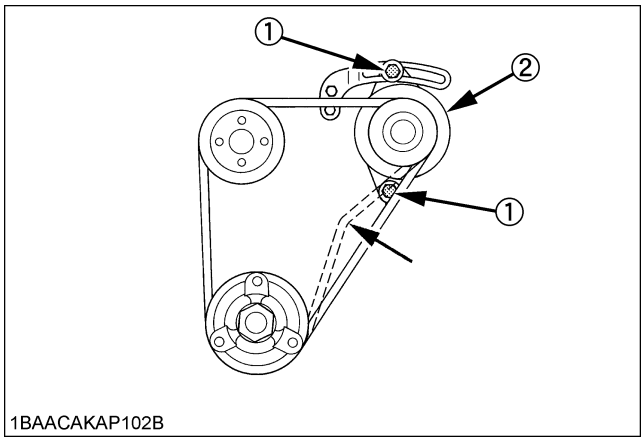


(1) Bolt
(2) Alternator

**IMPORTANT :**

- If the engine is run with a loose fan belt, the belt could slip and cause overheating of the engine or insufficient battery charging. Check fan belt tension regularly.
- Should the fan belt break or jump off, the indicator light for battery charge will light up. Stop the engine and remove the key immediately.

## ■Checking Radiator Hoses and Clamps

**CAUTION**

**To avoid personal injury:**

- **Wait long enough for the radiator coolant to cool down.**

Check the water hoses for proper connection. This check should be carried out every 200 hours or every 6 months, whichever comes first.

1. Should the hose clamps become loose or water leaks, tighten the hose clamps properly.
2. Should the radiator hoses become swollen, aged or cracked, they must be replaced and the hose clamps tightened again properly.

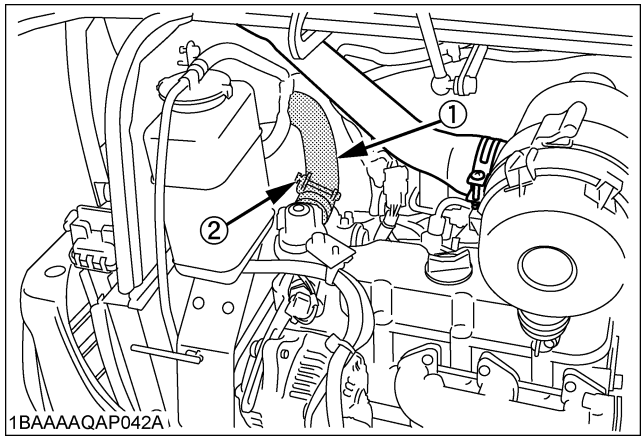


(1) Radiator hoses (2) Hose clamps

www.maskinisten.net
www.classicmachinery.net
https://truckmanualshub.com/


## ■Inspection and Cleaning Air Filter Element

Open the engine cover and remove the dust cover. Take out only outer element, clean the element, case interior and reassemble. During reassembly, take care to install the dust cover with facing the TOP mark upwards. Do not remove the inner element (safety element).

**IMPORTANT :**
- Should the machine be used in extreme dusty areas, the air filter element must be inspected and cleaned more frequently than in the specified maintenance periods.
- The air filter has a dry element, keep free from oil.
- Do not run the engine without the air filter.

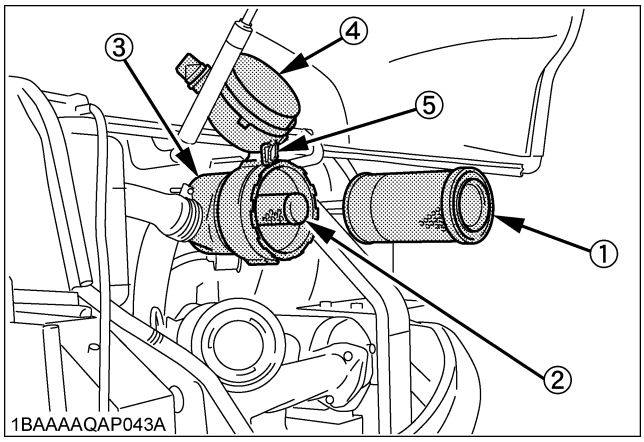


(1) Outer element
(2) Inner element (safety element)
(3) Case
(4) Dust cover
(5) Clamps

## ■Air Filter Maintenance

**CAUTION**
**To avoid personal injury:**
- **Wear eye protection.**

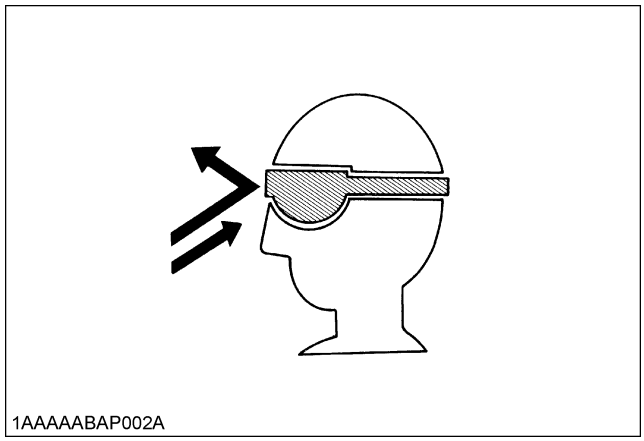


The quickest and safest method of maintenance is the exchange of the paper cartridge. Furthermore there are different methods of cleaning the cartridge.

### ◆ Cleaning with compressed air

Pressure of compressed air must be under 205 kPa (2.1 kgf/cm$^2$), and the cartridge should be blown clean from the inside to the outside until the dust deposits are noticeably reduced.

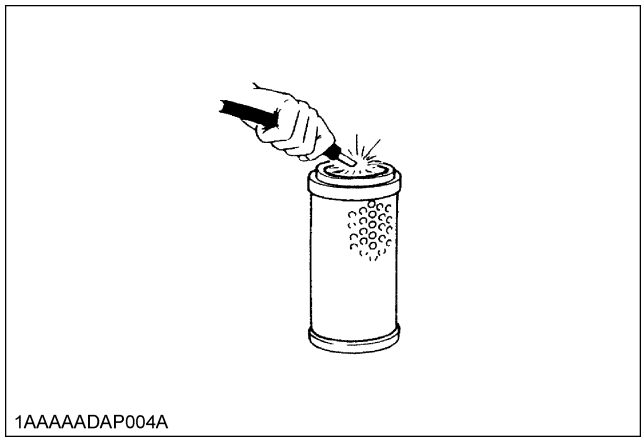


**IMPORTANT :**
- If the air suction is still inadequate, or the color of the exhaust gases is abnormal even after the cleaning, the air filter cartridge must be replaced.

www.maskinisten.net
www.classicmachinery.net
https://truckmanualshub.com/


## ■Greasing Swing Bearing

1. Fill with grease through the respective grease nipple.
2. Grease at each 90° (1.58 rad.) position of the swing frame.

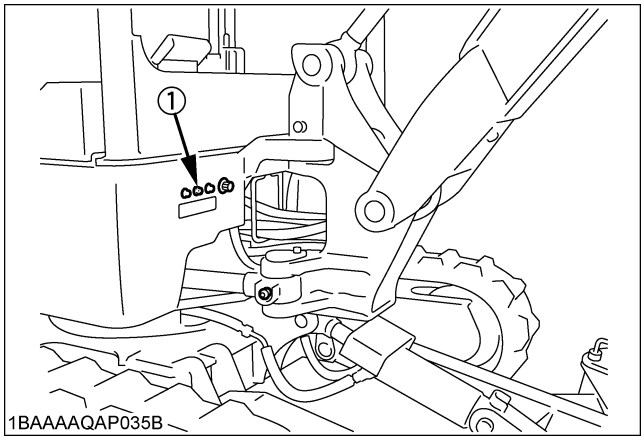


(1) Grease nipple

## ■Checking Fuel Line and Intake Air Line

1. Check to see that all lines and hose clamps are tightened and not damaged.
2. If hoses and clamps are found worn or damaged, replace or repair them at once.

# EVERY 250 SERVICE HOURS

Do all 50 hour servicing at the same time.

## ■Changing Engine Oil(First Engine Oil Change after 50 Service Hours)

**CAUTION**

**To avoid personal injury:**

- **First stop the engine then remove the key and wait long enough for the oil to cool down.**

1. Remove the drain plug on the underside of the engine and drain all oil.
2. Re-tighten the drain plug.

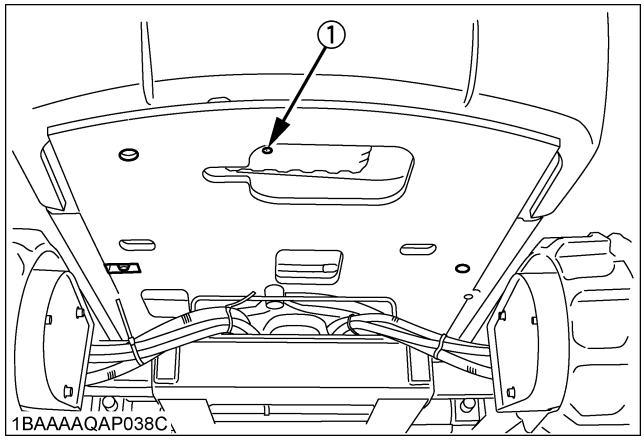


(1) Drain plug

3. Fill through the filling port up the specified level.

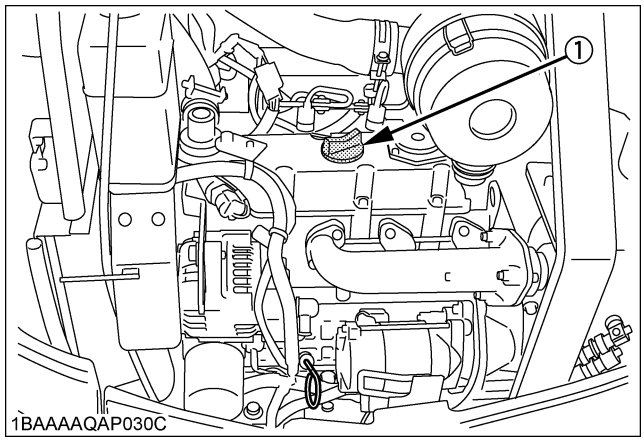


(1) Oil filling port

4. Let the engine idle for approx. 5 min. Check the engine oil level. To check the engine oil level, insert the engine oil dipstick completely into the respective port opening and pull out again. If the oil level lies between both markings, no oil must be added.

www.maskinisten.net
www.classicmachinery.net
https://truckmanualshub.com/


**IMPORTANT :**
- Regardless of the service hours, an engine oil change is due every six months.

## ■Replacing Engine Oil Filter

1. Replace the oil filter cartridge at the same time as doing the engine oil change.
2. Remove the cartridge with the supplied filter wrench.

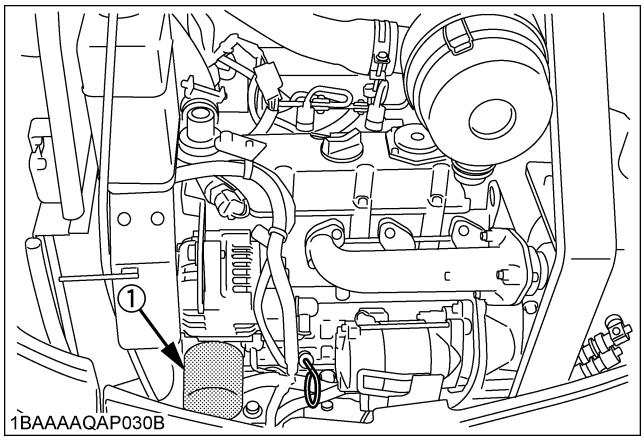


(1) Oil filter

3. Oil the O-ring of the new oil filter cartridge lightly. Then tighten the oil filter cartridge by hand.
4. Fill engine oil to the specified level.
5. Let the engine run for approx. 5 min. and make sure that the engine oil indicator lamp does not light up. Then stop the engine and remove the key.
6. The engine oil level is reduced by the amount of the filter capacity after the engine is started. It is necessary to add oil.

**IMPORTANT :**
- Always check the oil level after having exchanged the filter.

| | |
|---|---|
| Engine oil volumes (with engine oil filter) | 3.6L |

# EVERY 500 SERVICE HOURS

Do all 50 and 250 hour servicing at the same time.

## ■Drive unit Oil Change(First Oil Change at 100 hours)

**CAUTION**

**To avoid personal injury:**
- **Lower to the ground, stop the engine and remove the key before undertaking the oil change.**

1. Rotate the track so that the drain plug of the drive unit is in the bottom position.
2. Remove the drain plug to let the oil run out. Screw in and tighten the drain plug again and fill with gear oil through the oil check port.
3. Fill oil until it overflows out of the oil check port.

**Oil change**
- first oil change after 100 hrs
- then every 500 hrs
- or at least once a year

4. Use prescribed gear oil SAE 90.

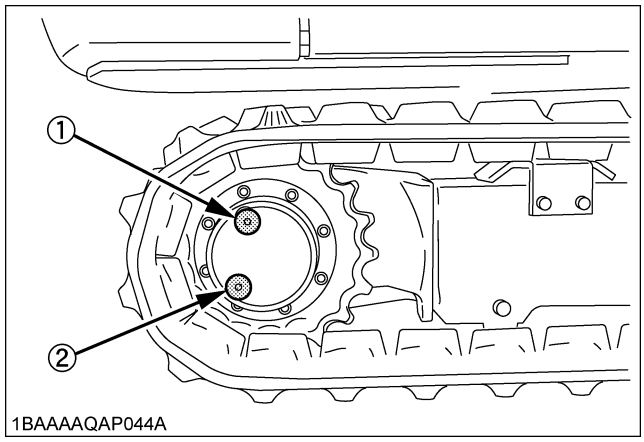


(1) Drain plug
(2) Oil filling port

| | |
|---|---|
| Gear oil volume | approx. 0.25L |

www.maskinisten.net
www.classicmachinery.net
https://truckmanualshub.com/


## ■Replacing Fuel Filter Element

**CAUTION**

**To avoid personal injury:**

- **Keep fire away.**

1. Close the cock of the fuel filter. Remove the filter with the supplied filter wrench.
2. Apply a light film of fuel to the seal of the new filter and turn in tightly by hand.
3. Open the cock of the fuel filter again.

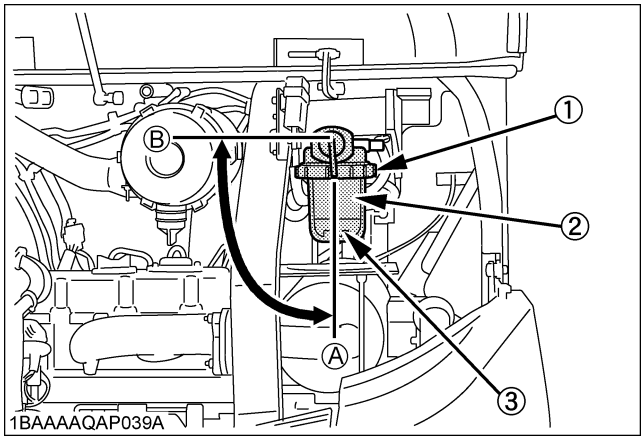


(1) Ring nut (3) Float (A) "Open"
(2) Filter element (B) "Closed"

**IMPORTANT :**

- After exchange of the filter, the fuel system must be purged of air.

## ■Replacing Hydraulic Return Filter Element(first replacement after 250 service hours)

**CAUTION**

**To avoid personal injury:**

- **Remove the oil filter only after the oil in the hydraulic tank has cooled down.**

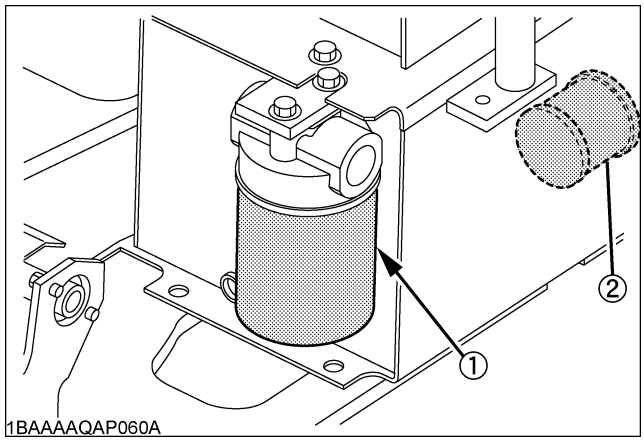


(1) Return filter cartridge
(2) Suction filter

1. Replace the oil filter cartridge at the same time as doing the hydraulic oil change.
2. Remove the cartridge with the supplied filter wrench.
3. Oil the O-ring of the new oil filter cartridge lightly. Then tighten the oil filter cartridge by hand.
4. Fill hydraulic oil to the specified level.

**IMPORTANT :**

- Always check the oil level when replacing the filter.

www.maskinisten.net
www.classicmachinery.net
https://truckmanualshub.com/


# EVERY 1000 SERVICE HOURS

Do all 50, 200, 250 and 500 hour servicing at the same time.

## ■Hydraulic Oil Check for Machines with Hydraulic Breakers

The hydraulic oil change after 1000 operating hours in the operator's manual is based on the type of work done. Following inspection measures are valid when hydraulic breakers are used:

1. Changing and filling up of hydraulic oil
   (1) The hydraulic oil must be changed more often when breakers are used because the machine is subject to harder conditions than normal excavating work.
   (2) Use only the recommended oils mentioned in the operator's manual when changing or filling with oil.
   (3) When filling up oil, never mix oils of different makes.
2. Changing the return filter and oil
   (1) The filter must be changed more often because of contamination resulting from the frequent assembly and disassembly of the hoses.
   (2) Use the correct replacement filter.
   (3) Oil change according to operating hours.

| | | Hydraulic oil | Return Filter | Suction Filter |
|---|---|---|---|---|
| Normal excavator work | | every 1000 Hrs. | 500Hrs. (250Hrs. after first operation | 1000 Hrs. |
| Breaker work portion | 20% | evry 800 Hrs. | 300 Hrs. | |
| | 40% | evry 400 Hrs. | | |
| | 60% | evry 300 Hrs. | 100 Hrs. | |
| | More than 80% | evry 200 Hrs. | | |

## ■Hydraulic Oil Change(Including Replacing Suction Filter in Hydraulic Tank)

**CAUTION**

**To avoid personal injury:**

- **Wait long enough for the hydraulic fluid to cool down. Then begin with the change of the hydraulic fluid.**

1. Park the excavator on a firm, flat and level surface. Lower the attachments and dozer blade to the ground and stop the engine.

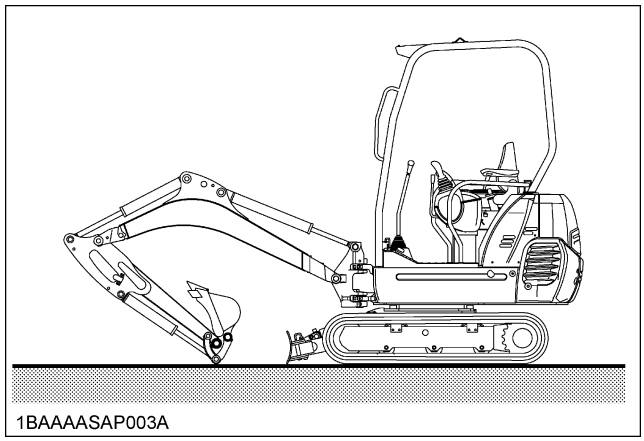
1BAAAASAP003A

2. Remove the drain plug on the underside of the hydraulic tank and drain the oil.

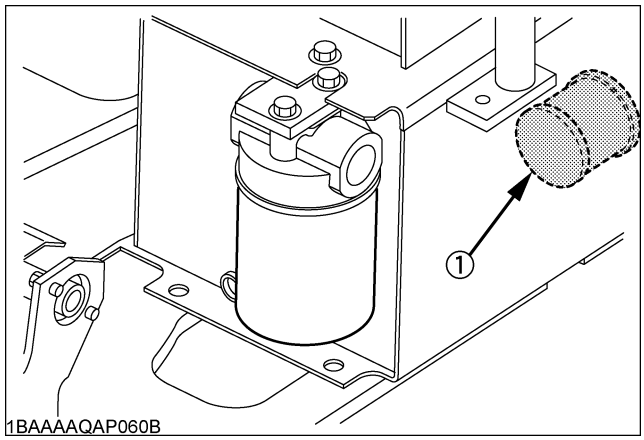

1BAAAAQAP060B

(1) Suction filter

www.maskinisten.net
www.classicmachinery.net
https://truckmanualshub.com/


3. Remove the cover of the hydraulic tank
4. With a fork wrench or similar, remove and replace the filter with new one.
5. Retighten the drain plug, and remove iron powder adhering to the magnet.
6. Fill oil through the oil filling opening on the top side of the tank.
7. Let the engine run for approx. 5 min. and check the oil level again.

**IMPORTANT :**
- Should dirt deposits be in the hydraulic tank, remove with the help of a clean cloth and light oil.

| | | |
|---|---|---|
| Hydraulic oil volumes | Hydraulic tank | 14L |
| | Whole oil volumes | 27L |

# EVERY 1000 SERVICE HOURS OR ONCE A YEAR

## ■Replacing Air Filter Element

Open the engine cover and remove the dust cover.
Take out outer element and inner element (safety element).
Replace inner and outer element.
Installing the dust cover, be sure to its TOP mark (arrow) faces upwards.

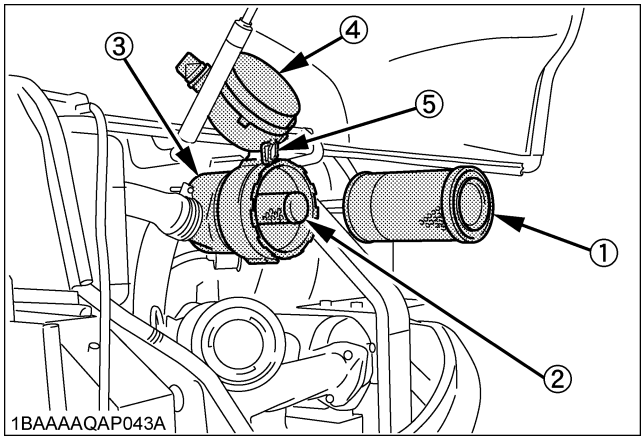


(1) Outer element
(2) Inner element (Safety element)
(3) Case
(4) Dust cover
(5) Clamps

**IMPORTANT :**
- Shorten the replacement period if using in a place exposed to lots of dust or sandy areas.

# EVERY 1500 SERVICE HOURS

## ■Checking Fuel Injection Nozzle(Injection Pressure)

Consult your local KUBOTA Dealer for this service.

# EVERY 2000 SERVICE HOURS

Do all 50, 200, 250, 500 and 1000 hour servicing at the same time.

## ■Changing Front Idler and Track Roller Oil

**NOTE :**
- Contact your KUBOTA dealer for details.

## ■Checking Alternator and Starter Motor

**NOTE :**
- Contact your KUBOTA dealer for details.

# EVERY 3000 SERVICE HOURS

## ■Checking Injection Pump

Consult your local KUBOTA Dealer for this service.

# ANNUAL SERVICE

## ■Electrical Wiring and Fuses

Check the terminals periodically for proper connections. Loose wiring or damaged cables can cause improper functioning or short circuiting of the electrical system. Check wiring and replace damaged components immediately. If a fuse blows out soon after having been replaced, contact your nearest KUBOTA dealer. Do not use a fuse other than specified.

# BIENNIAL SERVICING

**CAUTION**

**To avoid personal injury:**
- **Do not loosen the radiator cap before the radiator has cooled down sufficiently. Then only loosen the cap and allow enough time for the pressure in the system to be released. Now remove the cap completely.**

www.maskinisten.net
www.classicmachinery.net
https://truckmanualshub.com/


## ■Replacing of Radiator Hoses

Replace radiator hoses and hose clamps every two years. If the hoses are swollen, hard or cracked, they must be replaced earlier.

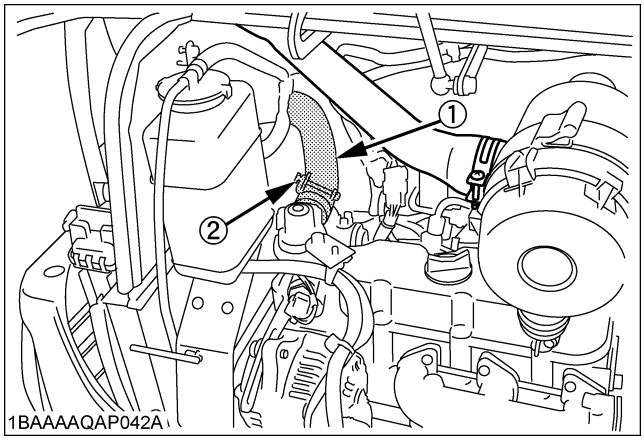


(1) Radiator hoses
(2) Hose clamps

## ■Changing Radiator Coolant

**CAUTION**

**To avoid personal injury:**

- **When using anti-freeze, put on some protection such as rubber gloves (Anti-freeze contains poison.).**
- **If anti-freeze has been swallowed, seek medical attention at once.**
- **When anti-freeze comes in contact with the skin or clothing, wash it off immediately.**
- **Do not mix different types of Anti-freeze. The mixture can produce chemical reaction causing harmful substances.**
- **Anti-freeze is extremely flammable and explosive under certain conditions. Keep fire and children away from anti-freeze.**
- **When draining fluids from the engine, place some container underneath the engine body.**
- **Do not pour waste onto the grounds, down a drain, or into any water source.**
- **Also, observe the relevant environmental protection regulations when disposing of anti-freeze.**
- **Anti-freeze if swallowed is poison to people, animals and birds.**

Stop the engine then remove the key and wait until it has cooled down completely.

1. Open the drain plug on the bottom of the radiator and drain coolant completely, Should a reserve tank be equipped, disconnect the line from the tank floor and then open the drain cock.
2. To clean, rinse the radiator with water.
3. Close the drain plug and fill the radiator and the reserve tank with coolant fluid. Let the engine idle for about 5 min., stop the engine and remove the key then check the coolant level.
4. The machine has been shipped filled with 50% anti-freeze solution.

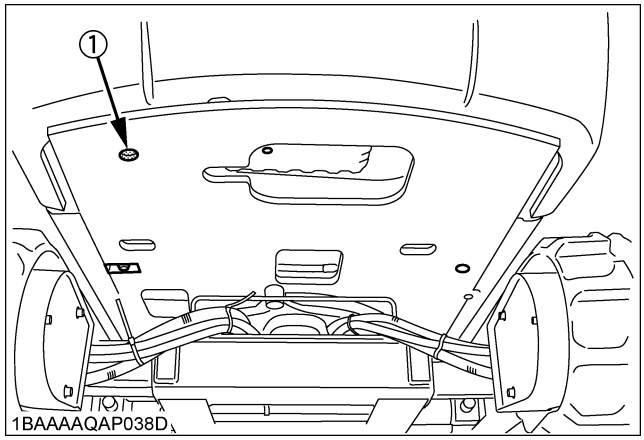


(1) Drain plug

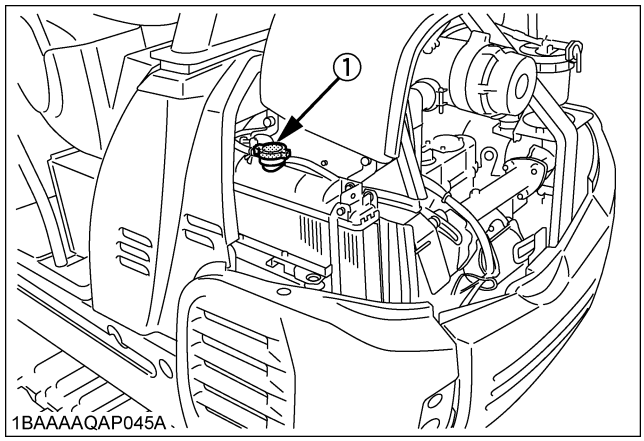


(1) Radiator cap

www.maskinisten.net
www.classicmachinery.net
https://truckmanualshub.com/


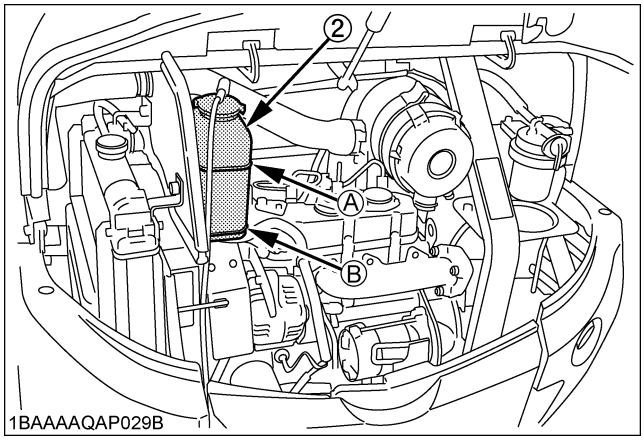


(2) Reserve tank

(A) Full
(B) Low

| | |
|---|---|
| Radiator | approx. 2.7 L |
| Reserve tank | approx. 0.56 L |

**IMPORTANT :**
- Do not operate the engine without coolant.
- To fill the radiator system and the reserve tank, use fresh water and anti-freeze fluid.
- When the anti-freeze is mixed with water, the anti-freeze mixing ratio must be less than 50%
- Tighten the radiator cap properly. If the cap is loosely or not properly fitted, overheating of the engine can result due to coolant fluid loss.

## ■Replacing Fuel Hose

Replace the hoses and clamps.
(See "Checking Fuel and Intake Air Line" every 200 hours maintenance.)

## ■Replacing Intake Air line

Replace the hoses and clamps, if necessary.
(See "Checking Fuel and Intake Air Line" every 200 hours maintenance.)

www.maskinisten.net
www.classicmachinery.net
https://truckmanualshub.com/


# OTHER ADJUSTMENTS AND REPLACEMENTS

## PURGING FUEL SYSTEM

1. Fill up the excavator with fuel.
2. Turn the starter key to the position "RUN".
3. The air in the fuel system will automatically be purged within one minute.

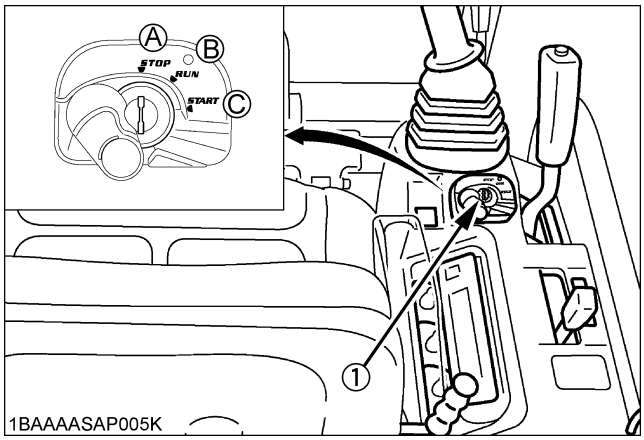


(1) Starter switch

(A) "STOP"
(B) "RUN"
(C) "START"

**IMPORTANT :**

- If the purging was insufficient, the engine dies right after starting. In this case repeat steps (2) to (3) again.

## ADJUSTMENT OF TRACKS

### ■Rubber Tracks

Tension the tracks as specified:

1. Apply grease (2) to the grease nipple (1).

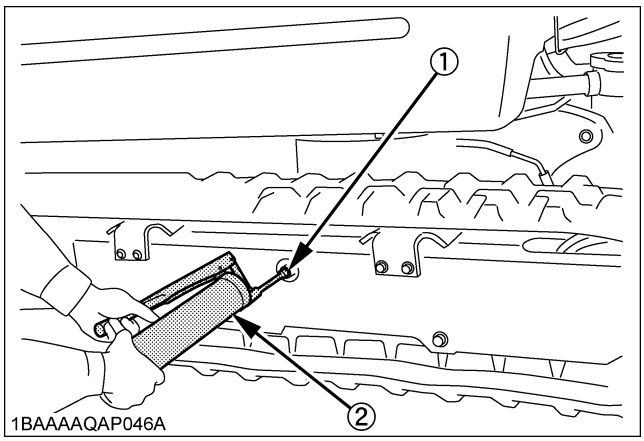


(1) Grease nipple
(2) Grease gun (Option)

2. Tension the track in the lifted position, so that the distance "A" (clearance between the center track roller and the track surface of the track) is 10 to 15 mm (0.4 to 0.6 in.) (see illustration) In this case, the track seam is positioned on the top center between the idler and the sprocket.

**DANGER**

**To avoid serious injury or death:**

- **Do not work under the machine in this condition.**
- **For your safety do not rely on hydraulically supported devices, they may leak down and suddenly drop or be accidentally lowered.**

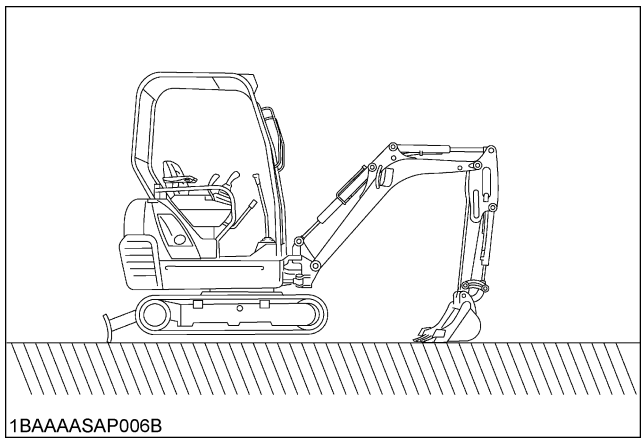


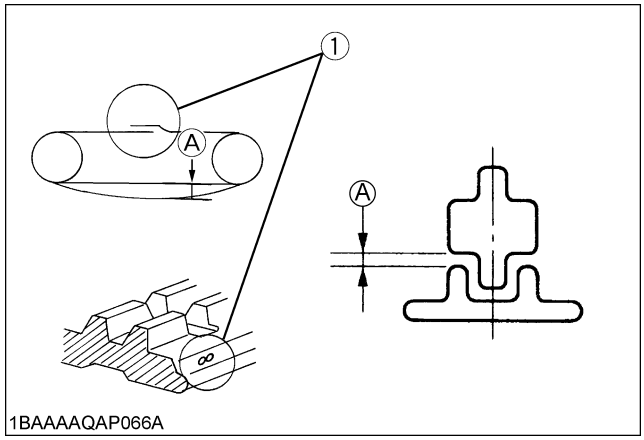


(1) Seam (Mark "∞")

| | |
|---|---|
| (A) | 10 to 15 mm |

www.maskinisten.net
www.classicmachinery.net
https://truckmanualshub.com/


**IMPORTANT :**

- Track seam
  The ends of the rubber track are joined with a seam. When adjusting the tracks, the seam must be positioned on the top midway between the idler and the sprocket. By machines equipped with an upper roller, the seam mark should be positioned over the upper roller.
  If the seam is positioned incorrectly, the tracks will be tensioned to loosely, and a further readjustment will be necessary.
- Rotate the track after adjustment one to two times to check the tension. To loosen the rubber tracks, follow the same method as for steel tracks.

- Additionally following points are to be observed when adjusting rubber tracks.
  (1) If the track loosen more than 25 mm, readjust them.
  (2) Check track tension 30 hours after initial use and readjust if necessary. Check and adjust thereafter every 50 service hours.

### ■Special Information when Using Rubber Tracks

1. When turning, make a slow swing turn. Avoid spin turns to reduce lug wear and entry of dirt.
2. The relief valve may be activated if too much dirt and sand clog the tracks. In this case move the machine for a short distance straight backwards to let the earth and sand fall off, then a turn can be made.
3. Avoid using rubber track on riverbeds, stony underground, ferro-concrete and on iron plates. The rubber can damage as well as increase wear on the tracks.

◆ **To loosen the tracks, follow following procedure:**

**CAUTION**

**To avoid personal injury:**

- **Do not loosen the grease nipple completely or too quickly. Otherwise grease under high pressure in the tension cylinder could squirt out.**
- **Make sure that no obstacles, such as stones are caught in the track. Remove such obstacles before adjusting the track tension.**

1. Loosen the bolt of the cover and remove the cover.
2. Using a socket wrench, loosen the grease nipple a few turns.
3. When grease oozes out from the thread, rotate the track and loosen the track in the lifted position (see illustration).

**After adjustment is completed:**

Using the socket wrench, tighten the grease nipple.

Tightening torque must be between 1000 to 1100 kgf-cm

**IMPORTANT :**

- If the tracks are too tight, wear is increased.
- If the tracks are too loose, the track pads may collide with the sprocket, wear is increased.
  The track may dislocate or come off.
- Clean the track after every use.
- Should the track tension be high due to sticking mud, lift the track with the help of the boom, arm and bucket, idle the engine and remove mud from the track, especially from the openings of the link plate carefully.

## CHANGING THE BUCKET

**CAUTION**

**To avoid personal injury:**

- **When the coupling pins are removed or installed, chips may come off. Always use gloves, goggles and a helmet.**
- **When the change of the equipment must be performed with the engine running, always work as a 2-person team.**
  **One person sits in the operator's seat and the other works on the machine.**
- **Do not use your fingers to center the holes, since they may be injured or even cut in case of sudden or uncontrolled movements.**
- **Read the manual of the attachment to do a correct operation safely when other attachments are installed instead of Kubota specified bucket.**

www.maskinisten.net
www.classicmachinery.net
https://truckmanualshub.com/


# FUSES

**CAUTION**

**To avoid personal injury:**

- **When changing fuse, stop the engine and turn the key in position "STOP".**

## ■Replacing Fuses

1. Remove the cover of the fuse box.
2. Replace the burnt out fuse with a fuse having the same capacity.

## ■Fuse Capacities and Circuits

<table>
<tr><td colspan="2">5A Glow<br>10A Main</td><td colspan="2">10A High speed</td></tr>
<tr><td colspan="2">5A ROOM LIGHT</td><td rowspan="7">Spare<br><br>5A<br><br>10A</td><td>15A AUXILIARY</td></tr>
<tr><td colspan="2">20A WORK LAMP</td><td>10A WIPER/WASHER</td></tr>
<tr><td colspan="2">5A METER SUB</td><td>15A P.SOURCE/<br>BEACON</td></tr>
<tr><td colspan="2"></td><td></td></tr>
<tr><td colspan="2"></td><td></td></tr>
<tr><td colspan="2"></td><td></td></tr>
<tr><td colspan="2"></td><td></td></tr>
<tr><td colspan="2">10A ALTERNATOR</td><td colspan="2">5A HI SPEED</td></tr>
<tr><td colspan="2">5A LEVER LOCK</td><td colspan="2">5A WORK LAMP</td></tr>
<tr><td colspan="2">10A HORN</td><td colspan="2">10A METER MAIN</td></tr>
</table>

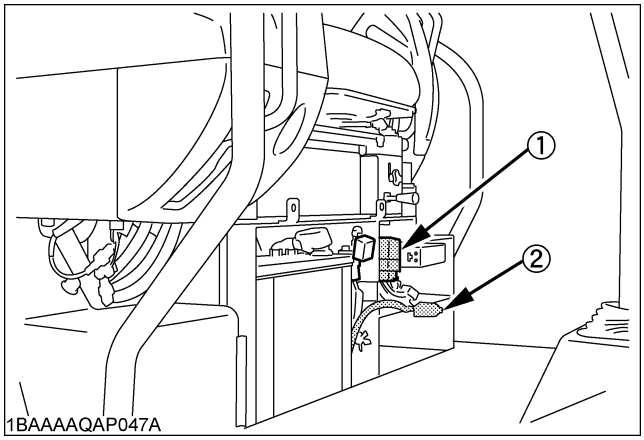


(1) Fuse box
(2) Auxiliary electric

## ■Auxiliary Electric

Max power is less than 120 W including the "Beacon" (Auxiliary electric).

## ■Slow Blow Fuse

Slow blow fuse is provided to protect the electrical circuits. If the fusible link is blown, check the electrical circuits for trouble and then replace with a new compatible slow blow fuse.

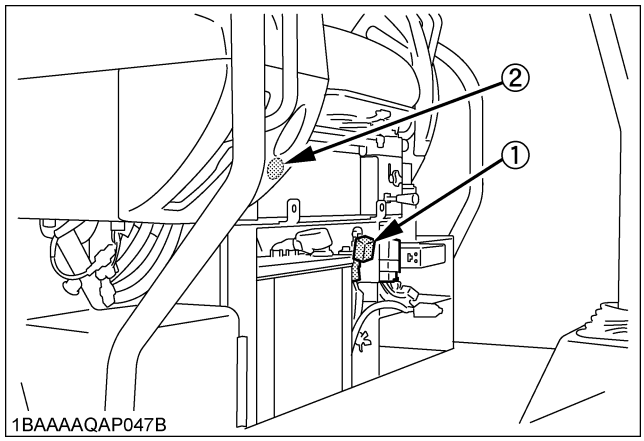


(1) Slow blow fuse (50 A)
(2) Auxiliary electric

**NOTE :**

- If the machine keeps idling on the reserve power, the battery gets discharged. Raise the engine rpm.

www.maskinisten.net
www.classicmachinery.net
https://truckmanualshub.com/


# TROUBLESHOOTING

If the mini-excavator does not show the desired performance, or when trouble arises, refer to the table below and undertake appropriate measures.

| Trouble | | Cause | Countermeasure |
|---|---|---|---|
| Engine | Starting difficulties | Lock levers in "UNLOCK" position | * Bring lock lever into "LOCK" position |
| | | Fuel is too viscous | * Check fuel tank and filter<br>* Remove impurities and water<br>* If necessary, replace filter |
| | | Air or water in the fuel system | * Remove water from the fuel tank<br>* Check fuel pipe joint bolts and nuts for looseness<br>* Purging of the fuel system (for fuel filter and injection pump see "PURGING OF THE FUEL SYSTEM" in the chapter "OTHER ADJUSTMENTS AND REPLACEMENTS".) |
| | | Oil viscosity is too high the engine runs sluggishly in winter | * Pour hot water over the radiator<br>* Use oils of different viscosities depending on the ambient temperature. (Use SAE10W, SAE10W-30 or SAE10W-40) |
| | | Battery is almost dead; insufficient compression | * Recharge battery |
| | Insufficient engine power | Low fuel level | * Check fuel and add if necessary |
| | | Clogged air cleaner | * Clean the air filter element |
| | Engine suddenly stops | Low fuel level | * Check fuel and add if necessary<br>* Purge the fuel system |
| | Abnormal exhaust gas colour | Poor fuel | * Use high quality fuel |
| | | Too much engine oil | * Drain engine oil to prescribed oil level |
| | Water temperature in red zone (Overheating) | Defective seal of the water pump | * Replace |
| | | Worn or torn fan belt | * Adjust or replace |
| | | Thermostat is defect | * Replace |
| | | Coolant level too low | * Fill to prescribed level |
| | | Radiator grill or fins are clogged | * Clean |
| | | Coolant is contaminated with rust from the cylinder head or crank case | * Replace coolant fluid and add anti-rust |
| | | Defective radiator cap (Evaporation) | * Replace |
| | | Corroded coolant pipes | * Clean |
| | | Continuous operation under full load | * Reduce load |
| | | Cylinder head gasket is damaged (Coolant loss) | * Replace |
| | | Engine oil level too low | * Fill to prescribed level |
| | | Maladjustment of fuel injection | * Readjust ignition timing |
| | | Use of poor fuel | * Use prescribed fuel |

www.maskinisten.net
www.classicmachinery.net

https://truckmanualshub.com/



| | | | |
|---|---|---|---|
| Hydraulic System | Boom, arm, bucket, drive, swing and dozer power is too low | Hydraulic oil level too low | * Add oil |
| | | Leakages of hoses and / or joints | *Replace hose or joint |
| | Swing motor and front attachment does not work | Lock lever in "LOCK" position | *Bring lock lever into "UNLOCK" position |
| Drive System | Deviation of drive direction | Blocked through stones | * Remove |
| | | Track too loose or too tight | * Adjust accordingly |
| | Drive lever does not move | Lock lever in "LOCK" position | * Bring lock lever into "UNLOCK" position |

www.maskinisten.net
www.classicmachinery.net
https://truckmanualshub.com/


# KUBOTA I.C.S. NAVIGATION LIST OF MESSAGES

If an error occurs with the machine, one of the following messages appears in the LCD display.
In case of a trouble, immediately contact your local dealer for inspection and repair.

| Message | Warning lamp Color | Problem or failure (what happened) | Machine behavior (provisional measure) | Correction |
|---|---|---|---|---|
| 1 Fuel<br>1BAAAAQAP054A | yellow | Fuel running out. | - | Add fuel. |
| 2 Engine oil<br>1BAAAAQAP055A | red | Engine oil circuit error (clogged) or engine oil shortage. | Immediately stop the engine. | The engine may be seized, failing to restart the engine. Immediately contact your local dealer for repair. |
| 3 Charge<br>1BAAAAQAP056A | red | Charging line in trouble. Charging failure. | Check the fan belt. (When the belt is in good condition, keep running until the battery becomes dead.) | Immediately contact your local dealer for repair. |
| 4 High Voltage<br>1BAAAAQAP058A | red | 24V line engine startup alternator defective. | [Do not start the engine on 24V line. Get it restarted to see if there is the message again.] | If the message does not reappear, no repair is needed. If the message stays on, contact your local dealer for repair. |
| 31 Lift up unload lever<br>1BAAAAQAP057A | yellow | The engine has been started with the lock lever down. | The engine fails to start. | Pull up the lock lever and start the engine. |
| 32 1500 HR service<br>1BAAAAQAP059A | yellow | The hour meter has reached the specified count-up. Carry out the maintenance job. | - | Carry out the specified maintenance job. |
| No message (warning lamp flashing) | red | Sensor power line short circuited. | The work light lights up. | Immediately contact your local dealer for repair. |

www.maskinisten.net
www.classicmachinery.net
https://truckmanualshub.com/


◆ **Service hour meter**

When the hour meter has counted up to the hours circled in the maintenance list below, the message appears. The message shows up as follows.

| No. | Check points | | Intervals | Hour meter indicator | | | | | | | | | Consequently |
|---|---|---|---|---|---|---|---|---|---|---|---|---|---|
| | | | | 50 | 100 | 250 | 300 | 550 | 600 | 750 | 800 | 1000 | |
| 1 | Engine oil | | change | ◉ | | | ○ | ○ | | | ○ | | every 250 hrs |
| 2 | Hydraulic oil | | | | | | | | | | | ○ | every 1000 hrs |
| 3 | Air filter element | Outer element | replace | | | | | | | | | ○ | every 1000 hrs |
| | | Inner element | | | | | | | | | | ○ | every 1000 hrs |
| 4 | Drive unit oil | | change | | ◉ | | | | ○ | | | | every 500 hrs |
| 5 | Engine oil filter | | replace | ◉ | | | ○ | ○ | | | ○ | | every 250 hrs |
| 6 | Hydraulic return filter cartridge | | | | | ◉ | | | | ○ | | | every 500 hrs |
| 7 | Hydraulic suction filter element | | | | | | | | | | | ○ | every 1000 hrs |

◉ First operation

The message appears. The message shows up as follows.

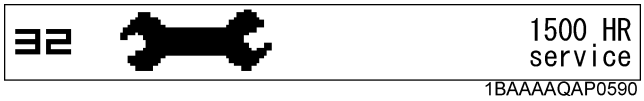

1BAAAAQAP0590

(The message reappears on the hour meter designated next.)

**NOTE :**
- The maintenance message disappears automatically in about 10 seconds.
- When the key is turned from OFF to RUN, the maintenance message reappears and disappears again automatically in about 10 seconds.
- When the key is turned from OFF to RUN repeatedly 10 times, the message disappears.

◆ In case the service hour meter replaced due to any trouble with it, the meter is set to "0". Contact your KUBOTA dealer for details.

www.maskinisten.net
www.classicmachinery.net
https://truckmanualshub.com/


# OPERATION UNDER COLD WEATHER CONDITIONS

## PREPARATION FOR OPERATION IN COLD WEATHER

1. Replace engine oil and hydraulic oil with those of viscosities suitable for cold weather.
2. In cold weather, battery power drops, and the battery fluid may freeze if the battery is not sufficiently charged. To prevent the battery fluid from freezing, be sure to keep the battery charged at least 75% or more of its capacity after operation. To ease next starting, it is recommended to keep the battery stored in closed or heated rooms. If the battery fluid level is too low, do not add after operation, but add with the engine running before the next operation.
3. Add anti-freeze to coolant in the radiator and reserve tank, if the ambient temperature is expected to drop below 0℃ (32℉). Mixing ratio of water and anti-freeze depends on the expected ambient temperature.

- Mixing ratio between water and anti-freeze

| Ambient Temperature ℃ (℉) | -5 (+23) | -10 (+14) | -15 (+5) | -20 (-4) | -25 (-13) | -30 (-22) | -35 (-31) |
|---|---|---|---|---|---|---|---|
| Antifreeze % | 30 | 30 | 30 | 35 | 40 | 45 | 50 |
| Water % | 70 | 70 | 70 | 65 | 60 | 55 | 50 |

**IMPORTANT :**

- Use permanent anti-freeze or long-life coolant.
- Drain the coolant completely and clean the inside of the radiator, then fill with the water and anti-freeze mixture.
- The anti-freeze acts as an anti-corrosive, it is not necessary to add an additive to the water and anti-freeze mixture.
- See "Coolant check" under "DAILY CHECKS" in "MAINTENANCE" for radiator fill volumes.

## PROCEDURE AFTER DONE WORK

Clean the excavator thoroughly after work and wipe dry. Otherwise mud and earth on the tracks could freeze if the temperature drops below the 0℃ (32℉) mark. Operation of the excavator is then not possible. Store the excavator in a dry place; if not possible, store on wooden planks or on mats. If the excavator is kept on damp or muddy ground, the tracks could freeze overnight. Operation of the excavator is then not possible. Furthermore the reduction gear may be damaged.

Additionally, the piston rods of the hydraulic cylinders must be rubbed dry. Otherwise severe damage could occur if dirty water seeps through the seals.

www.maskinisten.net
www.classicmachinery.net
https://truckmanualshub.com/


# LONG STORAGE

**CAUTION**

**To avoid personal injury:**

- **Do not clean the excavator with the engine running.**
- **To avoid the danger of exhaust fume poisoning, do not operate the engine in a closed building without proper ventilation.**
- **When storing, remove the key from the starter switch to avoid unauthorized persons from operating the excavator and getting injured.**
- **Bring the excavator on a firm, flat, and level surface. Lower the attachments and dozer blade on the ground.**

## ■ Should the Excavator be Stored for a Longer Period of Time, Observe Following Procedures:

1. The whole excavator should be cleaned thoroughly and in all cases stored indoors. If the excavator has to be kept outdoors, lay out wooden planks on even ground, place the excavator on the planks and cover completely.
2. Do an oil change and grease the excavator.
3. Heavily grease the visible section of the cylinder rods.
4. Remove the battery and store indoors.
5. If it is expected that the temperature will sink below the 0℃ (32℉) mark, add anti-freeze or drain coolant completely.

**IMPORTANT :**

- Wash the excavator after stopping the engine.
  If you wash the excavator while running the engine, splashing water gets into the air cleaner through its intake and cause engine damage.
  Carefully, wash and do not splash water over the air cleaner while the engine is running.

## ■ Observe Following Procedures when the Machine is to be Operated after Long Storage.

1. Wipe off the grease from the hydraulic cylinder rods.
2. Turn on the engine and operate the attachments and the drive mechanisms under no load in order to circulate the hydraulic oil.
   (If the machine is stored for longer than one month, do steps 1 and 2 once every month.)

www.maskinisten.net
www.classicmachinery.net
https://truckmanualshub.com/


**Periodic replacement of important component parts**

To ensure safety in operation, you are strongly requested to inspect and service the machine at regular intervals. For added safety, ask your KUBOTA dealer to replace the following important component parts.
These parts are prone to degradation in material or subject to wear and tear with time. It is difficult to judge how much they have been affected at regular inspection. It is therefore necessary to replace them with new ones, whether wear is visible or not after a specified time of use.
If any of them is found to be worn before the specified use, they must be repaired or replaced the same as other parts.
If any of the hose clamps are found deformed or cracked, the hose clamps must also be replaced.
For the hydraulic hoses other than the ones to be replaced periodically, inspect them for the following points. If found loose or very worn, tighten and / or replace the hose.
When replacing the hydraulic hoses, change their O rings and sealing components with new ones.
For replacement of the important parts, contact your KUBOTA dealer.

- At the following periodic inspections, check the fuel hoses and hydraulic hoses as well.

| Inspection Interval | Check points |
|---|---|
| Daily Checks | Oil leak at fuel and hydraulic hose connections and points |
| Every month | Oil leak at fuel and hydraulic hose connections and points<br>Damages at fuel and hydraulic hose (cracks, chafing) |
| Every year | Oil leak at fuel and hydraulic hose connections and points<br>Interference, deformation, degradation, twist and other damages (cracks, chafing) of fuel and hydraulic hoses |

List of important component parts

| No. | Component parts | Used place | Q'ty | Period |
|---|---|---|---|---|
| 1 | Fuel hose | Fuel tank - Fuel filter | 1 | Every 2 years or 4000 hours |
| | | Fuel filter - Fuel pump | 1 | |
| | | Fuel pump - Fuel nozzle | 1 | |
| | | Fuel nozzle - Fuel tank | 2 | |
| 2 | Hydraulic hose (suction) | Tank - Pipe | 1 | |
| | | Pipe - Main pump | 1 | |
| 3 | Hydraulic hose (delivery) | Main pump - Control valve | 3 | |
| | | Main pump - Pilot filter | 1 | |
| | | Pilot filter - Change valve | 1 | |
| 4 | Hydraulic hose (Boom cylinder) | Control valve - Adapter | 2 | |
| | | Adapter - Boom cylinder | 2 | |
| 5 | Hydraulic hose (Arm cylinder) | Control valve - Pipe, Boom | 2 | |
| | | Pipe, Boom - Arm cylinder | 2 | |
| 6 | Hydraulic hose (Bucket cylinder) | Control valve - Pipe, Boom | 2 | |
| | | Pipe, Boom - Bucket cylinder | 2 | |
| 7 | Hydraulic hose (Swing cylinder) | Control valve - Swing cylinder | 2 | |
| 8 | Hydraulic hose (Dozer cylinder) | Control valve - Rotary joint | 2 | |
| | | Rotary joint - Pipe | 2 | |
| | | Pipe - Dozer cylinder | 2 | |
| 9 | Hydraulic hose (Service port) | Control valve - Pipe, Boom | 2 | |
| | | Pipe, Boom - Pipe, Boom | 2 | |
| | | Pipe, Boom - Pipe, Arm | 2 | |
| 10 | Hydraulic hose (Swivel motor) | Control valve - Swivel motor | 2 | |

To prevent serious damage to the hydraulic system, use only a KUBOTA genuine hydraulic hose.

www.maskinisten.net
www.classicmachinery.net
https://truckmanualshub.com/


# RECOMMENDED OILS

**IMPORTANT :**
1. Before delivery the hydraulic oil used was an ISO 46 viscosity grade.
2. Use engine oil API service classification CD, CE or CF.
3. Use SAE 90 (API, CLA/GL5) as drive unit oil for all seasons.

| | Application | Viscosity | Shell | Mobil | Exxon | MIL-Standard |
|---|---|---|---|---|---|---|
| Engine oil | In winter or by low temperatures | SAE 10W | Shell Rotella T10W<br>Shell Rimula 10W | Mobil Delvac 1310 | XD-3 10W<br>XD-3 Extra 10W | MIL-L-2104C<br>MIL-L-2104D |
| | | SAE 20W | Shell Rotella T20W-2<br>Shell Rimula 20W-2 | Mobil Delvac 1320 | XD-3 20W-20<br>XD-3 Extra 20W-20 | |
| | In summer or by high ambient temperatures | SAE 30 | Shell Rotella T30<br>Shell Rimula 30 | Mobil Delvac 1330 | XD-3 30<br>XD-3 Extra 30 | |
| | | SAE 40 | Shell Rotella T40<br>Shell Rimula 40 | Mobil Delvac 1340 | XD-3 40<br>XD-3 Extra 40 | |
| | | SAE 50 | Shell Rimula 50 | Mobil Delvac 1350 | | |
| | All- Season engine oil | Multi-purpose | Shell Rotella T15W-40 | | XD-3 15W-40<br>XD-3 Extra 15W-40 | |
| Gear oil | In winter or by low temperatures | SAE 75 | | Mobilube HD80W-90 | | MIL-L-2105C |
| | | | Shell Oil S8643 | | | |
| | | SAE 80 | | Mobilube HD80W-90 | | |
| | | | Shell Spirax HD80W | | | |
| | In summer or by high ambient temperatures | SAE 90 | | Mobilube 46 | | MIL-L-2105 |
| | | | Shell Spirax HD90 | Mobilube HD80W-90 | | MIL-L-2105C |
| | | SAE 140 | | Mobilube HD85W-140 | | MIL-L-2105C |
| | | | Shell Spirax HD140 | Mobilube HD80W-140 | | MIL-L-2105C |
| | All-weather gear oil | Multi-purpose | Shell Spirax HD80W<br>Shell Spirax HD85W | Mobilube HD80W-90 | GX80W-90 | MIL-L-2105C |
| Hydraulic oil | In winter or by low temperatures | ISO 32 | Shell Tellus T32 | Mobil DTE-Oil 13 | NUTO H32 | |
| | | ISO 46 | Shell Tellus T46 | Mobil DTE-Oil 15 | NUTO H46 | |
| | In summer or by high ambient temperatures | ISO 68 | Shell Tellus T68 | Mobil DTE-Oil 16 | NUTO H68 | |
| Grease | | | Shell Alvania EP2 | Mobilux EP2 | BEACON Q2 | |
| Fuel | | | Light oil No. 2-D (ASTM D975) | | | |
| Fuel under –5°C (+23°F) | | | Light oil No. 1-D (ASTM D975) | | | |

www.maskinisten.net
www.classicmachinery.net
https://truckmanualshub.com/



# APPENDICES

## MAIN DIMENSIONS

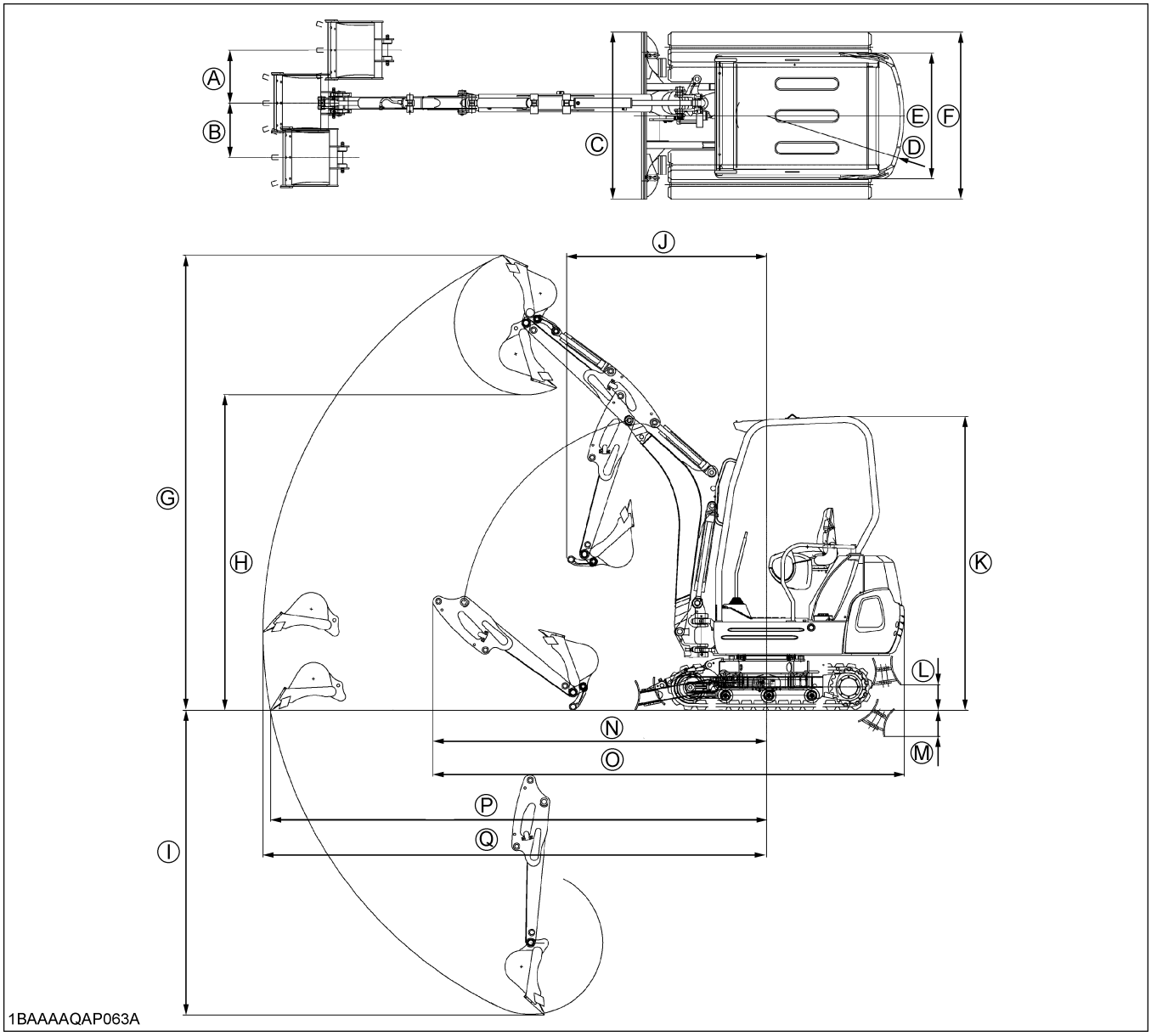


With rubber track.

mm

| | (A) | (B) | (C) | (D) | (E) | (F) | (G) | (H) | (I) | (J) | (K) | (L) | (M) | (N) | (O) | (P) | (Q) |
|---|---|---|---|---|---|---|---|---|---|---|---|---|---|---|---|---|---|
| KX41-3 | 510 | 325 | 990<br>1300 | 1070 | 980 | 990<br>1300 | 3540 | 2455 | 2370 | 1550 | 2285 | 200 | 205 | 2590 | 3660 | 3855 | 3910 |

www.maskinisten.net
www.classicmachinery.net
https://truckmanualshub.com/


# LIFTING CAPACITY

1. The lifting capacities are based on ISO 10567 and do not exceed 75% of the static tilt load of the machine or 87% of the hydraulic lifting capacity of the machine.
2. The strokes are as follows.
   (1) The load point corresponds to the front bolt part of the arm.
   (2) The machine positions are (i) over - front (Blade down), (ii) over - front (Blade up), and (iii) over - side.
   (3) The operating cylinder is the boom cylinder.
3. The bucket of the excavator, the hook, the sling and other lifting accessories are taken into consideration for the loads.

Machine conditions:
No bucket, all others according to the standard regulations.

**WARNING**

**To avoid personal injury or death:**

- **No loads greater than those values mentioned in the lifting capacity tables are to be lifted.**
- **The values mentioned in the table are valid only on even, hard grounds. When lifting on soft ground, the machine can tip over due to the load being concentrated only on one side of the machine.**
- **The table values are calculated at the end of the arm without the bucket. In order to find the allowable loads for machines with bucket, the bucket weight must be subtracted from the values in the table.**

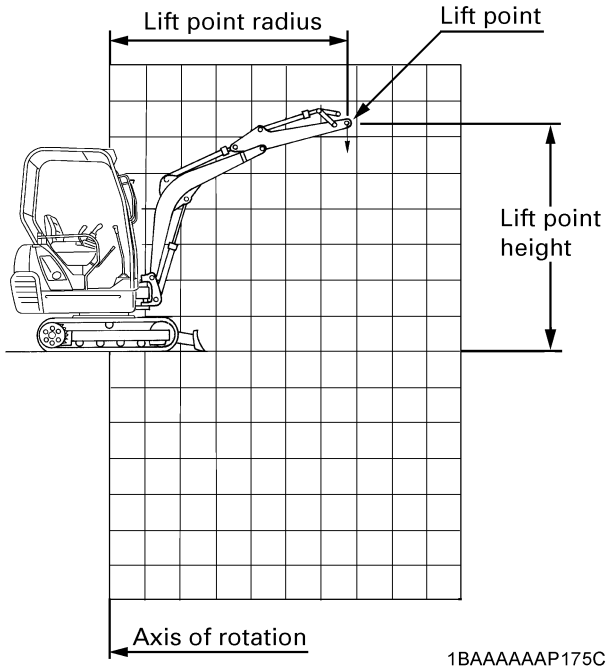

www.maskinisten.net
www.classicmachinery.net
https://truckmanualshub.com/



KX41-3 LONG ARM
RUBBER CRAWLAR
ROPS CANOPY

LIFTING CAPACITY OVER-FRONT BLADE DOWN

Unit=1kN

| LIFT POINT HEIGHT (m) | | LIFT POINT RADIUS (m) | | | | | | | |
|---|---|---|---|---|---|---|---|---|---|
| | | 0.0 | 0.5 | 1.0 | 1.5 | 2.0 | 2.5 | 3.0 | 3.5 |
| GL | 3.5 | | | | | | | | |
| | 3.0 | | | | | | | | |
| | 2.5 | | | | | | 3.3 | | |
| | 2.0 | | | | | | 3.0 | | |
| | 1.5 | | | | | 3.1 | 3.5 | 3.4 | |
| | 1.0 | | | | | 5.1 | 4.2 | 3.6 | |
| | 0.5 | | | | | 6.5 | 4.7 | 3.7 | |
| | 0 | | | | 7.0 | 6.8 | 4.8 | 3.7 | |
| | -0.5 | | | 6.3 | 9.5 | 6.3 | 4.5 | 3.3 | |
| | -1.0 | | | 10.0 | 8.0 | 5.4 | 3.8 | | |
| | -1.5 | | | 12.9 | 6.2 | 4.1 | | | |
| | -2.0 | | | | | | | | |

LIFTING CAPACITY OVER-FRONT BLADE UP

Unit=1kN

| LIFT POINT HEIGHT (m) | | LIFT POINT RADIUS (m) | | | | | | | |
|---|---|---|---|---|---|---|---|---|---|
| | | 0.0 | 0.5 | 1.0 | 1.5 | 2.0 | 2.5 | 3.0 | 3.5 |
| GL | 3.5 | | | | | | | | |
| | 3.0 | | | | | | | | |
| | 2.5 | | | | | | 2.9 | | |
| | 2.0 | | | | | | 2.9 | | |
| | 1.5 | | | | | 3.1 | 2.9 | 2.1 | |
| | 1.0 | | | | | 4.0 | 2.8 | 2.1 | |
| | 0.5 | | | | | 3.8 | 2.7 | 2.1 | |
| | 0 | | | | 5.9 | 3.7 | 2.7 | 2.0 | |
| | -0.5 | | | 6.3 | 5.9 | 3.7 | 2.6 | 2.0 | |
| | -1.0 | | | 10.0 | 5.9 | 3.7 | 2.6 | | |
| | -1.5 | | | 12.9 | 6.0 | 3.7 | | | |
| | -2.0 | | | | | | | | |

LIFTING CAPACITY OVER-SIDE (TRACK WIDTH 1300mm)

Unit=1kN

| LIFT POINT HEIGHT (m) | | LIFT POINT RADIUS (m) | | | | | | | |
|---|---|---|---|---|---|---|---|---|---|
| | | 0.0 | 0.5 | 1.0 | 1.5 | 2.0 | 2.5 | 3.0 | 3.5 |
| GL | 3.5 | | | | | | | | |
| | 3.0 | | | | | | | | |
| | 2.5 | | | | | | 3.1 | | |
| | 2.0 | | | | | | 3.0 | | |
| | 1.5 | | | | | 3.1 | 3.1 | 2.3 | |
| | 1.0 | | | | | 4.2 | 3.0 | 2.3 | |
| | 0.5 | | | | | 4.1 | 2.9 | 2.3 | |
| | 0 | | | | 6.1 | 4.0 | 2.9 | 2.2 | |
| | -0.5 | | | 6.3 | 6.1 | 3.9 | 2.8 | 2.2 | |
| | -1.0 | | | 10.0 | 6.2 | 3.9 | 2.8 | | |
| | -1.5 | | | 12.9 | 6.2 | 4.0 | | | |
| | -2.0 | | | | | | | | |

KX41-3 LONG ARM
RUBBER CRAWLAR
ROPS CANOPY

LIFTING CAPACITY OVER-FRONT BLADE DOWN

Unit=1000lb

| LIFT POINT HEIGHT (ft) | | LIFT POINT RADIUS (ft) | | | | | | | |
|---|---|---|---|---|---|---|---|---|---|
| | | 0 | 2 | 4 | 6 | 8 | 10 | 12 | 14 |
| GL | 14 | | | | | | | | |
| | 12 | | | | | | | | |
| | 10 | | | | | | | | |
| | 8 | | | | | 0.69 | | | |
| | 6 | | | | | 0.69 | 0.76 | | |
| | 4 | | | | 0.97 | 0.88 | 0.78 | | |
| | 2 | | | | 1.65 | 1.08 | 0.82 | | |
| | 0 | | | | 1.76 | 1.13 | 0.80 | | |
| | -2 | | | 1.84 | 1.56 | 1.03 | 0.68 | | |
| | -4 | | | 2.27 | 1.25 | 0.80 | | | |
| | -6 | | | | | | | | |
| | -8 | | | | | | | | |

LIFTING CAPACITY OVER-FRONT BLADE UP

Unit=1000lb

| LIFT POINT HEIGHT (ft) | | LIFT POINT RADIUS (ft) | | | | | | | |
|---|---|---|---|---|---|---|---|---|---|
| | | 0 | 2 | 4 | 6 | 8 | 10 | 12 | 14 |
| GL | 14 | | | | | | | | |
| | 12 | | | | | | | | |
| | 10 | | | | | | | | |
| | 8 | | | | | 0.68 | | | |
| | 6 | | | | | 0.68 | 0.47 | | |
| | 4 | | | | 0.97 | 0.66 | 0.46 | | |
| | 2 | | | | 0.99 | 0.64 | 0.45 | | |
| | 0 | | | | 0.96 | 0.62 | 0.44 | | |
| | -2 | | | 1.84 | 0.95 | 0.61 | 0.44 | | |
| | -4 | | | 1.97 | 0.95 | 0.62 | | | |
| | -6 | | | | | | | | |
| | -8 | | | | | | | | |

LIFTING CAPACITY OVER-SIDE (TRACK WIDTH 1300mm)

Unit=1000lb

| LIFT POINT HEIGHT (ft) | | LIFT POINT RADIUS (ft) | | | | | | | |
|---|---|---|---|---|---|---|---|---|---|
| | | 0 | 2 | 4 | 6 | 8 | 10 | 12 | 14 |
| GL | 14 | | | | | | | | |
| | 12 | | | | | | | | |
| | 10 | | | | | | | | |
| | 8 | | | | | 0.69 | | | |
| | 6 | | | | | 0.69 | 0.51 | | |
| | 4 | | | | 0.97 | 0.71 | 0.51 | | |
| | 2 | | | | 1.05 | 0.69 | 0.50 | | |
| | 0 | | | | 1.02 | 0.67 | 0.49 | | |
| | -2 | | | 1.84 | 1.01 | 0.66 | 0.49 | | |
| | -4 | | | 2.01 | 1.02 | 0.67 | | | |
| | -6 | | | | | | | | |
| | -8 | | | | | | | | |

## WARNING

**To avoid personal injury or death:**

- **Operate always in standard track width 1300mm, except to pass through narrow space.**
- **Do not operate in narrow track width 990mm, it makes risk of the excavator tipping over.**

LIFTING CAPACITY OVER-SIDE (TRACK WIDTH 990mm)
ONLY REFERENCE

Unit=1kN

| LIFT POINT HEIGHT (m) | | LIFT POINT RADIUS (m) | | | | | | | |
|---|---|---|---|---|---|---|---|---|---|
| | | 0.0 | 0.5 | 1.0 | 1.5 | 2.0 | 2.5 | 3.0 | 3.5 |
| GL | 3.5 | | | | | | | | |
| | 3.0 | | | | | | | | |
| | 2.5 | | | | | | 2.0 | | |
| | 2.0 | | | | | | 2.1 | | |
| | 1.5 | | | | | 2.9 | 2.0 | 1.5 | |
| | 1.0 | | | | | 2.7 | 2.0 | 1.5 | |
| | 0.5 | | | | | 2.6 | 1.9 | 1.4 | |
| | 0 | | | | 3.7 | 2.5 | 1.8 | 1.4 | |
| | -0.5 | | | 6.3 | 3.7 | 2.4 | 1.8 | 1.4 | |
| | -1.0 | | | 7.1 | 3.7 | 2.4 | 1.8 | | |
| | -1.5 | | | 7.2 | 3.8 | 2.5 | | | |
| | -2.0 | | | | | | | | |

LIFTING CAPACITY OVER-SIDE (TRACK WIDTH 990mm)
ONLY REFERENCE

Unit=1000lb

| LIFT POINT HEIGHT (ft) | | LIFT POINT RADIUS (ft) | | | | | | | |
|---|---|---|---|---|---|---|---|---|---|
| | | 0 | 2 | 4 | 6 | 8 | 10 | 12 | 14 |
| GL | 14 | | | | | | | | |
| | 12 | | | | | | | | |
| | 10 | | | | | | | | |
| | 8 | | | | | 0.48 | | | |
| | 6 | | | | | 0.48 | 0.33 | | |
| | 4 | | | | 0.72 | 0.46 | 0.33 | | |
| | 2 | | | | 0.66 | 0.44 | 0.32 | | |
| | 0 | | | | 0.63 | 0.43 | 0.31 | | |
| | -2 | | | 1.14 | 0.62 | 0.42 | 0.31 | | |
| | -4 | | | 1.16 | 0.63 | 0.42 | | | |
| | -6 | | | | | | | | |
| | -8 | | | | | | | | |

www.maskinisten.net
www.classicmachinery.net
https://truckmanualshub.com/

Kubota

U.S.A. : **KUBOTA TRACTOR CORPORATION**
3401 Del Amo Blvd., Torrance, CA 90503, U.S.A.
Telephone : (310)370-3370
Western Division : 1175 S. Guild Ave., Lodi, CA 95240
Telephone : (209)334-9910
Central Division : 14855 FAA Blvd., Fort Worth, TX 76155
Telephone : (817)571-0900
Northern Division : 6300 at One Kubota Way, Groveport, OH 43125
Telephone : (614)835-1100
Southeast Division : 1025 Northbrook Parkway, Suwanee, GA 30024
Telephone : (770)995-8855

Canada : **KUBOTA CANADA LTD.**
5900 14th Avenue, Markham, Ontario, L3S 4K4, Canada
Telephone : (905)294-7477
Richmond Distribution Center : 2620 Viscount Way, Richmond, B.C. V6V 1N1
Telephone : (604)270-9286
Drummondville Distribution Center : 5705 Place Kubota, Drummondville, Québec, J2B 6B4
Telephone : (819)478-7151

France : **KUBOTA EUROPE S.A.S**
19-25, Rue Jules Vercruysse, Z.I. BP88, 95101 Argenteuil Cedex, France
Telephone : (33)1-3426-3434

Italy : **KUBOTA EUROPE S.A.S Italy Branch**
Via Grandi, 29 20068 Peschiera Borrome (MI) Italy
Telephone : (39)02-51650377

Germany : **KUBOTA BAUMASCHINEN GmbH**
Steinhauser str, 100, 66482 Zweibrucken Rheinlandpfalz Germany
Telephone : (49)6332-4870100

U.K. : **KUBOTA (U.K.) LTD.**
Dormer Road, Thame, Oxfordshire, OX9 3UN, U.K.
Telephone : (44)1844-214500

Australia : **KUBOTA TRACTOR AUSTRALIA PTY LTD.**
100 Keilor Park Drive, Tullamarine, Victoria 3043 Australia
Telephone : (61)-3-9279-2000

Malaysia : **SIME KUBOTA SDN. BHD.**
No.3 Jalan Sepadu 25/123 Taman Perindustrian Axis,
Seksyen 25, 40400 Shah Alam, Selangor Darul Ehsan Malasia
Telephone : (60)3-736-1388

Philippines : **KUBOTA AGRO-INDUSTRIAL MACHINERY PHILIPPINES, INC.**
155 Panay Avenue, South Triangle Homes, 1103 Quezon City, Philippines
Telephone : (63)2-9201071

Taiwan : **SHIN TAIWAN AGRICULTURAL MACHINERY CO., LTD.**
16, Fengping 2nd Rd, Taliao Shiang Kaohsiung 83107, Taiwan R.O.C.
Telephone : (886)7-702-2333

Indonesia : **P.T. KUBOTA INDONESIA**
JALAN. Setyabudi 279, Semarang, Indonesia
Telephone : (62)-24-7472849

Thailand : **THE SIAM KUBOTA INDUSTRY CO., LTD.**
101/19-24 Navanakorn, Tambol Klongneung, Amphur Klongluang, Pathumtani 12120, Thailand
Telephone : (66)2-529-0363

Japan : **KUBOTA Corporation**
Farm & Industrial Machinery International Operations Headquarters
2-47, Shikitsuhigashi 1-chome, Naniwa-ku, Osaka, Japan 556-8601

**KUBOTA Baumaschinen GmbH**
Steinhauser Straße 100 6660 Zweibrücken, Federal Republic of Germany
Phone : 6332-4870
Telex : 45117KBMZW D
Facsimile : 6332-487101

English(U.S.A.,Australia)
Code No. RB238-8124-5

PRINTED IN JAPAN