https://truckmanualshub.com/

SWE215F-5

Crawler-type Hydraulic Excavator

Operation & Maintenance Manual

Sunward Intelligent Equipment Co., Ltd.

August, 2020

https://truckmanualshub.com/

Foreword

It is particularly important that the operator should read these instructions carefully in order to operate and maintain the excavator safely and correctly. Otherwise accidents or damage may occur.

The manual supplies safety rules and labels which have been fixed on the machine so as to provide the instructions of potential danger and the ways to avoid it.

SUNWARD cannot predict any kind of potential danger may occur in the process of operation and maintenance. Therefore, the related instructions in this manual and on the machine only concern the basic safety rules. It is the operator's duty to take necessary measures to protect safety if there is no corresponding method recommended in this manual.

The forbidden usages or operations that mentioned in this manual cannot be engaged in any circumstances.

The excavator is designed according to the metric system, all the data presented are metric and only metric parts and tools can be used.

The manual should be regarded as the permanent part of excavator and kept at the easy reading place for consultation at any time. If it is damaged or lost, please contact SUNWARD or agents for ordering. The manual should be attached when the excavator is transferred or sold.

Only trained, qualified and experienced operators can operate, check and maintain the machine.

The equipment covered by this manual meets the applicable technical specifications effective as of its date of issue. The manufacturer SUNWARD reserves the right to make any modifications from time to time without prior notices to any excavator components.

Please contact SUNWARD or agents for the updated information or the information problem concerned in this manual.

Sunward Intelligent Equipment Co., Ltd.

https://truckmanualshub.com/

Table of Contents

1 SAFETY RULES 6
1.1 SAFETY LABELS 7
1.1.1 Location of Safety Labels 7
1.1.2 Safety Labels Instructions 3
1.2 GENERAL SAFETY RULES 13
1.2.1 Observing Safety Rules 13
1.2.2 Understanding Safety Label 14
1.2.3 Emergency Protection 14
1.2.4 Protective Articles 14
1.2.5 Safety Equipment 15
1.2.6 Keeping Machine Clean 15
1.2.7 Checking before Start-up 15
1.2.8 Precautions for Entering Cab 15
1.2.9 Correct Entering/Leaving Machine 16
1.2.10 Adjustment of Operator's Seat 16
1.2.11 Fastening Seatbelt 16
1.2.12 Ensuring Perfect Visibility 17
1.2.13 Leaving Operation Seat Safely 17
1.2.14 Emergency Exit 17
1.2.15 No Passengers Allowed 17
1.2.16 Worksite Safety 17
1.2.17 Operation on Loosened Area 18
1.2.18 Signals and Gestures from Flagman 18
1.2.19 Distance to High Voltage Cables 19
1.2.20 Preventing Scald 19
1.2.21 Keeping Away From Transmission Parts 19
1.2.22 Preventing Fire and Explosion 19
1.2.23 Measures for Fire Fighting 20
1.2.24 Preventing Splashing or Falling Objects 20
1.2.25 Prevention of Flying-Out Parts 20
1.2.26 Preventing Asbestos Dust Inhalation 21
1.2.27 Bewaring of Inhalation of Smoke or Exhaust Gas 21
1.2.28 Be Careful of High Pressure Liquids 21
1.2.29 Safe Disposal of Liquids 22
1.2.30 Safe Disposal of Chemicals 22
1.2.31Waste Material Disposal 22
1.2.32 Prohibition of Unauthorized Modification on Machine 22
1.3 SAFE OPERATION INSTRUCTIONS 23
1.3.1 Inspection before Starting Engine 23
1.3.2 Correct Engine Start-up 23
1.3.3 Starting Engine in Cold Weather 24
1.3.4 Safe Operation 24
1.3.5 Operation on Slopes 25

https://truckmanualshub.com/

1.3.6 Operation on Snowy Ground 25
1.3.7 Avoid Tipping-Over 25
1.3.8 Preventing Accidents While Backing or Swinging 26
1.3.9 Avoiding Accidents Caused By Control Failures 27
1.3.10 Moving Machine Safely 27
1.3.11 Safety Rules during Traveling 28
1.3.12 Traveling on Slopes 28
1.3.13 Safety Rules during Towing 29
1.3.14 Machine Transportation 29
1.3.15 Parking Machine 30
1.4 SAFETY MAINTENANCE INFORMATION 30
1.4.1 Using Warning Signs 30
1.4.2 Parking Machine Prior to Maintenance 31
1.4.3 Safety Maintenance Rules 31
1.4.4 Tips for Using a Hammer 32
1.4.5 Precautions of Welding and Polishing 32
1.4.6 Avoiding Heating Pipes Containing Flammable Liquids 33
1.4.7 Avoiding Heating near Pressure Oil Pipes 33
1.4.8 Removing Paint Before Welding or Heating 33
1.4.9 Attachments 34
1.4.10 Maintenance Precaution of Track Tension Mechanism 34
1.4.11 Safety Rules for High-pressure Oil 34
1.4.12 Safety Operation for High-pressure Hoses 35
1.4.13 Accumulator 35
1.4.14 Preventing Accumulator Explosion 36
1.4.15 Waste Disposal 36
2 TRANSPORTATION AND STORAGE 37
2.1 TRANSPORT 38
2.1.1 General Transport Instructions 38
2.1.2 Transport Specification 38
2.1.3 Loading or Unloading with a Trailer 39
2.1.4 Loading 40
2.1.5 Tying Down the Machine 41
2.1.6 Unloading 41
2.1.7 Lifting Machine 42
2.2 STORAGE 43
2.2.1 Before Storage 43
2.2.2 During Storage 44
2.2.3 After Storage 44
3 OPERATION 45
3.1 MACHINE ASSEMBLY DRAWING 46
3.2 CONTROL DEVICE INSTRUCTIONS 47
3.2.1 Control Device Illustration 47
3.2.2 Pilot Safety Lever 48
3.2.3 Travel Control Lever 49

https://truckmanualshub.com/

3.2.4 Air Condition Control Panel 50
3.2.5 Multifunction Monitor System 51
3.2.6 Right Pilot Control Handle 71
3.2.7 Horn Switch 71
3.2.8 Left Pilot Control Handle 72
3.2.9 One-key Idling Switch 72
3.2.10 Starting Switch 73
3.2.11 Throttle Control Knob 73
3.2.12 Work light Switch 74
3.2.13 Wiper Switch 74
3.2.14 Washer Switch 74
3.3 OTHER OPERATION INSTRUCTIONS 76
3.3.1 Cab Windows 76
3.3.2 Cover and Hood with Lock 79
3.3.3 Cigar Lighter 81
3.3.4 Radio 81
3.3.5 Seat83
3.3.6 Fuse 84
3.3.7 Air Conditioner Instruction 85
3.3.8 Accumulator 91
3.4 MACHINE OPERATION AND CONTROL 92
3.4.1 Operator’s Position 92
3.4.2 Setting and Adjustment 92
3.4.3 Work Mode Selection 93
3.4.4 Inspection before Starting Engine 93
3.4.5 Engine Start-up 94
3.4.6 New Machine Running-in 96
3.4.7 Machine Preheating in Cold Weather 97
3.4.8 Safety Operation Rules 98
3.4.9 Machine Traveling 100
3.4.10 Machine Steering 101
3.4.11 Upper-structure Swing 103
3.4.12 Work Equipment 103
3.4.13 Work 104
3.4.14 Emergency Stop for Boom 109
3.4.15 Parking Machine 109
3.4.16 Machine Stop and Emergency Stop 110
3.4.17 Prohibited Operations 111
4 MAINTENANCE 113
4.1 MAINTENANCE INFORMATION 114
4.1.1 Maintenance Instruction and Inspection Procedure 114
4.1.2 Daily Inspection Prior to Start-up 114
4.1.3 Checking Hour Meter Frequently 115
4.1.4 Preparation Work Prior to Maintenance 115
4.1.5 Correct Use of Fuel and Lubricant 115

https://truckmanualshub.com/

4.1.6 Checking Discharged Grease and Used Filter Element 115
4.1.7 Checking after Inspection and Maintenance 116
4.1.8 Electrical System Maintenance 116
4.1.9 Hydraulic System Maintenance 116
4.2 OIL, COOLANT AND FILTER 117
4.2.1 Lubricant and Hydraulic Oil 117
4.2.2 Fuel 117
4.2.3 Coolant in Cooling System 118
4.2.4 Grease 118
4.2.5 Oil and Fuel Storage 118
4.2.6 Filter Elements 119
4.2.7 Fuel and Coolant Specifications 120
4.3 TIGHTENING TORQUE SPECIFICATION 121
4.3.1 Tightening Torque Table for Bolts and Nuts 121
4.3.2 Tightening Torque Table for Hoses 122
4.4 MAINTENANCE SCHEDULE 123
4.4.1 Adding Lubrication Grease 123
4.4.2 Engine Oil 124
4.4.3 Gear Oil 125
4.4.4 Hydraulic System 126
4.4.5 Fuel System 127
4.4.6 Air Filter 127
4.4.7 Cooling System 128
4.4.8 Air Conditioning System 128
4.4.9 Other 129
4.4.10 Hoses 130
4.4.11 Wearing Parts Table 131
4.4.12 Maintenance in Special Situation 132
4.5 MACHINE MAINTENANCE INTERVAL 133
4.5.1 Daily Maintenance (Every 8 Hours) 133
4.5.2 Maintenance in Initial 50 Hours of Running-in Period 137
4.5.3 If Maintenance is Needed 142
4.5.4 Every 50 Hours Maintenance 148
4.5.5 Every 100 Hours Maintenance 148
4.5.6 Every 250 Hours Maintenance 148
4.5.7 Every 500 Hours Maintenance 151
4.5.8 Every 1000 Hours Maintenance 153
4.5.9 Every 2000 Hours Maintenance 157
4.6 GENERAL TROUBLE SHOOTING 158
5 TECHNICAL SPECIFICATION 163
5.1 SW155F TECHNICAL SPECIFICATION 164
5.1.1 Machine Specification 164
5.1.2 Dimension 165
5.1.3 Work Parameters 166
5.1.4 SWE215F-5 Electrical Schematic 167

https://truckmanualshub.com/

5.1.5 Electrical Components....168
5.1.6 SWE215F-5 Hydraulic Schematic....169
5.1.7 Hydraulic Components....170
5.1.8 Noise & Vibration Description....170
6 NOTE FOR SAFETY....171
7 MANUFACTURER INFORMATION....174

https://truckmanualshub.com/

1 SAFETY RULES

Warning

Please thoroughly read and completely understand all precautions described in this manual or safety labels. Follow all instructions when operating or servicing this machine.

https://truckmanualshub.com/

1.1 SAFETY LABELS

1.1.1 Location of Safety Labels

- Fully understand the correct position and contents of safety labels in this machine.
- To ensure that the content of labels can be read properly, be sure that they are in right place and always keep them clean. When cleaning them, do not use solvents or gasoline. It may cause labels to peel off.
- There are also other labels in addition to warning labels. Handle these labels in the same way.
- In case the labels are damaged, lost or not legible, replace them with new ones. For details of the part number, refer to parts manual or actual label, and place an order with SUNWARD or our authorized distributors.

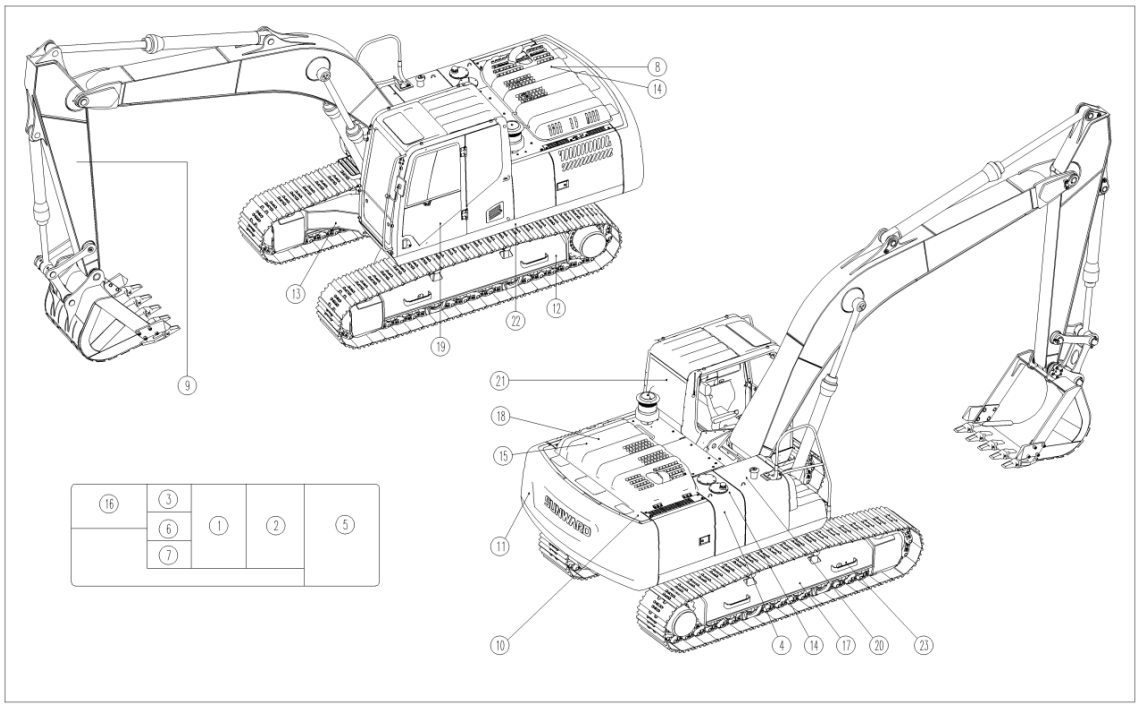

Actual position of safety labels in the machine

https://truckmanualshub.com/

1.1.2 Safety Labels Instructions

(1) Safety Operation Label

- Please read all safety precautions carefully written in labels and all information concerning safety, prior to operate machine.
- Maintenance frequently and replace safety label if required. In case that safety labels or manual are damaged or lost, you can place an order with our distributors. The procedure of ordering them is identical with that of the other parts and components. You must specify model of the machine when ordering.
- Use only trained and qualified personnel to operate this machine. Follow all safety precautions and instructions in this manual to keep your machine in good condition.
- Do not alter or modify machine rashly, this may impair function and effect service life or jeopardize personal safety.
- Caution: all safety information described in this manual covers only basic safety information of this machine. It's not possible to predict every circumstance which might involves potential hazards. So it's necessary to ask for instruction from your superior before attempting any operation or maintenance procedure.

(2) Engine Operation Label

Diesel engine inspection

- Stop machine on level ground, inspect engine oil level (stop engine for longer than 15 minutes to allow engine oil to go back to the bottom), inspect dipstick to make sure oil level must be between the lines of "MIN" and "MAX". For engine maintenance

https://truckmanualshub.com/

procedures, please refer to the "diesel engine maintenance manual" enclosed with the other literature of the machine.

Pre-start inspection

- Keep control lever of pilot valve in LOCK position, pilot handle and travel pull link are in normal position (neutral position), operator sit over seat.
- While switching the key to ON position, except engine hour meter and LCD module, all indicators of test system must light up. Buzzer must sound as well. Self-test is finished in 2 seconds to indicate test system is or is not properly functioning.

Start the engine

- Keep control lever of pilot valve at LOCK position.
- Switch key to ON position.
- Honk the horn to alert the persons around.
- Turn the key to the right; hold it in START position until engine runs. Then release the key, switch will automatically. Return to ON position.

Caution

- **Do not operate motor for longer than 5 seconds ever time to avoid damage to machine. In case of failure to start engine, switch the key back to OFF position, wait 2 minutes before a new attempt. Incorrect start may damage to starter.**

Engine daily inspection

1. Before starting engine, please check engine oil gauge, the oil level between H and L is correct.
2. Before starting engine, please check coolant level, and fill up if necessary. The coolant must be clean.
   For -32° C or higher, choose the compound of 50% vinyl glycol and 50% water as coolant.
   For -32~ -51° C, choose the compound of 60% vinyl glycol and 40% water as coolant.
3. Please choose diesel oil as follows:
   0# diesel oil for 4° C or higher
   -10# diesel oil for -5 ° C or higher.
   -20# diesel oil for -15 ° C or higher.
   The diesel oil should be clean. Never use impure fuel.
4. If any air bubble in fuel system, please exhaust it before starting engine.
5. Without fuel, engine will stop running. After filling up fuel, please exhaust air by hand oil pump. (If no hand oil pump, use starter motor to exhaust air automatically.)

Engine start and stop

Start

1. Ensure the handle is in the neutral position.
2. Pull the accelerograph handle to a position a little higher than that of "lowest idle speed".
3. When it is around 0° C or even lower, preheat the engine before startup, turn the ignition key widdershins to "preheat" position and keep it there for 10 to 15 seconds, then turn it right to "start" position, engine is now started. After that, release the key, which will automatically return to "ON" position. Don't run the starter motor for more than 5 consecutive seconds. If the engine fails to be started, wait for 30 seconds and then try again to start the engine. If engine fails to work after being started for three times, check the oil supply system.
4. After starting engine, pull the accelerograph handle from low speed to middle speed position, warm up the engine for 5 minutes.

Engine in operation

1. Only thermometer pointer is in green range, the engine can run.
2. Check that the warning lamps are off.
3. If warning lamp is lit or warning sound is made, stop engine immediately and check concerned position as per light lamp.

Stop

1. Run the engine at low rev for about 5 minutes to gradually let it cool.
2. Turn the key to the "OFF" position to stop the engine.

(3) Diesel Label

Caution

- **Refilling fuel with extra care. Stop engine before refilling fuel. Do not smoke while refilling to fuel tank or operating around fuel system.**
- **Select proper fuel according to different ambient temperature.**

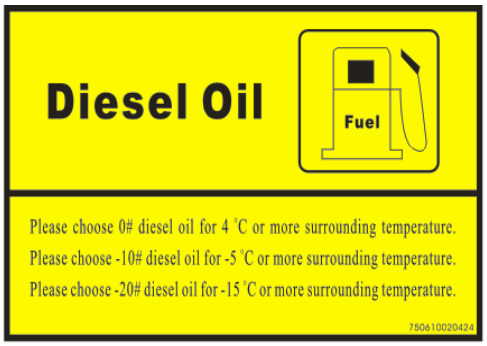

- Refer to "stop engine" section for properly parking machine and stopping engine.
- Inspect fuel gauge on monitor, top up is required.
- Prevent dirt, dust, water and other foreign matter from entry into oil tank and fuel system.
- While refilling at the end of daily work-shift, do not spill, drip any fuel to machine or ground to avoid fuel clotting.
- After refilling fuel, fasten cap securely.

(4) Machine Posture Label

Caution

- **Do not start engine when hydraulic oil tank runs out of oil.**

Inspect hydraulic oil level……daily

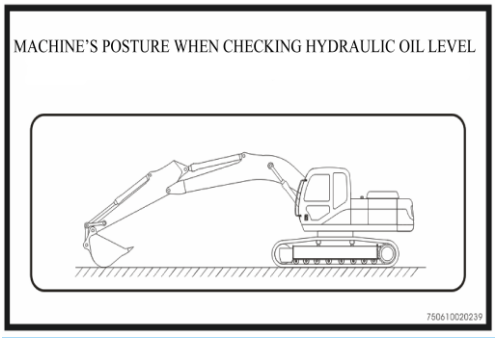

- Park machine on level ground.
- Completely retract arm cylinder and extend bucket cylinder to full length.
- Lower bucket down to the ground.
- Run engine at low speed for 5 minutes.
- Shut down engine, remove the key.
- Place pilot control lever to LOCK (up) position.
- Open right side door to check oil level gauge. Located on hydraulic oil tank, oil level must be within level

https://truckmanualshub.com/

marks. Drain oil if level is higher than MAX mark, refill if level is below MIN mark.

- Fill oil：
- Remove upper breather screw cap by rotating anticlockwise.
- Refill oil through strainer. Recheck oil level gauge.
- Fasten cap securely.

(5) Maintenance and Lubrication Label

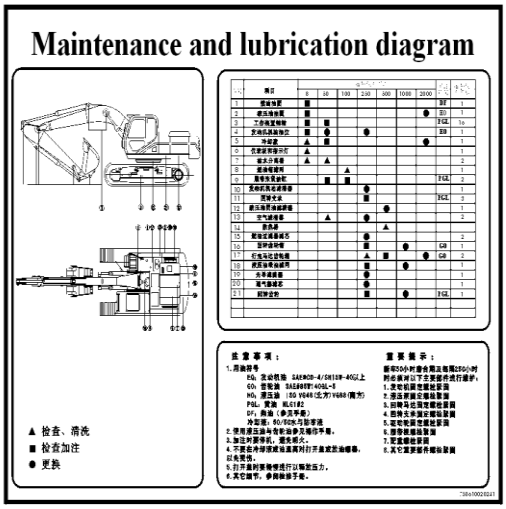

Proper procedure of maintenance and inspection

Learn about how to properly service machine. Perform proper maintenance and inspection procedure in accordance with this manual. Inspect machine before starting machine.

- Check monitor.
- Check each liquid level.
- Check hose and piping for leakage, twist, wear out or damage.
- Check surrounding the machine for any signs of noise, heat etc.
- Check parts for looseness and lost.

Caution

- **If any problems are detected, repair prior to operation, or contact with our authorized distributor.**

- Use recommended fuel, hydraulic oil and lubricant.
- Use only genuine SUNWARD components.
- The warranty is not applicable for any damages arising from failure to use SUNWARD recommended fuel, lubricant, hydraulic oil and genuine SUNWARD components.
- Do not adjust engine speed limiter or safety valve of

https://truckmanualshub.com/

hydraulic system.

- Do not allow water or vapor to reach electrical equipment.
- Do not disassemble components such as engine pump controller, sensor etc.

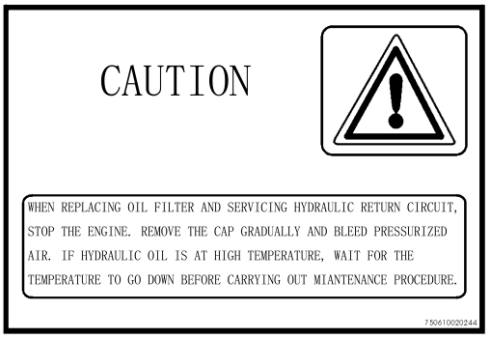

(6) Wiper Label

Use the wiper properly.

(7) Filter Element Maintenance Safety Label

Replace pilot oil filter ……every 400 hours

- Stop machine on firm level ground.
- Lower bucket to the ground.
- Run engine at low-speed for 5 minutes.
- Shut down the engine, remove the key.
- Release inner pressure in the hydraulic system by operating left and right pilot handles.
- Set pilot control lever in LOCK (UP) position.
- Use wrench for filter to remove filter housing off the filter head cover by rotating counterclockwise.
- Remove filter core and used O-ring.
- Clean the area in contact by head cover and O-ring.
- Apply a new layer of fresh hydraulic oil, and place it in position.
- Lubricate new filter core with a thin layer of clean hydraulic oil on the ring section. Push filter core upward while moving it forward and backward alternately to install it.
- Clean filter housing.

https://truckmanualshub.com/

- Rotate clockwise to tighten filter housing to head cover. Tighten at torque: 19.5—29.5Nm (2-3 kgf.m).

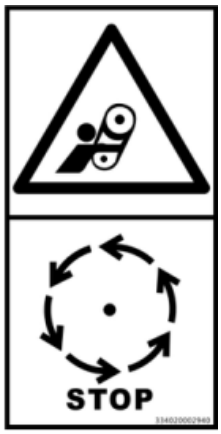

(8) Engine Hood Label

Warning

- **Risk of entangled by transmission part, such as belt**

Engine should be shut down prior to inspection and maintenance.

(9) Work Device Label

Warning

- **Stay clear of working device.**

(10) Swing Label

Warning

- **Keep clear of swing area.**

(11) Tail Warning Label

Warning

- **Stay clear of machine while it is running.**

https://truckmanualshub.com/

(12) Lifting Direction Label

(13) Traction Hook

(14) Anti- scald Label

- After running operation, engine oil, gear oil and hydraulic oil is getting hot, so do engine, hoses, pipelines or other components. Be cautious of scalding.
- Attempt inspection and maintenance procedure, after machine components and oil cool down.
- There is pressure in hydraulic oil tank. Relieve pressure before opening cap to avoid oil spurt.
- There is pressure which builds up in hydraulic piping. Relieve pressure prior to repair or replacing.

（15）Preventing Hand Caught by Fan

- Fan would run at high speed while engine is active. Pay much attention to prevent hand, foot, hair and clothing being caught in fan blade, when attempting any inspection and maintenance procedures on machine.

(16) Operation Label

- This machine is equipped with two pilot control handle and two travel control lever which control

https://truckmanualshub.com/

working device motion, swing action of upper structure, machine travel accordingly.

- The right pilot handle controls motions as below：

  a. boom rise

  b. boom fall

  c. backhoe loading , or grab bucket rotate clockwise

  d. backhoe dumping, or grab bucket rotate anticlockwise.

- Left pilot handle controls motion as below：

  e. rotate upper-structure to left (counterclockwise)

  f. rotate upper-structure to right (clockwise)

  g. extend arm

  h. retract arm

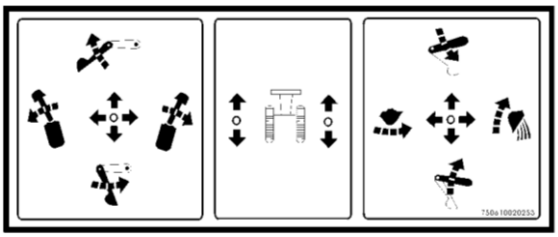

- Operation together with two pilot handles can also take compound motion. In addition, horn switch button is fixed on the handle.
- Two travel control lever control forward motion, reverse motion and steering of the machine.

（17）Direction Label

- This label indicates travel direction of machine when “travel control lever is pushed forward”.

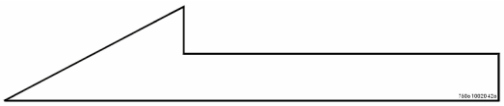

Warning

In case that driving wheel is located underneath cab, machine will travel rearward when pushing “travel control lever” forward.(On this occasion, symbol indicates backward).

(18) No Stepping Label

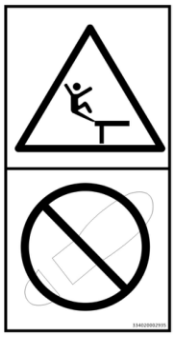

Warning

- **Stay clear of operation area of working device**.

https://truckmanualshub.com/

(19) Pilot Safety Lock Label

(20) Fuel Label

Warning

- **Handle fuel with extra care because it's highly flammable. In case that fuel is ignited, this can cause explosion or fire, and even death or injury to person.**

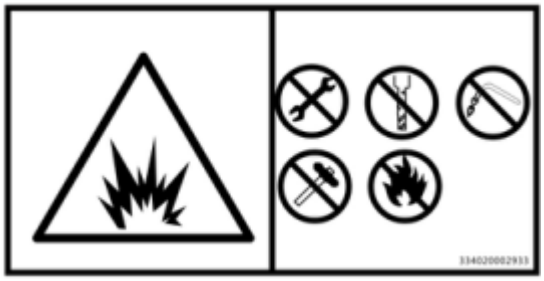

- Always refilling fuel at outdoor. Before refilling, the engine should be shut down.
- Do not refill fuel while smoking or near fire or sparks.
- All fuel and most of lubricants are flammable.
- Flammable liquid should be stored at proper place far from fire.
- Do not burn out or stab at pressurized container.
- Do not store rags containing oil. This can cause self-ignition and can be lighted up.
- Fasten cap of filling opening.

https://truckmanualshub.com/

(21) Emergency Exit Label

- When accidents happen, and operator is trapped in cab, operator can use life hammer located on the side of cab to destroy window labeled with exit mark to get out of the machine.
- The safety structure being damaged is beyond repair. But you could have it replaced with a new one.

Caution

- **Pay attention to the flying pieces while breaking out emergency exit way. For better protection of your safety, please keep sufficient distance from exit way being damaged.**
- **Exit hole must be big enough for operator to get out. Make sure your safety.**

(22) Center of Gravity Label

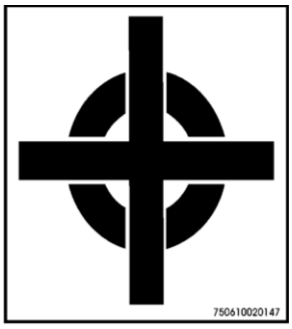

(23) Track Tension Adjustment Label

- Pay attention to avoid being hurt by the fly-out of grease nozzle while adjusting track tension.
- The manual should be read carefully prior to adjust track tension.

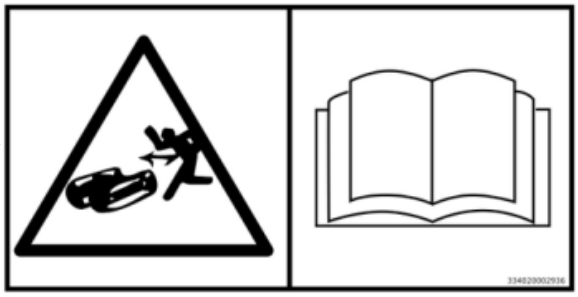

https://truckmanualshub.com/

1.2 GENERAL SAFETY RULES

1.2.1 Observing Safety Rules

- Thoroughly read, understand and follow all safety precautions and procedures found in this manual.
- Regularly affix, maintenance and renew new safety labels, so that they are legible，conspicuous and affixed firmly.
- In case safety labels and manual are damaged or lost, contact us or our authorized distributor to order new ones (when ordering, please specify machine model, and serial NO).
- Learn about how to properly and safely operate machine and its controlling device.
- Use only trained and qualified person to operate on this machine.
- Keep machine at good working condition.
- Unapproved modification on this machine can impair function, effect service life and jeopardize personal safety.
- Note: all safety information described in this section covers only basic safety information of this machine. It’s not possible to predict every circumstance which might involves potential hazards. So it’s necessary to ask for instruction from your superior before attempting any operation or maintenance procedure.

https://truckmanualshub.com/

1.2.2 Understanding Safety Label

Different safety labels containing safety messages are located on different position. All message of safety are identified by words “DANGER” “WARNING” and “CAUTION”(see fig), Their significations are as follow:

- DANGER ---indicates an imminent hazard, if not avoided, will result in death or serious injury.
- WARNING---indicates a potential hazard, if not avoid it, death or serious injury may incur.
- CAUTION---indicates a potential hazard. If not avoid, may result in minor or moderate injury.

Label of “DANGER” “WARNING” and “CAUTION” are placed in specific position in which involves a possible hazard. General safety related items are listed in “CAUTION” labels, In this manual, “CAUTION” may also be used to invite attention to safety instructions.

1.2.3 Emergency Protection

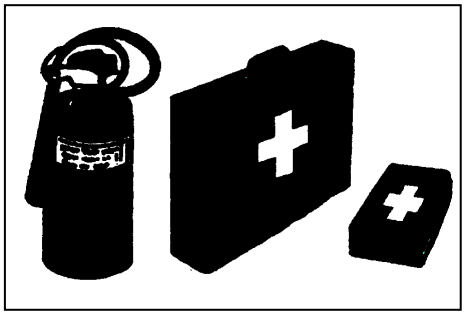

- Be cautious of fire and accidents: make sure there are fire extinguishers ready for emergency, thoroughly read and understand all instructions on fire extinguisher and know how to operate it.
- Carry out maintenance and inspection procedure regularly to make sure fire extinguisher is available at all time.
- Have a kit ready for emergency. Be sure that all drugs are still in effective period.
- Prepare beforehand the communication means of doctor, ambulance, hospital and fire brigade. Take note of their telephone numbers for emergency contact.

1.2.4 Protective Articles

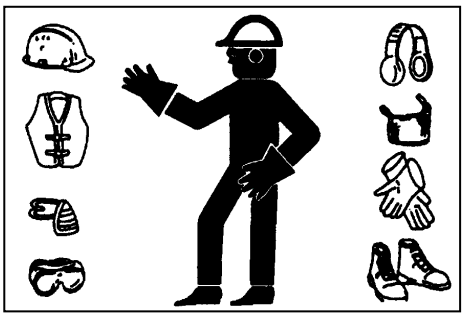

- Do not wear accessories or loose clothing. Always wear close fitting clothing and protective articles suited for operation.

  They cover the following items:

  Close fitting clothing

  Hard hat

https://truckmanualshub.com/

Thick gloves
Protective glasses, goggles or face mask
Mask or filter face mask
Ear plug or earcap
Safety belt and rain-proof

1.2.5 Safety Equipment

- Make sure that all guards and covers are properly positioned. Repair immediately if they are damaged.
- Understand how to use safety apparatus and use them properly.
- Never remove any safety apparatus, keep them in good operating condition.

1.2.6 Keeping Machine Clean

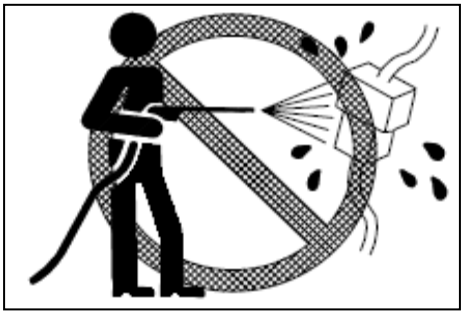

- Do not use water or vapor to flush electrical circuit, connector of machine to avoid electrical system failure.
- Remove all mud, oil dirt and other foreign matter. Keep machine clean at all times.

1.2.7 Checking before Start-up

- Inspect surrounding machine daily or before each work shift.

Be sure to follow the instruction described in “pre-start inspection” section during patrol inspection process.

1.2.8 Precautions for Entering Cab

- Remove all mud, oil adhered to your shoes prior to access into cab. Failure to do so, your foot may slip and this may cause serious accidents.
- Do not leave parts or tools around operator’s console.
- Do not store flammable and explosive items in cab.
- Do not use radio or cell phone during operation on the machine.
- After smoking, be sure to extinguish dog-end, secure ash tray cover to prevent fire.
- Don’t place transparent bottle and other convex stuff in

https://truckmanualshub.com/

cab to prevent fire as a result of solar light focusing.

- Don't leave lighter in cab. There is a possibility that lighter may explode along with the increase of temperature.

1.2.9 Correct Entering/Leaving Machine

- Always face the machine, maintain a secure three point contact to mount or dismount machine my means of steps or handrails to avoid falling off.
- Do not grip any control levers as a substitute of handrails to mount or dismount the machine.
- Keep all handrails, gangway clean and free of oil and mud to prevent slip.
- Never mount or dismount the machine while it's under the operation of tramping, swing, and digging.
- Do not mount or dismount machine while holding tools in your hand.
- Do not jump on or off the machine.

1.2.10 Adjustment of Operator's Seat

A comfortable posture can alleviate operator's fatigue. You may adjust seat for your comfort in relation to your weight, height and arm length.

- Distance from hand-lever: for ideal hand operation posture, adjust distance of upper slide rail as well as armrest angle and backrest tilting.
- Position of pedal: for desired pedal operation posture, adjust distance of lower slide rail as well as seat height.
- Weight support adjustment: adjust load bearing capacity of seat in relation to your weight for better damping effect.

1.2.11 Fastening Seatbelt

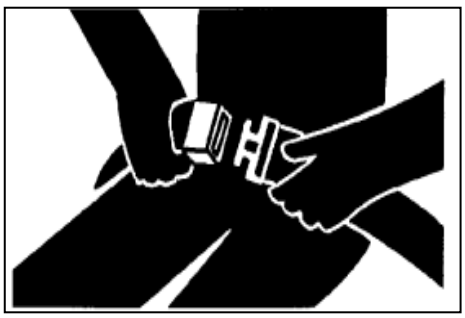

- Check seatbelt for damage or wear out before starting machine.
- Fasten your seat belt prior to operation.
- Change seat belt every 3 years to ensure the safety

https://truckmanualshub.com/

performance of seat belt can meet the requirements for use.

1.2.12 Ensuring Perfect Visibility

- Stop the machine if the fog, rain, snow or dust has negative effects on your visibility.
- To work at dark, make sure the lighting device can function normally.

1.2.13 Leaving Operation Seat Safely

Warning: Unexpectedly touching unlocked pilot safety control lever can result in sudden movement of the machine and cause injury or damages to the machine.

- When operator tends to leave or stand up off the seat(to open or close front or upper windows, remove or install front lower windows, adjust seat), please lower the work equipment to the ground, set pilot safety control lever to LOCK position securely, then stop the engine.

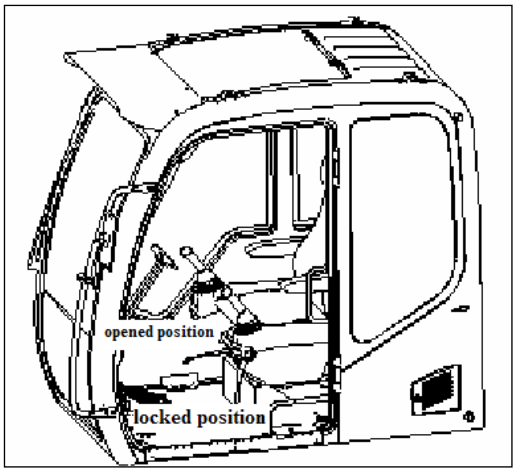

1.2.14 Emergency Exit

- If the door cannot be opened for some reason, you may open the back windows, and use it as an alternative exit way for emergency. For details refer to the instructions in “emergency exit label”.

1.2.15 No Passengers Allowed

- When machine is in the process of operation or traveling, do not allow anyone to ride on the machine other than the operator. Because there is a hazard that passengers may fall off or get hit by foreign body.
- Passenger may block operator’s sight to result in unsafe operation.
- Do not allow anyone to sit on bucket or other front attachments. Serious injury can occur to person.

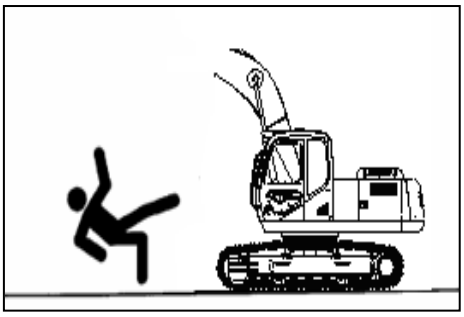

1.2.16 Worksite Safety

- Thoroughly inspect worksite for any abnormal danger situations prior to operation.
- Operate with extra care for any operation in vicinity of flammable materials such as thatched roof, dry leaves

or dry grass.

- Survey terrain and ground condition around worksite. Determine a safest operation method in a safe manner.
- Do not operate in vicinity of the area in which there is a risk of landslide or falling rock.
- At the work around place of water or gas lines, or cables underground. Contact relevant utility to identify their locations. Pay attention not to rapture or damage any of these lines.
- Take necessary measures to prevent any unauthorized person from entry into work area.
- In the event of operation over soft ground or in shallow water, it's necessary to check type and condition of rock bed, and take water depth, flow speed into account prior to operation.
- In the event of operation in vicinity of over bridge or overhead stuff, be cautious not to collide with front working device of machine.

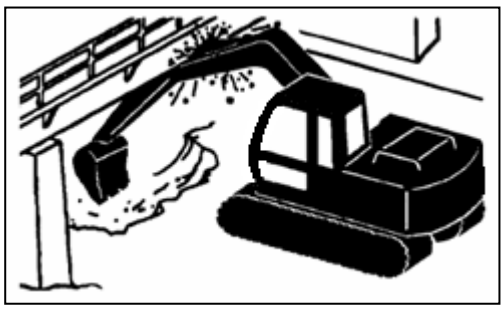

1.2.17 Operation on Loosened Area

- Do not operate around cliff, shoulder of road or ditch. In this area, the ground is loosened. There is a possibility of getting into danger of ground sinking with vibration and weight of the machine. Bear in mind that the soil is loosened in this area after heavy rain, explosion operation or earthquake.
- When working on a dike or around ditch, there is a possibility of getting into danger of ground sinking resulting from vibration or weight of the machine. It's necessary to take measures to secure safety against tip-over and falling off.

1.2.18 Signals and Gestures from Flagman

- Provide caution plates when working on shoulder of road or loosened ground. Provide a flagman if necessary. Operator must pay much attention to caution plates and follow flagman's instruction.
- Use only one flagman to instruct.
- Make sure all signals and gestures are understood by the personnel prior to operation.
- It's necessary to offer a flagman to organize operation during multi-machine operation. Be sure all his signals are understood and follower by operators.

https://truckmanualshub.com/

1.2.19 Distance to High Voltage Cables

- Severe injury or death can occur to person due to any contact of any parts or load of machine with electric cables. Always keep safe distance：

	Voltage	Minimum safe distance
Low voltage	100V 200V	2m
	6,600V	2m
High-voltage and extra high voltage	22,000V	3m
	66,000V	4m
	154,000V	5m
	187,000V	6m
	275,000V	7m
	500,000V	11m

- If it's inevitable to operate in vicinity of high voltage utilities, contact with your local utility company to shut off power supply, always wear proper electrical insulated shoes and gloves.
- If it's inevitable to pass by utilities, provide a flagman to secure safe distance and warn operator in time.

1.2.20 Preventing Scald

- Be cautious of coolant burn during inspection or discharging coolant. Hot fluid or vapor can erupt from check port or discharging port and scald. Allow cool before opening.
- Before attempting any inspection or oil discharging operations, wait to prevent scald until oil is cool and internal pressure is released.

1.2.21 Keeping Away From Transmission Parts

- Use extreme care to operate in vicinity of driving parts to prevent hands, feet, hair and clothing being caught in machine.

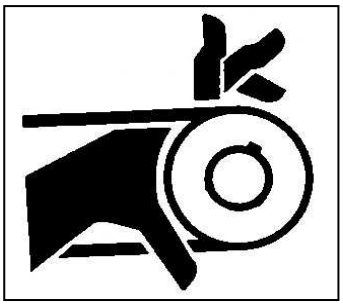

1.2.22 Preventing Fire and Explosion

- No smoke or using naked flame around fuel and

https://truckmanualshub.com/

engine oil.

- Stop engine before refilling.
- Do not spill oil to hot surface or electrical equipments of machine.
- Secure and lock oil cap after adding oil.
- Wipe off oil dirt; remove all flammable or explosive material.
- Do not weld or cut pipelines that contain flammable fluids.
- Keep wire terminals secured and clean.
- All leads must be free of damage. Prevent fire due to short circuit of damaged leads and machine.
- Prevent spark due to static electricity or friction.

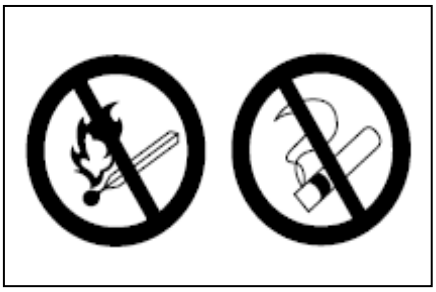

1.2.23 Measures for Fire Fighting

- Switch starting key to “OFF” position to stop engine.
- Remove fire extinguisher in cab.
- Get out of machine by utilizing handrail and steps.
- Contact fire department and colleagues and superior. Extinguish fire with fire extinguisher.

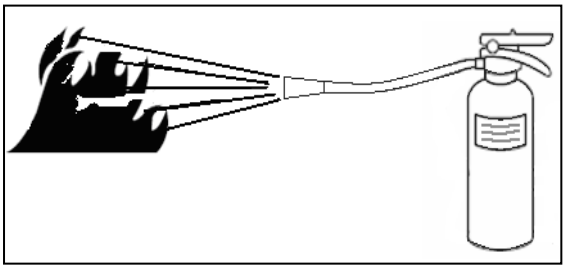

1.2.24 Preventing Splashing or Falling Objects

- Wear protection glasses or goggles to avoid injury resulting from fly-out and falling object (such as metal particles or sand rock).
- When hitting, make working area off-limits to the other person.
- Machine must be fitted with falling object protective structure (FOPS) and front protective structure. If machine is used in mining area or quarry where there is a risk of falling rocks.

1.2.25 Prevention of Flying-Out Parts

- Bear in mind that lubricating grease in track tension device is under high pressure. Do not remove parts such as oil cup or valve etc to avoid injury.

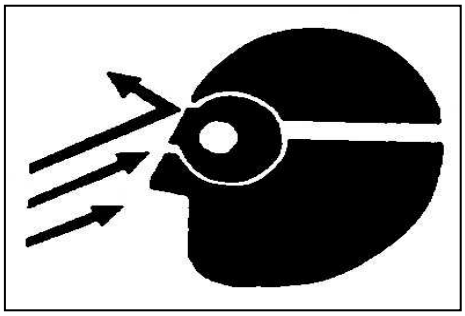

https://truckmanualshub.com/

- Moreover, keep face and body away from valve block in case that part will fly out.
- There is some pressure build up in travel redactor. Gear oil temperature will increase after operation. Keep face and body away from air bleeding plug.
- With gear oil cooled, gradually loosen air bleeding plug to release pressure.

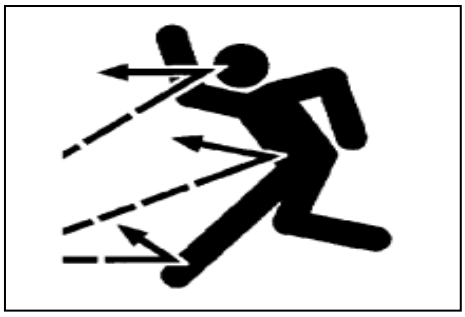

1.2.26 Preventing Asbestos Dust Inhalation

- Asbestos dust is known to cause pulmonary cancer. When handling elements containing asbestos fibers, be cautious not to inhale asbestos dust generating by those elements.
- To avoid dust, do not use pressurized air to clean machine. Do not scrub or grind material containing asbestos. Always wear approved respirator and use recommended dust collector to remove asbestos during maintenance. If you can not find them, wet asbestos material with water or oil. Follow rules and regulations at operational site. Observe relevant laws and regulations in reference to asbestos disposal. Do not allow other person to access working area.

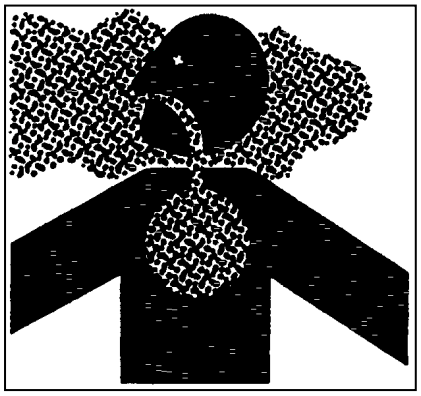

1.2.27 Bewaring of Inhalation of Smoke or Exhaust Gas

- If exhaust gas is inhaled, this can cause diseases and even death.
- If machine is operated at indoor, it’s necessary to open door and windows to ventilate. Or you can also use lengthened discharge pipe to discharge exhaust gas to outside.

1.2.28 Be Careful of High Pressure Liquids

- High pressurized fluid can penetrate leading to severe injury.
- Always release pressure before separating fluid or other pipelines.
- You may release pressure by means of operating control lever.

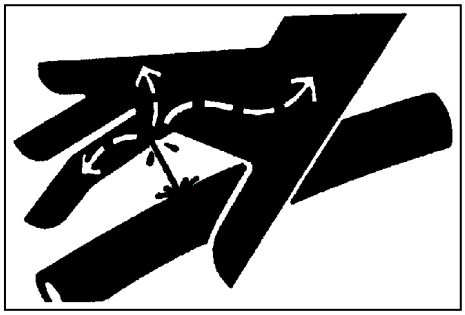

https://truckmanualshub.com/

- Fasten all connector parts prior to pressurizing.
- Use cardboard to locate leakage. Keep your hand and body away from pressurized fluid.
- In case of accidents, consult a doctor experienced in this kind of injury for medical care.

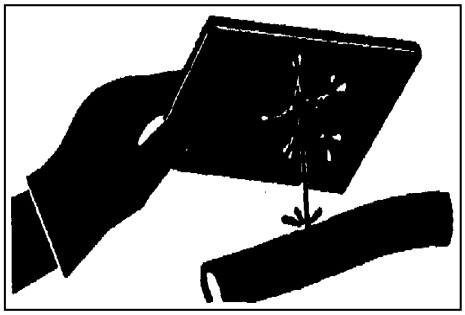

1.2.29 Safe Disposal of Liquids

- Considering that fuel is highly flammable, handle them with extra care. In case that fuel is ignited, injury or death may occur to persons.
- Always add fuel at open-air. Be sure to stop engine before refilling fuel.
- Do not refill fuel while smoking or around naked flame or spark.
- All fuel and most lubricant and coolant are flammable.
- Keep flammable fluid away from the area involves fire hazards.
- Do not burn out or stab at pressurized container.
- Do not restore rags containing oil. They may be ignited or self-ignited.
- Secure cap on refilling opening.

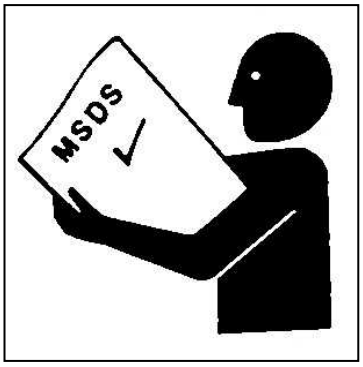

1.2.30 Safe Disposal of Chemicals

- Serious injury can occur by allowing hazardous medical to make direct contact with person. Medicals being used in the machine such as lubricant, coolant, and binding admixture may be harmful.

1.2.31Waste Material Disposal

- Observe local laws and regulations to dispose of waste material, such as fuel, coolant etc.

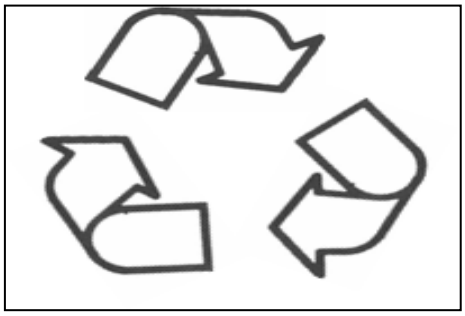

1.2.32 Prohibition of Unauthorized Modification on Machine

- Any unauthorized modification to machine may involve hazards.

https://truckmanualshub.com/

- SUNWARD disclaim any responsibility for damage, injury or accidents arising from unauthorized modification.

1.3 SAFE OPERATION INSTRUCTIONS

1.3.1 Inspection before Starting Engine

Before starting daily routine inspection, carry out the following checks.

- Wipe off dust on glass window to secure visual field.
- Wipe off dust on the surface of front light and working lamp, check to ensure they are properly functioning.
- Check coolant level, fuel level and oil level in engine oil pan. Check air filter for clogging, check wiring for damage.
- Adjust operator's seat to a position where it is easy to carry out operation. Check seat belt or mounting clamps for damage or wear.
- Check meters to ensure they are functioning properly. Check working lamp angle. Make sure control levers are at neutral position.
- Check safe lock control levers to ensure they are in LOCK (UP) position before starting engine.
- Adjust rear view mirror to a certain position where a clear visual field of back machine is secured.
- Check upper or lower machine to ensure there is no other persons or obstacles surrounding machine.
- In case there are any warning tags posted on control lever, do not start or touch control lever.

1.3.2 Correct Engine Start-up

Warning: Inappropriate engine start can cause machine out of control leading to severe injury or death.

- Make sure all control levers are set in neutral position, and honk the horn to alert, before starting engine.
- Start the engine only if operator is in seated position. Do not start machine while standing on the track or

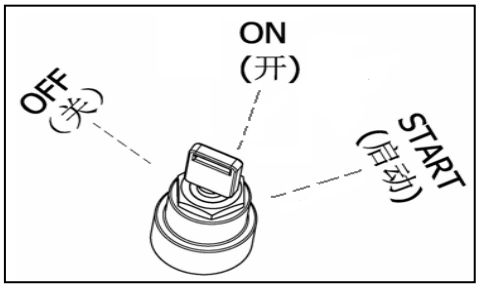

https://truckmanualshub.com/

ground.

- Never ride on the machine, the machine is for operator only.
- Do not attempt to start engine by short circuiting the engine (including terminal starting), this action is dangerous, beyond dangerous, it will cause damages to equipment.

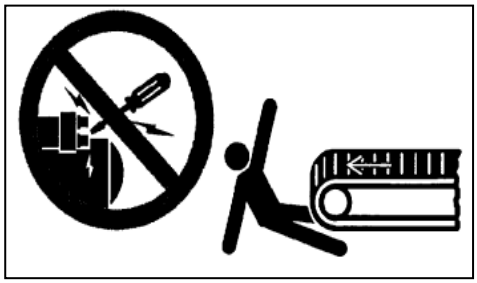

1.3.3 Starting Engine in Cold Weather

- Carry out a complete warm-up operation before operating control lever. Failure to do so, machine will lag in response, this may result in accidents.
- If the battery electrolyte is frozen, do not charge battery or use a different power source to start the engine. Failure to do so may cause battery to be ignited.
- Melt battery electrolyte and check electrolyte for leakage or freezing before charging battery or using different power source to start machine.

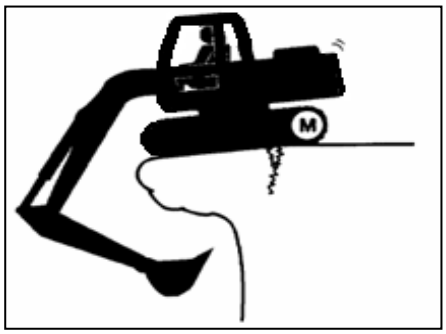

1.3.4 Safe Operation

- Before excavation operation, thoroughly check the underground line conditions. Precisely identify location of individual underground utility line such as cables, gas pipeline, water pipeline etc.
- Keep jobsite off-limits to all no operating person.
- Make sure the condition of worksite is stable and capable of supporting the machine.
- To make it easy to escape if there is any collapse, set the tracks at right angle to the pit with sprocket at the rear when carrying out operation near pit.
- When digging the work face under an overhang, the overhang may collapse and fall on top of the machine.
- Do not place bucket above the head of person or operator cab. Falling objects from bucket or collision with bucket can cause serious injury or death or damage to machine.
- When using breakout hammer or other heavy working equipment, there is a hazard of losing its balance and tipping over.

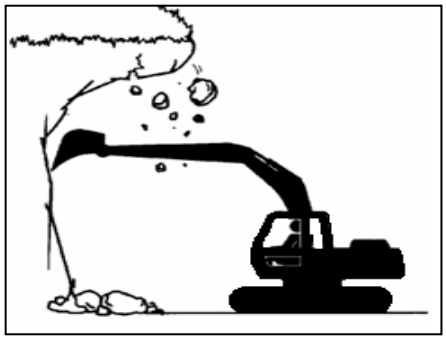

https://truckmanualshub.com/

- Do not lower, swing or stop working device all of sudden.
- Do not extend or retract boom cylinder suddenly, There is a risk of machine tipping over due to impact force.

1.3.5 Operation on Slopes

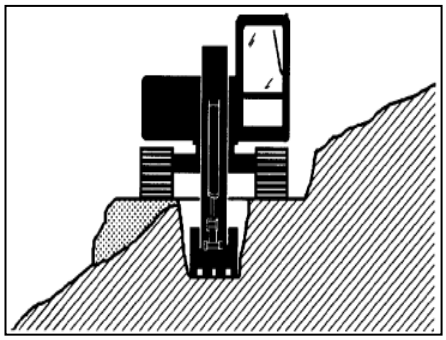

- When operating swing or working device during operation on slopes, there is a risk that the machine may lose its balance or tip over. This may cause serious injury or damage to machine. So it's necessary to provide a flatness area for the machine and operate carefully.
- Do not swing machine from uphill side to downhill side, when bucket is fully loaded. This dangerous act can cause machine to tip over.
- If the machine has to be used on a slope, pile the soil to make a platform which can keep machine as horizontal as possible.

1.3.6 Operation on Snowy Ground

- Snow coated or frozen ground is slippery. So pay extreme attention when tramping or operating machine. Do not operate control lever suddenly. Pay much attention when operating on a slope even a slight slope. Can cause slip.
- Frozen ground will become soft along with the increase of ambient temperature. This may cause machine to tip over.
- In case of access to deep snow, there is a hazard that machine may tip over or be buried in the snow. Be cautious not to leave the road shoulder or get trapped in snow.
- When clearing snow, the road shoulder and objects placed beside the road are buried in the snow and can not be seen. There is a hazard of the machine tipping over or hitting covered objects, so always carry out operation carefully.

1.3.7 Avoid Tipping-Over

Warning: Do not attempt to jump off a tipping

https://truckmanualshub.com/

over machine; this may cause severe accidents of injury and death.

Machine will tip over before you jump off the machine.

Fasten seat belt.

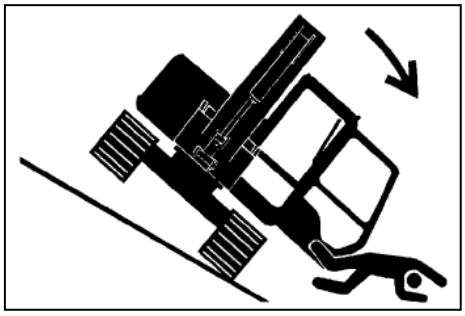

- There is a possibility of tipping over when machine is operated on a slope. To avoid tipping over：
  - Smooth jobsite of machine.
  - Lower bucket to ground, keep it close to machine.
  - Lower operation speed to prevent machine from tipping over.
  - Do not change direction when tramping on a slope.
  - Decrease slewing speed of upper-structure, when bucket is loaded.
- Be alert that ground surface becomes soft arising from increase of ambient temperature. This may affect the stability of machine.

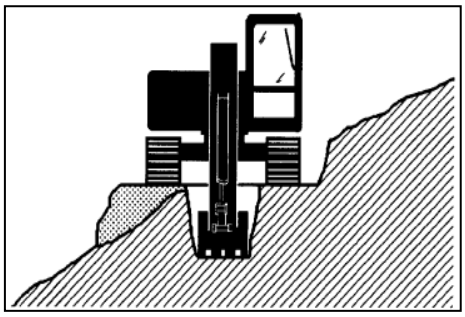

1.3.8 Preventing Accidents While Backing or Swinging

Warning: There is a possibility to crush or hit person around to cause severe accidents of injury or death, when swing or reversing the machine.

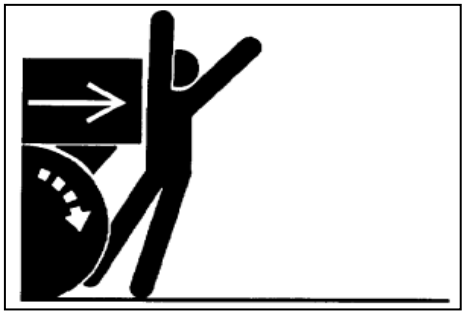

Follow the following instructions to prevent accidents during swing or reversing operation.：

- Check surrounding area to ensure there is no other person around before swing and reversing the machine.
- Ensure that bystanders are out of swing area.
- Ensure that travel alarm is functioning properly. Be alert that no bystander accesses to jobsite. Sound horn or use other alarm to warn people.
- When machine travels in reverse, provide a flagman to assist in case operator’s sight is limited. Keep the flagman with operator’s sight
- When signal is needed during working, signal man be suppose to use hand signal. Only when the signals are understood by both signal man and operator, the machine can be operated to tram or swing.
- Understand all flags，signs and signals being used during operation. Select the person who is responsible to signal.

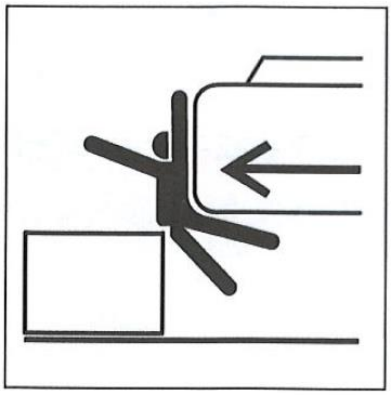

https://truckmanualshub.com/

- Keep windows, mirrors and light fittings clean.
- In case of improper visibility arising from dust, rain, or fog etc. use appropriate lighting device.
- Please read and understand all safety rules described in this manual.

1.3.9 Avoiding Accidents Caused By Control Failures

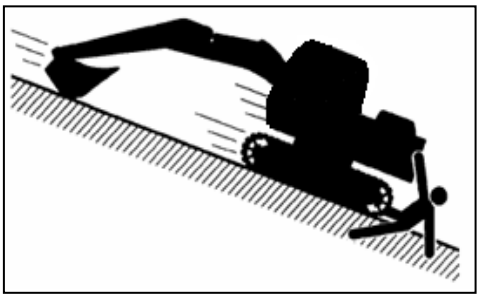

Warning: When the machine is out of control, any attempt to mounting or to stop a moving machine can result in severe injury or even death.

To avert runaway, it's necessary to park machine properly.

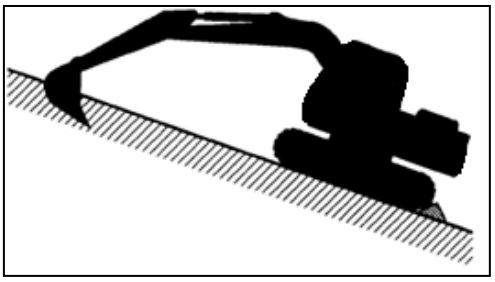

- Always park the machine on level ground, do not park the machine on a slope.
- Lower the bucket to the ground.
- Disable the auto-idle speed switch and power selecting switch.
- Allow the engine to idle at low speed for 3 minutes to cool down the machine.
- Stop the engine, remove the key.
- Turn off the pilot control switch.
- When the machine is to park on a slope, chock the machine on both side of the track, lower bucket to dig the teeth into the ground.
- Position the machine to avoid unexpected movement. Keep proper distance from the other machine.

1.3.10 Moving Machine Safely

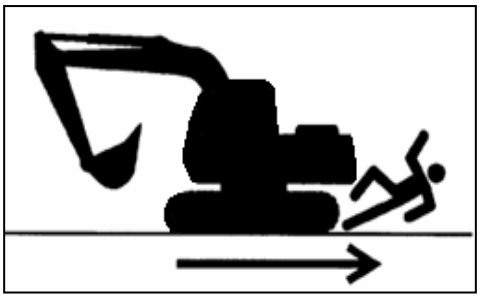

- Before moving the machine, check travel control lever (pedal) to ensure the relationship between operation direction and machine movement direction.
- Before moving the machine, make sure the working area is free of other persons and obstacles, and sound the horn to alert.
- Bypass any obstacles during traveling.

https://truckmanualshub.com/

- When traveling, swing, operating working device in confined area, position a signal person and define the meaning of the signals beforehand.

1.3.11 Safety Rules during Traveling

- During operation of machine, do not operate exceeding max load capacity or performance to avoid stall and damage to working device.
- When traveling on flat ground, fold the working device and keep 400 to 500mm high above the ground.

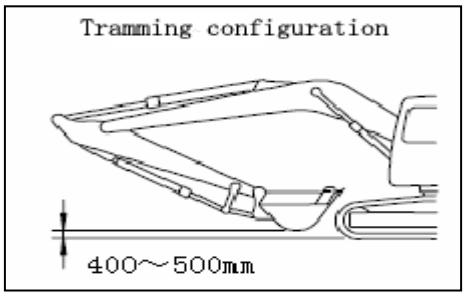

- When traveling on rough ground, travel at low speed. Do not steer sharply， there is a risk of machine turning over. The work device may hit the ground and cause machine to lose its balance or damage the machine or structures.
- When traveling on rough ground or on slope, disable the auto-reduction switch(if present) ， if auto-reduction switch is on, engine revs may increase. This may cause machine to speed up abruptly.
- Avoid traveling on obstacles if possible. if the machine has to travel on obstacles, lower the working device close to the ground at low speed. Do not travel over obstacles which involve risk of tilting machine to one side.
- When traveling or operating, keep a safe distance from people, structure or other machine to avoid making contact with them.
- When passing over bridges or structures, check first structure is strong enough to support the weight of the machine. When traveling on road, contact relevant authorities and follow there instructions.
- When operating in tunnel, under bridges, under electric wires or other height-limited area, operate slowly and pay much attention not to hit anything.

1.3.12 Traveling on Slopes

To prevent machine from tipping over or side sliding, follow the instructions below.

- When travel on slopes, keep working equipments 20 to 30cm high above ground. In case of emergency, lower the working device to ground to help stop the

https://truckmanualshub.com/

machine.

- When traveling uphill, set the cab facing uphill direction. For downhill, set the cab facing downhill direction. When traveling, always check the firmness of the ground in front of machine.
- When traveling uphill, extend the working device to the front to improve the balance, keep the working device 20 to 30cm and travel at low speed.
- When traveling downhill, lower the engine speed, keep the travel lever close to the neutral position, and travel at low speed.
- When traveling on slopes, operate machine straight up or straight down, steering or crossing on the slope is very dangerous. Always descend to a flat area to change direction, then travel uphill again.
- When traveling on grass, fallen leaves or wet steel plates always travel at low speed because there is a risk of slip even if traveling on a slight grade.
- In case that engine stops when traveling on a slope, place control lever to neutral position immediately, and re-start the engine.

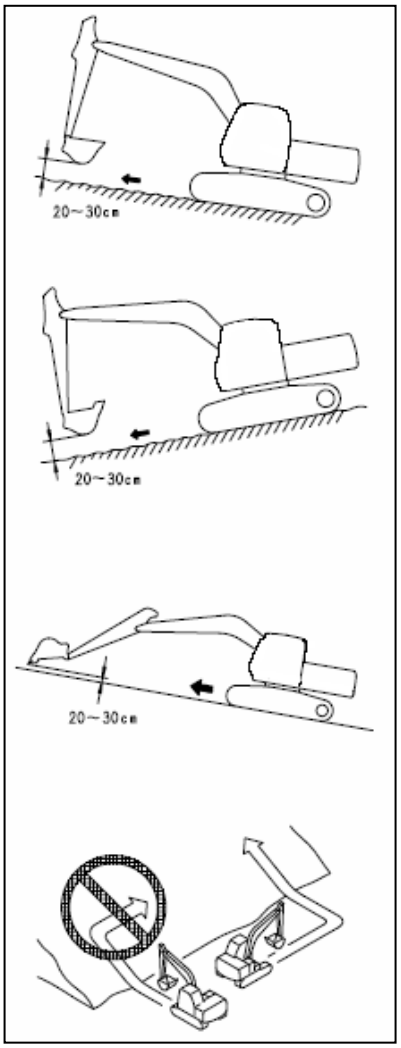

1.3.13 Safety Rules during Towing

Warning: Improper towing may damage machine, any mistake on selecting steep rope or inspection can result in serious injury or death.

- Always wear gloves when handling steel ropes.
- Secure steel ropes to track frame.
- During towing operation, do not stand between the towing machine and the machine being towed.
- Do not tow machine on slopes.
- Never use a wire rope which has cut strands, reduced diameter, or kinks. There is danger that the rope may break during the towing operation.

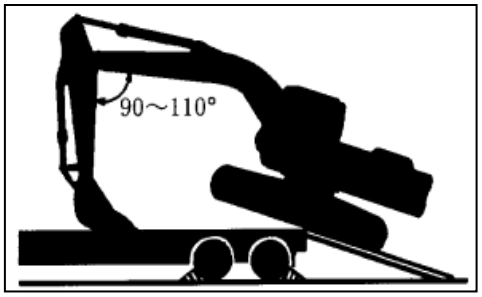

1.3.14 Machine Transportation

Warning: When loading or unloading the machine, there is a hazard of tipping over or falling.

- During transportation on road, follow the local laws and regulations. Study all local laws or regulations concerning limiting load weight, width and length. Dismantle the machine if necessary. Select proper

https://truckmanualshub.com/

route or means of transportation according to the width, height or weight of the load.

- Provide proper truck or trailer for road transportation.
- When crossing bridges or private structures, check first to ensure that the ground is firm enough and capable of supporting the weight of the machine. When the machine has to travel on road, it's necessary to contact relevant authorities to follow their instructions.
- For any instructions concerning loading or unloading machine, refer to the chapter 2 (transportation and storage).

1.3.15 Parking Machine

- Parking machine on a firm, level ground.
- Select a place without hazard of falling rocks or landslides, or flooding.
- Lower the working devices completely to the ground.
- When leaving machine, place the pilot safety lever to LOCK position, and then stop the machine.
- To prevent unauthorized person from operating the machine, always close the cab door, use the key to lock all the equipment. Then remove the key, and keep the key with you, and leave the key in a prescriptive place.
- If the machine has to park on slopes, follow the instruction below：

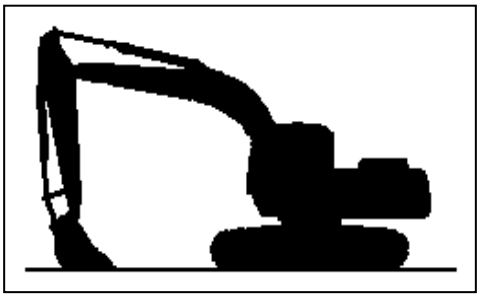

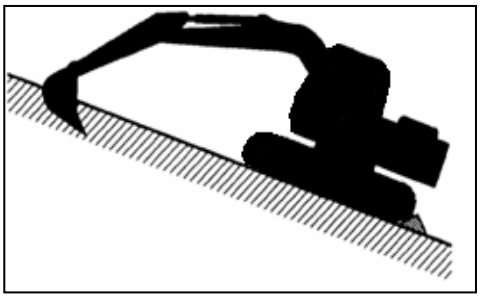

◆ place the bucket to the downhill side, then dig it into the ground.

◆chock the track to prevent machine from moving.

1.4 SAFETY MAINTENANCE INFORMATION

1.4.1 Using Warning Signs

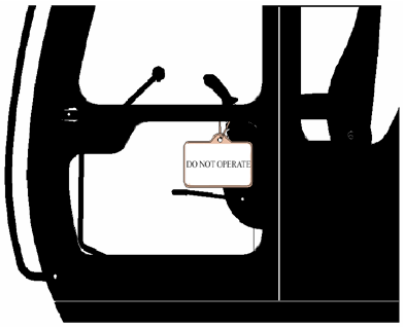

Warning: During maintenance or service procedure, any attempt to start the engine, have access or operate control lever of working device can result in serious injury or damage.

- Always post "DO NOT OPERATE" tag to the control

https://truckmanualshub.com/

lever in the cab to alert the other person that you are carrying out maintenance or service.

- Set the other warning signs around the machine if necessary.

1.4.2 Parking Machine Prior to Maintenance

- Park the machine on firm level ground.
- Lower the bucket to the ground.
- Switch off the idle, run the machine at low speed for 5 minutes.

Set the key switch to OFF position to stop the engine.

- Operate each control lever, release internal pressure of hydraulic system.
- Remove the key from the switch, set the pilot lock lever to LOCK position.
- Post “DO NOT OPERATE” sign to the controls.
- Cool the engine.
- Chock the track to prevent machine from moving.

1.4.3 Safety Maintenance Rules

- Understand all maintenance instructions prior to operation.
- Keep the working site clean and dry.
- Do not spay water and vapor in cab.
- When the machine if moving, do not lubricate the machine or perform any maintenance operation.
- Prevent any parts of the body from reaching moving parts of the machine.
- If the maintenance procedure has to be carried out when engine is running. Position a person in operator seat to stop the engine at any moment. All persons keep each other in touch.
- Do not operate under the machine which is supported by boom. If you have to service the machine with boom supported, use bracket or block strong enough to support the machine and working device securely.
- Dispose of replaced parts in time; remove any

https://truckmanualshub.com/

accumulated lubricating grease, oil or debris.

- Always disconnect negative terminal from battery before testing on electrical system or welding on the machine.
- Provide complete lighting device for jobsite. When working under the machine or inside the machine, always use maintenance work light with protective hood. Or broken bulb pieces may ignite flammable fluid e.g. spilled fuel, engine oil, anti-freezing fluid etc.

- Do not make contact with coolant, in case of contact; there may be some hazards of blindness, for the skin, cold injury may occur.
- When using pressed air to clean up, injury or damage can occur due to flying-out particles. When using pressed air to clean up filter core or radiator, always wear goggles, dust-preventive mask, gloves and other protective items.

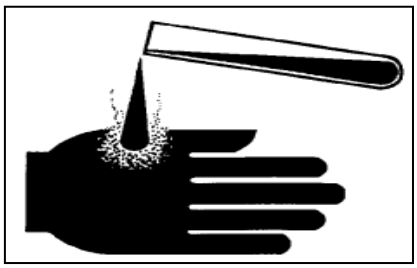

1.4.4 Tips for Using a Hammer

- When using a hammer, pins may fly out or metal particles may be scattered. This may lead to serious injury, always do as follow.
  - When using a hammer to hit hard metal parts, say pins, bucket teeth, cutting edges or bearings. There involves some hazards that pieces may be scattered and lead to injury. Always wear goggles and gloves.
  - When hitting pins or bucket teeth, there may be some hazards that broken pieces may fly out causing injury to surrounding persons. Make sure the surrounding area is off limits to the other people.
- When hitting the pins with tough force, there are some hazards that pins may fly out causing injury to surrounding people.

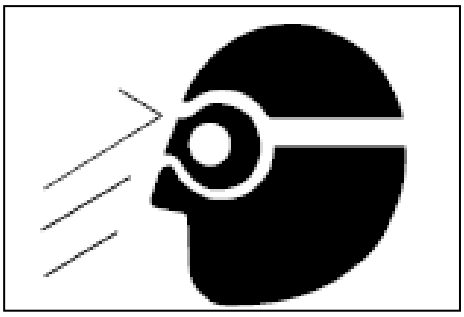

1.4.5 Precautions of Welding and Polishing

- Welding operation can generate flame and gas. Operate must be therefore carried out in well-ventilating area with complete preparation.
- Store flammable substance in safe place prior to welding operation.

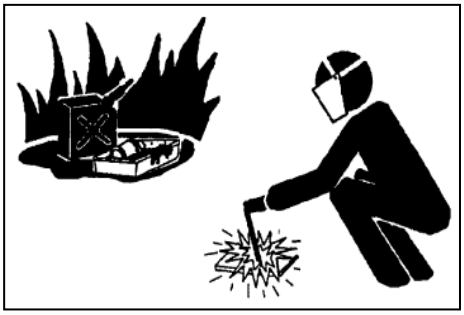

https://truckmanualshub.com/

- Use only qualified person to carry out welding operation, never allow any unqualified personnel to carry out welding operation.
- Sparks may occur during grinding. Place flammables in safe place prior to grinding operation.
- With welding and grinding operation is made, recheck worksite and its surrounding area for any abnormal signs e.g. spark, smoke etc.

1.4.6 Avoiding Heating Pipes Containing Flammable Liquids

- Do not carry out welding or gas cutting operation to any pipelines containing flammable liquids.
- Use non-flammable solvent to remove all flammable liquids prior to welding or gas cutting.

1.4.7 Avoiding Heating near Pressure Oil Pipes

Warning: Heating around hydraulic pressure pipe will cause flammable spray causing serious scald to yourself or bystanders.

- Do not carry out any welding, gas welding, gas cutting or heating operation around hydraulic pressure pipe or other flammable material.
- While heat power is beyond the working area, the pressure pipe may be cut off at any time. Prior to welding or gas cutting, the fireproofing covers should be placed temporary to protect the pressure pipe or other materials.

1.4.8 Removing Paint Before Welding or Heating

Paints might be heated during welding or gas cutting operation and generate harmful gases. Inhaling these gases may cause nausea.

- Avoid generating any potential harmful gas and dust.
- Carry out painting operation outdoor or in ventilating area. Dispose of paint solvent properly.
- Remove paints prior to welding or heating operation.
- When using grinder or sand paper to remove paints, always wear proper inhaler to avoid inhaling dust.
- In case of removing paints with solvent, use soap to remove solvent prior to welding as well as to clear all solvent and its container or other flammables. Offer at

https://truckmanualshub.com/

least 15 minutes for volatilization prior to welding or heating.

1.4.9 Attachments

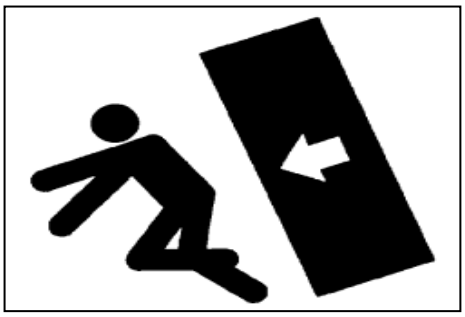

There are some hazards that those stored accessories say bucket, breakout hammer might fall off to cause serious injury.

- Store accessories and equipment to avoid falling off. Take necessary measures to prevent children and unauthorized personnel from entering storage area.

1.4.10 Maintenance Precaution of Track Tension Mechanism

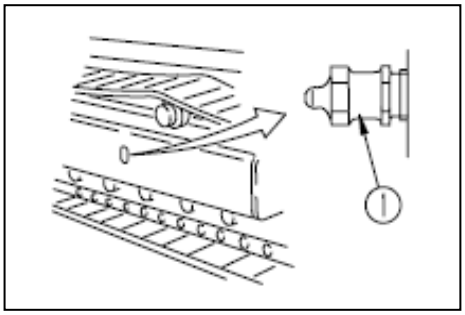

- Grease is being pumped into track tension adjustment system under high pressure. During adjustment operation, if the specified maintenance procedures are not followed, the lubricating grease drain plug (1) may fly out leading to serious injury and damage.
- When loosening grease drain plug (1) to loosen the track tension. Never loosen it more than one turn. Loosen the grease drain plug slowly.
- Never put your face, hands, feet, or any other part of your body close to grease drain plug (1).

- Recoil spring assembly contains a compression spring which serves as a shock absorber for the idler. If it is disassembled improperly, spring may fly out and cause serious injury and even death. Do not disassembly recoil springs.

1.4.11 Safety Rules for High-pressure Oil

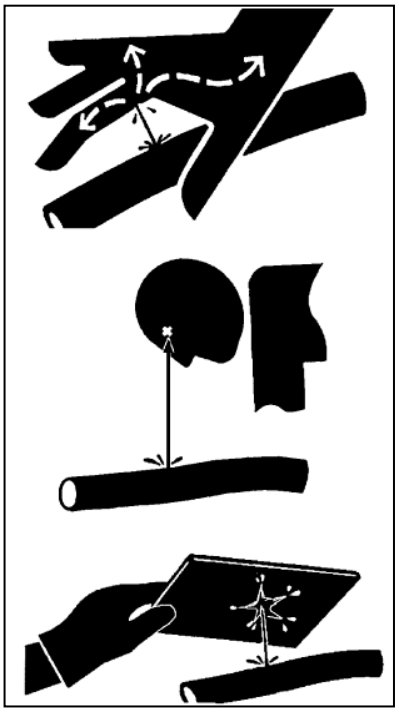

- Hydraulic system is always under internal pressure. When inspecting or replacing piping or hoses, always check that the pressure in the hydraulic circuit has been released. If the circuit is still under pressure, it will lead to serious injury, so always do as follow.
  - Never attempt any inspection or replacing operation if hydraulic system is under pressure.
  - If there is any leakage from piping or hoses, the surrounding area is wet, so check for cracks or swelling in the hoses. When carrying out inspection, wear goggles and leather gloves.

https://truckmanualshub.com/

- High pressure oil leaking from small holes may penetrate your skin or cause blindness if it contacts your eyes. If you are hit by a jet or high pressure oil and suffer injury to your skin or eyes, wash the place with clean water, and consult a doctor immediately for medical attention.

1.4.12 Safety Operation for High-pressure Hoses

- If oil or fuel leaks from high-pressure hoses, it may cause fire or defective operation, which may lead to serious injury. If any loose bolts are found, stop work and tighten to the specified torque. If any damaged hoses are found, stop operations immediately and contact with your SUNWARD distributor.
  - Damaged hose, deformed mouthpiece, damaged O-ring.
  - Frayed or cut covering or exposed reinforcement wire layer.
  - Covering swollen in places.
  - Twisted or crushed movable portion of hose.
  - Foreign material embedded in covering.

1.4.13 Accumulator

Accumulator is charged with pressurized nitrogen. When handling accumulator, careless operation may lead to explosion and cause serious injury or damage. Always follow the following instructions.

- Do not disassemble accumulator.
- Do not keep accumulator close to fire or expose it under flame.
- Do not drill holes, weld or heat up on accumulator.
- Do not hit or roll accumulator to avoid any shock on it.
- When handling accumulator, bleed the air.
- Please contact SUNWARD dealer to get assistance with this work.

https://truckmanualshub.com/

1.4.14 Preventing Accumulator Explosion

- Do not allow any lightened matches or other flame to approach accumulator upper side. Failure to do so may cause explosion.
- Use voltmeter or hydrometer to measure electricity; do not measure the electricity of battery by short circuiting.
- Do not use or charge the battery if the battery electrolyte level is below specific volume. Failure to do so will cause battery explosion.
- Do not charge frozen battery, failure to do so may cause explosion. Heat the battery up to approx. 16 ℃.
- The electrolyte is toxic. In case of explosion, electrolyte may splash into eyes and cause blindness. When inspecting electrolyte density, always wear protective goggles.

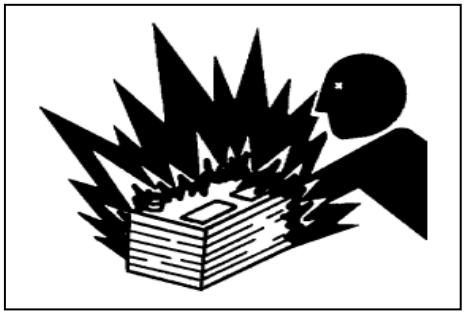

1.4.15 Waste Disposal

- To prevent pollution, pay attention to the manner of disposing of waste materials.
  - Always put oil drained from your machine in containers. Never drain oil directly onto the ground or dump into the sewage system, rivers, the sea, or lakes.
  - When disposing of harmful objects such as oil, fuel, coolant, solvent, filters, and batteries. Obey appropriate laws and regulations.

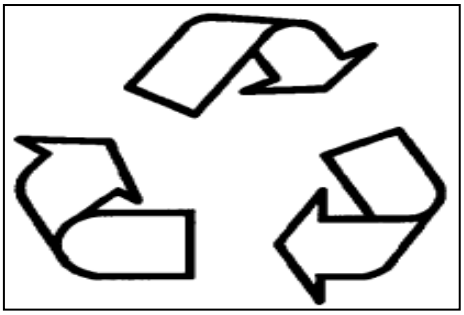

https://truckmanualshub.com/

2 TRANSPORTATION AND STORAGE

Warning

Before reading this chapter, please thoroughly read and fully understand the contents described in chapter "SAFETY RULES" in this manual.

https://truckmanualshub.com/

2.1 TRANSPORT

2.1.1 General Transport Instructions

- Before using a trailer to transport machine, contact local traffic department to confirm relevant regulations, make sure that machine's overall length, width, height and weight are within allowed spec.
- If there are any dimensions out of spec, obtain special permission from relevant government agencies or dismantle the machine into smaller unit to transport.
- Select proper transportation tools according to machine's weight, length, width and height.
- Survey the traffic condition for transportation in advance, e.g. road condition and width, height of bridges and tunnels as well as the limits of weight and traffic regulation etc.

Please note:

- **Transportation weight and dimension of the machine may change with different configuration of the front device and attachments.**

2.1.2 Transport Specification

The details of machine dimension are showed in following picture.

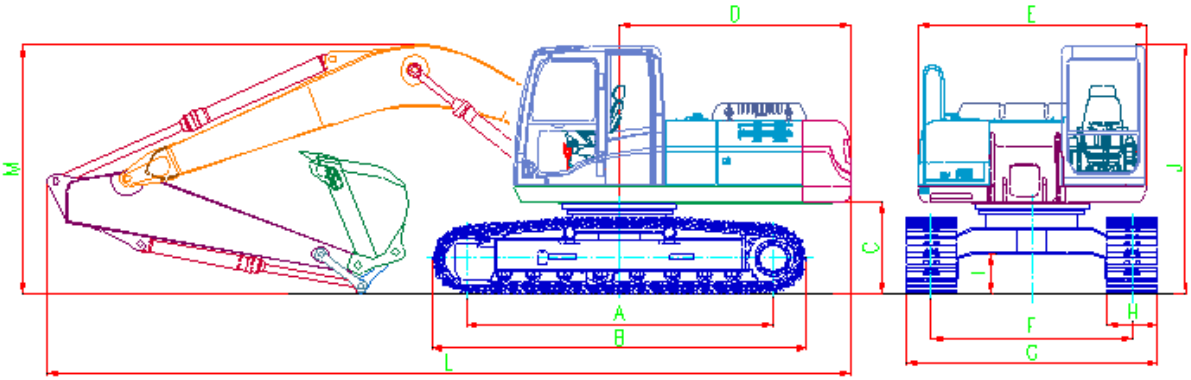

See transport dimension in Chapter 5, Technical Parameters

https://truckmanualshub.com/

2.1.3 Loading or Unloading with a Trailer

Warning

◆ **When loading or unloading, do not go at idle speed mode to prevent sudden change in speed.**

◆ **Set travel speed at low position. Do not attempt any travel speed switching operation to avoid that sharp change of speed and over-speed cause danger. Always keep the machine travel at low speed.**

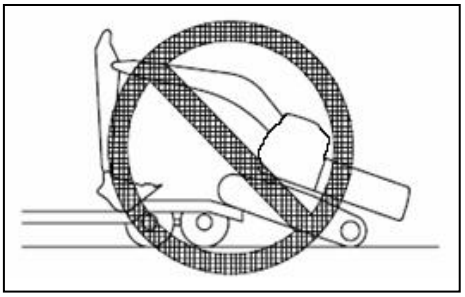

◆ **Be sure engine runs at low speed, adjust throttling knob to keep the engine run at low speed.**

◆ **When loading or unloading, do not attempt any steering operation. At which moment, steering operation is extremely dangerous. The machine is subject to rolling over. If the machine needs to change direction, go back to level ground or trailer platform, then revise travel direction and cross the slope.**

◆ **Do not attempt any other operations (e.g. steering and moving work equipment etc) on slope. Allow only travel operation.**

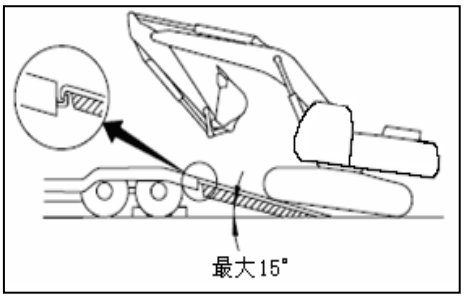

◆ **Because it’s a raised shape at the place where ramp intersects the flats. Pay attention to pass it: the slope should not exceed 15°.**

◆ **Prevent the machine from tipping over and other damages due to upper-structure slewing. Lower the boom, fold arm and bucket and slew the upper-structure slowly to get the optimum stability.**

◆ **Clean up the track, slope of the trailer and loading surface to prevent hazards resulting from obstacle and oil**

https://truckmanualshub.com/

2.1.4 Loading

Note

- **Load the machine only on firm, level ground and keep a safe distance with the road shoulder.**
- **Chock the machine to prevent the machine movement during loading process.**
- **The ramp for loading must have enough strength and width with an maximum slope of 15°, be sure both side of the ramp is at equal level so that machine could travel safely.**

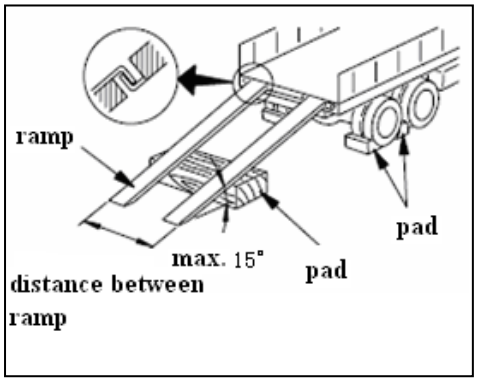

Loading operation

- Switch off idle speed, set engine speed to low speed by means of fuel control knob.
- Set travel speed selector to low speed position.
- Machine direction: When loading, if machine is equipped with working device, keep the working device at the front of the machine and travel forward. If no working device, travel in reverse to load the machine.
- Align the direction of the machine with the ramp: be sure the center line of the machine track matches that of the ramp and travel slowly.
- Lower the working equipment as much as possible without causing any interference on the machine. When traveling on slope, operate only the travel lever; never operate the other lever or pedal.
- When the machine travels over the rear wheels of trailer, travel the machine slowly so that the smooth change of machine position (from grading to level) is possible. pay attention not to make working equipment hit trailer.
- When the machine travels to the middle of the trailer, slew the upper-structure 180°making the working equipment face backside of the machine.

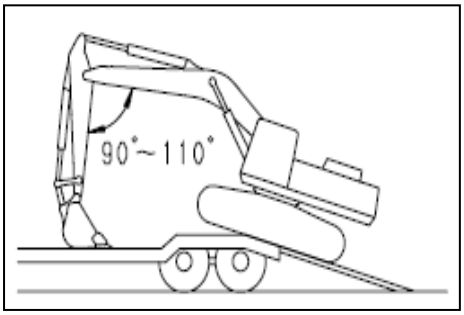

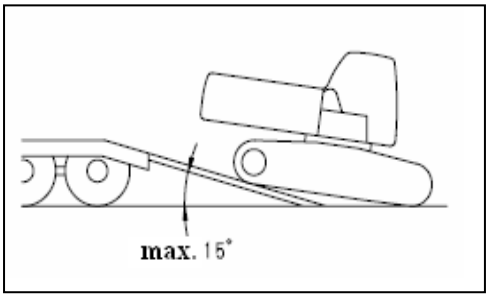

https://truckmanualshub.com/

2.1.5 Tying Down the Machine

Note

- **Secure the chains or slings to the machine frame. Do not place the chains and slings across or press on the hydraulic piping or hoses.**

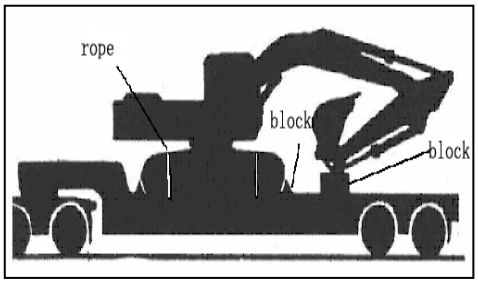

- When placing the machine on the specified position of the trailer, fold working equipment to transportation configuration, lower the boom, place an wooden block under bucket cylinder to prevent damages to it during transportation.
- Pull the pilot safety lever to LOCK position, stop the engine, remove engine starting key, and lock the cab door securely.
- Chock the front and rear position of the track to prevent machine movement during transportation.
- Fix the four corners of the machine and front accessories to the trailer with chains or wire ropes.
- Raise the ramp located on the rear part of the trailer then fix it.

2.1.6 Unloading

Note

- **Load the machine only on firm, level ground and keep a safe distance with the road shoulder.**
- **Chock the machine to prevent the machine movement during loading process.**
- **The ramp for loading must have enough strength and width with an maximum slope of 15°, be sure both side of the ramp is at equal level so that machine could travel safely.**
- **In case of cold weather, fully warm up the machine.**

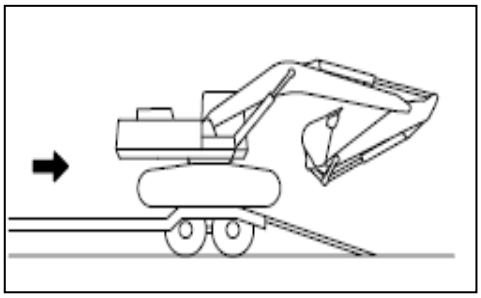

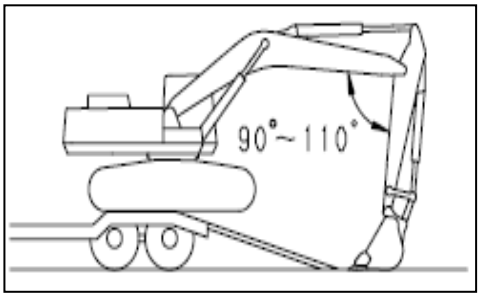

Unloading procedure

- Switch off idle speed function, set travel speed to low speed position, adjust engine throttle knob to set engine speed at low speed.

https://truckmanualshub.com/

- Raise boom to proper height.
- Align the center line of machine track with that of ramp and travel slowly.
- When machine is over the rear wheels of the trailer, operate on the machine slowly so that the machine could transfer to the ramp smoothly.
- When on the ramp, adjust working equipment angle so that the angle of boom and arm is within 90-110°. Lower the bucket to the ground until the machine leave ramp.

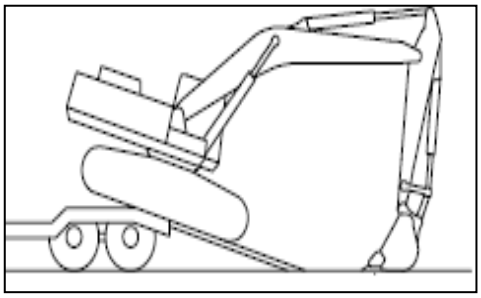

2.1.7 Lifting Machine

Note

- **Never raise the machine with any worker on it.**
- **Make sure the wire rope has sufficient strength for the weight of the machine. The service condition must be in accordance with relevant forced standard.**
- **Swing the working equipment to the sprocket end, set the undercarriage and upper structure parallel. Do not swing to the other direction.**
- **Do not lift the machine in any posture other than the posture given in the right fig.**
- **When lifting, keep the machine horizontal. Never walk under the machine.**
- **This lifting procedure applies to machine with standard specifications.**
- **To get the lifting methods information for the machines equipped with other attachments or optional devices, please contact SUNWARD or our distributor.**

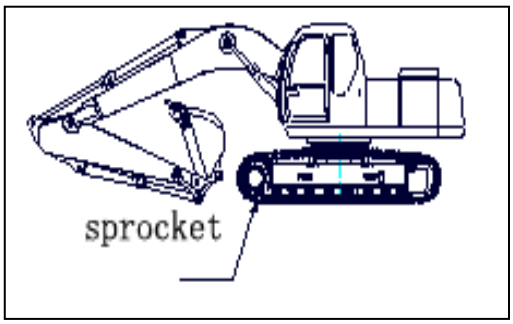

Machine lifting operation

- Set work equipment to the sprocket side. Extend arm cylinder and bucket cylinder to their end of stroke,

https://truckmanualshub.com/

operate boom cylinder and lower the work equipment to the ground.

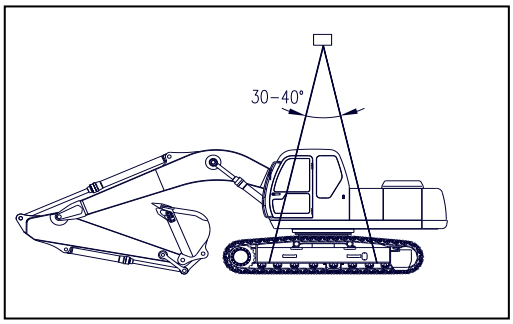

- Stop the engine, remove the key and lock cab doors and windows securely.
- Use steel rope and support rod with sufficient length to keep them not to hit machine during lifting operation. Cover steel rope or rod with protective material to avoid damages to machine if necessary.
- Put steel ropes through the place between the first and second track rollers on both side of the machine.
- Adjust steel rope to keep the lifting angle within 30° to 40°.
- Lifting the machine gradually, check that it's balanced. Make sure to keep machine at level, otherwise re-adjust steel rope until it's at level.

2.2 STORAGE

Note

- **To protect the hydraulic cylinder piston rod while in storage, keep the work equipment in the fig shown at right. (This prevents rust from developing on the piston rod).**

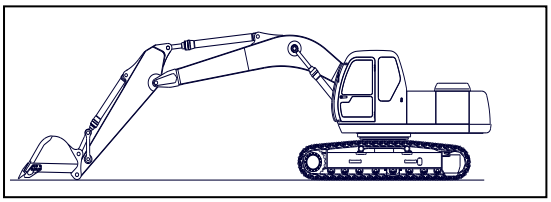

2.2.1 Before Storage

- Clean and wash all surface and exposed parts.
- Apply grease to all lubricating parts until fresh grease spills out.
- Change engine oil.
- Apply grease to exposed parts on piston rod.
- Top up fuel tank with diesel oil.
- Disconnect battery negative terminal and secure battery cover. You can also remove the battery from the machine, store it separately.
- If the expected ambient temperature may below 0℃ (32℉), mix coolant with anti-freezing liquid.
- Select proper storage position： The machine must be kept at well-ventilated indoor place, if the machine has

https://truckmanualshub.com/

to be stored outdoors, select level, firm ground and cover the machine with a sheet.

2.2.2 During Storage

Note

- **When it's necessary to perform the rust-preventive operation while the machine is at indoor, open the doors and windows to ventilate and prevent gas poisoning.**

- During storage, operate the machine to travel, swing and dig for 2 to 3 cycles at least once a month so as to lubricate machine, and charge the machine battery.
- Before operating, check cooling water level and lubrication status.
- Air condition must run once a month.

2.2.3 After Storage

Note

- **Start engine only in well-ventilated condition.**

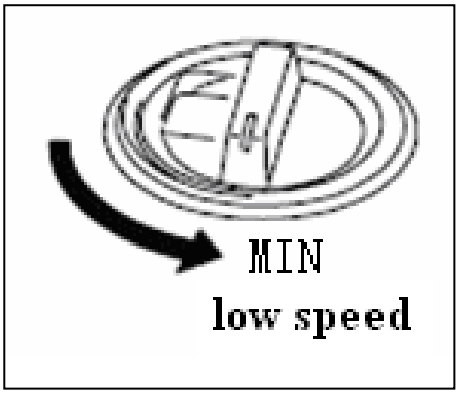

- Remove lubricating grease on piston rod surface.
- Apply grease to all lubricating parts.
- Check engine oil level, keep it in specified level, if not, and refill engine oil. If some water is found to mix in the oil, replace it.
- Check fuel level and bleed the air.
- Check its level to ensure that it is with the standard range.
- Start and run the engine at half speed for several minutes before operation with full load.
- Cycle all hydraulic function for several times.

https://truckmanualshub.com/

3 OPERATION

Warning

Before reading this chapter, please thoroughly read and fully understand the contents described in chapter "SAFETY RULES" in this manual.

https://truckmanualshub.com/

3.1 MACHINE ASSEMBLY DRAWING

- To operate machine safely and properly, it's crucial to fully understand the machine's individual structure and operation methods for controlling equipment, as well as the presented meaning.

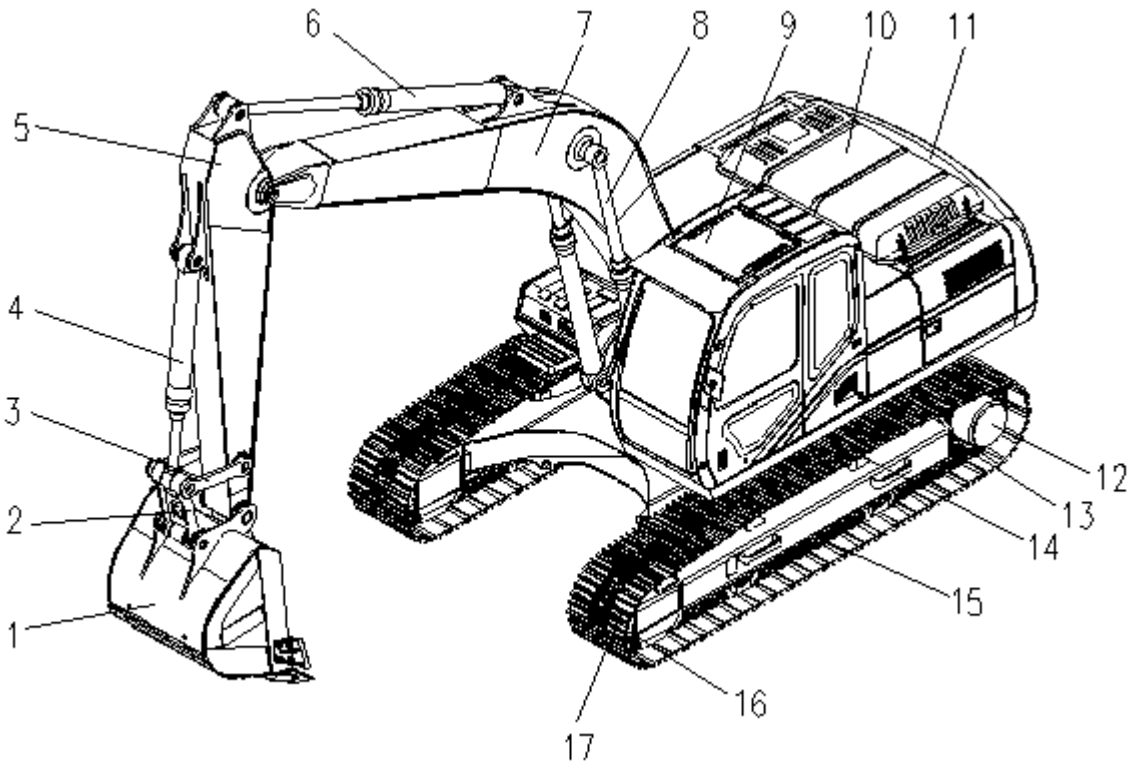

1. Bucket	2.Linkage	3. Rocker arm
4. Bucket cylinder	5. Arm	6. Arm cylinder
7. Boom	8. Boom cylinder	9.Cab
10. Engine hood	11. Counterweight	12. Travel motor
13. Sprocket	14. Carrier roller	15. Track roller
16. Idler	17. Track assembly	

https://truckmanualshub.com/

3.2 CONTROL DEVICE INSTRUCTIONS

3.2.1 Control Device Illustration

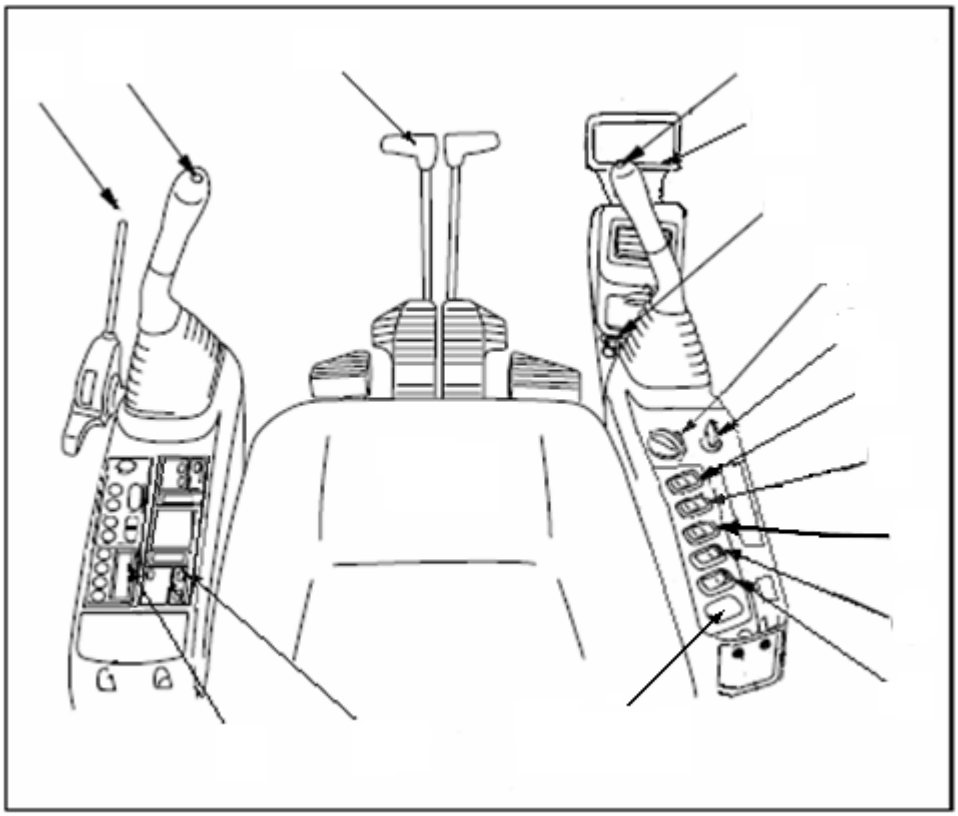

1- Throttle control knob 2-Starting switch 3-Work light switch

4-Wiper switch 5-Washer switch 6- Manual/Auto selection switch

7-Quick-change lock switch 8-Engine regeneration switch 9- A/C control panel

10-radio 11-Pilot safety lever

12- Left pilot control handle (one-key for idle speed)

13- Right pilot control handle (W/ horn switch)

14- Travel control lever 15- Monitor 16- Cigar lighter

https://truckmanualshub.com/

3.2.2 Pilot Safety Lever

Warning

- **When leaving the cab, always set the pilot pilot safety lever (1) to LOCK position. Failure to do so as well as to touch the lever accidentally, serious injury may occur.**
- **If the pilot safety lever is not set to LOCK position, there is a possibility that it will move and lead to serious accidents or injury. The specification of these control levers is shown in fig.**
- **When operating the pilot safety lever upward or downward, pay attention not to touch the other control levers.**

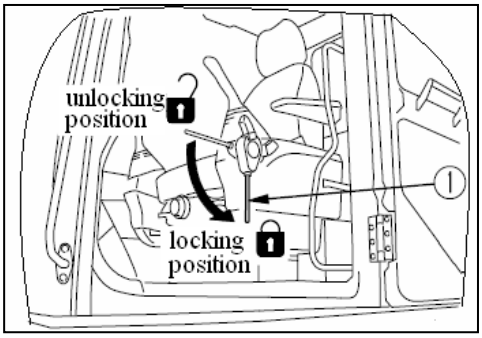

Pilot safety lever is a device being used to lock up working equipment and control levers for swing, travel and accessories (if equipped). Pull the lever to lock up. .

Pilot safety lever is pilot hydraulic lock device. Even if it's in locked position, the control lever for working equipment and travel control lever are movable. But working equipment, travel motor and swing motor stop.

https://truckmanualshub.com/

3.2.3 Travel Control Lever

Warning

- **Do not rest your feet on pedal unless the machine travels. If resting your feet on the pedal and stepping down on it accidentally, a sudden movement of the machine may occur and lead to serious accidents.**
- **Only if the idler is under the cab, the machine travel direction corresponds to operation direction of lever.**
- **When the machine is traveling, sudden steering can cause damage to machine.**

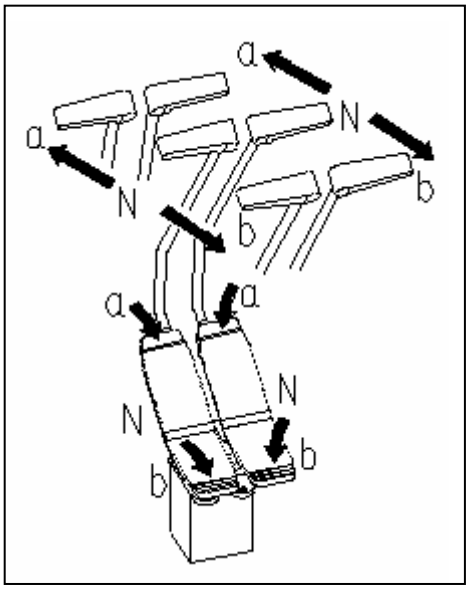

- Travel control lever (2) is being used to control machine's travel.
  （a）forward：
  Push lever forward
  (pedal forward tilting)
  （b）reverse：
  Pull lever backward
  (pedal backward tilting)
  (N）neutral：Machine stops
  (pedal stays the middle position)
- For the machine with travel alarm equipment(if present),if setting the lever from neutral position to forward or reverse position, alarm device will sound to alert that the machine is about to travel.
- Travel control lever is involved in auto-idle speed function of this machine.

https://truckmanualshub.com/

3.2.4 Air Condition Control Panel

1－OFF button

2－Wind speed switch

3－Temperature setting switch

4－Air outlet mode setting switch

5－Auto mode setting switch

6－Inner/exterior air-in switch

7－LCD screen

8－Hot/cold change switch

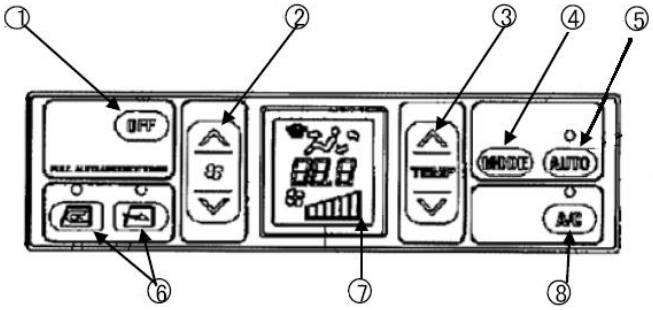

https://truckmanualshub.com/

3.2.5 Multifunction Monitor System

3.2.5.1 Main Interface

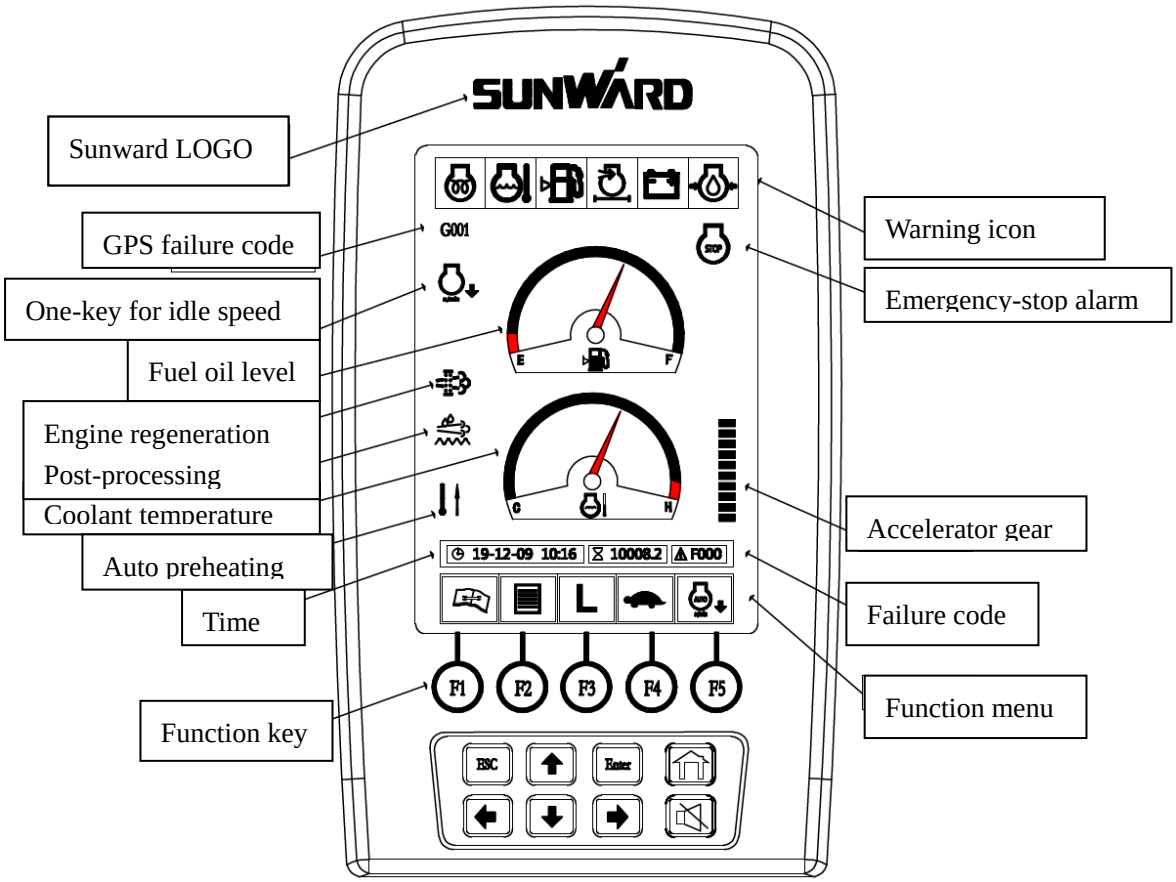

In this interface:

1. Press F1 to enter into maintenance information interface.
2. Press F2 to enter into menu interface.
3. Work mode is adjusted with the accelerator gear.

   The icon of mode L is L, The icon of mode S is S ,The icon of mode H is H .

   Remark: L is light load mode, S is standard mode, H is heavy load mode.
4. Press F4, travel speed is switched between high speed and low speed, icon of low travel speed is , icon of high travel speed is .
5. Press F5, work state is switched between automatic idle and non-automatic idle, icon of automatic idle is , lighting on the main interface.
6. If the buzzer sounds, please press muffle. Buzzer will sound continuously if there are different kinds of warning.
7. Warning icon: . When there is warning information, the corresponding

https://truckmanualshub.com/

warning light will light; no warning, the light is white.

8. SUNWARD LOGO: SUNWARD.

9. Fuel quntity icon: 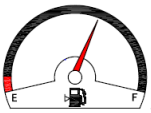

. On the side of E means that fuel is a little, on the side of F means that lots of fuel. When the pointer turns to the red area on the E side, the fuel oil should be refilled in time.

10. Engine cooling water temperature icon is 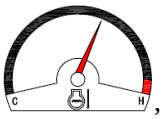

, on the side of C means low water temperature, on the side of H means high water temperature. When the pointer turns to the white area on the C side, the water temperature is too low; When on the red area on the H side, the water temperature is too high.

11. GPS fault information: the icon is G001, it displays when GPS fault occurs. There're nine number including 001 to 009.

12. System time: 19-12-09 10:16 means Dec. 9th, 2019 ten sixteen.

13. Work hour：display like this 10008.2, it means the machine worked for 10008.2 hours.

14. One key of idle speed: the icon is

. Press the top of the left handle to change to auto-idle speed. The yellow icon of auto-idle speed displays on the main interface, then press the top of the left handle again, and the icon disappear.

15. means preheating, when machine is preheating, the icon is red, or is white。

16. is the warning icon for overheated coolant. When system detects that the temperature of coolant is high, this icon is red, or is white.

17. is the warning icon for low fuel oil level. When system detects low fuel oil level, this icon is red, or is white.

18. is warning icon for clogged air filter. When system detects clogged air filter, this icon is red, or is white.

19. is for charging. When system detects battery is charging, this icon is red, or is white.

20. is for low engine oil pressure, when system detects low engine oil pressure, this icon is red, or is white.

21.

is the warning icon for emergency stop. After pressing down the emergency stop button, the machine is shut down with buzzer warning. And on the main interface, this icon is red flickering on the main interface. After switching on the emregency-stop button, the buzzer is mute and the warning

https://truckmanualshub.com/

icon disappear.

22. Accelerator gear: ten gears are included. Turn the accelerator knob to change it.

23. F000 is a icon for system failure. When system detects a system failure, this icon is red, or is white.

24. is the icon for auto-preheating. When the machine temperature is lower than the set one, increase the engine rev to heat the water. The yellow auto-preheating icon displays on the main interface when starting the machine. If there's no operation of handle and accelerator gear, the auto-preheating icon will keep on for a few minutes till the machine temperature is higher than the set one; After operating the handle and accelerator gear, this icon will disappear, that will not disturb the normal work.

25. is the icon for engine regeneration. When engine starts auto-regeneration, the icon is green displaying on the main interface; After pressing down the manual regeneration switch, the icon is yellow manual regeneration displaying on the main interface. The main effect of regeneration is to catch harmful particles in the exhaust air and create an environment with high temperature, making these articles burned more sufficient, so as to discharge pollution-free carbon dioxide and reduce the discharge value of articles.

26. is the icon for post-processing. When DEF liquid level is lower or higher than the set one, this icon is yellow displaying on the main interface.

3.2.5.2 Interface 1 of Maintenance Information

Press F1 in main interface to enter into the interface of maintenance information.

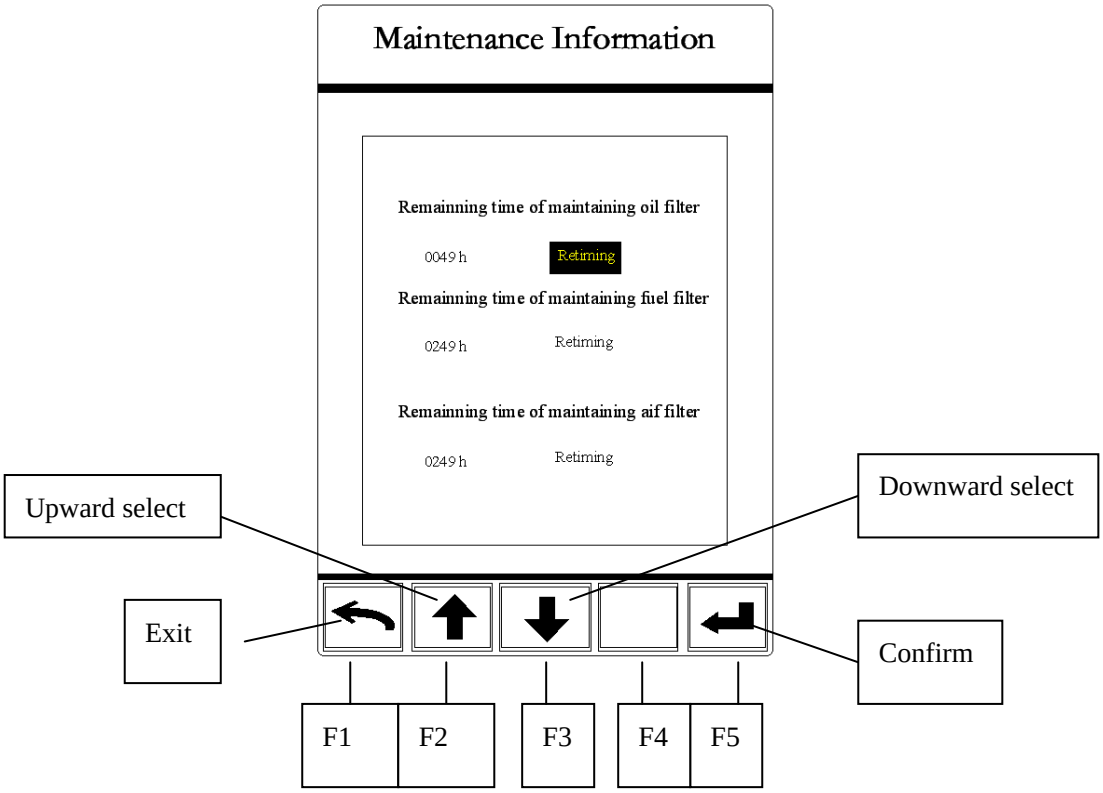

https://truckmanualshub.com/

In this interface：

1. This interface display rest maintenance time of engine oil filter element, fuel filter element and air filter element. If there are no need to maintain, please press F1 to exit.
2. After replacing engine oil filter element, press F5 to set maintenance time again.
3. After replacing diesel oil filter element, press F5 to set maintenance time again.
4. After replacing air filter element, press F5 to set maintenance time again.
5. Press F2 or F3 to switch among three options.

3.2.5.3 Interface 2 of Maintenance Information

Press F5 in maintenance interface 1 to enter into maintenance interface 2.

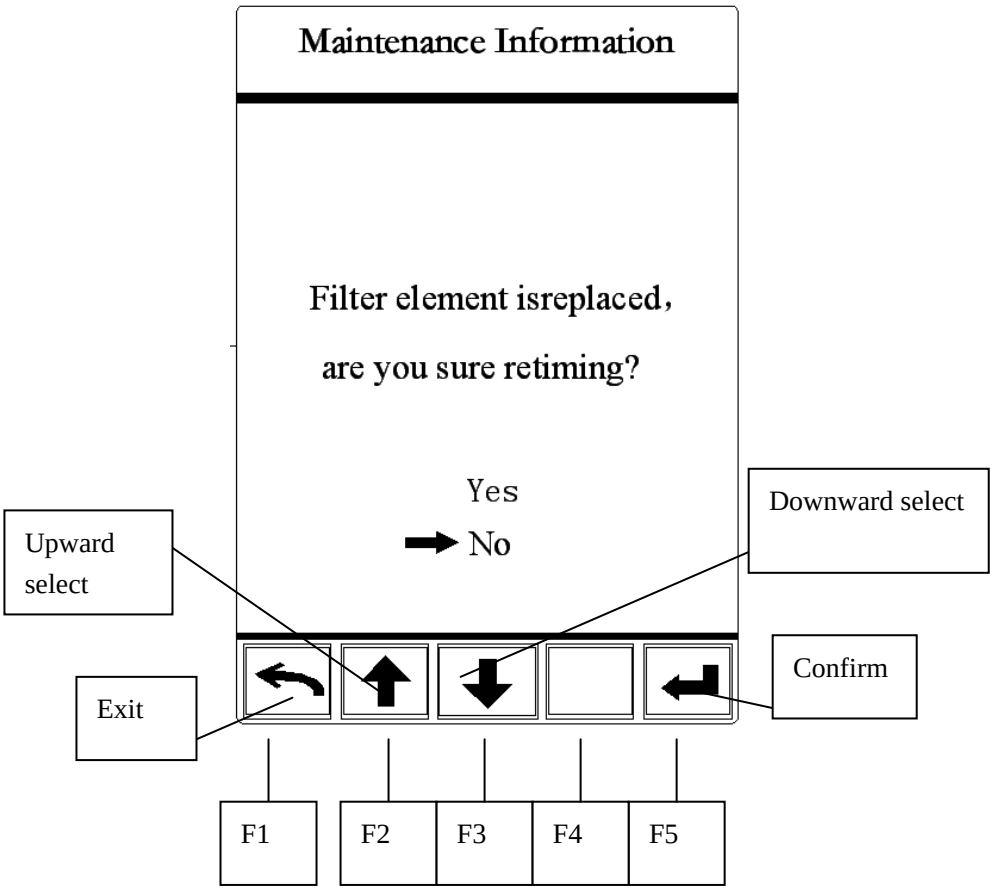

In this interface：

1. This interface is used to confirm for re-setting maintenance time of engine oil filter element, fuel filter element and air filter element.
2. Press F5 to confirm the operation.
3. Press F1 to exit this interface.
4. Press F2 or F3 to switch between Yes or No.

https://truckmanualshub.com/

3.2.5.4 Main Menu Interface

Press F2 in main interface enter into menu interface

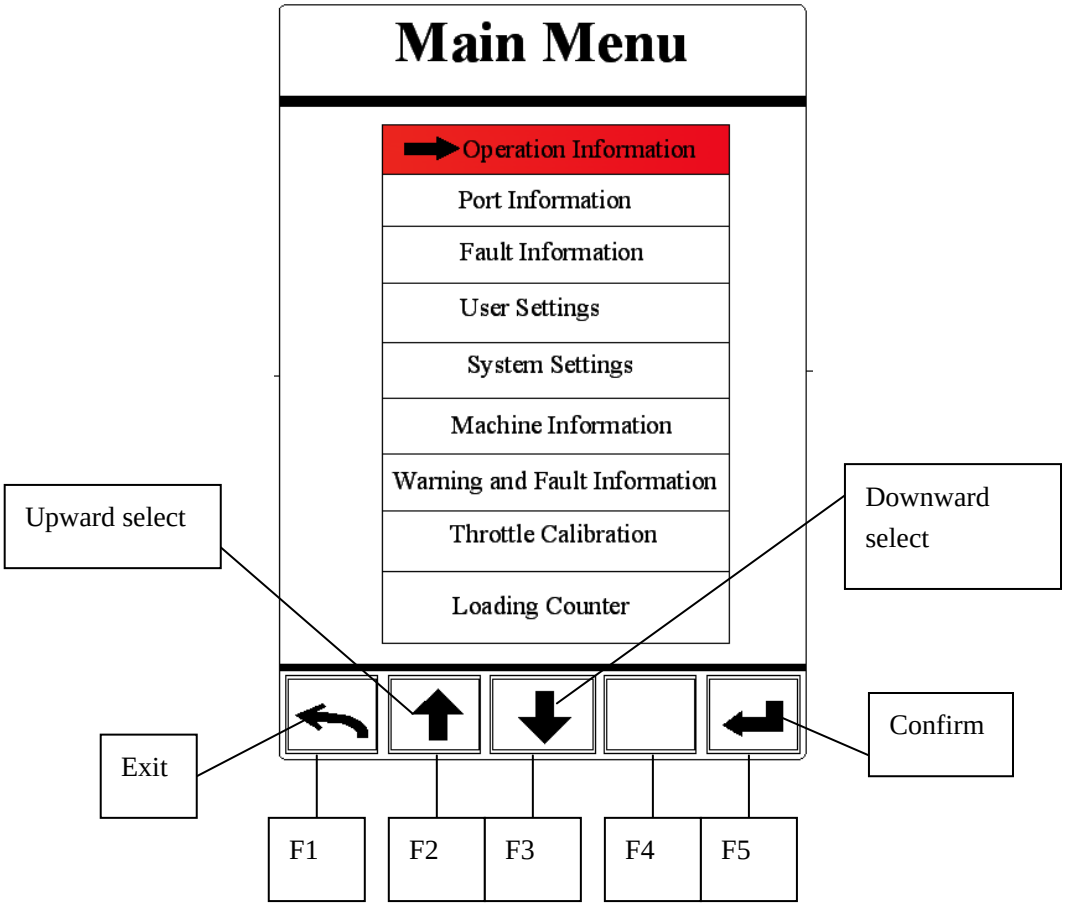

In this interface：

1. Following information you can find, including operate information, port information, warning and failure information, user settings, system settings, machine information, history failure record, throttle calibration, loading counter.
2. Red option is the current one.
3. Press F1 to exit.
4. Press F2 and F3 to switch among menu items.
5. Press F5 to enter into the selected option.

https://truckmanualshub.com/

3.2.5.5 Operation Information Interface

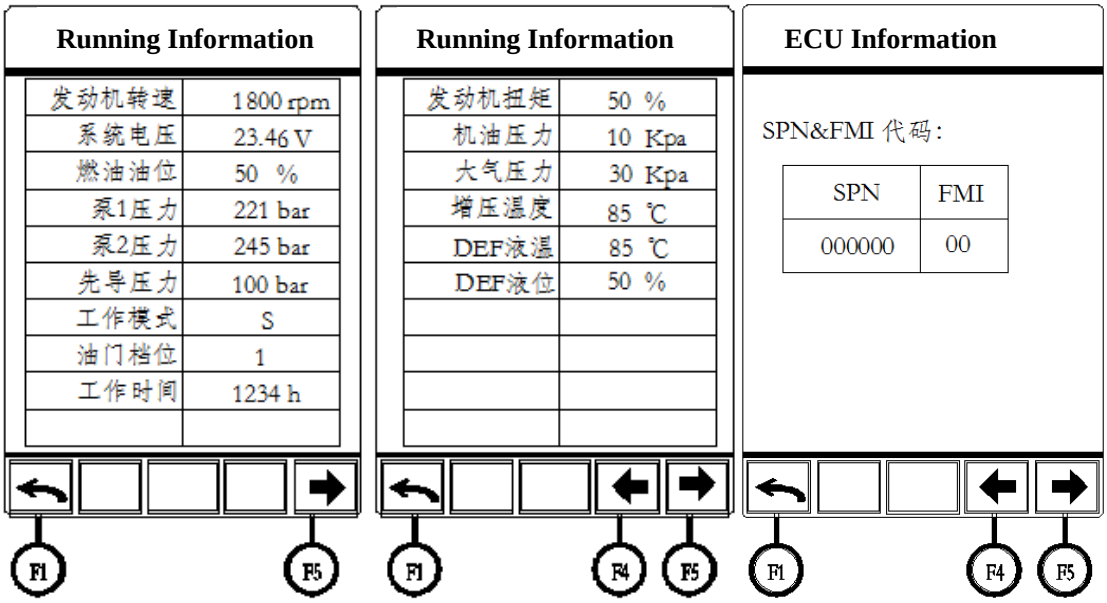

This interface display system operation information, in this interface：

1. Three interfaces are included.
2. Following information you can find:
   Engine rev, system voltage, fuel oil level, hydraulic pump pressure, pilot pressure, work mode, accelerator gear, work time, engine torque, engine oil pressure, air pressure, pressurized temperature, DEF liquid temperature and level.
3. Press F1 to return the menu interface.
4. Press F5 to turn to the next page, F4 for previous page.

https://truckmanualshub.com/

3.2.5.6 Port Information Interface

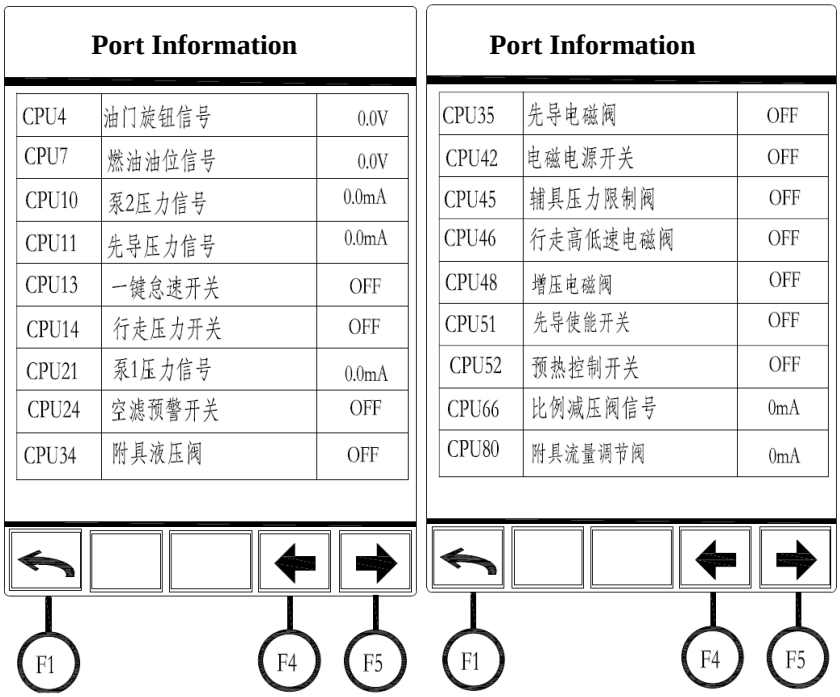

This interface display system port information, in this interface：

1. Two interfaces are included, which are analog signals and numerical signals.
2. Press F4 and F5 to switch among two interfaces.
3. Press F1 to return system menu interface.

https://truckmanualshub.com/

3.2.5.7 Machine Information Interface

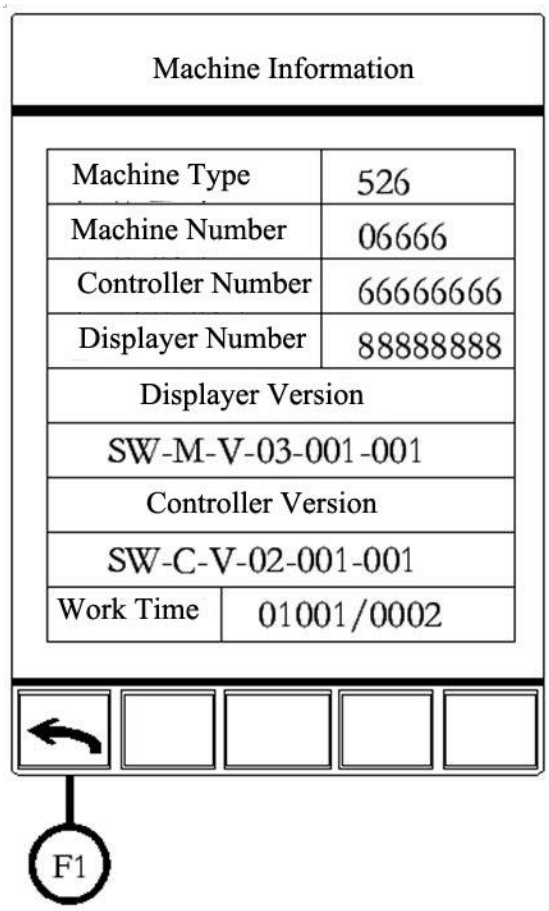

In this interface：

1. Following information can be found, including machine model, machine serial no., displayer no., engine model and soft version no.
2. Press F1 to return system menu interface.

https://truckmanualshub.com/

3.2.5.8 User Setting Interface

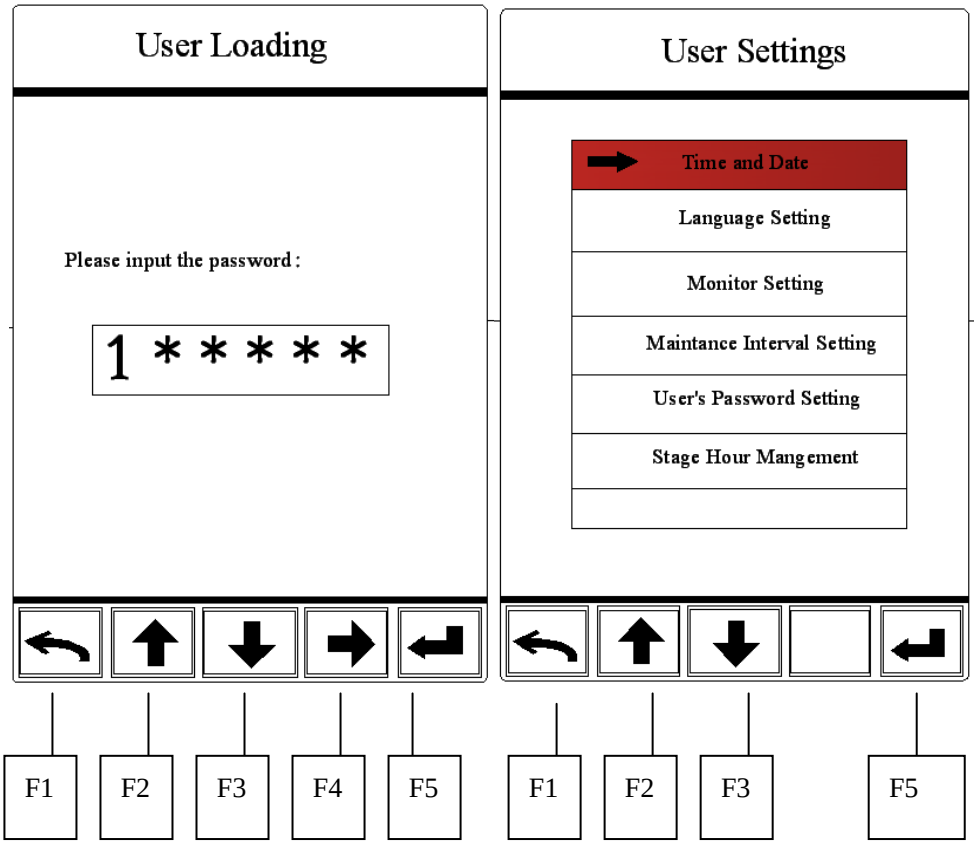

Input correct password in the user loading interface and then enter user setting interface, in this interface：

1. In user loading interface, use F2 and F3 to input password, F4 button is used for selecting password digit capacity. After the correct password is input, press F5 to enter user setting interface.
2. User setting interface includes clock setting, language setting, display setting, maintenance interval time setting, user password modification and stage hour management.
3. Press F2 and F3 to select menu, press F5 to enter into the selected menu, return by pressing F1.

https://truckmanualshub.com/

3.2.5.8.1 Clock Setting Interface

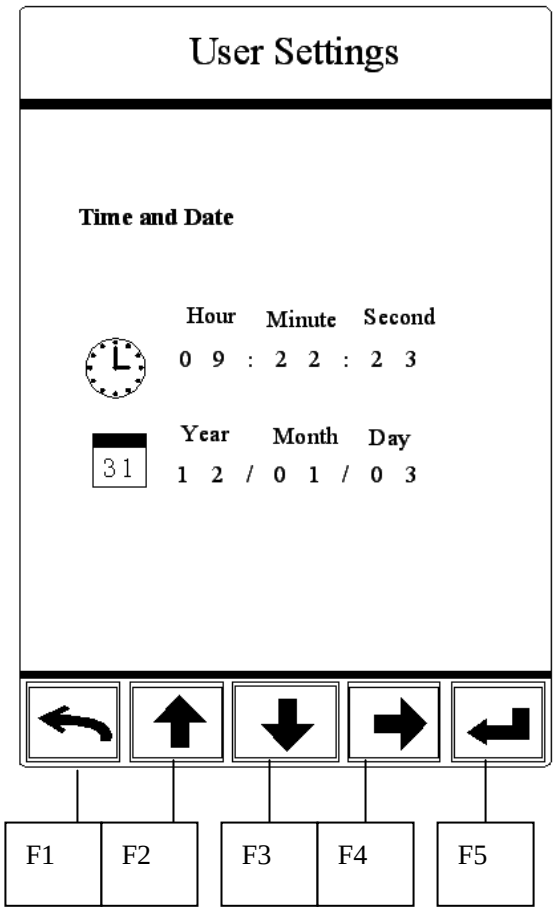

In this interface：

1. F4 is used to select the parameter which should be modified, F2 and F3 are used to modify parameters, F5 is used to confirm the modified value, and press F1 to exit.

https://truckmanualshub.com/

3.2.5.8.2 Language Setting Interface

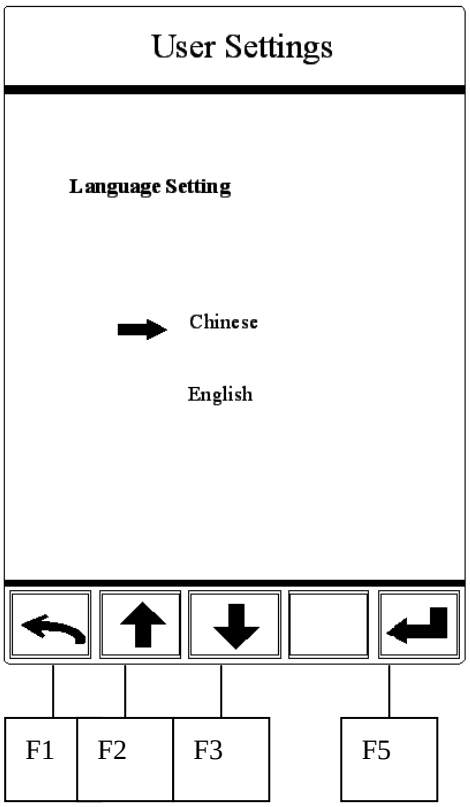

In this interface：

1. Press F2 and F3 to select a language, confirm by F5 and return by F1.

https://truckmanualshub.com/

3.2.5.8.3 Screen Brightness Setting Interface

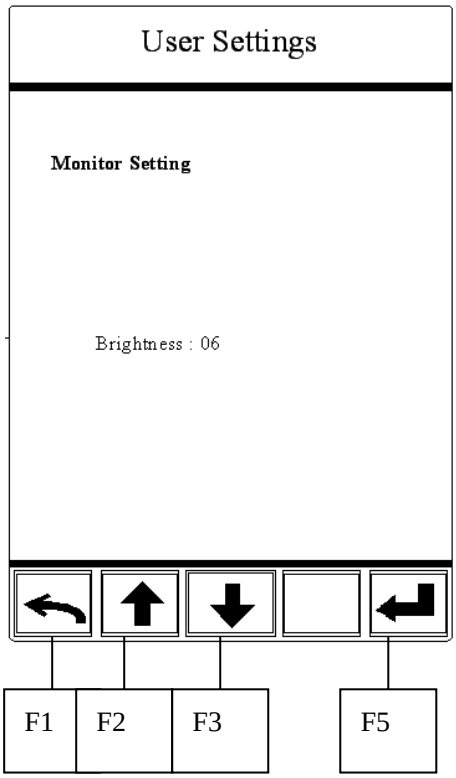

In this interface：

1. Press F2 and F3 to adjust the brightness, confirm by F5 and return by F1.

https://truckmanualshub.com/

3.2.5.8.4 Maintenance Interval Setting Interface

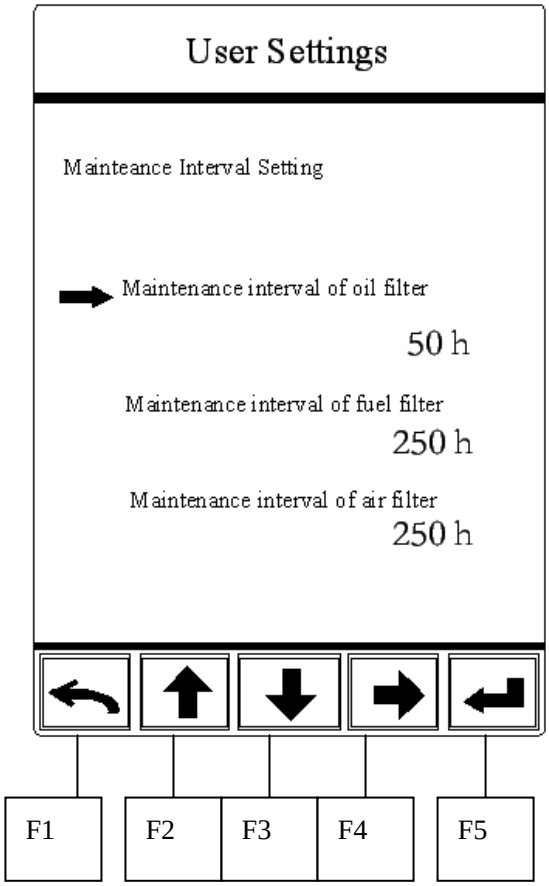

In this interface:

1. Press F2 and F3 to adjust interval time, F4 is used to select project to be adjust, F5 is confirming, press F1 to return.

https://truckmanualshub.com/

3.2.5.8.5 User Password Modification Interface

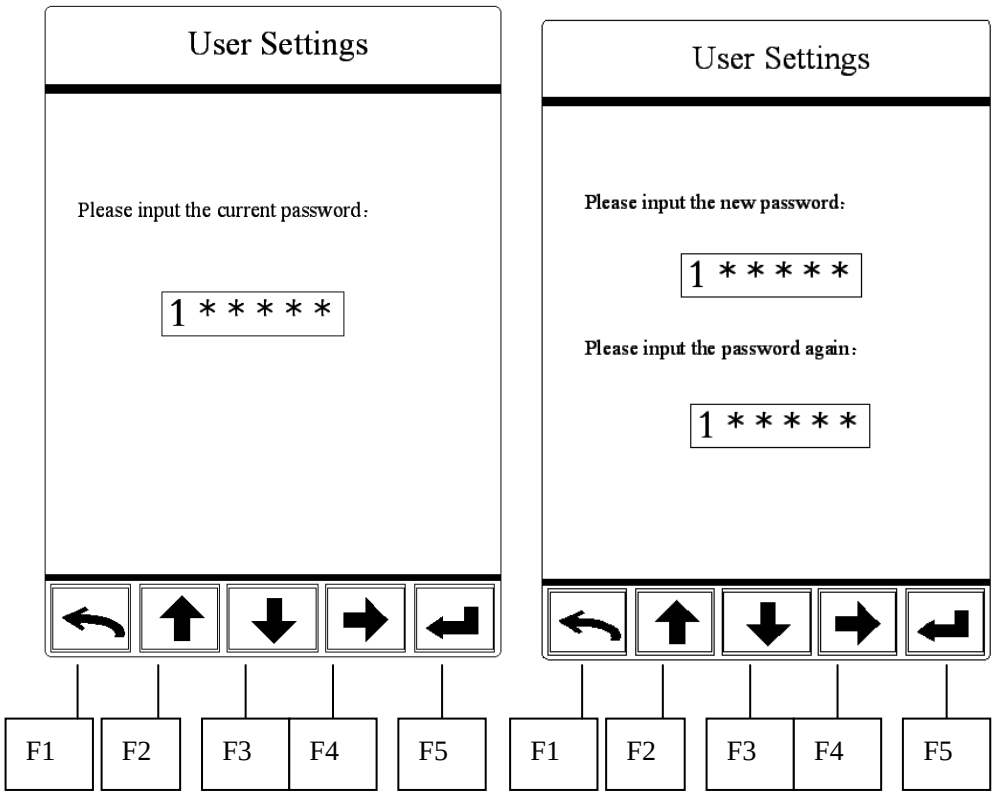

In this interface:

1. Press F2 and F3 to modify password, F4 is used to select password digit capacity, press F5 to confirm, exit by F1. After inputting the correct password, then you can set a new password.

https://truckmanualshub.com/

3.2.5.8.6 Stage Hour Setting Interface

In this interface：

1. F2 and F3 are used to begin timing or reset the time, when timing begins, lease hour is triggered, when select time reset, lease hour reset, press F5 to confirm, press F1 to exit.

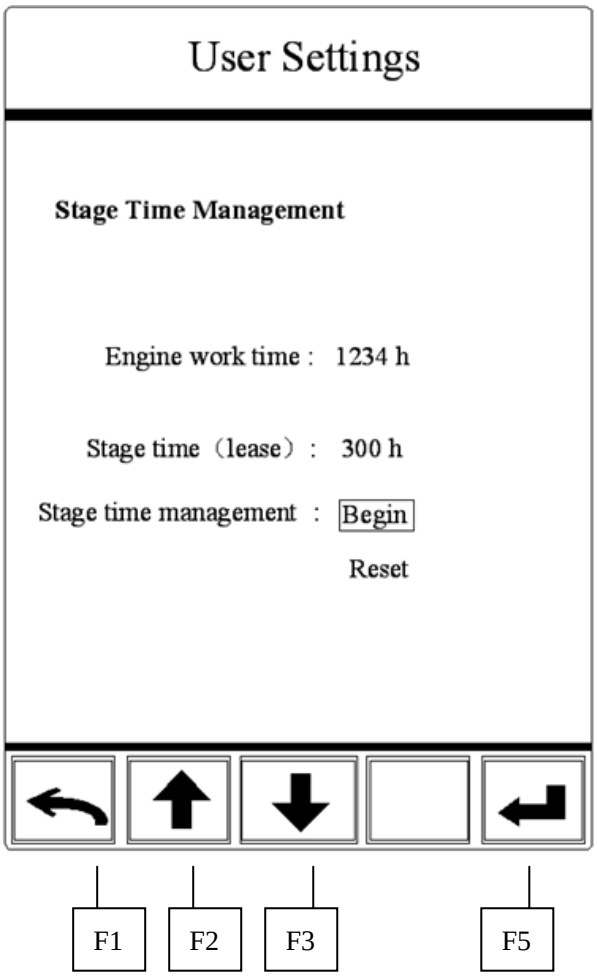

https://truckmanualshub.com/

3.2.5.9 System Settings Interface

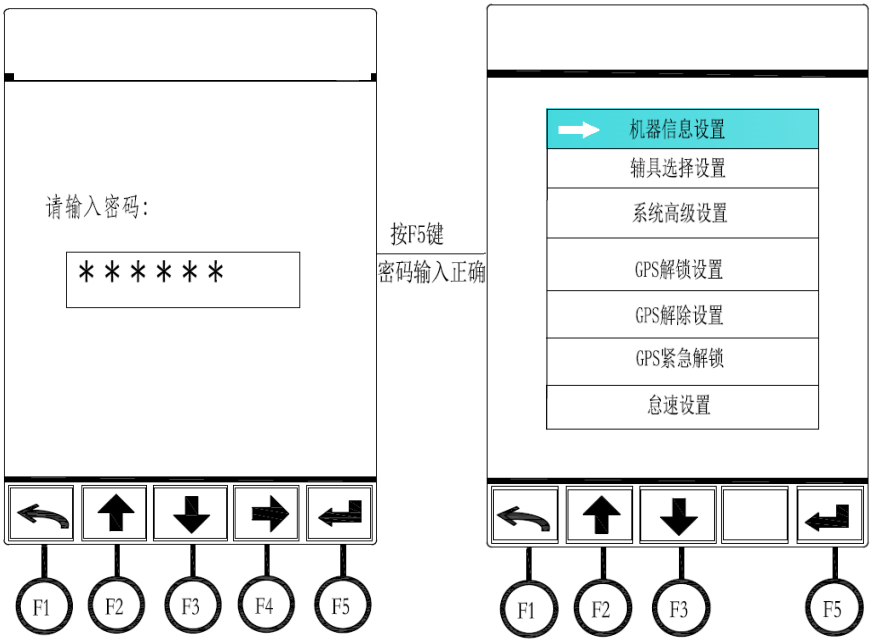

Input the correct password in the loading interface of system settings to enter the system settings interface in which you can do following operations:

（1） In the loading interface of system interface, input correct password by F2 and F3, select the password digit capacity by F4, confirm with F5 after correct password is input to enter the system settings interface.

（2） In this interface, below settings are included:

Machine information, auxiliary attachment selection, advance system settings, GPS unlock, GPS remove, GPS emergency unlock and idling speed. Select the menu by F2 and F3, confirm by F5, and exit by F1.

https://truckmanualshub.com/

3.2.5.10 Warning and Failure Information Interface

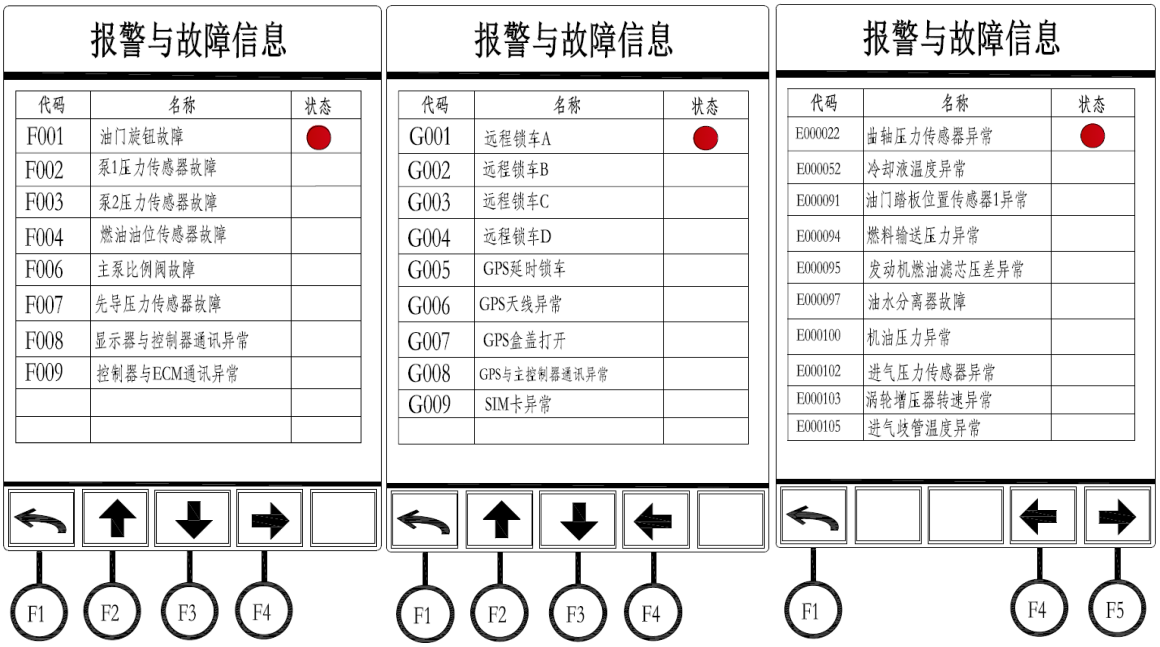

In this interface:

1. System failure, GPS failure and ECM failure are included.
2. You can check corresponding information of failure or warning code.
3. F2 and F3 can be selected among failure.
4. Three interfaces can be switched by F4.
5. Press "F1" to exit.

https://truckmanualshub.com/

3.2.5.11 History Failure Record Interface

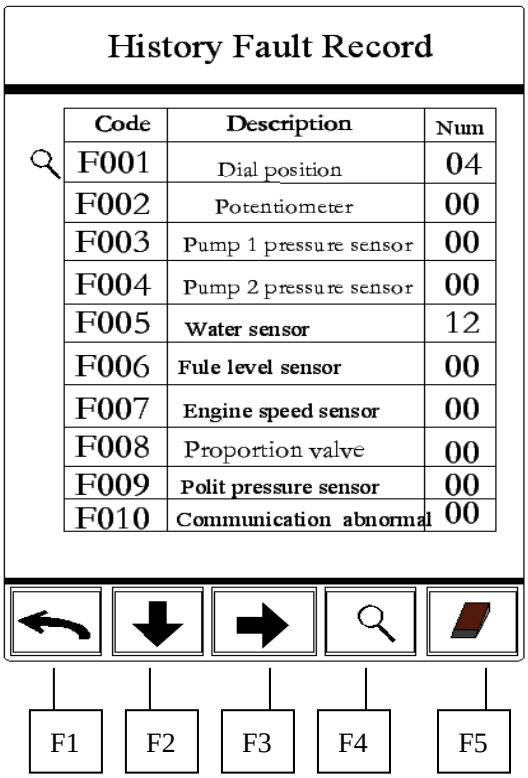

History failure record interface 4-1

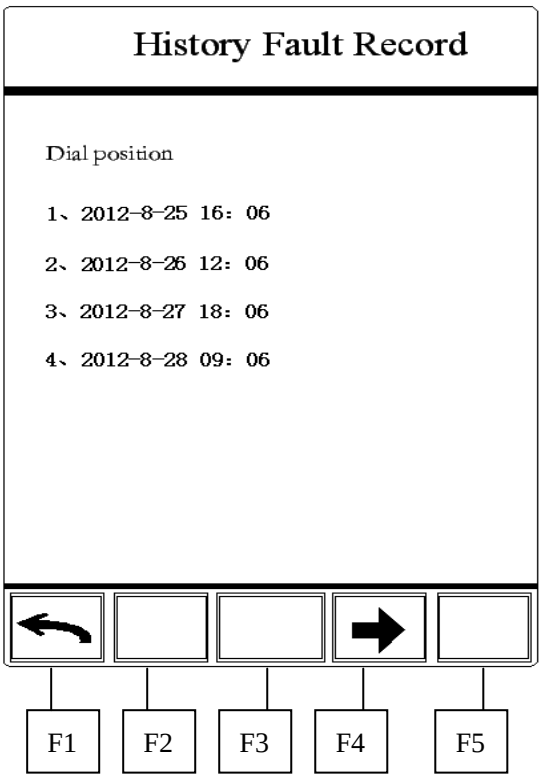

History failure record interface 4-2

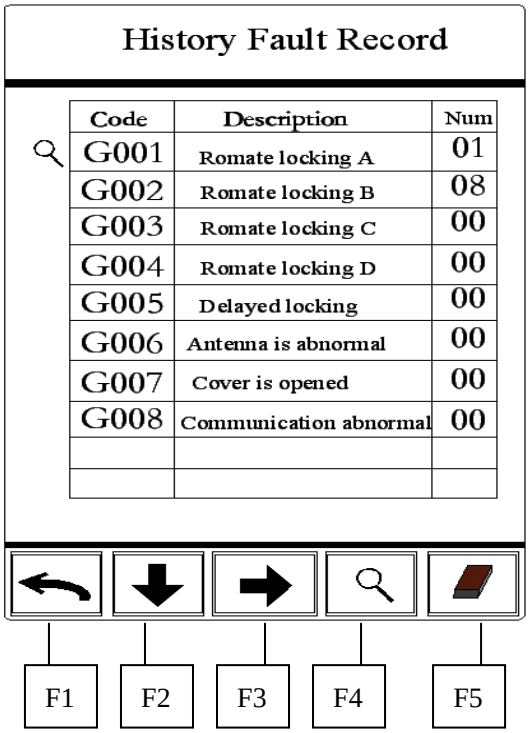

History failure record interface 4-3

History failure record interface 4-4

In this interface：

1. There are four history failure record interfaces, the first interface is as figure 4-1, in which recoding content and times of history failure.
2. F2 can be switched among history failures.
3. F3 can switch between interface4-1 and interface 4-3.
4. F4 can consult the detail time of failures, and switch to interface 4-2 from interface 4-1 or 4-3.
5. In interface 4-1 and interface 4-3, F5 can clear history failures.
6. In interface4-4, F5 is used to confirm clearing history failure.
7. F1 is to exit.

3.2.5.12 Throttle Calibration Interface

Disoperation can lead to abnormal system, so please try your best to contact with Sunward or the person who is authorized by Sunward to deal with it.

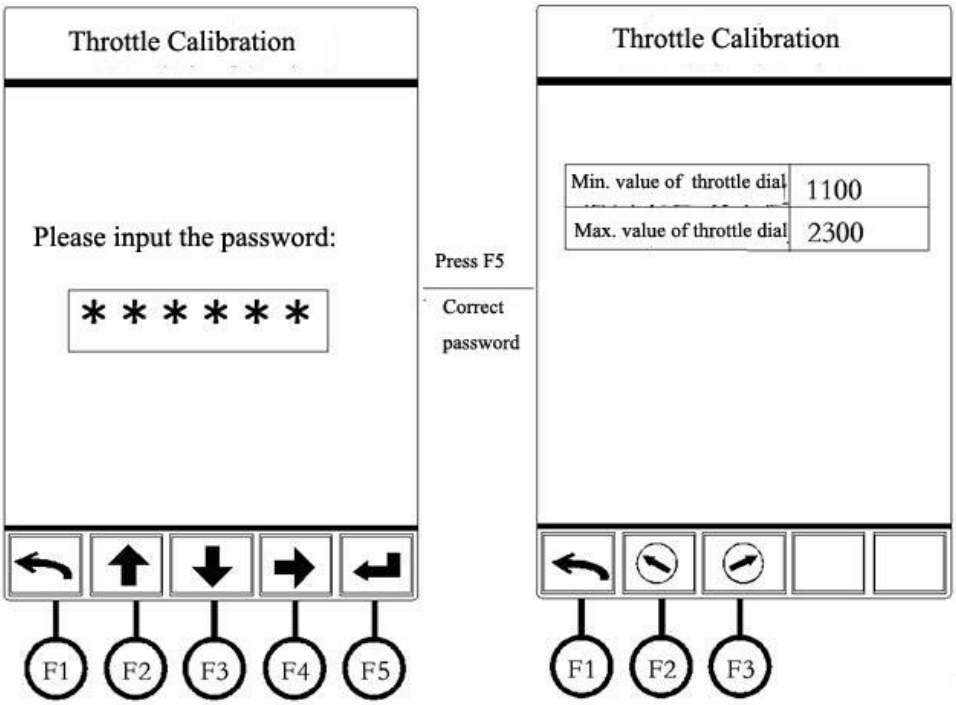

In this interface：

1. At first, enter into password inputting interface, press F4 to select the password digit capacity, F2 and F3 are used to modify password. After inputting password, press F5, if password is correct, enter the throttle calibration interface, press F1 to exit.
2. There is min. accelerator dial and max. accelerator dial in the accelerator calibration interface.
3. Adjust accelerator to min. position, press F2 to confirm.
4. Adjust accelerator to max. position, press F3 to confirm.
5. Press F1 to go back.

https://truckmanualshub.com/

3.2.5.13 Loading Counter Interface

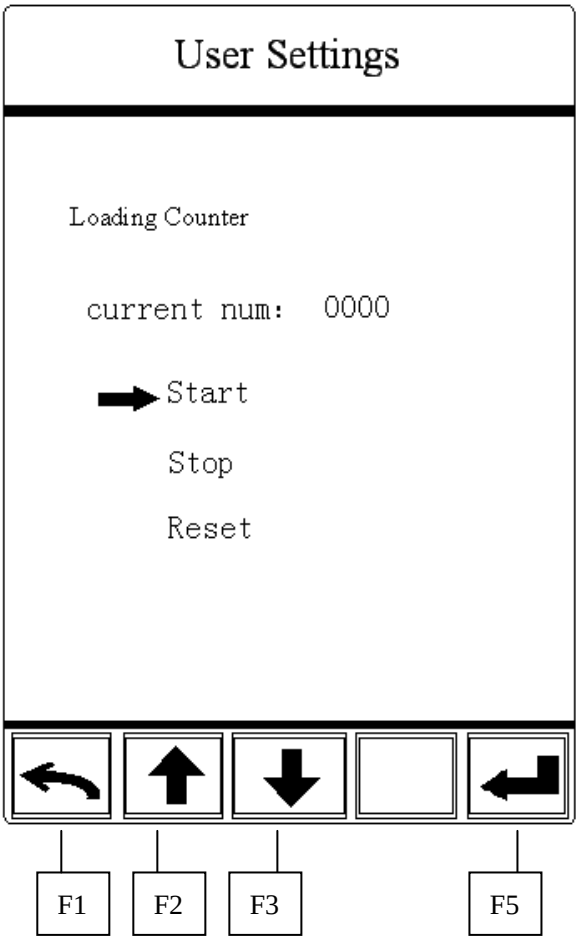

In this interface：

1. Start/cancel loading counter function, or reset current loading number.
2. Press F2 and F3 used to select loading counter and reset loading number, press F5 confirm.
3. Press F1 to go back.

https://truckmanualshub.com/

3.2.6 Right Pilot Control Handle

（with horn switch）

- The right handle for work equipment is used to control boom up/down movement as well as bucket's digging and dumping.

  （a）pull the handle backward--boom lift

  （b）push the handle forward -boom lower

  （c）push the handle to right- bucket dump

  （d）push the hanlde to left - bucket dig

  A (dial): switch on/off the hydraulic shear

  B (button): horn

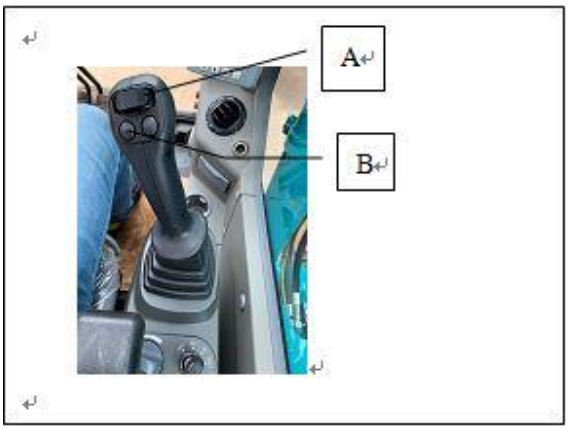

3.2.7 Horn Switch

- Horn switch is used to control hydraulic excavator work horn. This horn switch is located on the upper side of the right control handle. This switch is an inching switch. We recommend you to use right hand thumb to depress this switch.

- Depress the horn switch as shown in the fig. the horn will sound. The sound frequency and length of time is corresponding to the status of depressing action. When you release the thumb, the sound stops.

https://truckmanualshub.com/

3.2.8 Left Pilot Control Handle

(With One-key Idling Switch)

- Left side work equipment control handle is used to operate arm to dig or dump and control upper-structure to slew.

  (1) push the handle forward--arm extend

  (2) pull the handle backward-arm retract

  (3) push the handle to right--upper-structure swing clockwise

  (4) push the handle to left--upper-structure swing anticlockwise

  A (Dial): Slew the auxiliary attachment

  B (Button): One-key for idling speed

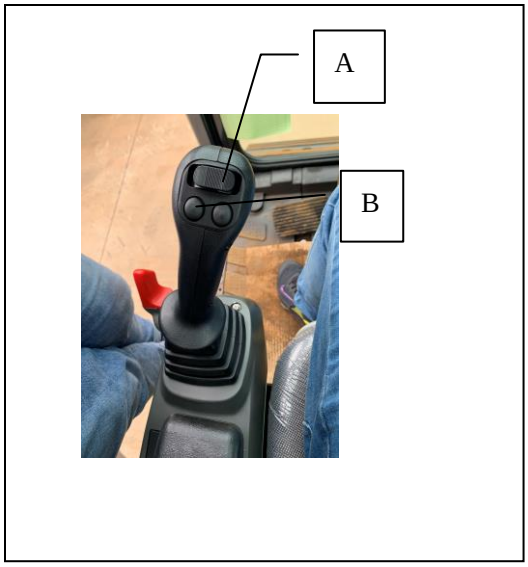

3.2.9 One-key Idling Switch

- The one-key idle speed switch can reduce the rev of engine.
- This switch is located on the top of the left handle.
- When engine is at the high speed, pull this switch, rev of engine slow down to idle speed, pull it once again , rev will restore.

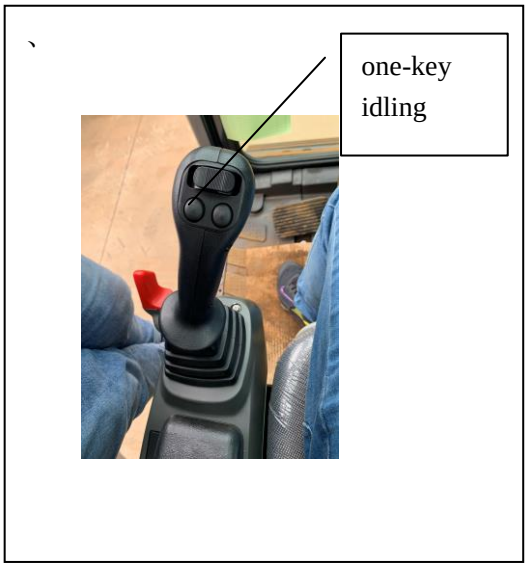

https://truckmanualshub.com/

3.2.10 Starting Switch

Starting switch is used to start or shut the engine.

- **OFF position**

  You can insert or remove key. All electrical system switches are shut-down except indoor lamp. Engine is stopped as well.

- **ON position**

  Power is on by turning the key from OFF to ON position. Hold the starting switch key in ON position when engine is running.

- **START position**

  It's engine starting position. When starting the engine, hold the key in this position. With engine started, release the key immediately; it will go back to ON position automatically.

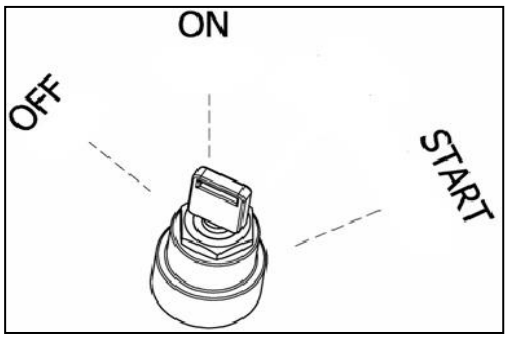

3.2.11 Throttle Control Knob

- This knob is used to regulate engine rev and power output.

  (a) low idle speed position

  (b) high idle speed position

- When shifting accelerator control knob from position "a" to position "b", engine rev will increase.
- When shifting the knob from position "b" to "a", engine rev will decrease.

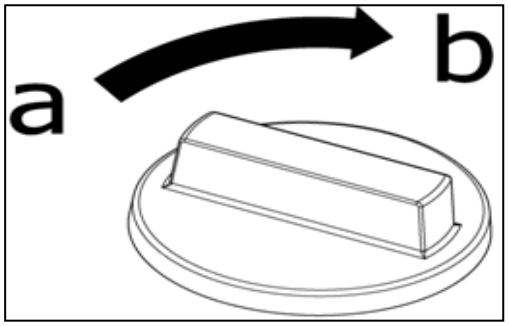

https://truckmanualshub.com/

3.2.12 Work light Switch

- Work light Switch is used to control headlight, working light, and light for monitor.
- Set Work light Switch to ON position, machine's front light, working light, and monitor light will be electrified and illuminated.
- Set switch to OFF position, the power for front light, work light, monitor light will be cut down. Light will be shut down.

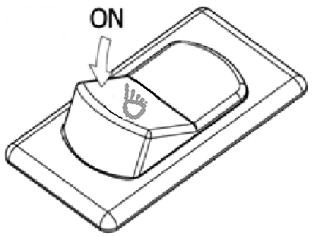

3.2.13 Wiper Switch

- Wiper switch is used to control wiper located on front window of the cab.
- Set the wiper switch to ON position to activate wiper.
- Set the wiper switch to OFF position to stop the wiper and reset to original state.

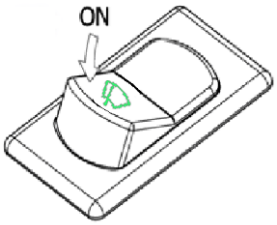

3.2.14 Washer Switch

- Washer switch is used to control the washer for cab front window.
- Set washer switch to ON position to activate the washer.
- Set the switch to OFF position to stop the washer.

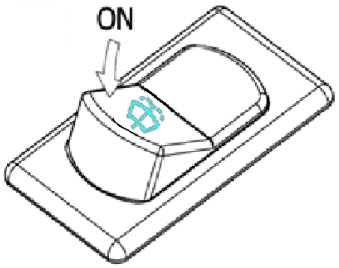

https://truckmanualshub.com/

3.2.15 Auto /Manual Selection Switch

- This switch is used to control pilot solenoid valve.
- Place the switch on “Auto” position, and the pilot solenoid valve is controlled by the excavator controller.
- Set to the “Manual” position to control the pilot solenoid valve by the corresponding switch.

3.2.16 Quick-change Unlock Switch

- This switch is used to change the attachment quickly.
- Place the switch at “ON” position to open the quick-change solenoid valve.
- Place the switch at “OFF” position to close the quick-change solenoid valve.

3.2.17 Engine Regeneration Switch

- Start and prohibit engine regeneration function.
- Prohibition Regeneration Switch:

  When the switch is on the “ON” position, engine regeneration function is disabled; When the switch is on the “OFF” position, engine regeneration function is enabled. Normally, it’s on the “OFF” position, except when there’s high temperature objects which can’t be touched nearby the post-processing system. (e.g. machine is in the forest).

- Manual Regeneration Switch:

  When the yellow icon displays on the meter (at this time, yellow light is flickering below the meter), it indicates that manual regeneration is requested by the engine. At this moment, press down the switch to enable engine regeneration function, and then it will reset automatically.

https://truckmanualshub.com/

3.3 OTHER OPERATION INSTRUCTIONS

3.3.1 Cab Windows

Cab rotary front window

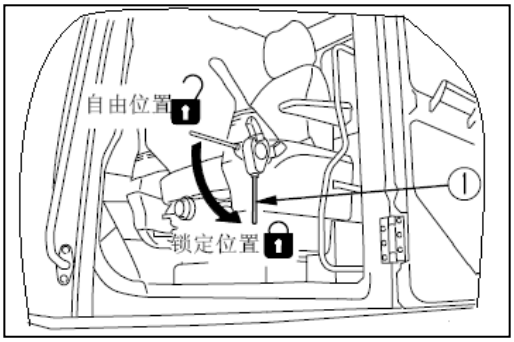

- To open or close the rotary window, always stop the machine at level ground, lower the work equipments to ground and stop the engine before proceeding to other operations.
- Always place the pilot safety lever A to LOCK position (see the right fig) while opening or closing upper window, rotary window, lower window or door.

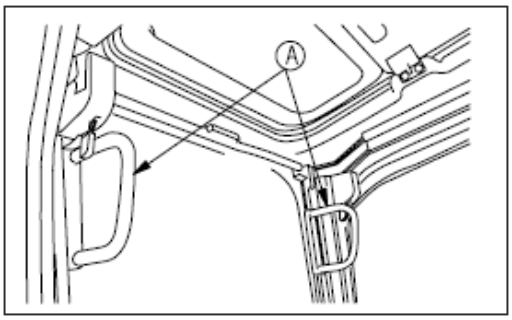

Warning

- **Serious accidents may occur if fail to lock the control lever and touch it unexpectedly.**

- Check if the wiper blades are in fixed position.
- Use both hands to grip handle A firmly, press fasten buckle B with thumb (see fig). Use hands to push rotary window back-upward to the top of the cab to fix rotary window.

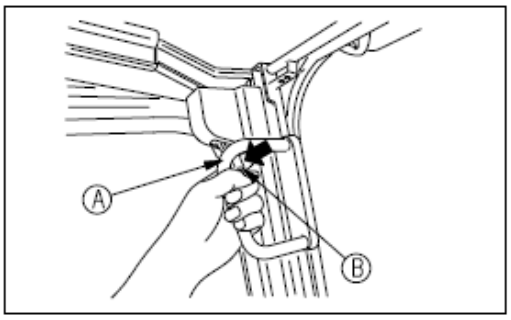

- To close the front window, grip the handle A by hands, press fasten buckle B with thumb. When close the front window, grip the handle firmly and put it down slowly, push handle A forward when the window get to the bottom to ensure the complete fixing of the lockset.

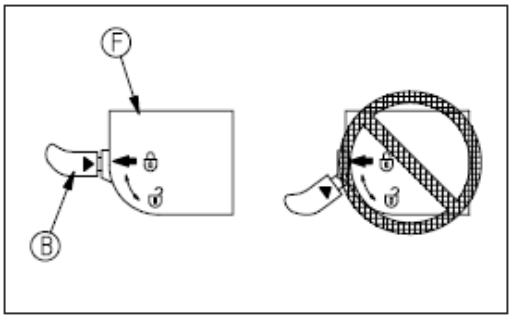

https://truckmanualshub.com/

Cab Skylight Window

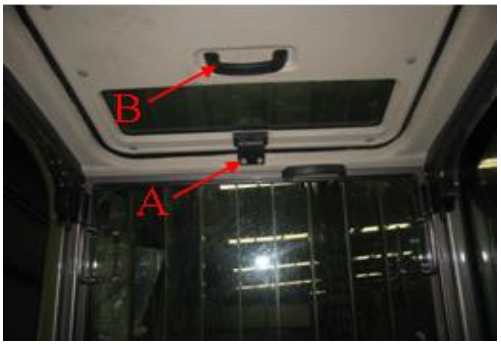

- Set pilot safety lever to LOCK position.;

Warning

- **Serious accidents may occur arising from failure to lock up the control lever or touch it unexpectedly.**

- Open the lock button (A) on the front, then grip the handle (B) and push it upward to open the canopy.
- To close it, grip handle (B) and use lock button (A) to lock skylight automatically (refer to right fig).

Inner lock

- Push ball handle A downward until a sound is heard, then push indoor handle outward, the door will open(refer to the right fig).

Sliding window (left side)

- Press down the window rubber lock A(refer to the right fig) and pull it backward, the window will open.

https://truckmanualshub.com/

Exterior Rotary Latch

- Open the cab door: push the door until A latches with B (see the right fig.1), following a clack sound, the door is locked(see fig.2).

Fig.1

- Open the cab door：Press the unlock handle on the right side of under door frame, the fixed lock will be open,(as fig.3),then close the cab door.

Fig.2

Fig.3

Emergency exit

- When the cab door cannot open due to some reasons, “safety hummer” can be used to broken the back window, you can escape from the back window.

- Escaping approach：

1. Take the “safety hammer” outward.
2. Break the back window with it, escape from the outlet.

Remark：

Unless using it as the emergency exit, do not break the back window.

https://truckmanualshub.com/

3.3.2 Cover and Hood with Lock

- The fuel filling opening, cab, machine body covering units are equipped with lock.
- When using starting key to open or close these covers, doors and hoods, insert the key to the bottom, then rotate the key. If it is rotated when partially inserted, the key may break.

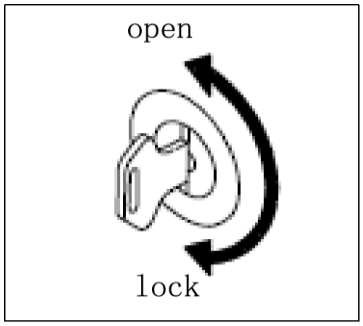

Opening and closing door or covering parts with lock

- Insert the key into the key slot, turn the key anticlockwise and pull the handle to open the door or covers;
- Turn the key clockwise to lock the door or covering parts (see the right fig).

Opening and closing engine hood

- Opening: Insert the key, turn it clockwise to unlock, pull the lock plate upward, and then open the engine hood upward with the handle.
- Closing: Close the engine hood downward, the fixed lock will lock automatically (it still can be open), insert the key and turn it anticlockwise 90°, after that take out the key, now the engine hood is locked.

https://truckmanualshub.com/

Fuel tank lock

- Open fuel tank filling opening cover A; insert the key into the key slot, turn the key anticlockwise for 180°, the lock is open. To lock the fuel filling opening, turn the B clockwise (see fig below).
- Rotate oil fill cap B anticlockwise to open oil fill port. To lock up oil fill port, rotate B clockwise (see fig below).

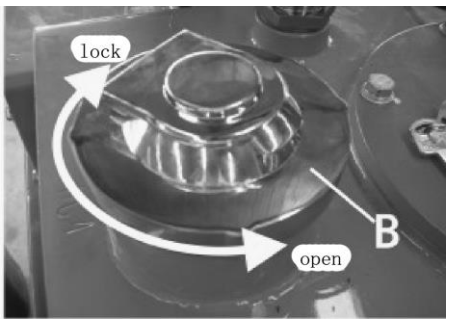

3.3.3 Cigar Lighter

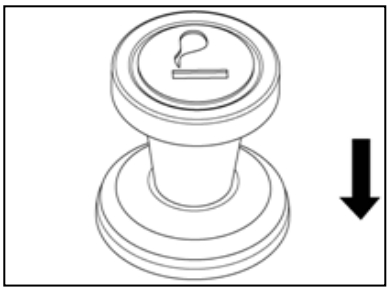

- Push the lighter into the hole following the direction given in fig. it will rest in LOCK position until the heat-up is made. Then the light will eject and return to initial position. Take the lighter out to use.
- Pay attention to hold the upper end rubber hand grip to avoid being burned.

3.3.4 Radio

Radio is equipped with the cab of the hydraulic excavator, on the position of (15) as the picture, users can listen to the different frequent broadcast of the radio according to own different requirements and interests for relieving the tired.

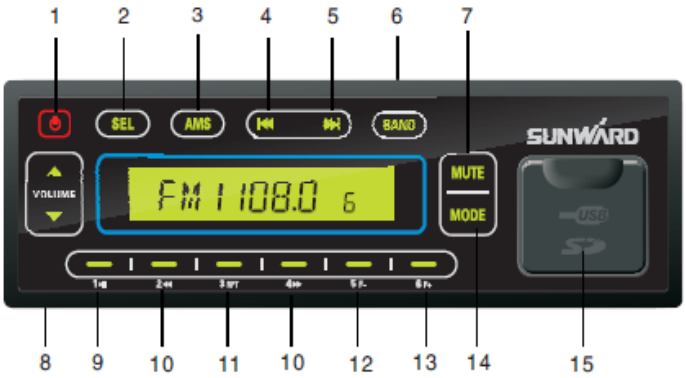

1. Power
2. Sound Effect Mode
3. Auto storage
4. Upward Selection
5. Backward Selection
6. Band
7. Mute
8. Volume Adjustment
9. Play/Stop
10. FF/ FB
11. Pre-storage 3/Repeat Play
12. Pre-storage 5
13. Pre-storage 6
14. Function Selection Mode
15. USB/SD Port

The Instruction of the Radio

(1) Power-on or Power-off:

Power button ⏻ . Press it shortly to turn on or turn off the radio.

(2) Volume Adjustment（▲/▼）:

Volume turn up or down +/-

(3) Band selection:

Press “FM/AM” button to change radio band and the band will

https://truckmanualshub.com/

circulate among FM1/FM2/FM3/AM1/AM2/FM1.

(4) Radio Channel Manual Selection:
Shortly press "∧" and "∨" under the "TUNING" to search radio station by upward or downward frequency.

(5) Radio Channel Auto Selection:
Press "∧" and "∨" under the "TUNING" for more than 0.5 second, the radio will search radio station automatically by upward or downward frequency, till one is found, and then keep on listening in this one.

(6) Radio Channel preservation:
After manual/auto search radio channel, press down any one button among M1∽M6 for more than 2 seconds to store current broadcast frequency. 6 radio channels can be saved within each band, 30 radio channels in total.

Auto search stored radio channels: Press down AS/PS button over than 1 second to search radio channel upward from current frequency, once a radio channel is found, it will be saved to the presetting position.

(7) Pre-saved Radio Channels Audition:
After the AS/PS button is pressed down less than 1 second, all the pre-saved radio channels will be listened in proper order with 5 seconds for each. During the audition process, press down this button again to stop and keep listening the current radio channel.

(8) Select Radio Channels
Shortly press any one button of M1∽M6 less than 2 seconds to listen to the pre-saved radio directly.

Time operation:
Press down the CLK button to display time mode, press it again to return back. Under this mode, long press this button more than 1 second till time display flickering to enter into the time adjustment mode. Short press the radio channel selection button ∧ to increase one hour, increase continuously by long press; Short press ∨ to increase one minute, increase continuously by long press. If there's no operation for 5 seconds, exit the time adjustment mode.

https://truckmanualshub.com/

Attention

- Set the volume to the appropriate position to avoid traffic accidents.
- Place this radio in the cab if in the hot or cold day. Idle temperature ensures its good performance.
- It's easily broken when water poured in, don't spray water onto this radio when washing the machine.

3.3.5 Seat

Seat adjustment specification

- The seat is two stages adjustable and capable of moving forward and backward. the adjustment: 270mm (forward 140mm, backward 130mm);
- The backrest infinite variable adjustment range: 35°-170°;
- Seat suspension adjustment: 60mm; the seat infinite variable adjustment range: 50-130 kg.;
- Headrest height adjustment range: 105mm. it's adjustable in 7 stages.;
- The armrest can be adjusted from -40°~100

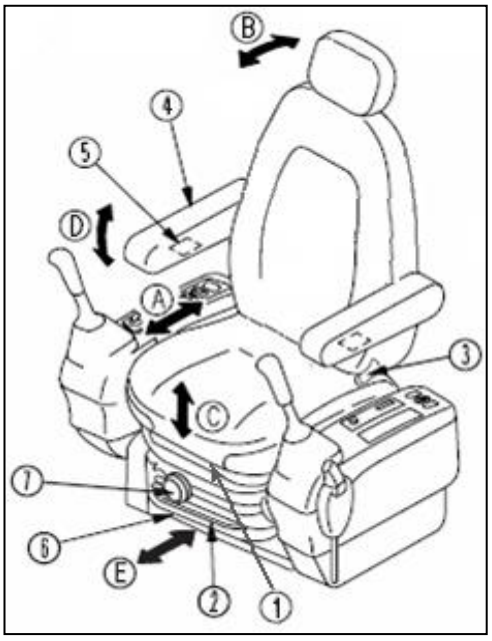

Instruction

A: Hand position adjustment

Raise the adjustment lever 1, upper seat move forward or backward. Adjust hand to proper position.

B: Backrest tilting adjustment

Pull up the adjustment lever 3, turn the backrest (or the backrest will turn forward automatically). Adjust the backrest to the optimal position and convenient for operation, then loose the lever.

C: Seat height adjustment

Lift the seat upward, when you hear the fist click sound, the seat rise 30mm, lift the seat again, the seat rise another 30mm, still lift the seat, it will fall down to the lowest position.

D: Arm rest angle adjustment

https://truckmanualshub.com/

Rotate the angle adjustment hand wheel 5 under the arm rest; adjust the arm rest 4 to the comfortable position.

E：Foot position adjustment

Pull up level 2, and adjust the foot position, after it attains ideal position, put down the lever, and realize self-hold.

F：Bearing adjustment

Rotate lever 7, observe the bearing of the seat through observation window, until the bearing attain to the body weight of the operator.

3.3.6 Fuse

Note

- **Always turn off the key switch prior to fuse replacement.**

- The fuses protect the electrical equipment and wiring from burning out. .
- Replace any fuse with corrosion or generating white powder or any fuse looseness in fuse holder.
- Replace fuses with equivalent capacity ones.

https://truckmanualshub.com/

3.3.7 Air Conditioner Instruction

Warning

- **It's dangerous to perform improper operation, lubrication, and maintenance or service procedure on the machine. This may cause injury or death.**
- **Do not attempt any operation on the machine before you thoroughly understand the information about operation, lubrication, maintenance, and service procedure.**
- **Safety precautions and warnings are provided in this manual. If you fail to pay attention to these information, you or the other persons may suffer the injury and even death.**

Schematic diagram

This air conditioning is heat/refrigeration A/C. refers to the schematic diagram on the right.

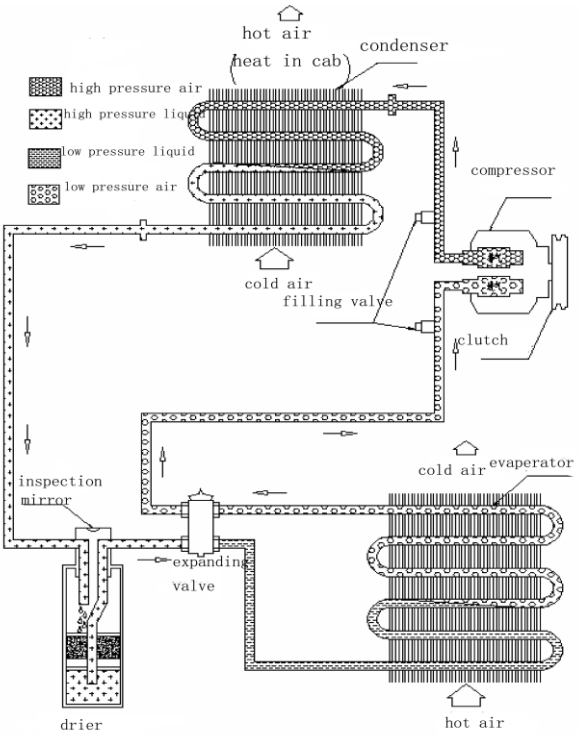

air conditioning refrigerating schemitic diagram

NO.	Name	Specification
1	Cooling Capacity	4.0kw
2	Heating Capacity	5.0kw
3	Air Flow Capacity	400m^3/h
4	Voltage	24V.DC
5	Total Power Consumption	≤250w
6	Motive Power Consumption	≤2.5kw
7	Refrigerant	R-134a (environmental protection)
8	Refrigerant Change	900∽1050g
9	Compressor	SE-5H14 B type slot
10	Refrigerate oil	PAG(sp20),300ml

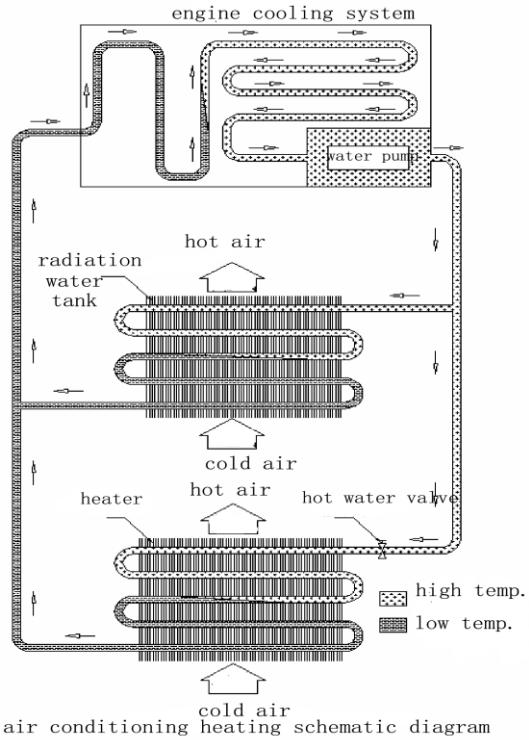

air conditioning heating schematic diagram

https://truckmanualshub.com/

Operation Instruction

The cab inner is equipped with air conditioner, the panel is on the left controlling box, and users can start the air conditioner according to environmental temperature and self requirement, and adjusting inner temperature. We suggest use the conditioner according to national environmental protection requirements and conditioner temperature controlling rules.

Control panel of air conditioner shows as following picture:

1— Power switch

2— wind speed setting switch

3— temperature setting switch

4— air outlet mode setting switch

5— auto mode setting switch

6— inner/exterior air-in switch

7—liquid crystal display screen

8—air conditioner start/close switch

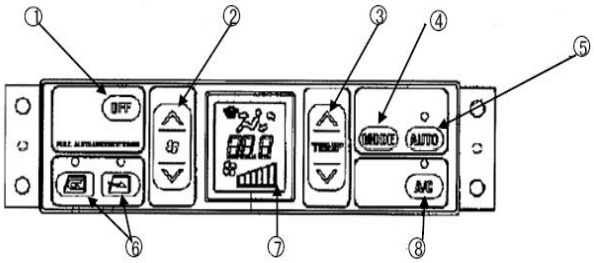

Remark: when the function of auto mode setting switch 5, inner/exterior air-in switch 6 and air conditioner start/close switch 8 are started, the lamp above the switches will be lighted.

The function of buttons and switches are as follows:

1. Power switch

The control of fan and air conditioner is as below. Press the OFF switch 1, the display of temperature and input air will disappear on the screen. The lamp above the auto mode setting switch 5 and air conditioner start/close switch 8 will be turned off. The running will be stop.

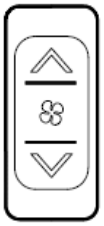

display	input air
	input air "weak"
	input air "middle 1"
	input air "middle 2"
	input air "middle 3"
	input air "middle 4"
	input air "strong"

2. Wind speed setting switch 2: the input air can be set from step 1 to 6. The input air will be displayed on the screen. Press the button ▲, the input air will be strengthened; Press the button ▼, the input air will be weakened. When auto mode is started, the input air will be switched automatically.

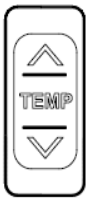

3.Temperature setting

To set the temperature of cab inner.

The temperature of cab inner can be set from 18.0 centigrade to 32.0 centigrade. Press the

display	setting temperature
18. 0	maximum refrigeration
18. 5～31. 5	adjusting setting temperature
32. 0	maximum heating

button ▲, the setting temperature will rise; Press the button ▼, the setting temperature will drop. On normal state, the temperature should be set at 25 centigrade.

display	air outlet model	air outlet				remark
		front	back	sole	defrost	
	front, back and sole	○	○	○		
	front and back	○	○			
	front		○			can not choose under auto model
	sole			○		
	sole and defrost			○	○	can not choose under auto model
	defrost				○	can not choose under auto model

remark: ○ indicates the oultlet from which air is blowed.

4. Air outlet selection

The mode of the outlet can be set as below:

Press this selection button ④ once, the mode on the display screen change once and the air conditioner works as such mode.

When the Auto Mode is on, the mode shifts automatically.

5. Auto mode

According to the set temperature, automatically set the air output volume, air outlet, the shift mode of the internal and external air.

Set the switch ⑤ according to the Auto mode, the light on the button is on.

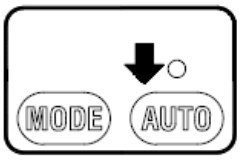

Press this switch on normal condition and set to the suitable comfortable temperature by the temperature button ③, the air condition will work automatically.

Shift the auto mode to manual mode, it's only need to set the air output, air outlet and the shift mode of the internal and external air, after that, the light on the auto mode button is off.

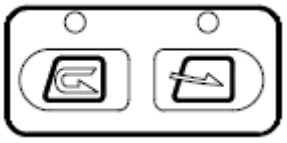

6. Intake air internal and external circulation selection button

It shifts between inner air circulation and external air inflow.

When under the Auto Mode, press this button, its light is on which indicates this circulation m es.

Inner air circulation ——

External air leading-in——

Inner air circulation	Only on the mode of internal air circulation when the external air stopped
	Suitable for making the cab warm or cool immediately or when the air of the cab is very dirty
External air inflow	Operation of external air flowing
	Leading the clean air flowing or demisting

7. LCD Screen

Display the setting temperature, air output and the status of the air outlet when the air conditioner is working.

Press down the "OFF" switch ①, all the indicating icons

https://truckmanualshub.com/

disappear and the air conditioner stops running.

8. A/C ON/OFF switch

The switch is used to control the start and shutdown of the A/C system (for cooling, heating, and dehumidification). Press down the A/C switch ⑧, and the air conditioner starts and its indicator light is turned on; to press it down again can shut down air conditioner and the light is turned off.

Note: if the fan does not start (the LCD screen shows the air feed state), the air conditioner will not be started (for cooling, heating, or dehumidification) by pressing down the button ⑧. If it is needed to use the air conditioner, firstly press down the air flow rate regulating button ② to select an air flow rate to ensure that the fan is started and then press the A/C button again.

Caution

When the air conditioner is used, do not turn the temperature control switch to the COOL position, and instead, switch the air flow rate switch to the low position to prevent the evaporator from frosting and the cooling effect from being affected.

When an air conditioner refrigerates in summer, do not open the hot water valve so as to affect the cooling effect caused by the frost evaporimeter.

Because the heating system adopts the engine coolant as its heat source, the air conditioner can heat in the heating mode only when the machine runs for a while and the engine coolant temperature is up to more than 50℃, in case of a low ambient temperature.

The air conditioner has the intelligent memory function: when switching off the excavator's power supply, the air conditioners running state (including shutdown) is saved; when the excavator's power supply is switched on, the air conditioner will automatically return to the state saved previously.

Operation method

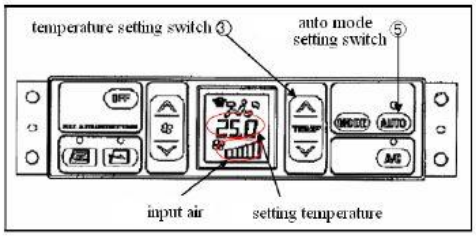

Typical Operation Procedures

1. The auto mode setting switch ⑤ is on and the temperature, air flow rate, auto switch, and A/C switch indicator lights on the LCD screen are on.

2. Adjust the temperature switch and set the temperature to a comfortable value. Set the temperature accordingly, and the air conditioner automatically switches in the air flow rate, air outlet, and internal/external circulation. The air conditioner runs automatically to reach the set temperature.

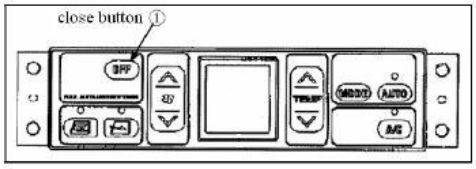

Remarks: in the auto mode, the air flow rate is automatically

https://truckmanualshub.com/

limited to prevent the cool air from flowing out and the engine coolant temperature is flow.

Auto run stop

Press down the OFF switch ①

The set temperature and air flow rate indicators on the LCD screen as well as the auto switch and A/C switch lights are off and the air conditioner is stopped.

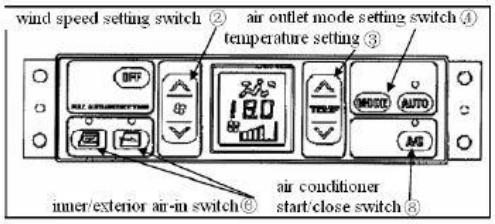

Manual operation control

1. Press down the fan regulation switch ② to regulate the air flow rate. In addition, confirm the set temperature and air flow rate by checking the information shown on the LCD screen.
2. It is possible to check whether the A/C switch ⑧ is switched on by checking the light on it.
3. Set an appropriate temperature by regulating the temperature regulation switch ③.
4. Adjust the blowing mode toggle switch ④ to enable the required air outlets.
5. Select the required internal/external air mode by using the internal/external switching button ⑥.

Stop of manual running

Press down the OFF switch ①

The set temperature and air flow rate on the LCD screen as well as the light on the A/C switch are turned off and the air conditioners running stops.

https://truckmanualshub.com/

Running in cool head and warm feet mode (BYLEVEL)

1. Press down the fan switch ② to adjust the air flow rate. The set temperature and air flow rate are confirmed through the LCD screen.

2. Press down the air outlet mode setting switch ④ to select an air outlet mode.

3. Allow the air conditioner ⑧ in the On state. The light on switch can be used to confirm this.

4. Adjust the fan speed setting switch ②, temperature setting switch ③, and internal/external air mode switching switch ⑥to the appropriate positions respectively.

What is blown at the head position is cool air and what is blown at the feet position is warm air. This is the cool head and warm feet mode.

Defrosting running

1. Press down the fan switch ② to adjust the air flow rate. The set temperature and air flow rate are confirmed through the LCD screen.

2. Adjust the air outlet mode switching switch ④.

3. Select the external air import state by pressing down the internal/external air switching button ⑥.

4. Adjust the temperature adjustment switch ③ to set the temperature to 32℃ (maximum heating capacity)

In order to allow the air to be blown onto the glass, adjust the shutter directions of the air outlets.

In addition, if the glass is covered with moisture or dehumidification is required in the plum rain season, simply start the air conditioner ⑧ for dehumidification.

Other Functions of Air Conditioner

Self-diagnosis function

Implement the fault check of the air conditioners sensors and parts.

1. Press down the OFF switch ①. The set temperature and air flow rate indicators on the LCD screen disappear and the air conditioner stops running.

2. Simultaneously, press down the control button of the temperature setting switch ③ for three seconds or above, and there will be a trouble code on the LCD screen.

Representation	Meaning of trouble code
E--	Trouble-free
E11	Internal air sensor disconnected
E12	Internal air sensor short circuited
E15	Water temperature sensor disconnected
E16	Water temperature sensor short circuited
E18	Solar radiation sensor short circuited
E43	Air outlet abnormal
E44	Mixed air outlet abnormal

https://truckmanualshub.com/

Conversion between ℃ and ℉

To press down the temperature setting switches ∧ and ∨ simultaneously for 5 seconds while the fan operates can realize the conversion between ℃ and ℉.

	LCD indication
℃	18.0~32.0
℉	63~91

Reset

Applicable for the newly installed air conditioner or erasing the trouble codes after the troubleshooting.

Simultaneously pressing down the internal and external switches for three seconds or above can erase the trouble codes.

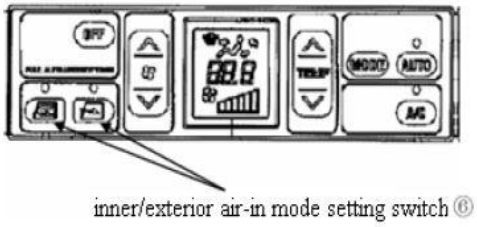

3.3.8 Accumulator

Warning:

- **The accumulator is charged with high-pressure nitrogen gas. Improper operation may lead to explosion and result in serious injury or damage.**

When handling the accumulator, always follow the steps below.

- The pressure in control piping could not be completely released. When disassembling hydraulic devices, do not stand in the oil ejecting direction. Loosen the bolts gradually.
- Do not disassemble accumulator.
- Do not place the accumulator close to naked flame or get it exposed in fire.
- Do not drill holes or weld on accumulator.
- Do not get accumulator hit, rolled or shocked.
- When handling accumulator, it's necessary to bleed the air. Please contact with distributor.

The accumulator is fixed in control piping. The accumulator is a device being used to store pressure. With this accumulator equipped, you are allowed to operate controlling piping in a short time, even if engine stops. Therefore, work equipments could be lowered under their own weight by means of control lever.

Pressure releasing methods for a machine equipped with an accumulator

- Lower the work equipment on the ground, turn off its breaker or other attachment.
- Stop the engine.
- Shift starting switch to ON position.
- Set pilot safety lever to free position. Operate work equipment lever and accessory control pedal forward, backward, leftward and rightward alternately to release pressure in piping.
- Set safety control lever to LOCK position to lock up control lever and attachment control pedals.

https://truckmanualshub.com/

3.4 MACHINE OPERATION AND CONTROL

3.4.1 Operator's Position

Operator is seated on the left hand in the cab. It includes operator seat, seat belt, left/right handle, left/right pedal travel operating valve (handle), operation display screen, radio and .air conditioner.

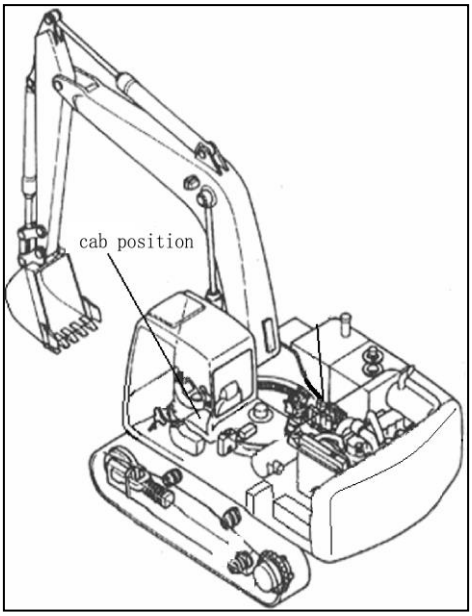

3.4.2 Setting and Adjustment

The machine has the following settings:

- Engine rev setting:

  Turn the throttle knob to get desired revs.

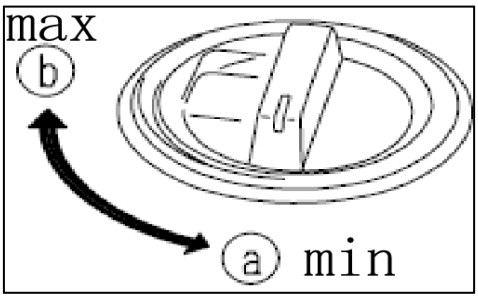

- Work mode setting：S, H, L

  For detailed information, please refer to section "3.2.5 monitor system".

- Travel speed setting：

  Press travel speed switch button to shift between high speed and low speed.

- Auto-idle setting：

  Press idle button to shift between "auto-idle" and "auto-idle cancel".

https://truckmanualshub.com/

3.4.3 Work Mode Selection

- Based on different work condition, select different work mode for the high efficiency, energy saving, and environmental friendly purpose.
- Select different gears by accelerator rotary knob according to driving modes, shown as below.

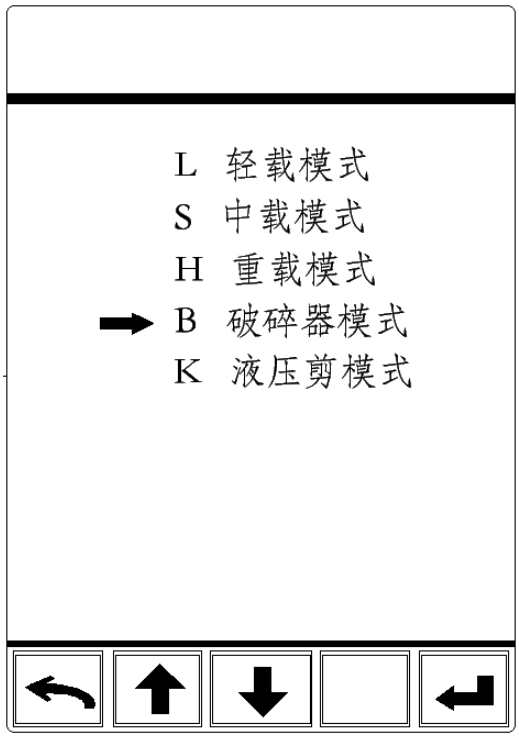

S— medium load work mode

L— light load work mode

H— heavy load work mode

It's a complete shift cycle

- The applicable work conditions corresponding to individual work mode are as follow:：

Work mode	Applicable work condition
S	Applicable for operations with small load and high economical efficiency requirements.
L	Applicable for operations with light load, e.g. operation on flat work ground.
H	Applicable for operations with heavy load and demanding for fast operation speed.

3.4.4 Inspection before Starting Engine

Before starting the engine, do a walk-around inspection covering the following items:

- Remove the dust on the cab windows to allow for a good visibility.
- Remove all foreign matters around engine, radiator or accumulator. Check for engine oil or fuel leakage. If any abnormalities are found, clear them as well as to remove all oil to avoid fire.

https://truckmanualshub.com/

- Do a walk-around inspection on machine: check for bolt looseness, wire wear out, piping leakage etc. If any abnormal signs are detected, please clear them.
- Check work equipments, cylinder, link, hose free of crack, wear out or and variation.
- Check engine oil level: the level must be between the lines of “MAX” and “MIN”.
- Check coolant level: the coolant level must be between the lines of “LOW” and “FULL”.
- Drain the water and sediment in fuel tank.

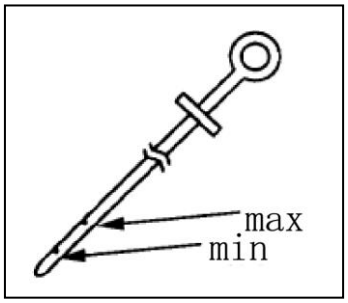

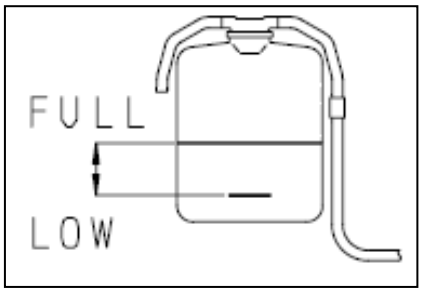

Confirmation

- Check around the machine to make sure it’s clear of person and obstacles.
- Adjust weight bearing, height, seat tilting, armrest angle, backrest angle etc for operator’s comfort.
- Check seat belt and fasten buckle.
- Check horn and light to ensure they are properly functioning.
- Check instruments and monitor for any damage.

3.4.5 Engine Start-up

Warning

- **Do not start the engine, if any signs or marks are posted to handles in the cab.**
- **Do not start the engine by short-circuiting.**
- **Do not start the machine without operator seated.**
- **Make sure the surrounding area is clear of person and obstacles before starting the engine. Sound the horn to warn people.**
- **Do not start the machine in a confined area.**
- **Exhaust gas is toxic, when starting the engine in a confined area, be careful to ensure good ventilation.**

Note

- **Throttle knob should be set to MIN position**

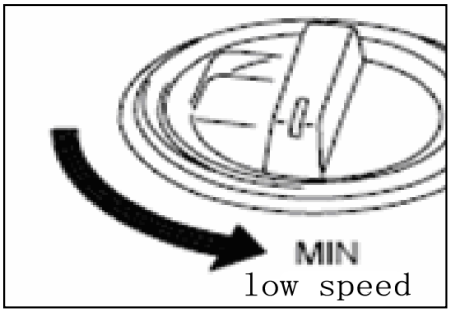

https://truckmanualshub.com/

before starting the engine.

- **Do not keep the starting motor running continuously for longer than 5 seconds. If the engine fails to start, wait 2 minutes before a new attempt.**

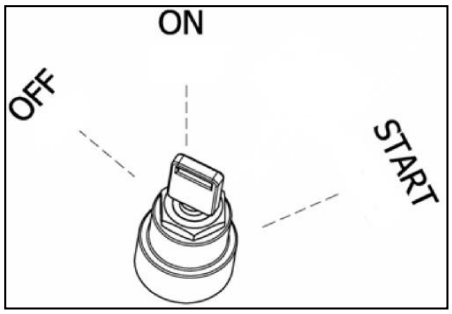

Start the engine in normal weather condition

- Set pilot safety lever to LOCK position.
- Turn throttle knob to low speed position.
- Shift starting key to “ON” position to “start” position to start the engine.
- With engine started, release the starting switch key, the key will return to “ON” position automatically.
- The engine oil pressure is displayed in screen, check engine oil pressure is within specified range. If yes, you are allow to operate. If no, find out the problem and do not operate until the problem is cleared. You could stop the engine to help find the problem if necessary.

Start the engine in cold weather

- Set pilot pilot safety lever to LOCK position.
- Turn throttle knob to low speed position.
- Hold the key in warm-up position for around 20 seconds until the warm-up indicator stop illuminates.
- After warm-up procedure, set starting key to “start” position to start engine.

Do not keep the starting motor rotating continuously longer than 5 seconds. If it fails to start, wait 2 minutes before another attempt.

- With engine started, release the key, it will return to “ON” position automatically.
- The engine oil pressure is displayed in screen, check whether it’s within specified range. If yes, you are

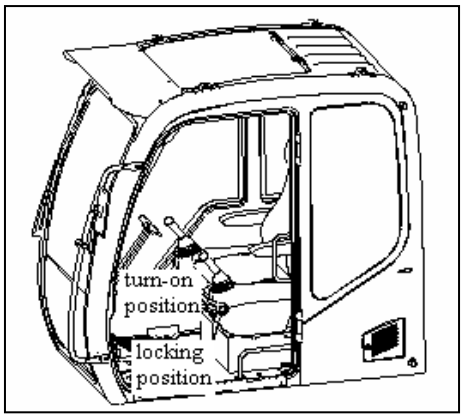

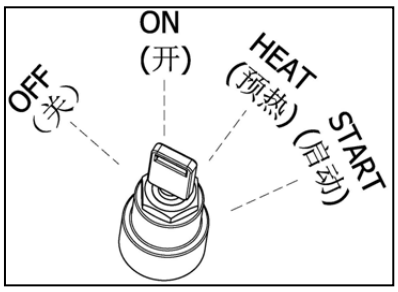

https://truckmanualshub.com/

allowed to operate. If no, find out the problem and do not operate until the problem is cleared. You could stop the engine to help find the problem if necessary.

3.4.6 New Machine Running-in

Note

- **All machines have a running-in period. The running-in period of our machines is the first 50 hours.**
- **How well does the machine run during running-in period have direct effect on the machine performance in the future in terms of use effect and service life. Please follow the rules specified in this manual.**

- After starting the engine, do not attempt any operation; allow it to idle for 15 seconds.
- After idle running, attempt all digging, swing action without load at idle speed for 5 minutes.
- Do not operate with heavy load or at high speed.
- Before stopping the engine, do keep it running at idle for longer than 2 minutes.
- Do not start, accelerate, steer, travel and attempt all other actions sharply, except in emergency.

https://truckmanualshub.com/

3.4.7 Machine Preheating in Cold Weather

Note

When hydraulic oil temperature is below 25 ℃, operating machine in this circumstances can cause sudden movement and stop, the machine will become hard to maneuver. And accidents may occur.

- **When the engine is difficult to be started, it's necessary to carry out warm up operation.**

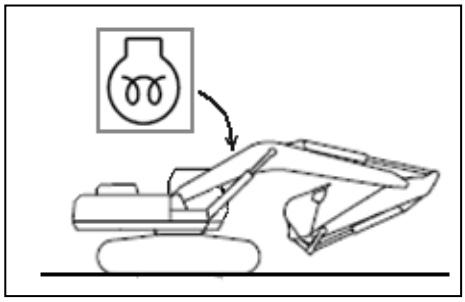

- With engine started, cancel auto-idle, adjust throttle knob to low speed position (approx. 1200r/min) to allow the engine to idle for 5 seconds.
- Adjust throttle knob to set engine revs to 1500 rpm, operate bucket to perform "dig" — "dump" blank action for 5 minutes without attempting any other actions.

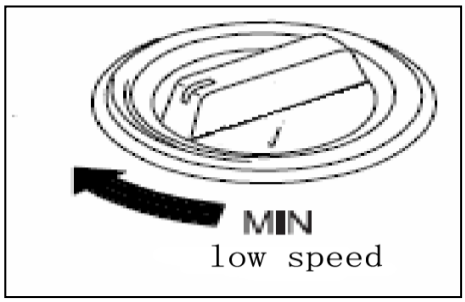

- Engage engine speed at 1500 rpm, operate bucket and arm to act to full stroke for 5 minutes.
- Adjust throttle knob to speed up engine rev to high speed position (approx. 2000r/min), cycle the following operations for 3-5 times.:

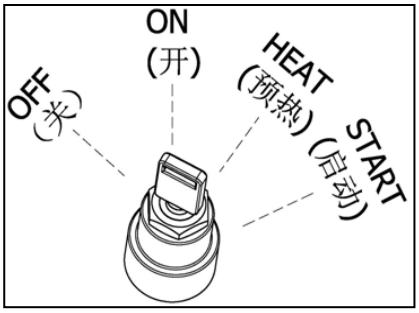

- Boom up←→down movement
- Arm retract ←→extend
- bucket dig←→dump
- platform left swing←→right swing
- complete machine travel forward←→travel backward
- With warm-up operation done, check gas discharging, noise and all other actions. If the machine is functioning properly, proceed to work. If not, keep carrying out step 4 until it's functioning properly.

https://truckmanualshub.com/

3.4.8 Safety Operation Rules

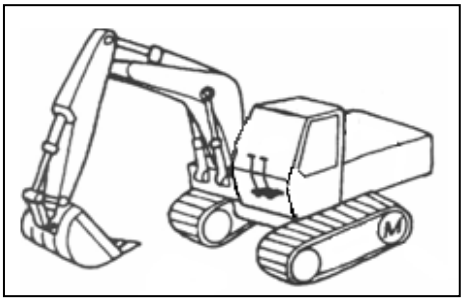

Safety rules on machine steering

- Place the idler underneath the cab and place sprocket under counterweight. Only when idler is under the cab, the direction of travel control lever matches with that of machine traveling. Otherwise, the direction is in reverse. i.e. if sprocket is located under cab, push travel control lever forward, machine will travel in reverse.
- Before traveling, make sure the surrounding area is clear of person and obstacles.
- Sound the horn to warn people before traveling.
- Only operate the machine on the operator's seat.
- Do not carry other people with machine.
- Make sure door, windows are in lock up position and locked securely.
- Do not travel in reverse if possible. swing upper-structure for 180°. Before proceeding to operate, slightly push handle to confirm the relationship between handle operation and travel direction.
- If the machine cannot swing due to confined area, it's necessary to offer a signal man to assist operator.

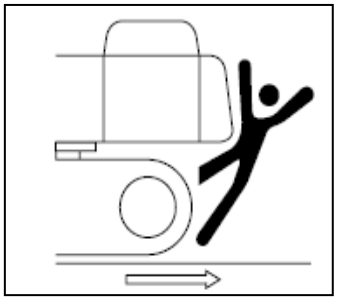

Working on slopes

- Use machine to dig a platform as flat as possible during operation on slopes. Then park the machine on this platform to operate. Do not directly stop the machine on a slope to operate.

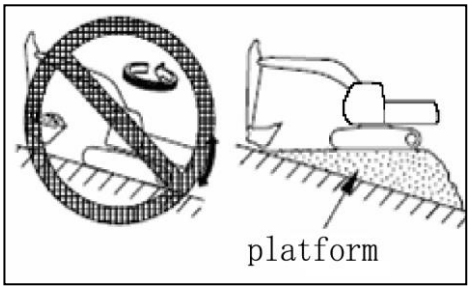

https://truckmanualshub.com/

Safety rules on travelling operation

- Do not exceed allowed load of the machine to prevent damages to it.
- When traveling on flat ground, lower work equipment (bucket) to a height of 400 to500mm above the ground level.
- When traveling on slopes, the work equipment must be lowered to a height of 20 to 30cm above. If the slope is steep, the work equipment must be extended accordingly.
- When travel on slopes or in a confined area, cancel auto-idle function as well as to set travel speed at “LOW” position.

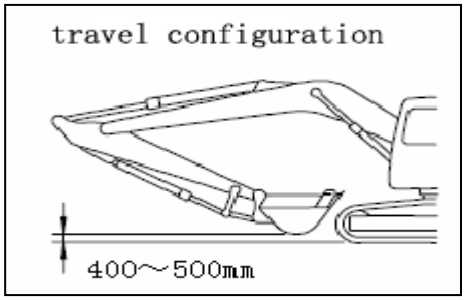

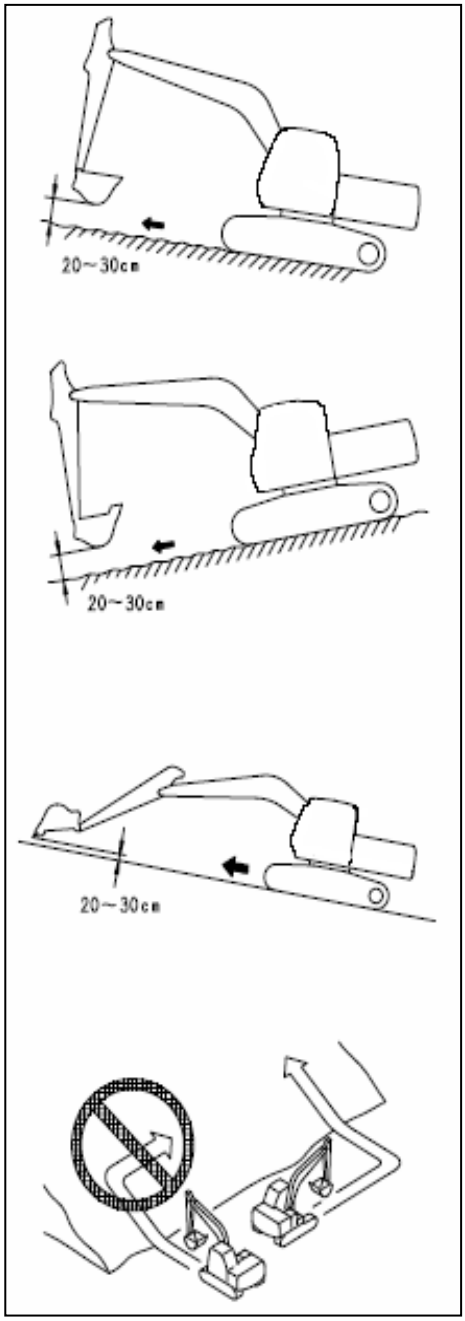

- Never change direction on slopes or attempt upper-structure swing operation.
- When passing under bridge, tunnel or other place with limited height, check to make sure the machine could pass through. If yes, travel at low speed.
- When the machine travels on bridge or other place with load limitation, make sure the weight of the machine do not exceed load limits.
- Always keep safety distance, when traveling under high voltage cables.
- Always keep certain distance away from people, structure and other objects.
- Go pass grassland and marsh at low speed.
- Do not immerse the machine in water by more than the permissible depth (under center of sprocket).

https://truckmanualshub.com/

3.4.9 Machine Traveling

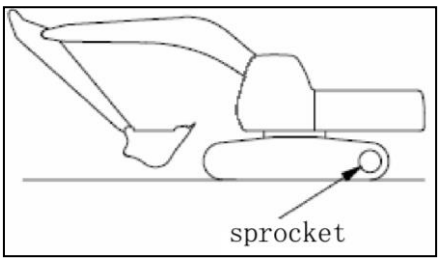

Note

- **Only if the idler is under cab, the machine moves in the same direction to the operation of the travel levers.**
- **When machine is traveling, do not change traveling direction suddenly to avoid damages to machine.**

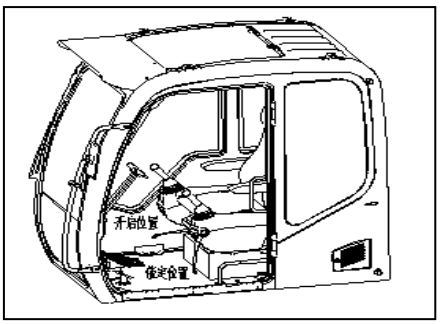

- When starting the engine, set idler under cab. Then place pilot safety lever to ON position.
- Fold work equipment, lift boom, and keep the bucket at a height of 400 to 500mm above ground level.
- Push travel control lever or step down travel pedal: push forward both travel control lever(or pedal) in sync, the machine will move forward; pull backward both travel control levers (or pedal) in sync, the machine will travel rearward.

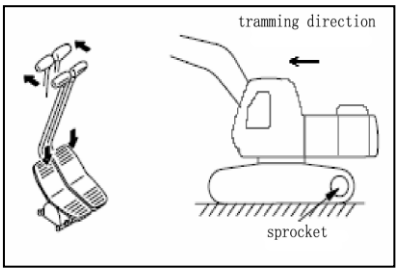

- The machine has two travel speed stages: high/low speed, 5.5km/h and 3.5km/h accordingly.
- When the sprocket is located under cab, push both travel control levers (or pedal) in sync, the machine will travel rearward. Pull backward both levers (or pedal), the machine will travel forward. .

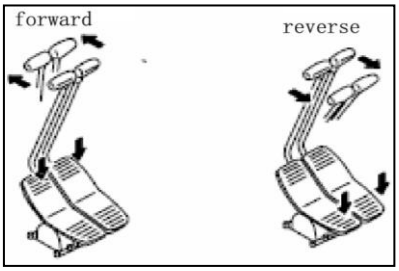

Note:

In real operations, it's difficult to identify the relation between machine travel direction and handle operate direction due to long-time operation, you may give a trial operation by handling handle slightly. With direction relation identified, you are allowed to proceed to operate.

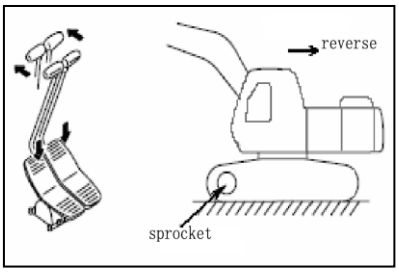

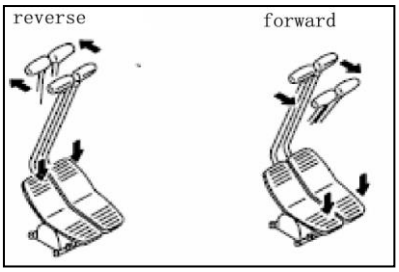

https://truckmanualshub.com/

3.4.10 Machine Steering

- When idler is located under cab, push left travel lever (or pedal) forward, the machine will turn right, push right travel lever(or pedal) to turn left.
- When idler is located under cab, pull left travel lever (or pedal) backward to turn left. Pull right travel lever (or pedal) backward to turn right.
- If push travel lever (or pedal) in different direction in sync, the machine will rotate on the spot.

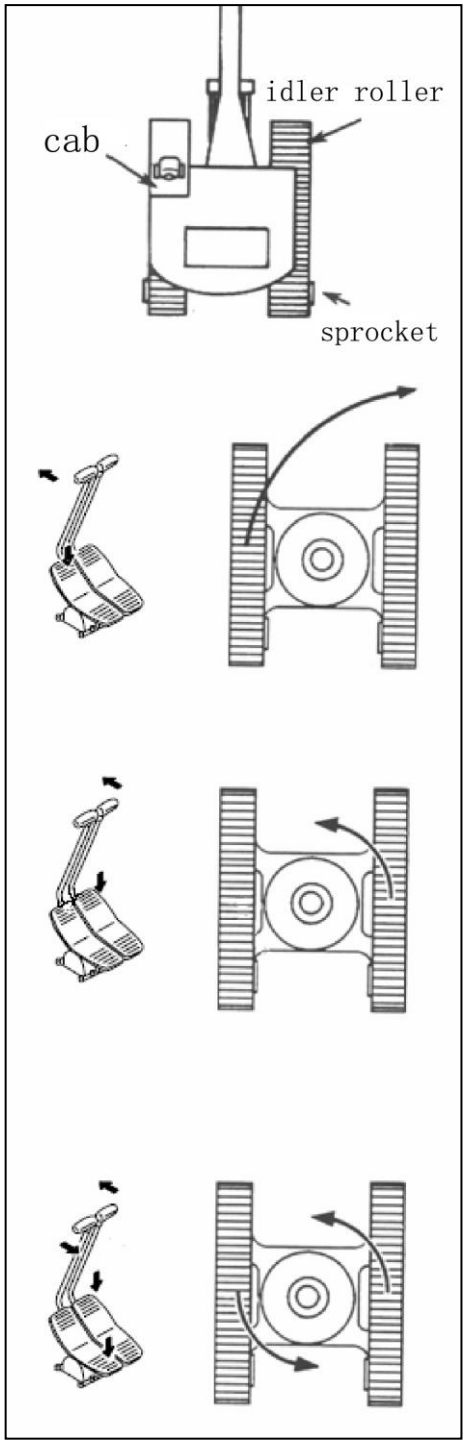

https://truckmanualshub.com/

- When the sprocket is located under cab, the relation between operation direction and machine travel direction is opposite to the item ①, ② above.

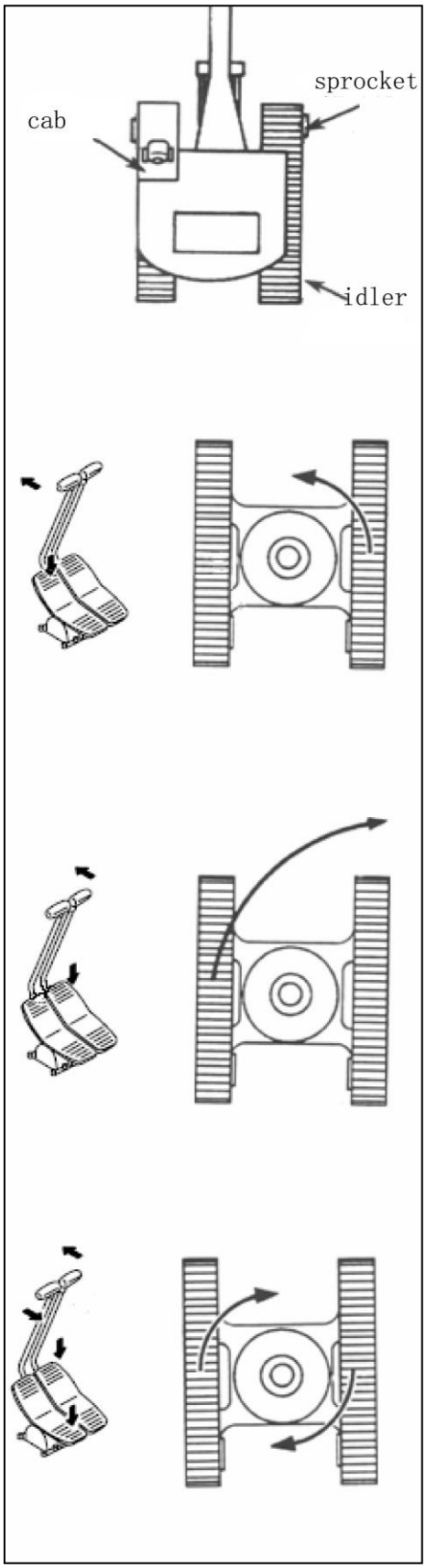

https://truckmanualshub.com/

3.4.11 Upper-structure Swing

Warning

- **Before swing operation, check that the surrounding area is clear of obstacles and has sufficient space to swing**
- **During swing operation, do not extend bucket and arm at one time, unless the space is larger than machine's max digging radius.**

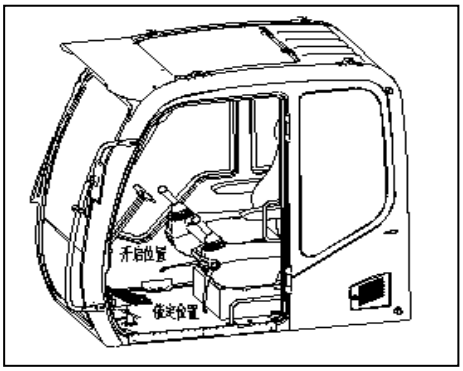

- Start the engine, set safety lever to ON position.
- Raise boom, fold arm and bucket to keep work equipments at a height of 1 M above ground.
- Operate the lever on the left of seat： push lever to the left to swing the machine to the left; push lever to the right to swing the machine to the right.

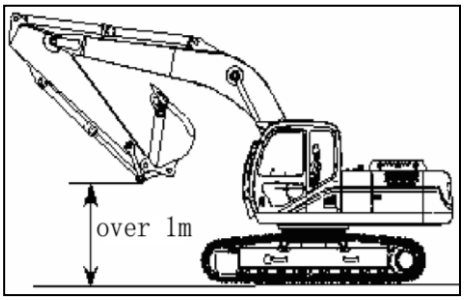

3.4.12 Work Equipment

Warning

- **When the machine is set to "auto-idle" state, the machine will stop all action for 10 seconds, and then engine will go to idle speed state automatically. Since then, any operation on lever will shift the machine to high rev.**
- **The moving speed of work equipments is in proportion with distance of handling lever. i.e. the bigger the distance of lever being moved is , the faster the work equipments move. Avoid sudden movement at high speed.**

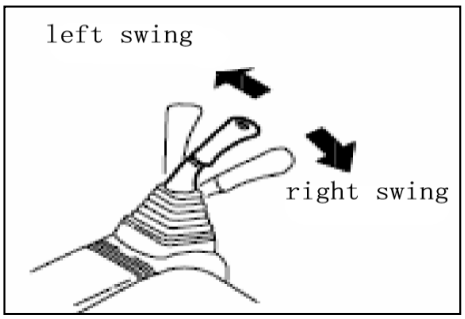

- Work equipments are regulated by levers located on both side of seat.
- Left control lever

Forward, backward movement controls bucket dumping and digging.

Left, right movement controls upper-structure left swing and right swing.

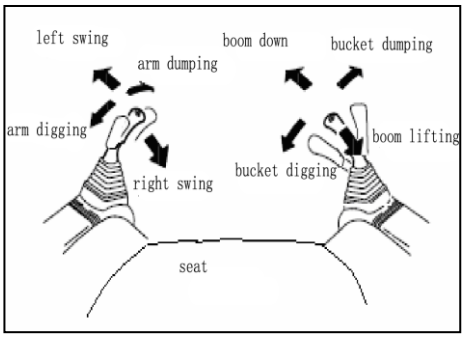

- Right control lever

Forward, backward movement controls boom down movement and up movement.

https://truckmanualshub.com/

3.4.13 Work

Backhoe work

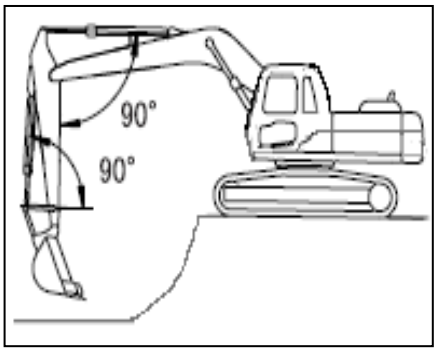

- The bucket should be lowered at 45° to the ground.
- Use arm as a primary digging force to pull bucket towards machine direction.
- If there is mud adhered to bucket, move arm and (or) bucket back and forth rapidly to get rid of mud.

Note:

- **When arm is at 90° angle with arm cylinder, and bucket cylinder is at 90° angle with rocker arm, the max digging force of arm and bucket can be achieved.**
- **The range for excavating with the arm is from a 45° away from the machine to a 30° angle toward the machine.**
- **Machine can execute short-time intense excavation: a pressurizing button is presented on the top of the left control lever. Press it down to increase system pressure providing intense excavation for 8 seconds.**

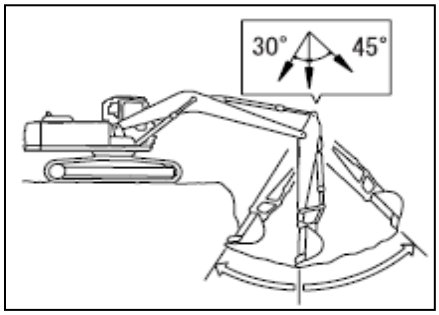

Ditching work

- To excavate a straight ditch, set track parallel to the ditch. Excavate to desired depth, then travel machine backward to proceed excavation.

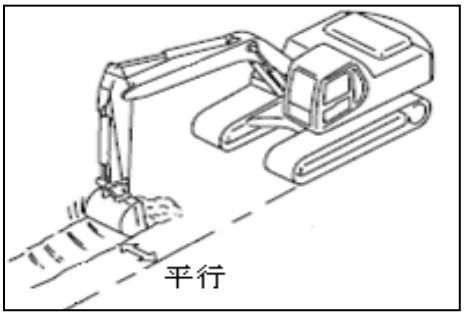

https://truckmanualshub.com/

Leveling work

Note

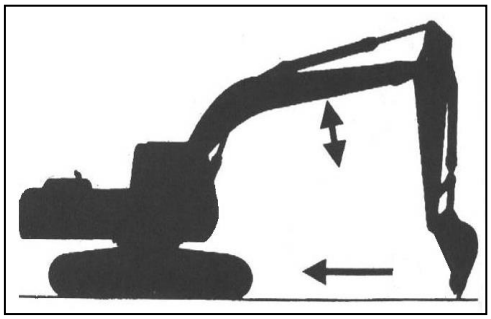

- Do not use bucket to smooth the ground excessively.
- Do not pull bucket in travel manner to carry out smooth operation.
- Do not use bucket in swing manner to carry out leveling operation. Especially in case of large size obstacles, damages may occur to machine.
- When dozer blade locates at the front end with deep digging depth, be careful to not collide it with boom cylinder and bucket.
- Place the dozer blade at the rear as possible as it can when operation.
- Dozer blade is only suitable for simple work of bulldozing instead of downward digging; failure to comply may result in the damage of dozer blade or even the damage of machine chassis.

- After bucket teeth touches ground vertically, retract it a little.
- When arm is away from the outer side of excavator, and at right angle to the ground, lift boom and fold the arm to move the bucket teeth in level.
- When arm is near the inner side of excavator and at right angle to the ground, lower the boom and fold the bucket at the same time to move the bucket teeth in level.

Loading work

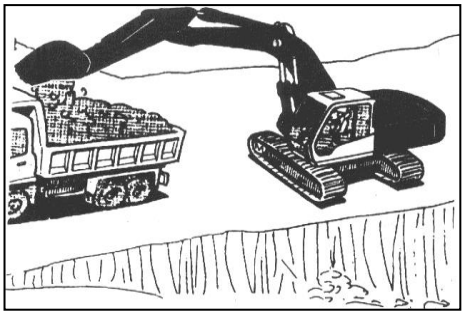

- The procedure of using arm and bucket to excavate is identical with that of “backhoes excavate work”.
- Swing upper-structure while raising boom.
- When the bucket is reaching the top of the truck, stop swing operation and boom lifting. Extend arm and bucket to dump.
- After dumping, swing upper-structure, fold arm and bucket appropriately.

Note : The machine is allowed to swing 90° and 180° for loading. To enhance work efficiency, always perform loading work in 90° swing manner if possible.

https://truckmanualshub.com/

Breaking work

Note

- **Select matched model of breaker according to excavator model.**

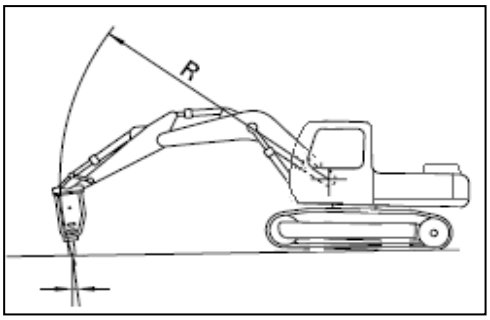

- Main applications of breaker:

  Rock crush

  Road construction

  Structure demolition

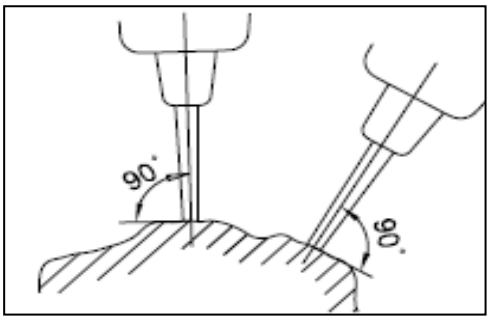

- Keep the chisel pushed perpendicularly against the impact surface when carrying out breaking operation.

- When applying impact, push chisel against the impact surface and operate so that the chassis rises approx. 50 mm (2 in) off the ground. Do not let the machine come further off the ground than this amount.

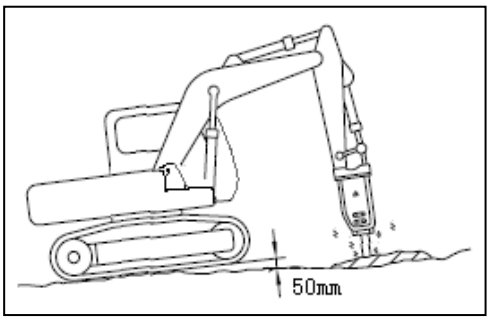

- Always keep the chisel pressed against the impact surface properly to prevent using the impact force when there is no resistance.

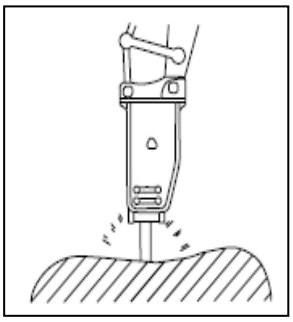

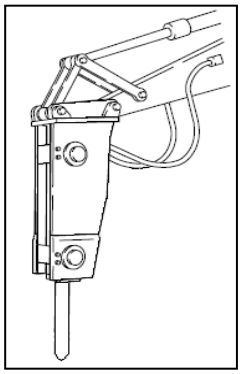

- Adjust bucket cylinder at all time, always keep chisel pushed perpendicularly against the impact surface.

- When it's difficult to break, do not apply continuous impact to the same surface for longer than 1 minute. Change the point of impact and carry out breaking operation closer to the edge.

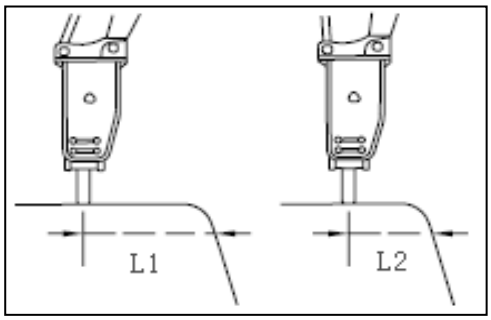

https://truckmanualshub.com/

Prohibition for a Breaker

- Do not operate hammer breaker to the end of strokes.

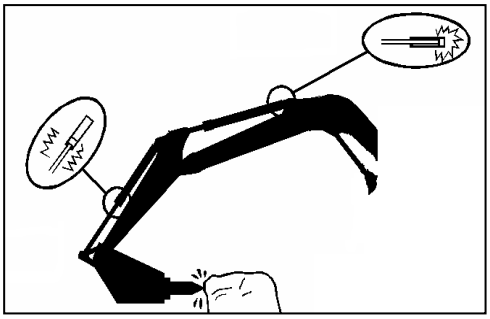

- Do not crush objects with swing force.

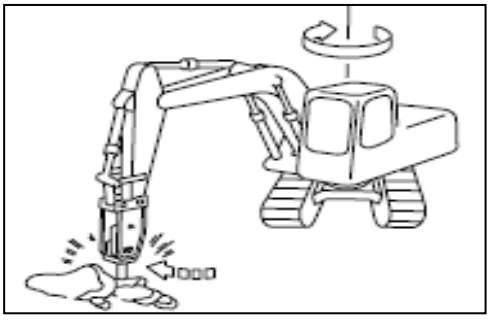

- Do not move the chisel while carrying out breaking operations

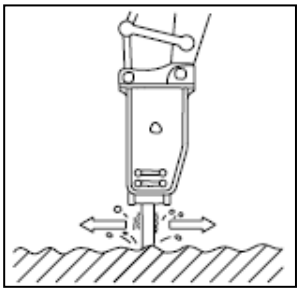

- Do not move chisel to gather in pieces of rock.

- Do not holding the chisel horizontal or upward during breaking.

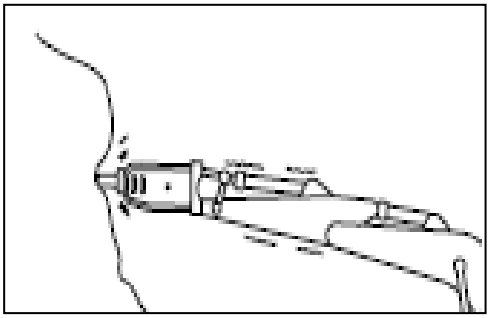

https://truckmanualshub.com/

- Do not twist the chisel when it has penetrated the rock.

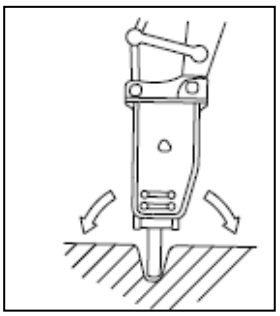

- Do not move work equipments to drive breaker to work.

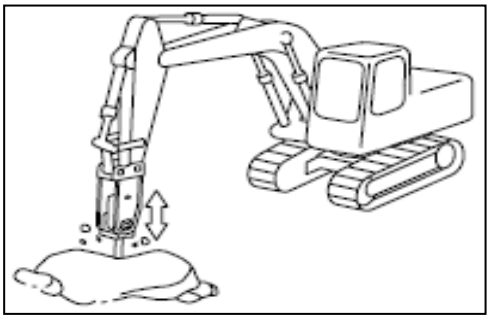

- When folding arm and breaker, do not collide boom; let alone step down impacting pedal to cause chisel to hit boom. This can cause direct damage to machine.

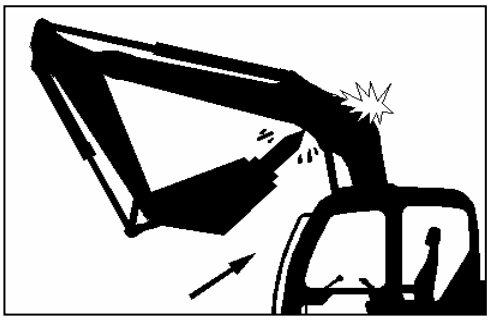

https://truckmanualshub.com/

3.4.14 Emergency Stop for Boom

If the engine fails to start due to unexpected shutdown, it's necessary to lower the boom and keep bucket down to ground to prevent accidents arising from boom falling off as well as to facilitate service.

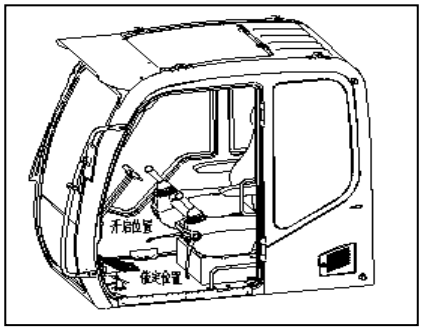

- Carry out the following operation in 5 minutes if expected engine stop happens.
- Set pilot control lever to ON position.
- Honk the horn to alert.
- Gradually move right control lever (for boom action controlling) forward.

Note

- **Do not operate too quickly, failure to do so may cause boom sudden up movement and lead to accidents.**
- **Do not operate any other lever and actions, failure to do so; boom can not be lowered due to pressure depletion in accumulator.**

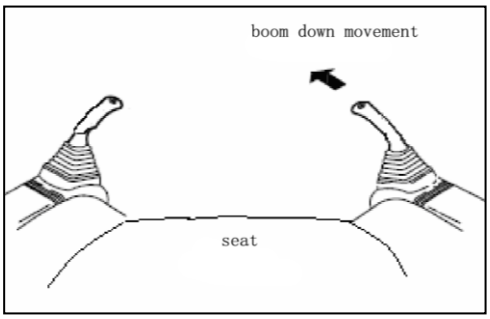

3.4.15 Parking Machine

1） Drive machine to parking area. The area must be firm level ground.

2） Release all operate levers and keep them in NEUTRAL position.

3） Set pilot safety lever to LOCK position.

4） Turn throttle knob anticlockwise to MIN, allow engine to idle at low speed for 5 minutes.

5） Set starting key to OFF position, remove the key.

6） Close all doors, windows. Shut access door, tool box, engine cover and fuel tank.

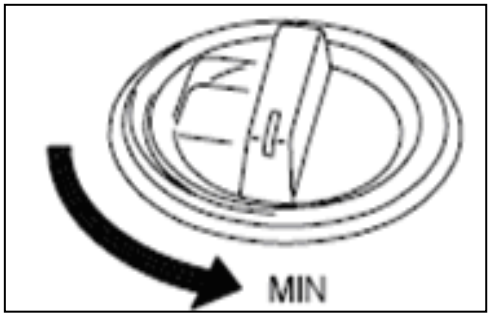

https://truckmanualshub.com/

3.4.16 Machine Stop and Emergency Stop

Stop machine

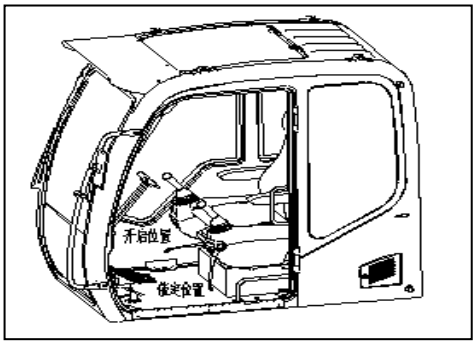

1） Stop operating lever and travel pedal, each control valve will return to NEUTRAL position; all action of the machine will stop. However the machine will act when operating the control valve.

2） Set pilot safety lever to LOCK position, the machine will stop. In this case, the machine will not be started, even if you operate all control valves.

Emergency stop

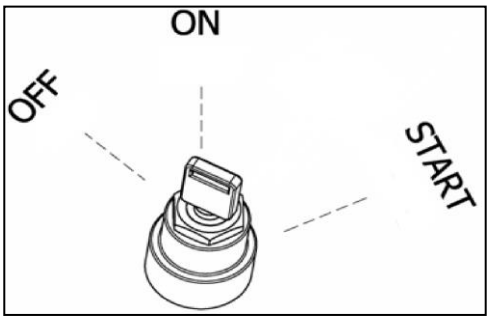

In case of emergency, use emergency stop： Set engine start key to OFF position to stop engine.

https://truckmanualshub.com/

3.4.17 Prohibited Operations

1） Do not let bucket with full load passing over people and cab to prevent falling objects.

2） Do not excavate too deeply under the machine, the ground under the machine may collapse and cause the machine to fall.

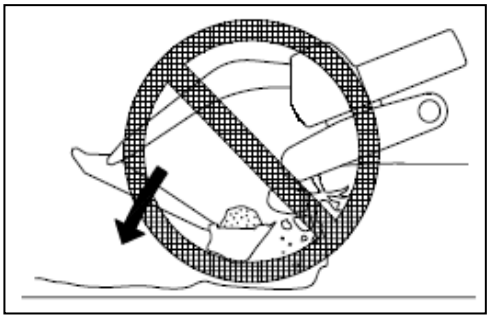

3） When working on the road shoulder or cliff, place the track with the ground edge 90° instead of parallel setting, and the travel motor should be set on the other side away from the edge, in this way, the machine is easy to leave in case of emergency.

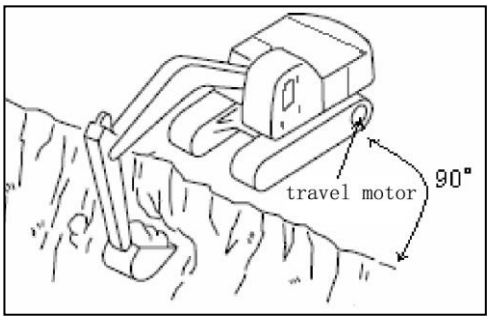

4） Do not work under suspension parts or excavate suspension shape to prevent damages to the machine or injury due to collapse.

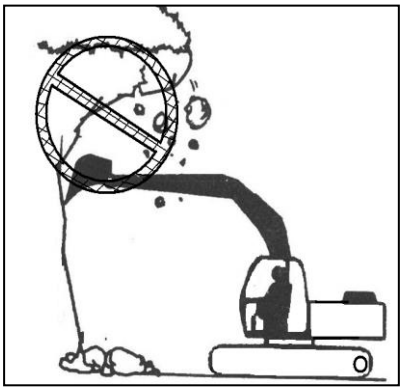

https://truckmanualshub.com/

5） Do not use impact of work equipments to break objects. This may cause damages to work equipments.

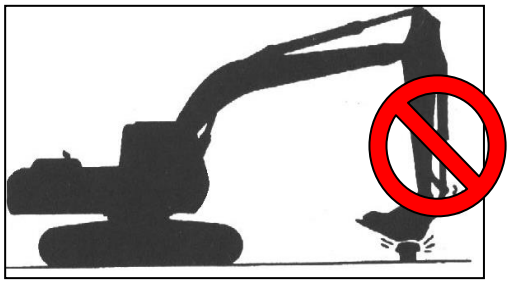

6） When carrying out demolition work, do not carry demolition above your head, there is hazard of broken parts falling off.

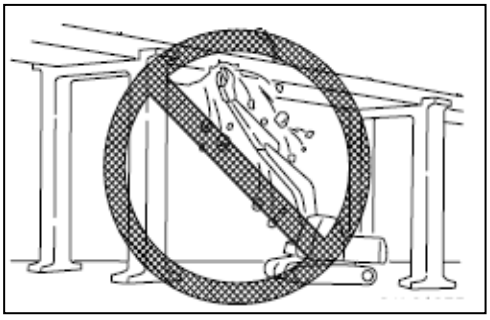

7） When using a breaker or other heavy-duty equipment: do not lower, raise, swing and stop work equipments all of sudden to avoid accidents due to losing its balance.

https://truckmanualshub.com/

4 MAINTENANCE

Warning

Before reading this chapter, please thoroughly read and fully understand the contents described in chapter "SAFETY RULES" in this manual.

https://truckmanualshub.com/

4.1 MAINTENANCE INFORMATION

Study how to maintenance and service this excavator, follow all maintenance and inspection procedure described in this manual.

4.1.1 Maintenance Instruction and Inspection Procedure

【Important】

- Use recommended fuel, hydraulic oil and lubricant.
- Use only genuine parts produced by SUNWARD.
- In the event that you fail to use recommended fuel, lubricant, hydraulic oil and genuine parts, your warranty rights will become void.
- Do not adjust engine speed limiter or hydraulic system safety valve.
- Do not allow water to reach electric equipments.
- Do not dismantle engine pump controller, sensor etc.

4.1.2 Daily Inspection Prior to Start-up

- Check monitor.
- Check each liquid level.
- Check hoses and piping for leakage, twist, wear out or damage.
- Give a walk-around inspection for some normal items, e.g. noise, temperature etc.
- Check parts for looseness or lost.
- If any problems are found, repair them before operation, or you may contact designated distributor for assistance.

https://truckmanualshub.com/

4.1.3 Checking Hour Meter Frequently

- Check the reading displayed on hour meter to see if the time has come for any necessary maintenance.
- The interval listed on regular maintenance table is made based on normal situation. If your machine works under extreme condition, you may shorten this interval to carry out maintenance procedure.

4.1.4 Preparation Work Prior to Maintenance

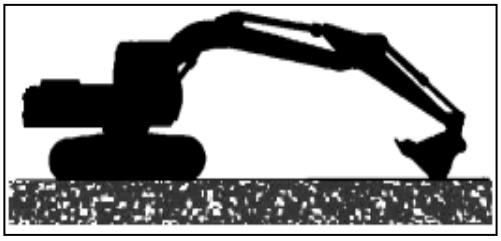

- Park the machine on firm level ground.
- Lower the bucket to the ground.
- Shut down auto-idle function.
- Allow engine to idle for 5 minutes.
- Set the key to OFF position.
- Set pilot safety lever to LOCK position.
- Hang a warning sign 'DO NOT OPERATE" on the machine.

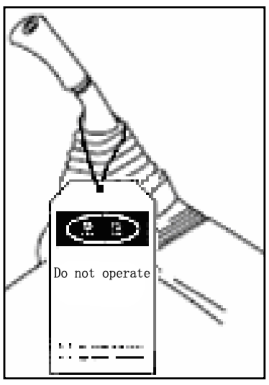

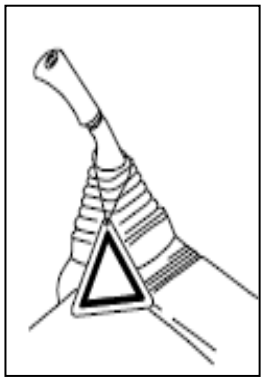

4.1.5 Correct Use of Fuel and Lubricant

【Important】

- **Always use recommended fuel and lubricant, failure to do so will cause damages to excavator, and your warranty right will become void.**

4.1.6 Checking Discharged Grease and Used Filter Element

- With oil or filter element replaced, check used oil and filter core for any metal chips and debris. If a large amount of metal chips or debris is found, report to the owner of the machine or your superior, and take proper measures.

https://truckmanualshub.com/

4.1.7 Checking after Inspection and Maintenance

Accidents may occur and cause serious injury or damage, if failed to check after inspection and maintenance. Follow the steps below to carry out inspection.

- **Check after inspection and maintenance(with engine stopped)**
  - Have any inspection and maintenance points been forgotten?
  - Have all inspection and maintenance items been carried out? Check one by one. .
  - Have any tools or parts been dropped inside the machine? It's particularly dangerous if parts are dropped inside the machine and get caught in the link mechanism.
  - Check for any water and oil leakage. Be sure all bolts have been tightened at specified torque.
- **Inspection when operating engine.**
  - For any detail information about the checks when operating engine. Please maintain it with two people.
  - If the inspection and maintenance items work properly.
  - Is there any leakage of fuel or oil when engine speed is raised and applying loads to hydraulic system?

4.1.8 Electrical System Maintenance

- It is extremely dangerous if the electrical equipment becomes wet or the covering of the wiring is damaged. This will cause an electrical short circuit and may lead to malfunction of the machine.
- Do not use water to flush the inside of the operator's cab.
- Do not allow water to get into the electrical components.
- Service relating to the electric system is checking fan belt tension, checking damage or wear to the fan belt and checking battery fluid level.
- Never install any electric elements other than those specified by SUNWARD.
- When working at seashore, carefully clean the electric system to prevent corrosion.

4.1.9 Hydraulic System Maintenance

Hydraulic equipment is at high temperature during operations and immediately after operations. During operation, it's also under high pressure, so be careful of the following points when carrying out inspection and maintenance of hydraulic related equipment.

- Stop the machine on level ground, lower the bucket completely to the ground.
- Always stop the engine and release pressure in hydraulic pipes.
- Immediately after the engine is stopped, the hydraulic oil and lubricants are at a high temperature and high pressure. Wait for the temperature to go down before starting the maintenance operation.
- Even when the temperature goes down, the circuits may be under internal pressure, so when loosening plugs, screws, or hose connections, do not stand directly in front. Loosen gradually to release the

internal pressure before removing.

- Always release the air in the hydraulic tank to remove the internal pressure before carrying out inspection and maintenance of the hydraulic circuit.
- Inspection and maintenance works include checking the hydraulic system for oil level, replacement of filter elements and replacement of hydraulic oil.
- When dismantling high pressure hoses, check that there is no damage to the O-rings. If any damage is found, replace the O-ring.

4.2 OIL, COOLANT AND FILTER

4.2.1 Lubricant and Hydraulic Oil

- Oil is used in the engine and hydraulic equipment under extremely severe conditions (high temperature, high pressure), and deteriorates with the use.
- Always use oil that matches the grade and maximum ambient temperatures recommended in the operation and maintenance manual.
- Even if the oil is not dirty, always change the oil at specified interval.
- Always be careful when handling it to prevent any impurities (water, metal particles, dirt, etc.) from getting in. the majority of problems with machines are caused by the entry of such impurities.
- Never mix oils of different grades or brands.
- Always add specified amount of oil.
- If the oil in the work equipments is not clear, there is probably water or air getting into the circuit. In such cases, please contact with your SUNWARD distributor.
- When changing the oil, always replace the related filter elements at the same time. Especially when changing engine oil filter element before installation, apply specified fresh and clean oil to the new filter element.
- We recommend you have an analysis made of the oil periodically to check the condition of the machine. For those who wish to use this service, please contact with your SUNWARD distributor.
- The hydraulic system has been filled with SAE 10W CD oil, when the machine is shipped from factory.
- Do not use any hydraulic oil other than those recommended by SUNWARD. Failure to do so may cause filter clogging.
- When changing hydraulic oil, please clean up thoroughly the residual oil in pipes and cylinders.

4.2.2 Fuel

- The fuel pump is a precision instrument. If fuel containing water or dirt is used, it cannot work properly.
- Be careful not to let impurities get in when storing or adding fuel.
- Always use the fuel specified in the Operation and Maintenance Manual.

https://truckmanualshub.com/

- Fuel may congeal depending on the temperature when it is used (particularly in low temperature below -15℃（5℉）. It's necessary to use the fuel that is suitable for the temperature.
- To prevent humidity in air to condense in fuel tank to form water, top up oil tank after the work is finished every day.
- Before starting the engine, or when 10 minutes have passed after adding fuel, drain the sediment and water from the fuel tank.
- If there runs out of fuel, or if the filters have been replaced, it is necessary to exhaust the air from the oil circuit.

4.2.3 Coolant in Cooling System

- River water contains large amount of calcium and other impurities, so if it is used, scale will stick to the engine and radiator, and this will cause defective heat exchange and overheating.
- When using antifreeze, always observe the precautions given in the Operation and Maintenance Manual.
- Antifreeze is flammable, so be extremely careful not to expose it to flame or fire.
- The proportion of anti-freeze to water differs according to the ambient temperature.
  For details of the mixing proportions.
- If engine is overheated, before adding coolant, wait for the engine to cool down.
- If the coolant level is low, it will cause overheating and will also cause problems with corrosion from the air in the coolant.

4.2.4 Grease

- Grease is used to prevent twisting and noise at the joints.
- If any part becomes stiff after being used for long time, add grease.
- Always wipe off all of the old grease that is pushed out when greasing. Be particularly careful to wipe off the old grease in places where sand or dirt sticking in the grease would cause wear of the rotating parts.

4.2.5 Oil and Fuel Storage

- Keep indoors preventing any water, dirt, or other impurities from getting in. if drums have to be stored outside, cover them with a waterproof sheet or take other measures to protect them.
- When keeping drum cans for a long period, put the drum on its side so that the filler port of the drums is at the side to prevent moisture from being sucked in.
- To prevent any change in quality during long-term storage. Be sure to use in the order of first in- first out (use the oldest oil or fuel first).

https://truckmanualshub.com/

4.2.6 Filter Elements

- Filters are extremely important safety parts. They prevent impurities in the fuel and air circuits from entering important equipment and causing problems.
- Replace all filters periodically. Details see P131-P132.
- Do not clean the filters (cartridge type) and use again.
- When replacing filter elements, check if any metal particles are affixed to the old filter. If any metal particles are found, contact with your SUNWARD distributor.
- Do not open packs of spare filters until just before they are to be used. Always use SUNWARD genuine filter elements.

https://truckmanualshub.com/

4.2.7 Fuel and Coolant Specifications

		Ambient temperature									Specified capacity	Refill capacity
		-22	-4	14	32	50	68	86	104	122°F		
		-30	-20	-10	0	10	20	30	40	50°C		
Engine oil pan	Engine oil					SAE 30						
				SAE 10W								
				SAE 10W-30								
				SAE 15W-40								
		SAE 5W-30										
Swing reduction gearbox				SAE 30								
Travel reduction gearbox												
Hydraulic system	Hydraulic oil			SAE 10W								
				SAE 10W-30								
				SAE 15W-40								
Fuel tank	Diesel oil				ASTM D975 No. 2							
			★									
				GB252 premium-20# light diesel oil								
			GB252 premium -35# light diesel oi									
Swing mechanism grease chamber	Grease			NLGI No. 2								
Grease cup												
Cooling	Coolan	Add coolant										

https://truckmanualshub.com/

4.3 TIGHTENING TORQUE SPECIFICATION

Note

- **If nuts, bolts, or other parts are not tightened to the specified torque, it will cause looseness or damage to the tightened parts, and this will cause failure of the machine or problems with operation.**

4.3.1 Tightening Torque Table for Bolts and Nuts

Thread diameter (mm)	Across flats(mm)	Tightening torque					
		Target value			Service limit		
		N•m	kgf•m	lbft	N•m	kgf•m	lbft
6	10	13.2	1.35	9.8	11.8 - 14.7	1.2 - 1.5	8.7 - 10.8
8	13	31	3.2	23.1	27 - 34	2.8 - 3.5	20.3 - 25.3
10	17	66	6.7	48.5	59 - 74	6.0 - 7.5	43.4 - 54.2
12	19	11	11.5	83.2	98 - 123	10.0 - 12.5	72.3 - 90.4
14	22	177	18	130.2	157 - 196	16.0 - 20.0	115.7 - 144.7
16	24	279	28.5	206.1	245 - 309	25.0 - 31.5	180.8 - 227.8
18	27	382	39	282.1	343 - 425	35.0 - 43.5	253.2 - 314.6
20	30	549	56	405.0	490 - 608	50.0 - 62.0	361.7 - 448.4
22	32	745	76	549.7	662 - 829	67.5 - 84.5	488.2 - 611.2
24	36	927	94.5	683.5	824 - 1030	84.0 - 105.0	607.6 - 759.5
27	41	1320	135.0	976.5	1180 - 1470	120.0 - 150.0	868.0 - 1085.0
30	46	1720	175.0	1265.8	1520 - 1910	155.0 - 195.0	1121.1 - 1410.4
33	50	2210	225.0	1627.4	1960 - 2450	200.0 - 250.0	1446.6 - 1808.3
36	55	2750	280.0	2025.2	2450 - 3040	250.0 - 310.0	1808.3 - 2242.2
39	60	3280	335.0	2423.1	2890 - 3630	295.0 - 370.0	2133.7 - 2676.2

https://truckmanualshub.com/

4.3.2 Tightening Torque Table for Hoses

Normal No. of threads	Across flats (mm)	Tightening torque					
		Target value			Permissible range		
		N•m	kgf•m	lbft	N•m	kgf•m	lbft
9/16-18UNF	19	44	4.5	32.5	35 - 63	3.5 - 6.5	25.3 - 47.0
11/16-16UN	22	74	7.5	54.2	54 - 93	5.5 - 9.5	39.8 - 68.7
13/16-16UN	27	103	10.5	75.9	84 - 132	8.5 - 13.5	61.5 - 97.6
1-14UNS	32	157	16.0	115.7	128 - 186	13.0 - 19.0	94.0 - 137.4
13/16-12UN	36	216	22.0	159.1	177 - 245	18.0 - 25.0	130.2 - 180.8
1-7/16-12UN-2B	41	215	22.0	159.1	176 - 234	18.0 - 24.0	130.2 - 180.8

Note: The ★ marked torques represent tightening torque for hoses above swing joint.

4.4 MAINTENANCE SCHEDULE

4.4.1 Adding Lubrication Grease

Part name		QTY	Interval (hour)						
			8	50	100	250	500	1000	2000
Each pin roll for work equipment	Connecting pin roll of boom and platform	2	△						
	Pin roll on both side of cylinder	8	△						
	Individual pin roll of arm and bucket	8	△						
Swing bearing track		2				△			
Swing mechanism grease chamber		1					△		

Recommended lubricating grease

	Bucket, arm and boom, rotary gear, swing bearing etc.
	—20 to 40°C（—4 to104F）
BP	BP Energrease Ls—EP2
Caltex	Multifax EP2
Esso	Beacon EP2
apollo	Daphne Coronex Grease EP2
Mobil	Mobilux EP2
fuchs	2# extreme pressure lithium grease
Shell	Shell Alvania EP Grease 2
Remark	lithium grease with extreme high load capacity

https://truckmanualshub.com/

4.4.2 Engine Oil

Part name		QTY	Interval (hours)						
			8	50	100	250	500	1000	2000
Engine oil	Check oil level	1	△						
Engine grease	Replace	18∽21L		▲※					
Engine oil filter	Replace	1		▲※					

※ **Replace engine oil after the first 50 hours, afterwards, replace once every 250 hours.**

For the other aspects, please carry out the maintenance procedure following the requirements specified in diesel engine manual.

·The performance difference among different engine oil is big. We commonly adopt API and CCMC standards.

Recommended engine oil grade and brand are listed in the following table.:

Engine oil / Manufacturer	-20℃ to 0℃	−10℃ to 35℃	25℃ to 40℃
Sunward specified	CI-4 15W-40		
Mobil	CI-4 15W-40※		

Note: The machines delivered from the factory, has been filled with the engine oil marked by ※.

https://truckmanualshub.com/

4.4.3 Gear Oil

Part Name		QTY	Interval (hour)						
			8	50	100	250	500	1000	2000
Swing reductor	Check oil level	—				△※1			
	Replace	4.5∽7 L				▲※2			
Travel reductor	Check Oil Level	—				△※1			
	Replace	2×（4∽8） L				▲※2			

※ 1. Check gear oil level every 250 hours, refill if necessary.

※ 2. Gear oil should be changed at the initial 250 hours, the second replacement time is 1000 hours, and after that is every 1000 hours to change once.

Note: Filling quantity of gear oil should be defined by the height of oil pointer.

Recommended gear oil name

Brand / Manufacturer	Gear oil -20℃ to 40℃
Esso	Esso Gear Oil GP80-90,GP85W-90
ENEOS	Gear Lube Sp90
Mobil	Mobilube Gx90 ※
Fina	GL-580W-90
Great wall (Sinopec)	85W/90
Shanghai oil	API-GL-4 85W/90

Note: The machines delivered from the factory, has been filled with the engine oil marked by ※.

https://truckmanualshub.com/

4.4.4 Hydraulic System

Part name		QTY	Interval (hours)							
			8	50	100	250	500	1000	2000	3000
Check hydraulic oil level		1	△							
Replace hydraulic oil		——							▲※	▲※
Clean up oil suction filter		1							▲※	▲※
Replace oil suction filter		1								
Clean oil return filter		1					▲			
Replace oil return filter		1					▲			
Replace pilot oil filter		1								
Check hose and piping	Leakage	——	△							
	Crack and twist	——				△				

Note:：※——Hydraulic oil replacement interval is relating to its type, with different type of engine oil, the replacement interval varies.

Recommended hydraulic oil brand name

Oil type	Hydraulic oil			
Service point	Hydraulic system			
Replace interval	2000 hour		1500 hour	
Ambient temperature / brand supplier	-20℃ to 40℃	-10℃ to 40℃	-20℃ to 40℃	-10℃ to 40℃
Fina	HM46			
Esso Standard	Essolube D-3 10W 30			40
Mobil	AW46			
Shell	1310			
fuchs	LC46			
Caltex	HD46			
Remark	Abrasive-resistance hydraulic oil			

https://truckmanualshub.com/

4.4.5 Fuel System

Part Name		QTY	Interval (hours)						
			8	50	100	250	500	1000	2000
Drain deposit in fuel tank		1	△						
Drain water and deposit in water separator		1	△						
Replace fuel filter		1		▲※					
Check fuel hose	Leakage, crack etc	—	△						
	Crack, twist etc	—				△			

Note: ▲ represents "replacement". Please use only premium diesel fuel (GB252-0#, winter-10#), do not use kerosene.

※ The fuel filter should be changed after the first 50 hours operation, the second replacement time is after 250 hours operation and after that is every 250 hours to change once.

4.4.6 Air Filter

Part Name		Qty.	Interval (hours)						
			8	50	100	250	500	1000	2000
Air filter internal element	Clean up	1	Check filter element cleanliness regularly or when indicator lights up			△			
	Replace	1					▲		
Air filter external element	Replace	1	If the external part has been replaced						
Connection pipes between air filter and engine.	Check for leakage		△						
	Replace		Replace immediately if any pipe cracks or leakages are found.						

https://truckmanualshub.com/

4.4.7 Cooling System

Item		Qty.	Interval (hours)						
			8	50	100	250	500	1000	2000
Check coolant level		1	△						
Check and adjust fan belt tension		1	△						
Replace coolant		23∽28L							▲
Clean up radiator and hydraulic oil cooler core	Outside	1				△ ※			
	Inside	1	When replacing coolant						

Note：※ If the machine is used at dusty area, shorten maintenance interval.

4.4.8 Air Conditioning System

Part		Qty.	Interval (hours)						
			8	50	100	250	500	1000	2000
Clean A/C condenser		1					△※		
Change A/C filter element	Outer	1					▲		
	Inner	1					▲		

Note：※ If the machine is used at dusty area, shorten maintenance interval.

https://truckmanualshub.com/

4.4.9 Other

Part	Qty.	Interval (hours)						
		8	50	100	250	500	1000	2000
Check bucket teeth for wear and looseness	——	△						
Change bucket	1	When necessary						
Adjust bucket connection clearance	1	When necessary						
Check and change seat belt	1	△	Every three years（Replace）					
Add windshield detergent	——	When necessary						
Check track for slack	2		△					
Adjust track tension	2	When necessary						
Check air conditioning system	1	△						
Wash cab floor mat	1	When necessary						
Check bolts and nuts for tightening torque	——		△※		△			

Note：The items with ※ only should be maintained at the first inspection.

https://truckmanualshub.com/

4.4.10 Hoses

table 1. hose

interval(hour)	inspection item	abnormality	remedy
daily	hose appearance	leaks (1)	replace
	hose end	leaks (2)	replace
	joint	leaks (3)	tighten, replace hose or replace o-ring
every 250 hours	hose appearance	crack (4)	replace
	hose end	crack (5)	replace
	hose appearance	strengthening material expose (6)	replace
	hose appearance	partly raised (7)	replace
	hose	bend (8)	replace
	hose	bend (9)	replace (use proper bending radius)
	hose and joint	deformed and corrosion (10)	replace

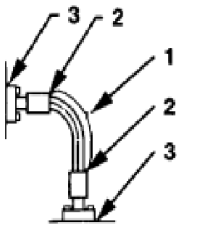

M137-07-008

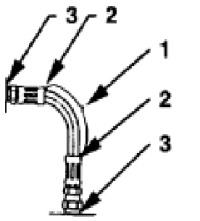

M115-07-145

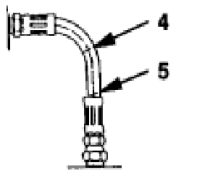

M115-07-146

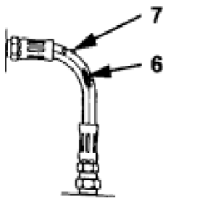

M115-07-147

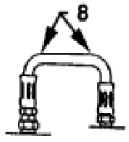

M115-07-148

M115-07-149

https://truckmanualshub.com/

4.4.11 Wearing Parts Table

Item	Product no.	Part name	Qty.	Remark
Engine oil filter	750201013191	Engine oil element	1	
Fuel filter	730403000406	Fuel prefilter element	1	
	730403000566	Fuel main element	1	
Pilot filter	730403000396	Pilot element	1	
Air filter	750201011595	Air filter outer element	1	
	750201011596	Air filter inner element	1	
Bucket teeth	750601000078	Bucket teeth	5	
	750601000080	Bucket teeth pin	5	
	750601000081	Bucket teeth pin jump ring	5	
	750629000018	Left teeth	1	
	750629000017	Right teeth	1	

https://truckmanualshub.com/

4.4.12 Maintenance in Special Situation

Work condition	Maintenance instruction
In mud, water and rain.	● Check joints, bolts and nuts for looseness and lost, and any signs of damages and leakage. ● After work, clean up mud, rock, sand adhered to machine. Check welds for damages, cracks and looseness. ● Do daily lubrication and maintenance work. ● In the event that machine has to work in circumstances involves acid rain or corrosive stuff, flush parts being effected with fresh water
On the sea	● Check plug and all drain plugs to ensure they are tightened securely prior to operation. ● After completing operation, flush machine with fresh water to remove salt. Carry out maintenance operation regularly to prevent corrosion.
In the dusty or hot environment	● Clean up air filter and element more frequently. ● Clean radiator and oil cooling fins to remove embedded dust and dirt. ● Clean up fuel suction cartridge and filter more frequently. ● Clean up frequently, especially the surface of alternator and starter rectifier.
On stony ground	● Operate with extra care. Check chassis and track for damages and excessive wear out. ● Check joint, nut, and bolt for looseness, damage and lost. ● Check bucket or breaker for damage and excessive wear out more frequently. ● Fix an upper or front frame to prevent hazard due to falling objects, if necessary.
In cold weather	● Use premium oil with low viscosity according to ambient temperature. . ● Use proper anti-freezing according to ambient temperature. ● Charge battery a little time earlier than normal situation. The electrolyte will freeze with insufficient charging. ● Remove mud adhered to machine to prevent damages to machine due to freezing.
In the environment with falling objects	cab：Add falling objects prevention device to prevent cab from damaging and avoid operator injury if necessary.

https://truckmanualshub.com/

4.5 MACHINE MAINTENANCE INTERVAL

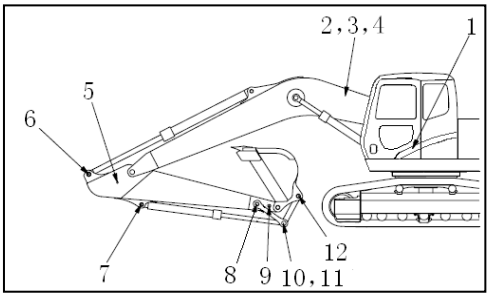

4.5.1 Daily Maintenance (Every 8 Hours)

Carry out following maintenance operation before starting machine daily (every 8 hours):

4.5.1.1 Lubricating Work Equipments

(1) boom cylinder foot, 2 places

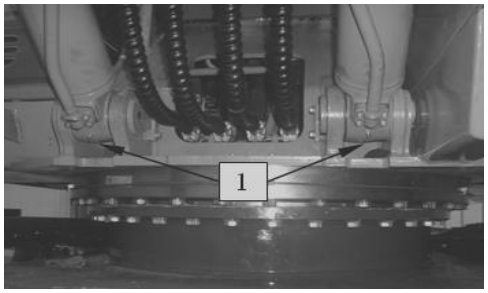

(2) boom foot pin (2 places)

(3) boom cylinder piston rod end (2 places)

(4) arm cylinder foot pin(1 place)

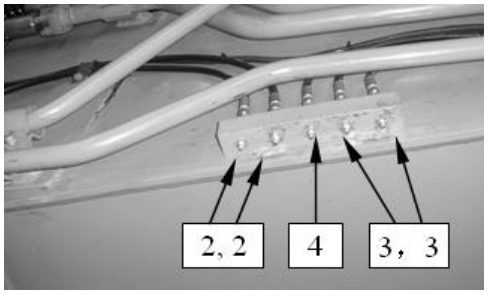

(5) boom – arm connecting pin (2 places)

(6) arm cylinder piston rod end (1 place)

(7) bucket cylinder foot pin (1 place)

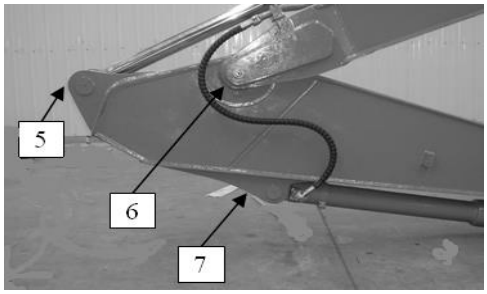

(8) arm –link connecting pin(1 place)

(9) arm – bucket connecting pin(1 place)

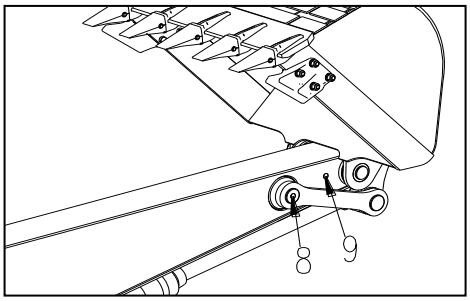

(10) link connecting pin(2 places)

(11) bucket cylinder piston rod end.(1 place)

(12) bucket – link connecting pin(2 places)

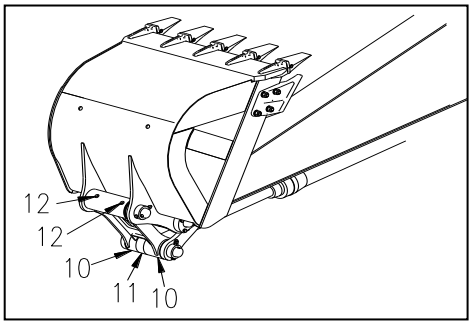

https://truckmanualshub.com/

4.5.1.2 Checking Engine Oil Level

Warning

- **The parts and oil are at high temperature after engine is stopped, and may cause serious burns. Wait until temperature goes down before starting operation.**

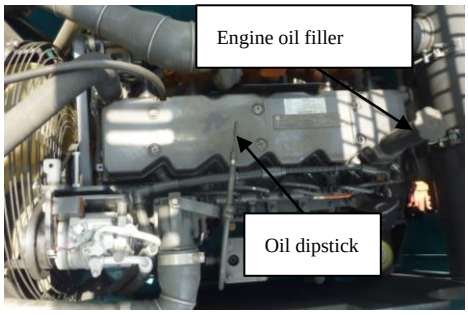

- Open engine cover, pull dipstick out. Use clean rag to remove oil trace on dipstick
- Re-insert dipstick in position; pull it out to check the oil mark. The mark should be between the lines of MIN and MAX. if not, drain or refill.
- If the oil level does not reach scale L, open port to refill.
- If the oil level overflows scale H, loosen drain plug to drain redundant oil.
- With oil level checked, insert dipstick into the hole and secure port cover.

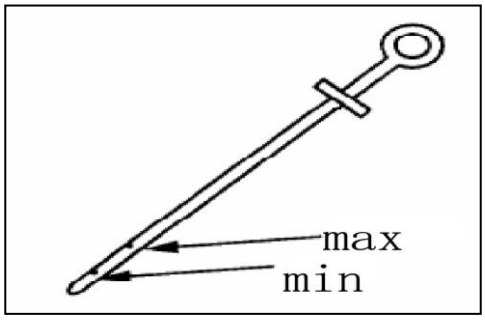

Note: The oil level checking operation should be carried out 10 minutes after shut-down. If checking oil level the moment machine has just been shut down, incorrect number will be read.

4.5.1.3 Checking Coolant Level

Warning

- **There is high pressure in existence inside the radiator, and coolant temperature is still high, after engine is stopped. Do not open the refilling port cover at this time. Wait until temperature goes down, and then gradually loosen cover to release pressure. Failure to do so will cause serious burn.**

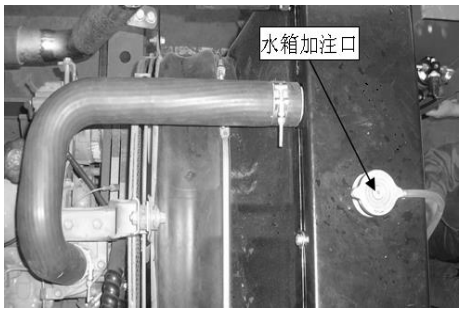

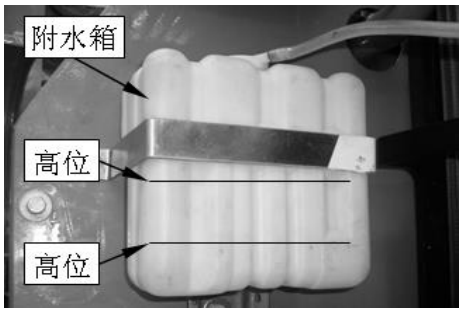

- Open left inspection door of the machine, inspect coolant level of secondary tank. The level must be between the lines of HIGH and LOW. If not, drain or refill.
- If the secondary water tank is empty, add coolant to radiator first before adding coolant to secondary water tank.

4.5.1.4 Checking Hydraulic Level

【Important】

- ◆ **Do not run engine with empty hydraulic oil tank.**
- **With arm cylinder folded and bucket cylinder extended to their full stroke, lower bucket to ground to stop the machine.**
- **Shut auto-idle switch to run engine unloaded at low speed for 5 minutes.**

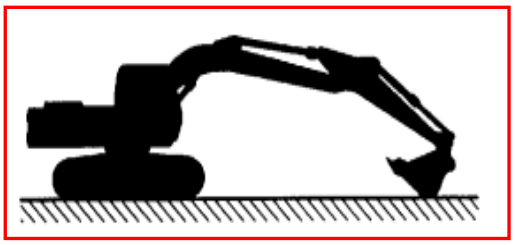

【Important】

- ◆ **Improper engine shut-down will damage turbocharger.**
- Set starting key to OFF position, stop the engine and remove the key from starting lock.
- Set pilot pilot safety lever to LOCK position.
- Open inspection door (right back door) for main pump, check fluid level to ensure that hydraulic oil will be between fluid level scales. Otherwise refill if necessary.

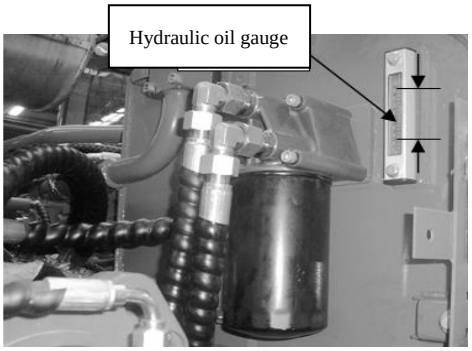

Filling oil

Note

- ◆ **There is pressure in hydraulic oil tank. Release pressure before opening oil fill cap.**
- Release pressure, then remove oil fill cap on top of hydraulic oil tank to fill oil. Recheck fluid level.
- Lock oil fill cap, make sure oil return cartridge and suspension rod are positioned properly.

4.5.1.5 Draining Sediment in Fuel Tank

- To facilitate access, swing upper-structure 90°. Stop the machine at level ground as shown in fig.
- Shut auto-idle switch to run engine unloaded at low speed for 5 minutes.

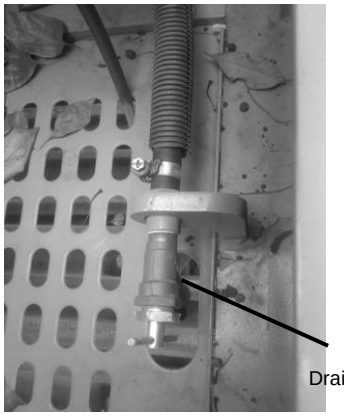

【Important】

- ◆ **Improper engine shut-down operation may cause damages to turbocharger.**
- Set starting key to OFF position, stop engine, then remove the key from starting lock.
- Set pilot safety lever to LOCK position.
- Loosen drain valve underneath diesel oil tank to drain

https://truckmanualshub.com/

water and deposit. Collect them with container. Fasten valve the moment clean diesel oil is discharged.

4.5.1.6 Checking Hoses and Pipelines for Leakage, Interference Abrasion

Warning

- **Pressurized fluid can penetrate skin causing serious injury.**
- **To prevent being injured, use a card board to search leakage. Be careful not to allow high-pressure fluid to come into contact with body.**
- **In case of accidents, contact experienced doctor for medical attention.**

Warning

Exposed hydraulic oil and lubricant can cause fire and injury to person.

To avoid this hazard:

Stop the machine to firm level ground, lower bucket to ground.

Stop the engine, remove key from starting lock, set pilot safety lever to LOCK position.

Check hose for any twist, abrasion, check hose clamp for looseness or lost. Check damages of cooler. Check flange for looseness, and oil leakage.

When clamping, repairing or replacing any loosened, damaged, lost hose clamp, hose, pipe, oil cooler and its flange bolt, do not bend or hit high-pressure hose, do not install twist or damaged hose or piping.

https://truckmanualshub.com/

4.5.2 Maintenance in Initial 50 Hours of Running-in Period

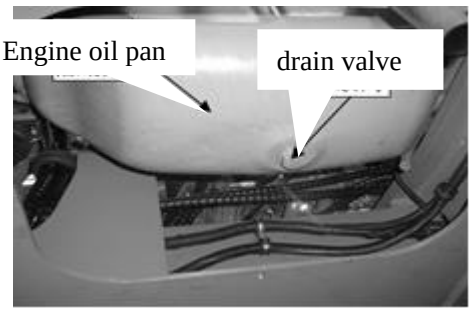

The first 50 operation hours are the running-in period. It is necessary to carry out following maintenance operation:

4.5.2.1 Replacing Engine Oil, Oil Filter Element

1) Start engine to warm up oil without overheating.
2) Lower bucket to ground, stop the machine at level ground. Turn off auto-idle switch to run machine unloaded at low speed for 5 minutes.

【Important】

- **Stopping engine improperly can cause damages to turbocharger.**

3) Set starting key to OFF position, stop engine, remove the key from starting lock, set pilot safety lever to LOCK position.;
4) Open bottom cover underneath engine, place container under drain valve of engine oil pan. Open drain valve to drain engine oil.

Note

- **The engine oil might be hot, be care to handle it without being burned.**

5) With engine oil drained, fasten and secure drain valve.

Replacing engine oil filter element

6) Oil filter is positioned on main pump chamber. Open inspection door of main pump (right back door), use supporting rod to secure inspection door.
7) Use special wrench for filter to remove filter cartridge in counterclockwise manner.;
8) Clean up mounting surface of filter bracket base and cartridge. Apply a layer of clean oil to new filter washer.
9) Install the new filter, rotate filter cartridge clockwise until washer is against bracket mounting surface. Be sure that the washer is free of damage during the process of installation.
10) Use special wrench for filter to rotate cartridge clockwise for 3/4 or 1 turn.

https://truckmanualshub.com/

Pay attention not to over fasten.

Replacing engine oil

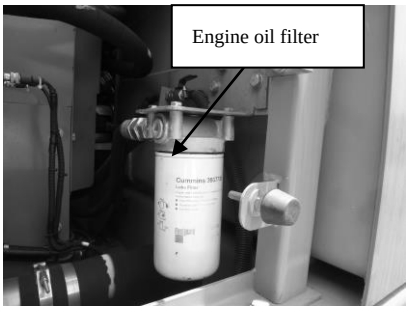

11) Fill with oil through oil fill cap and check oil fill volume until specific scale position on dipstick is reached.

    Engine oil capacity 25L

12) Cap oil filling port.

13) Start engine; run it unloaded at low speed for 5 minutes.

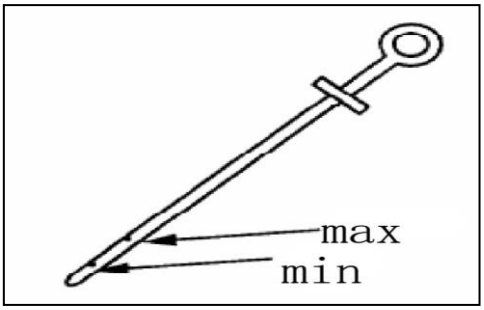

- Check engine oil pressure indicator (red) on monitor to make sure it goes off. If it's still on, stop engine immediately and identify the cause.
- Check drain valve for any leakage.
- Check dipstick for oil level.

https://truckmanualshub.com/

4.5.2.2 Draining Water and Sediment in Water Separator

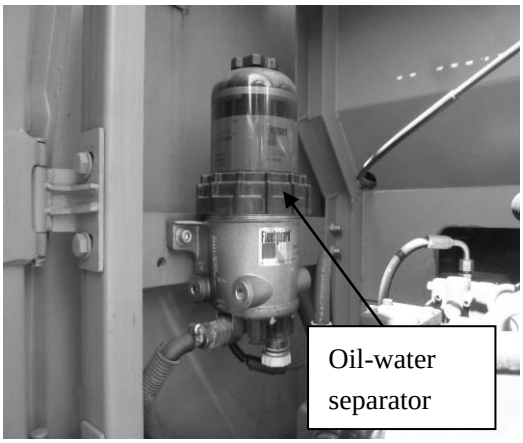

1) Water separator is located in main pump chamber, open inspection door (right back door), and use support rod to secure inspection door.
2) Loosen drain valve located under water separator to drain water and deposit. Fasten drain valve the moment clean diesel oil is discharged.

Note: With water drained, it's necessary to exhaust air from fuel system.

4.5.2.3 Changing Fuel Filter

Note

- **To be safe and environmental friendly, use container to collect waste oil, do not drain the oil to ground, ditch, river, pond or lake. Dispose of waste oil properly.**
- **After work, engine temperature is still high. After replacing the oil filter, wait for the engine to cools down.**
- **Keep flame or spark away from fuel.**

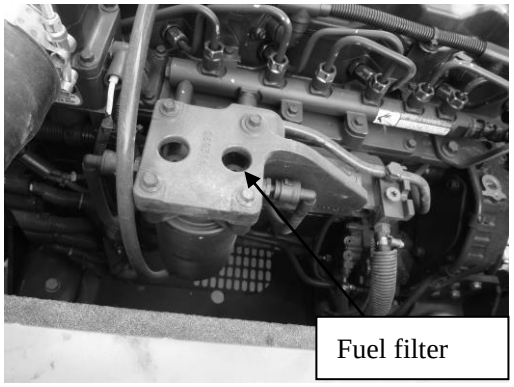

1) Place a container under filter to collect fuel.
2) Use filter wrench to rotate cartridge counter-clockwise to remove it.
3) Clean filter holder, fill new filter with clean fuel, apply a layer of clean fuel on packing surface.
4) Position new filter to filter holder, fasten cartridge by hand until packing surface contacts sealing surface of filter holder.
5) Use wrench to fasten 2/3 turns. Pay attention not to over tighten.

Note: With filter replaced, it's necessary to exhaust air from fuel system.

4.5.2.4 Replacing Fuel Primary Filter

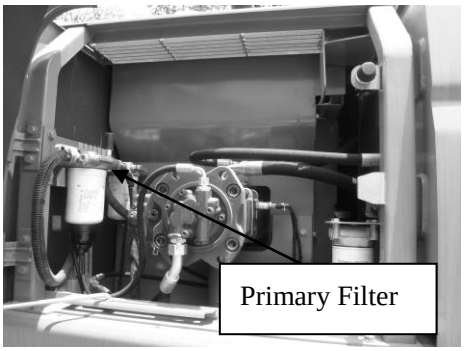

1) Place a container under filter element to collect oil.
2) Use filter element wrench to remove filter element by rotating filter ① clockwise .
3) Clean up filter bracket, use clean fuel to rinse new

https://truckmanualshub.com/

filter and apply engine oil to contact surface. Then position it to filter bracket.

4) During installation, fasten until sealing surface contacts with the sealing surface of filter bracket. Then fasten another half turn.

Fastening too much may cause damages to contact surface and leading to signs of oil leakage.

If fastening too loose, fuel may leak from contact surface. Therefore it must be tighten appropriately.

Note: With filter replaced, it's necessary to exhaust air from fuel system.

Exhausting Air from Fuel System

1) Loosen exhaust plug.
2) Loosen oil pump button, press on it repeatedly until fuel oil overflows from air bleeding plug.
3) Fasten oil pump button and air bleeding plug.
4) Start engine to check filter sealing surface for leakage.

4.5.2.5 Cleaning Oil Suction Filter Element

Warning

- **With engine shut, parts and oil are at high temperature which may lead to serious burns. Wait until temperature cools down before starting maintenance operation.**
- **There is pressure in hydraulic oil tank. Release pressure first before opening oil fill cap on top of hydraulic oil tank.**

1) To facilitate access, swing upper-structure 90°, then stop excavator at level ground.
2) Position excavator with arm cylinder completely retracted and bucket cylinder completely extended.
3) Lower bucket to the ground, run the engine unloaded at low speed for 5 minutes. Stop the engine, remove key and set pilot control lever to LOCK position.
4) Clean up upper hydraulic oil tank to prevent dirt getting into hydraulic system. Press lock cap to release internal pressure.
5) Remove hydraulic oil tank cover 2.
6) Remove oil suction filter and suspension bar unit 3.

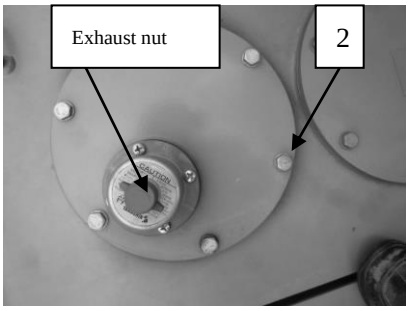

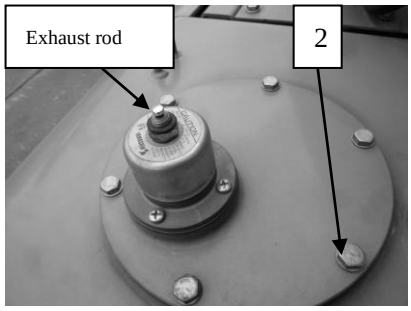

https://truckmanualshub.com/

Rinse filter. To replace filter, fix new filter on suspension bar, tighten bolt at torque: 14.5 to 19.5 Nm (1.5 to 2 kgf·m).

7) Install oil suction filter and suspension bar unit 3, make sure filter is positioned on the opening properly.
8) Install tank cover 1, make sure filter and suspension bar are place in position. Tighten bolt at torque: 49 Nm (5kgfm).
9) Start engine; run it unloaded at low speed for roughly 15 minutes to bleed air in main pump and hydraulic system.
10) Shut down engine.

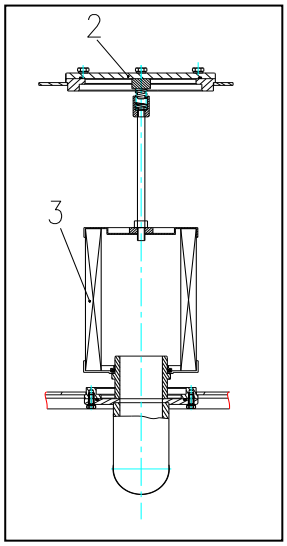

4.5.2.6 Cleaning Oil Return Filter Element

Warning

- **With engine shut, parts and oil are still at high temperature. Wait for engine to cool down, before starting operation.**
- **There is pressure inside hydraulic oil tank. Release pressure before opening oil fill cap located on top of hydraulic oil tank.**

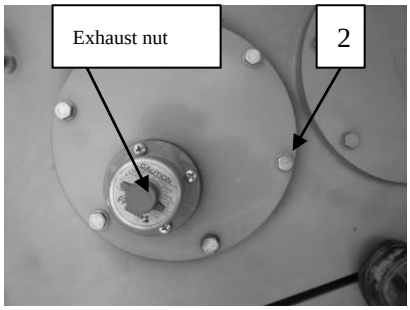

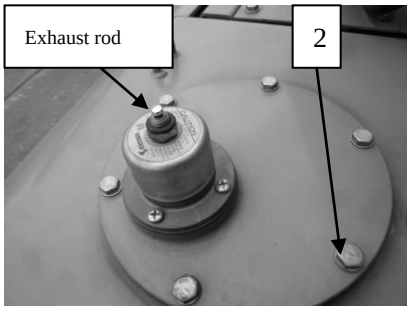

- To facilitate access, swing upper-structure 90°, then stop the machine at level ground.
- Position excavator with arm cylinder fully retracted and bucket cylinder fully extended.
- Lower bucket to ground, run engine unloaded at low speed for 5 minutes, then stop the engine, remove key, set pilot control lever to LOCK position.
- Clean up upper hydraulic oil tank to prevent dirt getting into hydraulic system, press down lock cap to release internal pressure.
- Loosen 6 bolts to release internal pressure, and remove cap (1) at which moment, the cap might be ejected under spring (2) force, therefore it's necessary to hold the cap down when removing these bolts.
- Pull out upper end of bar (3), remove spring (2) and filter element (4).
- Remove dirt adhered on filter element (4), rinse it with fresh diesel oil or washing oil. If the filter (4) is damaged, replace it with new one.
- Reinstall filter element (4), insert it to the bulge (5) in oil tank.
- When installing, the bulge under cap (1) must secure spring (2), then use bolt to fasten it.

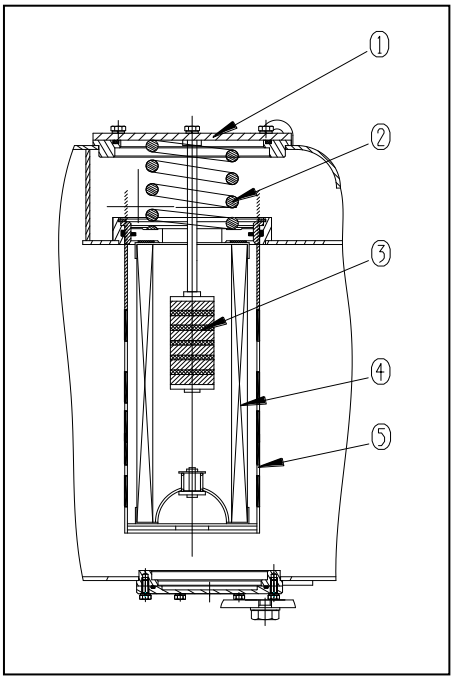

https://truckmanualshub.com/

4.5.2.7 Fan Tension Checking and Adjustment

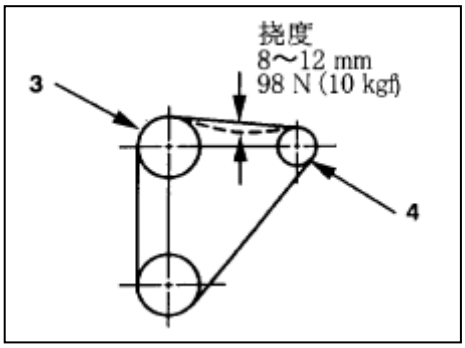

【Important】

- **Excessive tension on belt will accelerate the wear-out of bearing and belt. Loose belt may cause incomplete battery charging, engine overheating, belt abnormality and premature wear-out.**

11) Press at a point midway between fan belt pulley and engine belt pulley to check fan belt tension.

12) When the pressure is 10kgf （98N）, deflection A should be within the range 8~12mm.

Note: Please replace belt if necessary.

With new belt installed, make sure to run engine at low speed for 3-5 minutes. Next, check and adjust belt tension to ensure that belt is positioned properly.

4.5.3 If Maintenance is Needed

4.5.3.1 Cleaning Air Filter Element

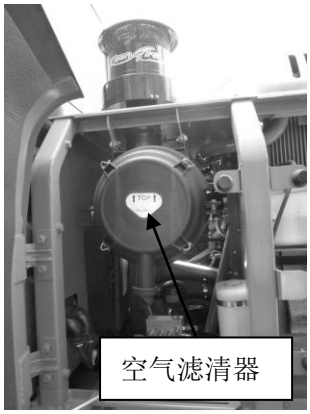

- In case of filter clogging, indicator on monitor will flash to notify you to clean air filter.
- Stop the machine at level ground, lower bucket to ground.
- Stop auto-idle switch to run the engine unloaded at low speed for 5 minutes.

【Important】

- **Stopping engine improperly will cause damages to turbocharger.**

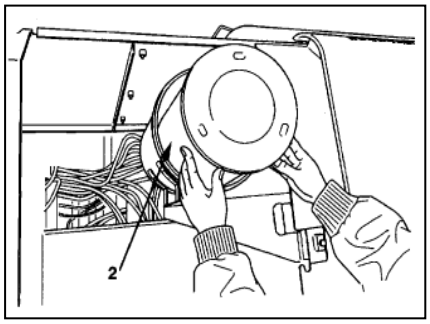

- Set starting key to OFF position, stop the engine and remove the key from starting lock. Set pilot safety lever to LOCK position.
- Loosen buckle (1) to remove air filter end cover.
- Remove outside filter (2), clap slightly with hand. Never hit it with hard stuff.

Note

- **Minimize pressure of compressed air (<0.2 MPa,**

https://truckmanualshub.com/

2kgf/cm2), scatter personnel around to avoid scattered metal particles, wear personal protective articles including goggles and protective glassed.

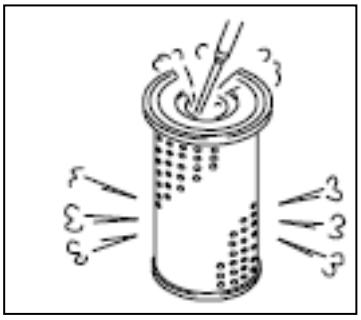

- Use compressed air to clean outside filter (1), following the wrinkle direction to blow air outward.
- Clean up the inside filter.
- Install outside filter (1), end cover, fasten clamp buckle (2).
- Start engine; run it unloaded at low speed. Check filter clogging indicator on monitor. If this indicator illuminates, shut engine immediately and replace outside filter (1).
- Replace internal filter (3) the moment outside filter (1) is replaced.

4.5.3.2 Cleaning Cooler

After the machine works a certain period of time, the cooler surface will be covered with dust or other foreign material which will influence radiating effect of cooler. It should be cleaned in time.

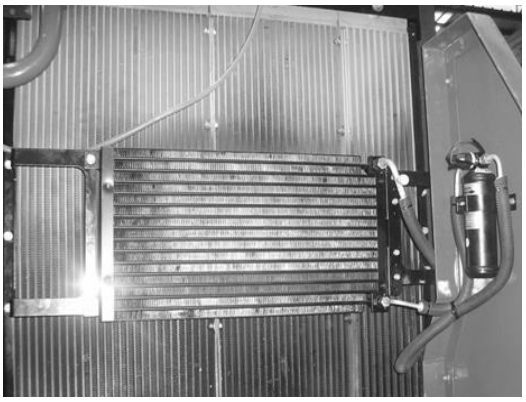

- Open left inspection door(left back door)；
- Loosen the mounting bots located on left side of condenser, open up condenser of A/C.
- Use compressed air (below 0.2 MPa) or water to rinse condenser.
- Remove the strainer (if present) in front of radiator for cleaning up.
- Use compressed air (below 0.2 MPa) or water to rinse cooler.
- Reinstall the front strainer (if provided) and condenser of A/C.

Note: Do not remove air conditioning pipes, failure to do so will cause coolant leakage and air conditioner malfunction.

https://truckmanualshub.com/

4.5.3.3 Checking and Fastening Track Bolts

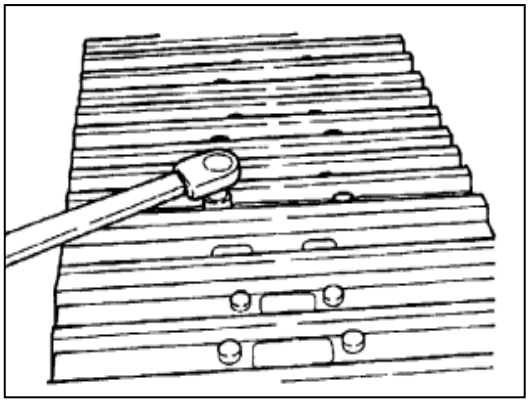

If operating machine with bolts loosened, there is hazard that the bolts will rupture. Therefore the loosened bolts should be fastened.

Tightening Method

- Track shoe

1) Tighten at torque 490 ±49 N m (50 ±5 kgf m, 360 ± 36 lbft), then check to make sure that nuts contact with track link surfaces securely.

2) After checking, retighten 120°±10°.

- Rubber block (if mounted)

1) Tighten at torque: 549 ±59 N m (56 ±6 kgf m, 405 ± 43 lbft).

2) After tightening, check to ensure that nut and track link contact surface contact against each other securely. .

Tighten Sequence

- Tighten bolts in the sequence given in right fig.
- With bolts tightened, check bolts and track link mating face to ensure they contact securely.

4.5.3.4 Checking Track Tension

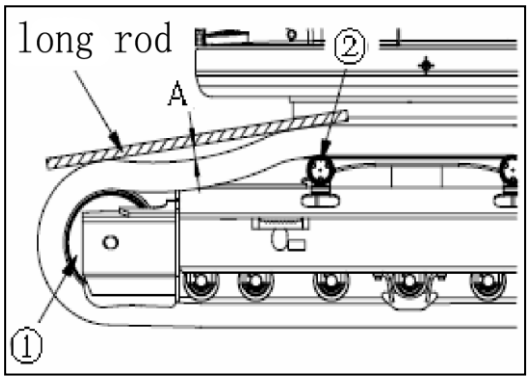

- Run engine at low idling, move the machine forward a distance equals to the length of track on ground. Then stop the machine.
- As shown in right fig, choose a straight long rod; place it on track over idler (1) and carrier roller (2), measure the max distance “A” between upper surface of track and bottom surface of the rod.

Standard deflection “A” should be 20-28 mm (0.8-1.1 in).

- If the track tension is not at standard value, adjust it in the following manner:

1) Pump in grease through grease fitting(2) with a grease pump.(pump fitting (2) and plug screw (1) are integral)

2) To check track to evaluate the proper tension of track. Gradually move machine forward（7-8 m（23 ft - 26 ft 3 in）.

3) Recheck track tension, if the tension is improper, re-adjust it.

Warning

- **There is a hazard that plug screw may fly out under high lubrication grease pressure. Never loosen plug (1) by over one circle.**
- **Do not loosen any parts other than plug screw (1). Do not attempt installation facing plug screw (1).**

4.5.3.5 Checking A/C Cooling Medium Level

Warning

- **In case that cooling medium gets into eyes or makes contact with hands, this may cause blindness or freezing injury, therefore do not contact cooling medium directly.**
- **Do not loosen any parts of cooling medium piping.**
- **Do not allow any naked flame to reach the position with cooling medium leakage.**

If the cooling medium（134a）is insufficient in A/C system, the cooling performance of air conditioning will be bad.

- If setting engine to idle at high speed, and operating air conditioning to extra refrigerating state, there must be small amount of bubbles in inspection glasses which is fixed on condenser reservoir.
- There are bubbles flowing in cooling medium (continuous bubble flowing): Low cooling medium level.

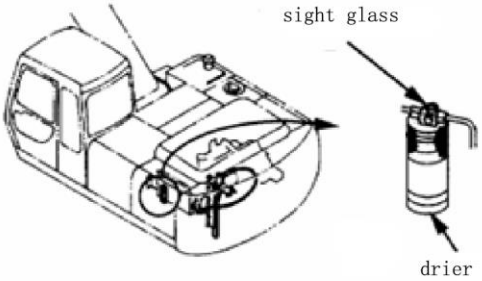

illustration

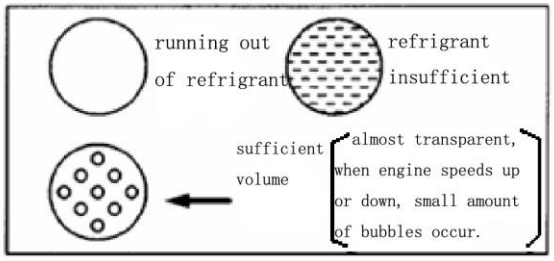

【Important】

- **If the engine runs at low cooling medium level, this may cause damages to compressor.**
- Bubbles indicate low cooling medium level, please contact SUNWARD distributor to add cooling medium.

https://truckmanualshub.com/

Inspection during Idle Seasons

If the air conditioning system is kept inactive for a long time, perform an operation on cooler for 3-5 minutes every month to lubricate each part of the compressor.

4.5.3.6 Checking Washer Fluid Level

- Check reservoir for fluid level, add fluid if necessary.
- When adding fluid, pay attention not to allow any dusts to get in.

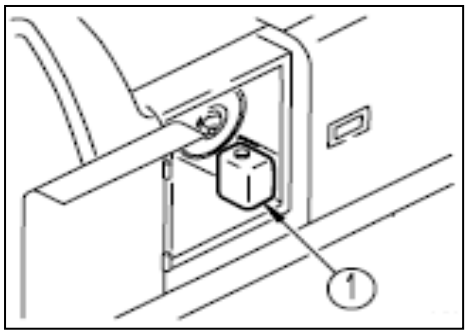

Mixture ratio of pure washer fluid and water

The mixture ratio differs according to the ambient temperature. So dilute the washer fluid with water following the table below.

Operation area	Mixing ratio	temperature
In general	Pure detergent1/3：water 2/3	-10 ℃ (14 ℉)
Cold area winter	Pure detergent 1/2：water 1/2	-20 ℃ (-4 ℉)
Extreme area winter	Pure detergent	-30 ℃ (-22 ℉)

Note: Pure detergent are divided into 2 categories：-10° C （14° F）(general use) and -30° C （-22° F）(cold area use). Select according to the area and season.

4.5.3.7 Adjusting Bucket Clearance

Warning

- **When adjusting, it's dangerous if work equipment is moved by mishandling.**
- **Set work equipment at stable state, shut engine and lock up pilot safety lever.**

- Set work equipment in posture as shown in right fig.

- Stop engine, set pilot safety lever to LOCK position.
- Remove O-ring of link to measure clearance “a”.

Note:

Move bucket to one side, or measure overall clearance at one place, the measurement is a little bit easy. (The position shown in fig is left position).

It's easy to measure correctly if using pin gauge.

- Loosen 4 fixed bolt (2) and plate (3).
- Remove shim (4) according to clearance “a” being measured in previous step.

【for instance】

For clearance of 3mm, remove 1 pcs shim of 1.0mm and 1 pcs shim of 0.5mm. The clearance will become 0.5 mm. for shim (4), use two types of 1.0mm and 0.5mm.

If the clearance is smaller than one shim, do not attempt any maintenance operation.

- Tighten 4 bots (2).

If it’s difficult to tighten bolt (2), to facilitate tightening, pull out fixing pin bolt (5).

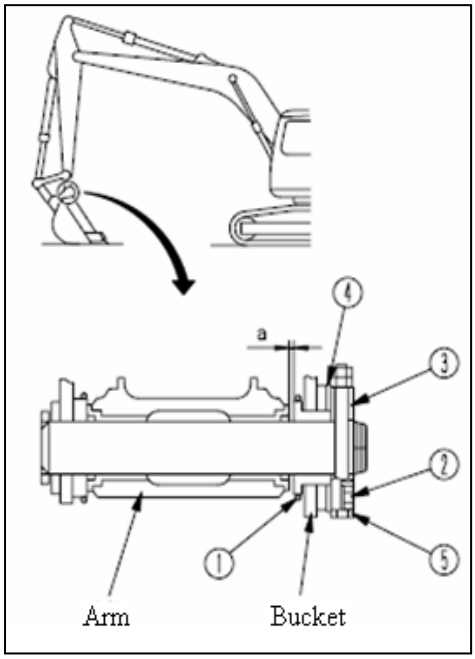

4.5.3.8 Replacing Bucket Teeth

Replace bucket teeth before bucket teeth holder wears out.

Warning

- **It's dangerous if the work equipment moves by mistake when the teeth are being replaced. Set the work equipment in s table condition, stop the engine, and then set the pilot safety levers securely to the LOCK position.**
- **If the lock pin is knocked out by force, there is hazard that pins may fly out. Check to ensure nobody is in the surrounding area.**
- **During replacement operation, there is hazard of flying out pieces. So wear protective glasses, gloves, and other protective equipment.**

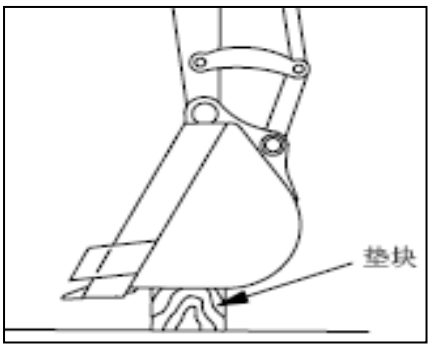

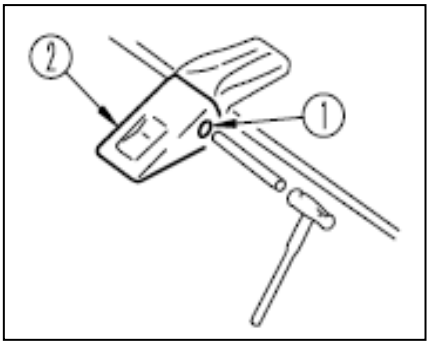

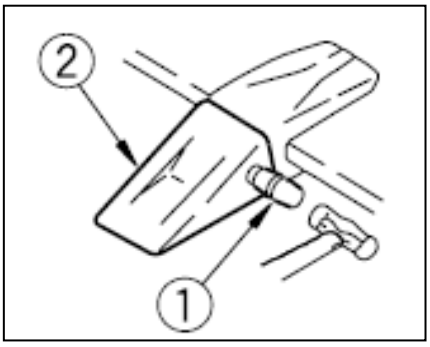

- Lower the bottom surface of the bucket on a block, check that the work equipment is in a stable condition, then set pilot safety lever to the LOCK position.
- Place a metal rod (diameter is a little smaller than pin)

https://truckmanualshub.com/

against the back of the pin), use hammer to knock out pin (1), then remove bucket teeth (2).

- Clean mounting surface, place new bucket teeth (2) to teeth holder, push pin (1) partly into it by hand, then use hammer to knock in lock pin to position it to bucket holder.

4.5.4 Every 50 Hours Maintenance

Carry out the following maintenance operation every 50 hours.

4.5.4.1 Checking and Adjusting Track Tension

For details, please refer to chapter 4.5.3.4.

4.5.4.2 Draining Water and Sediment from Water Separator

For details, please refer to chapter 4.5.2.2.

4.5.5 Every 100 Hours Maintenance

When the machine works for every 500 hours, take the maintenance as specified in this chapter and carry out maintenance of every 50 hours at the same time.

4.5.5.1 Checking and Adjusting Fan Belt Tension

For details, please refer to chapter 4.5.2.7.

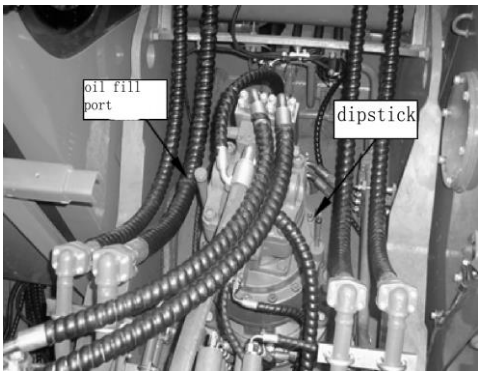

4.5.6 Every 250 Hours Maintenance

When machine works for every 250 hours, take out maintenance as specified in this chapter and carry out 50 hours maintenance at the same time.

4.5.6.1 Checking Swing Reduction Gear Oil Level

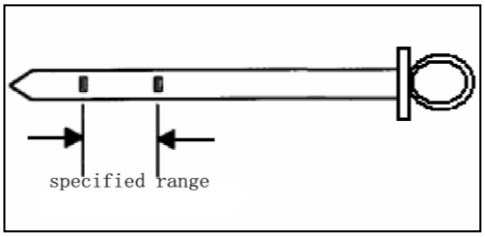

- Stop the machine at level ground.
- Shut auto-idling switch to run the engine unloaded at low temperature for 5 minutes.

https://truckmanualshub.com/

【Important】

- ◆ **Stopping the engine improperly may damage turbocharger.**
- **Set start key to OFF position, stop the engine, remove the key from starting lock, set pilot safety lever to LOCK position.**

Note

- ◆ **After completing work, the gear oil temperature might be very high, wait for temperature to cool down.**
- Pull out dipstick of swing redactor, wipe off oil trace, reinsert it and pull out again, the oil mark should be between the two scales.
- If necessary, remove oil fill cap to add gear lubricating oil. Check oil level again.

4.5.6.2 Checking Travel reduction gearbox Oil Level

- Stop the machine at level ground, set the connect line of travel reduction gearbox oil fill port 1 and drain port 3 is vertical from horizontal level.
- Shut auto-idle speed switch, run the engine unloaded at low speed for 5 minutes.

【Important】

- ◆ **Stopping the engine improperly may damage turbocharger.**
- Set start key to OFF position, stop the engine, remove the key from starting lock, set pilot safety lever to LOCK position.

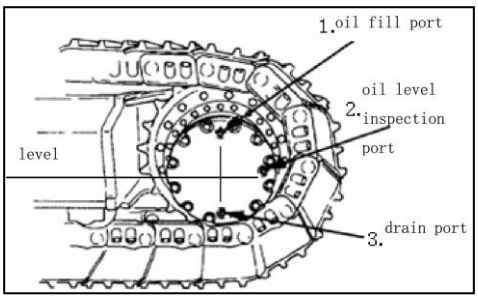

Note

- ◆ **After completing work, gear temperature may be very high. Wait for temperature to cool down before loosening oil fill plug of fill port 1. Pay attention that to keep body and face away from oil fill port 1 during operation.**
- With gear oil cooled down, gradually loosen oil fill port plug to release pressure.
- Remove plug of oil fill port 1 and inspection port 2, check through inspection port 2 that gear oil level must be within the range of 10mm under inspection port 2.
- If necessary, add lubricating gear oil through oil fill port 1, and then recheck oil level.

https://truckmanualshub.com/

- Reinstall plug screw of oil fill port 1 and inspection port 2.
- Check the gear oil level on another side of travel redactor with the same method.

4.5.6.3 Checking, Adjusting Belt Tension of A/C Compressor

Inspection

The deflection should be 5 to 8mm, when pressing at a point midway between drive belt pulley and compressor belt pulley with a finger pressure of 58.8N(6kgf).

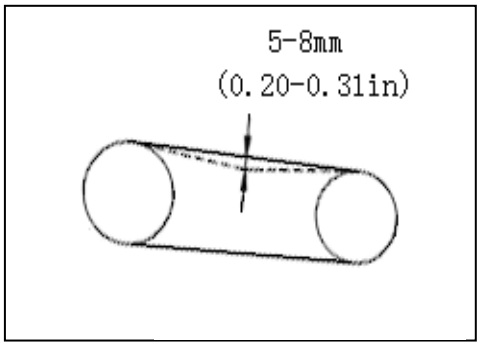

Adjustment

- Loosen bolts (1) .
  Fasten the adjust screw (2) with hands to make the deflection of the belt to 5-8mm (about 58.8N (6 kgf)).
- Fasten the bolt (1).
- Check the belt pulley for damage, whether the V shape slot and V shape belt wear out. If the belt is drew out, there's no adjustable capacity or there's notch and crack on it, it's time to replace with a new one.
- While adjusting the belt, reset it again after one hour's operation.

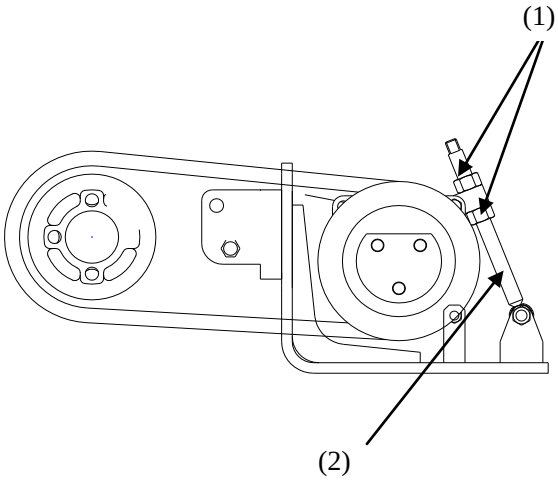

4.5.6.4 Cleaning Air Filter Element

- Stop the machine at level ground, lower bucket to ground.
- Shut auto-idle speed switch to run engine unloaded at low speed for 5 minutes.

【Important】

- ◆ **Stopping the engine improperly may damage turbocharger.**
- Set start key to OFF position, stop the engine, remove the key from starting lock, set pilot safety lever to LOCK position.
- Loosen clamp buckle (2) to remove air filter front cover.
- Remove outside filter (1), clap slightly by hand, never hit with hard object.

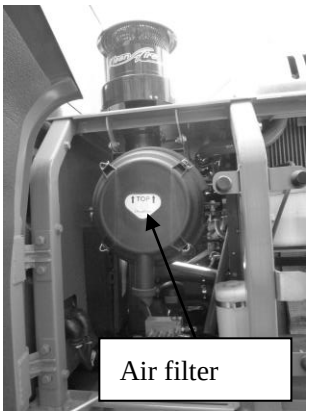

Note

- ◆ **Minimize pressure of compressed air (<0.2**

MPa,

- **2kgf/cm2）, scatter personnel around to avoid scattered broken pieces, wear personal protective articles including goggles and protective glassed.**

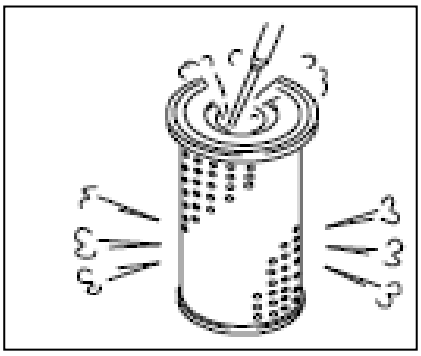

- Use compressed air to clean outside filter (1), following the wrinkle direction to blow air outward.
- Clean up the inside filter.
- Install outside filter (1), end cover, fasten clamp buckle (2).
- Start engine; run it unloaded at low speed. Check filter clogging indicator on monitor. If this indicator illuminates, shut engine immediately and replace outside filter (1).
- Replace internal filter element (3) the moment outside filter element (1) is replaced.

4.5.6.5 Checking Hoses and Pipeline Leakage, Interference wear-out.

For details, please refer to chapter 4.5.1.6.

4.5.7 Every 500 Hours Maintenance

When the machine works for every 500 hours, take the maintenance as specified in this chapter and carry out maintenance of every 50 hours, every 100 hours and 250 hours at the same time.

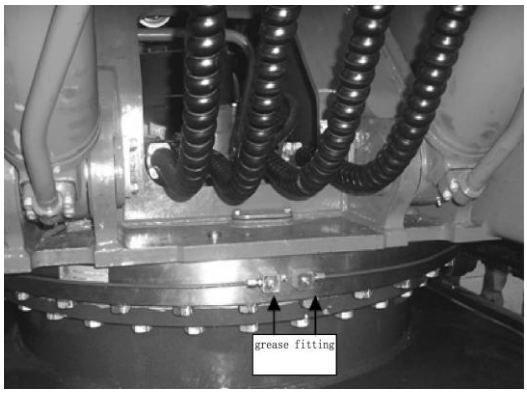

4.5.7.1 Greasing Ball Track of Swing Bearing

- Stop the machine at level ground, lower the bucket at level ground.
- Shut auto-idle speed switch, run the engine unloaded at low speed for 5 minutes.

【Important】

- **Stopping the engine improperly may damage turbocharger.**

- Set start key to OFF position, stop the engine, remove the key from starting lock, set pilot safety lever to LOCK position.
- Pump in grease through 3 grease fittings to swing bearing ball track.
- Start engine, lift bucket, and swing upper-structure at

https://truckmanualshub.com/

45°.

- Repeat 3 times from step 3 until lubricating grease overflows from swing bearing seal.

4.5.7.2 Lubricating Swing Mechanism

- Stop the machine at level ground, lower the bucket to ground.
- Stop auto-idle switch, run the engine unloaded at low speed for 5 minutes.

【Important】

- ◆ **Stopping the engine improperly may damage turbocharger.**

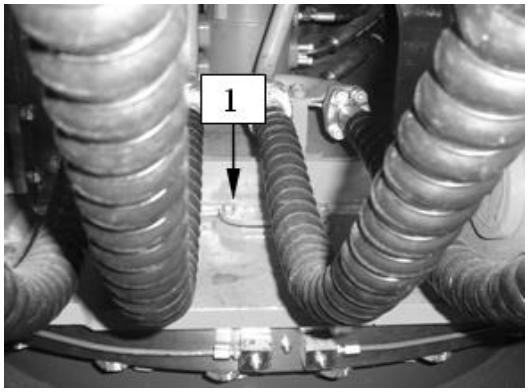

- Set start key to OFF position, stop the engine, remove the key from starting lock, set pilot safety lever to LOCK position.
- Loosen 2 bolts of grease fill port cover located on front part of platform. Then remove grease fill port cover (1).
- Check that grease height in the position where pinion passes by should be at least 14mm (0.6in), and free of pollution; add 0.5kg lubricate grease to reach standard height if necessary.
- Check the color of the grease, in case of white, change it.
- Drain port locates around central swing joint under lower carriage frame.

4.5.7.3 Replacing Engine Oil, Engine Oil Element

For details, refer to chapter 4.5.2.1.

4.5.7.4 Replacing Fuel Filter

For details, refer to chapter 4.5.2.3.

4.5.7.5 Replacing Fuel Primary Filter

For details, refer to chapter 4.5.2.4.

https://truckmanualshub.com/

4.5.7.6 Cleaning Cooler

For details, please refer to chapter 4.5.3.2.

4.5.8 Every 1000 Hours Maintenance

When the machine works for every 1000 hours, take the maintenance as specified in this chapter and carry out maintenance of every 50 hours, every 100 hours and every 250 hours and every 500 hours at the same time.

4.5.8.1 Replacing Swing Reduction Gear Oil (6.6L)

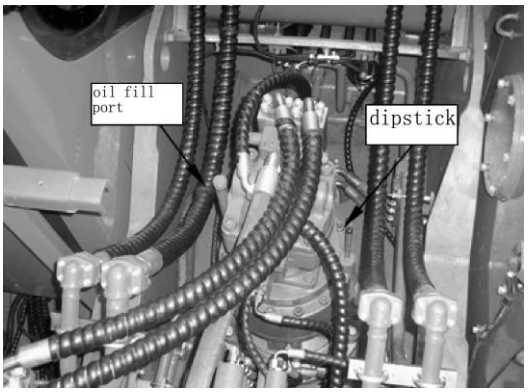

- Stop the machine at level ground.
- Stop auto-idle switch, run the engine unloaded at low speed for 5 minutes.

【Important】

- ◆ **Stopping the engine improperly may damage turbocharger.**
- Set start key to OFF position, stop the engine, remove the key from starting lock, set pilot safety lever to LOCK position.

Note

- ◆ **After completing work, the gear oil temperature might be very high, wait for temperature to cool down.**
- Place a container under drain pipe to collect oil.
- Loosen drain plug to drain the oil, and then tighten the plug.
- Remove oil fill end cover, add specified gear lubricate oil.
- Remove dipstick of swing redactor, wipe off oil with clean cloth, re-insert dipstick, then pull out again, the mark of oil should be between two scales.
- If the oil level doesn’t reach mark L, add oil through oil fill port, if the oil level exceeds mark H, drain excessive engine oil and check oil level again.

https://truckmanualshub.com/

4.5.8.2 Change Travel reduction gearbox Oil (2×4.7 L)

- Stop the machine at level ground, set the connect line of travel reduction gearbox oil fill port 1 and drain port 3 is vertical from horizontal level.
- Shut auto-idle speed switch, run the engine unloaded at low speed for 5 minutes.

【Important】

- ◆ **Stopping the engine improperly may damage turbocharger.**
- Set start key to OFF position, stop the engine, remove the key from starting lock, set pilot safety lever to LOCK position.

Note

- ◆ **After work, the temperature of gear oil might be very high. Wait for the temperature to cool down before gradually loosen the plug of oil fill port 1. Keep face and body away from plug of oil fill port, during the process of work.**
- With the oil cooled down, gradually loosen the plug to release pressure.
- Place a container under drain port3 to collect oil.
- Follow the given sequence to remove oil fill port 1, check port 2 and plug screw of drain port 3 and drain the oil.
- Check the O-ring on plug for damages. Replace it with new one if necessary.
- Tighten the plug of drain port 3.
- Add oil through oil fill port1, when the oil overflows from inspection port 2; tighten the plug of oil fill port 1 and inspection port 2.
- Replace travel reduction gearbox oil on the other side in the same manner.

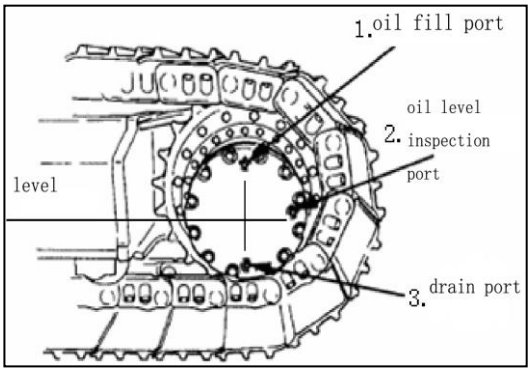

https://truckmanualshub.com/

4.5.8.3 Changing Oil Return Filter Element

Warning

- **After the engine is stopped, parts and oil are still in high temperature which may result in serious burns. Wait for temperature to cool down.**
- **There is pressure inside hydraulic oil tank. Release pressure before opening oil fill cap located on top of hydraulic oil tank.**

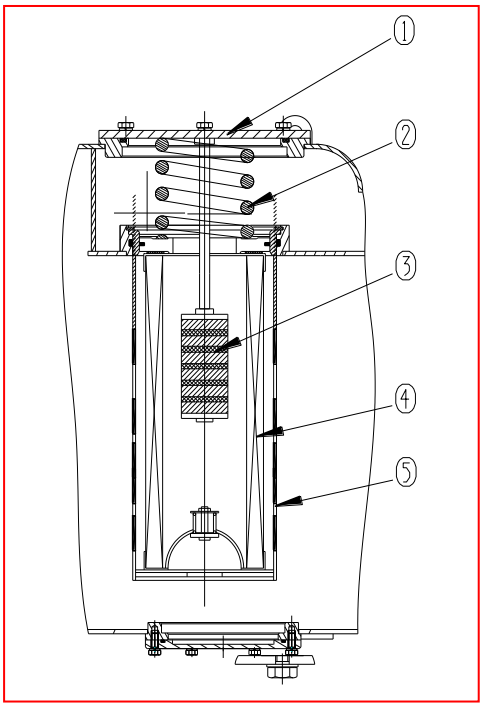

- To facilitate access, swing upper-structure 90°, then stop the machine at level ground.
- Position excavator with arm cylinder fully retracted and bucket cylinder fully extended.
- Lower bucket to ground, run engine unloaded at low speed for 5 minutes, then stop the engine, remove key, set pilot control lever to LOCK position.
- Clean up upper hydraulic oil tank to prevent dirt getting into hydraulic system, press down lock cap to release internal pressure.
- Loosen 6 bolts to release internal pressure, and remove the cap (1). This time, the spring (2) may pop up, thus, when dismantling the bolts, press down the cap.
- Pull out upper end of bar (3), remove spring (2) and filter (4).
- Check bottom filter shell for dirt, if any dirt is found, remove it. Pay attention not to let any dirt get into hydraulic oil tank.
- Place removed parts into fresh diesel oil or washing oil to rinse (except filter), replace with new filter.
- Reinstall filter element (4), insert it to the bulge (5) in oil tank.
- When installing, the bulge under cap (1) must secure spring (2), then use bolt to fasten it.

https://truckmanualshub.com/

4.5.8.4 Replacing Pilot Oil Filter

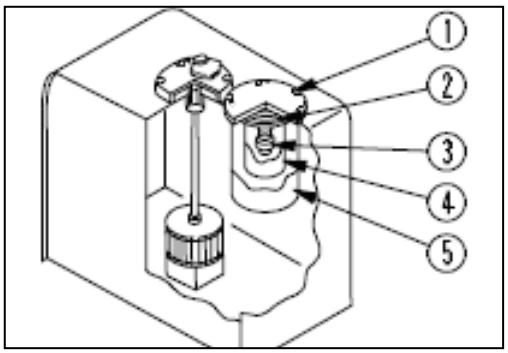

Warning

- **After engine is stopped, parts and oil are still in high temperature which may result in serious injury. Wait for temperature to cool down before stating maintenance operation.**
- **There are pressures in hydraulic system. Release the pressure before starting maintenance work.**

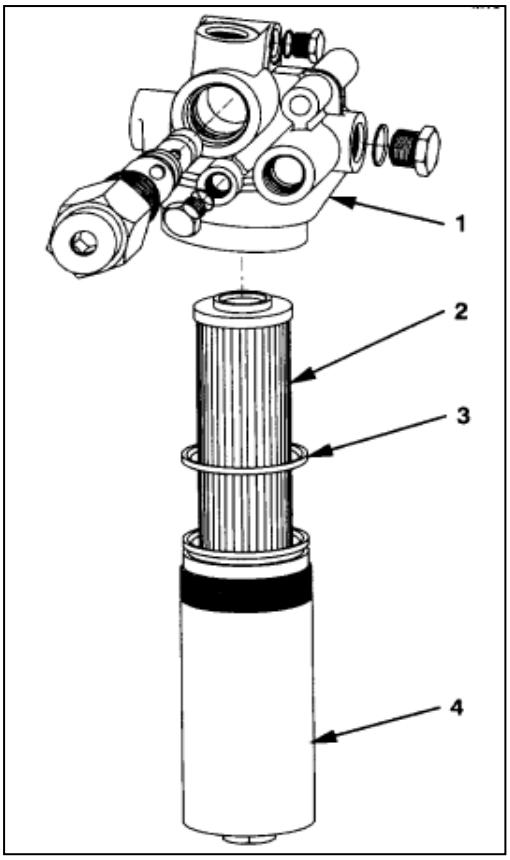

- To facilitate access, swing upper-structure 90°, then stop the machine at level ground.
- Position excavator with arm cylinder fully retracted and bucket cylinder fully extended.
- Lower bucket to ground, run engine unloaded at low speed for 5 minutes, then stop the engine, remove key, set pilot control lever to LOCK position.
- Rotate filter wrench counter-clockwise to remove casing (4) off mounting seat.
- Clean up mounting seat (1) and casing (4).
- Replace filter element (2) and seal ring (3), apply a layer of fresh oil when installation.
- Secure casing (4) clockwise on headstock (1).

https://truckmanualshub.com/

4.5.9 Every 2000 Hours Maintenance

When machine works for every 2000 hours, take the maintenance as specified in this chapter and carry out the maintenance of every 50 hours, 100 hours, 250 hours, 500 hours and 1000 hours at the same time.

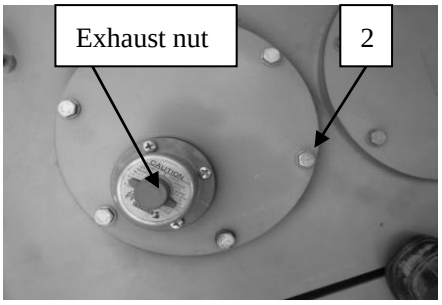

4.5.9.1 Replacing Oil Suction Filter Element and Hydraulic Oil

Note

- **High pressure may build in hydraulic oil. Always release pressure and cool down oil temperature before attempting any maintenance operation.**
- **Determine replace interval based on the type of hydraulic oil. The interval differs according to different type of hydraulic oil.**
- **Determine replace interval based on work condition when using hydraulic breaker, the maintenance and replacement interval should be shortened by half.**

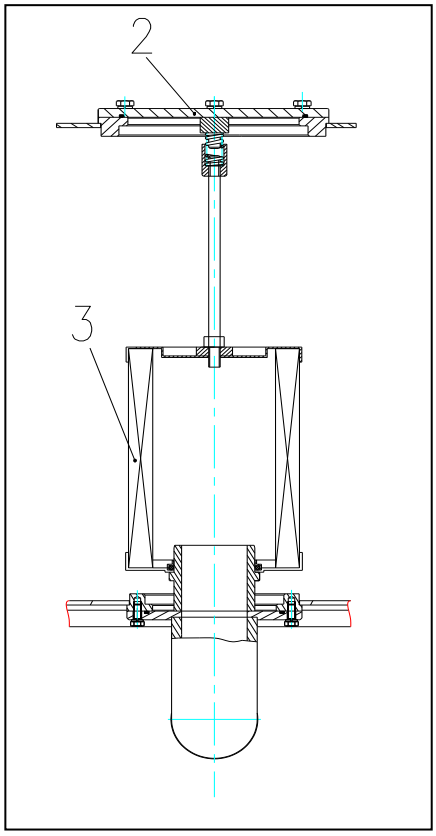

- Swing upper-structure by 90°, stop the machine at firm level ground.
- Clean upper hydraulic oil tank to prevent dirt from getting into hydraulic system.
- Remove oil fill cap (2).
- Remove oil suction filter and suspension rod unit (4).
- Use pump to drain hydraulic oil from oil tank, remove drain plug (3) located on bottom oil tank to drain the residual oil to a container.
- Clean up hydraulic oil tank; re-install drain plug (3).
- Replace oil suction filter, re-install suspension rod unit (4), and oil fill cap (2).
- Add fresh hydraulic oil; install lock cover (1).
- Start engine, run it at low speed to bleed the air in main pump and system.
- Stop the engine.

https://truckmanualshub.com/

4.6 GENERAL TROUBLE SHOOTING

Note

- **If the machine is kept in storage for a long time, the oil film coating on kinetic surface may be damaged. After starting the machine. It's necessary to cycle individual kinetic surface for 2 to 3 times to let it completely lubricated.**

Engine		
Problem	**Cause**	**Possible remedy**
Engine runs but it's difficult to start or fails to start.	Out of fuel. Mistake type or brand of fuel or it's polluted. Defective wiring. Insufficient battery power Air filter clogging. Fuel filter clogging. Internal leakage in fuel system Fuel manual pump spring up Air gets into fuel system Start engine malfunction	Add fuel Bleed the air from fuel system Drain out the off-grade fuel. Fill with proper fuel Check starting circuit, clear the problem Charging or replace new battery. Clean filter or replace new filter. Clean up filter or replace with new filter. Bleed air in fuel system Check and repair leaks Push down and secure hand wheel Use manual pump to bleed air Replace start motor
Engine fails to make full use of power.	Air filter clogging Fuel piping clogging or oil deliver malfunction Improper fuel or pollution Fuel filter clogging. Ejection oil nozzle gets polluted or malfunction occurs The clearance of eject pump linkage out of spec	Clean or replace filter Clear the problem or replace piping. Drain the fuel and add proper fuel. Bleed air in fuel system Clean or change filter. Bleed air in fuel system Contact with distributor Contact with distributor Contact with distributor
Engine fails to make full use of power.	Turbocharger malfunction Air bleeding failure Temperature of engine is too high or too low. Leakages in intake or exhaust air system	Contact with authorized distributor. Remove muffler and run the engine See "ENGINE OVERHEATING" or "over-cooling" Repair place with leakage

Engine overheating	Coolant level too low Improper coolant (e.g. water) Defective thermostat Defective temperature monitoring element Radiator clogging Defective fan Fan belt wears out or loosened. Defective belt pulley Defective cooling system Defective temperature sensor Ejection oil pump unpunctual Separator sponge peel off.	Add coolant Drain out, then replace with specified coolant Contact with your designated distributor. Contact with your designated distributor. Clean up radiator and front strainer Replace fan Adjust fan belt or replace. Replace belt pulley Clean up cooling system Change temperature sensor Contact with your designated distributor. Replace separator sponge
Engine water temperature too low	Defective thermostat Defective temperature sensor Defective monitoring elements	Contact with your designated distributor. Change temperature sensor Contact with your designated distributor.
Too much engine oil consumption	Improper engine oil Engine oil leakages Excessive engine temperature. Engine internal elements wears out	Drain out and change to specified fuel Check oil delivery system and repair Check cooling system Contact with your designated distributor
Exhaust gas is black (exceed standard)	Improper fuel Intake system clogging Intake piping damage Intercooler clogging Ejection oil pump unpunctual Ejection nozzle gets polluted. Defective engine main block engine main body malfunction	Draining out and replace with proper fuel Check intake system replace clean up intercooler Contact with your designated distributor Contact with your designated distributor Contact with your designated distributor
Exhaust gas is white	Improper fuel Engine temperature too low Defective thermostat Coolant leaks get into engine cylinder	Draining out and replace with proper fuel Run the engine to warm up Contact with your designated distributor Contact with your designated distributor
Turbocharger noise or excessive vibration	Insufficient lubrication of bearings. Turbine blades broken Bearing wear out Piping leakage Improper clearance between turbine and its case	Check turbocharger lubricate piping. Remove exhaust pipe and air intake hose for inspection Contact with your designated distributor Check piping and repair Contact with your designated distributor

Turbocharger joint leakage	Bearing or seal wear out, damage Excessive pressure in crank case Carbon clogging in oil return piping of turbocharger	Contact with your designated distributor Check intake pipe to ensure its function Check, clean up

Electrical system		
problem	**Cause**	**Possible remedy**
Starting motor continues to run after engine is started.	Start relay fails to disconnect or gets pulled in. Defective starting key	Replace starting relay or contact with your distributor Contact with your designated distributor
While engine is running, charging indicator illuminates.	Engine belt loosened or damaged. Belt pulley wear out Engine damaged Defective charging circuit Low voltage of battery	Adjust engine belt or replace Replace belt pulley Contact with your designated distributor Check and repair Charge or replace battery
Display screen does not work	Fuse blown out Defective wire circuit Display screen damaged	Replace fuse Check circuit and repair Contact with your designated distributor
All indicators do not work	Fuse blown out Defective wiring circuit Defective circuit board	Replace fuse Check circuit and repair，or Contact with your designated distributor Contact with your designated distributor
Individual indicator does not work	Bulb damaged Fuse blown out Defective wiring circuit	Change bulb Change fuse Check circuit and repair，or Contact with your designated distributor
Abnormal fuel indication	Defective oil level sensor Defective wiring circuit Defective indicator	Check and repair, or replace Check circuit and repair, or Contact with your designated distributor
Displayed temperature of coolant do not reflect real temperature	Defective temperature sensor Defective wiring circuit Defective indicator	Contact with your designated distributor Check circuit and repair, or Contact with your designated distributor Contact with your designated distributor

https://truckmanualshub.com/

Mode selection		
Problem	**Cause**	**Remedy**
Work mode selection does not work	Defective indicator Defective controller Defective solenoid valve Defective wire circuit	Contact with your designated distributor Contact with your designated distributor Contact with your designated distributor Contact with your designated distributor
High/low travel speed selection does not work	Travel pilot pressure switch Defective controller Defective solenoid valve Defective wire circuit Travel motor	Contact with your designated distributor Contact with your designated distributor Contact with your designated distributor Contact with your designated distributor Contact with your designated distributor

Hydraulic system		
Problem	**Cause**	**remedy**
Hydraulic function slow	Low hydraulic oil level Low hydraulic oil temperature Oil type do not match ambient temperature Low engine revs Main pump wear out Pilot oil circuit malfunction Main suction oil pump blocked	Add hydraulic oil until specified scale level is reached Warm up operation until hydraulic temperature reaches around 50℃. Use proper oil Adjust engine revs or contact with distributor Contact with distributor Contact with distributor Contact with distributor
Hydraulic oil overheating	Improper oil Low hydraulic oil level Hydraulic oil polluted Radiator clogging Filter clogging pump suction pipe leakage main pump wear out safety valve improper adjustment on hydraulic element	Use proper hydraulic oil Add hydraulic oil to reach specified scale level Filter or drain out and refill with proper oil Clean radiator and front drainer Clean or replace filter Contact with distributor Contact with distributor Contact with distributor Contact with distributor

https://truckmanualshub.com/

Hydraulic oil produces bubble	Suction piping leakage Piping twist or depressed mix water into oil improper oil improper oil volume, too high or too low	Contact with distributor Check hydraulic piping Drain out and refill with proper hydraulic oil Drain out and refill with proper hydraulic oil Keep hydraulic oil within specified level range
Hydraulic cylinder acts but cant not lift loads	Main pump wear out Main safety valve low pressure Suction filter clogging Pump suction pipe leakage Hydraulic cylinder wear out and cause internal leaks	Contact with distributor Contact with distributor Clean or replace oil suction filter Check oil suction piping Replace piston ring or contact with distributor
Other		
Problem	**Cause**	**Remedy**
Platform cannot slew or act slowly or unstably	Defective control pilot valve Swing motor defective Defective swing reduction gear Defective swing bearing Improper lubrication of swing bearing	Contact with our designated distributor Contact with our designated distributor Contact with our designated distributor Contact with our designated distributor Greasing it
Travel abnormally	Track over stretched or too loose Insufficient lubrication of idler or track roller Get stuck by stones Defective brake Defective pilot valve	adjust lubricate remove and clear repair, replace or contact with our distributor repair, replace or contact with our distributor
One side track does not move or moves slowly(off-track)	Controlled pilot valve malfunction Corresponding steering valve and brake valve malfunction Central joint oil-seal damaged Hydraulic motor malfunction Travel redactor malfunction Displacements differ with double hydraulic pump	repair Contact with distributor Contact with distributor Contact with distributor Contact with distributor Contact with distributor

https://truckmanualshub.com/

5 TECHNICAL SPECIFICATION

https://truckmanualshub.com/

5.1 SW155F TECHNICAL SPECIFICATION

5.1.1 Machine Specification

Machine	SWE215F-5
Operation weight	21800 kg
Standard bucket capacity	1.0 m3
Track shoe width	600mm
Power equipment	
Engine model	Cummins QSB6.7
Type	Direct injection, water-cooling, four strokes, supercharge, intercooling
Cylinders	6
Rod diameter x Stroke	107mm x 124mm
Displacement	6.7 L
Rated power/rotation speed	129kW/2200rpm
Max. torque/rotation speed	881Nm/1300rpm
Fuel tank capacity	380 L
Hydraulic system	
Main pump	2 ×piston pump
Flow rate	2×240L/min
Work pressure	34.3 Mpa
Front work equipment(supercharge)	32.4(34.3) Mpa
Travel	35.3Mpa
Swing	26Mpa
Pilot pump	1×gear pump
Flow rate	21L/Min
Pilot pressure	3.9 Mpa
Hydraulic tank capacity	280 L
Performance parameter	
Swing speed	11.8 rpm
Travel speed	5.3 /3.3 km/h
Max. traction	232 kN
Max. gradeability	35 °
Bucket max. digging force	155 kN
Arm max. digging force	110 kNv

https://truckmanualshub.com/

5.1.2 Dimension

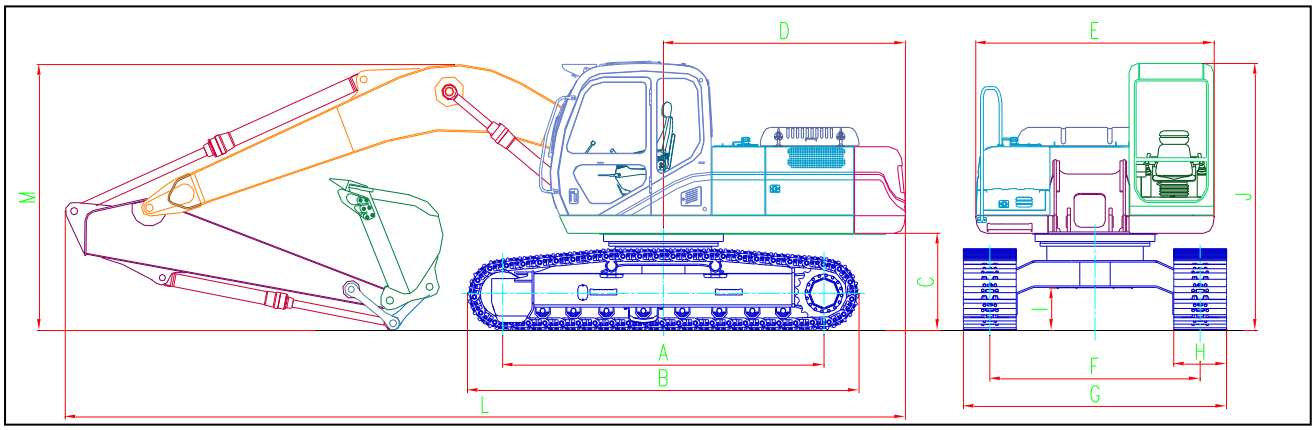

Unit：mm

Machine Model		SWE215F-5
A	Tumbler distance	3465
B	Overall length of crawler	4260
C	Platform ground clearance	1060
D	Tail swing radius	2750
E	Upper-carriage width	2710
F	Track gauge	2200
G	Chassis width	2800
H	Crawler width	600
I	Chassis ground clearance	478
J	Overall height of cab	2970
K	Transport length	9570
L	Boom height	2945

5.1.3 Work Parameters

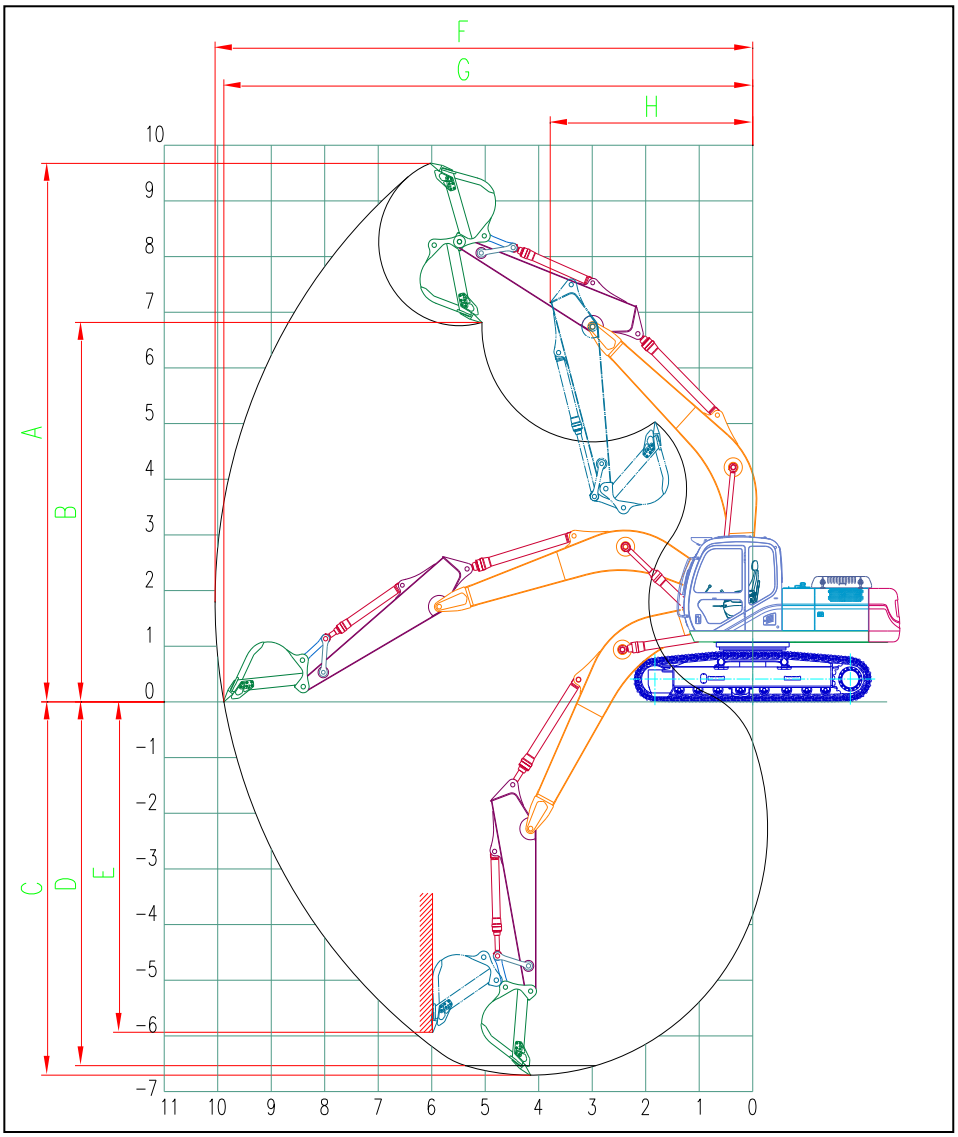

Machine Model		SWE215F-5
A.	Max. digging height	9750
B.	Max. dumping height	6980
C.	Max. digging depth	6750
D.	Max. digging depth at 8 inch level	6560
D.	Max. vertical digging depth	5900
E.	Max. digging radius	9940
F.	Max. digging reach at ground level	9775
G.	Min. swing radius	3560
	Arm length	2920
	Boom length	5700

https://truckmanualshub.com/

5.1.4 SWE215F-5 Electrical Schematic

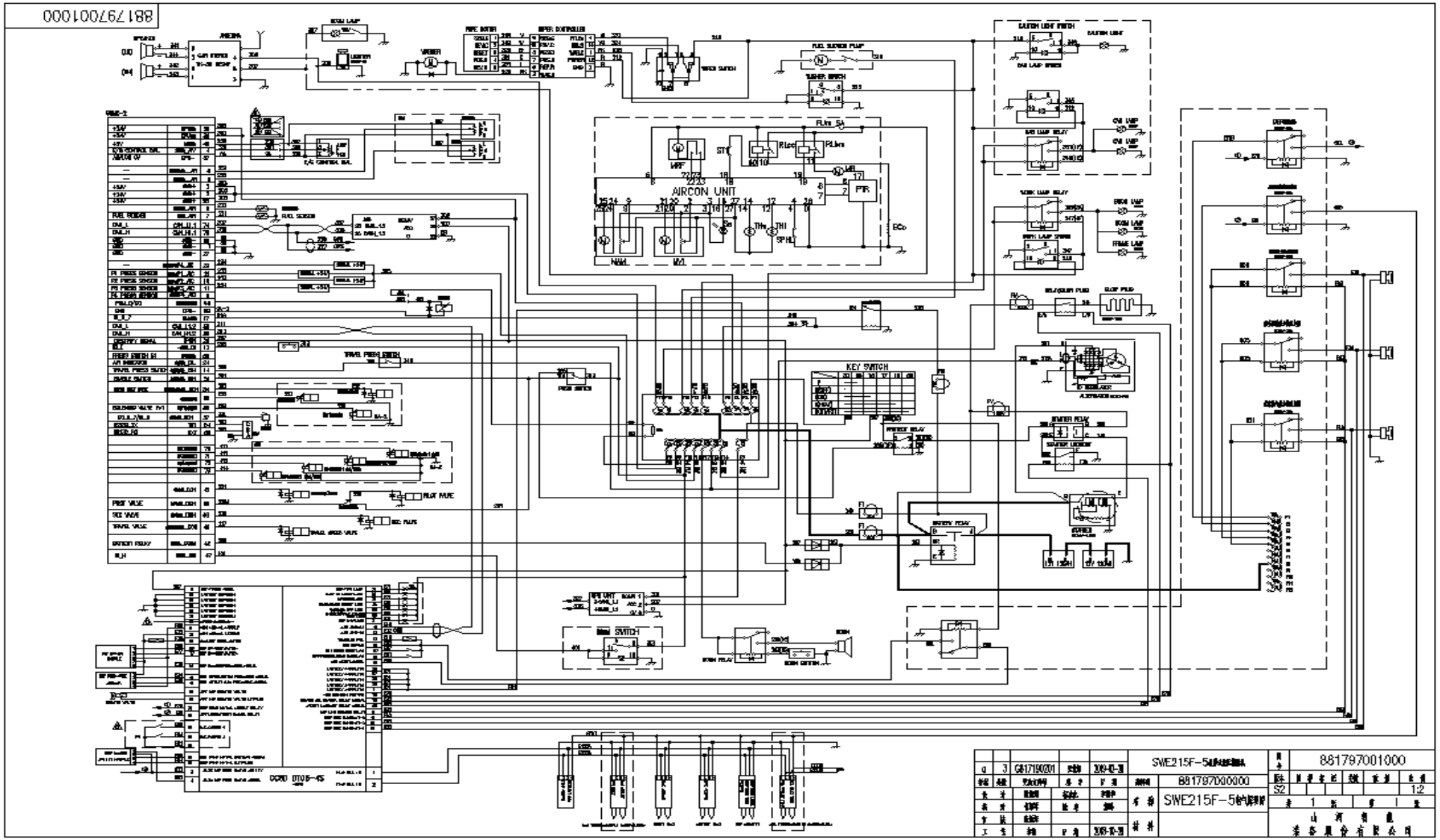

https://truckmanualshub.com/

5.1.5 Electrical Components

No.	Part	No.	Part
1	Throttle servo-motor	31	Rapidly preheating controller
2	Safety relay	32	Controller
3	Preheating relay	33	Throttle motor driver
4	Parking motor relay	34	Radio
5	Starter	35	Washer assembly
6	Parking motor assembly	36	Wiper controller
7	Generator	37	Horn
8	Water temp sensor	38	Electronic horn
9	Air filter indicator	39	Horn for machine backing
10	Overheating warning switch	40	Electronic horn
11	Engine oil pressure warning switch	41	Cigar ligther
12	Solenoid power master switch	42	GPS monitor system
13	Main pump pressure sensor	43	Electric control box assembly
14	Pressure switch	44	Parking motor assembly
15	Work light	45	Wiring terminal
16	Work light	46	Single-core plug
17	Oil level sensor	47	Controller 1-core
18	Microswitch	48	Controller 2-core
19	Rocker switch mounting frame	49	Controller 3-core
20	Rocker switch middle frame	50	Controller 6-core
21	Auto-idle switch	51	Waterproof connector 2-core
22	Fast selection switch	52	Waterproof connector 4-core
23	Front light switch	53	Waterproof connector 6-core
24	Work light switch	54	Connector 18-core
25	Warning light switch	55	Connector 22-core
26	Wiper switch	56	Relay socket
27	Washer switch	57	Battery 120Ah
28	Rocker switch cover	58	Battery clamp（with protective cover）
29	Ignition key	59	Engine control panel EC100B
30	Display screen		

https://truckmanualshub.com/

5.1.6 SWE215F-5 Hydraulic Schematic

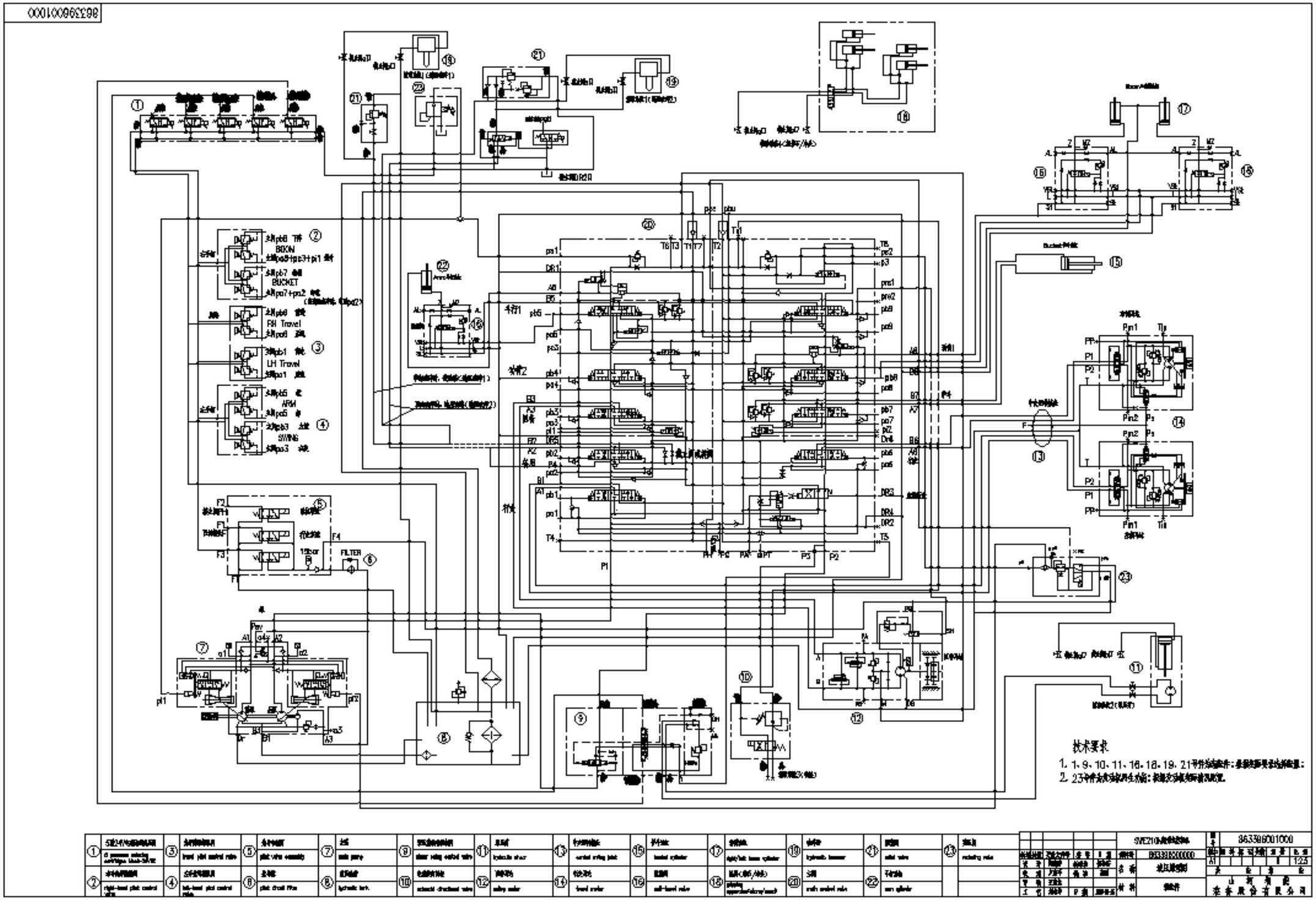

5.1.7 Hydraulic Components

No.	NAME	QTY
1	Main valve	1
2	Main pump	1
3	Swing motor	1
4	Right travel motor	1
5	Left travel motor	1
6	Central swing joint	1
7	Left pilot handle	1
8	Right pilot handle	1
9	Double-pedal valve	1
10	Pilot filter	1
11	Low pressure valve unit	1
12	Boom cylinder	2
13	Arm cylinder	1
14	Bucket cylinder	1

5.1.8 Noise & Vibration Description

According to ISO3744 & ISO6395：The machine fulfills the requirements of the Directive 2000/14/EC and the directive 2005/88/EC, the description about noise and vibration are as followings:

Noise at operator's position：$L_{pA} \leqslant 78$ dB;

Machine noise：$L_W \leqslant 103$ dB

Seat shock absorption:

Excavator status	Engine rev./Mode	Vibration accelerated speed m/s ²	
		Under the operator seat	On the cab floor
Engine runs without load	1000rpm	0.01	0.01
	1250rpm	0.01	0.01
	1450rpm	0.01	0.02
	1600rpm	0.01	0.03
	1700rpm	0.01	0.02
	1850rpm	0.01	0.02

https://truckmanualshub.com/

6 NOTE FOR SAFETY

Note for safety

If the machine is installed with attachments or optional parts without the authorization of SUNWARD, its service life will be shortened, and some machine failures or safety problems will be resulted in. Thus, SUNWARD will not take any responsibility for any accidents or damages caused by the unauthorized installation of attachments.

Warning

General note

● As the attachment is a powerful tool, it should be used correctly to avoid serious hazard or damage.

● Don't use the attachment before the instruction manual of the attachment is read thoroughly and understood completely. If the instruction manual is lost, ask the attachment manufacturer or sales company for a new one.

● Install a protective cover in front of the cab if a breaker or other attachments is installed. It depends on the type of the attachment.

● Comparing to a machine installed with a bucket, the machine equipped with a breaker has a heavy load on its front part, and the whole machine is not stable. Thus, when the breaker is rotated to one side, don't operate the machine to avoid tipping.

● After the attachment is installed, the swing range and gravity of the machine is changed, thus the machine may move in a sudden, in that case, the status of the machine should be observed carefully.

● Before operation, a warning line around the machine should be placed to stop other people, Don't operate the machine when there's people in the nearby.

● Don't place feet on the operation pedal to prevent serious accidents caused by disoperation, except that the pedal should be stepped during operation.

Note for assembly and disassembly

The procedures as below should be observed strictly for safe operation when disassembling and installing the attachment.

● The operation of disassembly and assembly should be done on firm level ground.

● When the machine is operated by more than two persons, signals should be confirmed before operation and observed.

● A crane should be used when lifting or moving a heavy object (more than 25 kg or 55 lb).

● Support the part firmly before disassembling. Pay much attention to the gravity position when lifting with a crane.

● It's very dangerous to operate the machine when lifting a load with a crane. A bracket is needed and make sure it's in a safe status.

● Make sure the machine is stable and will not tip over when laying down the dismantled attachment or

https://truckmanualshub.com/

installing the attachment.

- Don’t walk under a load lifted by the crane. Stay at a safe place away from the load.

https://truckmanualshub.com/

7 MANUFACTURER INFORMATION

Company： SUNWARD INTELLIGENT EQUIPMENT CO., LTD.

Trade mark：

Add：Sunward Industrial Park, No.1335 Liangtang Road (E), Xingsha, Changsha, Hunan, China

Sales hotline：400-887-6230；Service hotline：400-887-8230

Maintenance point：Our office in various provinces and cities of China

Distributor information	
Distributor :	
Add:	
Tel:	
Fax:	
Email:	
Contact:	
Remark:	

Overseas subsidiary information:

Overseas subsidiary information			
No.	Subsidiary Name	Email	Address
1	SUNWARD INTELLIGENT (M) SDN. BHD.	mal2@sunward.cc	D-09-02 MENARA MITRALAND NO.13A,JALAN PJU 5/1.KOTA DAMANSARA,PJU 5,47810,PETALING JAYA SELANGOR.
2	Công ty TNHH SUNWARD Việt Nam	vnm1@sunward.cc	lo 33, biet thu 1, ban dao linh dam, phuong hoanh liet, quan hoang mai, hanoi, vietnam
3	SUNWARD EUROPE HEAVY INDUSTRY NV	eu@sunward.cc	Nijverheidspark 3, 3580 Beringen, Belgium
4	PT.SUNWARD INDONESIA MACHINERY	ina8@sunward.cc	JLN. PROF.LATIMENTEN NO 28, GROGOL, JAKARTA BARAT -14440
5	SUNWARD USA CORP	usa@sunward.cc	2710 geesling rd,denton tx,76208
6	SUNWARD INTELLIGENT(CAMBODIA) CO.,LTD	cambodia@sunward.cc	No.18 ,St 110B,Ideal Garden Home City,Sangkat Teuk Thla,Khan Sen Sok,Phnom Penh,Cambodia
7	ООО "САНВАРД РУС" /SUNWARD RUS LLC /	rus@sunward.cc	123001, г. Москва, ул.Большая садовая, д.5, оф. 219А/ 123001, Moscow, Bolshaya Sadovaya Street, No. 5, office 219A/
8	SUNWARD KOREA CO., LTD.	kor@sunward.cc	경기도 용인시 기흥구 구갈로 64, 603 실 Zip: 16972 Add: Rm603, No.64 Gugal-ro, Giheung-gu, Yongin-si 16972, Gyeonggi-do, South Korea
9	SUNWARD LAOS TRADE CO., LTD.	laos@sunward,cc	Donnoune, xaythany District, vientiane Laos
10	SUNWARD EQUIPMENT(THAILAND) CO.,LTD	th@sunward.cc	Arwan Building,6th Floor,1339 Pracharat 1 Road,Wongsawang,Bangsue,Bangkok.
11	SUNWARD PHILIPPINES INC.	phl1@sunward.cc	218 D. AQUINO ST. BRGY. 62 WEST GRACE PARK CALOOCAN CITY
12	PT. SUNWARD INDONESIA EQUIPMENT	ina1@sunward.cc	
13	SUNWARD SOURTH AFRICA	africa2@sunward.cc	