TRAKKER
EURO 4/5

BODYBUILDERS INSTRUCTIONS

HEAVY RANGE

IVECO

EDITION 2008

euro4 euro5

Publication Edited by:
Technical Application
Strada delle Cascinette, 424/34
10156 Turin - Italy

Publication Nr. 603.93.731 - 2nd Edition
Printed in Italy - 01/08

Produced by:

SATIZ

B.U. TECHNICAL PUBLISHING
Iveco Technical Publications
Lungo Stura Lazio, 15/19
10156 Turin - Italy

TRAKKER EURO 4/5

Bodybuilders instructions
Print 603.93.731 - 2nd edition
Base - January 2008

UPDATE DATA

Section	Description	Page	Revision date
2	Frame	Paragraph 2.16 moved to chapter 5	January 2008
3	Structures	3.26: paragraph added 3.5.4.3	January 2008
3	Structures	3.43: paragraph added 3.12.1	January 2008
4	Power take-off	Full overhaul chapters 4.6 and 4.7	January 2008
5	Electronic subsystems	5-41: note added to paragraph 5.5.8	January 2008
6	Exhaust systems with SCR	Chapters 6.6 and 6.7 added. Full overhaul chapter 6.5	January 2008

Update data

Foreword

This manual contains instructions and data for fitting body structures/ancillaries and Vehicle modifications and is intended for skilled and qualified personnel.

The bodybuilder is responsible for the design and fitting and any modifications necessary for the installation. The bodybuilder must ensure full compliance with the requirements set out in this manual and with national and international regulations (Construction and Use, and EEC Standards) in force.

Before starting any work make sure you are working form the latest Iveco Bodybuilders Instruction manual for the model. Make sure that all safety equipment e.g. eye protection, hard hat, shoe, gloves etc are used. Check that all mechanical equipment e.g. lifts and handling gear is in good working order and is used. Finally work on the vehicle in good conditions and ensure maximum safety at all times.

Any change, modification or installations not covered by this manual and not expressly authorized in writing by IVECO will relieve the latter of any responsibility and make, in particular, the vehicle warranty null and void.

For installations / modifications and general information not covered by this manual contact **Iveco.**

On completion of the installation e.g. body, crane, wheelbase modification the vehicle and systems **must** be checked to ensure vehicle operation and safety is as designed by Iveco and has not been compromised. If a vehicle system needs to be set up i.e. engine control for PTO installation then contact your local Iveco Service Department.

IVECO shafl not be responsible for any change, modification or fittings concerning the vehicle.

Due to continuing vehicle improvements and changes in regulations which cover or affect the vehicle, the information in this publication may not always be up to date.

If the bodybuilder has any queries regarding the information contained in this manual regarding the vehicle that is to be worked on he should contact Iveco **before** starting.

Symbols - Warnings

Danger to people:

failure to fully comply with these precautions can involve serious danger for personal safety.

Danger of serious damage to the vehicle

Partial or complete non observance of these precautions can cause serious damage to the vehicle and invalidate the Iveco warranty.

Warning / Precaution:

failure to fully comply with these precautions can result in serious danger to personal safety and damage to the vehicle with the loss of the vehicle warranty.

This indicates the correct use of materials in order to make the vehicle as environmentally friendly as possible.

NOTE Indicates additional information.

Page header and footer interpretation

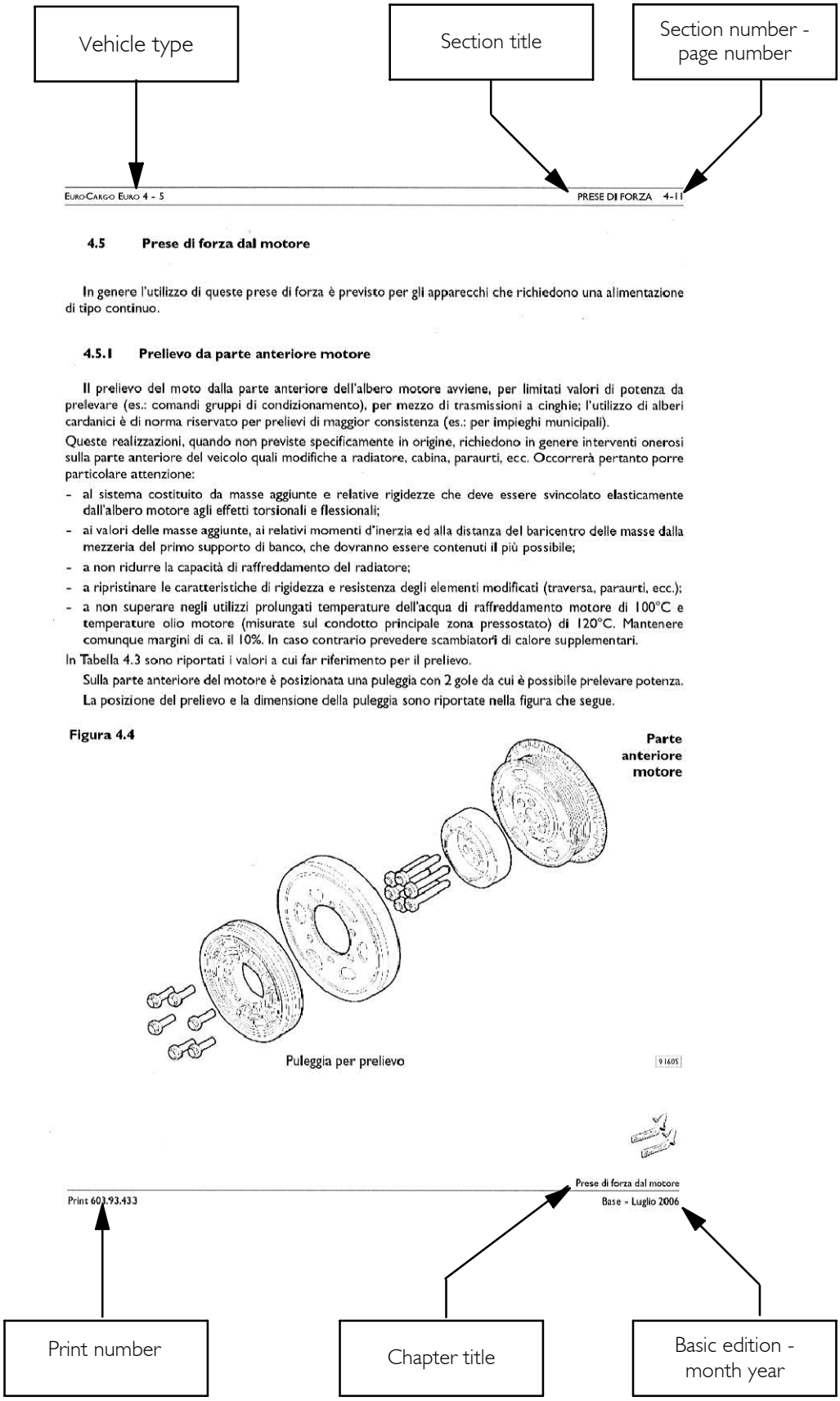

INDEX OF SECTION

	Section
General specifications	**1**
Chassis modifications	**2**
Building & Mounting the structures	**3**
Power Take-offs	**4**
Special instructions for electronic subsystems	**5**
Special instructions for -SCR- exhaust system	**6**

SECTION 1

General specifications

Page

1.1	Aim of bodybuilders instructions	1-3
1.2	IVECO "no objection" for changes and fittings	1-3
1.3	Liabilities	1-4
1.4	Guarantees	1-4
1.5	Request for a "no objection"	1-4
1.6	IVECO technical documents available by means of computer	1-5
1.7	Trademarks and Logos	1-5
1.8	Legal Provisions	1-5
1.9	Prevention of accidents	1-6
1.10	Choice of material to use: Ecology - Recycling	1-6
1.11	Vehicle delivery	1-7
1.12	Vehicles Identification	1-8
1.13	Dimensions and weights	1-9
1.13.1	General Specifications	1-9
1.13.2	Determining the Centre of Gravity of the Body and Payload	1-9
1.13.3	Observing the Permitted Weights	1-13
1.14	Instructions for the Correct Functioning of the Parts of the Vehicle and Accessibility for Maintenance	1-14
1.15	Quality System management	1-15
1.16	Vehicle maintenance	1-15
1.17	Conventions	1-16

1.1 Aim of bodybuilders instructions

The purpose of this publication is to provide data, specifications and instructions for the bodybuilding and conversion of an original IVECO vehicle to ensure the functionality, safety and reliability of the vehicle and its components.

1.2 IVECO "no objection" for changes and fittings

Changes must be carried out in accordance with the requirements set out in the following guidelines.

The following may be carried out only with IVECO's authorisation after submitting a copy (two for English Market) of the documentation required for technical evaluation of the proposed change (drawings, calculations, technical report etc.):

- wheelbase modifications, where the new wheelbase does not fall within the minimum and maximum wheelbase available within the IVECO range for the same vehicle;
- work carried out on the braking system;
- work carried out on the suspension system;
- steering wheel modifications;
- changes to the stabiliser bars and suspensions;
- changes to the cab, cab supports, locking and tipping devices;
- changes to the intake systems, engine exhaust and SCR components;
- engine cooling system modifications;
- power unit and driving component modifications;
- work carried out on front and rear axles;
- fitting additional axles;
- fitting decelerator brakes;
- fitting power take-offs;
- changing the tyre dimensions;
- coupling device (hooks, fifth wheels) modifications;
- electric/electronic unit modifications.

The other modifications of fittings covered by the following standards and made in compliance with the same do not require specific authorisation from IVECO. Any modification or fitting not covered by these standards shall, on the contrary, be authorized by IVECO in advance.

1.3 Liabilities

The authorizations issued by IVECO concern solely the technical/conceptual feasibility of the modification and/or fitting to be made on a genuine IVECO vehicle.
The bodybuilder is responsible for the:

- project of the modification or fitting;
- choice and features of the products used;
- workmanship of the modification or fitting;
- compliance of the project and its implementation with all the instructions provided by IVECO;
- compliance of the project and its implementation with all the current regulations in the country where the vehicle is registered;
- the operation, safety and reliability and in general the effective performance of the vehicle and also the effects that the changes and the conversion may have on the performance and specifications of the vehicle.

1.4 Guarantees

The bodybuilder/chassis converter who has built the body or who has modified the chassis must guarantee that the work was undertaken in a professional manner in full compliance with the specifications contained in this manual. IVECO reserves the right to declare void its own warranties for the vehicles where:

- These specifications have not been adhered to or where unauthorised equipment was installed, or unauthorised modifications were carried out.
- An unsuitable vehicle/model has been used for the required conversion or application.
- The specifications, standards or instructions issued by the Manufacturer for the flawless execution of the operations have not been followed.
- Original spare parts or components which IVECO has made available for specific conversions were not used.

Maintaining the functionality of vehicle components.
The effective operation of vehicle components, all component safety and running conditions, compliance with national and international regulations (e.g. EC Directives) and accident prevention standards must be guaranteed in all permitted conversions and applications.
All our vehicles are covered by a warranty as laid down in the specific documents.
The bodybuilder must carry out operations at least in an equivalent manner.

1.5 Request for a “no objection”

The requests for approval or support to carry out work or make modifications or fittings shall be forwarded to the IVECO marketing offices in charge.
To obtain the approval, the body builder shall provide adequate documents that illustrate the anticipated implementation, utilization and conditions of use on the vehicle. The drawings shall highlight any item differing from the instructions contained in this manual.
The body builder shall submit the modification and/or fitting to the competent authorities for approval.

1.6 IVECO technical documents available by means of computer

The following technical documents are available on the Internet at www.thbiveco.com:

- bodybuilder instruction manuals;
- specification sheets;
- chassis cab diagrams in .dwg and tiff formats;
- chassis diagrams in tiff formats;
- other specifications concerning the vehicle range.

The body builder shall submit the modification and/or fitting to the competent authorities for approval.

1.7 Trademarks and Logos

Trademarks, nameplates and denominations must not be modified or displaced in relation to the original design. The appearance of the vehicle must not be changed or modified.

The application of trademarks tied to the transformation or trim levels must be authorised by IVECO. They must not be applied near to the IVECO tradenames or logos.

IVECO reserves the right to withdraw the tradenames and logos if the fitting or conversion fails to conform with requirements. The bodybuilder accepts all responsibility for the entire vehicle.

Instruction for added assemblies

Where assemblies are added, the bodybuilder must provide the necessary service and maintenance instructions when the vehicle is delivered.

1.8 Legal Provisions

On completing the vehicle, the bodybuilder/chassis converter must check the work (modifications, body + equipment etc.) to ensure that the legal provisions required in the country of registration are observed (e.g. weights, dimensions, braking, noise, emissions etc.). Information regarding these matters may be obtained from the competent Authorities or the IVECO Area Network.

The vehicles manufactured at our plant (except some versions for Extra-European countries) comply with the EC directives. Converted vehicles must also comply with these directives. The only permissible exception is granted where local type approval differs from EC homologation.

1.9 Prevention of accidents

The structures and devices fitted to the vehicles must comply with the current regulations concerning the prevention of accidents and safety regulations in force in the countries where the vehicle is to be used.

All the precautions dictated by technical awareness must be adopted to prevent malfunction and functional defects. Compliance with these regulations will be the responsibility of the manufacturers of the structures and devices.

Components such as seats, coverings, linings, protective panels etc. may present a potential fire hazard if they are exposed to an intense heat source.

They should be removed before working with welding equipment and flames.

1.10 Choice of material to use: Ecology - Recycling

Increasingly greater attention should be paid, at the study and design stage, to the choice of materials to be used.

This is especially the case as regards the aspects connected with ecology and recycling in the light of domestic and international regulations that are constantly being developed in the sector.

In this connection:

- everyone must be aware of the prohibitions on using harmful or potentially hazardous materials, such as ones containing asbestos, lead, halogen additives, fluorocarbons, cadmium, mercury, hexavalent chrome, etc.
- Use materials whose processing produces limited waste and that permit easy recycling after their first use.
- With composite synthetic materials, use components that are compatible with each other, envisaging also their possible utilization with the addition of other salvaged components. Affix the markings required in compliance with the current regulations.

In order to comply with EC directive 2000/53 (ELVs), IVECO S.p.A. prohibits fitting parts containing lead, mercury, cadmium and hexavalent chrome to vehicles (except for the departures referred to in Attachment II of the above directive).

1.11 Vehicle delivery

Prior to delivering the vehicle, the body builder shall:

- verify that the work has been made correctly;
- perform vehicle and/or equipment set-up;
- check the operation and safety of the vehicle and/or equipment;
- prepare and deliver the necessary instructions for service and maintenance of the fitting and any additional units to the end customer;
- write the new data down on the special tags;
- confirm that the work carried out complies with the indications provided by the vehicle manufacturer and with all legal requirements;
- carry out the checks included in the "IVECO Pre-Delivery inspection" list (available from the IVECO network) with regard to the items affected by the work done;
- provide a guarantee for the modifications made;
- in the event that the connections originally provided with screws have been mounted and restored, the same screws must not be used. In such an instance, and in the event that rivets have been replaced with screws, you must again check the tightness of the connection after travelling approximately 500-1000 km, to ensure it is to the correct torque.
- measure the battery voltage. Ensure there is a minimum charge of 12.5 V. If the voltage reading is between 12.1 and 12.49 V, recharge the battery (slow charge). If the voltage is less than 12.1 V, the battery must be scrapped and replaced with a new one.

1.12 Vehicles Identification

The commercial designation of IVECO vehicles does not coincide with the type approval designation.

Following are two examples of commercial designation of Trakker Range vehicles complete with an explanation of the codes utilised.

	Cab Range					Power		Configuration version		Suspension		
CAB VERSIONS	AD	2	6	0	T	4	1			/	P	
TRACTORS	AT	4	0	0	T	4	5	W	T			
	AT AD	PTT-Cab versions (n°/10 → hung in ton) PTC-Tractors (with semitrailers) (n°/10 → hung in ton)			TRAKKER	Engine power (n° x 10 → HP)		B T W WT		P		

RANGE-CAB

AD = Active Day short
AT = Active Time long

VERSION

B = Mixer truck
T = Tractor
W = All-wheel drive
WT = All-wheel drive tractor

SUSPENSION

/P = Rear tyre (tandem 21 ton, 6x4 and 8x4)

1.13 Dimensions and weights

1.13.1 General Specifications

The dimensions and maximum permissible weight on the axles are indicated on drawings, on technical specifications and, in greater details, on the official documentation issued by IVECO.

The kerb weights refer to vehicles with standard equipment. Special equipment may involve considerable modification to the weight and its distribution on the axles.

Lights and rear-view mirrors positioning on our vehicles is designed for widths of 2,550 mm. This dimension may also be applied to special body versions with a width of 2,600 mm (e.g. refrigerator vans).

Weighing the Chassis

As a result of production factors there may be a variation in weight of approx. 5%.

It is, therefore, advisable to determine the weight of the vehicle with its cab before fitting the body and equipment and establishing their distribution on the axles.

1.13.2 Determining the Centre of Gravity of the Body and Payload

Positioning on longitudinal plane

To establish the location of the centre of gravity of the body and payload the following examples below may be used as guidelines.

The technical documentation specific to each model (chassis cab drawing) give the positions permitted with the vehicle in its standard form. The weight and positioning of the single components of the vehicle are given in the chassis and weight distribution diagram.

Figure 1.1

Vehicles with 2 axles; vehicles with 3 axles with an equal load on the two rear axles

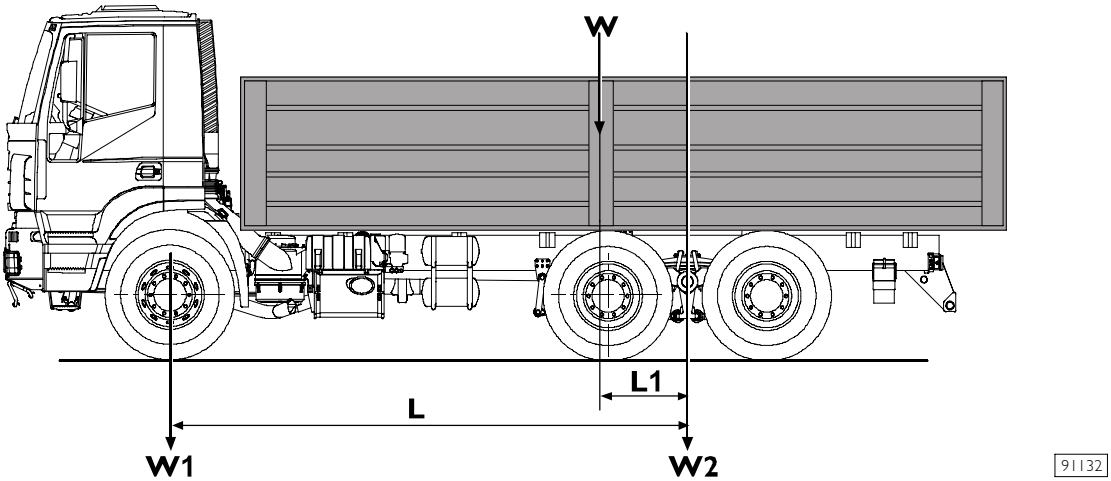

Example to determine the position of the centre of gravity of the payload plus body

A = Rear axle or tandem mid axle
W = Payload + body
W_1 = Share of payload on front axle
W_2 = Share of payload on rear axle (or tandem)
L_1 = Distance of centre of gravity from centre-line of rear axle (or tandem centre-line)
L = Actual wheelbase

$$L_1 = \frac{W_1 \cdot L}{W}$$

respectively $L_1 = L - \frac{W_2 \cdot L}{W}$

Figure 1.2

4-axle vehicles with identical loading of each front and rear axle

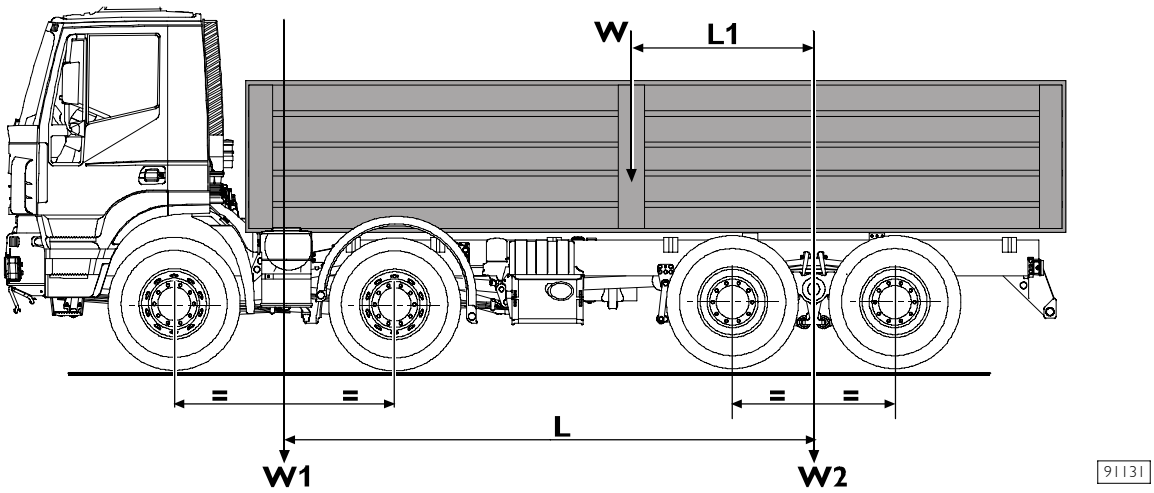

Example to verify compliance of admitted weight on the axles

W = Payload plus body
W_1 = Proportion of payload on front axles
W_2 = Proportion of payload on rear axles (tandem axles)
L_1 = Distance of centre of gravity from mid point of rear axles
L = Effective wheelbase

$$L_1 = \frac{W_1 \cdot L}{W}$$

respectively $L_1 = L - \frac{W_2 \cdot L}{W}$

In order to apportion the payload on the axles, it must be uniformly distributed except when the shape of the loading surface itself entails a different distribution of the load.

As for equipment, the actual location of the centre of gravity is used.

When building bodies or containers, loading and unloading systems for the transported goods must be devised which preclude excessive variations in the distribution of the load and/or excessive loads on the axles, also giving the relevant instructions to the users.

The bodybuilder will also need to install suitable payload securing systems on the body so that transport can be made with the utmost safety.

Figure 1.3

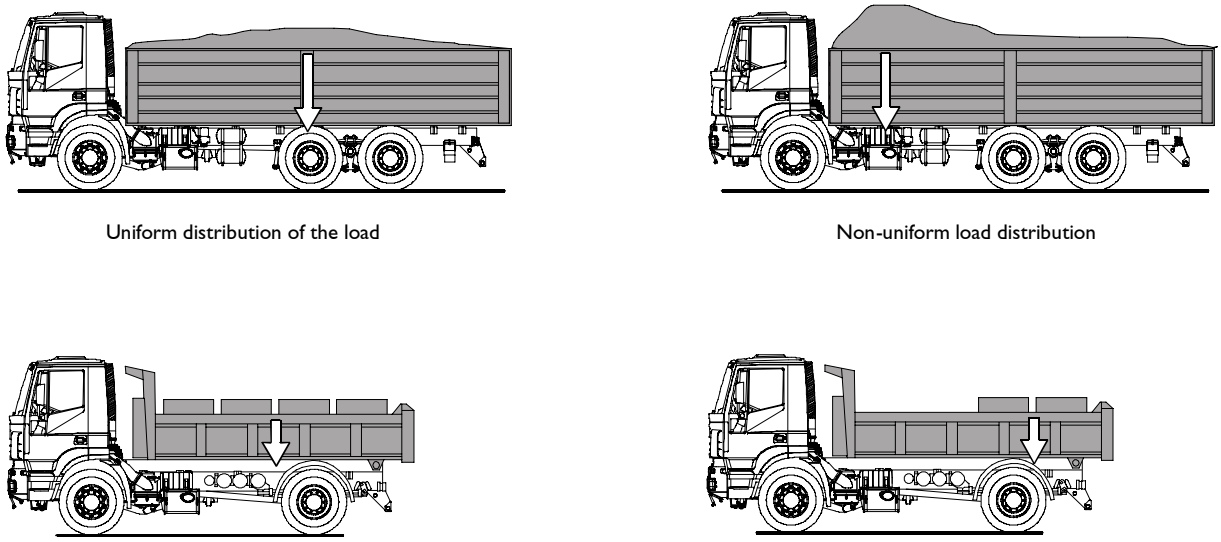

Height of the Centre of Gravity

The height of the centre of gravity of the chassis cab is given in the technical documentation specific to each model (chassis drawing).

For testing the vehicle complete with superstructure, the bodybuilder must check that the height of the centre of gravity of the equipment including the payload, or of the entire vehicle when fully loaded, falls within the maximum permitted values.

These limits are defined in compliance with the national or international regulations (e.g. as amended by the current EC braking Directive) or requested by the Manufacturer to ensure good handling of the vehicle (e.g. transverse stability of the moving vehicle).

In order to comply with the current EC Directive, IVECO provides information for the various models (wheelbase and specific body) on computer, regarding:

- Height of centre of gravity of chassis cab (e.g. chassis cab diagram, braking data);
- Maximum height of centre of gravity of complete vehicle at full load (e.g. national type-approval document);
- Braking capacity of each single axle (e.g. braking data).

Figure 1.4

Verification with full load:

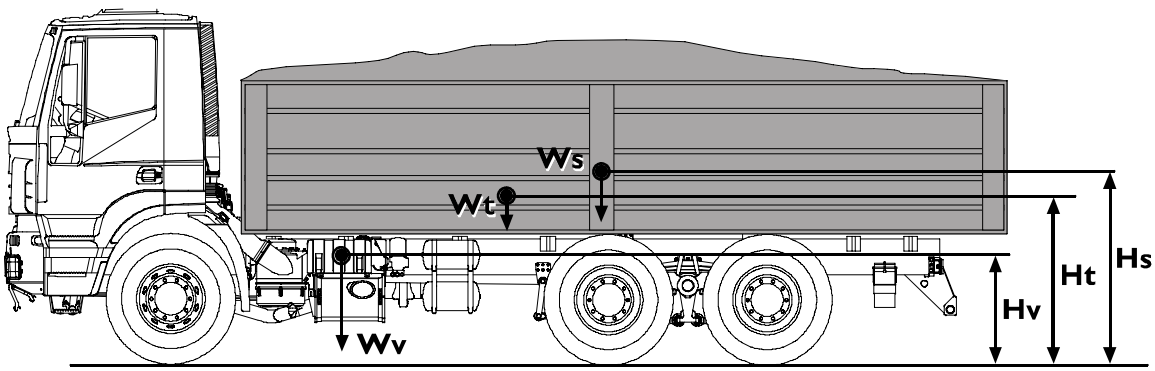

91135

$$Ht = \frac{Wv \cdot Hv + Ws \cdot Hs}{Wv + Ws} \qquad Hs = \frac{(Wv + Ws) \cdot Ht - Wv \cdot Hv}{Ws}$$

Wv = Chassis cab vehicle kerb weight
Hv = Height of centre of gravity of chassis cab vehicle (laden condition)
Ws = Body and payload
Hs = Height of centre of gravity of body and payload in relation to ground
Wt = Vehicle weight when fully loaded
Ht = Height of centre of gravity of vehicle fully laden to gvw

To check the vehicle with its body but no payload, use above formula but for Ws use only the body kerb weight (The position for Hv will depend on the load and deflection of the suspension).

Using Stabiliser Bars

Supplementary stabilising or anti-roll bars, where available, spring reinforcements or the application of rubber components (in compliance with point 2.7) may increase the height of the centre of gravity of the payload which must be defined as each occasion arises. The modification must be carried out after careful consideration has been given to the specifications of the version, to the wheelbase and to the distribution of the cross-stresses acting on the suspension both at the front and at the rear of the vehicle. It must be borne in mind that it is often advisable to modify the rear axle only since a modified front axle would give the driver a false sense of stability making it more difficult to perceive the safety limits. Modification to the front axle may be made where the load is positioned behind the cab (e.g. crane) or where the superstructures are very rigid (e.g. van conversion).

Exceeding the Limits

When transporting goods with an exceptionally high centre of gravity (e.g. machinery, indivisible cargo etc.) from a technical point of view it is possible to exceed the values indicated in the table provided that the steering system of the vehicle is suitably adapted to this condition (e.g. reduced speed, gradual changes on the steering wheel, etc.).

1.13.3 Observing the Permitted Weights

All limits indicated in our documentation must be adhered to. The load of the front axle is of particular importance under varying load conditions, in order to ensure the correct steering characteristics on road surfaces of all types.

Particular attention must therefore be paid to vehicles with a weight which is concentrated on the rear overhang (e.g. cranes, trailers with a central axle) and to vehicles with a short wheelbase and a high centre of gravity (e.g. mixer trucks).

When positioning the body and equipment, the loads must be correctly distributed transversally. For each wheel a variation in the rated load (1/2 of the axial load) of 4% is permitted (e.g. admitted load on axle: 10,000 kg load admitted on each wheel: 4,800 to 5,200 kg) provided that the tyres permit it, without impairing braking or driving stability.

Apart from different specifications for specific individual vehicles, the following may be taken to be the minimum values for the front axle:

- 20% of the total vehicle weight with uniformly distributed loads
- 25% of the total vehicle weight for loads that are concentrated on the rear overhang.

The rear overhang of the body must be built in strict observance of the permitted axle loads, the limitations in length, the positioning of the tow hook and of the underride guard stipulated by the relevant regulations and legal requirements.

Variations in the Permissible weight

Special exceptions to the maximum permissible weight may be granted for particular applications for which, however, precise limitations regarding the use will be imposed in addition to possible vehicle reinforcements.

Such exemptions, if they exceed the limits imposed by law, must be authorised by the Administrative Authority.

A reduction in admissible vehicle load (downrating) may require modifications on some parts, such as the suspension. In these circumstances, the necessary information may be supplied.

The request for authorisation must include:

- Vehicle type, wheelbase, identification number, designated use.
- Weight distribution on the axles (e.g. vehicles equipped with crane and body) including positions of the centre of gravity of the payload.
- Proposals concerning the reinforcement of the vehicle components where necessary.

1.14 Instructions for the Correct Functioning of the Parts of the Vehicle and Accessibility for Maintenance

As a rule, when modifying or installing any type of equipment, nothing must be altered which prevents the correct functioning of assemblies and parts of the vehicle under all operational conditions.

For example:

- Ready access to all parts requiring inspection or maintenance and periodic servicing must be provided. In the case of closed body types suitable opening doors must be provided.
- For tilting cabs, adequate space permitting tilting must be assured. In the case of structures which involve the space above the driver's cab, adequate space for the passage of intake air must be guaranteed (see Figure 1.5).

Figure 1.5

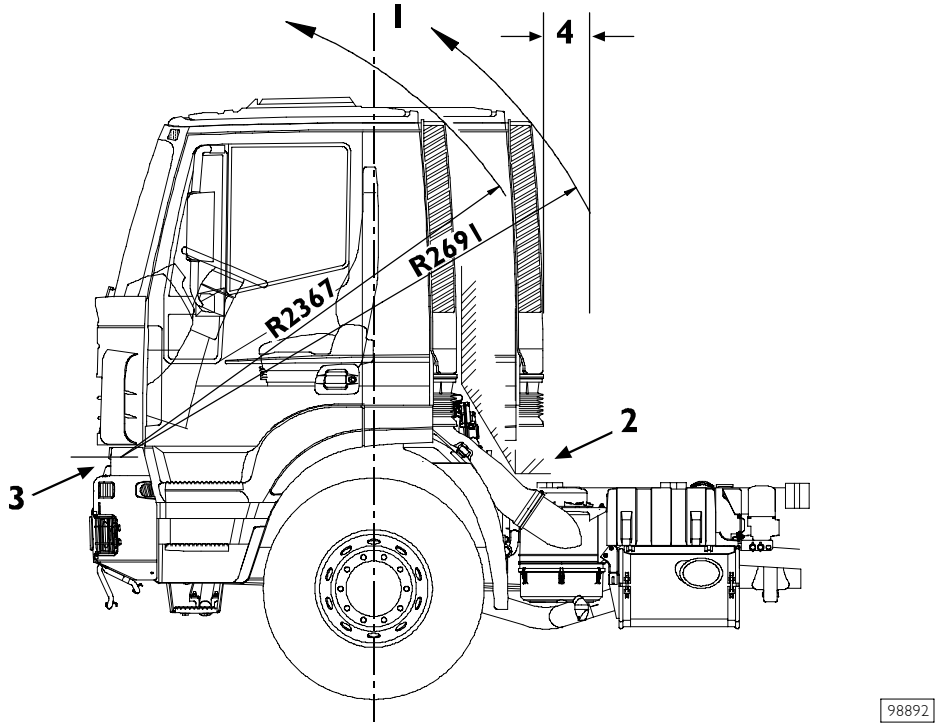

1. Retain adequate room for tilting the driver's cab - 2. Retain the free space above the gearbox (for tractors with semitrailers consider the movement between tractor and semitrailer) - 3. Cab pivot point - 4. Min. distance to be met

- Service access to chassis/driveline components must be retained. For instance repairing the gearbox or clutch must be possible without necessitating the removal of major components of the added structure.
- The cooling system (radiator cowling, radiator, air passages, cooling circuit etc.), fuel supply (pump position, filters, pipe diameter, etc.) and the engine air intake must not be altered.
- The anti-noise panels must not be altered or moved in order to prevent changes in the approved noise levels of the vehicle. Should it be necessary to make openings (e.g. for the longitudinal runner of the body to pass through) these must be properly closed off using material with inflammability and soundproofing characteristics equivalent to those used originally.

- Adequate ventilation of the brakes and battery case (especially in the case of box bodies) must be guaranteed.
- The positioning of the mud-guards and wheel-arches must allow free movement of the rear wheels even when chains are being used. Sufficient space must also be ensured with lifting axles. Some of our models have 3rd axle steering which also steers in the raised position; and it is necessary to leave space for this function (see point 2.20).
- When the vehicle has been set up, for safety reasons, headlight attitude must be checked and adjusted as necessary. Perform the adjustment according to the instructions provided in the user and maintenance manual.
- In the case of parts which are supplied loose (e.g. spare wheel, chocks) it will be the responsibility of the bodybuilder to position and secure them in an accessible and safe manner in compliance with possible national regulations.

1.15 Quality System management

For some time IVECO has been promoting Quality System development and training for bodybuilders.

This is a requirement due not only to compliance with domestic and international regulations on product liability, but also the growing demand for increasingly higher quality levels. The creation of new forms of organization in the various sectors and the quest for increasingly more advanced levels of efficiency.

IVECO believes it essential for bodybuilders to be equipped and organised where the following are defined and available:

- organization charts for functions and responsibilities.
- Quality System.
- quality goals.
- technical design documentation.
- process and control phases with relevant resources.
- product improvement plan, obtained also with corrective actions.
- after sales service.
- staff training.
- manufacturer liability documentation.

1.16 Vehicle maintenance

In addition to making the necessary checks on the body/structure in keeping with customary working procedures, the bodybuilder shall perform the checks specified in the "IVECO pre-delivery inspection" list, which can be obtained from the IVECO network, for the aspects affected by the modifications performed.

1.17 Conventions

In these bodybuilders instructions, the wheelbase is taken as the distance between the centreline of the first steering axle and the centreline of the first rear axle (driven or non-driven). This definition differs from the definition of wheelbase in the CE Directives. The rear overhang is taken as the distance between centreline of the last axle and the rear end of the chassis runner. For dimensions A, B and t of the frame and subframe section please refer to the figure below.

Figure 1.6

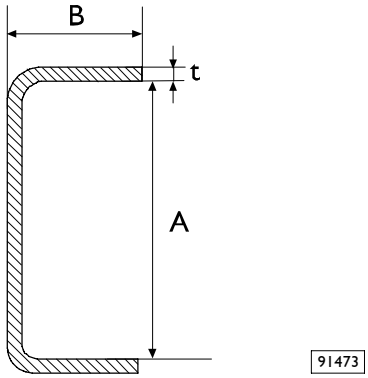

SECTION 2

Chassis modifications

Page

2.1	General instructions for chassis modifications	2-5
2.1.1	Specific Precautions	2-5
2.2	Painting and Rust Protection	2-7
2.2.1	Original components	2-7
2.2.2	Added or modified painted parts	2-9
2.2.3	Precautions	2-10
2.2.4	Max indicative height of center of gravity of payload in relation to transverse stability	2-11
2.3	Drilling the Chassis	2-12
2.3.1	Screws and nuts	2-12
2.3.2	Characteristics of the material to be used when modifying the chassis	2-13
2.3.3	Stresses on the chassis	2-14
2.3.4	Welding the Chassis	2-15
2.3.5	Closing of existing holes	2-17
2.4	Modifying the Wheelbase	2-18
2.4.1	General Specifications	2-18
2.4.2	Approval	2-18
2.4.3	Effects on the steering	2-19
2.4.4	Effect on braking	2-19
2.4.5	Recommended procedure	2-20
2.4.6	Chassis Stress Level	2-21
2.4.7	Cross Members	2-21
2.4.8	Changes to transmissions	2-21
2.5	Modifying the Rear Overhang	2-22
2.5.1	General specifications	2-22
2.5.2	Reducing the Overhang	2-22
2.5.3	Increasing the Overhang	2-22

Index

Page

2.6	Installing a Towing Device	2-24
2.6.1	General Specifications	2-24
2.6.2	Traditional towing hooks	2-25
2.6.3	Towing hook for central axle trailers	2-26
2.6.4	Mid-axled trailer (with rigid drawbar)	2-26
2.6.5	Lowered Rear Cross Member	2-31
2.6.6	Centre axle trailers: towing cross member in lowered and forward positions (short hook)	2-33
2.6.7	Reinforcement of Standard Rear Cross Member	2-33
2.6.8	Tow hooks for Centre Axle Trailers	2-34
2.6.9	Remarks about the Payload	2-34
2.6.10	Increasing the Towable weight	2-34
2.7	Installing a Supplementary Axle	2-35
2.7.1	General Specifications	2-35
2.7.2	Chassis Frame Reinforcement	2-35
2.7.3	Installing a Rear Supplementary Axle	2-36
2.7.4	Steering Axles	2-38
2.7.5	Components and Suspension	2-38
2.7.6	Stabilisers	2-38
2.7.7	Connection to the Chassis Frame	2-38
2.7.8	Brake system for additional axle	2-39
2.7.9	Raise Device	2-39
2.7.10	Modifying the suspension	2-40
2.7.11	Changing a Mechanical Suspension into a Pneumatic or Mixed Suspension	2-40
2.8	Modifying the Drive Line	2-41
2.8.1	Permitted lengths	2-41
2.8.2	Determining Driveshaft Positions	2-43
2.9	Modification of the Engine Air Intake and Exhaust Syatem	2-46
2.9.1	Intake	2-46
2.9.2	Vertical Exhaust	2-47

Page

2.10	Modification of the Engine Cooling System	2-48
2.11	Installation of a Supplementary Heating System	2-49
2.12	Installation of an Air Conditioning System	2-50
2.13	Cab Modifications	2-51
2.13.1	General Specifications	2-51
2.13.2	Roof Panel Modifications	2-51
2.14	Changing the Size of the Tyres	2-52
2.15	Modifications to the Braking System	2-54
2.15.1	General Specifications	2-54
2.15.2	Brake Pipes	2-54
2.15.3	Electronic braking system control devices	2-59
2.15.4	Taking air from the system	2-59
2.16	Electrical System: Modifications and Drawing-Off Power	2-60
2.17	Repositioning Parts and Mounting Auxiliary Assemblies and Equipment	2-60
2.18	Carrying hazardous goods ADR	2-62
2.19	Retarder installation	2-64
2.20	Modifications to the Rear Underrun	2-65
2.21	Rear Mudguards and Wheel Boxes	2-66
2.22	Mudflaps	2-67
2.23	Side Guards	2.68
2.24	Chocks	2-70

2.1 General instructions for chassis modifications

Changes must be performed according to criteria contained in related paragraphs below.

Particular attention must be given to the following points:

- **Welding to the bearing structures of the chassis is explicitly prohibited** (with the exception of the items described at points 2.3.4, 2.4 e 2.5);
- **Holes in the flanges of the side members are not permitted** (except for the items described at point 3.4);
- Where riveted connections exist and can be modified as explained below, these can be replaced by flanged-head screws and nuts of min. class 8.8 or by hex screws of the next greater diameter and self locking nuts. Screws greater than M14 must not be used (max. diameter of hole 15 mm) unless otherwise specified.
- In cases where the original joints were detached and rejoined with bolts it is forbidden to reuse the same bolts. In this event and when rivets are replaced with bolts, the bolt torque must be checked after the vehicle has been driven approximately 500 - 1.000 kms.

2.1.1 Specific Precautions

During the welding, drilling, grinding and cutting operations when working in the proximity of brake lines and particularly if these are of plastic material or electric wiring, care must be taken to ensure their protection. Where necessary they should be removed (comply with the provisions given at points 2.15.2 and 5.5).

Figure 2.1

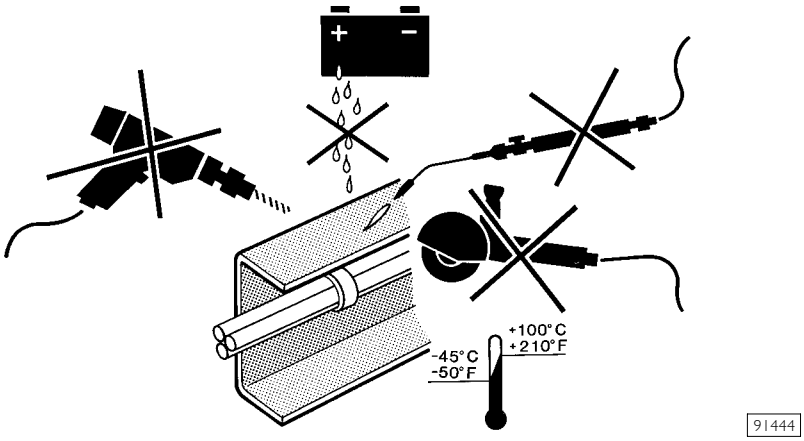

Take precautions concerning the alternator and the electrical/electronic components

In order to avoid damaging the diode rectifier, never disconnect the batteries (or open the isolator) when the engine is running. If the vehicle has to be tow started make certain that the batteries are connected. Should it be necessary to charge the batteries, disconnect them from the vehicle circuit.
In order to run the engine with external means and in order to avoid current peaks which might damage the electric/electronic components, do not use the "start" function in conjunction with external charge devices if such devices are equipped with this function. Starting will have to be carried out only with the external battery trolley ensuring correct polarity.

Earth connections

As a general rule the original earth connections of the vehicle must not be changed. If it is necessary to move these connections or to implement further earth points use the existing holes on the chassis as far as possible and:

- Remove, mechanically, and/or with an appropriate chemical product, the paint on the chassis side and on the terminal side creating a resting plane free from indentations or ridges.
- Apply appropriate high conductivity paint between the cable terminal and the metal surface (e.g. galvanizing paint IVECO Part number 459622 by PPG).
- Connect the earth cables within 5 minutes from the application of the paint.

Do not use the IVECO standardised M1 (battery earth connection) M2, M8 (earth connection for started motor depending on the driving position) points for the earth connections for control switches (e.g. sensor or low absorption devices).

With regard to the electronic devices, avoid linking earth connections between the devices; only use single wire earths with optimised lengths (as short as possible).

Specifications and standards for correct installation of wires in electrical systems

Power cables (+ direct) must be fed on their own into corrugated piping (of appropriate diameter) and not together with other smaller cables (signal and negative cables); they must be spaced a minimum distance of 100 mm apart (reference value = 150 mm) from high heat sources (engine turbine, exhaust manifold,...) and a distance of at least 50 mm must be maintained from chemical agent containers (batteries, etc.).

The same prescription is applicable with regard to the proximity to moving parts.

The passage of cables through openings and over sharp edges of sheet metal must be protected by means of cable glands (in addition to the flexible conduit covering).

The flexible conduit must protect the cable entirely and it must be joined (with shrink wraps or by taping) to the rubber caps on the terminals. In addition, the clamps securing the flexible conduit (cut longitudinally) must not deform it; this precaution prevents the risk of cables coming out of the conduit or coming into contact with the cut edge of the conduit.

All connection clamps (+) for the above cables and their terminals must be protected by sealed rubber in areas exposed to atmospheric agents with the possible risk of standing water.

Fixing of the cable lugs to the terminals (including negative terminals) must be assured in such a way as to prevent them working loose, applying tightening torque wherever possible and arranging the lugs in a star configuration in the case of multiple connections (to be avoided if possible).

The route of the cables in question must be defined as far as possible with dedicated brackets and ties that are close enough together to avoid loose sections and provide the possibility (and obligation) to reconstruct the same installation in the event of repairs or the installation of additional equipment.

In the case of connection between the chassis-tilting cab, the position of the cable harness must be checked with the cab in its driving position and when tipped, in order to identify any points of interference or pulling, which must be corrected.

2.2 Painting and Rust Protection

2.2.1 Original components

Table 2.1 shows the protection and painting classes required for original vehicle components. Table 2.2 shows classes for unpainted or aluminium parts and table 2.3 shows classes for painted parts.

Table 2.1 - Protection classes as for STD 18 - 1600 (Schedule I)

Class	Features of the part	Examples of the type of part
A	Parts in direct contact with atmospheric agents	Cab, rear view mirrors, cab fixing components
B	Parts in direct contact with atmospheric agents with mostly structural characteristics, directly visible	Chassis and related parts, including fixing components and parts under the hood
B1		Rear and front axles
C	Parts in direct contact with atmospheric agents, not directly visible	Engine and related parts
D	Parts not in direct contact with atmospheric agents	Pedals, seat frames, fixing components, internal cab pillars

Table 2.2 - Various unpainted and/or aluminium parts and components

Material	Type of protection		Class					
			A		B - B1		C	D
Stainless steel	-		yes		-		-	-
Ferrous	chemical coating		DAC 500/8/PL GEO 321/8/PL (*) GEO 321/8/PM (*)	(1)	DAC 320/5 GEO 321/5 (*) GEO 500/5 (*)	(1)	- - -	- - -
	Zinc treatment	(2)						
	FE/ZN 12 III		-		-		yes	yes
	FE/ZN 12 IV (*)		-		-			
	FE/ZN 12 V		-		yes		-	-
	FE/ZN 12 IV S (*)		-		yes		-	-
Aluminium	Anodizing		yes		yes		yes	yes
	Painting		yes		-		-	-

(*) Hexavalent chromium-free

(1) I.S. 18-1101

(2) I.S. 18-1102

Table 2.3 - Painted parts as for STD 18 - 1600 (Schedule III)

		A	B (5)	B1	C	D
Mechanical surface cleaning (including the removal of burrs / rust and cleaning of modified parts)	Sand blasting	-	yes •	-	yes •	yes •
	Brushing	yes •				
	Sanding					
Pre-treatment	Degreasing	-	-	-	yes •	yes •
	Phosphate degreasing					
	Phosphating of the heavy iron		yes •			
	Phosphating of the zinc	yes				
Cataphoretic treatment	High thickness (30-40 μm)	yes (1)	yes (4)•	-	yes (6)•	yes •
	Low thickness (15-25 μm)	yes (2)				
	Acrylic to finish (>35 μm)	-				
Anti-rust	Bicomponent (30-40 μm)	-	yes (7)	-		
	Monocomponent (30-40 μm)		-	yes		
Chip-resistant base	Mono (130 °C) or bicomponent (30-40 μm)	yes (2)	-	-	-	-
Paint	Mono (130 °C) or bicomponent (30-40 μm)	yes	yes •	-	yes •	yes •
	Powders (50-60 μm)	yes (3)	yes			
	Monocomponent at low temperature (30-40 μm)	-	-	yes		

(1) = Cycle for two-coat preparation.

(2) = Cycle for three-coat preparation.

(3) = Alternative to the mono or bicomponent paint, only for cab parts (windscreen wipers, rear view mirrors, etc.)

(4) = Excluding parts that cannot be immersed in pre-treatment and paint baths, due to their geometry (air tanks), their large size (castings) or where this would compromise their functionality (mechanical parts).

(5) = For ferrous steel or pre-coated fuel tanks, refer to Table 2.3.

(6) = Only parts fitted on the engine.

(7) = Parts that cannot be treated cataphoretically (4).

• = Alternative products and cycles for the same class, as long as they are compatible with the part being treated.

NOTE All components installed on chassis must be painted as per Sta Iveco 18-1600 Colour IC444RAL 7021 brightness 70/80 gloss.

2.2.2 Added or modified painted parts

All parts of the vehicle (cab, chassis, bodywork, etc.) which are added or subjected to modification must be protected from rust and corrosion.

There must be no unprotected areas on ferrous materials.

Table 2.4 (painted) and Table 2.5 (unpainted) show the minimum treatments required for modified or added components when it is not possible to provide the same protection as that used on IVECO original components. Different treatments are allowed on condition that the same level of protection against rust and corrosion is guaranteed.

Never use powder enamels directly after degreasing.

Parts in light alloy, brass and copper must not be protected.

Table 2.4 - Added or modified painted parts

Description of the cycle phase	Class
	A - B - D (1)
Mechanical surface cleaning (including the removal of burrs / rust and cleaning of modified parts)	Brushing/sanding/sand blasting
Pre-treatment	Degreasing
Anti-rust	Bicomponent (30-40μm) (2)
Paint	Bicomponent (30-40μm) (3)

(1) = Modifications to rear axles, front axles and engine (Classes B1 and C) are not allowed.

(2) = Preferably epoxy.

(3) = Preferably polyurethane.

Table 2.5 - Added or modified unpainted and/or aluminium parts

Type of protection	Type of protection	Class	
		A - B (1)	D
Stainless steel		yes	-
Ferrous	chemical coating		-
	Zinc treatment	-	yes
Aluminium	Anodizing	yes	yes
	Painting	-	-

(1) = Modifications to rear axles, front axles and engine (Classes B1 and C) are not allowed.

2.2.3 Precautions

Suitable precautions must be taken to protect those parts whose preservation and operation could be damaged by paints such as:

- rubber or plastic pipes for the air and hydraulic installations;
- gaskets, parts in rubber or plastic;
- flanges of the transmission shafts or power take-offs;
- radiators;
- shock absorber and hydraulic or air cylinder rods;
- drainage and bleeder valves (mechanical components, air tanks, cold starting heater plug pre-heating tanks etc.);
- fuel sediment filter;
- nameplates and logos.

With particular regard to the engine and its electric and electronic components, adequate precautions must be taken to protect:

- the whole engine and vehicle wiring, including earth contacts;
- all connectors on sensor/actuator side and wiring side;
- all sensors/actuators, on flywheel, on flywheel rev sensor bracket;
- the whole diesel fuel system pipes (plastic and metallic);
- complete diesel fuel filter base;
- control unit and control unit base;
- the whole soundproofing cover inner side (injectors, rail, pipes);
- common rail pump including regulator;
- vehicle electric pump;
- tank;
- front belt circuit and relevant pulleys;
- power steering pump and relevant piping;
- ECU's fitted on the vehicle.

If the wheels are removed, protect the contact surfaces on the hubs, avoid increasing the thickness and especially avoid the build-up of paint on the connecting flanges of the wheel disks and contact points of the fixing nuts.

Ensure that the disc brakes are adequately protected.

The electronic components and modules must be removed.

When the painting operation is to be completed by oven drying (max. temp. 80°C), all parts which may be damaged by exposure to heat (e.g. all electronic control units), must be removed.

2.2.4 Max indicative height of center of gravity of payload in relation to transverse stability 1)

Table 2.6

Models	Base equipment with anti roll bars				Max indicative height of center of gravity (including body or equipment) in relation to the ground (mm)
	Front		Rear		
	1	2	1	2	
AT/AD 260P	×		×	×	2720
AT/AD 260FP	×		×	×	2680
AT/AD 260H	×		×	-	2780
AT/AD 260W	×		×	-	2890
AT/AD 330H	×		×	-	2600
AT/AD 330W	×		×	-	2620
AT/AD 380H	×		×	-	2510
AT/AD 380W	×		×	-	2520
AT/AD 340H	×	-	×	-	2290
AT/AD 410H/HB	×	-	×	-	2510

Notes:
1) = Values refer to the transverse stability of the vehicle.
X = with standard anti-roll bar
- = without anti-roll bar
SW = to request roll bar

2.3 Drilling the Chassis

When it is necessary to mount assemblies or auxiliary units on the chassis, as a general rule, the existing holes made at the factory should be used.

It is absolutely forbidden to drill holes on vehicle longitudinal wings, except as mentioned at para 3.3.

In specific cases (application of brackets, corner sections etc.) where it is necessary to make new holes, the holes must be made on the upright rib of the rail and must be properly deburred and reamed.

Position and Size

The new holes must not be made in areas of high stress (such as supports for springs) and at variance with the cross-section of the side member.

The diameter of the holes must be proportional to the thickness of the steel. Under no circumstances must this exceed 15 mm unless otherwise specified. The distance from the centre of the hole to the edges of the side member must not be below 40 mm. The centres of the holes must never be located at a distance of less than 45 mm from each other or in relation to the existing holes. The holes must be staggered as shown in Figure 2.2. When moving spring support or crossmembers, the same drilling arrangement must be used.

Figure 2.2

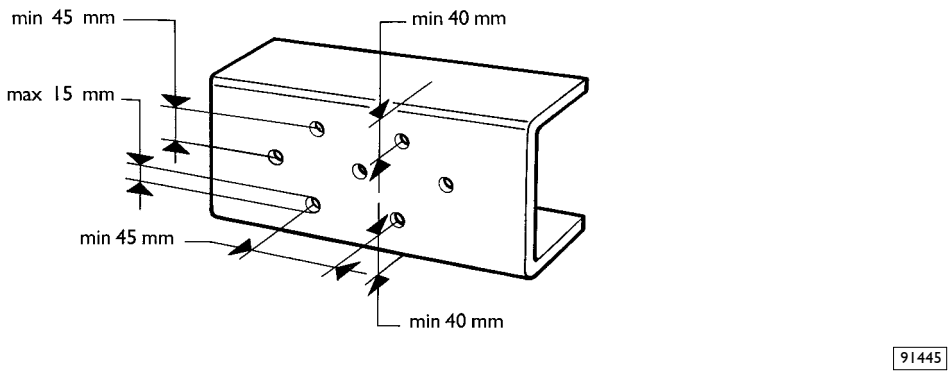

2.3.1 Screws and nuts

In general, use connectors of the same type and class as those for similar fixings on the original vehicle (Table 2.7).

As a general rule, materials of class **8.8** are recommended. Class **8.8** and **10.9** screws must have been hardened and tempered. For applications of diameter 6mm, stainless steel parts are recommended. Approved finishes are Dacromet and zinc coating, as detailed in Table 2.2. A Dacromet finish is not recommended if the screws are to be subjected to welding. If space allows, use screws and nuts with flanged heads. Use self-locking nuts. Nuts must be tightened using a torque wrench set to the correct torque setting for the fixing.

Table 2.7 - Classes of resistance for screws

Class of resistance	Usage	Tensile strength (N/mm^2)	Yield point (N/mm^2)
4 (1)	Non-load bearing screws	400	320
5.8 (1)	Low resistance screws	500	400
8.8	Medium resistance screws (cross members, cleat plates, brackets)	800	640
10.9	High resistance screws (spring supports, anti roll bars and shock absorbers)	1000	900

(*) Do not use

2.3.2 Characteristics of the material to be used when modifying the chassis

When modifying the chassis of the vehicle, and in applications which reinforce the side members directly, the material used must correspond in quality (Table 2.8) and thickness (Table 2.9) to that of the original chassis.

Should it not be possible to source materials of the thickness indicated, the next greater thickness may be used (e.g. 1 mm instead of 6.1 mm).

Table 2.8 - Material to be used to modify the chassis

Steel name		Tensile strength (N/mm^2)	Yield point (N/mm^2)	A5 elongation
IVECO	FeE490	610	490	19%
Europe	S500MC			
Germany	QStE500TM			

Alternatively, just for rear overhang extension.

IVECO	Fe510D	520	360	22%
Europe	S355J2G3			
Germany	QSt52-3N			
UK	BS50D			

Table 2.9 - Chassis section dimension and thickness

Models	AxBxt longitudinal pitch section (See Figure 1.6)
AT-AD190, AT-AD190W, AT-AD260, AT-AD260W, AT-AD340	289x80x7.7
AT-AD380, AT-AD380W, AT-AD 410, AT-AD 410W	289x80x10

IVECO recommends the following chassis extension pieces, available from the Spare Part Division are used for chassis extensions.

Dimension (mm)	Length (mm)
289X80X7,7	2000
289X80X10	2000

2.3.3 Stresses on the chassis

Do not exceed the following stress values under static conditions:

Table 2.10

Range	Permitted static stress on the chassis (N/mm^2), σ_{amm}
	Off-road use
Trakker	100

When required by national regulations, the bodybuilder must check that the stress limits are not exceeded.

Welding activity will cause a deterioration in the characteristics of the material. Therefore, when checking the stresses in thermically-modified zones, consider a reduction of approx. 15% of the resistance characteristics.

2.3.4 Welding the Chassis

Welding operations must only be carried out by specialist, trained personnel, using suitable equipment and in a perfectly workmanlike manner. Any intervention on the system not carried out as per instructions provided by IVECO or carried out by unskilled staff, might severely damage the on-board systems, thus adversely affecting vehicle operation safety and efficiency and causing damages not covered by warranty.

Welding is permitted:

- when joining sidemembers to extend or shorten the wheelbase or rear overhang.
- for the application of reinforcing L section flitch on a side member that is to be modified as detailed below (see Figure 2.3).

Figure 2.3

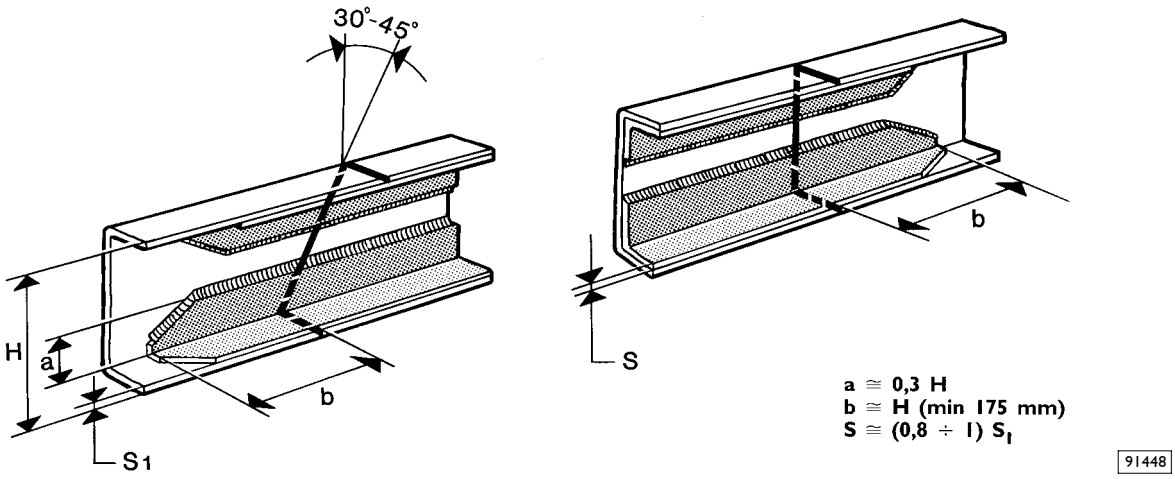

When of arc welding, the instructions below must be followed in order to protect electric units and ECUs:

- before disconnecting power cables, check to ensure all electrical items are switched off;
- where an electric switch is installed (battery isolation switch) wait for cycle end;
- disconnect negative power pole;
- disconnect positive power pole without connecting it to ground and DO NOT short circuit it with negative pole;
- disconnect ECUs connectors, carefully and do not touch ECU connector pins;
- if welding next to an ECU, remove the ECU from vehicle;
- connect welding machine ground directly to the part to be welded;
- protect plastic pipes against heat sources and remove, if necessary;
- if welding near leaf springs or air springs protect against welding spatters;
- avoid electrode or gun contact with spring leaves.

Operations for welding preparation

As part of the procedure it will be necessary to remove the paint and deoxidise the parts of the chassis that are affected by the welding operation as well as those parts which may have to be covered by possible reinforcements. When work has been completed the modified part must be protected with adequate rustproofing (see point 2.2.2).

a) Cut the side members with a diagonal or vertical cut. (We recommend that the diagonal cut be used particularly for the section between the wheelbase) Cuts are not permitted in areas in which the profile of the side member as well as the chassis width change or in those where there is a high concentration of stresses (e.g. spring brackets). The cuts must not be made through the holes present in the side member (see Figure 2.4).

Figure 2.4

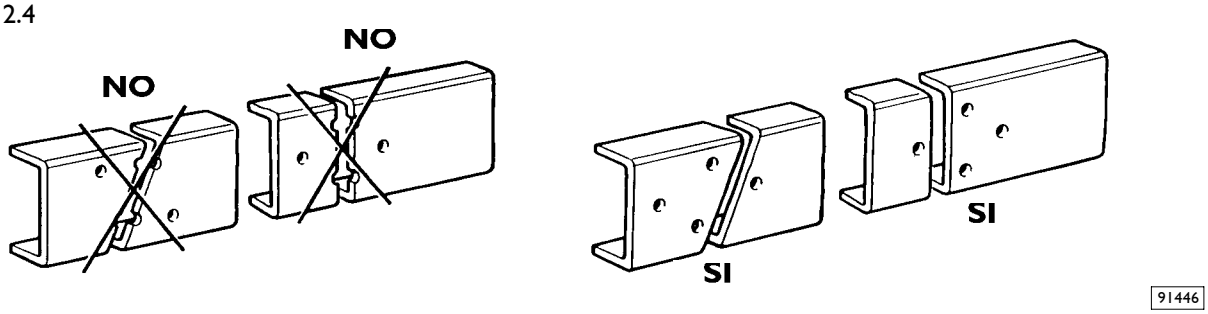

b) on the inner side of the side member give the parts that are to be joined a V-shaped chamfer of 60° along the entire length to be welded (see Figure 2.5).

c) arc weld in stretches using carefully dried basic electrodes. The recommended electrodes are:

for S 500 MC (FeE490: QStE 500TM; BS 1449 HS50-45)
Diameter of the electrode is 2.5 mm, current intensity approx. 90A (max. 40A for each millimetre of diameter of the electrode).
Using MIG-MAG welding use a welding rod with the same characteristics as the material to be welded (diameter 1 to 1.2 mm).
Recommended welding rod: DIN 8559 - SG3 M2 5243
gas DIN 32526-M21 or DIN EN 439
If FeE490 is used at very low temperatures, we recommend:
PrEN 440 G7 AWS A 5.28 - ER 80S - Ni 1
gas DIN EN439-M21
Avoid current overloading. Welding must be free from marginal cuts and waste material.

d) Repeat the operation on the reverse side by welding as detailed in point **c)**.

e) Allow the side members to cool slowly and uniformly. Cooling by air, water or other means is not permitted.

f) Remove excess material resulting from the welding operations by grinding.

Figure 2.5

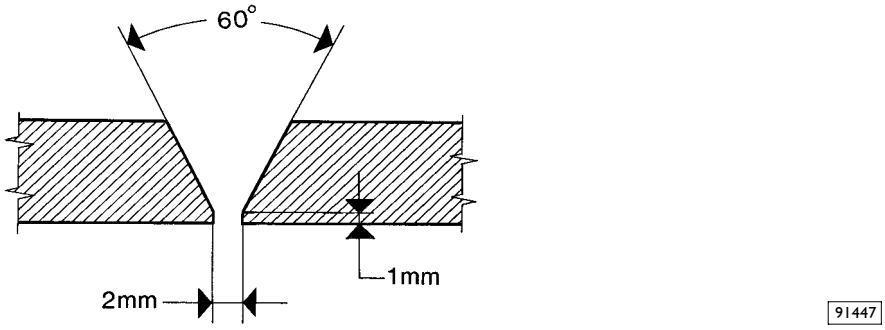

g) On the inner side reinforcing L-section flitches should be applied. These should be made of steel and have the same characteristics as the steel used for the chassis. The minimum dimensions are given in Figure 2.3.
The reinforcements may only be fixed to the vertical web of the side member using welding beads, plug welds, bolts or rivets (Huck rivets may also be used).
The cross-section and the length of the weld bead, the number and distribution of the plug welds, bolts or rivets must be adequate to transmit the bending and shearing moment of the section.

2.3.5 Closing of existing holes

If, when making new holes, the existing holes are found to be too close (see Figure 2.2) these may be closed up by welding. To ensure the success of this operation the outer edge of the hole should be chamfered and copper plate used for the inner part. For holes with a diameter of over 20 mm, chamfered plugs may be used, welded on both sides.

2.4 Modifying the Wheelbase

2.4.1 General Specifications

Any change to the wheelbase affecting the electrical circuits and/or entailing a relocation of the electrical/electronic components must be approved and performed according to the instructions provided in chapter 5.

As a rule, for each vehicle, modification to the wheelbase must be carried out on the standard wheelbase above or closer to the new wheelbase required.

The measurements given in the written authorisations will apply in all cases particularly for extensions made to the longest standard wheelbase.

Frame cutting must be performed according to the indications given at point 2.3.4. Whenever permitted by the body size, wheelbases should be made equal to those planned in our production. This enables the original transmission shafts and previously defined cross-member positions to be used.

When wheelbase values in excess of those laid down as standard by Iveco are introduced, take particular care to comply with limits laid down by national law. In particular, ensure the vehicle is within the required dimension range (where applicable). Use only material indicated at the 2.3.2 point.

2.4.2 Authorisation

The alteration of the wheelbase for the 4x2 versions is permitted without specific approval by IVECO in the following cases:

- if the wheelbase is to be lengthened and the new value is still within the standard range of length with the same side member section. These sizes are given in the specific technical documentation or in Table 2.8 and Table 2.9.
- if the wheelbase is to be shortened without falling below the standard minimum values established for each model.

Provided the chassis converter gives sufficient guarantees from the technological and control point of view (qualified personnel, adequate operating processes, etc.).

For the 6x4 and 8x4 versions the wheelbase may only be modified following specific approval by IVECO. This also applies to 4x4, 6x6 and 8x8 vehicles with four wheel drive, where it is particularly necessary to consider the distributor gear position.

Conversion must be carried out performed in compliance with these instructions by making the necessary changes and adjustments and taking the appropriate precautions (e.g., determining whether ECU parameters need updating, rearranging the exhaust pipes, ensuring compliance with specific load limits on the rear axle, etc.), by taking into due account the requirements specified for the original wheelbase lengths.

2.4.3 Effects on the steering

When required by current law, apart from complying with dimension limits, also ensure that the vehicle does not exceed the specified limits in terms of effort on the steering wheel with the associated inscribability times (e.g. the current ECE Regulation or EC Directive).

Table 2.11 contains, the wheelbase extension limits for the various models, with series drive, at max load admissible on front axle and with tires admissible on vehicle.

Should vehicles with longer wheelbase be needed, for special applications, it will be necessary to fit various devices aimed at improving the steering characteristics such as a reduction in the maximum permitted load on the front axle or the installation of wheels and tyres with shorter kingpin offset values (Table 2.17).

The fitting of an additional pump and a dual circuit power steering unit, if not immediately available, will require authorisation and must only be installed by an authorised workshop.

2.4.4 Effect on braking

Generally, shortening the wheelbase has a negative effect on braking characteristics.

Table 2.11 gives the wheelbase alteration limits. Ask an authorised IVECO dealer for the conditions (brake cylinder, minimum tare settings see section, technically permitted masses, tyres, height of centre of gravity) under which these values are permissible.

Table 2.11 - Maximum permitted wheelbase lengthening depending on the load on the front axle and tyre dimensions (ECE - R79/01 regulation and EG/70/311)

	Maximum load on the front axle (kg)	Maximum load on the rear axle (kg)	Maximum PTT (kg)	Maximum wheelbase value (mm)	Steering wheel dia. (mm)	B_t: caster trail (mm) (*)
4x2	8500	13000	21000	5100	470	139
4x4	9000 9000	13000 13000	21000 21000	4500 3800	510 470	164 164
6x4	8000 9000 9000 9000	2 * 9500 2 * 9500 2 * 9500 2 * 16000	28000 28000 28000 38000	5100 4500 5100 4500	470 470 510 510	139 139 139 139
6x6	9000 9000	2 * 9500 2 * 16000	28000 40000	4500 3820	510 510	164 164
8x4x4	2 * 9000	2 * 16000	48000	5820	470	132
8x8x4	2 * 9000	2 * 16000	48000	5820	470	151

(*) See figure 2.6

Figure 2.6

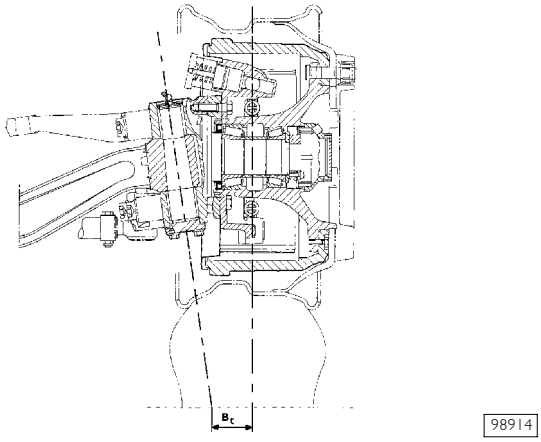

2.4.5 Recommended procedure

To ensure the success of the conversion proceed as follows:

- Arrange the vehicle so that the chassis is perfectly level, using the appropriate stands.
- Disconnect the propeller shafts, the braking system pipes, the wiring harness and any equipment that might prevent the work being carried out correctly.
- Identify the reference points on the chassis (e.g. pilot holes, suspension supports).
- Mark the reference points with a light line of punch marks on the top flange on both side members after ensuring that their joining line is perfectly at right-angles to the longitudinal axis of the vehicle.
- When re-positioning the spring hanger brackets, identify the new position using the reference marks made previously.
  Check that the new measurements are identical between the left and right sides. Differences no greater than 2 mm should emerge from diagonal checking of the lengths less than 1,500 mm.
  Unless another tool is available, make new holes by using the supports and gussets of the cross members as a template.
  Fix the supports and cross members with rivets or bolts. If using bolts, fix the supports by reaming the holes and using class 10.9 calibrated bolts with nuts equipped with a device that prevents them from working loose. When space permits it use flanged-head screws and nuts.
- If cutting the chassis, make a second line of reference points so that the area affected by the modification is included between these and the previous points (in any event ensure a distance of not less than 1500 mm. measured when the work has been completed). Inside these two reference lines make points to mark out the area of the cut then proceed as indicated in point 2.3.4.
  Before welding, ensure that the side members, including any added portion, are perfectly aligned and take measurements on both sides and diagonally to check, as previously described. Fit the reinforcements as instructed at point 2.3.4.

Further indications

- Protect the surfaces from oxidation as described in point 2.2.2.
- Restore the electrical and braking systems as described in points 2.15 and 5.5.
- For changes to the drive line follow the instructions given in point 2.8.

2.4.6 Chassis Stress Level

When lengthening a wheelbase, in addition to local reinforcement on the side member joint, the bodybuilder must provide sufficient reinforcements to achieve the section modulas of the side member section no lower than that designed by IVECO for the same wheelbase or for next size up. Alternatively, when permitted by local regulations, larger subframe sections can be used.

When required by national regulations the bodybuilder must check that the stress limits are not exceeded. In any event such stress must be no greater than that of a chassis with the original wheelbase assuming that the load is evenly distributed and taking the chassis to be a beam resting on the spring hanger brackets.

When extending out from the longest original wheelbase the reinforcements must depend on the length of the extension, the type of body built and the use to which the vehicle is to be put.

2.4.7 Cross Members

The necessity of fitting one or more additional cross members depends on the length of the extension, the location of the transmission shaft support, the welding area, the introduction points of the forces produced by the body and the condition under which the vehicle is to be used.

Any supplementary cross members must have the same features as those already existing (flexural strength, torsional strength, quality of the material, connection to the side members, etc). Figure 2.7 shows an example. A cross member is mandatory for any extension over 600 mm.

As a general rule the distance between the two cross members must not be greater than 1,000 to 1,200 mm.

Minimum distance between two cross-members shall not be lower than 600 mm for vehicles intended for heavy-duty applications; this restriction does not apply to the "light" cross-member supporting the transmission.

Figure 2.7

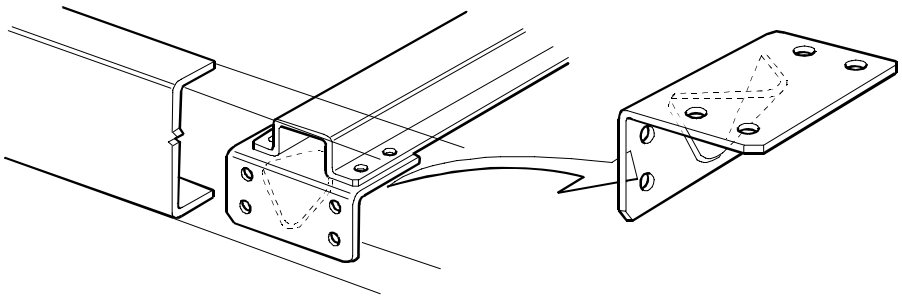

91449

2.4.8 Changes to transmissions

See chapter 2.8 for admissible changes.

2.5 Modifying the Rear Overhang

2.5.1 General specifications

In modifying the rear overhang it must be borne in mind that such modification entails changes in the distribution of the payload on the axles relative to the loads established by IVECO (see point 1.13). The limitations established by national laws must also be respected as well as the maximum distance from the rear edge of the body and the ground clearance prescribed for the tow hook and the underrun bar. The distance from the extremity of the chassis to the rear edge of the body must not, as a general rule, exceed 350 to 400 mm.

Should the bolted rear cross member be re-positioned, the same standard type of connections should be maintained (i.e. number of screws, dimensions, class of resistance).

When re-positioning rear cross members fastened by rivets, these can be replaced by flanged nuts and bolts with same diameter or by class 8.8 hexagonal-headed screws with the next largest diameter. Use self-locking nuts (do not use bolts with a diameter larger than M14).

When the installation of a tow hook is planned an adequate distance (approximately 350 mm) must be left from the rear cross member to the next nearest cross member for mounting and removing the tow hook wherever necessary.

If the modifications are carried out competently and in compliance with the specifications contained in this manual, the towable weight originally established may be retained. In any case responsibility for the work rests with those who have carried it out.

Authorisation

Extensions to rear overhang, up to a value of 65% (2-axle vehicle) or 70% (3 an 4 axle vehicle) of the distance between centre lines, as well as shortening up to the shortest standard overhang available for the frame of the relevant vehicle type do not require any approval by IVECO, provided they are carried out in accordance with these guidelines.

If it proves necessary modify the length of the electrical circuits, see chapter 5 "Special instructions for electronic subsystems".

2.5.2 Reducing the Overhang

If the rear overhang of the chassis has to be reshortened (e.g. in the case of tippers) the last cross member must be moved forward.

If, when reducing the length of the overhang, the rear cross member is found to be too close to an existing cross member, the latter must be removed if it does not affect the suspension supports.

2.5.3 Increasing the Overhang

Various methods of increasing the length are given in Figures 2.8 and 2.9.

The connection of the added section is to be carried out in compliance with the specifications given in point 2.2.4.

The frame may be straight cut. The minimum dimensions of the reinforcements the are to be fitted to the modified section are given in Figure 2.3.

Modifying the Rear Overhang

Figure 2.8 shows a typical method of extension for increases of 300 to 350 mm. In this case the reinforcing L-bars, which also serve to connect the cross member and the chassis frame, must be of the same thickness and width as the original gusset plate. The connection of the cross member and the plates, originally achieved with rivets, may be made with class 8.8 bolts with the next larger diameter.

In those cases where the joint between the cross member and the gusset plate is made by means of a weld, it is permissible to join the gusset plate to the reinforcement by welding (see Figure 2.8).

When the increase exceeds 350 mm, Figure 2.9 shows the procedure to be used.

Figure 2.8

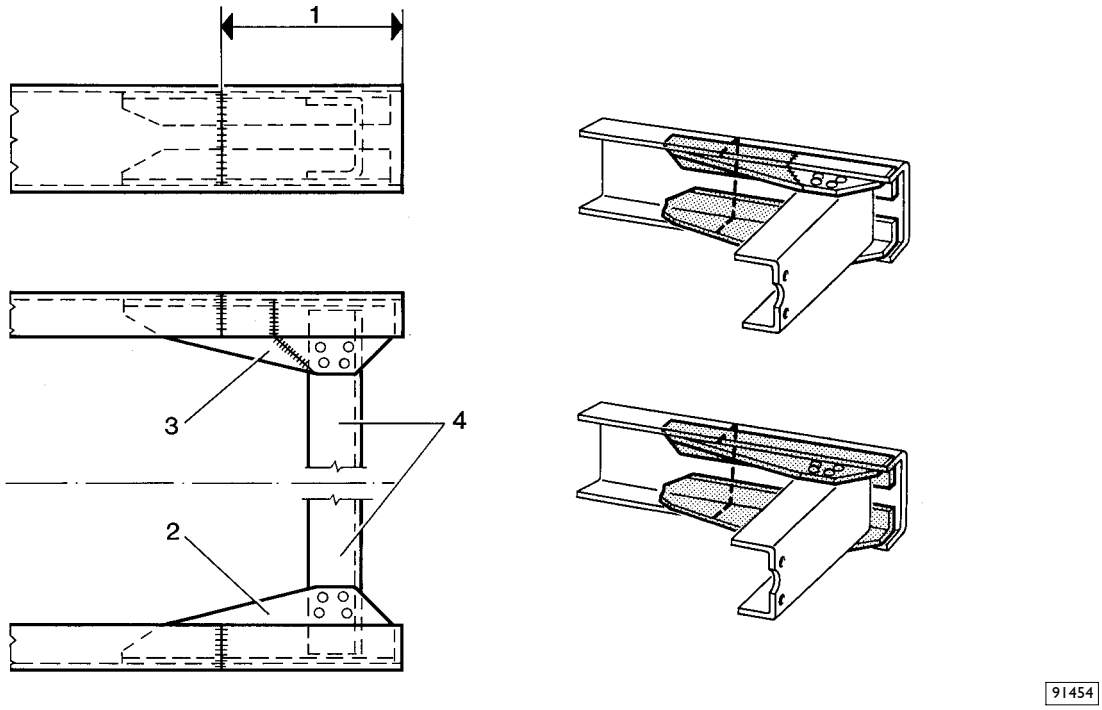

1. Added portion - 2. Reinforcing runner - 3. Reinforcing runner (alternative solution) - 4. Original rear cross member

Figure 2.9

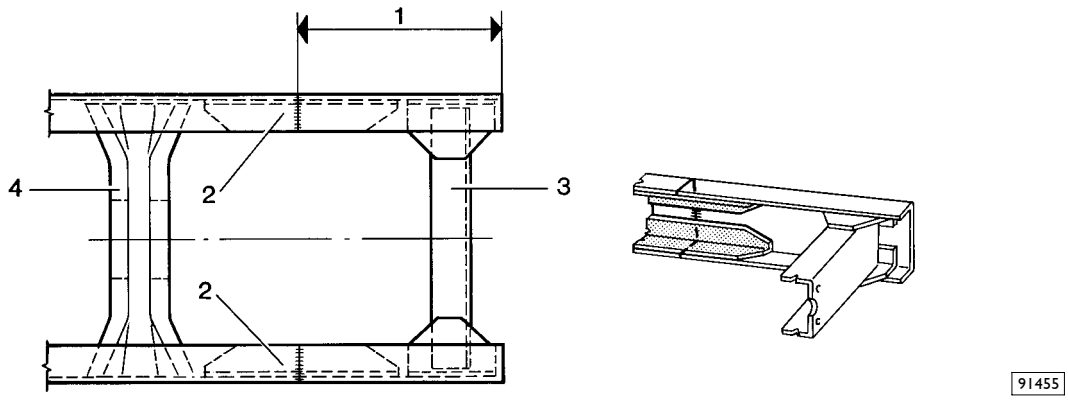

1. Added portion - 2. Reinforcing runner - 3. Original rear cross member - 4. Supplementary cross member (if necessary)

So will be necessary to examine on a case by case basis, the feasibility of installing a supplementary cross member to give the frame sufficient torsional rigidity. Adding a supplementary cross member with the same properties as the standard production cross member is necessary whenever the distance between two cross members is greater than 1,200 mm.

2.6 Installing a Towing Device

2.6.1 General Specifications

Without prior authorisation, the installation of a tow-hook is permissible only on those cross members which are intended for that use and on those vehicles which IVECO has intended for towing a trailer.

The subsequent installation of a tow hook in vehicles for which the installation of a tow hook was not originally contemplated, must be authorised by IVECO.

In addition to the permissible towing weight, the authorisation will specify all other possible specifications that are to be adhered to such as the use of the vehicle, the transmission ratio, the type of braking system as well as possible specifications concerning reinforcements to be applied to the rear cross member or the necessity for employing specially intended cross members.

In trailers with one or more axles close together (centre axle trailers), considering the stress resulting in particular from the vertical dynamic load to which the rear cross member is subjected, the instructions given in point 2.6.4 must be taken into account.

The tow hook must be appropriate for the permitted loads and of the type approved by national laws.

Since tow hooks are important to vehicle driving safety (in some countries they must be specifically certified) they must not be modified in any way.

When mounting the tow hook to the cross member, the specifications of the hook manufacturer as well as the limitations imposed by current standards - such as minimum space required for the brake and electrical connections the maximum distance between the swivel hook axis and the rear edge of the body - must be respected.

This may vary as a function of national standards. In the European Community a maximum of 420 mm can be reached. If higher values are required, check the EC Directive for the conditions to be able to accomplish this.

Should the fixing holes in the flange of the coupling hook not match the holes in the rear towing crossmember of the vehicle then in certain cases re-drilling may be authorised in specific cases after applying appropriate reinforcements.

It is the bodybuilder's responsibility to ensure that no part of the body or structure creates a hazard or impairs the maneuverability of the trailer.

The trailer drawbar must be free to move unobstructed.

2.6.2 Traditional towing hooks

Choice of hook for traditional trailers

The reference dimension for choosing the type of hook is defined by value D calculated as defined below.

Figure 2.10

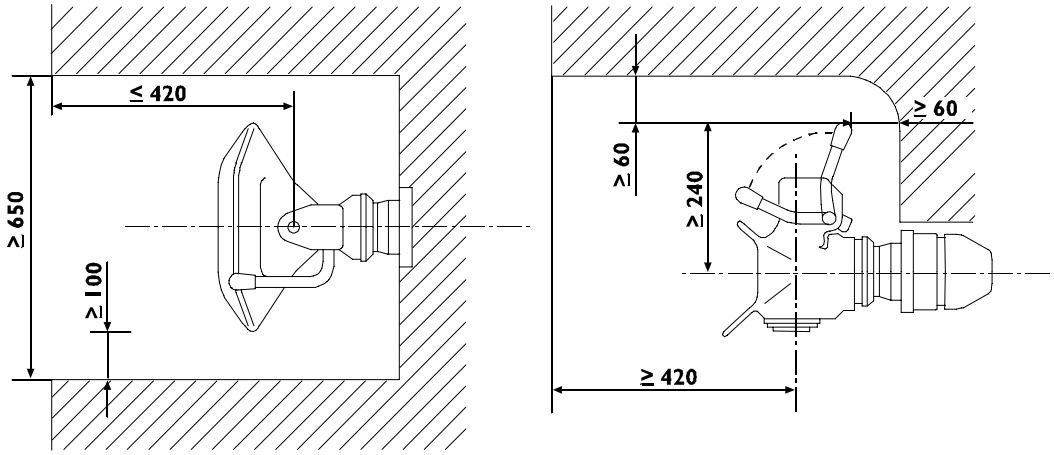

Free area for towing hooks

116773

When selecting the appropriate hook and for the use of reinforcements for the rear cross member (where necessary), the effect of the horizontal forces produced by the weight of the tractor and trailer must be taken into account in accordance with the following formulas:

$$D = 9.81 \times \frac{T \times R}{T + R}$$

D = Representative value of the hook class (kN)
T = Maximum weight of tractor, in t.
R = Maximum weight of trailer, in t.

2.6.3 Towing hook for central axle trailers

Ball Hooks

When fitting a ball hook IVECO will supply on request, information regarding the points at which the hook structure can be connected to the chassis.

The carrier assembly must conform to current legislative norms and the work carried out will be the responsibility of the bodybuilder. Upon request, IVECO will supply designs for the construction of carrier assemblies specifically planned by IVECO.

Should assembly of a ball-type hook require modification to the underrun bar, such modification must not affect the original stiffness and resistance specifications (local government regulations where these exist should be complied with).

The bodybuilder must, upon request, submit the required documentation to prove compliance with the legal regulations.

2.6.4 Mid-axled trailer (with rigid drawbar)

The use of trailers with centre axles (rigid tow bar trailers with single or tandem axles), with respect to articulated tow bar trailers, entails an increase in bending stress on the rear chassis overhang as well as an increased torsional stress of the rear towing cross member resulting from the vertical static and dynamic loads which the tow bar exerts on the hook (for example when braking or on bumpy roads).

On vehicles for which towing of a trailer is permitted and in accordance with values laid down by IVECO for each model, towable weights with mid-axled trailers on the 1° rear axle and vertical loads on the drawbar may be defined on the basis of the size of the drilling flange present on the vehicle rear beam (see Table 2.12).

With long rear overhangs, it may be necessary to adopt larger subframe sections than normal depending on the towable weights (see Table 2.12).

If central axle trailers are to be used, the connection of chassis frame to subframe will be carried out from the rear overhang to the front support on the rear suspension with cleat plates or by strengthening the existing connections with shear-resistant reinforcing (see Figure 2.11).

The values indicated in Table 2.12 however, are subject to confirmation on a case by case basis subject to the conditions which will be specified in the authorisation, such as the use of the vehicle, the adoption of a suitable braking system, the installation of a cross member with a greater capacity or reinforced, or of appropriate tow hooks etc.

Table 2.12

Dimensions of flange (mm) (hook class)		Max. vertical loads permitted on hook (kg)		Maximum towable weight (kg) for centre-axle trailers R
		Static S	Total load* (static+dynamic) Fv	
120x55 (G135 or G3)		650	1690	6500
140x80 (G140 or G4)		900	2340	9000
160x100	(G150	950	2470	9500
	G5	1000[2]	2960[2]	12000[2]
	G6	1000[3]	4040[3]	18000[3]
	81 G5	1000[3]	4400[3]	20000[3]
	700G61)	1000[3]	5120[3]	24000[3]

* Indicative values determined according to ISO/TCC22/SCI5/WG4 Annex A through the following formula Fv = 3 y C y 0.6 + S

2 Feasible with reinforced cross member and suitable tow hook

3 Admissible on models with reinforced cross-member and suitable towing hook.

The value of the maximum (static + dynamic) vertical load transmitted by the trailer to the hook can be determined more accurately through the following ISO formula:

$$Fv = a \cdot x^2/l^2 \cdot C \cdot 0.6 + S$$

Fv = Max vertical load (static + dynamic) transmitted by the trailer to the tow hook (kN)

a = Vertical acceleration in the drawbar/towing hook coupling area; depending on the rear suspension of the tractor for semi-trailer, use the following values:

- a = 1.8 m/sec^2 for vehicles with pneumatic suspension (or equivalent)
- a = 2.4 m/sec^2 for vehicles with other suspension types

x = Total length in mms of the loading area of the trailer (m).

l = Length of the trailer wheelbase (distance between drawbar towing eye centre and axle centre or trailer axle centre line) in m.

C = Total weight of trailer, R, minus the static load applied S (all values expressed in tons).

S = Static support load (kN)

0,6 = Deceleration factor

Figure 2.11

Chassis reinforcement for centre axle trailers:

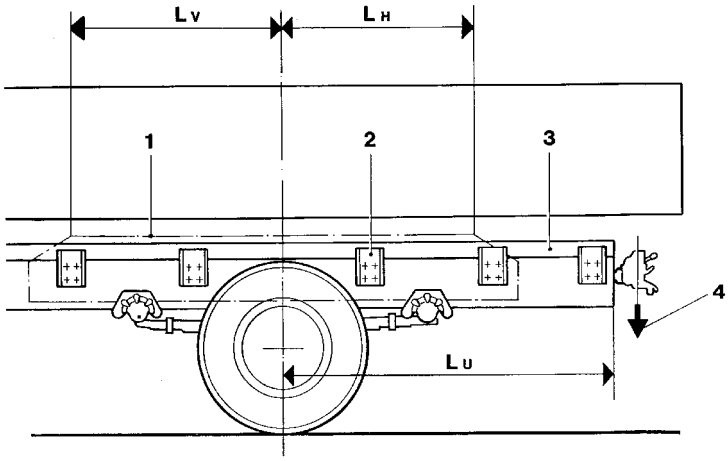

91458

1. Combined reinforcement - 2. Shear resistant connections (cleat plates) - 3. Subframe longitudinal runner - 4. Vertical load on tow hook

Table 2.13 - Longitudinal subframe profiles for centre axle trailers

Section modulus Wx of subframe member (cm^3) (Yield point of material used=360N/mm^2)												
Model	**Chassis profile A xB (mm)**	**t (mm)**	**Wheel-base (mm)**	**Rear over-hang (mm)**	**R = Maximum trailer mass (kg) S = Static vertical load (kg)**							
					R≤9500	**R≤12000**	**R≤14000**	**R≤16000**	**R≤18000**	**R≤20000**	**R≤22000**	**R≤24000**
AT-AD190	289 x 80	7,7	3800	1195	A	A	A	A	A	A	A	A
			4200	1195	A	A	A	A	A	A	A	A
			4500	1780	A	A	A	A	A	A	A	A
			4800	2365	A	A	A	A	A	A	A	A
			5100	2365	A	A	A	A	A	A	A	A
AT-AD190W	199/289 x 80	7,7	3800	1195	A	A	A	A	A	A	A	A
			4200	1195	A	A	A	A	A	A	A	A
			4500	1780	A	A	A	A	A	A	A	A
AT-AD190W/P	199/289 x 80	7,7	3800	1217	A	A	A	A	A	A	A	A
			4200	1217	A	A	A	A	A	A	A	A
			4500	1802	A	A	A	A	A	A	A	A
AT-AD260 19t on rear axle	289 x 80	7,7	3200	1225	A	A	A	A	A	A	A	A
			3500	1495	A	A	A	A	A	A	A	A
			3820	1495	A	A	A	A	A	A	A	A
			4200	1135	A	A	A	A	A	A	A	A
			4500	1990	A	A	A	46	46	46	46	57
			4800	1495	A	A	A	A	A	A	A	A
			5100	1585	A	A	A	46	46	46	46	57
AT-AD260 21t on rear axle	289 x 80	7,7	3200	1225	A	A	A	A	A	A	A	A
			3500	1495	A	A	A	A	A	A	A	A
			3820	1495	A	A	A	A	A	A	A	A
			4200	1135	A	A	A	A	A	A	A	A
			4500	1990	A	46	46	46	46	57	74	74
			4800	1495	A	A	A	A	A	A	A	A
			5100	1585	A	46	46	46	46	57	74	74
AT-AD260/P 19t on rear axle	289 x 80	7,7	3200	1217	A	A	A	A	A	A	A	A
			3500	1487	A	A	A	A	A	A	A	A
			3820	1487	A	A	A	A	A	A	A	A
			4200	1127	A	A	A	A	A	A	A	A
			4500	1982	A	A	A	46	46	46	46	57
			4800	1487	A	A	A	A	A	A	A	A
			5100	1577	A	A	A	46	46	46	46	57
AT-AD260/P 21t on rear axle	289 x 80	7,7	3200	1217	A	A	A	A	A	A	A	A
			3500	1487	A	A	A	A	A	A	A	A
			3820	1487	A	A	A	A	A	A	A	A
			4200	1127	A	A	A	A	A	A	A	A
			4500	1982	A	46	46	46	46	57	74	74
			4800	1487	A	A	A	A	A	A	A	A
			5100	1577	A	46	46	46	46	57	74	74
AT-AD260B	289 x 80	7,7	3200	685	A	A	A	A	A	A	A	A
			3500	685	A	A	A	A	A	A	A	A
			3820	685	A	A	A	A	A	A	A	A
AT-AD260B/P	289 x 80	7,7	3200	767	A	A	A	A	A	A	A	A
			3500	767	A	A	A	A	A	A	A	A
			3820	767	A	A	A	A	A	A	A	A
AT-AD380 19t on rear axle	289 x 80	10	3200	1495	A	A	A	A	A	A	A	A
			3500	1495	A	A	A	A	A	A	A	A
			3820	1495	A	A	A	A	A	A	A	A
			4200	2080	A	A	A	A	A	A	A	A
			4500	2080	A	A	A	A	A	46	74	74
AT-AD380 22t on rear axle	289 x 80	10	3200	1495	A	A	A	A	A	A	A	A
			3500	1495	A	A	A	A	A	A	A	A
			3820	1495	A	A	A	A	A	A	A	A
			4200	2080	A	A	A	A	A	46	74	74
			4500	2080	A	A	A	A	A	46	74	74
AT-AD380 32t on rear axle	289 x 80	10	3200	1495	A	A	A	A	A	A	A	A
			3500	1495	A	A	A	A	A	A	A	A
			3820	1495	A	A	A	A	A	A	A	A
			4200	2080	89	105	135	135	135	135	150	150
			4500	2080	89	105	135	135	135	135	150	150

Table 2.13 - Longitudinal subframe profiles for centre axle trailers (continues)

Section modulus Wx of subframe member (cm^3) (Yield point of material used=360N/mm^2)												
Model	**Chassis profile A xB (mm)**	**t (mm)**	**Wheel-base (mm)**	**Rear over-hang (mm)**	**R = Maximum trailer mass (kg) S = Static vertical load (kg)**							
					R≤500	**R≤12000**	**R≤14000**	**R≤16000**	**R≤18000**	**R≤20000**	**R≤22000**	**R≤24000**
AT-AD380/P, AT-AD380B 19t on rear axle	289 x 80	10	3200 3500 3820 4200 4500	1495 1495 1495 2080 2080	A A A A A	A A A A A	A A A A A	A A A A A	A A A A A	A A A A 46	A A A A 74	A A A A 74
AT-AD380/P, AT-AD380B 22t on rear axle	289 x 80	10	3200 3500 3820 4200 4500	1495 1495 1495 2080 2080	A A A A A	A A A A A	A A A A A	A A A A A	A A A A A	A A A 46 46	A A A 74 74	A A A 74 74
AT-AD380/P, AT-AD380B 32t on rear axle	289 x 80	10	3200 3500 3820 4200 4500	1495 1495 1495 2080 2080	A A A 89 89	A A A 105 105	A A A 135 135	A A A 135 135	A A A 135 135	A A A 135 135	A A A 150 150	A A A 150 150
AT-AD260W	199/289 x 80	7,7	3500 3820	1490 1490	A A	A A	A A	A A	A A	A A	A A	A A
AT-AD380W 22t on rear axle	199/289 x 80	10	3500 3820	1490 1850	A A	A A	A A	A A	A A	A A	A A	A A
AT-AD380W 32t on rear axle	199/289 x 80	10	3500 3820	1490 1850	A 74	A 74	A 74	A 74	A 89	A 89	A 105	A 105
AT-AD340	289 x 80	7,7	4250 4750 5020 5820	685 1225 1495 1225	A A A A	A A A A	A A A A	A A A A	A A A A	A A A A	A A A A	A A A A
AT-AD340/P	289 x 80	7,7	4250 4750 5020	767 1217 1487	A A A	A A A	A A A	A A A	A A A	A A A	A A A	A A A
AT-AD340B	289 x 80	7,7	4250 4750 5020	1000 1000 1000	A A A	A A A	A A A	A A A	A A A	A A A	A A A	A A A
AT-AD340B/P	289 x 80	7,7	4250 4750 5020	992 992 992	A A A	A A A	A A A	A A A	A A A	A A A	A A A	A A A
AT-AD410 21t on rear axle	289 x 80	10	4250 4750 5020 5820	1225 1225 1495 1225	A A A A	A A A A	A A A A	A A A A	A A A A	A A A A	A A A A	A A A A
AT-AD410 32t on rear axle	289 x 80	10	4250 4750 5020 5820	1225 1225 1495 1225	A A A A	A A A A	A A A A	A A A A	A A A A	A A A A	A A A A	46 46 46 46
AT-AD410/P 22t on rear axle	289 x 80	10	4250 4750 5020 5820	1217 1217 1487 1217	A A A A	A A A A	A A A A	A A A A	A A A A	A A A A	A A A A	A A A A
AT-AD410/P 32t on rear axle	289 x 80	10	4250 4750 5020 5820	1217 1217 1487 1217	A A A A	A A A A	A A A A	A A A A	A A A A	A A A A	A A A A	46 46 46 46
AT-AD410B 22t on rear axle	289 x 80	10	4250 4750 5020	1225 1225 1495	A A A	A A A	A A A	A A A	A A A	A A A	A A A	A A A

Table 2.13 - Longitudinal subframe profiles for centre axle trailers (continues)

Section modulus Wx of subframe member (cm^3) (Yield point of material used=360N/mm^2)												
Model	**Chassis profile A xB (mm)**	**t (mm)**	**Wheel-base (mm)**	**Rear over-hang (mm)**	**R = Maximum trailer mass (kg) S = Static vertical load (kg)**							
					R≤500	**R≤12000**	**R≤14000**	**R≤16000**	**R≤18000**	**R≤20000**	**R≤22000**	**R≤24000**
AT-AD410B 32t on rear axle	289 x 80	10	4250 4750 5020	1225 1225 1495	A A A	A A A	A A A	A A A	A A A	A A A	A A A	46 46 46
AT-AD410W	289 x 80	10	4750	855	A	A	A	A	A	A	A	A

NOTE See Table 3.2 (section bar dimensions)

Table 2.14 - Combined section reinforcement runner profiles (Figure 3.4)

	A	**B**	**C or D**	**E**	**F**	**G**
Material yield point (N/mm^2)	≤ 320	≤ 320	≤ 240	≤ 240	≤ 360	≤ 360
Max. runner profile height reduction (mm):	40	60	100	120	100	120
Combined reinforcements length L_V : L_H :	 $0.5.L_U$ $0.6.L_U$	 $0.5.L_U$ $0.6.L_U$	 $0.8L_U$ $0.95L_U$	 $0.85L_U$ $1.0.L_U$	 $0.8.L_U$ $0.95.L_U$	 $0.85.L_U$ $1.0.L_U$
Example: Combined section as an alternative to the channel section C250x80x8 (mm)	210X80X8	190X80X8	150x80x8 + straight section 15x80	130x80x8 + straight section 15x80	150x80x8 + angle section	130x80x8 + angle section
Actual height reduction (mm)	40	52	85	97	92	104

The continuity of combined reinforcement runners can be interrupted only in special cases and is subject to authorisation. Similarly, when it is difficult to apply an external reinforcing L section (items F and G Figure 3.4) - owing to the presence of suspension mountings or air spring connection brackets - and the recessing to be performed could excessively reduce the section's resisting capacity, the adopted solution will require special authorisation.

2.6.5 Lowered Rear Cross Member

If the type of trailer used requires that the tow hook be positioned lower than originally intended, IVECO may issue authorisation for the original cross member to be lowered or for an additional cross member (of the original type) to be fitted in a lower position. Figures 2.12 and 2.13 give some examples of how this is done.

The installation of the new cross member in its new position must be carried out in the same manner as before, using the same type (diameter and class) of bolt.

Figure 2.12

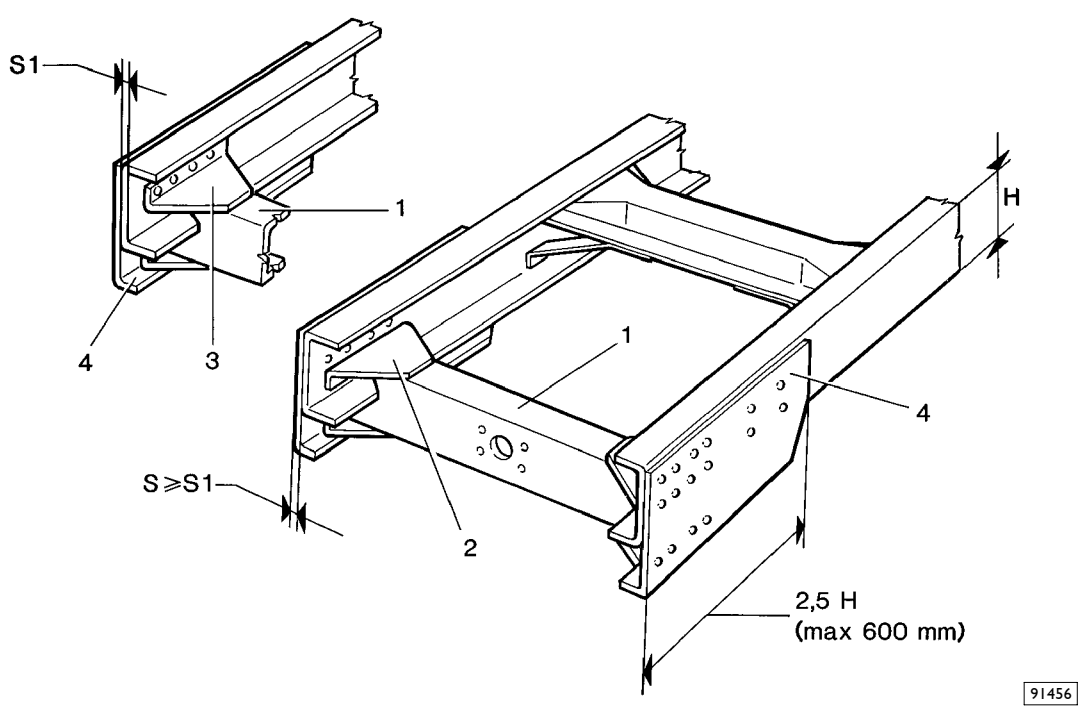

1. Original rear cross member - 2. Gusset - 3. Upside-down gusset - 4. Connecting angle piece

The thickness of the outer reinforcing angles must not be less than the thickness of the side members of the vehicle. They must cover a length which is at least 2.5 times the height of the side member itself (maximum 600 mm) and be made of material with the properties indicated in point 3.1.1. The angles are to be attached to the web of the side members using all the bolts joining the cross member to the frame, integrating them with the other bolts so that, as a result of their number and location, they will take into account the greater moment transmitted. As a general rule, when the cross member is lowered by an amount equivalent to the height of the side member, the number of bolts is increased by about 40%.

When an additional cross member is installed (see Figure 2.13) a central joining plate with a thickness commensurate with that of the cross members, must be employed.

A device to prevent the bolts from loosening must be adopted for the joints.

Figure 2.13

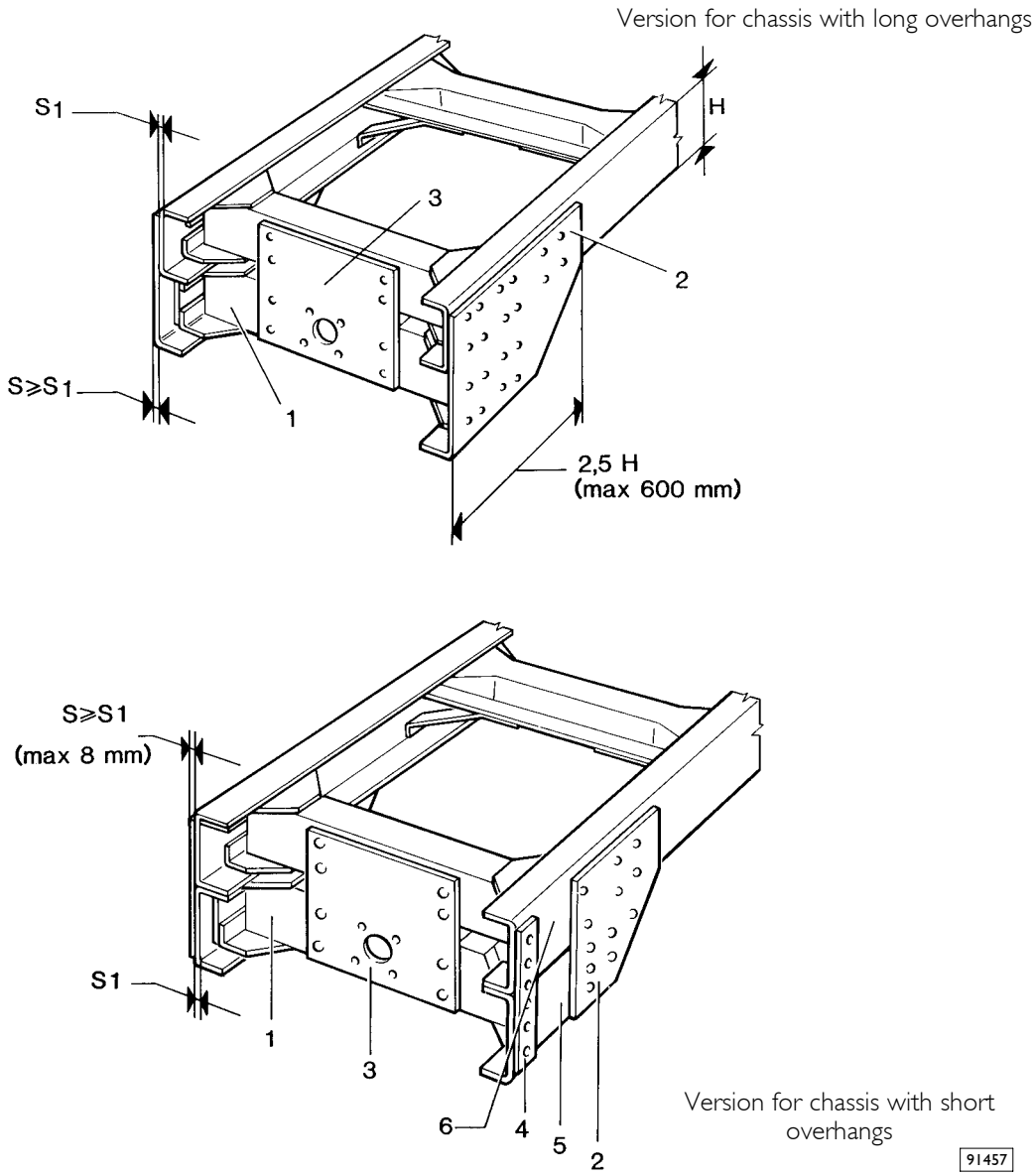

1. Original rear cross member - 2. Connecting angle piece - 3. Connecting plate - 4. Gusset plate - 5. Pressed steel channel sections (same size as chassis) - 6. Space for rear sprung support

Assurance should be given that the movements between the tow bar and vehicle conform to current regulations. As a general rule, the original towable mass can be confirmed by IVECO. In any event the responsibility for the work carried out will rest with the bodybuilder.

The vehicle must be presented for inspection if local government regulations require it.

Figure 2.13 shows an example of a lowered supplementary cross member.

When this solution is applied to short rear overhang vehicles, the external connecting plates must conform to the arrangement described in Figure 2.13. Should the brackets of the underrun bar be modified, following the lowering of the rear cross member, the new version will be equivalent to the original in terms of attachment, strength and stiffness and the positioning of the lights checked for compliance with the standards (local standards where applicable).

2.6.6 Centre axle trailers: towing cross member in lowered and forward positions

Vehicles designed to tow centre axle trailers for which a final cross member located in a lowered or forward position (next to the rear suspension rear mountings or air springs) is evisaged, do not require particular chassis reinforcing devices. For the subframe, the runner profile dimensions indicated for the different types of equipmen t (e.g. see Table 3.1 standard bodies) will be sufficient. The bodybuilder will accurately work out the size and position of the chassis connection structure (see items 2.3 and 2.6.5) and make use of a suitable cross member and an appropriate towing hook.

The tow hook position will be such to permit any movement between vehicle and trailer drawbar according to the various conditions of use, to comply with the required safety margins and the standards and legal regulations in force (where applicable). In these cases the standard underrun bar cannot be used, and the bodybuilder will investigate the possible permitted changes from specifications or the specific solutions to adopt (e.g. tilt type underrun bar).

2.6.7 Reinforcement of Standard Rear Cross Member

When it is necessary to reinforce the standard cross member and when original cross members are not available, the bodybuilder will provide suitable reinforcements for which he shall be responsible.

These reinforcements may consist of C-sections mounted on the inside of the cross member. Care must be taken to ensure that the connections between the cross member and the side members are also reinforced following the procedures recommended below, whenever stronger enforcements are required:

1) The mounting of a channel section on the inside of the cross member and joining it to the vertical web of the side member or to the following cross member of the chassis, if it is situated in close proximity, in compliance with the procedures illustrated in Figure 2.14.

Figure 2.14

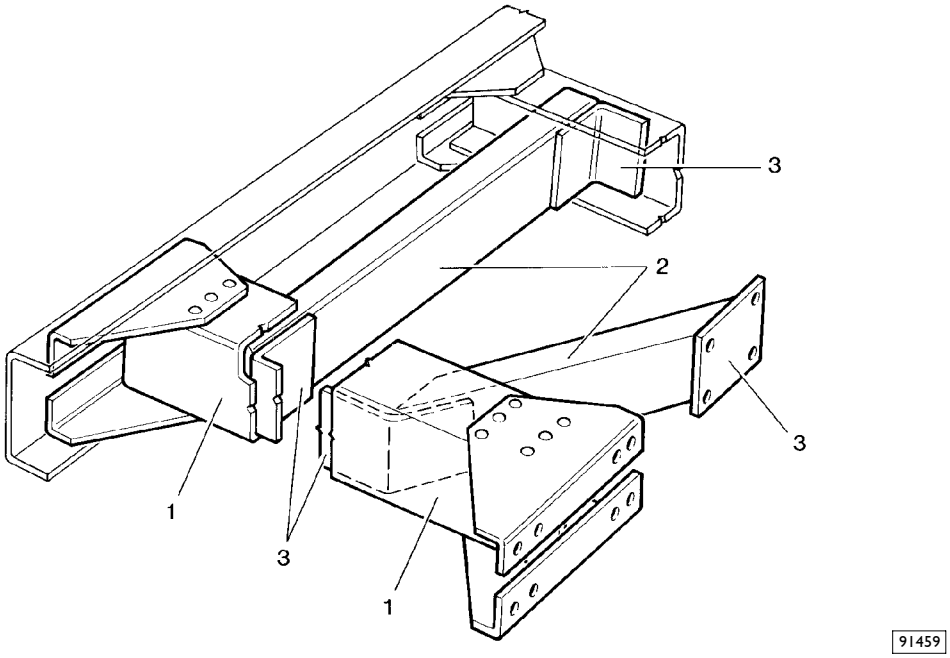

1. Original cross member - 2. Reinforcing rail - 3. Connecting angle pieces or plates

2) Mounting a box section of suitable dimensions underneath the cross member, anchored at the extremities to the vertical web of the side members and joined at the centre of the cross member as shown in Figure 2.16.
In vehicles having a short rear overhang and a subframe, the box section can be fitted within the subframe sections, above the cross-member, and connected to it by means of a plate (as shown in Figure 2.13).

Should box-section assembly require modification to underrun bar plates the original requirements for fastening, resistance and stiffness must be met (comply with local government regulations if any).

Figure 2.15

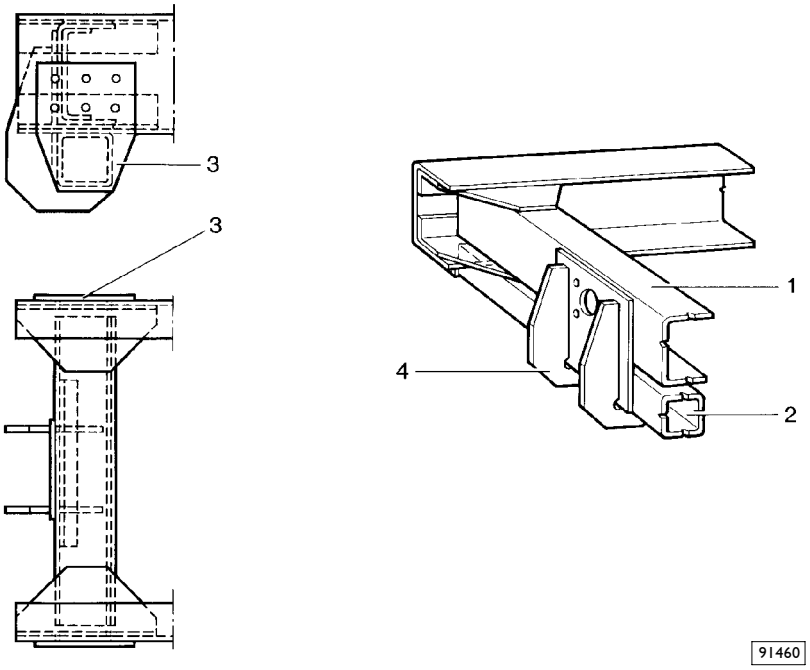

1. Original rear cross member - 2. Box section - 3. Connecting plate - 4. Ribbing plate

2.6.8 Tow hooks for Centre Axle Trailers

The use of centre axle trailers involues the use of tow hooks suitable for this purpose.

The values of the trailer loads and of the permissible vertical loads are contained in the technical documentation of the manufacturer of the tow hook or on the production data plate (e.g. DIN 74 051 and DIN 74 052).

There are also tow hooks with special type approval, whose values are greater than the ones mentioned in the above standards. These hooks may in any case be subjected to restrictions depending on the trailers used (e.g. drawbar length). In addition this can imply that the rear cross member should be further reinforced and a subframe runner of larger size be fitted.

2.6.9 Remarks about the Payload

It should be ascertained that the static drawbar load does not cause the allowable load on the rear axle or axles to be exceeded and that the required minimum load acting on the front axle is adhered to (see point 1.13.3). This requires a corresponding reduction and irregular distribution of the payload toward the front end.

2.6.10 Increasing the Towable weight

For those vehicles which IVECO regards as suitable for towing a trailer, a request may be submitted to evaluate the possibility of authorising a towable weight exceeding that which is normally permitted.

Such authorisation will include the conditions that must be complied with and, where necessary, specifications concerning modifications and work to be carried out on the vehicle.

These include possible reinforcements to the standard cross member (see Figure 2.14), the instructions for installing a reinforced cross member when available, and those on the brake system to be made.

The tow hook must be suitable for the new use. Its connecting flange must match that of the cross member.

To fasten the cross member to the chassis frame, preferably use flanged head nuts and bolts or hex head screws of minimum class 8.8. Use self-locking nuts.

2.7 Installing a Supplementary Axle

The installation of an additional axle has heavy repercussions on the vehicle systems; in particular, it has a critical impact on the braking system, the compressed air system, the wiring harness and the MUX interconnection systems. Accordingly, the addition of an extra axle must be approved by IVECO and must be performed according to the instructions given in chapter 5 "Special instructions for electronic subsystems".

2.7.1 General Specifications

On certain models IVECO may authorise, upon request, the installation of a supplementary axle and, consequently, an increase in the total weight of the vehicle.

The modification must respect the weight limitations and the conditions imposed by IVECO as well as all other conditions that may be imposed by national laws and such that are necessary to ensure the safety and proper functioning of the vehicle.

Diagrams of the installation procedure may be submitted for inspection. These proposals must indicate the parts necessary to connect the axle to the chassis as well as the reinforcements to, and modifications of the chassis. It is also necessary to submit diagrams showing the changes made to the systems. Documentation on the changes must be available at all times.

Changes made to the frame must be compatible with the guidelines given in the following paragraphs.

For all what concerns changes to be made to chassis, follow the instructions contained in paragraphs above.

In view of the increased stresses due to the increase in permissible load, and in consideration of the different phases of the dynamic stresses in operation as a result of the different reactions on the chassis when the axle is added, it is necessary to provide appropriate reinforcements to the chassis.

These reinforcements must in all cases satisfy all provisions of local applicable laws. The chassis that has thus been modified must not be subject to flexural stresses greater than those of the original chassis in the corresponding sections.

2.7.2 Chassis Frame Reinforcement

Figure 2.16 illustrates possible ways of modifying the chassis. The reinforcements must be continuous and must span the length of the entire frame of the vehicle up to the driver's cab. For their attachment to the side member - when using L-bars - class 8.8 reinforcement bolts must be used and their diameter and distribution must be such to enable the section reinforcements to provide the required strength.

Figure 2.16

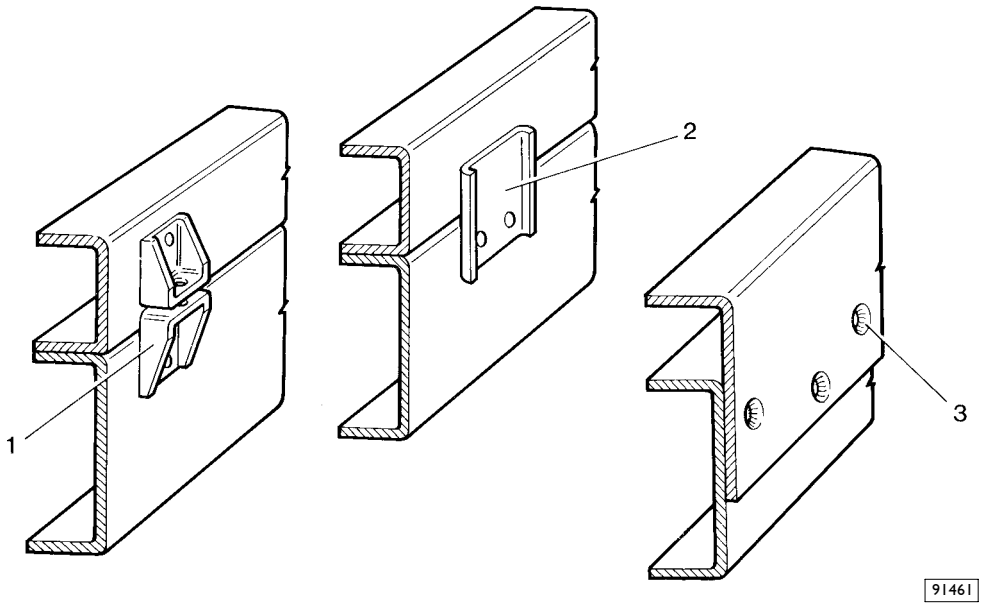

1. Bracket - 2. Plate - 3. Screws, rivets or dia. 20 to 30 mm holes to be filled with welding

Where an auxiliary frame is required as reinforcement (see point 3.1), the body mounting brackets on the chassis (if any) should be used for the attachment. An alternative method of attachment is shown in section 3.1.2 and those that follow it.

We recommend using shear resistant connections in the area of the rear overhang up to approximately the mid wheelbase (or to a point no closer than 2 m from the front axle) (see Figure 2.17).

The fitting of reinforcing plates directly onto the flanges of the side members, using holes filled with welded material is not permitted. This is to avoid affecting the strength of the original sections caused by poor welding.

This procedure is only permitted in special cases with specific IVECO authorization when there are proven difficulties in subsequent body applications.

The reinforcement on the chassis can be omitted provided the following static stress values are not exceeded: 100 N/mm^2

Any limitations, imposed by national regulations must be complied with.

If the installation is unavoidable, because of the deterioration of the material's properties due to the welding process, in checking the load-effects acting on the various sections, it is advisable to assume a reduction of 15% in the strength of the material.

As a general rule the thickness of the reinforcing plate must not exceed that of the flange of the original chassis. The mounting must be carried out by skilled personnel and the bodybuilder will be responsible for any damage to the frame resulting from poor workmanship.

2.7.3 Installing a Rear Supplementary Axle

The installation of a rear supplementary axle generally implies that the chassis overhang should be lengthened, the extension must be carried out in compliance with the specifications given in point 2.5.3 relating to the modifications of the chassis, leaving the reinforcements mentioned above unaffected.

When an additional axle is added to the overhang with a section depth smaller than the depth within the wheelbase area the adjustment of the section to give a higher value could be a solution towards reducing the stress arising from the conversion.

Figure 2.17 shows an example of the installation of a rear axle with an extension of the rear overhang.

Figure 2.17

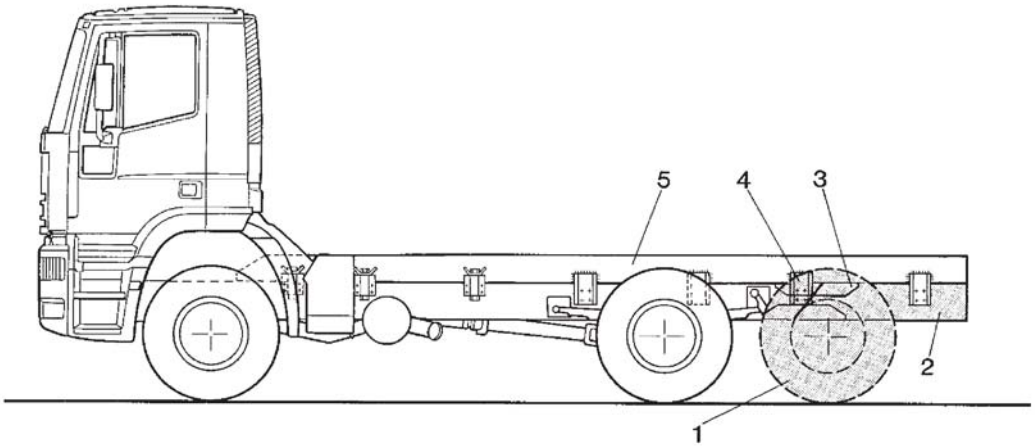

91141

1. Added supplementary axle - 2. Extension to the overhang - 3. Reinforcements for the modification of the chassis - 4. Connections - 5. Reinforcing runner

Installing an Intermediate Supplementary Axle

The installation of an additional axle in a forward (intermediate) position relative to the drive axle may require a possible reduction in the rear overhang (see point 2.5.2) in order to obtain the proper distribution of the weights (see Figure 2.18).

Figure 2.18

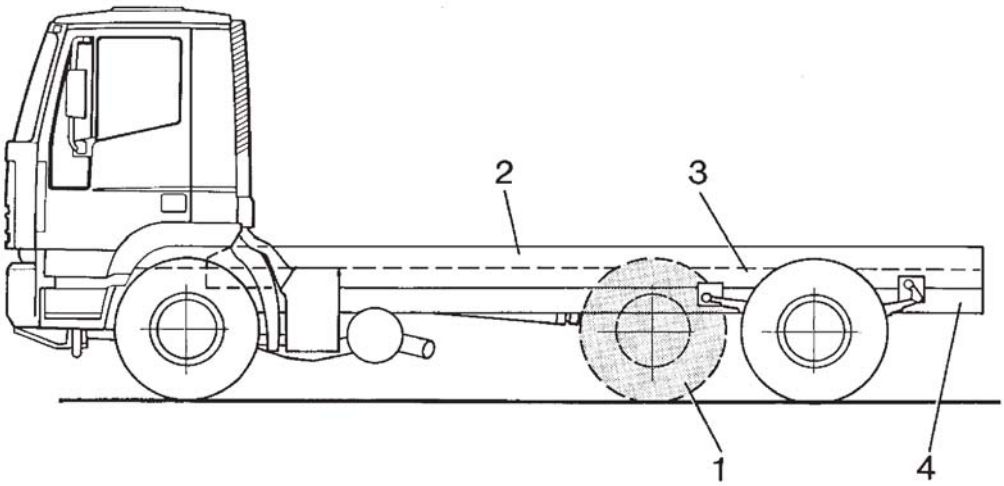

91142

1. Added supplementary axle - 2. Reinforcing runner - 3. Connections - 4. Reduction in the rear overhang

2.7.4 Steering Axles

Steering axles can be installed both intermediately and at the rear. They can be of the self-steering or force-steering types and be designed and installed in such a way that the required dependability and road safety are guaranteed. The self-steering axle must be fitted with a device controlled from the driver's seat which will lock the axle in the straight position when reversing.

The installation of an axle whose force-steering is obtained by means of the original steering system of the vehicle requires specific authorisation from IVECO in relation to the suitability of the original components for the conversion in question. In this case, it will be necessary for diagrams of the supplementary system to be submitted for our inspection.

2.7.5 Components and Suspension

Manufacturing quality of all components used (axle, suspension, braking units, systems etc) must be ensured in order to guarantee driving safety and good vehicle operation.

Particular care and attention must be paid to the designing and construction of the suspension in consideration of its importance for the proper performance and handling of the vehicle on the road.

The designed suspension may be either of the mechanical leaf-spring type, pneumatic with air actuated springs or of a mixed type. Whatever type is used it must not negatively affect the handling characteristics of the vehicle and its components in terms of driving quality, comfort, road holding, working angle of die transmission and its working space in the case of an intermediate supplementary axle.

Where the additional axle has its own independent suspension, the suspension characteristics must be proportional to those of the original rear suspension in relation to the static loads applied to the two axles.

2.7.6 Stabilisers

When pneumatic suspension is used for the added axle, depending on the solution adopted, it may be further necessary to fit an antiroll bar in particular when a body with a high centre of gravity is used.

Analogous measures to increase stability must be adopted for mixed suspension on axles added at the rear, in applications with dumper bodies for which it is necessary to adhere to the prescriptions at point 3.4.

2.7.7 Connection to the Chassis Frame

The connections of the added axle to the chassis must be such as to be able to withstand all longitudinal and transverse stress forces without transmitting them to the drive axle.

At the points in which the forces are introduced (spring supports, air spring brackets etc.), appropriate cross members or suitable frame reinforcements must be provided.

Ensure that the added axle is at right angles and aligned properly in relation to the longitudinal axis of the vehicle and the live axle. Check using the appropriate equipment available in the market.

2.7.8 Brake system for additional axle

The braking system, considering its importance relative to the active safety of the vehicle, must be extremely well developed and constructed.

Braking units, hoses and joints of the same type as on the original vehicle must be used.

The auxiliary axle must be equipped with the same brake components as those provided for the front axle.

Use flexible pipes to form the connection between the fixed parts (chassis) and moving parts (axles).

The braking torque must be proportional to the static and dynamic loads in order to provide an even distribution of the braking action to all the axles of the vehicle.

The total braking capacity of the modified vehicle must, as a general rule, be proportional to that of the original vehicle, allowing for the different total mass that is now applicable. The performance of the braking system (service, emergency and parking) must in all cases satisfy the current government regulations in terms of deceleration, behaviour when hot, response time, efficiency of engine braking and so forth.

If the Technical Control Authority demands that the technical documentation regarding the braking system be submitted (e.g. adhesion curves, compatibility range diagram) this must be provided by the company in charge of the conversion or the manufacturer of the auxiliary axle.

Upon request, technical documentation with characteristics and attainable performances of the braking system of the original vehicle may be made available.

For the construction of the braking circuit for the additional axle it is advisable to employ equipment and circuits specially provided for each single model by the Manufacturer of the equipment in use on the original vehicles.

Arrangements are permitted whereby the direct connection is achieved between the braking sections of the added axle and that of the live axle. It should be ascertained that the capacity of the air reservoir is adequate to the size of the additional brake cylinders. If necessary an additional air reservoir should be installed.

Current government regulations regarding emergency and parking brakes must be respected. We recommend that a parking brake is fitted on the additional axle.

Observe the instructions in current guidelines for the emergency brake and the parking brake. We believe it is advisable for the parking brake to act on the additional axle as well.

For indications of a general nature concerning the braking system, see the instructions given at point 2.15.

For the electrical system, comply with the indications provided at point 5.5.

2.7.9 Raise Device

The additional axle may be equipped with a raise device and may also be used in specific cases where permitted by government regulations, to increase the adhesion of the drive axle to the ground under certain conditions (starting uphill, slippery or snow/ice covered roads) provided that:

- this modification is made conditional to the issue by IVECO of a permit in which the maximum permitted load on the overloaded axle is specified.
- the device is used only for driving short distances for the uses stated above, and at the maximum speed stated on the specific authorization.

Some national regulations permit the use of the lifting device even during normal vehicle travel, provided that the max. type-approval load specified for the drive axle and admissible speed limits are not exceeded.

In such cases the indications given in point 1.13.2 should be heeded concerning the centre of gravity of the body plus the payload.

Approval of and Responsibility for the Operations Carried Out

NOTE Following conversion, the vehicle will be submitted to local authority technical control for approval (e.g. single inspection or type approval).

The authorisation given by IVECO to install an auxiliary axle and the passing of the approval inspection do not free the bodybuilder/ converter from responsibility for the conversion in question, or its effect on the vehicle.

For the added assemblies, the required service or maintenance operations with relevant schedule, consistent with the operations and relevant schedule planned for the original vehicle must be defined and entered in the specific documentation.

2.7.10 Modifying the suspension

Changes to the suspension can be made only with IVECO's prior approval, the suspension being a system of decisive importance to riding safety.

As a general rule no modification of the parabolic springs is permitted. On vehicles equipped with these springs, installation of elastic rubber components may be authorised for special versions or uses in order to increase the stiffness of the suspension. In very specific cases, and for specific uses, the possibility may be evaluated of adding an extra leaf to the parabolic spring. This operation should be carried out by a specialised firm following approval by IVECO.

The use on the same axle of one parabolic spring and one trapezoidal spring is not allowed.

2.7.11 Changing a Mechanical Suspension into a Pneumatic or Mixed Suspension

Modifications of this kind are generally authorised for the rear axle only. Modification proposals presented by bodybuilders to the Company may be examined upon submission.

The responsibility for the dimensions of the air actuated springs and their installation, for the counteracting bars, the effectiveness of the suspension and their effect on the behaviour of the vehicle and the pneumatic supply system rests solely with the firm that has carried out the modification. Suspension and anchoring components are very important to vehicle safety so that the firm carrying out the modification must undertake the necessary design and testing.

On vehicles which are equipped with a load apportioning valve , this must be replaced with a pneumatically controlled LAV actuated by the pressure of the air in the springs. It must be calibrated in order to create the same braking performance in relation to the load on the axle, as that on the original vehicle. The bodybuilder must ensure that the respective values are indicated on the plate made for that purpose.

The auxiliary air tank for the suspension must be connected to the circuit of the vehicle in compliance with the specifications given in point 2.15.4.

2.8 Modifying the Drive Line

Following the modification of the wheelbase, work on the transmission as a general rule, is carried out on the basis of the transmission of a similar vehicle with approximately the same wheelbase. The maximum value of the inclinations of the propeller shafts used for standard production vehicles is to be retained. This rule must also be applied when any modifications to the suspension and rear drive axles are made.

In cases of particular difficulty, the assistance of the company may be sought. A diagram giving the length and inclination of the proposed new transmission must accompany the request.

The purpose of the specifications contained in this manual is to ensure the proper functioning of the transmission, to limit its noise and to avoid the build-up of stress transmitted from the engine assembly. In no way does this diminish the responsibility of the bodybuilder for the work he has completed.

2.8.1 Permitted lengths

The maximum operating lengths obtainable for both the intermediate shaft sections and the sliding shafts "LG" or "LZ" (see Figure 2.19) can be determined according to the external diameter of the tube existing on the vehicle and the maximum operating rotational speed (see formula). These are specified in Table 2.15.

For the propeller shaft length specified in Table 2.15 when the tube diameter is not sufficient, a new shaft section with the same characteristics as the existing shafts must be used. As an alternative, in some cases the transmission shaft with a larger diameter tube can be used. The tube diameter required can be determined in compliance with the required length and the maximum rotational speed.

Figure 2.19

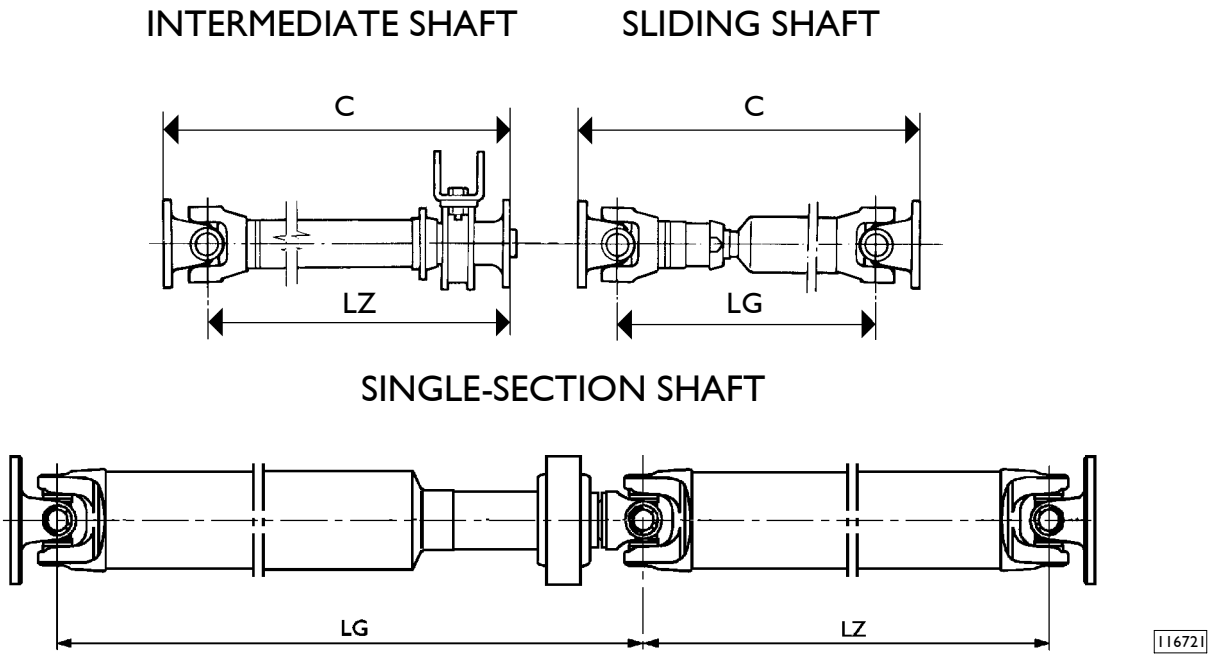

As far as sliding shafts are concerned, length LG is measured between the universal joint centres, with the sliding stub in its intermediate position. As regards single-stub shafts, check both branches LG and LZ.
The maximum working revs can be obtained using the formula below:

$$n_G = \frac{n_{max}}{i_G \cdot i_V}$$

n_{max} = maximum number of engine revolutions (rpm)
i_G = gear ratio in fastest gear
i_V = transfer box minimum ratio, equal to 1 if absent or for shafts upstream of divider.

The maximum propeller shaft speed is determined on the basis of the following formula (the necessary data may be obtained from the vehicle specifications and from the data plates on the engine, gearbox or transfer case).

$$n_G = \frac{n_{max}}{i_G}$$

n_g = Max. prop. shaft speed (rpm)
n_{max} = Max. engine speed (r.p.m.)
i_G = Gearbox ratio at top speed

The greater thickness of the tube depends on the class, i.e. on the torque that the original shaft has to transmit and on the design of the driveline (torque, ratios of kinematic chain, power axle load).

A reference value for the thickness of the tube of a general validity cannot be given. When, for example, a tube of a larger diameter is to be used, its thickness should theoretically be reduced until the torsional strength of the original tube is achieved. It should however be noted that, to determine the thickness of the tube, the following points are to be taken into account: the size of the male element of the fork, the possible necessity of adapters and the sizes of the tubes available.

Therefore the thickness of the tube should be agreed upon as each occasion arises with the workshops authorised by the manufacturers of the transmission shaft depending on its dimensions (i.e. size of the universal joint).

The minimum operating length (from flange to flange) must not be less than 800 mm for the sliding sections and 700 mm for the intermediate sections.

Table 2.15 - Obtainable propeller shaft characteristics

Joint size	Outside diameter for thickness (mm)	Max achievable lengths LG or LZ (mm)							
		1800	1900	2000	2100	2200	2300	2400	2500
		Maximum number of propeller shaft revolutions (rpm)							
2040	100 x 4,5	3400	3150	2900	2650	2450	2300	2100	1950
2040	120 x 3	4450	4100	3750	3400	3150	2900	2650	2450
2045	120 x 4	4450	4050	3700	3400	3100	2850	2650	2450
2055	120 x 6	4400	4000	3650	3350	3100	2850	2600	2400
2060	130 x 6	4650	4250	3900	3600	3300	3050	2800	2600
2065	142 x 6	5000	4600	4200	3900	3600	3300	3050	2850

The maximum possible lengths given above refer to the original shafts; plan for shorter lengths (-10%) for shafts obtained for by modification.

2.8.2 Determining Driveshaft Positions

In the case of drive lines which consist of several shafts, the individual shafts must all be approximately of the same length. As a general rule, the difference in length between a non sliding and a splined shaft (see Figure 2.20) must not exceed 600 mm. The difference in length between the shafts must not be more than 400 mm. A margin of at least 25 mm must be left so that the sliding joint can travel when the splined shaft is closed. When fully extended the shaft sliding sleeve should cover the splined stub for a length that should be about twice the diameter of the splined stub itself.

When the required length of the drive line exceeds the permissible length, an additional driven shaft must be provided as illustrated in Figure 2.20.

Figure 2.20

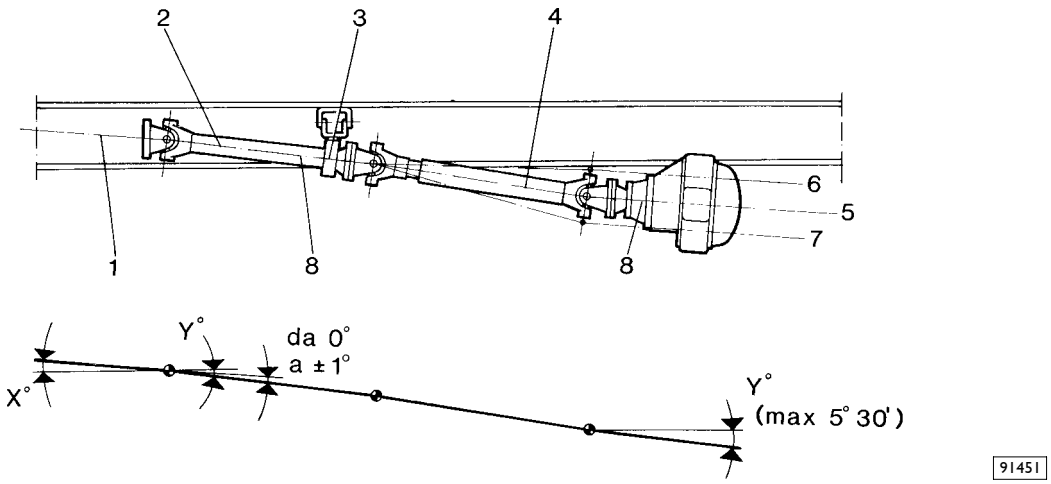

1. Engine, clutch, gearbox axis - 2. Intermediate shaft (non sliding) - 3. Intermediate shaft support - 4. Propeller shaft with sliding end - 5. Inclination of rear axle case (static load) - 6. Inclination of rear axle case (max. compression) - 7. Inclination of rear axle case (unladen) - 8. Intermediate shaft and axle case axis must have the same inclination

The intermediate shaft and the inclination of the rear axle case must be aligned accurately.
The difference in their inclination relative to the engine-clutch-gearbox axis must not vary more than 1°. This can be achieved by fitting wedges between the rear axle and the springs, or by adjusting the rear axle reaction bars. The inclination of the rear axle must not exceed 5°30'.

When, with a loaded vehicle, the rear axle flange is at a level which is lower than that of the gearbox flange, care must be taken to ensure that the inclination of the differential housing and of the driven shaft are greater than the inclination of the engine-gearbox axis. On the other hand, if, with a loaded vehicle, the rear axle flange is at a level which is higher than that of the gearbox flange, the inclination of the differential housing and of the driven shaft must be less than the inclination of the engine-gearbox axis.

When lengthening the wheelbase is substantial, it may become necessary to fit a supplementary intermediate shaft as shown in Figure 2.21. In this case the same inclination must be maintained between the engine-gearbox axis, the second intermediate shaft and the axis of the differential housing.

Figure 2.21

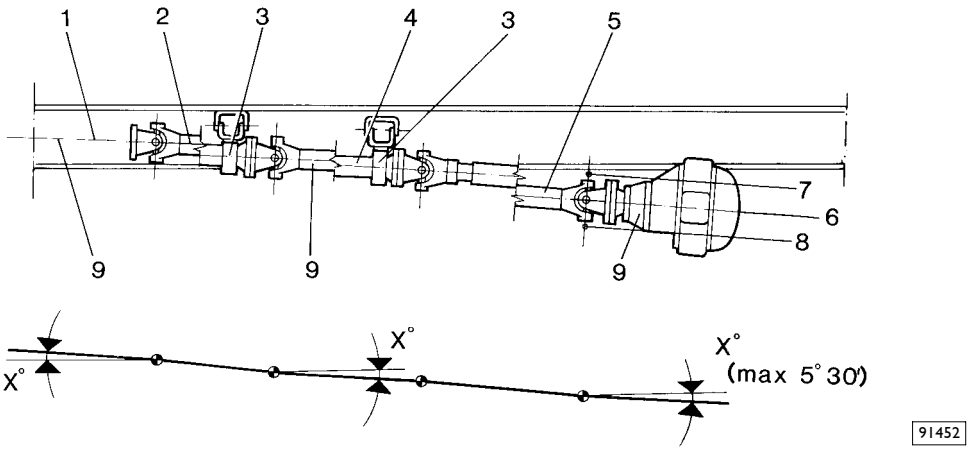

1. Engine, clutch, gearbox axis - 2. 1st intermediate shaft - 3. Intermediate shaft support - 4. 2nd intermediate shaft - 5. Propeller shaft with splined end - 6. Inclination of rear axle case (static load) - 7. Inclination of rear axle case (max. compression) - 8. Inclination of rear axle case (unladen) - 9. Gearbox, 2nd intermediate shaft and rear axle case axis must have same inclination.

Elastic supports must be fitted with the aid of supporting plates, at least 5 mm thick (see Figure 2.22), connected to cross-members having the same characteristics as those specified by IVECO.

When reducing the wheelbase it is recommended that the intermediate shafts are removed if the length of the splined shaft is less than approximately 800 mm.

Figure 2.22

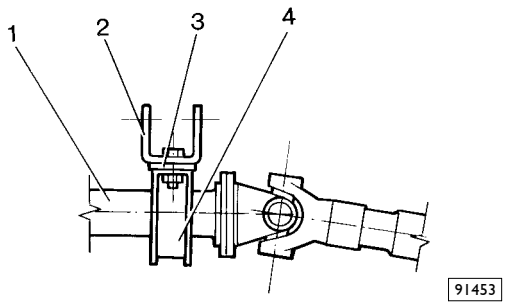

1. Intermediate shaft - 2. Support bracket - 3. Backing plate - 4. Support of intermediate shaft

If the drive line consists of a single shaft the inclination of the axle housing must be the same as the inclination of the engine-gearbox axis.

The same holds true also for vehicles with separate gearbox. In addition to this, as a general rule, the wheelbase of such vehicles cannot be reduced beyond the measurement of the shorter wheelbase contemplated for standard production (dumpers for example).

The use of original drive line parts from IVECO is recommended for these modifications however. Should this not be possible, hardened steel tubes with a yield point of not less than 420 N/mm^2 (42 kg/mm^2) may be used.

Modifications to the universal joints are not permitted.

Whenever the transmission or part thereof, is modified, each modified section must be subjected to careful dynamic balancing.

Since transmission is important to vehicle driving safety, it should be borne in mind that any modification to it must bear maximum operational guarantees. Only very specialised and transmission manufacturer-certified companies should therefore be employed to carry out work of this kind.

IVECO's approval is not required, if the frame is extended at the rear, or is shortened to the minimum value admissible for each model as standard, provided that this is done according to the instructions given herein.

If it proves necessary modify the length of the electrical circuits, see chapter 5 "Special instructions for electronic subsystems".

2.9 Modification of the Engine Air Intake and Exhaust System

2.9.1 Intake

The specifications of the engine air intake and exhaust systems must not be altered without authorisation by Iveco. Modifications carried out must not alter the vacuum levels (for the intake) or the original exhaust back pressure levels.

Table 2.16 - Engine Back Pressures

Engine	Engine Code	Maximum exhaust back pressure (kPa)	Maximum intake back pressure (kPa)
CURSOR 8			
E31	F2BE3681C	20	6.5
E33	F2BE3681B		
E36	F2BE3681A		
CURSOR 10			
E42	F3A3681B	19	6.5
E45	F3A3681A		
E46	F3A3681Y		
CURSOR 13			
E41	F3B3681D	28	6.5
E44	F3B3681G		
E45	F3B3681C		
E48	F3B3681F		
E50	F3B3681B		
E52	F3B3681E		
E56	F3B3681A		

The routing of the exhaust pipe must be as even as possible. Bends must not have an angle of less than 90° and the radii should not be less than 2.5 times the external diameter. Avoid kinks and use cross-sections which are no smaller than those corresponding to the original system. Any connections on the intake duct must guarantee resistance of the tube to penetration by water or dust.

Sufficient clearance should be maintained (min. 150 mm) between the exhaust pipe and the electrical system, plastic hoses, the spare wheel etc. Lower values (e.g. 80 mm) may be permitted if suitable sheet metal shielding is used. Further reductions require the use of heat insulation and the substitution of the plastic tubes with steel pipes.

Any work done on the exhaust system of the vehicle requires that the vehicle be homologated again with regard to noise and smoke wherever government regulations require it. The air intake must be positioned to avoid the intake of hot air from the engine and/or of dusty air or snow and rain. The apertures for the intake of air which may have to be made in the bodies of vans, must have a working surface of not less than two and a half times that of the master hose located upstream of the filter. These apertures (e.g. openings in the grill) must be of such a dimension that they do not become obstructed. It is prohibited to alter the air filer or replace the original filter with a lower air capacity unit. Modifications to the silencer body and engine equipment (fuel injection pump, regulator, injectors etc.) are not permissible as this may alter the correct functioning of the engine and adversely affect the exhaust emissions.

2.9.2 Vertical Exhaust

Apart from the general matters discussed in the above point, ensure that:

- The exhaust is far enough away from the inlet area.
- A suitable supporting structure duly braced and fixed to the vehicle chassis, is made for the vertical section of the pipe.
- A section of flexible hose is fitted to free the silencer elastically from the rest of the added pipe.
- Arrangements are made to prevent the direct entry of water into the end part of the pipe.
- Figure 2.23 shows an implementation example with a muffler located in a vertical position behind the cab.

Figure 2.23

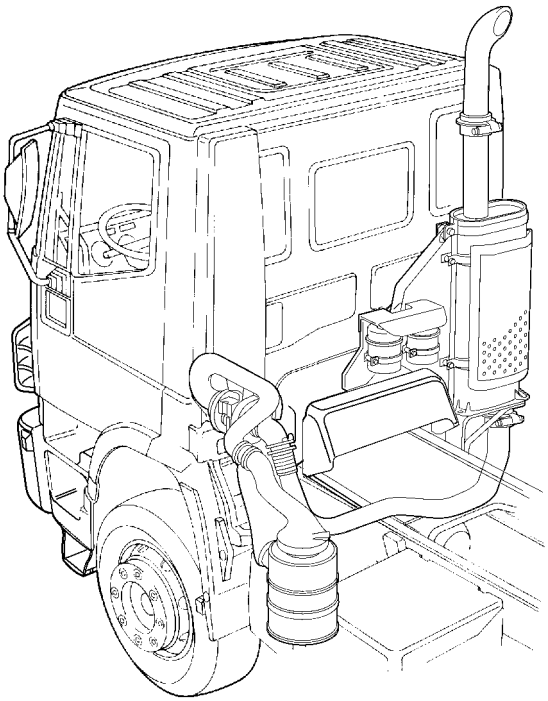

In the solution with silencer in vertical position, preferably used on 4-axle vehicles, connect silencer supporting bracket also to counter-chassis by means of specific nuts on bracket. For the version with 12.00R24 tires, the bracket has a longer distance between the two additional mounts; as use of both brackets is required, in case of counter-chassis with section bars lower than 190 mm, perform upper connection by means of a bracket secured by screws on upper counter-chassis wing.

NOTE Chapter 6 concerning SCR contains additional information on exhaust system changes.

2.10 Modification of the Engine Cooling System

The proper functioning of the original system, especially in connection with the radiator, the free surface of the radiator and hoses (dimensions and layout) must not be tampered with. Whenever modifications must be made that entail work on the engine cooling system (e.g., modifications to the cab), the following points must be considered:

- The useful area for the passage of air for the cooling of the radiator must not be less than that which is available on vehicles with the standard cab. Maximum venting of air from the engine compartment must be ensured and care must be taken - possibly using shields or baffles - to avoid stagnant air pockets or back flow of air. The performance of the fan must not be altered.
- If it is necessary to re-position the hoses this must be done without affecting the complete filling of the system (which must occur at a continuous flow without forming blockages at the mouth) or the normal flow of water. The maximum stabilising temperature of the water must not be altered even under the most severe operating conditions.
- Hoses must be located so that air pockets are not formed (i.e avoiding air traps and providing appropriate bleeding points) that could hinder the circulation of water. Check that the water pump primes immediately on starting the engine and later operates with the engine idling (accelerate a few times, if necessary) even when the circuit is not pressurized. Check that the delivery pressure of the water pump, when the engine is running under no load and at maximum RPM, is not lower than 1 bar.
- Always reinstall the radiator anti-clogging protection after making alterations to the engine cooling system.

2.11 Installation of a Supplementary Heating System

When the installation of a supplementary heating system is deemed necessary, it is advisable to use the types recommended by IVECO.

For vehicles on which IVECO has not planned the use of supplementary heaters, the installation should be carried out in compliance with the supplier's instructions (i.e. heater arrangement, piping, electrical system etc.) and following the directions given below.

All national rules and regulations relevant to the matter should be adhered to (i.e. inspections, particular installation for dangerous cargo transportation etc.). The supplementary heating system must not make use of the equipment that is specific to the vehicle which is subject to approval if the use is liable to impair or alter the performance of the equipment.

Furthermore:

- ensure correct operation of the vehicle components and equipment (i.e. cooling system);
- check the electrical system to ensure that the battery capacity and alternator output is sufficient for the higher current requirements (see point 5.5). Provide the new circuitry with a protection fuse;
- connect the intake of the newly added fuel system to the reservoir connected to the engine fuel return line. Direct feed from the vehicle fuel tank is permitted only if this is independent from the engine fuel system and the new circuit is perfectly leakproof;
- trace pipe and cable paths, the location of brackets and hoses bearing in mind that the overall dimensions and heat affect the various units on the chassis. Avoid runs and arrangements that could lead to hazards when the vehicle is running. Use shields or armouring if necessary;
- when installing a water heater, original vehicle heating and engine cooling circuits are involved (see point 2.10), it is advisable to follow the instructions listed below to ensure reliability of the heating system and safe operation of the original system:
  - ❑ special care must be taken when defining the connections between the supplementary equipment and the main one; refer to IVECO, if necessary.
  - ❑ determine a rational arrangement for piping, avoid neckings and siphonings;
  - ❑ install proper venting valve (bleeding points) to ensure proper filling of the system;
  - ❑ supplementary plugs should be installed to ensure draining of the system, if necessary;
  - ❑ proper insulation should be used to prevent heat dissipation.
- When air heaters are used and when the installation is to be made directly in the cab, make sure that the engine exhaust system does not touch the added installation (to prevent exhaust gas circulation inside the vehicle) and have the correct warm air distribution by avoiding direct air flows;
- the complete installation should be designed to ensure good accessibility for quick and easy servicing.

2.12 Installation of an Air Conditioning System

When the installation of an air conditioning system is deemed necessary, it is advisable to use the types recommended by IVECO. If this procedure is not applicable, the installation must be carried out in accordance with the supplier's instructions and the following points:

- The installation must not interfere with the correct operation of the vehicle components and of equipment which may be connected with the installation.
- Check the electrical system to ensure that the battery capacity and alternator output is sufficient for the higher current requirements. Provide the new circuitry with a protection fuse.
- With the agreement of IVECO, establish a method for installing the compressor, if fitted on the engine.
- Trace pipe and cable paths, the location of brackets and hoses bearing in mind that the overall dimensions and heat affect the various units on the chassis.
  Avoid runs and arrangements that could lead to hazards when the vehicle is running. Use shields or armouring if necessary.
- The complete installation should be designed to ensure good accessibility for quick and easy servicing. At vehicle delivery, the bodybuilder will supply all service and maintenance instructions which are deemed necessary.

Furthermore, according to the system operations:

a) Equipment installed inside the cab

- The condenser should not impair the original engine cooling system operation (reduction in the radiating area of the engine radiator).
- The best arrangement is to use a condenser, suitably ventilated.
- The arrangement of the evaporator-blower unit in the cab (if not planned by IVECO) should be designed to make sure that the accessibility control and operating equipment is not impaired.

b) Equipment fitted on the cab roof

- When the equipment (condenser, evaporator, blower) is fitted on the cab roof, make sure that its weight is not higher than that permitted for roof installation. Furthermore, the bodybuilder must provide proper reinforcement to the roof frame if necessary, in relation to the weight of the unit and the extent of the modification introduced.
- For specific applications with compressors not supplied by IVECO (e.g. fridge box), contact the IVECO offices in charge.

2.13 Cab Modifications

2.13.1 General Specifications

Any work on the driver's cab must first be authorised by IVECO before any work is started.

Modifications must not prevent operation of the control devices located in the area affected by the modifications (e.g. pedals, linkages, switches, pipes etc) or alter the strength of the load- bearing elements (uprights, reinforcement sections etc.). Due care must be taken when carrying out work that may affect the cooling system and air inlet pipes of the engine.

When defining the position of payload, account must be taken of the variation in cab weight, in order to ensure the correct distribution of the permitted loads on the axles (see point 1.13).

For operations that require the removal of sound deadening panels or internal protective elements (panelling, padding) restrict the removal to the absolute minimum, taking care to restore the protective elements to their original condition, ensuring the previous operating capability.

Controls and equipment (power take-off engagement control, external operating cylinder control etc.) may be fitted in the cab provided that:

- They are positioned, properly and are easily accessible to the driver.
- Safety, control and warning devices are fitted which meet the requirements of use and safety of the vehicle and its equipment as well as the requirements of national legislation.

Ensure that the pipes and wires are correctly positioned particularly when the cab is tilted. Use the necessary fixings taking care to observe the appropriate distances from the engine, heat sources and moving parts.

Provide the necessary protection from corrosion for all modifications to the structure (see point 2.2).

Ensure that seals are fitted correctly and apply sealant to those areas which require it.

Ensure that a perfect seal is provided against the infiltration of water, dust and fumes.

The bodybuilder must check that after modification, the cab satisfies legal requirements regarding both the inside and outside of the vehicle.

2.13.2 Roof Panel Modifications

Installation and modification work to achieve specific refurbishments must be carried out with great care to safeguard the strength and integrety of the cab and ensure that its operation and protection are maintained.

When fitting assemblies or systems onto the roof (e.g. air conditioning systems, spoilers, top- sleepers), check that the weight of the appliance does not exceed that permitted for the cab. These limits will be provided upon request depending on the assembly or system to be fitted.

The cabs are provided with anchorage points along the roof sides (8 points for normal cabs, 10 points for crew cabs) having threaded holes M8X1 protected by appropriate plastic plugs.

Should it be necessary to make an opening to form a roof compartment, ensure that:

- The connection radii are not less than 50 mm.
- Do not modify any ribs that may be present.
- Do not change the curvature of the roof.

2.14 Changing the Size of the Tyres

Replacing the tyres with others of different sizes or with a different loading capacity with respect to those considered at the time of vehicle type-approval must be approved by IVECO and it is also necessary to check for the need to reprogram the EBL or EBS system.

Changing the size of the tyres may involve replacing the wheels with others of a correspondingly greater loading capacity. In this case check whether the spare wheel carrier needs to be changed.

Mounting tyres of different sizes or types of construction on the same axle is prohibited.

Changing the size of the tyres may affect the ground clearanceof the front and rear underrun guard, therefore the compliance with the national legal requirements must be verified. Its supporting brackets, where necessary, may be replaced with other appropriate, type-approved brackets.

The use of larger tyres always necessitates verification of the safety margins for the mechanical parts, wheel arches etc., under all dynamic conditions of steering and bump travel. In certain cases the use of wider tyres may entail a check on the axles to assess the space required for the suspension components and the length of wheel studs etc.

Where there is local national legislation specifying overall widths (e.c. Jersey etc.) these must be complied with.

The use of tyres with a different outside diameter affects the performance of the vehicle in terms of speed, maximum gradability, pulling force, braking power etc. The tachograph must be recalibrated by an authorised workshop. The load capacity and the relative reference speed must always be compatible with the performance of the vehicle. When the tyres with a load capacity or speed limit are chosen for a given vehicle, the permissible loads of the vehicle or its performance, must be reduced accordingly. On the other hand, the use of tyres with a greater load capacity does not automatically increase the maximum permissible weight on the axles.

The size and load capacity of the tyres are established on the basis of international and national norms (ETRTO, DIN, CUNA etc.) and are listed in the manuals of the respective tyre manufacturers.

Specific performance characteristics may be established by government regulations for special use in the case of fire-fighting vehicles, vehicles for winter duty, airport tankers, buses etc.. Whenever so required by government regulations the vehicle must be presented to the respective government agency for inspection of the parts that have been replaced and entry of the respective modifications in the vehicle documents.

Table 2.17 - Tyres setup

Tyres dimensions	Rim	Caster trail (mm) Bt (see Figure 2.6)						Load capacity of tyres (kg)
		Front dead axle			Front driving axle			
		S	A	SP	S	A	SP	
12.00R24	24-8.5	72	-	-	105	-	-	8000
13R22,5	22,5X9.00	76	84	86	108	116	118	7500 ÷ 8000
12.00R20	20-8.5	77	-	-	109	-	-	7500 ÷ 8250
315/80R22.5	22,5X9.00	78	86	88	110	118	120	7500 ÷ 8000
11.00R20	20-8.5	80	-	-	111	-	-	6500 ÷ 6700
12R22,5	22,5X8.25	82	91	93	113	122	124	6700 ÷ 7100
11R22,5	22,5X7.50	88	103	99	119	134	130	6300
10.00R20	20-7.5	93	-	-	113	-	-	6000
14.00R20	20-10.0W	109	-	-	142	-	-	9000 ÷ 10000
385/65R22,5	22,5X11.75	110	-	-	141	-	-	8250 ÷ 9000
18R22,5	22,5X14.00	130	-	-	162	-	-	11200
425/65R22,5	22,5X13.00	132	-	-	164	-	-	10300

S Steel wheels
A Alcoa aluminium wheels
Sp Speedline aluminium wheels

Tyre loading capacity is given in the individual manufacturers' manuals.

2.15 Modifications to the Braking System

2.15.1 General Specifications

The braking system with its components represents an element of crucial importance to vehicle safety.

It is prohibited to make changes to units such as the brake force control system, distributor, brake cylinders, valves, etc, which are rated as safety components.

Any changes to the braking system (changes to the piping, fitting additional operating cylinders, etc.) require prior authorisation from IVECO.

For new equipment we recommend the same make as those fitted to the original vehicle.

When required by national regulations, the vehicle must be submitted for testing to the respective authority.

In the event of the regulating valves, air drier etc., being moved, reinstate the same type of installation as originally envisaged, verifying correct operation. In addition, operations carried out on the air drier must not affect cooling of the air supplied by the compressor.

2.15.2 Brake Pipes

When the wheelbase or rear overhang of the chassis are modified, the brake pipes concerned must be replaced by a single length of new pipe. Where this is not possible the connectors used must be of the same type as those used originally on the vehicle. When replacing observe the minimum internal dimensions of the existing pipes.

The new pipes must have the same characteristics and be of the same material as those used originally on the vehicle. The installation must be carried out so that the piping is protected and the correct function of the system ensured.

For the supply and fitting of material we recommend that you contact our Parts Centres or specialised workshops.

Plastic Pipes

When fitting new pipes or replacing others, plastic must not be used for the following:

- in areas where the temperature reaches more than 80°C (e.g. within 100 mm of the engine exhaust system)
- between fixed and moving parts, in this case special hoses are to be used
- on the hydraulic lines.

During modification the following must be observed:

- Material and dimensions — Standard DIN 74324 (Iveco Standard 18-0400, 18-2715) (max. operating pressure 11 bars)
- Radii of curvature — min. 6 x outer dia. (referred to the pipe centreline)

Preparation and installation (Iveco Standard 17-2403)

Cut the pipe at right angles (max. permissible variation 15°) using the correct tools to avoid flaws which could impair tightness. Mark the portion of the length L (see Figure 2.24) to be inserted in the connector with indelible ink or adhesive tape to ensure tightness. Mark the pipe to avoid confusion while it is being installed for subsequent modifications.

The Voss connector configurations are as shown in drawing 504225097.

Figure 2.24

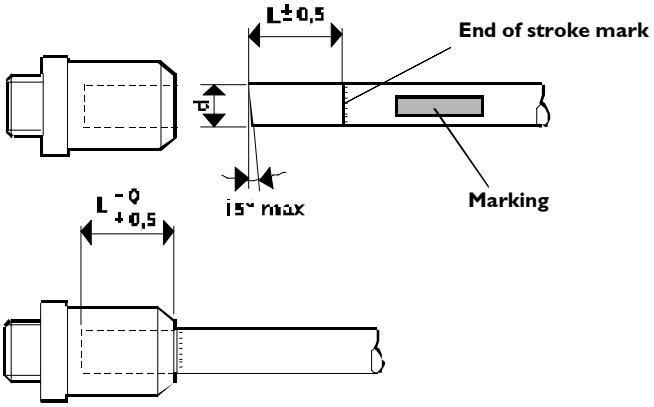

d (mm)	L(mm)
6	19.8
8	20.5
10	24
12	25
16	27.1

91463

Table 2.18 - Configuration of the new connectors VOSS - SV214/W

Type	pipe Ø	coupling Ø	VOSS reference	IVECO reference	GENERAL NOTES Possible couplings with other connectors
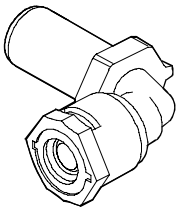 SV 214/W	6	6	5214010000	504149122	**Straight connector Ø 6** IVECO No. 504148941 with thread M10x1 IVECO No. 504148950 with thread M12x1.5 IVECO No. 504148962 with thread M12x1.5 IVECO No. 504148965 with thread M22x1.5 **Intermediate connector Ø 6 - 6** IVECO No. 504149318
	8	8	5214010200	504149132	**Straight connector Ø 6** IVECO No. 504148948 with thread M10x1 IVECO No. 504148956 with thread M12x1.5 IVECO No. 504148963 with thread M16x1.5 IVECO No. 504148966 with thread M22x1.5 **Intermediate connector Ø 8 - 8** IVECO No. 504149327
	6	12	5214010700	504149133	**Straight connector Ø 12** IVECO No. 504148959 with thread M12x1 IVECO No. 504148964 with thread M16x1.5 IVECO No. 504149016 with thread M22x1.5
	8		5214010900	504149136	
	12		5214011100	504149139	**Intermediate connector Ø 12 - 6/8/12** IVECO No. 504149332

Table 2.19 - Configuration of the new connectors VOSS - SV214/GV SV214/GE

Type	SW key	pipe Ø	Receptacle connector thread	VOSS reference	IVECO reference	GENERAL NOTES Possible couplings with other connectors
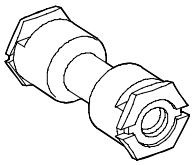 SV 214/GV		6		5214012000	504149318	**90° connector Ø 6** IVECO No. 504149122 coupling Ø 6
		8		5214012100	504149327	**90° connector Ø 8** IVECO No. 504149132 coupling Ø 8
		12		5014012200	504149332	**90° connector Ø 6** IVECO No. 504149133 coupling Ø 12 **90° connector Ø 6** IVECO No. 504149136 coupling Ø 12 **90° connector Ø 6** IVECO No. 504149139 coupling Ø 12 **45° connector Ø 12** IVECO No. 504149148 coupling Ø 12 **L connector Ø 12** IVECO No. 504149170 coupling Ø 12 **T connector Ø 12** IVECO No. 504149174 coupling Ø 12
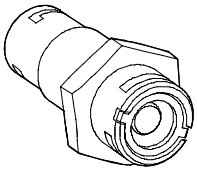 SV 214/GE	22	(2x) 8	m16 x 1,5	5214006400	504140020	**90° connector Ø 8** IVECO No. 504149132 coupling Ø 8
	24	12	M18 x 1.5 (with sealing taper seat with pipe Ø 16) on one side	5214006200	504149022	**90° connector Ø 6** IVECO No. 504149133 coupling Ø 12 **90° connector Ø 8** IVECO No. 504149136 coupling Ø 12 **90° connector Ø12** IVECO No. 504149139 coupling Ø 12
	28	(2x) 12	M22 x 1,5	5214006000	504149021	**L connector Ø 12** IVECO No. 504149170 coupling Ø 12
	28	12	M22 x 1.5 (inner thread M16 x 1.5) on one side	5214006100	504149026	**T connector Ø 12** IVECO No. 504149174 coupling Ø 12

Table 2.20 - Configuration of the new connectors VOSS - SV214/W VOSS - 214/L VOSS - 214/T

Type	pipe ∅	VOSS reference	IVECO reference	GENERAL NOTES Possible couplings with other connectors
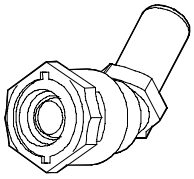 SV 214/W	12	5214011600	504149148	Straight connector ∅ 12 IVECO No. 504148959 with thread M12x1.5 IVECO No. 504148964 with thread M16x1.5 IVECO No. 504149016 with thread M22x1.5 Receptacle connector ∅ 12 IVECO No. 504149022 with thread M18x1.5 IVECO No. 504149021 with thread M22x1.5 IVECO No. 504149026 with thread M22x1.5
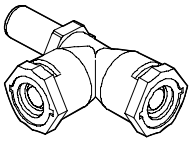 SV 214/L		5214011200	504149170	
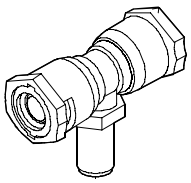 SV 214/T		5214011300	504149174	

As a rule quick coupling connectors should be used. We recommend that the same makes present on the original vehicle be used. When necessary (e.g. near bends), connectors with metal inserts may be used. Before inserting the pipe into the connector the latter must be screwed into its threaded seat on the component (e.g. pneumatic valve) adopting the tightening torques indicated below.

Table 2.21

Thread	Tightening torque (Nm ± 10%)
M 12 X 1.5 MM	24
M 14 X 1.5 MM	28
M 16 X 1.5 MM	35
M 22 X 1.5 MM	40

Insert the portion of the length L, previously marked, of the pipe into the connector applying force for 30 to 120 N depending on the dimension of the pipe.

The replacement of the components (valves etc.) is made possible since the coupling and connector may be internally rotated while screwing or unscrewing.

Precautions

Should piping be replaced:

1. **If the connectors are of the Raufoss P5 type, use new connectors.**
2. **If the connectors are of the Voss 214 type, disassemble them using the special pliers, then re-fit them on the new piping.**

Installation of piping on vehicle

New pipes must be thoroughly cleaned inside before use (e.g. by blowing through with compressed air).

Pipes must be fixed in their correct position. The fixing clips must go right round the pipe. They may be of plastic, metal or rubber.

Observe adequate distances between the various fixing elements. As a rule a maximum distance of 500 mm for plastic pipes and 600 mm for metal pipes is applicable.

For plastic pipes, in order to prevent distortion and tension on the connectors when fitting them, take the necessary precautions when working out the run and fitting the fixing brackets onto the chassis. Correct fitting of the fixing brackets will ensure that the pipes do not rub against the fixed parts of the chassis.

Observe the necessary safety distances from moving parts and heat sources.

When a pipe has to pass through the chassis frame (side or cross members) appropriate precautions must be taken to avoid damage.

A solution which can be used such as a bulkhead connection for a straight or angled run is given in the diagram below.

Figure 2.25

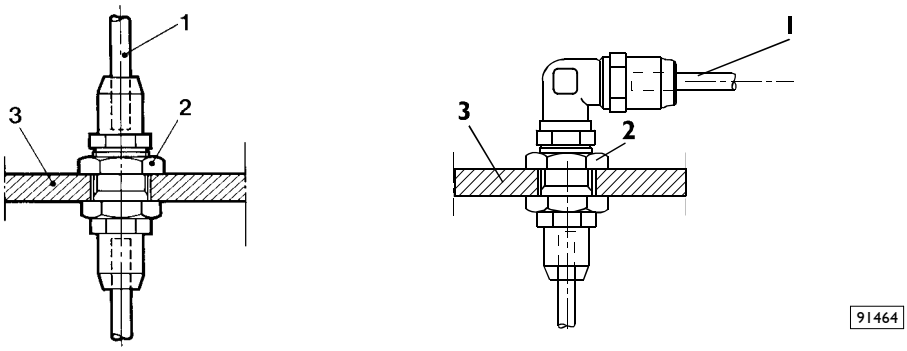

1. Pipe - 2. Bulkhead connector - 3. Chassis

After completing any work either on the system or the equipment, the braking system must be checked to ensure its efficiency.

On air systems, build up the pressure to the maximum level. Check for leaks in the areas affected by the work carried out.

To ensure that the connections have been made correctly, the air reservoir for one axle may be discharged. This check can be performed by reading the on-board gauge and, by working the brake pedal, by checking the pressure in the remaining brake section (or sections).

In hydraulic circuits, on completing the work, the normal air bleeding operation must be performed.

2.15.3 Electronic braking system control devices

For any changes to the electrical circuits, read carefully chapter 5.

When modifying the wheelbase, the ABS modulators must be kept in their original position in relation to the rear axle. The electrical wires (harness) between the sensors on the rear axle and the control unit and between the unit and modulators must be modified accordingly by fitting the harness(s) from a longer wheelbase IVECO vehicle should there be insufficient length in the originals. Brake pipes upstream of the modulators must be similarly modified.

In systems where adjustment devices operate only on drive axle, keep original control unit (sensor, ECU, modulator) position unchanged as to rear wheel axle.

In the applications of an additional axle on vehicles with ABS system of class I (adjustment on all wheels), a braking fore adjustment shall be provided for the additional axle. Given the various types of axles available on the market, with different solutions concerning suspensions, brake systems etc., it is not possible to provide useful general indications, therefore solution to be adopted shall be studies for each specific case, consulting IVECO and the ABS device supplier.

2.15.4 Taking air from the system

In vehicles with an air braking system it is possible to obtain small amounts of air from the air tank in the auxiliary circuit. Air should only be taken in through a reflux valve that is able to prevent tank pressure dropping to below 8.5 bars in the service brake circuit and auxiliary circuit.

Air must be taken in directly behind the brake system four circuit protection valve (output 24).

In the Trakker series, air may be taken in directly on the valve plate on connection 5 unless this is already in use (see Figure 2.26).

Figure 2.26

If larger quantities of air are required a supplementary air reservoir must be fitted. In this case, it will be necessary to check that the air compressor fitted is capable of charging the brake system reservoirs within the prescribed times.

If necessary a larger capacity compressor must be fitted.

2.16 Electrical System: Modifications and Drawing-Off Power

NOTE Subject moved to chapter 5.5

2.17 Repositioning Parts and Mounting Auxiliary Assemblies and Equipment

Whenever, in the course of modifying the vehicle, it should become necessary to reposition assemblies such as the fuel tank, batteries or the spare wheel, such relocation is permitted provided that the functioning of these parts is not impaired and provided that the same type of connections as originally in use are re-employed. Their transversal location on the vehicle's chassis may not, when their weight requires it, be changed radically.

Spare wheel holder

In the case of vehicles not equipped with a spare wheel carrier, and vehicles in which the spare wheel carrier must be relocated, the spare wheel must be secured to a suitable wheel carrier which allows the wheel to be readily removed.

To secure the spare wheel to the side of the vehicle with a support attached to the web of the side member, it is advisable to use a reinforcing plate on the inside or outside of the side member. The size of this plate must take into account both the weight of the wheel and the possible presence of other reinforcements on the side member (see Figure 2.27).

Figure 2.27

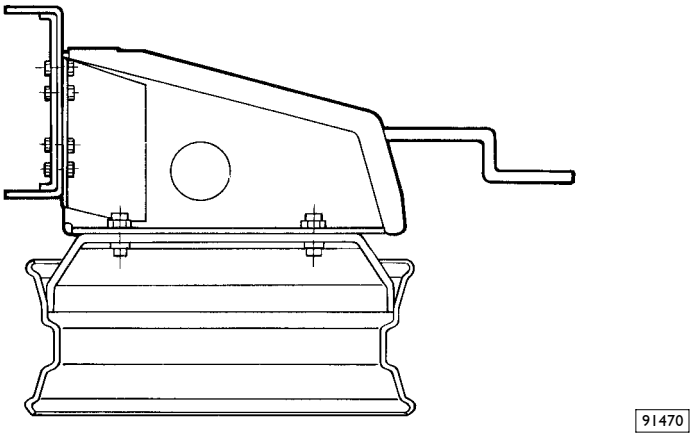

In order to limit the torsional stresses on the vehicle chassis, we recommend that the plate be fitted where there is a cross member, particularly in the case of heavy units.

A similar procedure should be adopted when fitting additional units such as tanks, compressors etc. When positioning them, due consideration must be given to the distribution of the weights (see point 1.13.3).

It is advisable to take measures to reinforce the frame depending on the weight of the construction parts. On request, Iveco is able to provide further information on this topic.

In any event, an adequate distance of their height from the ground must be ensured with due consideration given to the use of the vehicle.

Any holes that are necessary for the relocation must be made on the web of the side member in accordance with the specifications given in point 2.3. Holes already present must be made use of to the greatest extent possible.

When tank refilling is hindered by the positions of the body structure, the tank mounting brackets may be installed one drilling unit lower (45 mm).

Fuel tank

If a supplementary fuel tank is to be added, the best solution is to use the same system arrangement already used for original fuel tank, using, whenever possible, original elements. The use of a switching system allows the alternative feeding from the two tanks (see Figure 2.28).

Figure 2.28

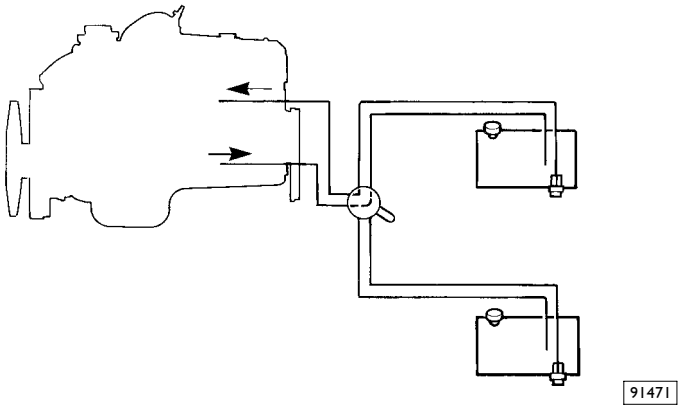

The use of the above system is advisable when the added tank is located on the side opposite the original one. When the tanks are in line on the same side it is possible to maintain fuel feed from the original tank then the added one should be connected directly to the former through hoses. The arrangement must conform to national rules and regulations. The tank-to-tank connecting line must be leakproof and not of a smaller internal dimension, have the same technical characteristics as those envisaged for the original system and be properly secured.

NOTE If additional tanks are installed, the IBC3 ECU must be reprogrammed.

2.18 Carrying hazardous goods ADR

Vehicles used to transport dangerous Goods - for instance inflammable materials or explosives - must be built in compliance with the safety specifications established for this type of transport by national or international regulations.

For the Trakker vehicles, the optional 2342 (ADR) optional is available combined with the optional 8818 (Digital Tachograph for ADR).

The optional 2342 consists of:

- special electric cutout placed on chassis.
- Control switch of cutout placed in cabin.
- Emergency switch.
- Protected electric connections.
- Wiring protected with polyamide sheath.
- ADR type-approval plate.
- Operation instructions.

Note that when optional 2342 is installed, central door locking system is not available.

Besides compliance to requirements on each specific issue, body makers shall comply to the "European agreement for the international transit of dangerous merchandise on road" (ADR) for vehicles traveling abroad, within Europe, now integrated in the specific EC Directive.

As a case in point, we list below some of the requirements in the above mentioned Agreement (ADR), which in any case must be carefully examined:

1) Electrical equipment.
Electric wiring must be suitably insulated and protected in conduits from impact, stones, heat etc.
Circuits must be protected against overloads by fuses or automatic disconnectors.
A general circuit breaker (excluding the tachograph supplied directly by the batteries) with suitable safety devices, located close to the batteries, with direct or remote control in the cab or outside.

2) Braking:
Compliance with the specific EC Directives.
Anti-lock braking system (ABS) and retarder compulsory in the cases required by the law.

3) Protection of the cab.
Use of virtually flameproof materials, in conformity with ISO 3795, with combustion speeds no greater than 100 mm/min. Otherwise, have a protective wall between the driver's cab and the transported container.

4) Exhaust system.
Those parts of the exhaust system which reach temperatures of more than 200°C and cannot be moved in front of the protective wall, must be adequately insulated.
If the exit of the exhaust cannot be turned outwards, in the case of tranporting explosives, it must be equipped with a spark arresting device.
(If any modifications of the exhaust pipes are necessary, they must be carried out in accordance with point 2.9).

5) Fuel tank.
This needs to be positioned so it is protected against bumps. In the event of it over turning or of leakage, the liquid has to run off straight onto the ground.

6) Independent heater.
This must be safe as regards fire protection. It has to be positioned in front of the cab rear panel, at least 80 cm off the ground, with the heated parts protected.

7) Speed limiting device.
Compulsory for vehicles with GVW greater than 12 m.t., in compliance with current EC Directives and set to 85 km/h.

8) Safety equipment.
A minimum of two fire extinguishers, two portable lamps that are independent from the electrical system of the vehicle, and whose operation cannot cause the combustion of the cargo being transported.

9) 3rd axle.
The electric lifting device for the 3rd axle has to be positioned outside the side members of the chassis frame, in a watertight box.

Check the availability of these outfits for our models with IVECO.

2.19 Retarder installation

Retarder brakes other than those supplied as options cannot be fitted on Trakker.
IVECO does not allow fitting any type of retarder brake system after-market.
For this reason, no approval will be given for the application of retarder brakes.

Any unauthorised interventions or changes concerning brake functionality will void the vehicle warranty.

2.20 Modifications to the Rear Underrun

Our vehicles are fitted with a rear underrun bar in accordance with EC Directive 70/221 and 81/333.

The maximum permitted distance from the bar to the rearmost part of the body is 400mm. For further information see the official information issued by IVECO.

Whenever chassis modifications affect the rear overhang, the underrun bar must be repositioned (in compliance with current regulations) so as to be able to obtain the same connection with the chassis as on the original vehicle.

When modifying the vehicle or installing special equipment (e.g. tail lifts) it may be necessary to modify the structure of the underrun bar. Such modifications must not change the original resistance and stiffness specifications (comply with local government regulations, if any). The firm carrying out the modification must be prepared to present the relevant documentation on the required specifications upon request.

Whenever a different underrun bar must be used, check relevant current regulations. Documentation or quality control certificates must be presented upon request from the competent authority.

2.21 Rear Mudguards and Wheel Boxes

When vehicles are supplied without mudguards, the bodybuilder must fit them using similar installations are used by IVECO on similar vehicles. The following points must be observed:

- Ensure the wheels can turn without any foul conditions even in the full bump condition with snow chains fitted, in compliance with the limits shown in the documentation supplied by IVECO.
- The maximum width of the vehicle over the tyres must comply with the legal limits.

When fitting mudguards or making whell boxes the following points should be considered:

- The supporting structure should be sufficiently strong enough, avoiding any sudden variation in section.
- If the supports are fixed to the web of the sidemembers they must be bolted, the sidemembers must not be welded (see Figure 2.29).

The supports that secure the longitudinal bodies cab be welded or connected by means of screws.

Figure 2.29

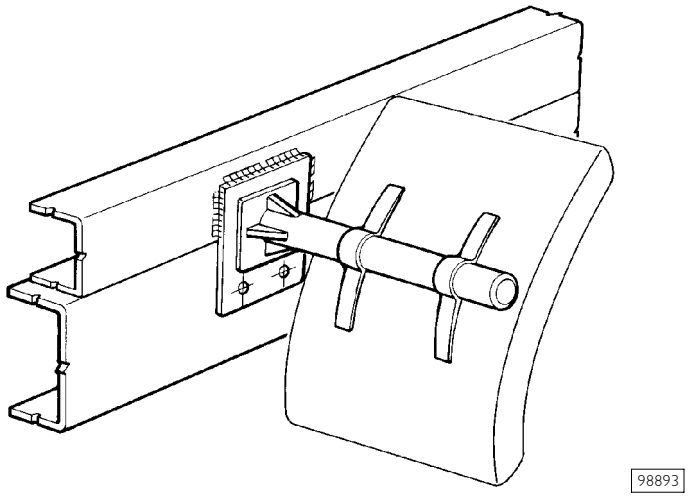

2.22 Mudflaps

If legally required, unless already fitted ex-factory, the bodybuilder must ensure that the complete vehicle is fitted with mudflaps. When mounting them legally required distances must be complied with.

Mudflaps

2.23 Side Guards

In some countries local or EC regulations require that the vehicle be fitted with side guards. The Bodybuilder who finishes off the vehicle must ensure compliance with the required characteristics unless it is already equipped with them ex-factory.

On permanently fitted structures such as fixed platform bodies, vans etc, the side guards will be fitted directly to their basic structure (floor ribbings cross members) whereas on mobile structures (such as tippers, interchangeable equipment, removable containers), the side guards will be connected to the auxiliary frame by way of suitable brackets or installed directly on the chassis. In the latter case, we suggest that the Bodybuilder makes use as far as possible, of the holes already existing on the side member vertical web in compliance with point 2.3.

According to the EC regulation, the external protection element can either consist of a single runner whose surface extends in the vertical direction or of several longitudinal sections with preset sizes and distances between them.

The side guards must be connected to their own supporting structures in order to allow quick removal or tilting should maintenance or repair work on assemblies or components located next to them be needed.

Operation of and access to the following parts must be ensured:

- Brake system equipment.
- Air inlet system.
- Fuel supply.
- Batteries.
- Suspension.
- Spare wheel.
- Engine exhaust.

The guards must be made of the appropriate materials (e.g. FeE420).

Particular care must be taken when fitting to ensure the clearance from the ground and the distances to the various components required by the regulations.

Figure 2.30 shows a type of side guard designed in compliance with the relevant EC Directive to be fitted to fixed bodies (available on request). The illustration also shows a specimen of a support designed for the combined fastening on the side guard and the rear wheel mudguard which can be fitted to mobile auxiliary subframes.

The Bodybuilder will take care of the preparation and the arrangement of the side guard depending on the type of auxiliary subframe concerned, as it is not possible to provide instructions of a general character applying to all equipment versions.

Side Guards

Figure 2.30

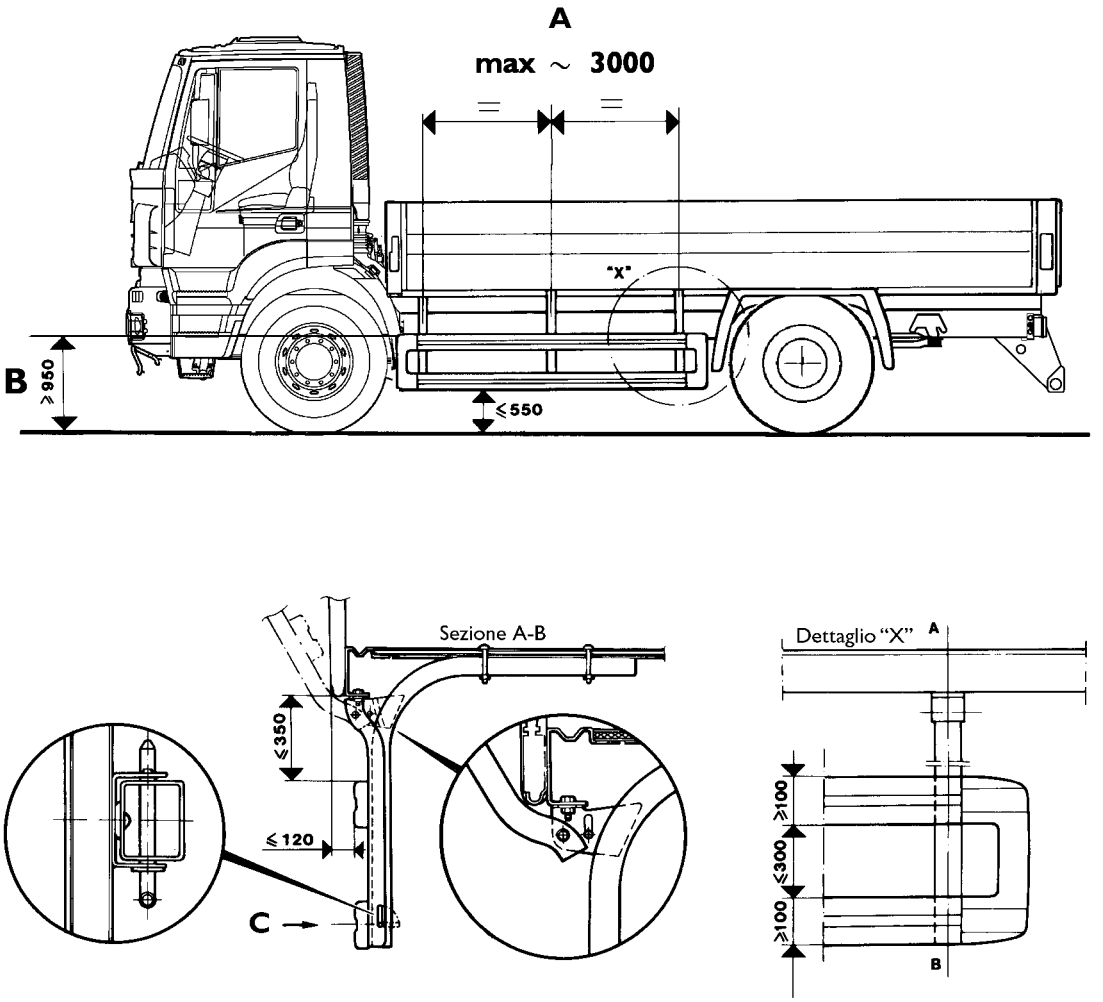

A For IVECO section

B Either the bottom part of the auxiliary frame is over 1,300 mm from the ground or the width of the auxiliary subframe is less than the external space occupied by the tyres.

C Test load 1 kN
Permitted sag values under test load:
≤ 30 mm on the rear, included in the last 250 mm of the device
≤ 150 mm on the remaining parts of the device

D Supporting structure for the combined fastening of the side guard and rear mud-guard.

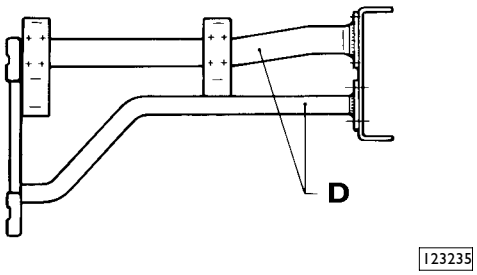

2.24 Chocks

Usually these are fitted directly at the factory. Should this not be the case, or if it is necessary to change their original position, the Bodybuilder must work out a new arrangement in compliance with local regulations. The new position must ensure reliability and safety as well as easy access for operation by the user.

Chocks

SECTION 3

Building & Mounting the structures

Page

3.1	Construction of the Subframe	3-3
3.1.1	Material	3-3
3.1.2	Longitudinal section dimensions	3-4
3.2	Counter-chassis components	3-5
3.2.1	Longitudinal Runner Profiles	3-5
3.2.2	Cross Members	3-8
3.3	Connections between frame and subframe	3-10
3.3.1	Choosing the Type of Body Mounting	3-10
3.3.2	Body Mounting Characteristics	3-10
3.3.3	Connection with Brackets	3-11
3.3.4	Connection with Greater Elasticity	3-12
3.3.5	Connection with U-bolts (clamps)	3-13
3.3.6	Connection with cleate (shear resisting) plates to contain longitudinal and transverse forces	3-14
3.3.7	Mixed Connection	3-15
3.4	Fitting Box-bodies	3-16
3.4.1	Fixed bodies	3-16
3.4.2	Tipper Bodies	3-17
3.4.3	Heavy-duty Service	3-19
3.4.4	Light-duty Service	3-20
3.4.5	Containers	3-20
3.5	Tractors for Semitrailers	3-22
3.5.1	Position of the Fifth Wheel	3-22
3.5.2	The Fifth Wheel	3-22
3.5.3	Coupling of Tractor and Semitrailer	3-23
3.5.4	Fifth Wheel Mountings	3-24
3.5.4.1	Preparation and installations of a Structure Working together with Chassis	3-24

Index

Page

3.5.4.2	Converting a Truck into a Semitrailer Tractor	3-26
3.5.4.3	Variable height fifth wheel (only for Low tractor)	3-26
3.6	Transport of Indivisible Materials (bascules)	3-27
3.7	Installation of Tanks and Containers for Bulk Materials	3-28
3.8	Installation of Cranes	3-31
3.8.1	Crane Behind the Driver's Cab	3-32
3.8.2	Crane on Rear Overhang	3-35
3.8.3	Removable Cranes	3-37
3.9	Installation of Tail Lifts	3-38
3.10	Installation of Snow-removal Equipment on Front of Vehicle	3-39
3.11	Winch installation	3-40
3.12	Installation of concrete mixers	3-41
3.12.1	Concrete mixer conversion with EuroTronic gearbox	3-43

NOTE The following detailed instructions complement the general information given in Chapter 1.

3.1 Construction of the Subframe

The purpose of an subframe (subframe) is to ensure a uniform distribution of the load on the vehicle's chassis and to increase the strength and rigidity of the main frame in relation to the particular use of the vehicle.

The following points are to be borne in mind when constructing a subframe:

3.1.1 Material

Usually, provided the subframe is not to undergo great stress, the material used for its construction may be of a lower grade than that used for the vehicle chassis. It shall have good weldability characteristics and limits not lower than valoes (1) shown in Table 3.1.

Should the stress limits require it (e.g. crane applications), or if very high sections are to be avoided, material with better mechanical characteristics may be used. In this case it should be considered that a lower inertia moment of the reinforcing beam implies high bending stresses on the chassis frame.

The properties of some materials that can be considered for the applications indicated are as follows.

Table 3.1 - Material to be used for body manufacturing

Steel name		Breaking load (N/mm^2)	Yield point (N/mm^2)	Elongation A5
IVECO	FE360D	360 (1)	235 (1)	25% (1)
EUROPE	S235J2G3			
GERMANY	ST37-3N			
UK	40D			
IVECO	FEE420	530	420	21%
EUROPE	S420MC			
GERMANY	QSTE420TM			
UK	50F45			
IVECO	FE510D	520	360	22%
EUROPE	S355J2G3			
GERMANY	ST52-3N			
UK	50D			

3.1.2 Longitudinal section dimensions

The table below illustrates the values for the section modulus W_x for C-section longitudinals recommended by IVECO. The indicated W_x value refers to the true section and allows for the section coupling radii (this can be calculated, with some approximation, by multiplying the value obtained when considering the section made up of simple rectangles by 0.95). Longitudinals of different sections can be used instead of those shown provided the section modulus W_x and the moment of inertia J_x of the new C-section are not lower than those shown in the table.

Table 3.2 - Profiles recommended by IVECO

Strength modulus Wx (cm^3)	Recommended C-section profile (mm)		
16 ≤ W ≤ 19	80 X 50 X 4	80 X 60 X 4	80 X 50 X 5
20 ≤ W ≤ 23		80 X 60 X 5	
24 ≤ W ≤ 26		80 X 60 X 6	
27 ≤ W ≤ 30		80 X 60 X 7	100 X 50 X 5
31 ≤ W≤ 33		80 X 60 X 8	100 X 60 X 5
34 ≤ W ≤ 36		100 X 60 X 6	
37 ≤ W ≤ 41		100 X 60 X 7	
42 ≤ W ≤ 45	80 X 80 X 8	100 X 60 X 8	
46 ≤ W ≤ 52	120 X 60 X 6	120 X 60 X 7	
53 ≤ W ≤ 58		120 X 60 X 8	
59 ≤ W ≤ 65		140 X 60 X 7	120 X 70 X 7
66 ≤ W ≤ 72		140 X 60 X 8	120 X 80 X 8
73 ≤ W≤ 79		160 X 60 X 7	
80 ≤ W ≤ 88		180 X 60 X 8	
89 ≤ W ≤ 93	160 X 70 X 7	180 X 60 X 7	140 X 80 X 8
94 ≤ W ≤ 104		180 X 60 X 8	
105 ≤ W ≤ 122	200 X 80 X 6	200 X 60 X 8	180 X 70 X 7
123 ≤ W ≤ 126		220 X 60 X 7	
127 ≤ W≤ 141		220 X 60 X 8	
142 ≤ W ≤ 160	200 X 80 X 8	240 X 60 X 8	
161 ≤ W ≤ 178	220 X 80 X 8	240 X 70 X 8	
179 ≤ W ≤ 201	250 X 80 X 7	260 X 70 X 8	
202 ≤ W ≤ 220	250 X 80 X 8	260 X 80 X 8	
221 ≤ W ≤ 224	220 X 80 X 8	280 X 70 X 8	
225 ≤ W ≤ 245	250 X 100 X 8	280 X 80 X 8	
246 ≤ W ≤ 286	280 X 100 X 8		
290 ≤ W ≤ 316	300 X 80 X 8		
316 ≤ W ≤ 380	340 X 100 X 8		
440	380 X 100 X 8		
480	400 X 100 X 8		

3.2 Counter-chassis components

3.2.1 Longitudinal Runner Profiles

The longitudinals of the added structure must be continuous, extending as far as possible forward to the front of the vehicle to include, if possible, the area of the rear support of the front spring, and rest on the chassis of the vehicle but not on the brackets.

In order to achieve a gradual reduction in the resistant section, the front ends of the longitudinal runner must be tapered upwards at an angle of no more than 30°, or tapered in some other equivalent way (see Figure 3.1) ensuring that the front end in contact with the chassis is suitably connected, min radius 5 mm.

Figure 3.1

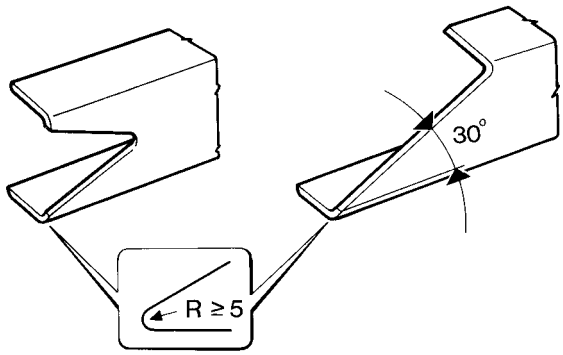

91136

If the cab's rear suspension components do not allow the entire runner to pass through, the latter may be shaped as shown in Figure 3.2. This could require the assessment of the minimum resisting section if high flexural moment occurs at the front (e.g. with crane mounted behind cab if operating towards of the vehicle front).

Figure 3.2

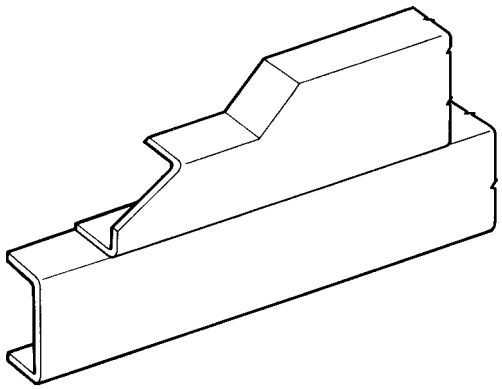

91137

The vehicle chassis is shaped and therefore the subframe runner profile must follow the shape of the main side members. The construction of subframe either wider or narrower than the chassis structure is permitted only in particular cases (e.g. removable containers sliding on rollers operated by mechanical or hydraulic systems). In these cases a necessary precaution will be that of ensuring a correct transmission of the forces between the subframe and the side member vertical web. This can be obtained by inserting an intermediate runner profile shaped according to the vehicle's side member or by applying a stiffened connecting L-section. Should the front part of the subframe be narrower than the chassis, either a number of suitably shaped U-sections or of angle L-sections with the appropriate gussetts can be installed on the outside of the subframe (Figure 3.3).

Figure 3.3

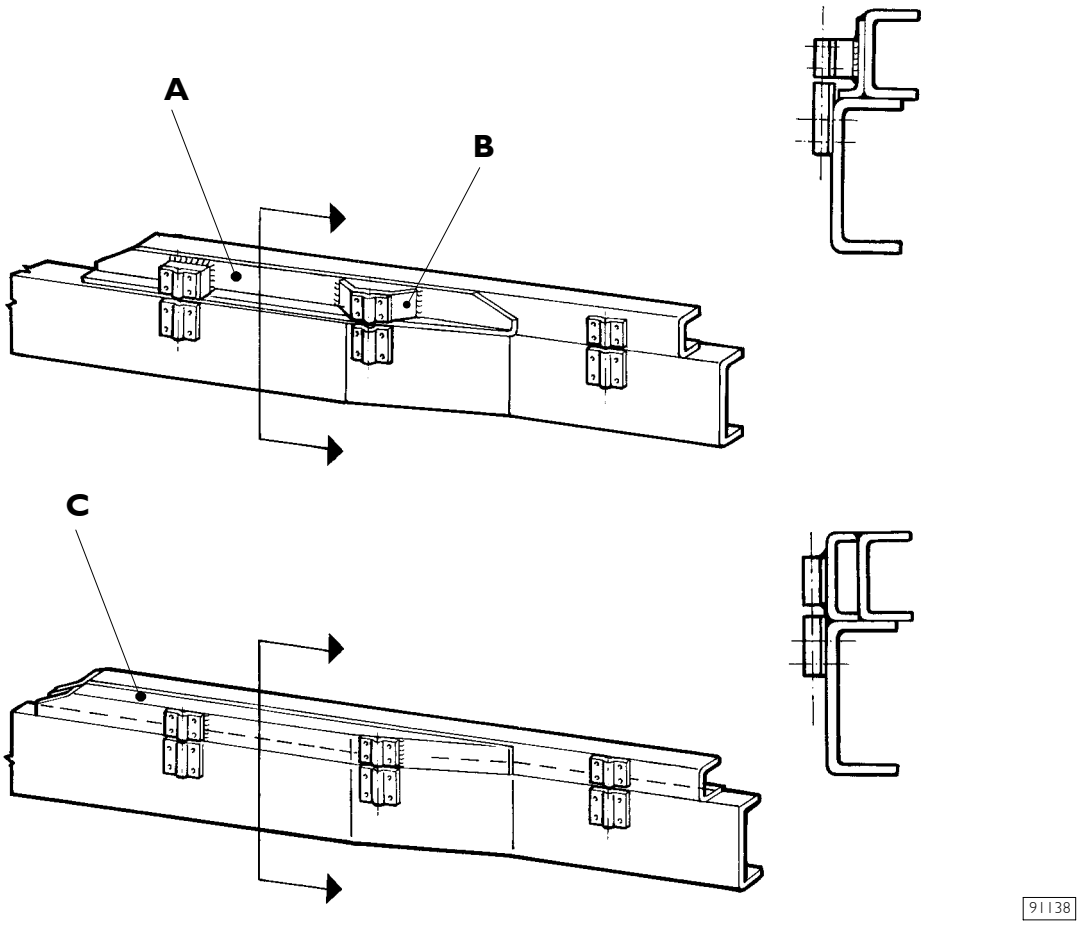

A. L section - B. Alternative solution - C. Channel section

The type of section of the runner must be determined with due consideration to the function of the subframe and to the type of structure that is above it. It is advisable to use open U-sections if the subframe has to adapt itself elastically to the vehicle's chassis, and to use box-type sections when added rigidity is needed.

Proper care must be taken to ensure a gradual change from the box- type section to the open type section. Some examples on how this achieve this are shown in Figure 3.4.

NOTE Cleat plates must not be used at the profile section of the sidemembers.

Figure 3.4

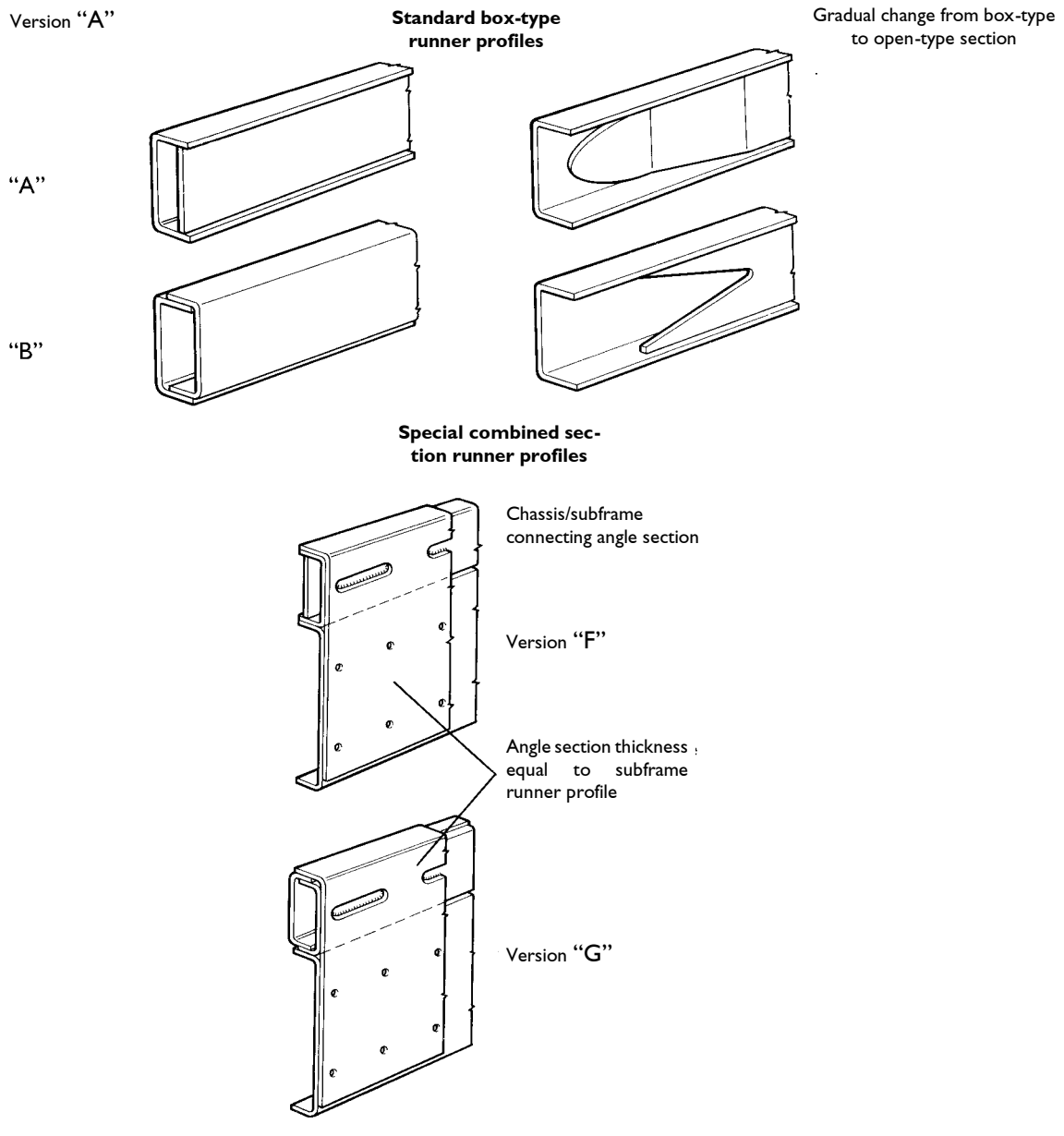

There must be continuity between the longitudinal runners of the subframe and the vehicle. Where this is not possible, continuity may be restored by fitting cleat plate brackets.

If a rubber antifriction strip is inserted, specifications and thickness must be equal to those originally used by the Manufacturer (hardness 80 Shore, max. thickness 3mm). The application of antifriction material may prevent abrasive actions which can cause corrosion when using material with a different composition (e.g. aluminium and steel).

The minimum recommended dimensions are shown for the sidemembers with various bodies. These values are generally valid for vehicles with standard wheelbase and rear overhang. In all cases similar sections, whose moment of inertia and resistance is not lower, can be used. It should be borne in mind that the moment of inertia, apart from being an important factor for the calculation of the share of bending moment to be applied, also represents the most adequate response to the degree of torsional stress required for the specific type of connecting section in use. Therefore, the moment of resistance is a determining factor as regards the stress exerted on the material.

3.2.2 Cross Members

An adequate number of cross members, which should be positioned if possible adjacent to the body mounting brackets, are required to brace the two runners of the subframe.

The cross members may be of the open type (e.g. C-type) or, if greater rigidity is desired, of the closed box-type.

Suitable gusset plates must be used to connect the crossmembers to the longitudinals to ensure sufficient strength at the connection (see Figure 3.5). In cases, where greater rigidity is required for the connection, this can be achieved as illustrated in Figure 3.6.

Figure 3.5

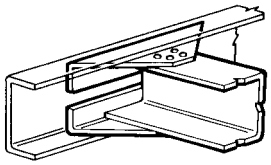

91521

Figure 3.6

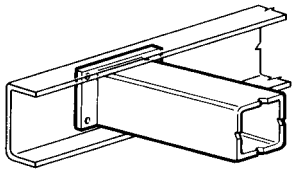

91140

Stiffening the Subframe

In the case of certain bodies, such as tippers, cement mixers, crane on rear overhang or bodies with a high centre of gravity, the subframe must be additionally stiffened at the rear end.

Depending on the degree of torsional stress, this must be done in one of the following manners:

- Joining the rear section of the longitudinal member by a box-frame construction.
- Box-frame construction, closed-section cross members (see Figure 3.7).
- Box-frame construction, whit a cruciform (see Figure 3.8).
- By applying in addition to the box-frame construction a longitudinal torsion-resistant bar (see Figure 3.9).

As a general rule, the box-frame construction of the longitudinal runners should not be used in the front end.

Figure 3.7

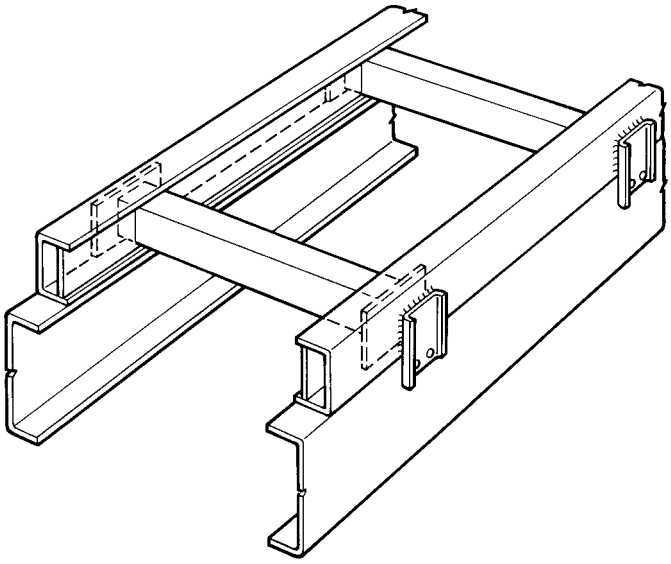

91475

Figure 3.8

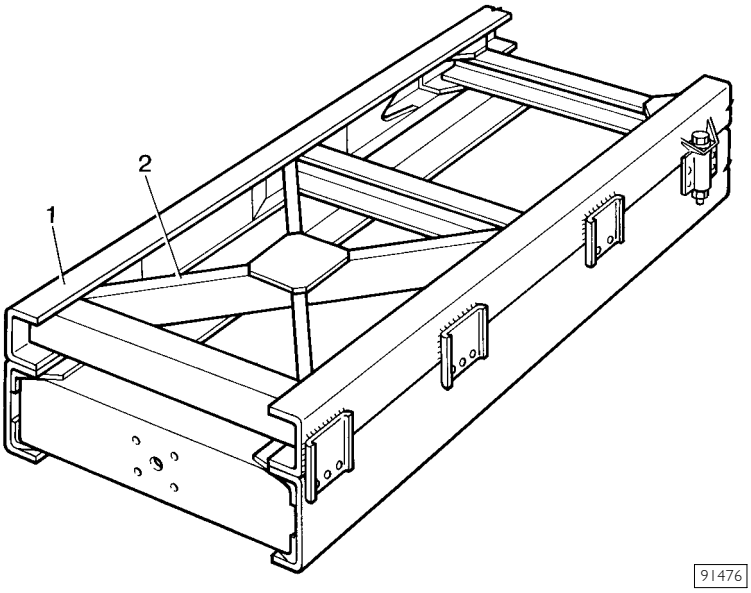

1. Subframe - 2. Cruciform

Figure 3.9

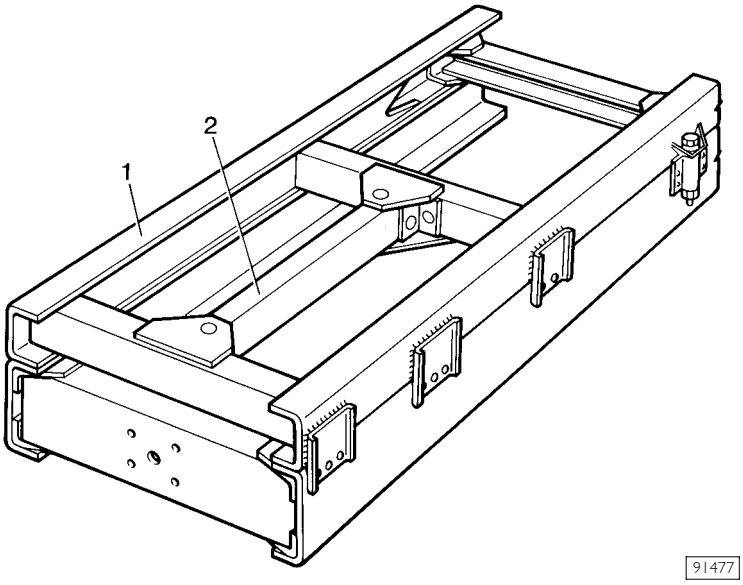

1. Subframe - 2. Box-section

Self-supporting Bodies as Subframes

A subframe (longitudinal runners and cross members) need not be fitted if self-supporting bodies are to be installed (e.g. rigid box body, tankers), or if the base of the structure to be fitted already serves the purpose of a subframe.

3.3 Connections between frame and subframe

3.3.1 Choosing the Type of Body Mounting

The selection of the type of connection to be used - if not provided initially by IVECO - is very important in terms of the subframe providing strength and stiffness for the appropriate body type.
The subframe connection may be flexible (brackets or clamps) or it may be rigid, resistant to stress (longitudinal or transverse plates); the choice must be made based on the type of body that is to be mounted (see points 3.2 to 3.8) analysing the stress forces which the additional equipment transmits to the chassis both under static and dynamic conditions. The number, size and type of fixing device properly subdivided over the length of the subframe, must be such as to ensure a good connection between the vehicle chassis and the subframe.
The screws and clamps must be of a strength class no lower than 8.8, the nuts must be equipped with devices that prevents them from working loose. The first fixing must be located, if possible, at a distance of approx. 250 to 350 mm from the front end of the subframe.
Any body fixing brackets already fitted on the vehicle frame must be used first.
Compliance with the position for the first mounting mentioned above must be ensured in cases where the body applies concentrated loads behind the cab and requires additional stability (e.g. cranes, front end tipping gears etc.) in order to prevent overstressing the chassis frame. If necessary, additional fixings must be fitted.
If the body to be fitted has different characteristics to those permitted on the original chassis (e.g tipper on a haulage chassis), the bodybuilder must provide the appropriate mountings (e.g. the replacement of brackets by cleat plates in the rear area of the chassis).

NOTE When fixing the body to the frame, no welding is allowed on the frame of the vehicle, nor can holes be drilled in the flanges of the sidemembers.

In order to improve the longitudinal or transverse securing of the connection, it is permissible to have holes in the top flanges of the side members, but only at the rear end of the members, over a length of not more than 150 mm, providing the fixing of any cross members that may be present is not weakened (see Figure 3.14). The mountings shown in Figure 3.15 may be used, using the screws which connect the rear cross member or underrun brackets to the chassis.

NOTE In all other cases, holes must not be drilled in the flanges of the sidemembers.

3.3.2 Body Mounting Characteristics

Flexible mountings (see Figure 3.10, 3.11 and 3.13) permit limited movement between the frame and the subframe, and permit the use of two parallel working strong sections. Each bears a part of the bending moment in proportion to its moment of inertia.
For the rigid type of joint (see Figure 3.15) between subframe and chassis, a single strong section is obtained, provided the number and position of the mountings are adequate to support the resulting stresses.
When using sheer resisting plates to secure the subframe to the sidemembers, a single strong section is formed which has a higher strength capacity when compared with the MTG made using brakets or clamps. This has the following advantages:

- Lower height of the subframe profile under the same bending moment acting on the section.
- Higher bending moment under the same subframe profile dimensions.
- Further increase in the strength capacity, when the subframe is made up of high mechanical characteristic materials.

Connections between frame and subframe

3.3.3 Connection with Brackets

A few examples of this type of connection (flexibility mounting), are shown in Figure 3.10.

Figure 3.10

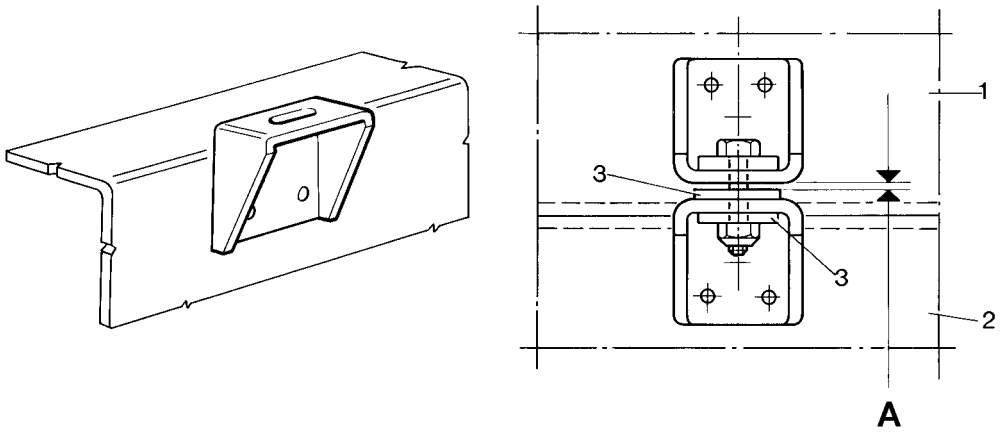

A. Leave a clearance of 1 to 2 mm before tightening

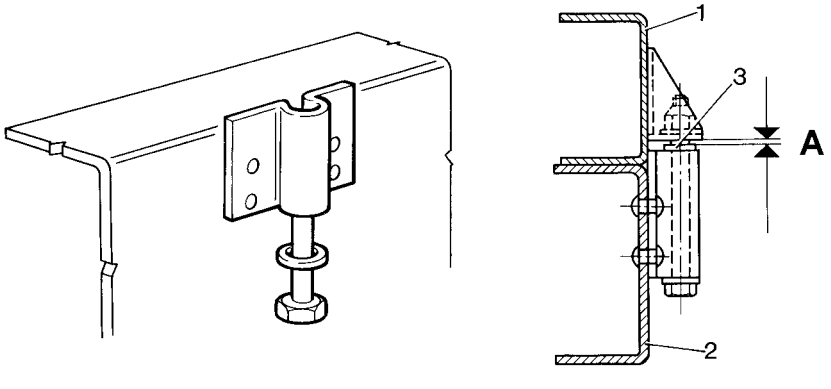

1. Subframe - 2. Frame - 3. Shims

In order to ensure a flexible joint there must be a gap of 1 to 2 mm between the brackets on the frame and those on the subframe before the securing bolts are tightened. Larger gaps are to be reduced by using suitable shims. Using bolts of proportional length improves the flexibility of the connection.

The brackets must be secured to the web of the vehicle's side member only by means of bolts or rivets.

In order to guide and better contain the loads transversally, a slight protrusion of the brackets above the chassis is recommended. When the brackets are fitted flush with the upper flange of the side member, the lateral movement of the body structure must be secured by other means (e.g. using guide plates fixed only to the chassis - see Figure 3.13). When the front connection is of the elastic type (Figure 3.11), longitudinal securing must be ensured even in conditions of maximum twisting of the chassis (e.g. off-road).

When the chassis already has factory fitted brackets for the installation of a box-type body, these brackets must be used for the installation of the structure. The brackets fitted to the subframe or to the body must have characteristics of strength no lower than those of the original brackets fitted to the vehicle.

3.3.4 Connection with Greater Elasticity

Given that there is not a clear definition of range of torsion of the vehicle rigid structure, due to its tough mission, the structure flexibility is always requested, except for special uses (e.g. installation of cranes). A coil spring should be used on each side of the connection points between frame and sub-frame.
The detail of the body mounting and installation is as follows:

Figure 3.11

- Spring stiffness = 424 N/mm.
- With the longitudinal hard on the top flange there must be a grap of 5 mm between the faces of the two brackets before the upper bracket is fixed to the longitudinal.
- The body securing bolt should be 14 mm diameter grade 8.8 and secured with lock nuts.
- Flat washers 4 mm thick by 32 mm outside diameter (minimum in both cases) should be fitted between the spring and the head of the bolt and between the lock nut and frame bracket.

When using rubber inserts, use materials which gives a good working life (elasticity). The relevant instructions for the regular inspections of the body mounting for deterioration and the bolt torque must be given to the operation.

Figure 3.12

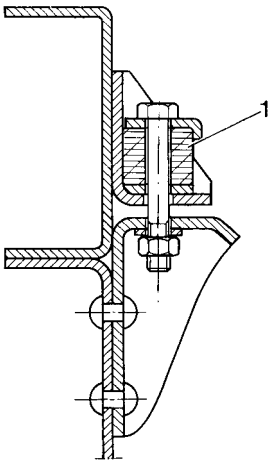

1. Element rubber.

The whole connection capacity can, if necessary, be re-established by fitting shear resisting plates from the rear spring front hanger brackets ti the end of the frame instead of the normal factory body brackets.

On installations where the vehicleis supported by means of hydraulic stabilisers (e.g. cranes, lifting platforms), the movement of the elastic connection should be limited to 30 ÷ 40 mm to ensure sufficient coordinated movement of the subframe and avoid excessive bending moments on the original chassis.

Connections between frame and subframe

3.3.5 Connection with U-bolts (clamps)

The most important mounting of this type is illustrated in Figure 3.13.

In this type of construction the bodybuilder must place metal spacers, between the flanges of the two side members and in the subframe at the point where the U-bolts are located, in order to prevent the flanges bending when the U-bolts are tightened.

In order to guide and contain transverse movement of the structure attached to the vehicle's chassis, this type of connection must also have guide plates that are attached only to the chassis as shown in Figure 3.13.

In order to keep the added structure from sliding and to increase the rigidity, it is necessary to provide positive attachment towards the rear with cleat plates to contain both longitudinally and transversal movement.

Alternatively it is also possible to use bolt-type connections at the rear end of the chassis as illustrated in Figure 3.14.

Due to the nature of this type of connection, its all-round use on the vehicle is not advisable.

Figure 3.13

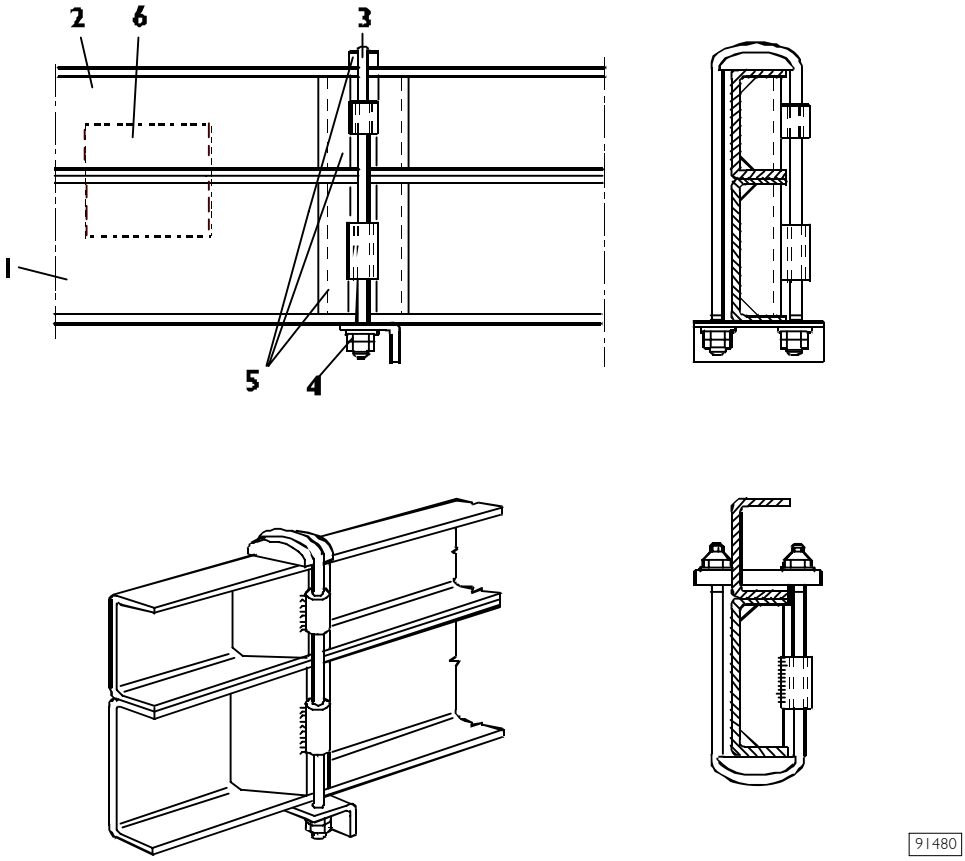

1. Frame - 2. Subframe - 3. U-bolts - 4. Locking with a lock nut - 5. Spacers - 6. Guide plates (where necessary)

Figure 3.14

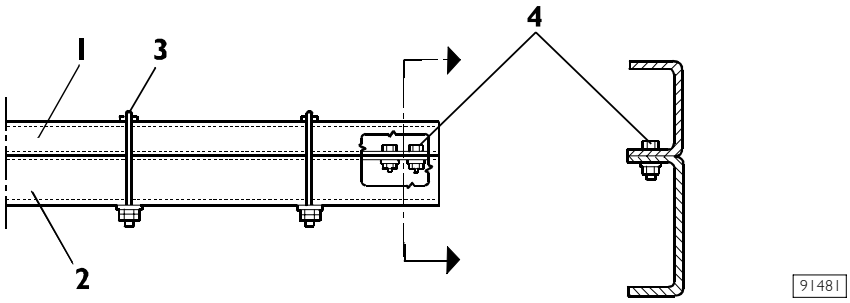

1. Subframe - 2. Frame - 3. U-bolts - 4. Longitudinal transversal securing

3.3.6 Connection with cleate (shear resisting) plates to contain longitudinal and transverse forces

This type of fixing shown in Figure 3.15 is achieved by means of a plate that is bolted or welded to the subframe and is secured to the chassis by bolts or rivets. This ensures regeneration following longitudinal and transverse thrust and provides maximum rigidity to the whole.

When this type of joint is used, the following must be observed:

- The plate must only be attached to the vertical web of the main sidemembers.
  Before fixing ensure that the subframe is mounted correctly on the top flange with no gaps between the two mating surfaces.
- Use of cleat plates must be confined to the central and rear sections of the frame.
- The number of plates, thickness and number of securing bolts must be adequate for the transmission of the sections shear and bending moments. As a rule the thickness of the plate will be equal to that of the vehicles sidemember. These values can be correctly determined by calculation according to the necessary elements.
  Good results can however be achieved taking the following into account:
  - The shear resistant plates and the omega brackets which are standard on some models are generally sufficient for normal bodies such as fixed loading platforms, tilting bodies, concrete mixers, provided the conditions of paragraphs 3.2 are met and comply, in terms of dimensions and positioning, with the normal bodies.
    The shear resistant plates already fitted to the vehicles can on the other hand meet the requirements of all installations which cause small bending moments on the vehicle frame (e.g. limited capacity cranes).
  - When a body cause high bending moments on the frame and the relevant strength has to be increased by means of shear resistant plates between the frame and subframe, or the subframe height has to be limited as far as possible (e.g. towing of central axle trailers, crane on rear overhang), observe the following instructions:

Table 3.3

Frame/subframe section height ratio	Max. distance between the centreline of the shearing resistant plates 1)	Min. characteristics of the plates	
		Thickness (mm)	Fixing hardware dimensions (at least 3 screws each plate) 2)
≤1.0	500	8	M 14

1) The number of bolts per plate enables a proportional increase in the distance between the plates (a double number of bolts enables greater distance between the plates). In the bearing areas of the frame (e.g. supports of the rear spring, of the tandem axle spring and of the rear air springs) closer spaced plates will have to be considered.
2) In case of limited thickness of both of the plates and the subframe, the connection should be carried out by means of spacers, so that longer bolts can be used.

NOTE Table applies to all models

Figure 3.15

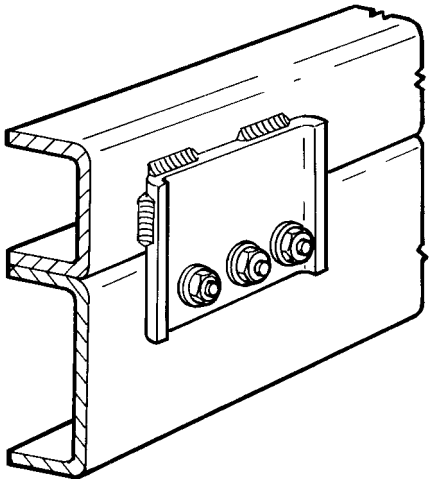

3.3.7 Mixed Connection

On the basis of instructions given for the construction of the subframe (point 3.1) and considerations included in the general section of point 3.3, the mounting between the vehicle frame and subframe can be of the mixed type, i.e. it may be obtained through a rational use of elastic flexible connections (brackets, clamps) and rigid connections (plates for longitudinal and transversal anchorage).

As a guide it is advisable to have elastic connections on the front section of the subframe (at least two on each side) while plate connections are recommended for the rear section of the vehicle when a stiffer structure is required for the whole assembly.

3.4 Fitting Box-bodies

3.4.1 Fixed bodies

On standard cab vehicles, intended exclusively for road use, box- bodies are usually fitted on a support structure comprising longitudinal runners and cross members. Minimum requirements for longitudinal sections are given in table 3.4. For dimensions, see table 3.2 depending on modulus of resistance Wx.

Table 3.4 - (for models of class AD/AT 190 up to AD/AT 340 and 380, the data given below apply to loads on front axle up to 8000 kg)

Model	Wheelbase (mm) (referring to the driving axle, on vehicles with 3 axles with third rear axle)	Minimum reinforcing profile
		Strength modulus W_x (cm^3)
AT-AD190, AT-AD190W	-	89
AT-AD260, AT-AD260W, AT-AD380, AT-AD380W	-	46
AT-AD340, AT-AD410, AT-AD410W	4200	46
	up to 5020	119
	up to 5800	245

NOTE For section dimensions see Table 3.2.

The attachment is carried out using the brackets arranged on the vertical web of the side members. If such brackets have not been provided by Iveco, they must be installed according to the specifications given in point 3.3. In order to provide an adequate lengthwise securing the brackets or clamps are used, it is good common practice to arrange a rigid joint (one on each side) on the rear overhang, using cleat plates on the web or bolts on the upper flange of the side member (see Figure 3.14 and 3.15).

Under no other circumstances may new holes be made in the flanges of the main side members.

In those instances in which the box-body uses supports that are raised above the subframe (such as cross members) it will be necessary to stiffen these supports in an appropriate manner in order to contain the longitudinal thrusts, as shown in Figure 3.16.

Figure 3.16

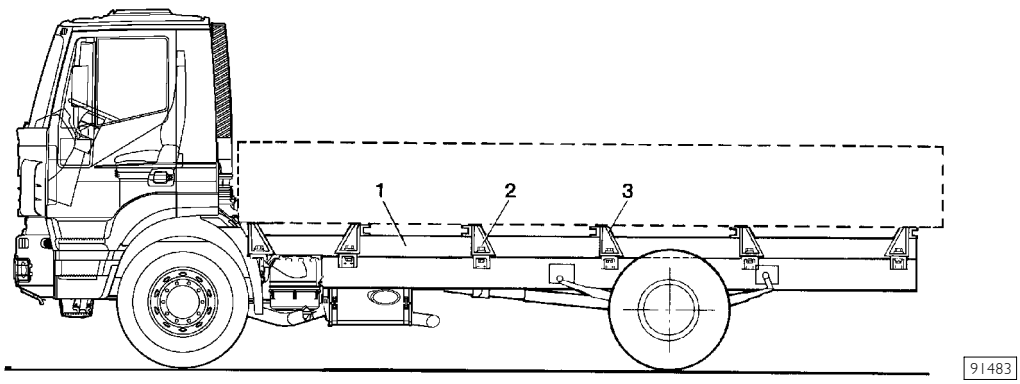

1. Subframe - 2. Brackets - 3. Securing anchorages

Figure 3.17

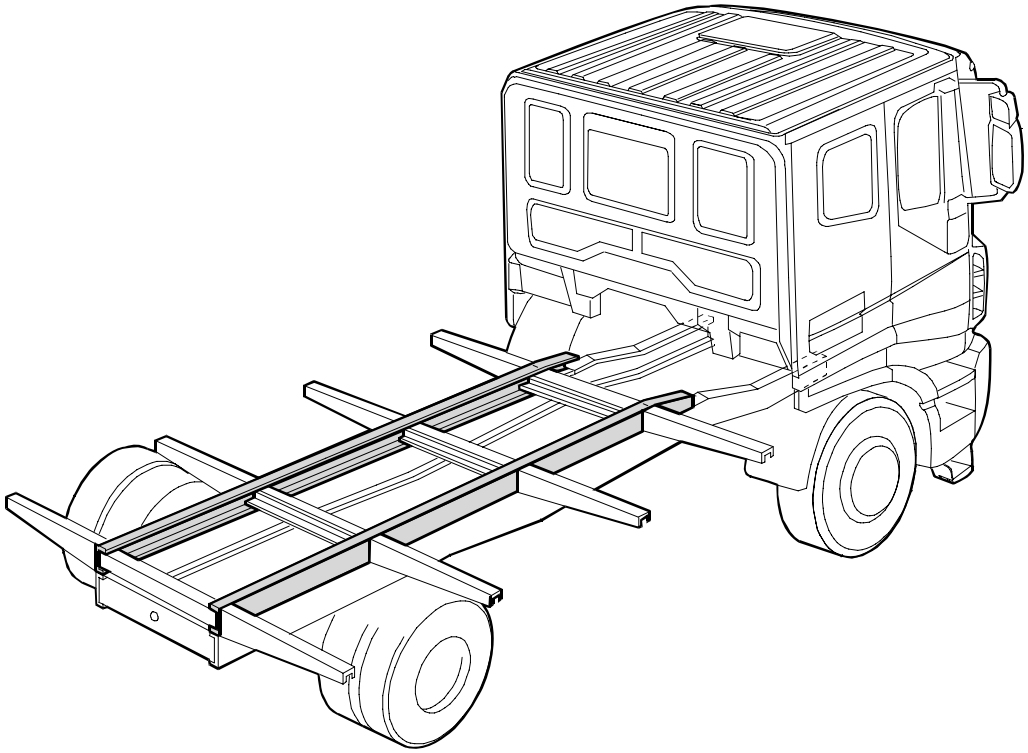

In the case of self-supporting bodies whose bearing structure operates as a subframe, the above explained installation of the reinforcing runners need not be affected.

The application of box bodies and structures with high torsional stiffness in general (e.g. vehicles in van specification), requires the use of elastic connections towards the front of the structure (see Figure 3.10 and 3.11) to avoid excessive reduction of main chassis distortion in particularly demanding applications.

Plates must be applied in the front part to limit the lateral movement of the superstructure in relation to the frame.

3.4.2 Tipper Bodies

The use of tipping bodies, whether front end or three way, subjects the chassis to notable stress. For this reason it is most important to select the right vehicle from among those intended for this use. Therefore we list here the specifications that must be adhered to for this type of construction subdivided according to light or heavy duty. Table 3.2 and Table 3.3 give the minimum runner dimensions for the subframe with which these vehicles must be equipped.

Furthermore any government regulations concerning these vehicles must also be adhered to.

Where Iveco offer a rear stabilizer bar as an option it is recommended this should be fitted.

After fitting the body, the bodybuilders must ensure that the vehicle remains stable during tipping. The following points must be kept in mind:

- The subframe must be (see Figure 3.8 and 3.9) suitable for the vehicle type and for the specific operating conditions. It must have adequately dimensioned longitudinals and cross members and be stiffened at the rear by box-type construction and cruciform.
  Fixing the subframe to the chassis, flexible connections (brackets or clamps) must be placed at the front end, whereas the rear section requires rigid-type joints (cleat plates, see Figure 3.15) to allow the added structure to contribute more to the rigidity of the whole.
  The "omega" brackets can be used on vehicles which are already fitted with them.

- The rear tipping hinge must be fitted on the subframe as near as possible to the rear support of the rear suspension. In order not to impair the stability of the vehicle during tipping operations and not to increase excessively the stress on the chassis, it is recommended that the distances between the tipping hinge and the rear hanger or tandem centre line is observed (see Figure 3.18). If for technical reasons this cannot be achieved, small increases may be permitted provided a higher strength subframe is used, in order to increase the rigidity of the rear end. Where long bodies are needed to transport large volumes, it is advisable (in those cases where it is permissible) to lengthen the wheelbase of the vehicle.
- Great care must be given to the positioning of the lifting ram both in terms of providing supports of adequate strength and in order to correctly position the mountings. It is advisable to place the ram to the front of the centre of gravity of the body and payload so as to reduce the extent of the localized load into the chassis.
- For both under floor and front end tipping gear installations it is recommended that an appropriate stabilizer is fitted to act as a guide during the tipping operation.
- The lifting ram must be mounted on the subframe.
  The useful volume in the body must conform.
- With the maximum permissible load on the axles.
- To the density of the material that is to be transported (a density mass of approx. 1600 kg/m^3 is to be used for excavated material).
- When freight having a low density is transported, the useful volume may be increased within the limits established for the maximum height of the centre of gravity of the payload plus the fixtures.
- The bodybuilders must ensure the functioning and safety of all parts of the vehicle (for instance, the positioning of lights, tow hook etc.) is safeguarded, in full compliance with the current safety regulations.

Figure 3.18

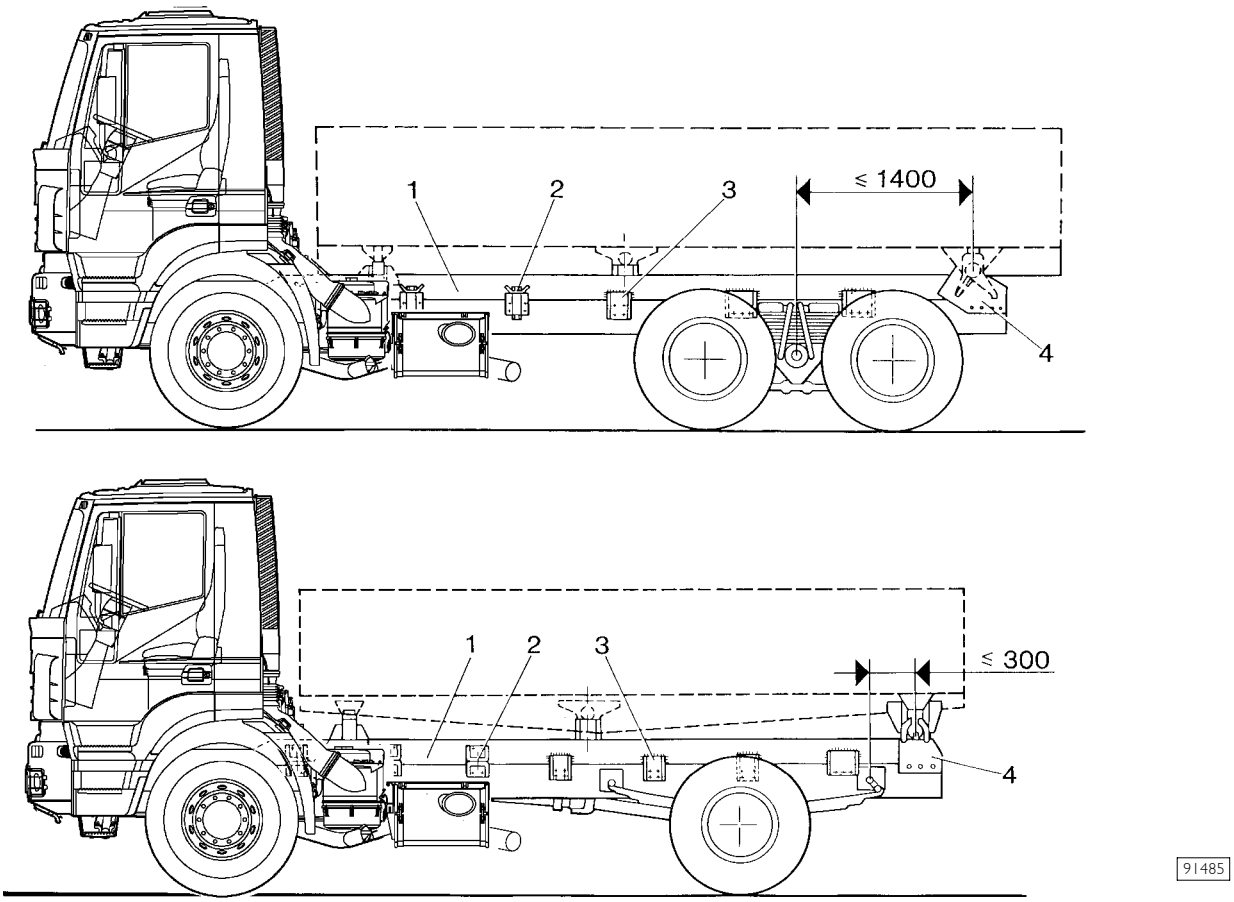

1. Subframe - 2. Brackets - 3. Plates - 4. Tipping hinge bracket

3.4.3 Heavy-duty Service

In Table 3.5 are listed the vehicles that are suitable for heavy-duty operations along with the minimum dimensions for the main subframe runners. For dimensions, see table 3.2 depending on modulus of resistance Wx.

Particular attention must be paid with strict adherence to the general specifications given to ensure vehicles have adequate stability in the rear tipping operation.

When mounting tipping bodies on chassis provided with pedestal brackets or other types suitable for different bodies, the latter must be replaced by shear/thrust resistant plates (cleat plates) from the rear spring/bogie front hanger bracket to the rear of the chassis or additional plates must be fitted.

For the models with two rear axles, the following must be complied with:

- The box-type construction for the reinforcing of the longitudinal (see Figure 3.4) must include the section from the end of the chassis to 1300 mm in front of the centreline of the two axles.
- The cruciform must include the section from the centreline of the twin axle and the end of the chassis.
- The tipping hinge must not be positioned more than 1400 mm from the centreline of the twin axle.

Table 3.5

Model	Wheelbase (mm)	Minimum profile of subframe (Yield limit of material used=360N/mm^2)
		Strength modulus Wx (cm^3)
AT-AD190, AT-AD190W	4200	65 (1) 113 (2) 173 (3)
AT-AD260, AT-AD260W AT-AD380, AT-AD380W	3820	89 (1) 113 (2) 173 (3)
AT-AD340	4250 5020	133 (4) 190 (4)
AT-AD410	5020	162 (2) (4) 190 (3) (4)
AT-AD410W	4750	162 (2) (4) 190 (3) (4)

(1) For max. load on the front axle of 7500 kg
(2) For max. load on the front axle of 8000 kg
(3) For max.load on the front axle of 8500 kg.
(4) Boxed section for entire length.

3.4.4 Light-duty Service

For these operations we recommend using vehicles with short wheelbases. In Table 3.3 are listed the longitudinal runners to be used. It is understood that the vehicle must be used for light duty on good roads, to transport freight with a low density and a low coefficient of friction.

In addition to the above general specifications, in order to give the vehicles the required rigidity and stability, the following points must be observed:

- Carefully check the chassis specifications (suspension, chassis, number of axles) to select a vehicle suitable for the body and its intended operation.
- The rear end of the subframe must be stiffened using box-type sections, crossbraces, cleat plates etc.
- The rear tipping hinge must be placed as near as possible to the rear hanger bracket of the rear suspension, max 300 mm 4x2 and max 1400 mm from the centre line of twin rear axel vehicles 6x4 and 8x4.
- In cases of vehicles having wheelbase longer than the standard tipper wheelbase, specially stiffened rear tipping support anchoring should be used so as to contain sag and ensure good stability during operation. The rear tipping angle should be between 45° and 35° while the user should be informed that the tipping should be done on as flat a surface as possible.
- Use the most rigid rear suspension available and rear anti roll bars. When parabolic rear springs are used, the stiffness should be increased using rubber elements that operate at static load.
- For vehicles with pneumatic rear suspension, (for 6x4 and 8x4 tandems with four air springs for each axle), dump the air from the suspension during the tipping operation to allow the vehicle the greatest stability during tipping. It is important that this operation takes place automatically from the tipping control. The resetting (raising) of the suspension can also be operated by the tipping control as the body is lowered.

Table 3.6

Model	Minimum profile of subframe (Yield limit of material used = 360N/mm^2)
	Strength modulus Wx (cm^3)
AT-AD190, AT-AD190W	89
AT-AD260, AT-AD260W, AT-AD340	105

(1) Necessity for a boxed section with connections resistant to shearing, starting from approx. 1000 mm in front of the centreline of the drive axle(s) up to the rear end of the chassis.

3.4.5 Containers

Not all vehicles lend themselves equally well to be used for removable type containers (i.e. the containers which can be unloaded by sliding along the subframe). Heavy duty vehicles are certainly better suited to this use but it is best to consult the Manufacturer concerning the suitability of the various models in relation to the use of the vehicle.

This type of operation is subject to additional stresses compared to those of normal on-road vehicles with fixed platform bodies, in particular as regards loading/unloading operations.

For this reason, the auxiliary frame used (see point 3.1) should be of the same dimensions as that for light tippers. Where vehicles with long wheelbases or rear overhangs are used, it may be necessary to use runners of larger dimensions for the subframe.

The lifting devices must be fixed to the subframe as indicated in point 3.4.2.

The stability of the vehicle must always be ensured during loading and unloading operations. We recommend fitting the rear end with supports (stabilisers) that are to be used during loading and unloading operations particularly when roll on, roll off containers are used. This supports are also recommended if the rear axles have pneumatic suspensions. As an alternative, refer to the explanations in chapter 3.4.4 concerning dumping the air from the suspension during the operation.

It is very important, with this type of vehicle, to adhere to the specifications concerning the height of the centre of gravity (see point 1.13.2); when containers for high payloads are used, a rear stabilising bar as well as stiffer rear suspension must be used, whenever the Manufacturer requires it.

Figure 3.19

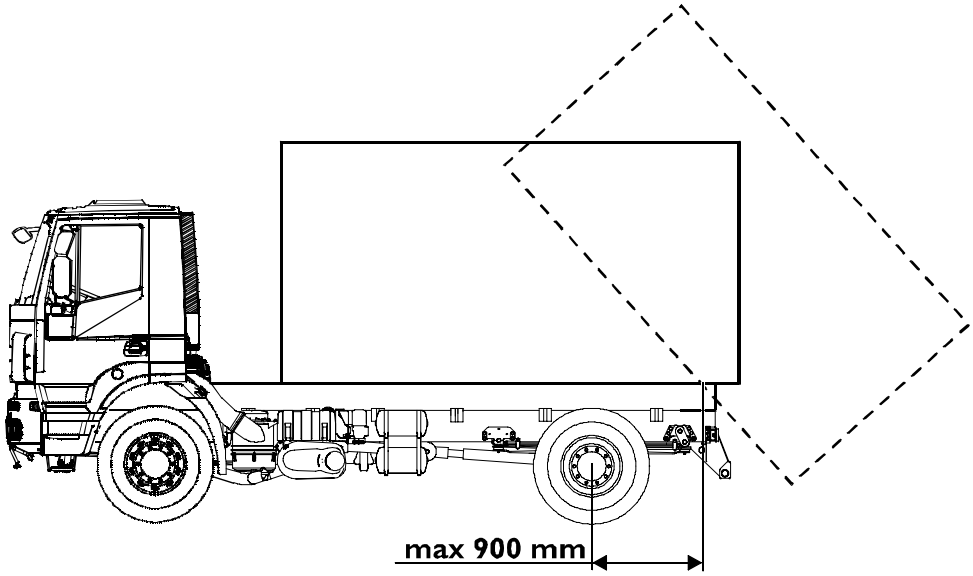

123236

The distance between the last rear axle and the sliding pivot must not exceed 900 mm.

3.5 Tractors for Semitrailers

For this use the vehicles provided by Iveco with specially designed equipment (chassis, suspension, brakes) should be used. The models with pneumatic rear suspension are particularly well suited because of the constant height of the fifth wheel to transport containers.

3.5.1 Position of the Fifth Wheel

The position of the fifth wheel may be selected from among the positions established by Iveco in relation to the kerb weight of the tractor in its standard version. If, as a result of subsequent additions and/or modifications, the kerb weight should be changed, reference must be made to the actual weight of the tractor and its complete equipment (supplies, driver, equipment etc.) in observance of the permissible loads on the axles when checking the position (see point 1.13.3).

To ensure a correct coupling with the semitrailer, particularly when the fifth wheel forward positions differ from the standard ones, the geometric positioning must be carefully checked (see point 3.5.3).

3.5.2 The Fifth Wheel

All fifth wheels having load characteristics, dimensions and performance that have been declared suitable for a specific use by their manufacturer, may be used on our vehicles. The type of fifth wheel to be selected depends on the vehicle and on the type of transport to be carried. For instance, for off-road use, fifth wheels with an adequate degree of transverse oscillation must be used to avoid excess stress on the vehicle's chassis due to torsion.

Where government regulations require it, fifth wheels must meet all requirements or be homologated. Regarding their mounting, number of bolts, dimensions, materials and positioning of longitudinal and transverse stops, see the instructions provided by the manufacture of the fifth wheels.

As the fifth wheel is very important to vehicle safety, it must not be modified in any way.

3.5.3 Coupling of Tractor and Semitrailer

Semitrailers must not have constructive characteristics (such as excessively flexible chassis, inadequate braking power) that would adversely affect the operation of the tractor. The coupling of the tractor and the semitrailer must take into account all their respective movements under all operating conditions and ensure adequate safety margins which may be required by law or regulations for road use (see Figure 3.20).

Figure 3.20

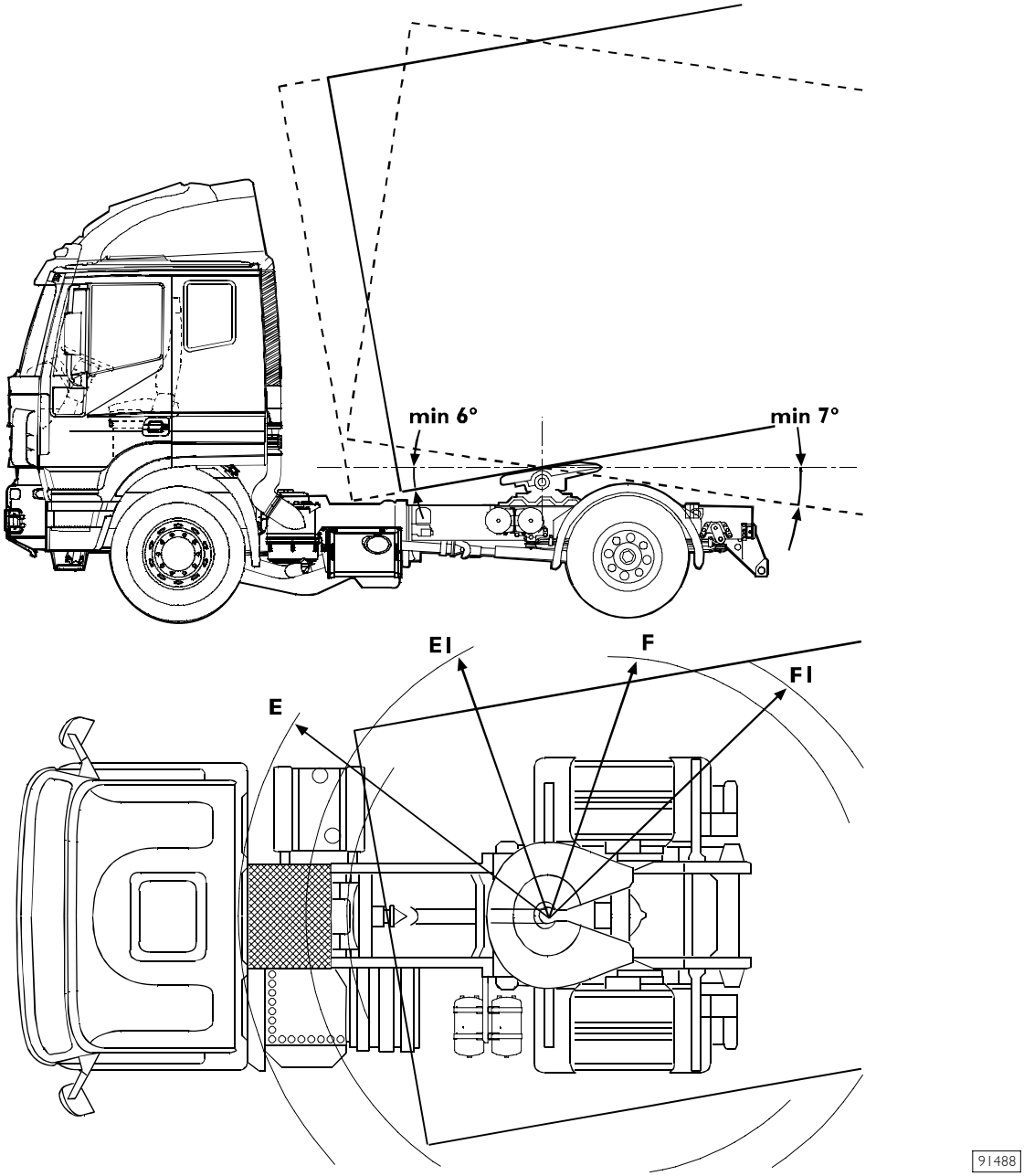

E. Front tractor clearance space - E1. Front tractor turning radius - F. Rear tractor turning radius - F1. Rear semitrailer clearance space

When required to do so, the required manoeuvring space in curves must be checked.

Concerning the definition of the height from the level of the 5th wheel, any limits imposed by the Manufacturer and/or government regulations must be observed.

3.5.4 Fifth Wheel Mountings

When the tractor is delivered without the bed plate for the fifth wheel, the following instructions must be adhered to for its construction:

- the mounting must be adequately dimensioned to handle the vertical and horizontal loads transmitted by the fifth wheel. Concerning its height, bear in mind what has been said in previous points;
- concerning the properties of the material and mounting, refer to point 3.1.1 and 3.1.2;
- the upper and lower surfaces of the mounting must be even to ensure a good bearing on the chassis of the vehicle and of the base of the fifth wheel;
- in cases where the mounting is supplied in component parts they must be assembled by welding and/or riveting;
- the fixing of the mounting to the chassis (see Figure 3.21) must be made on the angle support, if provided or as otherwise specified.

  For the fixing use flanged head bolts and nuts with a min, class of 8.8. An arragement to stop the bolts working loose must be used. The number of bolts and diameter must be at least equal to that require to secure the fifth wheel.

  When attaching logitudinal stop this must be achieved without welding or making holes in the sidemember flanges.

  It is permissible to attach cad up ramps to the chassis, on marking and fitting them. The following must be considered.
- to make them of suitable size to ensure that the semitrailer can be properly engaged with the fifth wheel;
- that the fixing to the chassis must be achieved without welding or making holes in the side member flanges.

3.5.4.1 Preparation and installations of a Structure Working together with Chassis

In addition to distributing the weight that bears on the fifth wheel the purpose of installing a suitable mounting similar in construction to the subframe shown in Figure 3.21, is to give the vehicle's chassis added torsional and flexional strength. It is required for extreme heavy- duty operations in certain markets for the models indicated in Table 3.7. The table also gives the minimum dimensions for the longitudinal runners for the side members. For dimensions, see table 3.2 depending on modulus of resistance Wx.

These must be connected by cross members, an adequate number of which must be placed in the area where the fifth wheel is positioned, while the remainder are distributed at the end of the straight section.

The mounting plate bearing the fifth wheel may be constructed in one of the following ways:

- by means of a plate of suitable thickness, of a length and width which is proportional to the fifth wheel supports or by means of two plate halves of greater length;
- by means of a fret-shaped plate which the Manufacturer of the fifth wheel can supply (height 30 or 40 mm) where there are no problems concerning the height of the fifth wheel.

The plate(s) on which the fifth wheel is fitted must be joined rigidly to the framework of the base (side and cross members).

The supports already provided by Iveco (longitudinal and/or cross members) must be used to secure the structure to the main frame. The best type of connection is provided by the use of plates at the rear and in proximity to the fifth wheel to stop sideways and lengthwise movement, and brackets towards the front (see Figure 3.21). In addition to the other general type specifications given in point 3.5.4, the specific requirements stipulated for certain models on their respective drawings (are available on request) must also be adhered to.

Figure 3.21

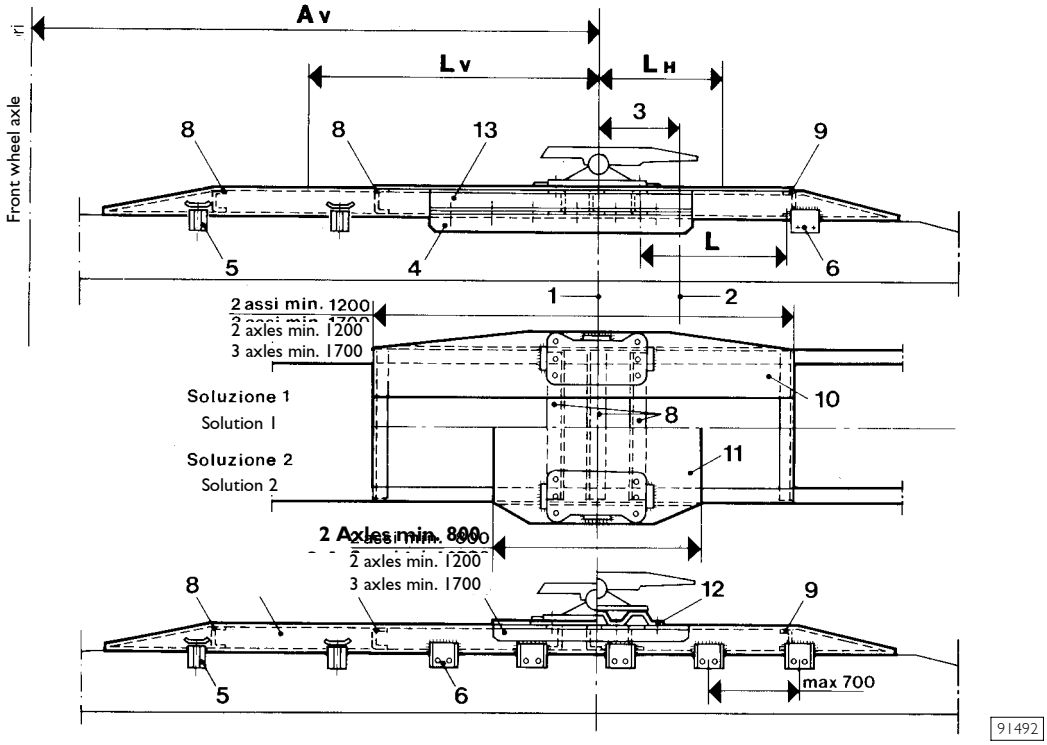

1. Fifth wheel pivot centreline - 2. Rear wheel or tandem centreline - 3. Fifth wheel position - 4. Standard equipment angle piece ∅ 14 dia. screws - 5. Front brackets ∅ 16 dia. screws - 6. Plates ∅ 14 dia. screws - 7. Longitudinal runner (see Table 3.5) - 8. Stiffening crossties - 9. Rear cross members (for L> 400 mm) - 10. Half-plate (min thickness = 8 mm) - 11. Plate (min. thickness = 10 mm) - 13. Fret-shaped plate - 14. Channel profile - 15. Fixing angle piece

A_V. =Distance between front axle and fifth wheel centreline - L_V/L_H. Minimum required reinforcement lenght when a special runner profile (see Figure 3.4) is used.

Table 3.7 - Minimum counter-chassis section bar dimensions

Model	Wheelbase (mm)	Minimum profile of subframe (Yield limit of material used=360N/mm²)
		Strength modulus Wx (cm³)
AD/AT 400 T... (4x2) AD/AT 190 T.../W (4x2, 4x4)	3200 - 3500 2800 - 3800	52
AD/AT 440 T...T (6x4) AD/AT 260 T.../W (6x4, 6x6)	2800 - 3200 2800 - 3500	60
AD/AT 380 T.../W (6x4, 6x6) AD/AT 720 T...W/T (6x4, 6x6)	3200 3500	72

Should it be necessary to reduce the height of the runner profile using shear resistant connections between the chassis and the subframe (see Table 3.7) instead of the channel profile specified in Figure 3.21, it is possible to make use of combined section runner profiles (see table below) provided the width and thickness values are no less than the tabulated ones. These are instructions of a general nature applying to the material covered by this manual. Materials of higher mechanical specifications call for the measurement of the overall chassis and subframe bending moment. Do not use sections with a height of less than 80 mm in order to provide the chassis with adequate stiffness characteristics.

For section dimensions see Table 3.2.

	A	B	F	G
Material yield point (N/mm^2)	≤ 320	≤ 320	≤ 360	≤ 360
Max. runner profile height reduction (mm)	40	60	100	120
Combined reinforcements length Lv: L_H: (see Figure 3.24)	$0.3A_V$ $0.2A_V$	$0.4A_VV$ $0.22A_VV$	$0.5A_V$ $0.25A_V$	$0.55A_V$ $0.25A_VV$
Example: Combined section as an alternative to the channel section (mm):	210X80X8	190X80X8	150x80x8 ± angle section	130x80x8 ± angle section
Actual height reduction (mm)	40	52	92	104

The above data cannot be used when the subframe is connected to the vehicle chassis by means of brackets. In this case, moments of resistance and stress data must be calculated for each chassis and subframe section.

3.5.4.2 Converting a Truck into a Semitrailer Tractor

In certain cases, on models where no tractor unit was originally planned, it is possible to obtain the necessary authorisation to convert a truck into a semitrailer/tractor. The specifications relative to such a conversion in terms of fifth wheel mountings, modifications of the chassis (i.e. suspension, braking system etc.) based on the use of the vehicle, must be defined in each case.

For class AD/AT 190 vehicles up to AD/AT 380 H it is necessary to replace the crossmember No. 4 of the chassis (side-member rear offsetting at about 2000 m from front wheel axle) with that specific to the tractor version (solution with long gusset plates). For use on roads in good conditions and up to 7500 kg on front axle, the use of subframe for fifth wheel mounting is not required. In the case of 8000 kg on the front axle, For off-road and on-road applications a subframe must be utilised having longitudinal profiles with minimum dimensions of 140x70x7mm.

3.5.4.3 Variable height fifth wheel (only for Low tractor)

Iveco offers its Customers a variable height fifth wheel solution, type-approved only for Low tractor units.

It must be clarified that the above device may be used in the lower position for any type of vehicle (except quarry and building site and tipper trucks), while in the higher position it must not be permitted under any circumstances for the following applications:

- Conversions with high centre of gravity
- silos
- Tanker trucks
- Tipper trucks
- Quarry and building site vehicles

The maximum height of the fifth wheel measured from the ground surface is also authorised up to 1200 mm in accordance with EEC Braking certificate.

3.6 Transport of Indivisible Materials (bascules)

The transport of indivisible material and of freight whose dimensions exceed normal ones, is regulated in various countries by special legislation.

The particular configuration of these transports in which stress is created as a result of the concentrated vertical load and of the dynamic thrusts that may arise when braking, requires that the choice of vehicle to be used is checked with Iveco beforehand.

The structure that bears the weight on the tractor must use a subframe (see point 3.5.4.1): other conditions that must be met for this type of transport will be specified each time in our authorisations.

3.7 Installation of Tanks and Containers for Bulk Materials

a) Installation through application of a subframe

As a general rule, the installation of tanks and containers on our vehicles requires the use of an appropriate subframe. Table 3.8 contains the recommendations for the dimensions of the longitudinal runners to be used for the subframe.

Table 3.8 - Installation of tanks

Model	Minimum profile of subframe (Yield limit of material used=360N/mm^2)
	Strength modulus Wx (cm^3)
AT-AD190, AT-AD190W	89
AT-AD260, AT-AD260W	89 (1)
AT-AD340, AT-AD410	59 (1) (2)

(1) Stiffen the subframe in the area on which the tanks and containers rest;

(2) Locate the front tank support in front or near to the rear support of the spring on the 2nd front axle, otherwise the use of a larger section and specific authorisation will be necessary.

Tankers, or more generally, structures which are torsionally very rigid, must be fitted so that the vehicle chassis retains sufficient and gradual torsional flexibility, by avoiding areas of high stress.
When installing a tank we recommend using elastic joints (see Figure 3.22) between the body of the tank and the subframe in front and rigid supports that are capable of withstanding longitudinal and transverse forces at the rear.

Figure 3.22

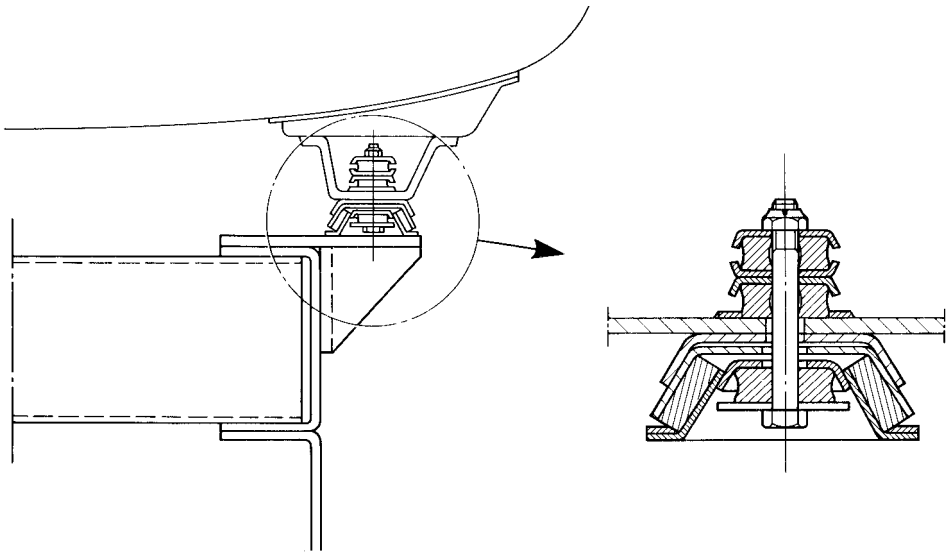

As mentioned in the case of other applications, the positioning of the mountings through which the forces are discharged is similar here. Rigid mounts are position corresponding to the rear suspension supports and the flexible mounts as near as possible to the rear support of the front suspension.

When faced with a different situation, a possible solution could be that of reinforcing the structure by means of longitudinal runner profiles of larger dimensions in comparison with those given in Table 3.8.

The rigidity characteristics of the vehicle chassis as well as the area where the connections are to be installed and the type of use for which it is intended must be taken into account.
As a rule, for road use, it can be said that the first front elastic connection will allow for a gap of approximately 10 mm between the subframe and frame during the chassis torsional stage.

In order to define the elastic connection.

b) Installation without application of a subframe

Tanks may be mounted directly onto the vehicle chassis without fitting an subframe under the following conditions:

- the distance between saddles must be determined depending on the load to be carried and must not exceed 1 meter.
- saddles must be fitted so as to allow an even distribution of the loads over a considerably large surface. Suitable brackets must be provided between the saddles to limit the longitudinal and transverse thrusts.
- other anchoring solutions may be authorised by Iveco.
- self-bearing tanks may be positioned directly on the chassis by means of suitable mountings located right behind the cab and in the area of the rear axle(s). The number and distribution depends on the number of axles and the wheelbase; this may vary from min. 2 for each side on 2- axle vehicles with short wheelbases to min. 3 for 3/4-axle vehicles with short wheelbases (see Figure 3.23).
- the mountings must be sufficiently long (600 mm approx) and be positioned next to the suspension mountings (max. distance 400 mm).
- to permit the necessary torsional movements of the chassis, elastic front mounting should be used where possible.

Other solutions are possible depending on the type of construction.

Figure 3.23

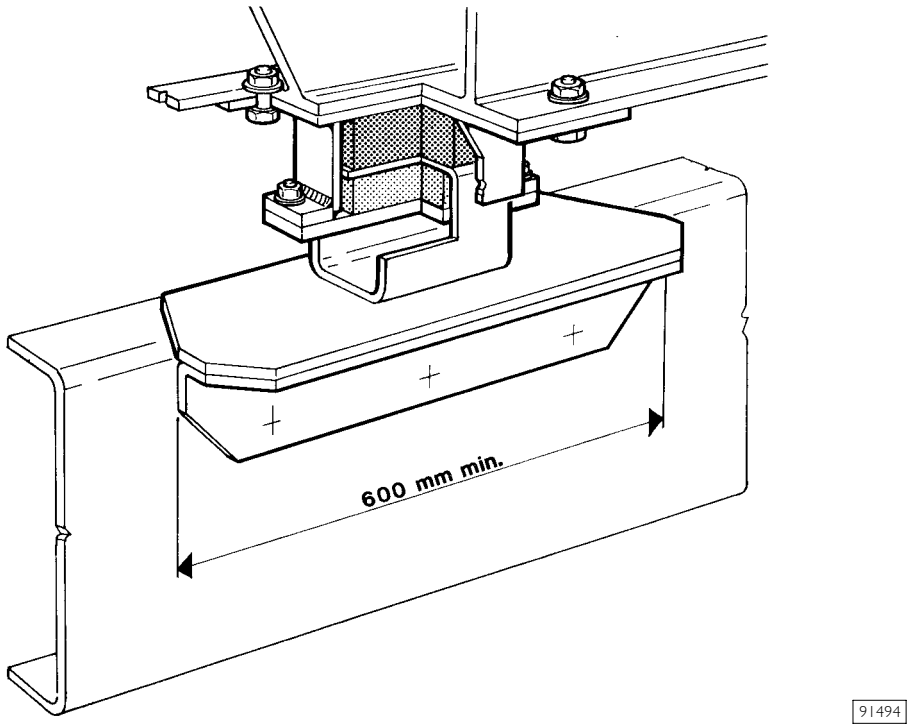

The installation of two or more separate containers or tanks on the vehicle requires the use of an subframe that permits good distribution of the load and an adequate torsional rigidity for the chassis/subframe using connections resistant to shearing. A good solution is constituted by using a rigid connection which connects the containers together.

In order to adhere to the maximum admissible load limits on the axles, it is necessary to establish the maximum volume, the degree of filling of the container and the density of the freight. When separate tanks or individual containers with separate compartments are used, care must be taken to ensure that with every degree of filling the maximum permissible load on the axles is respected as well as the minimum ratio between the load on the front axle and fully loaded vehicle weight (see point 1.13.2 and 1.13.3).

In consideration of the nature of this equipment, special attention must be paid to limiting the height of the centre of gravity as much as possible to ensure good handling (see point 1.13.2); we recommend the use of vehicles with stabiliser bars.

It is necessary to provide special transverse and longitudinal bulkheads inside the tanks and containers for liquids in order to reduce the dynamic loads which the liquid transmits when the vehicle is in motion and the tanks are not filled to capacity which would adversely affect the handling and resistance of the vehicle.

The same holds true for trailers and semitrailers in order to avoid dynamic loading on the coupling devices.

3.8 Installation of Cranes

The selection of the crane must be made with due consideration to its characteristics (weight, maximum torque) in relation to the performance of the vehicle.

The positioning of the crane and of the payload must be done within the load limits permitted for the vehicle. Installation of the crane must be carried out in compliance with statutory requirements, national standards (e.g. CUNA, DIN) and international standards (e.g. ISO, CEN), depending on which of these is pertinent to the particular vehicle.

While the crane is operating, the stabilisers (hydraulic if possible) must be used and be in contact with the ground. As a general rule, installation of the crane must be executed by interposing a suitable subframe, the construction of which must be carried out in observance of the general prescriptions (see point 3.1) and also with reference to the tables due to be published in relation to the subframe dimensions.

In those cases where no specific subframe is called for it is still necessary to provide a suitable mounting on the chassis for the crane using the standard body subframe (the length of the section members must be at least 2.5 times the width of the base structure of the crane) in order to distribute the load and the stress developed during the operation of the crane.

If the vehicle (e.g. tipper) requires the use of its own subframe, it may also be used for the crane provided that its dimensions are adequate.

Special cases, whose Mg value fall within the areas designated with the letter "E" (or for higher values) must be checked individually each time.

Figure 3.24

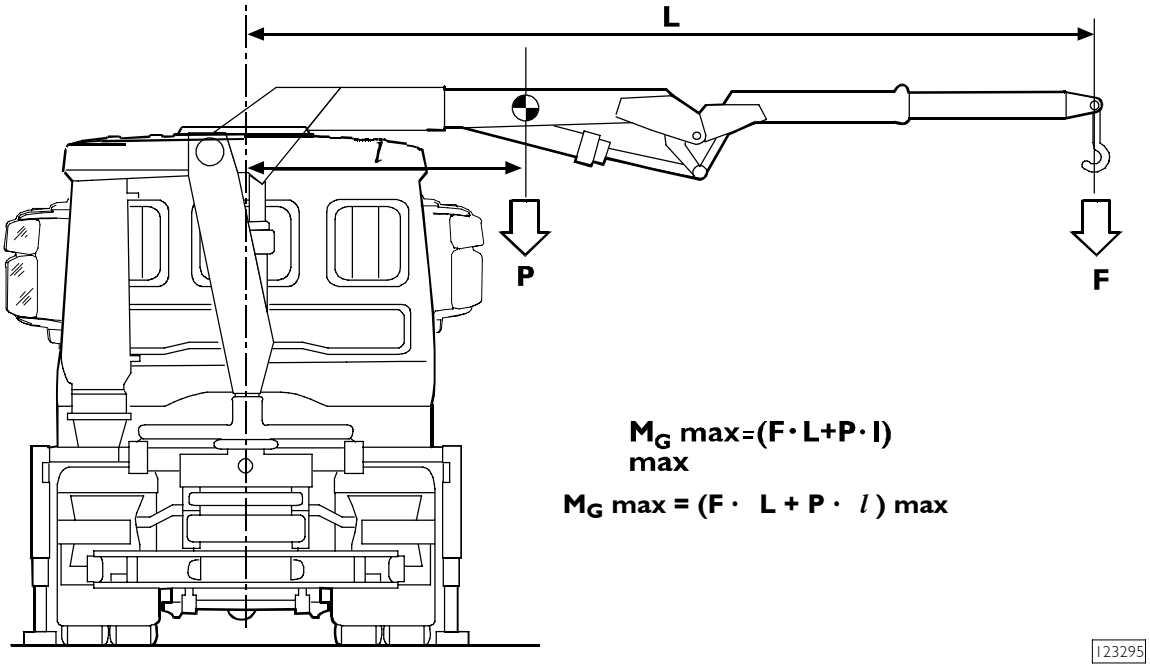

The dimensions of the subframe refer to the total maximum static moment of the crane (Mg max.) which is calculated on the basis of the equation given in Figure 3.24.

The decision concerning the number of stabilisers and the type of subframe to be used, particularly in terms of torsional rigidity (box-type sections, cross members etc.) is determined by the maximum moment of the crane and its position for which the Manufacturer of the crane and installer are responsible.

The verification of the stability of the vehicle when the crane is operating must be done in compliance with the applicable government regulations.

3.8.1 Crane Behind the Driver's Cab

The mounting of the subframe onto the chassis will as a rule, be made using the standard brackets (see Figure 3.25) to which are added, if necessary, other flexible anchorages (brackets or clamps) so that the flexibility and torsional characteristics of the chassis remain unchanged.

For on-road vehicles only if the height of the subframe runner profile has to be reduced (e.g. to lower the total height of the vehicle) the mounting of the subframe may be carried out with shear resisting connections (see Figure 3.26).

It is advisable to adopt constant section profiles for the entire effective length of the vehicle; reduction of the profile section (always gradual) is permissible in areas in which the moment of flexure induced by the crane assumes values equivalent to those of cases in which the use of a specific subframe is not called for.

The subframe for the crane may be integrated with the body longitudinal runner as shown in Figure 3.25. Length "Lv" must not be less than 35% of the wheelbase for vehicles with forward-control cab when the body runner has a smaller cross-section.

Figure 3.25

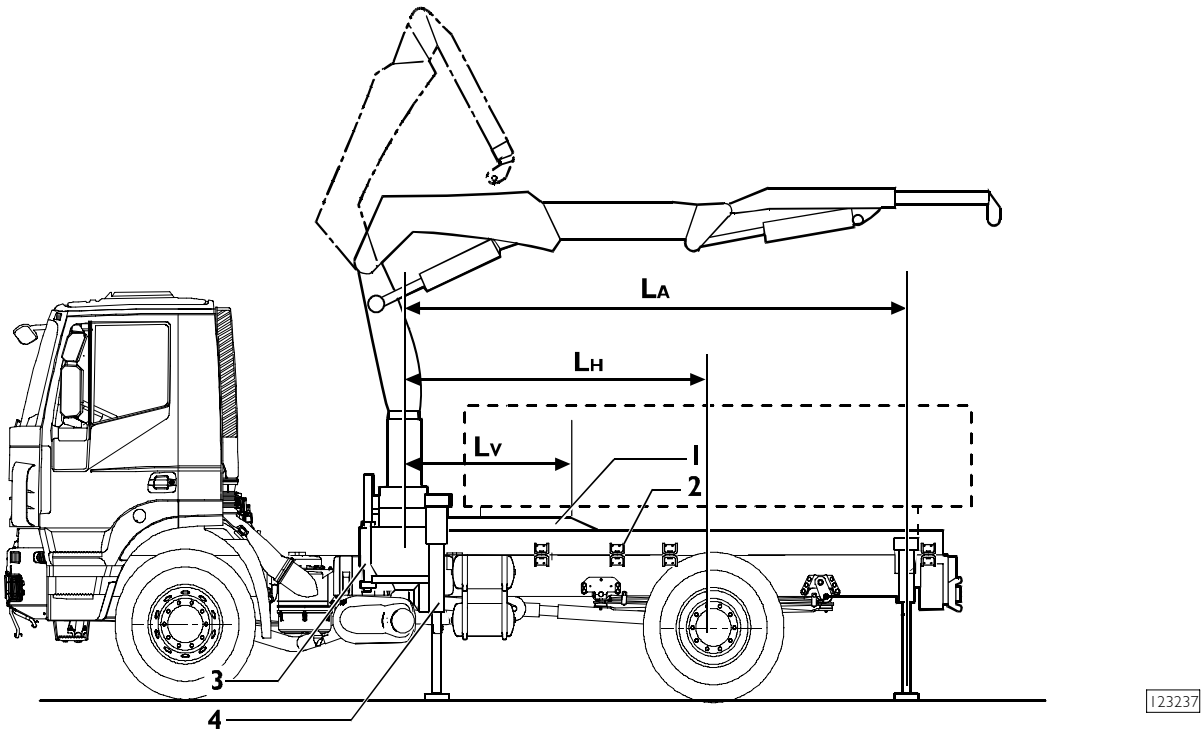

1. Subframe - 2. Connections - 3. Crane joints - 4. Stabilisers

Table 3.9 - Cranes mounted behind cab (subframe fixing with brackets or clamps)

Model	Wheelbase (mm)	Yeld limit of material used (N/mm²)	Total torque M_G max (kNm)																		
			0 - 20	20 - 30	30 - 40	40 - 50	50 - 60	60 - 70	70 - 80	80 - 90	90 - 100	100 - 120	120 - 140	140 - 160	160 - 180	180 - 200	200 - 220	220 - 240	240 - 260	260 - 280	280 - 300
			Minimum strenght modulus Wx for the subframe (cm³)																		
AT-AD190	5700	320	A	A	A	A	A	A	A	A	A	A	A	21 1)	8	119	150	245	374	474	E
AT-AD190W		420	A	A	A	A	A	A	A	A	A	A	A	21 1)	89	119	150	185	208	245	343
AT-AD260	4800	320	A	A	A	A	A	A	A	A	A	A	A	21 1)	8	119	150	245	374	474	E
AT-AD260W		420	A	A	A	A	A	A	A	A	A	A	A	21 1)	89	119	150	185	208	245	343
AT-AD340	5820	320	A	A	A	A	A	A	A	A	A	A	A	21 1)	8	119	150	245	374	474	E
		420	A	A	A	A	A	A	A	A	A	A	A	21 1)	89	119	150	185	208	245	343
AT-AD380	4200	360	A	A	A	A	A	A	A	A	A	A	A	A	A	A	57 1)	105	150	286	439
AT-AD380W		420	A	A	A	A	A	A	A	A	A	A	A	A	A	A	57 1)	105	150	173	208

A = The reinforcing profile prescribed for the respective superstructure is sufficient (e.g. for normal bodies). Close the reinforcing profile in the crane mounting area. In the crane area, reinforcing profiles with thickness of less than 5 mm must be reinforced.

E = To be checked on a case-by-case basis. Send the technical documentation with the checks of stresses and stability to the appropriate IVECO bodies.

(1) When the auxiliary frame requires a high moment of resistance (e.g to install platforms as per Table 3.1) the latter shall be established also for the crane.

Figure 3.26

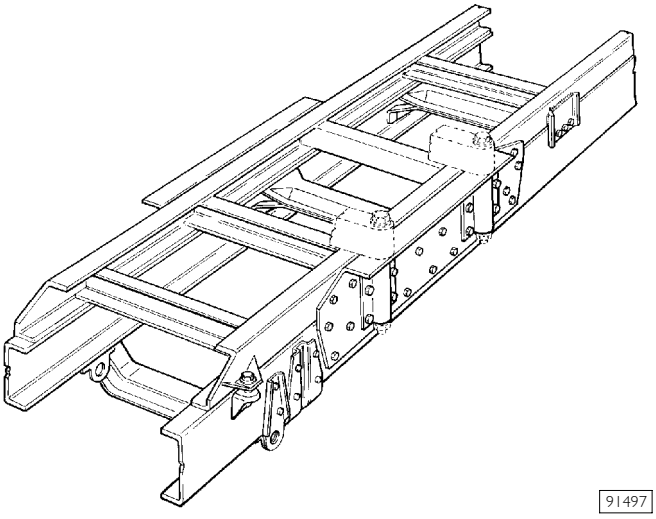

When installing cranes on large-cab vehicles, should it be impossible to extend the subframe up to the rear support of the front spring, it may be necessary to contain crane rotation according to crane capacity, so as not to exceed bending moment allowance for the chassis.

Installation of cranes on off-road vehicles may require fitting elastic mountings between the chassis frame and subframe on the front and central areas (see Figure 3.11) so as not to excessively constrain the chassis torsional movement. Since in such cases the crane will be virtually connected to the subframe only, the size of the longitudinal runners must be adequate to resist the crane operation-generated movements.

The functioning of the equipment that is placed behind the cab (e.g. gear levers, air filter, locking device for the tilting cab etc.) must not be impaired. Relocating assemblies such as batteries box or fuel tank is permissible provided that the original type of connections are re-established.

Normally, when the crane is placed behind the cab, it is necessary to move the body or equipment towards the rear. In the specific case of tipping equipment, particular care must be given to the placement of the lifting device and of the rear tipping hinges which should be moved back as little as possible (see point 3.4).

Table 3.10 - Cranes mounted behind cab (subframe fixing with shear-resistant plates)

Model	Wheelbase (mm)	Yeld limit of material used (N/mm²)	Total torque M_G max (kNm)																		
			0 - 20	20 - 30	30 - 40	40 - 50	50 - 60	60 - 70	70 - 80	80 - 90	90 - 100	100 - 120	120 - 140	140 - 160	160 - 180	180 - 200	200 - 220	220 - 240	240 - 260	260 - 280	280 - 300
			Minimum strenght modulus Wx for the subframe (cm³)																		
AT-AD190	5700	320	A	A	A	A	A	A	A	A	A	A	A	31 1)	36 1)	89	89	105	135	150	173
AT-AD190W	-	420	A	A	A	A	A	A	A	A	A	A	A	A	A	31 1)	46	89	89	105	135
AT-AD260	4800	320	A	A	A	A	A	A	A	A	A	A	A	31 1)	36 1)	89	89	105	135	150	173
AT-AD260W		420	A	A	A	A	A	A	A	A	A	A	A	A	A	31 1)	46	89	89	105	135
AT-AD340	5820	320	A	A	A	A	A	A	A	A	A	A	A	31 1)	36 1)	89	89	105	135	150	173
		420	A	A	A	A	A	A	A	A	A	A	A	A	A	31 1)	46	89	89	105	135
AT-AD380	4200	360	A	A	A	A	A	A	A	A	A	A	A	31 1)	36 1)	89	89	105	135	150	173
AT-AD380W		420	A	A	A	A	A	A	A	A	A	A	A	A	A	31 1)	36	89	89	105	135

A = The reinforcing profile prescribed for the respective superstructure is sufficient (e.g. for normal bodies). Close the reinforcing profile in the crane mounting area. In the crane area, reinforcing profiles with thickness of less than 5 mm must be reinforced.

(1) When the auxiliary frame requires a high moment of resistance (e.g to install platforms as per Table 3.1) the latter must be established also for the crane.

2) The application of these capacity ranges of the cranes requires that the vehicle's stability be carefully verified (possibility of using stabilisers with a greater extension or resorting to heavier ballast.

3) Should one wish to reduce the height of the runner profile using shear resistant connections between the chassis and subframe instead of the specified channel section it is possible to make use of combined section runner profiles (see table below) provided that the flange width and thickness values are no less than the tabulated ones. These are instructions of a general nature appl ying to materials covered by this manual. Material with higher mechanical specifications call for the measurement of the overall chassis and subframe bending moment. However it should be remembered that for the part of the runner profile which is not reinforced (channel section) the moment of resistance must not be less than the one required for the subframe concerned.
As a reduction of the subframe runner entails a reduction in the subframe moment of resistance, the Bodybuilder who is envisaging the installation of a crane with 4 stabilisers will have to work out the means for ensuring adequate torsional stiffness for the af in the crane resting area. For this reason we recommend that the height of the runner profiles be not less than 120 mm. However, as this solution also implies a restriction of the torsional capacity of the main chassis while the vehicle is travelling, we recommend that its use be confined to on-road use only.

(4) For section dimensions see Table 3.2.

Table 3.11 - Solutions with combined section runner profiles (see Figure 3.4)

	A	B	F	G
Material yield point (N/mm^2)	≤ 320	≤ 320	≤ 360	≤ 360
Max. runner profile height reduction (mm)	40	60	100	120
Combined reinforcements length (see Figure 3.24) L_V =	$0.25L_h$ or	L_A $0.35L_h$ or	L_A $0.55L_h$ or	L_A $0.6L_h$ or
Example: Combined section as an alternative to the channel section C 250 X 80 X8 (mm)	210x80x8	90x80x8	50x80x8 + angle section	130x80x8 + angle section
Actual height reduction (mm)	40	52	92	104

The above-mentioned indications cannot be followed when the counter-chassis is connected to the vehicle by means of brackets (see Table 3.9). In this case stress and timing must be determined individually for each chassis and counter-chassis section.

3.8.2 Crane on Rear Overhang

It is advisable for this type of application, to extend the subframe over the entire length of the vehicle that is available for the body up to the back of the cab or if this is no possible the rear support of the front spring.

In consideration of the particular distribution of the load on the vehicle, where the load is concentrated on the rear overhang, in order to ensure the rigidity that is necessary for good performance on the road and when the crane is in operation, the subframe must be strengthened and stiffened in relation to the capacity of the crane. Box-type construction sections (see point 3.1) and brackets are to be used in the area of the rear suspension and the rear overhang (Length Lv as per Figure 3.28). Care must also be taken to ensure that the transition from box-type to open section is well blended as illustrated in Figure 3.4.

In the area that is affected by the box-type section, the frame must be secured to the chassis of the vehicle by means of shear-resistant plates (i.e. an adequate number of plates spaced at most 700 mm from each other), whereas elastic mountings are to be used in the front part. Due care must be taken to ensure that under any load conditions, the ratio of the weight on the front axle to the rear axle or axles, respects the limits set for the vehicle (see point 1.13.3).

As the required stiffness of the subframe depends on various factors (i.e. crane capacity, size of its supporting base, vehicle kerb weight, chassis overhang) we cannot give information valid for all possible conditions. For this reason the bodybuilder will have to assess the vehicle stability also by means of practical tests. If, as a consequence of such tests , the subframe stiffness proves insufficient, the bodybuilder will have to achieve this objective by means of alternative methods.

The rear overhang of the crane (length Lu, see Figure 3.27) must be limited as much as possible in order to preserve the good driving characteristics of the vehicle and acceptable stress conditions. This value must not exceed 50% of the wheelbase.

Figure 3.27

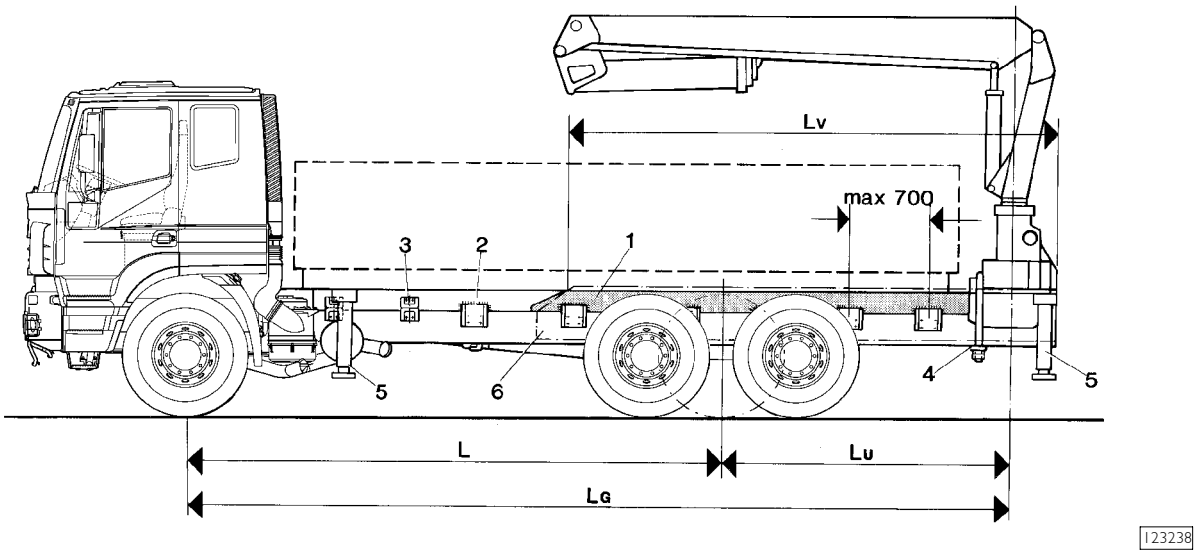

1. Subframe - 2. Plates - 3. Brackets - 4. Crane joints - 5. Stabilisers - 6. Connecting angle bar

Table 3.12 - Crane mounted on rear overhang (subframe fixing with shear-resistant plates)

Model	Wheelbase (mm)	Yeld limit of material used (N/mm²)	Total torque M_G max (kNm)																	
			0 - 20	20 - 30	30 - 40	40 - 50	50 - 60	60 - 70	70 - 80	80 - 90	90 - 100	100 - 120	120 - 140	140 - 160	160 - 180	180 - 200	200 - 220	220 - 240	240 - 260	260 - 280	280 - 300
			Minimum strenght modulus Wx for the subframe (cm³)																	
AT-AD190	5700	360	A	A	A	A	A	A	A	A	A	A	A	A	A	57	71	110	110	135	173
AT-AD190W		420	A	A	A	A	A	A	A	A	A	A	A	A	A	32 1)	42 1)	57	71	110	110
AT-AD260	4800	360	A	A	A	A	A	A	A	A	A	A	A	A	A	57	71	110	110	135	173
AT-AD260W		420	A	A	A	A	A	A	A	A	A	A	A	A	A	32 1)	42 1)	57	71	110	110
AT-AD340	5820	360	A	A	A	A	A	A	A	A	A	A	A	A	A	57	71	110	110	135	135
		420	A	A	A	A	A	A	A	A	A	A	A	A	A	32 1)	42 1)	57	71	110	110
AT-AD380	4200	360	A	A	A	A	A	A	A	A	A	A	A	A	23 1)	32 1)	42 1)	57	110	110	135
AT-AD380W		420	A	A	A	A	A	A	A	A	A	A	A	A	A	A	23 1)	42 1)	42 1)	57	71

A = The reinforcing runner required for the corresponding subframe is sufficient (e.g. Table 3.1 for standard platform bodies).
The reinforcing runner in the crane's mounting area is to be closed. In the same area, the reinforcing runners with thickness less than 5 mm are to be reinforced.

E = To be checked for case to case (submit the technical documentation with the calculation made to determine stress and stability).

1 = When the auxiliary frame requires a high moment of resistance (e.g to install platforms as per Table 3.1) the latter shall be used also for the crane.

2 = Should one wish to reduce the height of the runner profile using shear resistant connections between the chassis and subframe instead of the specified channel section) it is possible to make use of combined section runner profiles (see table below) provided the flange width and thickness values are no less than the tabulated ones. These are instructions of a general nature applying to materials covered by this manual. Material with higher mechanical specifications call for the measurement of the overall chassis and subframe bending moment. However it should be remembered that for the part of the runner profile which is not reinforced (channel section) the moment of resistance must not be less than the one required for the subframe concerned (i.e. Table 3.1 for fixed platform bodies). As a reduction of the subframe runner entails a reduction in the subframe moment of resistance, we recommend that the height of the runner profiles be no less than 120 mm.

Table 3.13 - Solutions with combined section runner profiles (see Figure 3.4)

	B	F	G
Material yield point (N/mm^2)	≤ 320	≤ 360	≤ 360
Max. runner profile height reduction (mm):	20	60	80
Combined reinforcements length (see Figure 3.26) L_V =	-	0.60 L_G	0.65 L_G
Example: Combined section as an alternative to the channel section (mm): 220x80x8 mm	200x80x8	160x80x8 + angle section	140x80x8 + angle section
Actual height reduction (mm)	12	52	64

The continuity of combined reinforcement runners can be interrupted only in special cases and is subject to authorisation. Similarly, when it is difficult to apply an external reinforcing L section (items F and G fig. 3.4) - owing to the presence of suspension mountings or air spring connection brackets - and recessing to be performed could excessively reduce the section's resisting capacity, the adopted solution will need special authorisation.

A = The reinforcing runner required for the corresponding subframe is sufficient (e.g. Table 3.1 for standard platform bodies).
The reinforcing runners with thickness less than 5 mm are to be reinforced.

I = When the auxiliary frame requires a high moment of resistance (e.g to install platforms as per Table 3.1) the latter shall be established also for the crane.

3.8.3 Removable Cranes

The installation of removable cranes on the rear overhang may be carried out according to the specifications of the preceding paragraph provided the type of fixing used between the crane and the subframe does not cause additional stress to the vehicle's chassis.

In consideration that the vehicle may be used with or without the crane, we recommend marking on the body the position of the useful load consistent for the two types of operating condition.

If the vehicle retains its ability to tow a trailer, all regulation concerning the proper coupling of the vehicle must be observed.

3.9 Installation of Tail Lifts

Special purpose superstructures may be installed on vehicles that are intended for special uses.
The use of such vehicles for uses other than those for which they are intended is subject to approval by the manufacturer.

Preparing municipal vehicles such as compactors, compressors or road sprinklers in many cases requires:

- Building a subframe which is particularly strong at the rear or elastic mountings at the front of the vehicle.
- Shortening the rear overhang of the chassis. When very short overhangs are required, the chassis may be shortened immediately behind the rear spring support (or after the anti-roll bar connection in the case of pneumatic suspension), keeping the cross member connection to the chassis intact.
- Placing the engine exhaust in a vertical position, behind the cab. In such cases adopt solutions similar to those adopted by the Manufacturer (see Point 2.9.2).
- Modifying the rear suspension by using asymmetrical springs.
- Rearranging the rear lights.

Precautions

Do not use the reverse light switch fitted on IVECO gearboxes for functions requiring a high degree of reliability and safety (e.g. stopping engine when reversing, on vehicles fitted for household waste collection, with personnel standing on the rear boards).

3.10 Installation of Snow-removal Equipment on Front of Vehicle

The installation of snow removal equipment on the front of the vehicle, such as blades or plows, requires the use of suitable supporting structures and entails observance of the specifications contained in point 2.1 concerning the connection to the chassis.

Furthermore, all government requirements and regulations governing the application of this type of equipment must be observed.

Operation and possibility to use the original components located at vehicle front (e.g. towing hook, footboard to clean windscreen) must be safeguarded. Otherwise the company carrying out the modification must fit equivalent systems in compliance with the safety regulations and norms.

For most of our vehicles - if used for snow removal purposes at maximum speeds of 62 km/h - an increase of the maximum permissible weight of the axle may be granted upon request.

The Manufacturer that carries out the installation must document and guarantee the observance of the requested new weight limit.

3.11 Winch installation

The winch installation on the vehicle should be positioned on one of the following points:

- on frame front end (front installation);
- on vehicle frame, behind the cab;
- between vehicle frame side member, centred or displaced on one side;
- on the frame rear end.

The installation should be performed so as not to interfere with operation of units and components of the vehicle, with respect to max. load limits allowed on axles and following the company directions.

Fixing of the winch unit and the relevant drive components should conform to directions reported at paragraph 2.3 ensuring that the reinforced areas are not locally limited to the mounting area (see paragraph 2.17) taking into consideration also the rope operations and in particular, its transverse component when the pulling action is running obliquely.

For the installation of the winch behind the cab a proper subframe will be designed to have dimensions and structure (stiffening cross member and braces) conforming to winch capacity.

The company has various winch installations available for some models. When specific requests are made for commercially available types of winch, we suggest choosing those equipped with hydraulic systems that can be operated through the hydraulic pumps already used for equipment previously installed on the vehicle (tiltable cargo body, crane etc.).

Should mechanical winches be mounted, the drive transmission will conform to the indications given at paragraphs 4.1 and 4.2.

For worm screw type winches, the power take-off system arrangement should take into account the low performance of such a drive system.

Electrical winches should be used for low power requirements and for short periods of use because of the limited capacities of battery and alternator.

Follow strictly the safety rules, if any.

Winch installation

3.12 Installation of concrete mixers

Concrete mixers may be installed only on vehicles that are suitable for this purpose as indicated in Table 3.14, where also the minimum requirements for the reinforcing sections and the capacity drums are given. It is clear that the maximum permissible mass for the vehicles must be respected. Stabilising bars must be used for these applications whenever they are available.

HB models, specially designed for these applications, mainly feature:

- specific frame rear overhang;
- large frame subframe connecting plates in the central portion of the bogie (Figure 3.28);

Figure 3.28

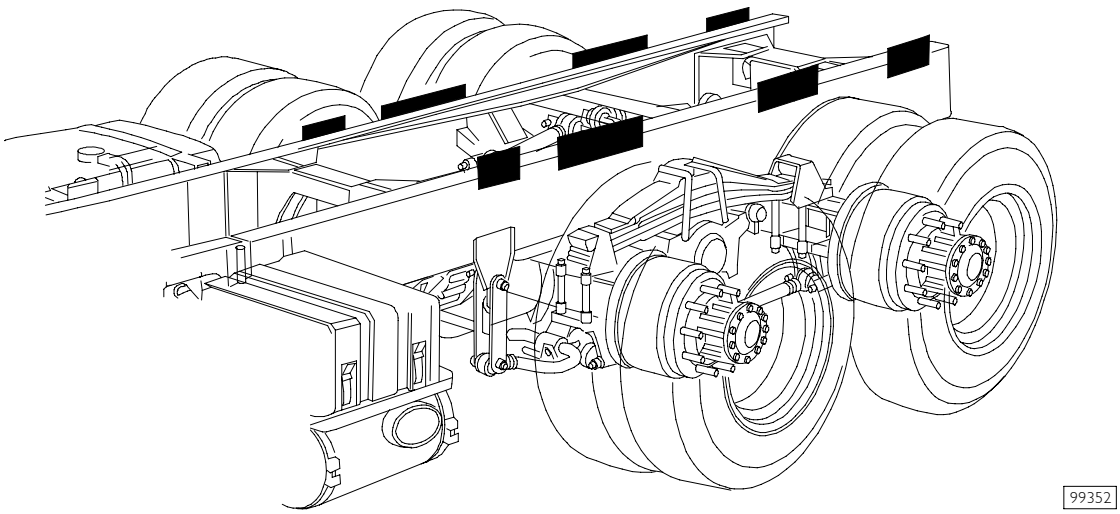

- suitably sized stabilizer bars;
- vertical engine exhaust;
- no rear underrun bar.

In addition to observing all the possible government regulations relating to the installation of concrete mixers, the following points must be kept in mind:

- The concrete mixer must be fitted with its own continuous steel subframe in observance of point 3.1, so as to distribute the concentrated weight as much as possible over the chassis. For the profiles of the subframe it is permitted to adopt cross sections which, on the basis of an equal breaking strength (Wx), and with moment of inertia (Jx) are not less than the values given in Table 3.14, allow the reduction in height of the centre of gravity of the added structure (e.g. box-section members or members with the upper flange facing outwards, see Figure 3.28).
- Suitable cross members must be provided to ensure adequate rigidity in the mounting between the cement mixing apparatus and its basic frame, so as to free the vehicle's chassis from the forces that result from the particular geometry and functional configuration of the concrete mixer. The subframe must be suitably stiffened towards the rear with appropriate crosspieces or crossbraces.

Table 3.14

(The dimensions of the sections refer to the maximum permitted load on the front axle, not exceding 7500 kg except for model AD/AT 410 for which the section indicated is valid up to 2 x 8500 kg - higher values require sections of greater size to be defined upon request).

Model	Approximate capacity of drum (m^3)	Minimum profile of subframe (Yield limit of material used=360N/mm^2)
		Strength modulus Wx (cm^3)
AT-AD190, AT-AD190W	4÷5	66
AT-AD260, AT-AD260W	6÷7	66
AT-AD380, AT-AD380W	10	81
AT-AD340 (2)	7÷9	81
AT-AD410, AT-AD410W	10	108

(1) A profile other than of C-section type is permitted: see Figure 3.21;

(2) Up to wheelbase 5020;

(3) boxed section.

Figure 3.29

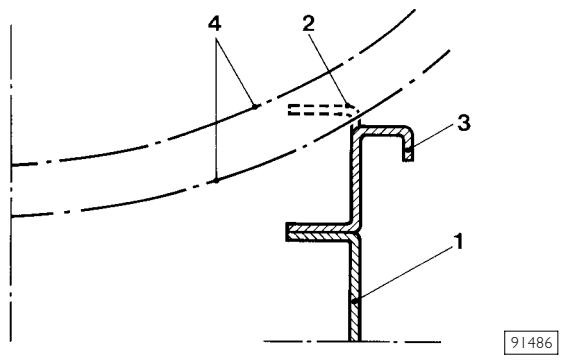

1. Main frame - 2. Regular channel profile - 3. Runner with upper flange turned over - 4. Position of drum

- The mounting (see point 3.3) must affect only the two frames and must be constructed in such a manner as to provide a secure anchorage. For those vehicles which are not yet equipped with them, we recommend the use of cleat plates to avoid slippage in length or to the side, restricting the use of flexible joints to the front end of the subframe (see Figure 3.15 and 3.29).

Figure 3.30

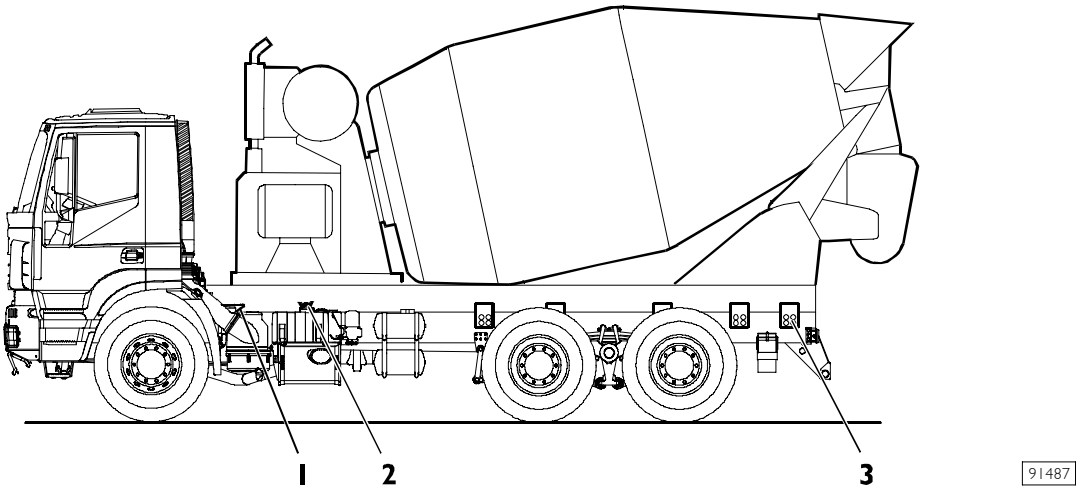

1. Subframe - 2. Brackets - 3. Cleat plates

- When installing the cement mixer assembly, care must be taken to position the centre of gravity as close to the front axle as possible, obviously with due consideration to the maximum permissible weight on the axle itself.
  To obtain the necessary stability of the vehicle and its safety while in operation, particularly when cornering or on rough terrain with transverse and/or longitudinal slope, the swing effect of the payload inside the drum must be taken into consideration since it results in a shift of the dynamic centre of gravity of the payload and consequently it adversely affects the vehicle's behaviour.
- Specific PTO solutions are available on request that are independent of the clutch and suitable for concrete mixer applications (see point 4.5.2). The auxiliary motor to control the drum must be mounted on an appropriate elastic suspension.
- Due to rotation of the drum the centre of gravity of the load moves and therefore the differences in the trasverse load must be kept within acceptable limits.

Please observe the instructions on programming the control devices for concrete mixers given in Chapter 4.

3.12.1 Concrete mixer conversion with EuroTronic gearbox

Iveco also offers its customers frames in a concrete mixer conversion equipped with a EuroTronic gearbox. This gearbox offers great convenience due its low net weight, low fuel consumption and great driving comfort.
Use of concrete mixer vehicles requires a manoeuvre during unloading that is partly very slow at a very high engine speed with slipping of the clutch (e.g. concreting kerbstones). For this purpose, Iveco has developed special software to enable unloading while driving for these vehicles.
Vehicles equipped with this gearbox do not have a clutch pedal and body builders must observe certain measures during connection of the speed control in order to guarantee correct operation while unloading.

a) Increase in concrete mixture engine speed by means of multiple switch:

- the body builder connects the speed request signals from the multiple switch on the conversion to the special ST14A interface provided (see para. 5.2.1);
- the VCM control unit must then be parameterised by Iveco Service.

Activation of unload mode:

- with the vehicle at a standstill, select the required engine speed using the multiple switch on the specification;
- operate key "D" (Drive) on the gearbox control unit for longer than 2 seconds;

- the display shows the message "1 slow" and unload mode is activated;
- when the accelerator pedal is activated, the clutch is now slowly engaged,i.e. it can be maintained in the slipping range to allow the vehicle to be moved slowly. In this unloading mode, no speed increase occurs due to the accelerator pedal. In this mode, the accelerator pedal is used only to activate the clutch.

b) Increase in concrete mixer engine speed by means of continuous speed increase:

- the body builder connects the conversion key speed request signals as shown on the wiring diagram (Fig. 3.31) to the special ST14A interface;
- the body builder fits the "EX" (external control) switch and the relay as shown in the wiring diagram (Fig. 3.31) to the vehicle;
- with unload mode, it is nevertheless possible to install a key to modulate engine speed directly in the driving cab;
- the VCM control unit must then be parameterised by Iveco Service.
- The EuroTronic control unit must then also be parameterised by Iveco Service.

Activation of unload mode:

- apply the parking brake with the vehicle at a standstill;
- turn on the "EX" switch to activate the external speed regulator and unload mode;
- the message "spec" (special) appears on the display;
- the speed can be altered by means of a button on the conversion or, if present, in the driver's cab;
- the lower forward/reverse gear may be engaged by operating the "D" or "R" key on the gearbox control unit;
- when the accelerator pedal is activated, the clutch is now slowly engaged,i.e. it can be maintained in the slipping range to allow the vehicle to be moved slowly. In this unloading mode, no speed increase occurs due to the accelerator pedal. In this mode, the accelerator pedal is used only to activate the clutch.

.

Figure 3.31

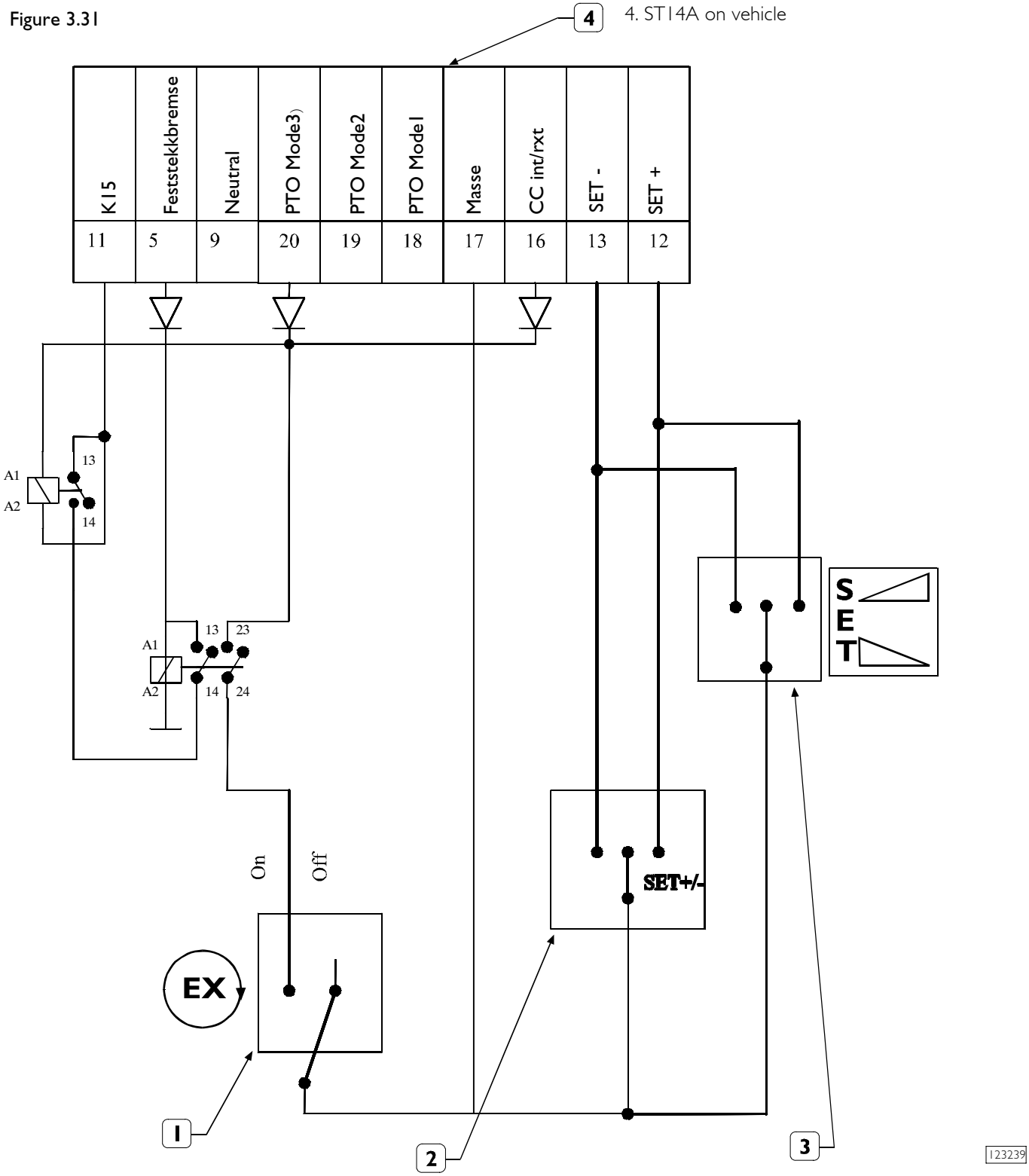

"EX" switch for activating unload/ speed adjustment mode that the body builder must fit on the vehicle. Iveco PN.: 504304749

Button on conversion for adjusting engine speed during unloading operations.

Auxiliary button for adjusting engine speed during unloading operations that the body builder must fit on the vehicle. Iveco PN.: 504304750.