https://truckmanualshub.com/

www.sanygroup.com

SANY HEAVY MACHINERY LIMITED

318A, Lianggang Avenue, Lingang Industrial Park, Fengxian District,
Shanghai, P.R. of China 201413

Tel: (86) 21 5700 8518
Service hotline:(86) 4006 098 318
E-mail: crd@sany.com.cn

Documentation No.: B06T01ENAM1-SY115C9/135C/155H

11644389

SANY

Quailty Changes the World

Crawler Hydraulic Excavator

SY115C9

SY135C8

SY135C9

SY155H

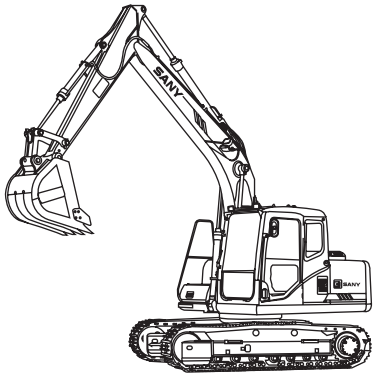

Safety, Operation and Manitenance Manual

Downloaded from www.Manualslib.com manuals search engine

https://truckmanualshub.com/

SANY

SY115C9/135C/155H

Crawler Hydraulic Excavator

Operation and Maintenance Manual

WARNING

Read and follow the safety precautions and instructions in this manual and on the machine decals. Failure to do can cause serious injury, death or property damage. Keep this manual with the machine for reading and future reference.

Safety, Operation and Maintenance Manual - Aug 2012

SANY

Downloaded from www.Manualslib.com manuals search engine

https://truckmanualshub.com/

Sany Group
Sany Heavy Machinery Limited
318A, Lianggang Avenue, Lingang Industrial Park,
Fengxian District, Shanghai, P. R. of China 201413

http://www.sanygroup.com

Tel: (86) 21 5700 8518
Service hotline: (86) 4006 098 318
E-mail: crd@sany.com.cn

© 2012 by Sany Group. All right reserved. No part of this publication may be reproduced, used, distributed or disclosed except during normal operation of the machine as described herein. All information included within this publication was accurate at the time of publication. Product improvements ,revisions, etc., may result in differences between your machine and what is presented here. Sany Group assumes no liability. For more information, Contact Sany Group.

Downloaded from www.Manualslib.com manuals search engine

https://truckmanualshub.com/

Table of Contents

1 Introduction

1.1 Overview 1-3
1.2 Your Documentation Package 1-4
1.2.1 Recommendations on using the documentation 1-5
1.2.2 Documentation storage 1-5
1.2.3 Manual organization 1-5
1.2.3.1 Introduction 1-6
1.2.3.2 Safety 1-6
1.2.3.3 System functions 1-6
1.2.3.4 Operation 1-6
1.2.3.5 Maintenance 1-6
1.2.3.6 Troubleshooting 1-7
1.2.3.7 Specifications 1-7
1.2.3.8 Optional Equipment 1-7
1.2.4 Page numbers 1-7
1.3 Your Sany Machine 1-8
1.3.1 Machine applications 1-8
1.3.2 Machine directions 1-8
1.3.3 Breaking in a new machine 1-9
1.3.4 Machine information 1-9
1.3.4.1 Product identification plate 1-9
1.3.4.2 Engine identification plate 1-10
1.3.4.3 Right and left drive motors 1-11
1.3.4.4 Swing motor 1-11
1.3.4.5 Hydraulic pump 1-11
1.3.4.6 Chassis serial number 1-12
1.3.4.7 Machine monitor 1-12
1.4 Table for serial number and distributor information 1-13
1.5 Correction Request Form - Technical Publications 1-14
1.6 Contact Information 1-15

2 Safety

2.1 Safety Information 2-5
2.2 Safety Messages 2-7

Downloaded from www.Manualslib.com manuals search engine

https://truckmanualshub.com/

2.2.1 Hazard alert wording 2-8
2.2.2 Other alert wording 2-9
2.2.3 Safety decals 2-9
2.2.3.1 Textual safety decals 2-10
2.2.3.2 Graphical safety decals 2-10
2.2.3.3 Safety decal locations 2-11
2.3 General Precautions 2-19
2.3.1 Safety rules 2-19
2.3.2 Abnormalities 2-19
2.3.3 Personal protective equipment 2-19
2.3.4 Fire extinguisher and first aid kit 2-21
2.3.5 Safety equipment 2-21
2.3.6 Cleaning your machine 2-22
2.3.7 Keeping the cab clean 2-23
2.3.8 Engaging the hydraulic lockout control 2-23
2.3.9 Handholds and steps 2-24
2.3.10 Overhead work 2-25
2.3.11 No sitting on attachment 2-25
2.3.12 Articulated parts 2-25
2.3.13 Preventing burns 2-25
2.3.13.1 Hot coolant 2-25
2.3.13.2 Hot oil 2-26
2.3.14 Preventing fire and explosion 2-26
2.3.14.1 Fire caused by fuel or oils 2-26
2.3.14.2 Fire caused by flammable materials 2-27
2.3.14.3 Fire caused by electric lines 2-27
2.3.14.4 Fire caused by hydraulic lines 2-28
2.3.14.5 Fire caused by illumination equipment 2-28
2.3.14.6 Fire caused by heat shield 2-28
2.3.15 In the event of fire 2-28
2.3.16 Windshield cleaning detergent 2-29
2.3.17 Preventing ejection of part 2-29
2.3.18 Falling object protection 2-30
2.3.19 Attachment installation 2-30
2.3.20 Attachment combination 2-31
2.3.21 Cab windows glasses 2-31

Downloaded from www.Manualslib.com manuals search engine

https://truckmanualshub.com/

2.3.22 Unauthorized modification 2-31
2.3.23 Job site investigation 2-31
2.3.24 Operation on soft ground 2-32
2.3.25 Overhead power cables 2-33
2.3.26 Ensuring a good visibility 2-34
2.3.27 Ventilating enclosed area 2-35
2.3.28 Asbestos hazard 2-35
2.3.29 Alternate exit 2-36
2.4 Safe Operation Precautions 2-37
2.4.1 Safe starting 2-37
2.4.1.1 Safe mounting 2-37
2.4.1.2 Seat adjustment 2-38
2.4.1.3 Seat belt 2-38
2.4.1.4 Before starting the engine 2-38
2.4.1.5 Engine starting rules 2-39
2.4.1.6 Safe starting 2-39
2.4.1.7 Starting engine in cold season 2-40
2.4.1.8 Engine starting aid 2-40
2.4.1.9 After starting the engine 2-41
2.4.2 Operation 2-42
2.4.2.1 Inspection before operation 2-42
2.4.2.2 Prior-operation precautions 2-42
2.4.2.4 Travel directions 2-43
2.4.2.3 Rules for steering safety 2-43
2.4.2.5 Rules for traveling safety 2-45
2.4.2.6 Safe traveling 2-46
2.4.2.7 Operation on an incline 2-47
2.4.2.8 Operation in snowy weather 2-48
2.4.2.9 Restricted operations 2-48
2.4.3 Parking the machine 2-51
2.4.3.1 Select a parking place 2-51
2.4.3.2 Machine shutdown 2-51
2.4.4 Transportation 2-52
2.4.4.1 Loading and unloading the machine 2-52
2.4.4.2 Transporting the machine 2-53
2.4.5 Battery 2-54

Downloaded from www.Manualslib.com manuals search engine

https://truckmanualshub.com/

2.4.6 Lifting objects with the machine 2-56
2.5 Precautions for Maintenance 2-57
2.5.1 Prior-maintenance precautions 2-57
2.5.2 Select a working area 2-57
2.5.3 Preparing the machine 2-58
2.5.4 Preparing yourself 2-59
2.5.5 Lock-out and tag-out 2-60
2.5.6 Using proper tools 2-60
2.5.7 Maintenance with engine running 2-61
2.5.8 Working under the machine 2-61
2.5.9 Track maintenance 2-62
2.5.10 Track tension adjustment precautions 2-63
2.5.11 Recoil spring 2-63
2.5.12 Welding operation 2-64
2.5.13 High-pressure hoses 2-64
2.5.14 Pressurized fluid 2-65
2.5.15 Hot cooling system 2-66
2.5.16 Air-conditioning system 2-66
2.5.17 High voltage precautions 2-67
2.5.18 Accumulator 2-67
2.5.19 Avoiding fire and explosion 2-68
2.5.20 Regular replacement of safety-related parts 2-69
2.5.21 Maintenance operation 2-70
2.5.22 Proper disposal of wastes 2-71

3 System Functions

3.1 Machine Overview 3-5
3.2 Machine Controls 3-6
3.3 Monitor 3-7
3.3.1 Monitor introduction 3-7
3.3.2 System information and operation 3-10
3.3.2.1 Main Page 3-10
3.3.2.2 System Information 3-12
3.3.2.3 Time Setup 3-13
3.3.2.4 Main Menu 3-14
3.3.2.5 Engine & Throttle Signals 3-15

Downloaded from www.Manualslib.com manuals search engine

https://truckmanualshub.com/

3.3.2.6 Main Pump Signals 3-15
3.3.2.7 Input Switch Signals 3-16
3.3.2.8 Output Switch Signals 3-16
3.3.2.9 Machine Configuration 3-17
3.3.2.10 Failure codes 3-17
3.3.2.11 Maintenance Information 3-18
3.3.2.12 Engine Speed Calibration 3-23
3.3.2.13 Language Selection 3-25
3.3.2.14 GPS Monitoring Information 3-26
3.3.2.15 System Setup 3-27
3.3.2.16 Machine configuration setup 3-28
3.3.2.17 Coolant Temperature 3-29
3.3.2.18 Service Call 3-30
3.4 Switches 3-31
3.4.2.1 Start switch 3-32
3.4.2.2 Fuel control dial 3-33
3.4.2.3 Work lamp switch 3-33
3.4.2.4 Wiper switch 3-35
3.4.2.5 Washer switch 3-36
3.4.2.6 Head lamp switch 3-36
3.4.2.7 Horn switch 3-37
3.4.2.8 Cab lamp 3-37
3.4.2.9 Cigar lighter 3-37
3.4.2.10 Preheat switch (only for SY135C8M) 3-38
3.4.2.11 Alternator indicator 3-38
3.5 Control levers and pedals 3-39
3.5.1 Hydraulic lockout control 3-40
3.5.2 Travel controls 3-41
3.5.3 Joystick controls 3-42
3.6 Roof Hatch 3-44
3.6.1 Opening the roof hatch 3-44
3.6.2 Closing the roof hatch 3-44
3.7 Windshield 3-45
3.7.1 Opening the window 3-45
3.7.2 Closing the window 3-48
3.7.3 Removing the lower window 3-50

Downloaded from www.Manualslib.com manuals search engine

https://truckmanualshub.com/

3.8 Alternate Exit 3-51
3.9 Door Catch 3-52
3.10 Cover/cap with a Latch 3-52
3.10.1 Opening/closing the cover with lock 3-53
3.10.2 Opening/closing the cap with lock 3-54
3.11 Cup Holder 3-55
3.12 Storage Box 3-56
3.13 Literature Bag 3-56
3.14 Ashtray 3-57
3.15 Air Conditioning System 3-58
3.15.1 Control panel 3-58
3.15.2 Operation method 3-64
3.15.3 A/C operation precautions 3-72
3.16 Radio 3-74
3.16.1 Control panel 3-74
3.16.2 Radio operation 3-76
3.17 Auxiliary Power Supply 3-80
3.18 Fuses 3-80
3.19 Fusible Link 3-81
3.20 Controller 3-82
3.21 Toolbox 3-82
3.22 Grease pump frame 3-82
3.23 Fire extinguisher 3-83

4 Operation

4.1 Before Starting the Engine 4-5
4.1.1 Routine checks 4-5
4.1.2 Checks before starting 4-7
4.1.2.1 Fuel tank - check/drain 4-7
4.1.2.2 Water separator - check/drain 4-7
4.1.2.3 Drain valve - regulate 4-8
4.1.2.4 Hydraulic oil - check/refill 4-9
4.1.2.5 Coolant - check/refill 4-10
4.1.2.6 Oil in engine oil pan - check/refill 4-11
4.1.2.7 Electric wires - check 4-12
4.1.2.8 Fuel tank - check/refuel 4-13

Downloaded from www.Manualslib.com manuals search engine

https://truckmanualshub.com/

4.1.2.9 Work lamp switch - check 4-14
4.1.2.10 Horn - check 4-15
4.1.3 Adjustment before operation 4-15
4.1.3.1 Operator seat 4-15
4.1.3.2 Rear view mirrors 4-17
4.1.3.3 Seat belt 4-19
4.1.4 Before Starting the Engine 4-20
4.2 Engine Starting 4-22
4.2.1 Engine Preheating 4-25
4.2.2 Warm-up operation 4-26
4.2.3 Selecting a working mode 4-26
4.3 Engine Shutdown 4-27
4.4 Machine Operation 4-28
4.4.1 Before moving the machine 4-28
4.4.2 Moving the machine forward 4-29
4.4.3 Moving the machine backward 4-30
4.4.4 Parking the machine 4-31
4.5 Steering Operation 4-32
4.5.4.1 Steering with travel controls 4-32
4.5.4.2 Steering with machine stopped 4-32
4.5.4.3 Steering during traveling 4-33
4.5.4.4 Pivot turn 4-33
4.5.1 Swing operation 4-34
4.6 Work Equipment Control and Operation 4-35
4.7 Working mode 4-37
4.8 Restricted Operations 4-38
4.8.1 Operation with swinging force 4-38
4.8.2 Operation with traveling force 4-38
4.8.3 Operation when hydraulic cylinder reaches its stroke end 4-39
4.8.4 Operation with bucket landing force 4-39
4.8.5 Operation with machine weight 4-40
4.8.6 Hard rocky ground 4-40
4.8.7 Sudden shift of travel speed during fast traveling 4-41
4.9 General Operation 4-41
4.9.1 Traveling operation 4-41
4.9.2 High-speed travel 4-41

Downloaded from www.Manualslib.com manuals search engine

https://truckmanualshub.com/

4.9.3 Permissible depth of water 4-42
4.10 Traveling on Slope 4-42
4.10.1 Traveling downhill 4-44
4.10.2 Engine stalls on an incline 4-44
4.10.3 Cab door on an incline 4-44
4.11 Removing Machine from Mud 4-44
4.11.1 One track trapped 4-44
4.11.2 Both tracks trapped 4-45
4.12 Recommended Applications 4-45
4.12.1 Backhoe operation 4-45
4.12.2 Trench work 4-46
4.12.3 Loading operation 4-46
4.13 Parking Operation 4-47
4.14 Checks after Each Workday 4-49
4.15 Locking the Machine 4-50
4.16 Operation in Cold Weather 4-50
4.16.1 Operation instruction 4-50
4.16.1.1 Fuel and lubricant 4-50
4.16.1.2 Battery 4-51
4.16.2 After each workday 4-52
4.16.3 After cold season 4-53
4.17 Long-Term Storage 4-54
4.17.1 Before storage 4-54
4.17.2 During storage 4-55
4.17.3 After storage 4-56
4.17.4 Starting the engine after long-term storage 4-56
4.18 Transportation Information 4-57
4.18.1 Transport methods 4-57
4.18.2 Loading/unloading machine to/from a trailer 4-57
4.18.2.1 Loading the machine 4-59
4.18.2.2 Securing the machine 4-61
4.18.2.3 Rear view mirrors 4-62
4.18.2.4 Unloading the machine 4-63
4.18.3 Lifting the machine or its components 4-65
4.18.3.1 Lifting precautions 4-65
4.18.3.2 Choosing a wire rope 4-66

Downloaded from www.Manualslib.com manuals search engine

https://truckmanualshub.com/

4.18.3.3 Lifting the machine 4-67

5 Maintenance

5.1 Maintenance Information 5-5
5.2 General Service 5-9
5.2.1 Oil, fuel and coolant 5-9
5.2.1.1 Oil 5-9
5.2.1.2 Fuel 5-10
5.2.1.3 Coolant 5-11
5.2.2 Grease 5-12
5.2.3 Oil and fuel storage 5-13
5.2.4 Filter element 5-13
5.2.5 Electrical system 5-14
5.2.6 Hydraulic system 5-14
5.3 Replacement Parts 5-16
5.4 Recommended Fluids 5-17
5.4.1 Fluid capacities 5-19
5.4.2 Recommended oils: 5-20
5.5 Tightening Torque Specification 5-22
5.6 Safety-Related Parts 5-24
5.7 Maintenance Schedule 5-25
5.7.1 List of maintenance schedule 5-25
5.7.2 Hydraulic Breaker Service Interval 5-27
5.8 Maintenance Procedures 5-28
5.8.1 Maintenance after initial 50 service hours 5-28
5.8.1.1 Engine oil and filter - change/replace 5-28
5.8.1.2 Fuel filter - replace 5-28
5.8.2 When Required 5-29
5.8.2.1 Air cleaner - clean/replace 5-29
5.8.2.2 Cooling system - clean 5-37
5.8.2.3 Track shoe bolts - inspect/tighten 5-41
5.8.2.4 Track tension - inspect/adjust 5-42
5.8.2.5 Bucket tips (lateral pin) - replace 5-45
5.8.2.6 Bucket Replacement 5-47
5.8.2.7 Bucket clearance - adjust 5-49
5.8.2.8 Window washer fluid - check/refill 5-51

Downloaded from www.Manualslib.com manuals search engine

https://truckmanualshub.com/

5.8.2.9 Air conditioner - inspect/service 5-52
5.8.2.10 Gas spring - inspect 5-54
5.8.2.11 Air in hydraulic system - purge 5-55
5.8.2.12 Hydraulic circuit internal pressure - release 5-58
5.8.3 Checks before starting 5-59
5.8.4 Every 100 service hours 5-60
5.8.4.1 Lubrication 5-60
5.8.5 Every 250 service hours 5-63
5.8.5.1 Compressor belt tension - inspect/adjust 5-63
5.8.5.2 Oil in engine oil pan and oil filter - change/replace 5-65
5.8.5.3 Primary fuel filter - replace 5-67
5.8.5.4 Secondary fuel filter - replace 5-71
5.8.6 Every 500 service hours 5-74
5.8.6.1 Swing bearing - lubricate 5-74
5.8.6.2 Swing pinion gear grease - check/refill 5-75
5.8.6.3 Coolant tank and radiator fins - inspect/clean 5-76
5.8.6.4 Air conditioner filters - clean 5-77
5.8.6.5 Swing drive oil - check/refill 5-80
5.8.6.6 Final drive oil - check/fill 5-81
5.8.7 Every 1000 service hours 5-82
5.8.7.1 Hydraulic oil filter - replace 5-82
5.8.7.2 Swing drive oil - change 5-84
5.8.7.3 Engine exhaust pipe clamps - check 5-85
5.8.7.4 Fan belt tension - check/replace 5-85
5.8.7.5 Nitrogen pressure in accumulator (breaker) - check 5-85
5.8.8 Every 2000 service hours 5-86
5.8.8.1 Final drive oil - change 5-86
5.8.8.2 Hydraulic tank filter screen - clean 5-88
5.8.8.3 Nitrogen pressure in accumulator (control oil circuit) - check 5-89
5.8.8.4 Hydraulic circuit internal pressure - release 5-92
5.8.8.5 Oil in hydraulic tank - change 5-93
5.8.8.6 Alternator - inspect 5-95
5.8.8.7 Engine valve clearance - check/adjust 5-95
5.8.9 Every 4000 service hours 5-95
5.8.9.1 Coolant pump - inspect 5-95
5.8.9.2 Start motor - check 5-95

Downloaded from www.Manualslib.com manuals search engine

https://truckmanualshub.com/

5.8.9.3 Accumulator (control oil circuit) - replace 5-96
5.8.9.4 High-pressure tube clamps and rubber - check 5-97
5.8.9.5 Compressor working condition - inspect 5-97
5.8.10 Every 8000 service hours 5-98
5.8.10.1 High-pressure tube clamps - replace 5-98
5.8.11 Every 10000 service hours 5-98

6 Troubleshooting

6.1 Troubleshooting Preparation 6-3
6.1.1 Checks before troubleshooting 6-3
6.1.2 Troubleshooting procedure 6-4
6.1.3 Troubleshooting precautions 6-6
6.1.4 Electrical circuits troubleshooting precautions 6-9
6.1.5 Hydraulic components handling precautions 6-10
6.2 Pseudo Failures 6-12
6.3 Towing the Machine 6-13
6.4 Towing Hook for Light Loads 6-15
6.5 Severe Operating Conditions 6-15
6.6 Engine Failures 6-16
6.6.1 Engine troubleshooting table 6-16
6.6.2 Coolant temperature high 6-19
6.6.3 Engine oil pressure low 6-20
6.6.4 When fuel exhausts 6-22
6.6.5 When engine rotates reversely 6-24
6.7 Failures of the Electrical System 6-25
6.7.1 Electrical system troubleshooting table 6-25
6.7.2 Failure codes 6-28
6.8 Battery 6-30
6.8.1 Battery removal and installation 6-30
6.8.2 Battery charging 6-31
6.8.3 Jump-starting the engine 6-32
6.8.3.1 Connecting the jumper cables 6-33
6.8.3.2 Starting the engine 6-34
6.8.3.3 Disconnecting the jumper cables 6-34
6.9 Failures of the Hydraulic System 6-35
6.10 Other Common Failures 6-39

Downloaded from www.Manualslib.com manuals search engine

https://truckmanualshub.com/

7 Specifications

7.1 Machine Dimensions 7-3
7.2 Working Ranges 7-4

8 Optional Equipment

8.1 General Safety 8-3
8.1.1 Selection precautions 8-3
8.1.2 Reading the instruction books 8-3
8.1.3 Removal and installation precautions 8-3
8.1.4 Operation precautions 8-4
8.2 Hydraulic Control Elements and Oil Circuit 8-6
8.2.1 Location of the components 8-6
8.2.1.1 Stop valve 8-6
8.2.1.2 Selector valve 8-7
8.2.1.3 Control pedal 8-7
8.2.2 Hydraulic circuit 8-8
8.2.2.1 Hydraulic circuit switching 8-8
8.2.2.2 Shifting to breaker / general optional equipment 8-8
8.2.2.3 Connecting hydraulic oil circuit 8-9
8.2.2.4 Hydraulic oil passage 8-10
8.2.3 Optional equipment removal and installation 8-11
8.2.3.1 Removal 8-11
8.2.3.2 Optional equipment installation 8-13
8.2.4 Hydraulic oil and hydraulic tank filter - change/replace 8-15
8.2.5 Long-term storage 8-16
8.2.6 Hydraulic specifications 8-16
8.3 Optional equipment Guide 8-17
8.3.1 Work equipment combination 8-17
8.3.2 Bucket tips selection 8-19
8.3.2.1 Rockwork bucket tips 8-19
8.3.2.2 Earthwork bucket tips 8-19
8.4 Recommended Operations 8-20
8.4.1 Hydraulic breaker 8-20
8.4.2 Hydraulic breaker operation 8-21
8.5 Restricted Operations 8-22
8.6 Hydraulic Breaker Lubrication 8-25

Downloaded from www.Manualslib.com manuals search engine

https://truckmanualshub.com/

8.7 Quick Coupler and Control System 8-26
8.7.1 Quick coupler installation 8-26
8.7.2 Operating precautions 8-28
8.8 Refueling System 8-29
8.8.1 Introduction 8-29
8.8.2 Components 8-30
8.9 Central Lubrication System 8-31
8.9.1 Scheme and components 8-31
8.9.2 System working principle 8-33
8.9.3 Setting the lubrication time of electric grease pump 8-34
8.9.4 Technical description 8-35
8.9.5 Adding grease with electric pump 8-36

Downloaded from www.Manualslib.com manuals search engine

https://truckmanualshub.com/

Downloaded from www.Manualslib.com manuals search engine

https://truckmanualshub.com/

Introduction

1 Introduction

1.1 Overview 1-3
1.2 Your Documentation Package 1-4
1.2.1 Recommendations on using the documentation 1-5
1.2.2 Documentation storage 1-5
1.2.3 Manual organization 1-5
1.2.3.1 Introduction 1-6
1.2.3.2 Safety 1-6
1.2.3.3 System functions 1-6
1.2.3.4 Operation 1-6
1.2.3.5 Maintenance 1-6
1.2.3.6 Troubleshooting 1-7
1.2.3.7 Specifications 1-7
1.2.3.8 Optional Equipment 1-7
1.2.4 Page numbers 1-7
1.3 Your Sany Machine 1-8
1.3.1 Machine applications 1-8
1.3.2 Machine directions 1-8
1.3.3 Breaking in a new machine 1-9
1.3.4 Machine information 1-9
1.3.4.1 Product identification plate 1-9
1.3.4.2 Engine identification plate 1-10
1.3.4.3 Right and left drive motors 1-11
1.3.4.4 Swing motor 1-11
1.3.4.5 Hydraulic pump 1-11

Downloaded from www.Manualslib.com manuals search engine

https://truckmanualshub.com/

1.3.4.6 Chassis serial number 1-12
1.3.4.7 Machine monitor 1-12
1.4 Table for serial number and distributor information..... 1-13
1.5 Correction Request Form - Technical Publications..... 1-14
1.6 Contact Information 1-15

Downloaded from www.Manualslib.com manuals search engine

https://truckmanualshub.com/

1 INTRODUCTION

1.1 Overview

- Sany-built machines offer high-quality performance and star-grade, after-sales service.
- Sany-built machines are widely used throughout the industry for various types of applications.
- Sany is a leading manufacturer of construction equipment worldwide.

This operator's manual provides safety, operation, maintenance, troubleshooting and technical specifications. In order to properly use your equipment, it is important to read this manual carefully before beginning any operations.

Items addressed in this manual are designed to help you:

- Understand the structure and performance of your crawler hydraulic excavator.
- Reduce improper operation and point out possible hazardous situations.
- Increase equipment efficiency during operation.
- Prolong the service life of equipment.
- Reduce maintenance costs.

Always keep this manual nearby and have all personnel involved with any job-related procedures read it periodically.

If you sell the machine, be sure to give this manual to the new owner.

Continuing improvements in the design of this machine can lead to changes in detail which may not be covered in this manual. Always consult your Sany distributor for the latest available information or if you have questions regarding information in this manual.

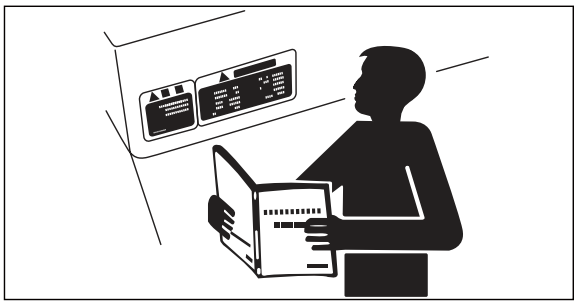

Fig. 1-1

Downloaded from www.Manualslib.com manuals search engine

https://truckmanualshub.com/

1.2 Your Documentation Package

The documentation for this machine includes the following items:

- Safety, Operation & Maintenance Manual (SOMM) — This manual is in the operator cab seat pocket.
- Parts Book — This publication consists of parts lists and matching drawings for ordering spare parts as-needed. If it was not already shipped with your machine, the parts book for your machine is available directly from Sany.
- CD — A VCR on safety, operation and maintenance of your excavator is delivered with the machine.

CD system requirements

In order to use the Sany CD, be sure of the following:

Hardware:

- Intel® Pentium II® running at 500 MHz or above
- At least 128 MB RAM
- CD-ROM drive
- Minimum screen resolution of 800 x 600 pixels, high-color depth

Software:

- Windows 2000, XP, Vista and Windows 7 operating systems
- Internet Explorer 6.0 or later (pop-up blocker disabled)
- Acrobat Reader 7.0 or later version

Downloaded from www.Manualslib.com manuals search engine

https://truckmanualshub.com/

1.2.1 Recommendations on using the documentation

- This documentation applies only to this machine and should not be used with any other machines.
- To ensure that the documentation is always complete and up to date:
- Keep all pages inside its binder (if shipped loose leaf).
- Use the CD to print and replace any missing pages or those made unreadable due to damage, grease, dirt, etc.
- Insert Sany replacement pages immediately into the appropriate book; destroy old versions of those pages.
- Replace outdated CD’s with new ones; destroy the old ones to prevent any confusion in the future.

1.2.2 Documentation storage

Always keep the operator manual and load charts with the machine in the operator cab.

The parts book is best left either shelved in the workshop area or office. It should always be available to the maintenance and service personnel as required.

These can be printed out from the CD.

1.2.3 Manual organization

The operator’s manual is designed for use and maintenance of this machine. Each section of this manual provides information you should be familiar with before operating this machine. Keep this manual with the machine for your reference at all times. Replace it immediately if it is damaged or lost. Due to improvement and updating of products, some information may differ from your machine. If you have any questions on the machine, con-

Downloaded from www.Manualslib.com manuals search engine

https://truckmanualshub.com/

tact your Sany distributor before operating or repairing the machine.

1.2.3.1 Introduction

This section provides an overview of what is covered in the rest of this manual, including machine label information and Sany contact information.

1.2.3.2 Safety

This section covers basic safety information relating to this equipment. Make sure you fully understand all the precautions described in this manual and the safety labels on the machine before operating or maintaining this machine. Failure to do so may result in serious injury or death.

1.2.3.3 System functions

This section provides an overview of all the controls, alerts and operating systems on the machine. It is important to study and become familiar with all systems before proceeding with any operations.

1.2.3.4 Operation

This section provides some basic operating procedures for this machine. Study and become familiar with all operating procedures before performing any job functions with the machine.

1.2.3.5 Maintenance

This section provides all general maintenance and repair procedures. (Detailed rebuild / replacement / repair information are covered in a separate shop manual.) Study and become familiar with all repair and maintenance proce-

Downloaded from www.Manualslib.com manuals search engine

https://truckmanualshub.com/

dures before performing any repair or maintenance operations.

1.2.3.6 Troubleshooting

This section includes common malfunctions and fault diagnostics procedures for this crawler hydraulic excavator operating system. Basic mechanical, hydraulic and electrical system troubleshooting is included.

1.2.3.7 Specifications

This section provides general required machine information for this crawler hydraulic excavator. Some information may vary due to design changes.

1.2.3.8 Optional Equipment

This section provides information regarding optional equipment for the excavator as authorized by Sany. If you will be using any optional equipment, it is important to read the instruction manual for the optional equipment and the general information related to optional equipment in this manual.

1.2.4 Page numbers

The pages in this manual are numbered as the following:

3–20

Page 20 of Chapter 3

Chapter 3

Downloaded from www.Manualslib.com manuals search engine

https://truckmanualshub.com/

1.3 Your Sany Machine

1.3.1 Machine applications

Sany Hydraulic Excavators are designed for the following operations:

- Excavating
- Leveling
- Digging
- Loading
- Demolishing

1.3.2 Machine directions

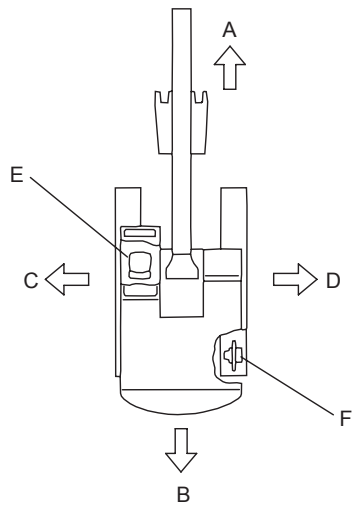

Fig. 1-2

(A) Front
(B) Back
(C) Left
(D) Right
(E) Operator Seat
(F) Sprocket

In this manual, the front, back, left or right direction indicates, when the cab faces the front and the final drive is behind of the machine, the moving direction that you could see from the cab.

Downloaded from www.Manualslib.com manuals search engine

https://truckmanualshub.com/

1.3.3 Breaking in a new machine

Your machine has been thoroughly adjusted and tested before shipment. However, initial operation of the machine under severe conditions can adversely affect the performance of the machine or shorten the machine life. Therefore, Sany recommends that you allow a break-in period of 100 operating hours for a new machine.

During the break-in period:

- Let the machine warm up before any operation.
- Avoid operating with severe loads or at high speeds.
- Avoid sudden starts or fast movements or stops.
- Always let the system cool down at the end of the working day.

1.3.4 Machine information

The serial numbers and model numbers on the components are the only numbers that your Sany distributor will need when ordering replacement parts or requiring assistance for your equipment. It is a good idea to record this information in this manual for future use. Below are the locations of the data plates.

1.3.4.1 Product identification plate

On the right side of the operator station on the bottom.

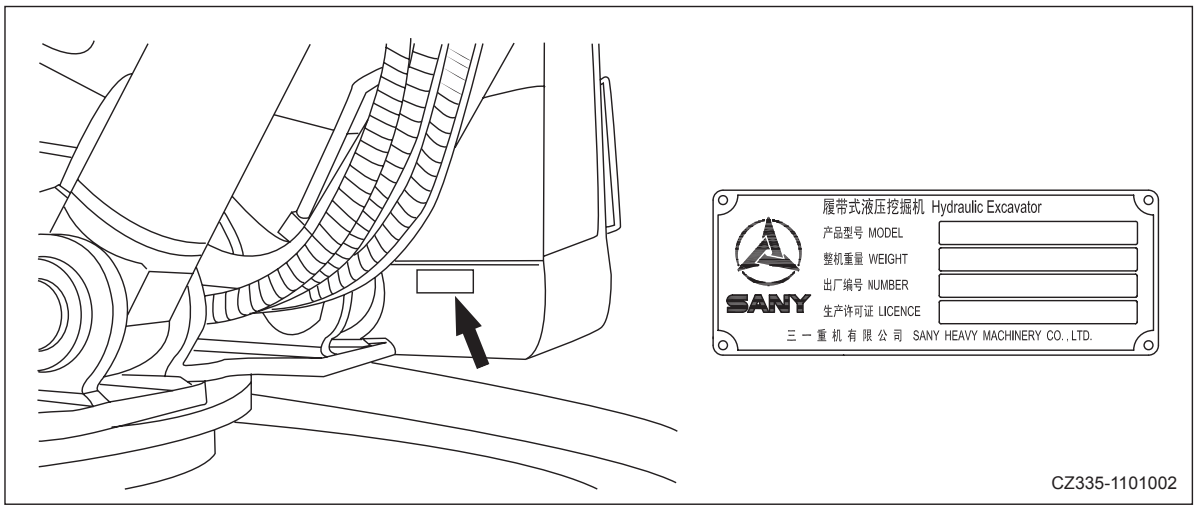

Fig. 1-3

Downloaded from www.Manualslib.com manuals search engine

https://truckmanualshub.com/

1.3.4.2 Engine identification plate

On cover of engine cylinder head.

SY115C9/SY135C8/SY135C9/SY155H

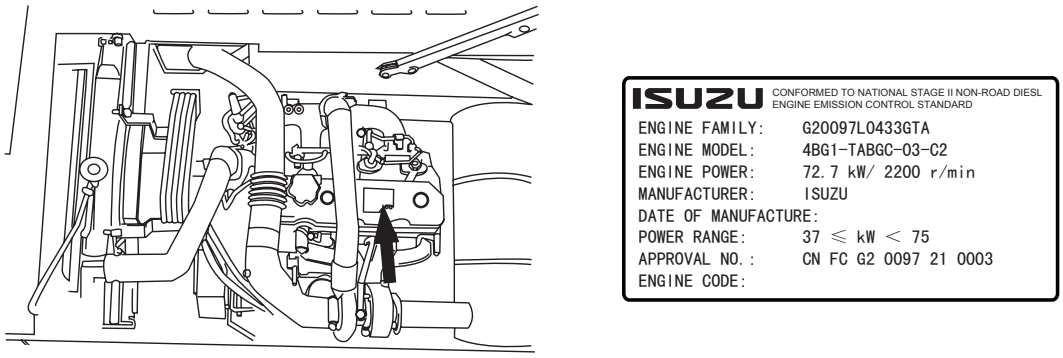

Fig. 1-4

SY135C8(M)

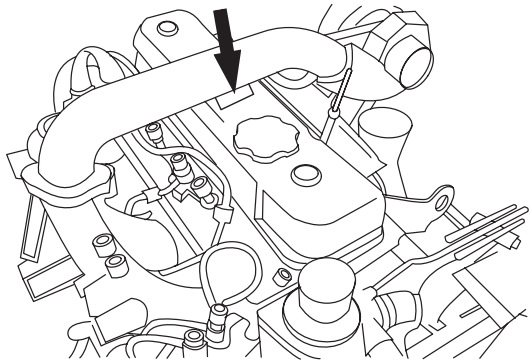

Fig. 1-5

Downloaded from www.Manualslib.com manuals search engine

https://truckmanualshub.com/

1.3.4.3 Right and left drive motors

On each drive motor:

Model: _____

ID No.: _____

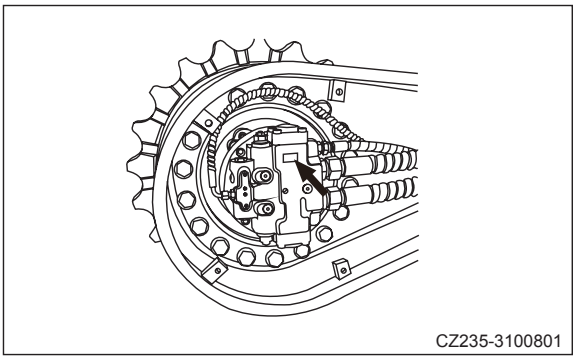

Fig. 1-6

1.3.4.4 Swing motor

On top of swing motor:

Model: _____

ID No.: _____

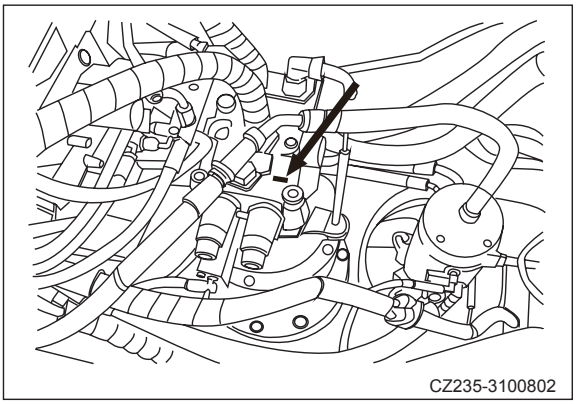

Fig. 1-7

1.3.4.5 Hydraulic pump

On bottom of pump:

Model: _____

ID No.: _____

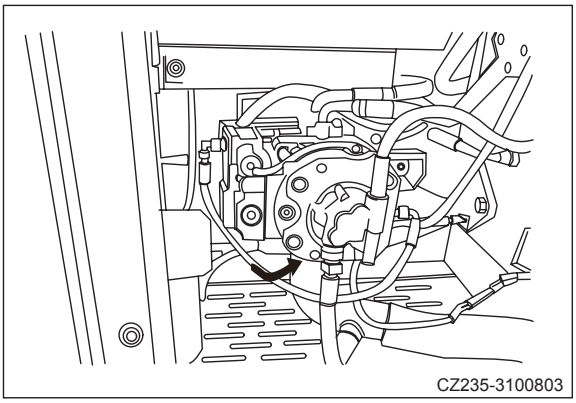

Fig. 1-8

Downloaded from www.Manualslib.com manuals search engine

https://truckmanualshub.com/

1.3.4.6 Chassis serial number

An additional serial number is stamped on the front part of the travel carriage frame.

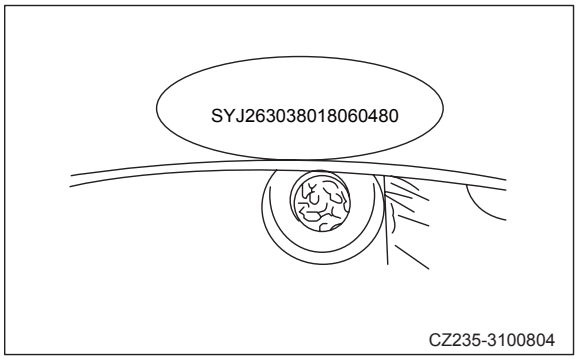

Fig. 1-9

1.3.4.7 Machine monitor

Location of machine monitor is shown in the right illustration.

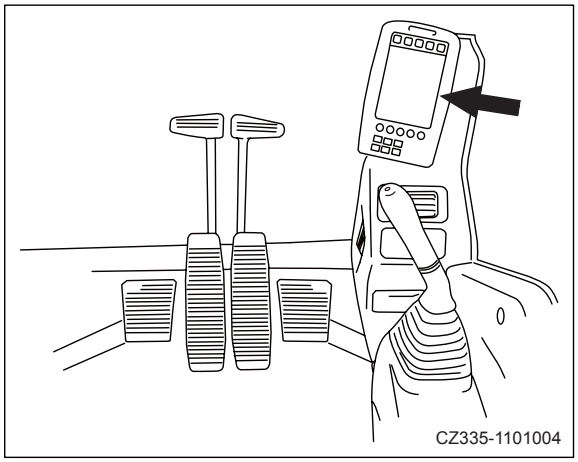

Fig. 1-10

Downloaded from www.Manualslib.com manuals search engine

https://truckmanualshub.com/

1.4 Table for serial number and distributor information

This location is for you to record information relating to your machine. It is advised that you keep this manual with your machine at all times for reference.	
Machine Serial No.	
Engine Serial No.	
Distributor Name: Address:	
Phone Numbers:	

Downloaded from www.Manualslib.com manuals search engine

https://truckmanualshub.com/

1.5 Correction Request Form - Technical Publications

If you find a problem with this manual, please make a copy of this page, fill out: the information and send it to us attention Technical Publications. See Contact Information” on next page.

Date of this request
Your Name
Company Name
Your Department
Street Address
City, State & ZIP
Phone
E-mail
Machine Model & Serial No.
Description of Problem (Wrong information, unclear or erroneous procedure, etc.)
Corrective Action by You (if any)

Downloaded from www.Manualslib.com manuals search engine

https://truckmanualshub.com/

1.6 Contact Information

Thank you for purchasing a Sany machine. In the event that you should need to contact us for any reason, you can reach us as follows:

Sany Heavy Machinery Limited

318A, Lianggang Avenue, Lingang Industrial Park, Fengxian District, Shanghai, P. R. of China 201413

Tel: (86) 21 5700 8518

Service hotline: (86) 4006 098 318

E-mail: crd@sany.com.cn

Downloaded from www.Manualslib.com manuals search engine

https://truckmanualshub.com/

BLANK PAGE

Downloaded from www.Manualslib.com manuals search engine

https://truckmanualshub.com/

Safety

2 Safety

2.1 Safety Information 2-5
2.2 Safety Messages 2-7
2.2.1 Hazard alert wording 2-8
2.2.2 Other alert wording 2-9
2.2.3 Safety decals 2-9
2.2.3.1 Textual safety decals 2-10
2.2.3.2 Graphical safety decals 2-10
2.2.3.3 Safety decal locations 2-11
2.3 General Precautions 2-19
2.3.1 Safety rules 2-19
2.3.2 Abnormalities 2-19
2.3.3 Personal protective equipment 2-19
2.3.4 Fire extinguisher and first aid kit 2-21
2.3.5 Safety equipment 2-21
2.3.6 Cleaning your machine 2-22
2.3.7 Keeping the cab clean 2-23
2.3.8 Engaging the hydraulic lockout control 2-23
2.3.9 Handholds and steps 2-24
2.3.10 Overhead work 2-25
2.3.11 No sitting on attachment 2-25
2.3.12 Articulated parts 2-25
2.3.13 Preventing burns 2-25
2.3.13.1 Hot coolant 2-25
2.3.13.2 Hot oil 2-26

Downloaded from www.Manualslib.com manuals search engine

https://truckmanualshub.com/

2.3.14 Preventing fire and explosion 2-26
2.3.14.1 Fire caused by fuel or oils 2-26
2.3.14.2 Fire caused by flammable materials 2-27
2.3.14.3 Fire caused by electric lines 2-27
2.3.14.4 Fire caused by hydraulic lines 2-28
2.3.14.5 Fire caused by illumination equipment 2-28
2.3.14.6 Fire caused by heat shield 2-28
2.3.15 In the event of fire 2-28
2.3.16 Windshield cleaning detergent 2-29
2.3.17 Preventing ejection of part 2-29
2.3.18 Falling object protection 2-30
2.3.19 Attachment installation 2-30
2.3.20 Attachment combination 2-31
2.3.21 Cab windows glasses 2-31
2.3.22 Unauthorized modification 2-31
2.3.23 Job site investigation 2-31
2.3.24 Operation on soft ground 2-32
2.3.25 Overhead power cables 2-33
2.3.26 Ensuring a good visibility 2-34
2.3.27 Ventilating enclosed area 2-35
2.3.28 Asbestos hazard 2-35
2.3.29 Alternate exit 2-36
2.4 Safe Operation Precautions 2-37
2.4.1 Safe starting 2-37
2.4.1.1 Safe mounting 2-37
2.4.1.2 Seat adjustment 2-38
2.4.1.3 Seat belt 2-38
2.4.1.4 Before starting the engine 2-38
2.4.1.5 Engine starting rules 2-39
2.4.1.6 Safe starting 2-39
2.4.1.7 Starting engine in cold season 2-40
2.4.1.8 Engine starting aid 2-40
2.4.1.9 After starting the engine 2-41
2.4.2 Operation 2-42
2.4.2.1 Inspection before operation 2-42
2.4.2.2 Prior-operation precautions 2-42

Downloaded from www.Manualslib.com manuals search engine

https://truckmanualshub.com/

2.4.2.4 Travel directions 2-43
2.4.2.3 Rules for steering safety 2-43
2.4.2.5 Rules for traveling safety 2-45
2.4.2.6 Safe traveling 2-46
2.4.2.7 Operation on an incline 2-47
2.4.2.8 Operation in snowy weather 2-48
2.4.2.9 Restricted operations 2-48
2.4.3 Parking the machine 2-51
2.4.3.1 Select a parking place 2-51
2.4.3.2 Machine shutdown 2-51
2.4.4 Transportation 2-52
2.4.4.1 Loading and unloading the machine 2-52
2.4.4.2 Transporting the machine 2-53
2.4.5 Battery 2-54
2.4.6 Lifting objects with the machine 2-56
2.5 Precautions for Maintenance 2-57
2.5.1 Prior-maintenance precautions 2-57
2.5.2 Select a working area 2-57
2.5.3 Preparing the machine 2-58
2.5.4 Preparing yourself 2-59
2.5.5 Lock-out and tag-out 2-60
2.5.6 Using proper tools 2-60
2.5.7 Maintenance with engine running 2-61
2.5.8 Working under the machine 2-61
2.5.9 Track maintenance 2-62
2.5.10 Track tension adjustment precautions 2-63
2.5.11 Recoil spring 2-63
2.5.12 Welding operation 2-64
2.5.13 High-pressure hoses 2-64
2.5.14 Pressurized fluid 2-65
2.5.15 Hot cooling system 2-66
2.5.16 Air-conditioning system 2-66
2.5.17 High voltage precautions 2-67
2.5.18 Accumulator 2-67
2.5.19 Avoiding fire and explosion 2-68
2.5.20 Regular replacement of safety-related parts 2-69

Downloaded from www.Manualslib.com manuals search engine

https://truckmanualshub.com/

2.5.21 Maintenance operation 2-70
2.5.22 Proper disposal of wastes..... 2-71

Downloaded from www.Manualslib.com manuals search engine

https://truckmanualshub.com/

2 SAFETY

2.1 Safety Information

This Operation and Maintenance Manual is a guide for you to operate your machine properly. It contains technical and safety information necessary for operation of your machine. Read and understand each section of the manual.

Only eligible, experienced operators with an official license (according to local laws) are allowed to operate the machine.

Always operate your machine according to national, provincial, prefectural and municipal laws and regulations. The operation safety information and description in this manual are just suggestive and attentive.

Sany cannot anticipate every possible circumstance that might involve a potential hazard during operation and maintenance. The Safety messages in this manual and on the product are, therefore, not all inclusive. If a procedure, work method or operating technique that is not specifically recommended in this manual is used, you must be sure that it is safe for you and for others. You should also ensure that the product will not be damaged or be made unsafe by the operation, lubrication, maintenance or repair procedures that you choose.

Modifying or abusing the machine according to your own will might impair the machine's performance, or result in more serious potential hazard. For instance, the specific volume of fuel exceeds set limit or the machine is overloaded. Drive and operate the machine carefully. Improper operation or application may cause personal injury or machine damage. Sany assumes no responsibility for such losses.

Downloaded from www.Manualslib.com manuals search engine

https://truckmanualshub.com/

Machines covered by this manual are used for various operations under normal conditions. Never use the machine in flammable or explosive environment, or in areas containing asbestos dust.

Select a Sany excavator that is suitable for high-plateau operation when operating in areas 2,000 m above the sea level.

This machine has gone through electromagnetic capacity test according to EN 13309-200C. All unapproved electronic attachments (such as communication devices) are therefore to be tested before installation and application. Make sure that the electromagnetic attachments will not cause interference.

The information, specifications, and illustrations in this publication are on the basis of information that was available at the time that the publication was written. Sany reserves the right to change these information at any time without prior notice. Consult your Sany distributor to obtain the latest information or if you have any question on the information provided in this manual.

Before starting operation and maintenance, operator and service personnel shall observe the following items:

- Read and understand the whole manual.
- Read and understand the safety notices contained in this manual and the safety decals on the machine.
- Never apply or operate your machine under any circumstances that are prohibited by the manual.
- If the amount of fuel added, content of particulates ,or latitude is beyond the specification of this type of machine, damage could result and the warranty of your machine would become invalid.

Downloaded from www.Manualslib.com manuals search engine

https://truckmanualshub.com/

The manual must be kept in the operator cab for reference at any time.

If the book delivery with machine is missing or cannot be read, contact your Sany distributor to obtain a new one.

This manual should be regarded as a permanent component of your machine. If the machine is sold to a third party, give this manual to new owner.

The machine provided by Sany to its buyer is in line with all specifications and standards of buyer's country. If the machine is purchased from another country or someone of a third country, it might be lacking of some safety devices or technical requirements necessary for using the machine in your country. In case you question whether the machine is in accordance with the standards and specifications of your country, you may contact local Sany distributor before operating the machine.

2.2 Safety Messages

Safety precautions given in this manual and on machine decals, both textual and graphical, provide information of hazardous situations and methods to avoid such situations.

Before performing operation and maintenance on the machine, the operator and after-sale service personnel must understand all warning signs or symbols on the machine decals, strictly follow the safety rules and precautions specified in this manual, and take positive actions so as to reduce the possibility of personal injury or death, the damage of machine caused by improper service, and the risk of unsafe factors, to the minimum.

Downloaded from www.Manualslib.com manuals search engine

https://truckmanualshub.com/

2.2.1 Hazard alert wording

Hazard alert words are used in this manual and on some machine decals to inform the operator of imminent or potential hazards that lead to death, personal injury or property damage.

Different alert words are used to indicate the degree of hazard.

DANGER It indicates an imminently hazardous situation which, if not avoided, will result in death or serious injury.

WARNING It indicates a potentially hazardous situation which, if not avoided, could result in death or serious injury.

CAUTION It indicates a potentially hazardous situation which, if not avoided, may result in minor or moderate injury. It can also be used to alert unsafe operation as which may cause property loss.

NOTICE It indicates a situation which can cause damage to the machine, personal property and/or the environment, or cause the equipment to operate improperly.

This is the safety alert symbol. It is used to alert you to potential personal injury hazards. Obey all safety messages that follow this symbol to avoid possible injury or death.

Downloaded from www.Manualslib.com manuals search engine

https://truckmanualshub.com/

An example alert wording and alert text

⚠ WARNING

- **The hydraulic lockout control must be placed in the LOCK position before you leave the operator cab.**
- **An unlocked hydraulic lockout control lever can cause serious injury or death if maneuvered unexpectedly.**

2.2.2 Other alert wording

In addition to the safety-related alert words above, the following words are used in this manual to provide additional information to which extra attention must be paid.

Note:

It is followed by information on how to avoid reduction of machine service life.

Remark:

It is followed by very useful information.

2.2.3 Safety decals

Safety decals on the machine are used to alert operator or maintenance personnel that potential hazards might be involved when the machine is being operated or serviced.

We use textual and graphical (or combined) decals to indicate a hazardous situation and how to avoid such situation.

Downloaded from www.Manualslib.com manuals search engine

https://truckmanualshub.com/

2.2.3.1 Textual safety decals

Textual safety decals use brief text to indicate hazardous situation and safety measures.

Fig. 2-1 is an example of textual safety decals.

Fig. 2-1

2.2.3.2 Graphical safety decals

Graphical safety decals use images or symbols to indicate a hazardous situation and how to avoid it.

Fig. 2-2 is an example of graphical safety decals.

The upper triangle indicates the type of hazardous situation while the lower circle shows the way to avoid it.

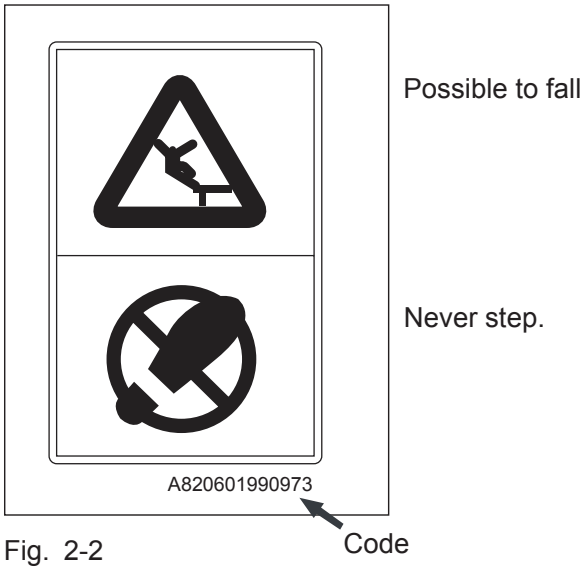

Fig. 2-2

Downloaded from www.Manualslib.com manuals search engine

https://truckmanualshub.com/

2.2.3.3 Safety decal locations

Sany cannot anticipate every possible circumstance that might involve a potential hazard. The warnings in this manual and on the product are, therefore, not all inclusive. If a tool, procedure, work method or operating technique that is not specifically recommended by Sany is used, you must be sure that it is safe for you and for others.

Application or operation not specified in this manual shall not be performed at any time.

The following safety decals are used on the machine.

- Be sure to recognize the correct locations and information on the decals.
- To ensure that the decals can be read and understood easily, they have to be attached to the right locations and always kept clean. The use of organic solution or gasoline to clean the decals is not allowed.
- There are also other decals besides those for warning and safety. These messages should be treated in the same way.
- A new decal should be used for replacement if the old one is broken or missing, or cannot be read. See the manual or the message for part number of the decal. You may order a new one from your Sany distributor.

Downloaded from www.Manualslib.com manuals search engine

https://truckmanualshub.com/

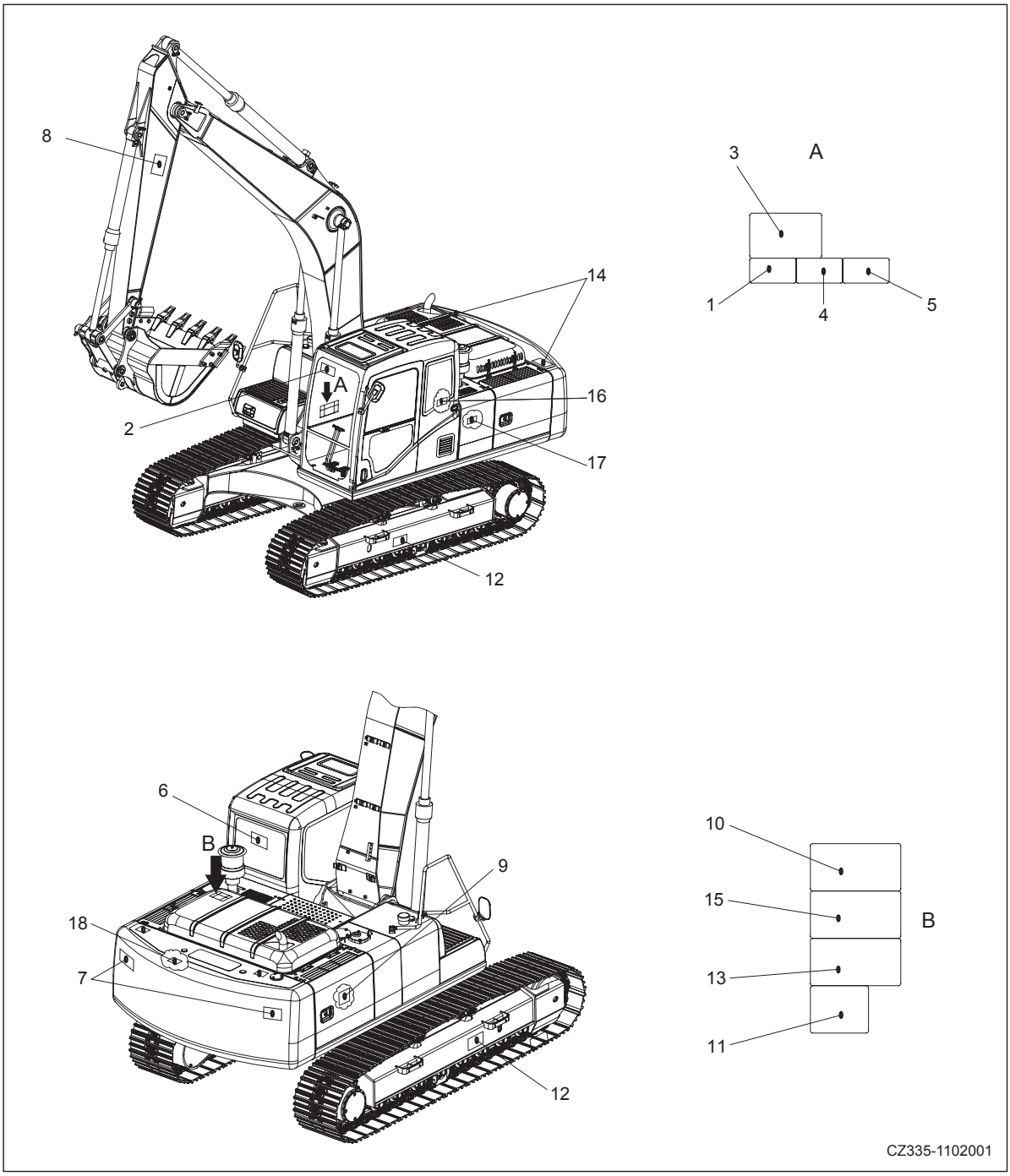

Fig. 2-3

Downloaded from www.Manualslib.com manuals search engine

https://truckmanualshub.com/

(1) Read the manual

- Warning!
- Read the Manual before operation, maintenance, disassembly, reassembly and transportation of your machine.

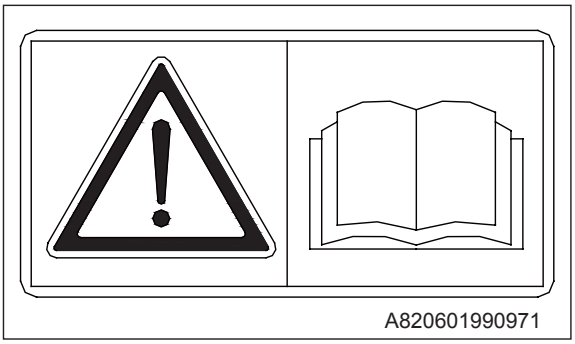

Fig. 2-4

(2) Lock the front window

- Always lock the front window if it is open.
- If the front window is unlocked in the open position, it may fall and personal injury could result.

Fig. 2-5

(3) Excavator control pattern

- To prevent bodily injury or death, be aware of the running condition and mode of your machine. Pay attention to your surrounding and operate your machine slowly.

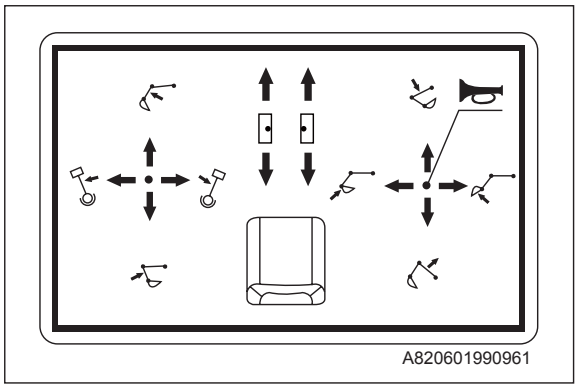

Fig. 2-6

Downloaded from www.Manualslib.com manuals search engine

https://truckmanualshub.com/

(4) High voltage

- Electrocution hazard.
- Keep a safe distance from power transmission lines.

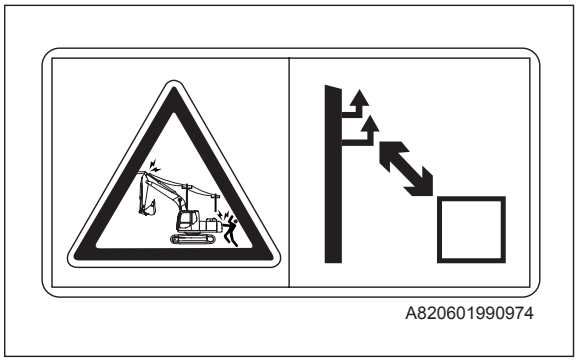

Fig. 2-7

(5) Remove key after power-off

Before leaving your machine, lower the work equipment to ground, engage the hydraulic lockout control and remove the ignition key.

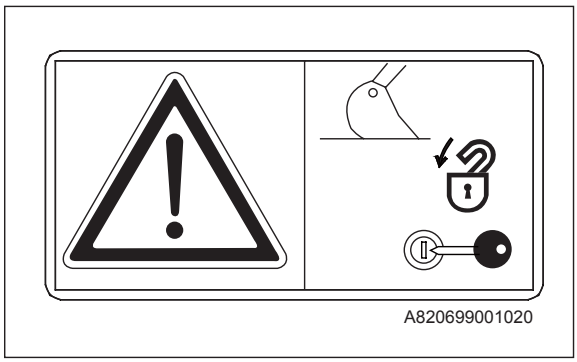

Fig. 2-8

(5) Alternate exit

Fig. 2-9

Downloaded from www.Manualslib.com manuals search engine

https://truckmanualshub.com/

(7) Away from swinging range

- This decal shows the possibility of being hit by the machine. Be away from the swinging range.
- Keep a safe distance from the machine when it is working.

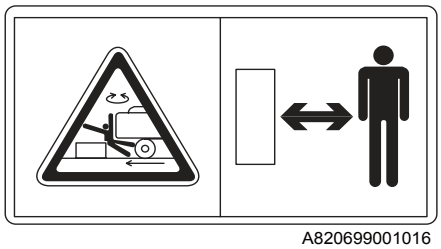

Fig. 2-10

(8) Watch out work equipment

- It is possible to be hurt by the work equipment.
- Keep a safe distance from the machine when it is working.

Fig. 2-11

(9) Hot surface

- Hot parts can cause burns. Never touch any hot part.

Fig. 2-12

Downloaded from www.Manualslib.com manuals search engine

https://truckmanualshub.com/

(10) Squirting hazard

- Read the instruction before removing the cap of any pressure vessel. To prevent squirting, turn the cap slowly to release internal pressure before removing it.

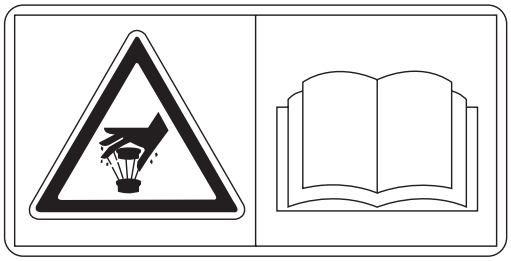

Fig. 2-13

(11) Fan cutting hazard

- A rotating part may cause injury. Keep a safe distance from any rotating part.

Fig. 2-14

(12) Track tension adjustment warning

- The regulator valve under high pressure may eject and cause bodily injury. Never loosen it over one turn.

Fig. 2-15

Downloaded from www.Manualslib.com manuals search engine

https://truckmanualshub.com/

(13) Moving belt

- A rotating belt is dangerous.
- Stop the belt before maintenance.

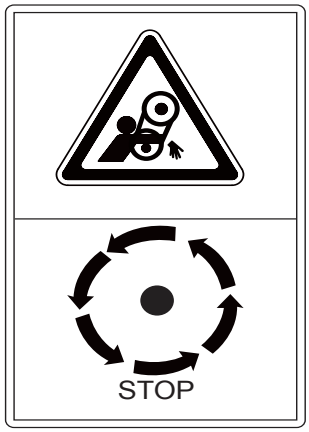

Fig. 2-17

(14) Possible to fall

- It is possible to fall.
- Stay away from the edge.

Fig. 2-18

(15) Engine hood

- It is possible to fall.
- Never step here!

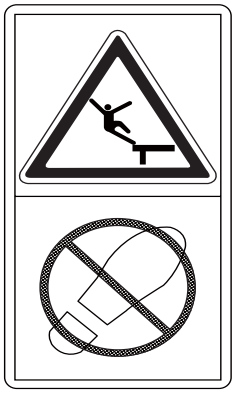

Fig. 2-16

Downloaded from www.Manualslib.com manuals search engine

https://truckmanualshub.com/

(16) Not seating

Fig. 2-19

(17) Water separator draining precautions

Fig. 2-20

(18) Refill refrigerant

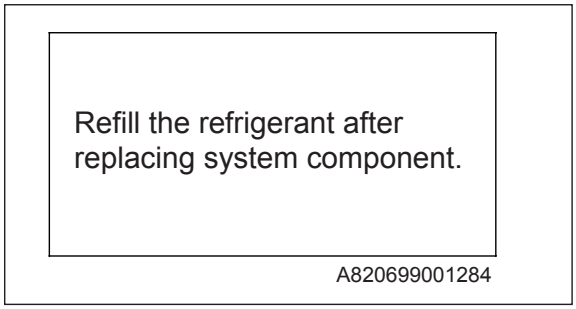

Fig. 2-21

Downloaded from www.Manualslib.com manuals search engine

https://truckmanualshub.com/

2.3 General Precautions

2.3.1 Safety rules

- Only trained personnel are allowed to operate and service the machine.
- All safety rules, precautions and instructions must be followed when operating and servicing the machine.
- Taking alcohol or drug could seriously impair one's ability in operating or repairing the machine, and it is hazardous for you and other persons.
- When working with another operator or job site traffic signalman, be sure to make all people understand all hand signals to be used.

2.3.2 Abnormalities

In case of any abnormalities found during operation and maintenance, such as noise, vibration, odor, incorrect gauge display, smoke, or oil leakage, contact your Sany distributor and take necessary measures. Never operate the machine before the faults are corrected.

2.3.3 Personal protective equipment

Wear proper work clothes and personal protective equipment (PPE) suitable for the environment of the job site. You may need:

- Hard hat
- Safety shoes
- Safety glasses, goggles or face shield
- Protective gloves
- Hearing protection
- Reflective protective clothing
- Rain gear

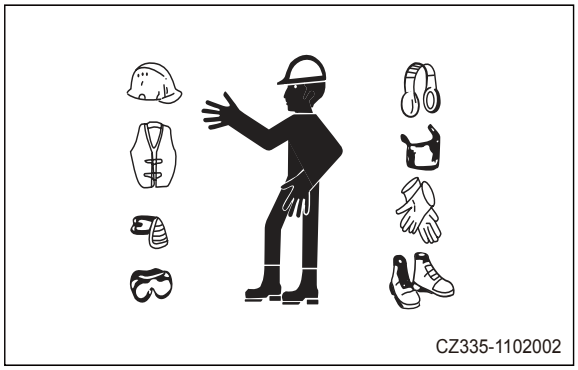

Fig. 2-22

Downloaded from www.Manualslib.com manuals search engine

https://truckmanualshub.com/

- Dust mask

Wear all necessary PPEs as well as other equipment required by your employer, local government, and local laws and regulations. Never take a risk.

WARNING

Observe the following items before performing any operations. Failure to do so could cause machine damage, personal injury or death.

- **Never wear slack clothing and jewelry, which may get caught by control levers or other machine parts.**
- **Long hair can be caught in moving parts. Tie your hair if necessary to avoid such hazard.**
- **Always have your hard hat and safety shoes on. Wear safety goggles, face masks, gloves, hearing protection and safety belt if necessary.**
- **Make sure all PPEs are in good condition before use.**
- **Never listen to radio or music with ear plugs on during operation.**

Downloaded from www.Manualslib.com manuals search engine

https://truckmanualshub.com/

2.3.4 Fire extinguisher and first aid kit

To prevent injury or fire, observe the following precautions:

- First aid kit and fire extinguisher should be available nearby.
- Read and understand the instruction attached to fire extinguisher. Use fire extinguisher properly.
- Regular inspection and maintenance shall be done to ensure proper functioning of fire extinguisher at any time.
- Check the first aid kit regularly and replenish it when necessary.
- Make emergency scheme to deal with fire and accidents.

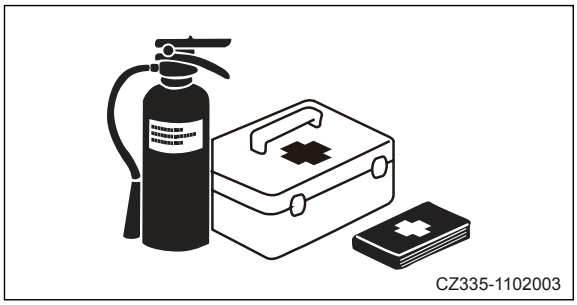

Fig. 2-23

2.3.5 Safety equipment

To protect you and others around you, your machine may be equipped with the following safety equipment. Make sure that they are secured in place and in good condition.

- Falling object protective structure (FOPS)
- Front guard
- Lamps
- Safety signs
- Horn
- Guards
- Travel alarm
- Mirrors
- Fire extinguisher
- First aid kit
- Windshield wipers

Make sure the above equipment are operational. Never remove or disconnect any safety equipment.

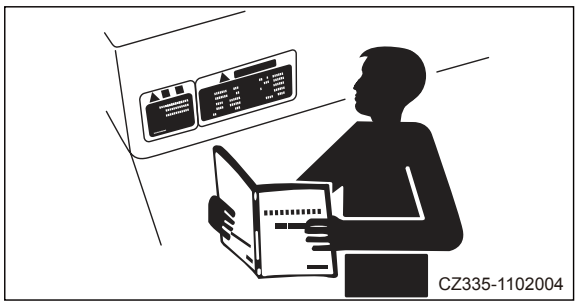

Fig. 2-24

Downloaded from www.Manualslib.com manuals search engine

https://truckmanualshub.com/

WARNING

Observe the following items before performing any operations. Failure to do so could cause machine damage, personal injury or death.

- **Make sure all covers and caps are in proper place. Repair or replace any of them immediately once found damaged.**
- **Know how to use these facilities and use them correctly.**
- **Never remove the guard rail of the operator cab (unless necessary) .**

2.3.6 Cleaning your machine

- Clean the windshields, mirrors and lights. Make sure that the operating area, steps and handholds are free from oil, grass, snow, ice or mud, which can cause you to slip and fall. Remove the mud on your soles before getting on the machine.
- If the machine is checked or serviced with presence of mud or oil dirt, it may cause you to slip or fall, or dirt may get into your eyes. Keep the machine clean all the time.
- If water has penetrated into the electrical system, never rush to power on your machine and start the engine, which can cause machine failure or PC board damage. Never flush the electrical system (including sensors, connectors, etc.) with water or steam.

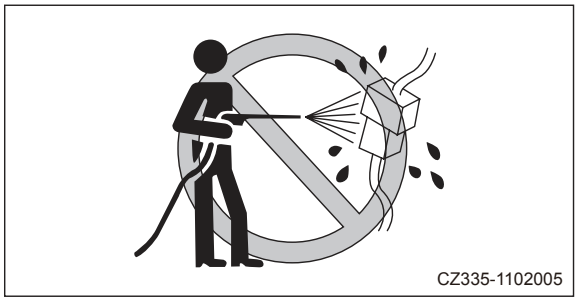

Fig. 2-25

Downloaded from www.Manualslib.com manuals search engine

https://truckmanualshub.com/

2.3.7 Keeping the cab clean

- Clean the mud and oil on your soles when getting into the cab. Mud or oil under your shoes can cause your foot to slip on the pedal during operation, and serious accident could result.
- Remove all loose personal items or other objects from the operator's area. Secure these items in the tool box or remove them from the machine.
- Never use cellular phone when operating or driving the machine.
- Never bring Hazardous articles, such as flammable or explosive products, into the cab.

2.3.8 Engaging the hydraulic lockout control

- Before you rise from the operator seat (e.g. to open or close the front window or to adjust the seat), lower work equipment to ground, place hydraulic lockout control (1) securely to the LOCK position, and then stop the engine. If hydraulic lockout control is FREE, accidental touching of control levers can cause sudden machine movement and serious injury, or machine damage could result.
- Before leaving your machine, always lower work equipment to ground, place hydraulic lockout control (1) to the LOCK position, and then shut down the engine. Lock all lockable components and remove ignition key.

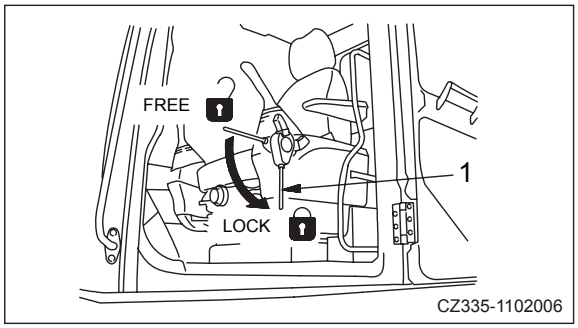

Fig. 2-26

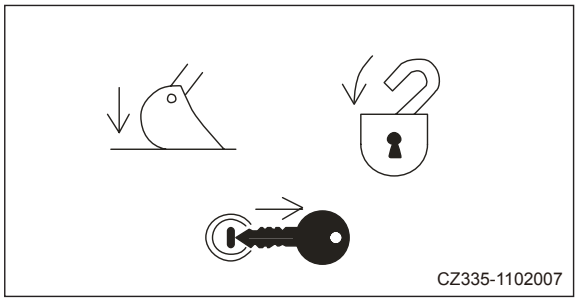

Fig. 2-27

Downloaded from www.Manualslib.com manuals search engine

https://truckmanualshub.com/

2.3.9 Handholds and steps

To avoid personal injury caused by slippery handholds or steps, observe the following instructions:

- Before mounting and dismounting, check the handholds and steps (including tracks) for oil, grease or mud. Always keep them clean. Make necessary repairs and tighten loose bolts if any.
- When mounting and dismounting the machine, use the handholds and steps marked by the arrows.
- Face the machine and maintain a 3-point contact with the handholds and steps (including tracks) . A 3-point contact can be both feet and one hand, or both hands and one foot.
- Never use any control lever as a handhold when mounting or dismounting the machine.
- Never carry tools when mounting or dismounting the machine.
- Never work on an engine hood or cover with no non-slip mat on it.
- Always face the machine when you mount or dismount the machine.
- Never jump onto/off the machine. Never mount a moving machine. Never jump onto the machine and try to stop it.
- When you enter and exit the operator cab, make sure the cab is on the central line of undercarriage.

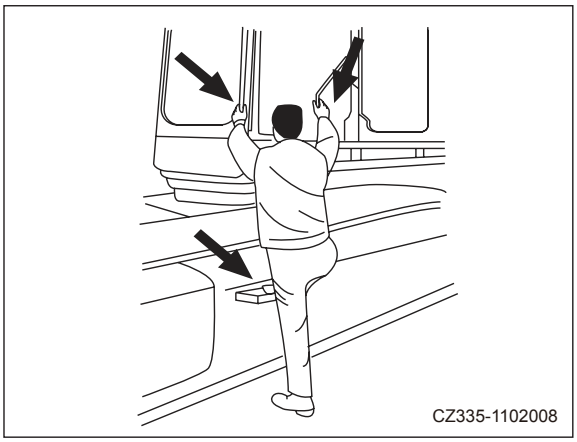

Fig. 2-28

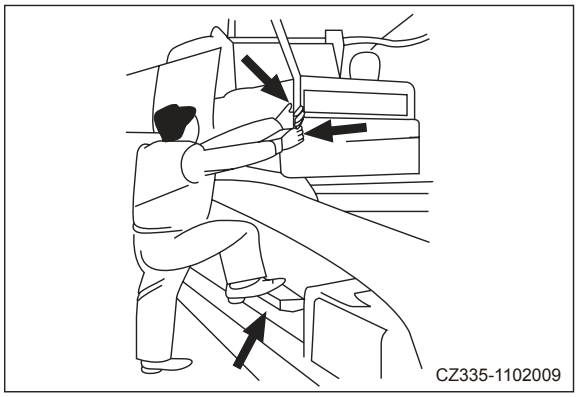

Fig. 2-29

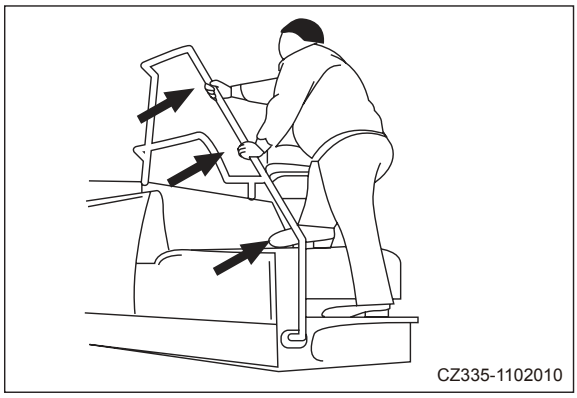

Fig. 2-30

Downloaded from www.Manualslib.com manuals search engine

https://truckmanualshub.com/

2.3.10 Overhead work

When working on a overhead place, use a ladder or other support to ensure your safety.

2.3.11 No sitting on attachment

To avoid falling hazard, no one is allowed to sit on work equipment or other machine attachments.

2.3.12 Articulated parts

The space around work equipment changes with movement of linkages. Serious personal injury could result if one is stuck in between. Never stay close to rotating or retracting/extending components.

2.3.13 Preventing burns

2.3.13.1 Hot coolant

- To prevent burns caused by hot coolant or steam when checking or discharging the coolant, wait until the engine coolant is cool enough before proceeding.
- Never open the cap of radiator before the engine cools down. Loosen the cap of the radiator slowly before removing it. Internal pressure of radiator must be relieved to avoid serious burns.

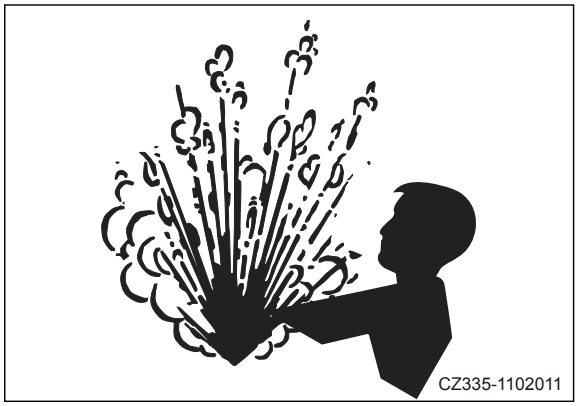

Fig. 2-31

Downloaded from www.Manualslib.com manuals search engine

https://truckmanualshub.com/

2.3.13.2 Hot oil

To prevent scalds caused by hot oil when checking or discharging the oil, always wait for the engine oil to cool down before you proceed.

When the engine has cooled down, loosen the cover or screw plug slowly to relieve internal pressure.

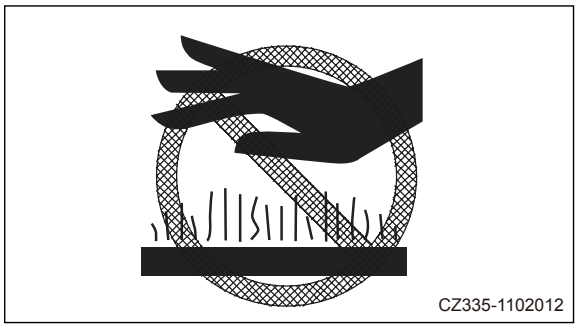

Fig. 2-32

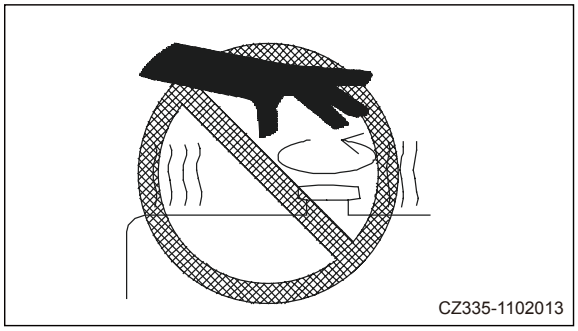

Fig. 2-33

2.3.14 Preventing fire and explosion

2.3.14.1 Fire caused by fuel or oils

- Engine oil and fuel must be stored in designated place, where unauthorized persons cannot enter.
- Never smoke or use fire near fuel or engine oil.
- Check for missing or loose pipe clamps, twisted hoses, hoses rubbing against pipeline, damaged oil cooler, and loose bolts in flange of oil cooler, so as to avoid oil leakage. Tighten, repair or replace any missing, loose or damaged pipe clamps, pipelines, hoses, oil coolers or other flange bolts.
- Refuel or store oils in a place with good ventilation.

Fig. 2-34

Downloaded from www.Manualslib.com manuals search engine

https://truckmanualshub.com/

- Shut down the engine before refueling.
- Never leave the machine when refilling the fuel or engine oil.
- Never let fuel overflow onto overheated surface or electrical components.
- Remove overflowed fuel or engine oil after refilling.
- Store oily rags and any flammable materials in protective containers in order to keep the job site safe.
- Screw on the caps of fuel tank and oil tank tightly.
- When oil is used to clean the parts, use non-flammable oil. Never use diesel oil or gasoline as they can easily catch on fire.
- All flammable materials should be moved to a safe place before carrying out grinding or welding operation on the chassis.
- Never weld or flame cut the lines containing flammable fluid.

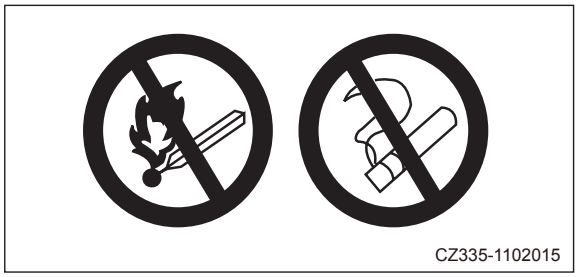

Fig. 2-35

2.3.14.2 Fire caused by flammable materials

- Remove at any time dry leaves, wood chips, paper pieces, dirt and other flammable materials built up or stuck on engine, exhaust manifold, battery or interior of engine hood to prevent fire.

2.3.14.3 Fire caused by electric lines

Short circuit of electrical system can cause fire.

- Keep electric terminals clean and fastened.
- Check power cables and electric lines for looseness, entanglement, hardening or break each day after operating for 8-10 hours. Check the presence or damage of wiring terminal cover.

Downloaded from www.Manualslib.com manuals search engine

https://truckmanualshub.com/

- In case of slack or entangled power cables or electric wires, tighten the connections or wire clips, and repair or replace broken wires.

2.3.14.4 Fire caused by hydraulic lines

- Check the clamps, guards and gaskets of all hoses and pipes to see whether they are tightened in position.
- In case of loosening, their vibration in operation may lead to friction against other components, resulting damage of hose, ejection of high-pressure oil, disastrous fire or serious injury.

2.3.14.5 Fire caused by illumination equipment

- Anti-blast illumination equipment shall be used to avoid explosion when fuel, oil, electrolyte, window cleaning detergent or cooling fluid is being checked.
- Instructions in this manual must be followed when power outlet on the machine is used for illumination.

2.3.14.6 Fire caused by heat shield

- Damage or missing of heat shield may lead to fire.
- In case of any abnormality, heat shield must be repaired or replaced before operation of machine.

2.3.15 In the event of fire

When a fire breaks out, leave the machine immediately by the following steps.

- Turn start switch to the OFF position to shut down the engine.
- Leave the machine with the help of hand-

Downloaded from www.Manualslib.com manuals search engine

https://truckmanualshub.com/

holds and steps.

2.3.16 Windshield cleaning detergent

Use alcohol based detergent. Never use methanol based detergent as it irritates eyes.

2.3.17 Preventing ejection of part

The grease in track tensioning device is under high pressure. Improper handling may result in serious injury, blindness or death. Observe the following instructions.

- Never disassemble grease nozzle or valve components. These parts may eject. Never stay in front of the valve.
- Travel reducer is under pressure.
- Gear oil is hot liquid. Wait for it to cool down before loosening the plug to release pressure. To avoid injury, never face the plug during operation.

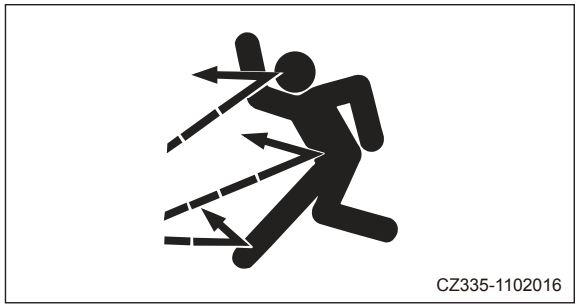

Fig. 2-36

Downloaded from www.Manualslib.com manuals search engine

https://truckmanualshub.com/

2.3.18 Falling object protection

- When the machine is operated in places where the cab is likely to be hit or invaded by falling objects, scattered materials or foreign bodies, protective structure shall be used to protect the operator.
- In demolishing or breaking operation, a front guard is necessary. In addition, a transparent glass film shall be applied to the windshield.
- In a coal mine or a quarry where falling objects are present, install falling object protective structure (FOPS) and front guard, and apply a transparent glass film to the windshield. The operator shall wear a hard hat and goggles.
- Keep the windshield shut in such conditions and make sure other people are kept a safe distance away from the operating area.
- Other guards may be necessary according to different working conditions. In this case, contact Sany distributor in advance.

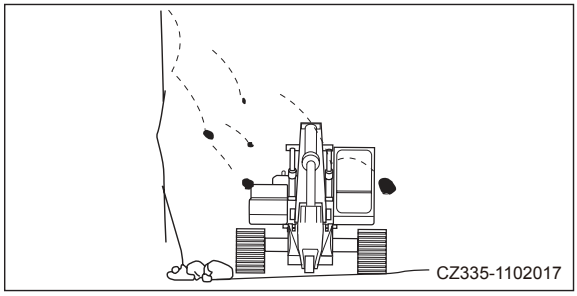

Fig. 2-37

2.3.19 Attachment installation

- Installation of optional parts or attachments may involve safety issues or be limited by the law. In this case, contact your Sany distributor in advance.
- Sany assumes no responsibility for the injury, accidents and product failure caused by the use of unauthorized attachments and parts.
- Before installing and using machine attachments, read related instructions regarding the attachment and general precautions on attachment in this manual.

Downloaded from www.Manualslib.com manuals search engine

https://truckmanualshub.com/

2.3.20 Attachment combination

Different or combined work equipment may collide with the cab or interfere with other machine components. Before operating work equipment you are not familiar with, check the clearance between it and the machine and operate it carefully.

2.3.21 Cab windows glasses

- Broken cab windows at the side of the work equipment may expose the operator in direct contact with the work equipment. In this case, stop operation immediately and replace the glasses.
- Broken or damaged window provides no protection to the operator. When the roof window is damaged, replace it immediately with a new one.

2.3.22 Unauthorized modification

Any modification unauthorized by Sany may lead to safety problems, personal injury or death. Improper modification can affect machine's strength and operator's view. Contact your Sany distributor before making any modification. Sany assumes no responsibility for the accidents, failure or damage caused by unauthorized modification.

2.3.23 Job site investigation

- Machine operation near flammable materials (e.g. dry tree leaves) poses a fire hazard. Be careful during operation.
- Check the terrain and ground condition and use the safest operating method. Never operate in areas with the risk of landslide or falling stones.
- Solidify the ground when operating beside

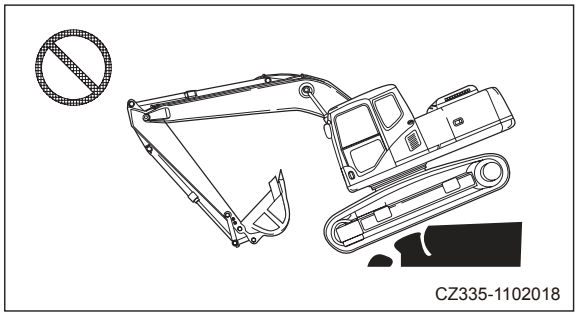

Fig. 2-38

Downloaded from www.Manualslib.com manuals search engine

https://truckmanualshub.com/

a ditch or on road shoulders. Keep your machine a safe distance away from the ditch or road shoulder. Designate a signal man, when necessary, to avoid accidental injury.

- When underground water mains, gas lines, cables or high-voltage electric cables are available on the job site, inform related utilities providers and mark the area. Be careful not to cut or damage any lines.
- Prevent any unauthorized personnel from entering the job site. Designate a signal man and fence the job site when operating your machine on a highway.
- Be especially alert when operating on frozen ground. Increase of ambient temperature may result in soft and slippery ground.
- When traveling or operating in shallow water or soft ground, check the type and condition of rock bed as well as the depth and water flow before operation.

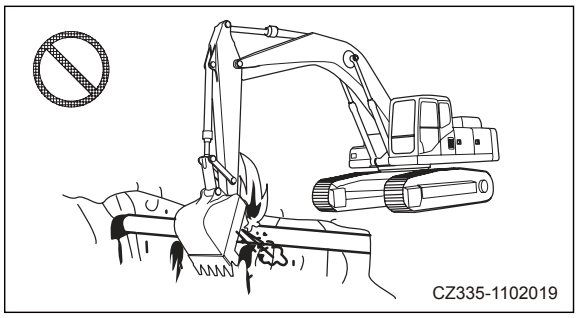

Fig. 2-39

2.3.24 Operation on soft ground

- Avoid traveling or operating your machine near cliffs, road shoulders or trenches. The soft ground plus machine weight and vibration can cause your machine to sink or tip over. The ground may become even softer after heavy rain, explosion or earthquake.
- When operating on a dam or near an excavated ditch, vibration and machine weight may trigger a landslide. Before operation, take protective measures to prevent your machine from tipping over or falling.

Downloaded from www.Manualslib.com manuals search engine

https://truckmanualshub.com/

2.3.25 Overhead power cables

Never drive or operate your machine near power cables, which may bring electrocution hazard and cause machine damage, personal injury or death. The following steps are to be followed while working at where power cables could be nearby.

- Before operation in the vicinity of power cables, inform local power company of the coming operation and ask them to take necessary measures.
- If your machine is too close to power cable, electrocution is most likely to occur and cause burns or death. A safe distance must be kept between machine and power cable (See Table 2-1). Before operation, communicate with local power company regarding safety measures.
- A signalman is to be designated to give signals if your machine is too close to power cables.
- Nobody is allowed to approach the machine when it is operated near high-voltage cables.
- If your machine is too close to the cable or touches the cable, to prevent electrocution, operator shall not leave the cab until machine power is surely cut off. In addition, Nobody is allowed to approach the machine.
- To prevent accidents, wear rubber shoes and rubber gloves during operation. Cover the operator’s seat with rubber sheet and pay attention to exposed part of body that should not touch the lower part of machine.

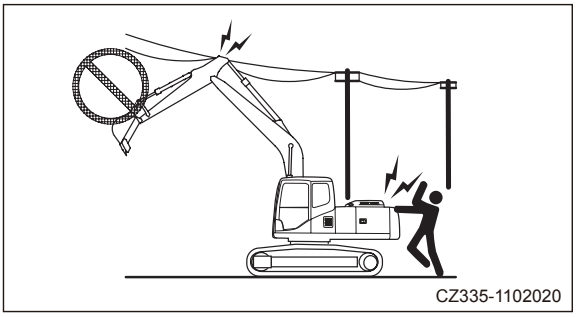

Fig. 2-40

Cable Voltage	Safe Distance
100V-200V	2 m (7 ft) or above
6,600V	2 m (7 ft) or above
22,000V	3 m (10 ft) or above
66,000V	4 m (14 ft) or above
154,000V	5 m (17 ft) or above
187,000V	6 m (20 ft) or above
275,000V	7 m (23 ft) or above
500,000V	12 m (36 ft) or above

Table 2-1

Downloaded from www.Manualslib.com manuals search engine

https://truckmanualshub.com/

2.3.26 Ensuring a good visibility

The machine is equipped with rearview mirrors to improve the visibility of the operator. However, some areas cannot be seen from the operator seat. When operating your machine in a position that gives you poor visibility, uncertainty of job site may cause machine damage and personal injury. Observe the following instructions when operating or driving your machine in a place without a clear view.

- Check rear view mirrors on each workday. Remove debris and adjust the view to ensure good visibility.
- Working in a darkened area requires turning on work lamps and head lamps of the machine. Set up auxiliary illumination on a job site if necessary.
- Stop operation if you cannot have a clear view in days with fog, snow, rain or sand storm.
- Road shoulder or soft ground should be marked. In case of bad vision, a signalman should be available if necessary. Operator shall especially pay attention to the marks and follow the instruction of the signalman.
- Only one signalman is allowed to give signals.
- Make sure all workers understand all signals and gestures before operation.

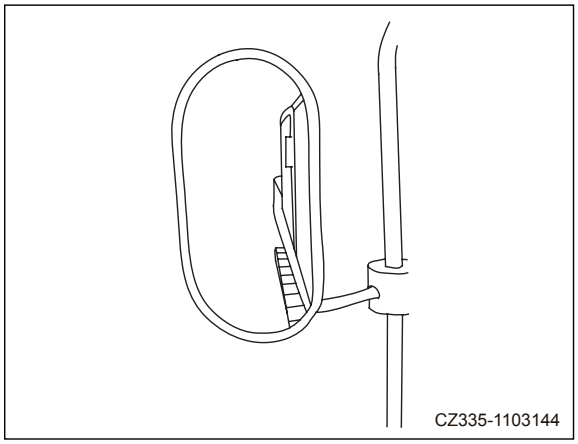

Fig. 2-41

Downloaded from www.Manualslib.com manuals search engine

https://truckmanualshub.com/

WARNING

Exposure to hazardous chemicals or dusts pose a serious danger if released or mishandled. Performing demolition work or handling hazardous materials often release substances that could pose a hazard. Serious injury or death may result unless proper precautions are observed while working with these materials. All workers involved in demolition or handling of hazardous materials should use approved personal protective equipment and follow all environmental safety regulations.

Fig. 2-42

2.3.27 Ventilating enclosed area

Engine exhaust gas can be fatal. If the engine must be started, or if fuel, cleaning oil or paint must be handled in an enclosed area, to prevent gas poisoning, doors and windows shall be opened to ensure sufficient ventilation.

2.3.28 Asbestos hazard

Inhalation of asbestos dust can cause lung cancer. It is possible to inhale asbestos dust when performing tear-down operation or handling industrial wastes at job site. The following rules must be followed.

- Use water, instead of compressed air, to remove the dust.
- If the air contains asbestos dust, operate the machine following the wind. All persons shall wear acceptable filter mask.
- Nobody is allowed to approach the machine during operation.
- The regulations, rules and environment criterion at job site shall be observed.

No asbestos is used in this machine. But after-

Downloaded from www.Manualslib.com manuals search engine

https://truckmanualshub.com/

market parts could contain asbestos. Therefore, use only the parts and components supplied by Sany.

2.3.29 Alternate exit

- If you are unable to open the cab door in case of emergency, use the safety hammer to break the rear window to escape.
- Remove the pieces of glass from the window frame before escaping. Be careful not to be cut by broken glass. Pay attention to the broken glass on the ground, which may cause you to slip and fall.

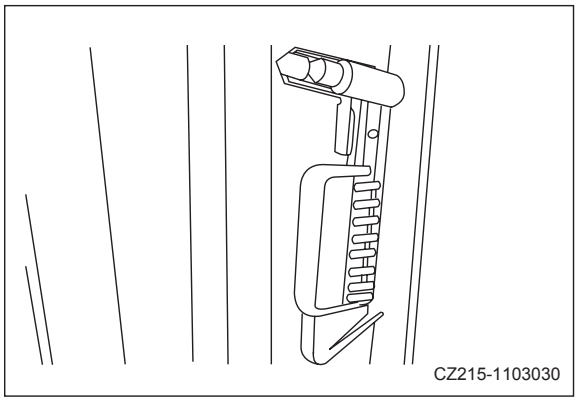

Fig. 2-43

Downloaded from www.Manualslib.com manuals search engine

https://truckmanualshub.com/

2.4 Safe Operation Precautions

2.4.1 Safe starting

2.4.1.1 Safe mounting

When you mount or dismount the machine:

- Always face the machine and maintain a three-point contact (one hand and two feet or two hands and one foot).
- Never jump on/off the machine. Never mount a moving machine.
- Never use any control lever as handhold.
- Remove the mud, oil dirt and water from the pedals, handholds and your soles at all times.
- The cab must be aligned with the under-carriage centerline before you enter or exit the cab.

An unattended machine is dangerous.

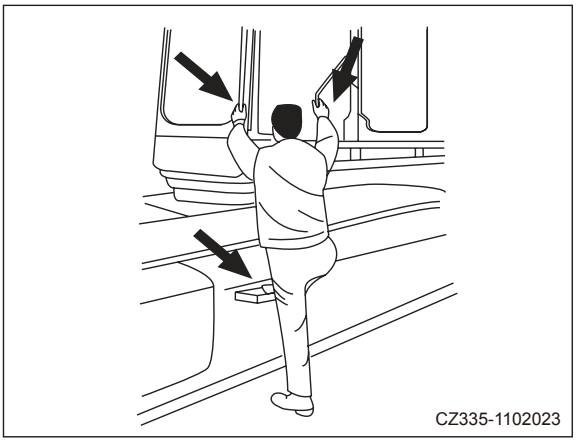

Fig. 2-44

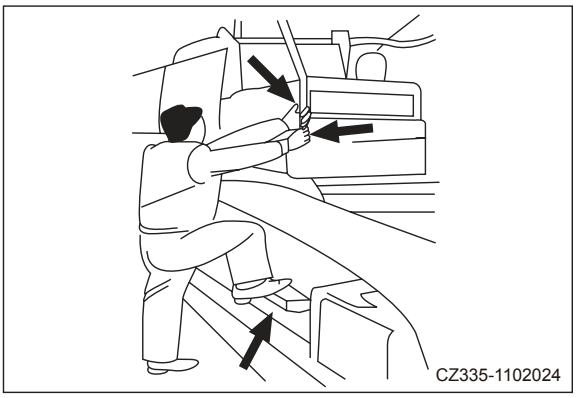

Fig. 2-45

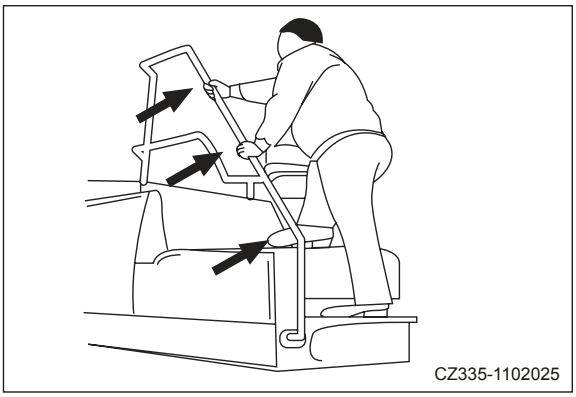

Fig. 2-46

Downloaded from www.Manualslib.com manuals search engine

https://truckmanualshub.com/

2.4.1.2 Seat adjustment

Uncomfortable seat position can easily lead to operator fatigue and mistakes. The seat position should be adjusted upon change of operator. Leaning against the back of seat, operator shall be able to push the pedal to its limit with his foot, and operate the control lever properly. Otherwise, the seat should be readjusted by moving it forward or backward.

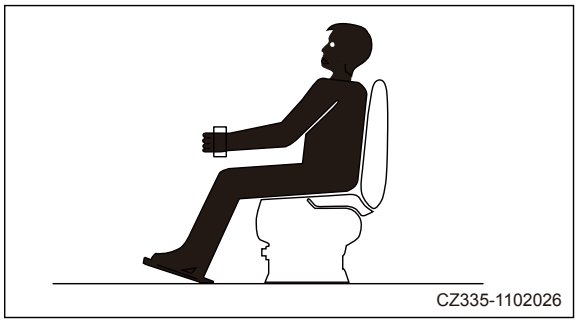

Fig. 2-47

2.4.1.3 Seat belt

The operator may get seriously injured or killed when the machine tips over. Before operating the machine, check carefully your seat belt, the buckles and the anchor point. Replace the seat belt if damage or excessive wear is observed. When the machine is being operated, keep your seat belt buckled up.

The seat belt must be replaced every three years regardless of its condition.

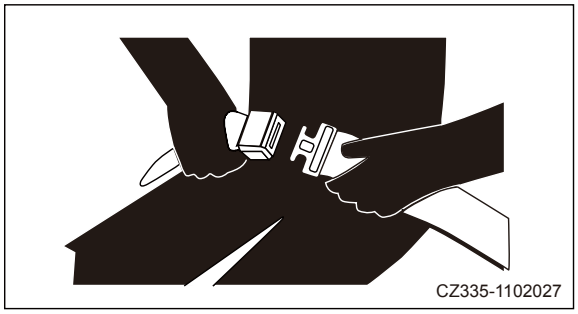

Fig. 2-48

2.4.1.4 Before starting the engine

Before starting your daily work, the following items must be observed before starting the engine.

- Clean the windows to ensure a good visibility.
- Clean the head lamps and work lamps, and check if they are in good condition.
- Check coolant level, fuel level and engine oil level.
- Check for blocked air filter and damaged electrical wires.
- Adjust the seat to a position easy for operation; check seat belt and buckles for damage and wear.

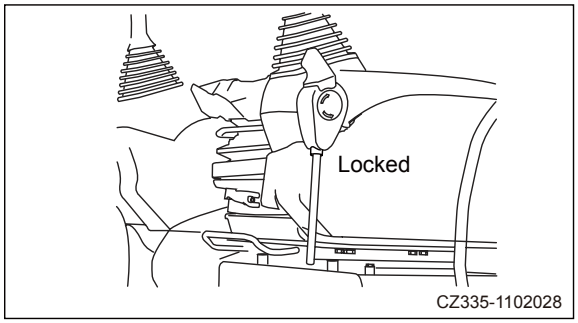

Fig. 2-49

Downloaded from www.Manualslib.com manuals search engine

https://truckmanualshub.com/

- Check the instrument panel. Check if the control levers are all in neutral position.
- Check if the hydraulic lockout control is in the LOCK position.
- Adjust the rear view mirrors so as to see clearly from the operator seat what is happening behind the machine.

2.4.1.5 Engine starting rules

- Before starting the machine, make sure nobody is on, under or around the machine. Sound the horn to warn people around.
- Always start and operate the machine from the operator seat.
- No one is allowed to stay on the machine except the operator.
- Never start the engine by shorting the start motor circuit, which is dangerous and may cause machine damage.

2.4.1.6 Safe starting

⚠ WARNING

- **Ample ventilation must be provided if you have to start the engine or operate the machine in an enclosed environment.**
- **Excessive inhalation of exhaust gas can be fatal.**
- **If you do not know how to stop the machine, never start it.**

Downloaded from www.Manualslib.com manuals search engine

https://truckmanualshub.com/

To understand proper starting steps of the machine, see **“Engine Starting” on page 4-22**.

- Being seated in the operator's position, adjust the seat so you can easily access all controls from a seated position.
- Familiarize all warning devices, gauges and operation controls.
- Place all controls to neutral/shutdown position.
- Nobody is allowed to stay in the working area.
- Start the engine as indicated in Operation Section.

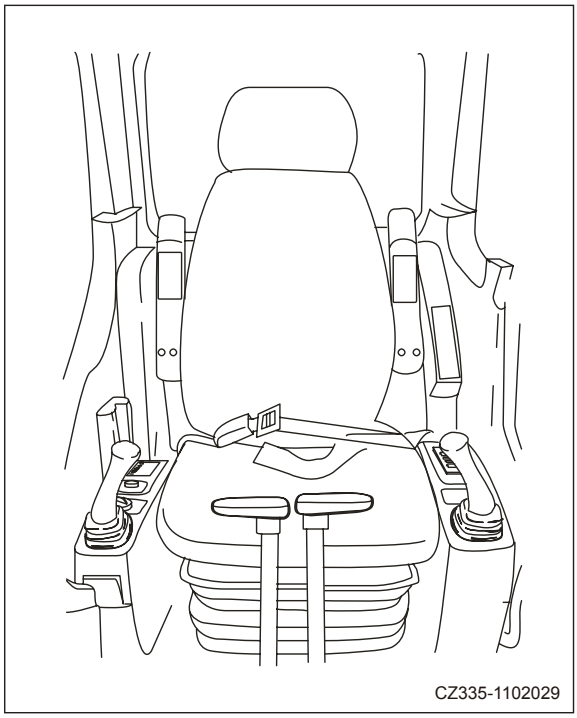

Fig. 2-50

2.4.1.7 Starting engine in cold season

- When ambient temperature is blow 10ºC, pre-heat the engine before start it. For detailed information, see **“Engine Preheating” on page 4-25.**
- When the machine is intended to work in areas where temperature is always below -15ºC, fuel heating system is recommended to improve engine startup performance.
- Sufficient warm-up operation is necessary. Incomplete warming up may result in slow reaction and accidents.
- Before starting, check the battery electrolyte. In case of frozen electrolyte, never charge the battery or use alternative power source to start the engine; instead, melt the electrolyte first. Otherwise, fire may break out on the battery.

2.4.1.8 Engine starting aid

Follow procedures in the Operation section when using jumper cables to start the engine.

Downloaded from www.Manualslib.com manuals search engine

https://truckmanualshub.com/

Improper handling may cause battery explosion or loss of machine control, resulting in personal injury and death. Never use jumper cables to start the engine unless necessary. Contact your Sany distributor before such an attempt.

- Using jumper cables to start the engine needs two persons working together with one seated in the operator seat and the other handling the battery.
- Wear goggles and rubber gloves before starting the engine with jumper cables.
- When connecting a normal machine with a faulty machine with jumper cables, battery voltage of the two machines shall be the same. Be careful not to allow the two machines to contact with each other.
- Turn both start switches to OFF position when connecting the two machines. Otherwise, the machine may move and cause danger when it is powered on.
- Start with the positive terminal when connecting the jumper cable. Start with the ground or negative terminal when disconnecting the jump cable.
- When disconnecting the jumper cable, take care not to allow the clips of jumper cable to contact with each other or with the machine.

Ether is a liquid used for cold start, which is extremely flammable and explosive. Read the instructions on the ether container before application.

Never use ether if the engine is equipped with spark-plug preheater or other forms of preheater.

2.4.1.9 After starting the engine

Run the engine at low idle for 3 to 5 minutes after engine startup, and check the running parameters and make sure they are normal

Downloaded from www.Manualslib.com manuals search engine

https://truckmanualshub.com/

and all readings are within normal working range.

2.4.2 Operation

2.4.2.1 Inspection before operation

- When conducting inspection, move the machine to a spacious area without barriers and operate slowly. Any other person is not allowed to approach the machine.
- Be sure to buckle the seat belt.
- Check the gauges and machine operation for abnormality; check the bucket, arm, boom, travel system, swivel system and steering system for abnormal operation.
- Check for abnormal noise, vibration, heating, odor or gauge reading; check oil or fuel for leakage.
- When the travel control level is in neutral position, test the engine's speed control device; operate each control lever and confirm they work properly. Understand the control mode of work equipment.
- In case of any abnormality, stop operation and take corrective measures immediately.

2.4.2.2 Prior-operation precautions

To prevent serious injury or death, follow the items below before moving the machine.

- It is dangerous to stay in the working range during machine operation. Sound the horn to warn people within the working range before operating your machine.
- Nobody is allowed to stay on and near the machine, or within the working range.
- To improve the visibility in the travel direction, you may turn the cab if necessary.
- Assign a signalman at where visibility is poor.

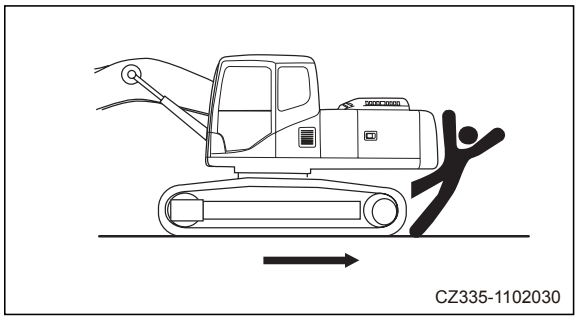

Fig. 2-51

Downloaded from www.Manualslib.com manuals search engine

https://truckmanualshub.com/

2.4.2.4 Travel directions

WARNING

Improper operation of travel control lever/ pedal can cause serious injury or death.

- Confirm the relative positions between the undercarriage and operator before operating the machine.
- If the motor is under the cab, pushing the control lever/pedal forward will move the machine backward.
- If the guide roller is under the cab, push the control lever/pedal to move machine forward.
- A sign for travel direction can be found on internal side of undercarriage. When operator pushes control lever/pedal, the actual travel direction is the direction indicated by arrow.

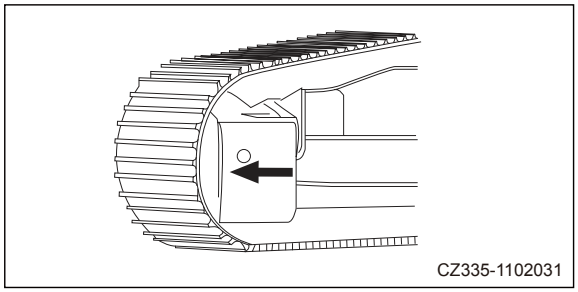

Fig. 2-52

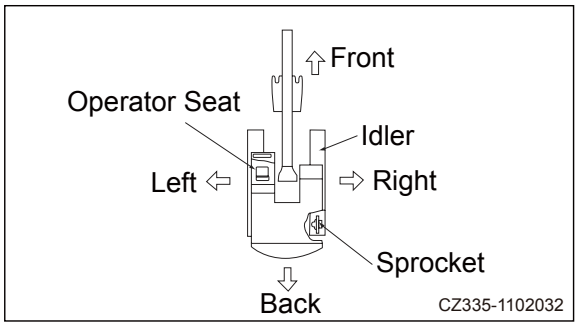

Fig. 2-53

Note:

In this manual, the forward, backward, left or right direct is the direction seen from the cab when the cab is straight forward and the driving wheels are in the rear.

2.4.2.3 Rules for steering safety

- Always drive and operate the machine in a seated position.
- Nobody is allowed in the cab except the operator.
- Check if the travel alarm works.
- Always secure the cab door or windows, either open or closed. At job site where flying objects may get into the cab, check if the doors and windows are properly shut.
- Assign a signalman if a blind area exists

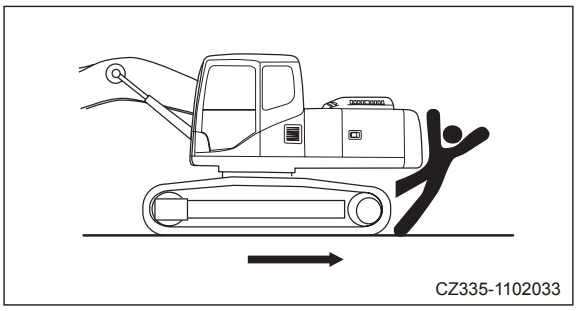

Fig. 2-54

Downloaded from www.Manualslib.com manuals search engine

https://truckmanualshub.com/

at the rear of the machine. In turning or swivel operation, be alert not to hit other machines or personnel.

- Sound the horn to warn personnel in the area before traveling.
- Check for the presence of personnel and/or obstacles again in the machine surroundings before traveling.
- Before traveling, position the machine so that the sprocket (1) is behind the operator cab. If the sprockets are in front of the cab, the machine will move in a direction opposite to the move direction of control levers. Special attention must be paid to operations under such circumstances.
- If your vision is limited during reverse travel, assign a signalman and keep him within the range of your vision.
- When a signalman is necessary on some occasions, use hand signals specified in local regulations.
- The machine can only be moved when both signalman and operator understand the signals.
- Understand all vocal, graphic and flag signals used in work and decide who is to give signals.
- Keep the windows, rear view mirrors and work lights clean and intact.
- Dust, heavy rain and fog may reduce visibility. Drive slowly and use proper lights in case of low visibility.

WARNING

During reverse or swivel operation, people around the machine may get hit by the counterweight or work equipment, resulting in serious injury or even death.

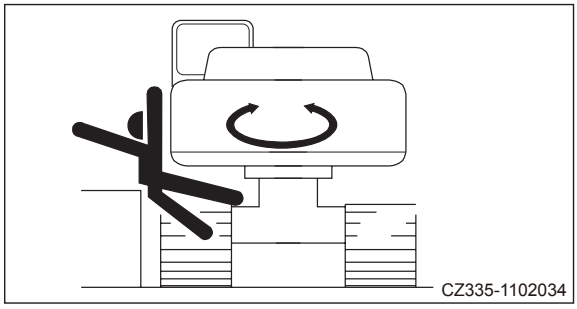

Fig. 2-55

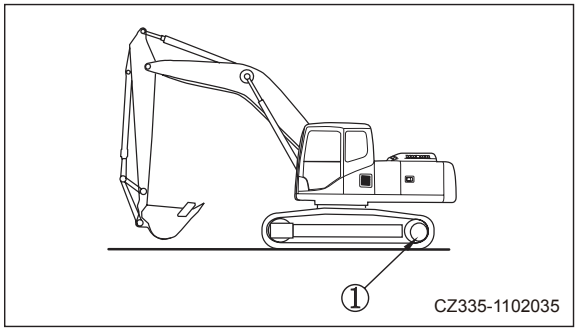

Fig. 2-56

Fig. 2-57

Downloaded from www.Manualslib.com manuals search engine

https://truckmanualshub.com/

2.4.2.5 Rules for traveling safety

- To prevent machine breakdown and avoid damage of work equipment, never operate the machine beyond its maximum load or rated capacity.
- When driving or operating the machine, keep the machine a safe distance away from people, building or other machine so as to avoid collision.
- When traveling on a highway, contact related departments in advance and follow their instructions.
- When traveling on flat ground, the work equipment should be retracted and kept 20-30cm(8-12in) off the ground.
- When traveling on rough ground, the machine shall move at a low speed and avoid sudden change of direction, or the machine may tumble down. If the work equipment hits the ground, the machine will lose balance and get damaged.
- When traveling on rough ground or on a steep slope, the auto-deceleration switch (if equipped) shall be switched off. If the auto-idle switch is on, engine speed and travel speed may drop suddenly.
- Avoid traveling over a barrier if possible. If you have to do that, lower the work equipment close to the ground and drive slowly. Never let the machine travel on a barrier that would make it tilt sharply.
- Check first the structural strength of a bridge or a building before drive the machine on it.
- Operate slowly when you are working in a tunnel, under a bridge or power cables or under where working height is limited. Take care not to damage anything with work equipment.

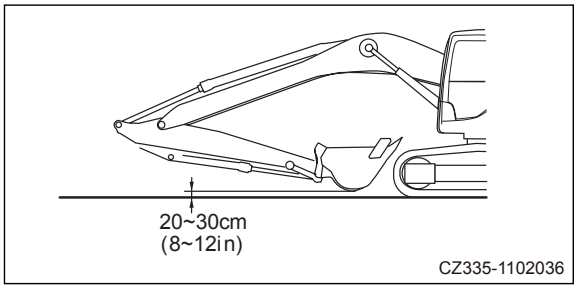

Fig. 2-58

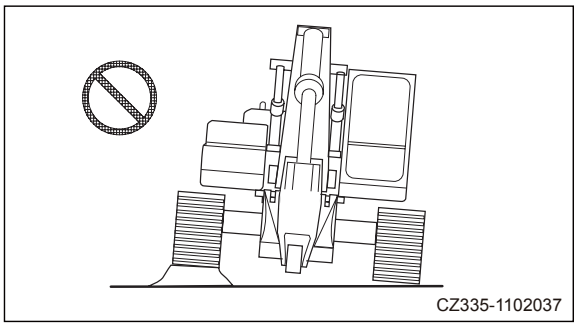

Fig. 2-59

Downloaded from www.Manualslib.com manuals search engine

https://truckmanualshub.com/

2.4.2.6 Safe traveling

- Check the travel direction of the machine before driving it. Make sure you know how to operate the control levers and pedals.
- Press the upper part of the control pedal or push the control lever forward to move the machine in the direction of the idlers.
- Work equipment should be kept 20-30 cm (8-12 in) off the ground when moving on a slope. In case of an emergency, the work equipment could be lowered to ground immediately to help stop the machine.

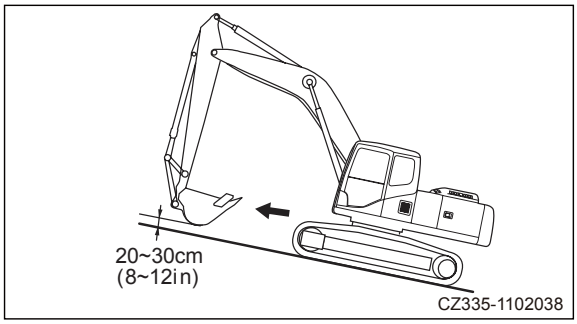

Fig. 2-60

WARNING

Driving the machine on a slope may cause it to slip or tumble down, resulting in serious injury or death.

- When driving the machine up a slope, face the cab to the uphill direction; when driving down a slope, face the cab to the downhill direction.
- Before traveling, always check the hardness of ground before your machine.

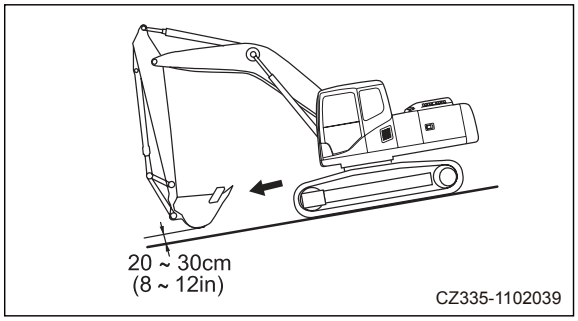

Fig. 2-61

- When driving the machine up a slope, extend the work equipment to keep balance. Keep the work equipment 20-30 cm (8-12in) off the ground and drive the machine slowly.
- When driving down a slope, lower the engine speed, keep the travel control levers close to “neutral” position and drive slowly.

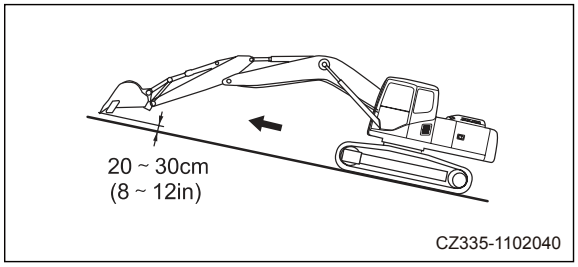

Fig. 2-62

Downloaded from www.Manualslib.com manuals search engine

https://truckmanualshub.com/

- Drive straight up and down a steep slope. It is very dangerous to turn on or drive across a slope.

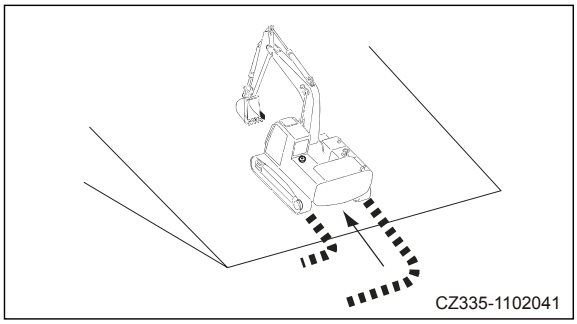

Fig. 2-63

- To adjust the position of the machine on a slope, drive it onto a flat surface, reposition it and driving the machine to the slope again.
- Drive at low speed on meadow, fallen leaves or wet steel plate because even a small grade could cause the machine to slip.
- If your engine stalls out when traveling on a slope, place the control levers to "neutral" position immediately and restart the engine.

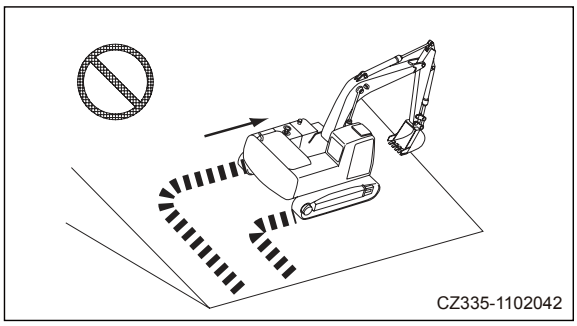

Fig. 2-64

2.4.2.7 Operation on an incline

If you swing upper structure or operate work equipment on an incline, you machine could loose balance and tip over, causing serious injury or damage. Therefore, such operations must be performed carefully on a flat platform.

- When the bucket is fully loaded, never turn work equipment from uphill to downhill. Such operation is dangerous and your machine could tip over.
- If you have to operate your machine on an incline, always build an earth platform so that your machine can work on a level surface.

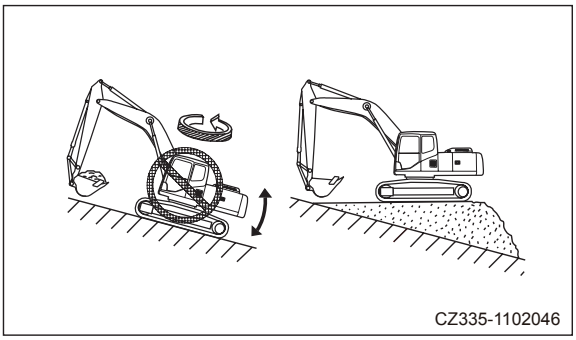

Fig. 2-65

Downloaded from www.Manualslib.com manuals search engine

https://truckmanualshub.com/

2.4.2.8 Operation in snowy weather

- Snow-covered or frozen surfaces are slippery. Never manipulate the control lever suddenly when driving or operating the machine. Extra attention should be paid to operation on a slope because even small inclination could cause the machine to slip.
- The machine may tip over on frozen surface which may become soft upon increase of ambient temperature.
- Avoid deep snow, which may cause your machine to tip over or to be buried in snow. Be noted that you shall never be away from road shoulder and avoid being trapped in snow.
- When cleaning the snow, it is hard to see the snow-covered road shoulder and objects near the road. There is danger for your machine to tip over or hit the covered objects. Therefore, please operate with extreme caution.

2.4.2.9 Restricted operations

- Never dig under an overhang, which may lead to falling stones, collapse of overhang, and accidents.

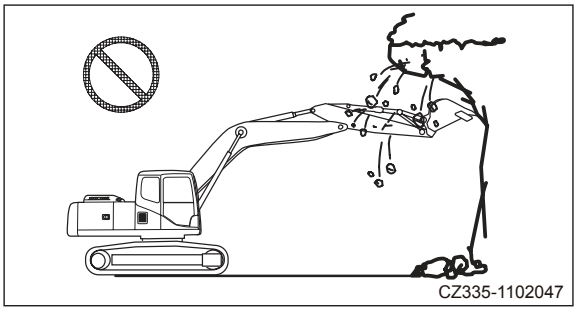

Fig. 2-66

Downloaded from www.Manualslib.com manuals search engine

https://truckmanualshub.com/

- Never dig too much under the machine, which may cause the ground to collapse due to cave-in, hence the accidents.

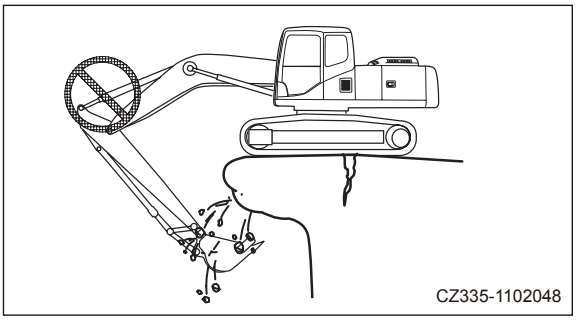

Fig. 2-67

- In excavating operation, the track should be adjusted vertical to road shoulder or cliff, with sprockets behind the cab, so that the machine can retreat easily in case of an emergency.

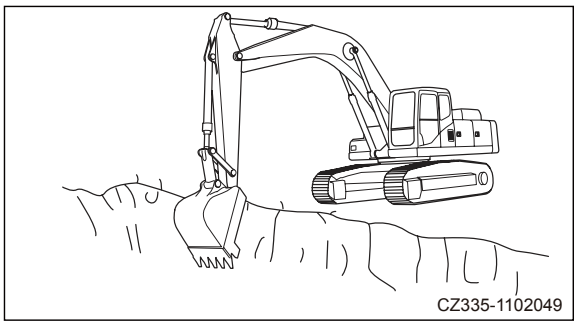

Fig. 2-68

- Never tear down under your machine, which may cause your machine to destabilize and roll over.
- When operating on building or other structures, strength of structure must be checked to avoid collapse of building, thus resulting injury or death.

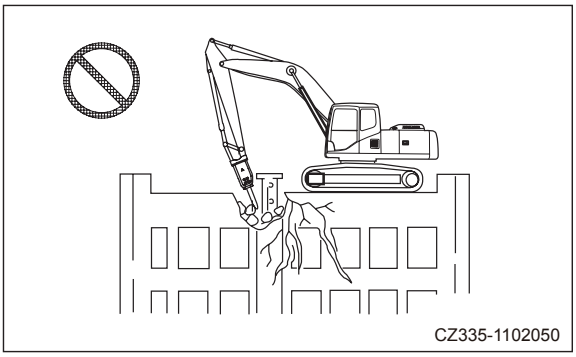

Fig. 2-69

Downloaded from www.Manualslib.com manuals search engine

https://truckmanualshub.com/

- Never tear down any structure over your machine. The falling of broken objects or collapse of building could damage your machine and cause personal injury or death.

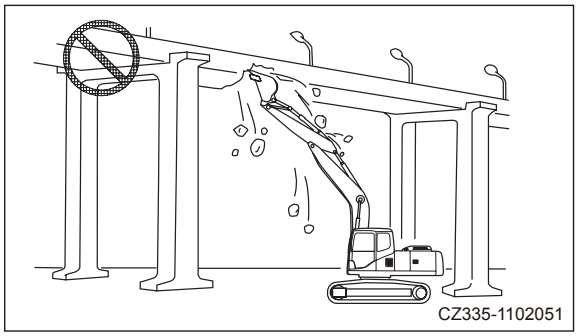

Fig. 2-70

- Never break anything with the impact force of work equipment as broken pieces could lead to personal injury, the work equipment could be damaged, and the counter-action of impact force could roll over your machine.
- Generally speaking, it is easier to tip over with the work equipment at one side than it is positioned in the front or rear.

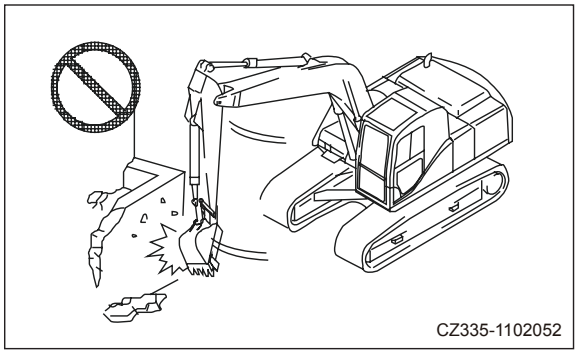

Fig. 2-71

- Lifting, moving or swinging the bucket shall never pass over anybody or a truck's cab. The falling of substances from the bucket or collision of buckets could result in personal injury or machine damage.
- The use of crusher or other heavy working unit could cause your machine to lose balance and tip over. When operating on a flat surface or slope:

  Never lower, swing or stop the working unit suddenly.

  Never extend or retract the boom cylinder suddenly as which may cause your machine to tip over due to impact.

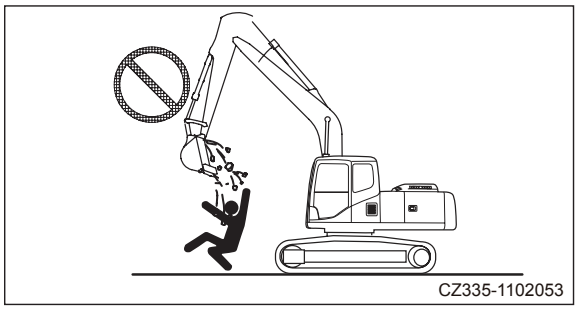

Fig. 2-72

Downloaded from www.Manualslib.com manuals search engine

https://truckmanualshub.com/

2.4.3 Parking the machine

2.4.3.1 Select a parking place

- Park your machine on a solid and flat surface.
- Park the machine in an ares free of such hazards as falling stones or landslide. If the terrain is low, park it in a relatively higher place.
- If you have to park the machine on a slope, observe the following instructions:
  - Position the bucket in the downhill direction and cut the bucket tips into the earth.
  - Chock the tracks to prevent unexpected movement.
- Never park your machine on a road undergoing construction. If you have to park your machine in such a place, flags are to be used on daytime and signal lamps at night to warn other people or vehicles according to local regulations.

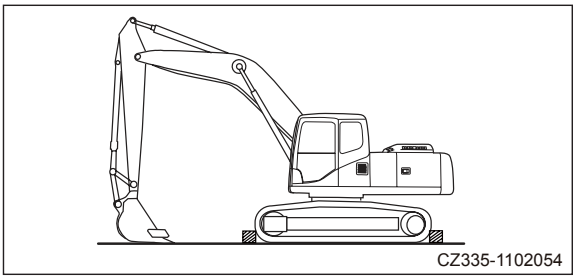

Fig. 2-73

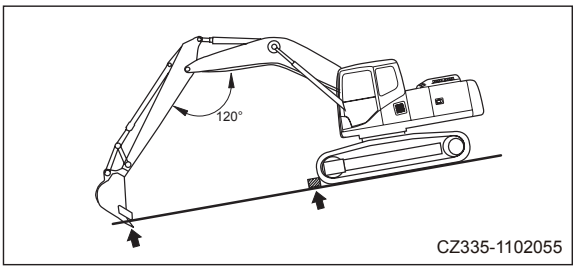

Fig. 2-74

2.4.3.2 Machine shutdown

Follow the procedures below to shut down the machine.

1. Stop the machine.
2. Position the machine properly.
3. Lower work equipment to ground or hold it in a position.
4. Reduce engine speed to idle and keep it running for 5 minutes.
5. Turn start switch to OFF position to stop the engine.
6. Place hydraulic lockout control to the

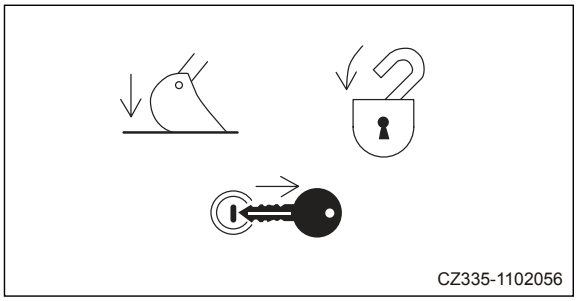

Fig. 2-75

Downloaded from www.Manualslib.com manuals search engine

https://truckmanualshub.com/

LOCK position.

7. Remove ignition key.

8. Close the windows and the cab door.

9. Lock all access doors, boxes and chambers.

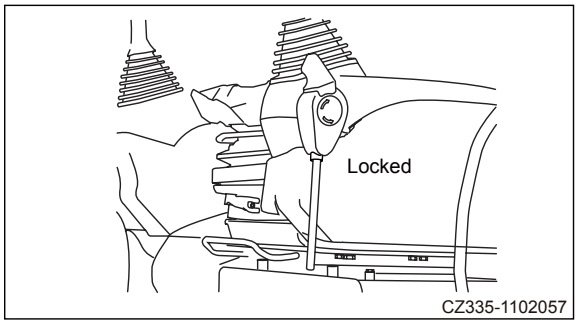

Fig. 2-76

When leaving your machine, face the machine and maintain a three-point contact with it. Never jump off the machine.

Be careful with slippery track, step and handholds when dismounting the machine.

2.4.4 Transportation

2.4.4.1 Loading and unloading the machine

Improper loading and unloading of the machine may cause it to fall or tip over. Follow the procedures below:

- Load or unload the machine only on a solid and flat surface. Keep it a safe distance away from road sides or a cliff.
- Keep on-lookers away.
- Use an access ramp with enough strength. Make sure that the width, length and thickness of the access ramp is capable of providing a safe loading/unloading operation (at an angle ≤ 15°).
- Make sure the access ramp is free from grease, oil, water and debris. Clean the track if necessary. Be extremely careful when loading or unloading the machine in rainy or snowy weather.
- Never load or unload the machine using the force of work equipment, which may cause the machine to fall or tip over.
- Run the engine at low speed and drive slowly.

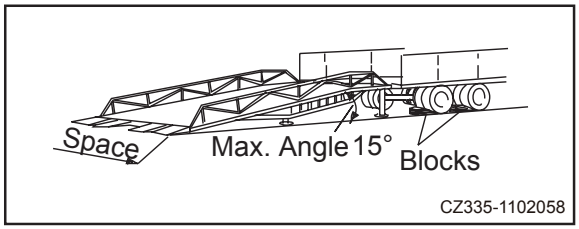

Fig. 2-77

Downloaded from www.Manualslib.com manuals search engine

https://truckmanualshub.com/

- Place the work equipment straight forward.
- Never operate any control levers other than the travel control lever when the machine is driving up the ramp.
- Never reposition the machine on the access ramp. If necessary, drive it off the ramp, reposition, and get on the ramp again.
- Gravity center of the machine may alter when it passes the jointing area between the ramp and the trailer. The machine may tilt at this moment. Travel slowly when the machine is on the joint area.
- When loading or unloading the machine on a platform, make sure the platform has adequate width, strength and a proper grade.
- The trailer may become less stable with the machine on it. Retract the work equipment and swing the upper structure slowly.
- Once the machine is loaded, lock the cab door. Otherwise, it may swing open during transportation.
- Secure the machine with chains and chocks.
- Secure all work equipment, lower the bucket, the arm and the boom, and place them in position for transport.

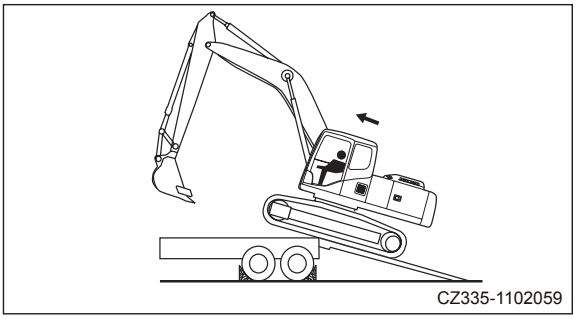

Fig. 2-78

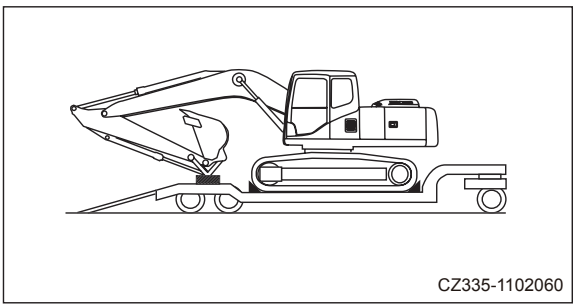

Fig. 2-79

2.4.4.2 Transporting the machine

Observe the following items when transporting the machine:

- Note the dimension of the trailer and the machine, especially the height. Watch out for barriers overhead and in narrow passages.
- Check the structure and strength of a bridge before crossing it. Obey local traffic regulations and traffic police directions when transporting the machine on highways.

Downloaded from www.Manualslib.com manuals search engine

https://truckmanualshub.com/

2.4.5 Battery

Electrolyte contains sulfuric acid, which gives off flammable and explosive gases. Improper handling may cause personal injury or fire. Observe the instructions below when handling battery:

- Never smoke or use fire near a battery.
- Turn the engine ignition key to the OFF position before working on the battery.
- Wear safety glasses and rubber gloves when handling battery.

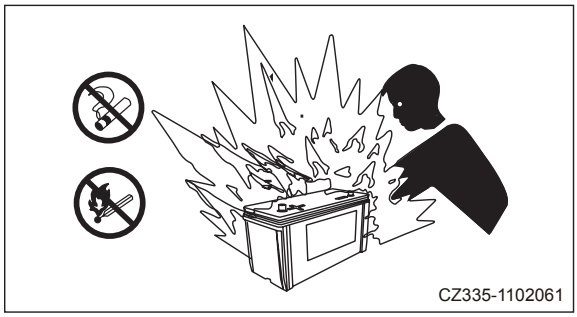

Fig. 2-80

- Electrolyte is a strong acid. If electrolyte contacts your clothing or skin, flush immediately with plenty of water. Electrolyte may cause blindness if it contacts your eyes. Flush immediately with plenty of clean water under such circumstances and seek medical treatment.

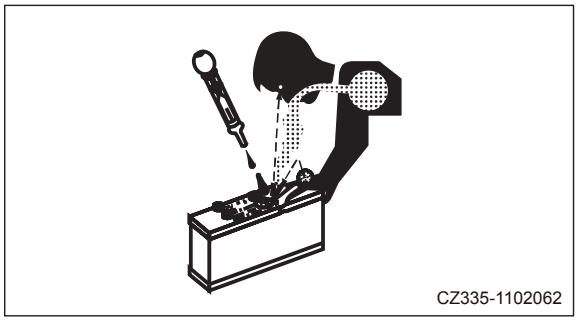

Fig. 2-81

To avoid battery-induced explosion, observe the following precautions:

- Never allow tools and other metal parts to contact with battery terminals. Keep tools or metal parts away from batteries.
- Stop the engine and wait for one minute before you proceed. Always disconnect the grounding terminal (negative(-)) first. To connect battery cables, always begin with the positive (+) terminal, and then connect the negative (-) terminal. Ensure all terminals are securely connected.
- Battery temperature rises when it is being charged. When battery temperature exceeds 45°C, stop charging and wait till it is at ambient temperature. Reduce the charging current by half and continue the

Downloaded from www.Manualslib.com manuals search engine

https://truckmanualshub.com/

charging process.

- A battery being charged may give off flammable gases. Before charging a battery, remove it from the undercarriage, put it in well-ventilated area and remove the cap.
- If acid squirts out of battery vent during charging, stop charging immediately.
- Never smoke and keep flames or sparks out when charging.
- When the battery has been fully charged, a green indicator will be on. Stop the charging process at this time.
- Restore the battery cover after charging.
- Put the battery back to its original position.

When towing a damaged machine, improper operation or use of unacceptable wire cable could lead to serious accident:

- Never tow the machine on a slope.
- Wear protective gloves and a had hat when using wire ropes.
- Check the strength of wire cable and make sure it could bear the weight of machine.
- Never use ropes with broken wires (A), reduced diameter (B) and twisting (C). Such ropes may break when towing.
- Never stand between the towing machine and the towed machine during towing operation.
- Operate the machine slowly. Never add load to the wire cable suddenly.

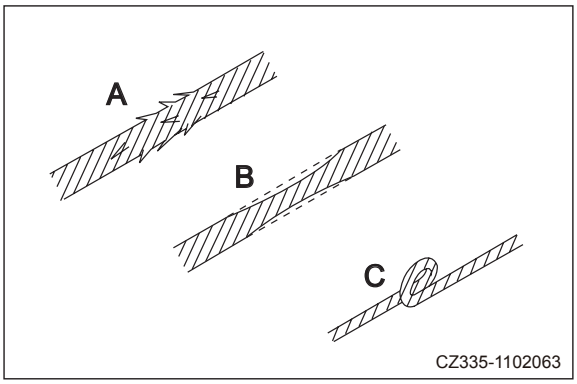

Fig. 2-82

Downloaded from www.Manualslib.com manuals search engine

https://truckmanualshub.com/

2.4.6 Lifting objects with the machine

WARNING

- **Overload is dangerous and can cause serious injury and death.**
- **Make sure the load is within the loading range and working radius of the machine.**

- Nobody is allowed to enter the working area.
- Confirm all signals to be used and assign a signalman before operation.
- Lift a load on a flat surface to prevent the machine from tilting or tipping over.
- Never use chains, wire ropes, shackles and slings that are damaged.
- Anchor wire ropes or slings onto the designated lifting lug. Never attach the shackle or sling onto the bucket tips. Loosened bucket tips could cause the load to fall.
- Never leave the operator seat when lifting is in progress.
- To prevent the load from hitting any person or building, inspect carefully the machine surroundings before swinging or operating the work equipment.
- Never swing or operate the work equipment suddenly. This may cause the load to drift and the machine to tip over. Use a drag rope if necessary.
- Never use the work equipment or the swing force to drag the load in any direction. The work equipment will jerk if the shackle breaks and the load comes free, resulting in serious personal injury.

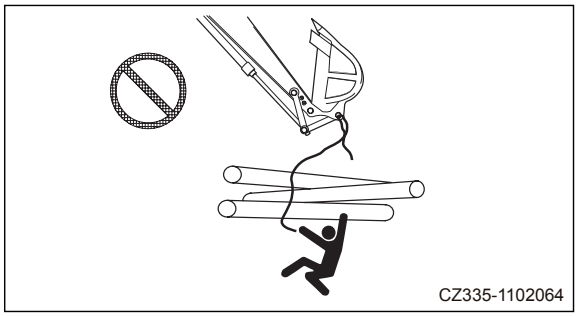

Fig. 2-83

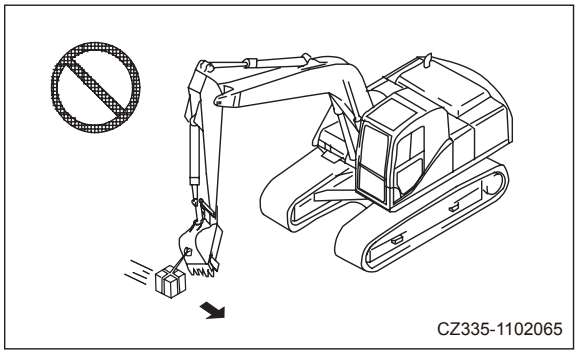

Fig. 2-84

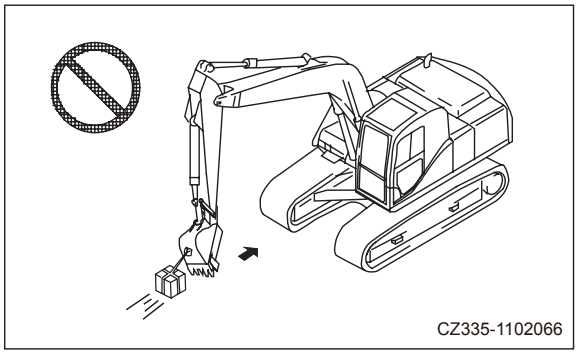

Fig. 2-85

Downloaded from www.Manualslib.com manuals search engine

https://truckmanualshub.com/

2.5 Precautions for Maintenance

2.5.1 Prior-maintenance precautions

To prevent accidents:

- Understand maintenance procedure before operation.
- Keep a clean and dry working area.
- Never spray water or steam in the cab.
- Never add lubricant and carry out other maintenance work when your machine is moving.
- Keep your hands, feet and clothing away from rotating parts.

2.5.2 Select a working area

- For maintenance work, select a clean flat area with plenty of space, ample sunlight and good ventilation.
- Clean the working area by removing fuel, lubricant and water, and covering slippery ground with sand or other absorptive materials.
- Never leave your hammer or other tools at the working area.
- If a clean, tidy working area cannot be guaranteed, there would be danger of tipping, thus resulting in personal injury.

Downloaded from www.Manualslib.com manuals search engine

https://truckmanualshub.com/

2.5.3 Preparing the machine

Before maintaining the machine:

- Park the machine on solid and flat ground.
- Lower the bucket to the ground.
- Place blocks under the tracks to prevent movement of the machine.
- Turn the fuel control dial to first gear. Run the engine at low speed for 5 minutes.
- Turn the start switch to OFF position and stop the engine.
- Turn the start switch to the ON position. Operate the control levers 2 or 3 times in all directions to relieve internal pressure of the hydraulic system.
- Remove the key from the switch.
- Place the hydraulic lockout control to the LOCK position.

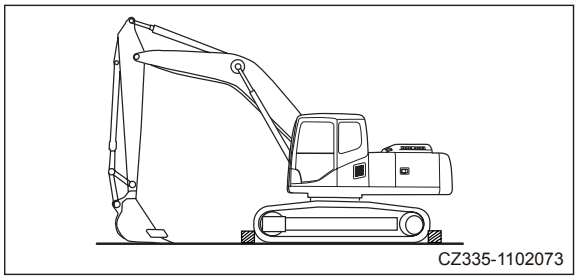

Fig. 2-86

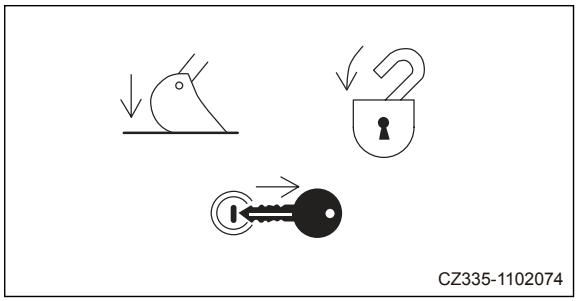

Fig. 2-87

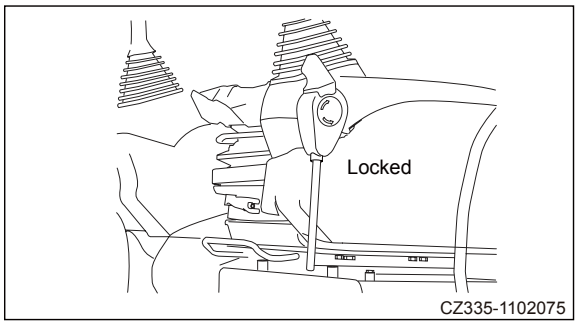

Fig. 2-88

Downloaded from www.Manualslib.com manuals search engine

https://truckmanualshub.com/

2.5.4 Preparing yourself

Only approved personnel can maintain or repair the machine. An observer may be assigned if necessary.

- Wear protective clothing and shoes necessary for the job.
- Wear rubber apron and rubber gloves when handling corrosive materials. Wear heavy gloves when handling wooden materials, wire ropes or sharp-edged metals.
- Wear a face shield when removing spring or elastic parts, or adding acid to battery. Wear safety hat and goggles when you weld or cut with a torch.
- Never carry out grinding, flame cutting or welding without an aspirator and ventilation equipment.
- Loud noise may impair your hearing permanent or temporary. When maintaining the engine, wear ear covers or ear plugs if you have to work in loud noise for a long time.
- When using a hammer to strike hard metal parts such as pin, bucket teeth, cutting edge or shaft, the flying of parts and metal pieces may cause bodily injury. Therefore, wear goggles and gloves and ensure the surrounding area is clear of any other people.
- When compressed air is used for cleaning, flying particles may cause personal injury. In this case, wear goggles, dust-preventive mask, gloves and other protective gear.

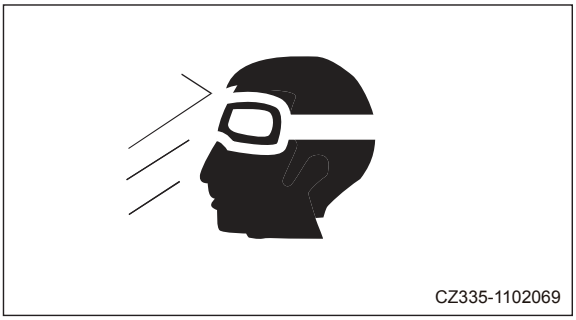

Fig. 2-89

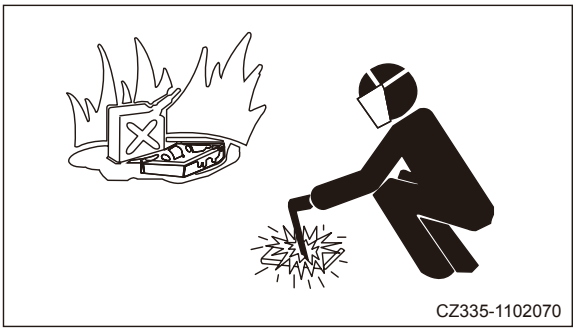

Fig. 2-90

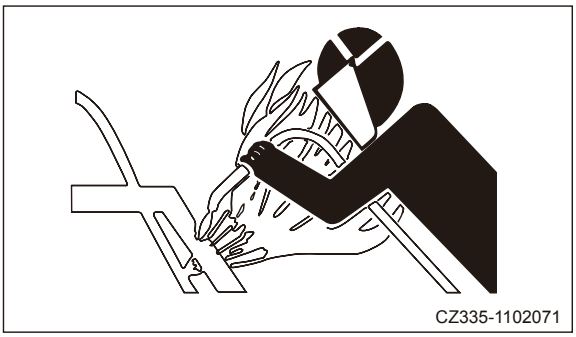

Fig. 2-91

Downloaded from www.Manualslib.com manuals search engine

https://truckmanualshub.com/

2.5.5 Lock-out and tag-out

- When maintenance is underway, starting the engine or moving the control levers or pedals could lead to serious accident.
- Before maintenance, attach a Never OPERATE tag or similar sign to the machine's start switch or control levers to warn others that this machine is under maintenance.
- Attach other warning tags around the machine if necessary.

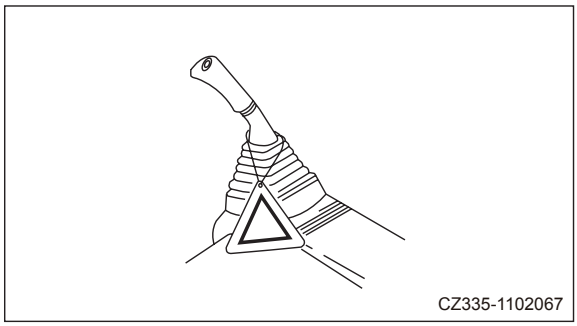

Fig. 2-92

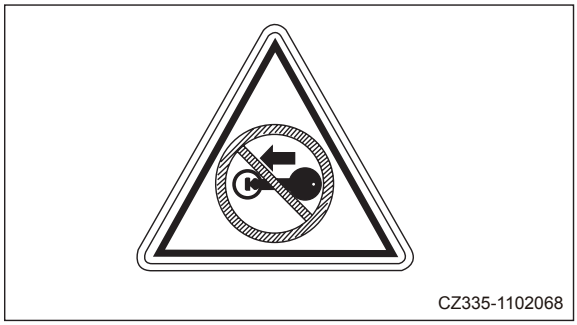

Fig. 2-93

2.5.6 Using proper tools

Use proper tools and use them correctly. Using damaged, inferior, defective, temporary tools or using the tools incorrectly could lead to serious accidents.

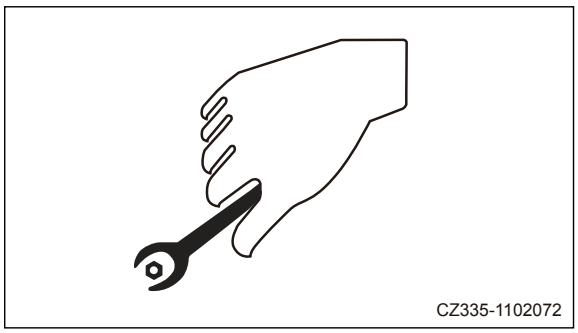

Fig. 2-94

Downloaded from www.Manualslib.com manuals search engine

https://truckmanualshub.com/

2.5.7 Maintenance with engine running

To prevent injury, no maintenance shall be carried out when the engine is running. However, if maintenance has to be done on a running engine, at least two worker are needed to carry out the maintenance.

- One of the workers shall stay in the operator seat ready to shut down the engine at any time. All the workers involved shall keep in touch.
- Place the hydraulic lockout control to the LOCK position to prevent movement of work equipment.
- Pay special attention to rotating parts like fan and fan belt.
- Never leave or insert any tool or other objects in the fan or the fan belt, which may cause the parts to break or fly.
- Never touch any control lever. If one of the control levers must be used, give signal to other workers and warn them to move quickly to a safe area.

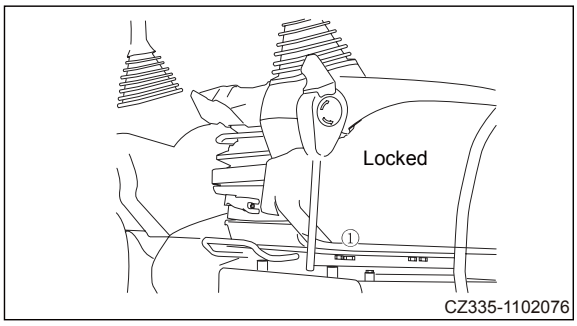

Fig. 2-95

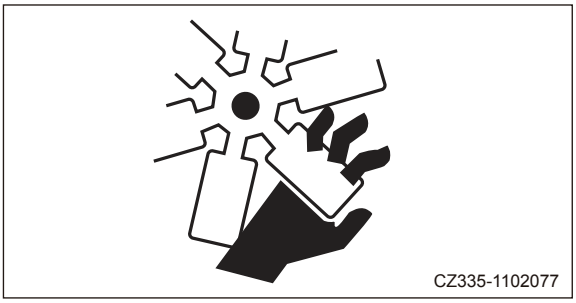

Fig. 2-96

2.5.8 Working under the machine

- Never carry out maintenance before the machine is well supported.
- Lower the work equipment to the ground before maintaining the machine.
- If the machine or work equipment has to be lifted for maintenance, blocks or supports that are strong enough to support the machine or work equipment should be used. Never use slag bricks, empty tires or stands to support the machine. These things may collapse under continuing load. Never use single jack to support the machine.

Fig. 2-97

Downloaded from www.Manualslib.com manuals search engine

https://truckmanualshub.com/

- If the track shoes are lifted and the machine is solely supported by the work equipment, it is very dangerous to work under the machine. In case of failure of hydraulic pipe or accidental touch of control lever, the work equipment or machine may fall suddenly, causing injury or death. Never work under the machine if it is not firmly supported with blocks or supports.

2.5.9 Track maintenance

WARNING

Never strike the recoil springs of the track. Recoil springs are under immense pressure and spring rupture may cause bodily injury. Never remove any spring when it is compressed.

- Dry rubbing of pin against bushing may produces extreme heat. Wear protective gloves to avoid burns.
- Maintain proper track tension. When working on mud- or snow-covered ground, mud or snow may attach to track components and causes over tension. Adjust track tension properly.
- Check for loosened or broken track shoes. Check the pins and bushings for wear or damages. Check the track rollers and carrier rollers.

Downloaded from www.Manualslib.com manuals search engine

https://truckmanualshub.com/

2.5.10 Track tension adjustment precautions

WARNING

Grease is injected into track tension adjustment system under high pressure. Failure to observe specified maintenance procedures may cause the grease discharge plug to eject and cause serious injury and damage.

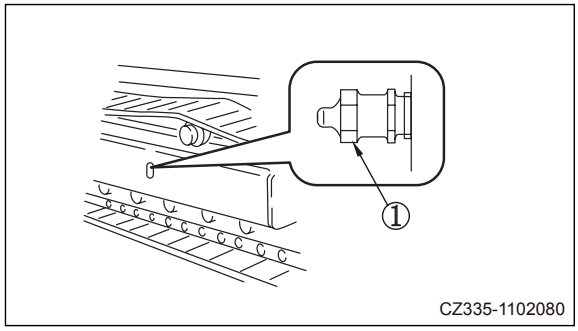

Fig. 2-98

- When loosening the grease discharge plug (1) to reduce track tension, the plug shall be unscrewed slowly for no more than one turn.
- Keep your face, hand, foot or any other body part away from the grease discharge plug.

2.5.11 Recoil spring

The recoil springs are used to reduce the impact of tension rollers. It includes a high pressure spring, which may fly out and cause serious injury or death if removed improperly.

If it has to be removed, contact your Sany distributor.

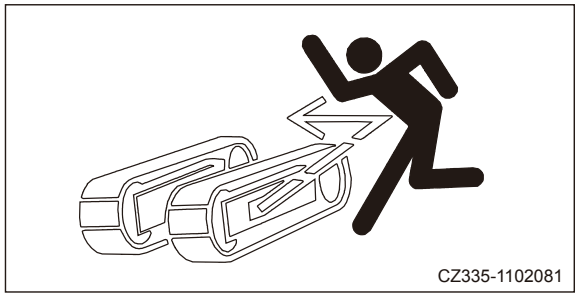

Fig. 2-99

Downloaded from www.Manualslib.com manuals search engine

https://truckmanualshub.com/

2.5.12 Welding operation

Welding operation may lead to fire or electrocution. Only qualified welders are allowed to conduct welding operation using proper equipment.

2.5.13 High-pressure hoses

If oil leaks from high-pressure hose, fault or even fire may occur. If any bolt on hose is loose, stop operation and tighten it to specified torque. In case of hose damage, stop operation immediately and contact Sany HM authorized dealer.

Replace the hose immediately in case of the following problems:

- Damage or leak of hydraulic hose fitting
- Damage or break of outer cover, or exposed steel wires of reinforcement layer
- Ballooning outer cover in some places
- Distortion or crushing of movable parts
- Impurities in outer cover

Downloaded from www.Manualslib.com manuals search engine

https://truckmanualshub.com/

2.5.14 Pressurized fluid

The hydraulic system is always under pressure. Make sure pressure in hydraulic circuits has been relieved before checking or replacing the lines. Residual pressure in the circuit may cause serious accidents.

- Release system pressure before maintaining the hydraulic system: 1) Remove the butterfly nut of the vent valve and press the venting button to release the internal pressure of the hydraulic tank; 2) Turn the start switch to ON position within 15 seconds after engine shutdown and place the hydraulic lockout control to FREE position. Move the control levers to all directions to release the pressure in the accumulator. Open fire is not allowed around the hydraulic system. Remove splashed hydraulic oil as quickly as possible.
- Diesel oil or pressurized hydraulic oil can penetrate skin or eyes, causing serious injury, blindness or death. It is hard to find the leaking of hydraulic oil with naked eyes. A cardboard or wooden board is necessary for checking for leaks. Never touch leaking liquid with bare hand. Wear face shield or safety goggles to protect your eyes. If any liquid penetrates your skin, flush with clean water immediately and get medical attention as soon as possible.
- The fuel lines are under high pressure when the engine is running. When checking or servicing the fuel system, shut down the engine and wait for 30 seconds till internal pressure drops before operation.

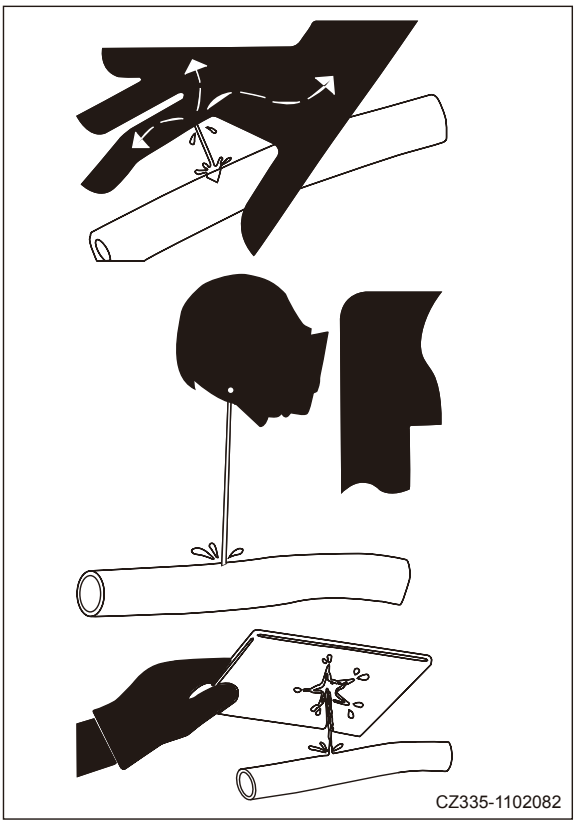

Fig. 2-100

Downloaded from www.Manualslib.com manuals search engine

https://truckmanualshub.com/

2.5.15 Hot cooling system

WARNING

Touching hot high-pressure coolant may cause serious injury.

When engine temperature rises, pressure of the cooling system increases. Before removing the radiator cover, stop the engine and let the system cool down. The radiator cover could only be removed after the coolant in it has cooled down.

Fig. 2-101

2.5.16 Air-conditioning system

WARNING

- **Refrigerant R134 a is a harmless gas under room temperature. It will change into highly toxic gas when burning.**
- **Refrigerant getting into eyes may cause blindness. It may cause frostbite if splashed on your skin.**

- Keep fire source away when servicing air-conditioning system.
- In maintenance of air-conditioning system, observe the instruction on the refrigerant cylinder and use it correctly. The type of refrigerant is R134a. Use of other refrigerants may damage the air-conditioning system.
- Obey local material disposal regulations. Never discharge refrigerant directly into the air.

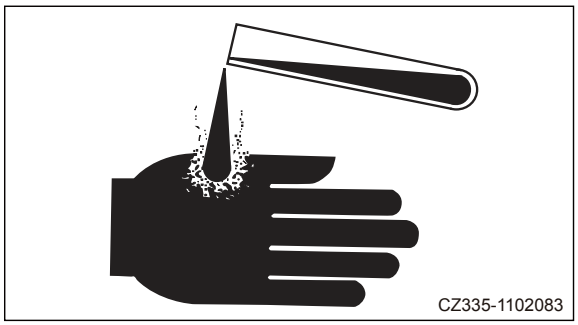

Fig. 2-102

Downloaded from www.Manualslib.com manuals search engine

https://truckmanualshub.com/

2.5.17 High voltage precautions

When the engine is running or has just been shut down, high voltage can occur in fuel injector terminal and engine controller. Since there is danger of electrocution, never touch fuel injector or interior of engine controller.

Please contact Sany distributor if you have to access fuel injector terminal or interior of engine controller.

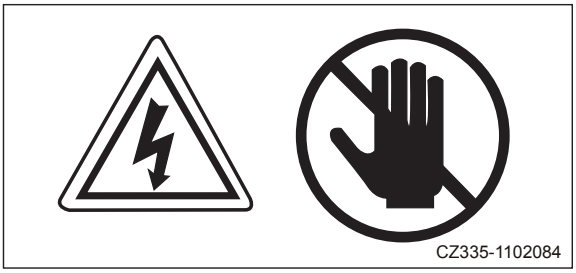

Fig. 2-103

2.5.18 Accumulator

Accumulator contains highly pressurized nitrogen. Improper operation of accumulator can cause explosion and serious accidents. Therefore, the following precautions must be observed:

- Never disassemble the accumulator.
- Never let the accumulator be near a fire source or exposed in flame.
- Never punch, weld or flame-cut on accumulator.
- Never strike or roll the accumulator, or let it bear any impact.
- The gas must be released when disposing of the accumulator. Contact Sany distributor for this disposal.

Fig. 2-104

Downloaded from www.Manualslib.com manuals search engine

https://truckmanualshub.com/

2.5.19 Avoiding fire and explosion

⚠ DANGER

Never smoke when handling the fuel or maintaining the fuel system. The gases in empty fuel tank can cause explosion easily. Never carry out flame-cutting or welding operation on fuel pipe, fuel tank or fuel vessels, which can lead to fire, explosion, injury or death.

- Then engine must be shut down and electrical equipment must be switched off when refueling the tank. Be extremely careful when adding fuel to a hot engine. No sparks shall occur around the grounding nozzle.
- Handle all solvents and dry chemicals in a place with good ventilation according to the steps indicated on vessel.
- Clean the machine of all dust and residuals. Never place greasy rag or other flammable materials on machine.
- When cleaning the parts and components, use nonflammable solvents instead of gasoline, diesel oil or other flammable fluids.
- Store flammable liquids and materials in suitable vessels as required by safety laws and regulations.
- Check fire extinguishers, fire-fighting system and fire detectors (if equipment) and make sure they are ready for use.

Fig. 2-105

Downloaded from www.Manualslib.com manuals search engine

https://truckmanualshub.com/

2.5.20 Regular replacement of safety-related parts

WARNING

Safety-related parts are important for safety of you and your machine. Failure to replace them at specified intervals may lead to personal injury, death or serious damage.

- Safety-related parts such as hoses and seat belt must be replaced regularly for the consideration of operating the machine safely in a long term.
- Materials of some parts may deteriorate naturally when exceeding specific time limit. Repeated use may lead to deterioration, wear and damage, hence the accidents and serious injury. Through merely visual inspection or feel it is hard to find out how long the parts could serve. Therefore, regular replacement is necessary.
- Repair or replace any safety parts once found defective regardless of its service time.

Downloaded from www.Manualslib.com manuals search engine

https://truckmanualshub.com/

2.5.21 Maintenance operation

- Check all parts and replace the worn, broken and damaged parts during repairing operation. Over-worn and over-damaged parts may fail in operation and cause injury and death. Replace damaged or illegible signs and marks.
- Tighten all fasteners and connectors to specified torque.
- Install all guards, covers and hoods after repair and service. Replace or repair damaged guards. Only the type of hydraulic oil approved or recommended by Sany should be used to make up the hydraulic system.
- Start the engine and check for any leaks (check the hydraulic system), and operate all control devices to be sure of their proper functioning. Make road test if necessary. Shut down the engine and check the work you have done (see if there are missing pins, gaskets and nuts). Check again all hydraulic oil levels before operation.

Downloaded from www.Manualslib.com manuals search engine

https://truckmanualshub.com/

2.5.22 Proper disposal of wastes

Improper disposal of wastes harms the environment and ecology. Consult local environmental protection department or Sany distributors for methods of recycling and waste disposal.

- Potential harmful substances used in Sany products include hydraulic oil, fuel, cooling liquid, refrigerant, filter and batteries etc..
- Use leak-proof vessels to hold discharged fluids. Never use food or beverage containers.
- Never dump waste fluids directly to the ground, sewage or water source.
- Leaking of refrigerant from air conditioner can spoil the atmosphere of the globe. Related laws and regulations must be followed to recover or regenerate the refrigerant.

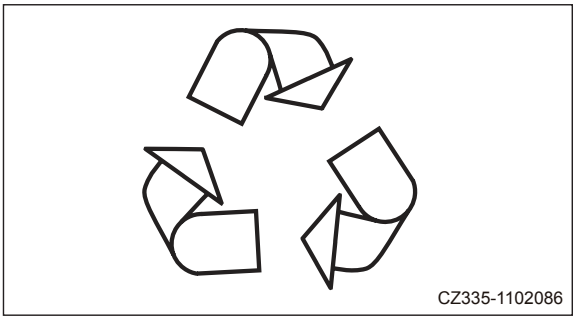

Fig. 2-106

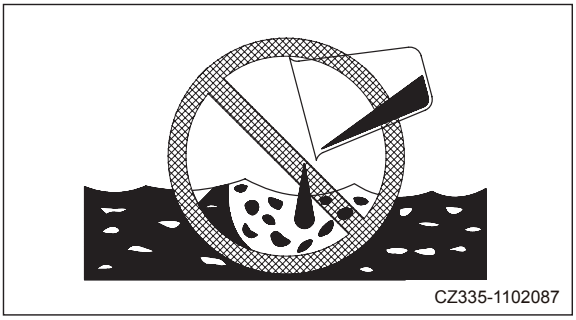

Fig. 2-107

Downloaded from www.Manualslib.com manuals search engine

https://truckmanualshub.com/

BLANK PAGE

Downloaded from www.Manualslib.com manuals search engine

https://truckmanualshub.com/

System Functions

3 System Functions

3.1 Machine Overview 3-5
3.2 Machine Controls 3-6
3.3 Monitor 3-7
3.3.1 Monitor introduction 3-7
3.3.2 System information and operation 3-10
3.3.2.1 Main Page 3-10
3.3.2.2 System Information 3-12
3.3.2.3 Time Setup 3-13
3.3.2.4 Main Menu 3-14
3.3.2.5 Engine & Throttle Signals 3-15
3.3.2.6 Main Pump Signals 3-15
3.3.2.7 Input Switch Signals 3-16
3.3.2.8 Output Switch Signals 3-16
3.3.2.9 Machine Configuration 3-17
3.3.2.10 Failure codes 3-17
3.3.2.11 Maintenance Information 3-18
3.3.2.12 Engine Speed Calibration 3-23
3.3.2.13 Language Selection 3-25
3.3.2.14 GPS Monitoring Information 3-26
3.3.2.15 System Setup 3-27
3.3.2.16 Machine configuration setup 3-28
3.3.2.17 Coolant Temperature 3-29
3.3.2.18 Service Call 3-30
3.4 Switches 3-31
3.4.2.1 Start switch 3-32

Downloaded from www.Manualslib.com manuals search engine

https://truckmanualshub.com/

3.4.2.2 Fuel control dial 3-33
3.4.2.3 Work lamp switch 3-33
3.4.2.4 Wiper switch 3-35
3.4.2.5 Washer switch 3-36
3.4.2.6 Head lamp switch 3-36
3.4.2.7 Horn switch 3-37
3.4.2.8 Cab lamp 3-37
3.4.2.9 Cigar lighter 3-37
3.4.2.10 Preheat switch (only for SY135C8M) 3-38
3.4.2.11 Alternator indicator 3-38
3.5 Control levers and pedals 3-39
3.5.1 Hydraulic lockout control 3-40
3.5.2 Travel controls 3-41
3.5.3 Joystick controls 3-42
3.6 Roof Hatch 3-44
3.6.1 Opening the roof hatch 3-44
3.6.2 Closing the roof hatch 3-44
3.7 Windshield 3-45
3.7.1 Opening the window 3-45
3.7.2 Closing the window 3-48
3.7.3 Removing the lower window 3-50
3.8 Alternate Exit 3-51
3.9 Door Catch 3-52
3.10 Cover/cap with a Latch 3-52
3.10.1 Opening/closing the cover with lock 3-53
3.10.2 Opening/closing the cap with lock 3-54
3.11 Cup Holder 3-55
3.12 Storage Box 3-56
3.13 Literature Bag 3-56
3.14 Ashtray 3-57
3.15 Air Conditioning System 3-58
3.15.1 Control panel 3-58
3.15.2 Operation method 3-64
3.15.3 A/C operation precautions 3-72
3.16 Radio 3-74
3.16.1 Control panel 3-74

Downloaded from www.Manualslib.com manuals search engine

https://truckmanualshub.com/

3.16.2 Radio operation 3-76
3.17 Auxiliary Power Supply 3-80
3.18 Fuses 3-80
3.19 Fusible Link 3-81
3.20 Controller 3-82
3.21 Toolbox 3-82
3.22 Grease pump frame 3-82
3.23 Fire extinguisher 3-83

Downloaded from www.Manualslib.com manuals search engine

https://truckmanualshub.com/

Downloaded from www.Manualslib.com manuals search engine

https://truckmanualshub.com/

3 SYSTEM FUNCTIONS

3.1 Machine Overview

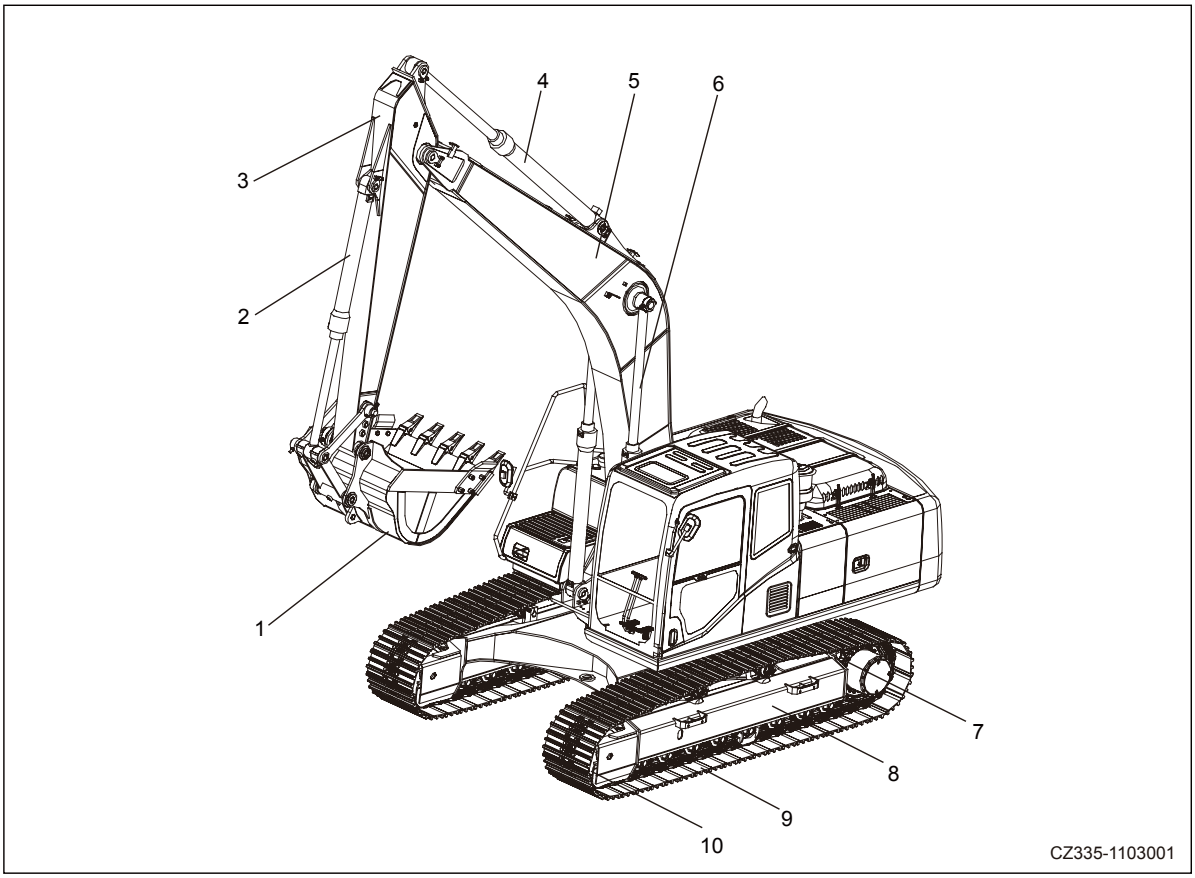

Fig. 3-1

(1) Bucket
(2) Bucket cylinder
(3) Arm
(4) Arm cylinder
(5) Boom
(6) Boom cylinder
(7) Sprocket
(8) Track frame
(9) Track shoe
(10) Track idler

Downloaded from www.Manualslib.com manuals search engine

https://truckmanualshub.com/

3.2 Machine Controls

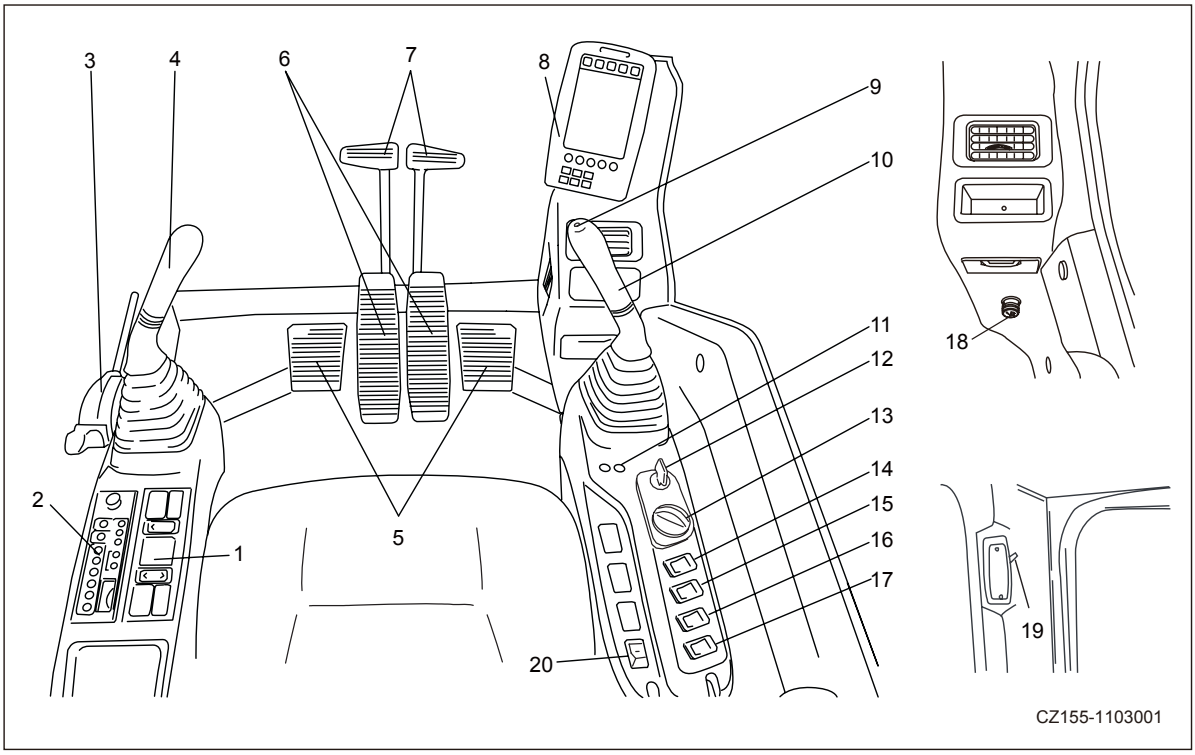

Fig. 3-2

(1) Air conditioner control panel
(2) Radio control panel
(3) Hydraulic lockout control
(4) Left joystick control
(5) Foot rest
(6) Travel control pedals
(7) Travel control levers
(8) Monitor
(9) Horn button
(10) Right joystick control
(11) Indicator lights
(12) Start switch
(13) Fuel control dial
(14) Work lamp switch
(15) Wiper switch
(16) Washer switch
(17) Head lamp switch
(18) Cigar lighter
(19) Cab lamp switch
(20) Preheat switch (only for SY135C8M)

Downloaded from www.Manualslib.com manuals search engine

https://truckmanualshub.com/

3.3 Monitor

When the start switch is turned to the ON position, the monitor is energized by the battery and initializes.

An operating monitor looks like below:

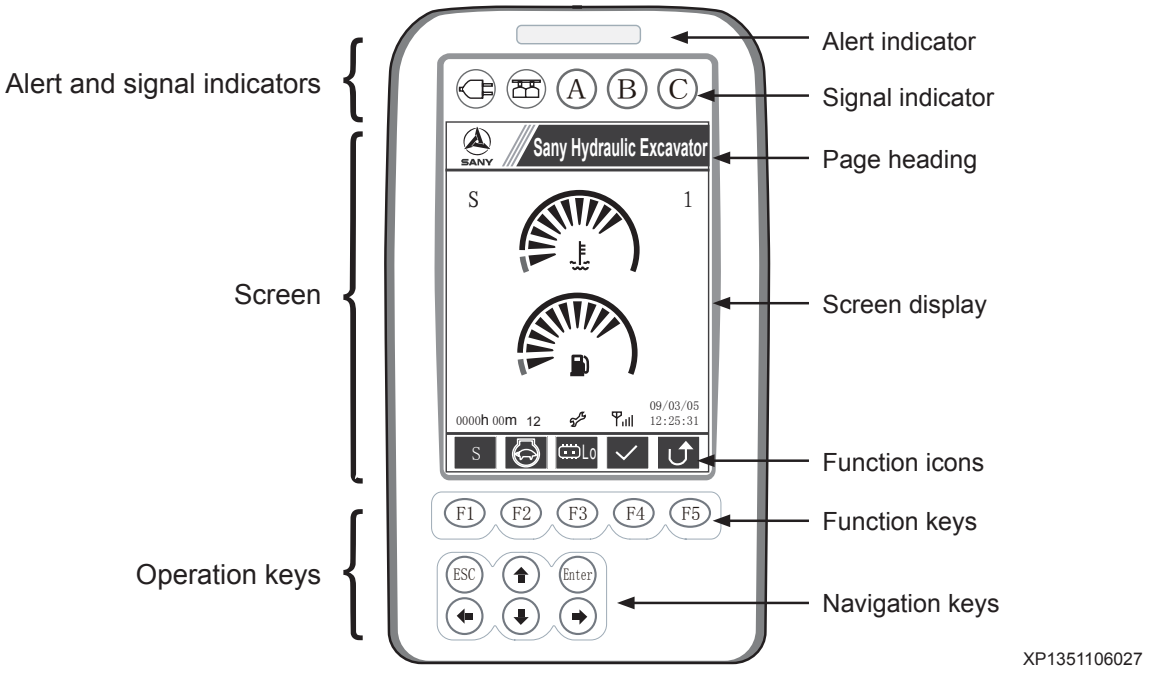

Fig. 3-3

3.3.1 Monitor introduction

Alert indicator (1)

The indicator is on when machine controller detects any fault, warning the user that the machine has a problem.

Signal indicators (2)

These indicators are designed for power indication, CAN indication and other signal indication. It is the user’ s choice to use any of them or not.

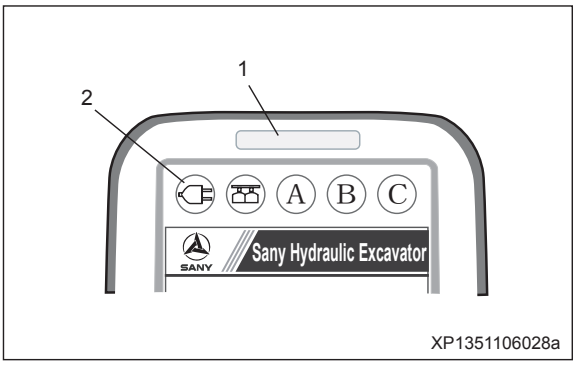

Fig. 3-4

Downloaded from www.Manualslib.com manuals search engine

https://truckmanualshub.com/

LCD display

The LCD display allows you to view system information like operating parameters, time, and function icons. As shown in Fig. 3-5, the following information will be displayed on the monitor.

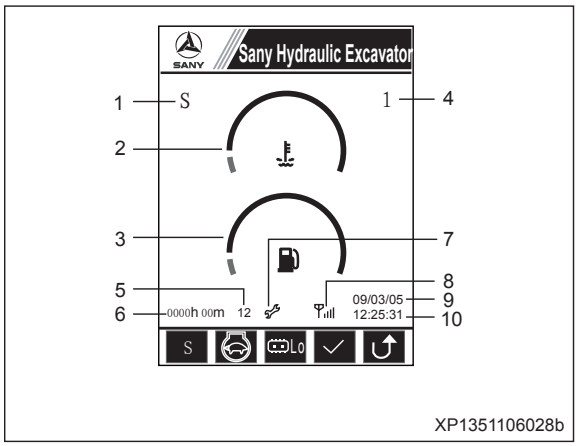

Fig. 3-5

1. Working mode (S, H, L or B)
2. Coolant temperature (°C)
3. Fuel level (%)
4. Fuel control dial position (1-11)
5. Failure code (refreshed every 2s)
6. Engine total operating hours (h/m)
7. Maintenance prompt, if any
8. GPRS signal, indicating whether the communication signal is 1023.
9. System calendar (Y/M/D)
10. System clock (h:m:s)

Operation keys

The operation keys include function keys and navigation keys.

1. Function keys

F1, F2, F3, F4, F5. See Fig. 3-6. Function of each key is defined by the icon displayed above it.

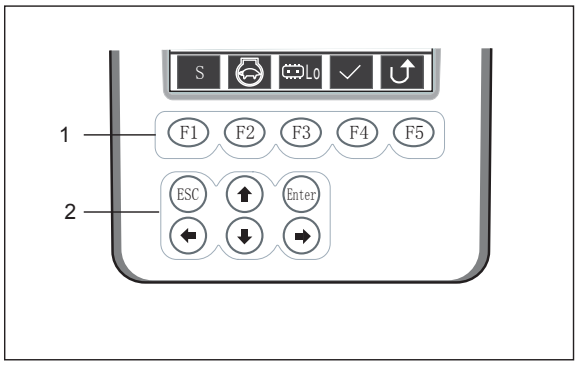

Fig. 3-6

- Function of each key is defined by the icon above it.
- The key becomes invalid when no icon is displayed above it.

Downloaded from www.Manualslib.com manuals search engine

https://truckmanualshub.com/

Common icons and function keys

Function key	Icon	Function	Range
F1	S	Select a working mode	S → H → L → B
F2		Switch to idle/non-idle	Idle/non/idle
F3	Lo	Switch to high/low speed	Lo → Hi
F4		Access an option/setup	Same as the Enter key
F5		View information	——
		Return to previous page	Same as the Esc key

Table 3-1

Default setup after starting the engine

- Working mode: S
- Full speed/auto idle: auto idle
- High/Low travel speed: low

Auto idle switch

- The auto idle switch is on as default. If no operation is performed within 5s, the engine will enter auto idle (the controller changes engine speed to idle) in order to reduce fuel consumption and noise.
- If the controller detects any operation or gear position change under idling state, the engine will restore its original speed automatically.
- Auto idle function is disabled under L mode.

Downloaded from www.Manualslib.com manuals search engine

https://truckmanualshub.com/

2. Navigation keys

Navigation key	Function
Enter	Enter an option/setup item.
ESC	Return to previous page.
↑	Select previous item (select the last item after the first one).
↓	Select next item (select the first item after the last one).
←	Select the left item (select the right most item after the left most one).
→	Select the right most item (select the left most item after the right most one).

Table 3-2

3.3.2 System information and operation

3.3.2.1 Main Page

Normally, the monitor displays the working mode, current date, throttle position, coolant temperature, fuel level, operating hours, warning information, maintenance prompt, GPRS signal, real time, etc. The user can set up the operating conditions of the machine.

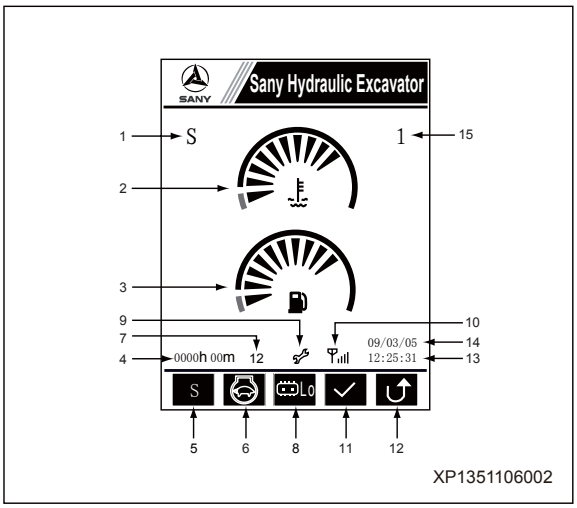

Fig. 3-7

Screen output

1. Working mode (S, H, L or B)
2. Coolant temperature (°C)
3. Fuel level (%)
4. Engine total operating hours (h/m)
5. Press [F1] to select a working mode:
   S → H → L → B → S……
6. Press [F2] to switch on/off auto idle:
   OFF → ON → OFF……
7. Failure code, if any, is refreshed every 2s.
8. Press [F3] to change travel speed:
   Hi → Lo → Hi……
9. The icon appears if some maintenance is

Downloaded from www.Manualslib.com manuals search engine

https://truckmanualshub.com/

to be done.

10. GPRS signal.
11. Press [F4] to access failure codes.
12. Press [F5] to access “System Information”.
13. System clock (h:m:s)
14. System calendar (Y/M/D)
15. Fuel control dial position (1-11)

Keypad input

[F1]: Select a working mode (S, H, L or B).

[F2]: Select auto idle or full speed.

[F3]: Select high/low travel speed.

[F4]: View "Failure Code".

[F5]: View "System Information".

[↑]: Access "Service Call".

[↓]: View "Maintenance Information" if any maintenance is to be done.

Downloaded from www.Manualslib.com manuals search engine

https://truckmanualshub.com/

3.3.2.2 System Information

Pass code is required to access system information.

Screen output

1. A 5-digit pass code is required to access system information, with each indicated by an asterisk (*) standing for a value from 0 to 9. A numeral appears at the digit where the cursor is located while the other four digits are in asterisk.
2. Press [F1 to increase/decrease the digit value at where the cursor is located.
3. Press [F2] to move the cursor the left/right digit.
4. System clock setup
5. Press [F4] to access “Unlock the System”.
6. Press [F5] to return to the “Main Page”.

Keypad input

[↑] [↓]: Increase/decrease the value at the digit where the cursor is located.

[←] [→]: Move the cursor to the left/right digit.

[F1]: Increase the value at where the cursor is located.

[F2]: Move the cursor to the left/right digit.

[F3]: Access "System Clock Setup".

[F4]: Acdess "Unlock the System".

[F5]: Return to the "Main Page".

[ESC]: Return to the "Main Page".

[Enter]: Check the validity of pass code. If the pass code is valid, you are allowed to access the "Main Menu".

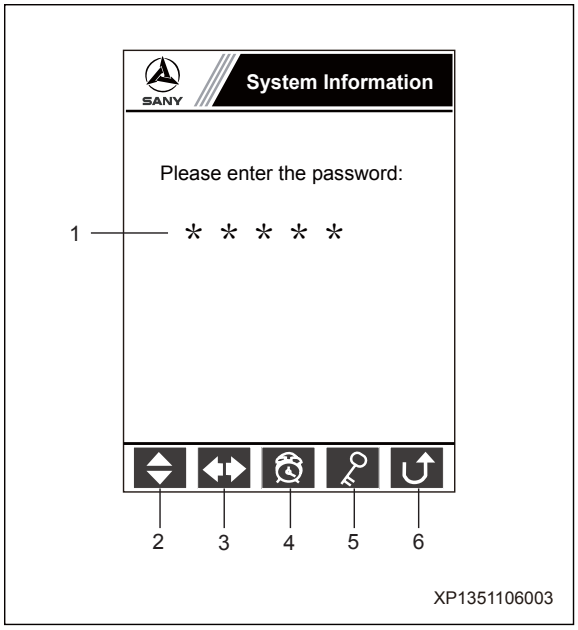

Fig. 3-8

Downloaded from www.Manualslib.com manuals search engine

https://truckmanualshub.com/

3.3.2.3 Time Setup

Set up the time of system clock.

Screen output

1. Date and time.
2. Enter time setup.
3. Return to "System Information".

Keypad input

[↑] [↓]: Increase/decrease the value by 1.

[←] [→]: Move the cursor.

[F1]: Enter time setup

[F5]: Return to the "System Information".

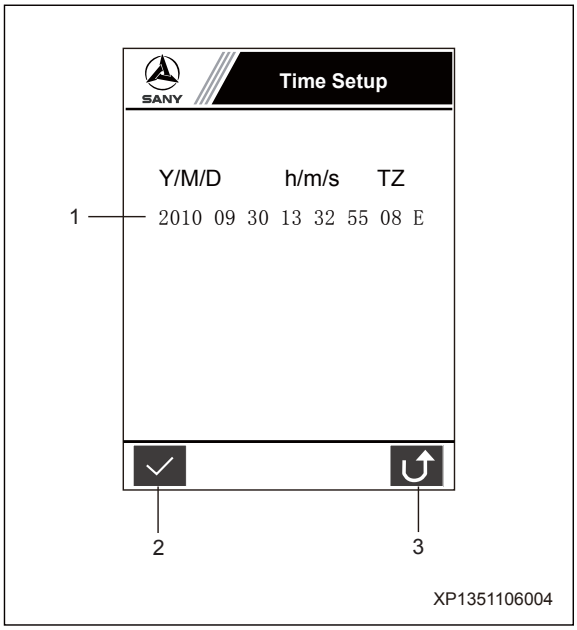

Fig. 3-9

Downloaded from www.Manualslib.com manuals search engine

https://truckmanualshub.com/

3.3.2.4 Main Menu

A list of system functions that can be selected to access different options.

Screen output

1. Menu of system functions.
2. A short description of the item selected, including: a) operating parameters of engine, main pump and main valve; b) Information of major components; c) Failure code and explanation; d) Maintenance information of the engine, hydraulic system, etc.; e) Auto setup of fuel control dial positions (1-11) and engine speed; f) System language setup; g) GPS information.
3. Press [F1] to scroll through the “Main Menu”.
4. Press [F2] to access item selected.
5. Press [F4] to access “System Setup”.
6. Press [F5] to return to the “Main Page”.

Keypad input

[↑] [↓]: Scroll through the "Main Menu".

[F2]: Access the item selected.

[F4]: Acdess "System Setup".

[F5]: Return to the "Main Page".

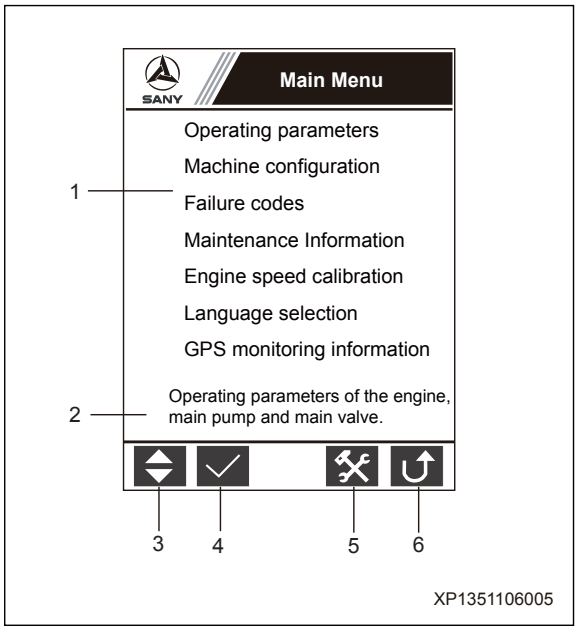

Fig. 3-10

Downloaded from www.Manualslib.com manuals search engine

https://truckmanualshub.com/

3.3.2.5 Engine & Throttle Signals

Displaying operating parameters of engine.

Screen output

1. Real-time display of engine signals collected by the controller.
2. Press [F1] to view "Main Pump Signals" on a positive flow machine.
3. Press [F5] to return to the "Main Menu".

Keypad input

[F1]: View “Main Pump Signals” on a positive flow machine.

[F5]: Return to the "Main Menu".

[ESC]: Return to the "Main Page".

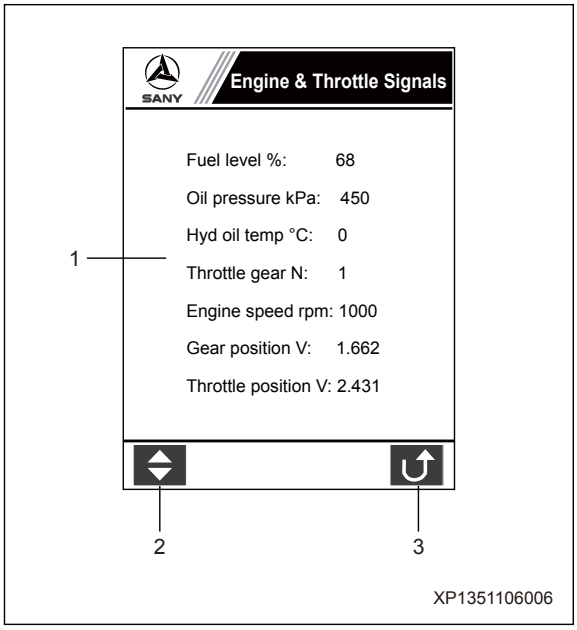

Fig. 3-11

3.3.2.6 Main Pump Signals

Displaying parameters of the main pump.

Screen output

1. Real-time display of main pump signals collected by the controller.
2. Press [F1] to view "Input Switch Signals" .
3. Press [F5] to return to the "Main Menu".

Keypad input

[F1]: View “Input Switch Signals” .

[F5]: Return to the "Main Menu".

[ESC]: Return to the "Main Menu".

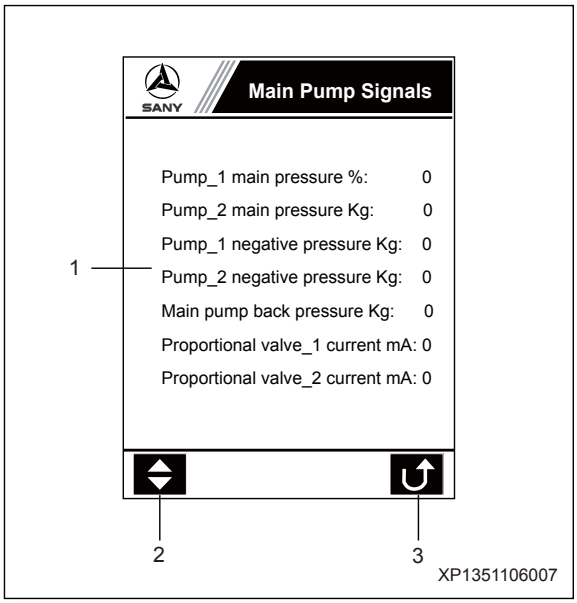

Fig. 3-12

Downloaded from www.Manualslib.com manuals search engine

https://truckmanualshub.com/

3.3.2.7 Input Switch Signals

Displaying input switch signals.

Screen output

1. Real-time display of input switch signals.
2. Press [F1] to view "Output Switch Signals".
3. Press [F5] to return to the "Main Menu".

Keypad input

[F1]: View “Output Switch Signals”.

[F5]: Return to the "Main Menu".

[ESC]: Return to the "Main Menu".

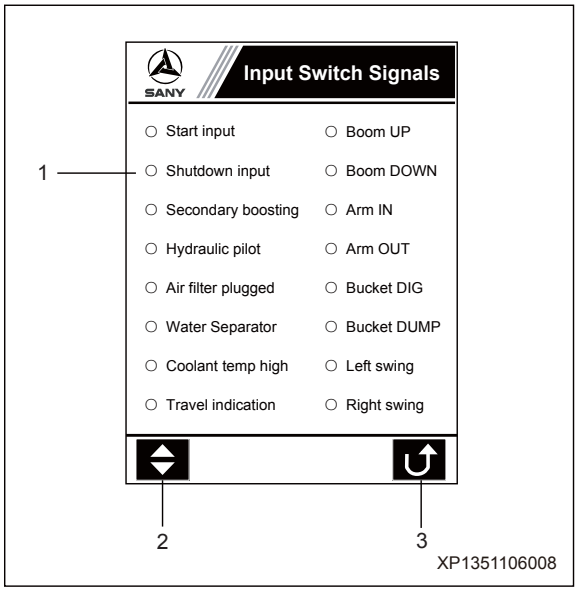

Fig. 3-13

3.3.2.8 Output Switch Signals

Displaying output switch signals.

Screen output

1. Real-time display of output switch signals.
2. Press [F1] to view "Engine & Throttle Signals".
3. Press [F5] to return to the "Main Menu".

Keypad input

[F1]: View “Engine & Throttle Signals”.

[F5]: Return to the "Main Menu".

[ESC]: Return to the "Main Menu".

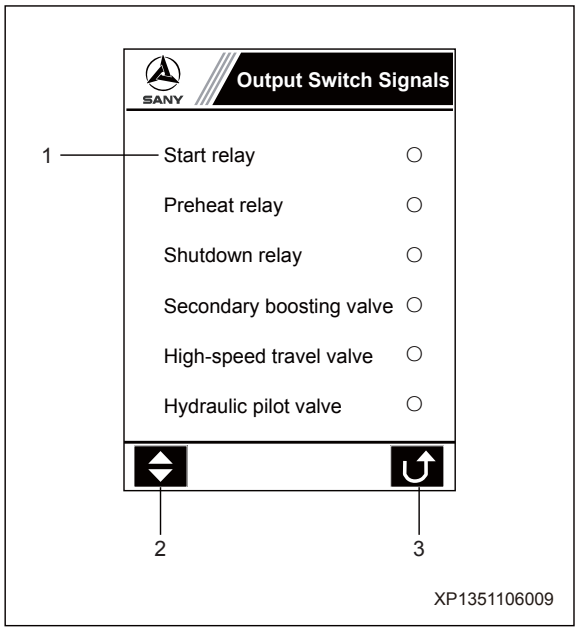

Fig. 3-14

Downloaded from www.Manualslib.com manuals search engine

https://truckmanualshub.com/

3.3.2.9 Machine Configuration

Displaying major components of the machine.

Screen output

1. Machine configuration information.
2. Press [F5] to return to the "Main Menu".

Keypad input

[F5]: Return to the "Main Menu".

[ESC]: Return to the "Main Menu".

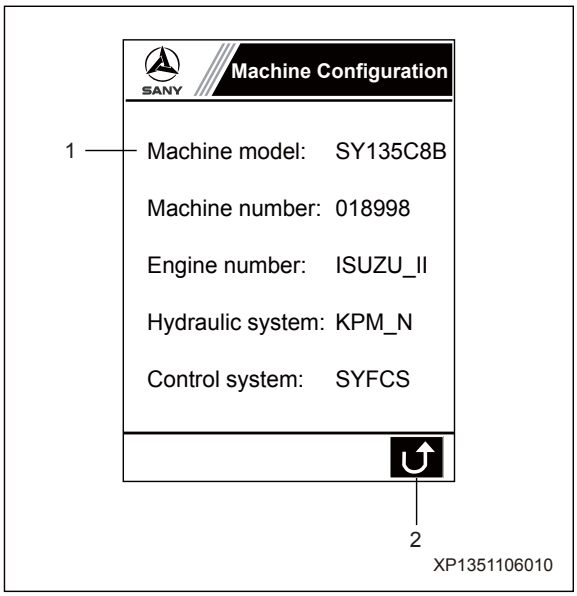

Fig. 3-15

3.3.2.10 Failure codes

Displaying failure codes and explanation.

Screen output

1. All failure codes and corresponding information.
2. Press [F1] to browse failure information.
3. Press [F5] to return to the "Main Page".
4. Number of failures.
5. Failure code.

Keypad input

[F1]: Browse failure information.

[F5]: Return to the "Main Page".

[ESC]: Return to the "Main Page".

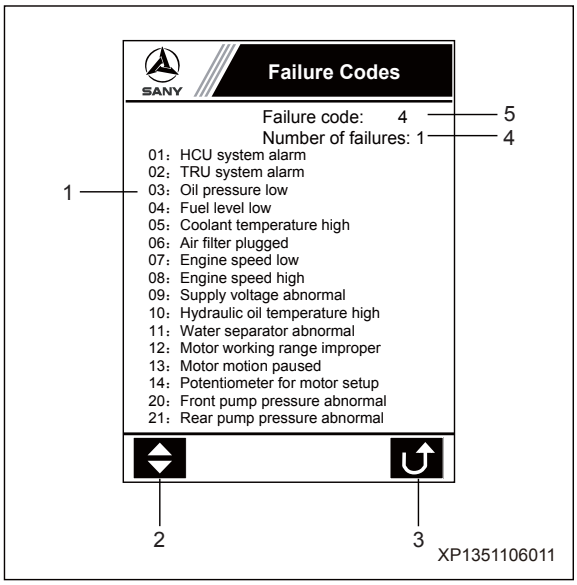

Fig. 3-16

Downloaded from www.Manualslib.com manuals search engine

https://truckmanualshub.com/

3.3.2.11 Maintenance Information

Every 50 service hours

Screen output

1. Maintenance interval.
2. Maintenance items.
3. Press [F1] to call “System Setup”. Enter the pass code and confirm that maintenance is done.
4. Press [F4] to start/pause rolling maintenance: ▶ → ⏸ → ▶ ……
5. Press [F5] to return to the “Main Page”.

Keypad input

[F1]: Maintenance is OK.

[F4]: Start/Pause rolling maintenance information.

[F5]: Return to the "Main Page".

[ESC]: Return to the "Main Page".

[Enter]: Maintenance is OK.

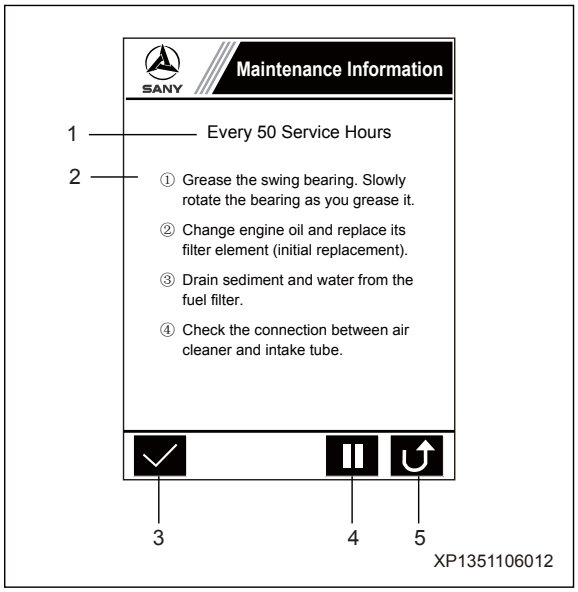

Fig. 3-17

Downloaded from www.Manualslib.com manuals search engine

https://truckmanualshub.com/

Every 250 service hours

Screen output

1. Maintenance interval.
2. Maintenance items.
3. Press [F1] to call “System Setup”. Enter the pass code and confirm that maintenance is done.
4. Press [F4] to start/pause rolling maintenance information: ▶ → ⏸ → ▶ ……
5. Press [F5] to return to the “Main Page”.

Keypad input

[F1]: Maintenance is OK.

[F4]: Start/Pause rolling maintenance information.

[F5]: Return to the "Main Page".

[ESC]: Return to the "Main Page".

[Enter]: Maintenance is OK.

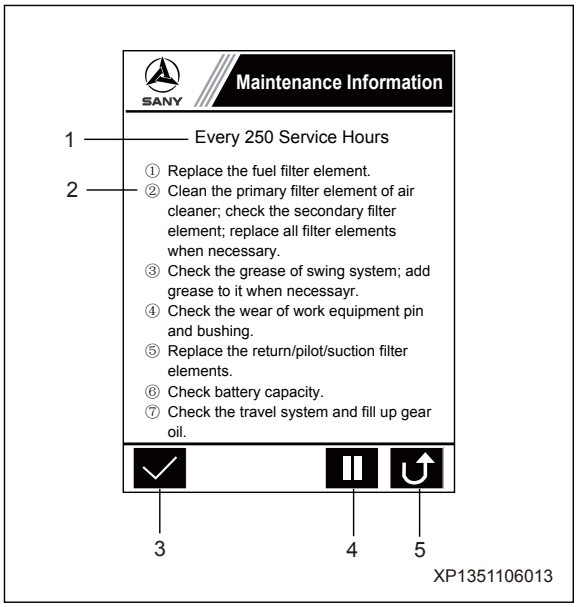

Fig. 3-18

Downloaded from www.Manualslib.com manuals search engine

https://truckmanualshub.com/

Every 500 service hours

Screen output

1. Maintenance interval.
2. Maintenance items.
3. Press [F1] to call “System Setup”. Enter the pass code and confirm that maintenance is done.
4. Press [F4] to start/pause rolling maintenance: ▶ → ⏸ → ▶ ……
5. Press [F5] to return to the “Main Page”.

Keypad input

[F1]: Maintenance is OK.

[F4]: Start/Pause rolling maintenance information.

[F5]: Return to the "Main Page".

[ESC]: Return to the "Main Page".

[Enter]: Maintenance is OK.

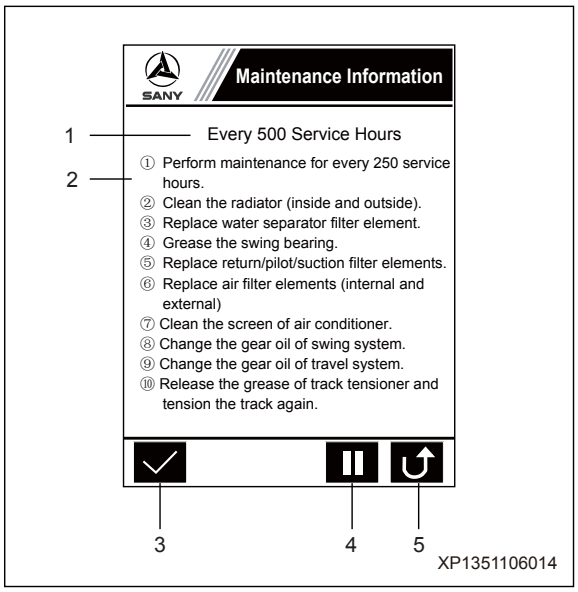

Fig. 3-19

Downloaded from www.Manualslib.com manuals search engine

https://truckmanualshub.com/

Every 1000 service hours

Screen output

1. Maintenance interval.
2. Maintenance items.
3. Press [F1] to call “System Setup”. Enter the pass code and confirm that maintenance is done.
4. Press [F4] to start/pause rolling maintenance: ▶ → ⏸ → ▶ ……
5. Press [F5] to return to the “Main Page”.

Keypad input

[F1]: Maintenance is OK.

[F4]: Start/Pause rolling maintenance information.

[F5]: Return to the "Main Page".

[ESC]: Return to the "Main Page".

[Enter]: Maintenance is OK.

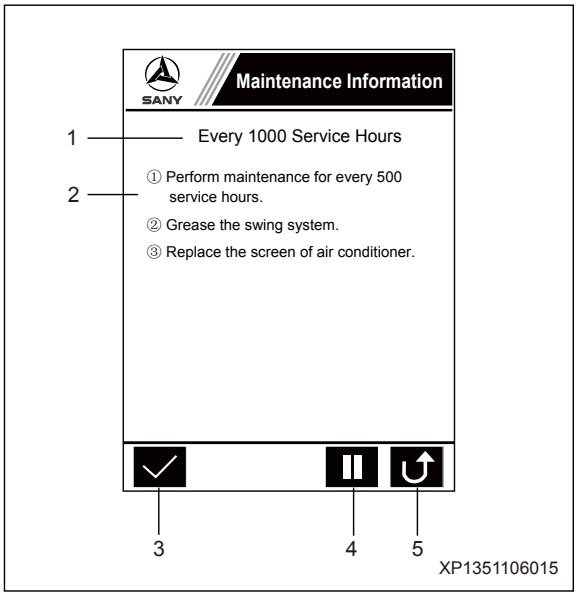

Fig. 3-20

Downloaded from www.Manualslib.com manuals search engine

https://truckmanualshub.com/

Every 2000 service hours

Screen output

1. Maintenance interval.
2. Maintenance items.
3. Press [F1] to call “System Setup”. Enter the pass code and confirm that maintenance is done.
4. Press [F4] to start/pause rolling maintenance: ▶ → ⏸ → ▶ ……
5. Press [F5] to return to the “Main Page”.

Keypad input

[F1]: Maintenance is OK.

[F4]: Start/Pause rolling maintenance information.

[F5]: Return to the "Main Page".

[ESC]: Return to the "Main Page".

[Enter]: Maintenance is OK.

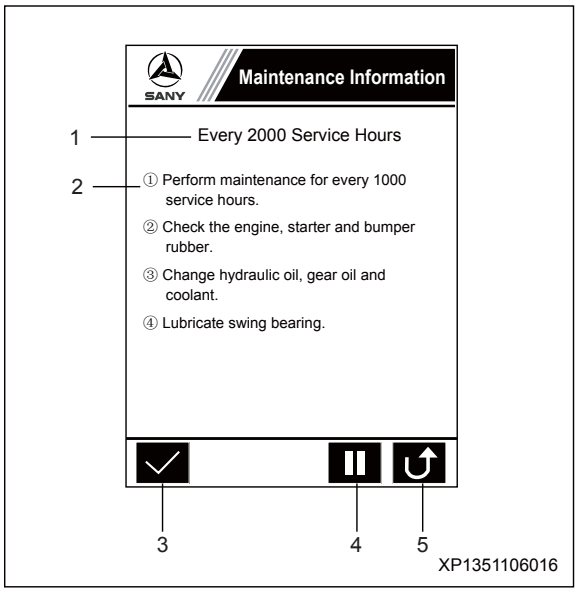

Fig. 3-21

Downloaded from www.Manualslib.com manuals search engine

https://truckmanualshub.com/

3.3.2.12 Engine Speed Calibration

Auto setup of gear positions and corresponding engine speed.

Screen output

1. Press [F1] to select a working mode: S → H → L → B → S……
2. Press [F2] to switch on/off auto deceleration: OFF → ON → OFF……
3. Press [F3] to start/stop auto gear position setup.
4. Press [F4] to start/stop auto speed setup.
5. Press [F5] to return to the “Main Menu”.

Keypad input

[F1]: Select a working mode (S, H, L or B).

[F2]: Select auto idle/full speed.

[F3]: Start/stop auto gear position setup.

[F4]: Start/stop auto speed setup.

[F5]: Return to the "Main Menu".

[ESC]: Return to the "Main Menu".

[↑]: Increase the allowable deviation by 1.

[↓]: Decrease the allowable deviation by 1.

[←]: Increase the allowable deviation by 5.

[→]: Decrease the allowable deviation by 5.

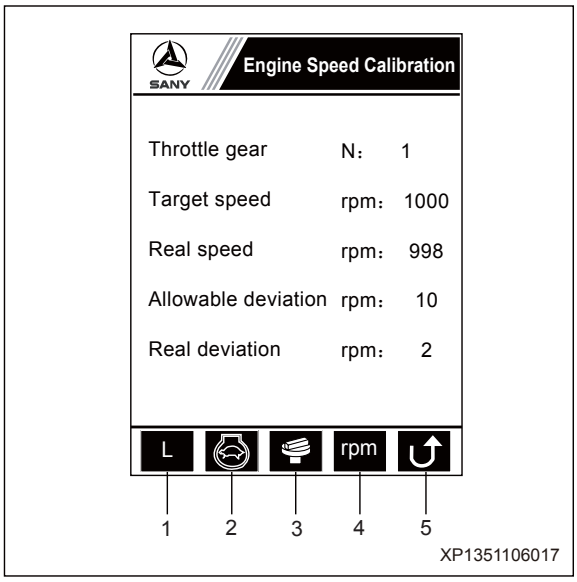

Fig. 3-22

Downloaded from www.Manualslib.com manuals search engine

https://truckmanualshub.com/

Remark:

- **Gear position calibration**

1. Gear position calibration can be performed without running the engine.
2. Auto gear position calibration procedure:
   1) Press [F1] to select working mode H.
   2) Turn the fuel control dial to position 0. (The monitor displays 0 for gear position.)
   3) Press the calibration start key [F3] to activate auto calibration mode. The blue icon for gear position calibration will turn red.
   4) Turn the fuel control dial to position 1. After 2 seconds, the monitor shows 1 for “current gear position”. The calibration of gear position 1 is done.
   5) Turn the fuel control dial to the next position. After 2 seconds the monitor shows the value for current gear position. The calibration of this gear position is done.
   6) After setting up the 11 gear positions, the red gear position calibration icon turns blue, meaning the calibration is done successfully.
   7) Press [F5] or [ESC] to exit gear position calibration.
3. Failure to follow the above steps will fail the calibration.

- **Speed calibration**

1. Auto speed calibration requires running the engine.
2. Auto speed calibration procedure:
   1) Press [F1] to select working mode H. Press [F2] to enable full speed.
   2) Turn the fuel control dial to position 1.
   3) Press the speed calibration start key [F4] to enter auto speed calibration mode. The blue icon for auto speed calibration will turn red.
   4) After setting up the speed for the 11 gear positions, the red speed calibration icon turns blue, meaning the calibration is done successfully.
   5) Auto speed calibration is not applicable to gear position 0.

Downloaded from www.Manualslib.com manuals search engine

https://truckmanualshub.com/

3.3.2.13 Language Selection

Selecting a system language.

Screen output

1. List of language options.
2. Press [F1] to scroll down the list.
3. Press [F2] to select a language.
4. Press [F5] to return to the “Main Menu”.

Keypad input

[F1]: Scroll down the list of system languages.

[F2]: Select a system language.

[F5]: Return to the "Main Menu".

[ESC]: Return to the "Main Menu".

[↑] [↓]: Move up or down the list.

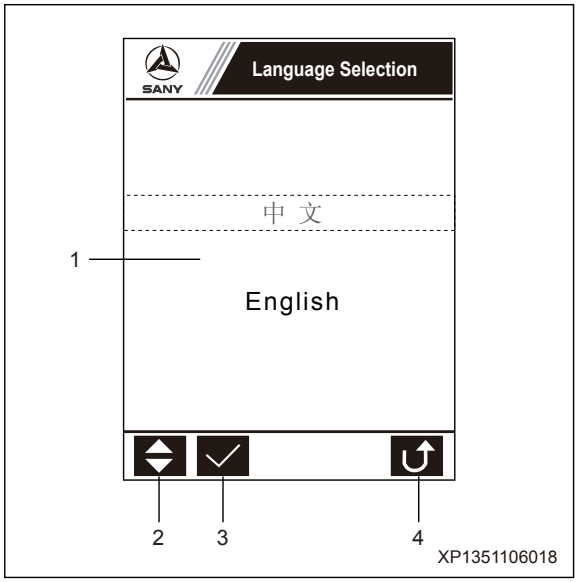

Fig. 3-23

Downloaded from www.Manualslib.com manuals search engine

https://truckmanualshub.com/

3.3.2.14 GPS Monitoring Information

Displaying GPS monitoring information.

Screen output

1. Real-time display of GPS monitoring information.
2. Press [F5] to return to the “Main Menu”.

Keypad input

[F5]: Return to the "Main Menu".

[ESC]: Return to the "Main Menu".

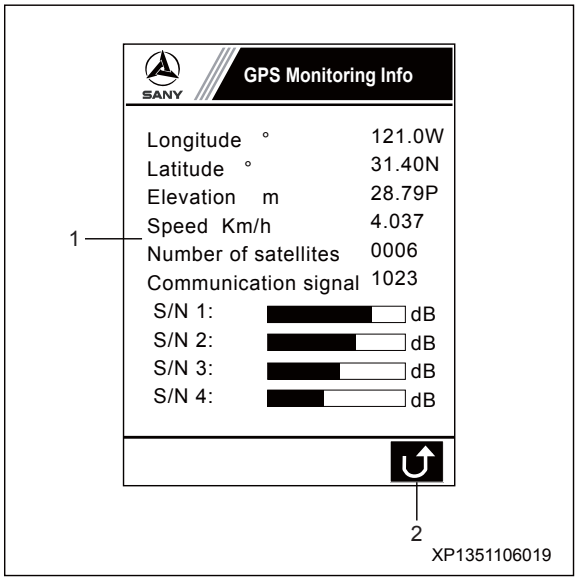

Fig. 3-24

Remark:

1. In this section the letter “E” stands for East Longitude and “W” for West Longitude.
2. The letter “N” stands for North Latitude and “S” for South Latitude.
3. The letter “P” stands for the height above the seal level and “N” for the height below the seal level.
4. The signal-to-noise ratio ranges from 0 to 99, which is indicated by a bar. The value on the right of the bar is real S/N ratio.
5. If the elevation value is not zero and no value is displayed for the longitude and latitude, GPS data are being received but the location has not been precisely defined yet.
6. When the communication signal is 1023, GPRS communication is regular. When it is 615, the GPRS communication is abnormal.
7. When the communication signal changes from 7 to 0, the SIM card or the antenna has a bad connection.
8. When the communication signal changes from 15 to 0, GPRS service is not available, the SIM card has insufficient fund, or GPRS network is abnormal.
9. When the communication signal changes from 31 to 0, the monitoring center is closed.

Downloaded from www.Manualslib.com manuals search engine

https://truckmanualshub.com/

3.3.2.15 System Setup

Access to “Machine Setup” requires a pass code.

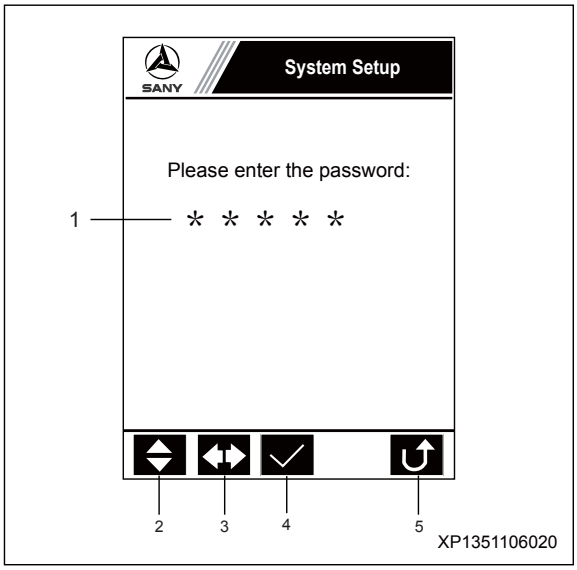

Fig. 3-25

Screen output

1. A 5-digit pass code is required to access “Machine Setup”, with each indicated by an asterisk (*) standing for a value from 0 to 9. A numeral appears at the digit where the cursor is located while the other four digits are in asterisk. Press [F3] to change all digits into asterisks.
2. Press [F1 to increase/decrease the digit value at where the cursor is located.
3. Press [F2] to move the cursor the left/right digit.
4. Press [F3] to check the validity of pass code. If it is correct, you are able to access “System Setup”; if wrong, you will be prompted by “Pass code invalid, try again!”
5. Press [F5] to return to the “Main Page”.

Keypad input

[F1]: Increase/decrease the value at where the cursor is located.

[F2]: Move the cursor to the left/right digit.

[F3]: Check the validity of pass code. If it is correct, you are able to access the “System Set-up”.

[F5]: Return to the "Main Menu".

[ESC]: Return to the "Main Menu".

[Enter]: Check the validity of pass code. If the pass code is valid, you are allowed to access "Machine Setup".

Remark:

The pass code is only revealed to related commissioning or service personnel.

Downloaded from www.Manualslib.com manuals search engine

https://truckmanualshub.com/

3.3.2.16 Machine configuration setup

Setting up serial number of the machine.

Screen output

1. Machine serial number and operating hours.
2. Select an item to set up.
3. Setup is OK.
4. Return to the “Main Menu”.

Keypad input

[↑] [↓]: Increase/decrease machine serial number by 100.

[←] [→]: Increase/decrease machine serial number by 1. Depress the key to quickly increase/decrease machine serial number by 10.

[F1]: Select an item to set up.

[F2]: Setup is OK.

[F5]: Return to the "Main Menu" and save the setup.

[ESC]: Return to the "Main Menu" and save the setup.

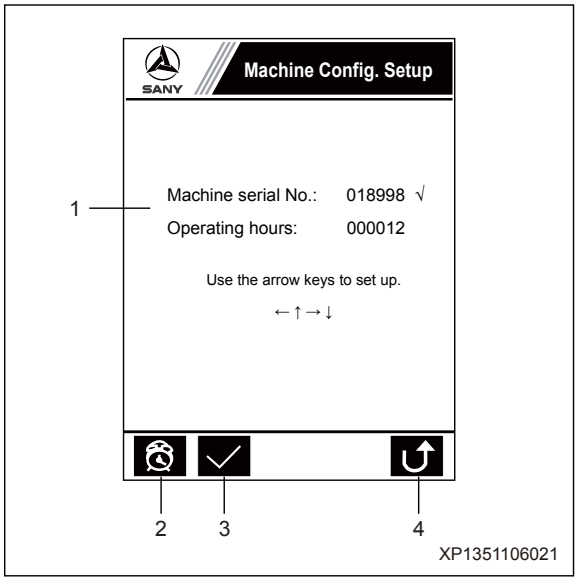

Fig. 3-26

Downloaded from www.Manualslib.com manuals search engine

https://truckmanualshub.com/

3.3.2.17 Coolant Temperature

Displaying the coolant temperature.

Screen output

1. Coolant temperature.
2. Press [F5] to return to the “Main Menu”.

Keypad input

[F5]: Return to the "Main Menu".

Remark:

To access the “Coolant Temperature” page, you need to enter the pass code on the “System Setup” page.

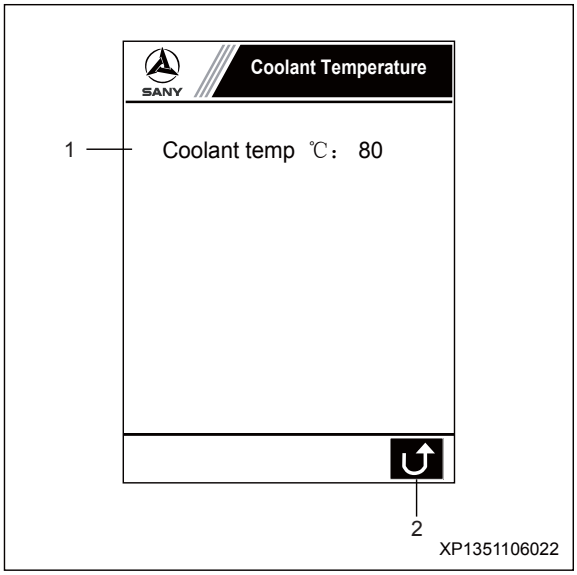

Fig. 3-27

Downloaded from www.Manualslib.com manuals search engine

https://truckmanualshub.com/

3.3.2.18 Service Call

Sending a call to machine service center.

Screen output

1. Call state.
2. Call command.
3. Operator phone number.
4. Press [F5] to return to the “Main Page”.

Keypad input

[↑] [↓]: Increase/decrease the value. Depress the key to quickly increase/decrease machine serial number by 10.

[←] [→]: Move the cursor through the digits of operator phone number.

[F5]: Return to the "Main Page".

[ESC]: Return to the "Main Page".

[Enter]: Call the service center.

Remark:

If the call fails to be connected through, it will be hold: “Calling..... Please wait!”

A successful call will have such a feedback that "The service center has received your trouble information. We will contact you as soon as possible!"

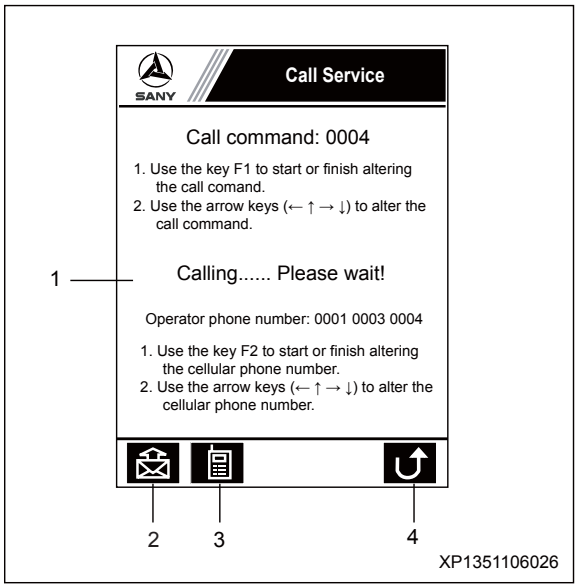

Fig. 3-28

Downloaded from www.Manualslib.com manuals search engine

https://truckmanualshub.com/

3.4 Switches

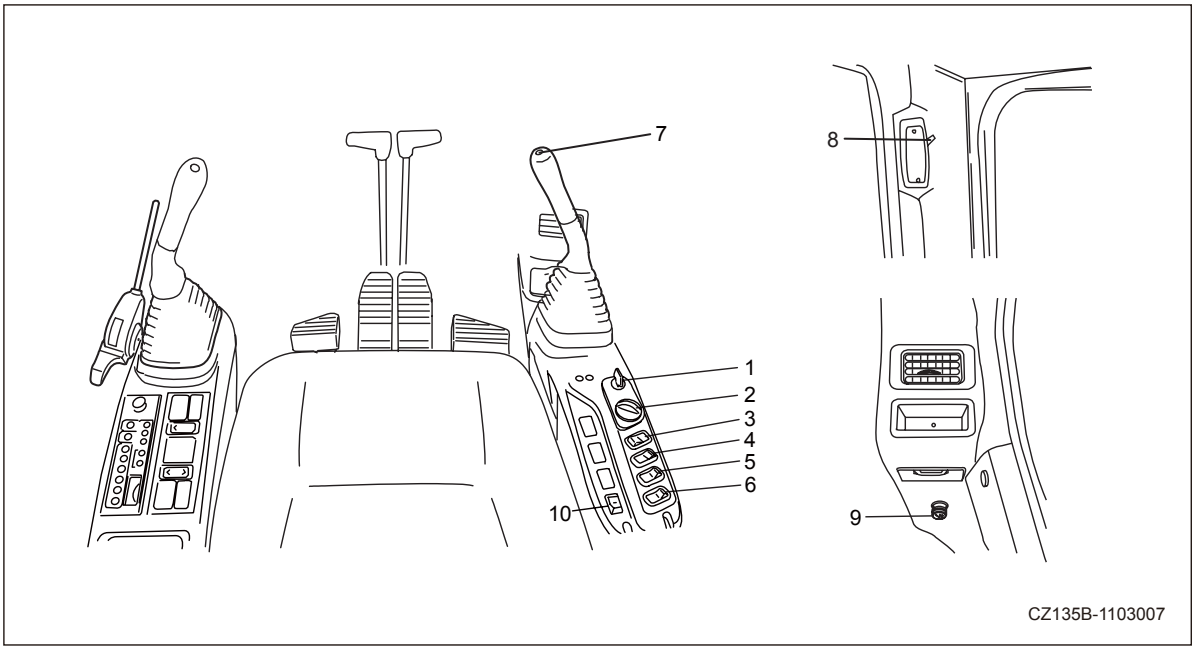

Fig. 3-29

(1) Start switch
(2) Fuel control dial
(3) Work lamp switch
(4) Wiper switch
(5) Washer switch
(6) Head lamp switch
(7) Horn switch
(8) Cab lamp switch
(9) Cigar lighter
(10) Preheat switch (only for SY135C8M)

Downloaded from www.Manualslib.com manuals search engine

https://truckmanualshub.com/

3.4.2.1 Start switch

NOTICE

If the engine does not stop at low idle speed, the service life of engine will be reduced. Except for emergency, never shut off the engine while it is running at high speed, which may otherwise cause troubles like fatigue cracking on cylinder cap and damage to bearing of the turbo-charger.

Start switch is used to turn on or turn off the engine.

(A): OFF

It allows you to insert or remove the key. All switches of the electrical system (except outdoor lights) are off and the engine is shut down.

(B): ON

The charging and lamp circuits are energized. Keep the start switch in “ON” position when operating the engine.

(C): START

This is engine starting position. When starting, keep the key staying in the position. Release the key immediately after the engine is started. The key will return to ON position (B) automatically.

(D): HEAT

This is engine preheating position. Insert the key and turn it counterclockwise to HEAT position. Keep the key in this position to preheat the engine. Releasing the key, it will return to OFF position (A) automatically and stops preheating.

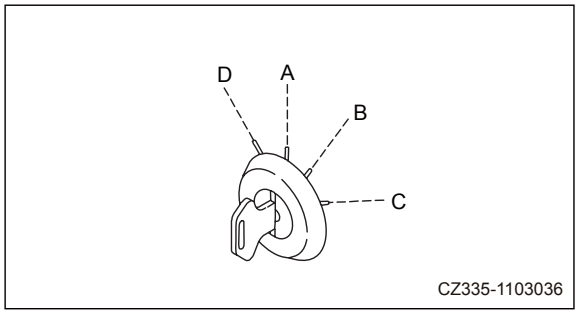

Fig. 3-30

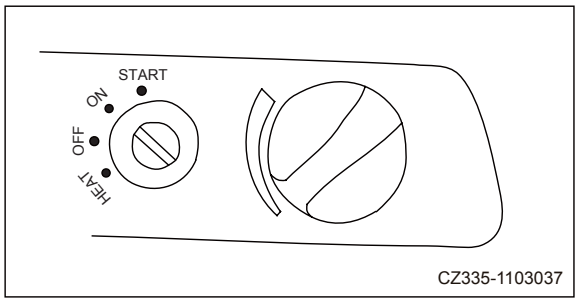

Fig. 3-31

Downloaded from www.Manualslib.com manuals search engine

https://truckmanualshub.com/

3.4.2.2 Fuel control dial

Fuel control dial is used to adjust engine speed and output power. Turn the dial clockwise to increase engine speed; turn it counterclockwise to decrease engine speed.

(a) - Low Idle (MIN): Turn it counterclockwise to MIN position.

(b) - Full Speed (MAX): Turn it clockwise to MAX position.

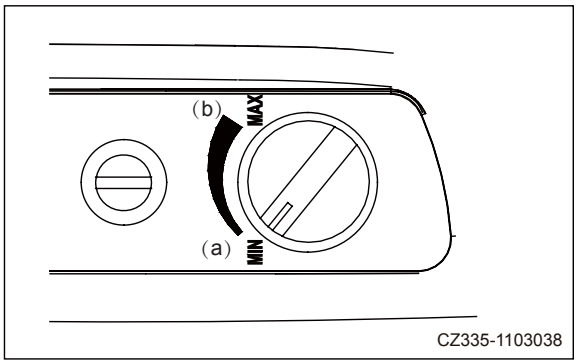

Fig. 3-32

3.4.2.3 Work lamp switch

The switch is used to turn on or turn off the work lamp.

WARNING

An exposed harness or loose plugging of harness could cause short circuit between power supply positive wire and work lamp internal grounding wire during excavator operation, which may burn the work lamp or the entire chassis harnesses, or cause personal injury or death.

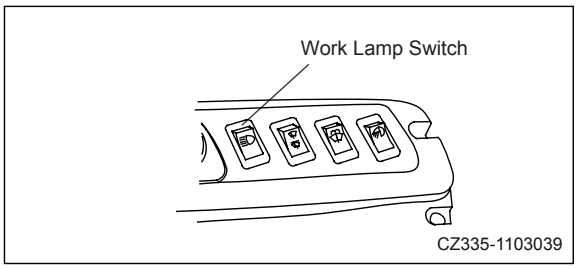

Fig. 3-33

1. Work lamp locations

a. One(1) work lamp on the chassis

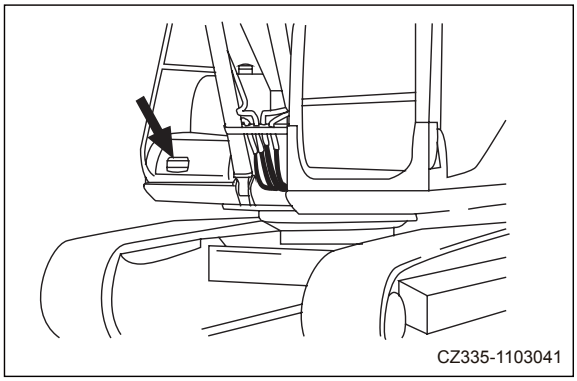

Fig. 3-34

Downloaded from www.Manualslib.com manuals search engine

https://truckmanualshub.com/

b. Two(2) work lamps on the boom

2. Work lamp external structure

(1) Work lamp seat

(2) Two-wire socket jacket

(3) Nut

(4) Work lamp screw

3. Work lamp internal wiring

(5) Power supply grounding wire

(6) Internal power supply positive socket

(7) Bulb power supply positive plug

(8) Bulb

Note:

The bulb is connected with power supply positive harness plug.

4. Replacing the bulb

1) Remove work lamp screw and open the work lamp.

2) Remove the bulb and pull out the plug (7) from the socket (6).

3) Install a new bulb and insert the power supply positive plug into the socket (6).

4) If the harness is exposed after wiring, use insulation tape to wrap it properly.

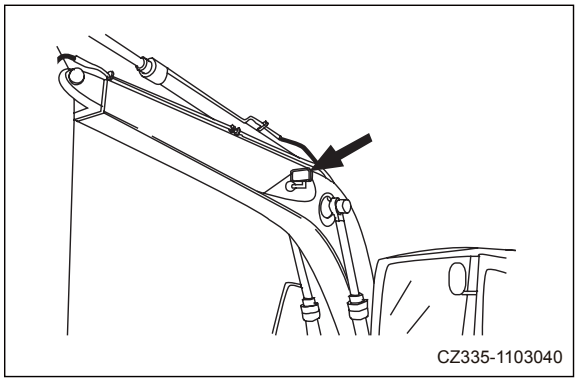

Fig. 3-35

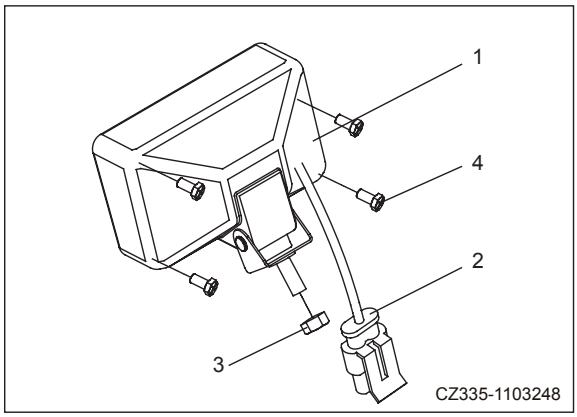

Fig. 3-36

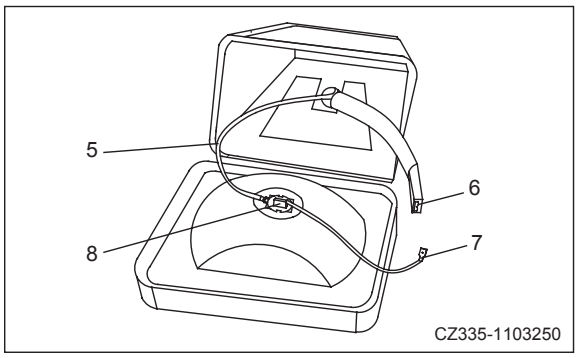

Fig. 3-37

Downloaded from www.Manualslib.com manuals search engine

https://truckmanualshub.com/

3.4.2.4 Wiper switch

NOTICE

When you use the wiper, press the washer switch to spray some detergent in order to prevent damaging the wiper due to friction.

When it is raining or the windshield is dirty, you can press the wiper switch to activate the windshield wiper.

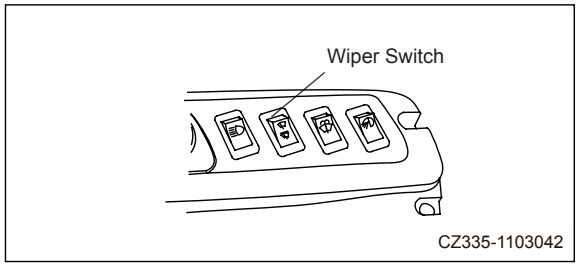

Fig. 3-38

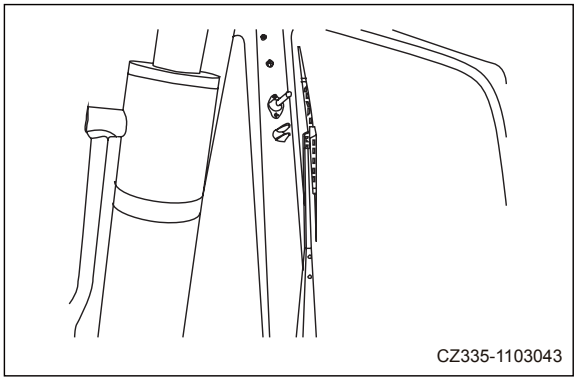

Fig. 3-39

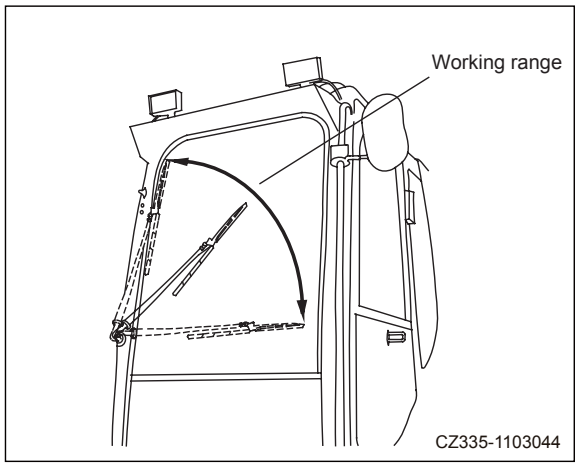

Fig. 3-40

Downloaded from www.Manualslib.com manuals search engine

https://truckmanualshub.com/

3.4.2.5 Washer switch

CAUTION

Before pressing the button, make sure that the windshield of cab is closed.

Press washer switch to spray cleaning detergent.

With the switch depressed, the washer keeps spraying detergent.

Releasing the switch, it goes back to its original position automatically and stops spraying.

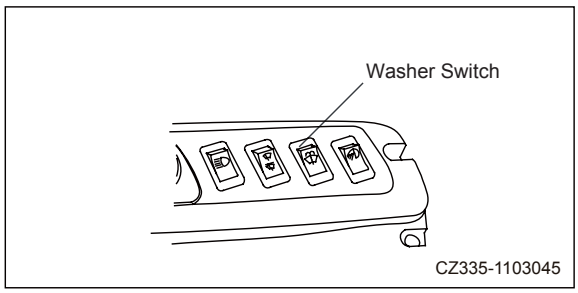

Fig. 3-41

3.4.2.6 Head lamp switch

Head lamp switch is used to switch on or switch off the lamps on top of the cab.

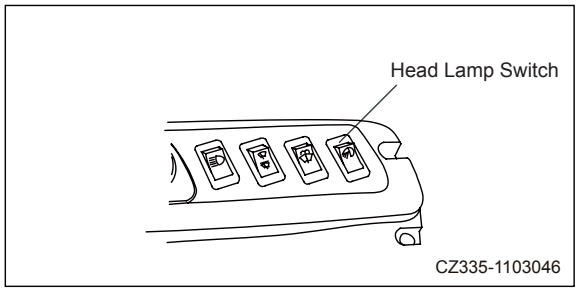

Fig. 3-42

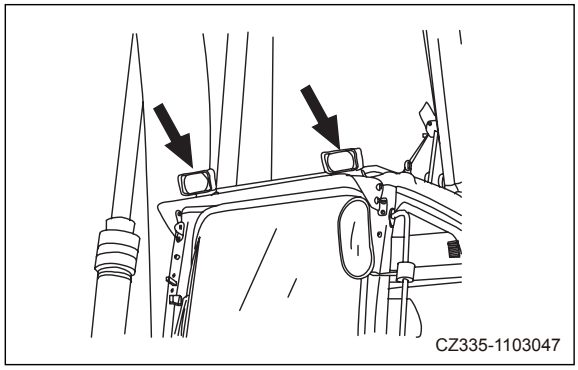

Fig. 3-43

Downloaded from www.Manualslib.com manuals search engine

https://truckmanualshub.com/

3.4.2.7 Horn switch

The horn switch is located on top of right joystick. Press the switch to sound the horn.

Depress the switch to keep the horn hooting.

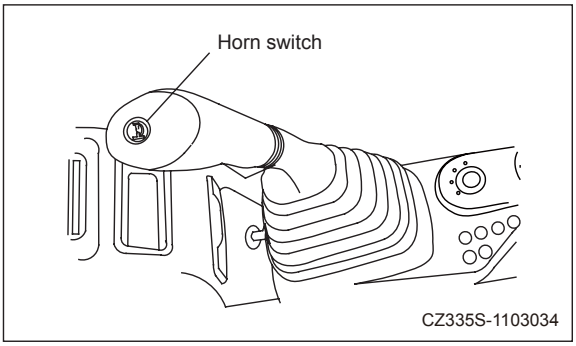

Fig. 3-44

3.4.2.8 Cab lamp

The cab lamp is mounted inside the cab. Toggle the cab lamp switch to turn on/ off the cab lamp.

(a) - ON

(b) - OFF

Note:

The cab lamp can be switched on even if the start switch is in the OFF position.

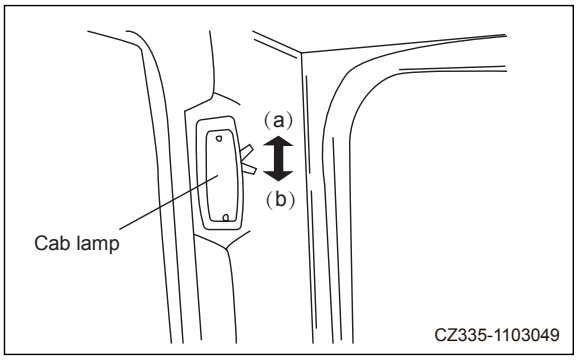

Fig. 3-45

3.4.2.9 Cigar lighter

The cigar lighter is used to light a cigarette.

Pushing in the lighter, it returns to its original position after a few seconds. Pull it out to light a cigarette.

The socket of cigar lighter can be used as a power source for devices rated not more than 240 W (24V×10A).

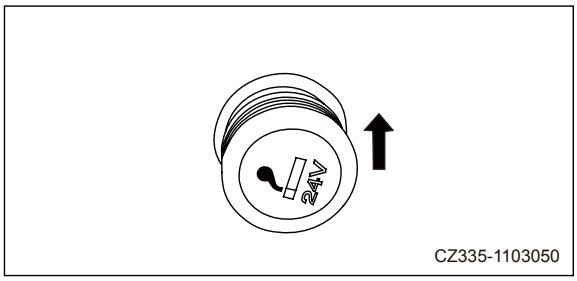

Fig. 3-46

Note:

The cigar lighter is 24V.

Downloaded from www.Manualslib.com manuals search engine

https://truckmanualshub.com/

3.4.2.10 Preheat switch (only for SY135C8M)

This is engine preheat switch, which will be used together with the preheat start switch.

- Pressing the preheat switch (6) and turning the key counterclockwise to HEAT position, the engine will start to preheating.
- Maintaining the key in this position, the engine keeps preheating.
- After releasing the key, the key will return to OFF position (A) automatically and the engine will stop preheating.

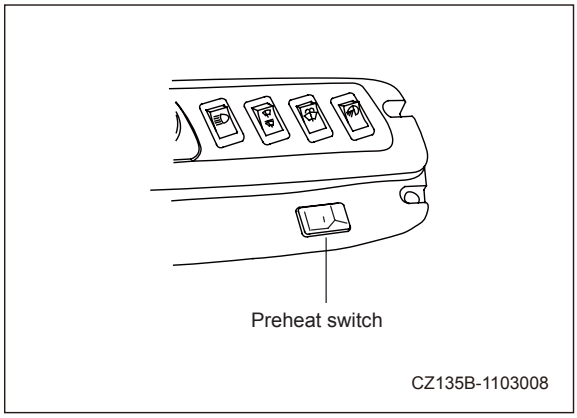

Fig. 3-47

3.4.2.11 Alternator indicator

The alternator indicator is illuminated when the start switch is energized; the indicator goes off while the engine is running and the alternator is working regularly; check the generator for any fault if the indicator is on all the time.

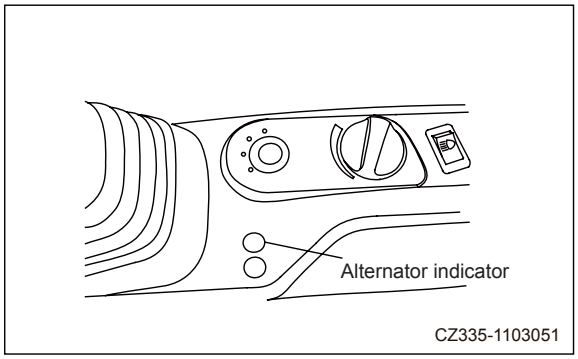

Fig. 3-48

Downloaded from www.Manualslib.com manuals search engine

https://truckmanualshub.com/

3.5 Control levers and pedals

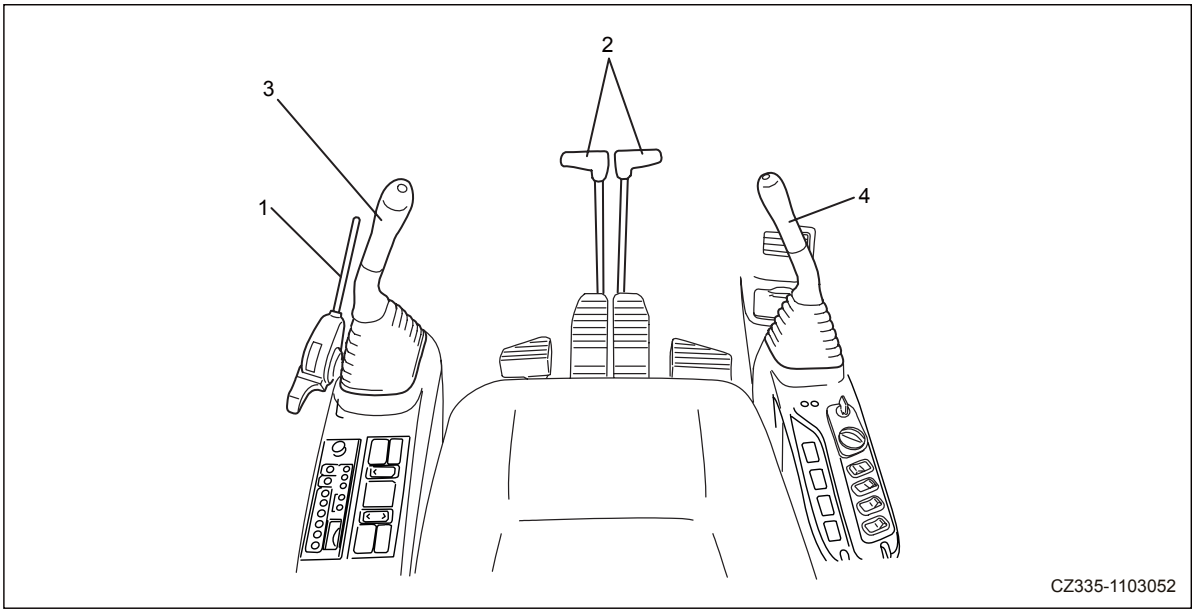

Fig. 3-49

(1) Hydraulic lockout control
(2) Travel controls
(3) Left joystick control
(4) Right joystick control

Downloaded from www.Manualslib.com manuals search engine

https://truckmanualshub.com/

3.5.1 Hydraulic lockout control

WARNING

- **Always place the hydraulic lockout control securely in the LOCK position before you leave the operator cab. If the hydraulic lockout control is left unlocked, unintended touching of it could cause serious injury or death.**
- **If the hydraulic lockout control is not in the LOCK position, move of control lever can cause serious accidents. Check the hydraulic lockout control as shown in Fig. 3-50.**
- **Be careful not to touch the joysticks when you engage or disengage the hydraulic lockout control.**

Hydraulic lockout control (1) is a device used to lock out control levers of work equipment, swing system, travel system and attachment (if equipped).

- LOCK position: Push down the hydraulic lockout control to engage it. The machine will not move even if you maneuver the controls.
- FREE position: The machine moves according to operation of control levers.

This lever is a hydraulic lockout control. When it is engaged, maneuver of control lever or pedal would therefore lead to no movement of the machine.

With all controls in neutral position, if any part of the machine tends to move or moves when you disengage the hydraulic lockout control, it indicates a failure in your machine. In this case, immediately engage the hydraulic lockout control and stop the engine. Contact your Sany distributor to solve this problem.

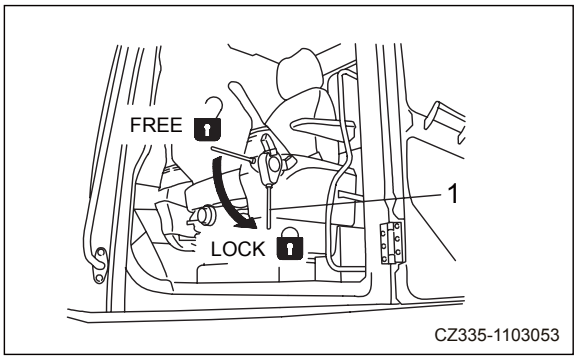

Fig. 3-50

Downloaded from www.Manualslib.com manuals search engine

https://truckmanualshub.com/

3.5.2 Travel controls

⚠ WARNING

- **Do not put your foot on any pedal during operation, except for travel. Unintended pedaling could lead to sudden move of your machine and cause severe accidents.**
- **Take extra care when driving or steering the machine with pedals. Do not put your foot on any pedal when they are not used.**

Control levers are used to change travel direction of your machine. Description in brackets is given for pedal operation.

a - Forward travel:

Push the control lever.

(Pedal tilts forward.)

b - Backward travel:

Pull the control lever.

(Pedal tilts backward.)

N - (Neutral Position): Machine stops.

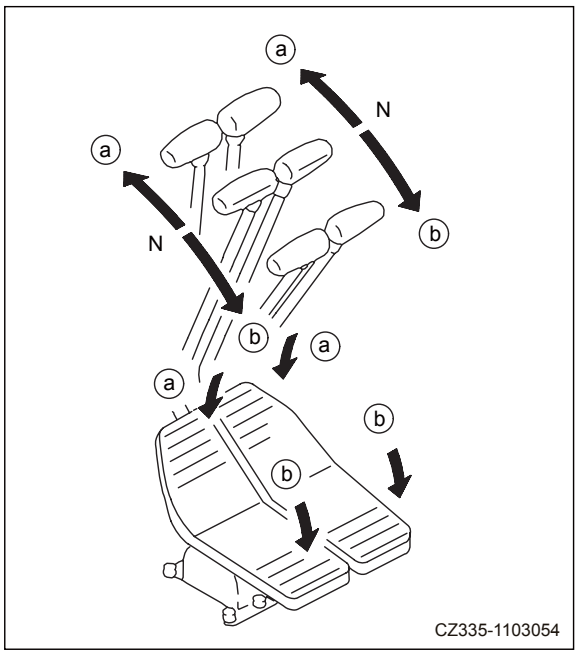

Fig. 3-51

Remark:

When track frame faces backward direction, travel direction is opposite to maneuvering direction of travel control lever. (Machine moves forward when you pull control levers and backward when you push them. The left and right directions are reversed too.)

Check direction of track frame before you maneuver travel control levers. (If the sprocket is in the rear, the track frame faces the front.)

With automatic deceleration function, travel control levers can be used to change engine speed through the following ways.

- When travel control levers and joystick controls are in neutral position, engine speed will drop to medium level even if fuel control dial is set above medium speed. If you maneuver any control, engine speed will rise to the level set by fuel dial control.
- If travel control levers and joystick controls are in neutral position, engine speed will decrease by 100 rpm. About four seconds later engine will drop to the level (about 1,400 rpm) set for automatic deceleration.

Downloaded from www.Manualslib.com manuals search engine

https://truckmanualshub.com/

3.5.3 Joystick controls

WARNING

- **Never expose any part of your body outside the window, which may otherwise put you in danger of being hurt by the boom if the joystick is moved unexpectedly. If the window is broken or missing, replace it immediately.**
- **It is important to know the positions and functions of each joystick control. Unexpected movement of machine could cause personal injury.**

As shown in the following illustrations, operating the joysticks diagonally can realize two functions in combined operation.

Left joystick control

Left joystick operation		
①	Forward	Arm OUT
②	Backward	Arm IN
③	Left	Left swing
④	Right	Right swing

Table 3-3

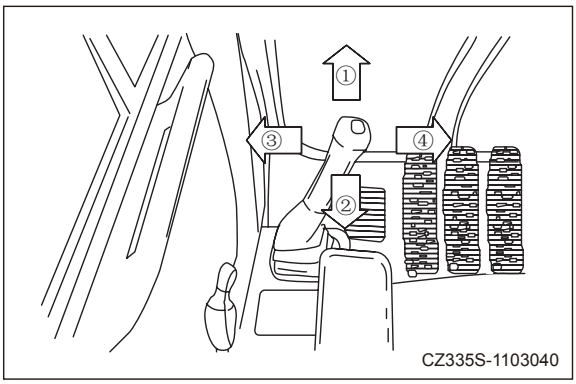

Fig. 3-52

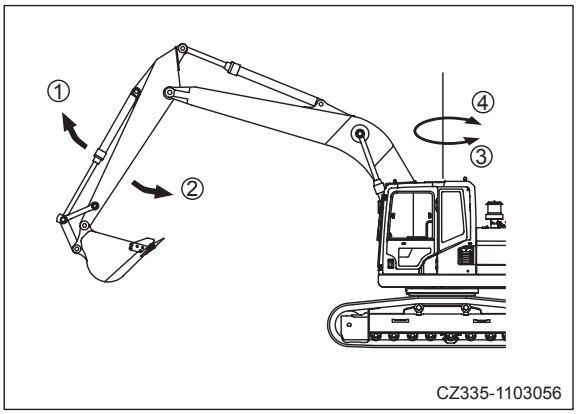

Fig. 3-53

Downloaded from www.Manualslib.com manuals search engine

https://truckmanualshub.com/

Right joystick control

Right joystick operation		
⑤	Forward	Boom DOWN
⑥	Backward	Boom UP
⑦	Left	Bucket DIG
⑧	Right	Bucket DUMP

Table 3-4

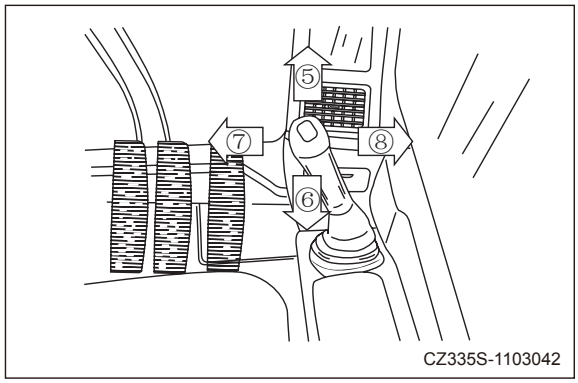

Fig. 3-54

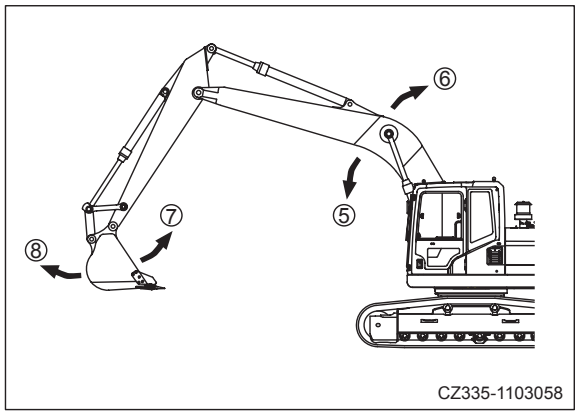

Fig. 3-55

Remark:

When travel control levers and joystick controls are in neutral position, engine speed will drop to medium level even if fuel control dial is set above medium speed. If you maneuver any control, engine speed will rise to the level set by fuel dial control.

If travel control levers and joystick controls are in neutral position, engine speed will decrease by 100 rpm. About four seconds later engine will drop to the level (about 1,400 rpm) set for automatic deceleration.

Releasing control lever or joystick, it goes back to neutral position automatically and machine function stops.

Downloaded from www.Manualslib.com manuals search engine

https://truckmanualshub.com/

3.6 Roof Hatch

WARNING

Secure the lockout control to the LOCK position when leaving the operator's seat. Serious accidents can be caused if any control lever or pedal is maneuvered by mistake when the lockout control is in FREE position.

3.6.1 Opening the roof hatch

1. Place hydraulic lockout control (1) to the LOCK position.

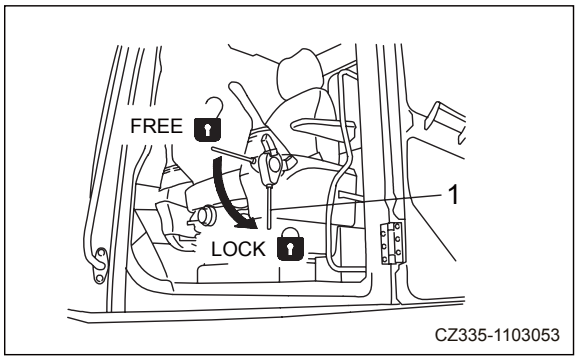

Fig. 3-56

2. Push upward the locks (B) at both sides of grip (A). Hold the grip (A) and push upward the roof hatch.

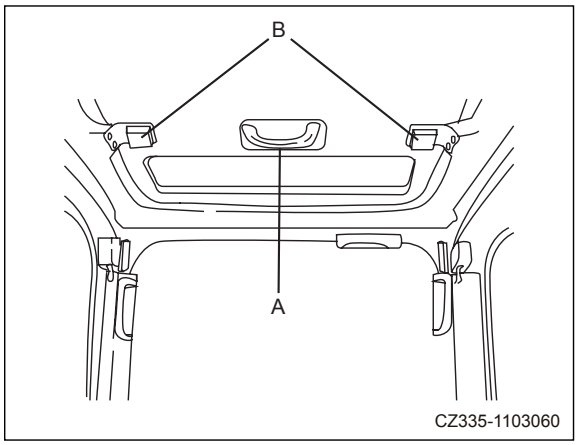

Fig. 3-57

3.6.2 Closing the roof hatch

Hold grip (A) to pull downward the roof hatch. The locks (B) will be engaged automatically. If the locks are not engaged properly, open the roof hatch and try to close it again.

Downloaded from www.Manualslib.com manuals search engine

https://truckmanualshub.com/

3.7 Windshield

Front window can be pulled up onto the cab roof.

WARNING

Always leave the lockout control in the LOCK position when opening or closing the windshield, bottom window or cab door. Serious accidents can be caused if any control lever or pedal is maneuvered by mistake when the lockout control is in FREE position.

- Before opening or closing any window, park your machine on a level ground, lower the work equipment to ground, and stop the engine.
- When opening the windshield, hold tight the grip with both hands and pull the window upward. Never stop before the automatic catch is engaged.
- When closing the windshield, the window moves quickly under its weight. Be sure to hold the grip tightly with both hands when closing the window.

3.7.1 Opening the window

1. Park your machine on a level ground, lower the work equipment to ground, and stop the engine.
2. Place hydraulic lockout control (1) to the LOCK position.

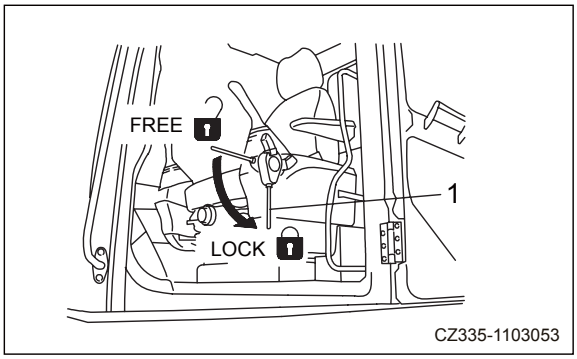

Fig. 3-58

Downloaded from www.Manualslib.com manuals search engine

https://truckmanualshub.com/

3. Check the wiper blade, which shall be stored in the right bracket.

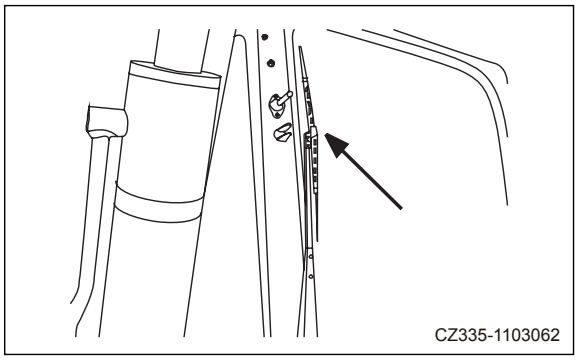

Fig. 3-59

4. Hold the left and right handholds (A) of the windshield and pull the two levers (B) in order to release the locks on top of the windshield. The windshield will be unlocked.

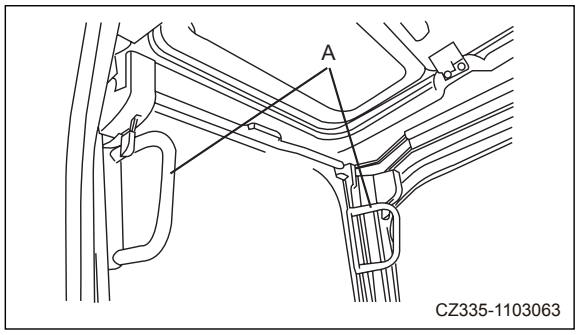

Fig. 3-60

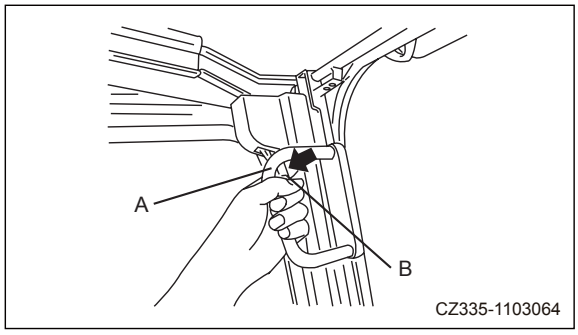

Fig. 3-61

Downloaded from www.Manualslib.com manuals search engine

https://truckmanualshub.com/

5. In the cab, hold the lower handhold (C) with your left hand and the upper handhold (D) with your right hand, and push the window upward. Continue to push the window toward the latch (E)in the rear of the cab till it is locked securely.

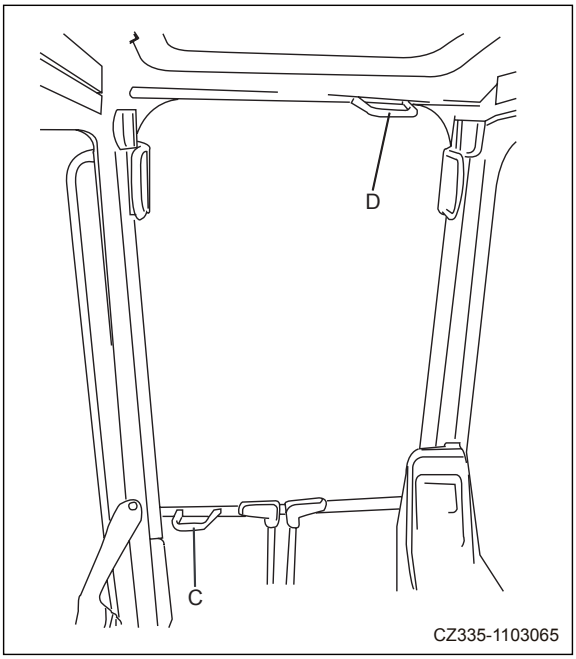

Fig. 3-62

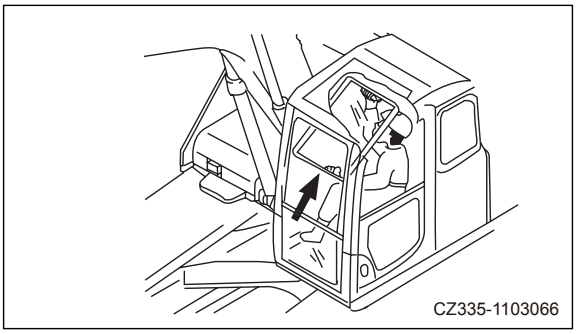

Fig. 3-63

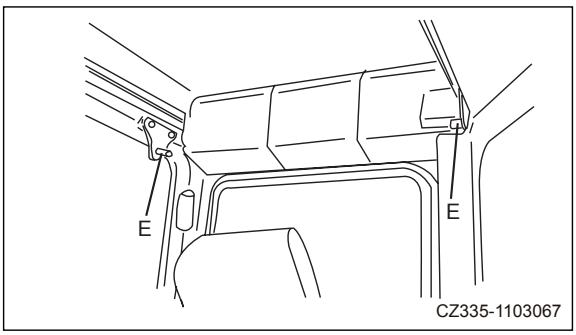

Fig. 3-64

Downloaded from www.Manualslib.com manuals search engine

https://truckmanualshub.com/

6. Check the lever (B), which shall be secured in “locked” position.

- Check the arrow on the catch (F), which should be aligned with the arrow on lever (B). The lock is engaged.
- If the arrow on the catch (F) is not aligned with the arrow on lever (B), the lock is not engaged. Repeat step 5 to engage the lock.

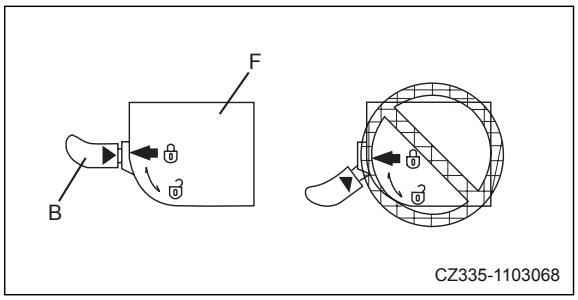

Fig. 3-65

3.7.2 Closing the window

CAUTION

Close the windshield slowly and never get your hand pinched by the window.

1. Park your machine on a level ground, lower the work equipment to ground, and stop the engine.

2. Secure the hydraulic lockout control (1) to LOCK position.

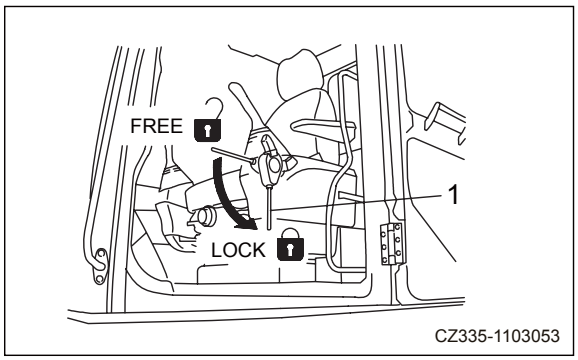

Fig. 3-66

3. Hold the left and right handholds (A) and pull the lever (B) downward to release the lock.

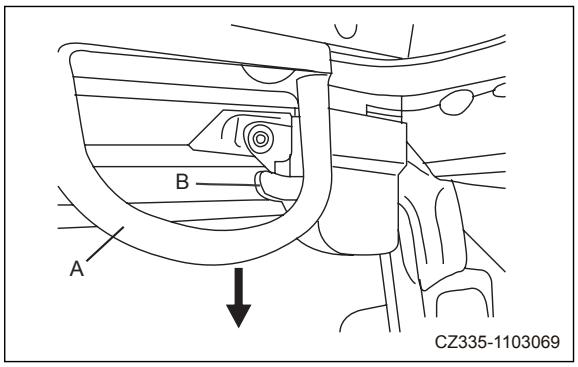

Fig. 3-67

Downloaded from www.Manualslib.com manuals search engine

https://truckmanualshub.com/

4. Hold the lower handhold (C) with your left hand and upper handhold (D) with your right hand, push the window forward and lower the window slowly.

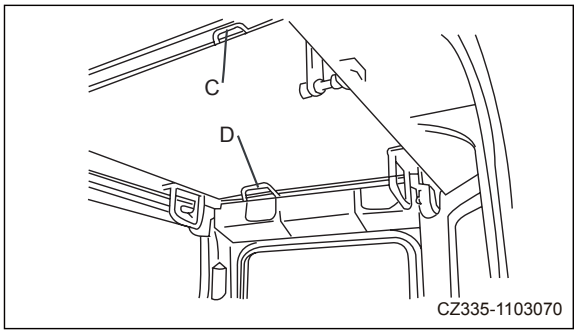

Fig. 3-68

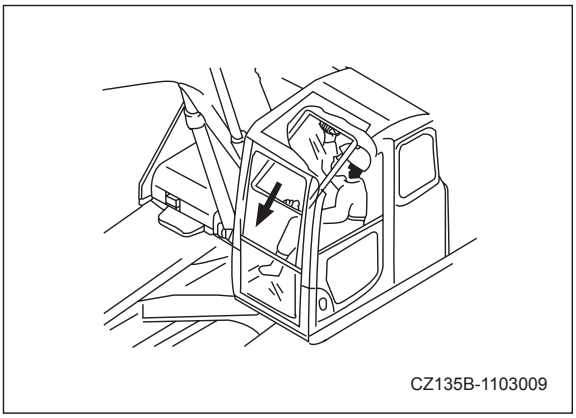

Fig. 3-69

5. When the bottom of windshield reaches the top of bottom window, push forward the top of windshield in order to engage both the left and right latches (G) of the locks.

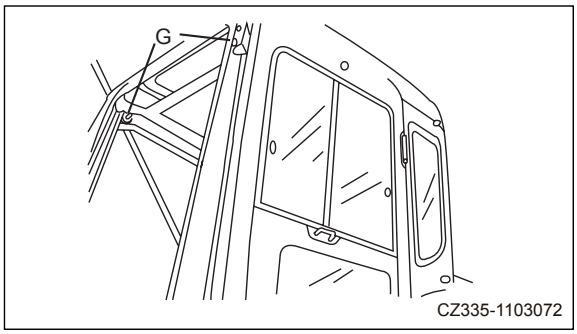

Downloaded from www.Manualslib.com manuals search engine

https://truckmanualshub.com/

6. Check the lever (B), which should be secured in “locked” position.

- Check the arrow on the catch (F), which should be aligned with the arrow on lever (B). The lock is engaged.
- If the arrow on the catch (F) is not aligned with the arrow on lever (B), the lock is not engaged. Repeat step 5 to engage the lock.

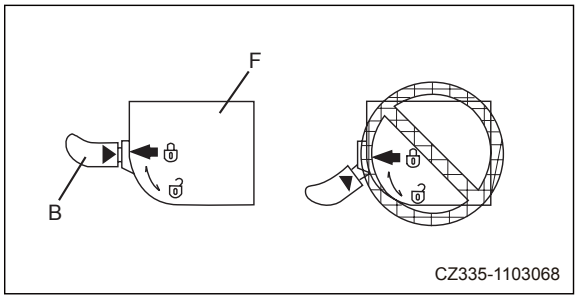

Fig. 3-70

3.7.3 Removing the lower window

Open the windshield, hold the grip (1) to pull upward in order to remove the lower windshield.

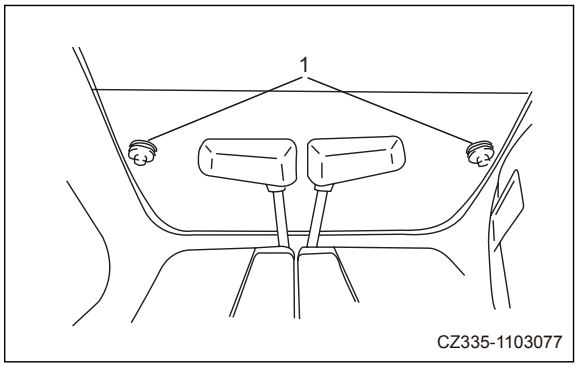

Fig. 3-71

- It will be difficult to remove the windshield in case of sand or dust building up at the bottom of the windshield. Moreover, the sand or dust may be brought into the cab along with the glass when storing the window. To prevent this from happening, the area (A) is to be cleaned before removing the window.

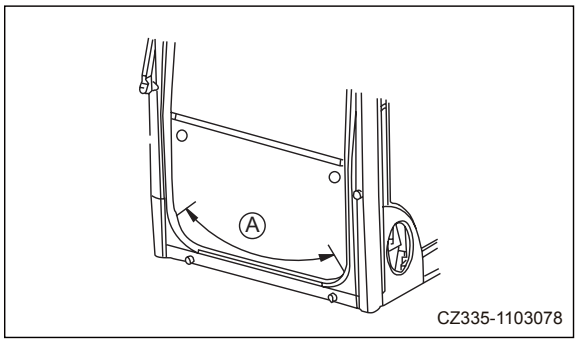

Fig. 3-72

Downloaded from www.Manualslib.com manuals search engine

https://truckmanualshub.com/

3.8 Alternate Exit

If you are unable to open the cab door in case of emergency, use the hammer to break the rear window and escape.

Never use the hammer for other purposes.

CAUTION

Broken glass can cut. Be careful not to be hurt by broken glass when you escape from a broken window.

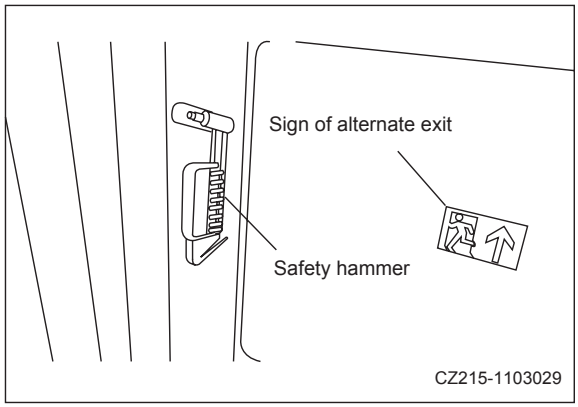

Fig. 3-73

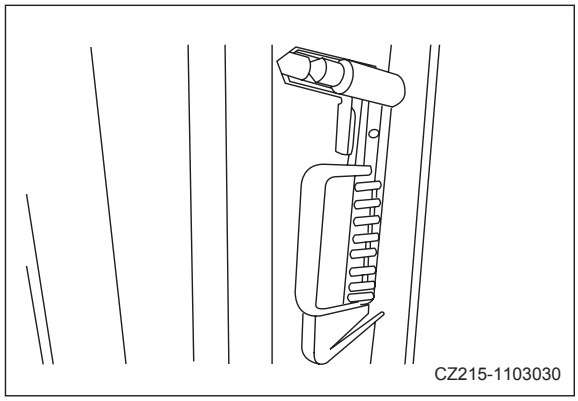

Fig. 3-74

Downloaded from www.Manualslib.com manuals search engine

https://truckmanualshub.com/

3.9 Door Catch

CAUTION

- **Park your machine on a level ground before unlocking the cab door.**
- **Never unlock the door on a slope. The door may shut suddenly and cause injury.**
- **Never expose your body or hand out of the cab or lay your hand on the door frame before unlocking the door. The door may shut suddenly and cause injury.**

Lock the door to its position after opening it.

1. Push the cab door toward the catch (1) so as to lock the door by engaging the catch (1).

2. Before closing the door, press the joystick (2) to the left of the operator seat to release the catch (1).

Secure the door firmly on its catch (1) after the door is opened.

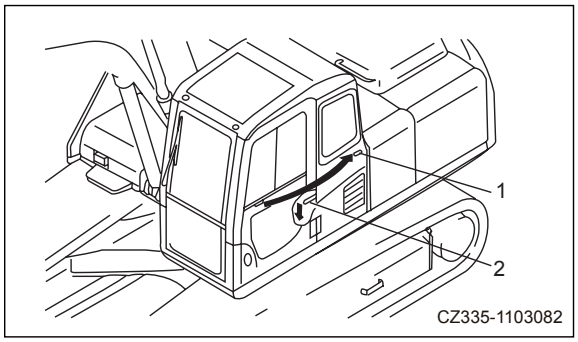

Fig. 3-75

3.10 Cover/cap with a Latch

Use the start switch key to open/close the cap or cover.

Insert the key to its shoulder (A).

The key could be broken if turned before it is fully inserted.

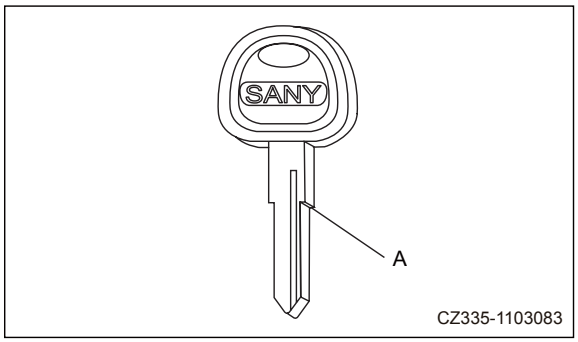

Fig. 3-76

Downloaded from www.Manualslib.com manuals search engine

https://truckmanualshub.com/

3.10.1 Opening/closing the cover with lock

NOTICE

- **Make sure to turn the cover (1) to shield the key hole after removing the key. Otherwise, invasion of foreign bodies could make the switch sluggish or failing.**
- **A longer travel distance is required to tighten the cover with lock. Make sure the cover is turned in position before you turn the key to lock the cover. If the key is turned when the cover is not in position, the lock plate will press against inner wall of filler opening and cause damage to lock cylinder.**
- **Be sure to have a clean O-ring seal in lock cover. If the seal is contaminated by iron scraps, stone pieces or other foreign bodies, it would be damaged during tightening and improper sealing of lock cover could result.**

Opening the cover

1. Turn to open the key hole cover(1).
2. Insert the key into the key hole.
3. Turn clockwise the key to align the key notch to the mark (A) on the cover. Open the cover(2).

Position (A): unlocked

Position (B): Locked

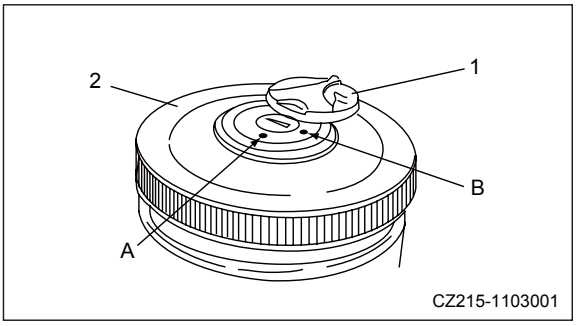

Fig. 3-77

Downloaded from www.Manualslib.com manuals search engine

https://truckmanualshub.com/

Closing the cover

1. Screw on the cover(2) and insert the key into the key hole.
2. Turn the start switch key to “locked” position (B), and remove the key.
3. Turn the cover (1) to shield key hole.

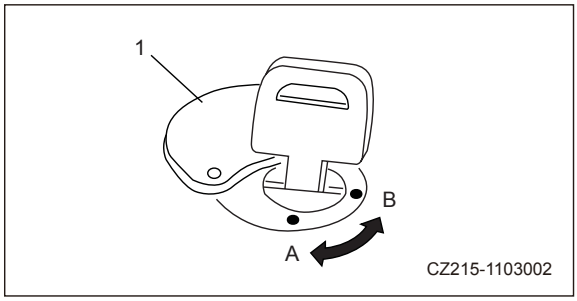

Fig. 3-78

3.10.2 Opening/closing the cap with lock

Opening the cap

1. Insert the key.
2. Turn the key counterclockwise and open the cap with its lever.

   Position (A): unlocked

   Position (B): locked

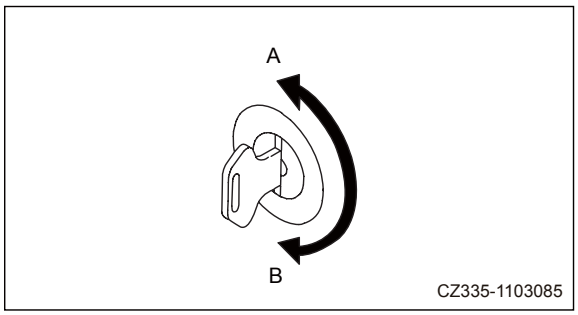

Fig. 3-79

Closing the cap

1. Close the cap properly and insert the key.
2. Turn the key clockwise and remove the key.

Downloaded from www.Manualslib.com manuals search engine

https://truckmanualshub.com/

3.11 Cup Holder

A cup holder has been designed and installed to the left side of operator in order to hold beverage.

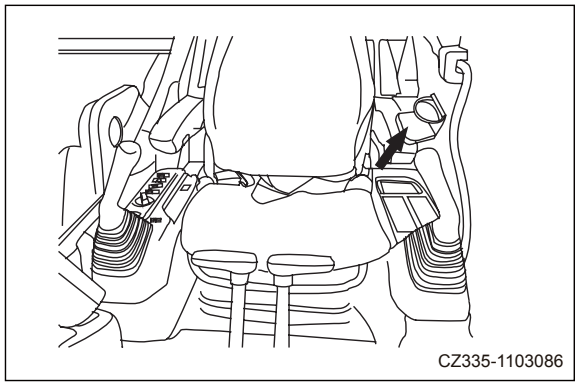

Fig. 3-80

- As shown in the illustration, the cup holder can be folded to prevent damage when it is not used.

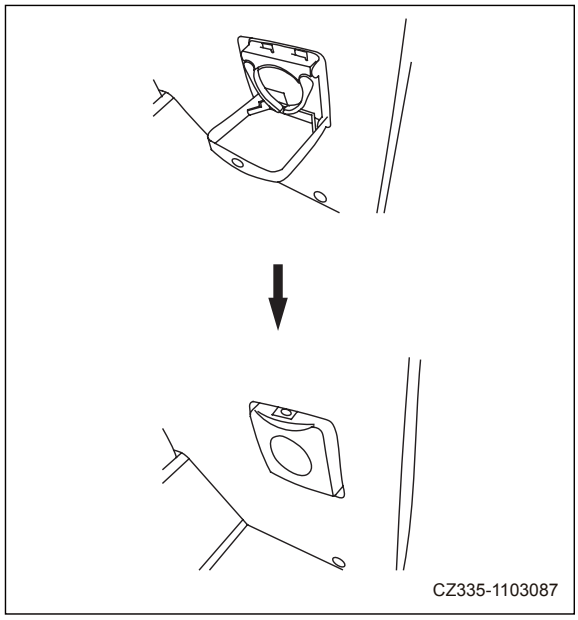

Fig. 3-81

Downloaded from www.Manualslib.com manuals search engine

https://truckmanualshub.com/

3.12 Storage Box

- Located to the rear right of operator seat, the storage box is used to keep your drinks warm in winter and cool in summer.
- Cool or warm air is sent into the storage box according to the setting of air-conditioner.

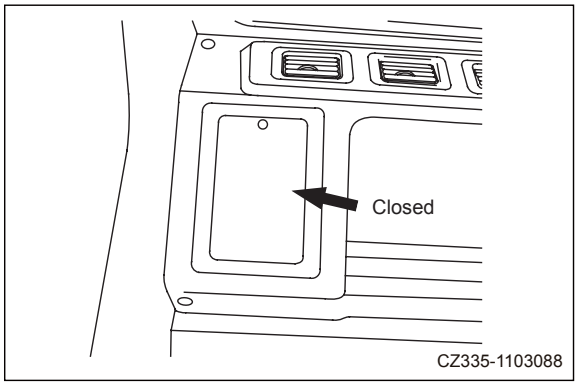

Fig. 3-82

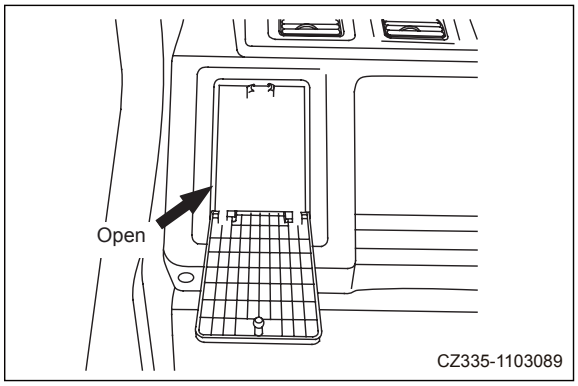

Fig. 3-83

3.13 Literature Bag

- The bag is located on the back of the operator seat.
- The "safety, operation and maintenance manuals" can be stored in this bag for you to refer to at any time.

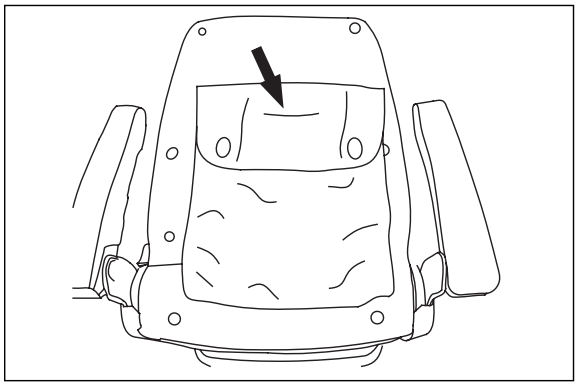

Fig. 3-84

Downloaded from www.Manualslib.com manuals search engine

https://truckmanualshub.com/

3.14 Ashtray

- The ashtray is above the cigar lighter.
- Make sure that the cigarette is extinguished before closing the ash tray.

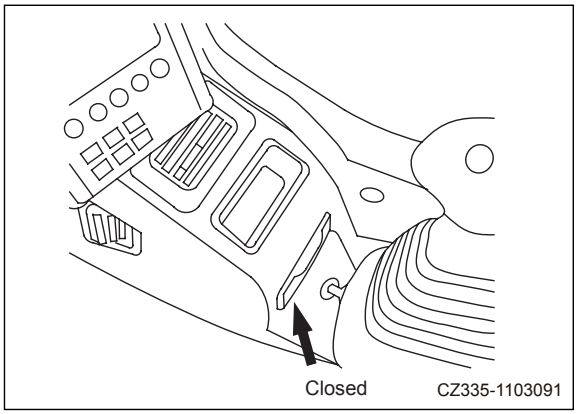

Fig. 3-85

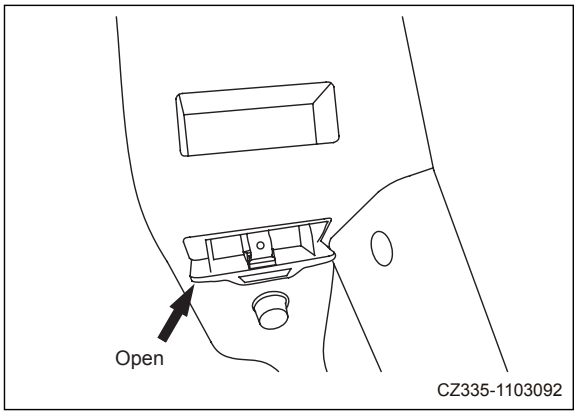

Fig. 3-86

Downloaded from www.Manualslib.com manuals search engine

https://truckmanualshub.com/

3.15 Air Conditioning System

3.15.1 Control panel

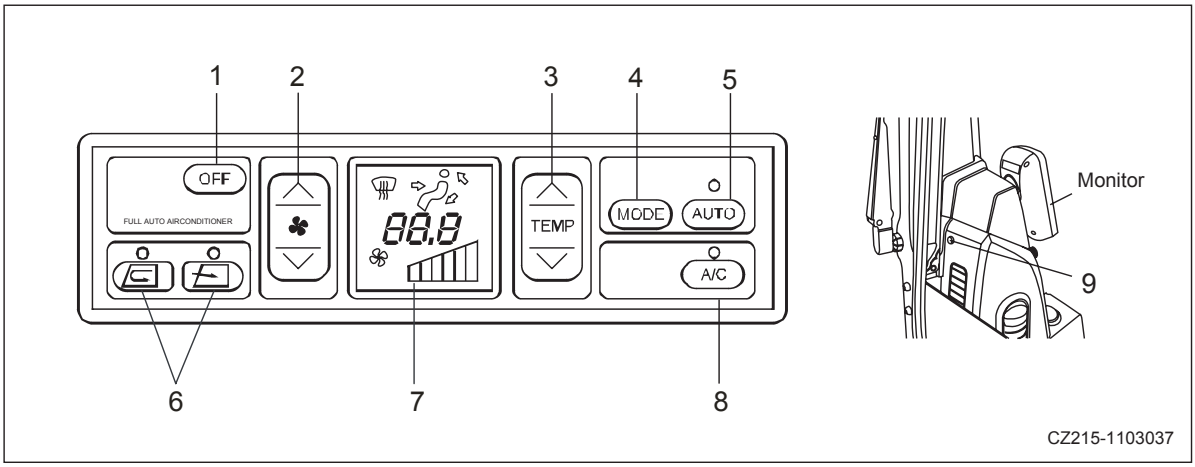

Fig. 3-87

Remark:

After the automatic control switch (5), fresh air/recirculation switch (6) and air conditioner switch (8) are switched on, the indicator above the corresponding switch will be illuminated.

(1) Power-off switch
(2) Fan switch
(3) Temperature switch
(4) Air outlet selector switch
(5) Automatic control switch
(6) Fresh air/Recirculation switch
(7) LCD panel
(8) Air conditioner switch
(9) Sunlight sensor

(1) Power-off switch

This switch (1) is used to stop the fan and air-conditioner.

When the power-off switch (1) is pressed, the temperature and air flow displayed on the LCD panel disappear, the indicators above the automatic control switch and air conditioner switch go out, and the operation stops.

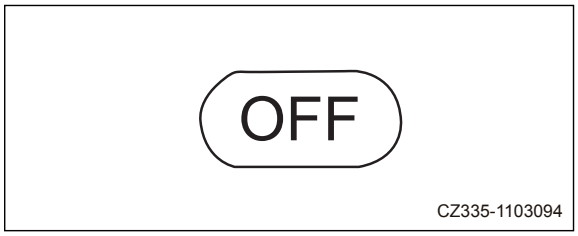

Fig. 3-88

Downloaded from www.Manualslib.com manuals search engine

https://truckmanualshub.com/

(2) Fan control switch

The switch (2) is used to regulate the volume of air flow, which can be set to any of six levels.

The amount of air flow is displayed on the LCD panel.

- Press ∧ to increase the air flow.
- Press ∨ to decrease the air flow.
- The air flow changes automatically in the automatic control mode.

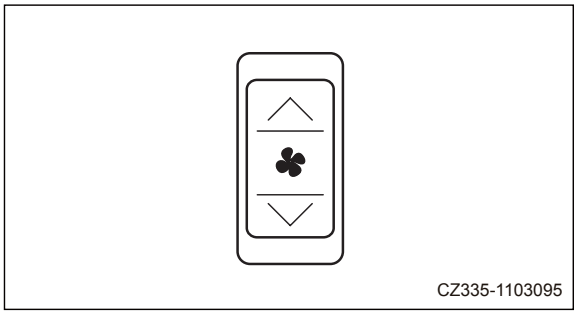

Fig. 3-89

LCD panel and air flow

a: Low

b: Moderate -1

c: Moderate - 2

d: Moderate - 3

e: Moderate - 4

f: High

LCD Display	Air Flow
	a
	b
	c
	d
	e
	f

Table 3-5

(3) Temperature switch

This switch (3) is used to control the temperature inside the operator cab.

The temperature can be set between 18 ℃ (64.4 ℉) and 32℃ (89.6 ℉).

- Press ∧ to increase the preset temperature.
- Press ∨ to decrease the preset temperature.
- The temperature is generally set at 25 ℃ (77 ℉).
- The temperature can be set with an increment of 0.5℃ (0.9 ℉).

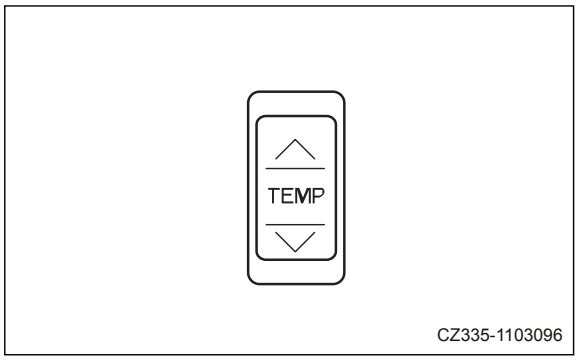

Fig. 3-90

Downloaded from www.Manualslib.com manuals search engine

https://truckmanualshub.com/

LCD display and function

LCD display (℃)	Set Temperature
18.0	Maximum cooling
18.5 ~ 31.5	Adjust temperature inside operator cab to selected temperature
32.0	Maximum heating

Table 3-6

(4) Air outlet selector switch

This switch (4) is used to select the position of each air outlet.

- When the switch (4) is pressed, the LCD panel will display the mode selected. The air will come out of the outlet displayed.
- The outlet is switched automatically in automatic control mode.

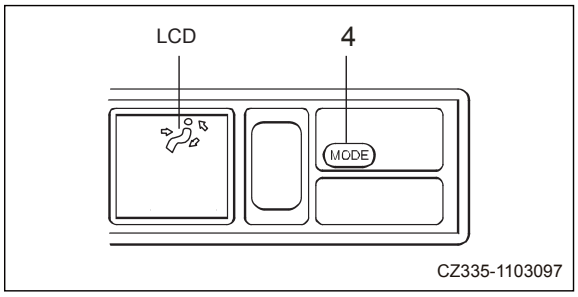

Fig. 3-91

(A): Air outlet for back (4)

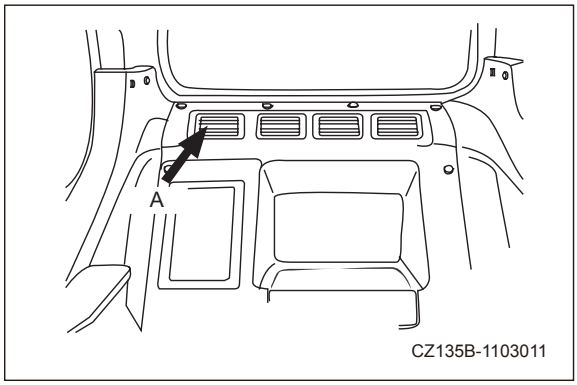

Fig. 3-92

(B): Air outlet for face (1)

(C): Air outlet for defrosting (1)

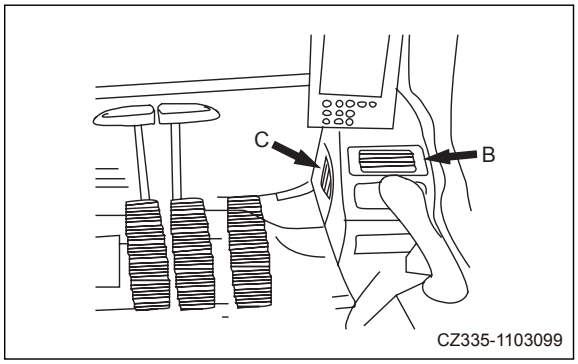

Fig. 3-93

Downloaded from www.Manualslib.com manuals search engine

https://truckmanualshub.com/

(D): air outlet for feet (1)

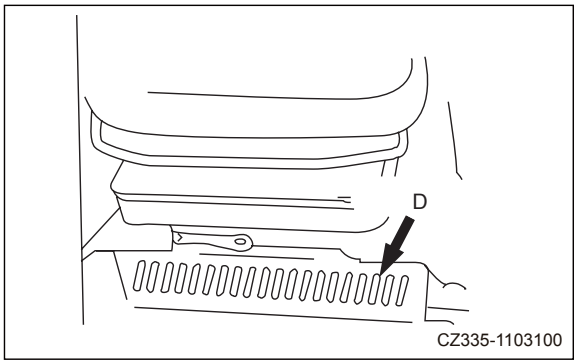

Fig. 3-94

LCD Display	Air Outlet Mode	Air Outlet				Remark
		A	B	C	D	
	Front outlet for face		○			Auto operation disabled
	Front and back outlets for face	○	○			
	Front and back outlets for face and feet	○	○		○	
	Air outlet for feet				○	
	Air outlet for feet and de-froster			○		Auto operation disabled
	Air outlet for defroster			○		Auto operation disabled

Table 3-7

Remark:

Air comes out of the outlet identified with ○ .

Downloaded from www.Manualslib.com manuals search engine

https://truckmanualshub.com/

(5) Automatic control switch

This switch (5) can be used to set air flow, outlets and fresh air or circulation automatically according to the preset temperature.

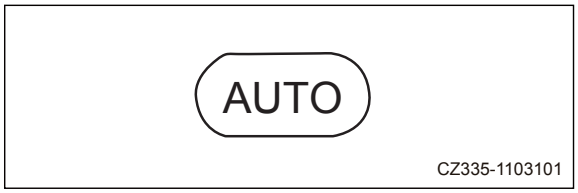

Fig. 3-95

- Pressing the automatic control switch (5), the indicator above the switch comes on.
- Generally, pressing this switch and setting with the Temperature Switch (3) to a suitable temperature, the air conditioner will run automatically.
- Changing from automatic control to manual control requires only resetting the air flow, outlets and fresh air/recirculation mode. The indicator above the switch goes out.

Remark:

When automatic control is selected, the air flow may remain at HIGH if the temperature is set at 18 ℃ (64.4 ℉) or 32 ℃ (89.6 ℉). But this is not a fault.

(6) Fresh air/recirculation switch

This switch (6) is used to open or close the fresh air inlet.

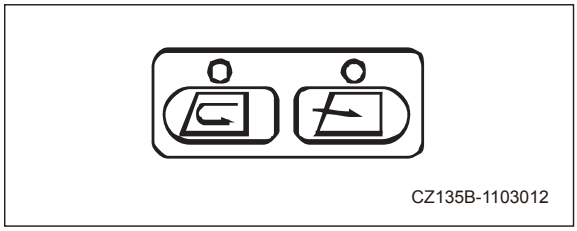

Fig. 3-96

- After the switch is pressed, the indicator above the switch is illuminated to indicate a state of taking in fresh air.
- Fresh air and recirculation modes toggle automatically in automatic control.

Recirculate	The air inlet is closed. The air will recirculate in the operator cab.
	It is suitable for rapid cooling or heating of the operator cab. It is also used when the external air is contaminated.
Fresh Air Intake	Fresh air is taken into the operator cab.
	It is used to take in fresh air and defog.

Downloaded from www.Manualslib.com manuals search engine

https://truckmanualshub.com/

(7) LCD display

LCD display (7) shows the preset temperature (a), air flow (b) and outlet position (c) during operation.

- By pressing the OFF switch (1), the display of preset temperature (a), air flow (b) and outlet position (c) disappears, and the operation stops.

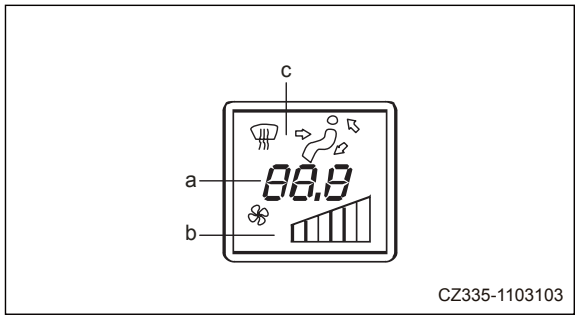

Fig. 3-97

(8) Air conditioner switch

The air conditioner switch (8) is used to switch on/off the air conditioner or its operation (cooling, dehumidifying and heating).

- When the fan is working (the LCD displays(b)), press the air conditioner switch (8) to activate the air conditioner. The indicator above the switch will be illuminated. Press this switch again to deactivate the air conditioner. The indicator goes out.
- The air conditioner is disabled when the fan is switched off (outlet position disappears from the LCD display).

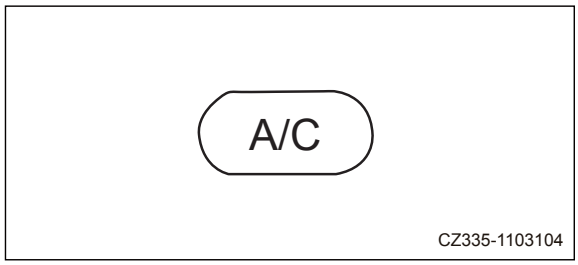

Fig. 3-98

(9) Sunlight sensor

The sunlight sensor will adjust the air flow of air outlet to match the strength of sunlight. In addition, it can detect automatically the variation of the temperature in the operator cab due to the strength of sunlight. And it can control temperature automatically.

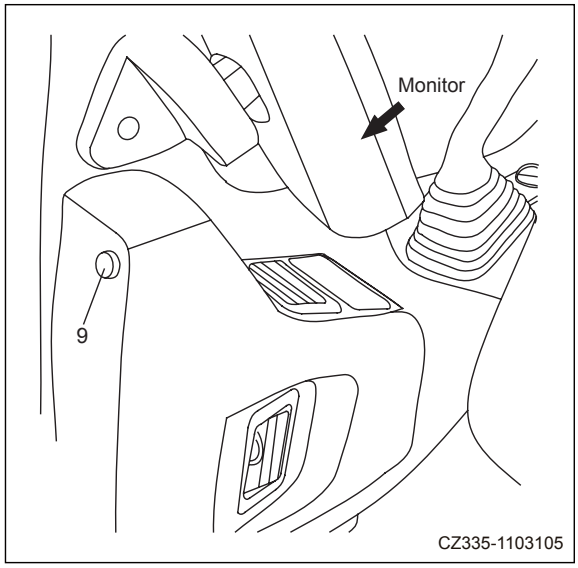

Fig. 3-99

Downloaded from www.Manualslib.com manuals search engine

https://truckmanualshub.com/

3.15.2 Operation method

You can control the air conditioner automatically or manually. Select a control manner you want.

Automatic operation

1. Turn on the automatic control switch (5).

- The LCD panel will display the temperature (a) and air flow (b). The indicators above the automatic switch (5) and air conditioner switch (8) will be illuminated.

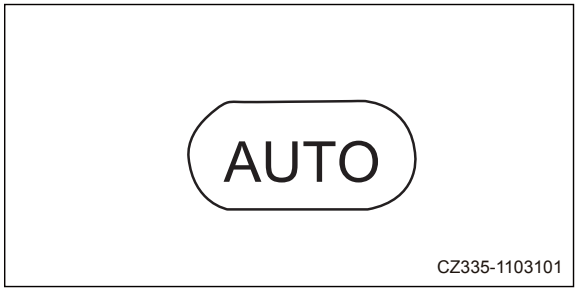

Fig. 3-100

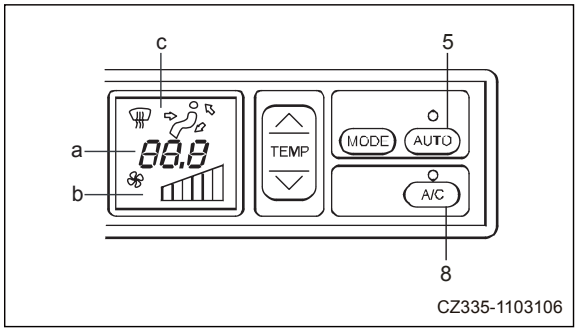

Fig. 3-101

2. Use the temperature switch (3) to set a comfortable climate. By setting the temperature, the air conditioner will change automatically its air flow, air outlet position and fresh air/recirculation air in order to achieve the preset temperature.

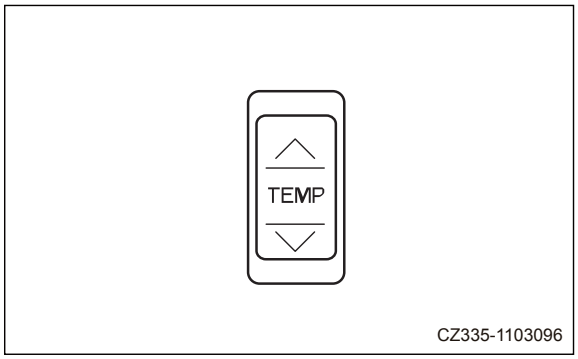

Fig. 3-102

Downloaded from www.Manualslib.com manuals search engine

https://truckmanualshub.com/

Remark:

When air outlet (c) is in (d) or (e) mode and the temperature of engine coolant is low, the air flow will be restricted to prevent blowing the cooling air.

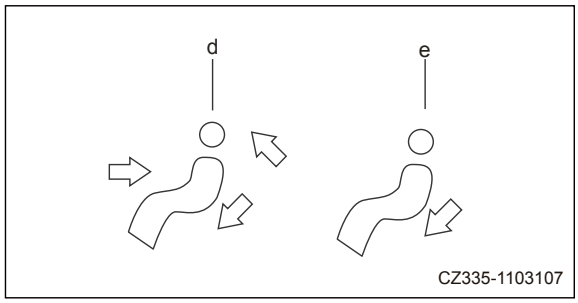

Fig. 3-103

Stopping AUTO operation

Press the OFF switch (1) in order to stop automatic operation.

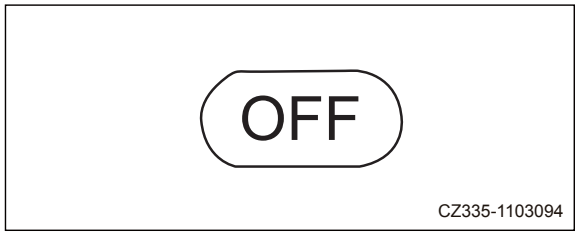

Fig. 3-104

Manual operation

1. Press fan switch (2) to regulate air flow. Check the temperature (a) and the air flow (b) displayed on the LCD display (7).

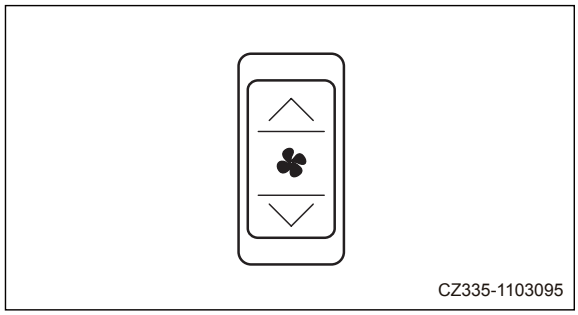

Fig. 3-105

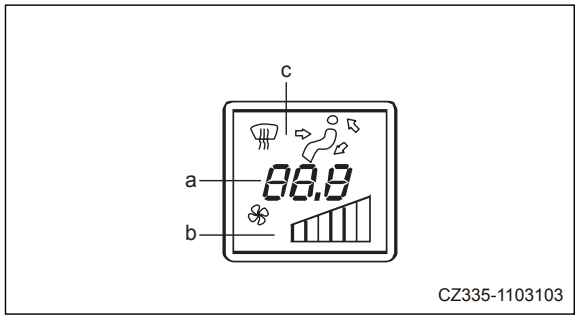

Fig. 3-106

Downloaded from www.Manualslib.com manuals search engine

https://truckmanualshub.com/

2. Turn on the air conditioner switch (8).

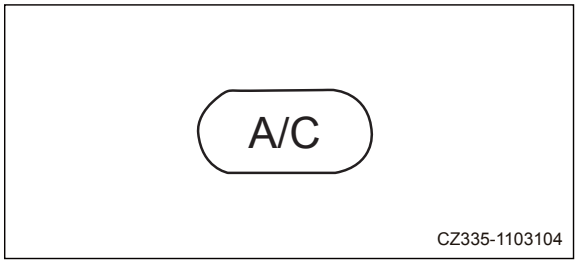

Fig. 3-107

3. Press the temperature switch (3) to set the internal temperature of the operator cab.

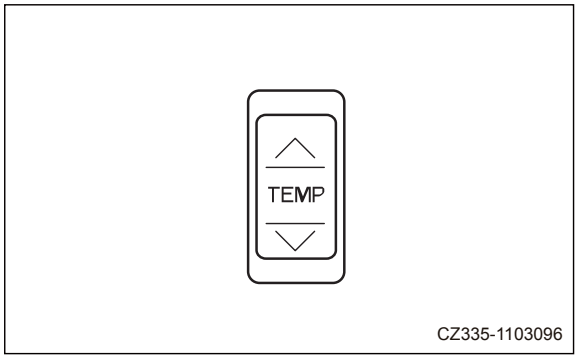

Fig. 3-108

4. Press the air outlet selector switch (4) to set it to the desired mode. The display at (c) on the LCD panel (7) will change accordingly.

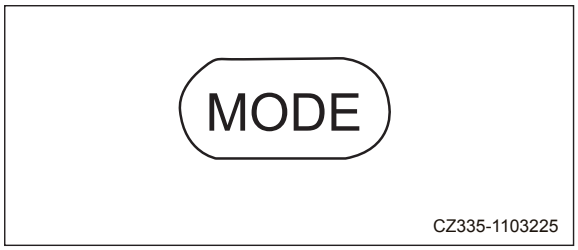

Fig. 3-109

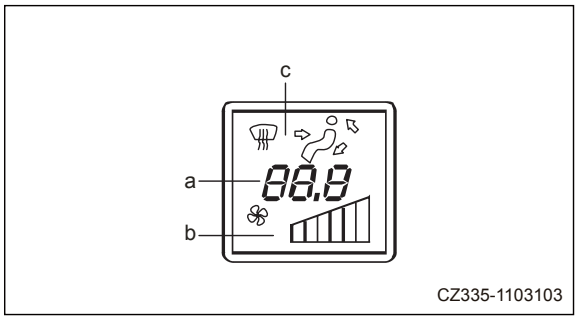

Fig. 3-110

Downloaded from www.Manualslib.com manuals search engine

https://truckmanualshub.com/

5. Press the fresh air/recirculation switch (6) to select the recirculation or fresh air intake mode of the operator cab.

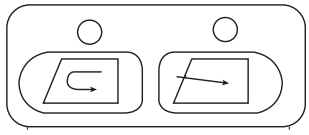

Fig. 3-111

Stopping manual operation

Press the switch OFF (1) to stop the manual operation.

Fig. 3-112

Cooling air for face and warm air for feet

In order to direct cooling air to your face and warm air to your feet, observe the following procedures:

1. Press the fan switch (2) to adjust the air flow. Check the LCD screen (7) for the temperature (a) and air flow (b).

Fig. 3-113

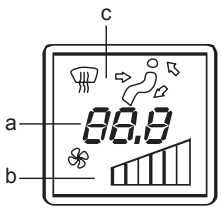

Fig. 3-114

Downloaded from www.Manualslib.com manuals search engine

https://truckmanualshub.com/

2. Press the air outlet selector switch (4) in order to display on the LCD panel the image as shown in the right illustration.

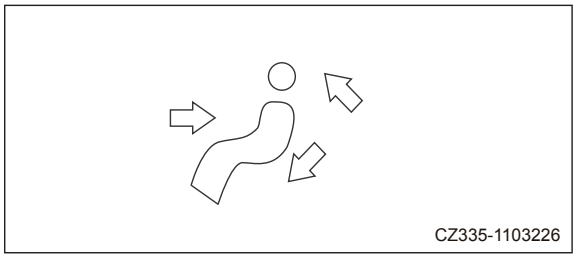

Fig. 3-115

3. Turn on the air conditioner switch (8).

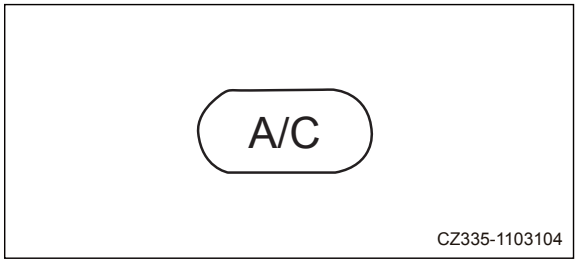

Fig. 3-116

4. Press the fan switch (2), temperature switch (3) and fresh air/recirculation switch (6) as desired.

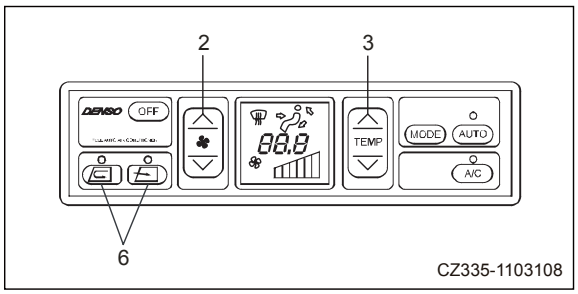

Fig. 3-117

Downloaded from www.Manualslib.com manuals search engine

https://truckmanualshub.com/

Defroster operation

1. Press the fan switch (2) to regulate the air flow. Meanwhile, check the temperature (a) and air flow (b) displayed on the LCD panel (7).

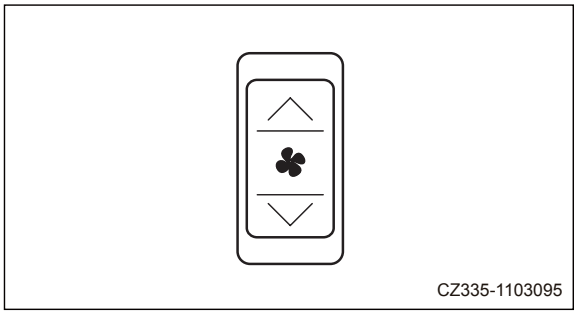

Fig. 3-118

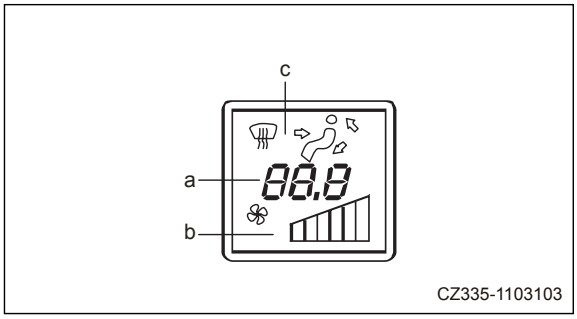

Fig. 3-119

2. Press the air outlet selector switch (4) and set the air outlet mode on the LCD panel as shown the right illustration (f) or (g).

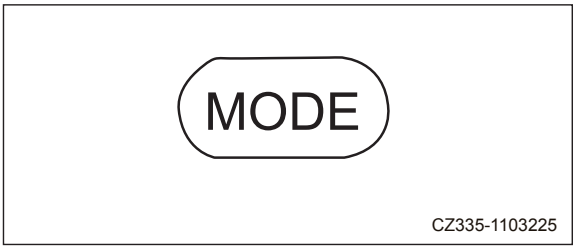

Fig. 3-120

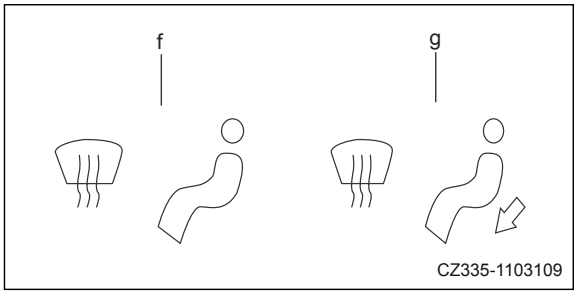

Fig. 3-121

Downloaded from www.Manualslib.com manuals search engine

https://truckmanualshub.com/

3. Press the fresh air/recirculation switch (6) to open the air inlet.

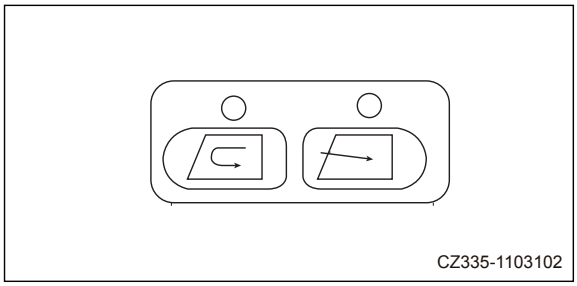

Fig. 3-122

4. Press the temperature switch (3) and set the temperature on the LCD panel (7) to the maximum (32℃).

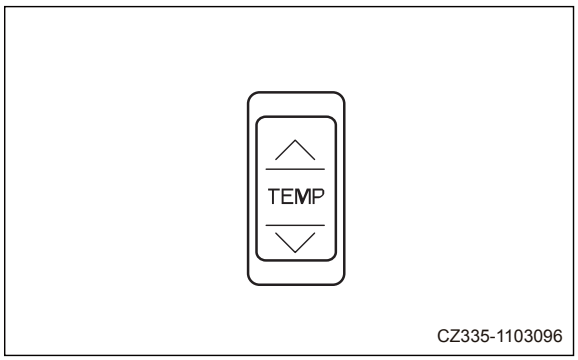

Fig. 3-123

5. Adjustment:

- Rear air outlet (A)

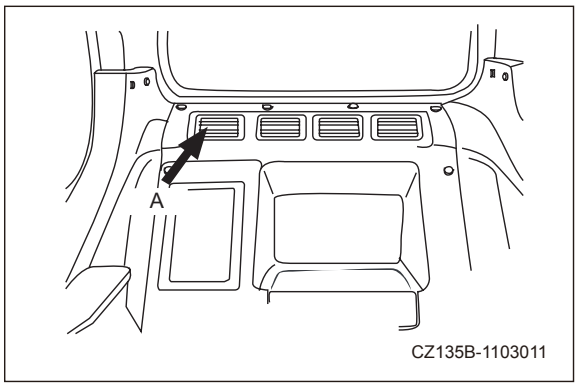

Fig. 3-124

Downloaded from www.Manualslib.com manuals search engine

https://truckmanualshub.com/

- Air outlet for face (B)
- Defrosting outlet (C)

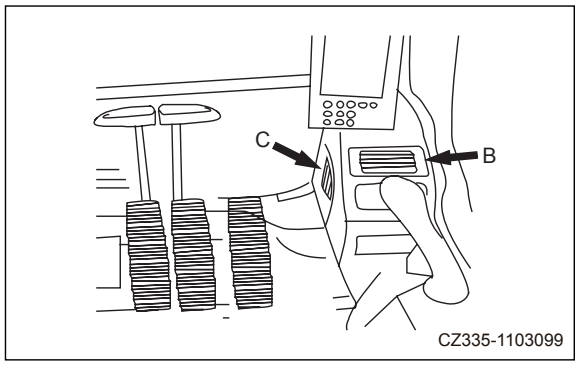

Fig. 3-127

- The air outlet (D) toward feet is fixed and nonadjustable.

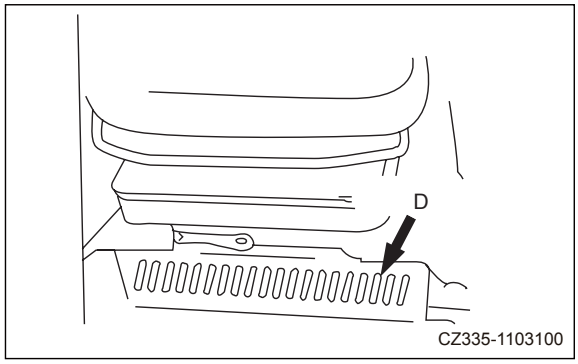

Fig. 3-125

- Turn on the air conditioner switch (8) when operating in rainy season, defogging the windows or carrying out dehumidifying operation.

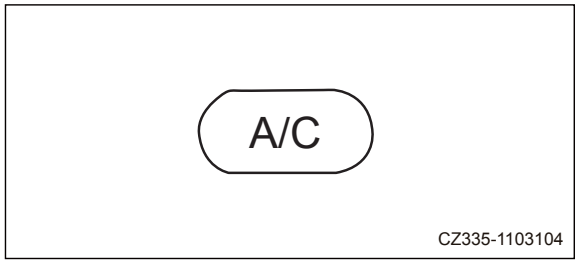

Fig. 3-126

Downloaded from www.Manualslib.com manuals search engine

https://truckmanualshub.com/

3.15.3 A/C operation precautions

Remark:

- When running the air conditioning system, always start with the engine running at a low speed. Avoid starting the air conditioner when the engine is running at a high speed, or possible damage to the air conditioner may result .
- If water should get on control panel or sunlight sensor, an unexpected failure may result. Always keep these components clear and free from water. In addition, keep these components away from naked flame.
- For the auto function of the air conditioner to work properly, always keep the sunlight sensor clean and free from debris, or it will influence the function of sunlight sensor.

Ventilation

- When the air conditioner has been operating for hours, the “fresh air/recirculation mode” shall be switched to “fresh air mode” every hour for ventilation.
- If you smoke when air conditioner is running, the smoke may hurt your eyes. In this case, the “fresh air/recirculation mode” shall be switched to “fresh air mode” in order to eliminate the smoke through continuous cooling.

Temperature control

When the compressor is working, set the temperature (5 or 6 ℃ (9 or 10.8 ℉) above outdoor temperature) that just makes you feel cool after entering the cab. This temperature difference is considered as the most healthy temperature. Therefore, the temperature shall be adjusted properly.

Inspection and maintenance of air conditioned machine

- When checking and maintaining the air

Downloaded from www.Manualslib.com manuals search engine

https://truckmanualshub.com/

conditioned machine, it is important to follow the graph for inspection and maintenance. For more information see “Air Conditioner - Inspect/Service (Maintenance Section)”, “Compressor Belt Tension - Inspect/Adjust (Maintenance Section)” and “Air Filter Element - Inspect/Clean/Replace (Maintenance Section)”.

- When the air conditioner has not been used for a long time, it is necessary to often run the engine at low speed and conduct cooling, dehumidifying and heating operations for several minutes in order to prevent loss of oil film on each component.
- The air conditioner will not work if the internal temperature of cab is low. You can circulate fresh air into the cab so as to increase the temperature. Switch on the air conditioner again to make it work.
- In case that any device or sensor of the air conditioner is found abnormal, “A/C controller failure” will be displayed on the air conditioner control penal. Please contact Sany distributor to investigate and repair it.

Downloaded from www.Manualslib.com manuals search engine

https://truckmanualshub.com/

3.16 Radio

3.16.1 Control panel

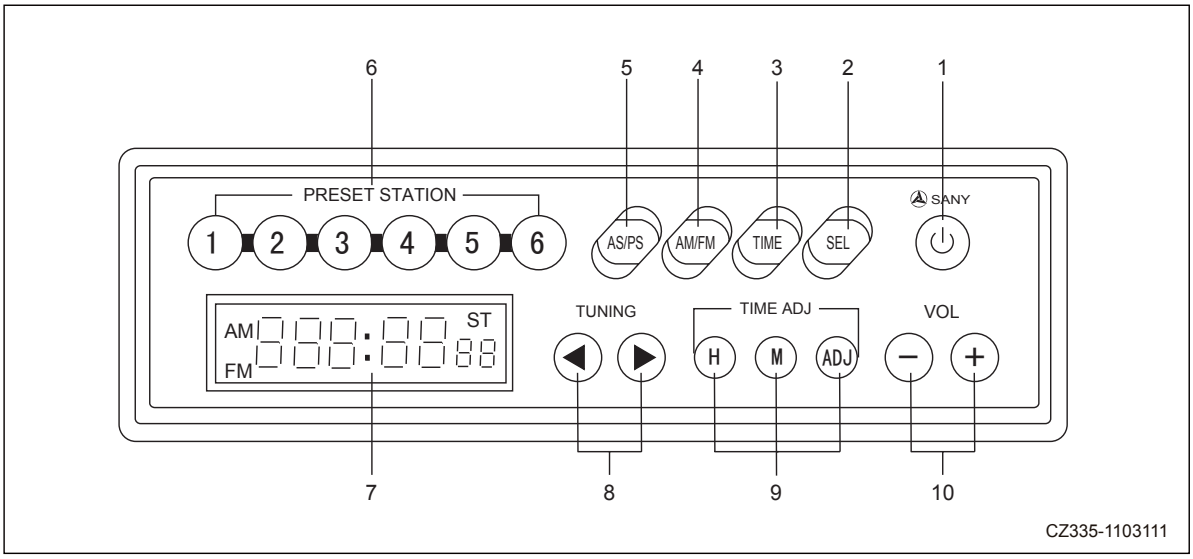

Fig. 3-128

(1) Power switch
(2) Sound effect switch
(3) Time display
(4) FM/AM selector
(5) AS/PS button
(6) Preset stations (1, 2, 3, 4, 5, 6)
(7) LCD
(8) Tuning buttons
(9) Time adjusting buttons
(10) Volume control

Power switch

Press the power switch (1) in order to turn on the radio. The frequency is shown on the LCD display (7). Press the power switch again in order to turn off the radio.

Sound effects conversion

- Pressing the switch (2) each time, the sound effects will be displayed in turn: VOL → BAS → TRE → Balance.
- The host machine will return to frequency display in terms of no operation within 5 seconds.
- The state of sound effects will be displayed on the LCD display (7).

Time display

- Pressing the switch (3) will display frequency in priority.
- When the frequency is displayed, pressing the switch (3) will display the present time for 5 seconds. The display will resume displaying frequency after 5 seconds.

Downloaded from www.Manualslib.com manuals search engine

https://truckmanualshub.com/

- Depress the button (4) for more than 5 seconds in order to display the region: ASIA： EU.

FM/AM band selector

Press the switch (4) to select the desired band. Pressing the button each time toggles the band between FM and AM.

AS/PS button

The button (5) is used to auto scan and preset stations.

- Auto Scan:

  When tuning in the radio, pressing the button AS/PS (5) allows you to scan each preset station, which will be played for 10 seconds, while the number of the preset station scanned is blinking on the display. If you want to tun in some station, press the button (5) again.

- Preset Stations:

  When tuning in the radio, depressing the button AS/PS (5) for more than 2 seconds will activate the auto scanning of current stations. Six radio stations that have the strongest signal will be stored in turn to the 6 buttons (1-6). Now you can play any of the preset stations.

Tuning in preset stations (1, 2, 3, 4, 5 and 6)

If the buttons (6) have been preset with some stations, you can press any of the buttons to play the preset station.

LCD display

The band, radio frequency, preset number and time will be displayed on the display (7).

Tuning button

Press the button (8) to change frequency.

Time set button

Press the button (9) to reset the time.

H: Hour

M: Minute

ADJ: Set to 00 minute

Volume control

- Press the button “+” (10) in order to increase the sound volume. The maximum volume is 40.
- Press the button “-” in order to decrease the sound volume. The minimum volume is 0.
- In case of no operation within 5 seconds, the display returns to show the frequency.

Downloaded from www.Manualslib.com manuals search engine

https://truckmanualshub.com/

3.16.2 Radio operation

Presetting radio station

1. Press the power switch (1) in order to show the frequency on display (7).
2. Press one of the tuning buttons (8) to locate the desired frequency. There are two tuning ways: manual and automatic.
3. When desired frequency is shown on the display (7), depress one of the preset buttons for at least 1.5 seconds. The voice will disappear. But the voice will come back when the presetting operation (storing to the memory) is completed. The preset button number and the frequency will be displayed, indicating the completion of presetting operation. After presetting the stations, press one of the preset buttons (6) for at least 1.5 seconds in order to tune in the preset station.

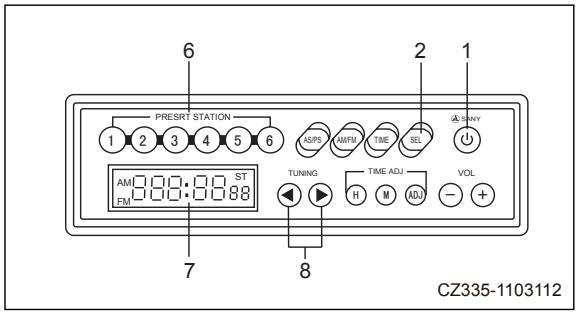

Fig. 3-129

Remark:

The AS/PS button can be used to preset the stations automatically.

Searching radio station

1. Press the power switch (1) in order to show the frequency on display (7).
2. Press one of the tuning buttons (8) to locate the desired frequency. There are two tuning ways: manual and automatic.

- **Manual tuning**

Press one of the tuning buttons (8) till the frequency appears on the display (7).

＜ key: Decrease the frequency.

＞ key: Increase the frequency.

When the frequency reaches its maximum or minimum limit, it will cycle in the order of max-min or min -max.

- **Automatic tuning**

Depress one of the tuning buttons (8) will activate automatic scanning of radio stations. When any station is found, the tuning stops. To scan next station, depress one of the tuning buttons (8) again.

Downloaded from www.Manualslib.com manuals search engine

https://truckmanualshub.com/

< key: Decrease the frequency.

> key: Increase the frequency.

If this button is pressed during automatic tuning, automatic tuning will be cancelled. The setting returns to the previous frequency before the button is pressed.

Sound effect conversion methods:

- VOL - Volume: Press “+” in order to increase the volume, which can be increased to 40. Press “-” in order to decrease the volume, which can be decreased to 0.
- BAS - Bass: Press the SEL key (2) in order to access sound effect and select BAS. Press VOL key (10) within 5 seconds in order to change the bass level between +7 and -7.
- TRE - Treble: Press the SEL key (2) in order to access sound effect and select TRE. Press VOL key (10) within 5 seconds in order to change the treble level between +7 and -7.
- BAL - Balance: Press the SEL key (2) in order to access sound effect and select BAL. Press VOL key (10) within 5 seconds in order to change the balance of the left and right audio channels between L9 and R9. BAL.0 means that both audio channels are kept balanced.

Remark:

For any mode, the display will return to show previous setting if no operation is done within 5 seconds.

Downloaded from www.Manualslib.com manuals search engine

https://truckmanualshub.com/

Setting the time correctly

3. Press the button (3) to display the time. The display will return to show radio frequency after 5 seconds and the time cannot be reset. In this case, press the time display button (3) again.

4. Press one of the time adjustment keys (9) in order to select hours or minutes.

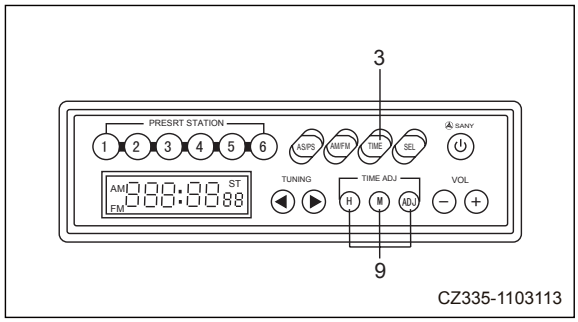

Fig. 3-130

H key: Hour adjustment

(Pressing this key once will increase 1 hour.)

M key: Minute adjustment

(Pressing this key once will increase 1 minute.)

by pressing the H key or the M key, the hours or minutes will keep going till the key is released.

ADJ key: When pressing the ADJ key, the time will be preset as following:

- When it displays 00-05 minutes, the time will return to 00 minute and 00 second. (The hours remain unchanged.)
- When it displays 55 - 59 minutes, the time will advance to 00 minute and 00 second. (The hours will be more.)
- When it displays 06 - 54 minutes, the time can not be preset. (Time remains the same).

  For Example:

  10:05 → 10:00

  10:59 → 11:00

  10:26 → 10:26

Use the H, M and ADJ keys to set the time correctly.

Downloaded from www.Manualslib.com manuals search engine

https://truckmanualshub.com/

Antenna

Before moving your machine into any building, it is necessary to put away the antenna in order to prevent intervention. Put away the antenna by the following steps:

1. Loosen the antenna's mounting bolt (1) in order to place the antenna in position (A).
2. Tighten the bolt (1) after storing the antenna.

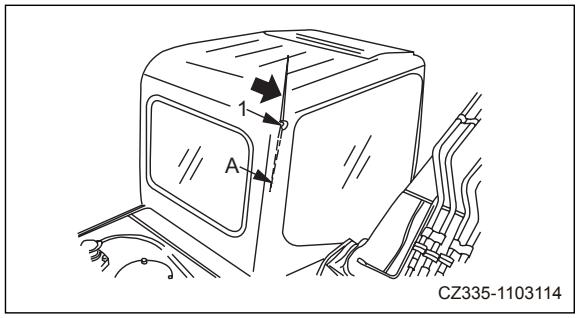

Fig. 3-131

Radio operation precautions

- To be safe, the volume should be kept at a level that you could hear the outside sound during operation.
- The penetration of water into the loudspeaker or radio may lead to unexpected trouble. In this case, be careful of not getting the device wet.
- Never use benzol, diluent or other solvent to clean the control panel or buttons. Soft dry cloth shall be used for cleaning. If the device is too dirty, wipe it with alcohol.
- When disconnecting or replacing the battery, the preset stations and the clock will be cleared. Therefore, the settings should be readjusted.

Downloaded from www.Manualslib.com manuals search engine

https://truckmanualshub.com/

3.17 Auxiliary Power Supply

24V Power

Remove the cigar lighter. Its socket can be used as auxiliary power supply.

Max applicable power supply is 240W (24V×10A).

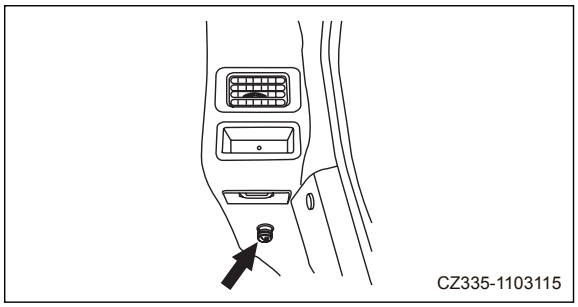

Fig. 3-132

Remark:

Never use this power supply for 12V devices.

3.18 Fuses

Remark:

Before replacing a fuse, make sure that the start switch is in OFF position.

- The fuse panel is located at the right rear of operator's seat .
- Fuses can protect electrical devices and wires from burning.
- The fuse should be replaced if it is eroded, produces white powder or becomes loose in the fuse panel.
- Replace the fuse with one of the same capacity.

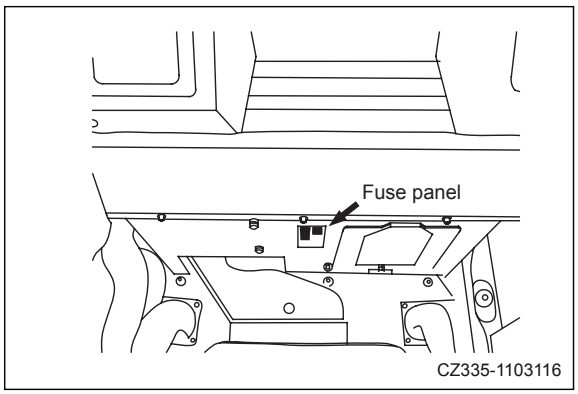

Fig. 3-133

Downloaded from www.Manualslib.com manuals search engine

https://truckmanualshub.com/

Fuse capacity and corresponding circuit

No.	Capacity	Circuit
F1	20A	Start circuit
F2	10A	Charging indicator
F3	5A	Horn circuit
F4	15A	Work lamp
F5	5A	Wiper & washer
F6	10A	Radio
F7	10A	Cab lamp
F8	20A	Air conditioner
F9	5A	Access lamp
F10	5A	Monitor
F11	15A	Controller
F13	15A	Head lamp
F14	10A	GPS
F15	15A	Cigar lighter

Table 3-8

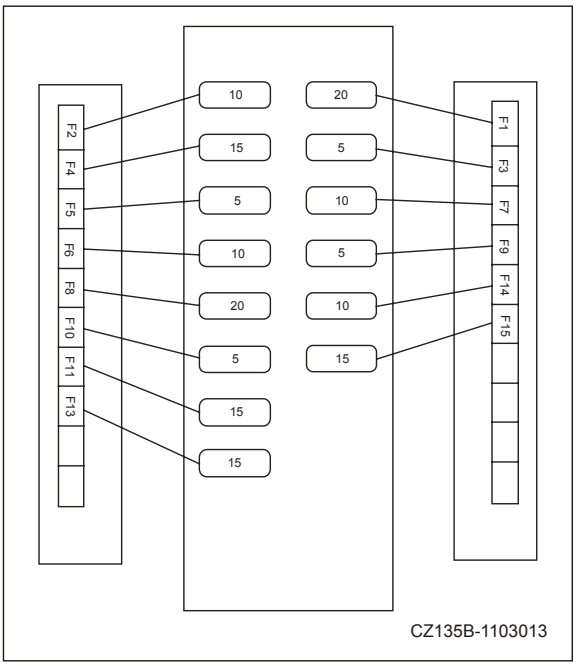

Fig. 3-134

3.19 Fusible Link

The fusible link (1) could possibly fail if the starter motor does not work with the start switch in ON position. Open the fuse compartment cover to access the fusible link on the back side of the seat in order to check and replace it.

Remark:

The fusible link is the large-size fuse applied to high current circuit in order to protect electrical component and wire from burning, in the way operating as a common fuse.

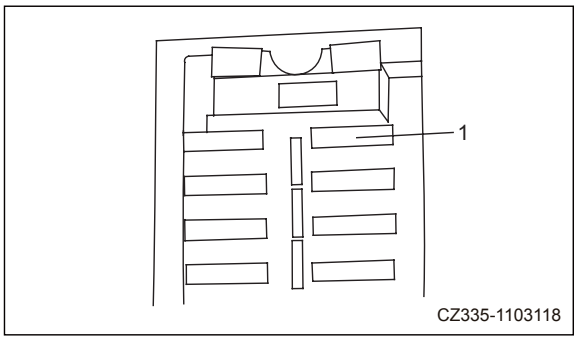

Fig. 3-135

Downloaded from www.Manualslib.com manuals search engine

https://truckmanualshub.com/

3.20 Controller

Be careful not to get the controller contaminated by water, mud or juice, which can cause failure.

Never disassemble the controller in case of any failure. Please contact Sany distributor for repair.

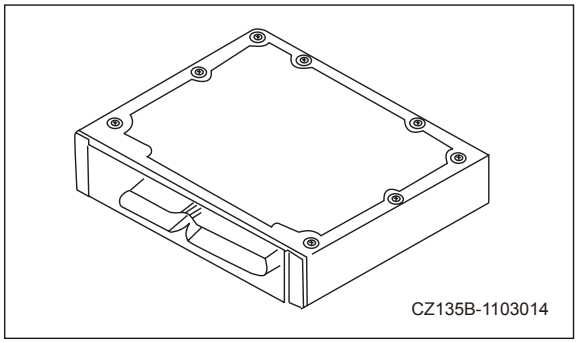

Fig. 3-136

3.21 Toolbox

Store your tools in this box.

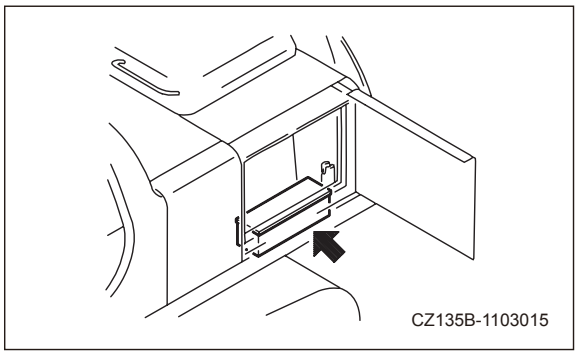

Fig. 3-137

3.22 Grease pump frame

The grease pump frame is inside the access door at the left rear part of the machine. When the grease pump is not in service, place it on the frame.

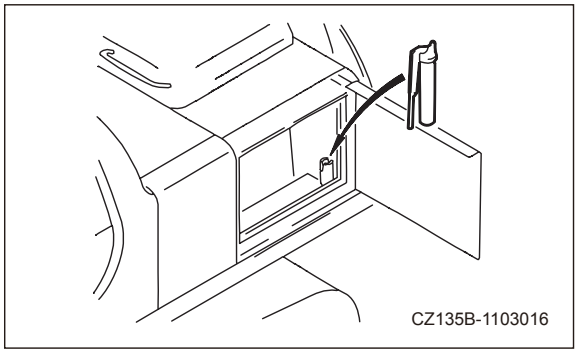

Fig. 3-138

Downloaded from www.Manualslib.com manuals search engine

https://truckmanualshub.com/

3.23 Fire extinguisher

Fire extinguisher is equipped in the rear of operator cab.

The following precautions must be observed in order to deal with unexpected fire.

- Read instruction label on fire extinguisher and know how to use fire extinguisher in event of fire.
- Check fire extinguisher regularly in order to make sure it is in the guarantee period.
- If your extinguisher has expired, replace it immediately.

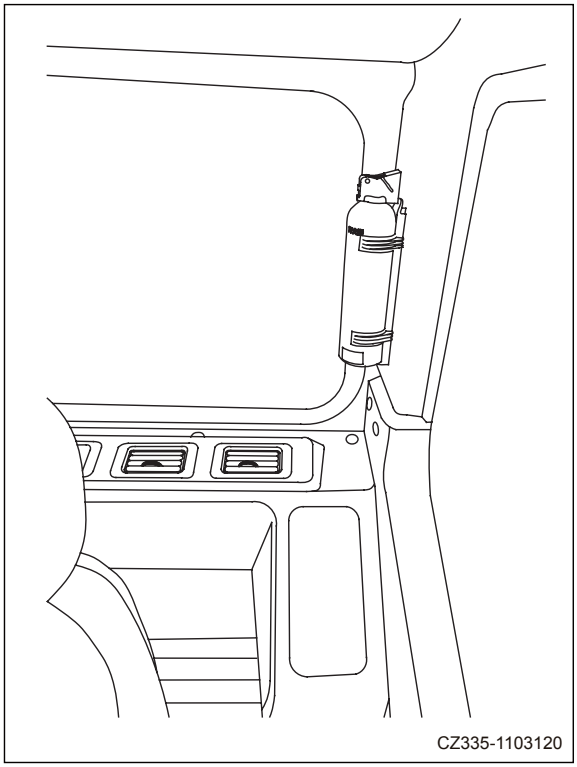

Fig. 3-139

Downloaded from www.Manualslib.com manuals search engine

https://truckmanualshub.com/

BLANK PAGE

Downloaded from www.Manualslib.com manuals search engine

https://truckmanualshub.com/

SANY

Operation

4 Operation

4.1 Before Starting the Engine 4-5
4.1.1 Routine checks 4-5
4.1.2 Checks before starting 4-7
4.1.2.1 Fuel tank - check/drain 4-7
4.1.2.2 Water separator - check/drain 4-7
4.1.2.3 Drain valve - regulate 4-8
4.1.2.4 Hydraulic oil - check/refill 4-9
4.1.2.5 Coolant - check/refill 4-10
4.1.2.6 Oil in engine oil pan - check/refill 4-11
4.1.2.7 Electric wires - check 4-12
4.1.2.8 Fuel tank - check/refuel 4-13
4.1.2.9 Work lamp switch - check 4-14
4.1.2.10 Horn - check 4-15
4.1.3 Adjustment before operation 4-15
4.1.3.1 Operator seat 4-15
4.1.3.2 Rear view mirrors 4-17
4.1.3.3 Seat belt 4-19
4.1.4 Before Starting the Engine 4-20
4.2 Engine Starting 4-22
4.2.1 Engine Preheating 4-25
4.2.2 Warm-up operation 4-26
4.2.3 Selecting a working mode 4-26
4.3 Engine Shutdown 4-27
4.4 Machine Operation 4-28
4.4.1 Before moving the machine 4-28

Downloaded from www.Manualslib.com manuals search engine

https://truckmanualshub.com/

4.4.2 Moving the machine forward 4-29
4.4.3 Moving the machine backward 4-30
4.4.4 Parking the machine 4-31
4.5 Steering Operation 4-32
4.5.4.1 Steering with travel controls 4-32
4.5.4.2 Steering with machine stopped 4-32
4.5.4.3 Steering during traveling 4-33
4.5.4.4 Pivot turn 4-33
4.5.1 Swing operation 4-34
4.6 Work Equipment Control and Operation 4-35
4.7 Working mode 4-37
4.8 Restricted Operations 4-38
4.8.1 Operation with swinging force 4-38
4.8.2 Operation with traveling force 4-38
4.8.3 Operation when hydraulic cylinder reaches its stroke end 4-39
4.8.4 Operation with bucket landing force 4-39
4.8.5 Operation with machine weight 4-40
4.8.6 Hard rocky ground 4-40
4.8.7 Sudden shift of travel speed during fast traveling 4-41
4.9 General Operation 4-41
4.9.1 Traveling operation 4-41
4.9.2 High-speed travel 4-41
4.9.3 Permissible depth of water 4-42
4.10 Traveling on Slope 4-42
4.10.1 Traveling downhill 4-44
4.10.2 Engine stalls on an incline 4-44
4.10.3 Cab door on an incline 4-44
4.11 Removing Machine from Mud 4-44
4.11.1 One track trapped 4-44
4.11.2 Both tracks trapped 4-45
4.12 Recommended Applications 4-45
4.12.1 Backhoe operation 4-45
4.12.2 Trench work 4-46
4.12.3 Loading operation 4-46
4.13 Parking Operation 4-47
4.14 Checks after Each Workday 4-49

Downloaded from www.Manualslib.com manuals search engine

https://truckmanualshub.com/

4.15 Locking the Machine 4-50
4.16 Operation in Cold Weather 4-50
4.16.1 Operation instruction 4-50
4.16.1.1 Fuel and lubricant 4-50
4.16.1.2 Battery 4-51
4.16.2 After each workday 4-52
4.16.3 After cold season 4-53
4.17 Long-Term Storage 4-54
4.17.1 Before storage 4-54
4.17.2 During storage 4-55
4.17.3 After storage 4-56
4.17.4 Starting the engine after long-term storage 4-56
4.18 Transportation Information 4-57
4.18.1 Transport methods 4-57
4.18.2 Loading/unloading machine to/from a trailer 4-57
4.18.2.1 Loading the machine 4-59
4.18.2.2 Securing the machine 4-61
4.18.2.3 Rear view mirrors 4-62
4.18.2.4 Unloading the machine 4-63
4.18.3 Lifting the machine or its components 4-65
4.18.3.1 Lifting precautions 4-65
4.18.3.2 Choosing a wire rope 4-66
4.18.3.3 Lifting the machine 4-67

Downloaded from www.Manualslib.com manuals search engine

https://truckmanualshub.com/

Downloaded from www.Manualslib.com manuals search engine

https://truckmanualshub.com/

4 OPERATION

4.1 Before Starting the Engine

4.1.1 Routine checks

Before starting the engine, it is necessary to inspect your machine carefully and completely. Check for any loose bolts or nuts. Check for any leaks of oil, fuel or coolant. Check the conditions of the work equipment and hydraulic system. It is also necessary to check for loose wires, any spaces or dust buildup at where it is close to high temperature.

Remove flammable materials from the surrounding of battery, engine, muffler, turbocharger, or other hot components. The leak of oil or fuel may cause the machine to catch on fire. Careful inspection is necessary. Contact your Sany distributor if any fault of your machine must be corrected.

Check and clean the following items each day before starting the engine:

1. Check the work equipment, cylinders, arms and hoses for cracks, excessive wear or loosening. Repair it in case of any problem.

2. Remove the dirt and debris around the engine, battery and radiator.

   Check the surrounding of engine and radiator for buildup of dirt. Check the surrounding of muffler, turbo charger or other hot components for flammable materials like dry leaves and thin branches. Remove them if any dirt or flammable materials are found.

   For method of removing dirt from radiator, see “**Coolant tank and radiator fins - inspect/clean**” **on page 5-76** .

Downloaded from www.Manualslib.com manuals search engine

https://truckmanualshub.com/

3. Check for any leaks of coolant or oil around the engine.

   Check the engine for leak of oil. Check the cooling system for leak of coolant. Repair it in case of any problem.

4. Check the hydraulic unit, hydraulic tank, hoses and joints for any leaks of oil.

   Check for oil leaks. Repair the leaks if any.

5. Check the undercarriage (track, sprockets, tension rollers and guards) for damage, wear, loose bolts or roller leakage.

   Correct the problem if any.

6. Check the handholds and step for any problem like loose bolts.

   Repair it in case of any problem. Tighten the loose bolts.

7. Check the gauges and monitor.

   Check the gauges and monitor in the cab. Change the parts or components in case of any problem. Clean their surfaces.

8. Clean and check rear mirrors

   Clean and check the rear mirrors for any damage. Repair it in case of any damage. Clean the mirrors and adjust their positions so that the area behind the machine could be seen clearly from operator’s seat.

9. Check the safety belt and holds for damage or wear. Replace it with a new one in case of any damage.

10. Check the bucket with hook (if equipped) for any damage.

    Check the hoisting hook, guide plate and hook seat for any damage. Contact Sany distributor for repair in case of any problem.

Downloaded from www.Manualslib.com manuals search engine

https://truckmanualshub.com/

4.1.2 Checks before starting

The items in this section must be checked every day before starting the engine.

4.1.2.1 Fuel tank - check/drain

1. Remove lower cover plate of fuel tank.
2. Place a vessel under drain valve (1) to contain drained fuel.
3. Turn drain valve (2) to OPEN position (O) to drain sediment, water and fuel from tank.
4. When clean fuel is seen, turn the drain valve (2) to CLOSE position (S).
5. Reinstall the lower cover plate.

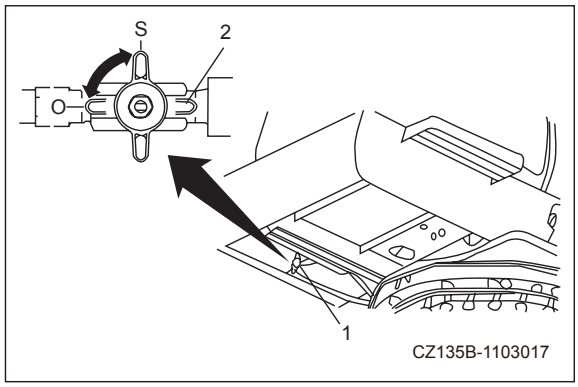

Fig. 4-1

4.1.2.2 Water separator - check/drain

1. Open the pump compartment door on the right side of the machine.

   Water separator is integrated with fuel prefilter (1).

2. Through transparent cover (2) you can observe water level and volume of sediment. In case of water or sediment built up at bottom, place a vessel under drain hose (4) to receive drainage.
3. Open drain valve (3) to discharge water.
4. Immediately close drain valve (3) when fuel is seen coming out of drain hose (4).

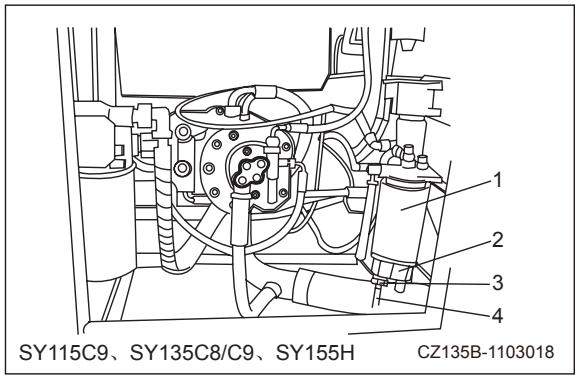

Fig. 4-2

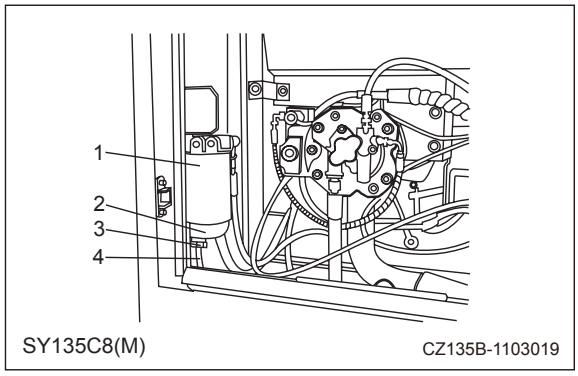

Fig. 4-3

Remark:

- Clean transparent cover (2) when replac-

Downloaded from www.Manualslib.com manuals search engine

https://truckmanualshub.com/

ing the additional fuel filter (1) if the transparent cover (2) is dirty or it is hard to see the interior through it.

- When drain valve (3) has been removed during cleaning, its O-ring must be greased and the valve must be tightened till it contacts the bottom.

4.1.2.3 Drain valve - regulate

If the drain valve (3) does not work smoothly, the part with O-ring shall be greased to make it move smoothly.

1. Place a vessel under the additional fuel filter cartridge (1).
2. Open the drain valve (3) and drain all water and sediment behind the transparent cover (2), and drain the fuel accumulated in cartridge (1).
3. Remove the drain valve (3) after confirming that nothing is coming out of the drain hose (4).
4. Apply suitable amount of grease to the O-ring (5). Pay attention to not greasing the drain valve outlet (6) or its threads (7).
5. Tighten drain valve (3) with hand till it contacts bottom of transparent cover (2).
6. Remove the fuel vessel.

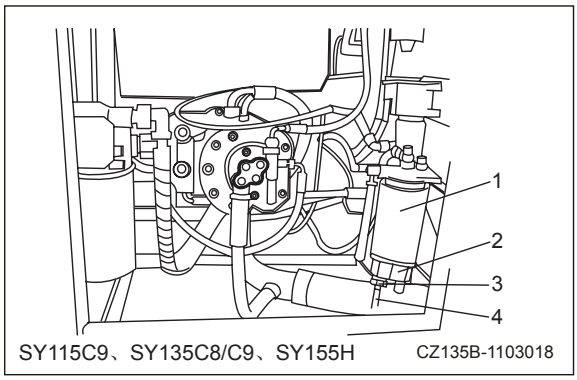

Fig. 4-4

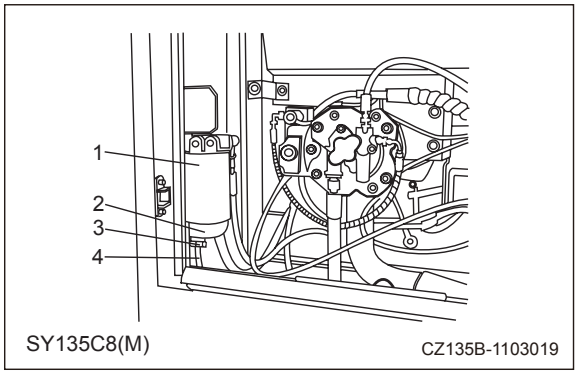

Fig. 4-5

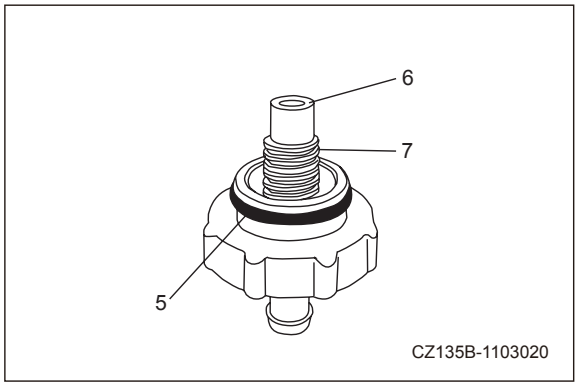

Fig. 4-6

Downloaded from www.Manualslib.com manuals search engine

https://truckmanualshub.com/

4.1.2.4 Hydraulic oil - check/refill

⚠ WARNING

- **Components and oil art still hot and can cause burns after the engine has been just shut down. Wait for them to cool down before working on them.**
- **When removing the cap for oil injection, turn it slowly to release internal pressure before removing it.**

1. Adjust the work equipment to the attitude shown by the right illustration. Check oil level. Add oil if necessary.

   For the type of hydraulic oil used on the machine see **"Recommended Fluids" on page 5-17.**

2. If the work equipment is not in the illustrated position, start the engine and run it at low speed. Properly retract the arm and bucket cylinders, lower the boom to rest the arm front end on the ground, and stop the engine.
3. Within 15 seconds after stoppage, operate work equipment joystick controls and travel control levers in all directions in order to release internal pressure.
4. Open the pump chamber door on the right in order to check the oil level gauge (G). Oil level should be maintained between H and L marks.

Note:

Never add oil to a level above the H mark, which may ruin hydraulic devices and cause oil to squirt. If the oil level is above the H mark, stop the engine and wait for the oil to cool down. Place a container under the drain plug (P) beneath the hydraulic tank and discharge excessive oil from the tank via the drain plug.

5. If the oil level is below the L mark, add oil through filler opening (F) on top of the tank.

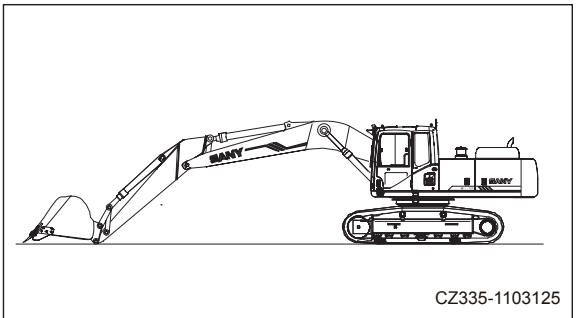

Fig. 4-7

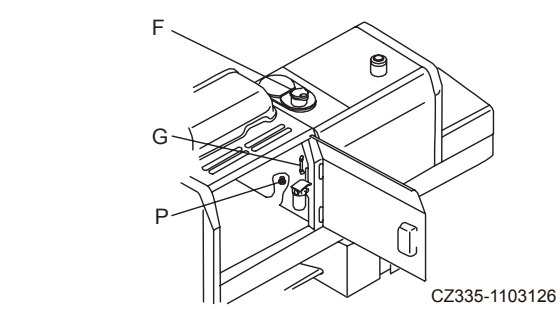

Fig. 4-8

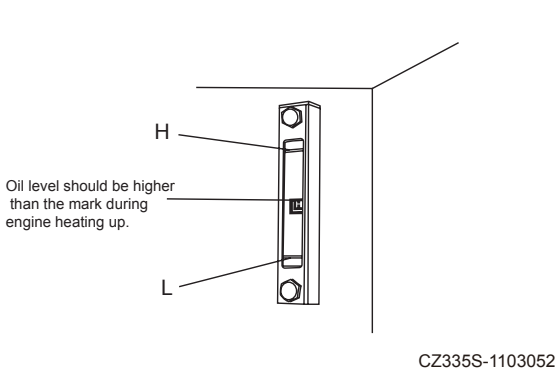

Fig. 4-9

Downloaded from www.Manualslib.com manuals search engine

https://truckmanualshub.com/

Remark:

The oil level may change as the oil temperature varies. (Refer to the following ranges.)

- Before operation: L+12.5~L+32.5
  (Oil temperature: 10 - 30°C (50 - 86°F))
- During operation: higher than the mid-mark.
  (Oil temperature: 50 - 80°C (122 -176°F))

4.1.2.5 Coolant - check/refill

WARNING

The coolant is hot and the radiator is under high pressure upon shutdown of the engine. It is possible to be burned if you remove the radiator cap (1) to check coolant level at the moment. In this case, before removing the cap (1), you have to wait for the temperature to cool down, and then slowly turn the cap to release internal pressure.

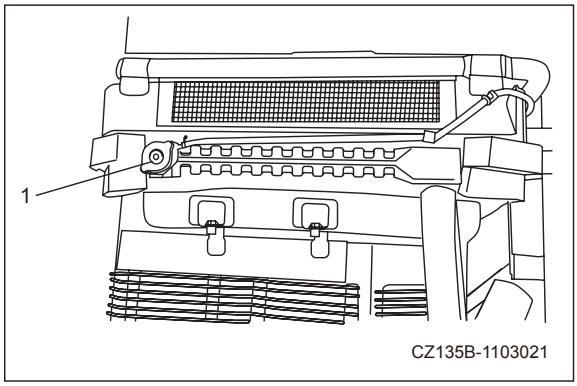

Fig. 4-10

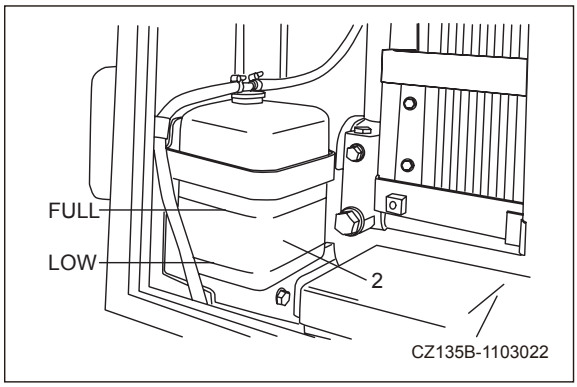

Fig. 4-11

1. The level of coolant must remain between the upper and lower limits marked on the tank when the engine is running. If water level is below the lower limit, it is necessary to add coolant to radiator and coolant to auxiliary tank.

2. Open the rear door to the left side of machine and check the coolant in auxiliary tank (2) to see whether its level is between the marks of FULL and LOW. If the coolant level is low, refill coolant to FULL position through the injection opening of auxiliary tank (2).

3. Tighten the cap after refilling the coolant.

4. If auxiliary tank (2) is empty, the coolant might leak. Correct the fault immediately

Downloaded from www.Manualslib.com manuals search engine

https://truckmanualshub.com/

after inspection. If no problem is found, check coolant level in radiator. Add coolant to auxiliary tank (2) if its level is low.

5. If auxiliary tank (2) is dirty inside and the level cannot be seen clearly, clean the tank by following the steps specified in "**Cooling system - clean**" **on page 5-37**.

4.1.2.6 Oil in engine oil pan - check/refill

WARNING

After shutting off the engine, the components and oil are still hot, which can lead to severe burns. Wait for the oil to cool down before operation.

1. Open the engine's hood.

2. Take out oil dipstick (G) and wipe the oil off the dipstick with cloth.

3. Insert the dipstick (G) to bottom and then pull it out.

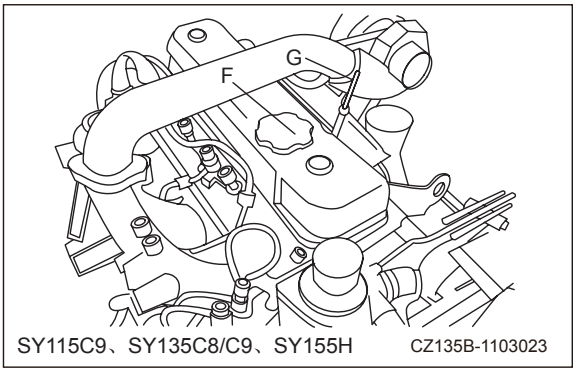

Fig. 4-12

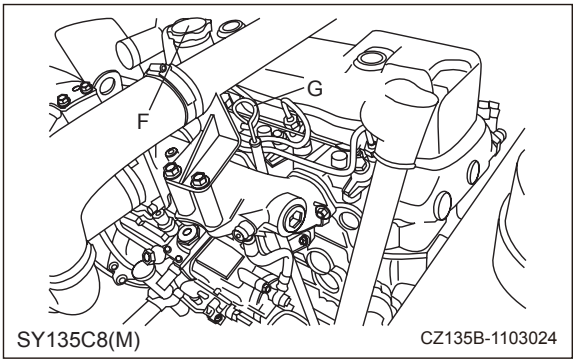

Fig. 4-13

4. Oil level should be between the H and L marks on dipstick (G). Add oil through opening (F) if oil level is below the L mark.

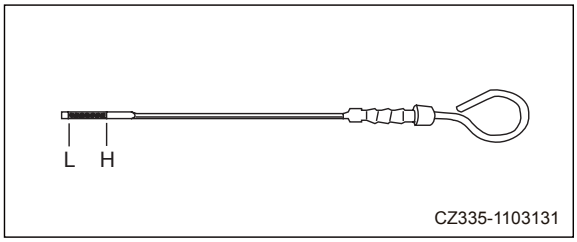

Fig. 4-14

Downloaded from www.Manualslib.com manuals search engine

https://truckmanualshub.com/

5. If oil level is above H mark, the drain valve (P) on the bottom of oil pan is to be opened to discharge extra oil. Check oil level again.

6. Tighten the filler cap and properly close the engine hood if oil level is normal.

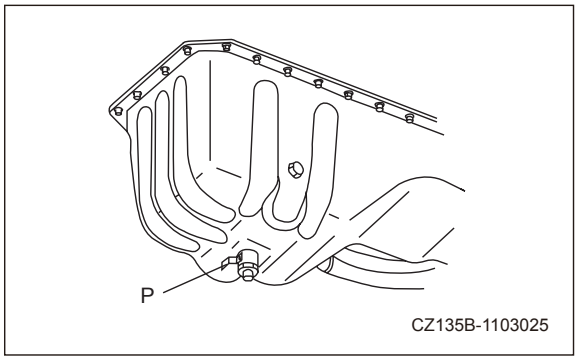

Fig. 4-15

Remark:

If you need to check oil level after operation of the engine, shut off the engine and wait at least for 15 minutes before checking.

If your machine is on a slope, move it to a level ground before inspection.

For the type of engine oil used on the machine see “**Recommended Fluids**” **on page 5-17.**

4.1.2.7 Electric wires - check

NOTICE

- **If any fuse burns frequently or any wire shows the sign of short circuit, contact your Sany distributor to find the cause and eliminate the trouble.**
- **Keep battery surface clean and check the vent on battery cover. Flush the cover to clean the vent if the vent is plugged by dirt or dust.**

Check whether the fuse is damaged; whether the fuse with proper capacity is used; whether any wire connection is off; whether wire sheath is broken.

Check for loose terminals. Fix it if any.

Moreover, pay special attention to electric wires when checking battery, engine, start motor and alternator. Make sure to check for flammable materials around battery. Immediately remove them if any.

Downloaded from www.Manualslib.com manuals search engine

https://truckmanualshub.com/

4.1.2.8 Fuel tank - check/refuel

WARNING

- **Never make fuel splash or overflow during refueling, which can cause fire.**
- **Clean the fuel completely in case of splashing. Remove the fuel if it flows onto ground or sand.**
- **Fuel is flammable and dangerous. No open fire is allowed in the vicinity of fuel.**

1. Turn the engine start switch to ON position and check the fuel level on display (1). Return the switch to OFF position after checking.

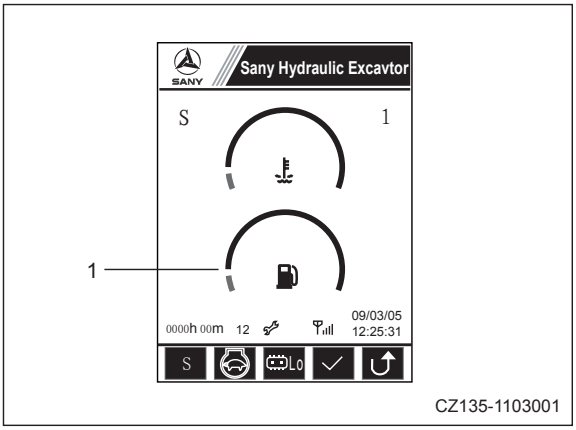

Fig. 4-16

2. In case of low fuel level, unscrew the filler cap (F) on fuel tank and add fuel to the tank till the float level meter (G) reaches the highest point.

- Fuel tank capacity: 240L

When the fuel tank is full, top (a) of the float level meter (G) is positioned at about 50mm.

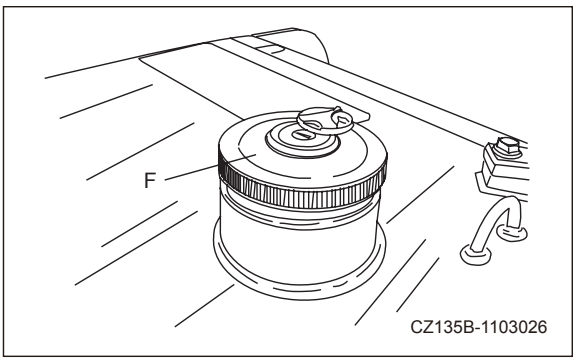

Fig. 4-17

Downloaded from www.Manualslib.com manuals search engine

https://truckmanualshub.com/

3. Add fuel and press down the float level meter (G) with the filler cap (F). Pay attention to not letting the level meter (G) be stuck on the cover plate of filler cap (F). Screw on the cap (F) tightly.

Remark:

Pressure of fuel tank may drop and fuel does not flow if the vent (2) on the cap is blocked. Clean the vent whenever necessary.

A longer travel distance is required to tighten the cover with lock. Make sure the cover is turned in position before you turn the key to lock the cover. If the key is turned when the cover is not in position, the lock plate will press against inner wall of filler opening and cause damage to lock cylinder.

Be sure to have a clean O-ring seal in lock cover. If the seal is contaminated by iron scraps, stone pieces or other foreign bodies, it would be damaged during tightening and improper sealing of lock cover could result.

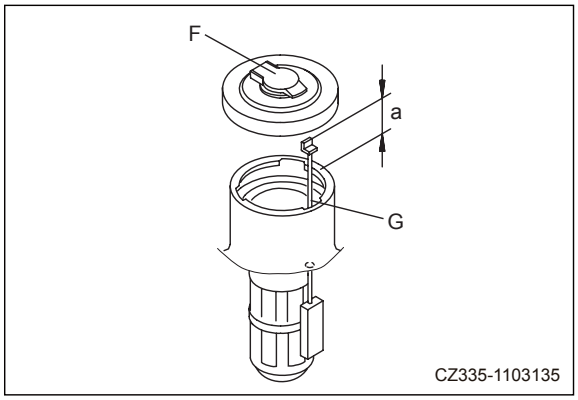

Fig. 4-19

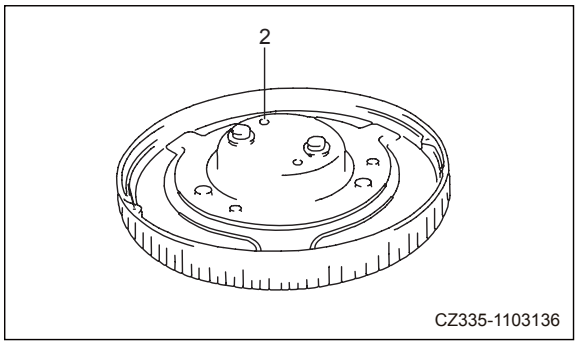

Fig. 4-20

4.1.2.9 Work lamp switch - check

Check the work lamps for normal functioning.

Check for any dirt or damage.

If any lamp does not work, the bulb may be burned or broken circuit may be present. Please contact Sany distributor for repair.

1. Turn the start switch to the ON position.

2. Switch on the work lamp and check if it lights up.

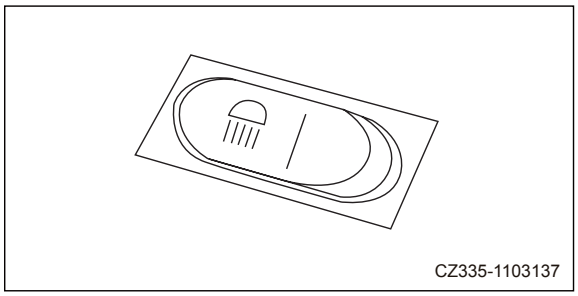

Fig. 4-18

Downloaded from www.Manualslib.com manuals search engine

https://truckmanualshub.com/

4.1.2.10 Horn - check

1. Turn the start switch to the ON position.

2. The horn sounds immediately when the horn button is pressed. Make sure that the horn sounds normally. In case of dead horn or abnormal sound, please contact Sany distributor for repair.

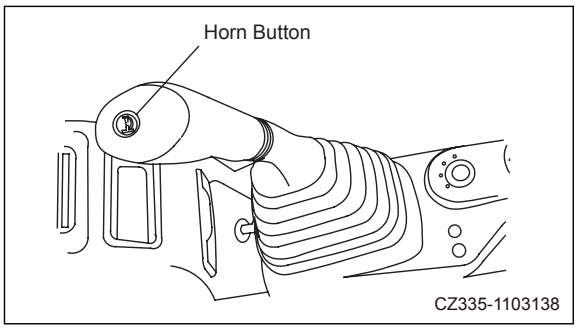

Fig. 4-21

4.1.3 Adjustment before operation

- It is necessary to adjust seat position before operating or after changing operator.
- Adjust the seat so as to enable operator to easily manipulate the control levers, pedals and switches from the seat.

4.1.3.1 Operator seat

(A) Forward and backward adjustment

Pull the lever (1) upward, slide the seat to desired position, and release the lever.

Adjustment space: 200mm (10mm for each adjustment)

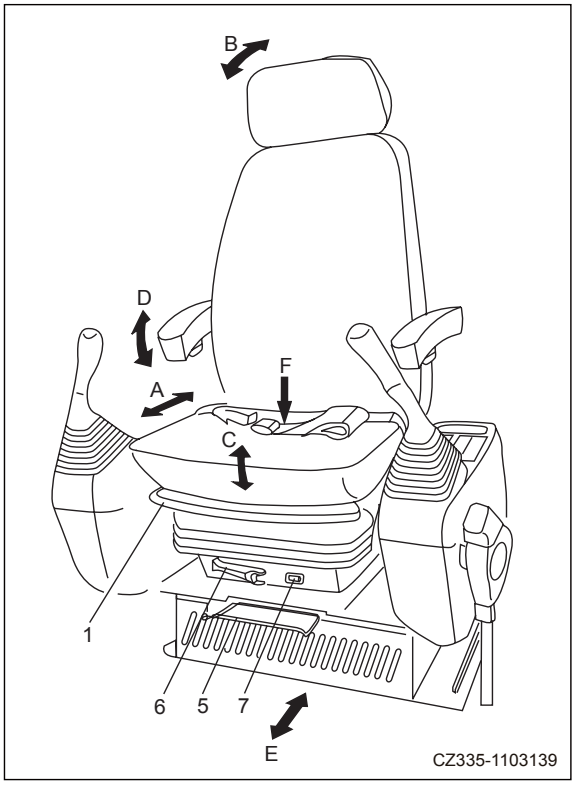

Fig. 4-22

Downloaded from www.Manualslib.com manuals search engine

https://truckmanualshub.com/

(B) Backrest adjustment

Lift lever (2), move the backrest to an optimum position at where operation can be easily conducted, and release the lever.

Make sure the backrest does not interferes with the cover plate of the air conditioner at rear when adjusting the inclination of backrest. Be careful with the control levers, which shall not be touched by armrest.

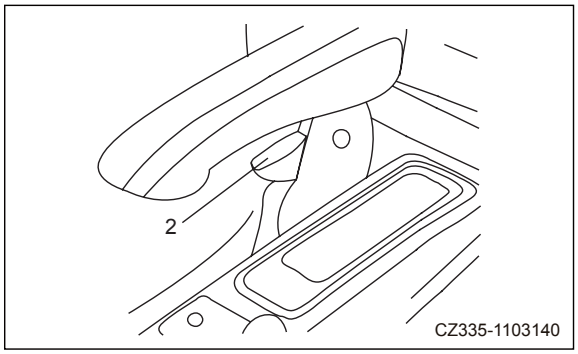

Fig. 4-23

(C) Height adjustment

The seat can be raised by 30 mm when you hear a "click" sound, and another 30 mm at the second "click". The seat can be lowered to the minimum height if you continue to raise it.

Adjustable height: 60mm (30mm for each adjustment)

(D) Armrest angle adjustment

Turning the plate (4) beneath armrest (3) can adjust the angle of armrest to desired position.

The armrest can be placed vertically so that the operator could leave the seat easily.

Adjustable angle: 40°

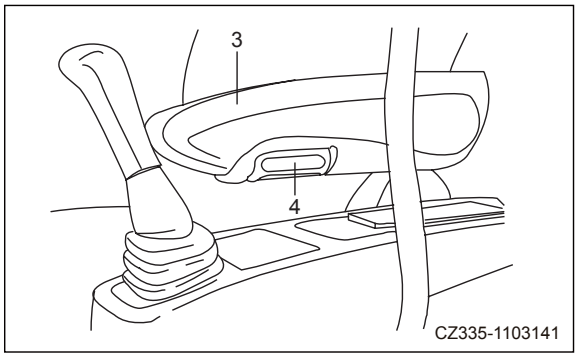

Fig. 4-24

Downloaded from www.Manualslib.com manuals search engine

https://truckmanualshub.com/

(E) Adjust the seat forward and backward as a whole

Pull the lever (5), slide the seat to desired position, and release the lever. In this case, the operator seat moves along with both armrest boxes and pilot hydraulic lockout control.

(F) Suspension adjustment (if equipped)

Turning the lever (6) counterclockwise will bring you a hard suspension which is suitable for heavy operator; turning the lever (6) clockwise will bring you a soft suspension which is suitable for light operator.

Remark:

To achieve the best adjustment, adjust the reading (kg) on dial (7) to weight of operator.

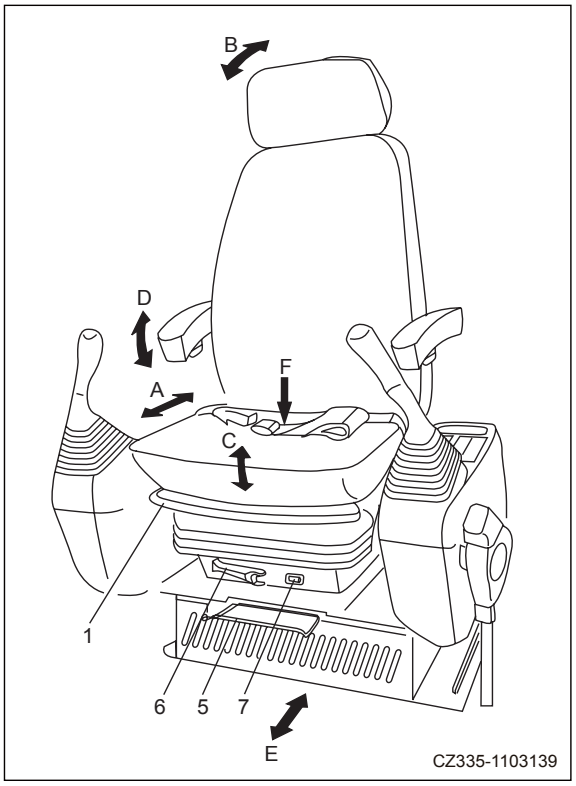

Fig. 4-26

4.1.3.2 Rear view mirrors

⚠ WARNING

The rear mirrors must be adjusted before operation. Without proper adjustment, a good visibility cannot be ensured and which may lead injury.

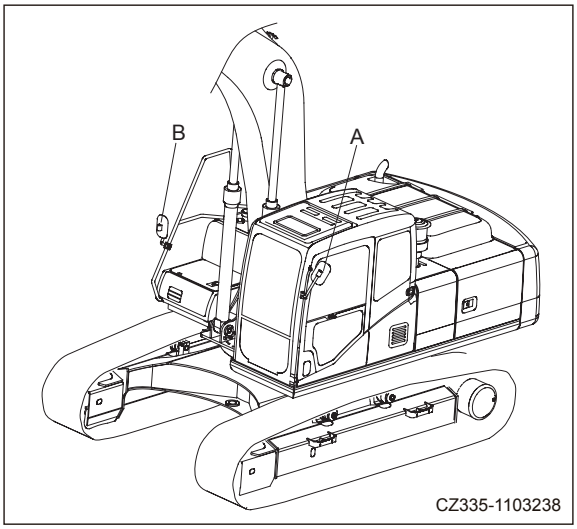

Fig. 4-25

Downloaded from www.Manualslib.com manuals search engine

https://truckmanualshub.com/

Rear mirror (A)

Adjust installation of rear mirror (A) so that people to rear left of machine can be seen clearly.

Install rear mirror (A) to the position as shown in the right illustration.

Turn the rod (1) around rod (4) to a suitable position and fix rod (1).

When adjusting mirror angle, if the mirror cannot move smoothly, you may loosen bolt (2) and bolt (3) to release the mirror.

Torque of bolt (2):

4.0~5.4 N·m (0.41~0.55 kgf·m)

Adjustment of rear mirror is accomplished when side of machine can be seen in the mirror, as shown in the right illustration.

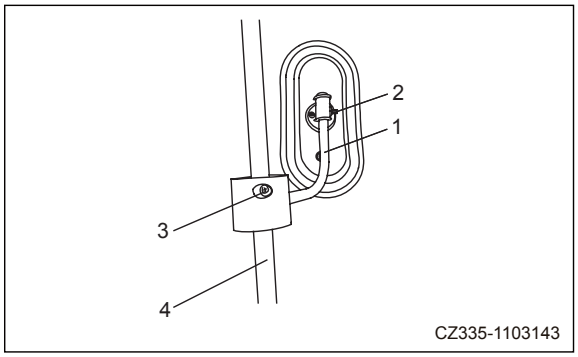

Fig. 4-27

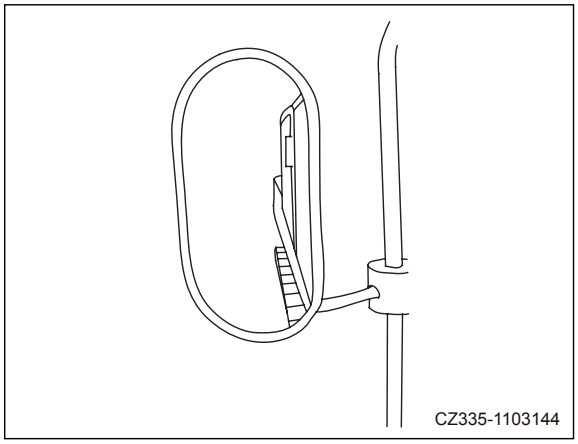

Fig. 4-28

Rear mirror (B)

Adjust installation of rear mirror (B) so that people to rear right of machine can be seen clearly.

Install rear mirror (B) to the position as shown in the right illustration.

M: 120 mm

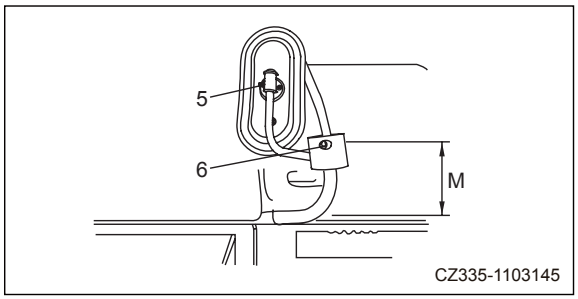

Fig. 4-29

Downloaded from www.Manualslib.com manuals search engine

https://truckmanualshub.com/

When adjusting mirror angle, if the mirror cannot move smoothly, you may loosen bolt (5) and bolt (6) to release the mirror.

Torque of bolt (5): 4.0~5.4 N·m

(0.41~0.55 kgf·m)

Adjustment of rear mirror is accomplished when side of machine can be seen in the mirror, as shown in the right illustration.

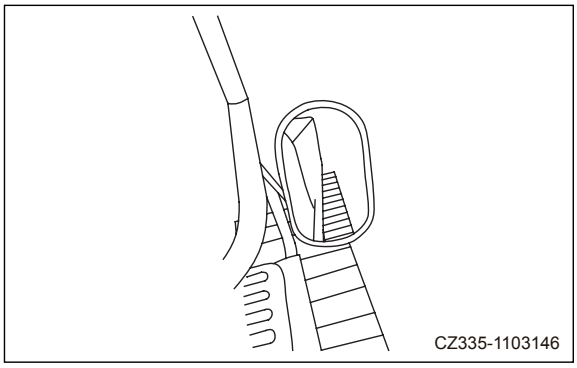

Fig. 4-30

4.1.3.3 Seat belt

- Check the condition of the seat belt and the buckle before you fasten it. Replace the belt if excessive wear or damage is observed.
- Replace the seat belt every 3 years regardless of its condition. See the production date on the back of the belt.
- Be sure to fasten your seat belt during machine operation.
- Never twist the seat belt.

Buckle up and release

The seal belt has a coiler, and belt length needs no adjustment.

1. Buckle up

   Hold clip (2) and pull the belt out of coiler (1). Check that there is no twist on the belt and insert catch (3) into buckle (4).

   Check if the belt has been fastened by pulling it slightly.

2. Release

   Press button (5) on buckle (4) to release catch (3). The belt will retract into the coiler automatically.

   Hold clip (2) so that the belt retract slowly into the coiler.

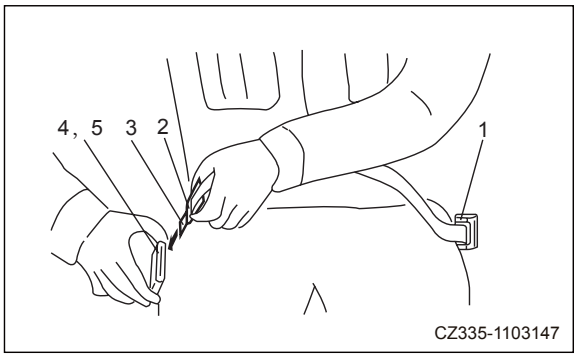

Fig. 4-31

Downloaded from www.Manualslib.com manuals search engine

https://truckmanualshub.com/

4.1.4 Before Starting the Engine

WARNING

- **Before starting the engine, check the hydraulic lockout control whether it is secured in "locked" position.**
- **If the hydraulic lockout control is not secured in position, accidental touching of control lever or pedal when starting the engine may lead to unexpected movement of machine, which could cause serious accident.**
- **When rising from operator seat, make sure the hydraulic lockout control is in LOCK position, regardless of that the engine is running or not.**

1. Check if the hydraulic lockout control (1) is in the LOCK position (L).
2. Check if all control levers and pedals are in a NEUTRAL position. They should remain in NEUTRAL position if left touched.

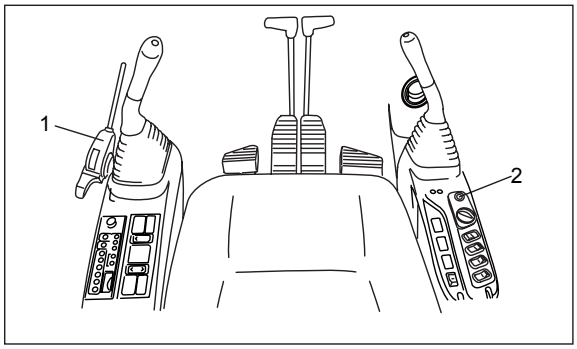

Fig. 4-32

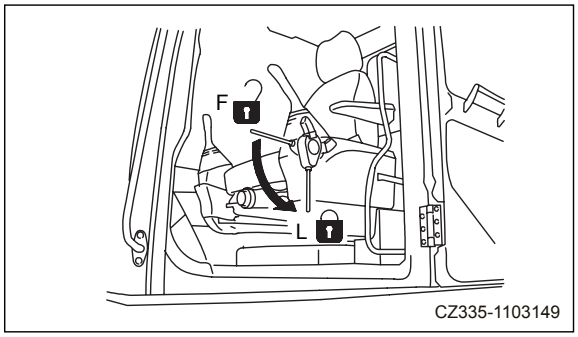

Fig. 4-33

Downloaded from www.Manualslib.com manuals search engine

https://truckmanualshub.com/

3. Insert your key into start switch (2), turn the key to ON position (B), and then check the following:

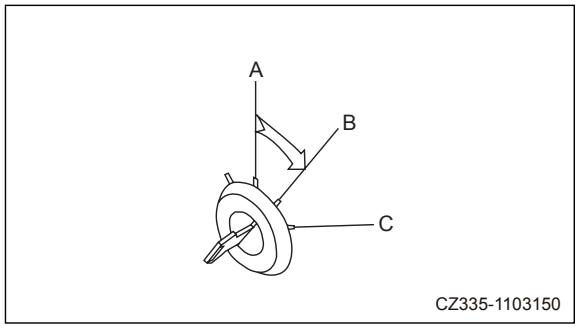

Fig. 4-34

Two seconds after the key is turned to ON position, default screen will be displayed under normal condition, as shown in the right illustration.

- Engine coolant temperature gauge (3)
- Fuel level gauge (4)
- Failure code (5)

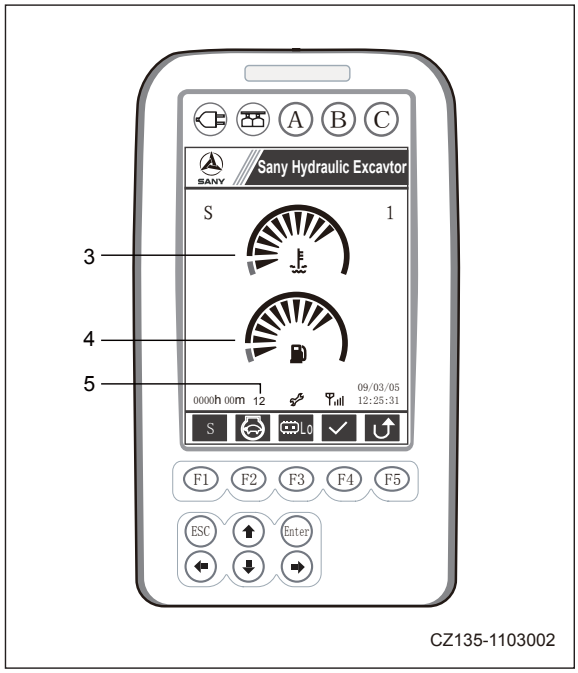

Fig. 4-35

Downloaded from www.Manualslib.com manuals search engine

https://truckmanualshub.com/

4.2 Engine Starting

WARNING

- **Always start the engine from the operator seat.**
- **Never start the engine in a way that may cause short circuit, which can lead to serious injury or fire.**
- **Sound the horn and start the engine after you have confirmed that the surrounding area is clear of personnel or barriers.**
- **Never use start-assisting solution as which may cause explosion.**
- **Exhaust gas is poisonous. Pay special attention to keeping a good ventilation when starting the engine in an enclosed space.**

Note:

- Before starting the engine, check that the fuel control dial (2) is in MIN position for low idling speed. If the knob is in MAX position, starting the engine can lead to sudden acceleration and damage to its parts.
- Never keep the ignition key in START position for more than 20 seconds. If the engine fails to start, wait at least two minutes before restarting it.
- After the engine is started, operation is not allowed until oil pressure stays in the normal range. Never manipulate any control lever or pedal in case of abnormal oil pressure.

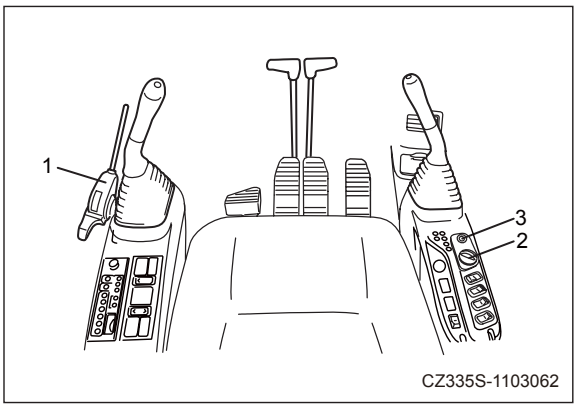

Fig. 4-36

Downloaded from www.Manualslib.com manuals search engine

https://truckmanualshub.com/

1. Check if the hydraulic lockout control (1) is in the LOCK position (L). If it remains in FREE position (F), the engine cannot be started.

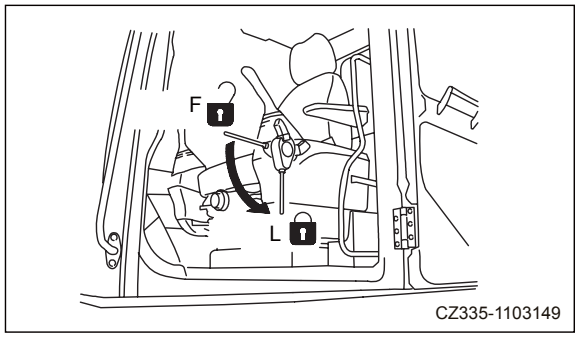

Fig. 4-37

2. Turn the fuel control dial (2) to MIN position.

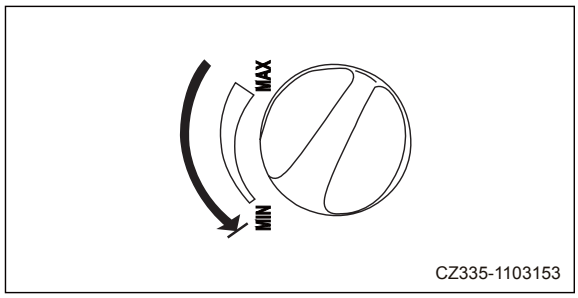

Fig. 4-38

3. Turn the ignition key to ON position (B).

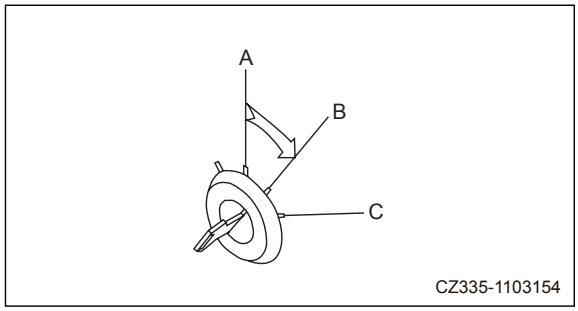

Fig. 4-39

Downloaded from www.Manualslib.com manuals search engine

https://truckmanualshub.com/

4. Turn the ignition key to START position (C).

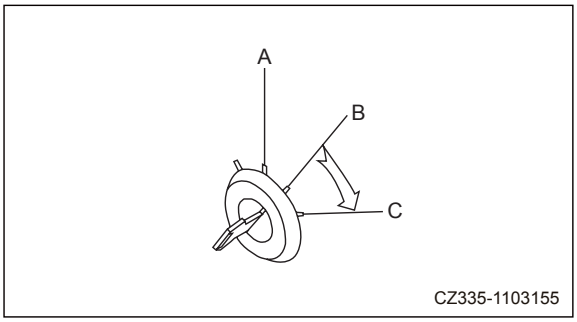

Fig. 4-40

5. Release the key (3) after starting the engine. The key will be back to the ON position (B) by itself.

Remark:

When ambient temperature is low, the engine may fail to start after the start switch is kept at START position for more than 10 seconds. In this case, wait at least for 1 minute before re-starting the engine.

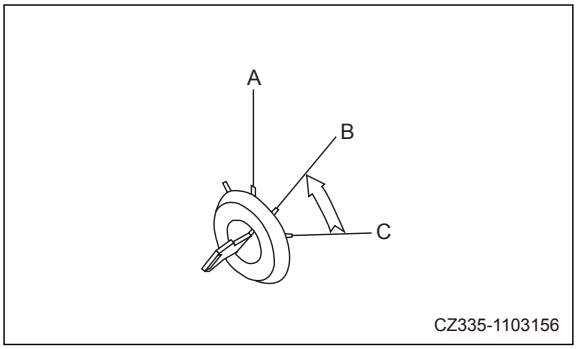

Fig. 4-41

6. Wait until engine oil pressure alarm is reset even if the engine is started. Never maneuver any control lever or pedal when engine oil is abnormal.

Note:

If oil pressure remains abnormal after 4-5 seconds, immediately shut down the engine, check oil level and check for oil leak. Take necessary actions in case of abnormality.

Downloaded from www.Manualslib.com manuals search engine

https://truckmanualshub.com/

4.2.1 Engine Preheating

When ambient temperature is below 10ºC, it is necessary to preheat the engine before starting.

1. For model SY135C8M

   Turn the fuel control dial to MIN position (b), and turn the ignition key to HEAT position (a). At the same time, switch on the preheat switch. When preheating indicator (c) lights, engine preheating begins. See the following table for preheating period.

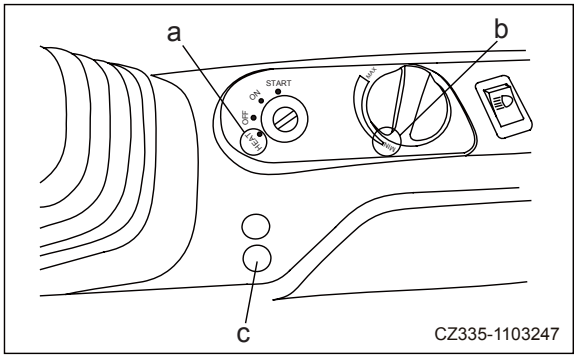

Temperature (ºC)	0~10	-10~0	<-10
Preheating period	10s	20s	30s

2. For models SY115C9, SY135C8, SY 135C9 and SY155H

   Turn fuel control dial to the MIN position (b). Turn ignition key to the HEAT position (a). The preheat indicator (c) will be on and the engine begins preheating. The preheat indicator (c) will be off after preheating. The engine is now ready to start up.

   - After preheating, turn the ignition key to the START position (C) to start the engine.
   - If the engine fails to start, wait at least one(1) minute before re-preheating and restarting the engine.

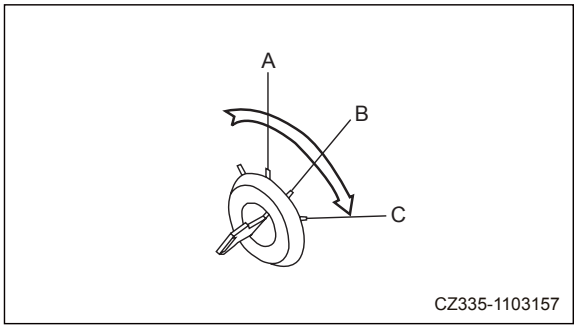

Downloaded from www.Manualslib.com manuals search engine

https://truckmanualshub.com/

4.2.2 Warm-up operation

⚠ WARNING

- **In case of emergency, abnormal running of engine, or other faults, turn the start switch to OFF position and shut off the engine.**
- **Never operate any control lever or pedal suddenly when temperature of hydraulic oil is low. Make sure to preheat the machine till temperature of hydraulic oil rises to a suitable point.**
- **Failure code 37 will be displayed when hydraulic oil becomes abnormal in temperature.**
- **If the machine has not been preheated completely, it may fail to respond or move suddenly and quickly during operation, and cause serious accidents. Complete warming-up is especially necessary in cold region.**
- **Never accelerate your machine suddenly before finishing preheat operation. Never continuously run the engine at low or high speed for more than 20 minutes, which may cause leaks in oil supply pipe of turbo charger. If the engine has to be run at idle speed, it is necessary to add load to it or run it at a moderate speed.**

Never enter into operation immediately after starting the engine. Proceed and check the following items:

1. Adjust fuel control dial to make the engine run unloaded at low speed (about 1,100 rpm) for about five minutes.
2. Adjust fuel control dial to make the engine run at moderate speed (about 1,400 rpm), and then slowly operate the bucket for five minutes.
3. Adjust fuel control dial to make the engine run at high speed, and operate the boom, arm and bucket for 5-10 minutes.
4. Cycle each action of excavator for several times before ending the preheat operation.
5. Check all gauges for normal display after preheating the machine.

   Continue to preheat the machine if coolant temperature (see display) and hydraulic oil temperature (50~80℃) fail to reach normal values.
6. Check exhaust color, noise or vibration for abnormality. Repair it if any.

4.2.3 Selecting a working mode

Press the working mode selection key F1 on machine monitor to choose a mode you want.

For more information see “**Working mode**” **on page 4-37**.

Downloaded from www.Manualslib.com manuals search engine

https://truckmanualshub.com/

4.3 Engine Shutdown

Remark:

- Shutting off the engine suddenly may considerably reduce service life of its components.
- Never shut off the engine suddenly except for emergency.
- Never shut off the engine suddenly if the engine is too hot. Run the engine at low idle in order to let it cool down gradually. Stop the engine.

1. Run the engine at idle speed for about five minutes to cool it down gradually.
2. Turn the start switch key (1) to OFF position (A) to shut off the engine.
3. Remove the key (1) from the start switch.

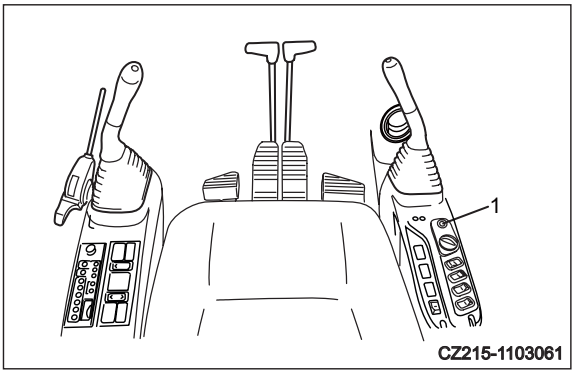

Fig. 4-42

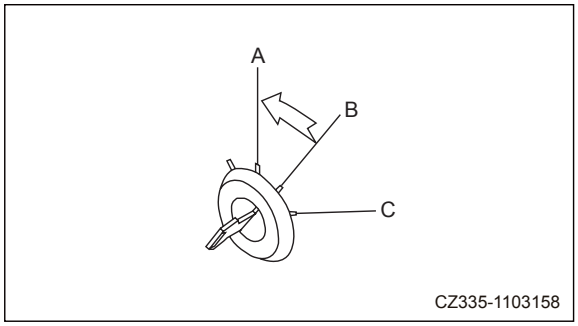

Fig. 4-43

Downloaded from www.Manualslib.com manuals search engine

https://truckmanualshub.com/

4.4 Machine Operation

WARNING

- **Check the surrounding of machine for safety and sound the horn before moving the machine.**
- **Nobody is allowed to enter the area around the machine.**
- **Remove any barriers from the travel route.**
- **There is a blind area behind the machine. Therefore, pay special attention to reverse travel.**
- **Check alarm devices for normal functioning before moving the machine.**

Check the correct travel direction before operating travel control lever or pedal. If the track frame faces the rear (behind the sprockets), the machine will move in a direction opposite to the operating direction of travel control lever or pedal (Both the forward and backward travels are reversed, and the leftward and rightward travels as well).

4.4.1 Before moving the machine

(1) Fuel control dial
(2) Hydraulic lockout control
(3) Travel control levers
(4) Travel control pedals

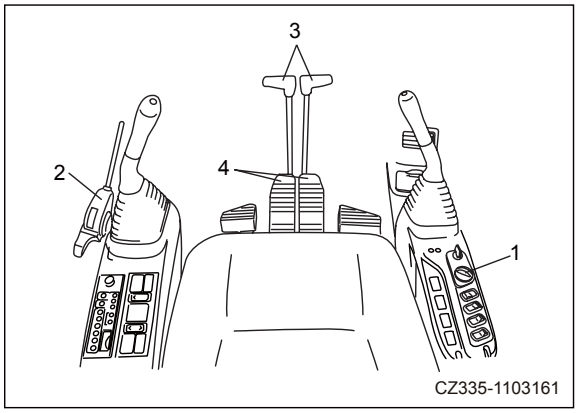

Fig. 4-44

Turn the fuel control dial in the MAX direction to the desired position in order to increase engine speed.

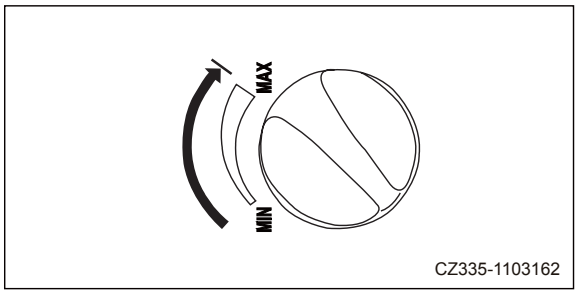

Fig. 4-45

Downloaded from www.Manualslib.com manuals search engine

https://truckmanualshub.com/

4.4.2 Moving the machine forward

1. Place the hydraulic lockout control to the FREE position (F), and retract the work equipment till it is 40-50 cm above the ground, as shown in the right illustration.

- If you never have a good visibility to the right, raise the boom to ensure a good visibility.

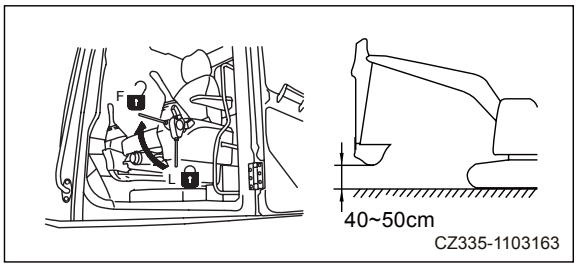

Fig. 4-46

2. Operate the left and right travel control levers or the left and right travel pedals according to the following instruction:

- When the sprocket (A) is under the rear part of machine:

  Slowly push the control lever or slowly push down the front part of pedal to move the machine.

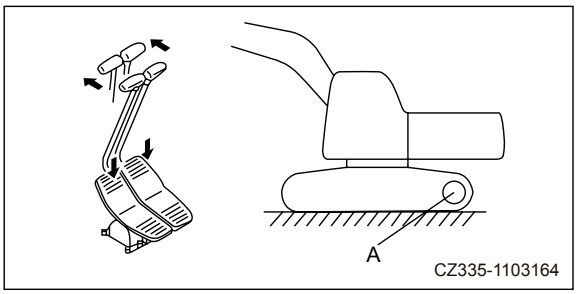

Fig. 4-47

- When the sprocket (A) is under the front part of machine:

  Slowly pull the control lever or slowly push down the rear part of pedal to move the machine.

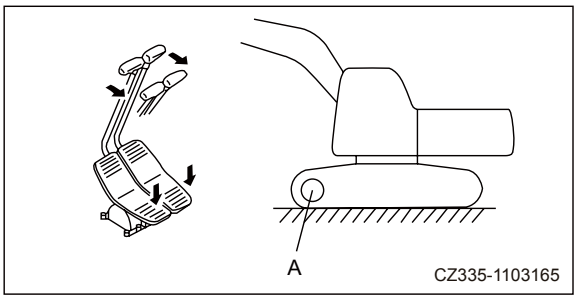

Fig. 4-48

Remark:

Fully preheat your machine if its travel speed is abnormal in cold weather. In addition, if the undercarriages is stuck with mud and the machine's travel speed becomes irregular, it is necessary to remove the mud from the undercarriage.

Downloaded from www.Manualslib.com manuals search engine

https://truckmanualshub.com/

4.4.3 Moving the machine backward

1. Place the hydraulic lockout control to the FREE position (F), and retract the work equipment till it is 40-50 cm above the ground, as shown in the right illustration.

- If you never have a good visibility to the right, raise the boom to ensure a good visibility.

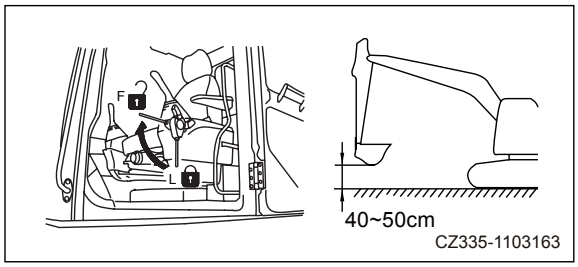

Fig. 4-49

2. Operate the left and right travel control levers or the left and right travel pedals as the following:

- When the sprocket (A) is under the rear part of machine:

  Slowly pull the control lever or slowly push down the rear part of pedal to move the machine backward.

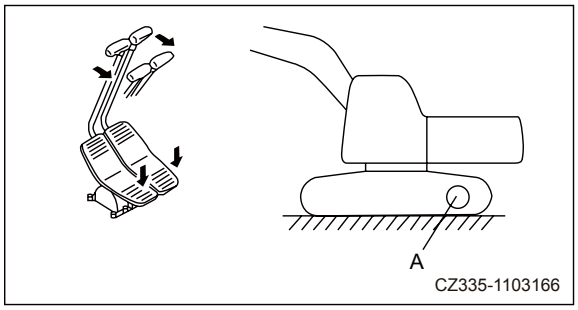

Fig. 4-50

- When the sprocket (A) is under the front part of machine:

  Slowly push the control lever or slowly push down the front part of pedal to move the machine backward.

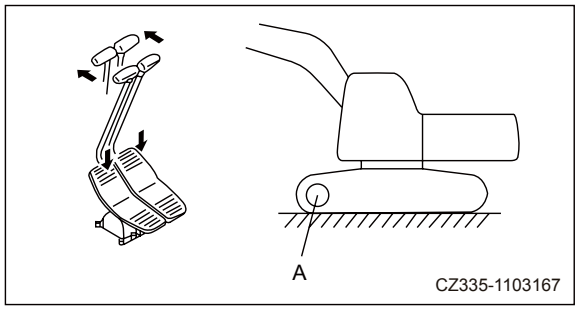

Fig. 4-51

Remark:

Fully preheat your machine if its travel speed is abnormal in cold weather. Moreover, if the tracks are stuck by mud and the machine's travel speed becomes irregular, it is necessary to remove the mud from the tracks.

Downloaded from www.Manualslib.com manuals search engine

https://truckmanualshub.com/

4.4.4 Parking the machine

Never park your machine suddenly.

Before parking your machine, leave yourself enough space so that you could leave the machine easily.

Place the left and right travel control levers (1) to neutral position before parking your machine.

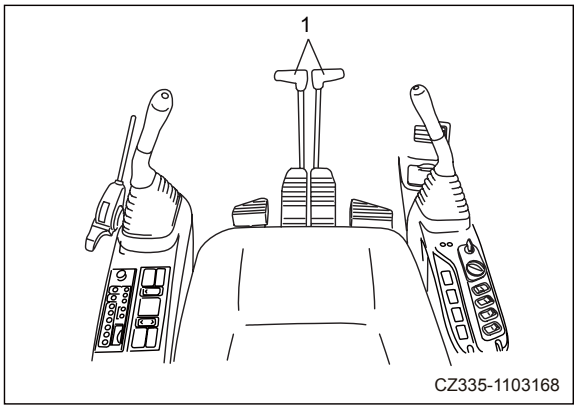

Fig. 4-52

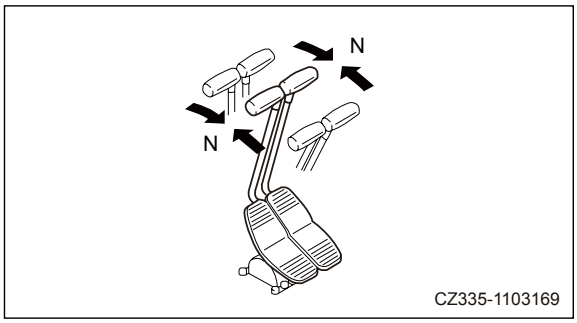

Fig. 4-53

Downloaded from www.Manualslib.com manuals search engine

https://truckmanualshub.com/

4.5 Steering Operation

Check the direction of track frame (position of sprocket) before maneuvering the travel controls. When the operator faces the sprockets, moving direction of travel controls is opposite to travel direction of machine.

4.5.4.1 Steering with travel controls

Avoid changing travel direction suddenly if possible. Stop your machine before making a turn, especially before a pivot turn.

Operate travel controls (1) according to the following instructions.

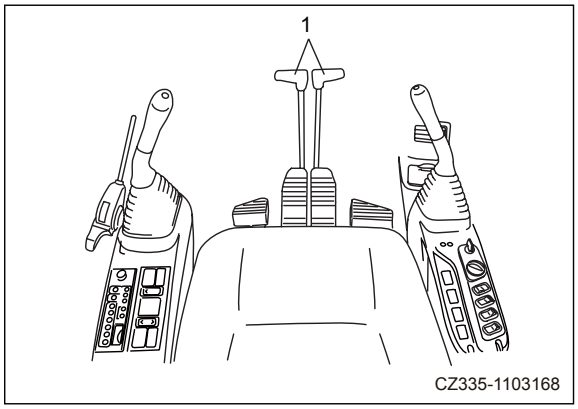

Fig. 4-54

4.5.4.2 Steering with machine stopped

When turning to the left side:

Push the right travel control lever to turn the machine to the left side in forward travel.

Pull the right travel control lever to turn the machine to the left side in backward travel.

(A) Turning left in forward travel

(B) Turning left in backward travel

Remark:

Operate the left travel control lever in the same way to turn your machine to the right side.

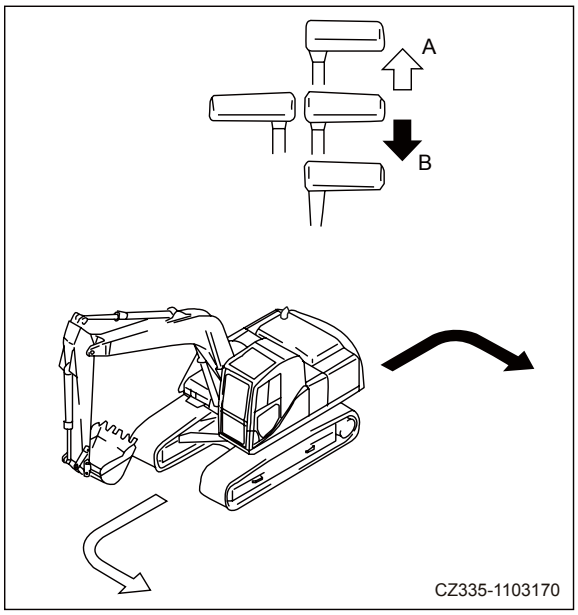

Fig. 4-55

Downloaded from www.Manualslib.com manuals search engine

https://truckmanualshub.com/

4.5.4.3 Steering during traveling

When turning to the left side:

Place the left travel control lever in the neutral position to turn your machine to the left side during traveling.

(A) Turning left during forward travel

(B) Turning left during backward travel

Remark:

Operate the right travel control lever in the same way to turn your machine to the right side during traveling.

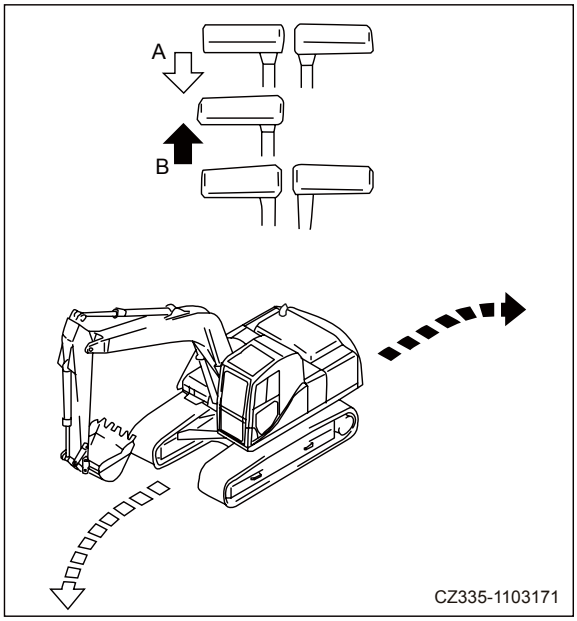

Fig. 4-56

4.5.4.4 Pivot turn

Pull the left travel control lever and push the right one to make a pivot turn to the left side.

Remark:

Pull the right travel control lever and push the left one to make a pivot turn to the right side.

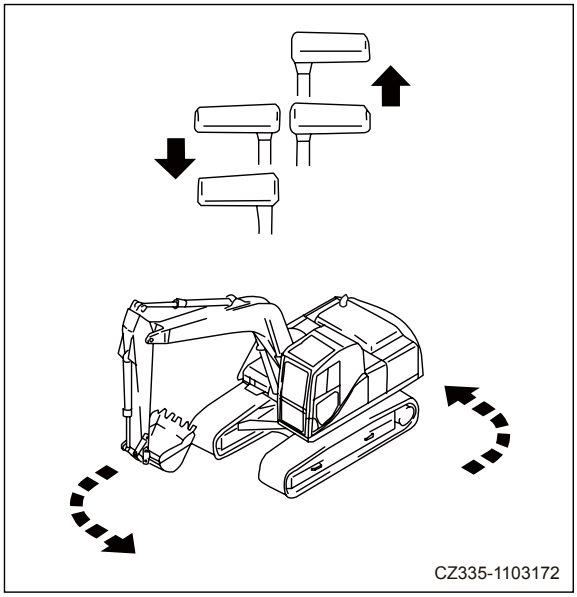

Fig. 4-57

Downloaded from www.Manualslib.com manuals search engine

https://truckmanualshub.com/

4.5.1 Swing operation

- When the rear part of the machine is positioned away from the track, check whether the surrounding area of the machine is safe before carrying out swinging operation.
- When the engine's speed decreases due to automatic idling function, the engine's speed could increase abruptly if any control lever is maneuvered. Be careful with the operation of control levers.

Maneuver the left joystick (1) in the illustrated directions to swing the turntable of upper structure.

(A) Swing to left

(B) Swing to right

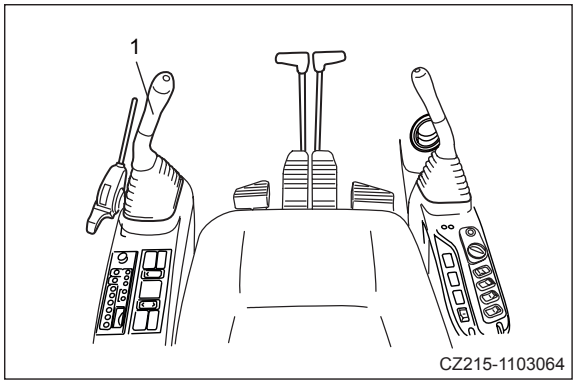

Fig. 4-58

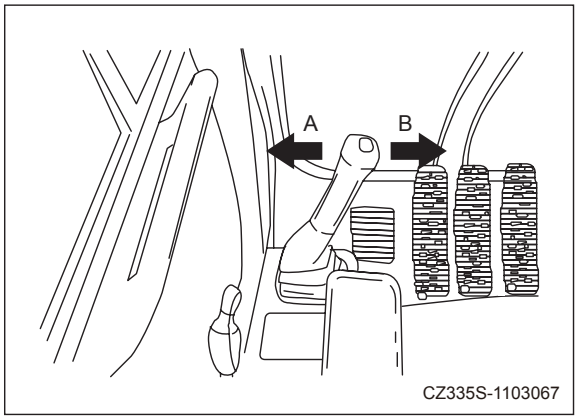

Fig. 4-59

Downloaded from www.Manualslib.com manuals search engine

https://truckmanualshub.com/

4.6 Work Equipment Control and Operation

CAUTION

Operation of the control levers while the engine is idling may cause engine speed to increase abruptly. Be careful with the operation of joystick controls.

Work equipment is controlled through the joysticks.

Note that joystick control will return to neutral position when released and movement of work equipment will be held.

- Arm control

Push or pull the left joystick to control arm operation.

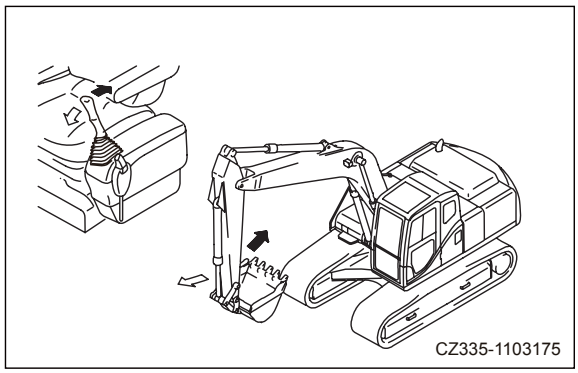

Fig. 4-60

- Swing control

Move the left joystick left or right to control swing operation.

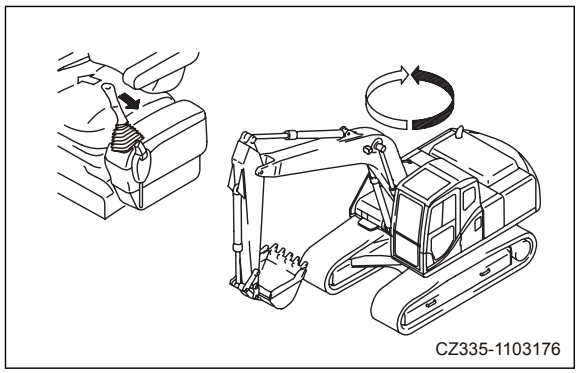

Fig. 4-61

Downloaded from www.Manualslib.com manuals search engine

https://truckmanualshub.com/

- Boom control

Push or pull the right joystick to control boom operation.

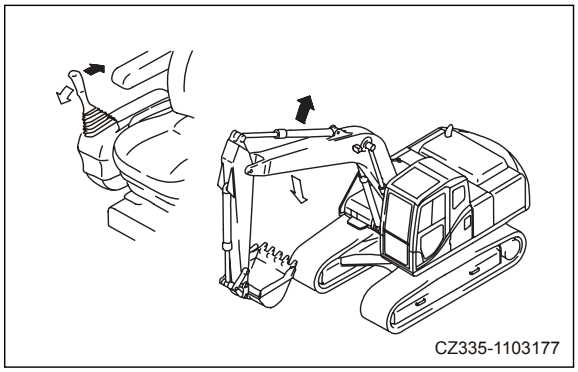

Fig. 4-62

- Bucket control

Move the right joystick left or right to control bucket operation.

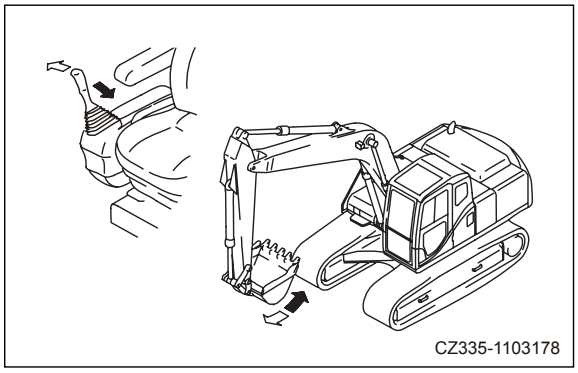

Fig. 4-63

When joystick control is in the neutral position, the auto deceleration system will be activated to lower engine speed to a moderate level if no operation is performed within 5 seconds. This will happen even if you turn the fuel control dial to the MAX position.

Remark:

This machine includes an energy accumulator installed in oil control lines. Turning the start switch key to ON position and placing the hydraulic lockout control to the FREE position, within 15 minutes after shutting off the engine, allows you to maneuver the control levers to lower the work equipment to ground.

This method can also be used to release the remaining pressure of hydraulic system, or to lower the boom after the machine has been loaded onto a trailer.

Downloaded from www.Manualslib.com manuals search engine

https://truckmanualshub.com/

4.7 Working mode

The working modes selection switch (1) is used to select a mode suitable for your working condition and purpose. In this way, effective operation can be achieved.

Select the most effective working modes through the following steps:

- Default working modes H will be displayed when the start switch is ON.
- Working modes selection key F1 is used to set the optimum mode according to operating practices.

When pressing down the working modes selection key (1), the working modes will be cycled (H → S → L → B) at (2) on the screen.

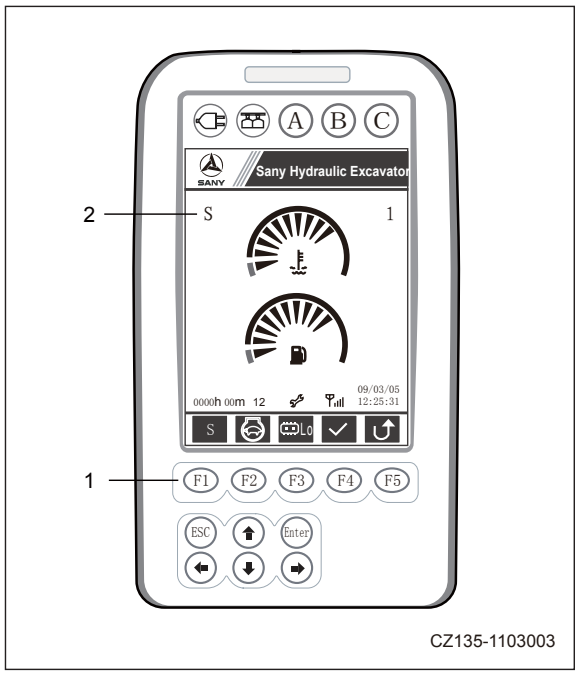

Fig. 4-64

Mode	Suitable Operations
H	Heavy-loaded operation for such as ore excavation
S	Standard operation for such as earth removing
B	Breaking operation performed with breaker
L	Light-loaded operation for leveling ground or trimming a slope.

Note:

If breaking operation is performed in a mode other than mode B, the hydraulic unit could be damaged.

Never perform breaking operation in a mode other than mode B.

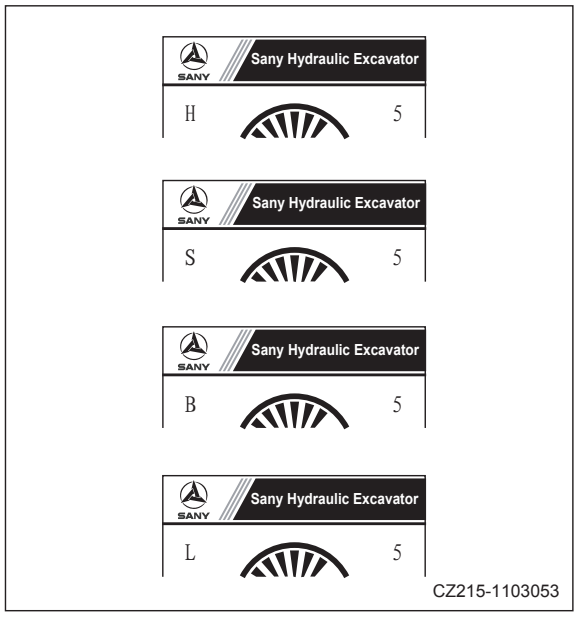

Fig. 4-65

Downloaded from www.Manualslib.com manuals search engine

https://truckmanualshub.com/

4.8 Restricted Operations

- Never maneuver the control levers of the work equipment when the machine is traveling. Stop the machine before maneuvering any control lever.
- The engine's speed could increase abruptly if you maneuver any control lever when the automatic idling function is active.

4.8.1 Operation with swinging force

Never use the swinging force to compact the ground or break objects. Doing this is dangerous. In addition, the service life of machine would be reduced considerably.

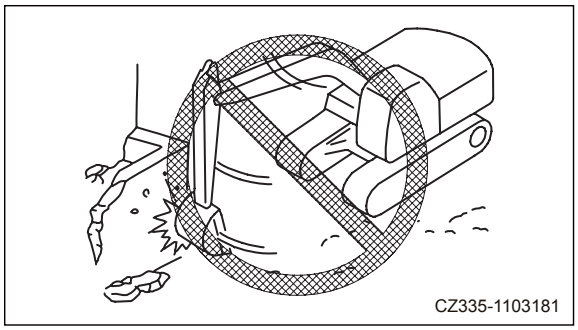

Fig. 4-66

4.8.2 Operation with traveling force

Never cut your bucket into ground and use the traveling force to excavate, which could damage your machine or work equipment.

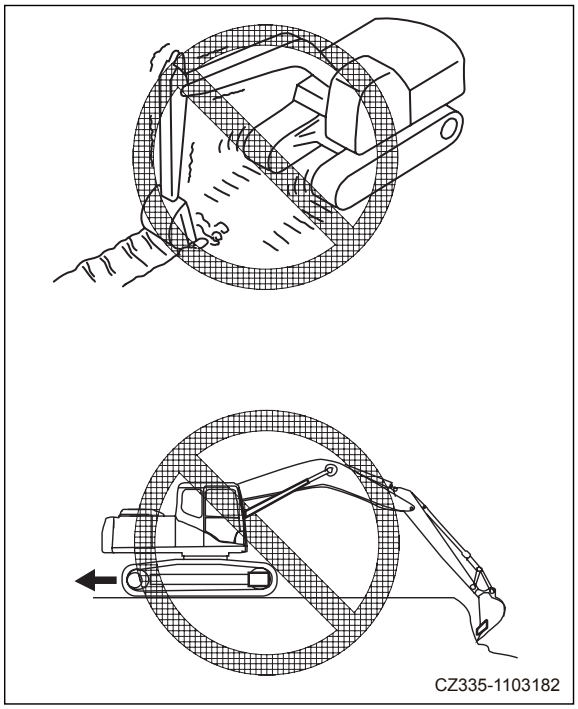

Fig. 4-67

Downloaded from www.Manualslib.com manuals search engine

https://truckmanualshub.com/

4.8.3 Operation when hydraulic cylinder reaches its stroke end

If the cylinder's piston reaches its end of stroke, using the work equipment under external impact could damage hydraulic cylinder and cause personal injury. Avoid operating the machine when its hydraulic cylinder is fully retracted or extended.

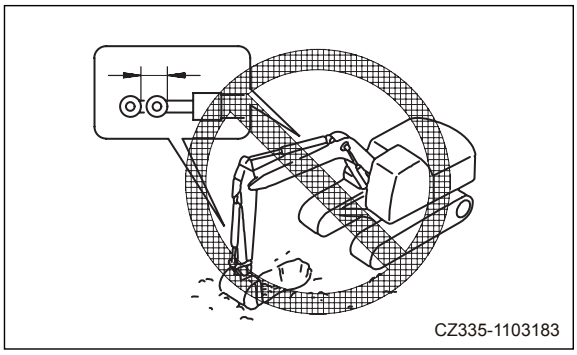

Fig. 4-68

4.8.4 Operation with bucket landing force

1. Never use the bucket's landing force for excavating, digging, breaking or pile-driving operation, which may otherwise reduce the service life of the machine considerably.

2. To avoid damage of hydraulic cylinders, never use the bucket to strike or compact the ground while its cylinder is fully extended or retracted.

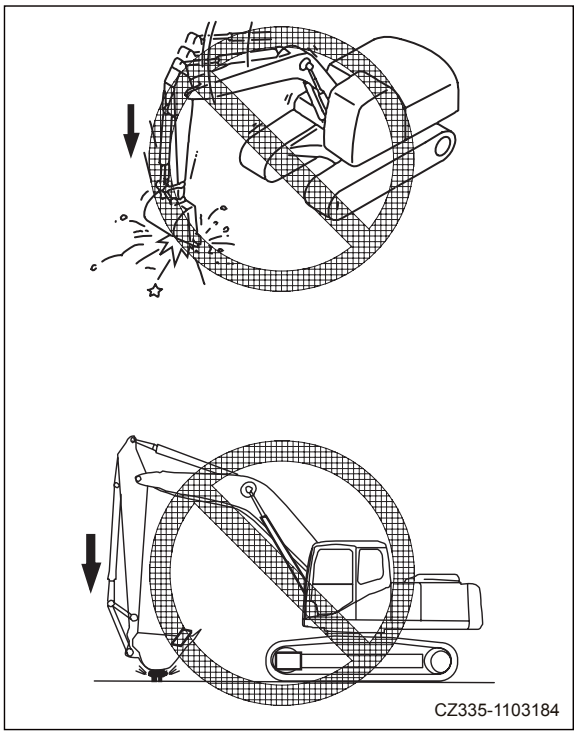

Fig. 4-69

Downloaded from www.Manualslib.com manuals search engine

https://truckmanualshub.com/

4.8.5 Operation with machine weight

Never use the weight of machine to excavate.

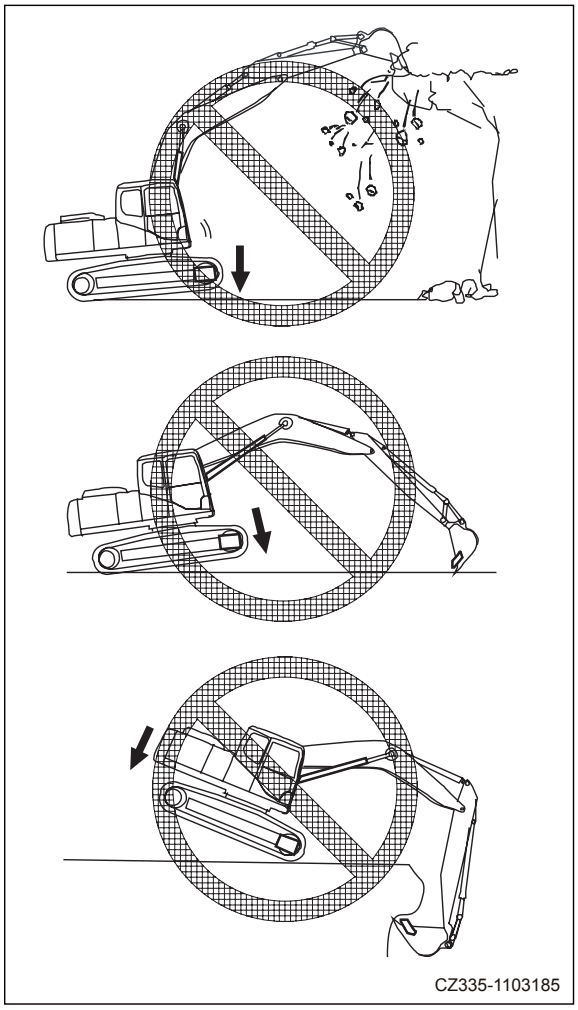

Fig. 4-70

4.8.6 Hard rocky ground

Never try to directly excavate hard rocky ground. Perform excavation after breaking the rocks through other means. By doing so, damage to your machine could be minimized, in addition to cost reduction.

Downloaded from www.Manualslib.com manuals search engine

https://truckmanualshub.com/

4.8.7 Sudden shift of travel speed during fast traveling

1. Never maneuver any control lever or pedal abruptly to change the action of machine.

2. Never suddenly change the position of control lever or pedal from forward (A) to reverse (B), or vice versa.

3. Never stop the machine by suddenly releasing the control lever or pedal while traveling at high speed.

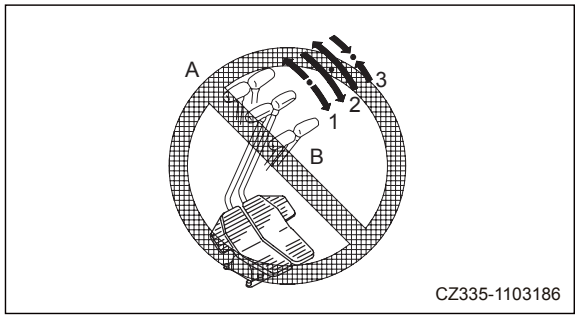

Fig. 4-71

4.9 General Operation

4.9.1 Traveling operation

Traveling over road shoulders, stumps or other barriers could bring strong impact on the chassis (especially the tracks), and cause damage to the machine. In this case, remove the barriers or bypass them. You can also take other actions to avoid barriers.

If there is no way to avoid traveling over barriers, drive your machine slowly while keeping its work equipment close to ground and running the track over barriers along the track's centerline.

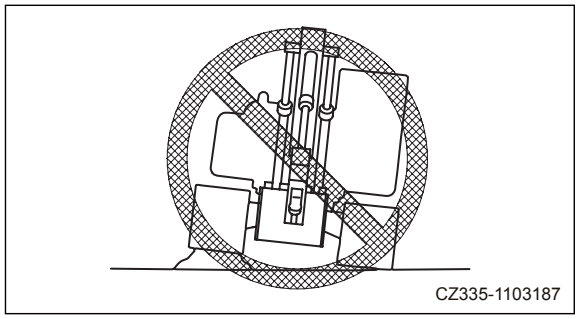

Fig. 4-72

4.9.2 High-speed travel

Run your machine slowly on rough surfaces with rocky bed or large stones. Place the tension wheel in forward direction while traveling at high speed.

- Press F3 (1) to change the travel speed. The travel speed (Hi or Lo) will be displayed at (2) above the F3 key.

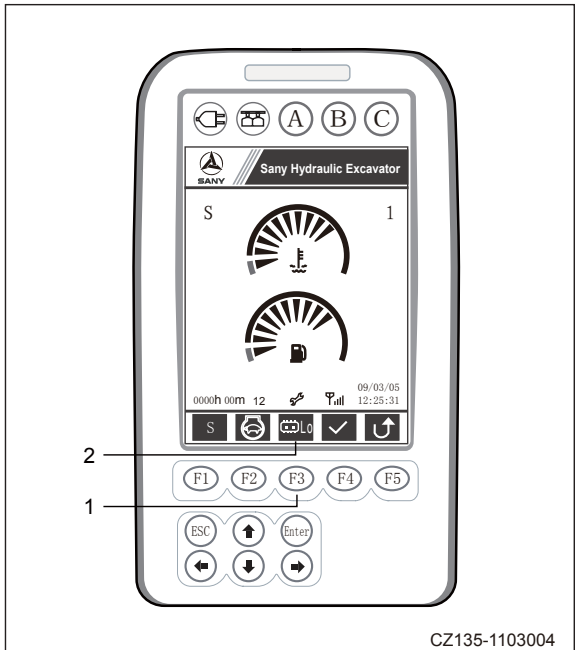

Fig. 4-73

Downloaded from www.Manualslib.com manuals search engine

https://truckmanualshub.com/

4.9.3 Permissible depth of water

Note:

When driving your machine out of water, an inclination of slope exceeding 15° would have the rear of its upper turntable immersed in water, thus the fan could be damaged due to water.

Pay special attention to your machine when driving it out of water.

- Don not drive your machine into water where water level could reach the center of carrier roller (1).
- Add grease to parts that have been soaked long in water, till old grease is completely squeezed out of the bearing (especially the area around the pin of bucket).
- Never operate your machine in water unless the foundation of job site is strong enough so that the level of water could not reach the center of carrier roller.
- If the swing bearing, swing gear and central swing joint are soaked in water, the drain plug should be opened to remove mud and water. Clean the swinging area and reinstall the plug. Lubricate the mesh gear and swing bearing inside the swing unit.

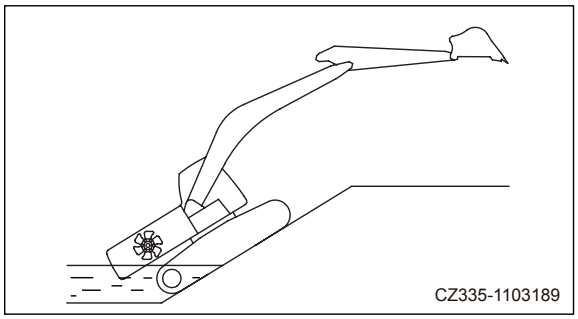

Fig. 4-74

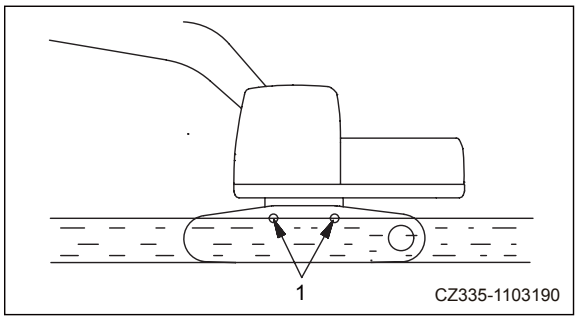

Fig. 4-75

4.10 Traveling on Slope

- When operating your machine on a slope, never turn your machine or operate the work equipment as that would cause your machine to loose balance.
- It is dangerous to swing downward on a slope when your bucket is loaded. If such operation is necessary, you have to pile up a platform on the slope with earth so that your machine could be kept on a level ground.

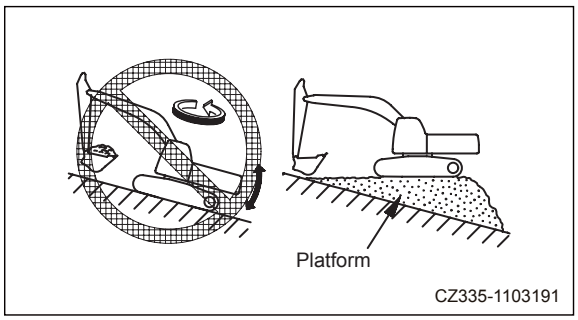

Fig. 4-76

Downloaded from www.Manualslib.com manuals search engine

https://truckmanualshub.com/

- Never travel on a steep slope, which could cause your machine to tip over.
- The bucket must be lifted 20-30 cm above the ground during traveling.
- Never travel reversely down a slope.
- Never turn your machine on a slope or traverse a slope.
- The above operations must be carried out on a level ground. You might have to travel a long distance for the sake of safety.
- The operations must be performed in this way because the machine can be stopped safely at any time when it skids or becomes instable.
- If the track shoes skid or the power of tracks is unable to help your machine run up a slope, never use the pulling force of arm to run up the slope as that could damage your machine.

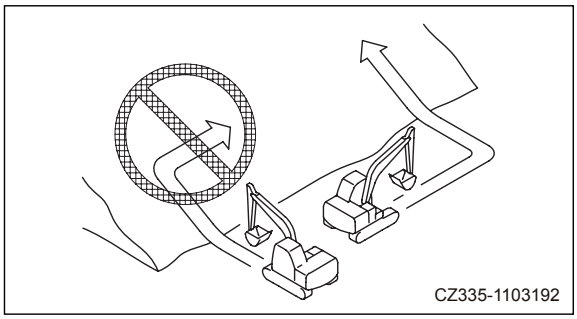

Fig. 4-77

1. The travel control lever and fuel control dial are used to keep your machine traveling at a low speed when running down a steep slope. When angle of the slope is more than 15°, adjust your work equipment to an attitude as shown in the right illustration and lower engine speed.

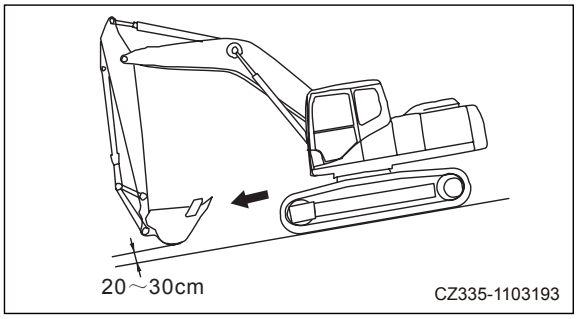

Fig. 4-78

2. When running up a steep slope, it is necessary to move your work equipment to the forward direction. Maintain the work equipment at about 20-30 cm above the ground and travel at a low speed.

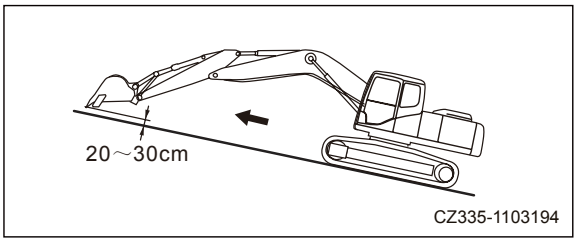

Fig. 4-79

Downloaded from www.Manualslib.com manuals search engine

https://truckmanualshub.com/

4.10.1 Traveling downhill

Place the travel control levers to the neutral position, which can make the brake function automatically.

4.10.2 Engine stalls on an incline

If the engine stops while traveling on a slope, place the travel control lever to its neutral position, lower the bucket to the ground and park the machine before restarting the engine.

4.10.3 Cab door on an incline

- If the engine stalls out on a slope, never perform swinging operation with the left joystick. The upper turntable will swing naturally under its weight.
- When your machine is on a slope, never open or close the cab door, which can change suddenly the force on machine. Always keep the cab door in an opening or closing position.

4.11 Removing Machine from Mud

Be careful with operation and avoid being trapped in the mud. If your machine is trapped in the mud, drive it out according to the following method.

4.11.1 One track trapped

Note:

When the boom or arm is used to lift your machine, make sure that the bottom of bucket contacts the ground. The boom and arm shall form an angle between 90 and 110°.

This is also applicable to a reversely-mounted

Downloaded from www.Manualslib.com manuals search engine

https://truckmanualshub.com/

bucket.

When one of the tracks is trapped in the mud, use the bucket to lift the track, place wood planks or logs under the track and then drive your machine out of the mud.

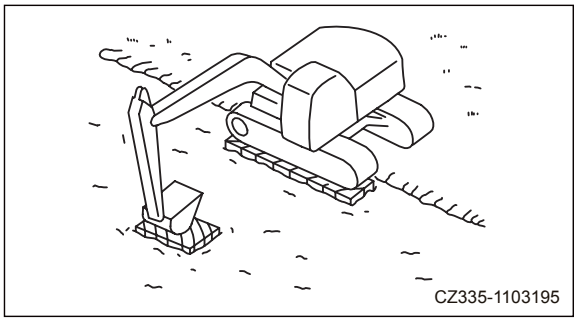

Fig. 4-80

4.11.2 Both tracks trapped

When both tracks are trapped in the mud and the machine cannot move due to skidding, use wood planks as described in the above method and cut your bucket into the ground in front of your machine. Retract the arm as you do in normal excavation, place the travel control lever in "FORWARD" position, and drive your machine out.

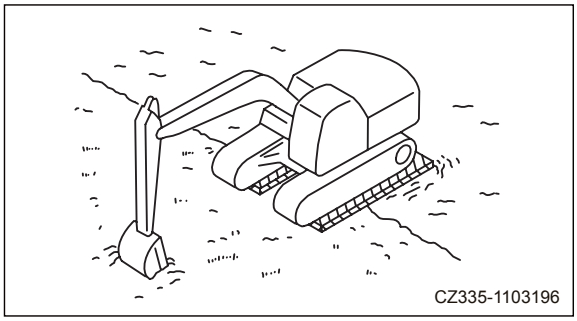

Fig. 4-81

4.12 Recommended Applications

Besides the following applications, the scope of application could be expanded by using various additional attachments.

4.12.1 Backhoe operation

Backhoe operation is suitable for digging an area which is lower than your machine.

When your machine is in a state shown in the right illustration (the angle between (bucket cylinder and link) and (bucket cylinder and arm) is 90°), maximum digging force can be obtained through the thrusting force of each hydraulic cylinder.

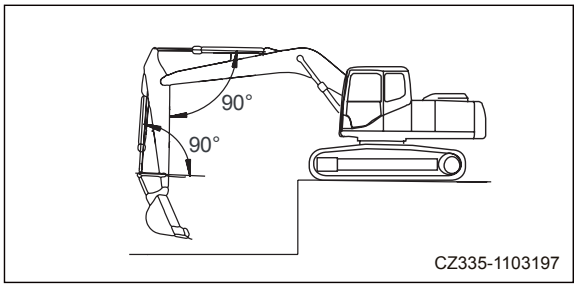

Fig. 4-82

When digging, using this angle effectively can help you achieve the maximum working efficiency.

Downloaded from www.Manualslib.com manuals search engine

https://truckmanualshub.com/

The digging range of arm is from 30 to 45°, as relative to the machine.

The angle may vary according to digging depth, but it is better to keep it within the above range if possible. Never operate the hydraulic cylinders to their full stokes.

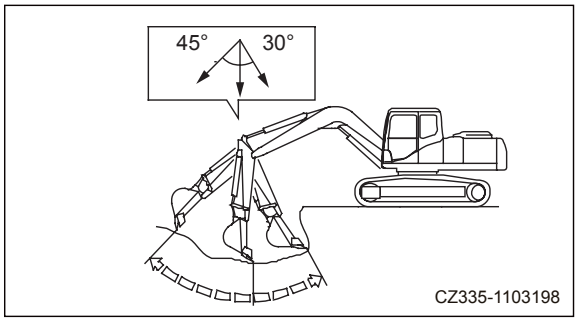

Fig. 4-83

4.12.2 Trench work

You can dig a trench efficiently by installing a bucket suitable for this job and adjust your tracks to parallel the to-be-dug trench line.

When digging a wider trench, excavate first both sides of the trench and then remove the middle part.

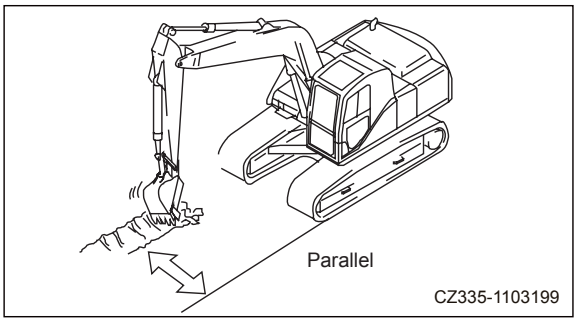

Fig. 4-84

4.12.3 Loading operation

In a place where the swinging angle is small, working efficiency can be improved by parking the dump truck at where the operator could see easily.

It is more convenient to load more material if the truck is loaded from rear rather than from its sides.

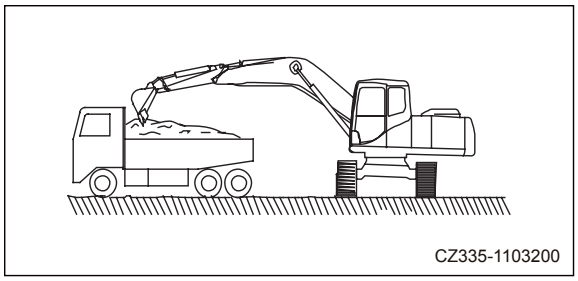

Fig. 4-85

Downloaded from www.Manualslib.com manuals search engine

https://truckmanualshub.com/

4.13 Parking Operation

Park your machine on a hard, level ground that is free from dangers. If you have to park your machine on a slope, chock the tracks with blocks. You can also penetrate the bucket into ground as additional safety support.

If any of the control levers is moved unexpectedly, the machine may move suddenly and cause serious accidents. Make sure that the hydraulic lockout control has been placed in "locked" position before you leave the cab.

1. Place both right and left travel control levers (1) in neutral position to stop your machine.

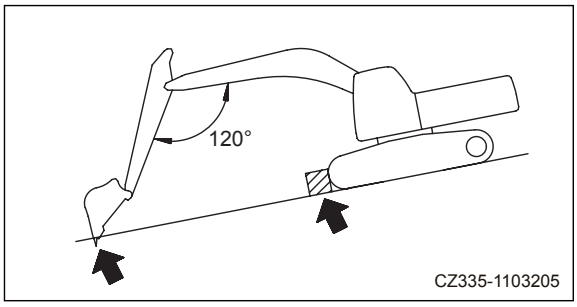

Fig. 4-86

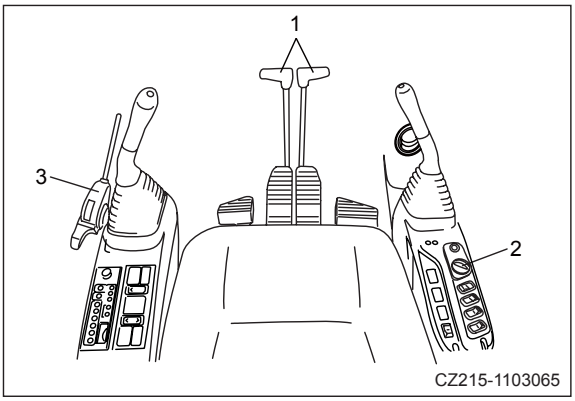

Fig. 4-87

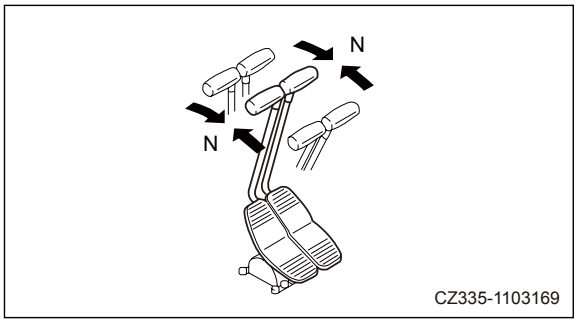

Fig. 4-88

Downloaded from www.Manualslib.com manuals search engine

https://truckmanualshub.com/

2. Turn fuel control dial to low idle (MIN) position in order to reduce engine speed.

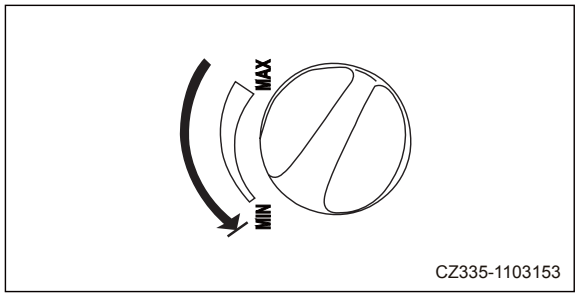

Fig. 4-89

3. Lower the bucket horizontally until its bottom is in contact with ground.

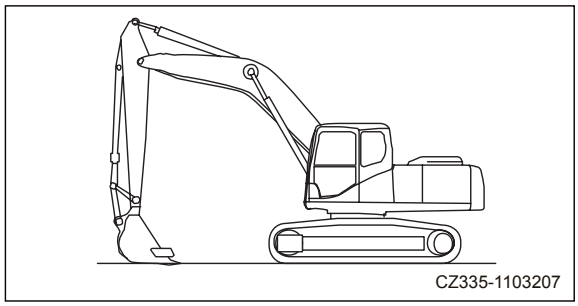

Fig. 4-90

4. Place hydraulic lockout control in LOCK position (L).

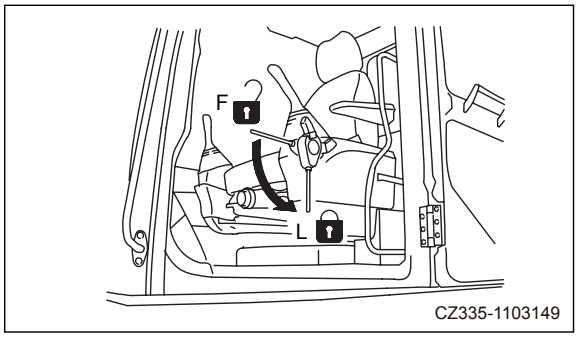

Fig. 4-91

Downloaded from www.Manualslib.com manuals search engine

https://truckmanualshub.com/

5. Check engine coolant temperature and oil pressure on machine monitor.

- If red segments appear on coolant temperature gauge (2), cool down the engine until red segments disappear. Shut down the engine.
- If alert indicator (1) is on and you are sure it is caused by abnormal oil pressure, shut down the engine immediately.

6. Shut down the engine. For engine shutdown steps see “**Engine Shutdown**” **on page 4-27.**

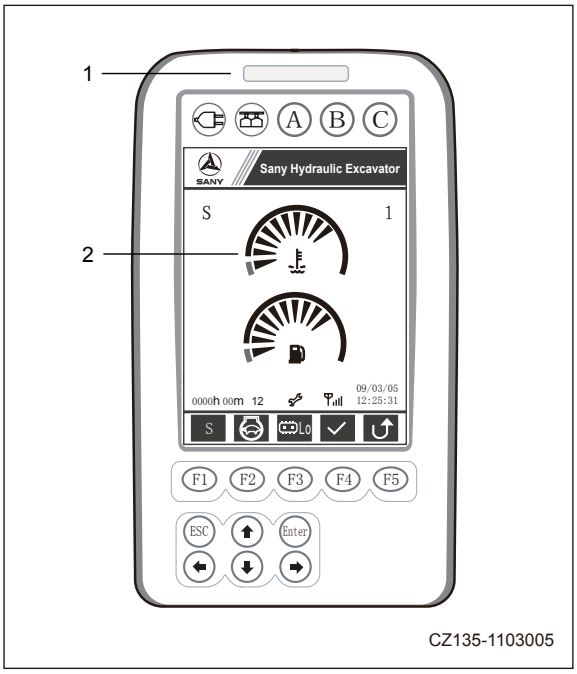

Fig. 4-92

4.14 Checks after Each Workday

1. Inspect your machine and check the work equipment, the exterior of machine, and the undercarriage. Check for leaks of oil or coolant. Repair it in case of any problem.

2. Refuel the tank to maximum level.

3. Check the engine compartment for any paper or other debris. Remove them, if any, in order to prevent fire.

4. Remove mud built up on the undercarriage.

5. If the ambient temperature is below -35°C, make sure to drain the coolant of radiator and engine (Sany uses the type of anti-freeze liquid that freezes at -35°C.)

Downloaded from www.Manualslib.com manuals search engine

https://truckmanualshub.com/

4.15 Locking the Machine

The following locations must be locked.

(1) Cab door
Close the windows properly.
(2) Injection cap of fuel tank
(3) Engine hood
(4) Battery cover (Battery is mounted behind left access door on some models.)
(5) Left door of machine
(6) Right door of machine
(7) A/C fresh air inlet

Remark:

Use start switch key to lock and open these locations.

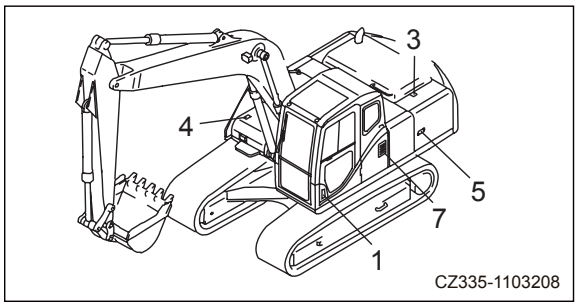

Fig. 4-93

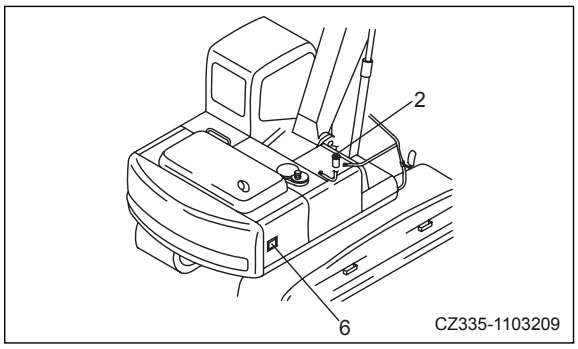

Fig. 4-94

4.16 Operation in Cold Weather

4.16.1 Operation instruction

The engine possibly fails to start and the coolant may freeze under low temperature. In this case, the following instructions must be followed.

4.16.1.1 Fuel and lubricant

Fuel and lubricant with low viscosity shall be used for all components.

For more information on specification of viscosity see“**Recommended Fluids**” **on page 5-17**.

Downloaded from www.Manualslib.com manuals search engine

https://truckmanualshub.com/

WARNING

- **Antifreeze liquid is poisonous. Pay attention to not letting it contaminate your eyes or skin. If it contaminates your eyes or skin, flush with large amount of clean water and See medical care immediately.**
- **When replacing the coolant or disposing the coolant containing antifreeze liquid, which is drained when repairing the radiator, contact your Sany distributor or a professional company to dispose it. Since the antifreeze liquid is poisonous, never drain it to sewage system or leave it on the ground.**
- **Antifreeze liquid is flammable, so no naked fire is allowed to approach it. Never smoke while disposing antifreeze liquid.**

Note:

Please use Sany genuine, efficient anti-freeze liquid as the coolant. In principle, we never recommend you choosing any other type of coolant.

See "**Cooling system - clean**" **on page 5-37** for more information about the mixing ratio of anti-freeze liquid when changing the coolant.

4.16.1.2 Battery

Battery capacity decreases as the ambient temperature drops. It is important to keep battery capacity at 100% level. Never let the battery stay long under low temperature so as to avoid the difficulty in starting your machine.

Since the battery's capacity will decrease under low temperature, it is important to cover the battery or remove it from your machine. Store your battery in a warm place and reinstall it before operating your machine.

Downloaded from www.Manualslib.com manuals search engine

https://truckmanualshub.com/

4.16.2 After each workday

CAUTION

Rotating track can cause severe injury. Always keep a safe distance from rotating track.

Observe the following precautions to prevent the machine from being immobilized the next day due to frozen mud and ice on the undercarriage.

- Remove all mud and water from your machine. Clean especially the piston rods of hydraulic cylinders in order to prevent mud, dirt or water from penetrating the cylinders and spoiling the seals.
- Park your machine on a hard, level ground. Park your machine on planks if possible. The planks can prevent your machine from freezing with the ground and you can move your machine the next day.
- Open the drain valve to discharge accumulated water of the fuel system so as to prevent it from freezing.
- Refill the fuel tank to the maximum level. In this way, when ambient temperature drops, the condensate in the tank could be minimized.
- After operation in water or mud, remove the water on the undercarriage according to the following instruction so as to extend its service life.

1. When the engine is running at idle speed, swing the upper structure by 90° in order to maintain the work equipment at the track side.

2. Lift one side of your machine just above the ground, as shown in the illustration, and run the track freely. Cycle this operation between the left and right tracks.

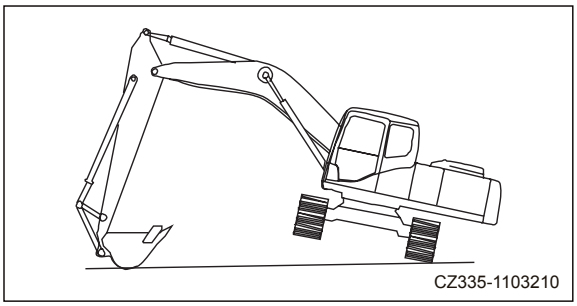

Fig. 4-95

Downloaded from www.Manualslib.com manuals search engine

https://truckmanualshub.com/

4.16.3 After cold season

When the season changes and the weather gets warm, perform as described below.

- The fuel or lubricant of any components shall be replaced with the one of specified viscosity.

For more information see “**Recommended Fluids**” **on page 5-17** .

Downloaded from www.Manualslib.com manuals search engine

https://truckmanualshub.com/

4.17 Long-Term Storage

4.17.1 Before storage

Note:

When storing your machine for more than one month, adjust your machine to the attitude as shown in the right illustration in order to protect cylinder piston rod against rusting.

When storing your machine for more than a month, perform as described below:

- Clean all parts of your machine and then store your machine indoors. If you have to store your machine outdoors, choose a level ground and cover your machine with canvas.
- Refill your fuel tank to its maximum level in order to avoid accumulation of water.
- Lubricate your machine and change its oil before storing it.
- Apply grease to the exposed part of the piston rod of hydraulic cylinder.
- Disconnect the battery's negative terminal and reinstall its cover, or remove the battery from your machine and store it in a separate place.
- For machines equipped with additional equipment, the control pedal of additional equipment shall be placed to LOCK position.
- To prevent rusting, please use Sany genuine, efficient anti-freeze liquid as coolant of the engine.

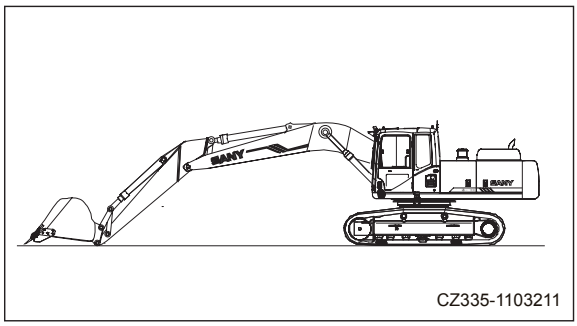

Fig. 4-96

Downloaded from www.Manualslib.com manuals search engine

https://truckmanualshub.com/

4.17.2 During storage

WARNING

When your machine is stored indoors, it is important to prevent it from rusting, Open the doors and windows to allow good ventilation. This can also prevent gas poisoning.

- During storage, it is important to operate your machine and drive it for a short distance once a month. This can help apply a new oil film on parts and components. Meanwhile, charge the battery of your machine. The storage temperature of this machine is between -25ºC and 75ºC.
- Before operating the work equipment, wipe off all the grease from the piston rod of hydraulic cylinder.
- If your machine is equipped with air conditioner, switch on the air conditioner for 3-5 minutes once a month, which can lubricate all parts of its compressor. The engine shall run at low idle speed when air conditioner is working. In addition, check its refrigerant twice a year.

Downloaded from www.Manualslib.com manuals search engine

https://truckmanualshub.com/

4.17.3 After storage

Note:

If your machine has been stored for a long period but no rusting prevention had been made each month, please contact Sany distributor before operating your machine again.

Before using your machine again after a long-term storage, perform as described below:

- Wipe off the grease from the piston rod of hydraulic cylinder.
- Apply lubricant or grease to all necessary locations.
- The moisture of air can mix with oils when your machine has been stored for a long time. Check the oils before and after starting the engine. If the oil contains water, remove the water timely.

4.17.4 Starting the engine after long-term storage

Before starting a machine that has been stored for a long period of time, it is important to fully warm up the engine.

For more information see **"Warm-up operation" on page 4-26**.

Downloaded from www.Manualslib.com manuals search engine

https://truckmanualshub.com/

4.18 Transportation Information

Related laws and regulations must be observed when transporting the machine. Safety must be ensured.

4.18.1 Transport methods

- Choose a method that is suitable for the weight and dimension provided in the section “Specification” .
- The weight and dimension provided in "Specification" can vary due to different type of track shoe, arm or other additional equipment.
- For transport of the machine installed with cab protection housing, please contact Sany distributor for more information.

4.18.2 Loading/unloading machine to/ from a trailer

The following instruction must be followed when loading/unloading the machine.

- Choose a hard, level ground to load and unload your machine. Keep a safe distance to sides of road.
- Auto idle must be switched off. If the auto idle switch is activated, the machine may move suddenly.
- The travel speed must be set to low (Lo). Run the engine at idle speed and operate your machine slowly when loading or unloading.
- In a cold region, it is important to fully preheat your machine and ensure a stable rpm of the engine before loading or unloading.
- Never reposition your machine on the access ramp, which may otherwise cause your machine to tip over. If necessary, reposition your machine on a level ground or

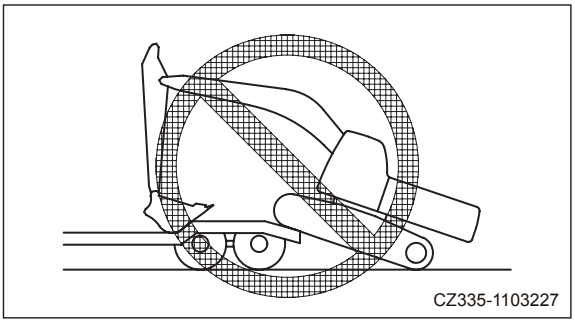

Fig. 4-97

Downloaded from www.Manualslib.com manuals search engine

https://truckmanualshub.com/

on the trailer.

- It is dangerous to load or unload your machine with the work equipment. The use of an access ramp is necessary.
- On an access ramp, never maneuver any other control lever except the travel control lever.
- At the junction of the access ramp and trailer, the machine's center of gravity may change suddenly and it is possible to loose balance. Drive slowly when passing the junction.
- If you have to swing the work equipment on the trailer, be extra careful with your machine, which may tip over due to instable base.

  If the work equipment has been installed on the machine, it must be retracted slowly to avoid the machine loosing balance.
- Considering operating safety, a signal man shall be assigned to alert preventing the machine from falling off the ramp.

The following items must be carefully observed:

- Use an access ramp with enough width, length, thickness and strength. Ramp grade shall not exceed 15°.
- When piling the earth to build a platform, the platform must be fully compacted to prevent landslide.
- To prevent the machine from skidding on the ramp, clean its track shoes and the ramp before loading and unloading. The machine has the danger to skid when the access ramp is contaminated with water, snow, grease or ice.

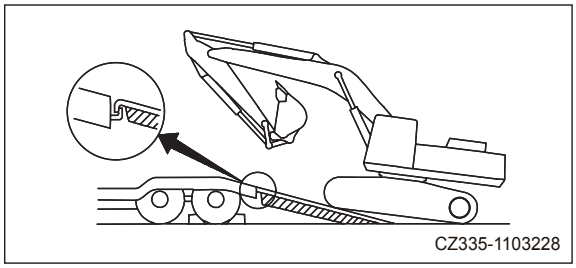

Fig. 4-98

Downloaded from www.Manualslib.com manuals search engine

https://truckmanualshub.com/

4.18.2.1 Loading the machine

1. The machine shall only be loaded and unloaded on a hard, level ground.

   It is necessary to keep a safe distance to roadside.

2. Choke the trailer and put blocks under its wheels to prevent its moving.

   Use two access ramps (2) and place them at the left and right sides respectively. The two ramps shall parallel each other and have equal distance to trailer centerline (3). Ramp grade (4) shall not exceed 15°. If the ramps bend too much under the weight of machine, supports must be placed under the ramps to prevent their bending.

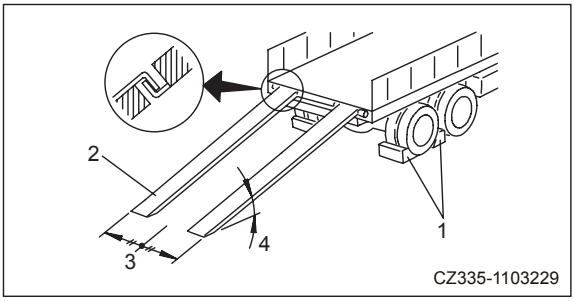

Fig. 4-99

3. Set the travel speed selector switch to low speed (Lo).

- Press travel speed button (6) to change travel speed (Lo, Hi), which will be displayed at (5) on the display screen.

4. Press button (8) to turn off auto deceleration. Use the fuel control dial to set engine speed to low idle.

- When machine is running in auto idle mode, the screen displays at (7).
- Press the button (8) again to cancel auto idle. The screen will display at (5).
- Auto idle is the default mode after the machine is started. Press the button (8) to toggle between auto-idle and non auto-idle → → .

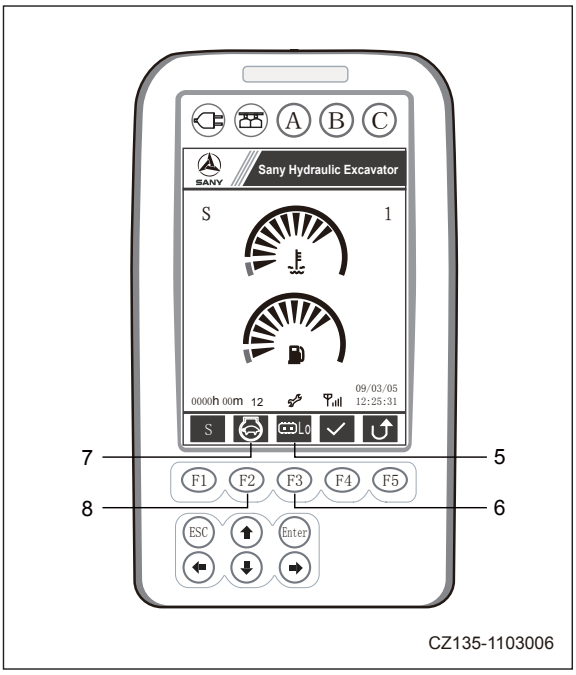

Fig. 4-100

Downloaded from www.Manualslib.com manuals search engine

https://truckmanualshub.com/

5. If the machine is installed with work equipment, the work equipment must be placed in front of the machine. Move the machine straight forward up the ramp. Without the work equipment, reverse the machine up the ramp.

   Lower the bucket on the trailer to support the machine immediately after getting aboard.

   Instruction and signals from a commander must be followed, in especially reverse travel.

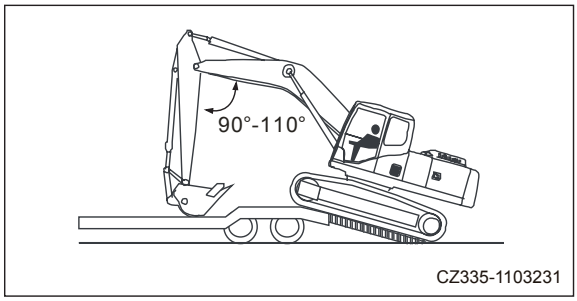

Fig. 4-101

6. Align your machine with the ramp before driving up the ramp. The centerline of machine shall match the centerline of trailer.

   Align your machine with the ramp and travel slowly.

   Lower the work equipment as low as possible if it causes no trouble.

   On an access ramp, only the travel lever can be maneuvered. Never maneuver any other control levers.

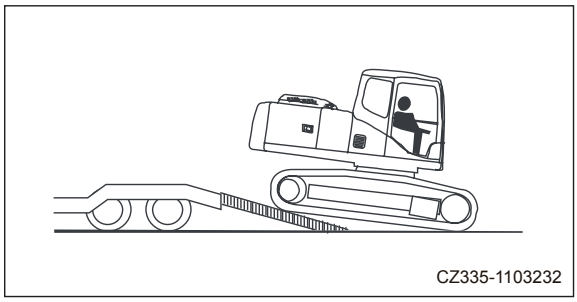

Fig. 4-102

7. Drive the machine slowly forward till all tracks are on the trailer and have full contact with trailer floor.

8. When the machine passes the rear wheels of the trailer, the machine could lean forward. So drive the machine slowly and carefully in order to avoid impact with the trailer.

9. Slightly raise the bucket, retract the arm and maintain it in lower position, and slowly swing the upper structure by 180°.

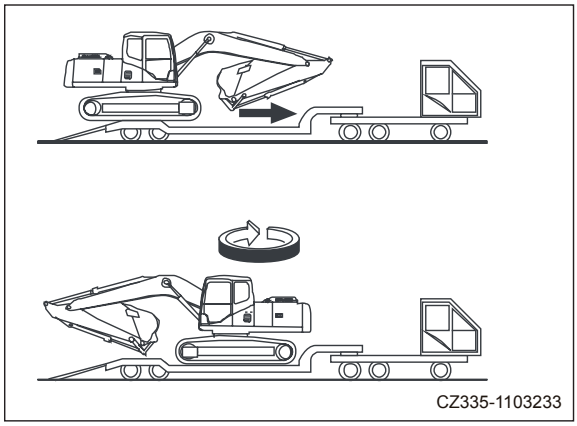

Fig. 4-103

Downloaded from www.Manualslib.com manuals search engine

https://truckmanualshub.com/

10. Fully extend the bucket cylinder and arm cylinder, and slowly lower the boom.

11. Place a wood block under the end of the bucket cylinder in order to prevent it from touching the trailer floor, which could result in damage to the cylinder.

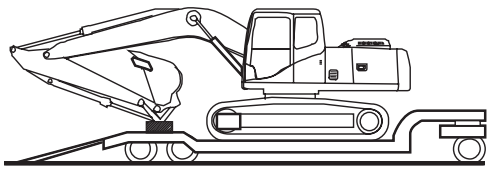

Fig. 4-104

4.18.2.2 Securing the machine

Note:

- Reinstall the rear view mirrors in order to enable them to be within the sphere of machine width.
- To prevent damage to the bucket cylinder during transit, place a wood block under the top end of the bucket linkage so as to prevent the bucket cylinder from touching the trailer floor.
- Check if the engine hood is locked. Seize the grip of engine hood and lift it slightly. If it is not open, it indicates that the hood catch is engaged. If the hood is not locked, it might be swung open during transit.

Secure the machine to the trailer through the following steps:

1. Fully extend the bucket cylinder and arm cylinder, and slowly lower the boom.

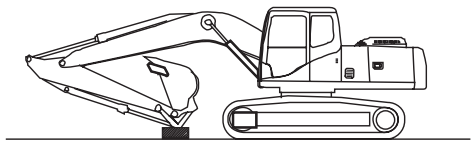

Fig. 4-105

Downloaded from www.Manualslib.com manuals search engine

https://truckmanualshub.com/

2. Place the hydraulic lockout control to the LOCK position (L).

3. Stop the engine and remove the key from the start switch.

4. Close all doors, windows and covers properly.

   Lock the covers, caps and doors.

5. Chock the tracks on both ends in order to prevent the machine from moving during transportation. Tie down the machine with chains or wire ropes with sufficient strength.

   It is important to keep the machine in a proper position in order to ensure that the machine could not slip to the sides.

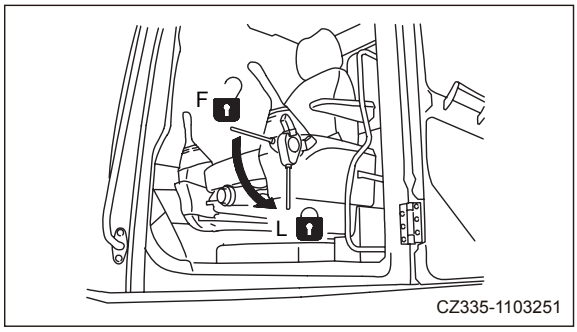

Fig. 4-106

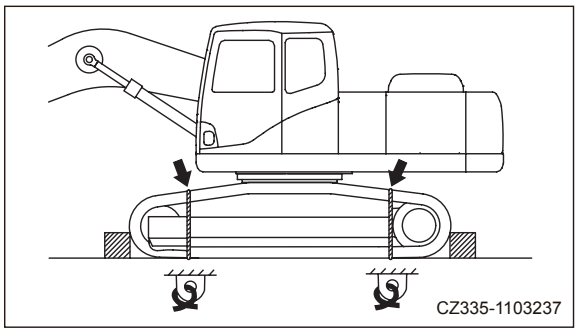

Fig. 4-107

4.18.2.3 Rear view mirrors

The rear view mirror is located in the position shown in the right illustration.

- If the rear view mirror is broken or it is necessary to reinstall the mirror after disassembling for shipping purpose, the following procedure must be observed.
- The rear view mirror must be readjusted after installation. For more information see “**Rear view mirrors**” **on page 4-17.**

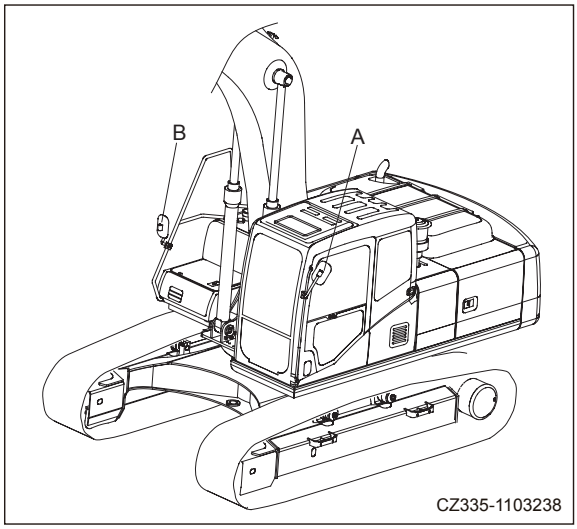

Fig. 4-108

Downloaded from www.Manualslib.com manuals search engine

https://truckmanualshub.com/

Removal

1. Loosen bolt (2) and remove the rear view mirror (1) from the bar (3).
2. Loosen bolt (4) and remove the bar (3) and the clasp (5).

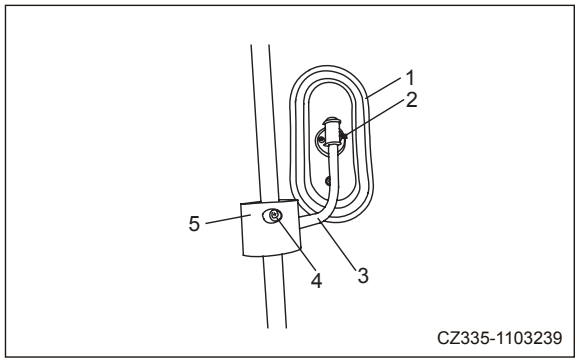

Fig. 4-109

Installation

1. Install the bar (3) and the clasp (5) to the handhold, and tighten bolt (4).
2. Install the rear view mirror (1) to the bar (3), and tighten the bolt (2).

4.18.2.4 Unloading the machine

1. Load and unload the machine only on a hard, level ground, and keep a safe distance from roadside as well.

2. Apply braking to the trailer and chock the trailer under its wheels to prevent moving.

   Use two access ramps (2) and place them at the left and right sides respectively. The two ramps shall parallel each other and have equal distance to trailer centerline (3). Ramp grade (4) shall not exceed 15°. If the ramps bend too much under the weight of machine, supports must be placed under the ramps to prevent their bending.

3. Remove the chains and wire ropes fastening the machine.

4. Start the engine and warm it up fully.

5. Move the hydraulic lockout control to FREE position (F).

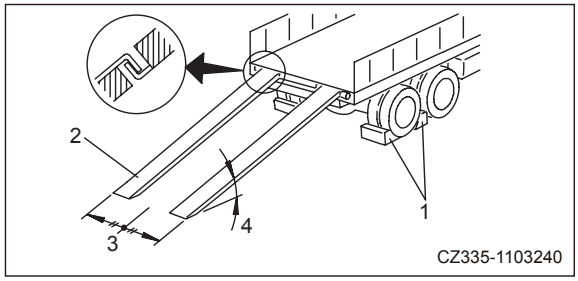

Fig. 4-110

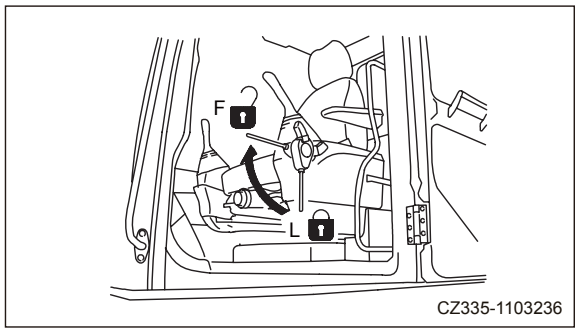

Fig. 4-111

Downloaded from www.Manualslib.com manuals search engine

https://truckmanualshub.com/

6. Set the travel speed selector switch to low speed (Lo).

- Press travel speed button (6) to change travel speed (Lo, Hi), which will be displayed at (5) on the display screen.

7. Press button (8) to turn off auto deceleration. Use the fuel control dial to set engine speed to low idle.

- When machine is running in auto idle mode, the screen displays at (7).
- Press the button (8) again to cancel auto idle. The screen will display at (5).
- Auto idle is the default mode after the machine is started. Press the button (8) to toggle between auto-idle and non auto-idle → → .

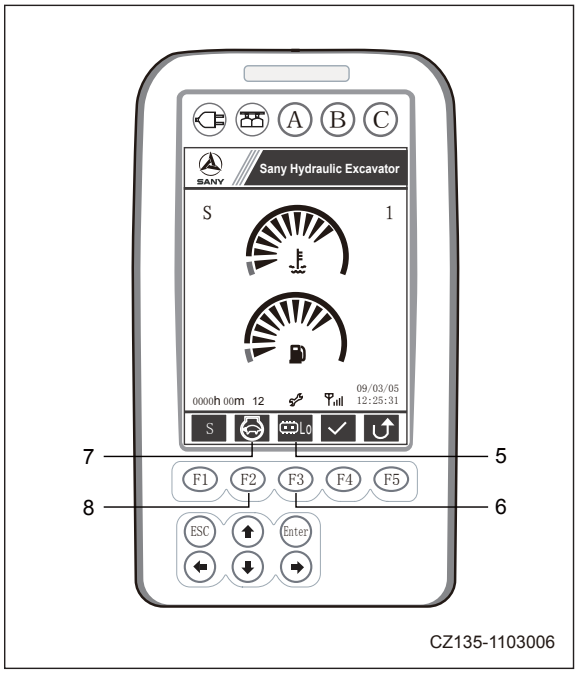

Fig. 4-112

8. Raise the work equipment, retract the arm below the boom, and drive the machine slowly.

9. Stop the machine when it comes to the rear wheels of the trailer and is positioned horizontally.

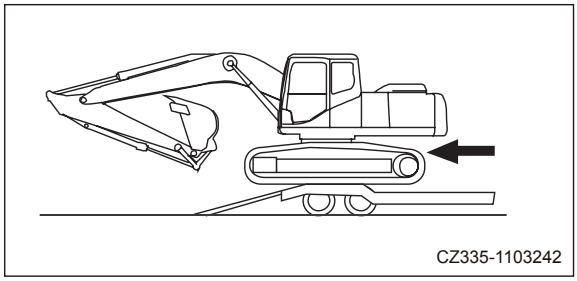

Fig. 4-113

Remark:

- Make sure to keep an angle of 90 - 110° between the arm and the boom when unloading the machine.
- The machine could be damaged if it is unloaded with retracted arm.

  When the machine runs on the access ramp, never penetrate the bucket into ground, which could damage the hydraulic cylinder.

10. While the machine is on the ramp, it is

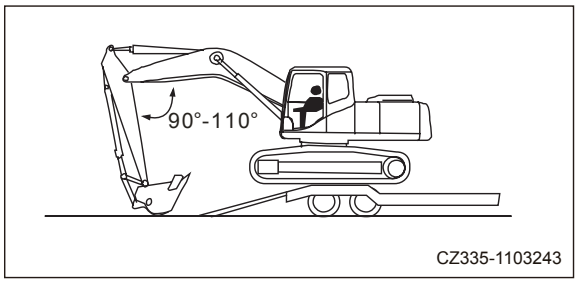

Fig. 4-114

Downloaded from www.Manualslib.com manuals search engine

https://truckmanualshub.com/

important to keep an angle of 90 - 110° between the arm and the boom. Lower the bucket to the ground and move the machine slowly.

11. When the machine is going down the ramp, slowly operate the boom and arm, and carefully drive the machine off the ramp.

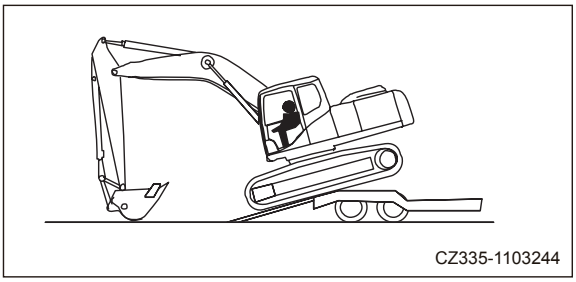

Fig. 4-115

4.18.3 Lifting the machine or its components

WARNING

Using a single rope to lift an object is possible to cause turning of the load and unfastening or slipping of the rope. Serious accidents could result.

4.18.3.1 Lifting precautions

1. Put wire rope on the middle of hook.

   If wire rope is hooked near hook end, the rope may slide off the hook, causing serious accident. The middle part of hook is stronger than the rest parts.

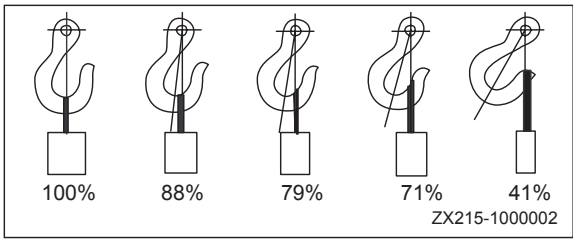

Fig. 4-116

2. Never lift an object when wire rope forms a bigger sling angle with the hook. If two or more ropes are used, the load on each rope increases with sling angle. The following table shows variation of allowable load kN(kg) with different angles when two ropes are used to lift a load. If a single rope is capable of lifting 9.8 kN(1000 kg) in vertical position, two ropes will be able to lift 19.6 kN(1000 kg) perpendicularly. However, when the two ropes forms a sling angle of 120 degrees, its lifting capacity becomes 9.8 kN(1000 kg). On the other

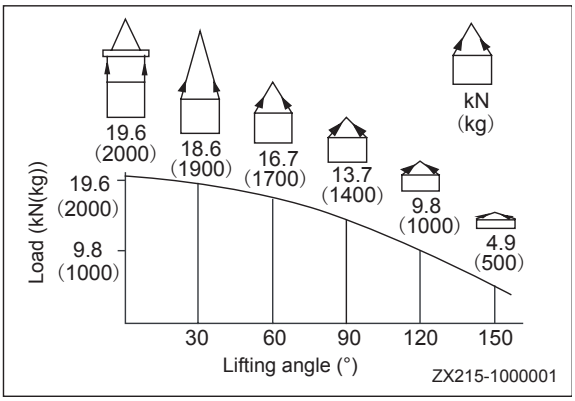

Fig. 4-117

Downloaded from www.Manualslib.com manuals search engine

https://truckmanualshub.com/

hand, if the sling angle is 150 degrees, to lift a load of 19.6 kN(1000 kg), each rope has to bear 39.2 kN(1000 kg).

3. Never use a single rope to lift an object. It’s better to bind the object with two or more rope symmetrically.

4.18.3.2 Choosing a wire rope

Select a suitable wire rope according to the object to be lifted. See the table below.

Wire Rope

(Standard bright wire rope “Z”)

（JISG3525，No.6，6X37-A type）

Wire Rope Nominal Diameter	Allowable Load	
mm	kN	Ton
10	8.8	0.9
12	12.7	1.3
14	17.3	1.7
16	22.6	2.3
18	28.6	2.9
20	35.3	3.6
25	55.3	5.6
30	79.6	8.1
40	141.6	14.4
50	221.6	22.6
60	318.3	32.4

Table 4-1

Note:

The allowable load equals to one sixth of the breaking force of wire rope. (Safety factor: 6)

Downloaded from www.Manualslib.com manuals search engine

https://truckmanualshub.com/

4.18.3.3 Lifting the machine

⚠ WARNING

- **Only eligible, experienced operator with official license (according to local laws) is allowed to operate a crane.**
- **Never lift the machine when someone is riding on it.**
- **Nobody shall be allowed to enter the area below or around the lifted machine.**
- **Make sure that the wire cables used for lifting the machine are strong enough to bear the weight of machine. Never use damaged or aged wire cable or sling.**
- **Never lift the machine when its upper structure has swung aside. Before lifting, it is important to move the work equipment to the final drive end and keep the longitudinal centerlines of the upper structure and the lower structure parallel.**
- **Before lifting, the lockout control must be put to "locked" position in order to prevent unexpected movement of the machine.**
- **Keep the machine parallel to the ground during lifting.**
- **Never lift the machine at fast speed, which may otherwise overload the wire cables or slings and result in rupture.**

Besides the attitudes recommended in the following procedure, never use any other attitudes to lift the machine. Never use the type of lifting equipment other than the ones specified in the following procedure. Otherwise it may have the danger to loose balance.

Note:

The lifting procedure is applicable to machines of standard dimension.

The lifting methods may vary according to actual additional and optional components installed.

Contact Sany distributor for suitable lifting methods.

For more information on the weight of machine see the section "Specification".

When lifting the machine, operate on a level ground according to the following steps.

Downloaded from www.Manualslib.com manuals search engine

https://truckmanualshub.com/

Machine of standard dimension

1. Start the engine and swing the upper structure in order to position the work equipment at the side of the sprocket (1).

2. Fully extend the bucket cylinder and the arm cylinder, and use the boom cylinder to lower the work equipment to the ground, as shown in the right illustration.

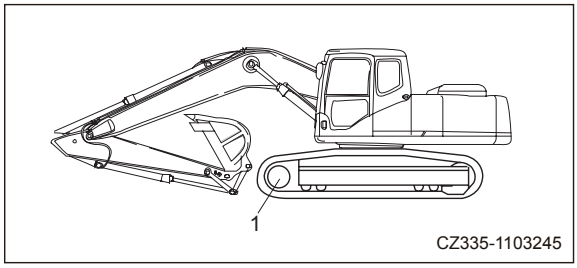

Fig. 4-118

3. Move the hydraulic lockout control to "locked" position (L).

4. Shut off the engine. Check the surrounding of the cab before leaving the machine. Close the cab door and windows properly.

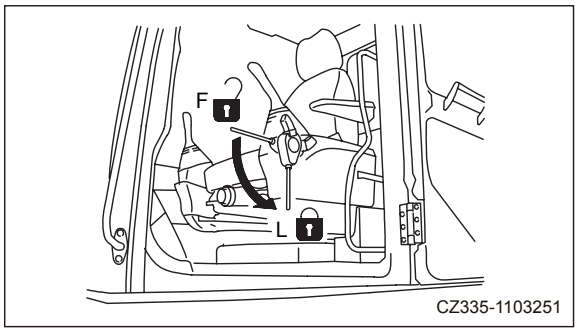

Fig. 4-119

5. Run a wire rope between the first two track rollers and between the last two track rollers. For machines installed with roller guard, the ropes shall go through under the tracks.

6. Adjust the wire rope lifting angle (A) to 30 - 40°, and lift the machine slowly.

7. When the machine is above the ground, make sure that the hook condition and the lifting condition are normal, and lift the machine slowly.

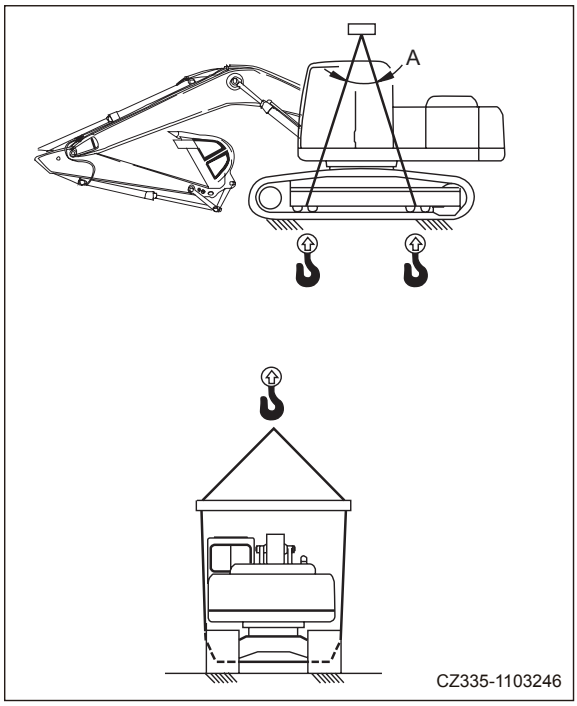

Fig. 4-120

Downloaded from www.Manualslib.com manuals search engine

https://truckmanualshub.com/

BLANK PAGE

Downloaded from www.Manualslib.com manuals search engine

https://truckmanualshub.com/

BLANK PAGE

Downloaded from www.Manualslib.com manuals search engine

https://truckmanualshub.com/

SANY

Maintenance

5 Maintenance

5.1 Maintenance Information 5-5
5.2 General Service 5-9
5.2.1 Oil, fuel and coolant 5-9
5.2.1.1 Oil 5-9
5.2.1.2 Fuel 5-10
5.2.1.3 Coolant 5-11
5.2.2 Grease 5-12
5.2.3 Oil and fuel storage 5-13
5.2.4 Filter element 5-13
5.2.5 Electrical system 5-14
5.2.6 Hydraulic system 5-14
5.3 Replacement Parts 5-16
5.4 Recommended Fluids 5-17
5.4.1 Fluid capacities 5-19
5.4.2 Recommended oils: 5-20
5.5 Tightening Torque Specification 5-22
5.6 Safety-Related Parts 5-24
5.7 Maintenance Schedule 5-25
5.7.1 List of maintenance schedule 5-25
5.7.2 Hydraulic Breaker Service Interval 5-27
5.8 Maintenance Procedures 5-28
5.8.1 Maintenance after initial 50 service hours 5-28
5.8.1.1 Engine oil and filter - change/replace 5-28
5.8.1.2 Fuel filter - replace 5-28
5.8.2 When Required 5-29

Downloaded from www.Manualslib.com manuals search engine

https://truckmanualshub.com/

5.8.2.1 Air cleaner - clean/replace 5-29
5.8.2.2 Cooling system - clean 5-37
5.8.2.3 Track shoe bolts - inspect/tighten 5-41
5.8.2.4 Track tension - inspect/adjust 5-42
5.8.2.5 Bucket tips (lateral pin) - replace 5-45
5.8.2.6 Bucket Replacement 5-47
5.8.2.7 Bucket clearance - adjust 5-49
5.8.2.8 Window washer fluid - check/refill 5-51
5.8.2.9 Air conditioner - inspect/service 5-52
5.8.2.10 Gas spring - inspect 5-54
5.8.2.11 Air in hydraulic system - purge 5-55
5.8.2.12 Hydraulic circuit internal pressure - release 5-58
5.8.3 Checks before starting 5-59
5.8.4 Every 100 service hours 5-60
5.8.4.1 Lubrication 5-60
5.8.5 Every 250 service hours 5-63
5.8.5.1 Compressor belt tension - inspect/adjust 5-63
5.8.5.2 Oil in engine oil pan and oil filter - change/replace 5-65
5.8.5.3 Primary fuel filter - replace 5-67
5.8.5.4 Secondary fuel filter - replace 5-71
5.8.6 Every 500 service hours 5-74
5.8.6.1 Swing bearing - lubricate 5-74
5.8.6.2 Swing pinion gear grease - check/refill 5-75
5.8.6.3 Coolant tank and radiator fins - inspect/clean 5-76
5.8.6.4 Air conditioner filters - clean 5-77
5.8.6.5 Swing drive oil - check/refill 5-80
5.8.6.6 Final drive oil - check/fill 5-81
5.8.7 Every 1000 service hours 5-82
5.8.7.1 Hydraulic oil filter - replace 5-82
5.8.7.2 Swing drive oil - change 5-84
5.8.7.3 Engine exhaust pipe clamps - check 5-85
5.8.7.4 Fan belt tension - check/replace 5-85
5.8.7.5 Nitrogen pressure in accumulator (breaker) - check 5-85
5.8.8 Every 2000 service hours 5-86
5.8.8.1 Final drive oil - change 5-86
5.8.8.2 Hydraulic tank filter screen - clean 5-88

Downloaded from www.Manualslib.com manuals search engine

https://truckmanualshub.com/

5.8.8.3 Nitrogen pressure in accumulator (control oil circuit) - check 5-89
5.8.8.4 Hydraulic circuit internal pressure - release 5-92
5.8.8.5 Oil in hydraulic tank - change 5-93
5.8.8.6 Alternator - inspect 5-95
5.8.8.7 Engine valve clearance - check/adjust 5-95
5.8.9 Every 4000 service hours 5-95
5.8.9.1 Coolant pump - inspect 5-95
5.8.9.2 Start motor - check 5-95
5.8.9.3 Accumulator (control oil circuit) - replace 5-96
5.8.9.4 High-pressure tube clamps and rubber - check 5-97
5.8.9.5 Compressor working condition - inspect 5-97
5.8.10 Every 8000 service hours 5-98
5.8.10.1 High-pressure tube clamps - replace 5-98
5.8.11 Every 10000 service hours 5-98

Downloaded from www.Manualslib.com manuals search engine

https://truckmanualshub.com/

Downloaded from www.Manualslib.com manuals search engine

https://truckmanualshub.com/

5 MAINTENANCE

5.1 Maintenance Information

Never conduct any inspection and maintenance work other than the scope specified in this manual.

Hour meter reading

Keep track of the hour meter reading on a daily basis. Make sure whether it is time to perform the required maintenance.

Genuine Sany replacement parts

Always use genuine Sany replacement parts listed in the Parts Manual.

Genuine Sany lubricants

Always use genuine Sany engine oil and grease. Select engine oil and grease of suitable viscosity according to ambient temperature.

Window washer fluid

Use automotive windshield washer fluid only, which shall not be contaminated by foreign substances.

Oil and lubricants

Always use clean oils and greases. Keep the oil reservoir and grease reservoir clean, which shall be free from any impurities.

Drained oil and used filter element

After changing the oil and replacing the filter element, check the used oil and filter element for signs metal particles and foreign material. If large amount of metal particles and/or impurities are found in the used oil and filter element, report to the personnel in charge and take proper measures.

Downloaded from www.Manualslib.com manuals search engine

https://truckmanualshub.com/

Primary fuel filter

Primary Fuel Filter must be installed before filling the fuel.

Welding instruction

- Turn off the engine start switch and wait for 1 minute before disconnecting the negative (-) terminal of the battery.
- Connect the ground cable of the welder at least 1 m (3.3 ft.) away from the place being welded.
- If the ground cable is connected to any electrical components (instrument, connector, etc.), the instrument will be out of function. If there are any seals or bearings between the weld and the grounding point, choose another grounding point away from these parts.
- Never use a grounding point in the vicinity of the work equipment pin or hydraulic cylinder .
- Never apply more than 200V continuously.

Preventing things from falling into machine

- When opening the access window or tank filler for inspection, make sure that the nuts, bolts or tools are not left inside the machine. Failure to do so could result in unexpected failure or damage to the machine, or accidents. In case that any materials fall into the machine, remove it immediately.
- Never carry unnecessary items in your pockets except those necessary for inspection.

Dusty work site

Observe the following items before working in a dusty place.

- When inspecting your machine or changing the oil, park your machine in a dust-

Downloaded from www.Manualslib.com manuals search engine

https://truckmanualshub.com/

free place in order to prevent dust from getting into the oil.

- Clean the air filter cartridge immediately if the filter's alarm indicates clogging.
- Clean the fins and other heat exchanger parts frequently to avoid them being clogged.
- Clean and replace the fuel filter frequently.
- Clean the electrical components, especially the start motor and the alternator, to prevent dust from building up on them.

Lubricants of different brands

Never mix lubricants of different brands and/or grades together. If you need to use the lubricant of another brand or grade, drain the old lubricant completely and replace with the new brand.

Securing access cover

When servicing the machine with the access covers open, use a locking lever to secure the cover to certain position. Otherwise, the cover can be swung close by wind and cause bodily injury.

Purging air from hydraulic system

When any hydraulic units have been repaired or replaced or any hydraulic lines have been removed or installed, always bleed the air from the system. For more information see "Air in hydraulic system - purge."

Connecting hydraulic hoses

- In removal of parts with O-rings or gaskets, clean the installation surfaces and replace with new parts. Remember to install the O-rings or gaskets.
- Never twist or bend the hydraulic hoses when assembling. Failure to do so could cause damage to the hoses and considerably reduce their service life.

Downloaded from www.Manualslib.com manuals search engine

https://truckmanualshub.com/

After inspection and maintenance

If no checks have been made after inspection and maintenance, unexpected failure may occur, causing severe injury or damage. The following items must be observed:

- Checks when machine is running.
  - For more information on checks during engine operation see "Maintenance during Engine Running." Be alert to your safety in the meantime.
  - Whether the checked or maintained parts work normally.
  - Whether oil leakage occurs when the engine speed increases and the oil is under pressure.
- Checks after the operation (when the engine has been shut down)
  - Whether you have missed the items to be checked or maintained.
  - Whether all the checks and maintenance have been performed correctly.
  - Whether any tools and parts are left in the machine. It is very dangerous to have a foreign object blocked in the linkage.
  - Whether leakage of water or oil occurs; whether all the bolts have been screwed tightly.

Closing engine hood properly

When the engine hood is closed after inspection and maintenance, hold the lever and lift the engine hood slightly in order to check whether the lock is securely engaged. An unlocked hood may be opened and cause accidents.

Downloaded from www.Manualslib.com manuals search engine

https://truckmanualshub.com/

5.2 General Service

- Use genuine Sany replacement parts, grease and oil.
- Never change or refill oil with a different type. When different oil is to be used, the used oil must be drained completely before filling the fresh oil. Meanwhile, the oil filter must be replaced. (A small amount of used oil remaining in the lines would affect nothing.)
- Unless specified otherwise, your machine contains the following oils and coolants when delivered from the factory.

Item	Type
Engine Oil Pan	Diesel Oil CH-4 15W-40
Swing Drive	Gear Oil 85W/140
Final Drive	
Hydraulic System	Caltex HDZ46
Radiator	TEEC-L35 antifreeze

Table 5-1

5.2.1 Oil, fuel and coolant

5.2.1.1 Oil

- The oils in engine and hydraulic units keep deteriorating when operating your machine under extreme conditions, such as high pressure and high temperature.
- Always use the type of oil recommended in the "Maintenance Section", which shall also be applicable under extreme ambient temperatures.
- Within the specified oil change interval, the oil must be changed even if it is not dirty.
- Like the blood in human body, lubricant shall be handled carefully in order to prevent impurities such as water, metal particles and dust.

Downloaded from www.Manualslib.com manuals search engine

https://truckmanualshub.com/

- Most troubles of the machine are caused by impurities.
  Pay special attention to the prevention of any impurities when storing or filling the oil.
- Fill the amount of oil as specified. Failure to do so could result in abnormality.
- Never mix oils of different grades or brands together.
- Contact your Sany distributor when the oil in your work equipment has been contaminated by water or air.
- To know the condition of your machine, regular oil quality analysis is recommended. Contact your Sany distributor if you need such service.
- Related filter elements must be replaced when changing the oil. In replacement of engine oil filter element, acceptable clean oil shall be filled into the new filter element prior to installation.
- Use the oils approved by Sany.
- Never use the hydraulic oil that has not been approved by Sany, which can block filter cartridge.
- Remove the remaining oil as much as possible from the lines and cylinders when changing the hydraulic oil. A small amount of different residual is acceptable.

5.2.1.2 Fuel

- To prevent the moisture in air from condensing in the fuel tank, the tank must be fully refueled after each workday.
- The fuel injection pump is a precise component, which may not work normally if the fuel contains water or other foreign substances.
- The sediment and water in the fuel tank must be drained before starting the engine or after 10 minutes since injection of oil.

Downloaded from www.Manualslib.com manuals search engine

https://truckmanualshub.com/

- Flush the fuel tank and the fuel system in case of any impurities found in the fuel tank.
- The air in fuel path must be eliminated in case that the engine runs out of fuel or the filter cartridge has been replaced.
- Always use the type of fuel specified in the "Maintenance Section."
  - The fuel can freeze below the specified temperature (especially lower than -15°C (5°F)).
  - When the fuel is used above the specified temperature, its viscosity and output power will decrease .
  - Pay special attention to prevention of impurities when storing or refilling the fuel.

Note:

Always use diesel oil as the fuel.

To ensure favorable consumption and exhaust of the fuel, the engine installed to your machine uses high-pressure oil injection unit with mechanical control. The unit contains high-precision components that require high-quality lubrication. Therefore, the use of low-viscosity fuel with low lubricating capability will considerably reduce the service life of the unit.

5.2.1.3 Coolant

- The coolant is also an important fluid against corrosion and freezing.

  Anti-freezing coolant is also necessary in regions where freezing prevention is unnecessary.

  Sany machines are prefilled with TEEC-L35 antifreeze, which has excellent performance in anticorrosion, anti-freezing and cooling, and can last for 1 year or 2000

Downloaded from www.Manualslib.com manuals search engine

https://truckmanualshub.com/

hours.

As a basic principle, we do not recommend you using coolants other than TEEC-L35 antifreeze. The use of other coolants is possible to cause serious problems, such as corrosion of the light metal parts of the engine and cooling system.

- Use distilled water or tap water (softened water) to dilute anti-freezing coolant.

  Natural water, such as river water and well water (hard water), contains large amount of minerals (calcium, magnesium, etc.), which can easily scale in the engine and radiator. The scale is hardly removed once formed in the engine and radiator. Overheat can occur due to unfavorable heat exchange. The water with overall hardness lower than 10 PPM is recommended when diluting the coolant.

- Precautions in this manual must be followed when using antifreeze.
- Anti-freezing coolant is flammable. Therefore, it must be kept away from naked fire.
- If the engine is overheating, wait for the engine to cool down before refilling coolant.
- Overheat can be caused if the coolant level is low. In addition, the air trapped in coolant can result in corrosion problem.

5.2.2 Grease

- Grease is used to prevent distortion and noise of joints.
- It is necessary to add grease to any component that appears inflexible or noisy after operation for a long period.
- Always use the recommended greases. Select the grease according to change interval and ambient temperature recom-

Downloaded from www.Manualslib.com manuals search engine

https://truckmanualshub.com/

mended in this manual.

- Wipe off the used grease that has been squeezed out when greasing. Make sure to wipe off the used grease that has been contaminated by sand or debris, which can otherwise lead to wear of rotating components.

5.2.3 Oil and fuel storage

- Store the oils and fuel indoors in order to keep them free from water, dust and other foreign substances.
- To store the barrel of oil or fuel for a long period, it is necessary to place the barrel with its opening facing the side in order to prevent intake of moisture. If you have to place the barrels outdoors, cover them properly with waterproof canvas or take other protective measures.
- To prevent deterioration of oil or fuel during long-term storage, use the oil or fuel that has been stored earlier than others.

5.2.4 Filter element

- Filter element is extremely important for safety. It can prevent failures by keeping important devices free from impurities coming from oil path or air path. All filter elements must be replaced regularly. When operating in unfavorable conditions, the filter elements shall be replaced more frequently according to the sulfur content in lubricant and fuel.
- Never use an element that has been cleaned. Replace it with a new one.
- In replacement of filter element, check the element for attached metal particles. Contact your Sany distributor if metal particles are found.
- Never open the package of a spare element when it is in storage.

Downloaded from www.Manualslib.com manuals search engine

https://truckmanualshub.com/

- Use genuine Sany elements.

5.2.5 Electrical system

- Humid electrical devices or damaged wire can cause short circuit and machine failure. Never flush the interior of your cab with water. When flushing your machine, be careful with water, which shall not penetrate into the electrical components.
- Electrical system maintenance correlates to checking the tension, damage or wear of fan belt.
- Never install any other electrical components except those specified by Sany.
- External electromagnetic interference can cause failure of system controller. Contact your Sany distributor before installing radio receiver or other wireless devices.
- Operating on beach requires cleaning the electrical system thoroughly in order to prevent corrosion.
- When installing an electrical device, connect it to dedicated power source. Never connect other power sources to the fuse, start switch or battery relay.

5.2.6 Hydraulic system

During operation and immediately after operation is ended, the temperature of the hydraulic system still remains high.

In addition, high hydraulic pressure is applied to the system. Take care when inspecting and maintaining the hydraulic system.

Stop the machine on lever ground; lower the bucket to the ground, then set so that there is no pressure applied to the cylinder circuit.

Always stop the engine Immediately after operations, the hydraulic oil and lubricating oil

Downloaded from www.Manualslib.com manuals search engine

https://truckmanualshub.com/

are at high temperature and high pressure, so wait for the oil temperature to go down before starting maintenance.

Even when the temperature goes down, the circuit may still be under internal pressure, so when loosening the plug or screw, or the hose joint, do not stand in front of the part. Loosen it slowly to release the internal pressure before removing it.

When carrying out inspection or maintenance of the hydraulic circuit, always bleed the air from the hydraulic tank to remove the internal pressure.

Periodic maintenance includes the inspection of the hydraulic oil lever, replacement of the filter and refilling of hydraulic oil.

When the high pressure hose, etc. Is removed, check the O-ring for damage. If necessary, replace it.

After the hydraulic filter element and strainer are cleaned or replaced, or after the hydraulic system is repaired of replaced or the hydraulic piping is removed, bleed air from the hydraulic circuit.

The accumulator is charged with high-pressure nitrogen gas. Incorrect handling may be dangerous.

For the handling procedure “**Accumulator**” **on page 2-67**.

Downloaded from www.Manualslib.com manuals search engine

https://truckmanualshub.com/

5.3 Replacement Parts

- Replacement parts, such as filter element and bucket tips, should be replaced according to maintenance schedule or before the wearing limits are reached.
- Replacement parts shall be replaced properly in order to use your machine economically.
- Select Sany genuine quality parts for replacement.
- Check the part number in the Parts Manual when ordering a part.

Also replace the part in brackets.

Component	Part Number	Part	Qty	Interval
Fuel filter, primary	60064761(SY115C9, SY135C8/C9, SY155H) 60033346(SY135C8(M))	Filter element	1	Every 250 hours
Fuel filter, secondary	B222100000453(SY115C9, SY135C8/C9, SY155H) B222100000415(SY135C8(M))	Filter	1	Every 250 hours
Oil filter	B222100000488(SY115C9, SY135C8/C9, SY155H) B222100000386(SY135C8(M))	Filter	1	Every 250 hours
Pilot filter	B229900000063	Filter element (O-ring seal)	1 (1)	Every 500 hours
Hydraulic oil filter	60101257 60101256	Filter element, oil suction Filter element, oil return	1 (1)	Every 1000 hours
Air filter, main	B222100000500	Filter element	1	—
Air filter, safety	B222100000501	Filter element	1	—
Breather valve filter element	60174894	Filter element	1	Every 1500 hours
Bucket (SY115C)	60102737 (60102738)	Lateral pin Bucket tips (Pin group)	5 (5)	—
	A229900007131 A229900007130 (A210111000301) (A210307000006)	Left cutter Right cutter (Bolt) (Nut)	1 1 (8) (8)	
Bucket (SY135C8)	10143956 (10143975)	Lateral pin Bucket tips (Pin)	4 (4)	—
	A229900007131 A229900007130 (A210111000301) (A210307000006)	Left cutter Right cutter (Bolt) (Nut)	1 1 (8) (8)	

Downloaded from www.Manualslib.com manuals search engine

https://truckmanualshub.com/

Component	Part Number	Part	Qty	Interval
Bucket (SY135C9)	60100572 (10143975) A229900005244 A229900005241	Lateral pin Bucket tips (Pin) Tip adaptor Tip pin	4 (4) 4 4	—
	A229900007131 A229900007130 A210111000301 60012073	Left cutter Right cutter (Bolt) (Nut)	1 1 (8) (8)	
Bucket (SY155H)	60100572 (A229900005241)	Lateral pin Bucket tips (Pin)	4 (4)	—
	A229900007131 A229900007130 (A210111000301) (A210307000006)	Left cutter Right cutter (Bolt) (Nut)	1 1 (8) (8)	

5.4 Recommended Fluids

- To keep your machine at the maximum state for a long period of time, it is necessary follow the oil instructions described in this manual. Failure to do so can cause overwear and service life reduction of the engine, power train, cooling system and other components.
- The additives available in market could benefit your machine, but they could impair your machine as well. We do not recommend any lubricant additives.
- The specific capacity refers to the overall oil volume in tanks and lines. Supplementary volume refers to the amount of oil used to make up the system in inspection and maintenance.
- The use of multigrade oils is strongly recommended when starting the engine at temperatures below 0°C (32°F), even if the daytime temperatures rise above 0°C(32°F).
- Use the recommended oils according the ambient temperatures given in the following table.
- When the sulfur content of fuel is less than 0.5%, change the fuel according to the required maintenance interval given in this manual. If the sulfur content is more than 0.5%, change the fuel according to the following table:

Sulfur Content in Fuel	Oil-Change Interval - Engine Oil Pan
0.5 - 1.0%	1/2 of standard interval
More than 1.0%	1/4 of standard interval

Table 5-2

Downloaded from www.Manualslib.com manuals search engine

https://truckmanualshub.com/

Fluid	Ambient Temperature									Recommended fluids
	-22 -30	-4 -20	14 -10	32 0	50 10	68 20	86 30	104 40	122 °F 50°C	
Oil										5W-30
										5W-40
										10W-30
										15W-40
										40
Hydraulic oil										HDZ32 (ISO VG32)
										HDZ46 (ISO VG46)
Diesel fuel										-30 diesel
										-10 light diesel
										0 light diesel
Coolant (Note 2)										TEEC-135 antifreeze

(Note 1)

Table 5-3

Downloaded from www.Manualslib.com manuals search engine

https://truckmanualshub.com/

5.4.1 Fluid capacities

	Engine Oil Pan*	Swing Drive	Final Drive	Hydraulic System	Cooling System	Fuel Tank
L	13.2(*)	3.0	2.5	150	16	240
US gal	3.5	0.79	0.66	39.62	4.23	63.4

Note:

* Capacity of engine oil pan on SY135C8M is 15 L (3.98 US gal).

Always use diesel oil as the fuel.

To ensure favorable consumption and exhaust of the fuel, the engine installed to your machine uses high-pressure oil injection unit with mechanical control. The unit contains high-precision components that require high-quality lubrication. Therefore, the use of low-viscosity fuel with low lubricating capability will considerably reduce the service life of the unit.

Note 1: The HTHS (high-temperature high-shear viscosity at 150°C) required by ASTM D4741 must be equal to or more than 3.5 mPa-S. Sany strongly recommend the use of engine oil 15W-40.

Note 2: Coolant

1) The coolant is also an important fluid against corrosion and freezing.

   Antifreezing coolant is also necessary in regions where freezing prevention is unnecessary.

   Sany machines are prefilled with TEEC-L35 antifreeze, which has excellent performance in anticorrosion, antifreezing and cooling.

2) For more information on diluting TEEC-L35 antifreeze with water **see "Cooling system - clean" on page 5-37**.

3) The proper concentration of coolant must be kept in order to ensure the coolant's performance against corrosion.

Recommended brands and quality of recommended products besides Sany genuine oils

Consult your Sany distributor before using any oils other than those recommended by Sany.

Downloaded from www.Manualslib.com manuals search engine

https://truckmanualshub.com/

5.4.2 Recommended oils:

1. Engine oil

   Select the oil of proper viscosity according to the temperature range given in the oil change schedule.

   Engine oil grade: Above API CF-4

   Recommended engine oil brand and type: Caltex CH-4 15W-40

2. Engine fuel

   Light diesel oil (GB252.81)

   - In most cases, the use of fuel ASTH2 and the diesel oil (minimum cetane number is 40) can achieve the best economic result and operating performance. At where the elevation is high or the ambient temperature is too low, it is necessary to use the fuel whose cetane number is more than 40 in order to prevent flameout and too much smoke.
   - When the fuel of low sulfur content is used, its cloud point shall be at lease 10°C lower than the expected minimum fuel temperature. Cloud point is the temperature at which the waxy crystals begin to form.
   - The universal diesel fuel of commercial brands shall contain sulfur that is less than 0.5%.
   - Clean fuel free from water and/or impurities shall be ensured before refueling.

3. Hydraulic oil

   The hydraulic system uses Caltex HDZ46 hydraulic oil (code B420106000036).

   When the ambient temperature is below 0°C, the following items have to be followed to heat the hydraulic system in order

Downloaded from www.Manualslib.com manuals search engine

https://truckmanualshub.com/

to ensure the safety of the hydraulic system.

- Run the engine at idle speed for 7-10 minutes before increasing its rpm to 1000 - 1200. Never operate your excavator except running the engine unloaded for 30-40 minutes or longer in order to heat the hydraulic oil to a temperature above 20°C.
- Now your machine can be used for normal construction operation after the hydraulic oil temperature rises above 20°C. However, the heating time shall be adjusted according to ambient temperature. In normal construction work, the joystick controls and pedals shall be maneuvered slowly while paying close attention to the system's running condition. Operating your machine with the hydraulic oil temperature being below 20°C could damage the hydraulic elements.
- Anti-friction hydraulic oil L-HM46 is widely used in temperate zones.
- Low-temperature, anti-friction hydraulic oil L-HV32, whose pour point is -42°C, is used in extremely cold regions (below -30°C) such as Russia and Northeast China.
- Anti-friction hydraulic oil L-HM68 is generally used in torrid regions such as the Middle East and India.
- Select proper hydraulic oil according to the region where your machine is to be operated. The machine has been filled with hydraulic oil of suitable brand and type before it is delivered. User is responsible to change the oil after the machine is delivered. You may consult our after-sale service personnel to obtain correct brand and type of the hydraulic oil.

Downloaded from www.Manualslib.com manuals search engine

https://truckmanualshub.com/

5.5 Tightening Torque Specification

NOTICE

- **The nuts, bolts or other parts having not been tightened to specific torque values can lead to loose or damaged parts, hence resulting in machine failure and operating troubles.**
- **Special attention shall be paid when tightening any parts.**

Unless specified otherwise, the metric nuts and bolts shall be tightened to the values given in the following table.

The tightening of torque is determined by the width of screw cap or nut.

In replacement of the bolts or nuts, use Sany genuine parts of equivalent size.

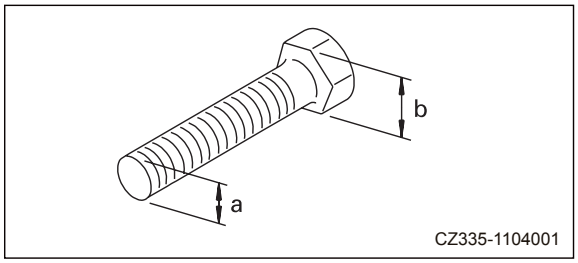

Fig. 5-1

Thread Diameter a (mm)	Square Size b (mm)	Tightening Torques					
		Target Values			Torque Limits		
		N·m	kgf·m	lbft	N·m	kgf·m	lbft
6	10	13.2	1.35	9.8	11.8 - 14.7	1.2 - 1.5	8.7 - 10.8
8	13	31	3.2	23.1	27 - 34	2.8 - 3.5	20.3 - 25.3
10	17	66	6.7	48.5	59 - 74	6.0 - 7.5	43.4 - 54.2
12	19	113	11.5	83.2	98 - 123	10.0 - 12.5	72.3 - 90.4
14	22	177	18	130.2	157 - 196	16.0 - 20.0	115.7 - 144.7
16	24	279	28.5	206.1	245 - 309	25.0 - 31.5	180.8 - 227.8
18	27	382	39	282.1	343 - 425	35.0 - 43.5	253.2 - 314.6
20	30	549	56	405	490 - 608	50.0 - 62.0	361.7 - 448.4
22	32	745	76	549.7	662 - 829	67.5 - 84.5	488.2 - 611.2
24	36	927	94.5	683.5	824 - 1030	84.0 - 105.0	607.6 - 759.5
27	41	1320	135	976.5	1180 - 1470	120.0 - 150.0	868.0 - 1085.0
30	46	1720	175	1265.8	1520 - 1910	155.0 - 195.0	1121.1 - 1410.4
33	50	2210	225	1627.4	1960 - 2450	200.0 - 250.0	1446.6 - 1808.3
36	55	2750	280	2025.2	2450 - 3040	250.0 - 310.0	1808.3 - 2242.2
39	60	3280	335	2423.1	2890 - 3630	295.0 - 370.0	2133.7 - 2676.2

Table 5-4

Downloaded from www.Manualslib.com manuals search engine

https://truckmanualshub.com/

Hydraulic hoses are tightened according to the torques given below.

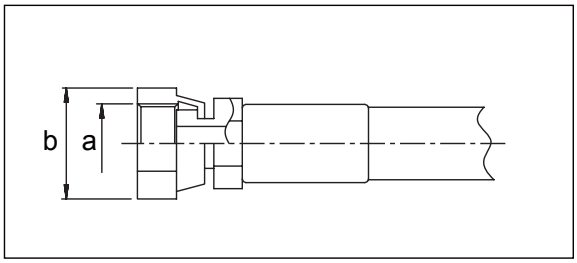

Fig. 5-2

Nominal Thread Number (a)	Square Size (b)(mm)	Tightening Torques					
		Target Values			Permissible Range		
		N·m	kgf·m	lbft	N·m	kgf·m	lbft
9/16-18UNF	19	44	4.5	32.5	35-63	3.5-6.5	25.3-47
11/16-16UN	22	74	7.5	54.2	54-93	5.5-9.5	39.8-68.7
13/16-16UN	27	103	10.5	75.9	84-132	8.5-13.5	61.5-97.6
1-14UNS	32	157	16.0	115.7	128-186	13.0-19.0	94-137.4
13/16-12UN	36	216	22.0	159.1	177-245	18.0-25.0	130.2 -180.8
☆ 1 -7/16 - 12UN - 2B	41	215	22.0	159.1	176-234	18.0-24.0	130.2-180.8

Table 5-5

Note: The item marked with ☆ is used for tightening the hose on top of the swivel joint.

Downloaded from www.Manualslib.com manuals search engine

https://truckmanualshub.com/

5.6 Safety-Related Parts

To ensure your safety during operating or driving the machine, user shall carry out regular maintenance on the machine. In addition, user shall also replace the parts listed in the table in order to further improve the safety condition. These parts are closely related to safety and fire prevention.

Since the safety-related parts may become easily worn or deteriorated due to material changing along with the time, it is hard to judge their conditions through regular maintenance. These parts shall be replaced as scheduled regardless of their conditions, which can effectively guarantee the functions of these parts.

If any safety-related part becomes abnormal before its scheduled replacement, it must be repaired or replaced immediately.

If any hose deteriorates, such as deforming or cracking, the hose clamps shall also be replaced while replacing the hose.

O-ring, gasket and other similar parts shall also be replaced while replacing a hose.

Consult your Sany distributor to replace the following safety-related parts on a regular basis.

No.	Safety-related parts subject to regular replacement	Quantity	Frequency
1	Fuel hose (fuel tank - water separator)	1	Every 2 years or 4000 hours, whichever occurs first.
2	Fuel hose (water separator - primary filter)	1	
3	Fuel return hose (engine - fuel tank)	1	
4	Fuel hose (primary filter - engine)	1	
5	Pump outlet hose (pump - control valve)	2	
6	Work equipment hose (boom cylinder oil inlet)	4	
7	Work equipment hose (Bucket cylinder line - boom root)	2	
8	Work equipment hose (bucket cylinder oil inlet)	2	
9	Work equipment hose (arm cylinder line - boom root)	2	
10	Work equipment hose (arm cylinder oil inlet)	2	
11	Swing drive hose (swing motor oil inlet)	2	
12	Main oil suction hose	1	
13	Travel control hose (control valve - swivel joint)	4	
14	Travel control hose (swivel joint - travel motor)	4	
15	Pump pressure hose	1	
16	Accumulator (control oil)	1	
17	High-pressure tube clamps	1	Every 8000 hours
18	Cover - fuel squirt prevention	1	
19	Seat belt	1	Every 3 years

Table 5-6

Downloaded from www.Manualslib.com manuals search engine

https://truckmanualshub.com/

5.7 Maintenance Schedule

If your machine is equipped with hydraulic breaker, the maintenance schedule for some parts may vary. For more information and proper maintenance see "Hydraulic Breaker Maintenance Schedule."

5.7.1 List of maintenance schedule

Maintenance after initial 50 service hours 5-28

Engine oil and filter - change/replace 5-28
Fuel filter - replace 5-28

When Required 5-29

Air cleaner - clean/replace 5-29
Cooling system - clean 5-37
Track shoe bolts - inspect/tighten 5-41
Track tension - inspect/adjust 5-42
Bucket tips (lateral pin) - replace 5-45
Bucket Replacement 5-47
Bucket clearance - adjust 5-49
Window washer fluid - check/refill 5-51
Air conditioner - inspect/service 5-52
Gas spring - inspect 5-54
Air in hydraulic system - purge 5-55
Hydraulic circuit internal pressure - release 5-58

Checks before starting 5-59

Every 100 service hours 5-60

Lubrication 5-60

Every 250 service hours 5-63

Compressor belt tension - inspect/adjust 5-63
Oil in engine oil pan and oil filter - change/replace 5-65
Primary fuel filter - replace 5-67
Secondary fuel filter - replace 5-71

Every 500 service hours 5-74

Downloaded from www.Manualslib.com manuals search engine

https://truckmanualshub.com/

Swing bearing - lubricate 5-74
Swing pinion gear grease - check/refill 5-75
Coolant tank and radiator fins - inspect/clean 5-76
Air conditioner filters - clean 5-77
Swing drive oil - check/refill 5-80
Final drive oil - check/fill 5-81

Every 1000 service hours 5-82

Hydraulic oil filter - replace 5-82
Swing drive oil - change 5-84
Engine exhaust pipe clamps - check 5-85
Fan belt tension - check/replace 5-85
Nitrogen pressure in accumulator (breaker) - check 5-85

Every 2000 service hours 5-86

Final drive oil - change 5-86
Hydraulic tank filter screen - clean 5-88
Nitrogen pressure in accumulator (control oil circuit) - check 5-89
Hydraulic circuit internal pressure - release 5-92
Oil in hydraulic tank - change 5-93
Alternator - inspect 5-95
Engine valve clearance - check/adjust 5-95

Every 4000 service hours 5-95

Coolant pump - inspect 5-95
Start motor - check 5-95
Accumulator (control oil circuit) - replace 5-96
High-pressure tube clamps and rubber - check 5-97
Compressor working condition - inspect 5-97

Every 8000 service hours 5-98

High-pressure tube clamps - replace 5-98

Every 10000 service hours 5-98

Downloaded from www.Manualslib.com manuals search engine

https://truckmanualshub.com/

5.7.2 Hydraulic Breaker Service Interval

For machines equipped with a hydraulic breaker, the hydraulic oil deteriorates faster than that of machines operating with a bucket. In this case, the following steps shall be followed in order to adjust the service intervals.

- **Change hydraulic filter element**

  For a new machine, the filter element is to be replaced after the first 100-150 service hours. Subsequent replacement shall be carried out according to the right chart.

- **Change the oil of hydraulic tank**

  Change the oil according to the right chart.

- **Replace the additional filter element (if equipped) of the breaker**

  Replace the pilot filter element (if equipped).

  The filter element is to be replaced according the right chart when the breaker has served for 250 hours (breaker operating proportion more 50%).

Remark:

100% breaker operation means that the breaker is used all the time, while 0% means that the breaker never used.

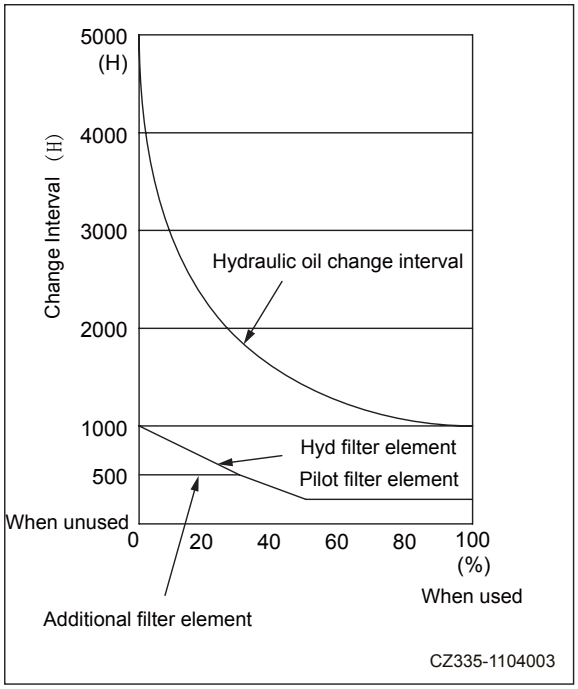

Fig. 5-3

Downloaded from www.Manualslib.com manuals search engine

https://truckmanualshub.com/

5.8 Maintenance Procedures

5.8.1 Maintenance after initial 50 service hours

The following maintenance is to be carried out after initial 50 service hours.

Consult your Sany distributor for special tools used for checks and maintenance.

5.8.1.1 Engine oil and filter - change/replace

For the procedures of changing engine oil and replacing oil filter see **“Oil in engine oil pan and oil filter - change/replace” on page 5-65.**

5.8.1.2 Fuel filter - replace

For the procedures of replacing fuel filters see **“Primary fuel filter - replace” on page 5-67 and “Secondary fuel filter - replace” on page 5-71.**

Downloaded from www.Manualslib.com manuals search engine

https://truckmanualshub.com/

5.8.2 When Required

5.8.2.1 Air cleaner - clean/replace

WARNING

- **If you check, clean and replace the filter when the engine is running, dust may invade the engine and cause damage. Shut down the engine before doing this job.**
- **The sealing rubber of the end cap must be held tightly against the filter.**
- **The use of compressed air could cause debris to fly out and result in personal injury.**
- **Always wear goggles, dust-proof mask or other protective gear.**
- **It is dangerous to pull out the outer filer element with force. When you work on a overhead place or at where you cannot stand firmly, be careful that the counter-acting force resulted from pulling of the outer filter element could cause you to fall.**

Always prepare your machine as required and lock/tag it out before proceeding. **See "Preparing the machine" on page 2-58 and "Lock-out and tag-out" on page 2-60.**

Downloaded from www.Manualslib.com manuals search engine

https://truckmanualshub.com/

Replacement

- Replace filter elements.

  If the filter has been used for more than a year or cleaned for more than six times, replace the outer filter element (5) and inner filter element (6) together.

- Replace vacuum valve.

  If rubber seal is broken or deformed considerably, replace the vacuum valve (4).

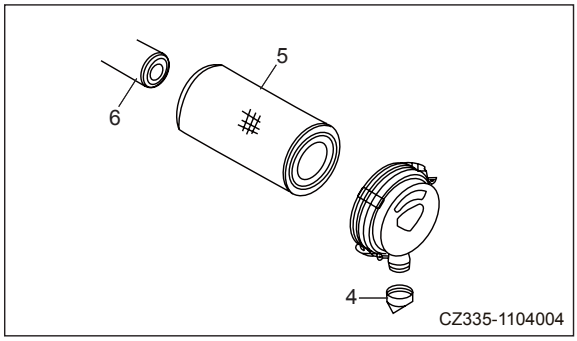

Fig. 5-4

Cleaning the outer filter element

Note:

Never place the filter under direct sunlight before and after cleaning.

1. Open the left rear door of the machine and loosen the four latches (2) to remove the cover (3).

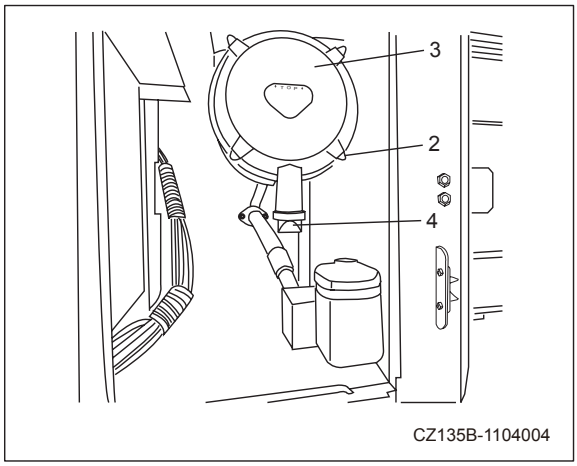

Fig. 5-6

Note:

- Never disassemble the secondary air cleaner element (6), which will allow dirt to pass through and cause engine failure.
- Never use a screwdriver or other tools.

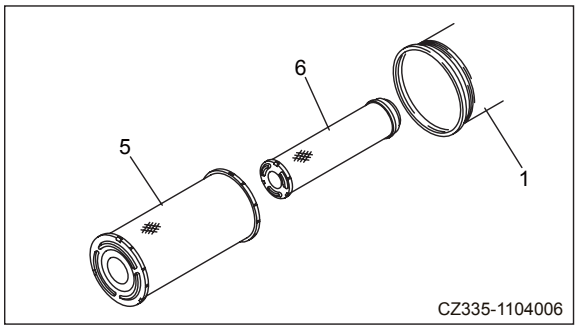

Fig. 5-5

Downloaded from www.Manualslib.com manuals search engine

https://truckmanualshub.com/

2. Hold the primary air cleaner element (5), shake it slightly and turn it in both directions in order to pull it out.

3. After removing the primary air cleaner element (5), check the secondary air cleaner element to see if it displaces or tilts. Push it back to position in case of displacement or tilting.

4. After removal of the primary air cleaner element (5), use clean cloth or tape to cover the secondary air cleaner element (6) in order to prevent entering of dirt.

5. Wipe or brush off the dirt from the cover (3) and the inside of air cleaner housing (1).

6. Wipe off the dirt built up on the cover (3) and the vacuum valve (4).

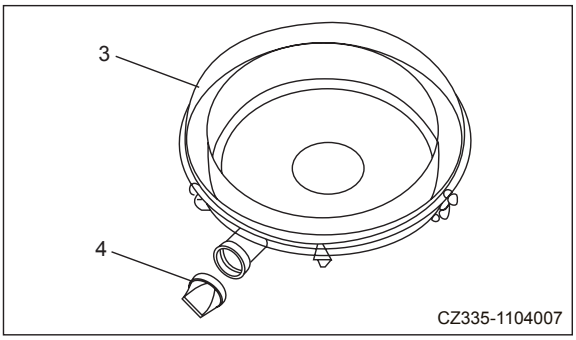

Fig. 5-7

Note:

Never tap the air filter with any object when cleaning it.

7. Use dry compressed air (less than 0.69 MPa (7kgf/cm2) 99.4 PSI)) to blow along the inside of the pleats toward the primary air cleaner element, and then direct the compressed air along the outside of the pleats to blow from interior to exterior.

   1) Replace the primary air cleaner elements that have been cleaned six times or used for more than a year. Replace the secondary air cleaner element at the same time.

   2) Remove one of the tags from the filter after each cleaning.

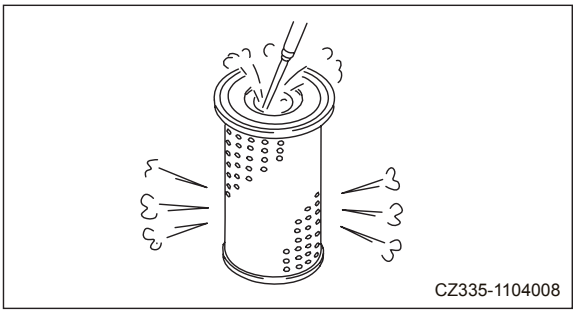

Fig. 5-8

Downloaded from www.Manualslib.com manuals search engine

https://truckmanualshub.com/

8. Use a light to illuminate the whole primary air cleaner element. Replace the primary air cleaner element in case of holes or reduced thickness found in the filter material.

9. Remove the cloth or tape covering the inner filter element (6).

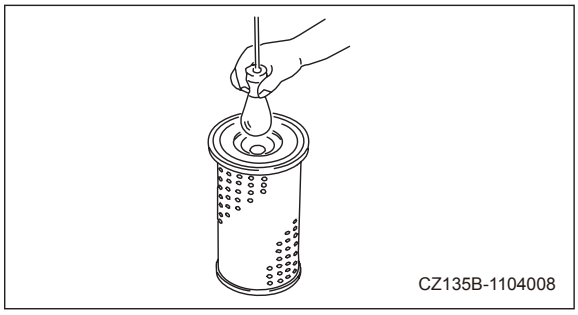

Fig. 5-9

Note:

- Never use air cleaner elements with damaged pleats, gaskets or seals.
- Using a filter that has been used for more than a year or an O-ring that has been cleaned could result failure. Never use them again.

10. Check the new filter or the cleaned filter for dirt or oil stains on the sealing area. Wipe off the dirt or oil stains.

11. Push the primary air cleaner element straight forward into the air cleaner housing. You can hold the primary air cleaner element and shake it slightly in order to insert the primary air cleaner element easily.

Note:

The air cleaner must be reinstalled correctly. Make sure that the air cleaner cartridge's bottom (the end without opening) (B) (C) faces the cover (3). Incorrect installation could result in air filter damage and engine damage.

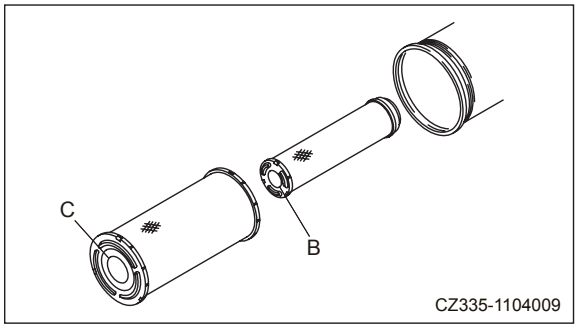

Fig. 5-10

Downloaded from www.Manualslib.com manuals search engine

https://truckmanualshub.com/

Note:

The latches (2) and housing of air cleaner could be damaged when you insert filter element with expanded rubber on the top or you did not push it in vertically but latch the cover (3) with force. So be careful when you reassemble filter element.

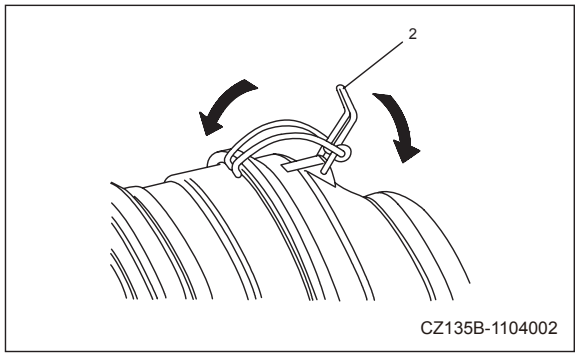

Fig. 5-11

12. Install the cover (3) according to the following steps.

    1) Align the cover (3) with the filter.

    2) Let the end of latch (2) catch the flange of the air cleaner housing.

    3) To lock the latches (2), engage the latches in a diagonal sequence (top - bottom - left - right) like tightening the bolts.

    4) The vacuum valve (4) shall face toward the ground (A) when installing the cover (3).

    5) When the cover (3) is installed, inspect the air cleaner housing shall not have a larger clearance with the cover (3). Reinstallation is necessary in case of larger clearance.

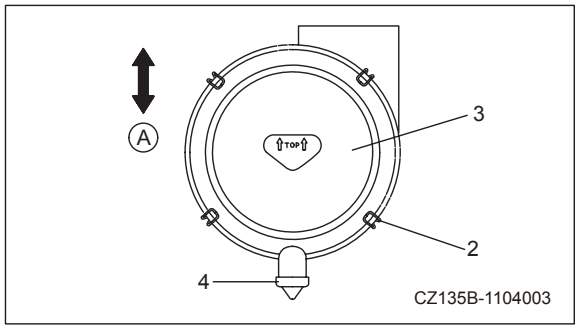

Fig. 5-12

Downloaded from www.Manualslib.com manuals search engine

https://truckmanualshub.com/

Replacing filter elements

1. Open the left rear door of the machine and loosen the four latches (2) before removing the cover (3).

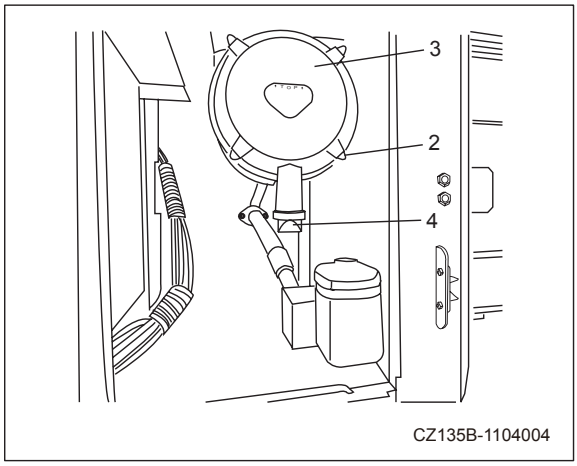

Fig. 5-14

2. Hold the outer filter element (5), shake it slightly and turn it in both directions in order to pull it out. Never remove the inner filter element (6).

3. After removing the outer filter element (5), check the inner filter element to see if it displaces or tilts. Push it back to position in case of displacement or tilting.

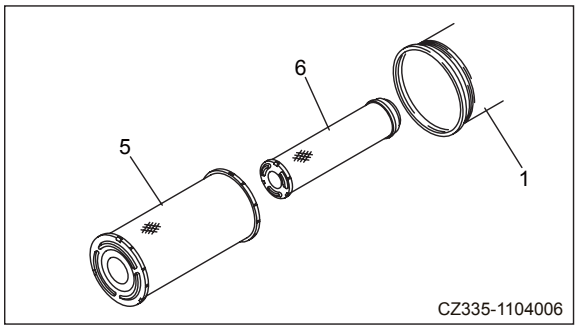

Fig. 5-15

4. Wipe or brush off the dirt from the cover (3) and the inside of air filter housing (1).

5. Wipe off the dirt built up on the cover (3) and the vacuum valve (4).

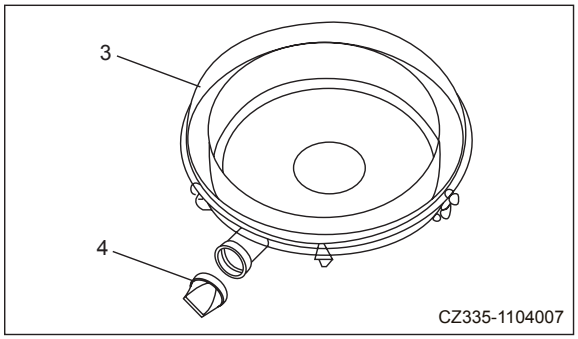

Fig. 5-13

Downloaded from www.Manualslib.com manuals search engine

https://truckmanualshub.com/

Note:

- Never use the inner filter element after cleaning it. Replace the inner filter element while the outer filter element is replaced.
- When the outer filter element and the cover have been installed, improper installation of the inner filter element could damage the outer filter element.
- Fake parts will allow dirt to pass through and damage the engine due to insufficient precision in the sealing area. Therefore, fake parts shall not be used under any circumstances.

6. Remove the secondary air cleaner element (6) and install a new secondary air cleaner element immediately.

   Insert the secondary air cleaner element securely.

7. Push the primary air cleaner element (5) straightly into the air cleaner housing.

   When pushing the primary air cleaner element, you may hold the primary air cleaner element and shake it slightly in order to make the insertion easily.

Note:

The air cleaner must be reinstalled correctly. Make sure that the air cleaner cartridge's bottom (the end without opening) (B) (C) faces the cover (3). Incorrect installation could result in air filter damage and engine damage.

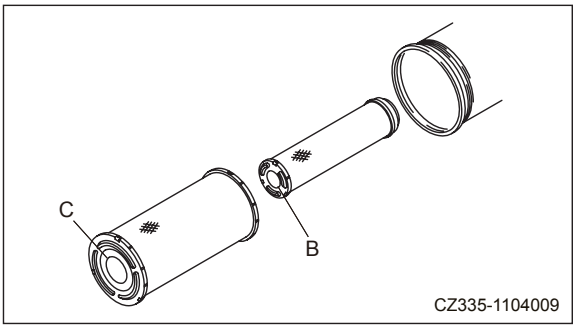

Fig. 5-16

Downloaded from www.Manualslib.com manuals search engine

https://truckmanualshub.com/

Note:

The latches (2) and housing of air cleaner could be damaged when you insert filter element with expanded rubber on the top or you did not push it in vertically but latch the cover (3) with force. So be careful when you reassemble filter element.

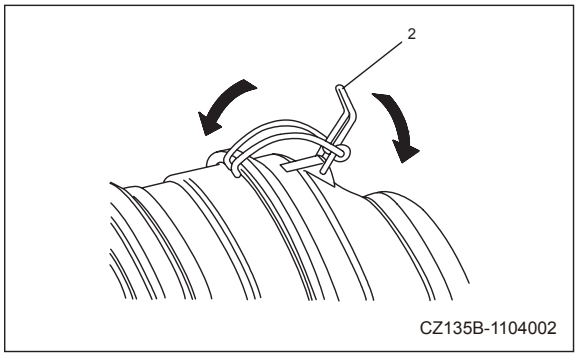

Fig. 5-17

8. Install the filter cover (3) through the following steps.

   1) Align the cover (3) with the filter.

   2) Let the end of latch (2) catch the flange of the air cleaner housing.

   3) To lock the latches (2), engage the latches in a diagonal sequence (top - bottom - left - right) like tightening the bolts.

   4) The vacuum valve (4) shall face toward the ground (A) when installing the cover (3).

   5) When the cover (3) is installed, inspect the air cleaner housing shall not have a larger clearance with the cover (3). Reinstallation is necessary in case of larger clearance.

9. Use a new sticker to replace sticker (7) on cover (3).

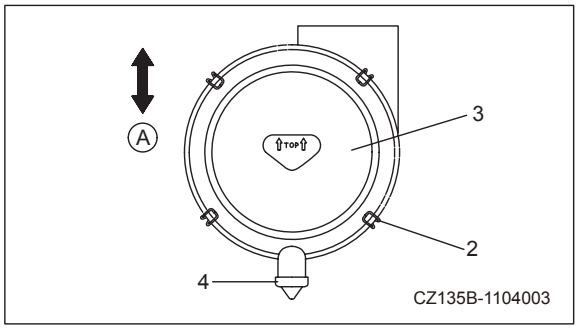

Fig. 5-18

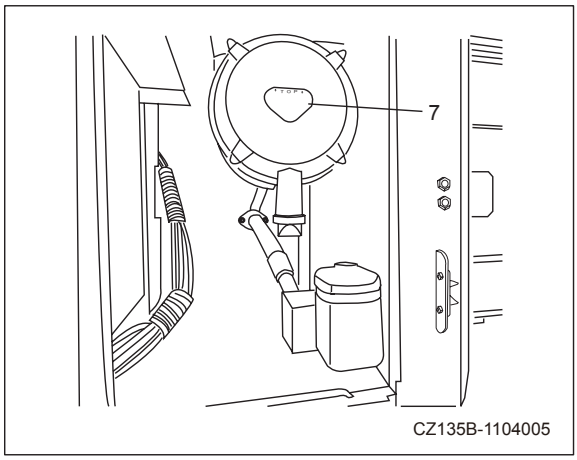

Fig. 5-19

Downloaded from www.Manualslib.com manuals search engine

https://truckmanualshub.com/

5.8.2.2 Cooling system - clean

⚠ WARNING

- **The radiator coolant is still hot under high pressure when the engine has just been shut down. It is possible to burn if you remove the radiator cap to drain the coolant. Remove the cap slowly to relieve pressure only when the cap is cool enough to touch with your bare hand.**
- **When you start the engine for cleaning purpose, the hydraulic lockout control should be placed in the LOCK position in order to prevent movement of the machine.**
- **For more information on startup of the engine** See **related sections in this manual.**
- **When disassembling the outer filter element, it is dangerous to pull it out with force. Be careful when you are doing this job on an overhead surface or at where you are unable to stand firmly. Take care that the counter-acting force of pulling the outer filter element could cause you to fall.**

Always prepare your machine as required and lock/tag it out before proceeding. **See "Preparing the machine" on page 2-58 and "Lock-out and tag-out" on page 2-60.**

Clean the inside of the cooling system and change the coolant according to the following table.

Anti-freezing coolant	Interval for cleaning the inside of the cooling system and changing anti-freezing coolant
TEEC-L35 antifreeze	Every years or 2000 hours, whichever occurs first

Table 5-7

The coolant is also an important fluid against corrosion and freezing.

Anti-freezing coolant is also necessary in regions where freezing prevention is unnecessary.

Sany recommends TEEC-L35 antifreeze, which has excellent performance in anticorrosion, anti-freezing and cooling, and can last for one year or 2000 hours.

We do not recommend you using other coolants. The use of other coolants is possible to erode the engine and cooling system parts that made of light metal such as aluminum.

Downloaded from www.Manualslib.com manuals search engine

https://truckmanualshub.com/

Sany recommends TEEC-L35 antifreeze. This antifreeze has a concentration of 50% and needs no dilution.

If you buy antifreeze from the market, make sure that the antifreeze's concentration is within the range 30-68% in order to ensure its performance against corrosion.

The ratio of mixing antifreeze with water is determined by the minimum ambient temperature, as shown in the following table.

It is better to estimate 10℃ (18 ℉) lower than the actual temperature when selecting a mixture ratio.

The mixture ratio is determined by ambient temperature. The mixture ratio shall not be lower than 30% (antifreeze/total volume of coolant ×100) in even the regions where freezing prevention is unnecessary in order to prevent corrosion of the cooling system.

The undiluted antifreeze will freeze at -15℃ (5 ℉). Do not store the undiluted antifreeze in an environment where is lower than -15℃ (5 ℉).

Minimum atmospheric temperature	℃	-10	-15	-20	-25	-30	-35	-40
	℉	14	5	-4	-13	-22	-31	-40
Antifreeze	L	6.75	8.1	9.23	10.35	11.25	12.15	13.05
	US gal	1.79	2.15	2.45	2.75	2.98	3.22	3.46
Water	L	15.75	14.4	13.3	12.15	11.25	10.35	9.45
	US gal	4.18	3.82	3.53	3.22	2.98	2.75	2.51
Volume ratio (%)		30	36	41	46	50	54	58

Table 5-8

Downloaded from www.Manualslib.com manuals search engine

https://truckmanualshub.com/

WARNING

- **Antifreeze is flammable. Naked fire should be kept away from antifreeze. Antifreeze is poisonous. Be careful when opening the drain valve in order to prevent skin contract of the water containing antifreeze. In case of contact with your eyes, flush with large amount of clean water and refer to medical care immediately.**
- **To change the coolant or drain the radiator coolant when repairing your machine, consult professional company or your Sany distributor to dispose the coolant containing antifreeze. Never drain the coolant to sewage or onto ground since the antifreeze is poisonous.**

Use suitable water to dilute the antifreeze. (For more information see "**Coolant**" **on page 5-11**.)

Density meter is recommended to control the mixture ratio.

Prepare a container to hold the drained coolant. The container's capacity should be larger than the specific volume of coolant.

Prepare a hose to transfer anti-freezing coolant and water.

1. Park your machine on a level ground and then shut off the engine. Lock out and tag out your machine before proceeding. See **"Lock-out and tag-out" on page 2-60.**
2. Remove slowly the radiator cap (1) to relieve pressure only when the coolant is cool enough for you to touch the radiator cap with your bare hand.

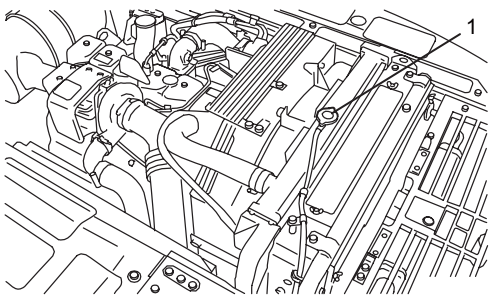

Fig. 5-20

Downloaded from www.Manualslib.com manuals search engine

https://truckmanualshub.com/

3. Remove the bottom cap and place a container to hold the coolant under the drain valve (2).

   Open the radiator bottom drain valve (2) to drain the coolant.

4. Close the drain valve (2) after draining the coolant. Add tap water to the radiator. When the radiator is full, start the engine at low speed in order to heat up to 90 ℃ (194 ℉)at minimum. Continue to run the engine for about 10 minutes.

5. Stop the engine and open the drain valve (2) to discharge water.

6. Use detergent to clean the radiator after draining the water. Refer to the detergent instruction for cleaning method.

7. Close the drain valve (2).

8. Reinstall the bottom cap.

9. Fill the coolant containing antifreeze till the fluid overflows from the filler opening. The mixture ratio of antifreeze and water is to be determined according to the chart of mixing values of antifreeze and coolant.

10. Run the engine at low speed for about five minutes and then at high speed for five minutes in order to eliminate the air from the coolant. (The radiator cap (1) shall be left open at the moment.)

11. Clean the auxiliary reservoir (3) after completely draining the coolant from it. Add water till the coolant level reaches a level between the high and the low marks.

    Replace the auxiliary tank with a new one if the old one is hard to clean.

12. Stop the engine. Wait about three minutes before adding water through the filler opening. Screw on the radiator cap tightly.

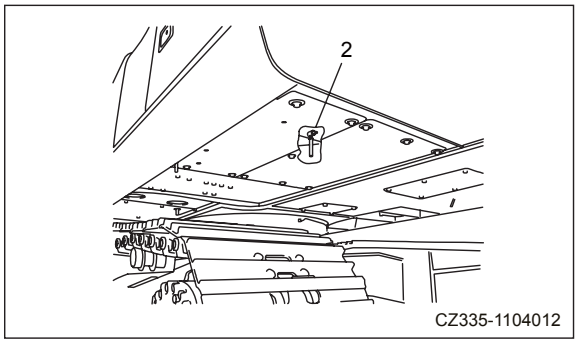

Fig. 5-21

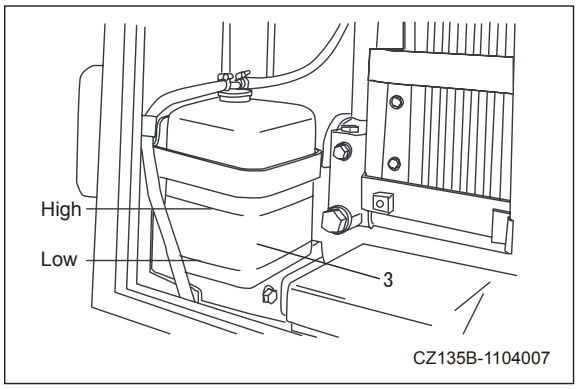

Fig. 5-22

Downloaded from www.Manualslib.com manuals search engine

https://truckmanualshub.com/

5.8.2.3 Track shoe bolts - inspect/tighten

If your machine is operated with loose track shoe bolts (1), the bolts can break. Tighten any loose bolts immediately.

Always prepare your machine as required and lock/tag it out before proceeding. **See "Preparing the machine" on page 2-58 and "Lock-out and tag-out" on page 2-60.**

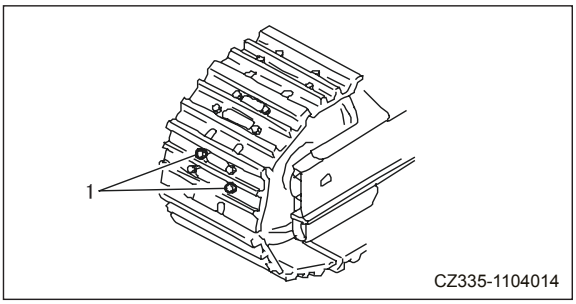

Fig. 5-23

Tightening

Three-grouser track shoe

1. Tighten the bolts to torque values of 600N·m - 680N·m (61.2kgf - 69.4kgf or 441lbft - 500lbft). Make sure that the nuts and track shoe are in close contact with the link mating surface.

2. Inspect and tighten again by 120º±10º.

Tightening sequence

Tighten the bolts in the sequence shown in the right illustration. After tightening, make sure that the nuts and track shoe are in close contact with the link mating surface.

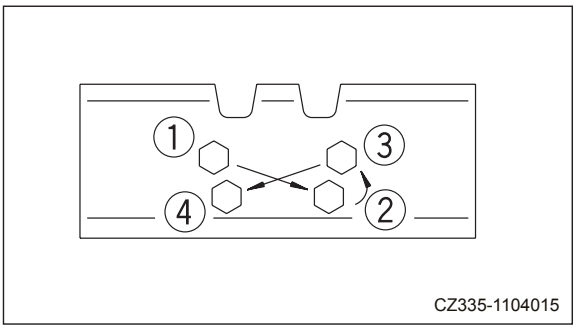

Fig. 5-24

Downloaded from www.Manualslib.com manuals search engine

https://truckmanualshub.com/

5.8.2.4 Track tension - inspect/adjust

The wear of undercarriage pin rolls and pin bushings may vary according to operating condition and soil type. Therefore, the tension of track shall be checked often in order to maintain standard tension.

Always prepare your machine as required and lock/tag it out before proceeding. **See "Preparing the machine" on page 2-58 and "Lock-out and tag-out" on page 2-60.**

Inspection

1. Run the engine at low idle speed. Travel the machine forward a distance that is equivalent to the length of an unfolded track. Park your machine.

2. Place a straight edge on top of the track grousers between the idler (1) and the carrier roller (2), as shown in the right illustration.

3. Measure the maximum amount of sag in the track. The sag is measured from the highest point of the track grouser to the bottom of the straight edge.

   The standard value of sag (a) should be10 - 30 mm (0.4 -1.2in).

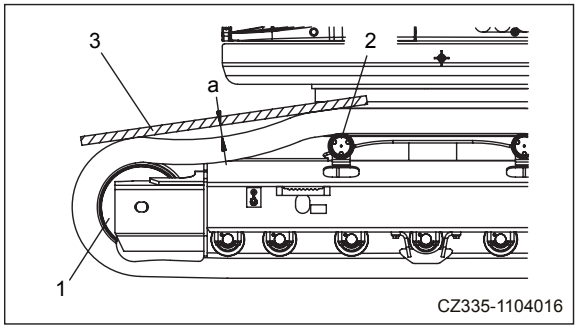

Fig. 5-25

Downloaded from www.Manualslib.com manuals search engine

https://truckmanualshub.com/

If the track tension is beyond the standard range, adjust the track tension through the following procedure.

Adjustment

⚠ CAUTION

- **The screw plug (1) is possible to fly out under high-pressurized grease. Never loosen the screw plug (1) over one turn.**
- **Never loosen any other components except the screw plug (1). Never face the installation direction of the screw plug (1).**
- **If the track does not loosen with the following method, contact your Sany distributor.**

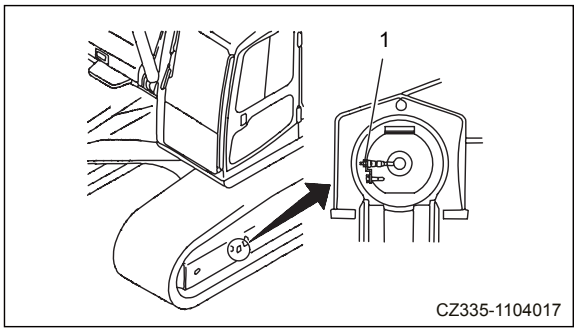

Fig. 5-26

Increasing track tension

To increase the track's tension, prepare a grease gun.

1. Add grease with the grease gun through the grease fitting (2). (The grease fitting (2) and the screw plug (1) are integral.)

2. Slowly travel the machine forward (7-8 m (23 ft - 26 ft 3 in)) in order to check whether the track tension is suitable.

3. Check the track tension again. Readjust the tension if it is still beyond the standard range.

4. Continue to add grease till the distance (S) becomes null (0). If the tension is still loose, it is probably because the pin roll and bushing are overworn. The pin rolls or bushings must be swapped or replaced. Contact your Sany distributor for repair.

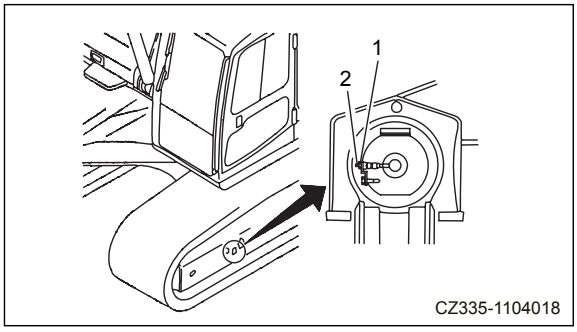

Fig. 5-27

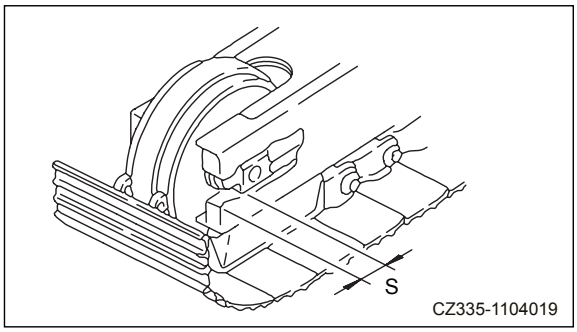

Fig. 5-28

Downloaded from www.Manualslib.com manuals search engine

https://truckmanualshub.com/

Reducing track tension

WARNING

- **Never loosen the valve (1) quickly or excessively. The grease under pressure can squirt out of the track tensioning cylinder. Carefully loosen the valve (1) and keep your body and face away from the valve (1).**
- **Never loosen the grease fitting (2).**
- **The grease is to be released through the following steps. If the tension of track is still tight, contact your Sany distributor for repair.**

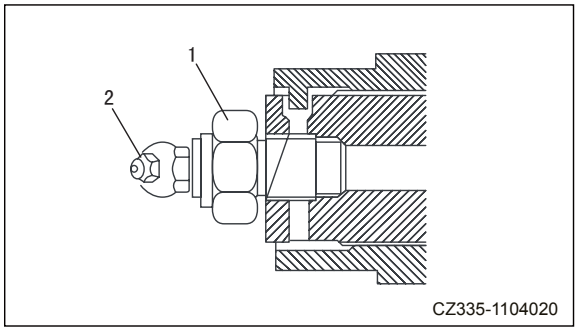

Fig. 5-29

- If gravels or mud falls between the sprocket and track link, remove it before you reduce track tension.
- To reduce track tension, slowly turn valve (1) counterclockwise with a long socket wrench. The grease will come out of the grease fitting.
- Loosening valve (1) only one turn is enough to reduce track tension.
- If grease does not come out smoothly, drive your machine back and forth for a short distance.
- When suitable sag of track is achieved, turn valve (1) clockwise to 78.4 N·m (8 kgf·m).
- To check if you have got desired track tension, run the engine at low idle speed, drive your machine forward (at a distance that is equivalent to the length of an unfolded track), and then park the machine.
- Check track tension again. Readjust the tension if it is still beyond the standard range.

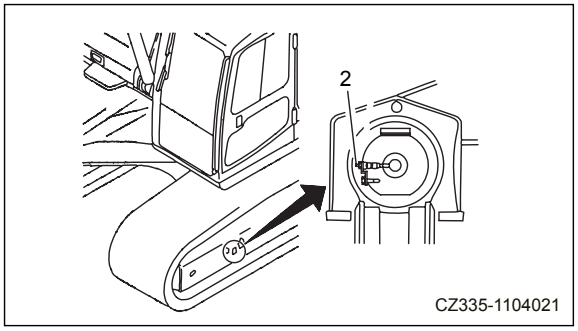

Fig. 5-30

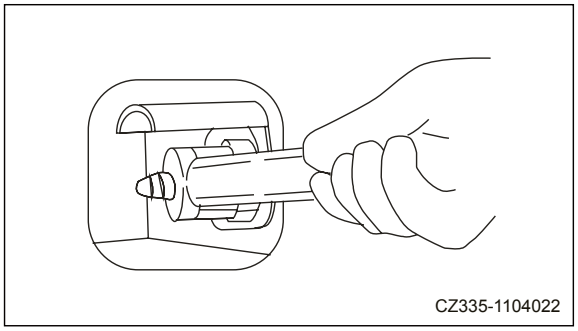

Fig. 5-31

Downloaded from www.Manualslib.com manuals search engine

https://truckmanualshub.com/

5.8.2.5 Bucket tips (lateral pin) - replace

Replace the bucket tip before the tip adapter is worn.

WARNING

- **Place the work equipment firmly before replacing the bucket tips. Stop the engine and engage the hydraulic lockout control. If the hydraulic lockout control is free, unexpected movement of the work equipment could cause sever accident.**
- **If you drive the pin with great force, the pin may fly out and cause an accident. Keep irrelevant people a safe distance from the area.**
- **Debris may fly out during replacement. Always wear safety goggles, gloves and other necessary protective gear.**

Always prepare your machine as required and lock/tag it out before proceeding. **See "Preparing the machine" on page 2-58 and "Lock-out and tag-out" on page 2-60.**

1. Place a block beneath the bucket in order to remove the pin and keep the bucket bottom leveling.

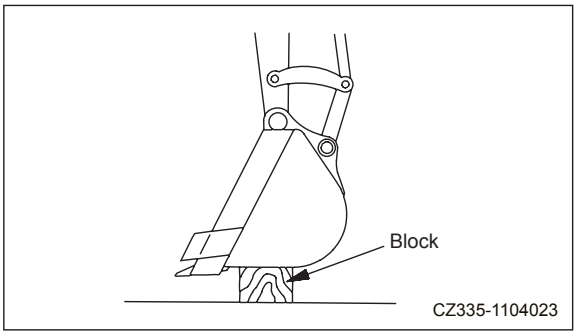

Fig. 5-32

2. Make sure the work equipment is stable and the hydraulic lockout control is in LOCK position.

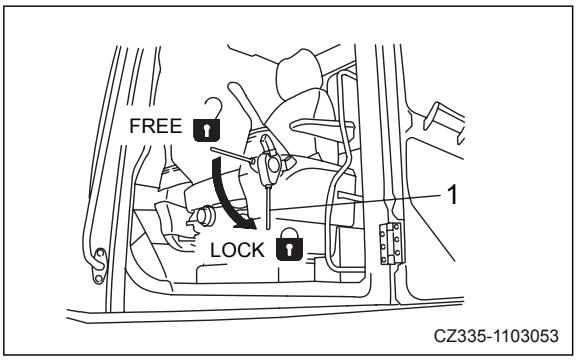

Fig. 5-33

Downloaded from www.Manualslib.com manuals search engine

https://truckmanualshub.com/

3. Place a metal stick against one end of the pin (1) and hammer the metal stick in order to drive the pin (1) out and remove the bucket tip (2).

Remark:

- The metal stick shall have a smaller diameter than the pin.
- If the tip cannot be removed safely in this way, consult Sany distributor for replacement.

4. Remove the tip and check the latch for any damage. Replace it if necessary. The latches and tips worn short must be replaced with new ones.

5. Clean the installation surface. Mount the new bucket tip (2) to its adapter. Push part of the pin (1) into the tip and hammer it in completely in order to lock the bucket tip onto its adapter.

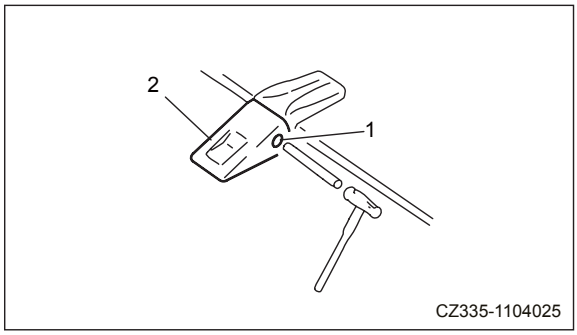

Fig. 5-34

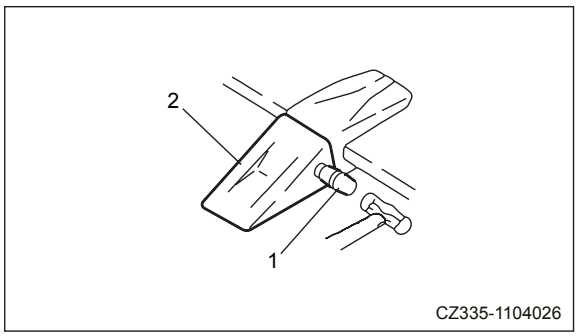

Fig. 5-35

No.	Item	No.	Item
1	Bucket	8	Latch
2	Plate	9	Bush
3	Plate	10	Bolt
4	Plate	11	Washer
5	Adaptor	12	Spacer
6	Tip	13	Side cutter (left)
7	Pin	14	Side cutter (right)

Table 5-9

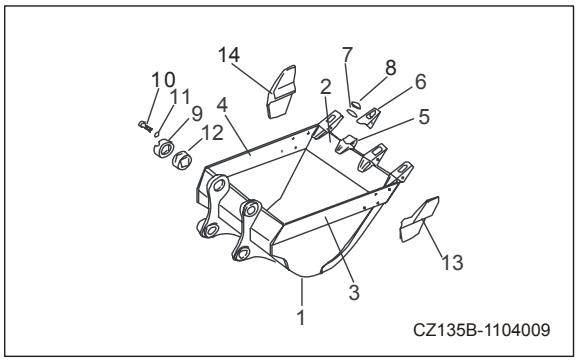

Fig. 5-36

Downloaded from www.Manualslib.com manuals search engine

https://truckmanualshub.com/

5.8.2.6 Bucket Replacement

⚠ CAUTION

- **Driving a pin shaft with a hammer can cause flying metal pieces that could lead to severe injury. Wear goggles, safety hat, protective gloves and other protective gear during such an operation.**
- **If the pin shaft is tapped with strong force, it could fly out and cause personal injury. Make sure that the surrounding area is clear of people before doing the job.**
- **Never stand behind the bucket when removing the pin shaft; pay special attention to not placing your foot under the bucket when working at one of the sides.**
- **Never get your finger pinched while removing or installing the pin shaft.**
- **Never put your finger into the pin bore during alignment.**

Park your machine on a hard, level ground.

Designate a commander and follow his instructions when carrying out the connection work.

Always prepare your machine as required and lock/tag it out before proceeding. **See "Preparing the machine" on page 2-58 and "Lock-out and tag-out" on page 2-60.**

Downloaded from www.Manualslib.com manuals search engine

https://truckmanualshub.com/

1. Place the bucket on a level ground.

Remark:

Before removing the pin roll, slowly lower the bucket to a level where it just contacts the ground.

If a larger force is used to lower the bucket to the ground, resistance could increase on the pin roll, causing difficulties while removing it.

Note:

Make sure the pin roll is free from mud or sand after removal.

Both ends of the bushing are installed with seals against dust. Be careful not to damage them.

2. Remove the nuts and screws on the plate retaining arm pin (A) and link pin (B), take out arm pin (A) and link pin (B), and then remove the bucket.

3. Align arm (5) with the bore for bucket replacement and the link (6) with bore (2). Insert the greased pin rolls (A) and (B) into bore (1) and bore (2) respectively.

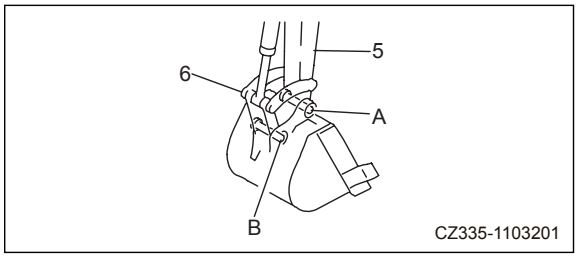

Fig. 5-37

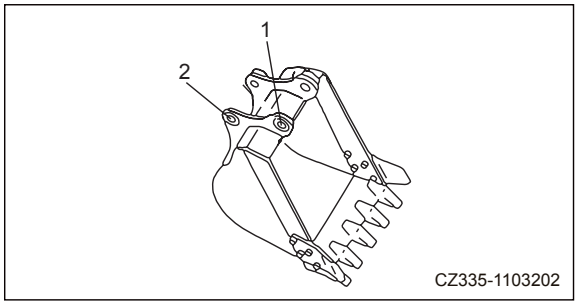

Fig. 5-38

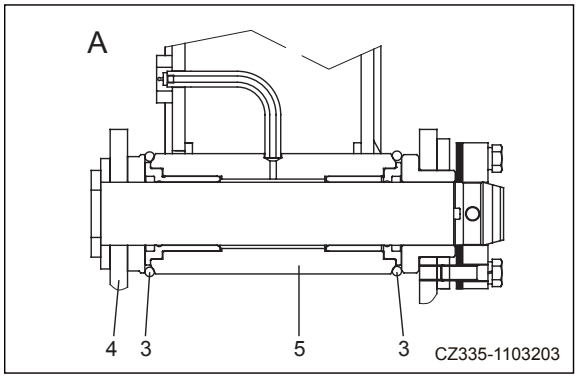

Fig. 5-39

Downloaded from www.Manualslib.com manuals search engine

https://truckmanualshub.com/

Remark:

When mounting the bucket, place the O-ring (3) of bucket (4) to the position, as shown in the right illustration, corresponding to the arm pin (A). After the pin roll is inserted, align it to the standard notch.

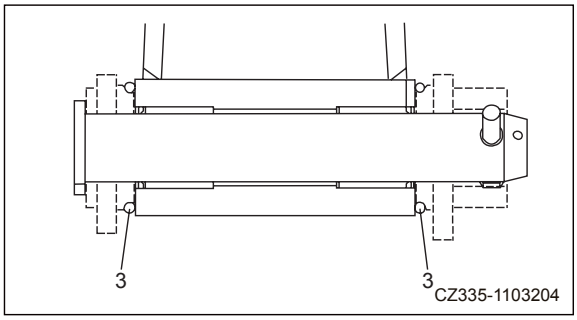

Fig. 5-40

4. Reinstall the nuts and bolts onto the plate retaining the pin rolls. Add grease to the pin rolls.

Remark:

- Inject sufficient amount of grease till the grease is squeezed out of the end face.
- Replace any broken seals when replacing a bucket. The use of broken seals could allow sand or dust to penetrate through to the pin roll and cause its abnormal wear.

5.8.2.7 Bucket clearance - adjust

The bucket linking clearance must be readjusted after your machine has been operated for a period of time. When the linking clearance is excessively large or small, it is necessary to install or remove the spacer.

⚠ WARNING

Place the work equipment firmly before adjusting bucket clearance. Stop the engine and engage the hydraulic lockout control. If the hydraulic lockout control is free, unexpected movement of the work equipment could cause severe accident.

Downloaded from www.Manualslib.com manuals search engine

https://truckmanualshub.com/

1. Park your machine on a level ground. Lower the bucket to the ground, in an attitude shown in the right illustration.

2. Run the engine at low speed. Fix the bucket on the ground. Slowly turn the upper structure counterclockwise till the inside of the left side of the bucket contact closely with the left end surface of the arm.

3. Shut off the engine. Lock out and tag out your machine before proceeding. See **“Lock-out tag-out” on page 2-60.**

4. Move the O-ring (1) and measure the clearance (a). It is easy to obtain accurate result with a feeler gauge.

5. Loosen the four plate-mounting bolts (2) in order to detach the plate (3). The spacer has an opening, so it is unnecessary to remove the bolt when making adjustment.

6. Remove the spacer equivalent to the measured clearance (a).

   (For example)

   If the clearance is 3 mm (0.118 in), remove two 1.0 mm (0.039 in) spacers and one 0.5 mm (0.02 in) spacer, or one 2.0 mm (0.078 in) spacer and one 0.5 mm (0.02 in) spacer. The clearance is reduced to 0.5 mm (0.02 in). The spacers (4) include three types, 2.0 mm (0.078 in), 1.0 mm (0.039 in) and 0.5 mm (0.02 in). When the clearance (a) is less than one spacer, no adjustment shall be made.

7. Tighten the four bolts (2).

   If it is difficult to tighten the bolts (2), remove the pin-retaining bolt (5) before tightening the bolts (2).

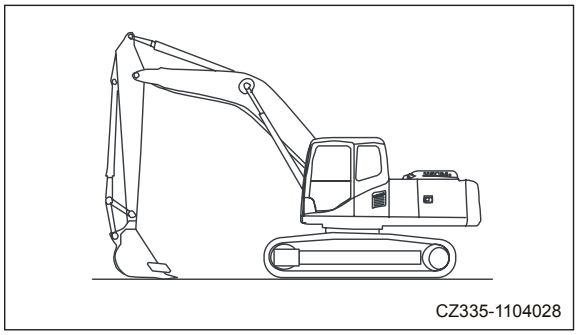

Fig. 5-41

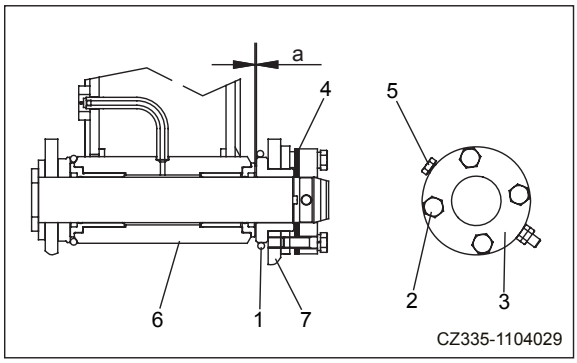

Fig. 5-42

Downloaded from www.Manualslib.com manuals search engine

https://truckmanualshub.com/

5.8.2.8 Window washer fluid - check/refill

Always prepare your machine as required and lock/tag it out before proceeding. **See "Preparing the machine" on page 2-58 and "Lock-out and tag-out" on page 2-60.**

If the washer fluid contains air, check the fluid level in the reservoir (1). Add washer fluid if necessary.

To prevent dirt from entering the reservoir, be careful when filling the washer fluid.

Select a mixture ratio according to ambient temperature. Therefore, the detergent is to be diluted with water according the ratios listed below.

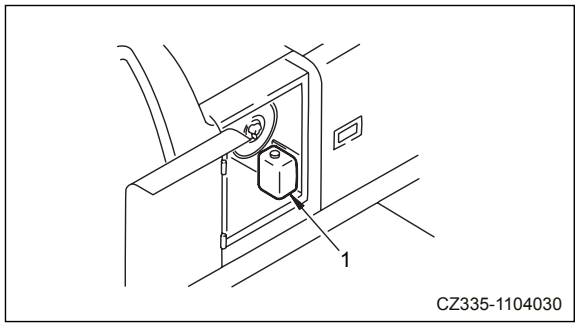

Fig. 5-43

Operating Regions	Mixture Ratio	Anti-Freezing Temperature
General	Detergent 1/3: Water 2/3	- 10℃ (14ºF)
Cold regions in winter	Detergent 1/2: Water 1/2	- 20℃ (- 4ºF)
Frigid regions in winter	Pure detergent	- 30℃ (- 22ºF)

Table 5-10

There are two types of detergent: one for -10℃ (4°F) (common) and one for -30℃ (-22ºF) (frigid regions), which can be selected according to the operating region.

Downloaded from www.Manualslib.com manuals search engine

https://truckmanualshub.com/

5.8.2.9 Air conditioner - inspect/service

Always prepare your machine as required and lock/tag it out before proceeding. **See "Preparing the machine" on page 2-58 and "Lock-out and tag-out" on page 2-60.**

Checking refrigerant (gas) level

WARNING

- **The refrigerant getting into your eyes or on your skin can cause blindness or freezing injury. Never touch the refrigerant. Never loosen any parts of the refrigerant lines.**
- **Keep any naked fire away from the leaking position of refrigerant gas.**

Insufficient refrigerant (R134a) will severely impair the cooling performance.

When the engine is running at high speed, operate the air conditioner for strong refrigeration and observe through the sight glass (1) on the condenser reservoir (2) in order to inspect the condition of refrigerant gas flowing to the tube.

- The refrigerant flows without bubble: perfect
- The refrigerant flow contains bubbles that pass continuously: refrigerant level low
- Colorless and transparent: no refrigerant

Remark:

The appearance of bubbles indicates low refrigerant level. Please consult Sany distributor to add refrigerant. Running the air conditioner with low refrigerant level could damage its compressor.

Inspection during idle period

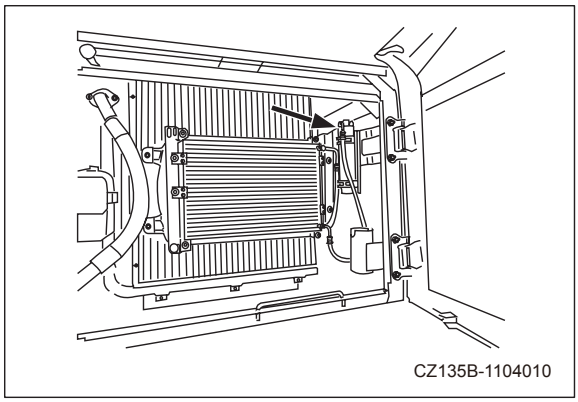

Fig. 5-44

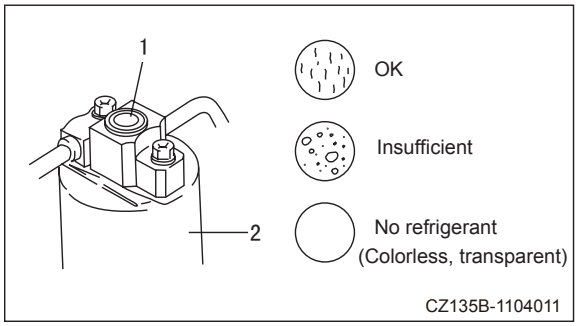

Fig. 5-45

Downloaded from www.Manualslib.com manuals search engine

https://truckmanualshub.com/

When the air conditioner will not be used for a long period of time, the air conditioner shall be operated for 3-4 minutes each month in order to lubricate the compressor components.

Components	Description	Service Interval
Refrigerant (gas)	Refilling	Twice a year (spring and autumn)
	Tube connections and internal leakage of parts and components	Daily
Condenser	Radiator fins plugged	Every 500 hours
Compressor	Function	Every 4000 hours
V-belt	Loose and bent	Every 250 hours
	Deterioration, wear, scratch and cracking	Every 250 hours
	Noise, odor smell or abnormal heat	When required
Fan motor and fan	Function (check for abnormal noise)	When required
Air conditioner air flow switch	Air flow control switch and switching function	Daily
Control unit	Function (make sure the function is normal)	When required
Joining bolts	Loose connections and loose or detached nuts and bolts	Every 6 months
Connection tubes	Installation condition, loose connections, air leakage or any damage	When required
Reservoir dryer temperature difference	Temperature difference indicates a blocked dryer.	Every year

Table 5-11

Downloaded from www.Manualslib.com manuals search engine

https://truckmanualshub.com/

5.8.2.10 Gas spring - inspect

WARNING

The Gas Spring contains high-pressurized nitrogen. Wrong operation can cause explosion and result in machine damage and personal injury or death. The following items shall be observed when dealing with the Gas Spring.

- **Be away from naked fire.**
- **Never drill or weld the Gas Spring.**
- **Never hammer the Gas Spring or expose it under any impact.**

Always prepare your machine as required and lock/tag it out before proceeding. **See "Preparing the machine" on page 2-58 and "Lock-out and tag-out" on page 2-60.**

The air springs are located on top of the cab (at both the left and right sides).

Contact your Sany distributor for inspection, repair and replacement in case of the following conditions.

- The cab roof hatch cannot be opened easily.
- The cab roof hatch cannot be kept open.
- Oil or air leaks from the air spring.

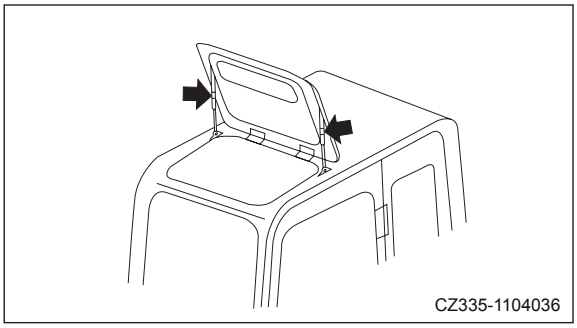

Fig. 5-46

Downloaded from www.Manualslib.com manuals search engine

https://truckmanualshub.com/

5.8.2.11 Air in hydraulic system - purge

Always prepare your machine as required and lock/tag it out before proceeding. **See "Preparing the machine" on page 2-58 and "Lock-out and tag-out" on page 2-60.**

1. Purging air from the pump

   1) Loosen air vent plug (1) and check for oil leak.

   2) If no oil leaks, disconnect drain hose from hydraulic pump and add hydraulic oil to hydraulic pump through drain port (2).

      Well secure the disconnected hose. To prevent overflow, hose opening must be higher than oil level in hydraulic tank.

   3) Tighten the plug (1) and reconnect the drain hose after purging the air.

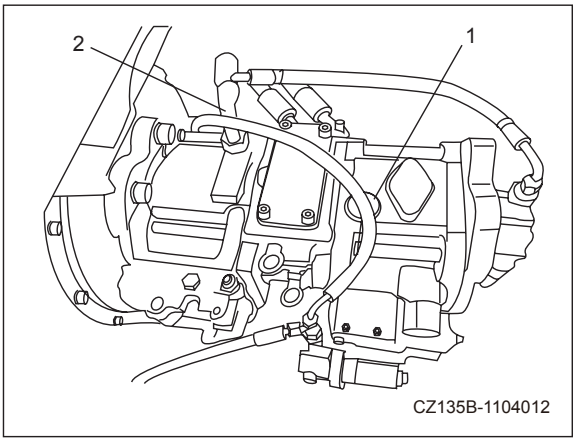

Fig. 5-47

Note:

If drain hose is reconnected before tightening the plug (1), oil will squirt out of the plug (1).

If the pump is operated when it is not fully filled with hydraulic oil, extra heat will be generated and pump damage could result.

2. Starting the engine

   See "**Engine Starting**" **on page 4-22**.

   After starting the engine run it at low speed for 10 minutes before you perform any operation.

3. Purging air from hydraulic cylinders

   1) Run the engine at low idle speed. Extend and retract oil cylinder 4-5 times. Note that the piston shall not reach its

Downloaded from www.Manualslib.com manuals search engine

https://truckmanualshub.com/

stroke end. Keep it 100 mm (3.9 in) from stroke end.

2) Operate each cylinder 3-4 times to its stroke end.

3) Operate each cylinder 4-5 times to its stroke end in order to purge air completely.

Note:

If you instantly run the engine at high speed or operate a cylinder to its stroke end, air in cylinder could damage piston seal.

4. Purging air from swing motor

1) Run the engine at low speed. Loosen the hose (3) at the port S. Check if oil comes out of the hose (3) from the port S.

Note:

Do not operate the swing drive under any circumstances.

2) If no oil is seen, shut off the engine. Remove the hose (3) from the port S and add hydraulic oil to the motor shell.

3) Tighten the hose (3) at the port S after purging the air from the swing motor.

4) With the engine running at low idle speed, swing evenly and slowly to the left side and the right side at least two times. The air will be expelled from the swing drive oil path.

Note:

- The air in the swing motor could damage the motor bearing.
- To replace the relief valve of the travel mo-

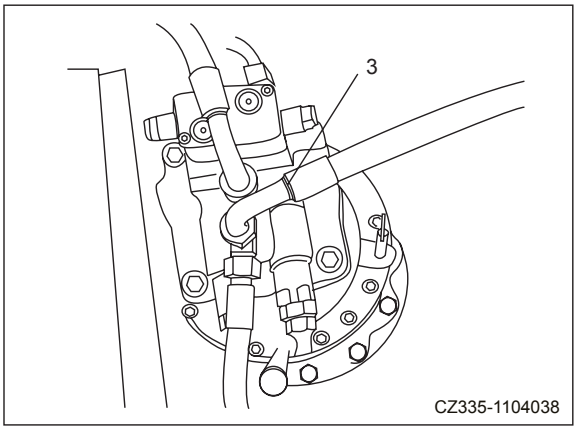

Fig. 5-48

Downloaded from www.Manualslib.com manuals search engine

https://truckmanualshub.com/

tor, consult Sany distributor for replacement and air elimination.

5. Eliminate air from the travel motor (only when the oil has been discharged from the travel motor shell)

   1) Run the engine at low speed. Loosen the air vent screw plug (4). Tighten the screw plug if oil is seen.

   2) Run the engine at low speed. Swing the work equipment 90 degrees in order to place it at the track side.

   3) Raise the machine with the force of the work equipment. With the track lifted just above the ground, run the track unloaded for two minutes. Repeat this operation for both tracks and run the tracks back and forth uniformly.

6. Eliminate air from attachment (if equipped)

   If a breaking hammer or other attachment has been installed, run the engine at low idle speed and operate the attachment control pedal repeatedly (about 10 times) till the air is expelled from the oil path completely.

Note:

- If manufacturer of the attachment has provided instruction on eliminating air from the attachment, the instruction shall be followed to eliminate the air.
- Turn off the engine after air elimination. Wait five minutes before operation in order to eliminate the bubbles in hydraulic cylinder.
- Check for oil leakage and wipe off the oil overflowed.
- Check the oil level after purging the air. Add oil if the oil level is low.

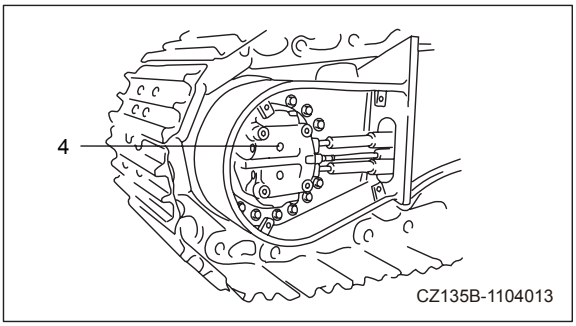

Fig. 5-49

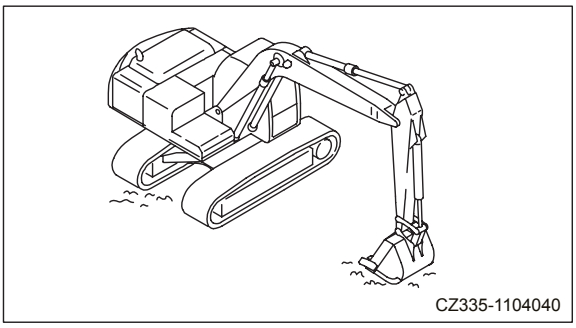

Fig. 5-50

Downloaded from www.Manualslib.com manuals search engine

https://truckmanualshub.com/

5.8.2.12 Hydraulic circuit internal pressure - release

WARNING

- **The hydraulic circuit is always under pressure. In this case, the pressure in hydraulic circuit is to be released when checking or replacing the hoses or fittings. Without doing so, the pressurized oil will squirt out and cause serious personal injury.**
- **After the engine is stopped, the components and oil are still hot and can cause serious burn. Wait until the temperature comes down before operating.**
- **The oil may squirt out when removing the oil filler cap. Therefore, slowly remove the cap in order to release the internal pressure.**

1. Park your machine on a hard, level ground.
2. Within 15 minutes since the engine is shut off, turn the start switch to ON position and cycle the work equipment control lever and the travel control lever in all directions in order to release the internal pressure.
3. Lock/tag it out before proceeding. See **“Lock-out tag-out” on page 2-60.**
4. Slowly loosen the oil filler cap on top of the hydraulic tank in order to release the internal pressure.

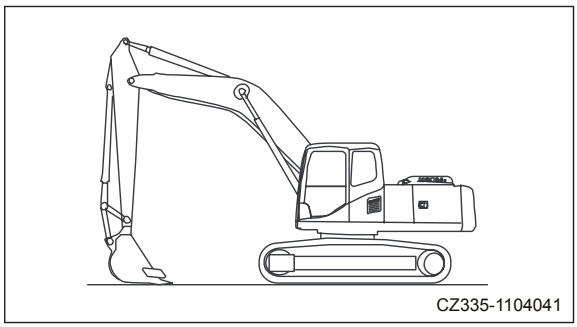

Fig. 5-51

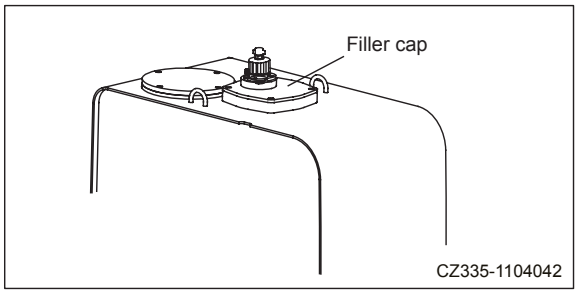

Fig. 5-52

Downloaded from www.Manualslib.com manuals search engine

https://truckmanualshub.com/

5.8.3 Checks before starting

For more information about the following items see “**Checks before starting**” **on page 4-7.**

- Drain water and sediment from fuel tank.
- Check water separator and drain water and sediment.
- Check oil level in hydraulic tank and refill the tank.
- Check coolant level and add coolant.
- Check oil level in engine oil pan and add oil.
- Check electric wires.
- Check fuel level and refuel the tank.
- Check work lamp switch.
- Check the function of horn.
- Check engine lower exhaust pipe and keep it clean. (Check exhaust pipe at any time in earthwork.)

Downloaded from www.Manualslib.com manuals search engine

https://truckmanualshub.com/

5.8.4 Every 100 service hours

5.8.4.1 Lubrication

NOTICE

- **If the lubricated components produce abnormal noise, additional lubrication is required besides regular maintenance.**
- **A new machine shall be greased every 10 hours within the initial 50 hours.**
- **After operating in water, the machine's wet pin rolls are to be greased.**

1. Adjust your machine to a to-be-greased attitude shown in the illustration below, lower the work equipment to the ground and then turn off the engine.
2. Lock/tag it out before proceeding. See **"Lock-out tag-out" on page 2-60.**
3. Use a grease gun to inject grease through the greasing points indicated in **Fig. 5-53**.
4. Finally, wipe off the used grease that has been squeezed out.

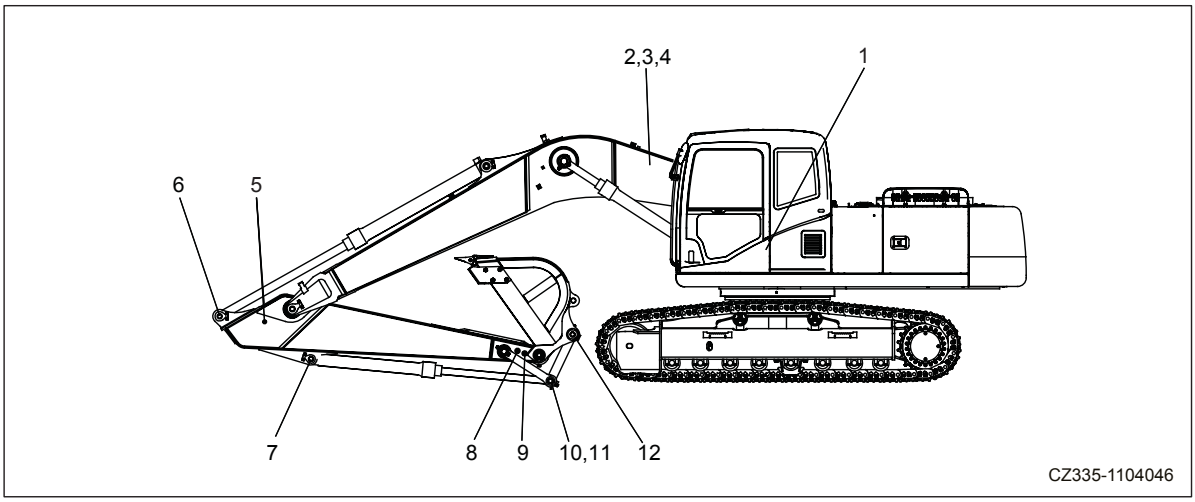

Fig. 5-53

Downloaded from www.Manualslib.com manuals search engine

https://truckmanualshub.com/

(1) Boom cylinder root pin (2)

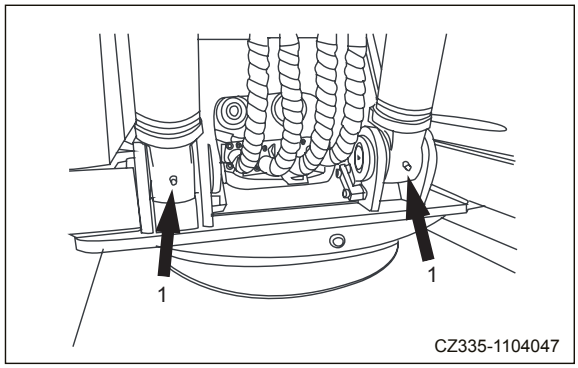

Fig. 5-54

(2) Boom root pin (2)

(3) Boom cylinder piston rod end (2)

(4) Arm cylinder root pin (1)

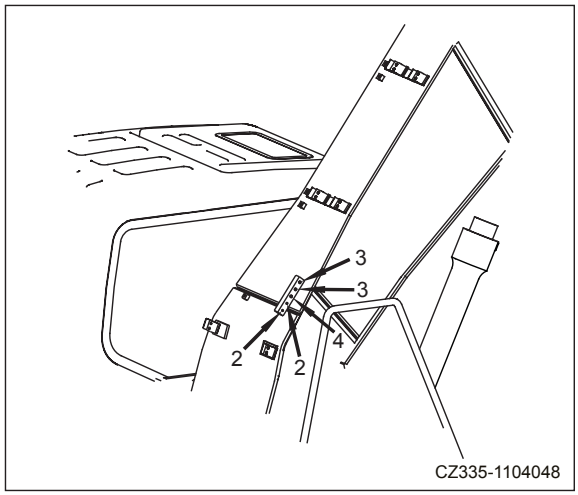

Fig. 5-55

(5) Boom-arm joining pin (2)

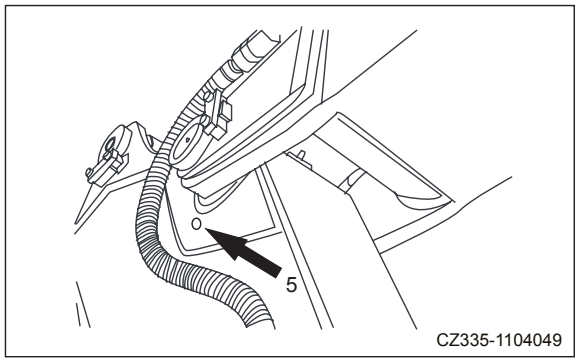

Fig. 5-56

Downloaded from www.Manualslib.com manuals search engine

https://truckmanualshub.com/

(6) Arm cylinder piston rod end (1)

(7) Bucket cylinder root pin (1)

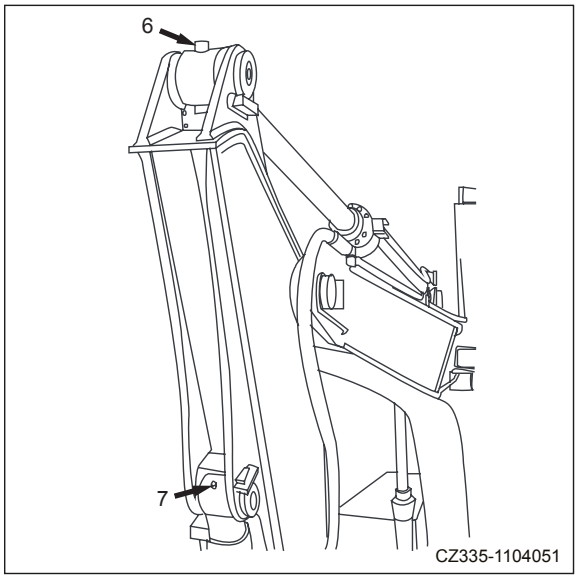

Fig. 5-57

(8) Arm-Bucket joining pin (1)

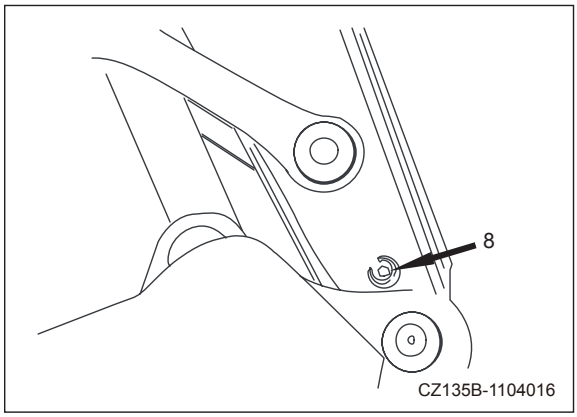

Fig. 5-58

(9) Rod joining pin (2)

(10) Bucket cylinder piston rod end (1)

(11) Bucket-rod joining pin (1)

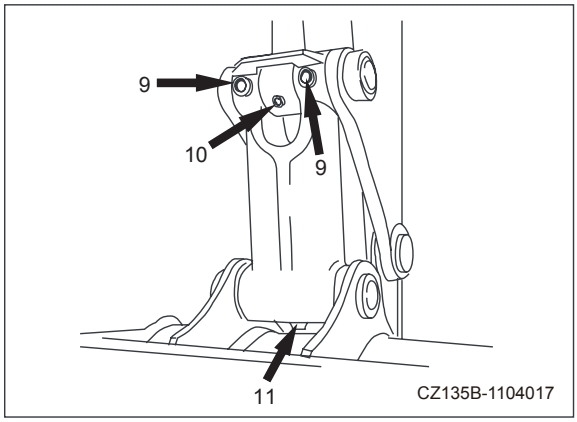

Fig. 5-59

Downloaded from www.Manualslib.com manuals search engine

https://truckmanualshub.com/

5.8.5 Every 250 service hours

5.8.5.1 Compressor belt tension - inspect/ adjust

Always prepare your machine as required and lock/tag it out before proceeding. **See "Preparing the machine" on page 2-58 and "Lock-out and tag-out" on page 2-60.**

Inspection

With a force of about 58.8N (6kgf), press with your finger the middle section of the belt between the drive pulley (1) and the compressor pulley (2) in order to check the deflection (A), which should be 5-8mm (0.20in-0.31in).

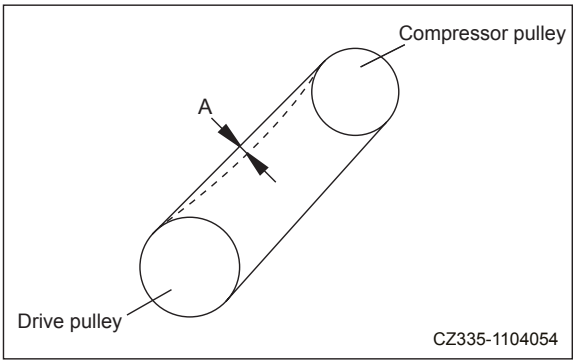

Fig. 5-60

Adjustment

1. Loosen the bolts (1) and (2).
2. Move the compressor (3) and its bracket (4) in order to adjust belt tension.
3. Tighten the bolt (1) and (2) after positioning the compressor (3).
4. Check again the belt tensioning device after adjustment.

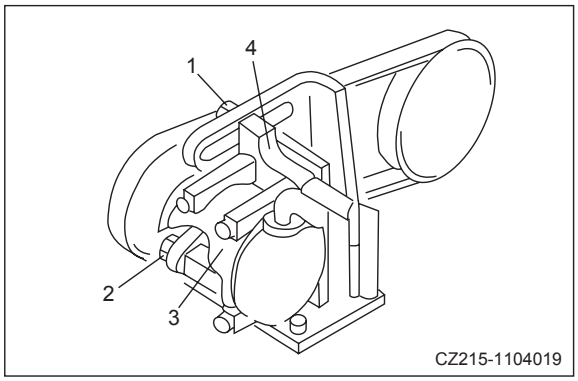

Fig. 5-61

Reference

Use a tension meter to check the belt tension of the compressor.

New Belt	Used Belt
637±108 (N) (65±11 (kgf))	441±88.2 (N) (45±9 (kgf))

Table 5-12

Downloaded from www.Manualslib.com manuals search engine

https://truckmanualshub.com/

Note:

- Check for damaged pulleys and worn V-groove and V-belt. In addition, make sure that the V-belt must not rub against the bottom of the V-groove.
- Consult Sany distributor to replace the belt timely in case of the following conditions.
  - The fan belt has been stretched and little margin is left for adjustment.
  - Cuts or cracks are found in the belt.
  - The belt skids or squeaks.
- A newly installed V-belt shall be readjusted after one hour operation.

Downloaded from www.Manualslib.com manuals search engine

https://truckmanualshub.com/

5.8.5.2 Oil in engine oil pan and oil filter - change/replace

WARNING

When the engine has just been stopped, the parts and oil are still hot and can cause serious burn. Wait until they are cool enough before doing the job.

Always prepare your machine as required and lock/tag it out before proceeding. **See "Preparing the machine" on page 2-58 and "Lock-out and tag-out" on page 2-60.**

Prepare as the following:

- Capacity of engine oil pan: See "**Fluid capacities**" **on page 5-19**.
- Filter wrench

1. Remove the bottom cover of the machine. Place a container under the drain valve. (Choose a container of a proper size according to the capacity table). The oil will be drained into the container through a piece of clean cloth.

2. To avoid splashing of the oil, slowly open the drain valve to discharge oil, and close the valve after drainage.

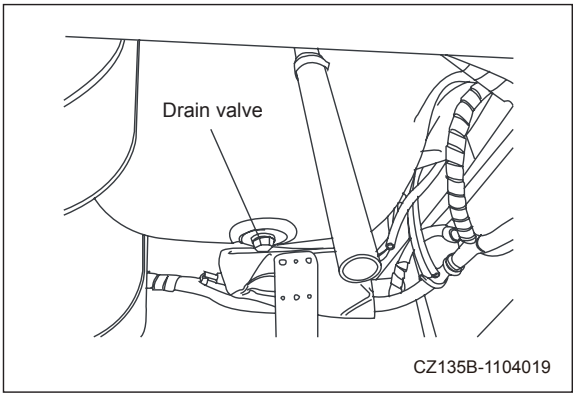

Fig. 5-62

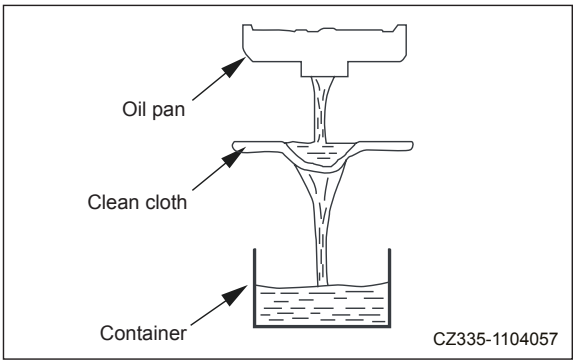

Fig. 5-63

Downloaded from www.Manualslib.com manuals search engine

https://truckmanualshub.com/

3. Open the right door and turn the filter (1) leftward with filter spanner in order to disassemble the filter.

4. Clean the filter seat (2). Fill the new filter with clean engine oil. Apply engine oil (or a film of grease) to the filter sealing surface and the threads before installing the filter to its seat.

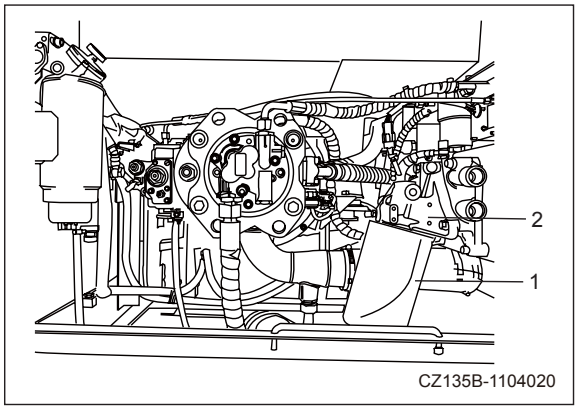

Fig. 5-64

Remark:

Check the filter seat (2) for presence of used seal. The presence of used seal in the filter seat (2) can cause oil leakage.

5. The installation requires contact of the sealing surface with that of the filter seat (2). Turn the filter 3/4-1 turn.

6. After replacement of the filter, open the engine's hood and fill engine oil through the filler to a level between the H and L marks of the dipstick.

7. Run the engine idly for a short time and then turn off the engine. Check again the oil level, which shall be between the H and L marks of the dipstick. For more information see “**Oil in engine oil pan and oil filter - change/replace**” **on page 5-65**.

8. Reinstall the bottom cover.

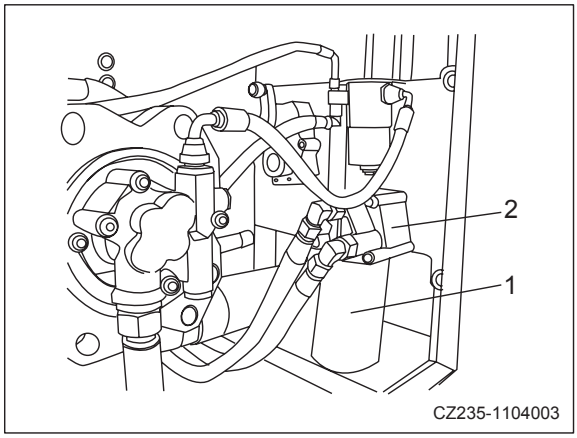

Fig. 5-65

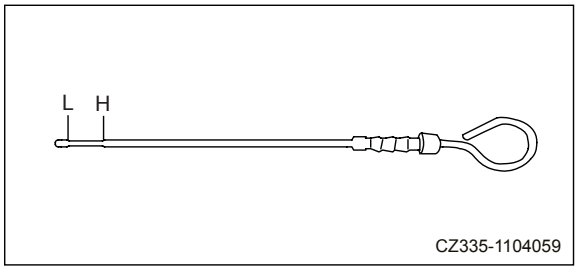

Fig. 5-66

NOTICE

Contact your Sany distributor to obtain genuine engine oil in order to guarantee oil quality and ensure 250 service hours.

Downloaded from www.Manualslib.com manuals search engine

https://truckmanualshub.com/

5.8.5.3 Primary fuel filter - replace

WARNING

- **Never replace the filter immediately after the engine is shut down, as all parts are still hot. Wait for the parts to cool enough before replacement.**
- **High pressure is created in the fuel system when the engine is running.**
- **Before replacing the filter, wait at least 30 seconds since engine stoppage. The replacement work shall be carried out after the internal pressure drops to a safe level.**
- **Be away from fire sources.**

Note:

- Sany genuine fuel filter is a special filter of effective filtration. The filter must be replaced with a genuine one.

  The use of other parts may allow dirt or debris to get into the fuel system and cause the injection system failure. Therefore, avoid using any substitutes.
- It is more important to prevent dirt from getting into the fuel system during inspection and service. In case of any parts contaminated by dust, flush them clean with diesel fuel.
- Prepare a container to hold the fuel drained.
- Prepare a filter wrench.

Downloaded from www.Manualslib.com manuals search engine

https://truckmanualshub.com/

Always prepare your machine as required and lock/tag it out before proceeding. **See "Preparing the machine" on page 2-58 and "Lock-out and tag-out" on page 2-60.**

1. Open the door on the right side of machine.

2. Place a fuel container under the filter.

3. Loosen the drain valve (1) to discharge water and sediment in the bowl (2). Also drain the fuel in filter (3).

4. Use a filter wrench to turn counterclockwise the bowl (2) in order to remove it. (The bowl can be reused.)

5. Use the filter wrench to turn counterclockwise the filter (3) in order to remove it.

6. Install the bowl (2) to the bottom of new filter. Always replace the O-ring seal (4).

7. Apply oil to seal surface during installation. Make the seal and filter have a close contact before further tightening the filter by 1/4 - 1/2 turn.

   If the bowl (2) was over-tightened, the O-ring seal might be damaged and fuel leak could result. If the bowl (2) was not tightened enough, fuel will leak through the gap with O-ring seal. To prevent such problems, always tighten it to the specified torque.

8. Clean the filter seat. Add clean fuel to new filter. Apply a thin layer of oil to the seal surface and install the filter to the filter seat.

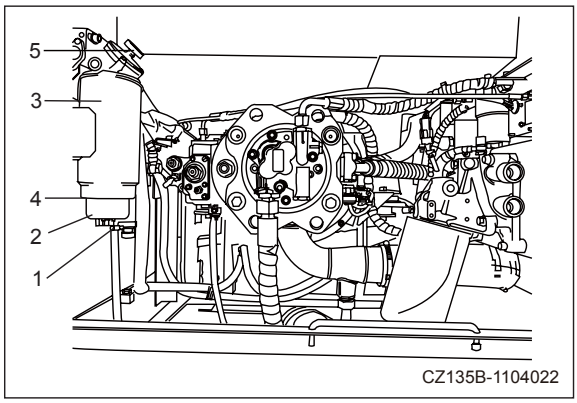

Fig. 5-67

Downloaded from www.Manualslib.com manuals search engine

https://truckmanualshub.com/

Note:

- Never remove the cover (B) while filling the fuel. Always fill fuel via the eight(8) external holes (A).
- Remove the cover (B) after filling. Install the fuel filter.
- Always fill clean fuel. Take care to keep the fuel free from dust or dirt. Be especially careful that the central part is clean and never remove the cover (B) during filling. Always keep the central part free from contamination.

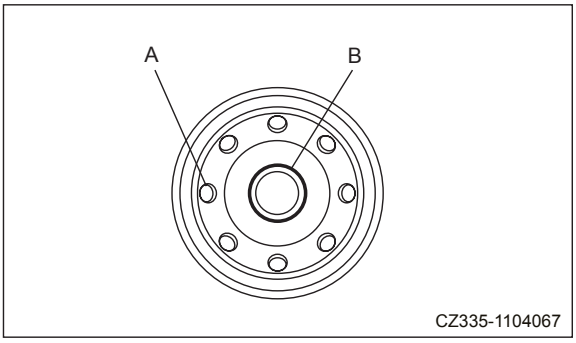

Fig. 5-68

9. Tighten the filter until the seal contacts the filter seat. Further turn it by 3/4 turn. If the filter cartridge was over-tightened, the seal might be damaged and fuel leak could result. If the filter cartridge was not tightened enough, fuel will leak through the gap with seal. Always tighten it to the specified torque.

10. Check drain valve (1) to see if it is tightened properly.

11. Release the air after replacing filter (3).

Air-purging steps:

12. Fill fuel into the fuel tank until the float reaches the maximum level.

13. Use a transfer pump (5) to pump the fuel in and out until heavy resistance is felt.

Remark:

- It is unnecessary to remove the plug on the primary fuel filter and the secondary fuel filter.
- When fuel exhausts, operate the transfer pump (5) to purge air.

Downloaded from www.Manualslib.com manuals search engine

https://truckmanualshub.com/

14. After purging the air, push in the knob of pump (5) and tighten it.

15. After replacing the filter, start the engine and run the engine at low idle for 10 minutes.

    Check the filter seal and the cover for fuel leak. Check the tightening degree of the filter when fuel leak is found.

    If fuel leak still exists, repeat step 1 through step 7 to remove the filter. If the seal is found damaged or cut by foreign substance, replace filter cartridge. Repeat step 8 through step 14 to install a new filter cartridge.

Downloaded from www.Manualslib.com manuals search engine

https://truckmanualshub.com/

5.8.5.4 Secondary fuel filter - replace

WARNING

- **Never replace the filter immediately after the engine is shut down, as all parts are still hot. Wait for the parts to cool enough before replacement.**
- **High pressure is created in the fuel system when the engine is running.**
- **Before replacing the filter, wait at least 30 seconds since engine stoppage. The replacement work must be carried out after the internal pressure drops to a safe level.**
- **Be away from fire sources.**

Note:

- Sany genuine fuel filter is a special filter of effective filtration. The filter must be replaced with a genuine one.

  The use of other parts may allow dirt or debris to get into the fuel system and cause the injection system failure. Therefore, avoid using any substitutes.

- It is more important to prevent dirt from getting into the fuel system during inspection and service. In case of any parts contaminated by dust, flush them clean with diesel fuel.
- Prepare a container to hold the fuel drained.
- Prepare a filter wrench.

Downloaded from www.Manualslib.com manuals search engine

https://truckmanualshub.com/

Always prepare your machine as required and lock/tag it out before proceeding. **See "Preparing the machine" on page 2-58 and "Lock-out and tag-out" on page 2-60.**

1. Open engine hood.
2. Place a fuel container under the filter.
3. Use filter wrench to turn counterclockwise the filter (1) in order to remove it.
4. Clean the filter seat. Apply a thin layer of oil to sealing surface of filter cartridge and install filter cartridge to filter seat.

   Replace internal seal (2) with a new one.

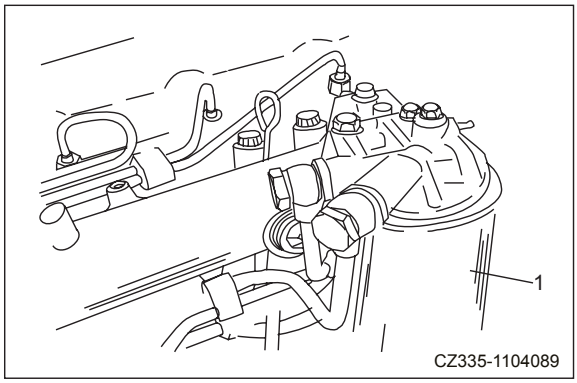

Fig. 5-69

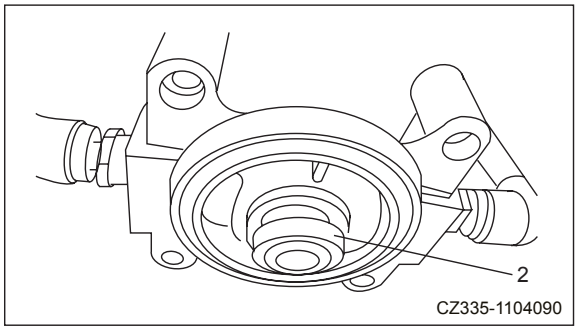

Fig. 5-70

Note:

- Never add fuel to new filter cartridge.
- Remove cap (B) and install filter cartridge.

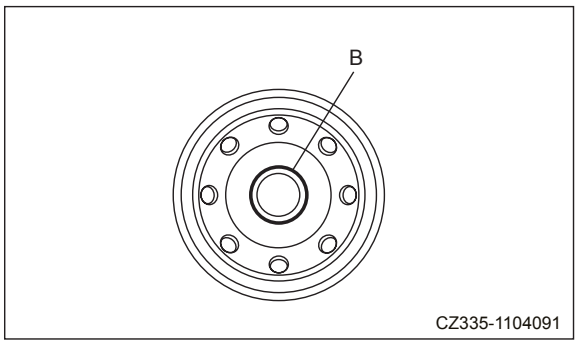

Fig. 5-71

Downloaded from www.Manualslib.com manuals search engine

https://truckmanualshub.com/

5. Tighten filter cartridge until the seal contacts filter seat. Further turn it by 3/4 turn.

   If filter cartridge was over-tightened, the seal might be damaged and fuel leak could result. If filter cartridge was not tightened enough, fuel will leak through the gap of seal. Always tighten it to the specified torque.

6. Remove air after replacing the filter.

Air-purging steps:

7. Refill fuel tank until the float reaches the maximum level.

8. Loosen plug (3) of fuel filter.

9. Turn counterclockwise the handle (4) of start priming pump.

10. Push and pull the handle (4) to pump fuel.

11. Tighten plug (3) when fuel coming out of plug of fuel filter contains no foam.

    Tightening torque: 9.8±2.0 N·m {1.0±0.2 kgf·m}

12. Operate the priming pump 5-6 times and turn handle (4) clockwise to tighten it.

13. Completely remove overflowed fuel after purging the air. Start the engine and run it at low idle for 10 minutes.

    Check filter cartridge for fuel leak. Check the tightening of filter cartridge if fuel leak is found.

    If fuel leak still exists, repeat step 1 through step 3 to remove the cartridge. If seal damage or impurities are found, repeat step 4 through step 13 to install a new cartridge.

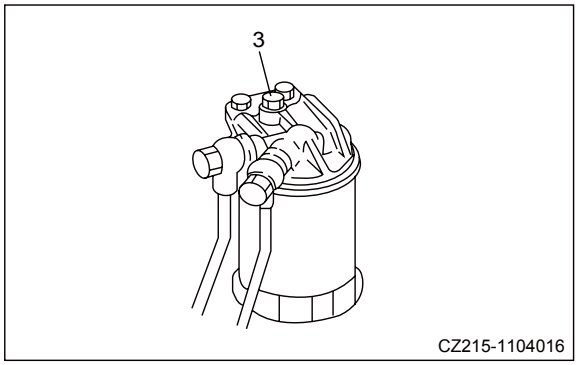

Fig. 5-72

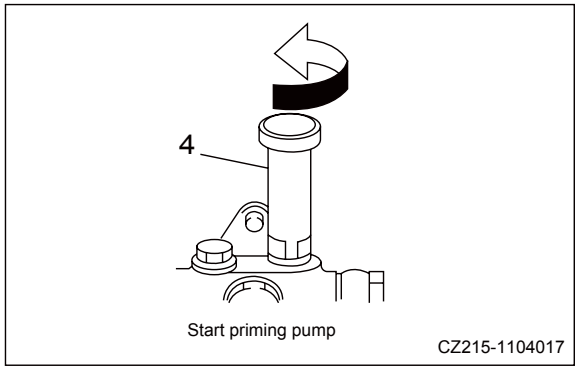

Fig. 5-73

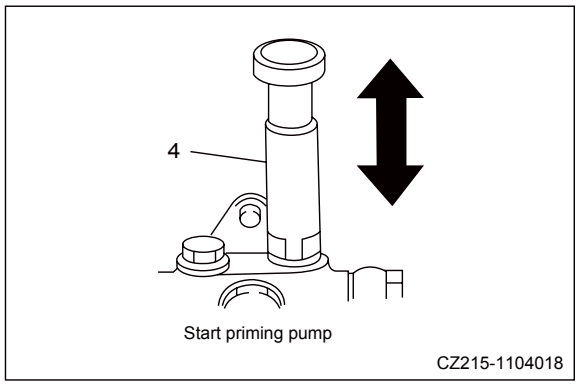

Fig. 5-74

Downloaded from www.Manualslib.com manuals search engine

https://truckmanualshub.com/

5.8.6 Every 500 service hours

Also perform maintenance for every 100 and 250 service hours is in the meantime.

5.8.6.1 Swing bearing - lubricate

1. Lower work equipment to ground, stop the engine and engage hydraulic lockout control.

2. Add grease through two grease fittings while the upper structure is kept static.

3. Start the engine, disengage hydraulic lockout control and raise the bucket 20-30 mm off ground. Swing upper structure by 45 degrees and add grease through steps 1 and 2.

4. Repeat step 3 twice to accomplish greasing.

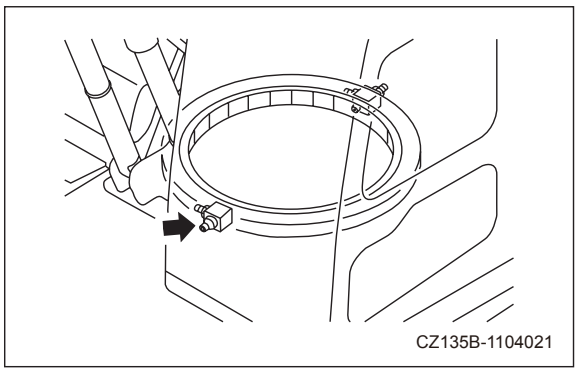

Fig. 5-75

Note:

- The grease is used to prevent distortion and noise of joints.
- It is necessary to add grease to any component that appears inflexible or noisy after operation for a long period.
- Wipe off the used grease that has been squeezed out when greasing.
- Make sure to wipe off all used grease in different locations. Using a grease that has been contaminated by sand or debris can lead to wear of rotating components.

Downloaded from www.Manualslib.com manuals search engine

https://truckmanualshub.com/

5.8.6.2 Swing pinion gear grease - check/refill

Always prepare your machine as required and lock/tag it out before proceeding. **See "Preparing the machine" on page 2-58 and "Lock-out and tag-out" on page 2-60.**

- Prepare a dipstick.

1. Remove the two bolts (1) from the swing frame. Remove the cover (2).

2. Insert the dipstick (3) into the grease through the hole for inspection and adjustment. Check the grease level, which should be 14 mm (0.6 in) at minimum, at where the pinion gear passes.

3. Check the grease to see whether it is milk-white. Milk-white grease indicates that the grease has been contaminated. Consult Sany distributor in order to change the grease.

   Total grease volume: 15 L (3.97 US gal)

4. Use the bolts (1) to reinstall the cover (2).

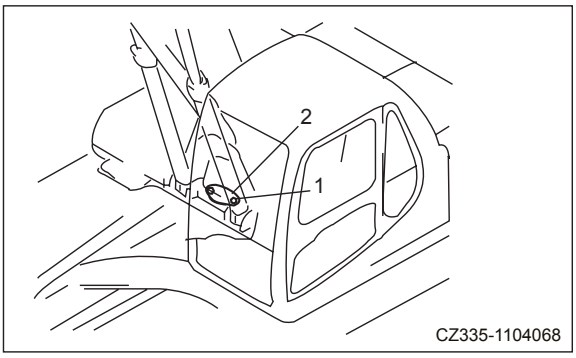

Fig. 5-76

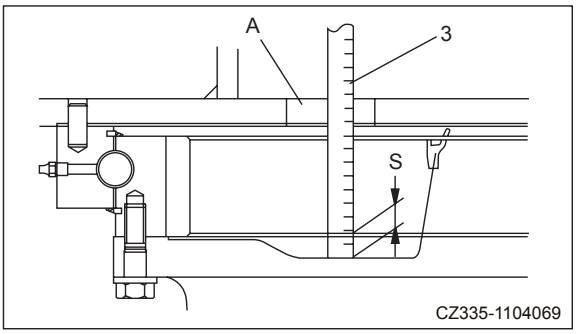

Fig. 5-77

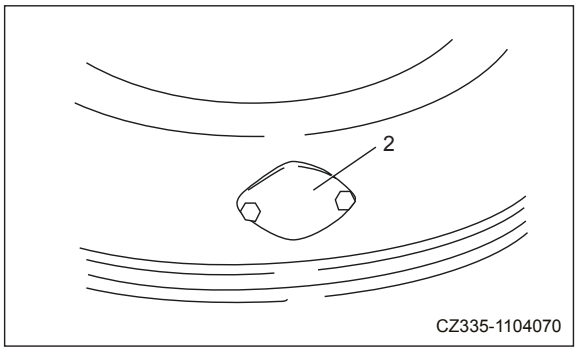

Fig. 5-78

Downloaded from www.Manualslib.com manuals search engine

https://truckmanualshub.com/

5.8.6.3 Coolant tank and radiator fins - inspect/clean

WARNING

If you are directly impacted by compressed air, pressurized water or steam, or you use them to purge dirt or debris, personal injury could result. Make sure you are well protected by wearing goggles, dust-proof mask or other protective gear.

Note:

When compressed air is used for cleaning, it is important to use the air at certain distance in order to avoid damaging the radiator fins. Damage of radiator fins will lead to water leakage and overheating. Working in a dusty place, the fins shall be inspected on each workday despite of the service schedule.

Always prepare your machine as required and lock/tag it out before proceeding. **See "Preparing the machine" on page 2-58 and "Lock-out and tag-out" on page 2-60.**

1. Open engine hood (1).

2. Loosen screws (3) and (8). Pull up screens (2) and (9).

3. Clean the screens.

4. Inspect the coolant tank (4), intercooler fins (5), A/C condenser fins (6) and the hydraulic oil radiator fins (7). Compressed air can be used to remove dirt and leaves sticking to the fins.

   Steam or water can also be used to clean the fins.

   However, a safe distance to the machine shall be kept when cleaning the heat exchangers (of radiator, oil cooler, intercooler

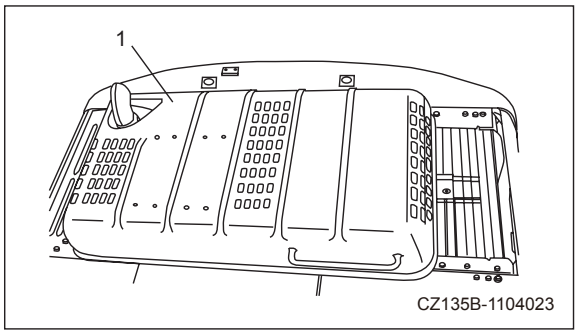

Fig. 5-79

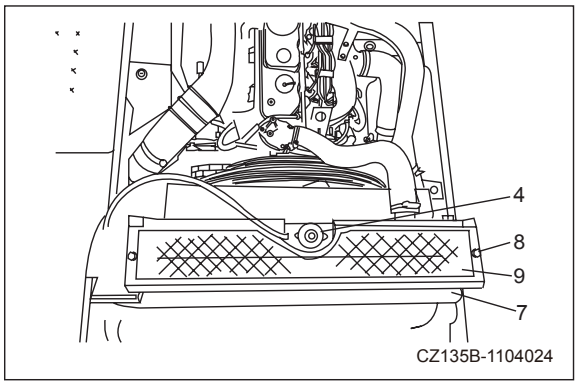

Fig. 5-80

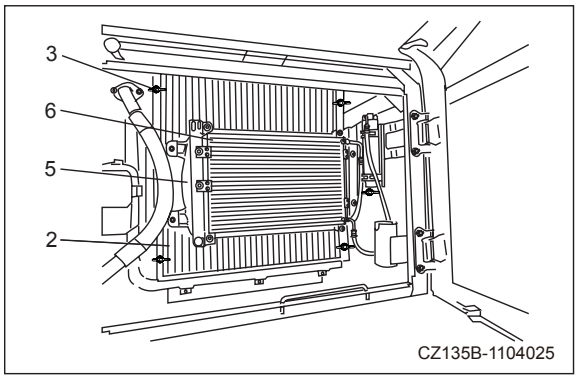

Fig. 5-81

Downloaded from www.Manualslib.com manuals search engine

https://truckmanualshub.com/

and air conditioner condenser) with powerful steam (from high-pressure flushing machine). With steam cleaning (high-pressure machine flushing) at a near distance, the heat exchanger could deform and early plugging and cracking could be resulted.

5. Inspect rubber hoses. Replace the hoses in case of cracking or aging. Check hose clamps for looseness.

6. Remove bottom cover (10). Remove dirt, debris and tree leaves that have been swept to the outside.

7. Reinstall cleaned screens (2) and (9) and tighten them with screws (3) and (8).

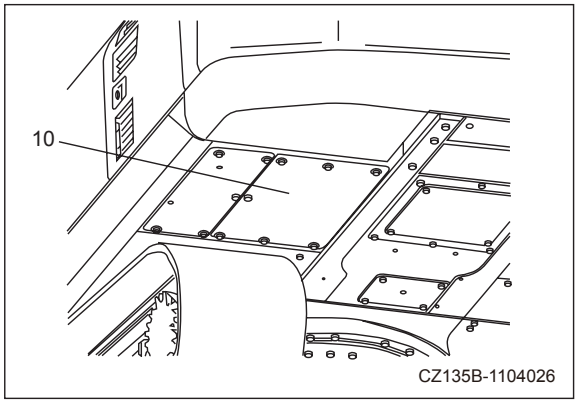

Fig. 5-82

5.8.6.4 Air conditioner filters - clean

⚠ WARNING

The dust blown by compressed air could cause personal injury. Make sure you are protected by goggles, dust-proof mask and other protective gear.

Note:

The filter shall be cleaned every 500 hours, but operating your machine in a dusty place requires cleaning the filter more frequently.

Remark:

An air filter plugged with dust will reduce air flow and cause the air-conditioning unit to produce noise.

Always prepare your machine as required and lock/tag it out before proceeding. **See "Preparing the machine" on page 2-58 and "Lock-out and tag-out" on page 2-60.**

Downloaded from www.Manualslib.com manuals search engine

https://truckmanualshub.com/

Cleaning the filter screen

1. Remove the screw (1) from the access window located on the left rear bottom of the cab, loosen the locking nut (2) and remove the air recirculation filter (3).

2. Use compressed air to clean the filter. If the filter bears oil or too much dirt, clean it with moderate detergent. After the filter has been flushed with water, it must be dried completely before reuse. This filter shall be replaced every year with a new one. If a plugged air filter cannot be cleaned with compressed air or flushing water, replace it immediately.

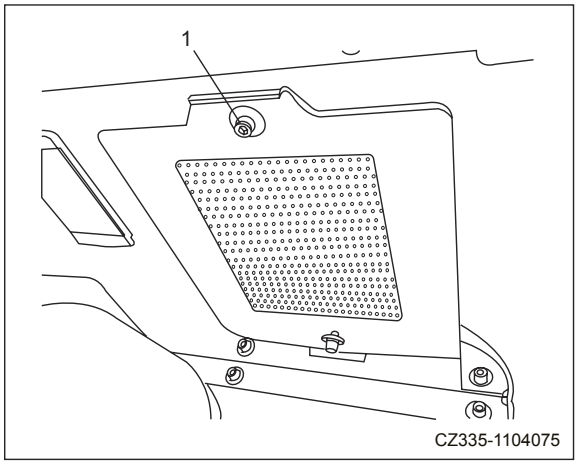

Fig. 5-83

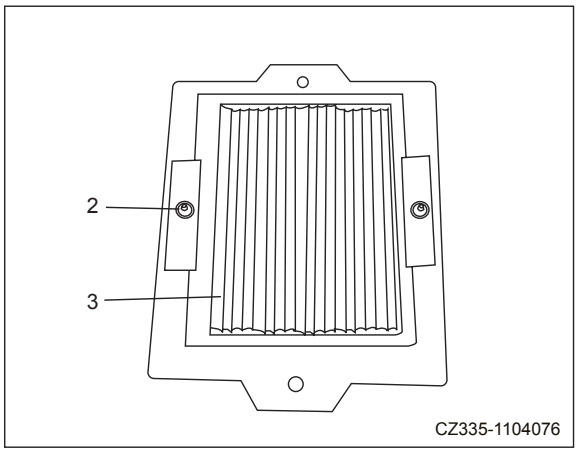

Fig. 5-84

Downloaded from www.Manualslib.com manuals search engine

https://truckmanualshub.com/

Cleaning the fresh air filter

1. Unlock the rear cover (4) on the left side of the cab with the start switch key. Open the cover (4) with your hand, remove the locking nut (5) and take out the fresh air filter (6).

2. Use compressed air to clean the filter. If the filter bears oil or too much dirt, clean it with moderate detergent. After the filter has been flushed with water, it must be dried completely before reuse. This filter shall be replaced every year with a new one. If a plugged air filter cannot be cleaned with compressed air or flushing water, replace it immediately.

3. After cleaning, restore the filter (6), tighten the nut (5) and close the cover. Lock the cover with your start switch key and then remove the key.

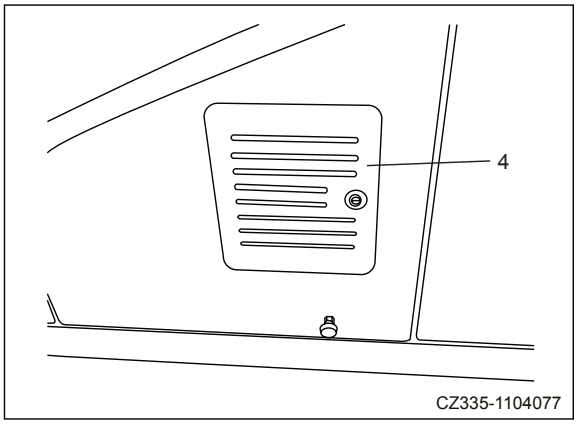

Fig. 5-85

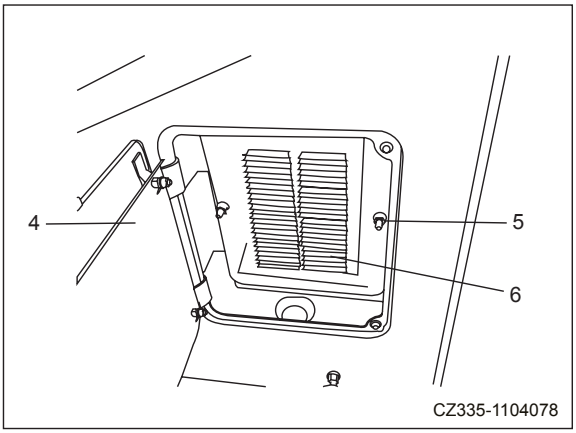

Fig. 5-86

Remark:

The fresh air filter must be installed correctly. To install the filter, the long end (L) of the filter (6) must be inserted first into the filter box. By inserting the short end (S), the cover (4) will not be closed.

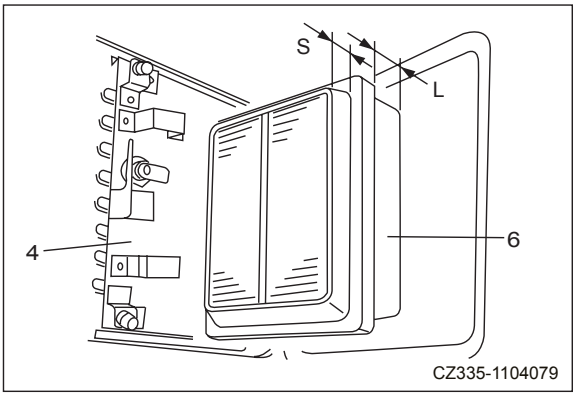

Fig. 5-87

Downloaded from www.Manualslib.com manuals search engine

https://truckmanualshub.com/

5.8.6.5 Swing drive oil - check/refill

WARNING

When the engine has just been stopped, the parts and oil are still hot and can cause serious burn. Wait until they are cool enough before doing the job.

Always prepare your machine as required and lock/tag it out before proceeding. **See "Preparing the machine" on page 2-58 and "Lock-out and tag-out" on page 2-60.**

1. Remove the dipstick (G) and wipe off the oil.
2. Insert the dipstick (G) completely into the filter tube.
3. Take out the dipstick (G) and check whether the oil level is between the H and L marks.
4. If the oil level is lower than the L mark on the dipstick (G), remove the filler cap and add oil.
5. If the oil level is higher than the H mark on the dipstick (G), loosen the drain valve (P) to drain excessive oil.
   - If the oil level is too high, consult Sany distributor for inspection.
   - Place a container under the drain valve before draining the oil.
6. After checking the oil level or refilling the oil, insert the dipstick (G) into the hole and restore the filler cap.

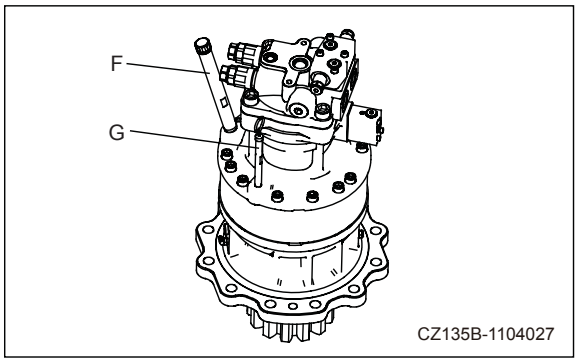

Fig. 5-88

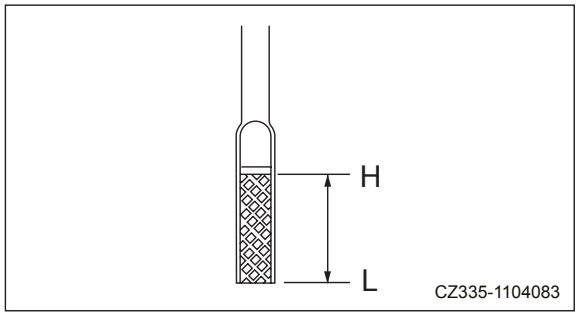

Fig. 5-89

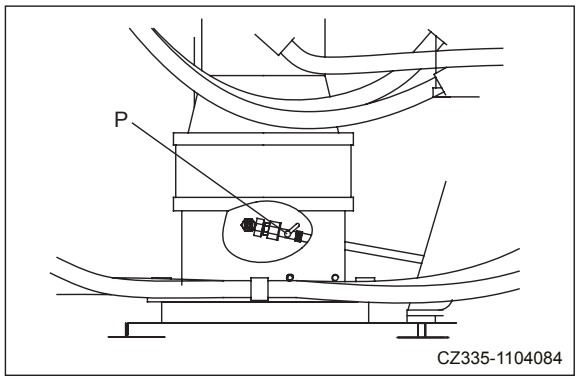

Fig. 5-90

Downloaded from www.Manualslib.com manuals search engine

https://truckmanualshub.com/

5.8.6.6 Final drive oil - check/fill

WARNING

- **When the engine is shut down, the oil is still hot. Wait until the oil is cool enough before operation.**
- **Remaining pressure in the tank can cause oil to squirt out or the screw plug to fly out. Slowly loosen the screw plug in order to release the pressure.**
- **When the screw plug is loosen, do not stand in front of the screw plug.**

Always prepare your machine as required and lock/tag it out before proceeding. **See "Preparing the machine" on page 2-58 and "Lock-out and tag-out" on page 2-60.**

- Refilling volume: 5.5 L (1.45 US gal)
- Prepare a 10 mm wrench.

1. Adjust the filler cap screw (F) to the upper position in order to make the line through the oil inspection screw plug (L) and the drain screw plug (P) perpendicular to the ground.
2. Use a proper screwdriver to eliminate the dirt from the hexagonal socket of screw plug in order to avoid damage to the bolt.
3. Use a spanner to remove the screw plug (L). When the oil level reaches the point 10 mm (0.4 in) below the bottom of the screw plug (L) opening, the amount of oil added is just perfect.
4. If the oil level is too low, reinstall the screw plug (L), operate the travel level and slowly travel your machine forward or backward in order to run the sprocket one turn. Repeat step 2 and check again.
5. If the oil level is low, fill oil through the opening of the screw plug (F) till the oil overflows through the opening of the screw plug (L).

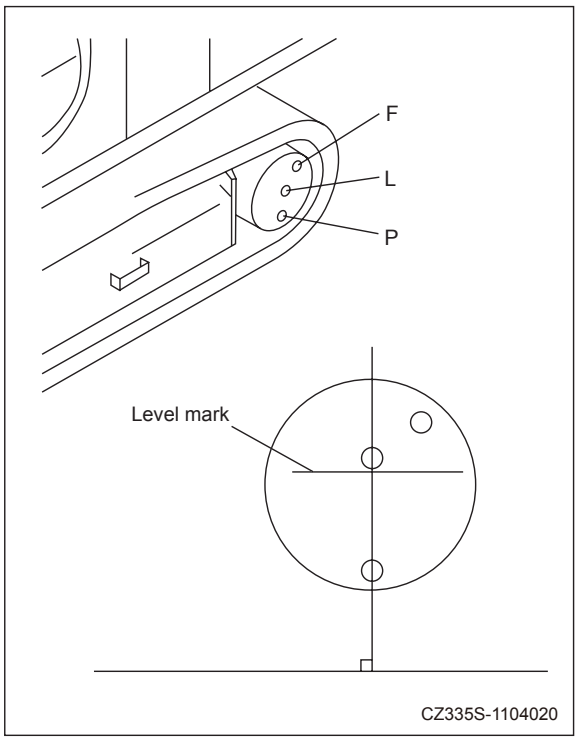

Fig. 5-91

Downloaded from www.Manualslib.com manuals search engine

https://truckmanualshub.com/

6. When the oil level is too high, consult Sany distributor for inspection.

7. Restore the screw plugs (F) and (L) after check and tighten them to: 58.8±19.6N.m.

5.8.7 Every 1000 service hours

Also perform maintenance for every 100, 250 and 500 service hours in the meantime.

5.8.7.1 Hydraulic oil filter - replace

WARNING

When the engine has just been stopped, the parts and oil are still hot and can cause serious burn. Wait for the temperature to cool down before doing the job.

Note:

For machines equipped with a hydraulic breaker, the hydraulic oil deteriorates faster than that of machines operating with a bucket. For more information see “**Hydraulic Breaker Service Interval**” **on page 5-27**.

Downloaded from www.Manualslib.com manuals search engine

https://truckmanualshub.com/

1. Park your machine on a hard, level ground. Adjust the work equipment to an attitude ready for service, as shown in the right illustration. Lower the work equipment to ground and turn off the engine.

2. Lock out and tag out your machine before proceeding. See **“Lock-out tag-out” on page 2-60.**

3. Turn the butterfly nut on the breather valve and press the venting button.

4. Loosen the four bolts and remove the cap (1). When the cap is removed, it may fly out due to the action of the spring (2). In this case, hold down the cap when removing the bolts.

5. Remove the spring (2), valve (3) and strainer (4) before disassembling the filter (5).

   - Check the bottom of the filter box and remove the dirt if any. Keep the hydraulic oil free from any dirt.

6. Clean the disassembled parts with cleaning oil.

7. Install a new filter.

8. Restore the valve (3), strainer (4) and spring (2).

9. Install the cap (1) to its position. Hold down the cap and tighten the bolts.

10. In order to vent the air, start the engine (see "Engine Starting" in the Operation Section) and run the engine at low idle for 10 minutes.

11. Stop the engine.

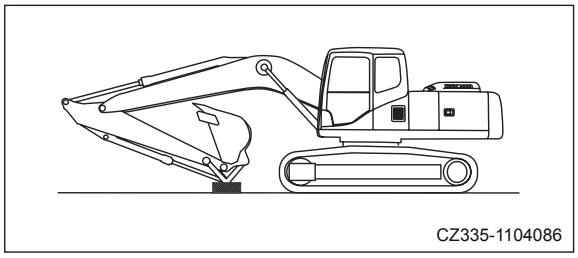

Fig. 5-92

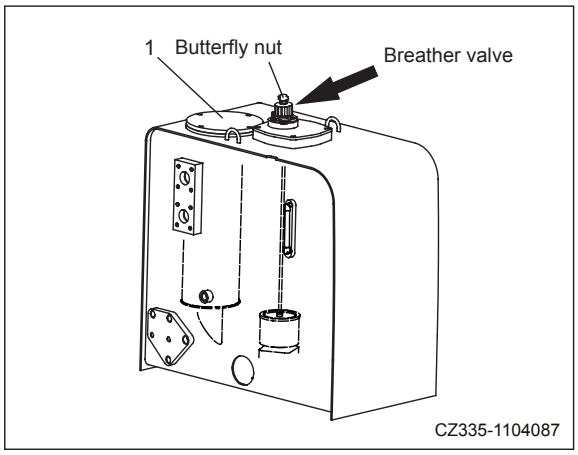

Fig. 5-93

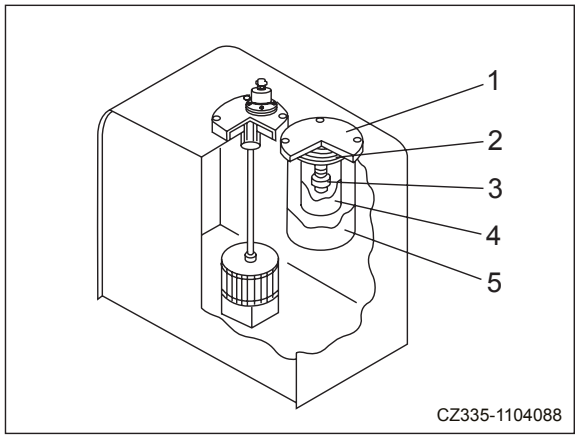

Fig. 5-94

Downloaded from www.Manualslib.com manuals search engine

https://truckmanualshub.com/

5.8.7.2 Swing drive oil - change

WARNING

When the engine has just been stopped, the parts and oil are still hot and can cause serious burn. Wait until they are cool enough before doing the job.

Always prepare your machine as required and lock/tag it out before proceeding. **See "Preparing the machine" on page 2-58 and "Lock-out and tag-out" on page 2-60.**

- Tank capacity:

  3.5 L (1.06 US gal)

1. Place a container under the drain valve (P) in order to contain the gear oil drained.

2. Loosen the drain valve (P) beneath the machine to drain the gear oil. Tighten the drain valve upon completion of the draining.

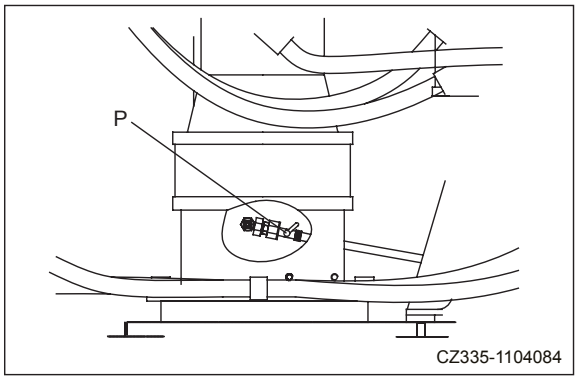

Fig. 5-95

Remark:

- If the gear oil flows out in a thin thread pattern, you can end the draining operation.
- When the temperature is low, you can swing the work equipment to slightly increase the oil temperature before draining the oil. However, the work equipment shall not be swung during draining, which may otherwise damage the swing unit.

Downloaded from www.Manualslib.com manuals search engine

https://truckmanualshub.com/

3. Remove the filler cap (F) and fill the oil as required through the filler opening (F).

4. Check the oil level. For more information see **“Swing drive oil - check/refill” on page 5-80**.

5. For information on selection of oil and temperature see **“Recommended Fluids” on page 5-17**.

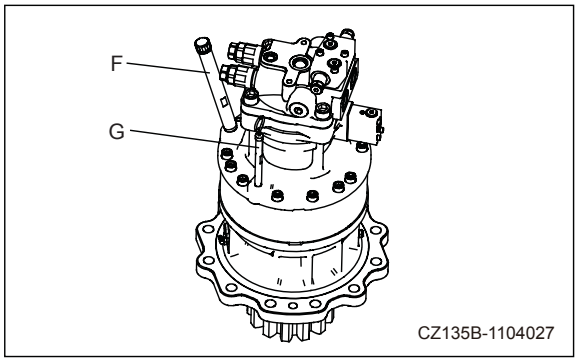

Fig. 5-96

5.8.7.3 Engine exhaust pipe clamps - check

Consult Sany distributor to check the fastening conditions of the air cleaner - turbocharger - post cooler - engine clamps.

5.8.7.4 Fan belt tension - check/replace

Check the tension of fan belt. Replace the fan belt in case of cracks or damage. Contact your Sany distributor if you have any troubles.

5.8.7.5 Nitrogen pressure in accumulator (breaker) - check

(If equipped)

Special tools will be used in order to check the accumulator and inject nitrogen.

Please consult Sany distributor, if possible, to conduct related inspection and inflating operation.

Downloaded from www.Manualslib.com manuals search engine

https://truckmanualshub.com/

5.8.8 Every 2000 service hours

Also perform maintenance for every 100, 500 and 1000 service hours in the meantime.

5.8.8.1 Final drive oil - change

WARNING

- **When the engine is just shut down, the oil and components are still hot and can cause burn. Wait until the oil is cool enough before servicing.**
- **Remaining pressure in the tank can cause oil to squirt out or the screw plug to fly out. Personal injury could result. Slowly loosen the screw plug in order to release the pressure. Never stand in front of the screw plug.**

Always prepare your machine as required and lock/tag it out before proceeding. **See "Preparing the machine" on page 2-58 and "Lock-out and tag-out" on page 2-60.**

- Refilling capacity:

  See "**Fluid capacities**" **on page 5-19**.

- Prepare a wrench.

1. Adjust the filler cap screw (F) to the upper position in order to make the line through the oil inspection screw plug (L) and the drain screw plug (P) perpendicular to the ground.

2. Use a proper screwdriver to eliminate the dirt from the hexagonal socket of screw plug in order to avoid damage to the bolt.

3. Place under the drain plug (P) a container used to contain the oil.

4. Use the spanner to remove the drain plug

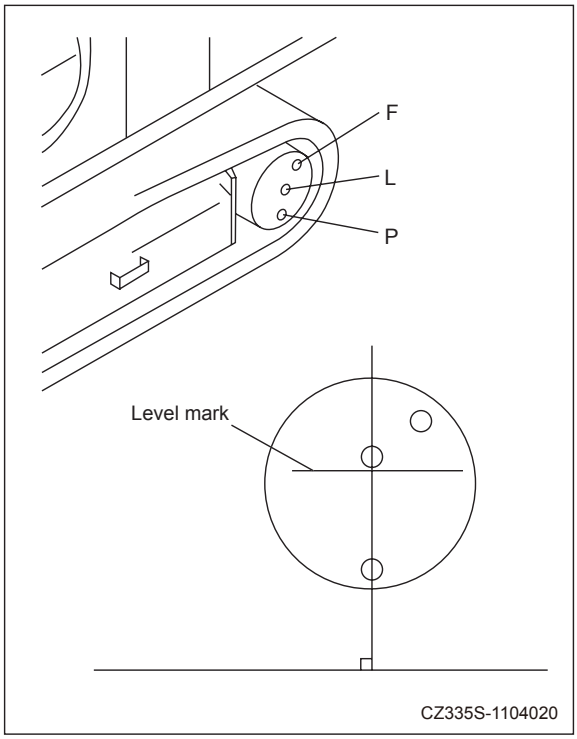

Fig. 5-97

Downloaded from www.Manualslib.com manuals search engine

https://truckmanualshub.com/

(P) in order to drain the oil.

Remark:

Check the O-ring on screw plug and replace the O-ring if broken.

5. Tighten the plug (P) and remove the plugs (F) and (L).

6. Fill oil through the opening of the plug (F).

7. When the oil is seen coming out of the opening (L), reinstall the plug (F) and (L) and tighten them to: 58.8±19.6N.m.

Downloaded from www.Manualslib.com manuals search engine

https://truckmanualshub.com/

5.8.8.2 Hydraulic tank filter screen - clean

WARNING

When the engine has just been stopped, the parts and oil are still hot and can cause serious burn. Wait until they are cool enough before doing the job.

Always prepare your machine as required and lock/tag it out before proceeding. **See "Preparing the machine" on page 2-58 and "Lock-out and tag-out" on page 2-60.**

1. Turn the butterfly nut on the breather valve and press the venting button.

2. Loosen the four bolts and remove the cap (1). When the cap is removed, it may fly out due to the action of the spring (2). In this case, hold down the cap when removing the bolts.

3. Hold the top end of the rod (3) and pull it upward in order to remove the spring (2) and the screen (4).

4. Clean the screen (4) of all dirt. Flush it with cleaning oil. Replace the screen if damaged.

5. During installation, fix the screen (4) to the bigger part (5) of the oil tank before assembling.

6. When assembling, take advantage of the bulged part of the cap (1) to hold the spring (2) before tightening the bolts.

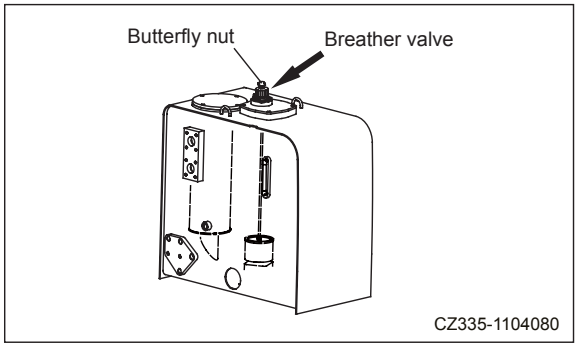

Fig. 5-98

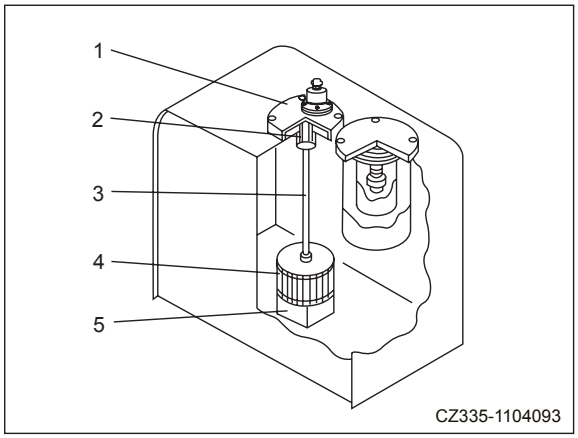

Fig. 5-99

Downloaded from www.Manualslib.com manuals search engine

https://truckmanualshub.com/

5.8.8.3 Nitrogen pressure in accumulator (control oil circuit) - check

WARNING

The accumulator contains pressurized nitrogen, which may explode due to improper operation, thus resulting in machine damage and personal injury. The following items must be observed when handling the accumulator:

- **Some pressure remains in the hydraulic circuit. Never face the opening from which oil may squirt when disassembling a hydraulic device. In addition, loosen the bolts slowly.**
- **Never dismantle the accumulator.**
- **Be away from fire sources.**
- **Never punch or weld the accumulator.**
- **Never bump or roll the accumulator. Keep it free from any impacts.**
- **Vent the air completely when handling the accumulator. Consult your Sany distributor to do this job.**

Note:

In continuous operation with low nitrogen pressure in the accumulator, the remaining pressure in hydraulic circuit will not be released once failure occurs to your machine.

Functions of the accumulator

The accumulator stores the pressure of the control circuit. Even if the engine is turned off, the control oil circuit allows you to achieve the following operations:

- Operate the control lever to lower the work equipment. The work equipment will fall due to gravity.
- The pressure in hydraulic circuit can be released.

The installation location of the accumulator is shown in the right illustration.

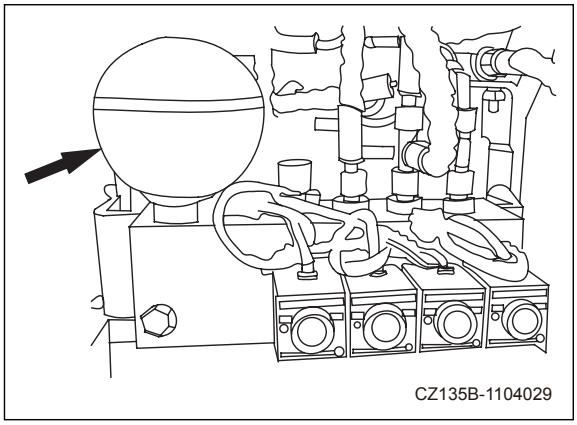

Fig. 5-100

Downloaded from www.Manualslib.com manuals search engine

https://truckmanualshub.com/

Checking the functions of accumulator

NOTICE

During inspection, make sure the surrounding area is clear without personnel or any barriers.

Check the nitrogen pressure through the following steps:

1. Park your machine on a hard, level ground.

2. Keep the work equipment 1.5m (4ft 11in) above the ground at maximum reach (with the arm fully extended and the bucket fully turned outward.

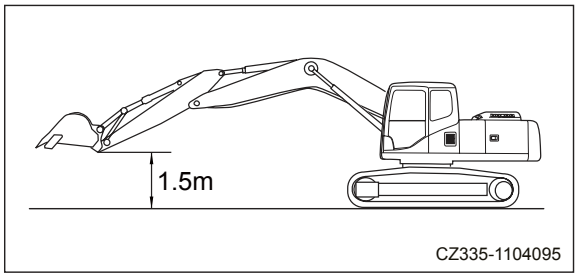

Fig. 5-101

The step 3 through step 5 shall be conducted within 15 seconds.

The accumulator's pressure drops gradually since stoppage of the engine. Therefore, check the accumulator immediately after the engine is shut down.

3. Keep the work equipment at its maximum operating radius, turn the start switch to OFF position (A) and stop the engine.

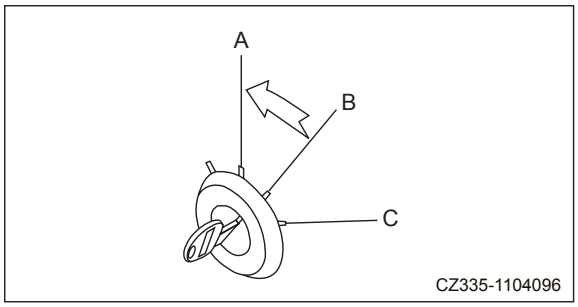

Fig. 5-102

Downloaded from www.Manualslib.com manuals search engine

https://truckmanualshub.com/

4. Turn the start switch to ON position (B).

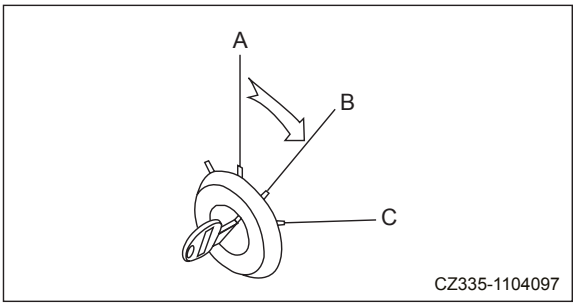

Fig. 5-103

5. Place the lockout control to FREE position (F). Operate the control lever to lower the work equipment. Check the work equipment whether it reaches the ground.

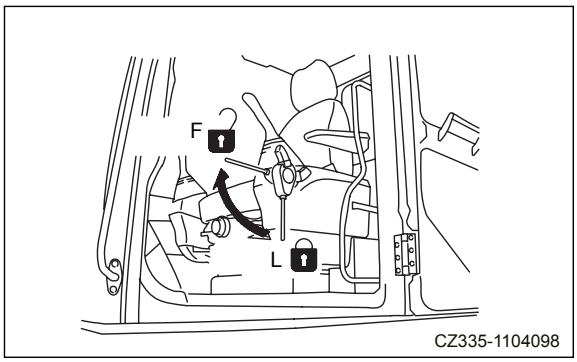

Fig. 5-104

6. A work equipment lowering and touching the ground under gravity indicates that the accumulator functions normally.

   In case that the work equipment is unable to lower or is held half way, the pressure in the hydraulic circuit accumulator may have dropped already.

   Consult Sany distributor for such inspection.

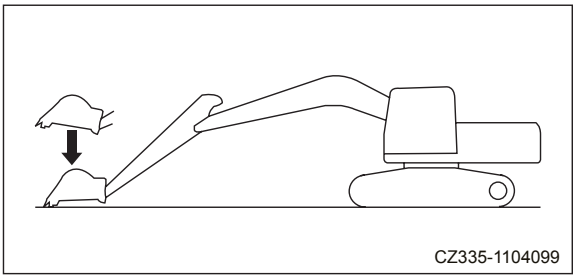

Fig. 5-105

7. After checking through the a.m. steps, place the hydraulic lockout control to LOCK position and turn the start switch to OFF position.

Downloaded from www.Manualslib.com manuals search engine

https://truckmanualshub.com/

5.8.8.4 Hydraulic circuit internal pressure - release

1. Low the work equipment to ground.

2. Place the work equipment lockout control to the LOCK position (L).

   The step 4 through step 6 shall be carried out within 15 seconds.

   Pressure of the accumulator will drop gradually after the engine is stopped. Therefore, the pressure can only be released when the engine has just be turned off.

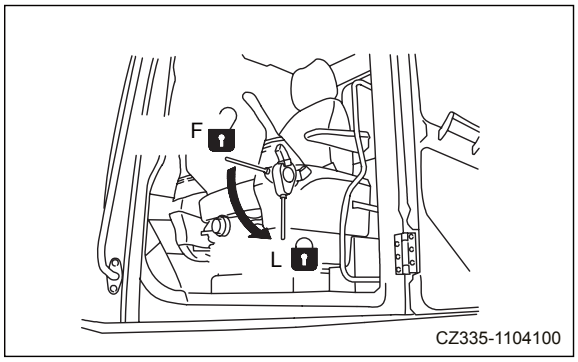

Fig. 5-106

3. Turn off the engine.

4. Turn the start switch to ON position (B).

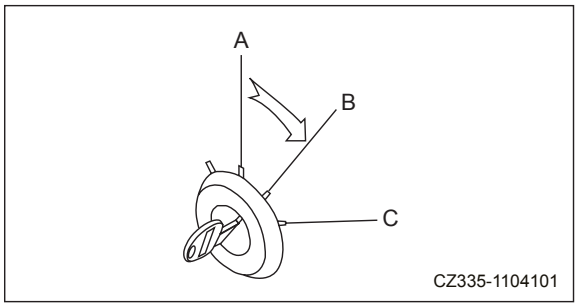

Fig. 5-107

5. Place the lockout control to FREE position (F) and then cycle the work equipment control lever in all directions in order to release the pressure in control circuit.

6. Place the lockout control to the LOCK position (L) and then turn the start switch to "OFF" position.

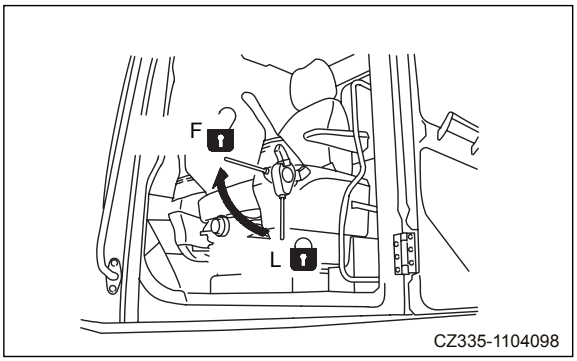

Fig. 5-108

Downloaded from www.Manualslib.com manuals search engine

https://truckmanualshub.com/

5.8.8.5 Oil in hydraulic tank - change

WARNING

- **When the engine has just been stopped, the parts and oil are still hot and can cause serious burn. Wait until they are cool enough before doing the job.**
- **Press the breather valve venting button to release the internal pressure before removing the oil filler cap.**

Note:

For machines equipped with a hydraulic breaker, the hydraulic oil deteriorates faster than that of machines operating with a bucket. For more information see "**Hydraulic Breaker Service Interval**" **on page 5-27**.

- For refilling capacity see "**Fluid capacities**" **on page 5-19**.
- Prepare a lever (used for 36 mm socket wrenches)

1. Unscrew the bolts of the bottom cover plate and remove the cover plate.
2. Swing the upper structure in order to position the drain plug beneath the hydraulic tank between the tracks.
3. Retract the arm and bucket cylinders and lower the boom in order to enable the bucket tips to touch the ground.
4. lace the hydraulic lockout control to the LOCK position and turn off the engine.

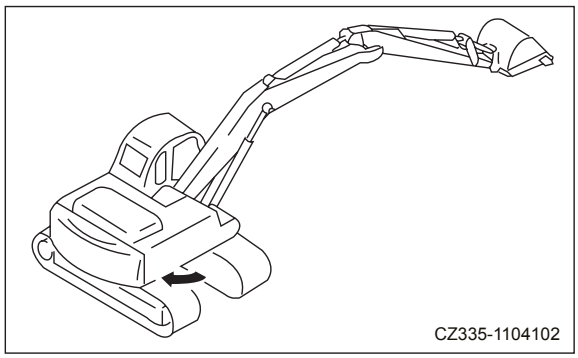

Fig. 5-109

Downloaded from www.Manualslib.com manuals search engine

https://truckmanualshub.com/

5. Remove the cap of the oil filler (F) .

6. Place a container under the drain plug. Remove the drain plug (P) with the lever in order to drain the oil. Check the O-ring on the drain plug (P) and replace it timely if broken. Tighten the plug (P) after draining.

   - Tightening torque: 927±103N·m (94.6 ± 10.5 kgf·m or 683.5 ± 76.0lbft)
   - Do not get oil on your body when removing the drain plug (P).

7. Fill the hydraulic oil as required through the filler (F). Check the oil level, which shall be between the H and L marks of dipstick.

   - For more information on applicable hydraulic oil see "**Recommended Fluids**" **on page 5-17**.
   - For more information on oil level inspection see "**Cooling system - clean**" **on page 5-37**.

8. Eliminate air from the hydraulic circuit.

   For more information on elimination of air from the hydraulic circuit see "**Hydraulic Breaker Service Interval**" **on page 5-27**.

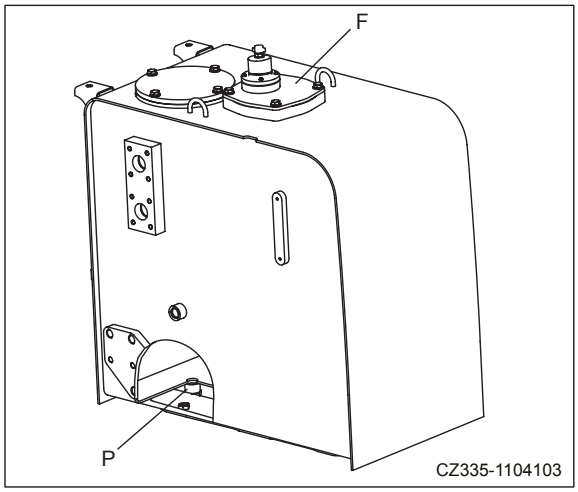

Fig. 5-110

Downloaded from www.Manualslib.com manuals search engine

https://truckmanualshub.com/

5.8.8.6 Alternator - inspect

Contact your Sany distributor to inspect the alternator.

Check the engine every 1000 service hours if the engine is started frequently.

5.8.8.7 Engine valve clearance - check/ adjust

Special tools are necessary for inspection and maintenance. Consult Sany distributor to do this job.

5.8.9 Every 4000 service hours

Also perform maintenance for every 100, 250, 500, 1000 and 2000 service hours in the meantime.

5.8.9.1 Coolant pump - inspect

Check coolant pump for leak of water or oil. In case of any problem, contact your Sany distributor for disassembly, repair or replacement.

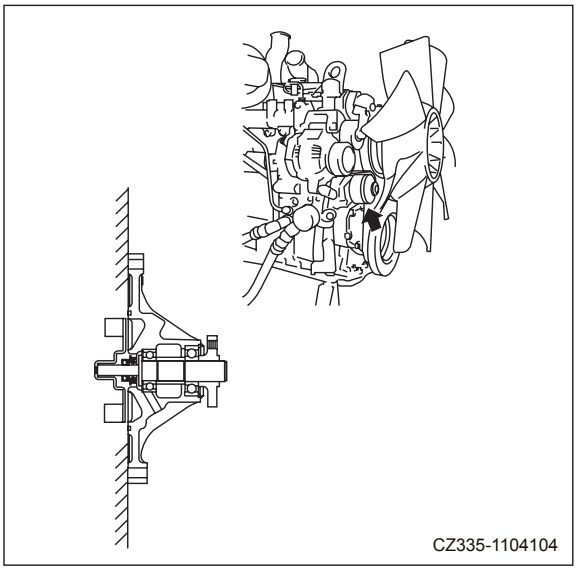

Fig. 5-111

5.8.9.2 Start motor - check

Consult Sany distributor to check the start motor. Check it every 1000 service hours if the engine is started frequently.

Downloaded from www.Manualslib.com manuals search engine

https://truckmanualshub.com/

5.8.9.3 Accumulator (control oil circuit) - replace

WARNING

The accumulator contains pressurized nitrogen, which may explode due to improper operation, thus resulting in machine damage and personal injury. The following items must be observed when handling the accumulator:

- **Some pressure remains in the hydraulic circuit. Never face the opening from which oil may squirt when disassembling a hydraulic device. In addition, loosen the bolts slowly.**
- **Never dismantle the accumulator.**
- **Be away from fire sources.**
- **Never punch or weld the accumulator.**
- **Never bump or roll the accumulator. Keep it free from any impacts.**
- **Vent the air completely when handling the accumulator. Consult your Sany distributor to do this job.**

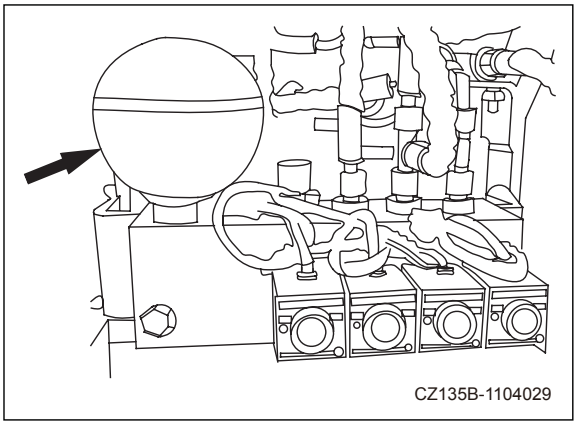

Fig. 5-112

If your machine is kept operating when the performance of accumulator decreases, the pressure in the hydraulic system will not be released. Consult Sany distributor to replace the accumulator.

The accumulator's installation location is shown in the right illustration.

Downloaded from www.Manualslib.com manuals search engine

https://truckmanualshub.com/

5.8.9.4 High-pressure tube clamps and rubber - check

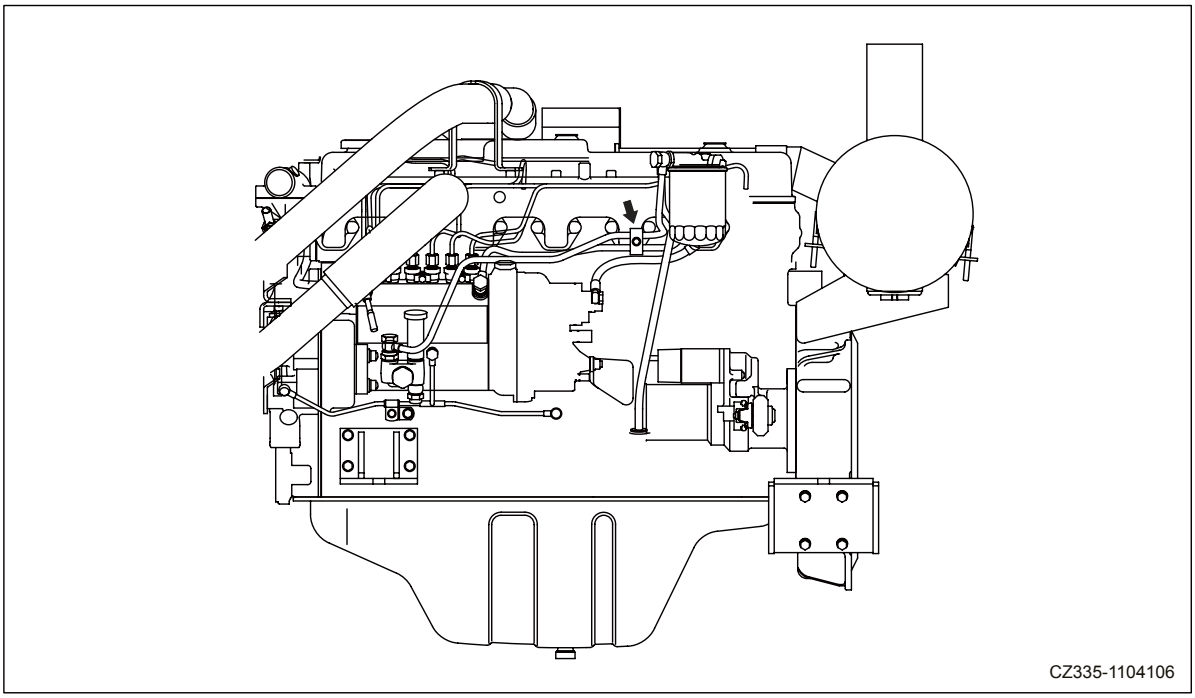

Fig. 5-113

Always prepare your machine as required and lock/tag it out before proceeding. See **“Preparing the machine” on page 2-58 and “Lock-out and tag-out” on page 2-60.**

Check, through visual inspection and feel, for any loose bolts on the five mounting clamps of high-pressure tubes between feed pump and injection nozzle. Check for any aged rubber. Contact your Sany distributor to replace any part that fails.

5.8.9.5 Compressor working condition - inspect

The following two items are to be inspected:

1. Whether the compressor and the magnetic clutch are switched on/off when switching on/off the air conditioner.

2. Whether the clutch or compressor produces abnormal noise.

   In case of any problem, Contact your Sany distributor for disassembly, repair or replacement of the parts.

Downloaded from www.Manualslib.com manuals search engine

https://truckmanualshub.com/

5.8.10 Every 8000 service hours

Also perform maintenance for every 100, 250, 500, 1000, 2000 and 4000 service hours in the meantime.

5.8.10.1 High-pressure tube clamps - replace

Contact your Sany distributor to replace the high-pressure tube clamps on the engine.

5.8.11 Every 10000 service hours

Contact your Sany distributor for an overall maintenance if your machine has worked for 10,000 hours.

Downloaded from www.Manualslib.com manuals search engine

https://truckmanualshub.com/

BLANK PAGE

Downloaded from www.Manualslib.com manuals search engine

https://truckmanualshub.com/

BLANK PAGE

Downloaded from www.Manualslib.com manuals search engine

https://truckmanualshub.com/

SANY

Troubleshooting

6 Troubleshooting

6.1 Troubleshooting Preparation 6-3
6.1.1 Checks before troubleshooting 6-3
6.1.2 Troubleshooting procedure 6-4
6.1.3 Troubleshooting precautions 6-6
6.1.4 Electrical circuits troubleshooting precautions 6-9
6.1.5 Hydraulic components handling precautions 6-10
6.2 Pseudo Failures 6-12
6.3 Towing the Machine 6-13
6.4 Towing Hook for Light Loads 6-15
6.5 Severe Operating Conditions 6-15
6.6 Engine Failures 6-16
6.6.1 Engine troubleshooting table 6-16
6.6.2 Coolant temperature high 6-19
6.6.3 Engine oil pressure low 6-20
6.6.4 When fuel exhausts 6-22
6.6.5 When engine rotates reversely 6-24
6.7 Failures of the Electrical System 6-25
6.7.1 Electrical system troubleshooting table 6-25
6.7.2 Failure codes 6-28
6.8 Battery 6-30
6.8.1 Battery removal and installation 6-30
6.8.2 Battery charging 6-31
6.8.3 Jump-starting the engine 6-32
6.8.3.1 Connecting the jumper cables 6-33
6.8.3.2 Starting the engine 6-34

Downloaded from www.Manualslib.com manuals search engine

https://truckmanualshub.com/

6.8.3.3 Disconnecting the jumper cables 6-34
6.9 Failures of the Hydraulic System 6-35
6.10 Other Common Failures 6-39

Downloaded from www.Manualslib.com manuals search engine

https://truckmanualshub.com/

6 TROUBLESHOOTING

6.1 Troubleshooting Preparation

6.1.1 Checks before troubleshooting

	Item	Judgement value	Remedy
Lubricating oil, coolant	1. Check fuel level and type of fuel	—	Add fuel
	2. Check for impurities in fuel	—	Clean, drain
	3. Check hydraulic oil level	—	Add oil
	4. Check hydraulic oil strainer	—	Clean, drain
	5. Check swing drive oil level	—	Add oil
	6. Check engine oil level (in oil pan)	—	Add oil
	7. Check coolant level	—	Add water
	8. Check dust indicator for clogging	—	Clean or replace
	9. Check hydraulic filter	—	Replace
	10. Check final drive oil level	—	Add oil
Electrical equipment	1. Check for looseness and corrosion of battery terminal and wiring	—	Tighten or replace
	2. Check for looseness and corrosion of alternator terminal and wiring	—	Tighten or replace
	3. Check for looseness and corrosion of start motor terminal and wiring	—	Tighten or replace
Hydraulic, mechanical equipment	1. Check for abnormal noise and smell	—	Repair
	2. Check for oil leakage	—	Repair
	3. Carry out air bleeding	—	Bleed air
Electrics, electrical equipment	1. Check battery voltage (engine stopped)	20-30V	Replace
	2. Check battery electrolyte level	—	Add or replace
	3. Check for discolored, burnt, exposed wiring	—	Replace
	4. Check for missing wiring clamps and hanging wiring	—	Repair
	5. Check for water leaking on wiring (be particularly careful attention to water leaking on connectors or terminals)	—	Disconnect connector and dry
	6. Check for blown or corroded fuses	—	Replace
	7. Check alternator voltage (engine running at 1/2 throttle or above)	After running for several minutes: 27.5~ 29.5V	Replace
	8. Check operating sound of battery relay (when switch is turned ON/OFF)	—	Replace

Table 6-1

Downloaded from www.Manualslib.com manuals search engine

https://truckmanualshub.com/

6.1.2 Troubleshooting procedure

1. Check and determine failure symptom.

   Ask for the following information upon service request of a client.

   - Name of client
   - Model and serial number of machine
   - Detailed information on job site, etc.

   Obtain general information through questions.

   - Failure encountered
   - Working condition when failure occurs
   - Working environment
   - Repair and maintenance history

2. Determine possible locations of failure.

   Refer to Troubleshooting Section in this manual in order to find possible locations of the failure.

3. Prepare tools for troubleshooting.

   Tools required:

   - T-connector
   - Hydraulic gauge, etc.
   - Refer to the Parts Book and prepare necessary replacement parts.

4. Go to job site.

5. Ask operator for more information on the failure.

   - Is there any abnormality before the failure occurred?
   - Does the failure occurred suddenly?

Downloaded from www.Manualslib.com manuals search engine

https://truckmanualshub.com/

- Did you do any repair when the failure occurred?

6. Play back the failure.

7. Start the engine and operate the machine to make sure that the symptom does exist.

   Simply determine location of failure and make repair before performing trouble-shooting.

   - Checks before starting
   - Other checking items

   Refer to Troubleshooting Section in this manual and choose troubleshooting procedure according to machine symptom before performing the service work.

8. Work out a service plan.

   - Repair in work shop.
   - Repair on job site.

Downloaded from www.Manualslib.com manuals search engine

https://truckmanualshub.com/

6.1.3 Troubleshooting precautions

⚠ WARNING

Observe the following items before performing any troubleshooting operations. Failure to do so can cause machine damage, personal injury or death.

- **Park your machine on a hard, level ground. Make sure that the safety pins, blocks and machine brake are effective.**
- **Co-workers must use the same signal system. Keep irrelevant people a safe distance from the machine.**
- **If the radiator cap is removed when the engine is hot. Hot coolant may squirt out and cause burns, wait for the engine to cool down before troubleshooting.**
- **Take care not to touch any hot parts or be caught by any rotating parts.**
- **Before disconnecting any electrical wiring, always disconnect the negative (–) post of battery.**
- **Before removing the plug or cap from any vessel that contains pressurized oil, water or air, release the internal pressure. When installing a measuring equipment, be sure to connect it properly.**

The aim of troubleshooting is to pinpoint the basic cause of the failure, to carry out repairs swiftly, and to prevent reoccurrence of the failure.

When carrying out troubleshooting, it is important to understand the structure and function.

However, a short cut to effective troubleshooting is to ask the operator various questions to form some idea of possible causes of the failure that would produce the reported symp-

Downloaded from www.Manualslib.com manuals search engine

https://truckmanualshub.com/

toms.

1. When carrying out troubleshooting, do not hurry to disassemble the components.

   If components are disassembled immediately any failure occurs:

   ★ Parts that have no connection with the failure or other unnecessary parts will be disassembled.

   ★ It will become impossible to find the cause of the failure.

   It will also cause a waste of man-hours, parts, or oil or grease, and at the same time, will also lose the confidence of the user or operator.

   For this reason, when carrying out troubleshooting, it is necessary to carry out thorough prior investigation and to carry out troubleshooting in accordance with the fixed procedure.

2. Points to ask user or operator:

   1) Have any other problems occurred apart from the problem that has been reported?

   2) Was there anything strange about the machine before the failure occurred?

   3) Did the failure occur suddenly, or were there problems with the machine condition before this?

   4) Under what conditions did the failure occur?

   5) Had any repairs been carried out before the failure? When were these repairs carried out?

Downloaded from www.Manualslib.com manuals search engine

https://truckmanualshub.com/

6) Has the same kind of failure occurred before?

3. Check before troubleshooting

1) Check the oil level.

2) Check for any external leakage of oil from the piping or hydraulic equipment.

3) Check the travel of the control levers.

4) Check the stroke of the control valve spool.

5) Other maintenance items can be checked externally, so check any item that is considered to be necessary.

4. Confirming failure

★ Confirm the extent of the failure yourself, and judge whether to handle it as a real failure or as a problem with the method of operation, etc.

★ When operating the machine to reenact the troubleshooting symptoms, do not carry out any investigation or measurement that may make the problem worse.

5. Troubleshooting

★ Use the results of the investigation and inspection in Items 2 – 4 to narrow down the causes of failure, then use the troubleshooting flowchart to locate the position of the failure exactly.

★ The basic procedure for troubleshooting is as follows.

1) Start from the simple points.

2) Start from the most likely points.

Downloaded from www.Manualslib.com manuals search engine

https://truckmanualshub.com/

3) Investigate other related parts or information.

6. Measures to remove root cause of failure

★ Even if the failure is repaired, if the root cause of the failure is not repaired, the same failure will occur again. To prevent this, always investigate why the problem occurred. Then, remove the root cause.

6.1.4 Electrical circuits troubleshooting precautions

1. Always turn the power off before disconnecting or connect connectors.

2. Before carrying out troubleshooting, check that all the related connectors are properly inserted.

★ Disconnect and connect the related connectors several times to check.

3. Always connect any disconnected connectors before going on to the next step.

★ If the power is turned ON with the connectors still disconnected, unnecessary abnormality displays will be generated.

4. When carrying out troubleshooting of circuits (measuring the voltage, resistance, continuity, or current), move the related wiring and connectors several times and check that there is no change in the reading of the tester.

★ If there is any change, there is probably defective contact in that circuit.

Downloaded from www.Manualslib.com manuals search engine

https://truckmanualshub.com/

6.1.5 Hydraulic components handling precautions

With the increase in pressure and precision of hydraulic equipment, the most common cause of failure is dirt (foreign material) in the hydraulic circuit. When adding hydraulic oil, or when disassembling or assembling hydraulic equipment, it is necessary to be particularly careful.

1. Be careful of the operating environment

   Avoid adding hydraulic oil, replacing filters, or repairing the machine in rain or high winds, or places where there is a lot of dust.

2. Disassembly and maintenance work in the field

   If disassembly or maintenance work is carried out on hydraulic equipment in the field, there is danger of dust entering the equipment. It is also difficult to confirm the performance after repairs, so it is desirable to use unit exchange. Disassembly and maintenance of hydraulic equipment should be carried out in a specially prepared dust-proof workshop, and the performance should be confirmed with special test equipment.

3. Do not let any dirt or dust get in during refilling operations.

   Be careful not to let any dirt or dust get in when refilling with hydraulic oil. Always keep the oil filler and the area around it clean, and also use clean pumps and oil containers. If an oil cleaning device is used, it is possible to filter out the dirt that has been collected during storage, so this is an even more effective method.

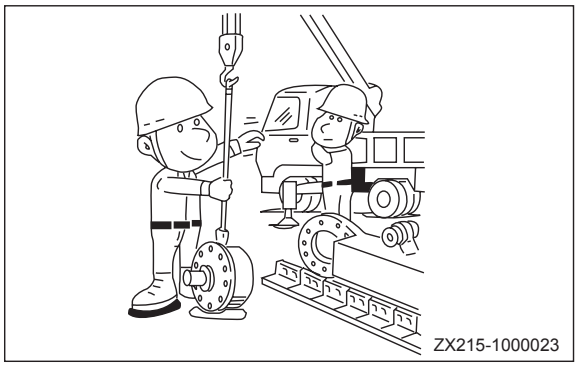

Fig. 6-1

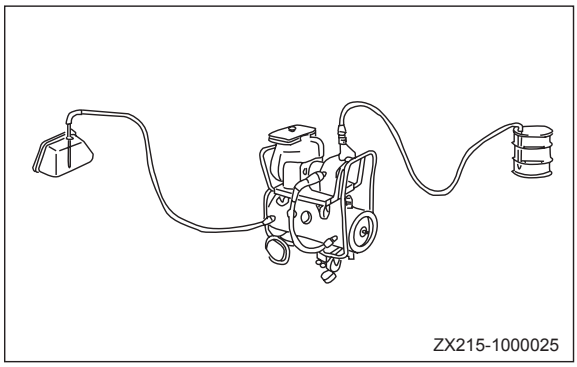

Fig. 6-2

Downloaded from www.Manualslib.com manuals search engine

https://truckmanualshub.com/

4. Change hydraulic oil when the temperature is high.

   When hydraulic oil or other oil is warm, it flows easily. In addition, the sludge can also be drained out easily from the circuit together with the oil, so it is best to change the oil when it is still warm. When changing the oil, as much as possible of the old hydraulic oil must be drained out. (Drain the oil from the hydraulic tank; also drain the oil from the filter and from the drain plug in the circuit.) If any old oil is left, the contaminants and sludge in it will mix with the new oil and will shorten the life of the hydraulic oil.

5. Flushing operations

   After disassembling and assembling the equipment, or changing the oil, use flushing oil to remove the contaminants, sludge, and old oil from the hydraulic circuit. Normally, flushing is carried out twice: primary flushing is carried out with flushing oil, and secondary flushing is carried out with the specified hydraulic oil.

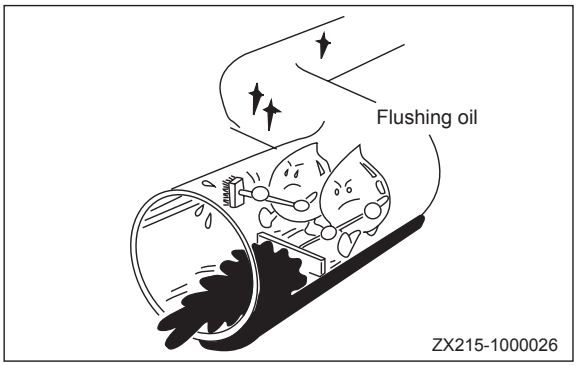

Fig. 6-3

6. Cleaning operations

   After repairing the hydraulic equipment (pump, control valve, etc.) or when running the machine, carry out oil cleaning to remove the sludge or contaminants in the hydraulic oil circuit. The oil cleaning equipment is used to remove the ultra fine (about 3 μ) particles that the filter built into the hydraulic equipment cannot remove, so it is an extremely effective device.

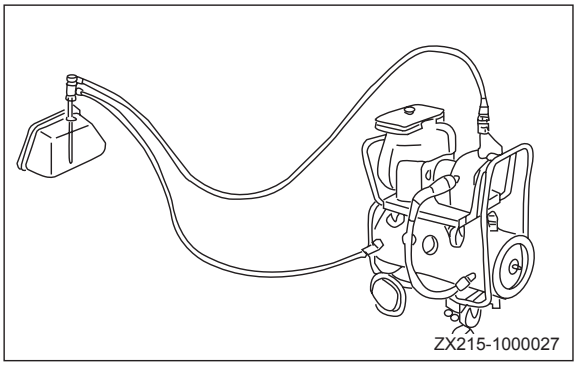

Fig. 6-4

Downloaded from www.Manualslib.com manuals search engine

https://truckmanualshub.com/

6.2 Pseudo Failures

Note that the following failures are pseudo ones:

- The arm speed may drop suddenly when retracting the arm with the work equipment lowering unloaded and the arm in a nearly vertical position.

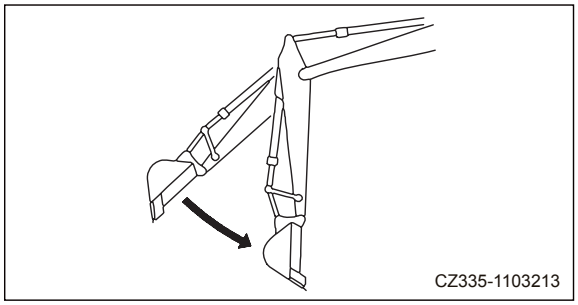

Fig. 6-5

- When the bucket tips are nearly parallel to the ground, the bucket speed may drop suddenly.

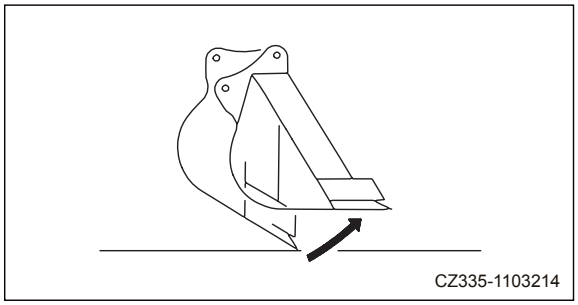

Fig. 6-6

- The brake valve produces noise when starting or stopping swinging operation.
- The travel motor produces noise when the machine travels downhill at low speed.

Downloaded from www.Manualslib.com manuals search engine

https://truckmanualshub.com/

6.3 Towing the Machine

WARNING

Towing the machine improperly or using wire cables beyond the specification could lead to serious injury or death.

- **Make sure that the wire cables used for towing the machine are strong enough, which may otherwise result in accidents.**
- **While towing the machine, do not use wire cables with broken wires (A), reduced diameter (B) or knot (C) in order to prevent rupture of the wire cables.**
- **Always wear protective gloves when handling wire cables.**
- **Never tow the machine on a slope.**
- **Never stand between the towing machine and the towed machine when performing towing operation.**
- **Operate the machine slowly and avoid imposing sudden load on wire cable.**

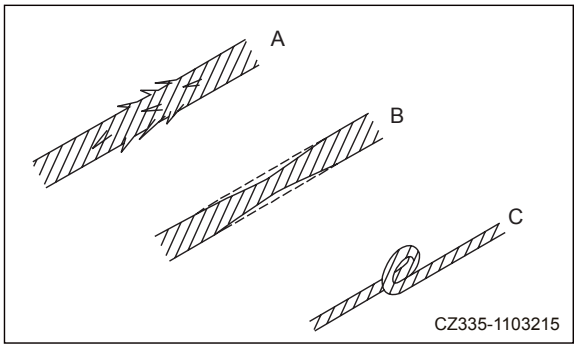

Fig. 6-7

Note:

The towing operation must be performed within the maximum towing capacity.

Downloaded from www.Manualslib.com manuals search engine

https://truckmanualshub.com/

- If the machine is trapped in mud and cannot move out of the mud with its own force, or the towing force of excavator is occupied by heavy object, wire cables can be used as shown in the right illustration.
- Place wood blocks or other protective materials between where the wire cable contacts the machine in order to prevent friction between the wire cable and the machine.
- Keep the wire cable parallel to the ground and align its direction with that of the track frame.
- Move at a speed of 1Km/h when towing the machine. Tow the machine to a place suitable for repair. Never tow the machine over a long distance.
- Towing of the machine is only allowed in case of emergency.

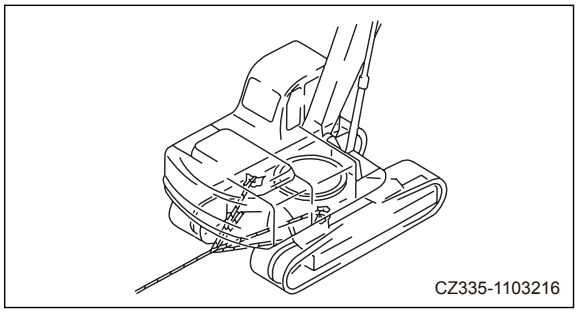

Fig. 6-8

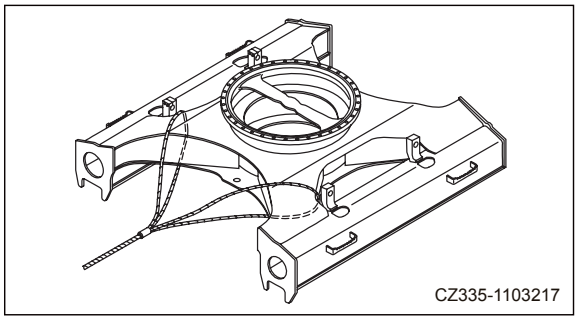

Fig. 6-9

Downloaded from www.Manualslib.com manuals search engine

https://truckmanualshub.com/

6.4 Towing Hook for Light Loads

WARNING

- **Towing the machine improperly could cause severe accidents. The following items must be observed when towing the machine.**
- **Shackle must be used.**
- **Keep the wire cable parallel to the ground and align its direction with that of the track frame.**
- **Move the machine slowly and avoid imposing sudden load on wire cable.**

The track frame has an eye, which can be hooked when towing a light object.

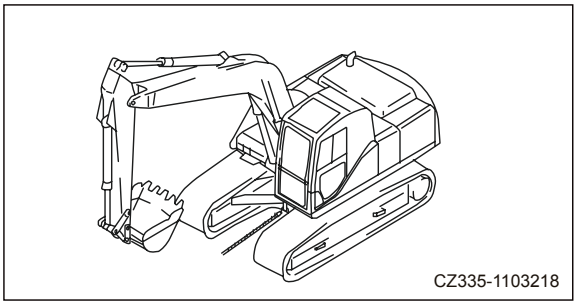

Fig. 6-10

6.5 Severe Operating Conditions

- When performing excavation in water, if the installation pins of work tool go below water surface, it is necessary to add grease to the pins before each operation.
- For heavy-loaded operation and deep excavation, it is necessary to add grease to the installation pins of the work tool before each operation. Cycle the operation of the boom, stick and bucket for several times before refilling the grease.

Downloaded from www.Manualslib.com manuals search engine

https://truckmanualshub.com/

6.6 Engine Failures

6.6.1 Engine troubleshooting table

Check the engine according to the following table if any failure occurs to it. Contact your Sany distributor to repair the engine.

Failure	Causes	Remedy
Unable to start the engine	• Battery low • Engine start switch internal failure • Pilot switch failure • Start motor failure • Open circuit of wire harness • Fuse failure (F1) • Short circuit of wire (grounding failure) • Alternator internal failure • Start relay failure • Brake failure	• Recharge/replace the battery. • Replace • Repair/replace • Repair/replace • Check/repair • Replace • Check/repair • Repair/replace • Replace • Repair/replace
Rough engine speed	• Open circuit of wire harness • Sensor internal failure • Short circuit of wire (grounding failure) • Sensor internal failure	• Check/repair • Replace • Check/repair • Replace
Unable to power off the machine	• Battery relay failure • Breakdown of surge diode	• Replace • Replace
Auto idle fails.	• Boom-up signal failure • Boom-down signal failure • Arm-in signal failure • Arm-out signal failure • Bucket-dig signal failure • Bucket-dump signal failure • Swing signal failure • Travel signal failure • Attachment signal failure • Controller failure	• Check/repair • Check/repair • Check/repair • Check/repair • Check/repair • Check/repair • Check/repair • Check/repair • Check/repair • Replace
Preheating function fails.	• Preheat fuse failure • Preheat relay failure • Short circuit of wire (grounding failure) • Preheat controller failure	• Replace • Replace • Check/repair • Replace
All devices fail.	• Hydraulic lockout control failure • Short circuit of wire (grounding failure) • Failure of internal coil of pilot lockout valve	• Repair/replace • Check/repair • Replace
Boom slow and weak	• Sensor failure • Short circuit of harness (grounding failure) • Open circuit of harness • Controller failure	• Replace • Check/repair • Check/repair • Replace

Downloaded from www.Manualslib.com manuals search engine

https://truckmanualshub.com/

Failure	Causes	Remedy
Arm slow and weak	• Sensor failure • Short circuit of harness (grounding failure) • Open circuit of harness • Controller failure	• Replace • Check/repair • Check/repair • Replace
Bucket slow and weak	• Sensor failure • Short circuit of harness (grounding failure) • Open circuit of harness • Bucket confluence solenoid valve failure • Controller failure	• Replace • Check/repair • Check/repair • Replace • Replace
Travel slow and weak	• Sensor failure • Short circuit of harness (grounding failure) • Open circuit of harness • Controller failure	• Replace • Check/repair • Check/repair • Replace
Monitor black-out	• Fuse failure • Open circuit of wire • Short circuit of wire (grounding failure) • Monitor failure	• Replace • Check/repair • Check/repair • Replace
Monitor displays nothing.	• Resistor failure • Open circuit of wire • Short circuit of wire (grounding failure) • Monitor or controller failure	• Replace • Check/repair • Check/repair • Replace
Dual-travel speed failure	• Dual travel speed solenoid valve failure • Open circuit of wire • Short circuit of wire (grounding failure)	• Replace • Check/repair • Check/repair
Engine coolant temperature reading incorrect	• Coolant temperature sensor failure • Open circuit of wire • Short circuit of wire (grounding failure) • Wire short-circuited with 24V	• Replace • Check/repair • Check/repair • Check/repair
Fuel level reading incorrect	• Fuel level sensor failure • Open circuit of wire • Short circuit of wire (grounding failure) • Wire short-circuited with 24V	• Replace • Check/repair • Check/repair • Check/repair
Wiper failure	• Wiper motor internal failure • Open circuit of wire • Short circuit of wire (grounding failure)	• Repair/replace • Check/repair • Check/repair
Arm-in pilot pressure reading incorrect	• 5V power supply failure • Open circuit of signal line • Short circuit of signal line • Sensor failure	• Repair/replace • Check/repair • Check/repair • Replace
Arm-out pilot pressure reading incorrect	• 5V power supply failure • Open circuit of signal line • Short circuit of signal line • Sensor failure	• Repair/replace • Check/repair • Check/repair • Replace

Downloaded from www.Manualslib.com manuals search engine

https://truckmanualshub.com/

Failure	Causes	Remedy
Boom-up pilot pressure reading incorrect	• 5V power supply failure • Open circuit of signal line • Short circuit of signal line • Sensor failure	• Repair/replace • Check/repair • Check/repair • Replace
Boom-down pilot pressure reading incorrect	• 5V power supply failure • Open circuit of signal line • Short circuit of signal line • Sensor failure	• Repair/replace • Check/repair • Check/repair • Replace
Bucket-dig pilot pressure reading incorrect	• 5V power supply failure • Open circuit of signal line • Short circuit of signal line • Sensor failure	• Repair/replace • Check/repair • Check/repair • Replace
Bucket-dump pilot pressure reading incorrect	• 5V power supply failure • Open circuit of signal line • Short circuit of signal line • Sensor failure	• Repair/replace • Check/repair • Check/repair • Replace
Swing pilot pressure reading incorrect	• 5V power supply failure • Open circuit of signal line • Short circuit of signal line • Sensor failure	• Repair/replace • Check/repair • Check/repair • Replace
Travel pilot pressure reading incorrect	• 5V power supply failure • Open circuit of signal line • Short circuit of signal line • Sensor failure	• Repair/replace • Check/repair • Check/repair • Replace

Table 6-2

Downloaded from www.Manualslib.com manuals search engine

https://truckmanualshub.com/

6.6.2 Coolant temperature high

CAUTION

- **Never remove the radiator cap when the coolant is still hot. Hot water or steam may squirt and cause burns.**
- **Wait the coolant to cool down before removing the radiator cap.**

NOTICE

- **Do not stop the engine immediately. sudden rise of coolant temperature can cause engine parts to burn.**
- **Refill the coolant slowly in several times. Quick filling of low-temperature coolant can cause engine cracks.**

When the coolant temperature gauge shows a temperature higher than 100°C, the coolant temperature alert indicator will be on. Stop operating your machine and keep engine running at a speed a little higher than idle in order to reduce temperature. When the pointer of coolant temperature gauge returns to the middle position, the alert indicator is off. Now, stop the engine and perform the following steps.

Downloaded from www.Manualslib.com manuals search engine

https://truckmanualshub.com/

Always prepare your machine as required and lock out/tag out your machine before proceeding. **See "Preparing the machine" on page 2-58 and "Lock-out and tag-out" on page 2-60.**

1. Check radiator hoses for coolant leak.

2. Check V-belt for rupture. Check the belt tension.

3. Check coolant level. Refill coolant if necessary.

   - Remove the radiator cap (1) and refill coolant to the opening. Tighten the cap properly.
   - Open the reservoir (2) and refill coolant to the FULL mark. Tighten the cap properly.

4. Check the front of radiator for any contaminants.

5. If your machine has coolant leak or often encounters higher coolant temperature, the cooling system has a problem.

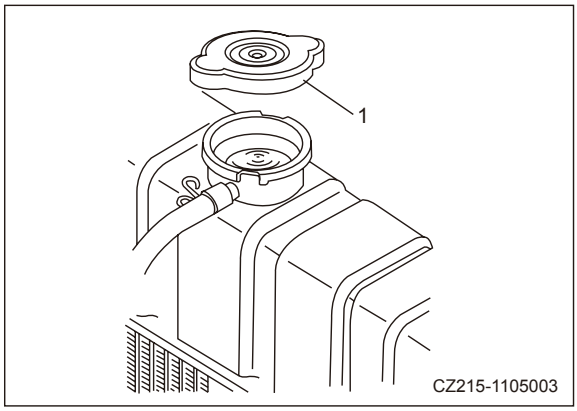

Fig. 6-11

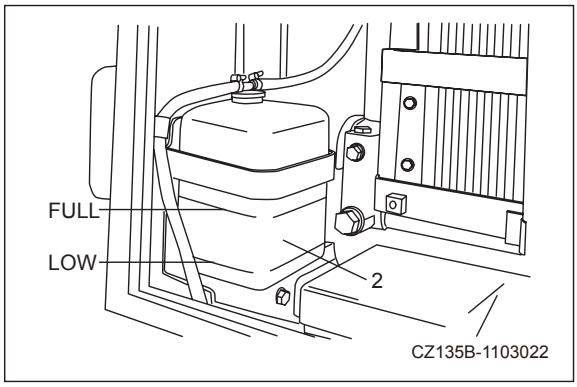

Fig. 6-12

6.6.3 Engine oil pressure low

NOTICE

When oil pressure low alert indicator is on, shut down the engine immediately. Damage could occur to the engine if leave it running.

When the engine is just started, the oil pressure gauge indicates high pressure before the engine is preheated. Check oil pressure after the engine is fully preheated.

When engine oil pressure gauge shows a value lower than the one given in the following ta-

Downloaded from www.Manualslib.com manuals search engine

https://truckmanualshub.com/

ble, the low oil pressure alert indicator and oil filter alert indicator will be on at the same time, altering that oil pressure is abnormal. Stop operating your machine, shut down the engine immediately, and proceed as the following.

Always prepare your machine as required and lock out/tag out your machine before proceeding. **See "Preparing the machine" on page 2-58 and "Lock-out and tag-out" on page 2-60.**

1. Check for oil leak.

2. Check engine oil level. Refill oil when required.

   - Remove the dipstick (1). Wipe off the oil on dipstick(1) with cloth.
   - Fully insert the dipstick into oil and then slowly pull it out.
   - If oil level between the marks L and H, the amount of oil is good.
   - If oil level is low, refill it immediately. If engine oil is contaminated, change the oil immediately.
   - Replace the dipstick(1) after checking.

3. If engine oil level is normal but abnormal pressure of engine oil is altered, contact your Sany distributor in time to solve the problem.

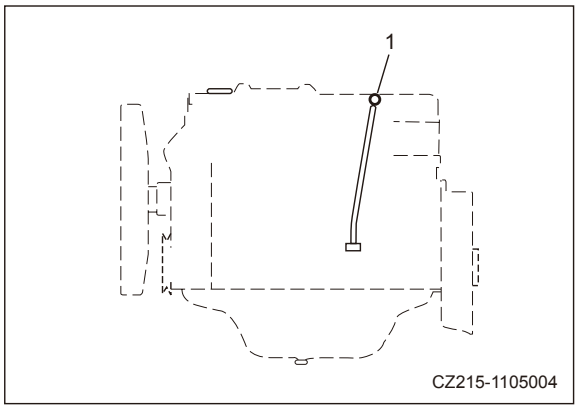

Fig. 6-13

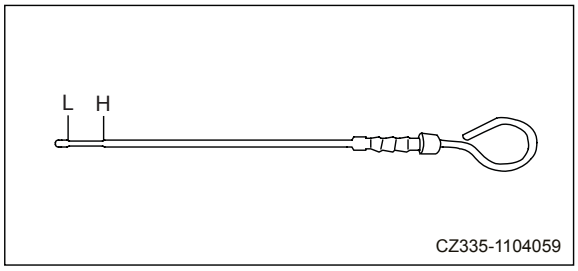

Fig. 6-14

Downloaded from www.Manualslib.com manuals search engine

https://truckmanualshub.com/

6.6.4 When fuel exhausts

When fuel exhausts, it is necessary to refuel the engine and purge air from the fuel system before restarting it.

WARNING

- **Never use a lighter, smoke, or use other fire sources when purging the air. A fire source can cause fire.**
- **Completely remove engine oil or fuel splashed onto the exhaust pipe and other places. These oil and fuel can cause fire or slipping accident.**
- **The space for air-purging operation is limited. Take care not to be cut by the edges.**

1. Turn counterclockwise the handle (1) of manual pump to release it.

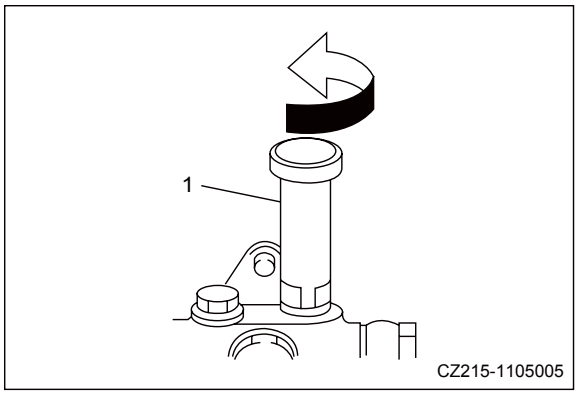

Fig. 6-15

2. Loosen air vent plug (2) on fuel filter and cover it with cloth.

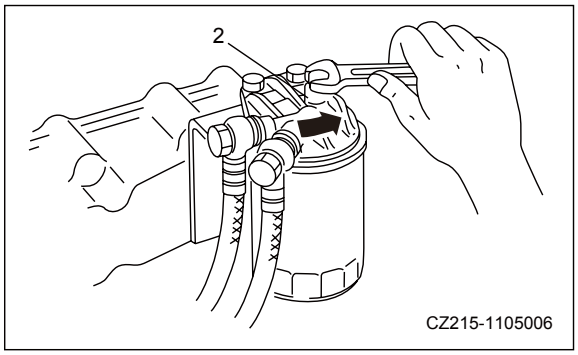

Fig. 6-16

Downloaded from www.Manualslib.com manuals search engine

https://truckmanualshub.com/

3. Repeatedly push the pump to transfer fuel until no foam is seen at the vent.

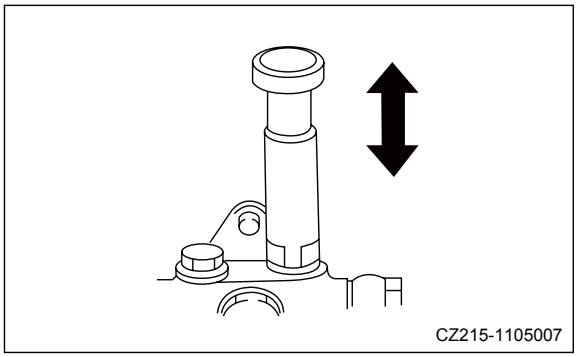

Fig. 6-17

4. Retighten plug (2) when you are sure no foam is seen.

   Plug tightening torque:

   9.8±2.0N·m {1±0.2 kgf·m}

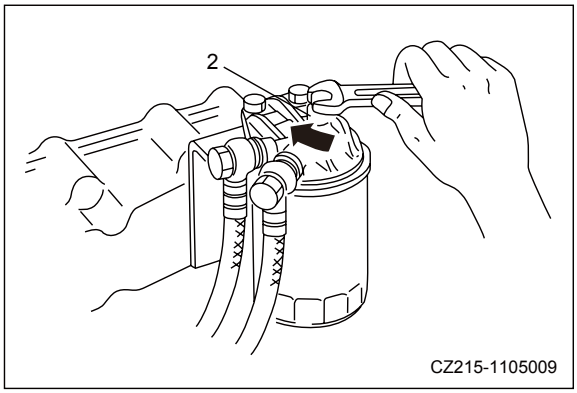

Fig. 6-18

5. Continue to operate the manual pump until heavy resistance is felt.

   Resistance of pump operation may not rise when fuel temperature is low. It is necessary to operate the pump continuously and repeatedly.

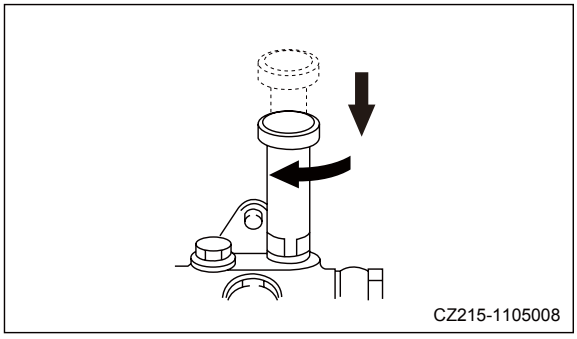

Fig. 6-19

6. After purging the air, completely remove splashed fuel before starting the engine.

7. Make sure no fuel leaks.

WARNING

Make sure no fuel leaks from filter and its housing. Fuel leak could cause fire.

Downloaded from www.Manualslib.com manuals search engine

https://truckmanualshub.com/

6.6.5 When engine rotates reversely

WARNING

Reverse rotation of engine can burn the engine within several minutes or cause severe injury. Shut down the engine immediately once reverse rotation is found. The exhaust gas from air cleaner is possible to cause fire.

The following symptoms can be used to identify reverse rotation of engine.

- High colliding sound produced after starting
- Heavy smoke coming out air cleaner
- Tachometer and oil pressure gauge giving no response
- Low oil pressure alert indicator on

Check and clean the air cleaner and intake hoses after shutting down the engine. Replace any defective air cleaner or hose immediately.

Downloaded from www.Manualslib.com manuals search engine

https://truckmanualshub.com/

6.7 Failures of the Electrical System

6.7.1 Electrical system troubleshooting table

Trouble-shoot the electrical system according to the following tables. Contact your Sany distributor solve the problem.

Failure	Causes	Remedy
Unable to start the engine	• Battery low • Engine start switch internal failure • Pilot switch failure • Start motor failure • Open circuit of wire harness • Fuse failure (F1) • Short circuit of wire (grounding failure) • Alternator internal failure • Start relay failure • Brake failure	• Recharge/replace the battery. • Replace • Repair/replace • Repair/replace • Check/repair • Replace • Check/repair • Repair/replace • Replace • Repair/replace
Rough engine speed	• Open circuit of wire harness • Sensor internal failure • Short circuit of wire (grounding failure) • Sensor internal failure	• Check/repair • Replace • Check/repair • Replace
Unable to power off the machine	• Battery relay failure • Breakdown of surge diode	• Replace • Replace
Auto idle fails.	• Boom-up signal failure • Boom-down signal failure • Arm-in signal failure • Arm-out signal failure • Bucket-dig signal failure • Bucket-dump signal failure • Swing signal failure • Travel signal failure • Attachment signal failure • Controller failure	• Check/repair • Check/repair • Check/repair • Check/repair • Check/repair • Check/repair • Check/repair • Check/repair • Check/repair • Replace
Preheating function fails.	• Preheat fuse failure • Preheat relay failure • Short circuit of wire (grounding failure) • Preheat controller failure	• Replace • Replace • Check/repair • Replace
All devices fail.	• Hydraulic lockout control failure • Short circuit of wire (grounding failure) • Failure of internal coil of pilot lockout valve	• Repair/replace • Check/repair • Replace
Boom slow and weak	• Sensor failure • Short circuit of harness (grounding failure) • Open circuit of harness • Controller failure	• Replace • Check/repair • Check/repair • Replace

Downloaded from www.Manualslib.com manuals search engine

https://truckmanualshub.com/

Failure	Causes	Remedy
Arm slow and weak	• Sensor failure • Short circuit of harness (grounding failure) • Open circuit of harness • Controller failure	• Replace • Check/repair • Check/repair • Replace
Bucket slow and weak	• Sensor failure • Short circuit of harness (grounding failure) • Open circuit of harness • Bucket confluence solenoid valve failure • Controller failure	• Replace • Check/repair • Check/repair • Replace • Replace
Travel slow and weak	• Sensor failure • Short circuit of harness (grounding failure) • Open circuit of harness • Controller failure	• Replace • Check/repair • Check/repair • Replace
Monitor black-out	• Fuse failure • Open circuit of wire • Short circuit of wire (grounding failure) • Monitor failure	• Replace • Check/repair • Check/repair • Replace
Monitor displays nothing.	• Resistor failure • Open circuit of wire • Short circuit of wire (grounding failure) • Monitor or controller failure	• Replace • Check/repair • Check/repair • Replace
Dual-travel speed failure	• Dual travel speed solenoid valve failure • Open circuit of wire • Short circuit of wire (grounding failure)	• Replace • Check/repair • Check/repair
Engine coolant temperature reading incorrect	• Coolant temperature sensor failure • Open circuit of wire • Short circuit of wire (grounding failure) • Wire short-circuited with 24V	• Replace • Check/repair • Check/repair • Check/repair
Fuel level reading incorrect	• Fuel level sensor failure • Open circuit of wire • Short circuit of wire (grounding failure) • Wire short-circuited with 24V	• Replace • Check/repair • Check/repair • Check/repair
Wiper failure	• Wiper motor internal failure • Open circuit of wire • Short circuit of wire (grounding failure)	• Repair/replace • Check/repair • Check/repair
Arm-in pilot pressure reading incorrect	• 5V power supply failure • Open circuit of signal line • Short circuit of signal line • Sensor failure	• Repair/replace • Check/repair • Check/repair • Replace
Arm-out pilot pressure reading incorrect	• 5V power supply failure • Open circuit of signal line • Short circuit of signal line • Sensor failure	• Repair/replace • Check/repair • Check/repair • Replace

Downloaded from www.Manualslib.com manuals search engine

https://truckmanualshub.com/

Failure	Causes	Remedy
Boom-up pilot pressure reading incorrect	• 5V power supply failure • Open circuit of signal line • Short circuit of signal line • Sensor failure	• Repair/replace • Check/repair • Check/repair • Replace
Boom-down pilot pressure reading incorrect	• 5V power supply failure • Open circuit of signal line • Short circuit of signal line • Sensor failure	• Repair/replace • Check/repair • Check/repair • Replace
Bucket-dig pilot pressure reading incorrect	• 5V power supply failure • Open circuit of signal line • Short circuit of signal line • Sensor failure	• Repair/replace • Check/repair • Check/repair • Replace
Bucket-dump pilot pressure reading incorrect	• 5V power supply failure • Open circuit of signal line • Short circuit of signal line • Sensor failure	• Repair/replace • Check/repair • Check/repair • Replace
Swing pilot pressure reading incorrect	• 5V power supply failure • Open circuit of signal line • Short circuit of signal line • Sensor failure	• Repair/replace • Check/repair • Check/repair • Replace
Travel pilot pressure reading incorrect	• 5V power supply failure • Open circuit of signal line • Short circuit of signal line • Sensor failure	• Repair/replace • Check/repair • Check/repair • Replace

Table 6-3

Downloaded from www.Manualslib.com manuals search engine

https://truckmanualshub.com/

6.7.2 Failure codes

The failure code(1) displayed on the monitor can be used to make failure analysis.

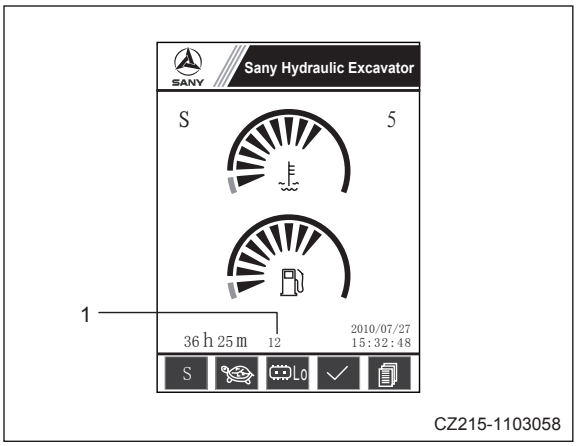

Fig. 6-20

Failure Code	Symptom	Alarm Trigger Condition
3	Engine oil pressure low	Oil pressure lower than 200 and engine speed higher than 800 for 15s
4	Fuel level low	Fuel level lower than 10% for 10s
5	Coolant temperature high	Coolant temperature higher than 105°C or coolant temperature over-high pressure switch off
6	Air cleaner plugged	Air cleaner plugging pressure switch off
7	Engine speed low	Engine speed lower than 800 rpm but higher than 400 rpm for 3s
8	Engine speed high	Engine speed higher than 2500 rpm
10	Hydraulic oil temperature high	Hydraulic oil temperature higher than 90°C for 10s
12	Motor working range irregular	Motor feedback voltage lower than 0.25V or higher than 4.75V for 3s
20	Front pump pressure sensor abnormal	Front pump pressure collecting volt lower than 0.25V or higher than 4.75V for 3s
21	Rear pump pressure sensor abnormal	Rear pump pressure collecting volt lower than 0.25V or higher than 4.75V for 3s
22	Bucket-dig pilot pressure sensor abnormal	Bucket-dig pilot pressure collecting volt lower than 0.25V or higher than 4.75V for 3s
23	Bucket-dump pilot pressure sensor abnormal	Bucket-dig pilot pressure collecting volt lower than 0.25V or higher than 4.75V for 3s
24	Arm-in pilot pressure sensor abnormal	Arm-in pilot pressure collecting volt lower than 0.25 and higher than 4.75 for 3s
25	Arm-out pilot pressure sensor abnormal	Arm-out pilot pressure collecting volt lower than 0.25 and higher than 4.75 for 3s

Downloaded from www.Manualslib.com manuals search engine

https://truckmanualshub.com/

Failure Code	Symptom	Alarm Trigger Condition
26	Boom-up pilot pressure sensor abnormal	Boom-up pilot pressure collecting volt lower than 0.25 and higher than 4.75 for 3s
27	Boom-down pilot pressure sensor abnormal	Boom-down pilot pressure collecting volt lower than 0.25 and higher than 4.75 for 3s
28	Left travel pilot pressure sensor abnormal	Left travel pilot pressure collecting volt lower than 0.25 and higher than 4.75 for 3s
29	Right travel pilot pressure sensor abnormal	Right travel pilot pressure collecting volt lower than 0.25 and higher than 4.75 for 3s
30	Swing pilot pressure sensor abnormal	Swing pilot pressure collecting volt lower than 0.25 and higher than 4.75 for 3s
34	Front pump proportional valve overcurrent	Front pump proportional valve current higher than 1300mA for 3s
35	Rear pump proportional valve overcurrent	Rear pump proportional valve current higher than 1300mA for 3s
36	Front pump proportional valve undercurrent	Front pump proportional valve current lower than 200mA for 3s and controller PWM output higher than 10V
37	Rear pump proportional valve undercurrent	Rear pump proportional valve current lower than 200mA for 3s and controller PWM output higher than 10V
38	Front pump proportional valve	Front pump proportional valve feedback current lower than 150mA or higher than 1350mA for 3s and controller PWM duty output higher than 10V
39	Rear pump proportional valve	Rear pump proportional valve feedback current lower than 150mA or higher than 1350mA for 3s and controller PWM duty output higher than 10V
40	Hydraulic oil temperature sensor abnormal	Hydraulic oil temperature collecting volt lower than 0.25V or higher than 4.75V for 3s
41	Coolant sensor abnormal	Coolant temperature collecting resistance lower than 10Ω or higher than 120 Ω for 3s after 30 minutes since engine starting
42	Fuel level sensor abnormal	Fuel level collecting resistance lower than 10Ω or higher than 120 Ω for 3s
43	Speed sensor abnormal	Speed collecting frequency lower than 100 for 3s under load
44	Fuel control dial abnormal	Fuel control dial collecting volt lower than 0.25V or higher than 4.75V for 3s
45	CAN bus abnormal	CAN communication monitoring component overtime or reset characters changed for 3s

Table 6-4

Downloaded from www.Manualslib.com manuals search engine

https://truckmanualshub.com/

6.8 Battery

WARNING

- **It is dangerous to charge a battery while it is installed on the machine. Remove the battery before charging it.**
- **Stop the engine and turn the start switch key to OFF position before checking or handling the battery.**
- **Wear goggles and rubber gloves when handling the battery.**
- **Disconnect first the grounding cable (negative terminal (-)) before removing the battery. Connect first the positive terminal (+) while installing the battery. Be especially careful with your tools, which may produce sparks when touching the positive terminals and the chassis.**
- **A loose terminal can result in improper contact, which may cause sparks and explosion.**
- **Check that which terminal is positive (+) and which one is negative (-) when removing or installing the terminals.**

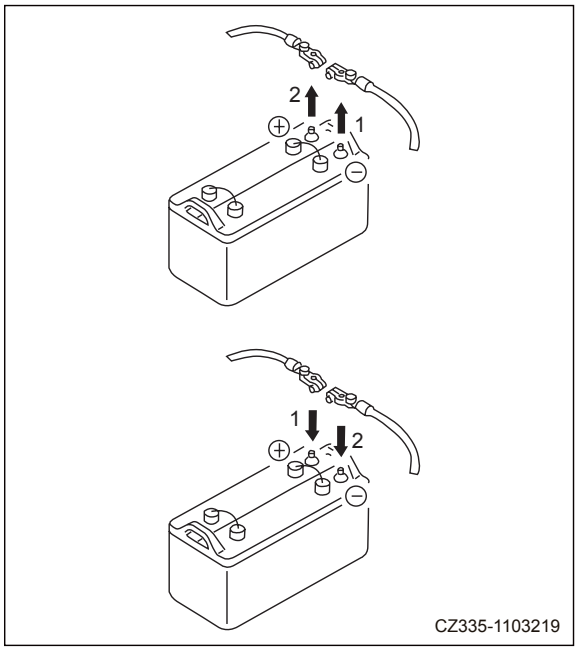

Fig. 6-21

6.8.1 Battery removal and installation

- Disconnect the grounding cable (generally the one in connection with the negative terminal (-)) before removing the battery.
- Sparks can occur if your tool touches the positive terminal and the chassis.
- Secure the battery with clamping plates when changing the battery.

Downloaded from www.Manualslib.com manuals search engine

https://truckmanualshub.com/

6.8.2 Battery charging

Improper handling can result in explosion when the battery is charged. Follow the instruction, **see "Battery" on page 6-30** and the instruction of charger, and proceed the procedure below:

- Regulate the charger to the voltage applicable to the battery. Incorrect voltage can over heat the charger and cause explosion.
- Connect the charger's positive clip (+) to the battery's positive terminal (+). Connect the charger's negative clip (-) to the battery's negative terminal (-). The wire clips must be fixed.
- Regulate the charging current to 1/10 of the rated capacity of battery. In case of quick charging, regulate the charging current to a level below the rated capacity of battery. Larger charging current may cause leakage or evaporation of electrolyte, hence fire and explosion.
- If the battery electrolyte freezes, do not charge the battery, or use an alternate power supply to start the engine. Charging a frozen battery may cause electrolyte to catch on fire and the battery to explode.

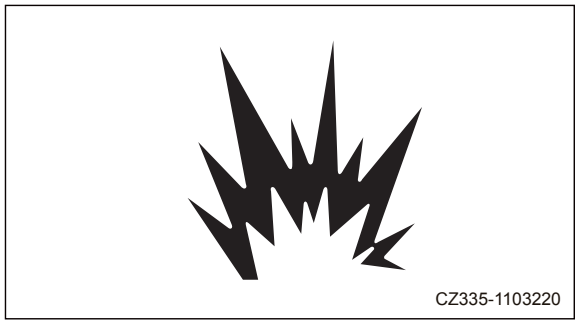

Fig. 6-22

Downloaded from www.Manualslib.com manuals search engine

https://truckmanualshub.com/

6.8.3 Jump-starting the engine

WARNING

- **Never let the positive terminal (+) contact with the negative terminal (-) when connecting the cable.**
- **Keep a normal machine away from the faulty machine in order to prevent sparks around the battery from burning the hydrogen released from the battery.**
- **Avoid mistakes in connection of the jumper cable. Its final connection with upper structure of the machine can produce sparks. In this case, the battery shall be connected to a location that is far enough from the battery. (But the work tool shall be excluded as the work tool is not a good conductor.)**
- **When removing the jumper cables, pay extra attention to the cables, whose clips shall not contact with each other or with the chassis.**

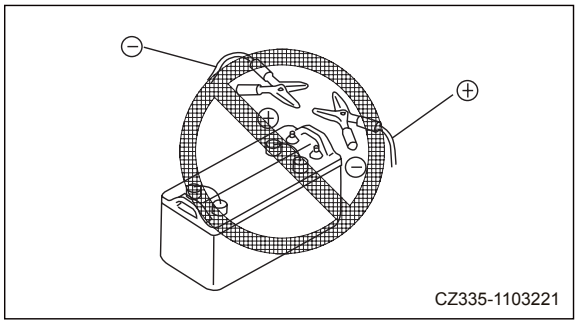

Fig. 6-23

Note:

- The start system of the machine is supplied with a 24V power source. Two 12V batteries are connected serially to supply power to a normally-operating machine.
- The sizes of jumper cables and clips shall match the size of battery.
- Generally, the batteries of the machine shall have the same capacity with the engine to be started.
- Check the cables and clips for damage or corrosion.
- Make sure that the cables and clips are connected securely.
- Check both machines whether their lockout controls and brake levers are in the

Downloaded from www.Manualslib.com manuals search engine

https://truckmanualshub.com/

"LOCKED" position.

- Check the control levers whether they are in the neutral position.

6.8.3.1 Connecting the jumper cables

Turn the start switches of the normal machine and the faulty machine to the OFF position.

Connect the jumper cables in the numbered sequence, as shown in the diagram.

1. Connect the clip of jumper cable (A) to the positive terminal (+) of battery (C) of the faulty machine.

2. Connect the clip on the other end of jumper cable (A) to the positive terminal (+) of battery (D) of the normal machine.

3. Connect the clip of jumper cable (B) to the negative terminal of battery (D) of the normal machine.

4. Connect the clip on the other end of jumper cable (B) to the swivel frame (E) of the faulty machine.

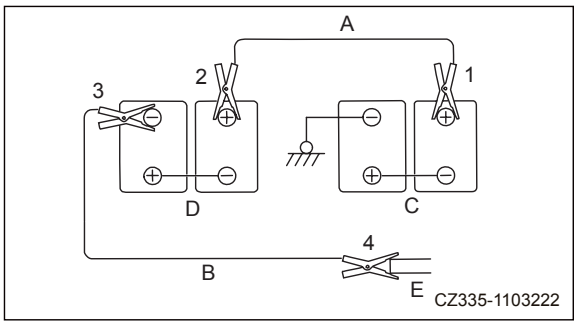

Fig. 6-24

Downloaded from www.Manualslib.com manuals search engine

https://truckmanualshub.com/

6.8.3.2 Starting the engine

WARNING

Check the lockout control, which must be in the "LOCKED" position regardless of that the machine is operating normally or has trouble. Check all control levers, which shall be in the "retaining" or neutral position.

1. Make sure the clips are securely connected with terminals of the battery.
2. Start the engine of the good machine and run it at high idle.
3. Turn the start switch of the faulty machine to "START" position and start the engine.

If the engine fails to start, wait for two minutes before attempting to restart it.

6.8.3.3 Disconnecting the jumper cables

After the engine is started, disconnect the jumper cables in steps reversed to their connection.

1. Disconnect the clip of the jumper cable (B) from the swivel frame (E) of the faulty machine.
2. Disconnect the clip of the jumper cable (B) from the negative terminal (-) of battery (D) of the normal machine.
3. Disconnect the clip of jumper cable (A) from the positive terminal (+) of battery (D) of the normal machine.
4. Disconnect the clip of jumper cable (A) from the positive terminal (+) of battery (C) of the faulty machine.

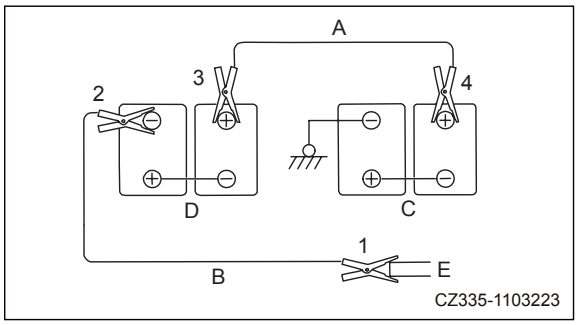

Fig. 6-25

Downloaded from www.Manualslib.com manuals search engine

https://truckmanualshub.com/

6.9 Failures of the Hydraulic System

- Trouble-shoot the hydraulic system according to the following tables. Contact your Sany distributor solve the problem.
- Set the working mode to S and the fuel control dial to position 10 before troubleshooting

Failure	Causes	Remedy
Work equipment moving slowly, or travel and swing speed slow	• Bad adjustment or failure of main relief valve • Pilot relief valve failure • Regulator failure • Plunger pump failure • Failure of pilot proportional solenoid valve of right joystick	• Replace • Replace • Repair/replace • Check/repair • Repair/replace
Work equipment, final drive or swing drive not functioning	• Pilot safety valve failure • Pilot pump relief valve failure • Hydraulic pump failure • Coupling failure	• Repair/replace • Replace • Check/repair • Check/repair
Abnormal noise in hydraulic pump	• Hydraulic oil level low • Bad hydraulic oil • Hydraulic tank cap vent plugged • Hydraulic tank filter screen plugged • Plunger pump failure	• Refill hydraulic oil • Use suitable hyd oil • Clean/replace • Clean/replace • Check/repair
Auto idle not functioning	• Sensor failure • Pilot valve failure • Controller failure	• Replace • Replace • Repair/replace
Boom speed slow	• Right pilot valve (boom circuit) failure • Pressure sensor failure • Boom control valve (spool) failure • Boom control valve (retaining valve) failure • Boom control valve (Safety valve and feed valve) seal failure • Boom cylinder failure	• Check/repair • Replace • Repair/replace • Repair/replace • Repair/replace • • Check/repair
Arm speed slow	• Left pilot valve (arm circuit) failure • Pressure sensor failure • Arm control valve (spool) failure • Arm control valve (regeneration valve) failure • Arm control valve (Safety valve and feed valve) or seal failure • Arm cylinder failure	• Check/repair • Replace • Repair/replace • Repair/replace • Repair/replace • • Check/repair
Bucket speed slow	• Right pilot valve (bucket circuit) failure • Pressure sensor failure • Bucket control valve (spool) failure • Bucket control valve (regeneration valve) failure • Bucket control valve (Safety valve and feed valve) or seal failure • Bucket cylinder failure	• Check/repair • Replace • Repair/replace • Repair/replace • • Repair/replace • • Check/repair

Downloaded from www.Manualslib.com manuals search engine

https://truckmanualshub.com/

Failure	Causes	Remedy
One cylinder of work equipment not working	• Pilot valve failure • Pressure sensor failure • Work equipment control valve (spool) failure	• Check/repair • Replace • Repair/replace
Work equipment cylinder drifting excessively	• Work equipment cylinder failure • Retaining valve (of boom or arm) failure • Work equipment control valve (safety valve and feed valve) seal failure • Work equipment valve spool failure	• Repair/replace • Repair/replace • Repair/replace • • Repair/replace
Work equipment sluggish	• Arm regeneration valve failure • Control valve (safety valve and feed valve) failure	• Repair/replace • Repair/replace
Other work equipment moves when single cylinder is in relief.	• Control valve seal failure	• Replace
Travel speed drops remarkably during swing or travel operation.	• Straight travel valve failure	• Repair/replace
Machine runs out during travel	• Travel pilot valve failure • Pilot relief valve failure • Regulator failure • Proportional solenoid valve sluggish • Travel valve spool sluggish • Central swivel joint sluggish • Travel motor failure • Travel pilot pressure sensor failure	• Repair/replace • Replace • Repair/replace • Repair/replace • Repair/replace • Repair/replace • Repair/replace • Replace
Travel speed slow	• Travel pilot valve failure • Pilot relief valve failure • Sensor failure • Travel control valve (spool) failure • Travel control valve (feed valve) failure • Travel motor failure	• Repair/replace • Replace • Replace • Repair/replace • Repair/replace • Check/repair
Machine steering difficult or power insufficient	• Travel pilot valve failure • Travel pilot pressure sensor failure • Travel control valve (spool) failure • Travel control valve (feed) failure • Travel motor (safety valve) failure • Travel motor (check valve) failure	• Repair/replace • Replace • Repair/replace • Repair/replace • Repair/replace • Repair/replace
Unable to shift travel speed	• High/low travel speed shift valve failure • Travel motor failure	• Repair/replace • Check/repair
Travel fails (on one side)	• Travel control valve (feed valve) seat failure • Travel motor (safety valve) seat failure • Travel motor (feed valve) seat failure • Travel motor failure • Pilot pressure sensor failure	• Repair/replace • Repair/replace • Repair/replace • Check/repair • Replace

Downloaded from www.Manualslib.com manuals search engine

https://truckmanualshub.com/

Failure		Causes	Remedy
Unable to swing	In both directions	• Swing motor (parking brake) failure • Bad adjustment or failure of swing motor (safety valve) • Swing motor failure • Swing drive failure	• Check/repair • Adjust/replace • • Check/repair • Check/repair
	In one direction	• Pilot valve failure • Swing control valve (spool) failure • Swing motor (feed valve) seal failure	• Repair/replace • Repair/replace • Replace
Swing speed slow	Acceleration performance bad	• Swing motor (parking brake) failure • Bad adjustment or failure of swing motor (safety valve) • Swing motor failure • Brake control line blocked	• Check/repair • Adjust/replace • • Check/repair • Remove obstruction or replace the pipeline.
	Bad acceleration performance on one side or swing speed slow	• Pilot valve failure • Swing motor (pressure compensation valve) failure • Swing motor (feed valve) seal failure • Leak on one side the shuttle valve of swing pilot pressure sensor	• Repair/replace • Repair/replace • • Replace • Repair/replace
Too much overrun in swing stoppage	In both directions	• Bad adjustment or failure of swing motor (safety valve) • Swing motor failure	• Adjust/replace • • Check/repair
	In one direction	• Pilot valve failure • Swing control valve (spool) failure • Swing motor (feed valve) seal failure	• Repair/replace • Repair/replace • Replace
Too much jerk in swing stoppage		• Swing pilot valve failure • Swing anti-jerk valve failure • Swing relief valve failure	• Repair/replace • Repair/replace • Repair/replace
High abnormal noise in swing stoppage		• Back pressure valve failure • Swing motor (safety valve) failure • Swing motor (feed valve) failure • Swing system mechanical failure	• Repair/replace • Repair/replace • Repair/replace • Check/repair

Downloaded from www.Manualslib.com manuals search engine

https://truckmanualshub.com/

Failure		Causes	Remedy
Excessive hydraulic drift of swing	When swing brake engaged	● Swing brake control line failure ● Swing motor (parking brake) failure	● Check/repair ● Repair/replace
	When swing brake disengaged	● Swing control valve (spool) failure ● Swing motor (relief valve) failure ● Swing motor (feed valve) failure	● Repair/replace ● Repair/replace ● Repair/replace

Table 6-5

Downloaded from www.Manualslib.com manuals search engine

https://truckmanualshub.com/

6.10 Other Common Failures

Failure	Causes	Remedy
Structure member noise loud	• Loose fastener • Bigger clearance between arm and bucket end faces due to wear	• Check and retighten. • Reduce the clearance to a value that is smaller than 1mm.
Bucket tip falls off during operation.	• Spring deformed and weak due to repeated use of bucket tip pin • Bucket tip pin not matching the adaptor	• Replace bucket tip pin
Track kinks.	• Loose track • Traveling at high speed on rough road in the direction of sprocket	• Tighten the track • Travel slowly on rough road in the direction of idler.
Fan not working	• Improper electrical connection or connector contact • Air flow control switch, relay or temperature control switch damaged • Fuse exploded or battery voltage low	• Repair/replace.
Fan running but producing less air flow	• Air intake side blocked • Evaporator or condenser fin plugged, giving ineffective heat conduction • Fan vane seized or damaged	• Clean/replace.
Compressor not working or working with difficulty	• Compressor clutch not picking up due to wire break or defective contact of electrical circuit • Loose compressor belt • Wire break or failure of compressor clutch coil • Insufficient or excessive refrigerant	• Repair • Adjust the tension of compressor belt • Replace clutch coil • Refill/drain the refrigerant to a suitable level
Refrigerant insufficient	• Refrigerant leaks. • Insufficient refilling	• Eliminate the leaking point. • Refill suitable amount of refrigerant.
High/low pressure reading in normal operation	Ambient temperature：30 ～ 50℃ High pressure gauge: 1.47 ～ 1.67MPa（15 ～ 17kgf/cm2） Low pressure gauge: 0.13 ～ 0.20MPa（1.4 ～ 2.11kgf/cm2）	
Low pressure gauge reads higher. / Low pressure tube surface frosted	• Expansion valve opening excessively. • Defective contact of expansion valve thermo-bulb • Excessive refrigerant in the system	• Replace expansion valve. • Install thermo-bulb correctly. • Drain refrigerant to the specified level.

Downloaded from www.Manualslib.com manuals search engine

https://truckmanualshub.com/

Failure		Causes	Remedy
Low pressure gauge reads lower.	Both high and low pressure gauge readings lower the standard value.	• Refrigerant insufficient	• Refill refrigerant to the specified level.
	Low pressure gauge could read negative.	• Low pressure hose blocked; expansion valve blocked by ice or contaminants.	• Repair the system. Replace reservoir in case of ice blockage.
	Evaporator frozen	• Thermostat failure	• Replace thermostat.
Expansion valve inlet felt cool and frosted.		• Expansion valve blocked.	• Clean/replace expansion valve.
Expansion valve outlet is not felt cool. Low pressure could be negative.		• Expansion valve thermo-tube or bulb leaks.	• Replace expansion valve.
High pressure gauge reads higher.	Both high/ low pressure gauges read higher than standard value.	• Air trapped in circulation system. • Excessive refrigerant refilled.	• Empty the system and vacuate to refill refrigerant. • Drain refrigerant to the specified level.
	Bad condensing effect of condenser.	• Condenser blocked by dust and debris • Condenser fan damaged	• Clean the condenser. • Check/replace condenser fan.
High pressure gauge reads lower.	Both high and low pressure gauges read lower.	• Refrigerant insufficient	• Refill refrigerant as required.
	Low pressure could be negative.	• Low pressure line blocked/damaged	• Clean/replace faulty component.
	Condenser and high pressure tube hot	• Compressor internal failure	• Replace compressor.
Bad refrigerating effect due active heater		• Hot water valve damaged and left open	• Replace hot water valve.

Table 6-6

Downloaded from www.Manualslib.com manuals search engine

https://truckmanualshub.com/

BLANK PAGE

Downloaded from www.Manualslib.com manuals search engine

https://truckmanualshub.com/

BLANK PAGE

Downloaded from www.Manualslib.com manuals search engine

https://truckmanualshub.com/

Specifications

7 Specifications

7.1 Machine Dimensions 7-3
7.2 Working Ranges 7-4

Downloaded from www.Manualslib.com manuals search engine

https://truckmanualshub.com/

Downloaded from www.Manualslib.com manuals search engine

https://truckmanualshub.com/

7 SPECIFICATIONS

7.1 Machine Dimensions

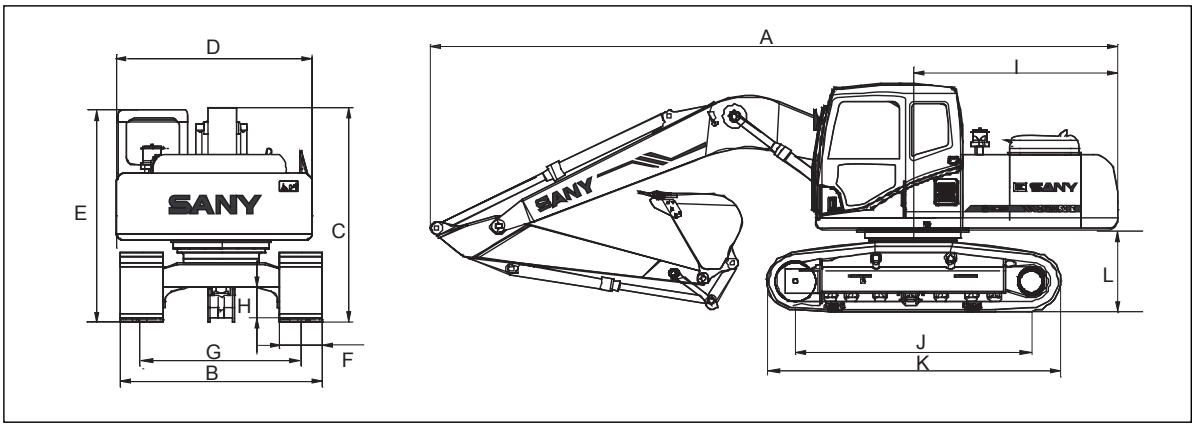

Fig. 7-1

Item		Unit	SY115C9	SY135C8/C9	SY135C8(M)	SY155H
Operating weight		kg	12400	13,500		14,100
Bucket capacity		m^3	0.48	0.54		0.6
Engine model			4BG1-TABGC-03-C2		4D34-TLE2A	BB-4BG1TRP
Engine power		kW/rpm	72.7 / 2200		70 / 2050	72.7 / 2200
A	Shipping length	mm	7280	7700		7700
B	Total width	mm	2550	2550		2550
C	Shipping height	mm	2810	2815		2815
D	Top width	mm	2480	2490		2580
E	Total height to top of cab	mm	2810	2740		2740
F	Standard width of track shoe	mm	500	500		500
G	Gauge	mm	1990	1990		1990
H	Min. ground clearance （Excluding grouser）	mm	422	425		425
I	Tail swing radius	mm	2325	2240		2240
J	Track grounding length	mm	2680	2930		2930
K	Track length	mm	3360	3665		3665
L	Ground clearance of upper structure (excluding grouser)	mm	915	870		870
Travel speed (high/low)		km/h	3.5/5.5	3.5 / 5.5		3.5 / 5.5
Swing speed		rpm	12	12		12

Table 7-1

Downloaded from www.Manualslib.com manuals search engine

https://truckmanualshub.com/

7.2 Working Ranges

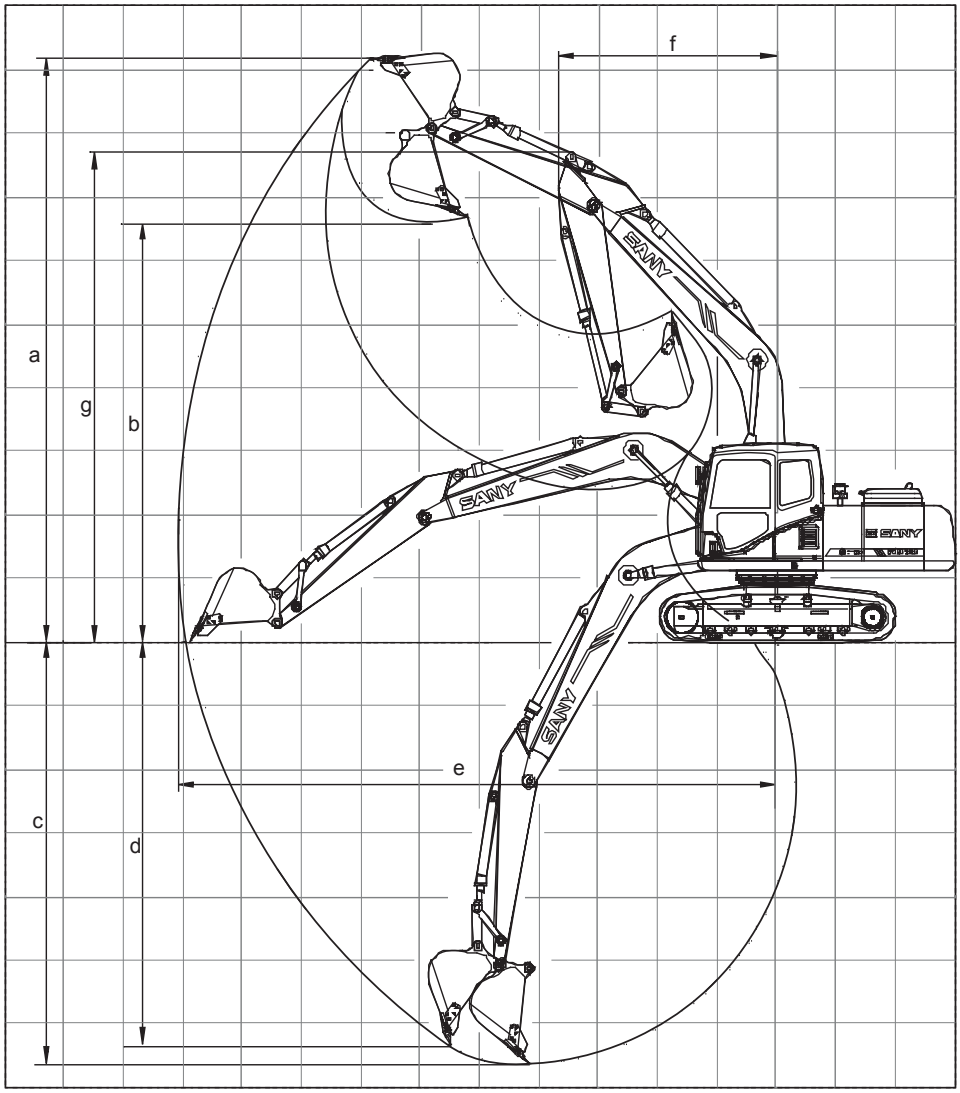

Fig. 7-2

Downloaded from www.Manualslib.com manuals search engine

https://truckmanualshub.com/

Item		Unit	SY115C9	SY135C8/C9	SY155H
a	Max cutting height	mm	7780	8645	8625
b	Max dumping height	mm	5530	6175	6120
c	Max digging depth	mm	5165	5500	5520
d	Max vertical digging depth	mm	4925	4890	5005
e	Max horizontal reach	mm	7605	8290	8330
f	Min. swing radius	mm	2600	2500	2315
g	Maximum height at minimum swing radius	mm	5995	6500	6495

Table 7-2

Downloaded from www.Manualslib.com manuals search engine

https://truckmanualshub.com/

BLANK PAGE

Downloaded from www.Manualslib.com manuals search engine

https://truckmanualshub.com/

SANY

Optional Equipment

8 Optional Equipment

8.1 General Safety 8-3
8.1.1 Selection precautions 8-3
8.1.2 Reading the instruction books 8-3
8.1.3 Removal and installation precautions 8-3
8.1.4 Operation precautions 8-4
8.2 Hydraulic Control Elements and Oil Circuit 8-6
8.2.1 Location of the components 8-6
8.2.1.1 Stop valve 8-6
8.2.1.2 Selector valve 8-7
8.2.1.3 Control pedal 8-7
8.2.2 Hydraulic circuit 8-8
8.2.2.1 Hydraulic circuit switching 8-8
8.2.2.2 Shifting to breaker / general optional equipment 8-8
8.2.2.3 Connecting hydraulic oil circuit 8-9
8.2.2.4 Hydraulic oil passage 8-10
8.2.3 Optional equipment removal and installation 8-11
8.2.3.1 Removal 8-11
8.2.3.2 Optional equipment installation 8-13
8.2.4 Hydraulic oil and hydraulic tank filter - change/replace 8-15
8.2.5 Long-term storage 8-16
8.2.6 Hydraulic specifications 8-16
8.3 Optional equipment Guide 8-17
8.3.1 Work equipment combination 8-17
8.3.2 Bucket tips selection 8-19
8.3.2.1 Rockwork bucket tips 8-19

Downloaded from www.Manualslib.com manuals search engine

https://truckmanualshub.com/

8.3.2.2 Earthwork bucket tips 8-19
8.4 Recommended Operations 8-20
8.4.1 Hydraulic breaker 8-20
8.4.2 Hydraulic breaker operation 8-21
8.5 Restricted Operations 8-22
8.6 Hydraulic Breaker Lubrication 8-25
8.7 Quick Coupler and Control System 8-26
8.7.1 Quick coupler installation 8-26
8.7.2 Operating precautions 8-28
8.8 Refueling System 8-29
8.8.1 Introduction 8-29
8.8.2 Components 8-30
8.9 Central Lubrication System 8-31
8.9.1 Scheme and components 8-31
8.9.2 System working principle 8-33
8.9.3 Setting the lubrication time of electric grease pump 8-34
8.9.4 Technical description 8-35
8.9.5 Adding grease with electric pump 8-36

Downloaded from www.Manualslib.com manuals search engine

https://truckmanualshub.com/

8 OPTIONAL EQUIPMENT

8.1 General Safety

It is important to be safe when an optional equipment is used. Read the following precautions before selecting, installing and operating an optional equipment.

8.1.1 Selection precautions

- Consult your Sany distributor before installing an optional equipment to your machine. Front guard, top guard or other protective structures may be required according to the type of optional equipment to be used.
- Only Sany-approved optional equipment can be installed. Sany assumes no responsibility to accidents, losses or failures caused by any attachment that has not been approved by Sany.

8.1.2 Reading the instruction books

- Read and understand the instruction books of your machine and of attachment or optional equipment before installation and operation.
- If the instruction book is missing or damaged, ask the manufacturer or your Sany distributor to obtain a new one.

8.1.3 Removal and installation precautions

To be safe, the following items must be observed before you remove or install an attachment or optional equipment.

- The removal or installation procedure must be performed on a hard, level ground.

Downloaded from www.Manualslib.com manuals search engine

https://truckmanualshub.com/

- If the job has to be done by two or more persons, appoint a chief and follow his instruction.
- Use a crane if you handle an object that weighs over 25 kg. (Only eligible, experienced personnel with official license are allowed to operate a crane.)
- Never stay under an object that is being lifted by a crane.
- Do not operate your machine when an object is being lifted with crane during removal or installation. Support can be used to prevent falling from the object when necessary.
- When a heavy part is to be removed, it is necessary to consider the impact to machine balance after removal. To prevent the machine from tipping over, support your machine, if necessary, before removing the heavy component.
- Before or after the optional equipment has been installed or removed, make sure that it is stable without the danger to tip.
- For more information about removal and installation please consult Sany distributor.

8.1.4 Operation precautions

Keep the following procedures in mind when installing a larger or heavy optional equipment. Before the operation, move your machine to a safe ground for trial operation. Make sure that you know very well the movement, center of gravity, and working range of your machine.

- If the machine stays inclined, swinging operation is not allowed in order to prevent tipping of the machine.
- Keep a safe distance to surrounding barriers during operation.
- Pay attention to the following points when installing a heavy optional equipment.

Downloaded from www.Manualslib.com manuals search engine

https://truckmanualshub.com/

★ Heavy optional equipment probably requires a larger space for swinging operation. There might be the danger of impacting other objects if the swinging range has not been calculated accurately. A larger space must be prepared before performing the swinging operation.

★ When the lifting of heavy optional equipment is held, the distance moving downward is relatively longer due to gravity. In this case, it should be lowered to the ground instead of being held in air.

★ Never swing, lower or stop your machine suddenly in order to prevent it from tipping over.

★ Never extend or retract the boom cylinder suddenly in order to prevent impact that may cause the machine to tip.

Downloaded from www.Manualslib.com manuals search engine

https://truckmanualshub.com/

8.2 Hydraulic Control Elements and Oil Circuit

8.2.1 Location of the components

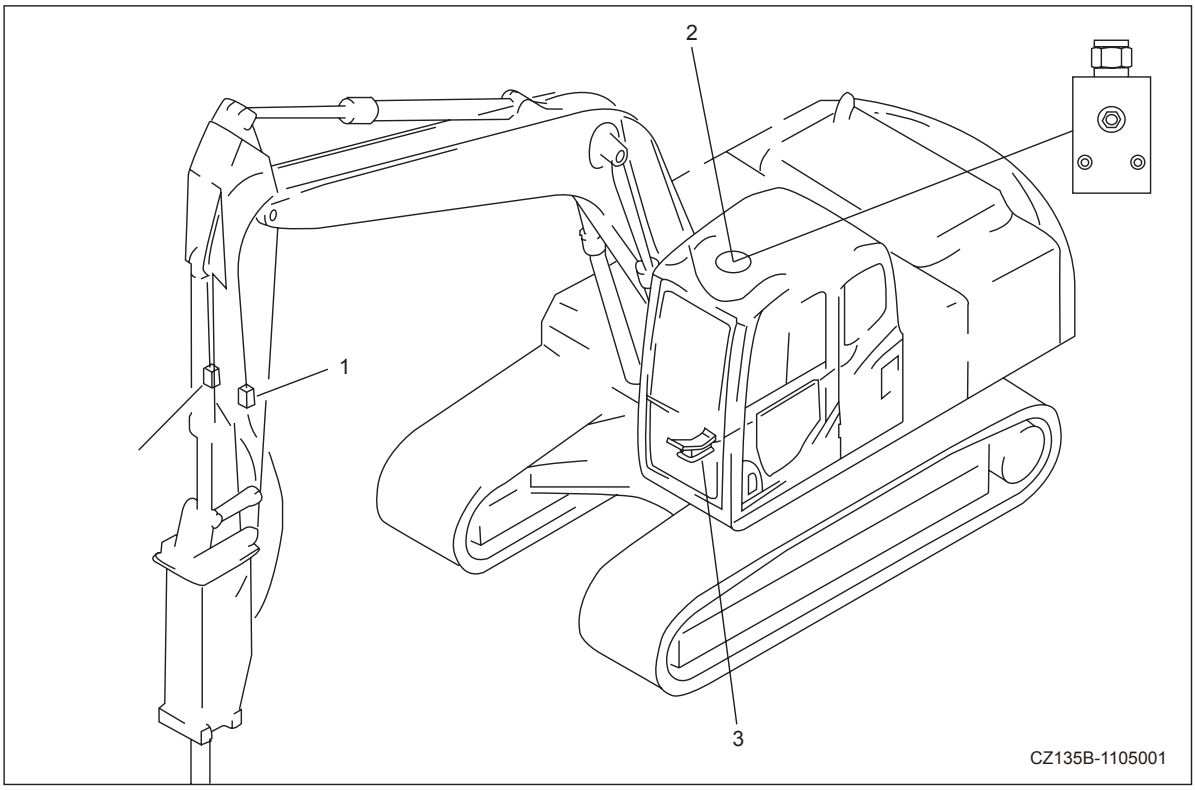

Fig. 8-1

(1) Stop valve
(2) Selector valve
(3) Control pedal

8.2.1.1 Stop valve

Stop valve stops hydraulic oil flow.

(a) Unlocked position allows flow of the hydraulic oil.

(b) Locked position stops flow of the hydraulic oil.

Switch the valve to locked position when removing or installing an optional equipment.

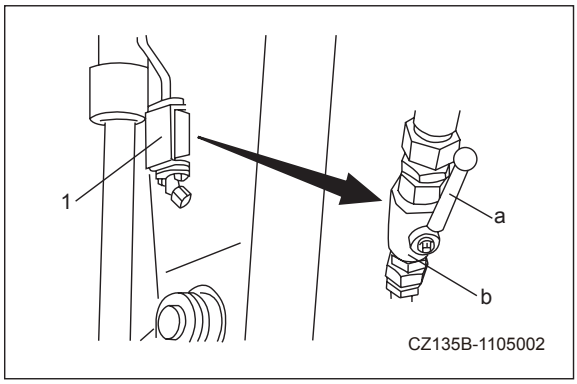

Fig. 8-2

Downloaded from www.Manualslib.com manuals search engine

https://truckmanualshub.com/

8.2.1.2 Selector valve

Selector valve changes flowing direction of hydraulic oil.

The change of direction is made according to the working mode selected. The working mode must be applicable to the installed optional equipment. For changing the working mode, see “**Hydraulic circuit**” **on page 8-8**.

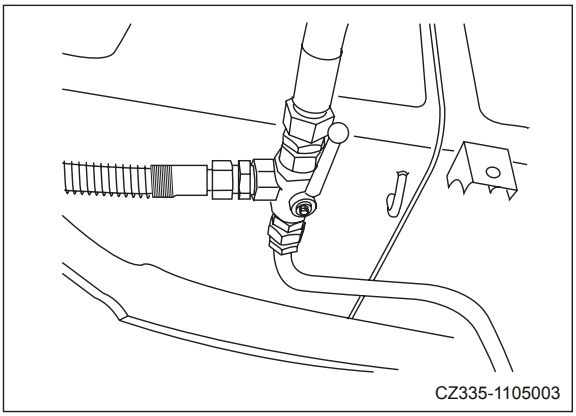

Fig. 8-3

8.2.1.3 Control pedal

WARNING

Do not operate when placing your foot on the pedal. If the pedal is pushed mistakenly, the optional equipment will move suddenly and cause severe accidents.

Control pedal is used to control the optional equipment.

When the front, center, or rear of the pedal is pushed down, the optional equipment will operate as the following.

Hydraulic breaker

Front (A): Operate

Center (N): Stop

Rear (B): Stop

For other optional equipment, consult its manufacturer for installation in order to confirm the operation of pedal and optional equipment before operating your machine.

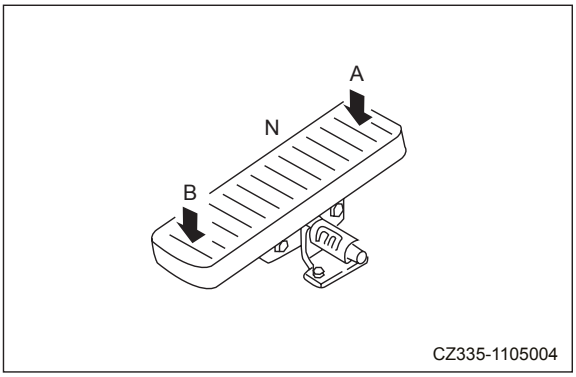

Fig. 8-4

Downloaded from www.Manualslib.com manuals search engine

https://truckmanualshub.com/

8.2.2 Hydraulic circuit

Note:

- When the breaker is mounted, the oil return line must be connected directly to the return filter. Therefore, do not use the return line except for mode B.
- In the stand-by valve, the safety valve's standard pressure was set at the factory before the machine was delivered. When mode B is selected, the pressure is set to 20.6MPa (210kgf/cm^2, 2980PSI); when the mode of hydraulic shear is chosen, the pressure is set to 27.4MPa (280 kgf/cm^2, 3980PSI). Readjustment may be necessary according to the type of optional equipment. In this case, please contact Sany distributor for adjustment.

8.2.2.1 Hydraulic circuit switching

- Set the working mode on the monitor according to the following standards according to the type of optional equipment.
- The pressures set for the safety valve in the stand-by valve and for the switch of hydraulic line are determined by the working mode selected.

Optional equipment	Mode	Hydraulic line	Safety Valve Pressure Setting
One-way hydraulic optional equipment, such as breaker	B	Hydraulic path forms automatically at the control valve where the return oil does not pass through.	When delivered from factory: 20.6Mpa (210kgf/ cm^2 2980PSI)
Dual-action hydraulic optional equipment, such as hydraulic shear	S	Hydraulic path forms automatically at the control valve where the return oil passes through.	When delivered from factory: 27.4MPa (280kgf/cm^2, 3980PSI)

8.2.2.2 Shifting to breaker / general optional equipment

- When installing an optional equipment with working mode B

  (a) Breaker hydraulic path (one-way hydraulic path) has been formed.

  (b) The overflow valve is set to low pressure.

  When delivered from the factory: 20.6MPa (210kgf/cm^2, 2980PSI)

- When installing an optional equipment with working mode S

Downloaded from www.Manualslib.com manuals search engine

https://truckmanualshub.com/

(a) Shear hydraulic path (dual-action hydraulic path) has been formed.

(b) The overflow valve is set to high pressure.

When delivered from the factory: 27.4MPa 280kgf/cm2, 3980PSI

8.2.2.3 Connecting hydraulic oil circuit

Connect the hydraulic lines to the optional equipment according to the following steps.

1. Check the stop valve, which should be in the locked position (b).

   (a) unlocked: allows flow of the hydraulic oil (the arrow-indicated direction is parallel to the longitudinal direction of arm).

   (b) locked: stops flow of the hydraulic oil (the arrow-indicated direction is perpendicular to the longitudinal direction of arm).

2. Remove the screw plug (3) from the end of the stop valve line.

Note:

The disassembled parts should not be lost or damaged.

3. The optional equipment manufacturer is responsible to connect the line (4) of the optional equipment after the screw plug (3) has been removed.

   Connection sizes and additional accumulator may vary according to different optional equipment manufacturers. Please consult Sany distributor in this regard.

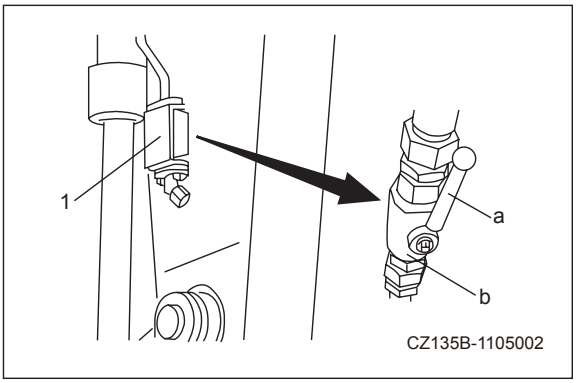

Fig. 8-5

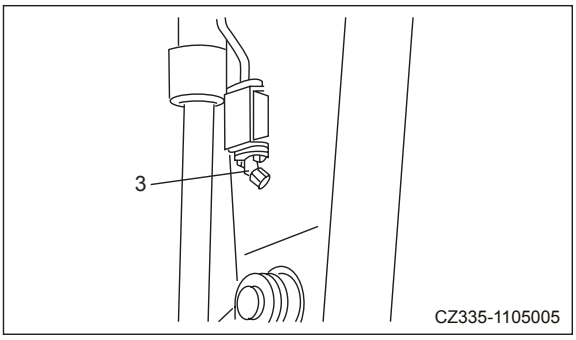

Fig. 8-6

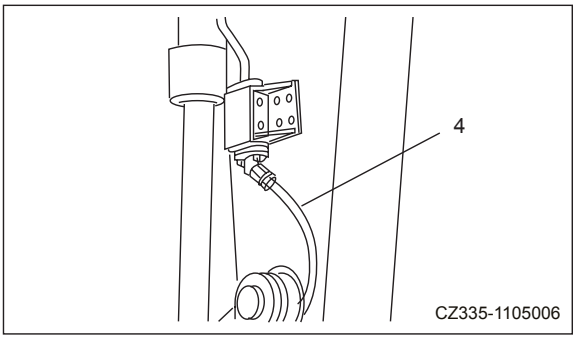

Fig. 8-7

Downloaded from www.Manualslib.com manuals search engine

https://truckmanualshub.com/

8.2.2.4 Hydraulic oil passage

The operating directions of the pedal and hydraulic path are shown below.

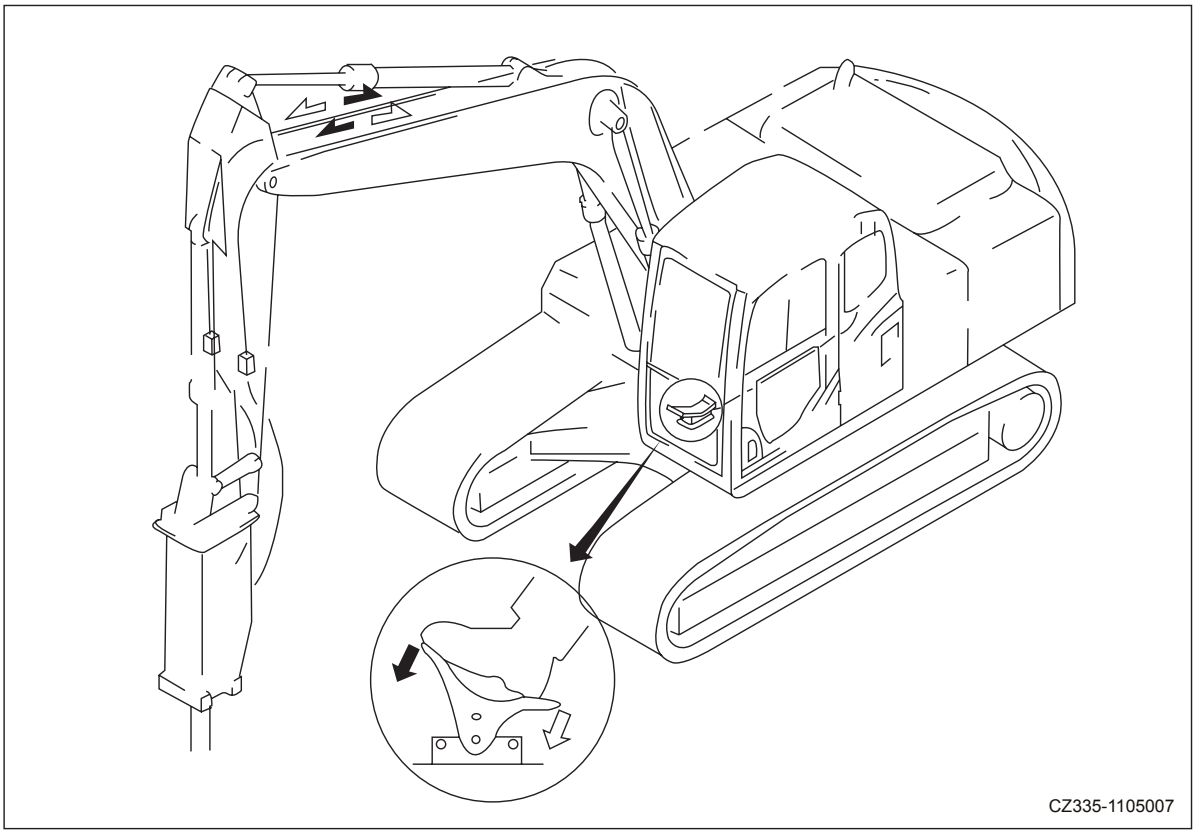

Fig. 8-8

By pushing the front of the pedal, the hydraulic oil flows to the left of the work equipment; by pushing the rear, the hydraulic oil flows to the right. (Only the front part of the pedal can be operated upon the installation of breaker.)

Downloaded from www.Manualslib.com manuals search engine

https://truckmanualshub.com/

8.2.3 Optional equipment removal and installation

8.2.3.1 Removal

1. Lower the work equipment to the ground and shut down the engine.

2. Turn the start switch to ON position (B), and place the lockout control to FREE position (F).

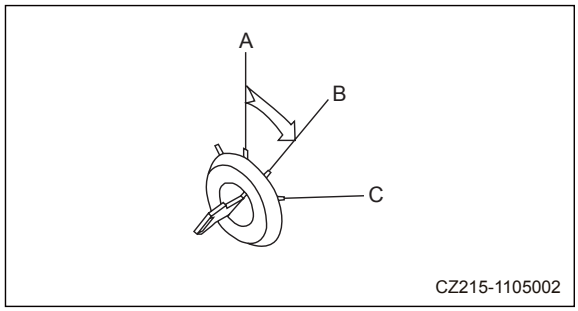

Fig. 8-9

3. After finishing step 2, fully cycle each control level and control pedal for 2-3 times within 15 seconds in order to release the internal pressure remained in the hydraulic lines.

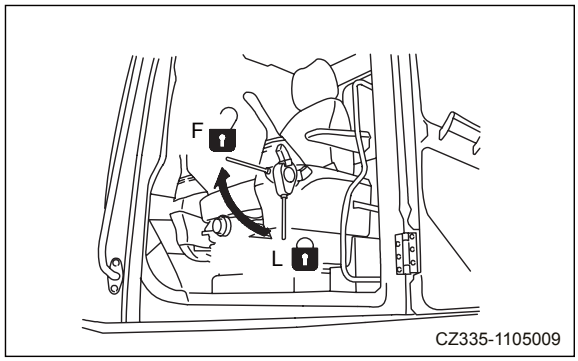

Fig. 8-10

4. Place the lockout control to LOCK position (L).

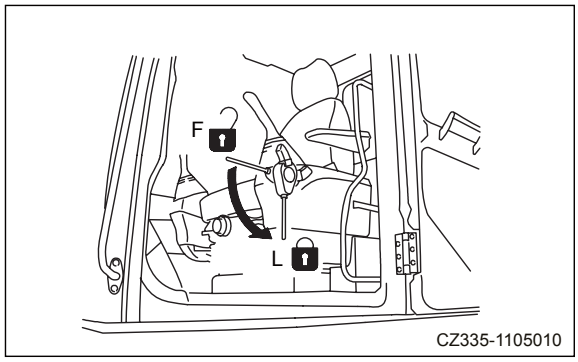

Fig. 8-11

Downloaded from www.Manualslib.com manuals search engine

https://truckmanualshub.com/

5. The breather valve (F) on top of the hydraulic tank can be used to release the internal pressure of the hydraulic lines.

   To release the pressure completely, turn and open the butterfly nut on the breather valve (F) and press the relief button to release the pressure.

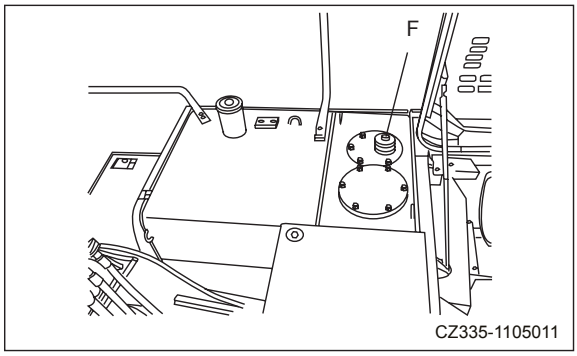

Fig. 8-12

6. Check the temperature of hydraulic oil, which should be cooled to a safe temperature, and then turn the rotor of the stop valve (mounted to the inlet and outlet lines to the side of the arm) to locked position (b).

   (a) unlocked: allows flow of the hydraulic oil (the arrow-indicated direction is parallel to the longitudinal direction of arm).

   (b) locked: stops flow of the hydraulic oil (the arrow-indicated direction is perpendicular to the longitudinal direction of arm).

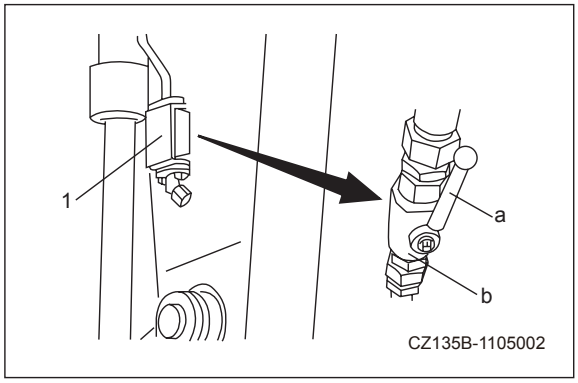

Fig. 8-13

7. Disconnect the hose at the side of the optional equipment. Install the screw plugs to the two outlets.

   The screw plugs are used to prevent that the invasion of foreign materials could lead to the malfunction of the optional equipment. Put the optional equipment in storage after the screw plugs have been installed properly.

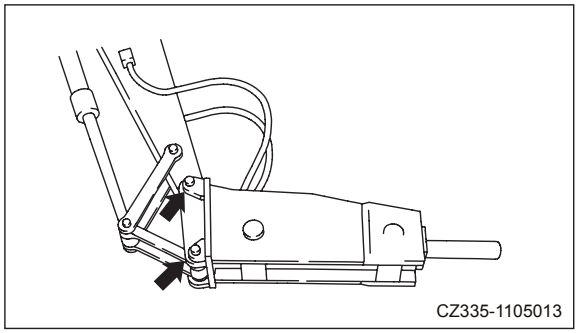

Fig. 8-14

8. Remove the two installation pins, disassemble the optional equipment, and install the bucket.

   For more information on the bucket installation procedures see "**Bucket Replacement**" **on page 5-47**.

Downloaded from www.Manualslib.com manuals search engine

https://truckmanualshub.com/

9. Check the oil level in the hydraulic tank after the bucket has been installed properly.

8.2.3.2 Optional equipment installation

1. Remove the bucket.

2. Place the optional equipment to a flat surface. Install the optional equipment to the arm with the pin (A) followed by the pin (B).

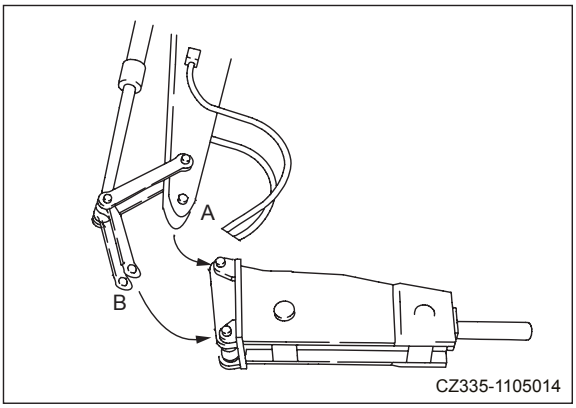

Fig. 8-15

3. Lower the equipment to the ground and shut down the engine.

4. Turn the start switch to ON position (B), and place the lockout control to FREE position (F).

5. After finishing step 2, fully cycle each control level and optional equipment control pedal for 2-3 times within 15 seconds in order to release the internal pressure remained in the hydraulic lines.

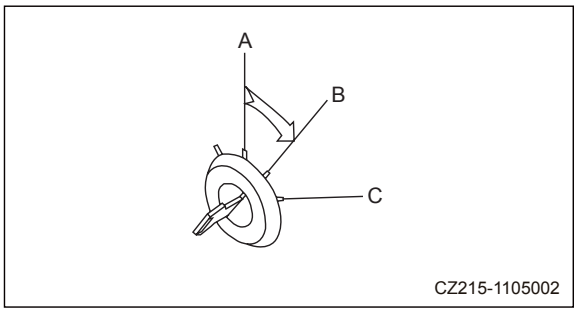

Fig. 8-16

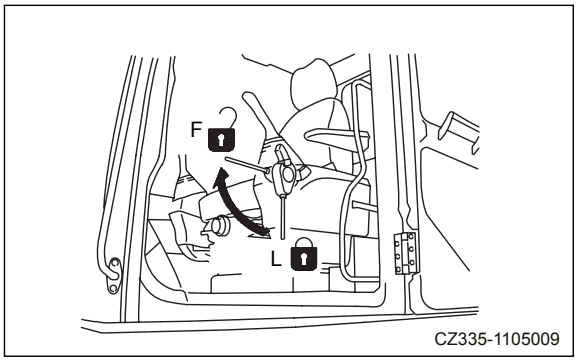

Fig. 8-17

Downloaded from www.Manualslib.com manuals search engine

https://truckmanualshub.com/

6. Place the lockout control to LOCK position (L).

7. The breather valve (F) on top of the hydraulic tank can be used to release the internal pressure of the hydraulic lines.

   To release the pressure completely, turn and open the butterfly nut on the breather valve (F) and press the relief button to release the pressure.

8. Check the temperature of the hydraulic oil, which should be cooled down to a safe temperature. Remove the two screw plugs from the inlet and outlet. Be careful not to contaminate the hose connections with any dirt or soil.

   If the O-ring is broken, replace it with a new one.

9. Connect the hose to the side of the optional equipment.

   When connecting the hose, check the oil flow direction and be careful not to make any mistakes.

10. Turn the rotor of the stop valve (mounted to the inlet and outlet lines to the side of the arm) to FREE position (a).

    (a) unlocked: allows flow of the hydraulic oil (the arrow-indicated direction is parallel to the longitudinal direction of arm).

    (b) locked: stops flow of the hydraulic oil (the arrow-indicated direction is perpendicular to the longitudinal direction of arm).

11. Check the oil level in hydraulic tank after installation of the optional equipment.

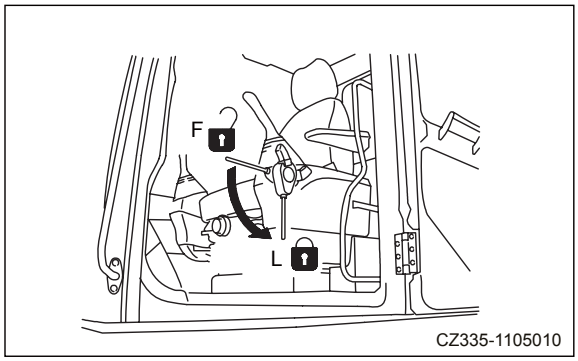

Fig. 8-18

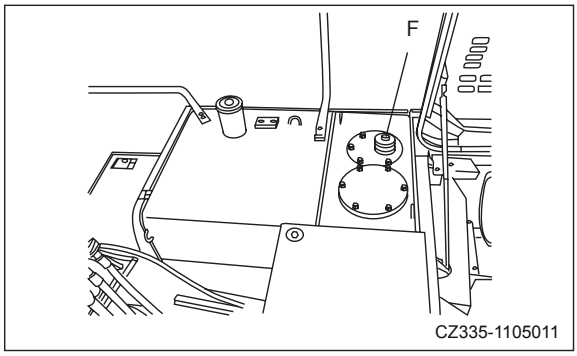

Fig. 8-19

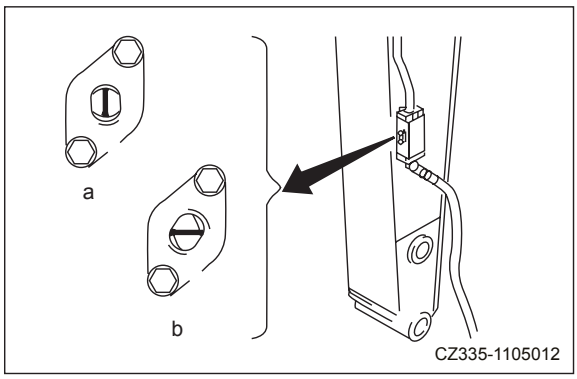

Fig. 8-20

Downloaded from www.Manualslib.com manuals search engine

https://truckmanualshub.com/

8.2.4 Hydraulic oil and hydraulic tank filter - change/replace

The operation of hydraulic breaker could contaminate the hydraulic system and deteriorate the hydraulic oil. In this case, the hydraulic oil and hydraulic tank filter should be changed more often, as compared with the machine installed with bucket. Otherwise, damage could occur in the hydraulic breaker, hydraulic pump and other hydraulic components. The recommended replacement intervals are shown below. (For information about how to change oil and replace a filter, see related items in the Maintenance Section.)

Table 8-1 Change interval (hours)

	Machine with Hydraulic Breaker	Machine with Common Bucket
Hydraulic oil	600	1500 or 2500 or 4000
Filter cartridge	100	1000

Note:

The figures in the above table are determined at 100 percent operation with hydraulic breaker. As the operating hours of hydraulic breaker reduce, the change intervals could be prolonged correspondingly as shown in the following illustration.

The filter cartridge must be replaced after the breaker has been operated for 100 hours.

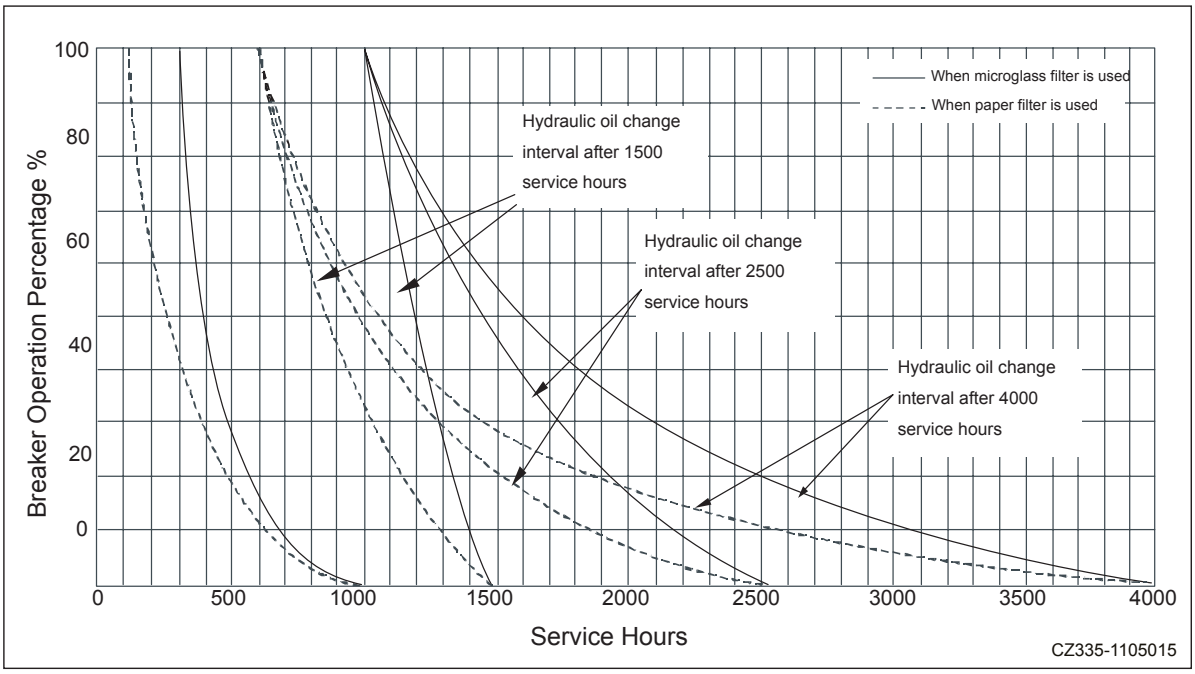

Fig. 8-21

Downloaded from www.Manualslib.com manuals search engine

https://truckmanualshub.com/

8.2.5 Long-term storage

The following procedures shall be followed when the equipment is to be stored for a long period of time.

- Turn the stop valve to locked position.
- Screw the plug on the valve.
- Place the latch pin to locked position.

Operating the pedal without installing the breaker or general optional equipment may cause overheating or other problems.

8.2.6 Hydraulic specifications

- Max. combined flow 2×63 L/min
- The overflow pressure of the safety valve in the stand-by valve has been set to 27.4MPa (280 kgf/cm^2, 3980PSI) (except mode B).
- The pressure to activate the safety valve in the stand-by valve has been set to 24.5MPa (250 kgf/cm^2, 3550PSI) (except mode B).
- The overflow pressure of the safety valve in the stand-by valve has been set to 15-17MPa (153-174 kgf/cm^2, 2178-2469 PSI) (mode B).
- The pressure to activate the safety valve in the stand-by valve has been set to 15.2MPa (155kgf/cm^2, 2200PSI) (mode B).

Besides the valves listed above, we also offer valves in which the overflow pressure of safety valve can be set to 24.5MPa (250kgf/cm^2, 3550PSI) and its activating pressure can be set to 20.1MPa (205 kgf/cm^2, 2911PSI). Please consult Sany dealer in your locality.

Downloaded from www.Manualslib.com manuals search engine

https://truckmanualshub.com/

8.3 Optional equipment Guide

WARNING

Read the optional equipment instruction manual and related sections about optional equipment.

- **Safety issue will be involved when installing any optional equipment. Therefore, please consult Sany distributor before the installation.**
- **Installing an optional equipment without approval from Sany distributor could lead to safety problems which may impair the operation and service life of your machine.**
- **Sany assumes no responsibility for any injuries, accidents or damage resulted from the installation of unauthorized optional equipment.**

8.3.1 Work equipment combination

WARNING

- **There is the danger of impacting the cab or machine body due to the type or combination of work equipment.**
- **Operating a work equipment for the first time requires to check for the danger of any intervention before starting. Operate your machine carefully.**

Downloaded from www.Manualslib.com manuals search engine

https://truckmanualshub.com/

Note:

- In excavation, the boom may intervene with the undercarriage when the boom is fully lowered. Be careful with the operation of the boom.
- For excavating or loading hard soil or soft soil containing gravels, reinforced rock-digging bucket with higher strength and abrasion resistance is recommended.
- It is recommended using high-strength and high-antiwearing rockwork bucket when you dig or load hard soil or soft soil containing stone pieces.

Bucket Type	Capacity m^3 (cu.yd)	Outer Width mm (ft in)	Weight Kg (lb)	Stand Arm (◇) m (ft in)	Remark
Rockwork (SY115C9)	0.48 (0.64)	882 (2ft 10in)	405 (893)	**2.36 (7 ft 9 in)**	Standard Rockwork
Earthwork (SY135C8)	0.53 (0.71)	880 (2ft 10in)	480 (1058)	**2.5 (8 ft 2 in)**	Standard
	0.53 (0.71)	946 (3 ft 1 in)	478 (1052)	**2.5 (8 ft 2 in)**	Rockwork
Earthwork (SY135C9)	0.54 (0.71)	860 (2ft 10in)	484 (1058)	**2.5 (8 ft 2 in)**	Standard
	0.6 (0.71)	950 (3 ft 1 in)	960 (1052)	**2.5 (8 ft 2 in)**	Optional
Earthwork (SY155H)	0.53 (0.71)	946 (3 ft 1in)	479.6 (1057)	**2.5 (8 ft 2 in)**	Rockwork
	0.6 (0.80)	986 (3 ft 3 in)	489 (1078)	**2.5 (8 ft 2 in)**	Standard

Table 8-2

◇—Digging or loading materials of specific gravity ≤ 1.8 t/m^3

Downloaded from www.Manualslib.com manuals search engine

https://truckmanualshub.com/

8.3.2 Bucket tips selection

Bucket tips may break off the adapter due to the working condition. In this case, suitable bucket tips must be determined. Currently, we offer bucket tips with a lateral pin. So the following types of bucket tips are recommended according to different working conditions.

8.3.2.1 Rockwork bucket tips

- Would be used at where the bucket tips service life could be impaired, such as loading hard rocks.
- Would be used at where the bucket tips will not penetrate into the soils, such as handling gravels after blasting or loosening the soils.
- Would be used at where heavy load operation is carried out, such as tapping or pulling the rock with bucket tips.

8.3.2.2 Earthwork bucket tips

- Would be used at where the bucket tips will penetrate into the soils, such as excavating and loading sand or clay.

<table>
<tr><th colspan="3" rowspan="2"></th><th colspan="4">Applicable Worksite</th></tr>
<tr><th>Rocks</th><th>Gravel</th><th>Sandstone</th><th>Clay and loose sand</th></tr>
<tr><td rowspan="4">Work Condition</td><td rowspan="4">Light ←→ Heavy</td><td>Excavation during pile-driving</td><td colspan="3" rowspan="4">Rockwork Tips</td><td rowspan="4">Earthwork Tips</td></tr>
<tr><td>Scraping the earth</td></tr>
<tr><td>General Excavation</td></tr>
<tr><td>Loading</td></tr>
</table>

Table 8-3

Downloaded from www.Manualslib.com manuals search engine

https://truckmanualshub.com/

8.4 Recommended Operations

The following instruction must be followed when operating an excavator with optional equipment.

Note:

Select the optimum model of optional equipment for your hydraulic excavator.

- The type of optional equipment to be installed and the model of special optional equipment may vary according to the model of your hydraulic cylinder. In this case, for selecting the optimum optional equipment, please consult Sany distributor.

8.4.1 Hydraulic breaker

Major applications:

- Crushing rocks
- Demolition
- Road Engineering

This optional equipment can be used widely for, such as demolishing buildings, breaking road surface or slag, tunneling, crushing rocks, and breaking operation at quarry.

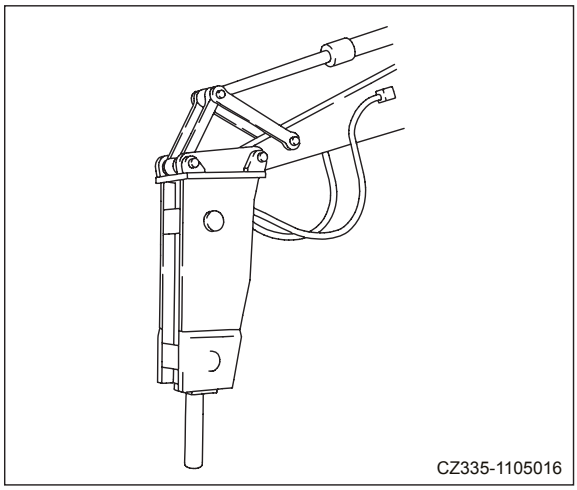

Fig. 8-22

Downloaded from www.Manualslib.com manuals search engine

https://truckmanualshub.com/

8.4.2 Hydraulic breaker operation

1. Press the breaker chisel vertically and firmly onto the object to be broken during breaking operation.

2. Press the breaker chisel tightly onto the working surface when striking and slightly raise the front of the undercarriage about 5 mm (0.2 in) from the ground, as shown in the right illustration. This clearance above ground shall not exceed 5 mm (0.2 in).

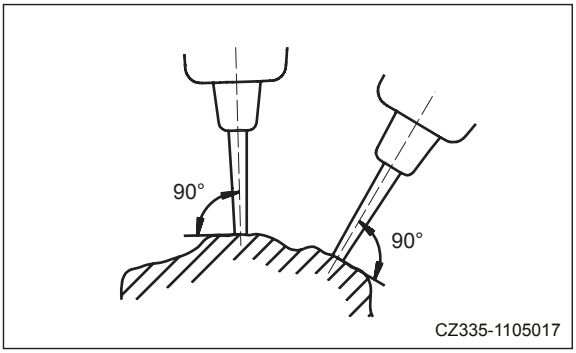

Fig. 8-23

Note:

The excavator shall not be raised too much.

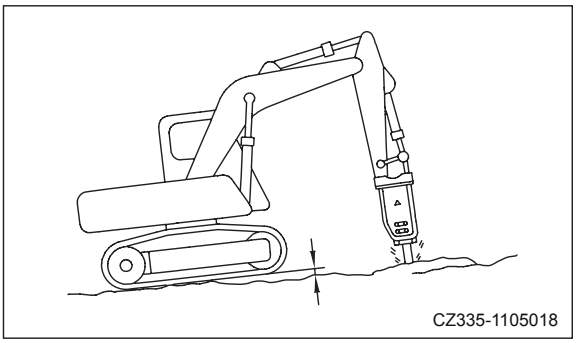

Fig. 8-24

3. If the same surface cannot be penetrated or broken by the chisel within one minute under continuous striking, change the struck position and try to break it near the edge.

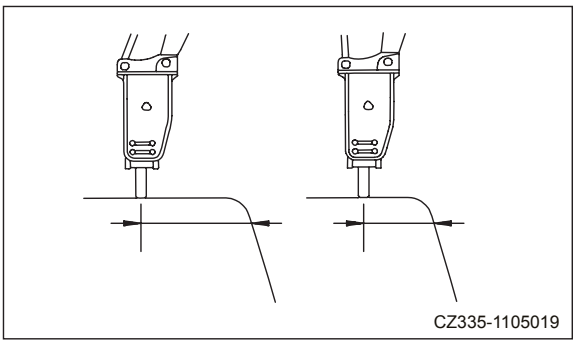

Fig. 8-25

Downloaded from www.Manualslib.com manuals search engine

https://truckmanualshub.com/

4. The chisel's penetrating direction will deviate gradually to the working direction of breaking hammer. It is important to align them by readjusting the bucket cylinder.

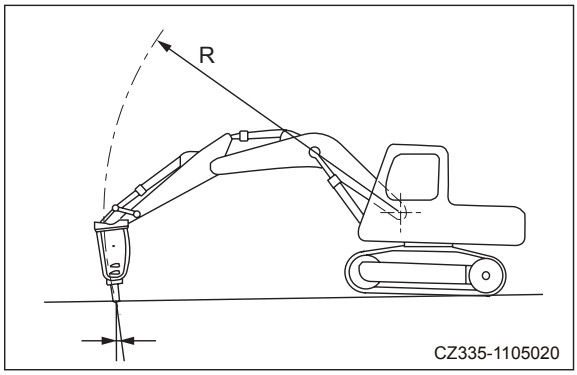

Fig. 8-26

5. Always press the chisel properly on the working surface in order to prevent striking without resistance.

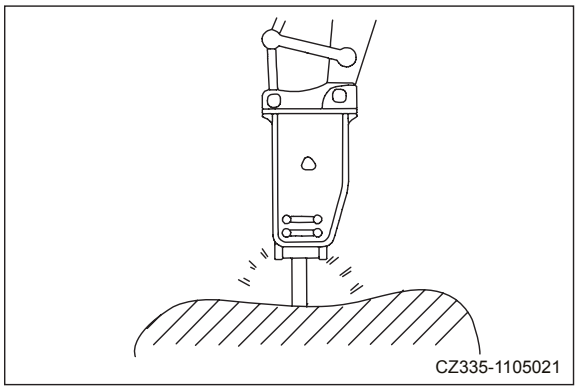

Fig. 8-27

8.5 Restricted Operations

Do not operate your machine in any of the following manners in order to ensure a longer service life and safe operation.

- Do not operate any of the oil cylinders to its full stroke. A distance of 5 cm (2 in) is to be reserved for backup.

1. Accumulating rocks with the breaker.

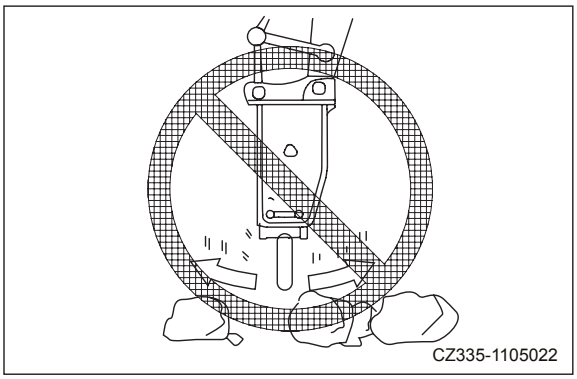

Fig. 8-28

Downloaded from www.Manualslib.com manuals search engine

https://truckmanualshub.com/

2. Breaking with swinging force.

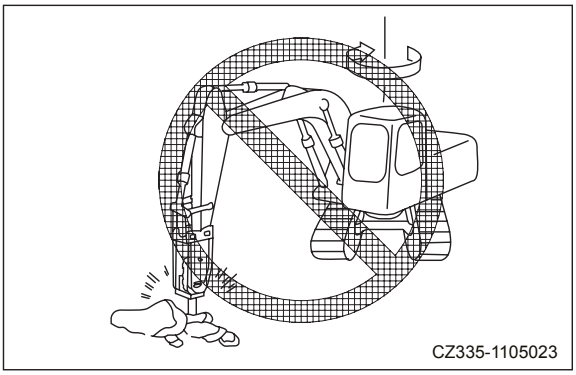

Fig. 8-29

3. Moving the chisel during striking operation.

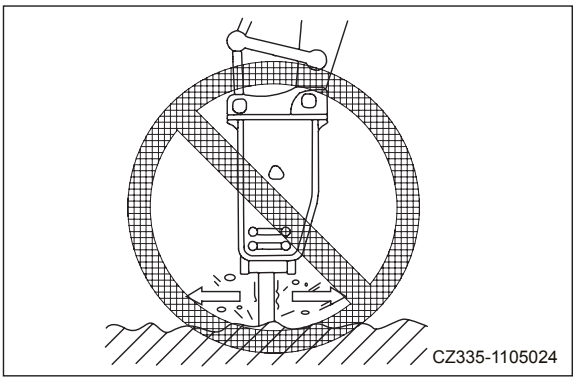

Fig. 8-30

4. Keep the chisel level or upward during striking operation.

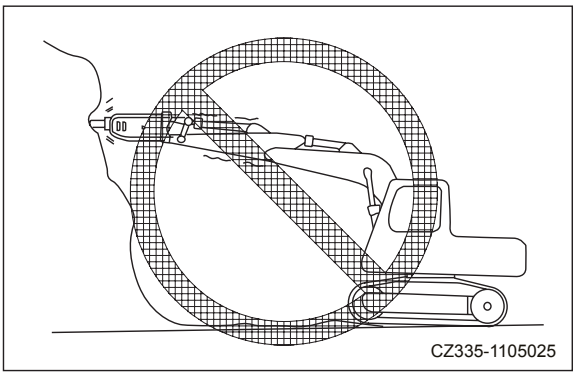

Fig. 8-31

Downloaded from www.Manualslib.com manuals search engine

https://truckmanualshub.com/

5. Swing the chisel when the rock has been penetrated.

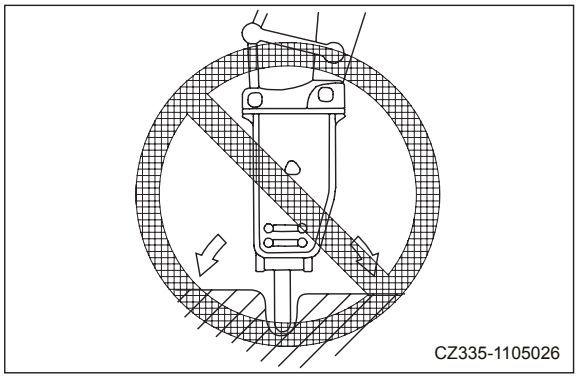

Fig. 8-32

6. Pecking operation.

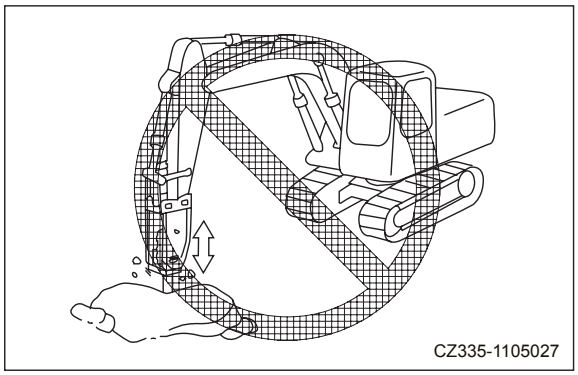

Fig. 8-33

7. Raise your machine above ground by fully extending the bucket cylinder and by the pushing force.

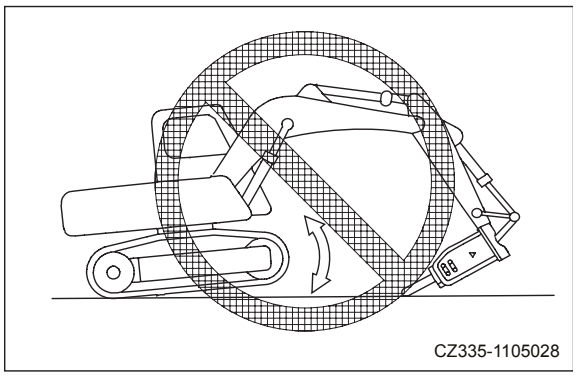

Fig. 8-34

Downloaded from www.Manualslib.com manuals search engine

https://truckmanualshub.com/

8.6 Hydraulic Breaker Lubrication

Grease the breaker at the correct point.

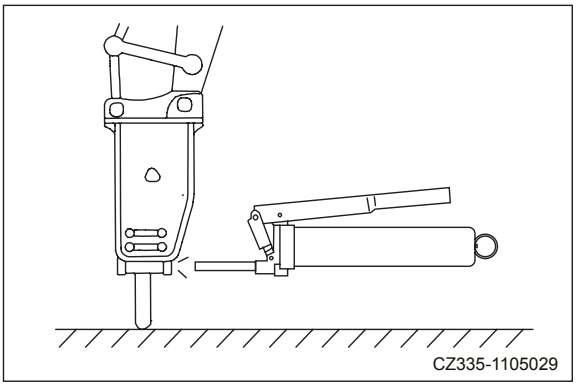

Fig. 8-35

Note:

Greasing in an improper manner could add grease more than desired. As a result, soil and sand may enter the hydraulic system, which can damage the hydraulic components when using the breaker.

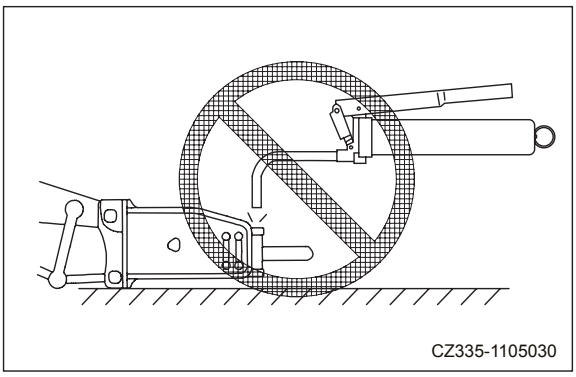

Fig. 8-36

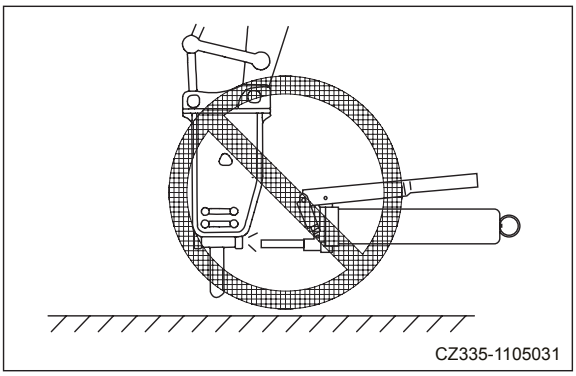

Fig. 8-37

Downloaded from www.Manualslib.com manuals search engine

https://truckmanualshub.com/

8.7 Quick Coupler and Control System

8.7.1 Quick coupler installation

1. Remove the safety pin of quick coupler, as shown in the right illustration.

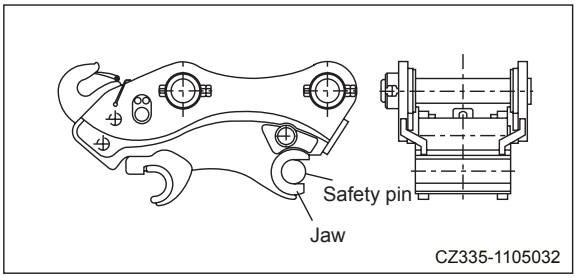

Fig. 8-38

2. Depress the quick coupler operation button (1) (auto reset) on the left joystick in order to slowly reduce the opening of the flexible jaws and the fixed jaws of quick coupler.

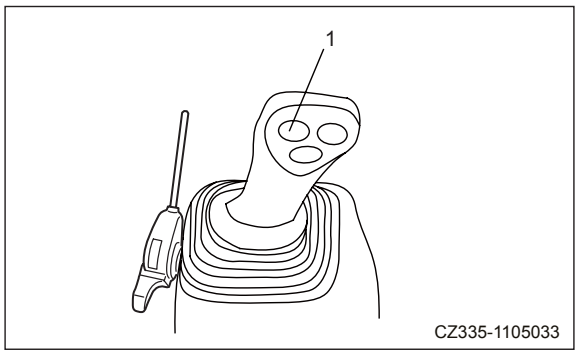

Fig. 8-39

3. Make the quick coupler's fixed jaws to slowly grip the bucket's support pin (2), as shown in the right illustration.

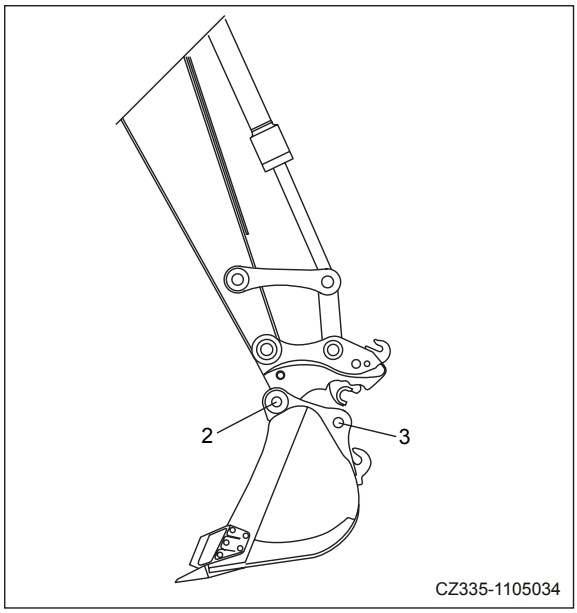

Fig. 8-40

Downloaded from www.Manualslib.com manuals search engine

https://truckmanualshub.com/

4. Extend the bucket cylinder to slowly move the flexible jaws of quick coupler toward the bucket's support pin (3).

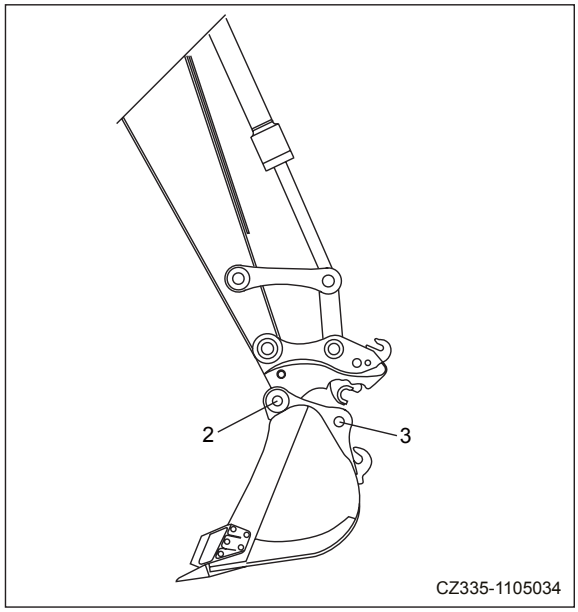

Fig. 8-41

5. Make sure that the jaws of quick coupler grip completely the support pin (3) of the bucket.

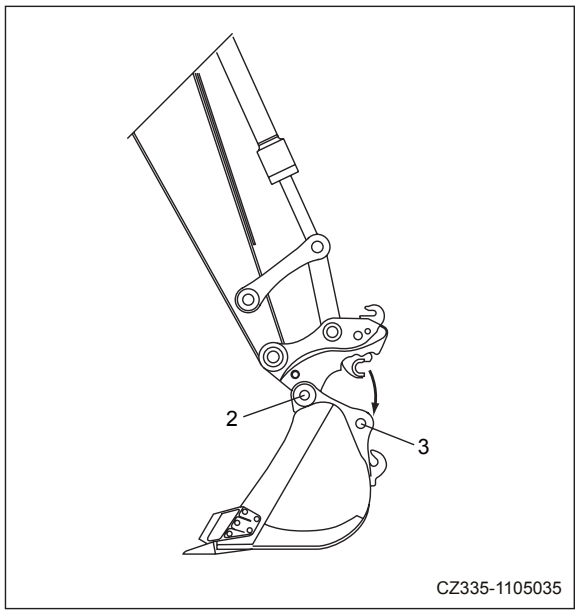

Fig. 8-42

Downloaded from www.Manualslib.com manuals search engine

https://truckmanualshub.com/

6. Release the operation button of quick coupler in order to enable the quick coupler to grip the bucket's support pin before conducting other operations.

7. Insert the safety pin after installation.

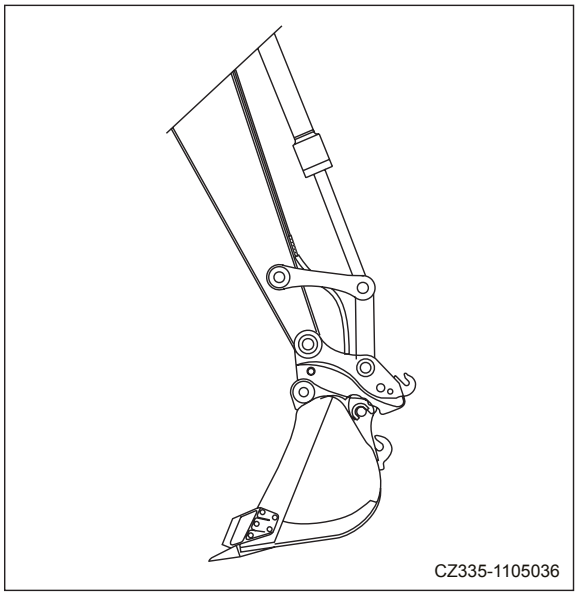

Fig. 8-43

8.7.2 Operating precautions

1. After installation of the quick coupler, the bucket and other optional equipment will make the swing diameter longer during the operation. In this case, they could possibly impact the cab or boom of your excavator. So be careful with the operation. After the quick coupler has been installed, retract the bucket to its position (the bucket cylinder is fully extended) before retracting the arm when carrying out retracting the operation. To avoid damaging the boom, never retract the arm to its position (the arm cylinder is fully extended) before operating the bucket.

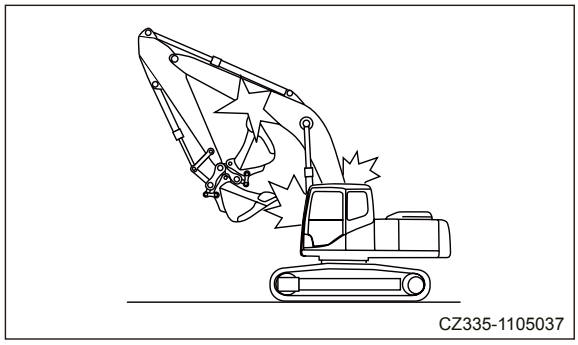

Fig. 8-44

2. Overloaded preparation may impair your machine and its optional equipment, thus reducing their service life.

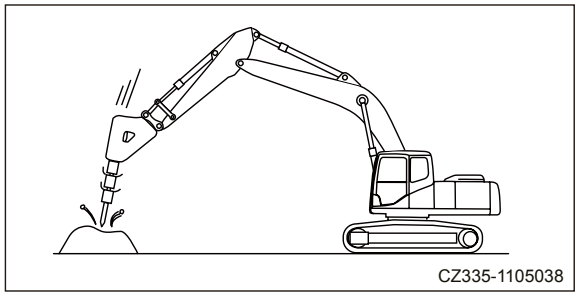

Fig. 8-45

Downloaded from www.Manualslib.com manuals search engine

https://truckmanualshub.com/

3. Do not apply pressure when the quick coupler touches the ground. Use the coupler only when it is connected with the bucket or optional equipment.

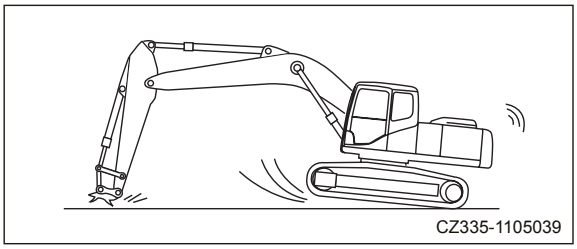

Fig. 8-46

4. It is very dangerous to move a heavy object with the quick coupler. Meanwhile, the service life of quick coupler could be reduced.

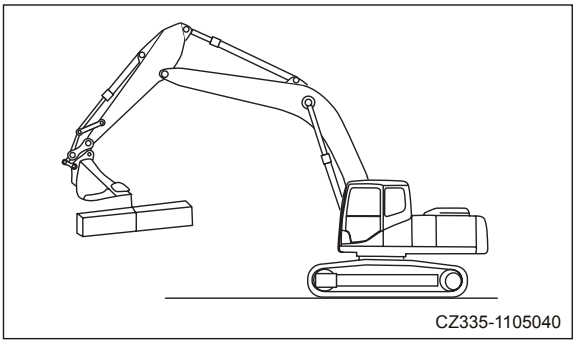

Fig. 8-47

Note:

Consult Sany local authorized dealer if you need to install a quick coupler. Make sure that you are using an optional equipment that has been approved by Sany. Sany assumes no responsibility for any failure and accident resulted from installation of any optional equipment that has not been approved by Sany.

8.8 Refueling System

8.8.1 Introduction

Sany excavators are equipped with a fueling system, which uses a refueling pump assembly. The refueling pump assembly is intended specially for large mobile off-the-road machinery, vehicles and vessels. It uses on-board battery as the power source and is not limited by terrain and power supply, which makes it very suitable for construction side and field.

For information regarding refueling amount, see “**Fluid capacities**” **on page 5-19**.

Downloaded from www.Manualslib.com manuals search engine

https://truckmanualshub.com/

8.8.2 Components

- The fueling system of Sany excavators includes mainly: a refueling pump assembly (including relevant piping and valves), a control switch and a fuel level control relay.
- Open the battery cover (1) and you can see the control switch and the refueling pump (2).

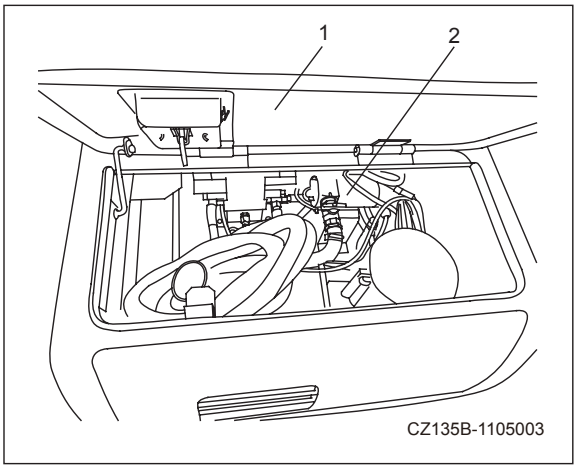

Fig. 8-48

- The main structure of the refueling pump 2) is shown in the right illustration.
- Technical specifications of the refueling pump:

  Pump flow rate: 46L/min

  Rated voltage: 24V

  Rate speed: 2800 rpm

  Coupling thread: 3/4’ G

  Weight: 3.5kg

  Packing dimension: 215×120×160mm
- The fuel level control relay (3) is shown in the right illustration.

  This relay is installed in front of the fuel tank filler opening and is connected with the refueling pump control switch and relay. Its signaling position is 100mm from the tank top surface.

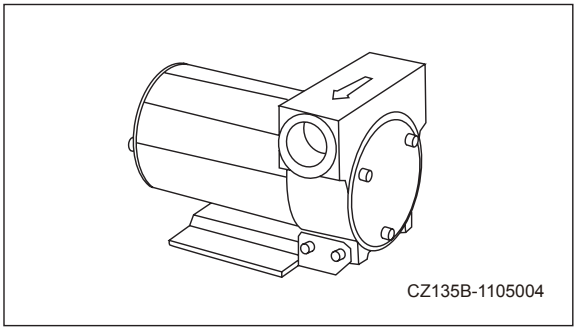

Fig. 8-49

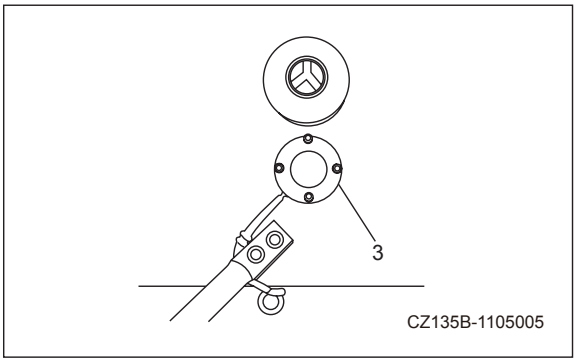

Fig. 8-50

Downloaded from www.Manualslib.com manuals search engine

https://truckmanualshub.com/

8.9 Central Lubrication System

8.9.1 Scheme and components

1. Models SY115C9, SY135C8/9 and SY155H adopt a 18-point lubrication scheme.

A sketch on distribution of excavator lubricating points is shown below:

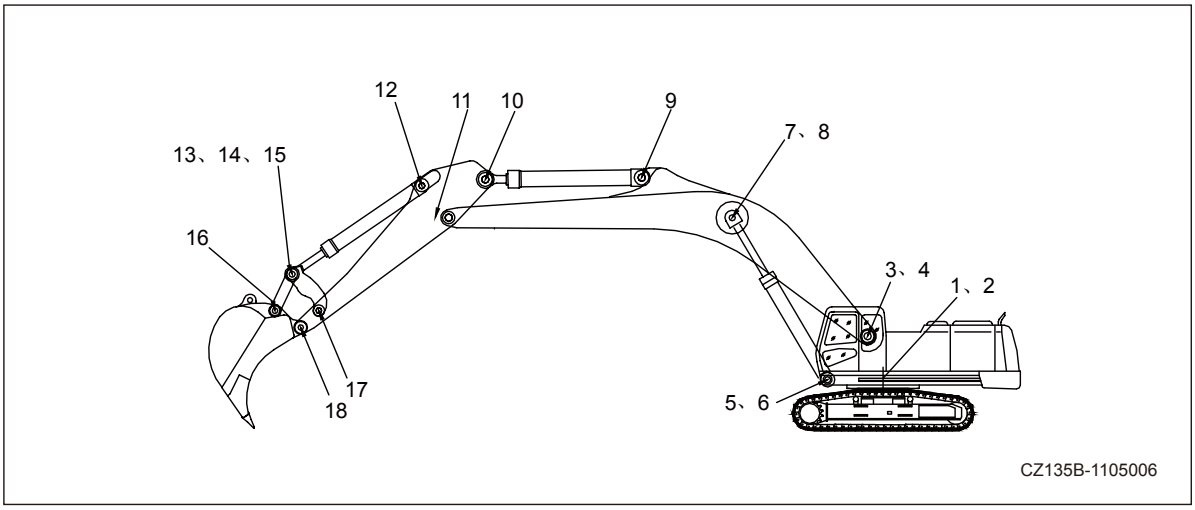

Fig. 8-51

2. System components

- Electric grease pumping section

  It is composed of the pump-mounting base, the electric pump, the pumping unit, the safety valve and the filter.

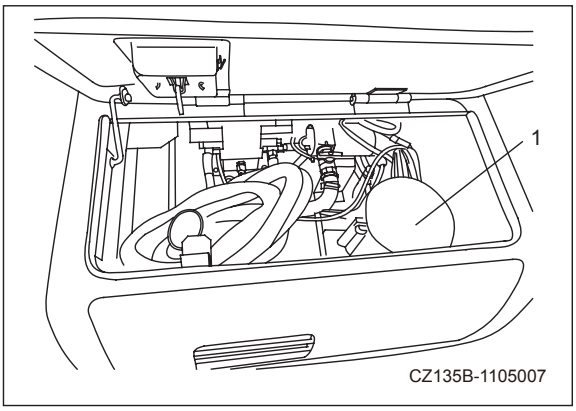

Fig. 8-52

Downloaded from www.Manualslib.com manuals search engine

https://truckmanualshub.com/

- Distributor section

  System distributor is mainly composed of:

  Main distributor (1)

  MX-F3/3

  Secondary distributors (3)

  MX-F510

  MX-F3/5

  MX-F3/4

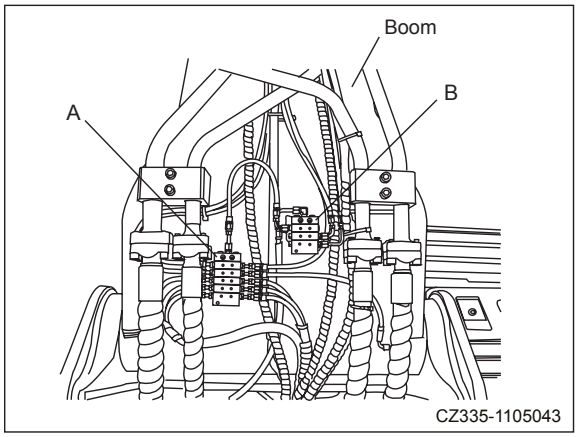

Fig. 8-53

The main distributor (A) and the secondary distributor (B) installed to the boom root are shown in the right illustration.

Secondary distributor (C) mounted to the arm.

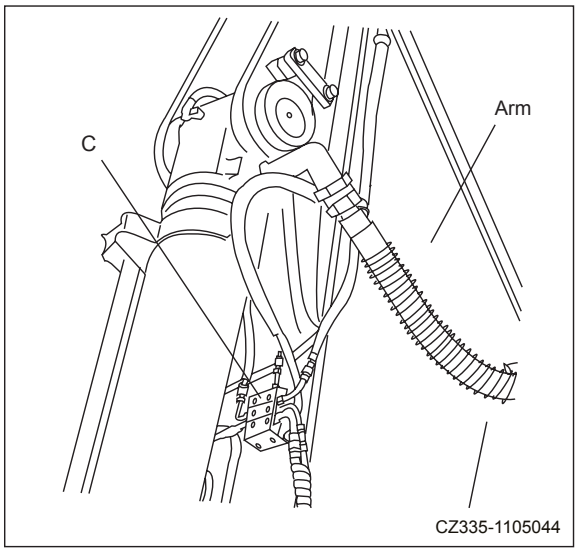

Fig. 8-54

Secondary distributor (D) mounted to the inside of the linking rod.

- Major lines configuration

  The system's major lines include high-pressure hoses, straight connectors, elbows, straight expansion core, bent expansion core, steel wire protection sleeves, hose protection sleeves, bucket distributor protection plates, etc.

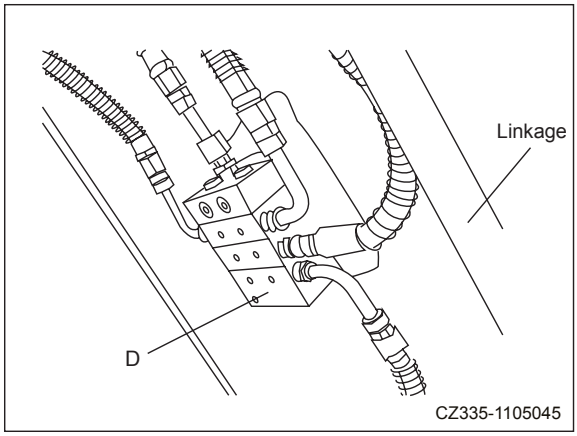

Fig. 8-55

Downloaded from www.Manualslib.com manuals search engine

https://truckmanualshub.com/

8.9.2 System working principle

As Sany SY series excavators have a relatively central distribution of lubricating points that are close to each other, we choose to use a progressive central lubrication system which is shown in the illustration below.

Operating principle: The pressurized grease from the electric plunger pump goes through the pumping unit, safety valve and filter to the main distributor, where the grease is sent through the tubes to three secondary distributors and then supplied in turn to each lubricating point according to a certain proportion.

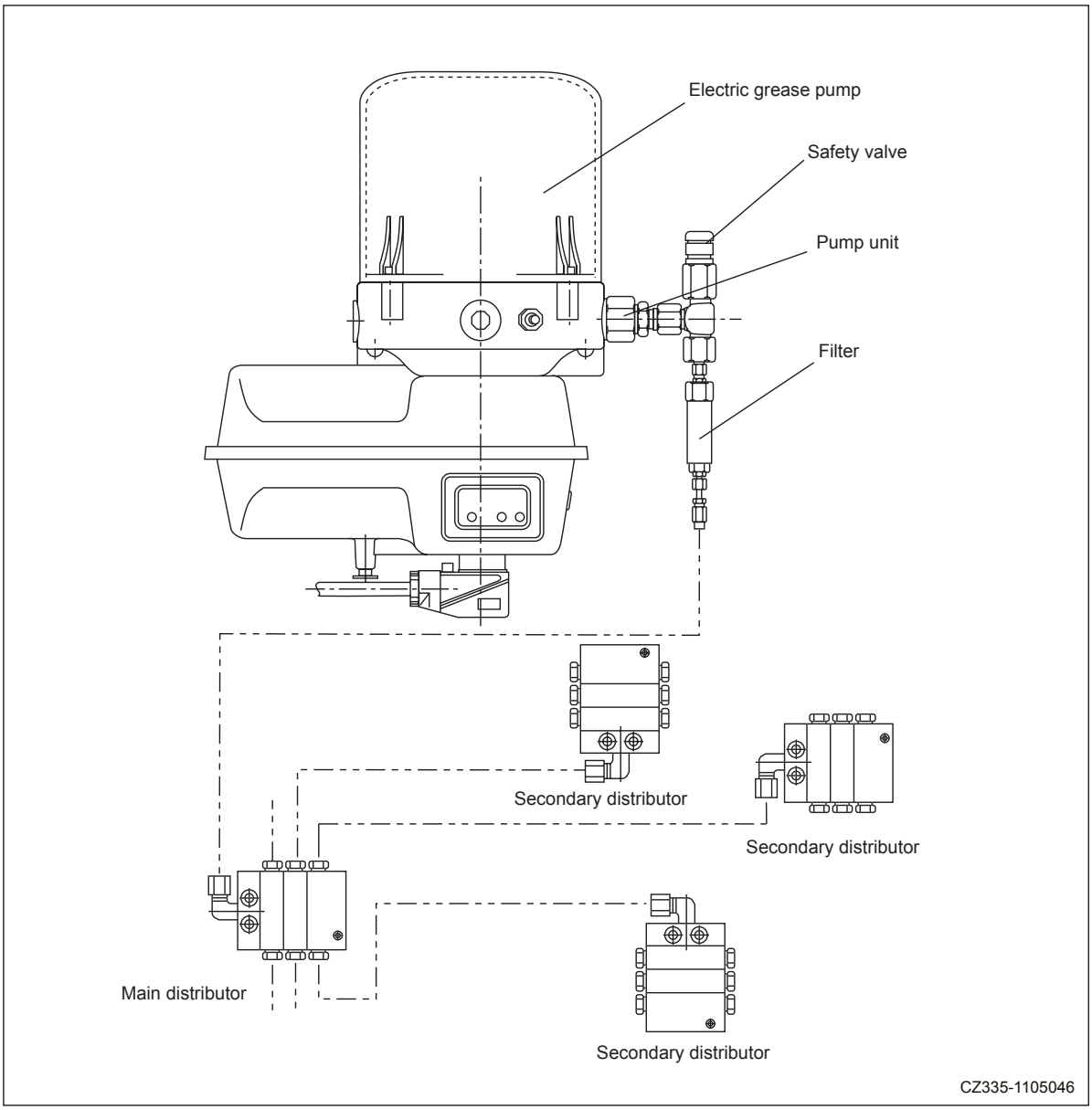

Fig. 8-56

Downloaded from www.Manualslib.com manuals search engine

https://truckmanualshub.com/

8.9.3 Setting the lubrication time of electric grease pump

The electronic controller built in the electric grease pump can realize related control over the time or cycle of the central lubrication system. When the time programming control is applied, the cab's central lubrication system indicator flashes after the excavator is powered on; the yellow LED indicator of the electronic controller will be illuminated for 25 seconds, indicating that the system is ready for lubrication.

By pressing the start button on the motor's shell or instrument panel, the lubrication cycle begins. Upon completion of the lubrication cycle, the motor of lubricating pump stops and the shutdown cycle begins. Subsequent lubrication will start according to the predetermine time schedule. If the engine is shut off during shutdown period or lubrication cycle, the cycle will be terminated and the time period will be recorded. When the engine is started again, the lubrication cycle will continue counting the time from when the previous cycle is terminated. For the suspended lubrication cycle, pressing the forcible start button allows you to activate the lubricant pump. Once the control unit is energized, a lubrication cycle will be activated. The following illustration shows the panel of electronic controller of the grease pump.

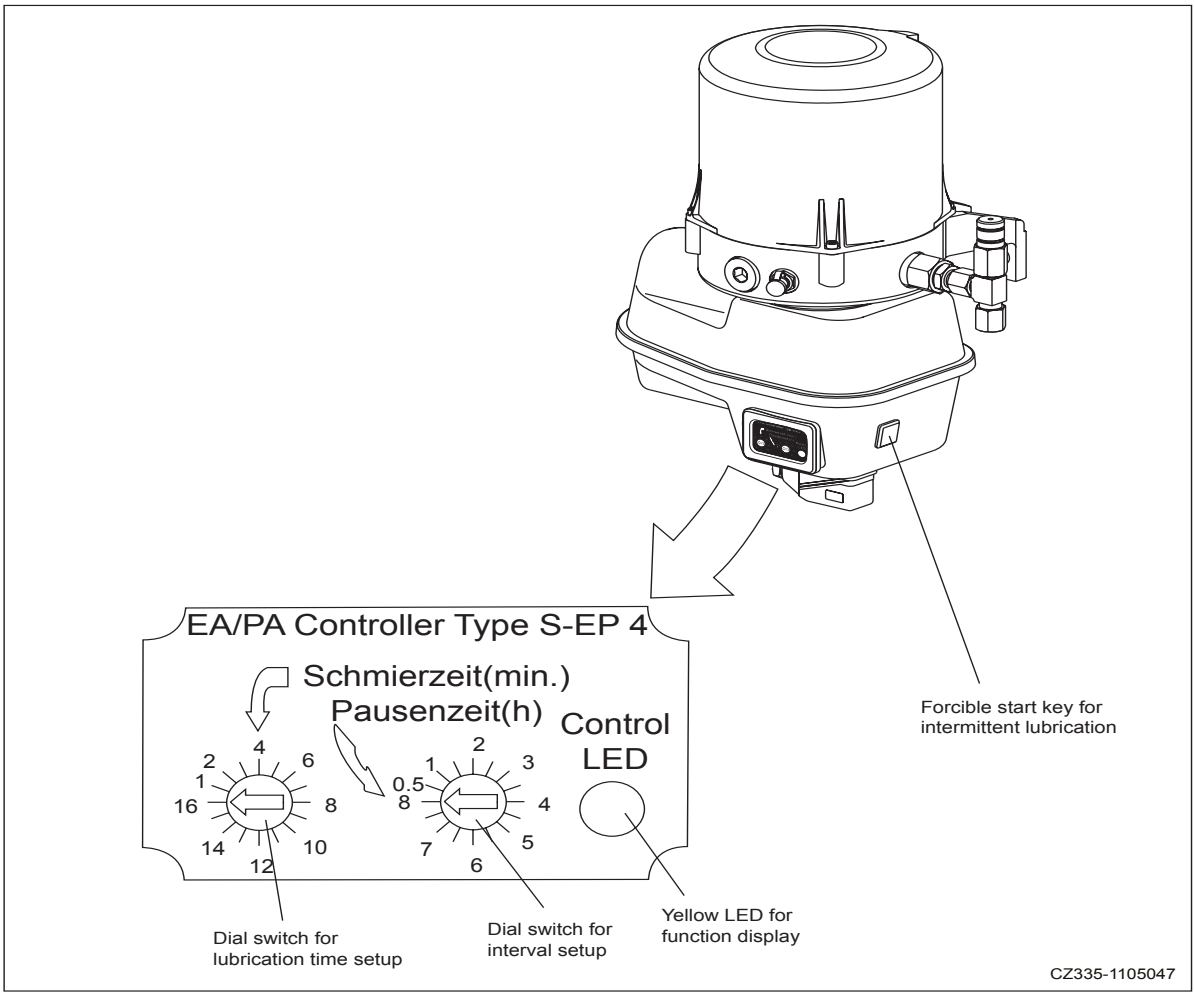

Fig. 8-57

Downloaded from www.Manualslib.com manuals search engine

https://truckmanualshub.com/

- Setting the parameters

  The interval can be set to 0.5 - 8 hours; the lubrication cycle can be set to 1 - 16 minutes, as shown in the illustration below. If you need to adjust the time, use a flat-headed screw driver to disassemble the red edge frame, loosen the four cross-headed screws, and remove the transparent covers in turn. If any of the covers is not shut properly, water could penetrate into the control unit and damage may result in.

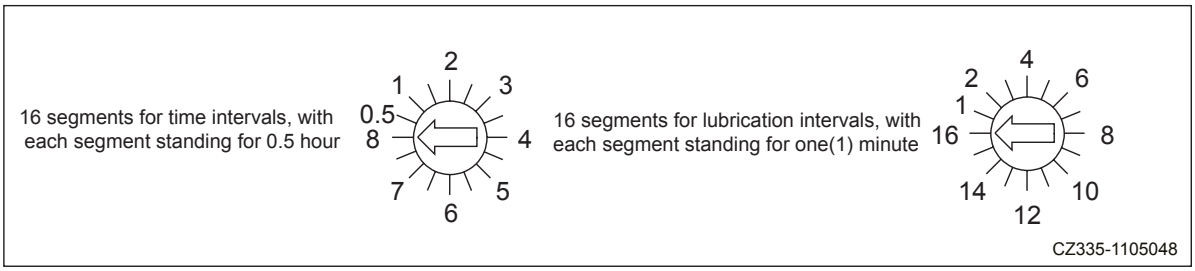

Fig. 8-58

8.9.4 Technical description

1. The system will lubricate for 10 minutes every half an hour, which was set at the factory before delivery.

2. After operating for 100 hours, you can adjust (increase or decrease) the lubricating time according to actual condition. The lubricating interval, however, shall not be changed.

3. Clean lithium base grease NLG12# is recommended for the lubrication.

4. Electric lubricant pump (24V/DC, 19 kg) with built-in electronic controller is used.

Downloaded from www.Manualslib.com manuals search engine

https://truckmanualshub.com/

8.9.5 Adding grease with electric pump

The electric grease pump of the central lubrication system lubricates your machine in the following three ways.

1. Standard Method:

Manual or pneumatic grease gun is used to add grease through the ball-type nozzle (1), as shown in the following illustration.

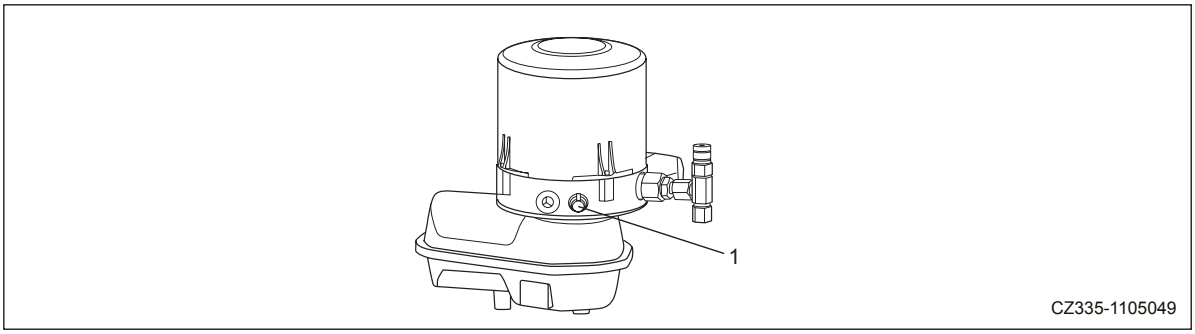

Fig. 8-59

2. Add grease through the connector, as shown in the illustration below.

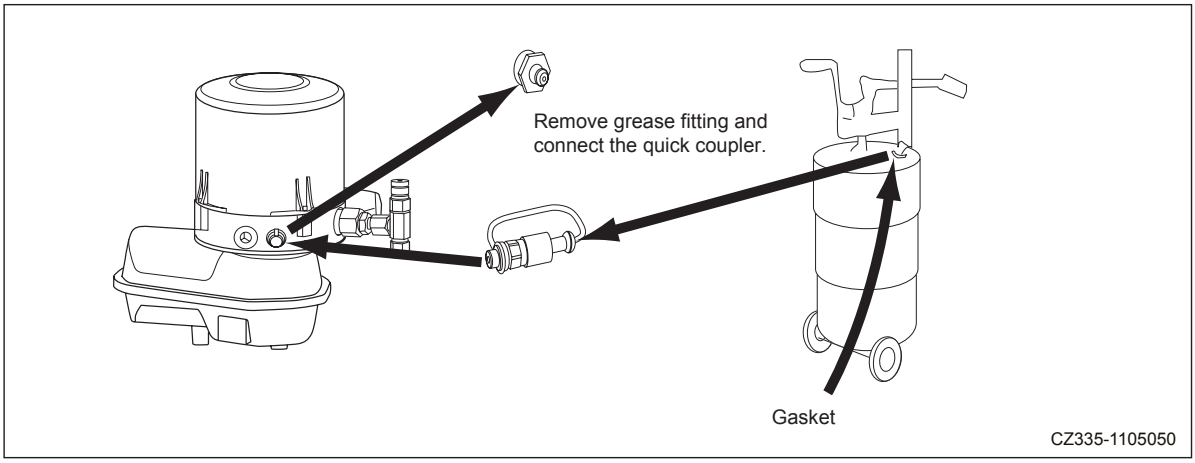

Fig. 8-60

Downloaded from www.Manualslib.com manuals search engine

https://truckmanualshub.com/

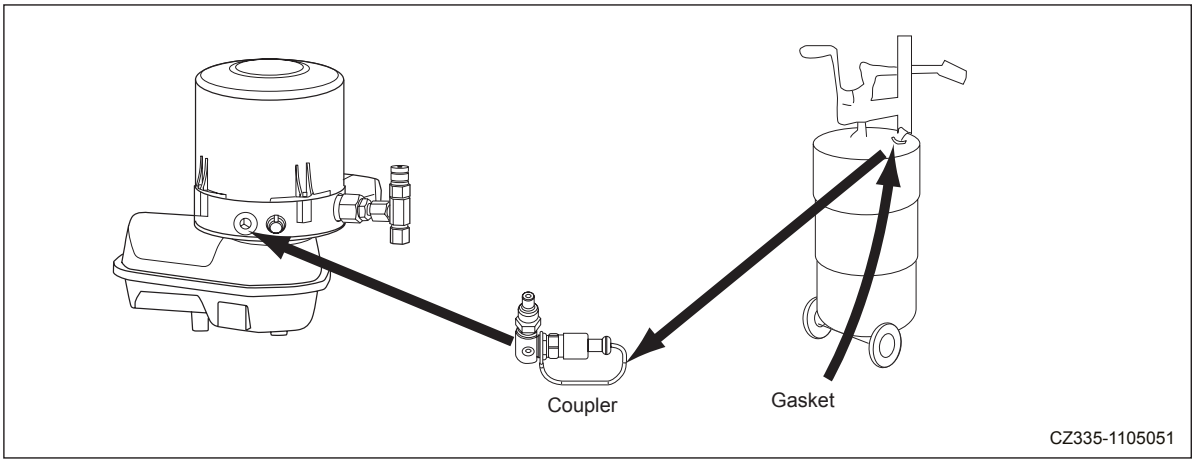

Fig. 8-61

3. Add grease through the grease gun, as shown in the illustration below.

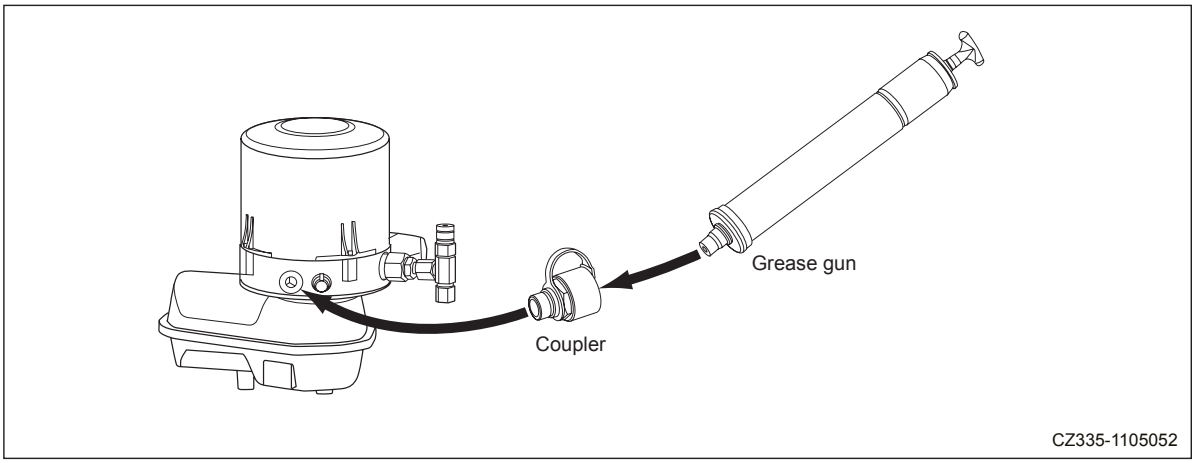

Fig. 8-62

Note:

Please consult Sany distributor if you need to install the central lubrication system. Make sure that you are using accessories specified by Sany. Sany assumes no responsibility for failures and accidents caused by the installation of any accessories that have not been approved by Sany.

Downloaded from www.Manualslib.com manuals search engine

https://truckmanualshub.com/

BLANK PAGE

Downloaded from www.Manualslib.com manuals search engine