https://truckmanualshub.com/

No. OF-2B0EE

TCM®

OPERATION & MAINTENANCE MANUAL

FORKLIFT TRUCK

Gas. & LPG Powered

FG15C13
FG15T13
FG18C13
FG18T13
FG20C3
FG20T3
FG25C3
FG25T3
FG30C3
FG30T3
FG35T3S

FHG15C3
FHG15T3
FHG18C3
FHG18T3
FHG20C3
FHG20T3
FHG25C3
FHG25T3
FHG30C3
FHG30T3

Diesel powered

FD15C13
FD15T13
FD18C13
FD18T13
FD20C3
FD20T3
FD25C3
FD25T3
FD30C3
FD30T3
FD35T3S

FHD15C3Z
FHD15T3Z
FHD18C3Z
FHD18T3Z
FD20C3Z
FD20T3Z
FD25C3Z
FD25T3Z
FD30C3Z
FD30T3Z

FHD15C3
FHD15T3
FHD18C3
FHD18T3
FHD20C3
FHD20T3
FHD25C3
FHD25T3
FHD30C3
FHD30T3

FHD20C3A
FHD20T3A
FHD25C3A
FHD25T3A
FHD30C3A
FHD30T3A

It is the responsibility of the operator and supervisor to read and understand this manual.
Protect the earth and be kind to your lift truck.

TCM CORPORATION

https://truckmanualshub.com/

TCM CORPORATION

TCM OPER. & MAINT. MANUAL FG15C13 – FD35T3S No. OF-2B0EE

https://truckmanualshub.com/

https://truckmanualshub.com/

Thank you very much for your purchase of TCM's product.

This Operation & Maintenance Manual was written to provide the owner/operator with information about the safe operation and maintenance of the TCM forklift truck. Read this manual thoroughly and become completely familiar with the lift truck before using it. If you have any questions, see your dealer.

Due to improvements in design, it is possible that the description contained herein may not completely apply to the truck delivered to you.

⚠ CAUTION
If the truck is to be leased, loaned or sold to anyone, this manual must be with the truck.

IMPORTANT

The specifications and attachments of the trucks vary with different destinations.
The following symbols are used to indicate their destinations in this manual.

Code	Destination
EXA	North America
EXC	Oceania
EXB	All regions excluding North America, EU member countries, Oceania and South Africa
EXE	EU member countries (excluding Scandinavia)
EXK	South Africa
EXN	Scandinavia

CONTENTS

1. SAFETY
2. OPERATING CONTROLS
3. OPERATION
4. MAIN-TENANCE
5. SPECIFICA-TIONS & SERVICE DATA
6. INDEX

https://truckmanualshub.com/

Rated load	Truck model	Engine model	Rated load	Truck model	Engine model	Rated load	Truck model	Engine model
1.5 tons	FG15C13	K15	2 tons	FG20C3	K21	3 tons	FG30C3	K21
	FG15T13	K15		FG20T3	K21		FG30T3	K21
	FHG15C3	K21		FHG20C3	K25		FHG30C3	K25
	FHG15T3	K21		FHG20T3	K25		FHG30T3	K25
	FD15C13	D1503		FD20C3	TD27-II		FD30C3	TD27-II
	FD15T13	D1503		FD20T3	TD27-II		FD30T3	TD27-II
	FHD15C3Z	C240		FD20C3Z	C240		FD30C3Z	C240
	FHD15T3Z	C240		FD20T3Z	C240		FD30T3Z	C240
	FHD15C3	TD27-II		FHD20C3	V3300		FHD30C3	V3300
	FHD15T3	TD27-II		FHD20T3	V3300		FHD30T3	V3300
				FHD20C3A	QD32		FHD30C3A	QD32
				FHD20T3A	QD32		FHD30T3A	QD32
1.75 tons	FG18C13	K15	2.5 tons	FG25C3	K21	3.5 tons	FD35T3S	QD32
	FG18T13	K15		FG25T3	K21		FG35T3S	K25
	FHG18C3	K21		FHG25C3	K25			
	FHG18T3	K21		FHG25T3	K25			
	FD18C13	D1503		FD25C3	TD27-II			
	FD18T13	D1503		FD25T3	TD27-II			
	FHD18C3Z	C240		FD25C3Z	C240			
	FHD18T3Z	C240		FD25T3Z	C240			
	FHD18C3	TD27-II		FHD25C3	V3300			
	FHD18T3	TD27-II		FHD25T3	V3300			
				FHD25C3A	QD32			
				FHD25T3A	QD32			

Note: In this manual, trucks with manual transmission are expressed as C type, and those with automatic transmission as T type.

https://truckmanualshub.com/

1. SAFETY

CONTENTS

FOR SUPERVISORS ..... 1 - 1
QUALIFIED OPERATORS ..... 1 - 2
PLANNING AND WORKING AREA ..... 1 - 3
PROPER AND IMPROPER USES ..... 1 - 6
TYPES OF VEHICLES AND LOADS ..... 1 - 7
INSPECTION ..... 1 - 10
INSPECTION/TRANSPORTING THE LIFT TRUCK ..... 1 - 11
TRAVELING ON PUBLIC ROADS ..... 1 - 13
HOW THE LIFT TRUCK WORKS? ..... 1 - 14
TRAVELING ..... 1 - 17
LOAD HANDLING ..... 1 - 24
PARKING ..... 1 - 29
INSPECTION AND SERVICE ..... 1 - 31
CAUTION PLATES ..... 1 - 41

https://truckmanualshub.com/

The following symbols, found throughout this manual, alert you to potentially dangerous conditions to the owner and the operator. Become completely familiar with the truck before proceeding with operating, checking and servicing the truck.

This manual and the decals affixed to the truck use the following safety alert indications.

SIGNAL WORD	CLASSIFICATION
DANGER	**Failure to follow the instructions in the message will likely cause a serious accident or death.**
WARNING	**Failure to follow the instructions in the message might cause a serious accident or death.**
CAUTION	**Failure to follow the instructions in the message may cause personal injury or damage to the truck or other property.**
NOTE	**The information will help to prolong the service life of the truck. The message is not directly related to accident prevention.**

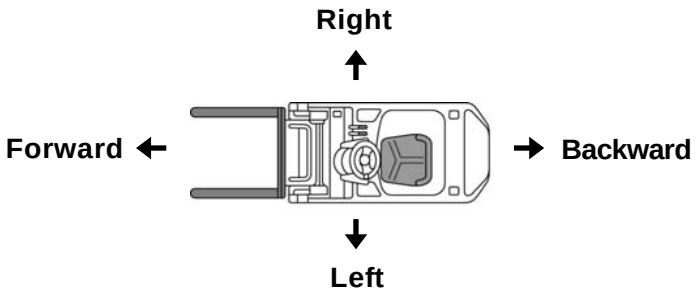

The diagram above indicates the meanings of the terms “forward”, “backward”, “right” and “left” used in this manual.

FOR SUPERVISORS

Lift truck accidents cause dozens or hundreds of deaths every year, and even greater numbers of personal injuries.

TCM has steadily improved the design and fabrication of our lift trucks so they may be used more safely and efficiently, but many accidents still occur due to improper use. Accidents are often the result of more than just “bad driving”. The use of inappropriate types of equipment, the selection of inappropriate attachments or accessories, inappropriate operating environments, careless designation of operators, and failure to properly train the operator are other common causes of accidents.

It is not possible to describe all potentially hazardous situations which may occur while operating, inspecting or servicing a forklift truck. The warnings and cautions in this manual, including the decals attached to the forklift, are not intended to cover all possible working hazards.
If you operate, inspect or service the forklift in a manner not described in this manual, please be careful because you do so at your own risk.

This chapter covers the methods of accident prevention which are primarily the responsibility of supervisory personnel.

- Pages 1 - 2 through 1 - 13 contain instructions which should be enforced by the personnel supervising the operation of the lift truck. Please make sure the operators also read these pages.
- Page 1 - 14 and the following pages contain specific precautions directly related to the operation of the lift truck.

https://truckmanualshub.com/

TRAIN OPERATOR TO STACK SAFELY

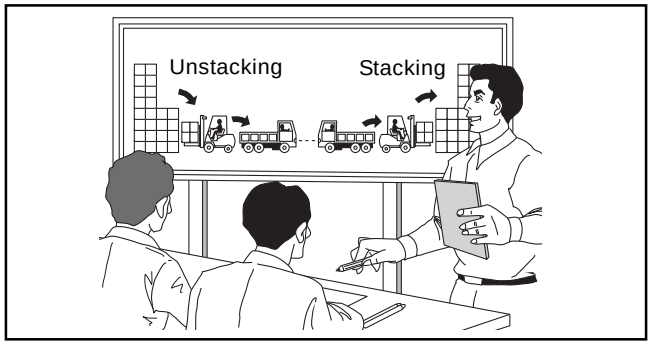

“Stacking” means piling up a palleted load or material directly on top of each other, without using racks or shelves to separate them. If stacking work is not done properly, the loads may slip or fall, endangering the operator as well as fellow workers in the area. Safety classes should be held to train all operators in the proper method of stacking and unstacking loads.
(Your TCM dealer can provide information about safety stacking training.)

TIRED OR UNWELL? SEND THEM HOME!

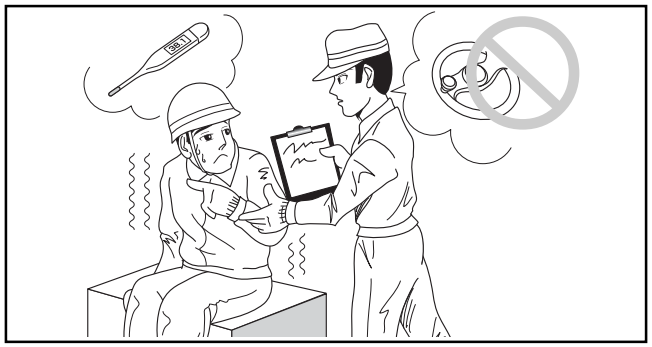

Do not let people take chances. An operator who is overworked or fatigued, an operator who is feeling unwell, or an operator who is intoxicated must not be allowed in the driver’s seat.

WEAR PROTECTIVE GEAR

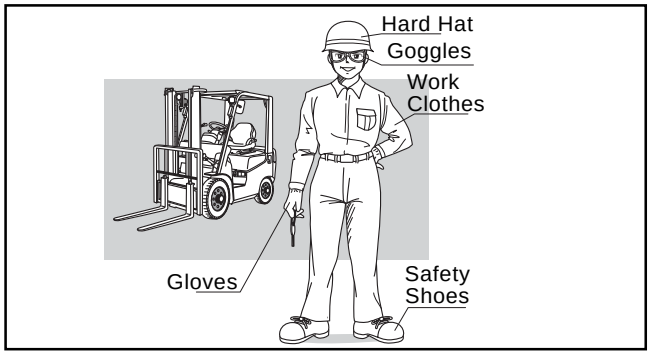

- Always wear proper work clothes for driving. Work clothes should be designed to prevent any part from accidentally catching on knobs or other parts of the truck or equipment. For example, shirts and trousers should have tight cuffs.
- Always wear a hard hat and safety shoes.
- Wear other protective gear as appropriate to the conditions of the work site, i.e., goggles or gloves.

PROVIDE AND MAINTAIN EMERGENCY EQUIPMENT

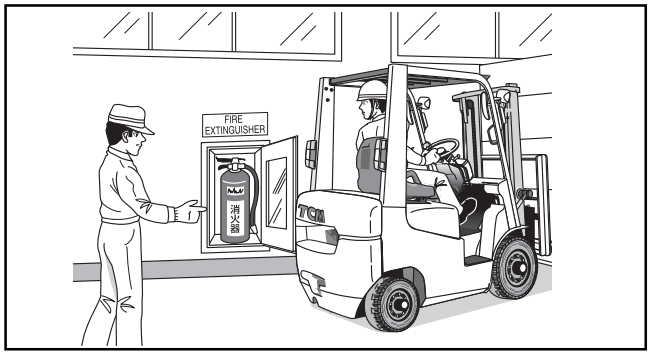

Fire extinguishers and first aid kits should be provided and maintained for use in case of a fire or accident. All personnel should understand the location and use of emergency equipment.

https://truckmanualshub.com/

KNOW WHO TO CALL IN AN EMERGENCY

Keep information on hand to allow immediate calls for help in case of a fire, accident or other emergency.

MAKE AN OPERATING PLAN AND DISCUSS IT

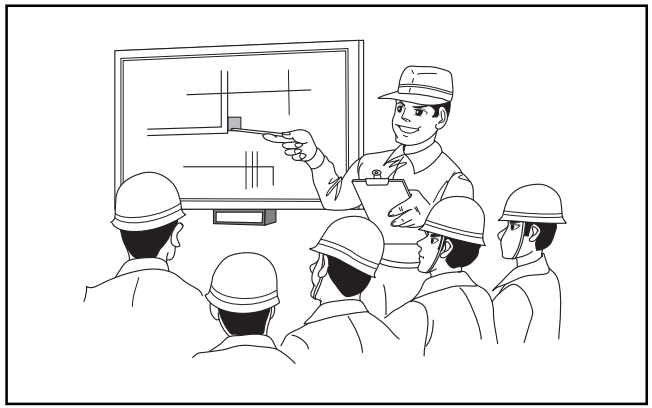

Before using the lift truck, plan out the travel routes and operating procedures, and thoroughly discuss the details with all involved personnel.

MARK THE TRAVEL LANES

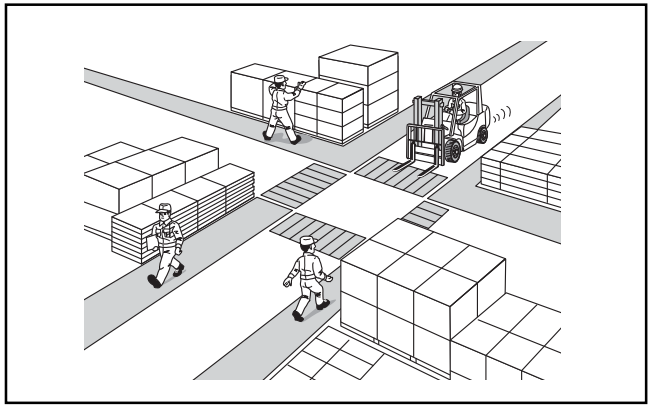

Designate the travel lanes for the lift truck and mark them clearly, so they will be kept free of obstruction.

SET SPEED LIMITS

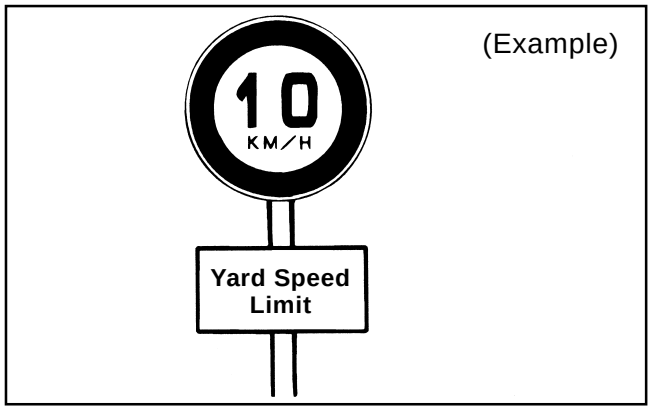

Set appropriate speed limits on your company grounds, and post signs that are clearly visible.

https://truckmanualshub.com/

KEEP PEOPLE OUT OF THE OPERATING AREA

No other personnel should be allowed in areas where the lift truck is used.
Where other people must be present, post a guide whose job is to make sure people stay clear of moving vehicles.

KEEP UNAUTHORIZED VEHICLES OUT

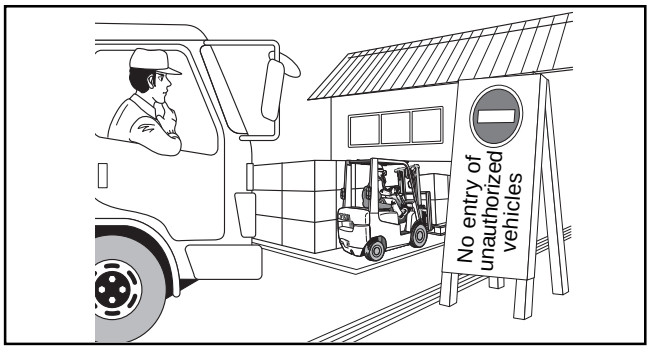

Unauthorized vehicles must be kept out of the load handling areas. Post signs or give signals as required.

ASSIGN TRAFFIC GUIDES TO CONGESTED AREAS

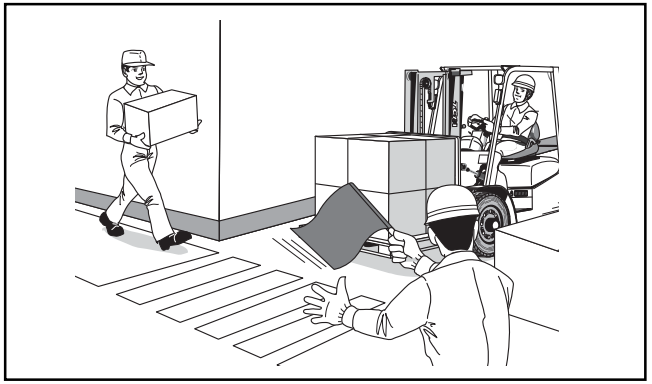

Post a traffic guide in confined or congested areas where other people or vehicles may pass. All personnel must obey the guide's signals.

PROVIDE ADEQUATE LIGHTING

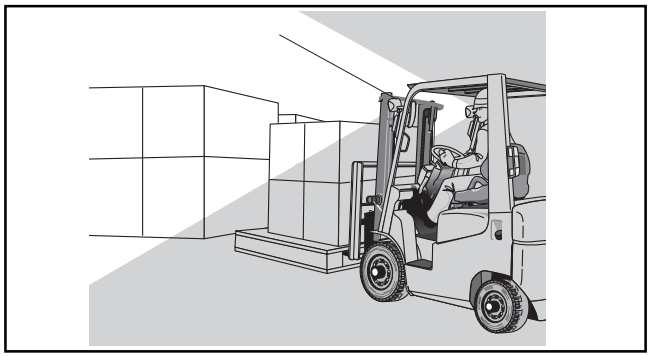

Safe operation requires well-lit traveling routes, so pedestrians and obstacles can be easily seen. Use headlights, taillights, helmet lamps or other lights as appropriate.

https://truckmanualshub.com/

KEEP THE GROUND LEVEL AND DRY

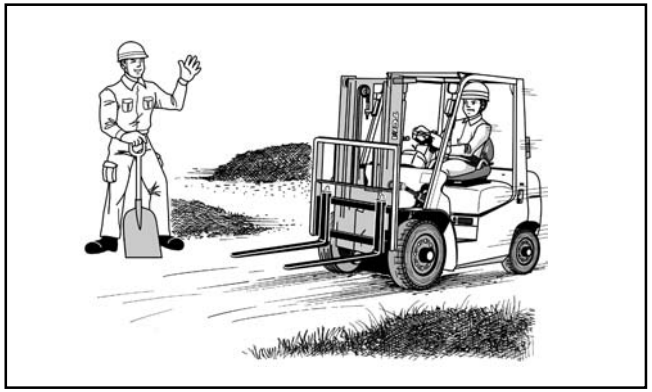

Be sure that all areas where the lift truck travels are level and regular. Clear away pools of oil or water.

SAFETY MEASURES FOR DANGER SPOTS

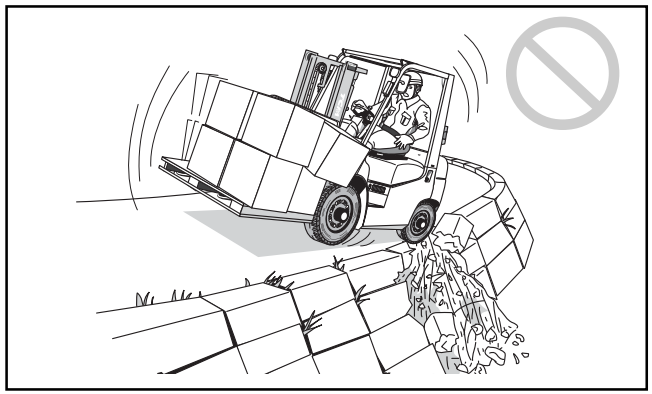

Post warning signs or take other appropriate measures to ensure that lift truck operators keep away from danger spots as they travel.

INSTALL CURBS OR RAILINGS

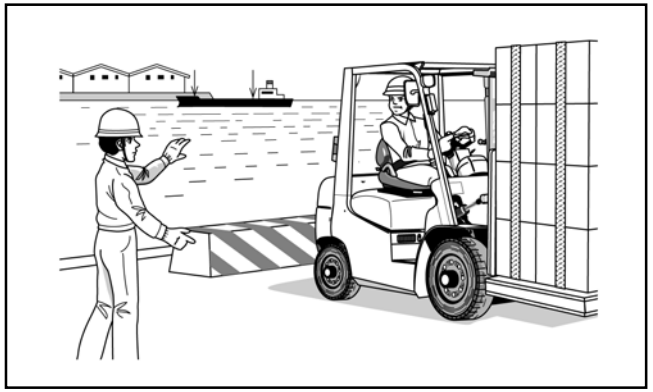

If the truck is to be used on a loading dock, shore wall or other raised surface, install curbs or railings.

DO NOT RELY ON THE OVERHEAD GUARD

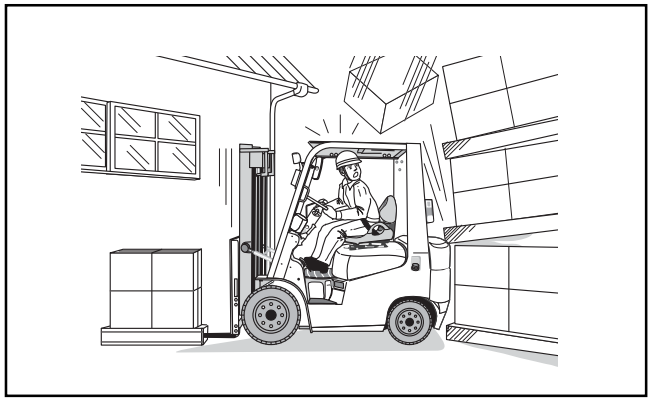

The overhead guard is a protective device that will moderate the impact of an object falling from overhead, but it cannot withstand every impact. If a heavy object seems likely to fall on the truck, make every effort to prevent it from doing so.

https://truckmanualshub.com/

PROPER USE OF THE LIFT TRUCK

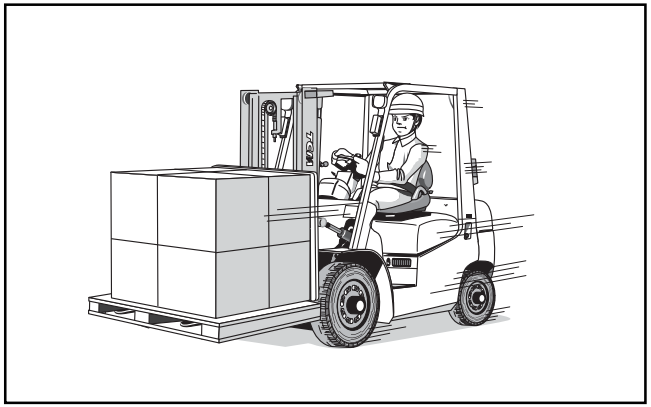

The proper use of a lift truck is to transport a load which is placed on the pallet and stacked within the prescribed height limit.
With a proper attachment, a lift truck may be used to transport a load which is stacked elsewhere than on the pallet.

IMPROPER USE

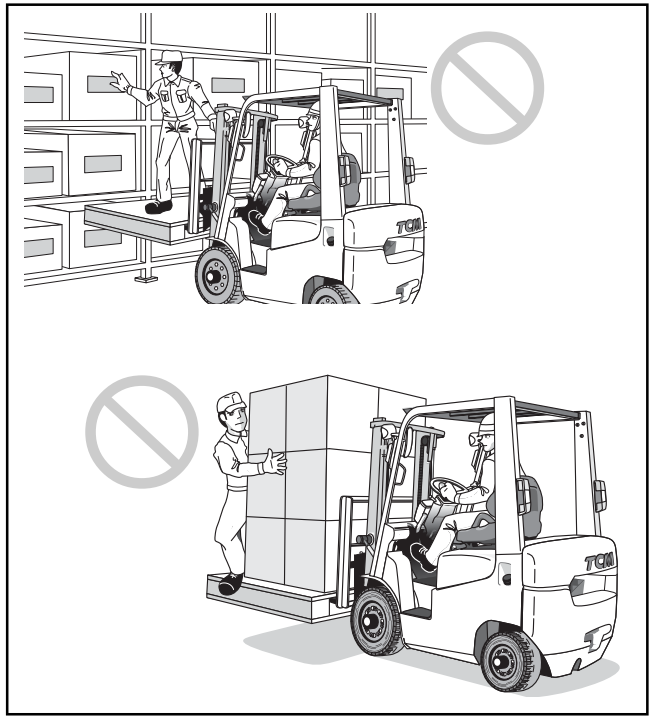

Transporting a person, elevating a person, and towing another vehicle are examples of the improper use of a lift truck. Uses which this manual specifies as improper must never be requested or permitted, under any circumstances.
(Examples of Improper Use)

- Transporting or elevating a person on the forks or pallet.
- Carrying a person on the pallet to control the load.
- Hanging wire ropes from forks to lift a load.
- Towing another vehicle.
- Pushing a load or another vehicle with the forks.
- Using the forks or truck body to close or open the door of a freight vehicle.

https://truckmanualshub.com/

READ MANUAL AND DECALS

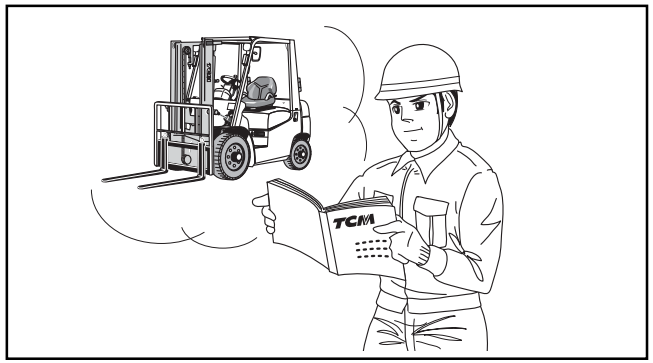

Read the Operation & Maintenance manual and caution plates on the truck, and become familiar with your truck and operating procedures. Remember that individual lift trucks might be different in design and construction from one another. Observe the caution decals on the truck. Keep this Operation and Maintenance manual on the truck as a ready reference for anyone who may drive or service it.

KEEP DECALS LEGIBLE

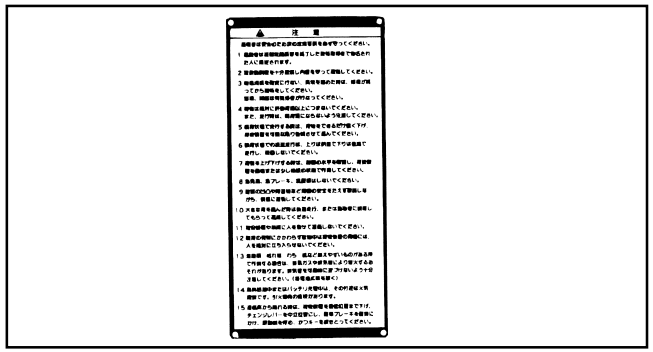

The decals on the truck describe safety precautions and operating instructions. Replace any damaged or missing decals. Check that the decals are legible during regular inspections.

NO OPERATION WITHOUT LIGHTS, OVERHEAD GUARD, OR BACKREST

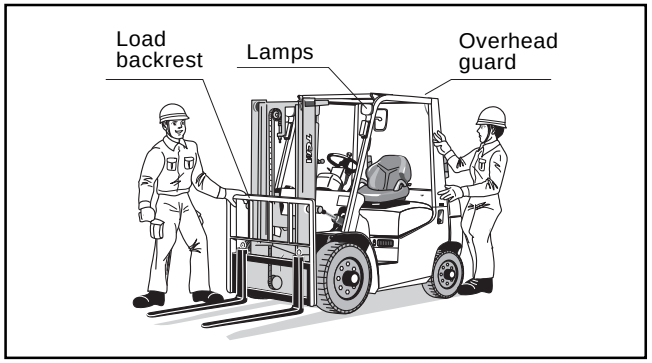

The lift truck cannot be used if the headlights, taillights, overhead guard, backrest, horn or turn signals have been removed. Any parts that have been temporarily removed for some reason must be reattached immediately.

OBTAIN APPROVAL FOR ANY MODIFICATION

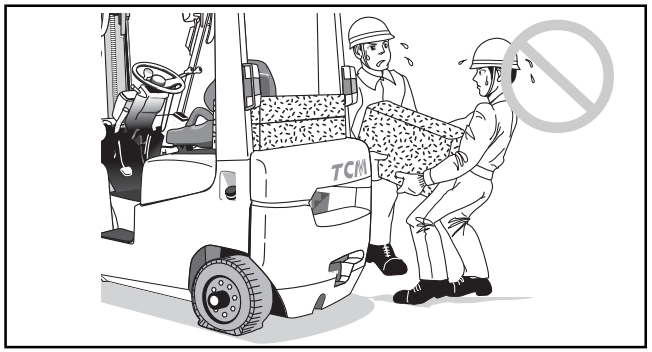

Modifications or additions that affect the capacity, construction or strength of the truck must not be performed by the user without the manufacturer's prior permission. For example, don't add a counterweight.

https://truckmanualshub.com/

USE THE RIGHT TRUCK FOR THE JOB

Be sure the type and capacity of the lift truck is suitable for the work environment.

Check Point	Choice
Capacity	Load capacities range from 0.5 to 42 tons. Pay particular attention to the load center. (TCM Lift Truck Capacities: 0.5, 0.7, 0.9, 1, 1.35, 1.5, 2, 2.25, 2.5, 2.75, 3, 3.5, 4, 4.5, 5, 6, 7, 8, 10, 10.5, 11.5, 12, 13.5, 15, 18, 20, 22, 23, 24, 25, 30, 37, or 42 tons.)
Power Source	Gasoline, natural gas, diesel, and battery- powered models are available. Fuel costs and exhaust composition will vary.
Balance	On counterbalanced models, the counterweight at the rear makes the vehicle longer than reach trucks. A reach truck performs loading and unloading by extending the front part of the mast outward, which gives it the advantage of compactness.
Tires	For indoor use, there are models with solid tires (best for reach trucks) and cushion tires (engine type or battery type). Both are compact. For outdoor use, pneumatic tires work well. Solid cushion tires, with the same dimensions as pneumatic tires, may be the best choice in cases where the load materials or surface conditions could puncture pneumatic tires.
Flammable Materials	For handling flammable materials such as petrochemicals, a combustion engine is too dangerous. An electric vehicle with explosion-proof or safety-reinforced construction is required. (A battery power source always offers better protection against fire than a combustion engine.)

USE THE PROPER ATTACHMENT

⚠ WARNING

Avoid hoisting a load with wire rope hung from the forks or an attachment, or avoid lifting a freight container with forks, because there is danger of the truck tipping. If necessary, have a qualified operator use a hook or crane arm attachment.

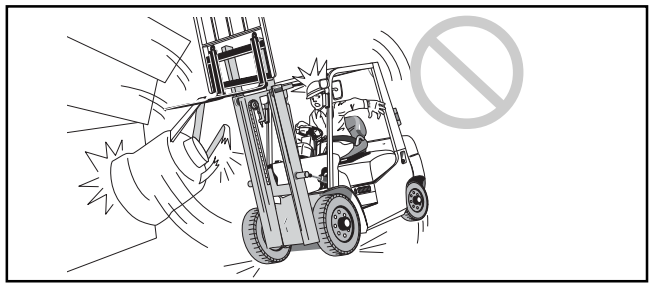

Popular Attachment Examples

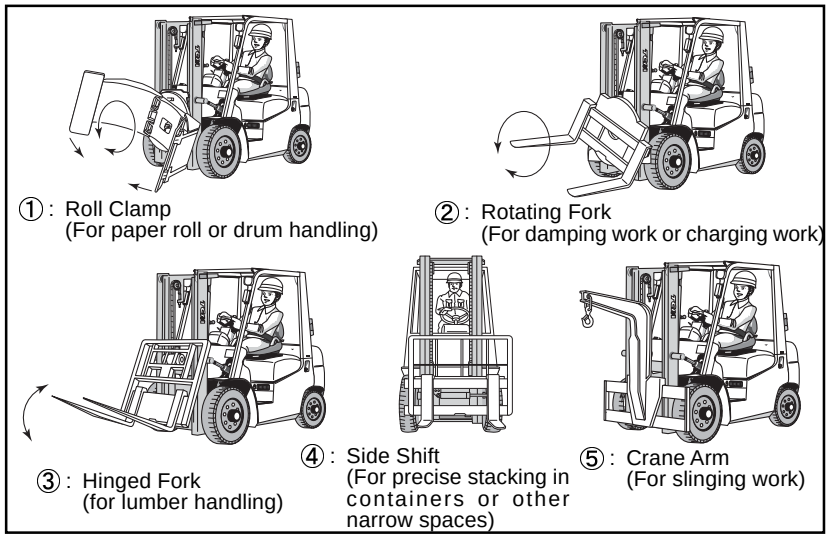

https://truckmanualshub.com/

HAVE A GOOD VENTILATION

Engine-powered trucks

When the engine is run indoors such as in an enclosed warehouse, have a fresh-air ventilation. Exhaust fumes can cause chemical poisoning, and in the worst case exhaust fumes can kill. When warming up or operating the truck indoors, open the windows and doors or use a fan to make sure there is a good ventilation.

USE STURDY PALLET MATERIALS

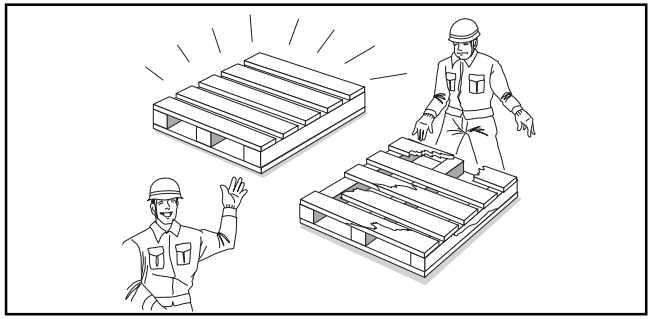

Pallets and skids must be strong enough to withstand the heavy weights of loading and unloading. Remove or repair any damaged pallet.

STACK LOADS SECURELY

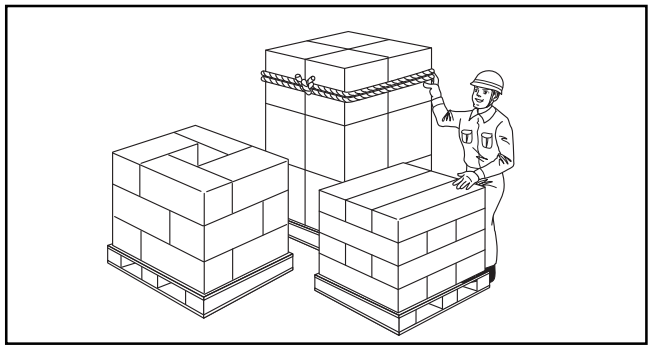

When stacking loads, place them in a stable manner that they will not easily come apart, and be sure the weight is evenly distributed. Secure the top layer with a cord wrapped like a headband or in a similar fashion.

KNOW THE WITHSTAND LOAD OF YOUR FLOOR

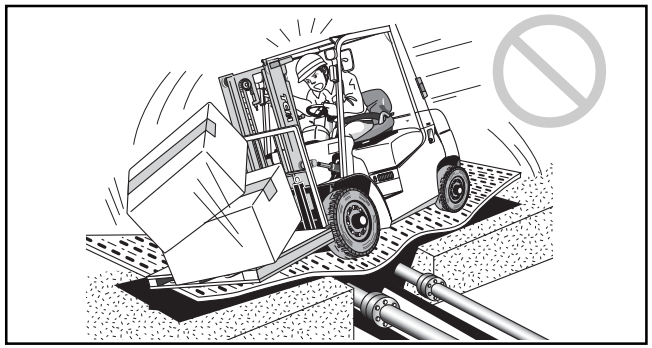

The lift truck is heavier than it appears. For example, a 2-ton truck weighs almost 3.5 tons even when empty. Furthermore, when loaded, 80 to 90% of the total weight is concentrated on the front wheels. Check the strength of your floors and roadways, and if necessary reinforce them.

https://truckmanualshub.com/

ALWAYS INSPECT BEFORE OPERATING

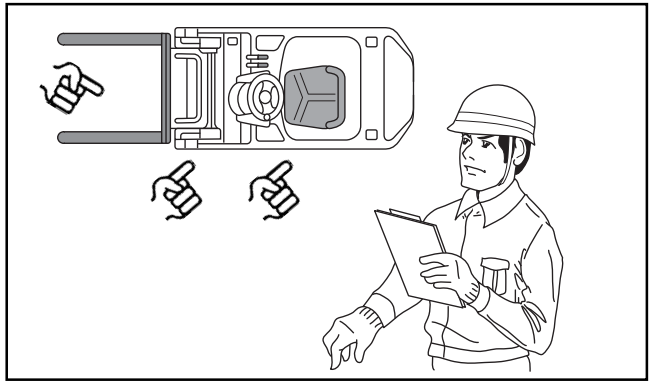

The operator should always inspect the truck before each use to verify that all essential safety features are working. Any abnormality is to be reported to the supervisor, who is responsible for correcting it.

PERIODIC INSPECTIONS ARE MANDATORY

Monthly and annual inspections must be performed thoroughly, and any abnormality promptly repaired. Only a certified expert who has the advanced skills and equipment is allowed to conduct inspections. Preserve the inspection logs for at least three years.

REPLACE SAFETY PARTS REGULARLY

	Name of safety parts	Recommended replacement interval (year)
1	Master cylinder and wheel cylinder cups and dust seals	1
2	Power steering hose	2
3	Reserve tank tubing	2 – 4
4	Fuel hose	2 – 4
5	Torque converter rubber hose	2
6	Rubber parts inside power steering unit	2
7	Lift chain	2 – 4
8	Load handling means hoses	1 – 2

Certain critical parts must be replaced at regular intervals. Since it is difficult to detect wear on the above parts by visual inspection, they must be replaced at the intervals specified, because a failure would result in a falling load or runaway truck.

NEVER USE AN UN-MAINTAINED TRUCK

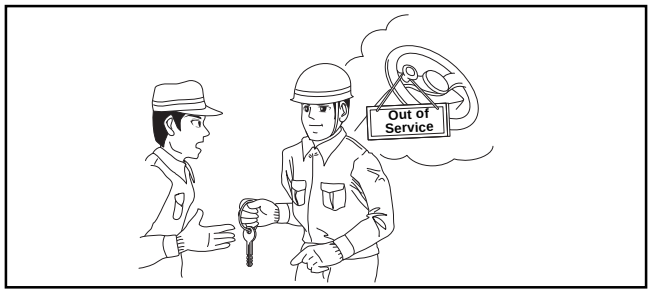

A truck that has not passed an inspection must never be operated. Hang a sign on the truck and remove the ignition switch, to make sure no one uses it. Then report the problem to the supervisor and wait for the repair to be completed.

https://truckmanualshub.com/

DESIGNATE A REPAIR AND ASSEMBLY SUPERVISOR

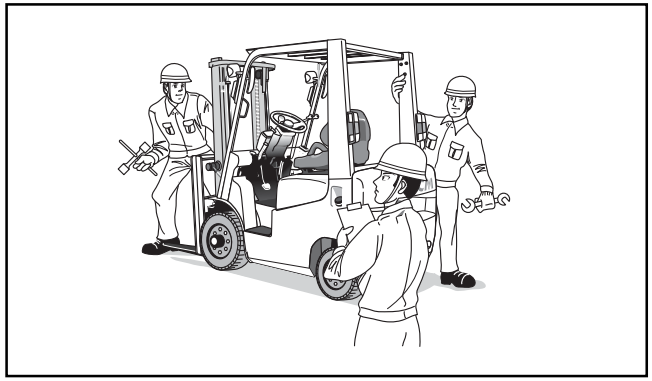

Repairs and the mounting and dismounting of attachments must be performed under the direction of a designated supervisor. The body and major parts of the lift truck are quite heavy and under very high pressure. Repair or assembly work undertaken without careful and thorough preparation can lead to serious injury.

TRANSPORTING THE LIFT TRUCK

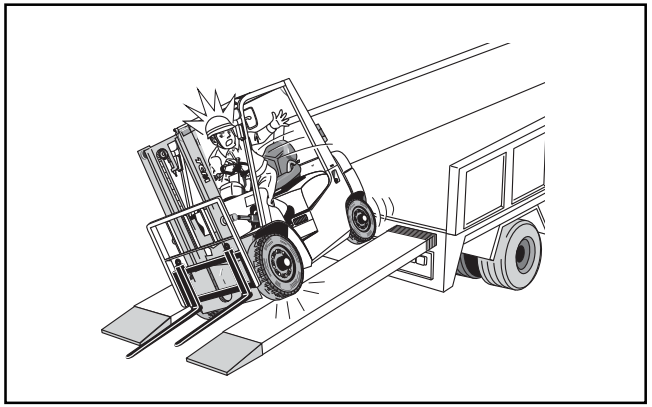

Use a level, hard road surface when loading the truck onto or unloading from a trailer and when unloading it. Be certain that the ramps have sufficient length and width as well as strength. Do not load or unload the truck when it is raining, unless the ramps are fitted with an anti-slipping surfaces.
It is safest to use a self-loading trailer truck equipped with a jack and winch. For loading, tilt the pallet with the jack, attach the winch to the towing pin of the lift truck, and pull it up. The operator must not ride on the lift truck during loading or unloading.

https://truckmanualshub.com/

USE OPTIONAL “LIFTING EYES” FOR LIFTING YOUR LIFT TRUCK

WARNING

Never hoist your lift truck at its overhead guard or counterweight; otherwise there is a danger of the truck falling.
If hoisting the lift truck is necessary for any reason, use optional “Lifting Eyes.”

WARNING

Observe the following conditions when lifting the lift truck:

- **Use optional “Lifting Eyes”.**
- **Use ropes strong enough to withstand the weight of the truck.**
- **Do not use any wire rope which is kinked, deformed or frayed.**
- **Lifting the truck should be performed only by qualified personnel.**
- **Do not enter under a lifted truck.**

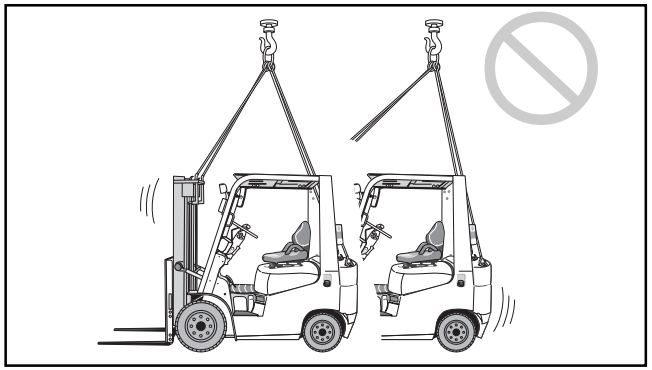

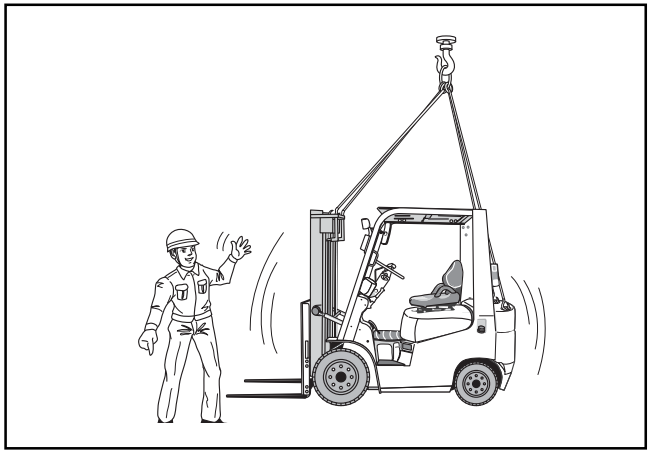

https://truckmanualshub.com/

GOT A LICENSE?

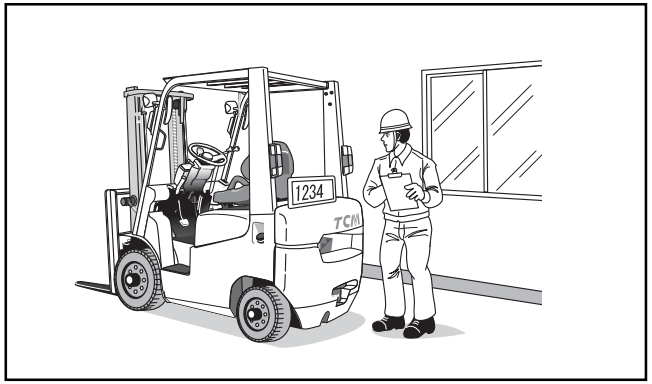

Before traveling on a public road, be sure that the truck has been licensed and inspected as required by local laws.

NO LOAD, NO TOWING

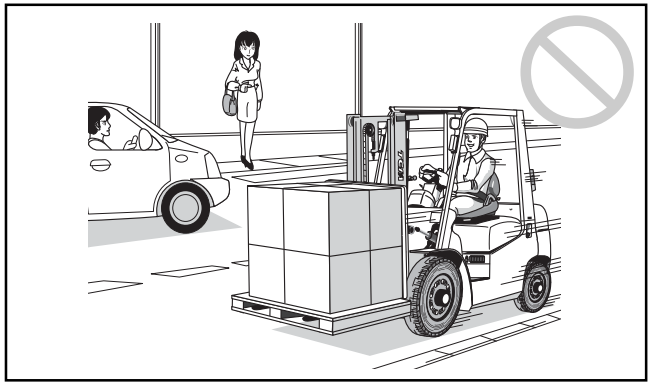

It is usually illegal to carry a load on a public road. It is also not allowed to make a sideways travel or tow another vehicle on a public road (with the possible exception of a disabled vehicle). Never tow another vehicle, even on company property.

OBEY TRAFFIC LAWS, AND TURN OFF YOUR LIGHTS

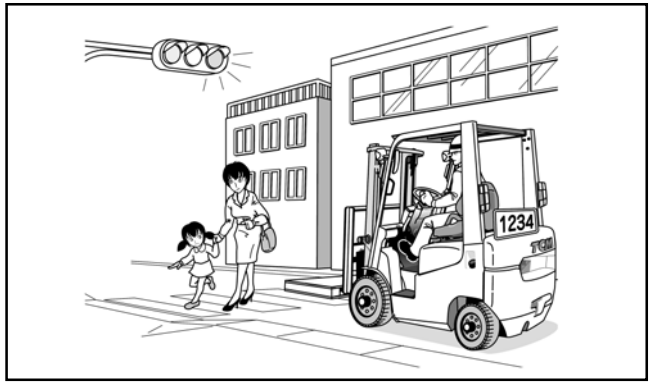

On a public road, the lift truck must obey the same laws as any other vehicle. Do not use rear working light.

https://truckmanualshub.com/

KEEPING THE TRUCK BALANCED

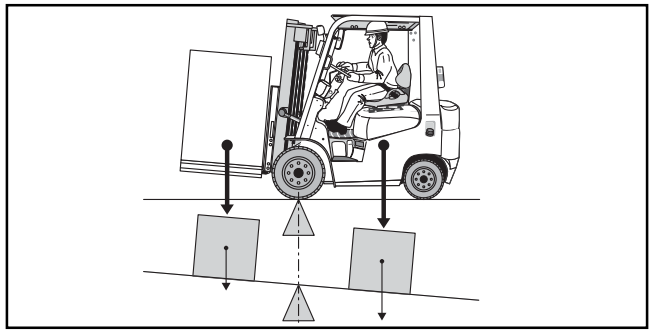

Lift trucks are equipped with load handling means including a mast and forks at its front part. The front wheels of the truck work as a fulcrum to balance the center of gravity of the truck and the center of gravity of the load. The relationship between the locations of those two centers of gravity is vitally important for safety.

KNOW THE CENTER OF GRAVITY OF YOUR LOAD

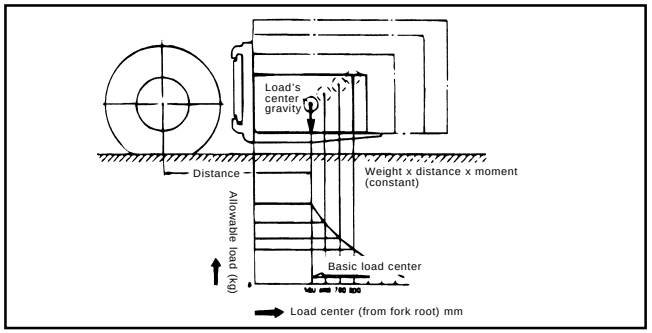

Materials of various shapes such as boxes or flat or cylindrical items may be loaded on the lift truck. In order to accurately judge the stability of the truck, it is vitally important for the operator to know the location of the center of gravity for each type of load.

HOW THE CENTER OF GRAVITY SHIFTS

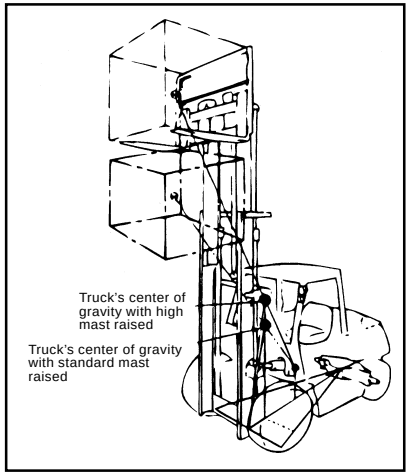

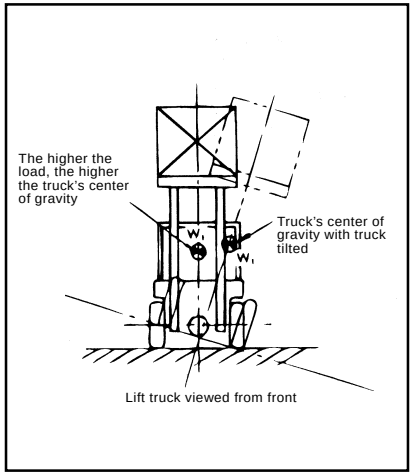

The stability of the lift truck is determined by the overall center of gravity, which is the product of the centers of gravity of the truck and the load. When the truck is empty, this point is the same as the center of gravity for the truck, and when it is loaded it shifts according to the center of gravity of the load. Since the center of gravity of the load changes whenever the mast is tilted forward or backward or the fork is raised or lowered, the overall center of gravity also changes. The center of gravity is also governed by the following factors:

- Size, weight and shape of the load
- Unloading height
- Tilt angle of the fork
- Tire material
- Acceleration, deceleration and turning
- Surface condition and gradient of the road
- Type of attachment

https://truckmanualshub.com/

HOW THE LIFT TRUCK WORKS?

■ OUTSIDE THE TRIANGLE OF BALANCE, THE TRUCK TIPS

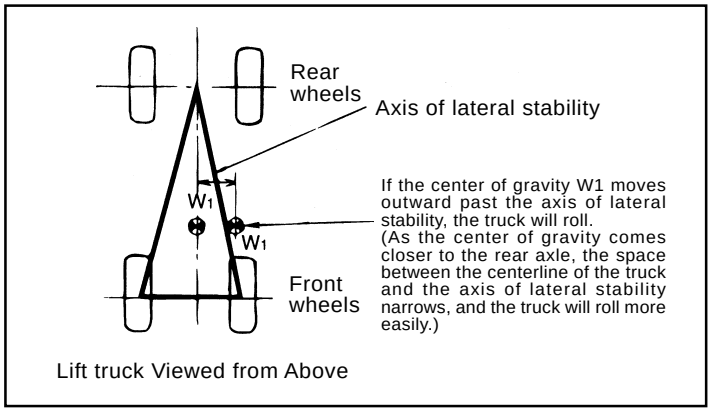

For a lift truck to remain stable, the overall center of gravity must be inside the triangle formed by the contact points of the left and right front tires and the center point between the steering wheels. The triangle defines the area of stability for the center of gravity.

If the overall center of gravity moves further forward than the front wheels, the truck will tip forward with the front wheels as the fulcrum. If the overall center of gravity moves outside the triangle to the right or the left, the truck will fall over in that direction.

■ RATED LOAD (LOAD WEIGHT AND LOAD CENTER)

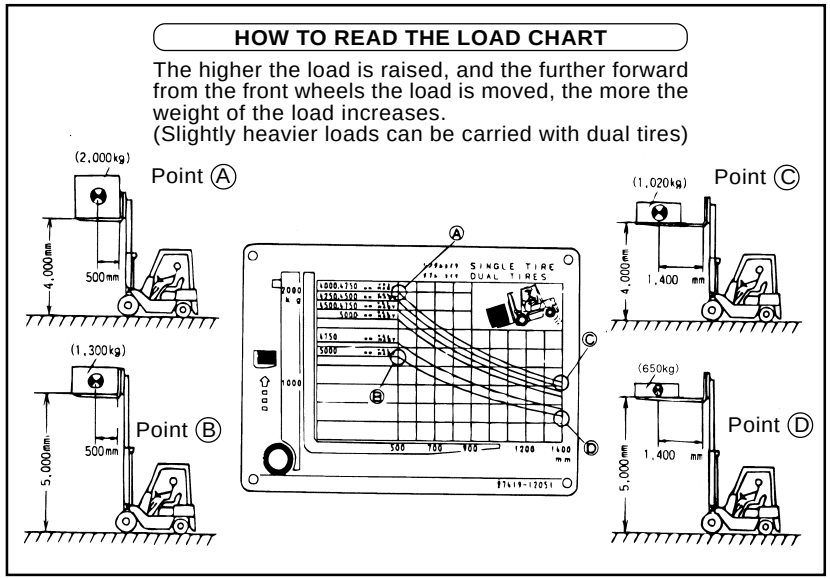

The load center is the distance from the front face of the forks to the center of gravity of the load. The rated load is the maximum weight allowable with the nominal load center.

The Load Chart, showing the relationship between the load center and the rated load, is attached to the truck as a decal. The rated load decreases as the load center moves toward the tip of the forks, and as the overall center of gravity moves forward.

https://truckmanualshub.com/

■ ACCELERATING, DECELERATING AND TURNING

The principle of inertia provides that a stationary object will remain stationary as long as there is no external force acting on it, and that a moving object will continue moving at a constant speed as long as there is no external force acting on it.

Due to inertia, when the lift truck starts to move there is a momentary backward force, and when it stops there is a momentary forward force. As a result, if the brakes are applied suddenly, there is a very strong hazard that the forward force will become strong enough for the truck to tip forward.

Likewise, when the truck is turning there is a centrifugal force that pulls it outward from the turning center. This force can cause the truck to fall sideways. Since the zone of lateral stability is especially narrow, it is necessary to slow down substantially when turning in order to prevent the truck from tipping.

When the load is elevated the overall center of gravity is raised, increasing the danger of the truck tipping over to the front or side.

https://truckmanualshub.com/

TRAVELING

Do not operate the lift truck until preoperational checks are finished

If any defect is found during checking, report it to the supervisor and have it repaired.
Do not operate the truck until the malfunction or damage is properly repaired.

Mount properly

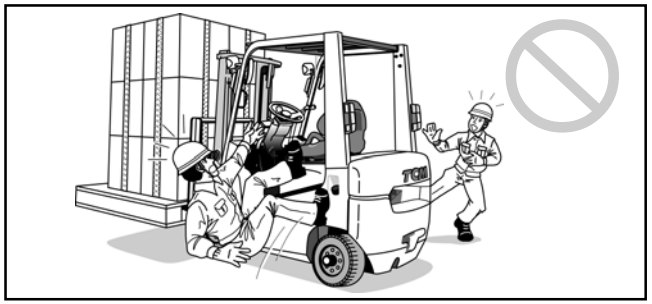

Never mount or dismount a moving truck. When mounting or dismounting the truck, use proper procedures, make sure the truck is at a complete stop. Support your body using the steps and hand grips properly. Keep the steps always clean.

When starting the engine Engine-powered trucks

When starting the engine, make sure to:
1) Apply the parking brake securely.
2) Place the direction shift lever and speed range shift lever into neutral.
3) Adjust the steering column angle and driver's seat position before starting the engine.
   Do not try to adjust them during operation; otherwise a serious accident might occur.
   After adjustment, make sure they are securely locked.
4) Seat yourself in the operator's seat and fasten the seat belt.
5) Press the clutch pedal (trucks with clutch) or brake pedal (trucks with torque converter).
6) Make sure there is no one under or around the truck, and start the engine.

Caution to be taken when starting the electric truck Electric trucks

Before trying to start the truck (before turning the key switch to ON), follow the procedure given below:
1) Apply the parking brake.
2) Place the direction shift lever in neutral.
3) Adjust the steering wheel and operator's seat before turning the key switch ON. Do not try to adjust them during operation; otherwise a serious accident might occur.
   After adjustment, make sure they are securely locked.
4) Seat yourself in the operator's seat and fasten the seat belt.
5) Press the brake pedal.
6) Make sure there is no one under or around the truck, and turn the key switch to ON.

Do not move controls unless properly seated

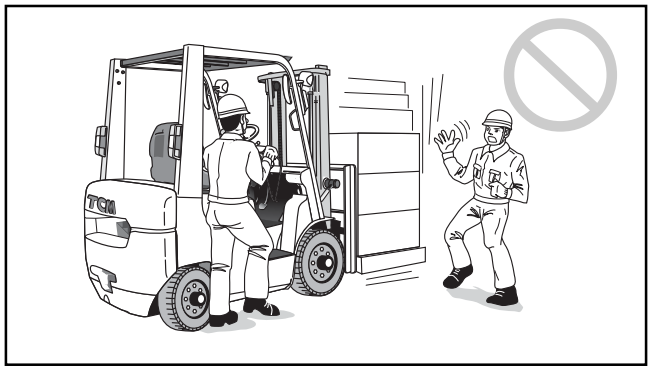

Do not operate the controls (levers and pedals) unless you are properly seated.

https://truckmanualshub.com/

Sound horn when starting

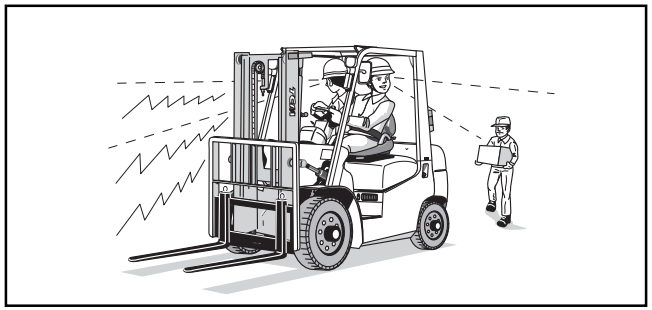

Before starting, make sure no one is near the truck. Let other workmen and bystanders know you are starting up by sounding horn.

Keep your hands clean

It is dangerous to operate the steering wheel and levers with greasy hands. If grease, oil or soil is sticking to your hands, clean if off.

Keep the truck's center of gravity low during traveling (when loaded in particular)

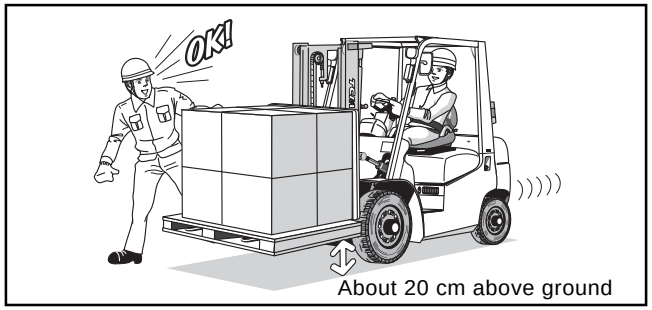

When traveling (when loaded in particular), keep the forks 20 cm above the floor or ground and tilted back, so as to lower the truck's center of gravity as far as possible.

Never use man as an additional counterweight

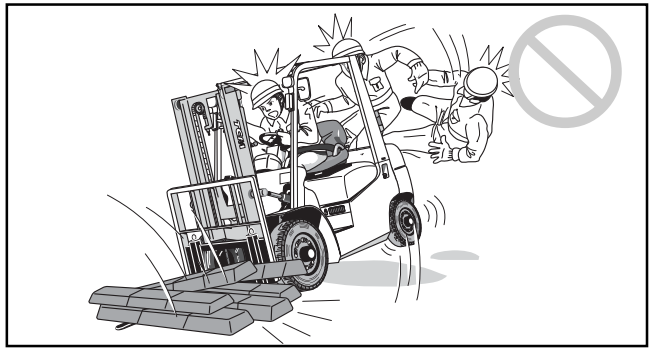

Do not use man as an additional counterweight. Do not offer rides to others.

Avoid sharp starts, stops and turns

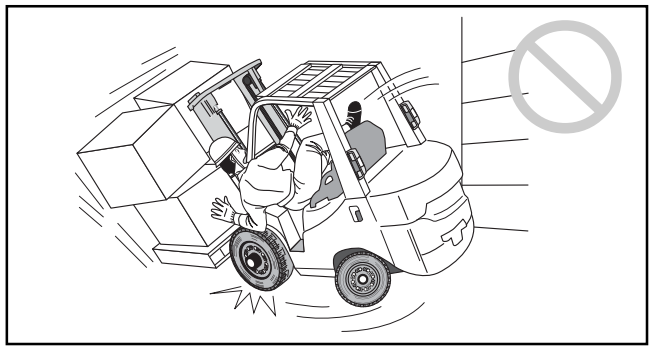

Start, stop and turn slowly. Before turning, slow down the truck sufficiently. In particular, an unloaded truck might tip over when it is turned sharply, because the rear of the truck is heavy.

Before reversing the direction of travel, bring the truck to a complete stop

It is dangerous to reverse the direction of travel abruptly.

https://truckmanualshub.com/

TRAVELING

Carry the load low

It is dangerous to travel with forks lifted higher than is appropriate, regardless of whether loaded or not. Keep the load as low as possible while traveling. Do not turn the truck with the load raised high.

Stay away from the edge of road

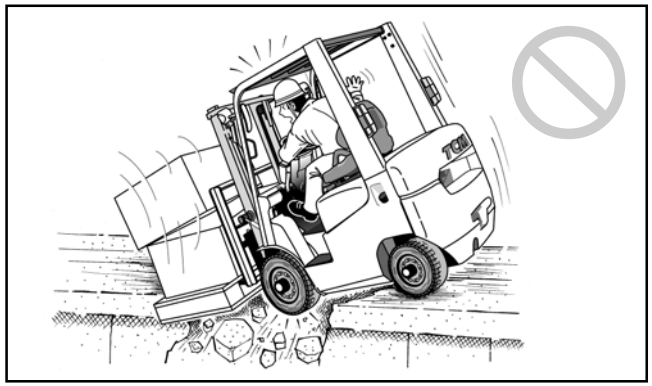

There is a fear of the edge of a soft ground breaking. Stay away from such a place. Keep appropriate distance from the edge of a narrow road or a platform.

Do not travel over a floor or ground surface covered with water

Do not travel over a floor or ground surface covered with water. Go round any pothole in the road.

Do not get into a soft ground area

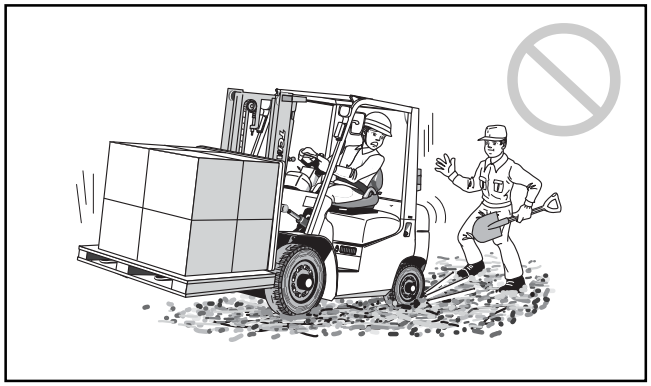

Avoid running on a slippery surface

Do not ride on obstacles (curb, railroad tracks, ditches)

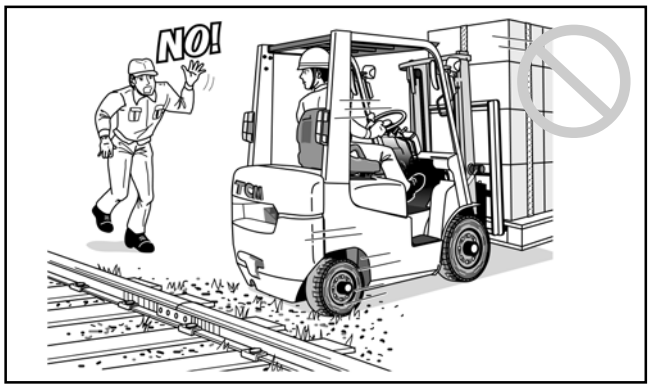

If unavoidable, be careful.

https://truckmanualshub.com/

Safe traveling:

- **Always look in the direction of travel**
  Always look in the direction of travel; failure to do so will lead to an accident. When passing an oncoming truck each other, slow down and use caution to have a safe distance. Moreover, maintain a safe distance from the truck ahead of you at all times.
- **Observe speed limits**
  Observe the specified speed limits.
- **Make sure there is no one or obstacle around the truck and in the direction of travel or turning**
- **Do not go past other trucks where vision is restricted**
  Do not go past other trucks at intersections, corners, narrow aisles and other locations where your vision is restricted.
- **Slow down at corners**
  Slow down and sound horn at intersections and other locations where your vision is restricted.
- **Come to a complete stop before crossing roads or at corners**

When going into areas where there are limits in height and width, use the following cautions:

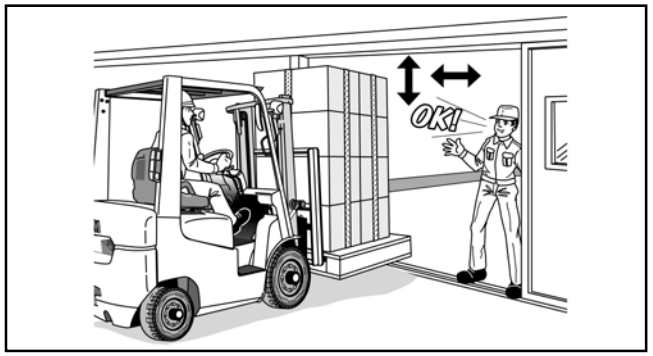

- Make sure there is enough height and width for the truck to pass.
- Do not put your hands and feet outside the truck.
- Make sure there is no one around the truck.
- Watch out for outdoor electric cables and other obstacles.

Rear steer, rear swing

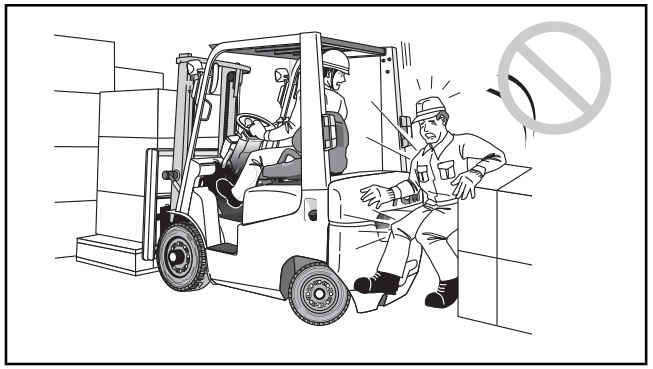

When the truck is turned in forward driving, the rear of the truck swings outwards. Before turning, make sure there is enough clearance from the wall and other obstacles.

https://truckmanualshub.com/

TRAVELING

Have a guide when handling bulky loads

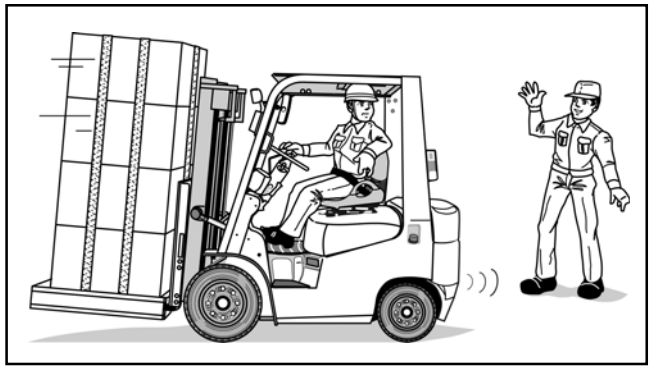

When handling bulky loads which restrict your vision, operate the truck in reverse and have a guide.

Reverse travel

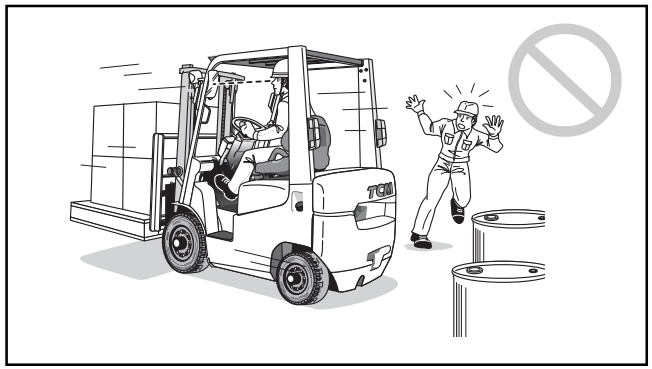

When traveling in reverse, always look in the direction of travel. Do not rely too much on the sideview mirrors (if so equipped) and backup buzzer.

Back down and drive up:

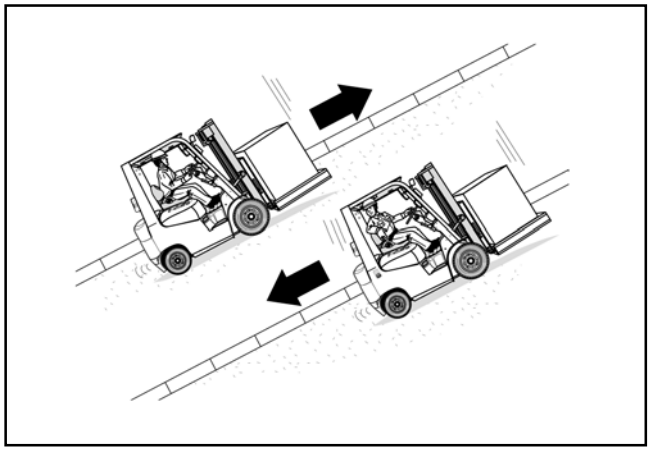

- Do not make turns on a gradient. There is danger of the truck upsetting.
- Keep the forks and pallet at an appropriate ground clearance height.
- When operating an unloaded truck on grades, have the rear end of your truck pointed up-hill.
- When operating a loaded truck on grades, have the rear end of your truck pointed down-hill.
- When descending a grade, use engine braking.
  Engine-powered trucks
  If the truck goes faster than you want, press the foot brake pedal from time to time. While using engine braking, do not operate the shift lever(s) nor press the inching pedal.
- When descending a grade, use the brake pedal.
  Electric trucks
  If the truck goes faster than you want, use the foot and regenerative brakes from time to time to slow down the truck.

https://truckmanualshub.com/

Brake the truck in good time

The truck takes a little longer to come to a stop on a slippery surface than on a usual surface. Brake the truck in good time. In addition, the stopping distance of the truck is longer on a downhill. Keep the traveling speed under your control.

Do not shut off the engine during traveling (trucks with power steering and power brake)

Engine-powered trucks

If the engine stops during traveling, both the power steering unit and the power brake goes inoperative.

Do not turning off key switch during traveling

Electric trucks

If the key switch is turned off during traveling, power steering becomes disabled to make steering hard.

Engine braking is not available when the inching pedal is pressed

Engine-powered trucks

When the inching pedal is pressed to the bottom, the brake is applied to the truck, but engine braking is not available because the clutch unit is disengaged.

When driving over a dockboard:

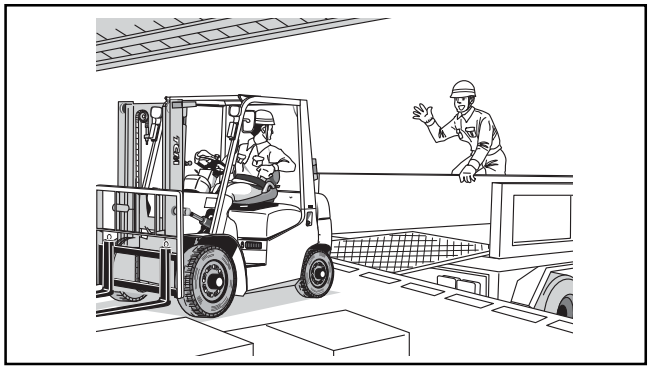

- Do not ride on the edge of the dockboard or bridgeplates; otherwise the truck might fall down, leading to personal injury or even death.
- Before driving over a dockboard or bridgeplate, make sure it is properly secured. Never exceed its rated capacity. Do not use a damaged dockboard or bridgeplate.
- Have the brakes set and wheels blocked in place to prevent the trailer from moving.
- Jacks must be installed to support the trailer when the truck goes into the trailer.
- Drive carefully and slowly across the dockboard or bridgeplate.
- Watch for bystanders.
- Give instructions to the trailer driver not to move the trailer until load handling is finished.
- Make sure the dockboard or bridgeplate is secured.

https://truckmanualshub.com/

TRAVELING

Know the load bearing capacity of the floor

Before entering a building or going into an elevator, make sure the floor is strong enough to withstand the weights of the truck and the loads.

Practice safe driving and load handling techniques

Before using the lift truck, you must practice safe driving and load handling techniques. Even after getting familiar with the operation of the truck, operate the truck carefully; reckless driving and operation will cause a personal injury or an accident.

When using multiple trucks

When operating multiple trucks, remember that their operating controls have their own characteristics even if the trucks are of the same specification. If you change the trucks, keep this point in mind. In particular, pay attention to the brake system.

Stay inside if the truck seems like it is about to turn over

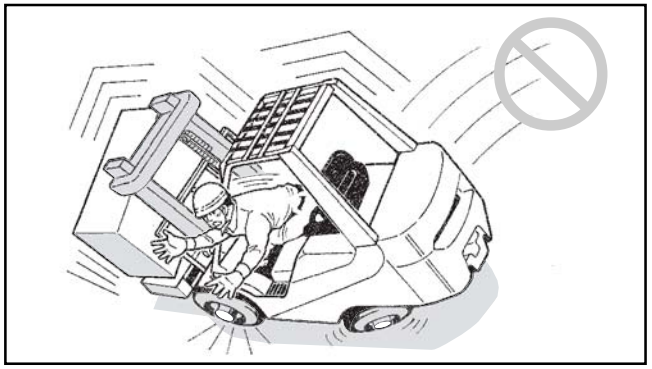

The operator must always fasten his seat belt. If the truck turns over, the operator might be thrown out and, in the worst case, the operator can be crushed under the truck causing severe injury or even death.

If it seems like the truck is about turn over, stay in the operator's seat. Hold on to the steering wheel firmly, brace your feet firmly on the floor, lean your body away the direction in which the truck seems like it is going to turn over. Never jump out of the truck!

https://truckmanualshub.com/

Keep anyone but a guide away from the working area

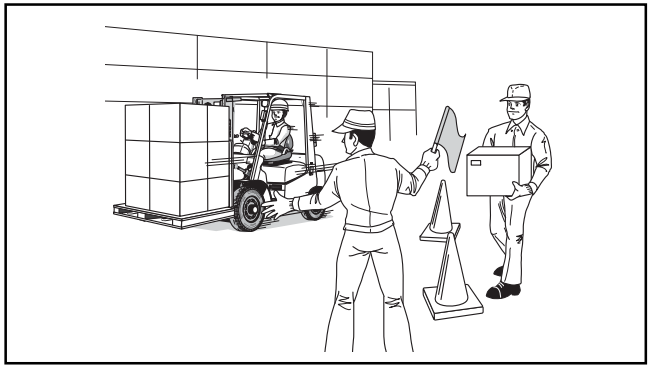

Do not let other persons or truck approach your lift truck during operation

When working in a group, have a person present to give guidance and follow his instructions

Do not use your truck for purposes other than specified:

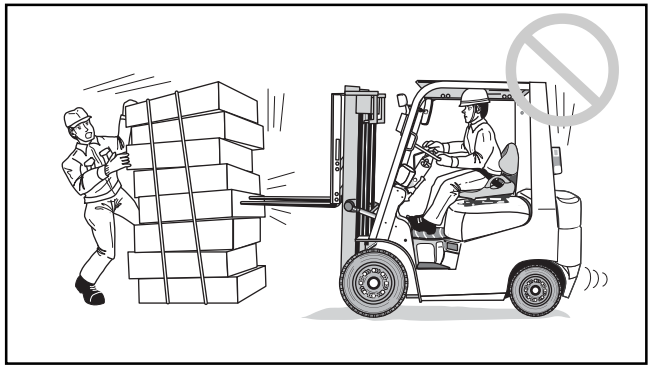

- Do not use the truck to open or close the doors of freight cars or warehouses.
- Do not push other trucks.
- Do not hoist loads, using ropes hung on the forks.
- Do not tow another vehicle using the draw bar.
- Do not push or pull loads with forks; otherwise, the load might fall off or get damaged. In particular, the truck with the max. lift height of more than 150 cm might tip over, if you try to do that.

Pay attention to the fork tips

The fork tips are sharp and could cause personal injury. In addition, if they catch on obstructions, the truck might lose control, leading to an accident.

Adjust fork spacing properly

Adjust the fork spacing suitable according to the size of the load.

Adjust fork spacing with your feet

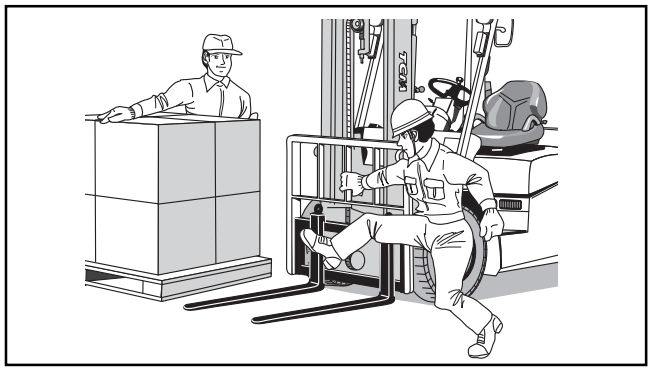

Adjust the fork spacing with your feet. Do not use your hands. You hands might get pinched between the forks and carriage.

https://truckmanualshub.com/

LOAD HANDLING

Make sure forks are securely locked

After adjusting the fork spacing, lock the forks with fork stoppers. Unlocked forks will slide during traveling, causing the load to fall off.

Do not put your hands or feet into the load handling system

WARNING

Never put your hands or feet on the mast or mast connecting members; otherwise your hands or feet might be cut if the mast moves unexpectedly.

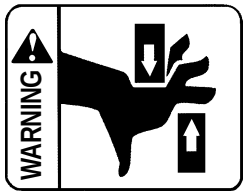

Never elevate a man

WARNING

Never allow other person(s) to ride on the forks. He might fall off the forks, getting injured.

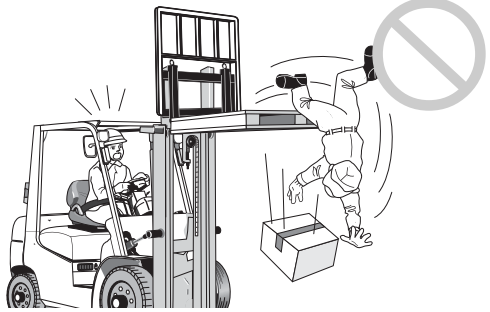

Never lift a load over anyone

WARNING

Never permit anyone to stand under raised forks. The forks might fall down unexpectedly, thus causing a personal injury.

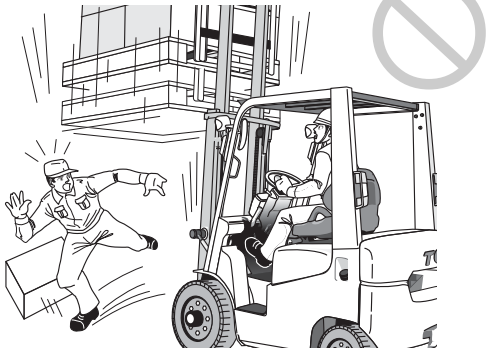

Do not ride on front guard

It is dangerous to use the truck body or mast as a ladder to ride on a high place.
You might be caught between the mast and truck body, resulting in a serious accident.

https://truckmanualshub.com/

Do not pick up loads from other truck

Do not pick up loads from raised forks of other truck. This might cause an off-centered load or the load to fall off.

Do not hold loads on the forks by hand

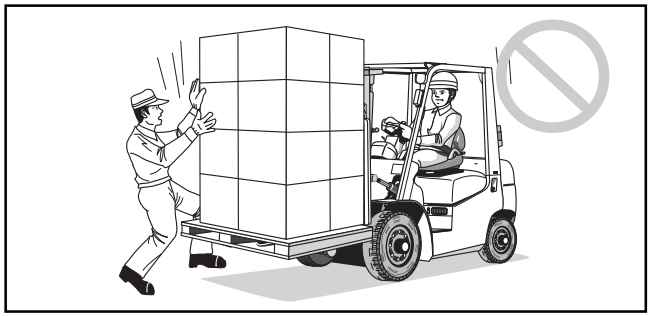

Do not hold loads on the forks by hand. If the truck moves unexpectedly, the load might fall off, getting the person caught under it.

Make loads in contact with load backrest

Insert the forks into the pallet as far as possible to make the loads in contact with the load backrest.

Do not stack loads too high on forks

Do not stack loads on forks in such a way that the top of loads exceeds the load backrest height; otherwise, loads might fall on the part of the operator, and in the worst case lead to a serious injury or death.

Do not lift unstable loads

Do not handle unstable loads. When handling loose loads, make sure they are stable enough before lifting.

Use special caution when stacking or unstacking loads

When stacking or unstacking loads, stabilize them with ropes or others, to prevent from falling off.

Use pallets and skids strong enough

Pallets and skids must be strong enough to withstand the weight of loads. Use of a damaged pallet or skid might let the load fall off the forks.

Use extreme caution when handling long or bulky loads

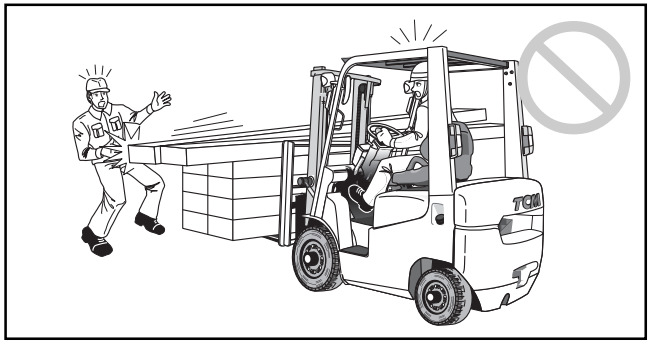

Lift and lower the load carefully so as not to hit it against something around the truck. Keep the load as low as possible. Be careful when turning the truck, to prevent it from moving out of position or falling off.

Be alert for overhead hazards

Use caution not to let the mast or overhead guard contact overhead power cables, piping, sprinklers or overhead cross beams. If part of the truck comes in contact with them, the load might fall off the forks or the truck tip over. Remember that the mast height becomes higher when the forks are raised.

https://truckmanualshub.com/

LOAD HANDLING

Never overload

WARNING

Know the rated capacity of your lift truck and its attachment, if any, and never exceed it; otherwise the rear wheels will be raised, thus making it difficult to travel and turn. There is also danger of the truck tipping over.

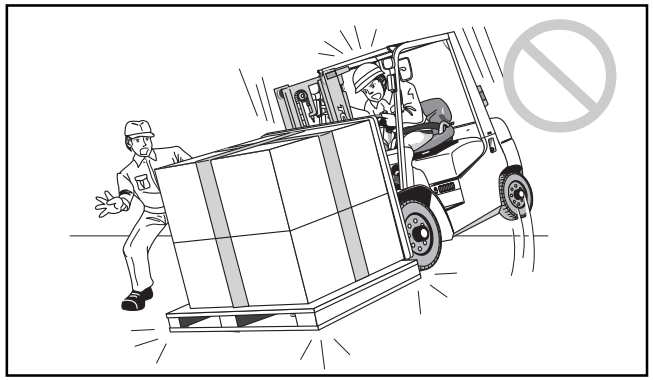

Do not jerk the forks (lift, down, and tilt) when loaded

The truck might tip over.

Do not tilt the mast with loads high

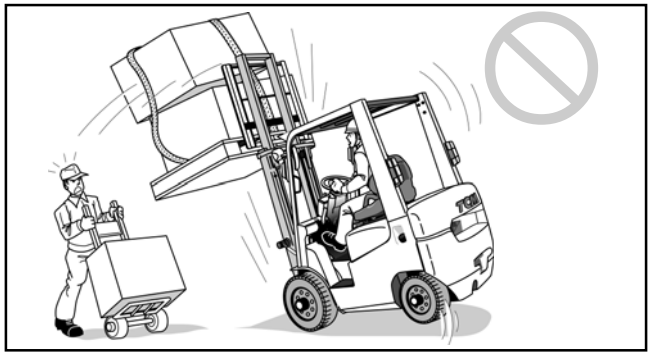

Use minimum forward and reverse tilt when stacking and unstacking loads. Never tilt forward unless the load is over stack; otherwise the truck might tip over.

Do not lift or start with mast tilted forward

When the mast is tilted forward, do not perform the following operations: lifting the forks and starting and traveling the truck.

Do not stack or unstack loads on a sloping grade

Do not squeeze loads into the stack

Do not squeeze loads into the stack using the truck's traction force. This will cause damage to the truck or loads, causing the truck to tip over.

Do not lift off-centered loads

Make sure that the loads are evenly positioned across the forks and that the load's center of gravity is aligned with the truck's center of gravity. Off-centered loads might cause the truck to turn over.

https://truckmanualshub.com/

Keep the chains tight

A slack chain means a mast rail or carriage hang-up, which might cause the sudden fall of loads or carriage or the truck to tip over. Keep the lift chains stretched tight at all time.

Do not hang loads with wire ropes attached directly on the forks:

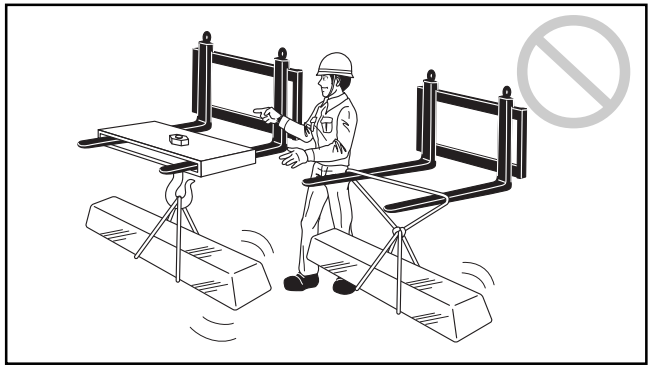

- Do not hang loads with wire ropes attached directly on the forks or attachment. If the wire ropes break or slide off, a personal injury might result. In particular, the use of a wire rope hung on one of the forks might cause the truck to turn over.
- Use a hook attachment or crane arm attachment to hang loads.
- Make sure that the wire ropes are strong enough to withstand the weight of the load and properly attached. The length of the ropes should be as short as possible but with adequate spread angle between legs.
- Carefully travel and turn when hanging a load with wire ropes; otherwise, if the load swings, the truck might turn over. Keep the load as low as possible.

A strong wind might cause loads to spill or the truck to tip over.

Loads might spill or the truck could tip over due to a strong wind. In particular, the risk of such an accident increases when the loads are raised high. Stop the operation or take necessary measures when a strong wind is blowing.

https://truckmanualshub.com/

PARKING

Park at the specified area

Park on a hard surface

Park at an out-of-traffic area

Park at an out-of-traffic area. Avoid parking near emergency exits, stairs, or fire hydrants.

Block the wheels when parking on a slope

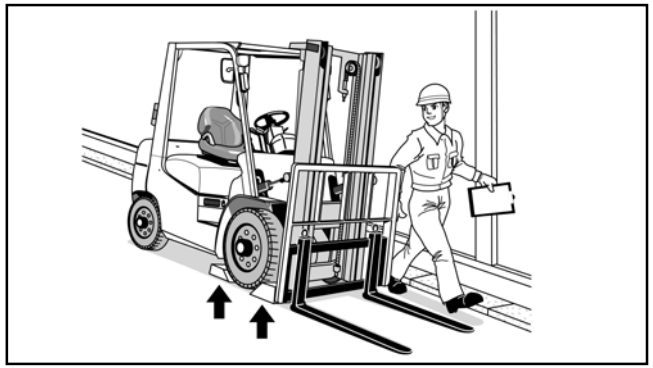

If unavoidable to park on a slope, apply the parking brake securely and block the wheels

Do not park near flammables

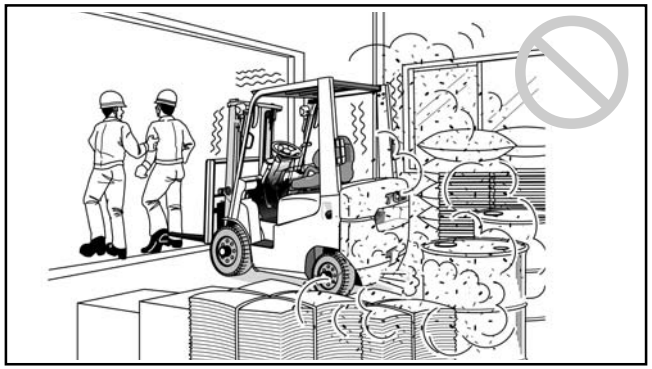

When parking a faulty truck

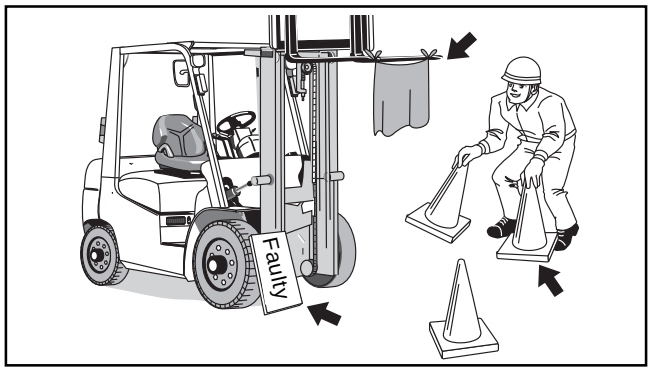

When it is not possible to lower the forks on the ground due to a faulty load handling mechanism, attach a sign to the tip of the forks to prevent pedestrians and other vehicles from bumping against the forks. Park the truck at an out-of-traffic area and take measures so as not to let people pass under the raised forks.

https://truckmanualshub.com/

Remove the key from a faulty truck and put up a sign

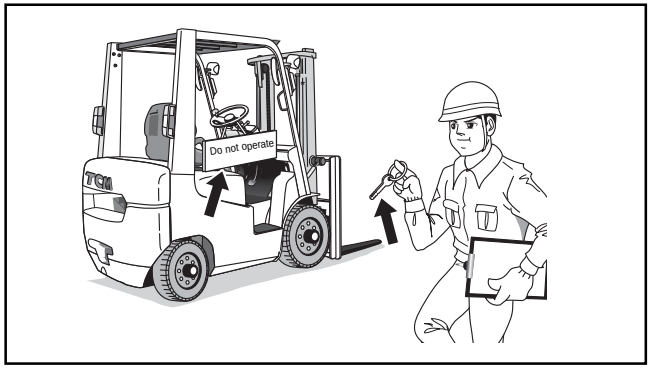

Remove the starter key and attach a sign saying DO NOT OPERATE.

When leaving the truck, observe the following conditions:

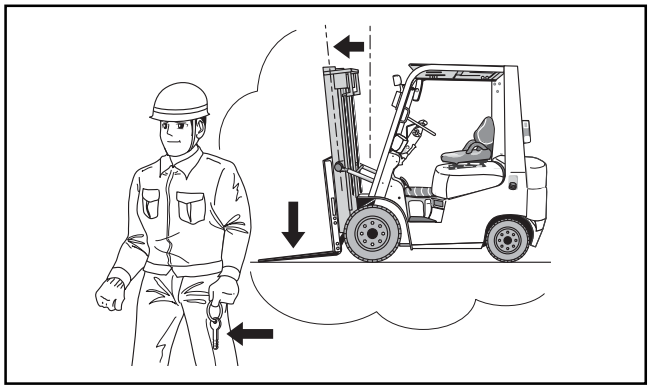

1) Park the truck on an out-of-traffic area and lower the forks on the ground.
2) Tilt the mast a little forward and make the fork tips in contact with the ground surface.
3) Apply the parking brake.

Engine-powered trucks

4) Place the shift levers (direction and speed range) in neutral.
5) Turn the key switch to the OFF position to shut off the engine.
6) Remove the key.

Electric trucks

4) Place the directional control lever in neutral.
5) Turn the key switch OFF.
6) Remove the key.

https://truckmanualshub.com/

INSPECTION AND SERVICE

Inspection and maintenance must be performed only by qualified personnel

WARNING

Inspection and maintenance of the truck should be performed only by qualified and authorized personnel. Improper inspection, maintenance or repairs will cause damage to the truck or a serious accident.

Park on a hard, level ground

Before performing inspection and maintenance, make sure to park the truck on a hard, level surface. Also make sure the place is dry and without dust.

Have a good ventilation

When performing inspection and maintenance indoors, have a good ventilation.

Have a fire prevention equipment handy

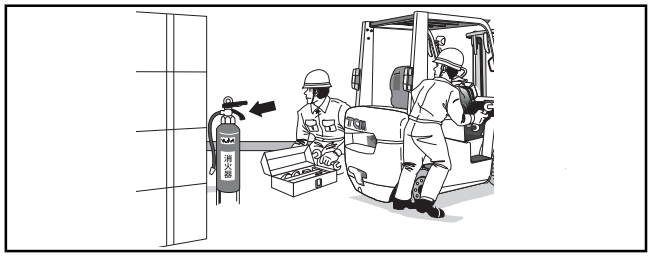

Have a fire prevention equipment handy whenever working indoors. Know how to use it.

Wipe any spilt oil or grease

Wipe any spilt oil or grease. If the truck is contaminated with oil or grease, it is difficult for you to find possible cracks or other defects.

No fire (when handling lubricants, batteries, cloth wetted with oil)

No fire. Never smoke or use fire or naked flame when handling lubricants, batteries or cloth wetted with oil.

Use appropriate tools

Use appropriate tools suitable for the job you have been assigned. Use of inappropriate tools might cause a serious accident.

Do not use tools for purposes other than specified

Do not use tools for purposes other than specified. It can cause a serious accident.

Avoid loose fitting clothing

Wear protective clothing called for by job conditions.

Wear safety gear devices (hard hat, safety shoes, safety glasses, gloves)

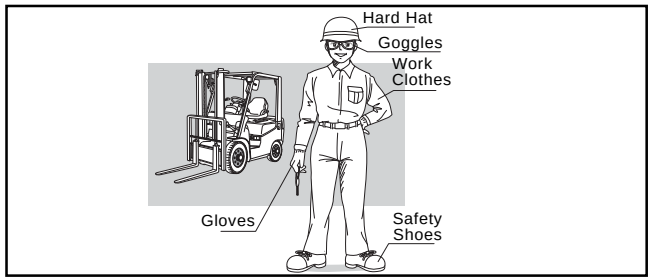

https://truckmanualshub.com/

When working in a group, have a leader and follow his instructions

Before starting inspection, shut off the engine
Engine-powered trucks

Make sure the engine is shut off before trying to start inspection or maintenance.

Before starting inspection, turn off the key switch
Electric trucks

Make sure to turn off the key switch before trying to start inspection or maintenance.

Unless otherwise specified, shut off the engine
Engine-powered trucks

Unless otherwise specified, inspection or maintenance should be performed with the engine shut off.

Unless otherwise specified, turn off the key switch
Electric trucks

Unless otherwise specified, inspection or maintenance should be performed with the key switch turned off.

Before starting inspection or maintenance, place the control levers in neutral

Make sure the forks and other attachment (if any) are on the ground

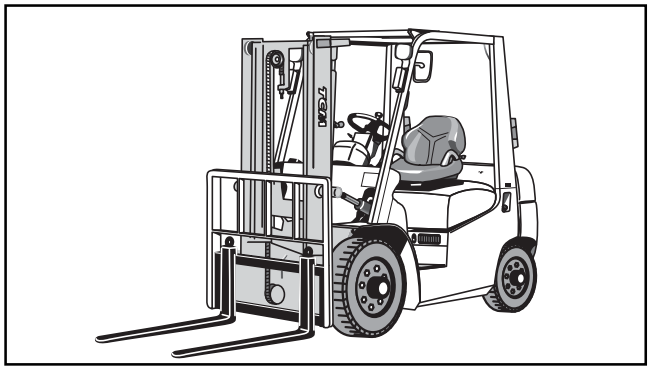

If unavoidable to work under raised forks or attachment, use a stable support under the inner mast and/or the carriage to prevent the forks or attachment from falling down unexpectedly

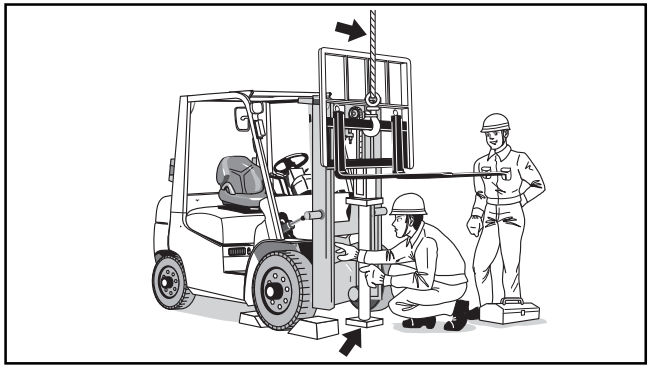

Do not put your feet under the forks

https://truckmanualshub.com/

INSPECTION AND SERVICE

Use caution not to get your fingers pinched in the floor plates or hood

Be careful so as not to get your fingers caught when closing the battery cover or doors.

Use caution not to fall down from the truck when working on the truck

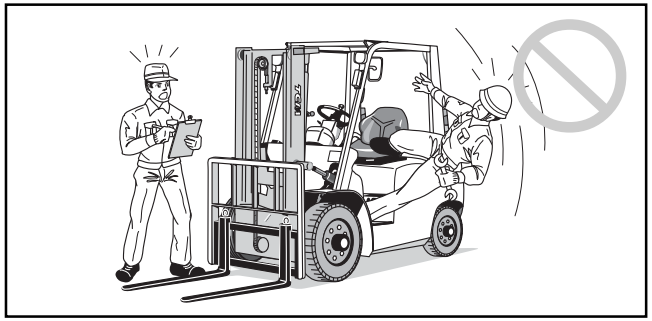

Do not use the mast as a ladder:

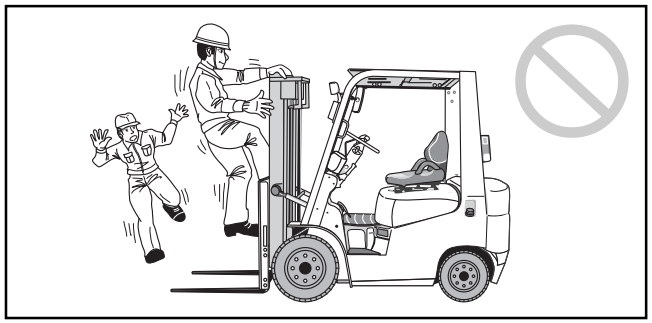

- When carrying out checks or adjustment, do not use the connecting member or load backrest as a ladder. The mast might move unexpectedly, pinching or cutting your hands or feet.
- Do not use the mast as a ladder. You might fall down from the mast, leading to a serious accident.

Shut down the engine before working on rotating parts Engine-powered trucks

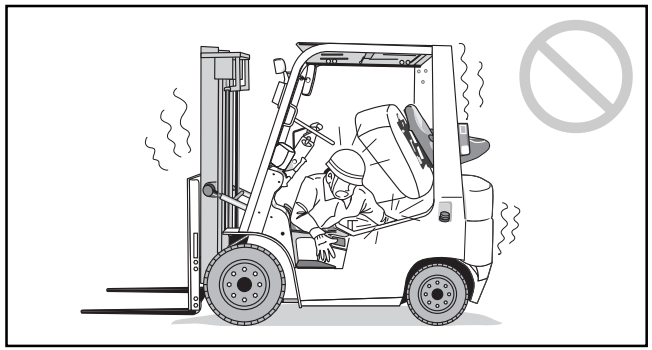

Use due caution when working on rotating parts, not to get your body or fingers entangled in them. Before checking a rotating part, make sure the engine is shut down. Do not bring something near rotating parts.

Make sure the engine is cool enough before servicing it Engine-powered trucks

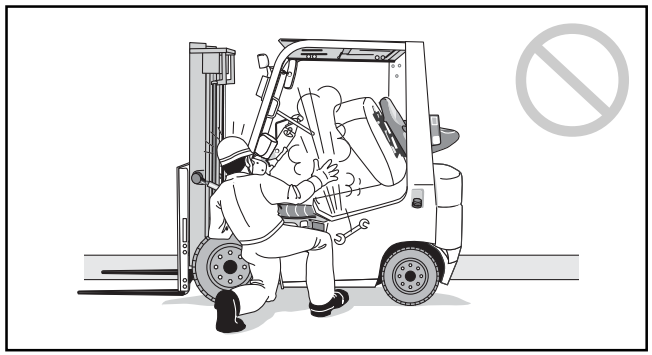

Immediately after the engine is shut down, the engine oil is hot and in high pressure. Do not try to drain oil or replace the filter. Hot engine oil might spout out to cause burns.

https://truckmanualshub.com/

Do not remove radiator cap when the cooling water temperature is high Engine-powered trucks

Immediately after the engine is shut down, the cooling water is hot and in high pressure.
Do not try to remove the radiator cap in this state. Hot cooling water might spout out to cause a serious personal injury or burns.

Loosen radiator cap slowly to allow steam to escape Engine-powered trucks

Hydraulic oil is hot immediately after the engine is shut down

Immediately after the engine is shut down, the hydraulic oil is hot and in high pressure. Do not try to drain the hydraulic oil or replace the filter. Hot oil might spout out to cause burns.

Release oil pressure before working

The hydraulic circuit has residual pressure. Before working on the system, release the pressure. To check for oil leaks, wear safety glasses and gloves and use a piece of cardboard or wood. High pressure oil penetrates the skin. It can cause blindness.

Checking of accumulator and piping is hazardous

Inspection of piping where an accumulator is installed is hazardous. When it needs to be inspected, ask your TCM dealer.

When high pressure oil comes in contact with your body, immediately get medical attention

Do not try to jump start the truck. The truck might jerk, causing an accident Engine-powered trucks

Caution to be taken when starting the engine using a booster cable Engine-powered trucks**:**

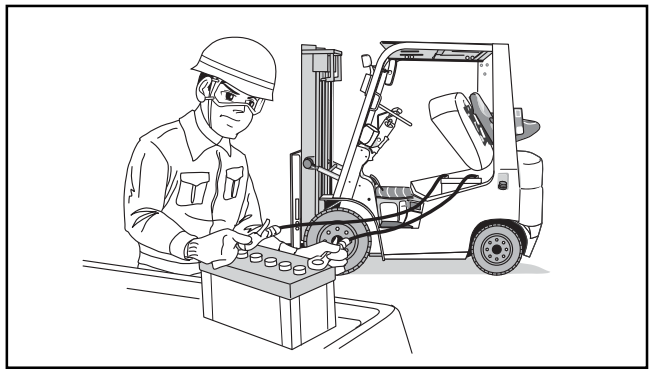

- When starting the engine using a booster cable, wear safety glasses. When starting the engine using the battery of another vehicle, use caution to prevent the truck whose battery is dead from coming in contact with the vehicle with a charged battery.
- Shut down the engine and connect the cable.
- Use caution to prevent the cable from getting entangled in the fan or fan belt.
- Do not have the wrong connections of the booster cable. Use due caution to prevent the positive (+) terminal from coming in contact with the negative (-) terminal.

https://truckmanualshub.com/

Use the specified brand of brake fluid

Use caution not to allow the entrance of dust into the brake fluid reservoir

Use caution to keep the breather of the brake fluid reservoir cap from clogging

Handling Long Life Coolant (LLC)

Engine-powered trucks

The LLC is flammable and poisonous. When storing it, attach a label “Dangerous substance” and keep it out of reach of children.

- The LLC is flammable. When handling the LLC, never smoke or use fire or naked flame near the LLC.
- The LLC is poisonous. Do not swallow it. If anyone swallowed it accidentally, let him drink a lot of water, induce vomiting and get medical attention immediately.

Caution to be taken when jacking up the truck

WARNING

Do not enter under the truck while it is jacked up. The truck might fall, getting you caught under it.

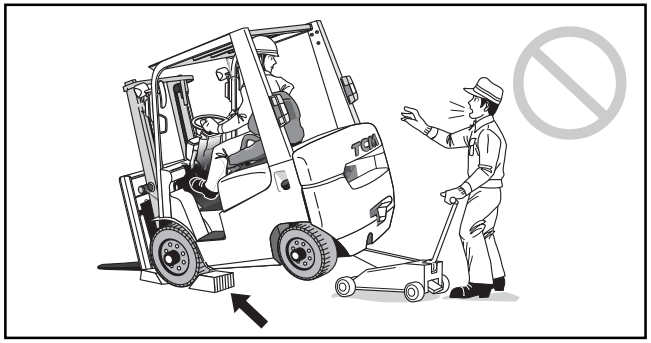

- Before jacking up the truck, remove the loads from the truck.
- When jacking up the truck, the operator must leave the truck. Lift the truck a little off the ground surface and put supports at both sides of the frame to prevent the truck from falling.
- Before jacking up, block the wheels to prevent them from rotating unexpectedly.

When hoisting the lift truck, use “Lifting Eyes”

WARNING

Never hoist your lift truck by attaching ropes or wires to its overhead guard or counterweight; otherwise there is the possibility of the chassis getting damage or falling. If hoisting the lift truck is necessary for any reason such as transportation, use an optional “Chassis Lifting Eye”. For the Chassis Lifting Eye, consult your TCM dealer.

- Lifting the truck must be performed only by qualified personnel (for crane or slinging work).
- The truck must be lifted by attaching wire ropes to the designated parts.
- Use strong wire ropes
  Make sure the wire ropes are strong enough to lift the truck and free from damage.

https://truckmanualshub.com/

⚠ Cautions to be taken when handling batteries:

- **If electrolyte gets on your skin, flush it off with a copious amount of water**

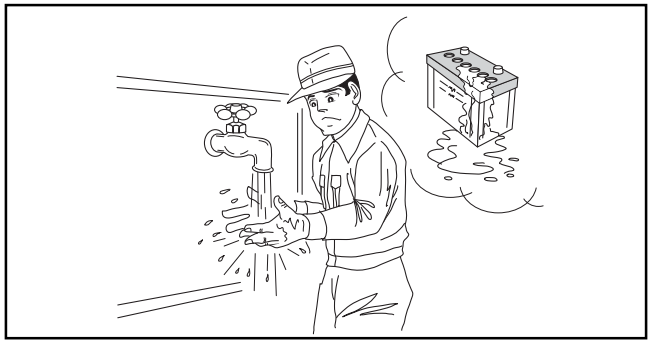

The battery electrolyte contains dilute sulfuric acid, a very corrosive material. It can destroy most things it touches. It will cause painful and serious burns if it gets on the skin. It can cause blindness if it gets into eyes. If battery electrolyte comes in contact with the skin or clothing, wash it away immediately with a copious amount of water.

- **If electrolyte gets into your eyes, get medical attention**
  If electrolyte gets into your eyes, flush it off immediately with a copious amount of water and get medical attention.
- **If anyone swallowed electrolyte accidentally:**
  Let him drink a copious amount of water or milk with egg white and salad oil mixed in it and take a rest. Send for a doctor.
- **Wear safety glasses when handling batteries**
  Wear rubber gloves, rubber boots, safety glasses when changing or charging batteries, adding battery electrolyte, or adjusting the specific gravity of the battery electrolyte.
- **The electric truck's batteries are high voltage**
  The batteries used for electric trucks are high voltages more than 48 V. If anyone touches it inadvertently, he can get an electrical shock accident or burn.
- **No fire**
  Since explosive hydrogen gases are always being released from the battery, there is a danger of causing an explosion. Never smoke or use fire or naked flame near the battery. No sparks.
  To prevent the generation of sparks, turn off the charger switch before connecting or disconnecting the battery or charger cable.
- **Do not put any metal tool on the battery case**
- **Do not short the battery terminals**

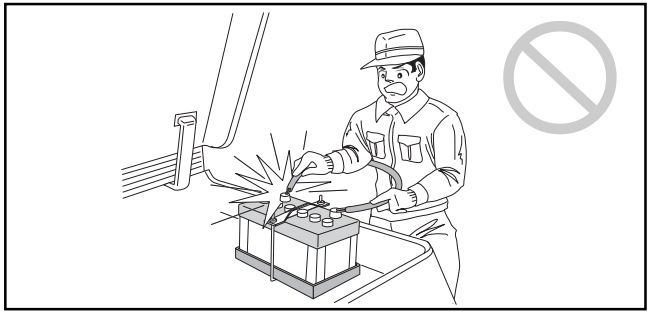

Do not short the battery terminals by placing a piece of metal between the positive and negative terminals. A loose terminal might cause sparks, causing an explosion. Make sure the terminals are tight. Use caution not to have the wrong connections of the battery terminals.

- **When turning the screw of the positive pole of the battery, use caution not to allow the tool to touch the metal parts of the truck, such as the engine** Engine-powered trucks
  If the tool touches metal parts, there might occur sparks, causing an accident.
- **Remove the negative (-) terminal of the battery first and reinstall it last** Engine-powered trucks
  When removing the battery, disconnect the negative (-) terminal first. When reinstalling, connect the positive (+) terminal first, and then connect the negative (-) terminal.

https://truckmanualshub.com/

- **When charging the battery, follow the instructions in the Instruction Manual of the charger**
- **No fire during charging**
  Batteries give off hydrogen gases during charging. No fire. No sparks.

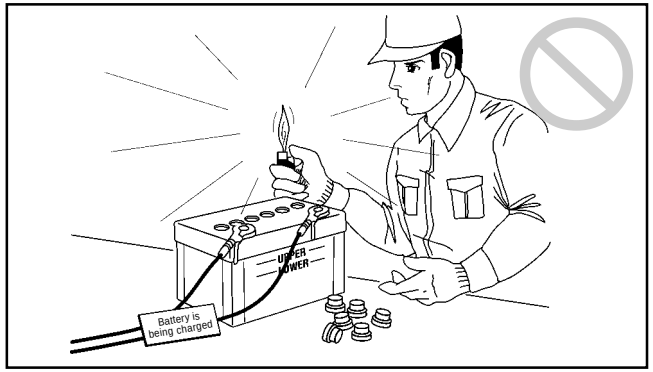

- **Make sure the battery electrolyte temperature is below 40°C**
  Hydrogen gases are released from the battery during charging, causing the battery to heat. Before trying to charge the battery, make sure the battery electrolyte temperature is below 40°C.
  (If the electrolyte temperature reaches 50°C or more, discontinue charging and wait until the electrolyte temperature drops to 40°C or lower.)
- **Have a good ventilation when charging**
  Since hydrogen gases are released from the battery during charging. Have a good ventilation; otherwise an explosion might result. Keep the battery case cover open.
- **Do not connect or disconnect the battery receptacles with the battery circuit conducting** Electric trucks
- **When cleaning the battery, make sure the battery caps are securely tightened**
- **Static electricity is hazardous**
  Static electricity is generated when cleaning the top surface or connections of the battery with a dry cloth, or covering the battery with a vinyl sheet. It might cause an explosion.
- **Static electricity from the body**
  Before checking or cleaning the battery, remove static electricity from your body by touching metallic parts at a place away from the battery.
- **Pay attention to battery electrolyte level**

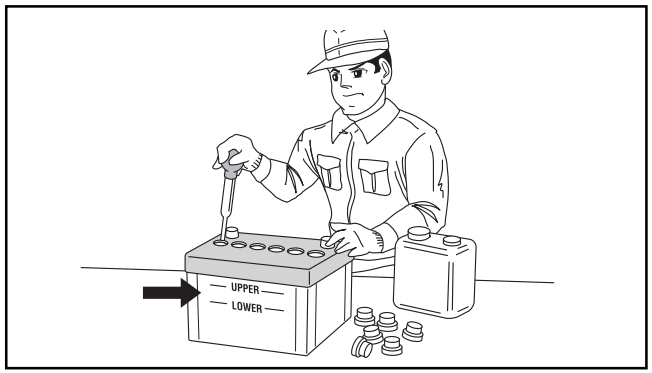

  Do not operate the truck or charge the battery when the battery electrolyte level is below the LOWER LEVEL marking; otherwise, the components inside the battery may be deteriorated and the battery life shortened, and in the worst case an explosion might occur. Keep the battery electrolyte level between the UPPER LEVEL and LOWER LEVEL markings at all times. Add purified water if the level is low.
- **Do not connect or disconnect the battery receptacles with the battery circuit conducting** Electric trucks
- **Prohibit to connect the battery that has over the specified voltage.**
- **When connecting the booster cable to the battery, pay attention to the polarity of the pole.**
  Two batteries shall be connected in parallel, not in series.

https://truckmanualshub.com/

Obey regulations

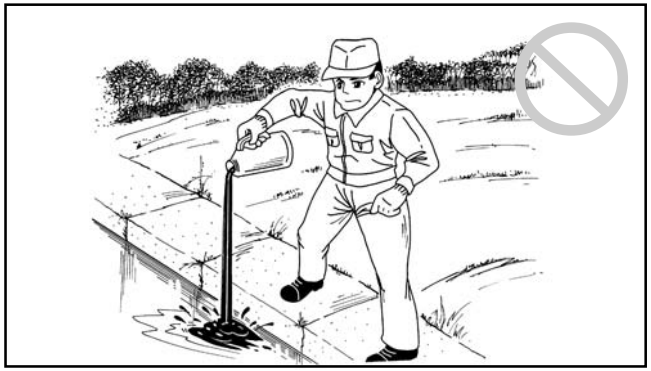

When disposing of waste oil, solvent, or discharged battery, obey the regulations and rules.

Caution to be taken when adjusting tire inflation pressure (rim, compressor):

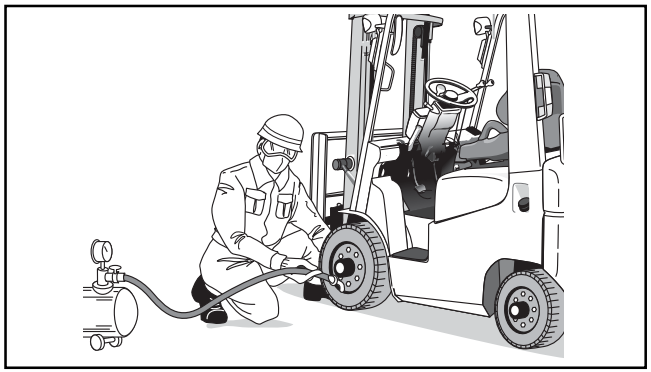

- When checking tire inflation pressure, position yourself in the path of rotation, not on the side of the tire.
- When inflating a tire using a compressor, first adjust the air pressure of the compressor; otherwise the air pressure will rise to the maximum pressure of the compressor, leading to a serious accident.
- Inflating tires to a high pressure requires special skill. Inflating tires requires special skill. Tires must be inflated only by a qualified person.
- When using compressed air, wear safety glasses and mask. When inflating tires, wear safety glasses and mask because dust might get into your eyes or mouth.

Do not loosen the wheel assembly nuts when changing a tire

The wheel assembly is locked in two ways: Hub nut type and nut type. In the hub nut type wheel assembly, the wheel is installed to the hub; in the nut type, a wedge ring is inserted between the wheel and the hub to lock the wheel assembly.
The tire is secured with the side ring and the lock ring.
When removing a tire from the truck, make sure the lock ring is securely installed; otherwise, the side ring, tire, and wedge ring might burst out, resulting in a severe accident.

Do not loosen bolts and nuts of split rim assembly:

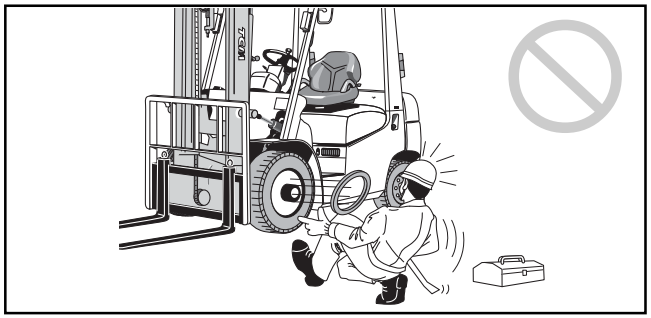

- The wheel has hub nuts that secure the wheel to the hub and rim nuts and bolts that assemble two rims together. When removing a tire from the truck, do not loosen the bolts and nuts of the split rim assembly.

https://truckmanualshub.com/

If the bolts and nuts of the split rim assembly are removed, the rims, bolts or nuts might blow off due to the internal pressure of the tire, to cause a serious personal injury.

- When replacing the rim assembly, install a new rim assembly with the head of each of the dowel bolts of the rim assembly pointing outside. (This helps make it difficult to loosen the rim bolts with the tire attached to the truck. Some bolts have a special shape for this purpose.)
- After replacing tires, test run the truck to check to see if the hub nuts are securely tightened. If a loose hub nut is found, tighten it to the specified torque.

Leave the disassembly and reassembly of tires, tubes and rims to a specialist

The inflation pressure of tires of the lift truck is very high (about 700 - 1,000 kPa) and thus due caution must be required to disassemble or reassemble the tires. An improperly reassembled tire might cause explosion to let parts fly into pieces, resulting in a serious personal injury.

Keep the tension of the right and left chains even

Uneven tension of the right and left chains means uneven loads even if they are properly placed on the forks. It may also lead to broken chains.

Keep sideview mirrors, backup alarm, and lamps in good working condition

Adjust the sideview mirrors to gain a full rear vision and keep the mirror's surface clean (if so equipped). The backup buzzer should sound when the direction change lever is placed in the reverse position. If the buzzer fails to sound, have it repaired.

Make sure the lamps turn on and off properly. Burned-out bulbs must be replaced with new ones.

Avoid fire hazards

- Wipe away any spilt lubricant or fuel inside the engine room.
- Do not leave waste cloth or paper contaminated with fuel or lubricant inside the engine room; it can cause fire hazards.
- The exhaust pipe, muffler and exhaust manifold are hot immediately after the engine has been shut off or while the engine is running.

https://truckmanualshub.com/

⚠ CARBON MONOXIDE POISONING

Engine-powered trucks

The following carbon monoxide control to avoid its poisoning is the user's responsibility.

■ Characteristics of carbon monoxide

The exhaust from all internal combustion engines contain carbon monoxide, a colorless, odorless, tasteless, poisonous gas. Exposure to carbon monoxide can cause serious injury or health problems, including death.

- **Places where carbon monoxide gas concentrated**
  Carbon monoxide can become concentrated in areas such as trailers, containers, coolers, freezers, and poorly ventilated rooms or buildings. Therefore, limit internal combustion engine usage in those areas.
- **Symptoms of carbon monoxide exposure**
  Common symptoms of carbon monoxide exposure may include headache, dizziness, and nausea. The smell of internal combustion engine exhaust means carbon monoxide could be present.
- **Treatment for carbon monoxide gas poisoning**
  If an operator experiences these symptoms, move him into fresh air, seek medical attention as required, and contact your employer so he can monitor threshold limit values. (Consideration should be given to shutting off the operator's internal combustion engine.)

■ Control of noxious gases and fumes

- **Source of carbon monoxide gas**
  Carbon monoxide is the product of incomplete burning of any material containing carbon, such as gasoline, LP and natural gas, and diesel fuel. Internal combustion engines that use these fuels are sources of exposure in the workplace.
- **Control of carbon monoxide gas**
  Control of carbon monoxide levels in the workplace is dependent on ventilation and proper maintenance of carbon monoxide producers including internal combustion-powered equipment. See periodical maintenance of this manual.
  Properly running internal combustion engines will still produce carbon monoxide emissions.
- **Ventilation**
  Ventilation shall be provided in enclosed areas where internal combustion-powered equipment is used to maintain an atmosphere that shall not exceed the contamination levels specified by the American Conference of Governmental Industrial Hygienists Threshold Limit Values of Airborne Contaminants.

https://truckmanualshub.com/

CAUTION PLATES

The caution plates attached to the lift truck explain cautions to be taken when using the truck, and procedures for operating the truck. Read messages on the caution plates as well as the description in this manual. Damaged or missing decals must be replaced with new ones.

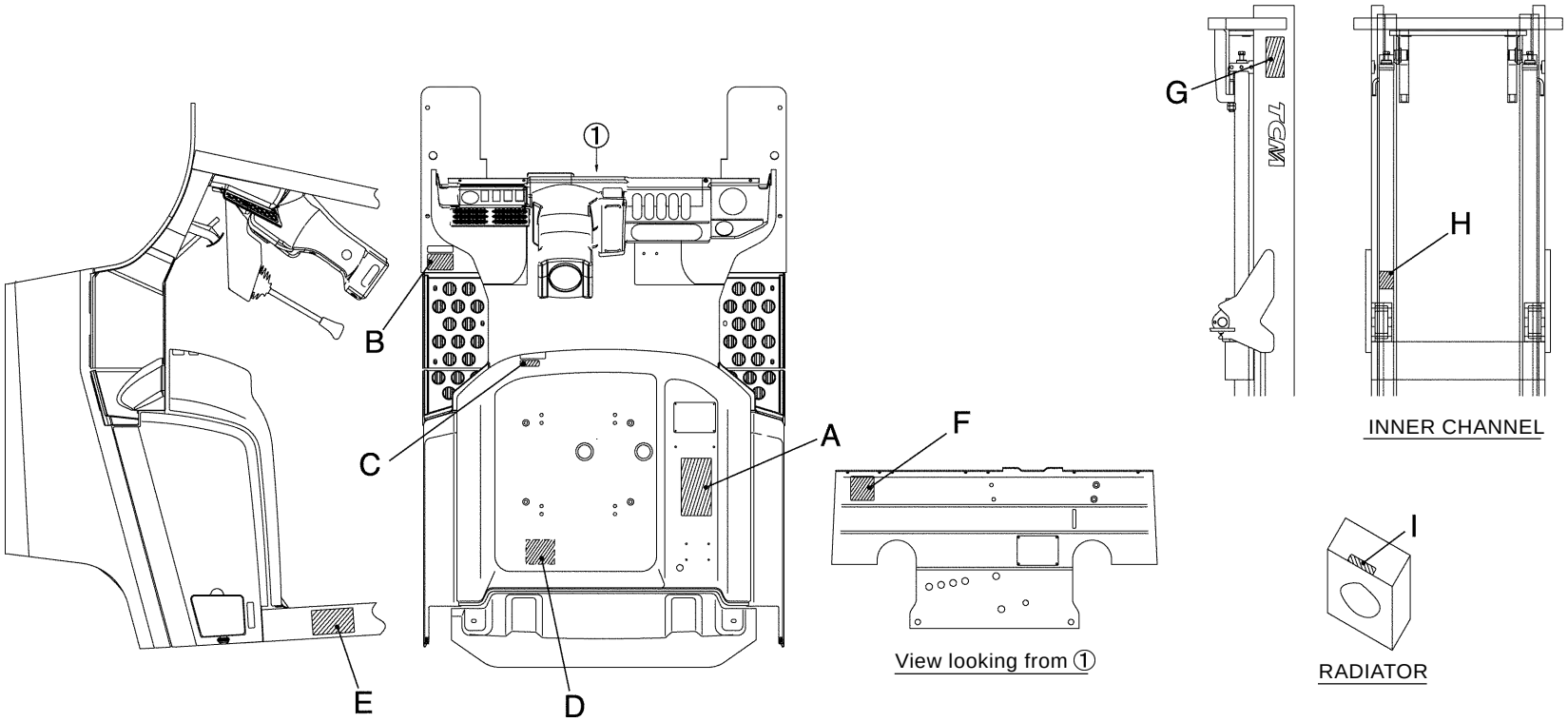

⚠ CAUTION

The instructions on the caution plates carried in this manual may differ from those on the caution plates attached to the truck body. In such a case, observe the instructions on the caution plates attached to the truck body.

https://truckmanualshub.com/

A. Safe operation

⚠ WARNING

YOU MUST FOLLOW THESE RULES TO AVOID SEVERE INJURY OR DEATH TO YOURSELF AND OTHERS.

1. Operate truck only if trained and authorized by your employer. Know Operation & Maintenance Manual and all work rules.
2. Safety check truck every day. Do not start if damaged or faulty; stop if problems start.
   Repair allowed only by trained, authorized mechanics.
3. Turn, start, stop, and handle loads smoothly and slowly.
   Carry loads low and tilted back; stack only on level using minimum tilt.
4. Look where you are going. Watch out for people, hazards on floors and overhead, drop-offs and tail swing clearance.
5. Truck overturn can kill you. Slow for turns even when empty. Never turn on inclines.
6. Do not lift overweight or loose loads.
   Move slowly with wide, high, or long loads.
   Keep forks wide and fully under loads.
   Travel in reverse if loads block view.
   Attachments require special training, ask your employer.
7. Keep loads upgrade on all inclines. Stay clear of ramp and dock edges. Make sure dockboards and trailers are secure before going on them.
8. Overhead guard and load backrest must be on truck.
   Always keep yourself completely inside guard.
9. Stop engine when refueling. Follow Operation & Maintenance Manual and employer's work rules about fuel, battery and tire maintenance hazards.
10. Forks can fall rapidly even with light loads.
    Do not raise people or allow them under forks.
    No passengers allowed on truck.
11. Park only in authorized areas, never on inclines.
    Lower forks to bottom, put direction control in neutral, turn off key and make sure parking brake is set.
12. Fasten the seat belt, when operating the lift truck.

B. Warning decal for handling inflated tires

⚠ WARNING

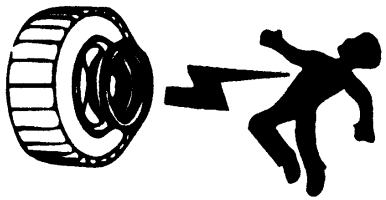

AVOID SEVERE INJURY OR DEATH.
Tire servicing requires special training.
Do not take tires off truck until all air pressure is out. Loosen only WHEEL LUG NUTS "A".
Do not loosen wheel assembly nuts "B" until all air pressure is out of tire.
See OPERATORS MANUAL for more important instructions for wheel service and reassembly.
Make sure all nuts and bolts are in place and tight.
Never add air to a tire that looks low. Let all air out and check for proper assembly.
Inflate all tires in a safety cage. See MANUAL for proper pressures.

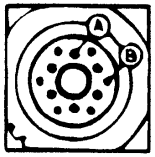

Split-type

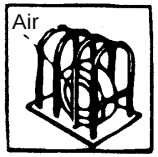

Safety cage

C. Warning decal for opening and closing engine hood

⚠ CAUTION

WHEN OPENING OR CLOSING ENGINE HOOD, PUT STEERING WHEEL IN STRAIGHT TRAVEL POSITION.

D. Warning decal for engine hood stopper

⚠ CAUTION

When opening the engine hood, make sure gas spring is securely locked at area indicated by arrow.

To close the engine hood, press area indicated by arrow while closing it slowly.

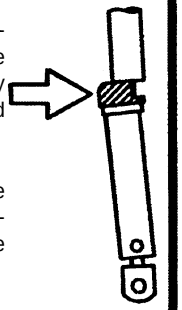

https://truckmanualshub.com/

CAUTION PLATES

E. Warning decal for seat belt (EXA)

F. Warning decal for front guard

AVOID SEVERE INJURY OR DEATH. DO NOT CLIMB ON FRONT GUARD.

H. Warning decal for mast connecting member

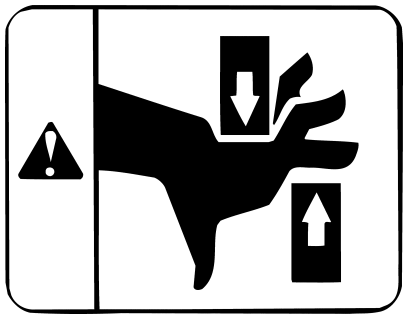

G. Warning decal for load handling means

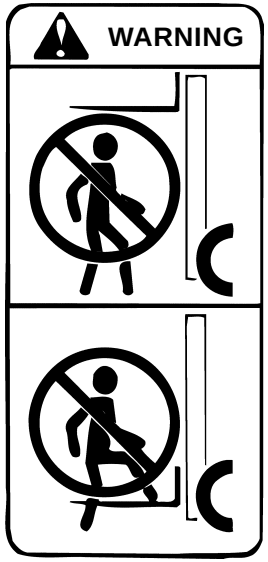

I. Warning decal for fan and other rotating parts

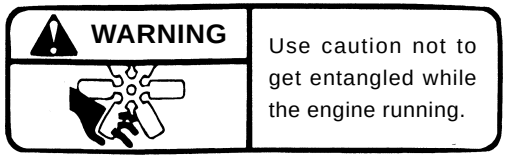

https://truckmanualshub.com/

Caution plate for handling batteries

WARNING

If the battery is used or charged when the electrolyte level is below the LOWER LEVEL mark, the battery may be damaged. It may also reduce the battery life or cause an explosion.
Add purified water so that the electrolyte level is between the UPPER LEVEL and LOWER LEVEL marks.

WARNING

Hydrogen gas produced by a battery can explode. Keep all open flames and sparks away from the battery. To prevent sparks, when connecting or disconnecting the battery or charger cables, be sure to stop the engine or turn off the charger switch.

No fire | Wear safety glasses | Keep children away | Sulfuric acid | Read manual | Explosive | Electric shock

DANGER

- Handle the battery carefully; otherwise you will get injured.
- Pay attention to an open flame or static electricity which might cause an explosion or a fire.
- Sulfuric acid will cause painful and serious burns if it gets on the skin. It can cause blindness if it gets into eyes.
- Touching a conducting part with bare hands will cause an electric shock accident.
- Do not connect or disconnect the battery plugs during the battery turned ON; otherwise you might get burnt or an explosion might occur.

- No fire. Do not smoke. Keep sparks or flames away from batteries.
- Static electricity: Do not clean batteries with a duster or dry cloth.
- Ventilation: Get a good ventilation. Do not use or charge batteries in a closed place or an area where ventilation is poor.
- Sulfuric acid: If sulfuric acid comes in contact with your skin or clothing, wash it away using a copious amount of water immediately.
  If sulfuric acid gets into your eyes, wash your eyes with a copious amount of water immediately and get to a doctor.
- Electrolyte level: Keep the battery electrolyte level proper at all times. If the level is too low, the battery will build up heat or the level is too high, electric leakage will occur.
- Electric shock accident: Wear safety glasses, rubber gloves, and shoes with rubber soles when servicing or inspecting batteries.

https://truckmanualshub.com/

MEMO

https://truckmanualshub.com/

The following symbols, found throughout this manual, alert you to potentially hazardous conditions to the owner and the operator.
Become completely familiar with the truck before proceeding with operating, checking and servicing.

This manual and decals affixed to the truck use the following safety alert indications.

SIGNAL WORD	CLASSIFICATION
DANGER	**Failure to follow the instructions in the message will likely cause a serious accident or death.**
WARNING	**Failure to follow the instructions in the message might cause a serious accident or death.**
CAUTION	**Failure to follow the instructions in the message may cause personal injury or damage to the truck or other property.**
NOTE	**The information will help to prolong the service life of the truck. The message is not directly related to accident prevention.**

2. OPERATING CONTROLS

CONTENTS

PICTORIAL NOMENCLATURE ..... 2 - 1
INSTRUMENTS AND CONTROLS ..... 2 - 3
SWITCHES ..... 2 - 5
METERS AND WARNING LIGHTS ..... 2 - 7
INTERLOCK SYSTEM ..... 2 - 11
LEVERS AND PEDALS ..... 2 - 12
TRUCK BODY ..... 2 - 16
OPTIONAL EQUIPMENT ..... 2 - 26

https://truckmanualshub.com/

PICTORIAL NOMENCLATURE

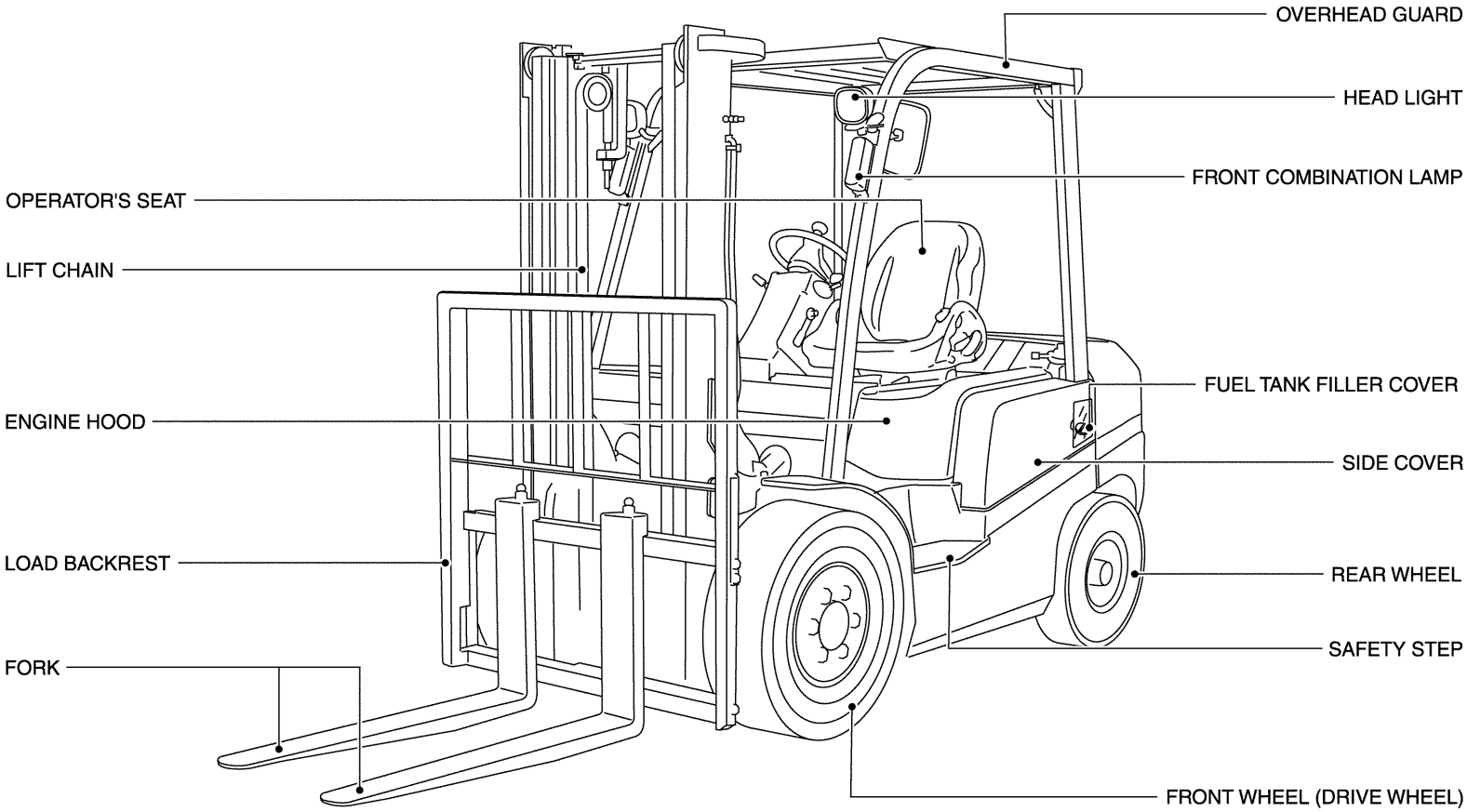

https://truckmanualshub.com/

PICTORIAL NOMENCLATURE

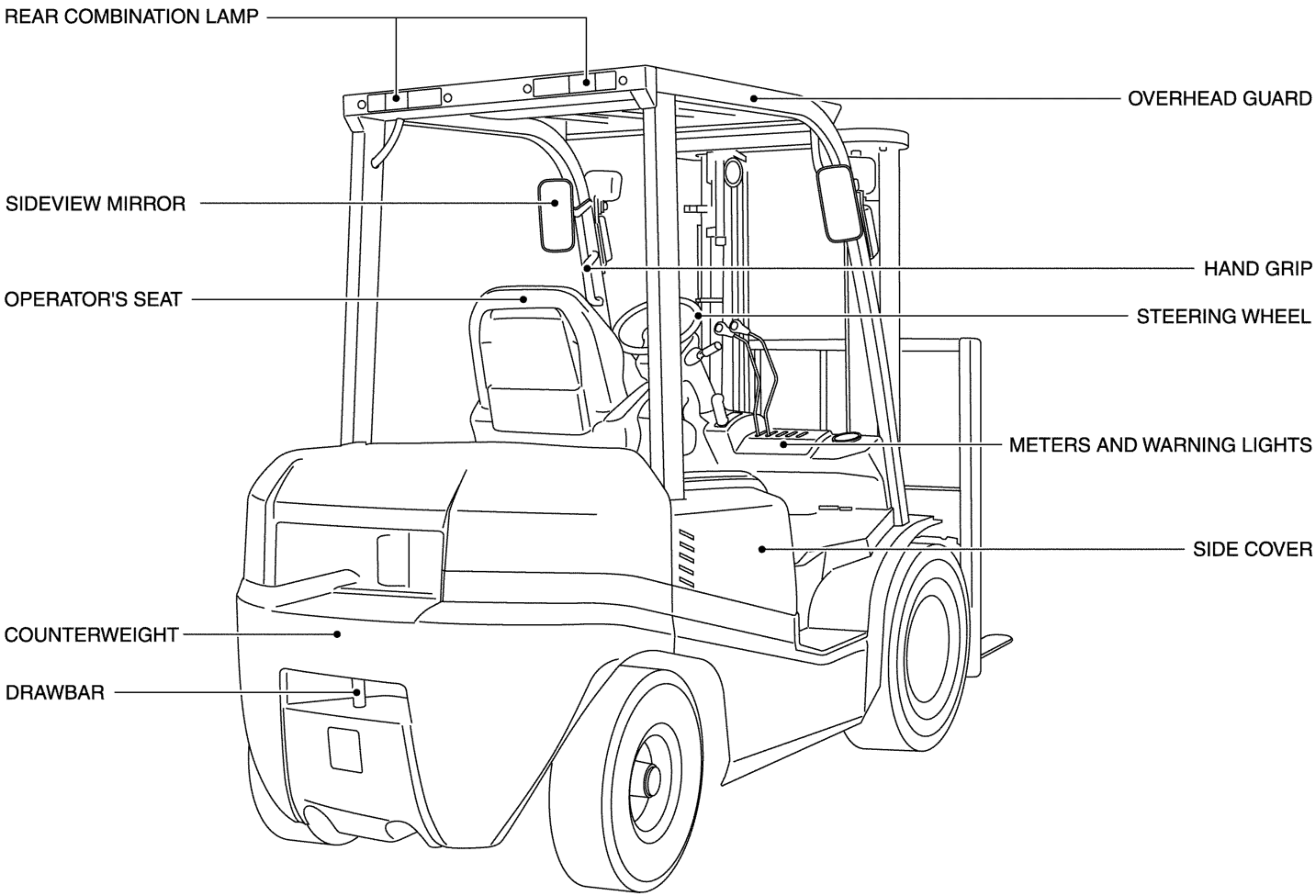

https://truckmanualshub.com/

INSTRUMENTS AND CONTROLS

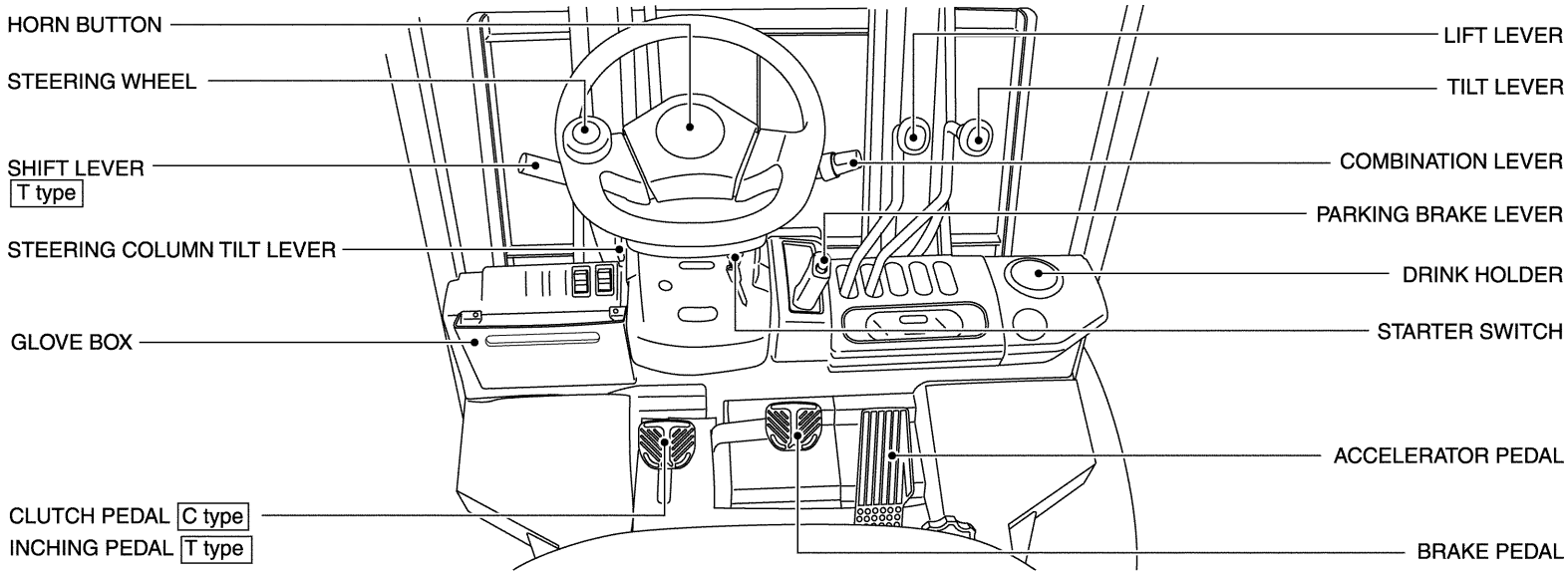

METER PANEL (DIESEL-POWERED TRUCKS)

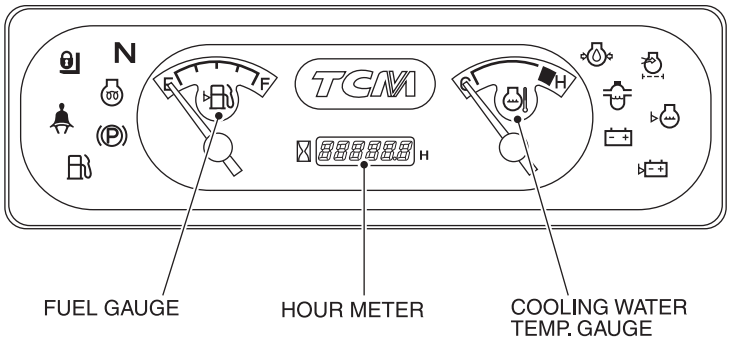

METER PANEL (GAS-POWERED TRUCKS)

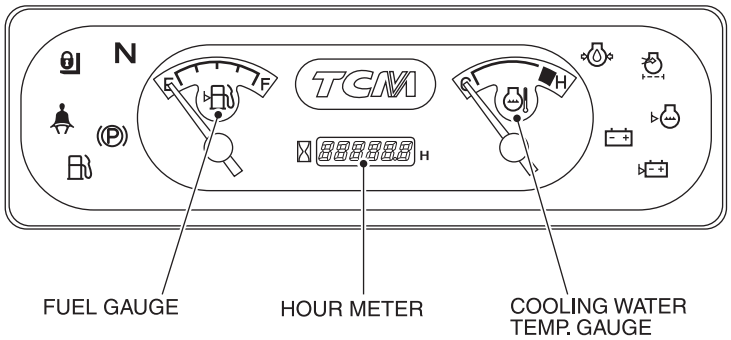

https://truckmanualshub.com/

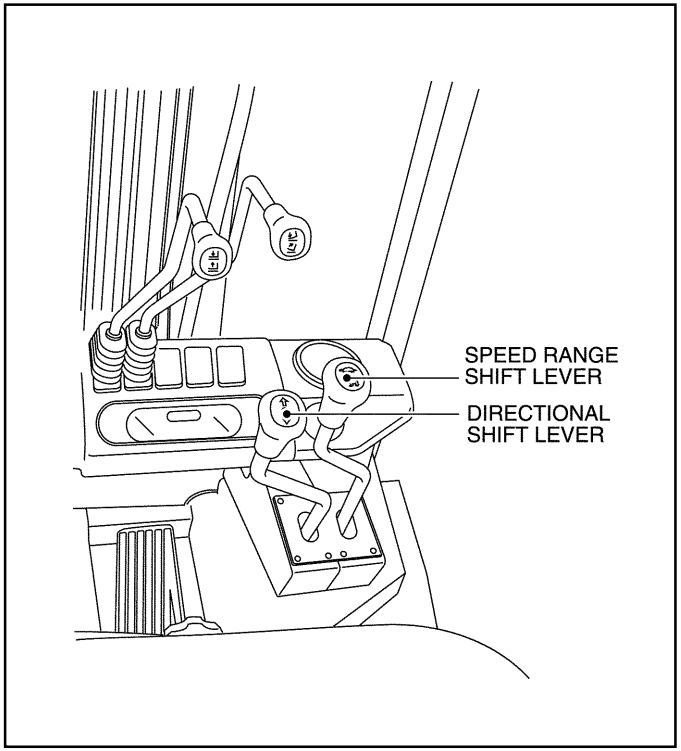

C type

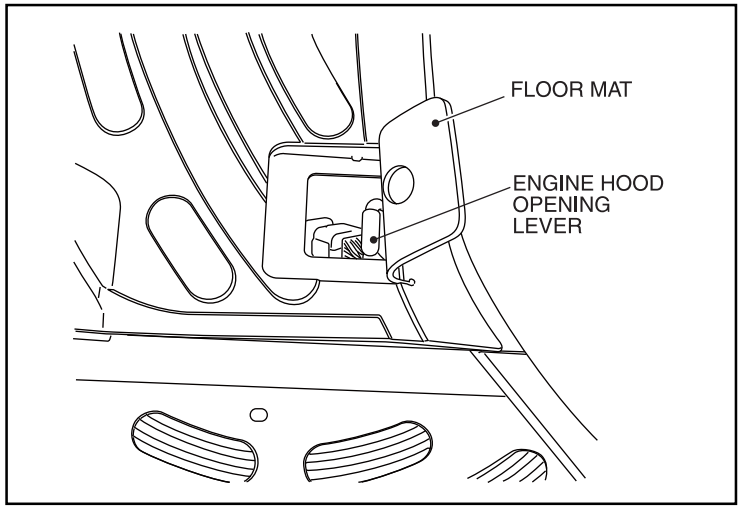

https://truckmanualshub.com/

SWITCHES

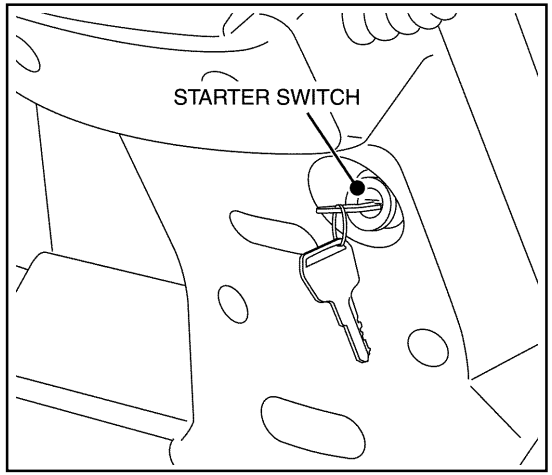

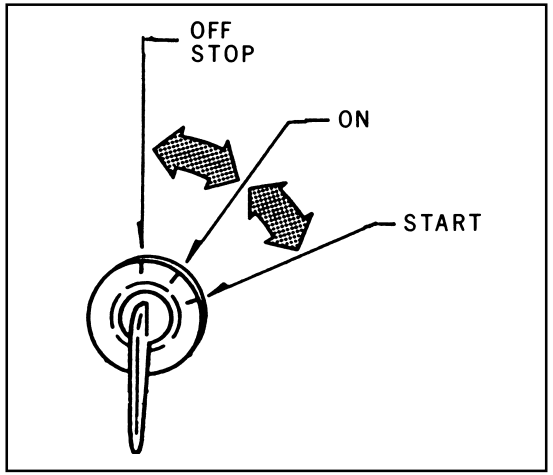

STARTER SWITCH

OFF
STOP

The position at which the key is inserted or drawn out.
The starter switch is “OFF” at this position. The engine stops when the starter switch is turned to this position.

ON

The electric circuit for the starter motor and others is closed.
On the diesel-powered truck, the glow indicator light will come on when the key switch is turned to “ON”. After the glow indicator light goes out, turn the starter switch to the “START” position.

START

The engine starts. After the engine starts up, remove your hand from the key. The key switch will automatically return to the “ON” position.

NOTE

1. Do not keep the key switch in the “ON” position while the engine is not running; otherwise the battery will go dead prematurely.
2. While the engine is running, do not turn the key switch to the “START” position; otherwise the starter motor will be damaged.
3. Do not keep the starter motor turning for more than 10 seconds at a time. If the engine won’t start, wait about 20 seconds before trying again.
4. Make sure the shift lever(s) are in neutral before trying to start the engine. The engine won’t start up unless the shift lever(s) are in neutral.

https://truckmanualshub.com/

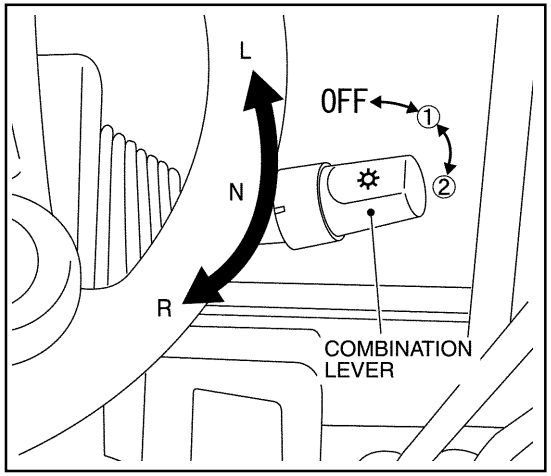

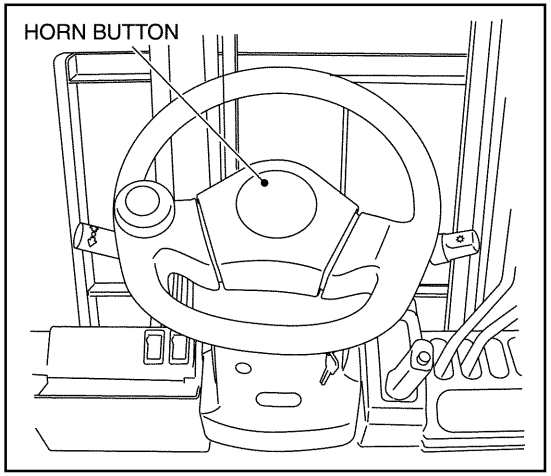

COMBINATION LEVER (LIGHTING SWITCH)

This lighting switch has two mode as follows:

Light \ Stage	OFF	①	②
Side lights	OFF	ON	ON
Tail lights	OFF	ON	ON
Meter panel	OFF	ON	ON
Head lights	OFF	OFF	ON

NOTE

The above lights can be turned on or off by the lighting switch regardless of the starter switch. Remember to turn them off when leaving the truck.

(TURN SIGNAL)

Use the turn signals (front and rear) to indicate the traveling direction of the truck.

L	Left-side lights turn on.
N	Off
R	Right-side lights turn on.

NOTE

Some trucks may have the turn signal lever on the left side of the steering column.

HORN BUTTON

Press the horn button at the center of the steering wheel to sound the horn.
The horn sounds regardless of the starter switch.

https://truckmanualshub.com/

INSTRUMENTS AND CONTROLS

METERS AND WARNING LIGHTS

DIESEL-POWERED TRUCKS

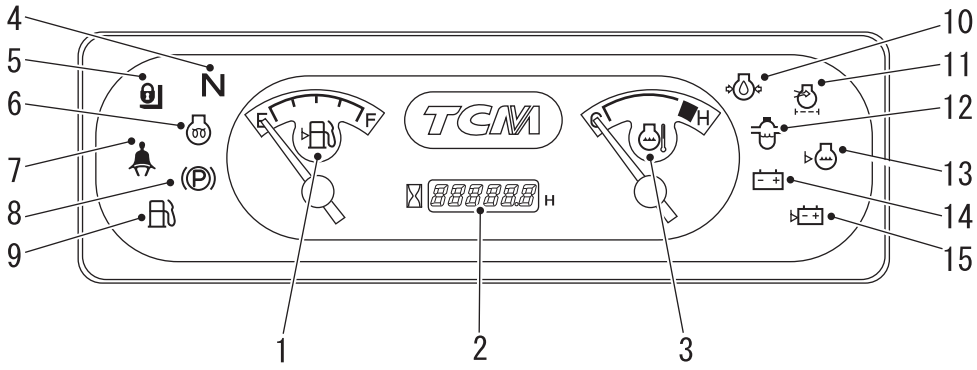

GAS-POWERED TRUCKS

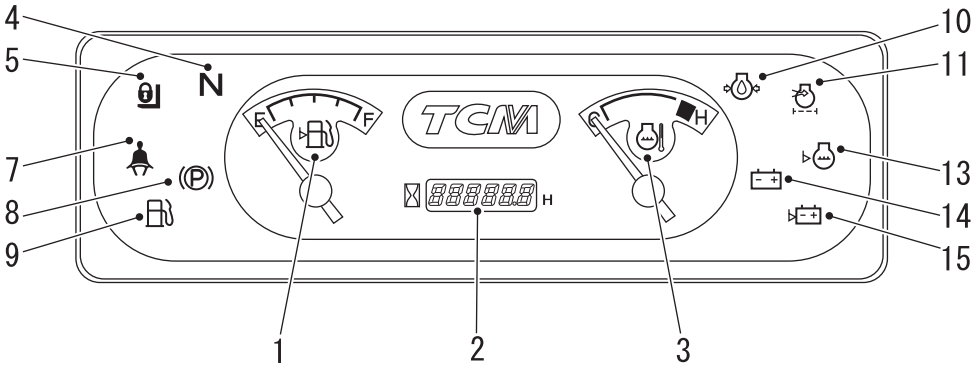

(METERS)

1. Fuel gauge
2. Hour meter
3. Cooling water temperature gauge

(WARNING LIGHTS, INDICATOR LIGHTS)

4. NEUTRAL LIGHT
5. TRAVELING AND LOAD HANDLING INTERLOCK SYSTEM WARNING LIGHT
6 GLOW INDICATOR
7. SEAT BELT WARNING LIGHT
8. PARKING BRAKE WARNING LIGHT
9. FUEL LEVEL WARNING LIGHT
10. ENGINE OIL PRESSURE WARNING LIGHT
11. AIR CLEANER CLOGGING WARNING LIGHT
12. SEDIMENTER WARNING LIGHT
13. RADIATOR WATER LEVEL WARNING LIGHT
14. CHARGE WARNING LIGHT
15. BATTERY ELECTROLYTE LEVEL WARNING LIGHT

Some of the above warning and indicator lights are optional.
5: Standard for EXE and EXN; optional for other destinations.
7, 8, 11, 13, 15: Optional for all destinations.

https://truckmanualshub.com/

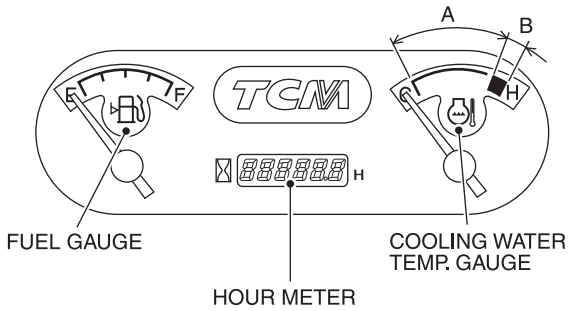

HOUR METER

The hour meter operates while the engine is running, and records total operating time of the truck in hours and tenth of an hour (6 minutes). Use it to determine maintenance schedule.

FUEL GAUGE

The fuel gauge indicates the fuel level in the fuel tank.

NOTE

- When checking the fuel level, park the truck on a level surface; otherwise you cannot get the correct fuel level.
- Don't drive low on fuel. Add fuel before the fuel level drops to the minimum.

COOLING WATER TEMPERATURE GAUGE

This gauge indicates the temperature of the engine cooling water. Under the normal operating condition, the pointer should stay in the range "A". If the pointer enter the red range "B", park the truck at an out-of-traffic area and let the engine run at idle rpm until the pointer returns to the range "A".

NOTE

Do not shut off the engine even if the pointer enters the red range "B"; otherwise a failure of the engine might result.

https://truckmanualshub.com/

INSTRUMENTS AND CONTROLS

WARNING LIGHTS AND INDICATOR LIGHTS

NEUTRAL LAMP

Light comes on when the shift lever is in neutral.

TRAVELING AND LOAD HANDLING INTERLOCK SYSTEM WARNING LIGHT

(Standard for EXE and EXN and optional for other destinations)

Light comes on when the traveling and load handling interlock system is active. For details, see “INTERLOCK SYSTEM” on page 2 - 11.

GLOW INDICATOR (DIESEL-POWERED TRUCKS)

When the starter switch is turned to “ON”, the engine is preheated and the glow indicator light comes on.

The glow indicator light goes out when the engine has been preheated, indicating that the engine is ready for starting.

SEAT BELT WARNING LIGHT (OPTION)

Light comes on if the operator does not fasten the seat belt. Light goes out when the seat belt is fastened.

FUEL LEVEL WARNING LIGHT

Light comes on when the fuel level drops below the value shown in the table. If the light comes on, add fuel.

	Fuel level at which warning light comes on
1.5- to 1.75-ton trucks	about 12 liters (3.2 U.S. gal.)
2- to 3.5-ton trucks	about 17 liters (4.5 U.S. gal.)

PARKING BRAKE WARNING LIGHT (OPTION)

Light comes on when the parking brake is applied.

ENGINE OIL PRESSURE WARNING LIGHT

Light comes on when the engine oil pressure is low. Light also comes on when the starter switch is turned to “ON” and goes out when the engine has started up.

NOTE

If light comes on during operation, it suggests that the engine oil level is low or the lubricating oil system is defective. Stop the operation immediately and ask your local TCM dealer to check your truck.

AIR CLEANER CLOGGING WARNING LIGHT (OPTION)

Light comes on when the air cleaner element becomes clogged. If light comes on during operation, stop the engine immediately and clean the element. For the element cleaning procedure, see page 4 - 33.

https://truckmanualshub.com/

SEDIMENTER WARNING LIGHT (DIESEL-POWERED TRUCKS)

Light comes on when the water level in the sedimenter exceeds the specified value.

NOTE

If light comes on during operation, stop the operation immediately and drain the water from the sedimenter. If the truck is used neglecting the warning light, the fuel injection pump might be damaged.
For the water draining procedure, see page 4 - 22.

BATTERY ELECTROLYTE LEVEL WARNING LIGHT (OPTION)

Light comes on when the electrolyte level drops below the “LOWER LEVEL”.
If light comes on, add purified water for the battery to the “UPPER LEVEL”.

RADIATOR WATER LEVEL WARNING LIGHT (OPTION)

Light comes on when the cooling water in the radiator reservoir tank drops below the lower limit. If light comes on, check the engine cooling water level and add cooling water to the proper level. (See page 4 - 6.)

CHARGE WARNING LIGHT

Light comes on if the power generating system fails to function normally during operation.
The light also comes on when the starter switch is turned to “ON” and goes out when the engine has started up.

NOTE

If the light does not go out after the engine has started up, it suggests a loose or broken fan belt or a defective power generating system. Stop the operation immediately and ask your local TCM dealer to check the truck.

https://truckmanualshub.com/

INTERLOCK SYSTEM

TRAVELING AND LOAD HANDLING INTERLOCK SYSTEM

(Standard for EXE and EXN; optional for other destinations)

The traveling and load handling interlock system is a safety device for lift trucks.
When the operator gets out of the seat, the system turns on a switch that shifts the transmission into neutral and blocks the hydraulic circuit (for lift and tilt). This system helps prevent an accident from happening if the operator of the truck is not in the driving position or a control is moved unintentionally when he is not in the operator's seat.

Interlock operation

- A buzzer sounds if the operator leaves his seat while the starter switch is on. After about 3 seconds, the transmission is locked in neutral and the hydraulic circuit is blocked (i.e., the truck won't move nor the load handling system won't operate without an operator in the seat even if the shift lever or any load handling lever is operated). The warning light comes on.
  (If the operator returns to the operator's seat within 3 seconds, the buzzer stops and it is possible to start the truck and operate the load handling system as usual.)
- The buzzer also sounds and the lifting operation is locked off if the operator leaves his seat without applying the parking brake when the starter switch is off. (Note that this function is also available on clutch type trucks.)

Releasing interlocks

- Releasing traveling interlock
  When the operator gets in the operator's seat and shifts the shift lever to neutral, the traveling interlock is released, the buzzer stops, and the warning light goes out.
- Releasing load handling interlock
  When the operator gets in the operator's seat and places all the load handling levers in neutral, the load handling interlock is released, the buzzer stops and the warning light goes out.

Note:

- The buzzer will not sound when the interlock is activated, if the parking brake is in operation.
- The traveling interlock is only available on torque converter type trucks.
- The traveling interlock only shifts the transmission to neutral; it doesn't engage the brakes.
- If, while the truck is going up a ramp for loading onto a trailer truck, the operator leaves the seat or rises up from the seat, or operates the truck from a position that does not press body weight on the seat, the traveling interlock is activated, the transmission is shifted to neutral, and the truck will roll back.
- Fasten the seat belt. Don't leave or rises up from the operator's seat while traveling.
- Don't rest something on the operator's seat; otherwise the traveling interlock may fail to operate as it should.
- If the operator's seat is replaced with a new one, use a genuine TCM operator's seat equipped with a seat switch.
- If the operator gets in the seat with the engine not running, and turns the starter switch to "ON", the forks can be lowered in the same manner as usual.
- The attachment lever(s) are not provided with interlock function.

https://truckmanualshub.com/

LEVERS AND PEDALS

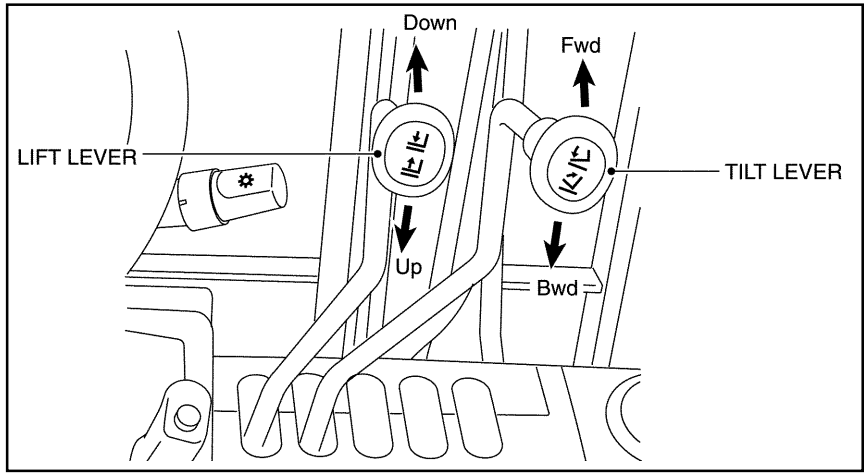

LIFT LEVER

CAUTION

Seat yourself in the operator's seat and make sure there is no one around the truck before operating the lift lever.

Pull back on the lever to raise the forks and push forward on it to lower the forks. The lifting speed of the forks can be controlled by the tilt angle of the lever and accelerator pedal effort or engine speed. Note that the lowering speed of the forks is controlled by the tilt angle of the lift lever alone. Engine speed has no connection with the lowering speed of the forks.

TILT LEVER

CAUTION

Seat yourself in the operator's seat and make sure there is no one around the truck before operating the tilt lever.

Pull back on the tilt lever to tilt back the mast and push forward on it to tilt the mast forward.
The tilting speed of the mast can be controlled by the tilt angle of the tilt lever and accelerator pedal effort or engine speed.

NOTE

When the engine is not running, the mast won't tilt even if the tilt lever is operated, because the tilt-lock mechanism installed in the control valve functions.
Note that the forks cannot be lowered with the engine not running, if the truck is provided with an optional lift lock system.

https://truckmanualshub.com/

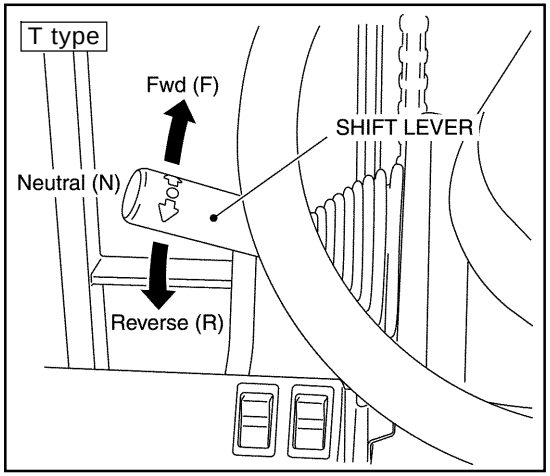

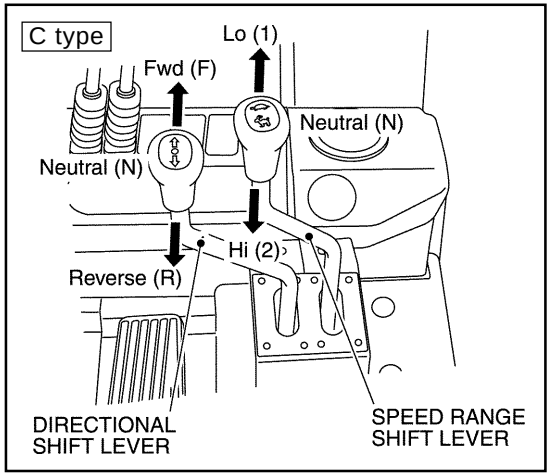

SHIFT LEVER T type

CAUTION

Press the brake pedal to the floor before operating the shift lever.
When the brake pedal is released, the truck will creep or moves slowly if the shift lever is in positions other than neutral "N".

The truck is equipped with a single shift lever on the steering column (1 speed for forward and reverse).
When the shift lever is placed in the reverse position "R", the back-up lamp comes on and the back-up buzzer sounds.
Bring the truck to a complete stop before reversing the direction of travel, from forward to reverse or vice versa.

DIRECTIONAL SHIFT LEVER C type
SPEED RANGE SHIFT LEVER C type

The truck is equipped with two floor-shift control levers (forward/backward and speed range: 2 speeds in forward and reverse, respectively).
When the directional shift lever is placed in the reverse position "R", the back-up lamp comes on and the back-buzzer sounds.
Before switching the speed ranges or reversing the direction of travel, press the clutch pedal to the floor. In addition, bring the truck to a complete stop before reversing the direction of travel, from forward to reverse or vice versa.

NOTE

The speed range shift lever C type and the shift lever T type have a neutral switch. Before starting the engine, make sure the lever is in neutral. Neither the C- nor the T- type truck will start unless the speed range shift lever C type or the shift lever T type is in neutral.

https://truckmanualshub.com/

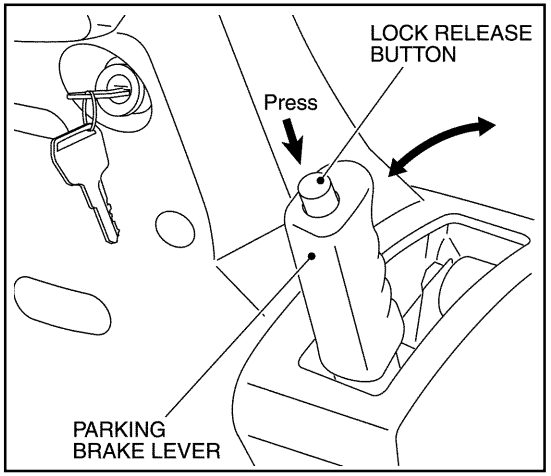

PARKING BRAKE LEVER

CAUTION

Block the wheels when parking on an incline.

Pull back on the lever to apply the parking brake. The lever is locked there.
To release the parking brake, press and hold down the lock release button on the tip of the lever while pushing forward on the parking brake lever.

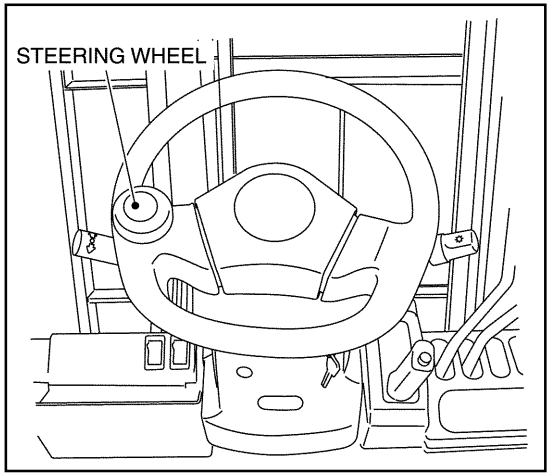

STEERING WHEEL

CAUTION

Power steering becomes inoperative if the engine stops. If the engine stops during operation, re-start the engine as soon as possible.

When traveling the truck, hold the steering wheel knob with your left hand. Do not remove your hand from the knob during traveling.

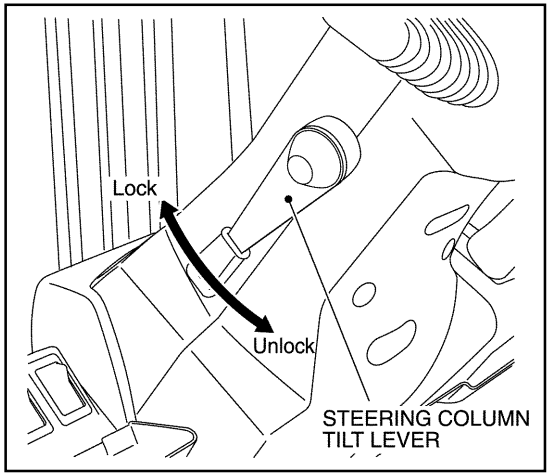

STEERING COLUMN TILT LEVER

CAUTION

- **Adjust the steering column angle properly before starting the day's work or each shift.**
- **After adjustment, push forward the lever to lock the steering column securely.**
- **Do not try to adjust the steering column angle during operation.**

Adjust the steering column angle according to the individual operator's physique. Pull back the lever to unlock the steering column and push it forward to lock.

https://truckmanualshub.com/

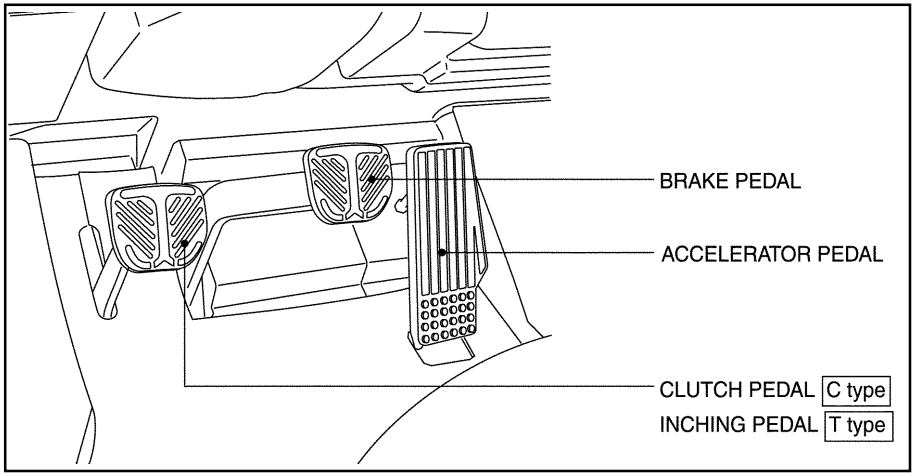

CLUTCH PEDAL C type

The clutch allows the operator to couple the engine to, or uncouple the engine from, the transmission. The clutch is disengaged by pressing the clutch pedal and engaged by releasing it.

NOTE

Do not travel the truck with the clutch engaged slightly as much as possible.

INCHING PEDAL T type

CAUTION

Do not press the inching pedal for slowing down the traveling speed or when starting uphill or descending downhill; otherwise you will not be able to use engine braking.

When the inching pedal is pressed slightly, the hydraulic clutch pressure drops (clutch is engaged slightly). If the pedal is further pressed, the clutch is completely disengaged and the brakes are applied to the truck.

For more information, look up “USING INCHING PEDAL” on page 3 - 3.

BRAKE PEDAL

Press the brake pedal to slow down or stop the truck. The brake lights come on when the brake pedal is pressed.

ACCELERATOR PEDAL

Press the accelerator pedal to increase engine speed. When the accelerator pedal is released, the engine runs at idle rpm.

https://truckmanualshub.com/

TRUCK BODY

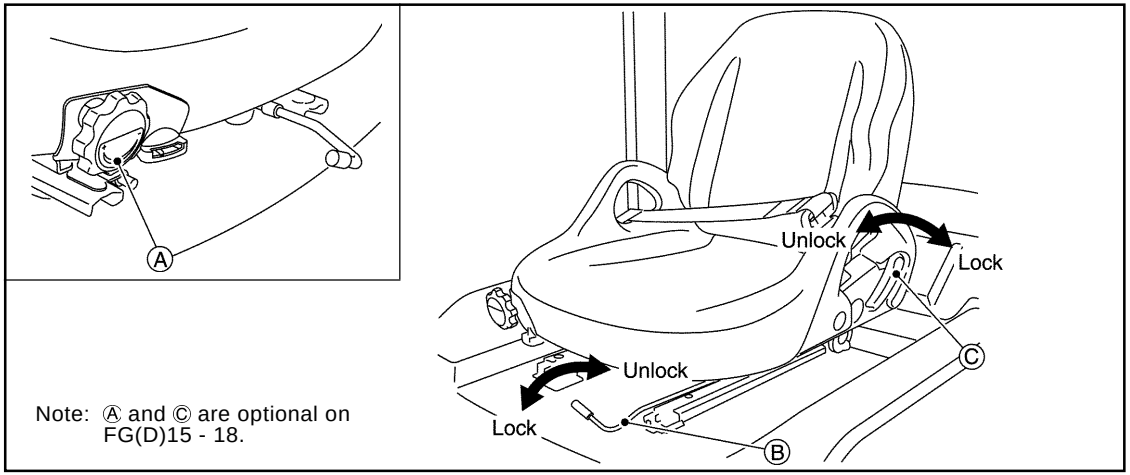

Note: Ⓐ and Ⓒ are optional on FG(D)15 - 18.

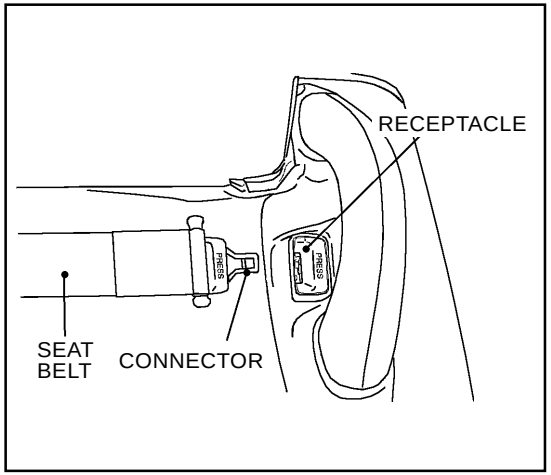

OPERATOR'S SEAT

SEAT SUSPENSION ADJUSTMENT KNOB Ⓐ [Optional on FG(D)15 - 18]

⚠ CAUTION

Adjust the suspension of the operator's seat using the adjustment knob before starting the day's work or each shift. Do not try to adjust the suspension during operation.

Adjust the operator's seat suspension properly to suit the individual operator's physique and to provide best comfort. Turn the adjustment knob to the value of your weight. The operator's seat absorbs shock and vibration to provide comfort during traveling and operation.

SEAT POSITION ADJUSTMENT LEVER Ⓑ RECLINING CONTROL LEVER Ⓒ [Optional on FG(D)15 - 18]

⚠ CAUTION

Adjust the seat position before starting the day's work or each shift. After adjustment, make sure the operator's seat is securely locked.

Adjust the operator's seat to a position that is comfortable for you and provides easy access to all hand and foot controls. To unlock, pull the lever upward. After adjustment, try to move the seat back and forth to make sure that it is securely locked.

SEAT BELT

⚠ WARNING

Be sure to fasten the seat belt before starting the truck; otherwise, if the truck turns over, the operator might be thrown out and, in the worst case, the operator can be crushed by the truck.

Pull out the connector at the right side and insert it into the receptacle at the left side until it clicks into place.
To unfasten the seat belt, press the red button by the receptacle, and the belt will automatically wind up into the seat.

https://truckmanualshub.com/

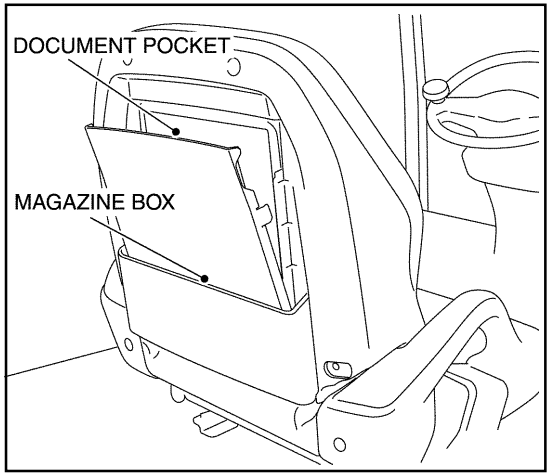

DOCUMENT POCKET
MAGAZINE BOX

The operator's seat has a document pocket and magazine box at its back. Use them for storing this Operation & Maintenance Manual and others. Remember to close the document pocket before operation.

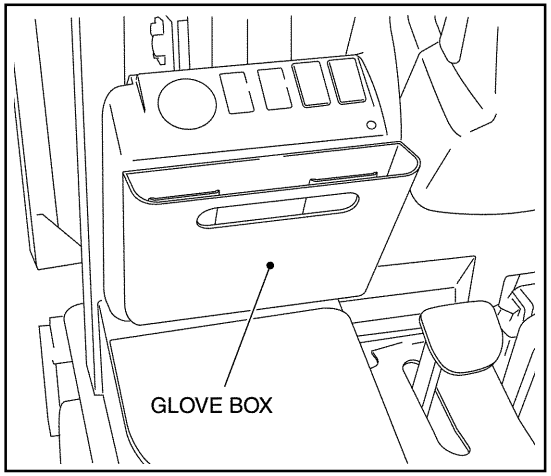

GLOVE BOX

The glove box is located under the dashboard diagonally to the left in front of the operator's seat. The glove box can be detached and is portable.

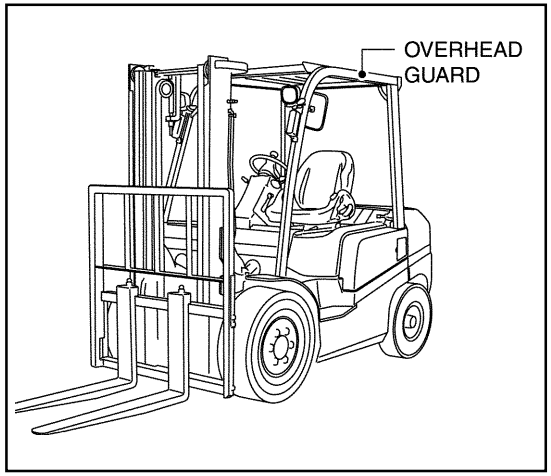

OVERHEAD GUARD

⚠ WARNING

The overhead guard is an important safety device which protects the operator from falling objects. Make sure it is securely installed. Do not remove or modify it.

NOTE

Keep the vinyl rain gutter always clear of dirt or dust.

https://truckmanualshub.com/

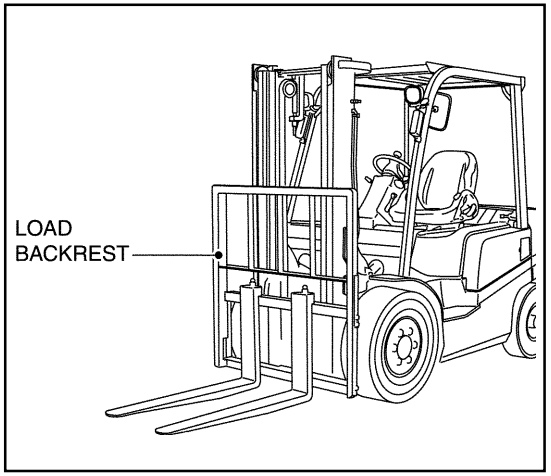

LOAD BACKREST

CAUTION

Do not remove or modify the load backrest. Otherwise,

- **The operator might get injured from a falling load.**
- **The forks might disengage from the carriage.**

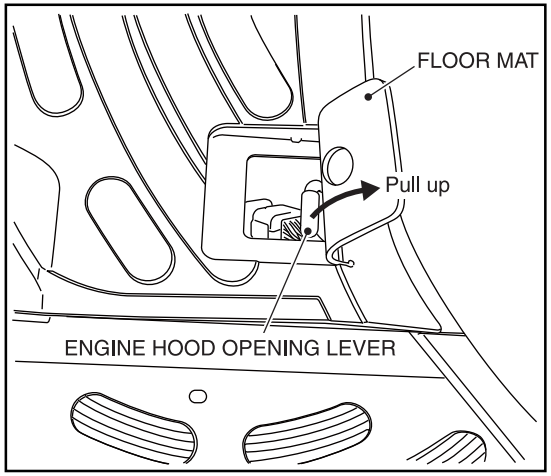

ENGINE HOOD

CAUTION

When opening or closing the engine hood, place the steering wheel in the straight-ahead position.

Remove the floor mat and pull up the engine hood opening lever, and the hood will open due to the operation of the gas damper. Make sure the gas damper stopper is securely engaged.

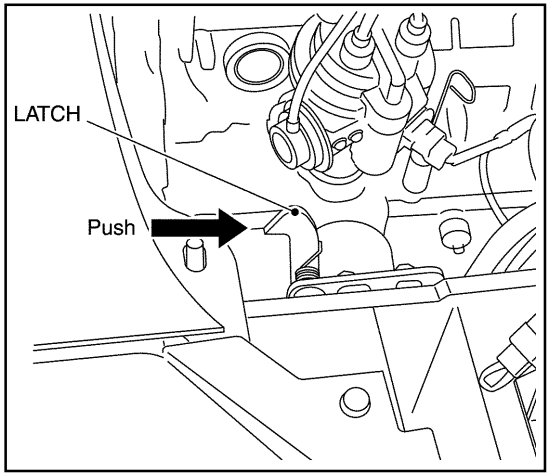

If the engine hood won't open

If the engine hood won't be opened by pulling the hood opening lever, follow the procedure given below:

1. Get a thin iron plate, about 20 cm (8 in.) long, such as an iron rule.
2. Using the iron plate, push the latch inside the hood in the direction indicated by the arrow.
3. The latch is unlocked and the hood will open.

https://truckmanualshub.com/

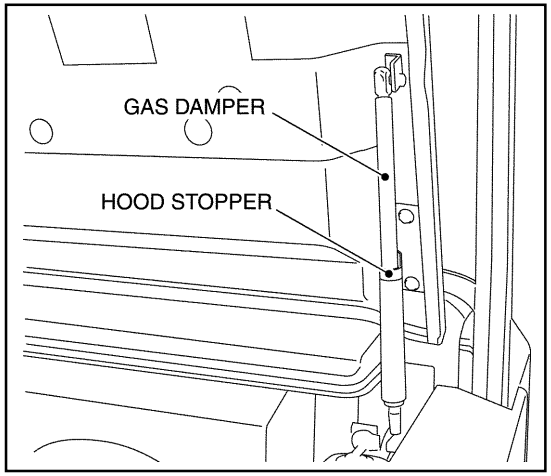

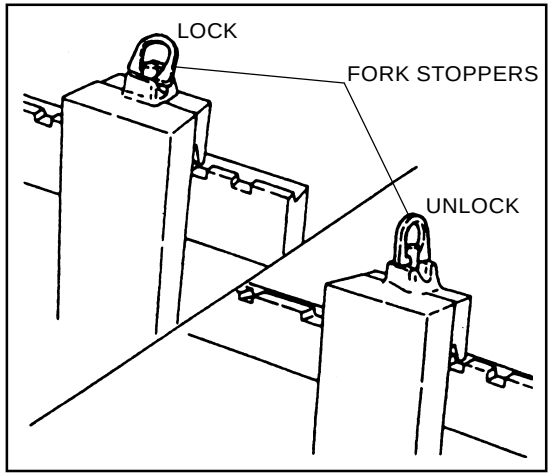

ENGINE HOOD STOPPER

⚠ CAUTION

- **After opening the engine hood, make sure the engine hood stopper is securely engaged.**
- **Use caution not to pinch your fingers or hand when closing the hood.**

The engine hood stopper is located at the middle part of the gas damper.
To close the hood, hold the hood and press the engine hood stopper with your finger while lowering the hood.

FORK STOPPER

⚠ CAUTION

- **The forks should be set symmetrically to the truck centerline, and fork stoppers should always be set.**
- **When adjusting fork spacing, hold the load backrest and push the forks with your foot. Do not use your hand.**

Secure the forks with the fork stoppers. Pull up the fork stoppers a little and turn 90° to unlock. Then adjust the fork spacing using your foot according to the size of the load you are going to carry.

https://truckmanualshub.com/

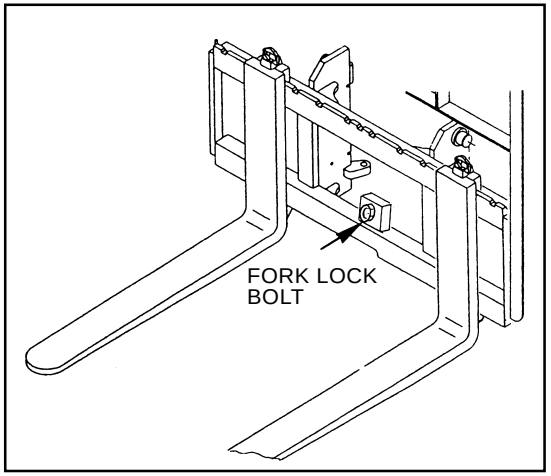

FORK LOCK BOLT

CAUTION

Do not remove the fork lock bolt other than the following cases; otherwise the forks might disengage from the carriage, causing personal injury.

- **When removal of the forks is needed.**
- **When gathering the right and left forks together to the center for some reason.**

When a fork prong is moved to the center, it will come off the carriage. This bolt prevents the fork from being used at the center of the carriage.

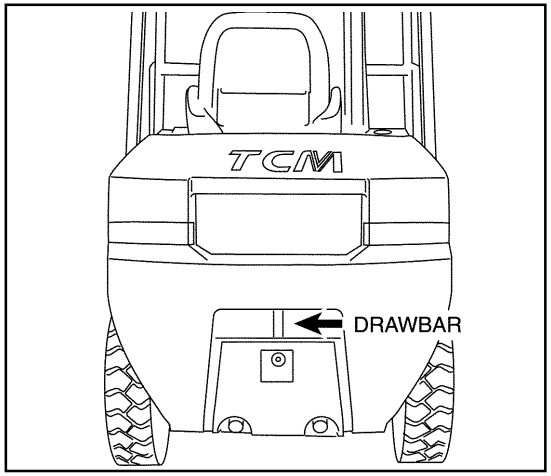

DRAWBAR

CAUTION

Do not use the drawbar for towing another vehicle or for being towed by another vehicle.

Use of the drawbar should be limited to the following cases:

- When the truck has bogged down in the mud or a side ditch.
- When loading onto or unloading from a trailer for transportation.

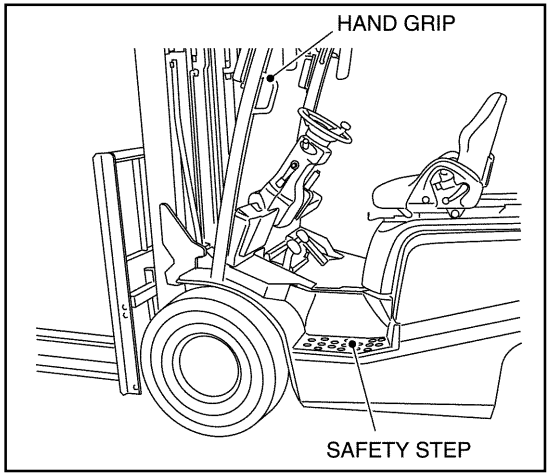

SAFETY STEP AND HAND GRIP

CAUTION

Use the safety step and hand grip when mounting or dismounting. Do not hold the levers when getting on or off. Do not mount or dismount while the truck is in motion.

The truck is equipped with a safety step at each side of the truck body and a hand grip on the left front pole of the overhead guard. When mounting or dismounting, use the safety step and hand grip.

https://truckmanualshub.com/

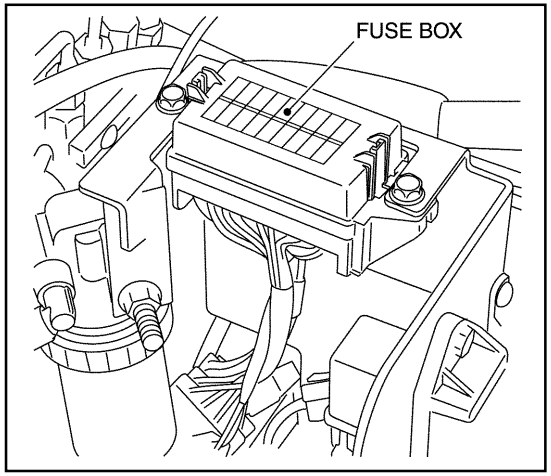

FUSE BOX

The fuse box is located at the left area inside the engine hood.

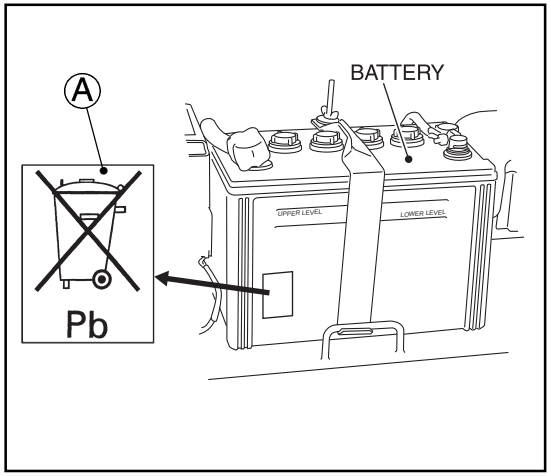

BATTERY

The battery is located on the left side of the engine room. Open the hood when servicing the battery.

CAUTION PLATE Ⓐ (EXE, EXN)

- Do not throw away a discharged battery without permission.
- Recycle a discharge battery.

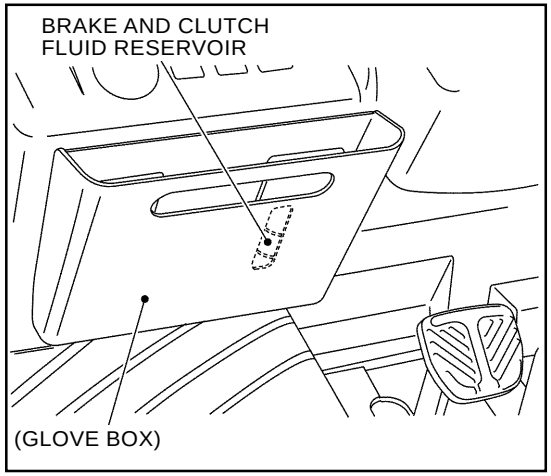

BRAKE AND CLUTCH FLUID RESERVOIR

The brake fluid reservoir is located inside the front guard.

To check brake fluid level in the reservoir, remove the glove box in front of the operator's seat and see the fluid level through the inspection slit provided on the front guard cover.

Note that the brake fluid reservoir doubles as a clutch fluid reservoir for C type trucks.

https://truckmanualshub.com/

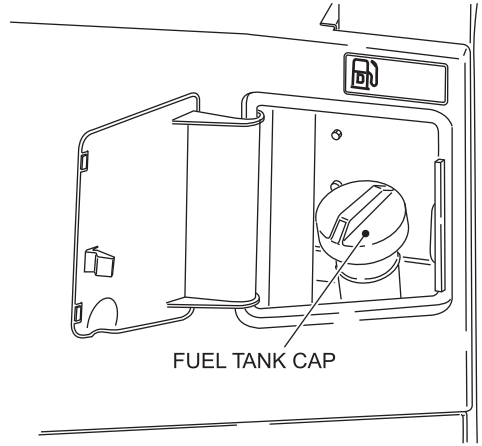

FUEL TANK CAP

CAUTION

- **When adding fuel, stop the truck, shut down the engine, and apply the parking brake securely. Never smoke. Keep fire or naked flame away from the truck. The operator must get off the truck.**
- **After adding fuel, tighten the cap securely. A loose fuel cap might cause fuel leaks, leading to a serious accident.**
- **Before starting the engine, make sure the fuel tank cap is securely tightened.**
- **Any spilt fuel should be wiped away.**
- **Never use naked flame (match or lighter) for checking the fuel level.**

The fuel tank cap is located at the left side of the truck.
Turn the cap counterclockwise to open. Inside the cap is a breather which allows the entrance of air into the tank.
Make sure the breather is not damaged or clogged; otherwise the fuel system might malfunction.

NOTE

- Use gasoline for gas-powered trucks and light oil for diesel-powered trucks.
- **Diesel fuel (Light oil)**
  Use good quality of light oil as diesel fuel. The light oil freezes when the ambient temperature is below -10°C (14°F), causing the fuel piping to become clogged. If the truck is to be used in cold regions, use proper quality of light oil according to the weather condition of the region.
- **Do not use kerosene as the fuel; otherwise the engine performance will be deteriorated or the fuel injection pump might be damaged.**

https://truckmanualshub.com/

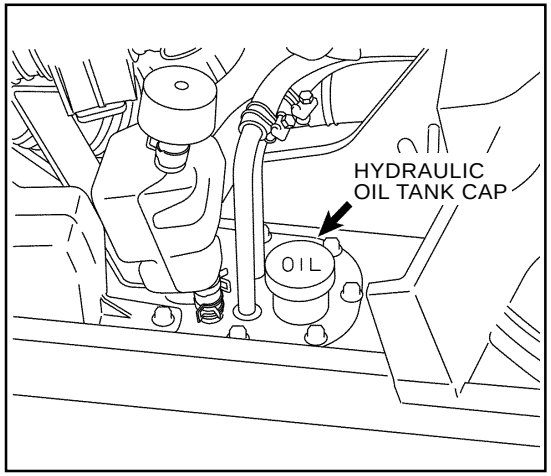

HYDRAULIC OIL TANK CAP

The hydraulic oil tank cap is located at the right-side area inside the engine hood. The cap is provided with an oil dipstick.

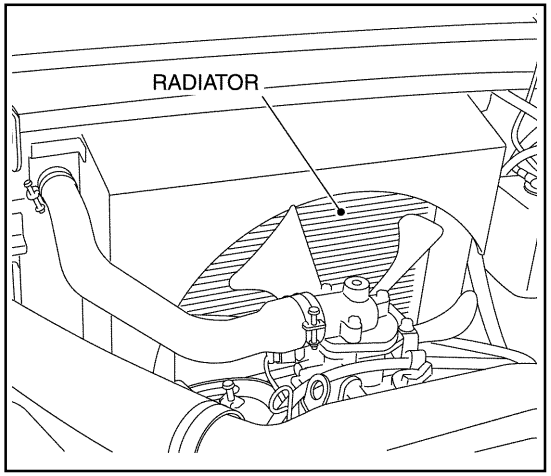

RADIATOR

⚠ CAUTION

Do not remove the radiator cap abruptly while the engine is hot. Make sure the engine has cooled down completely. Turn the cap counterclockwise a little to relieve the pressure in the radiator, and then remove the cap.

The radiator cap is located inside the cover at the rear part of the engine hood. To remove the cap, turn it 90°.
The sketch shows the radiator viewed from inside the engine hood.

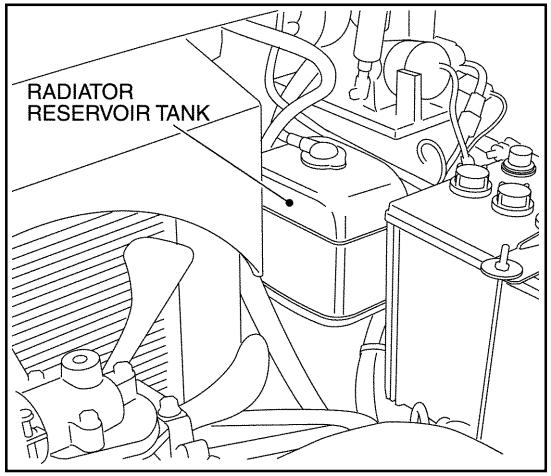

RADIATOR RESERVOIR TANK

The radiator reservoir tank is located behind the battery unit inside the engine hood.
You can check the cooling water level using this tank.

https://truckmanualshub.com/

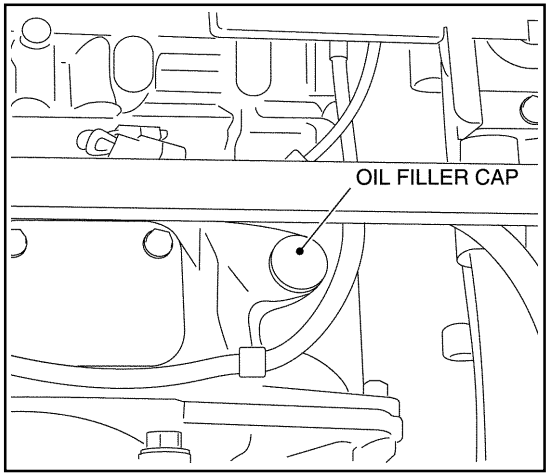

TORQUE CONVERTER OIL FILLER T type

The torque converter oil filler is located near the accelerator pedal under the floorboard. The filler has a cap with an oil dipstick.

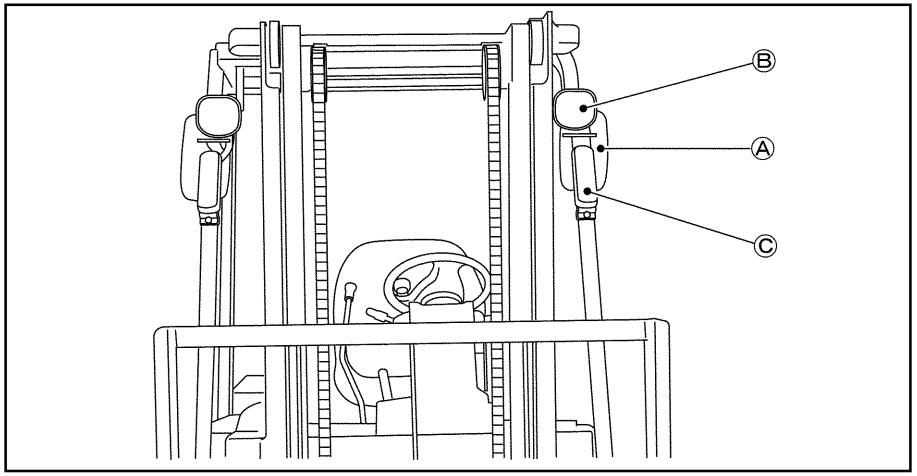

LIGHTS AND LAMPS

⚠ CAUTION

Check that lights and lamps come on and off properly. If any light bulb is blown out, replace with a new one. If the lens is contaminated or damaged, clean or repair.

Front side

The truck has head lights Ⓑ and combination lamps Ⓒ (turn signal and side marker lamps).

SIDEVIEW MIRRORS Ⓐ

⚠ CAUTION

- **When traveling in reverse, always look in the direction of travel. Do not rely too much on the sideview mirrors.**
- **Keep the mirror surfaces always clean.**
- **Adjust the sideview mirrors to gain full rear vision.**

The sideview mirrors are provided on the front poles of the overhead guard, one for each.

https://truckmanualshub.com/

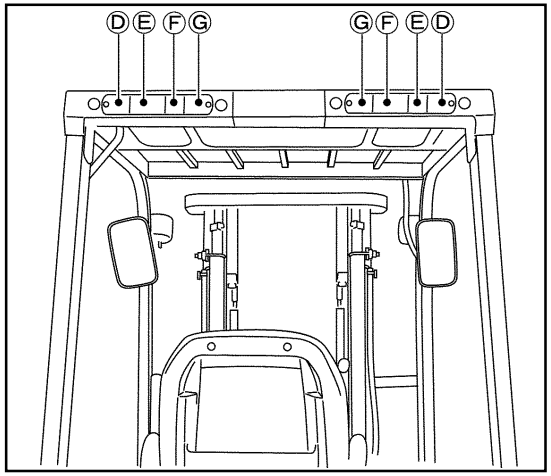

Rear side

The truck has combination lamps (stop and tail lamps Ⓓ, reflectors Ⓔ, turn signals Ⓕ, back-up lamps Ⓖ) at its rear.

https://truckmanualshub.com/

OPTIONAL EQUIPMENT

Here are some pieces of optional equipment which are deeply related to safe operation of the truck. For more information about optional equipment, consult your local TCM dealer.

REAR WORK LIGHT (RWL)

CAUTION

It is advisable to use an optional rear work light when you are working in a place where sufficient light is not available.

The rear work light illuminates the road or floor behind the truck at night to allow the operator to recognize obstacles, if any, on the road or floor easily.

BEACON LIGHT

Use an optional beacon light in the case when the truck is required to work near fellow workers or bystanders or when the work place is noisy.

SOUND VOLUME-ADJUSTABLE BACK-UP BUZZER

You can switch over the sound volumes in two stages, according to the noise level at the work place.

SPEEDOMETER (SM)

The speedometer indicates the traveling speed (km/h) and the distance traveled by the truck.
When the light switch is turned on, the dial is illuminated by a built-in lamp.

SPEED ALARM SYSTEM (SAS)

The SAS gives an alarm by sounding the buzzer and flashing the beacon light when the traveling speed exceeds the preset speed. The speed can be preset for 5 km/h, 10 km/h or 15 km/h.

HIGH LOAD BACKREST (HBR)

Use the high load backrest for handling high loads.

OVERHEAD GUARD WITH WIRE NETTING

The overhead guard with wire netting protects the operator from falling objects, especially when handling small parts at a high place.

PNEUMATIC SHAPED CUSHION TIRE (UNIQUE TIRE, TR01)

Use tires of this type when you are going to work in an area where there are debris or anything that might blow the tires on the road or floor surface.

TIRE CHAIN (TC)

Fit tire chains over the tires of the truck to increase traction and prevent skidding on roads covered with ice or snow.

NOTE

Some models may require tire chain fitting parts. For more information, consult your local TCM dealer.

FIRE EXTINGUISHER (FE)

Use the fire extinguisher for putting out a fire. An optional fire extinguisher will be attached to one of the rear supports of the overhead guard.

POWER BRAKE (POB)

CAUTION

The trucks with power brake have two hydraulic lines. Use ordinary brake oil (vegetable oil) for one having the master cylinder and use hydraulic oil (mineral oil) for the other having the brake booster. Therefore, never try to use rubber parts other than those specially designed for the power brake system.

https://truckmanualshub.com/

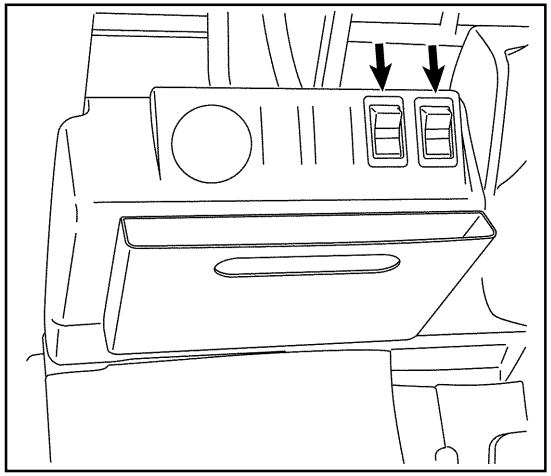

SWITCHES

The switches for the rear work light and others are located as shown above. Follow the instructions on the decal near each switch.

https://truckmanualshub.com/

The following symbols, found throughout this manual, alert you to potentially hazardous conditions to the owner and the operator.
Become completely familiar with the truck before proceeding with operating, checking and servicing.

This manual and decals affixed to the truck use the following safety alert indications.

SIGNAL WORD	CLASSIFICATION
DANGER	**Failure to follow the instructions in the message will likely cause a serious accident or death.**
WARNING	**Failure to follow the instructions in the message might cause a serious accident or death.**
CAUTION	**Failure to follow the instructions in the message may cause personal injury or damage to the truck or other property.**
NOTE	**The information will help to prolong the service life of the truck. The message is not directly related to accident prevention.**

3. OPERATION

CONTENTS

PROPER OPERATION ..... 3 - 1
DURING BREAK-IN ..... 3 - 1
RELATIONSHIP BETWEEN LOAD AND STABILITY OF TRUCK ..... 3 - 1
BASIC LOAD CENTER AND RATED LOAD ..... 3 - 2
STABILITY OF LIFT TRUCK ..... 3 - 3
USING INCHING PEDAL ..... 3 - 3
TRAVELING AND STARTING ON A SLOPE ..... 3 - 3
TRANSPORTING LIFT TRUCK ..... 3 - 4
OPERATING LIFT TRUCK ..... 3 - 4
MEASURES AGAINST COLD OR HOT WEATHER ..... 3 -10
IN COLD WEATHER ..... 3 -10
IN HOT WEATHER ..... 3 -12
LOAD HANDLING ..... 3 -13
PICK-UP ..... 3 -13
STACKING ..... 3 -13
UNSTACKING ..... 3 -14
STORING ..... 3 -15
BEFORE STORING; DAILY STORAGE ..... 3 -15
LONG-TERM STORAGE; OPERATING AFTER LONG-TERM STORAGE ..... 3 -16

https://truckmanualshub.com/

PROPER OPERATION

To operate the lift truck safely and get the most out of it, correct procedures are described on the following pages:

DURING BREAK-IN

We recommend to operate the truck under light load conditions for the first stage of operation to get the most from it. Especially, the requirements given below should be observed while the truck is in a stage of 200 hours of operation.

Always warm up your truck before putting it into work regardless of the seasons.

Perform specified preventive maintenance services carefully and completely.

Never “race” or play games with the truck. Avoid sudden stops, starts or turns.

Oil changes and lubrication are recommended to do earlier than specified.

Do not run the engine needlessly at high rpm without load.

RELATIONSHIP BETWEEN LOAD AND STABILITY OF TRUCK

The lift truck keeps a balance of weight between the truck and the load on the forks with the center of the front wheels as a fulcrum when the rated capacity load is placed in position.
Due care should be paid to the weight and the load’s center of gravity to maintain stability.

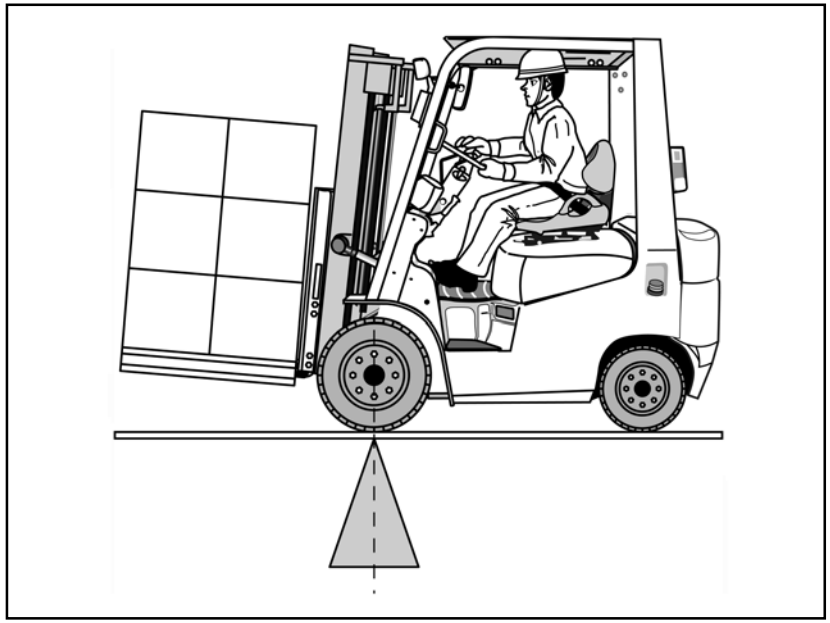

If the rated capacity is exceeded, there is a danger of the rear wheels being raised and in the worst case, the truck will turn over, resulting in a fatal accident. The load placed near the fork tips practically has the same effect that the weight of the load is increased. In this case, the load weight must be reduced accordingly.

https://truckmanualshub.com/

BASIC LOAD CENTER AND RATED LOAD

⚠ CAUTION

- **When traveling with loads, keep the forks 15 to 20 cm (6 to 18 in.) above the ground surface and keep the mast tilted back fully.**
- **The allowable load of a truck equipped with an attachment is reduced in comparison with that of the standard truck.**

If the truck is equipped with a load-handling means such as hinged forks, load grab, or rotating clamp, its allowable load will be reduced as compared with that of the standard truck (a truck without any attachment) for the following reasons:
Never exceed the allowable load indicated on the load chart attached onto the truck or attachment.
Reasons for a reduction in the allowable load:
1) The weight of an attachment is added.
2) The attachment shifts the basic load center position forward, and thus the allowable load is reduced.

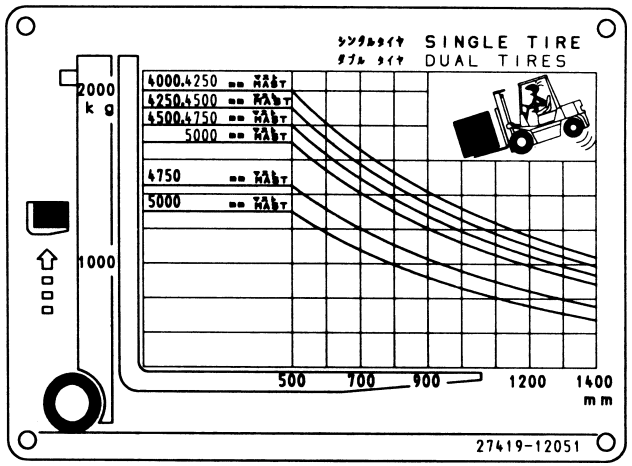

The basic load center is the distance from the front face of the forks to the load's center of gravity. The chart given above shows the relationship between the basic load center and the weight of loads to be allowable for the 2-ton truck. This chart is called a load chart and is attached to the truck.

https://truckmanualshub.com/

PROPER OPERATION

STABILITY OF LIFT TRUCK

The stability of lift trucks is stipulated in JIS (Japanese Industrial Standards) or in other national industrial standards, and TCM lift trucks are manufactured complying with these standards. However, note that the stability of lift trucks is not assured at all times, but only when the following conditions are properly observed.

- **The ground or floor surface is level and hard.**
- **The truck travels under standard loaded or unloaded condition.**
- **The truck is operated carefully and the forks are properly manipulated; that is, the forks are not tilted forward more than necessary, when stacking or unstacking.**
  Load handling is carried out carefully and slowly.

In addition, keep the truck in good working condition for safe operation and traveling.

Standard unloaded condition
This means that the forks are raised 30 cm (12 in.) above the ground or floor surface and tilted back fully without loads.

Standard loaded condition
This means that the forks are raised 30 cm (12 in.) above the ground or floor surface with a load placed at the basic load center position of the forks.

USING INCHING PEDAL T TYPE

The inching pedal works in the same manner as the clutch pedal of the C type truck.
Use the inching pedal to move the truck inch by inch while operating the load handling means at high speed.

1) Press the inching pedal to the floor.
2) Place the shift lever into the forward (or reverse) position.
3) Step on the accelerator pedal gradually while releasing the inching pedal little by little, to move the truck inch by inch.

TRAVELING AND STARTING ON A SLOPE

- When traveling on a slope with a load on the forks, have the load pointed up-hill.
  When traveling on a slope without load, have the rear end of the truck pointed up-hill to prevent the drive wheels from skidding.
- When going down a hill or starting on an incline, use the brake pedal, but not the inching pedal. If the inching pedal is pressed on a downward slope, engine braking will not be available to make it difficult to brake the truck. If the inching pedal is used when starting the truck on a slope, the truck might slip down.

https://truckmanualshub.com/

TRANSPORTING LIFT TRUCK

CAUTION

Transporting the lift truck on a trailer truck

- **Securely lock the lift truck in place to prevent it from moving on the trailer truck by fastening with wire ropes and blocking the wheels.**
- **When loading or unloading the lift truck onto or from a trailer truck or when traveling over public roads, pay attention to the overall length, overall height, and weight and observe the local traffic regulations.**

CAUTIONS TO BE TAKEN WHEN LOADING AND UNLOADING LIFT TRUCK

CAUTION

- **Never try to move the steering wheel when halfway up a ramp; otherwise the truck might fall down, leading to a serious accident.**
- **Use ramps of sufficient length, width, and strength.**
- **Before loading or unloading the lift truck, make sure to apply the parking brake to the trailer truck and block its wheels.**
- **Ramps must be securely locked to the trailer truck. Their surface must be clean and dry.**
- **Loading and unloading must be carried out on a level surface. The right and left ramps must be the same height.**
- **When loading the lift truck onto a trailer truck, back it up the ramps slowly with care.**

OPERATING LIFT TRUCK

MOUNTING AND DISMOUNTING

1) Make sure there is no approaching vehicle or passerby. Make sure the truck is at a complete stop.
2) Get on or off the truck from the left side of the truck, using the safety step and hand grip properly.

CAUTION

Do not hold the steering wheel when mounting or dismounting. Do not jump on or off the truck. You could slip or fall and get injured.

3) Fasten your seat belt securely. The seat belt helps protect you if there is an accident.

STARTING ENGINE AND AFTER ENGINE HAS STARTED

CAUTION

- **Do not try to start the engine unless you are seated properly in the driver's seat.**
- **Make sure there is no one around the truck before starting the engine.**
- **When starting the engine indoors, open the windows or doors and run the fan to prevent exhaust gas poisoning.**

Make sure the shift lever is in neutral "N" and the parking brake is applied securely.

1) Seat yourself in the driver's seat and insert the starter key into the starter switch.

https://truckmanualshub.com/

2) Let other workmen and bystanders know you are starting up by honking.
3) Press the clutch pedal to the floor (C type) or brake pedal (T type) and turn the starter switch to “START” (do not keep the starter switch at “START” more than 10 seconds) to crank the engine.
4) Once the engine has started, remove your hand from the key and release the clutch pedal or brake pedal. The starter key will automatically return to the “ON” position.
5) After the engine has started, do not increase the engine speed rapidly. Warm up the engine and make sure the CHARGE warning light and ENGINE OIL PRESS. warning light go out. In addition, make sure the meters are operating normally.
6) After the engine speed has stabilized, warm up the engine further at idling rpm.

WARMING UP ENGINE

Make sure to warm up the engine for about 5 minutes regardless of whether the ambient temperature is cold or not.
If the truck is operated before warming up the engine sufficiently, the inside of the engine is not properly lubricated and the combustion is incomplete, thus resulting in a damaged engine.

STARTING COLD ENGINE

In a cold climate, the battery performance drops and the viscosity of the lubricating oil increases to make it difficult to crank the engine.
Start a cold engine using the following manner:

Gas-powered trucks

CAUTION

Engine speed is high immediately after the engine has been started. Use caution when operating the shift levers and load handling levers.

- Turn the starter switch to the “START” position to engage the starter motor to start the engine (Keep the accelerator pedal released).
- After the engine has started, warm up the engine.
- If the engine won’t start on the first try, return the starter key to the “OFF” position. Wait about 30 seconds before trying again.

NOTE

After the engine starts, release your foot from the accelerator pedal. Do not race the engine.

Diesel-powered trucks

The preheating operation is automatically controlled according to the cooling water temperature.

- Turn the starter key clockwise to the “ON” position.
  The glow indicator comes on. It will go out when the engine has been preheated.
- When the glow indicator goes out, press the accelerator pedal and turn the starter key to the “START” position to start the engine. Do not keep the starter motor engaged for more than 10 seconds at a time.
- If the engine won’t start on the first try, return the starter key to the “OFF” position. Wait about 30 seconds before trying again.

https://truckmanualshub.com/

WHEN ENGINE WON'T START

CAUTION

Never try to start the engine by pushing or towing the truck.

- Do not keep the starter motor engaged for more than 10 seconds at a time. If the engine does not start 10 seconds after engaging the starter motor, stop the operation of the starter motor. Wait for a while and start all over again.
- If the engine is hard to start despite several tries, check the fuel level in the fuel tank, the fuel system for mixing of air, or the electrical wiring for a broken wire.
- The engine might not start if the starter motor does not reach a specified rpm. If this is the case, start the engine using an auxiliary battery and booster cable.

NOTE

For "Starting with Auxiliary Battery", see page 4 - 29.

BEFORE STARTING LIFT TRUCK

CAUTION

Make sure there is no one around the truck and let other workmen and bystanders know you are starting up by honking.

1) Pull back on the lift lever to raise the forks 15 to 20 cm (6 to 8 in.) from the ground or floor surface.
2) Pull back on the tilt lever to tilt back the mast fully.
3) Make sure there is no one around the truck and let other workmen and bystanders know you are starting up by honking.

STARTING LIFT TRUCK

CAUTION

Slow down when:
- **Making turns**
- **Running at narrow aisles**
- **Running on rough surfaces**
- **Approaching to loads or obstacles.**

C type

1) Press the clutch pedal to the floor.
2) Place the directional shift lever in the forward (reverse) position.
3) Place the speed range shift lever in the Low position.
4) Press and hold down the parking brake release button while releasing the parking brake lever.
5) Press the accelerator pedal while releasing the clutch pedal slowly to start the truck.

NOTE

Do not keep your foot on the clutch pedal after the truck has started; otherwise the clutch disk will wear out prematurely.

https://truckmanualshub.com/

T type

CAUTION

Press the brake pedal to the floor before placing the shift lever into the forward (or reverse) position; otherwise the truck starts moving slowly or creeps when the shift lever is placed into forward or reverse.

NOTE

Do not keep your foot on the inching pedal during traveling after the truck has started.

1) Press the brake pedal.
2) Place the shift lever in the forward (or reverse) position.
3) Press and hold down the parking brake release button while releasing the parking brake lever.
4) Release the brake pedal and press the accelerator pedal to start the truck.

GEARSHIFTING

CAUTION

When traveling in reverse, look in the direction of travel and be alert for pedestrians, other trucks or obstacles in your path of travel. Do not rely too much on the side view mirrors.

C type

- When reversing the direction of travel, from forward to reverse or vice versa, be sure to bring the truck to a complete stop.
- When changing the speed range from Low to High, start the truck and accelerate the speed. Then, release the accelerator pedal while pressing the clutch pedal and change the speed range. Press the accelerator pedal while releasing the clutch pedal quickly.

T type

When reversing the direction of travel, from forward to reverse or vice versa, be sure to bring the truck to a complete stop.

SLOWING DOWN

C type

Release the accelerator pedal and press the clutch pedal. Place the speed range shift lever into Low and press the accelerator pedal while releasing the clutch pedal quickly. Press the brake pedal as necessary.

T type

Ease up on the accelerator pedal. If necessary, press the brake pedal.

https://truckmanualshub.com/

TURNING

CAUTION

Note that the rear end (counterweight) of the truck swings when you turn the truck.

Unlike general passenger cars, the steer wheels are located at the rear of the truck. This causes the rear end of the truck to swing out when a turn is made. Slow down the truck and move toward a side to which you are turning. The steering wheel should be turned a bit earlier than as with the front-wheel steering car.

- Grab the steering wheel knob with your left hand.
- Your right hand is used to operate the load handling levers. Put your right hand on your knee while you are not operating the load handling levers.

PARKING

Slow down the truck and press the brake pedal to bring the truck to a stop. Press the clutch pedal (C type) and place the shift lever into the neutral “N” position.

NOTE

Do not stop the truck on an up-hill slope by controlling the accelerator pedal; otherwise the clutch disk will wear out or the torque converter oil temperature will rise abnormally.

CAUTION

Safe parking

- **Park the truck on a level ground, preferably in a wide area.**
  If parking the truck without load on a slope is unavoidable, position the load handling means down-hill and block the wheels to prevent accidental roll.
- **Park the truck in a designated area or out-of-traffic area. If necessary, put signposts or signal lights around the truck.**
- **Park the truck on a hard ground. Avoid soft ground, deep mud or slippery surfaces.**
- **If you cannot lower the forks on the ground due to a broken load handling system, put a caution cloth to the fork end and park in an out-of-traffic area.**
- **Pay attention to the ground condition because it might be slippery.**
- **Dismount from the truck after making sure it has come to a complete stop. Do not dismount from the truck in motion.**
- **Never jump off the truck.**
- **Dismount from the truck, facing the truck and using the safety step and hand grip.**

https://truckmanualshub.com/

Park the truck in an out-of-traffic area and follow the procedure given below:

1) Pull the parking brake lever to the full to apply the parking brake.
2) Lower the forks on the ground.
3) Turn the key switch “OFF” to shut down the engine.
4) Remove the key and keep it sure.
5) Dismount from the truck carefully.

GROUND CONDITION

CAUTION

- **Use due caution when traveling on a rough surface.**
- **When crossing a railroad, be sure to once stop, make sure to be safe and cross the railroad track at an angle wherever possible.**
- **Go around obstacles such as rocks and stumps, or pot holes. If unavoidable, reduce the speed and go over slowly and carefully. Use caution not to damage the bottom of the truck. Cross a small bump diagonally if the aisle width is enough to do so.**

Lift truck performance depends upon the ground condition or floor condition and travel speed should be adjusted properly.

TRAVELING ON SNOWY OR FROZEN ROAD

CAUTION

Note that fitting of optional tire chains will increase traction, but can hardly prevent the truck from sideslipping.

When traveling on a snowy or frozen road, use tire chains. Avoid sudden acceleration, stops or turns; otherwise the truck might skid to cause a serious accident.
Control the traveling speed carefully using the accelerator pedal.

NOTE

Some trucks require the replacement of some parts when using tire chains.
For more information, consult your local TCM dealer.

https://truckmanualshub.com/

IN COLD WEATHER

When using the truck in a cold weather, special care should be taken more than when using it in a warm weather.

Caution to be taken when adding fuel

CAUTION

When adding fuel, make sure to shut down the engine. Never smoke.

Add fuel up to the upper limit of the tank. This will help prevent the freezing of water content contained in the air inside the tank or the fuel system from corroding, which makes it difficult for the engine to start.

NOTE

Make sure the fuel cap is securely tightened.
(A loose cap will allow rain water or snow to enter the fuel tank.)

Caution to be taken for the cooling system

Frozen cooling water might damage the engine or radiator.
When the ambient temperature is anticipated to be below 0°C, add anti-freeze into the cooling water. If you do not use anti-freeze, make sure to remove all the cooling water after the day's work. When the truck has a label given at the right, it uses cooling water containing 50% LLC (Long Life Coolant). If this is the case, there is no need to change the cooling water for 2 years. When addition of cooling water is needed, use cooling water containing one part of water and one part of LLC.

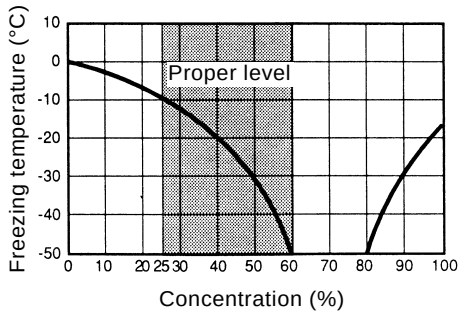

CAUTION

Handling LLC

- **The LLC is flammable. Do not use open flame when adding, changing or storing it.**
- **The LLC is poisonous. (Lethal dose: 100 cc). Do not swallow it. If anyone swallowed it accidentally, induce vomiting immediately and get medical attention.**
- **When storing, put a sign "Dangerous substance" and keep it out of reach of children.**

https://truckmanualshub.com/

MEASURES AGAINST COLD OR HOT WEATHER

Battery care

CAUTION

Never pour hot water over the battery case even if you find it difficult to start the engine. The battery case might break, causing a serious accident.

The battery hardly freezes and works efficiently when it is completely charged and has a greater specific gravity of the electrolyte.
If the electrolyte freezes, the battery case will be broken. Keep the battery in fully charged condition at all times.
The battery electrolyte usually freezes at about -35°C (-31°F) when the battery is in a fully charged condition.

To prevent freezing

- Keep the battery's state of charge to more than 75%.
- Keep the specific gravity of electrolyte at 1.280 or less.
- When the truck is not in use, remove the battery from the truck and store in a warm place.

NOTE

When adding purified water to the battery, make sure to add it immediately before charging or starting the truck.

DANGER

Cautions to be taken when handling battery

Gases produced by the battery can be explosive. Do not smoke. Do not use open flame for inspection.

- **No fire. Do not smoke. Keep sparks or open flame away from the battery.**
- **Keep proper electrolyte level. If the level is too low (below LOWER LEVEL), the battery will build up heat, leading to an explosion.**
- **Have a good ventilation. Do not use or store batteries in a closed place or an area where ventilation is poor.**
- **Avoid electroshock accident. Wear rubber gloves when servicing and inspecting the battery.**
- **Sulfuric acid. The electrolyte is sulfuric acid and thus it might cause burns or blindness if it comes in contact with the skin, eye, or clothing.**
  - **If electrolyte comes in contact with your skin or clothing, wash it away using a copious amount of water immediately.**
  - **If electrolyte gets into your eyes, wash your eyes with a copious amount of water immediately and get medical attention.**

https://truckmanualshub.com/

IN HOT WEATHER

Cooling system

⚠ CAUTION

Make sure the engine is cold before opening or closing the radiator cap. Hot cooling water might spout out to cause serious burns.

To get a good cooling effect, use caution not to allow leakage of cooling water and the forming of scale or corrosion in the cooling system.

- In hot weather, the cooling system is apt to cause scale or corrosion. Use caution to get the circulation of clean water at all times. The LLC can be used for all seasons, because it has anti-rust and anti-corrosion effect in addition to anti-freezing effect.
- A clogged radiator fin will cause an overheated engine. Keep the radiator fins always clean. In addition, check for water leaks.
- Check for a loose fan belt. If the fan belt is loose, adjust it for the specified tension.

Measures to be taken when the engine has overheated

⚠ CAUTION

If the engine has overheated, do not open the radiator cap. In addition, do not touch the radiator reservoir tank. Hot steam might spout out, causing burns.

When the engine has overheated:

1) Let the engine run at idle rpm for a while and open the engine hood fully to get a good ventilation.
2) After making sure the temperature of the cooling water cools down sufficiently, shut down the engine.
3) Open the reservoir tank and add cooling water.
4) Check for water leaks of the cooling system, clogged radiator fin, and loose fan belt.

https://truckmanualshub.com/

LOAD HANDLING

PICK-UP

1) The fork spacing should be as wide as possible to maintain proper balance of the load.
2) Place the truck right in front of the load to be handled.
3) The pallet should be evenly positioned across both forks.
4) Insert the forks into the pallet as far as possible.
5) To raise the load from the ground:
   ① Once lift the forks 5 to 10 cm (2 to 4 in.) off the ground or floor surface, and make sure the load is stable.
   ② After making sure the load is stable and evenly positioned on the forks, tilt back the mast fully and lift the forks up to 20 cm (8 in.) off the ground or floor surface. Start running.
6) When handling a bulky load which restricts your vision, drive the truck in reverse.

STACKING

1) When approaching the deposit area, slow down your truck.
2) Once stop the truck right in front of the area where your load is to be deposited.
3) Check the condition of the deposit position.
4) Tilt the mast forward until the forks become horizontal.
5) Raise the forks until they are a little higher than the deposit position.

⚠ CAUTION

- **Never tilt the mast forward with the load upraised except when the forks are over the rack or a stack.**
- **Do not leave the truck with the load upraised.**

6) Move forward slowly to place the load directly over the desired area and stop the truck.
7) Make sure the load is just over the desired area. Slowly lower the load into position. Make sure the load is securely stacked.
8) Disengage the forks from the pallet or load using necessary lift-tilt operation, and then back away.
9) After making sure the fork tips leave the pallet or load, lower the forks to the basic traveling position (20 cm (8 in.) off the ground or floor surface).
10) Tilt back the mast.

https://truckmanualshub.com/

UNSTACKING

1) When approaching the area where the load is to be retrieved, slow down the truck.
2) Once stop the truck right in front of the load so that the distance between the fork tips and the load is about 30 cm (12 in.).
3) Check the condition of the stack.
4) Tilt the mast forward until the forks become horizontal and lift up to the position of the pallet or skid.
5) Make sure the forks are positioned properly for the pallet. Move forward slowly to insert the forks into the pallet as far as possible. Stop the truck.
   * If the forks are hard to be fully inserted, use the following procedure:
   ① Move forward to insert 3/4 of the forks. Raise the forks 5 to 10 cm (2 to 4 in.), back away 10 to 20 cm (4 to 8 in.) with the pallet or skid on the forks. Lower the pallet or skid on the stack.
   ② Move forward again to insert the forks into the pallet fully.
6) Raise the forks 5 to 10 cm (2 to 4 in.) off the stack.
7) Check all around the truck to ensure that the path of travel is unobstructed and back away slowly.
8) Slowly lower the load to a height of 20 cm (8 in.) above the ground or floor surface. Tilt back the mast fully and move to the desired area.

https://truckmanualshub.com/

STORING

BEFORE STORING

CAUTION

- **If any time your lift truck is found to be in need of repair, defective or in any way unsafe, the condition should be reported to the supervisor, and the truck should be taken out of service until it has been restored to safe operating condition.**
- **Use caution to prevent electrical parts from getting wet when washing the truck.**

Before storing the lift truck, clean it thoroughly and perform inspection using the following procedure:

- Wipe away grease, oil, etc., adhering to the body of the truck with shop rag. Use water, if needed.
- While washing the truck, check the general condition of the truck. Especially check the truck body for dents or cracks, the tires for wear or nails or stones in the tread.
- Check the fuel level and add if necessary.
- Check for leakage of hydraulic oil, engine oil, fuel or cooling water.
- Apply grease, where needed.
- Check for looseness of the hub nuts and cylinder piston rod joints.
- Check the mast rollers to see that they rotate smoothly.
- Lift the forks up to the top position and lower to the lower limit. Repeat this procedure to prime oil into the lift cylinders.
- Drain off the cooling water completely from the cooling system in winter or cold weather if anti-freeze or LLC is not used.

DAILY STORAGE

- Park the truck at a specified place and block the wheels.
- Place the shift lever(s) in neutral “N” and pull the parking brake lever fully.
- Shut down the engine and operate the load handling levers several times slowly to remove the residual pressure from the cylinders and hoses.
- Remove the starter key and keep it in a safe place.

https://truckmanualshub.com/

LONG-TERM STORAGE

Perform the following checks in addition to “BEFORE STORING” and “DAILY STORAGE” services.

- Taking the rainy season into consideration, park the truck at a higher and hard ground.
- Remove the battery from the truck.
- Even though the truck is parked indoors, if the place is hot or humid, the battery should be kept in a dry, cool place, and charged once a month.
- Apply anti-rust to the exposed parts such as cylinder rods and shafts that tend to rust.
- Cover components which may be caught with humidity, such as the air breather and air cleaner.
- Put the truck in the operating state once a week and start the engine. Warm it up sufficiently before moving the truck a little back and forth.
- Avoid parking on a soft ground such as an asphalt ground in summer.

OPERATING AFTER LONG-TERM STORAGE

- Remove covers used to seal off moisture.
- Remove antirust from the exposed parts.
- Drain the crankcase, transmission (C type), differential, and torque converter (T type), clean their inside and add new oil.
- Drain foreign matter and water from the hydraulic oil tank and fuel tank.
- Remove the engine cylinder head cover and lubricate the valves and rocker shafts. Check the valves for proper operation.
- Add cooling water to the specified level.
- Charge the battery and mount it on the truck. Connect the cables.
- Perform pre-operational checks carefully.
- Warm up the engine.

https://truckmanualshub.com/

MEMO

https://truckmanualshub.com/

The following symbols, found throughout this manual, alert you to potentially hazardous conditions to the owner and the operator.
Become completely familiar with the truck before proceeding with operating, checking and servicing.

This manual and decals affixed to the truck use the following safety alert indications.

SIGNAL WORD	CLASSIFICATION
DANGER	**Failure to follow the instructions in the message will likely cause a serious accident or death.**
WARNING	**Failure to follow the instructions in the message might cause a serious accident or death.**
CAUTION	**Failure to follow the instructions in the message may cause personal injury or damage to the truck or other property.**
NOTE	**The information will help to prolong the service life of the truck. The message is not directly related to accident prevention.**

4. MAINTENANCE

CONTENTS

PREOPERATIONAL CHECKS ..... 4 - 1
GENERAL RULES ON INSPECTION ..... 4 - 1
ITEMS TO BE CHECKED ..... 4 - 3
PREVENTIVE MAINTENANCE ..... 4 - 17
ENGINE ROOM ..... 4 - 17
REPLACING TIRES AND REPAIRING FLAT TIRE ..... 4 - 27
REPLACING LAMP BULBS ..... 4 - 28
STARTING THE ENGINE WITH AUXILIARY BATTERY ..... 4 - 29
ADJUSTING OPERATING FORCE OF PARKING BRAKE LEVER ..... 4 - 30
PERIODIC INSPECTION ..... 4 - 31
PERIODICAL REPLACEMENT OF SAFETY PARTS ..... 4 - 31
MONTHLY (200 HOURS) CHECKS ..... 4 - 32
3 MONTHS (600 HOURS) CHECKS ..... 4 - 39
6 MONTHS (1200 HOURS) CHECKS ..... 4 - 41
ANNUAL (2400 HOURS) CHECKS ..... 4 - 42
PREVENTIVE MAINTENANCE SCHEDULE ..... 4 - 43

https://truckmanualshub.com/

PREOPERATIONAL CHECKS

Before starting the lift truck, be sure to inspect the following items for safety's sake and increased productivity.

⚠ CAUTION

- **If any fault is found by preoperational inspection, attach a sign in the control area stating DO NOT OPERATE, remove the starter key and report the condition to the supervisor. Operation of the truck should be halted until the truck is completely repaired.**
- **Check for oil leaks. Remember that oil leaks might cause a fire.**
- **Waste fluid caused from lubricant change services must not be thrown away thoughtlessly, because they will be a cause of air, water, earth pollution.**
  The service personnel or employer is required to dispose of it properly.

GENERAL RULES ON INSPECTION

- Use TCM's genuine parts only.
- Use TCM's genuine or recommended lubricants only.
- Clean the oil fillers and grease fittings using a brush or shop rag before adding oil or fuel or greasing.
- Oil level checks and addition of oil should be made with the truck parked on a level surface.
- Preventive maintenance services should be done in an orderly manner and due care taken to prevent personal injury.
- If unavoidable to work under raised forks or attachment, use a stable support to prevent the forks or attachment from falling down unexpectedly.
- Any time the operator finds that the truck or the controls are not functioning properly, operation of the truck should be halted and the condition reported to the supervisor. Never operate a faulty truck.

https://truckmanualshub.com/

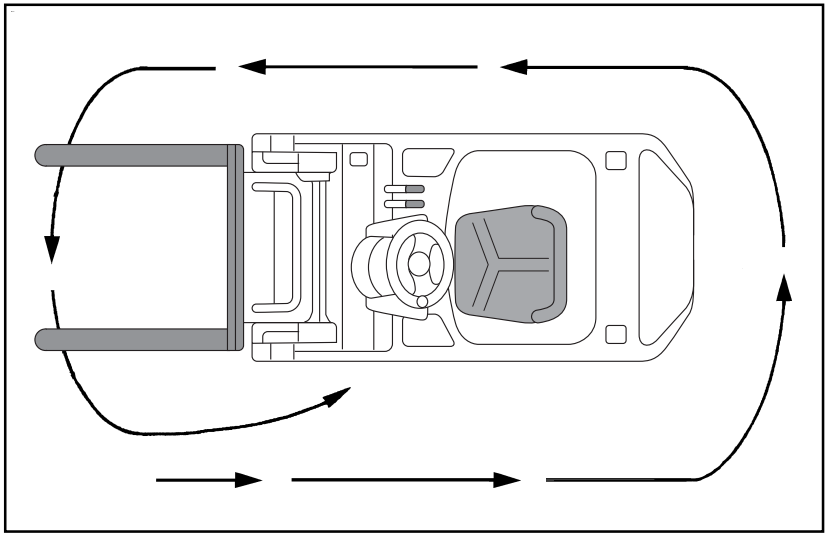

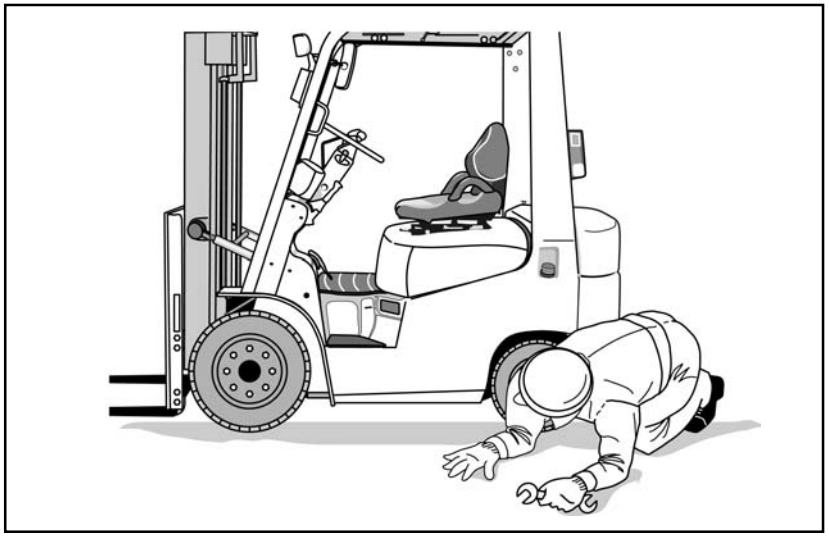

■ General condition

Check the general condition of the truck, in particular, the truck body for dents or cracks and tires for wear or nails caught in the tread.

■ State of the truck

Check the inclination of the truck. If the truck is tilted to either side, it suggests that the tires or wheels are defective. Contact your local TCM dealer.

■ Oil or water leaks

Check for oil or water leaks under the truck. If there is a pool of oil or water on the ground or floor surface, contact your local TCM dealer.

https://truckmanualshub.com/

ITEMS TO BE CHECKED

1 CHECK THE RESULT OF REPAIRS PERFORMED ON PREVIOUS CHECKING

CAUTION

Never try to operate a faulty truck.

Check to see if any defect found on the previous inspection has been repaired properly.

2 TIRE INFLATION PRESSURE AND TIRE CONDITION CHECK

CAUTION

The tires of the lift truck have a high inflation pressure. Make sure the tires and rims are normal and inflate the tires to the standard air pressure. Do not overinflate the tires.
When using an air compressor to inflate the tires, first adjust the compressor air pressure properly. Failure to do so will cause a serious accident since the compressor delivers the maximum pressure.
A small bend of the rim or a slightly damaged tire might cause a flat tire, leading to a serious accident. If you find any failure, contact your local TCM dealer.

Keep the inflation pressure of the tires always at proper level.

NOTE

Low air pressure reduces tire service life. Unevenness of air pressure between right and left tires will cause hard steering or the truck to wander.

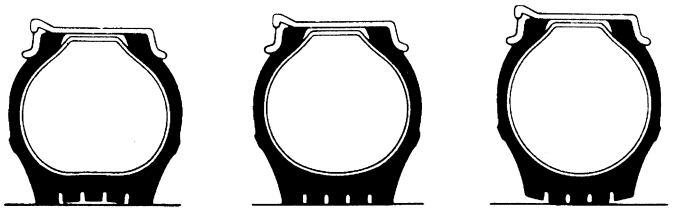

The standard tire pressure is indicated on the decal at the left side of the front guard.

Tire inflation pressure

Front wheels (both single and double tires)		
	(1.5- to 3-ton)	700 kPa (7 kgf/cm^2) (100 psi)
	(3.5-ton)	850 kPa (8.5 kgf/cm^2) (123 psi)
Rear wheels	(1.5- to 1.75-ton)	800 kPa (8 kgf/cm^2) (114 psi)
	(2- to 3-ton)	700 kPa (7 kgf/cm^2) (100 psi)
	(3.5-ton)	900 kPa (9 kgf/cm^2) (131 psi)

Turn the tire valve cap counterclockwise and remove it. Using a tire pressure gauge, measure the inflation pressure and adjust for the standard inflation pressure.
Then, make sure there is no air leakage from the tire valve, reinstall the tire cap.
Check that each tire does not get damaged at the tread surface or side face or bending at the rim.

Checking tires for tread wear

All the tires have tread wear indicators ("△" marking) between the tread blocks. When the tread is worn flush with the tread wear indicators, it means that the tread has reached a depth of about 1.6 mm. If the tread is worn flush with any of the tread wear indicators, replace the tire with a new one. If replacement of a tire is needed,

https://truckmanualshub.com/

both the front tires or rear tires should be replaced as a set. Make sure new tires are the same size as those to be replaced.

Hub nut check

CAUTION

A loose hub nut can be dangerous. In the worst case, the wheel comes off the truck, causing the truck to tip over.

Check the hub nuts for looseness. All hub nuts should be tightened to the specified torque.

Hub nut tightening torque

	Front wheels	Rear wheels
1.5- to 1.75-ton	Single tire: 150 – 175 N-m (15 – 17.5 kgf-m) (108 – 127 ft-lbs) Double tires: 230 – 280 N-m (23 – 28 kgf-m) (166 – 203 ft-lbs)	128 – 190 N-m (13 – 19.4 kgf-m) (94 – 140 ft-lbs)
2- to 3.5-ton	Single and doubles tires: 471 – 549 N-m (48 – 56 kgf-m) (347 – 405 ft-lbs)	

Tightening order for double tires

Double tires are installed by locking the inner tire rim with inner hub nuts (square nuts) and then by locking the outer tire rim with outer hub nuts (hex. nuts).
First, tighten the inner nuts (square nuts) in a diagonal order to the specified torque and then tighten the outer nuts (hex. nuts) in the same manner as above.

Tightening drive shaft mounting bolts

If any loose bolt is found, retighten it to the following torque:
96 – 111 N-m (9.8 – 11.3 kgf-m) (71 – 82 ft-lbs)

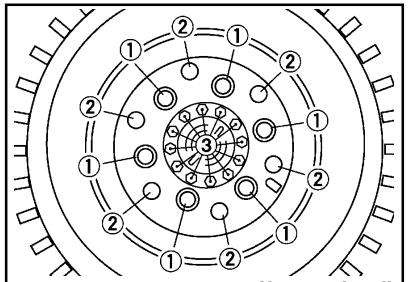

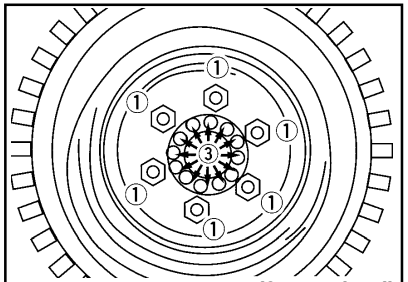

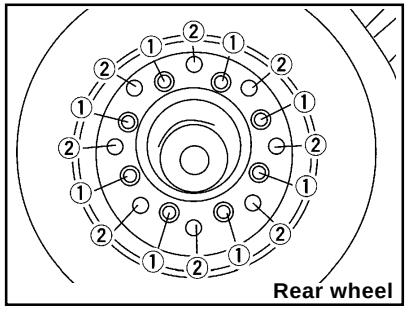

① Hub nuts
② Rim connecting bolts
③ Drive shaft mounting bolts

CAUTION

Do not use tires whose bolts securing the split type rim assembly are loose.
The front single tires and rear tires use a split type rim assembly in which the inner and outer rims are bolted together. If any tire has a loose rim connecting bolt, do not operate the truck. **Remove the air valve core to remove the air from the tire and detach the tire from the truck.** (For more information about the procedure for removing the tire, see page 4 - 27.)
Loosen the split rim connecting bolts using a special tool. It is advisable to ask a specialist to retighten the connecting bolts, disassemble and reassemble the tire and rim, and inflate the tire. (The disassembly, reassembly and inflation of tires should be performed only by qualified personnel.)

https://truckmanualshub.com/

3 OVERHEAD GUARD

Check the overhead guard for loose mounting bolts or nuts, cracks, deformation or damage.

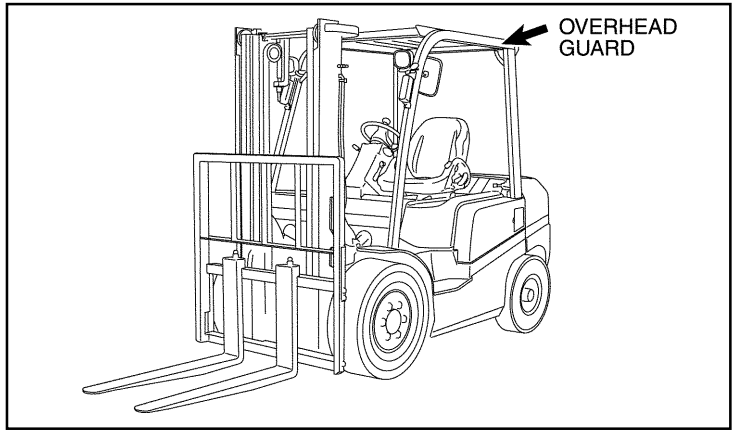

4 BRAKE FLUID LEVEL

Remove the glove box in the operator's compartment and check the brake fluid level through the inspection slit.
Make sure the fluid level is between the upper and lower markings.

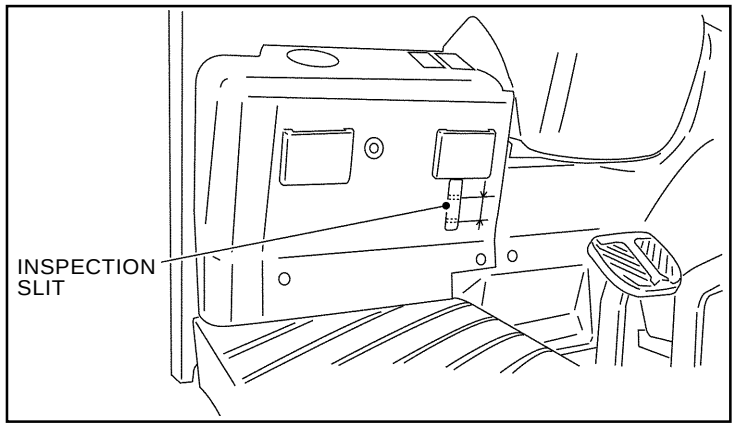

Open the engine hood

Remove the floor mat and pull up the engine hood opening lever to open the hood. Make sure the hood damper stopper is securely locked before removing your hand.

5 BATTERY ELECTROLYTE LEVEL

⚠ CAUTION

- **Do not use or charge the battery with the electrolyte level below the "LOWER LEVEL"; otherwise the inside of the battery deteriorates to cause a short battery life and in the worst case it might cause an explosion.**
- **Never use open flame for checking the electrolyte level. There is a danger of causing an explosion.**

Raise the left side-cover to remove.
Check the battery electrolyte level.
Keep the electrolyte level between the "UPPER LEVEL" and "LOWER LEVEL" on the battery case.
Clean the top of the battery case and connections.

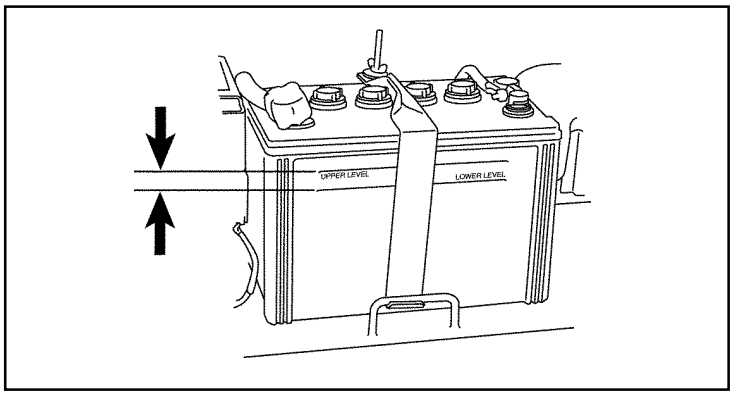

https://truckmanualshub.com/

6 COOLING WATER LEVEL

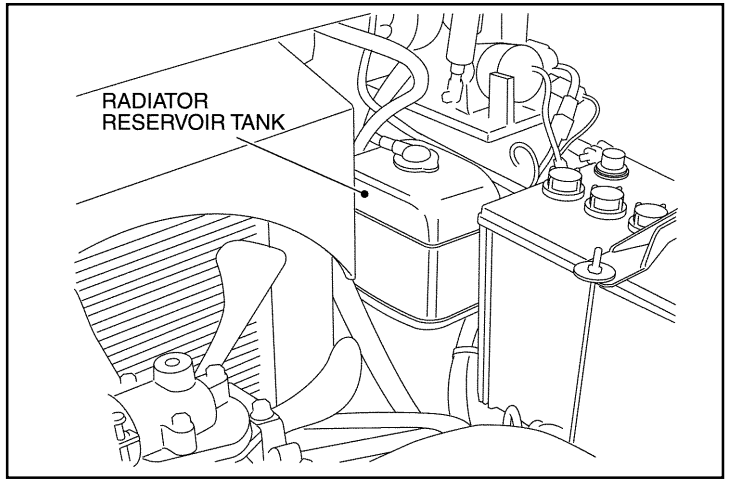

Check the cooling water level when the radiator is cold. Make sure that the cooling water level between “FULL” and “LOW” markings on the radiator reservoir tank.
If addition of cooling water is needed, remove the reservoir tank cap and add cooling water up to the “FULL” marking.

NOTE

If there is no cooling water in the reservoir tank, check the cooling water level in the radiator.

Checking cooling water level in radiator

CAUTION

- **Do not try to remove the radiator cap when the engine is hot; otherwise you will get burnt. The cooling water level should be checked before starting the engine or when the engine is cold.**
- **When removing the radiator cap, loosen it slightly to release the pressure, and then remove.**

Loosen the two radiator cover mounting bolts and remove the radiator cover.
Remove the radiator cap carefully and check the cooling water level. If addition of cooling water is needed, add cooling water to the neck of the fill port.

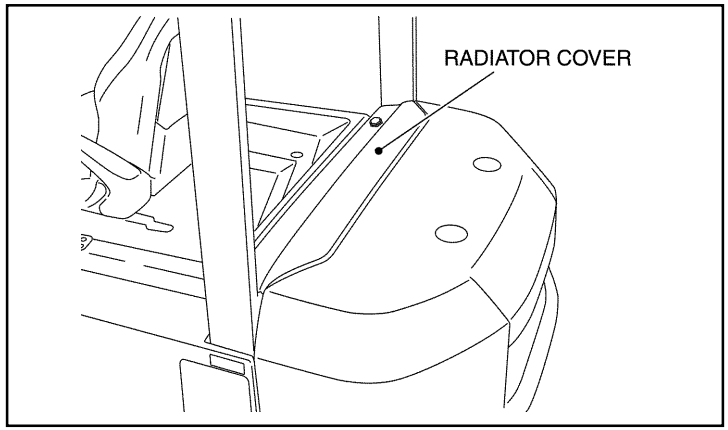

https://truckmanualshub.com/

7 ENGINE OIL LEVEL

⚠ CAUTION

The exhaust system is hot for a while after the engine is shut down. Use caution not to get burnt.

The engine oil level dipstick is located at the left side (K15, K21, K25, D1503, TD27-II, QD32, C240) or the right side (V3300) of the engine.
Remove the dipstick, clean the rod and reinstall. Pull it out again and check the oil level. The level should be within the range between the upper and lower marks on the dipstick.
Do not add engine oil above the upper mark on the dipstick.

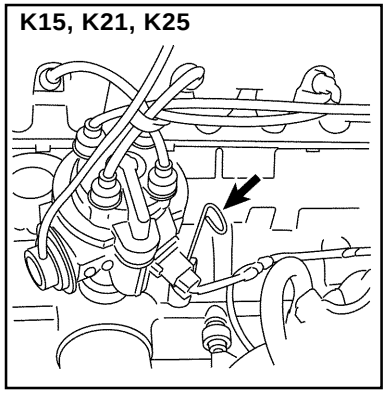

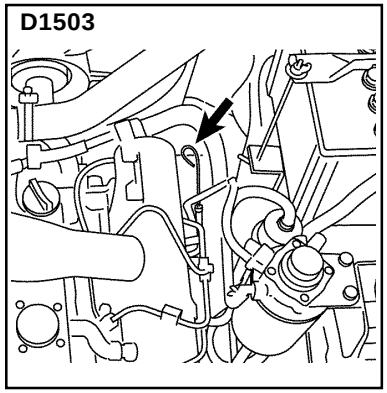

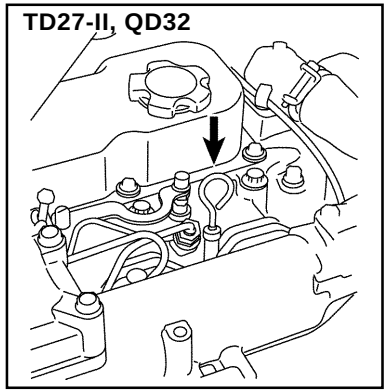

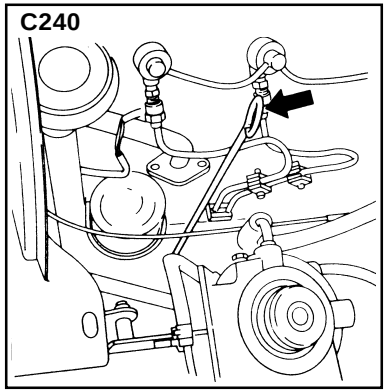

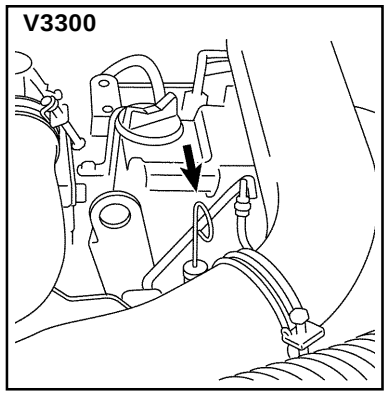

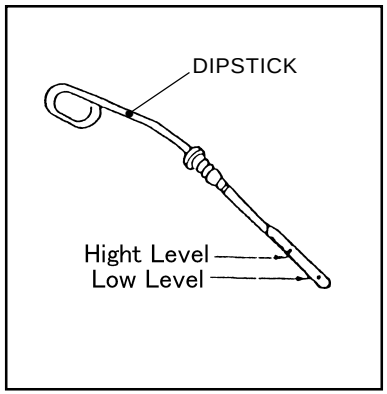

NOTE

Engine oil level check should be performed with the truck parked on a level surface before starting the engine. You cannot know the correct oil level immediately after the engine is shut down. Wait for about 10 minutes before checking the oil level.

https://truckmanualshub.com/

8 FAN BELT

⚠ CAUTION

Make sure the engine is shut down before checking the fan belt for tension.

Check the belt tension (deflection) by pressing the middle part on each span (areas indicated by arrows). Check also for cracks or damage of the belt. If defective, adjust or replace it with a new one.

Engine model	Belt deflection	
K15, K21, K25	12 – 14 mm (0.5 – 0.6 in.)	When a pressure of 98 N (10 kgf) (22 lbs) is applied.
D1503	7 – 9 mm (0.3 – 0.4 in.)	
TD27-II, QD32	8 – 11 mm (0.3 – 0.4 in.)	
C240	10 – 15 mm (0.4 – 0.6 in.)	
V3300	10 – 12 mm (0.4 – 0.5 in.)	When a pressure of 60 – 70 N (6 – 7 kgf) (13 – 15 lbs) is applied.

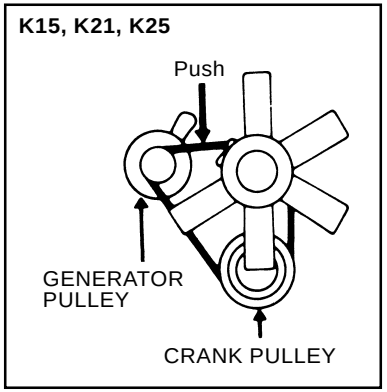

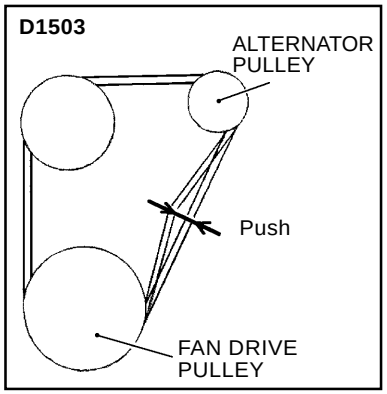

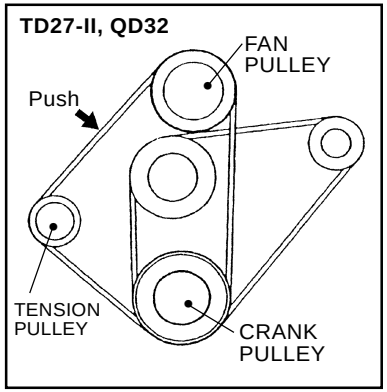

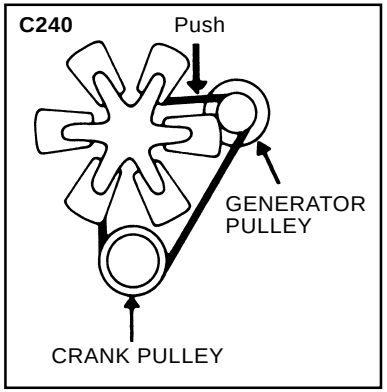

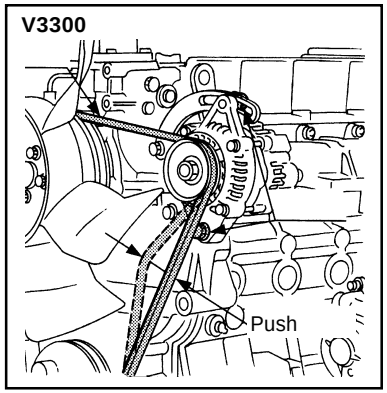

https://truckmanualshub.com/

9 REAR COMBINATION LAMP

Check the rear combination lamps (turn signals, tail lamps, brake lamp, back-up lamp, and rear reflector) for a damaged or contaminated lens.

10 HYDRAULIC OIL LEVEL

Raise the right side-cover to remove.
Check the hydraulic oil level in the tank using the oil level dipstick.
Remove the dipstick of the tank cap, clean the rod with a clean cloth and reinsert it. Remove the dipstick again and check the oil level. If the level is low, add hydraulic oil.

[How to read oil level]

“H” mark: Highest position of the standard truck
“L” mark: Lowest position of the standard truck
“S” mark: For trucks with a lift height of 6 m or more or for special trucks, the oil level should be within 10 mm above or below this mark.

NOTE

The oil level check should be performed with the engine shut down, the mast vertical, the forks on the ground or floor surface, and the truck parked on a level surface.

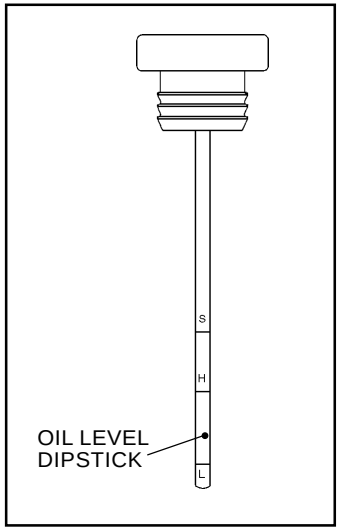

11 HYDRAULIC OIL PIPING AND CYLINDERS

Visually check the hydraulic oil piping and lift and tilt cylinders for oil leaks.

https://truckmanualshub.com/

12 TORQUE CONVERTER OIL LEVEL T TYPE

Remove the floorboard.
Remove the oil dipstick of the filler cap. Clean the rod with a clean cloth and reinstall it.
Remove the dipstick again and check the oil level.
The oil level should be within the specified range. If the level is low, add oil.

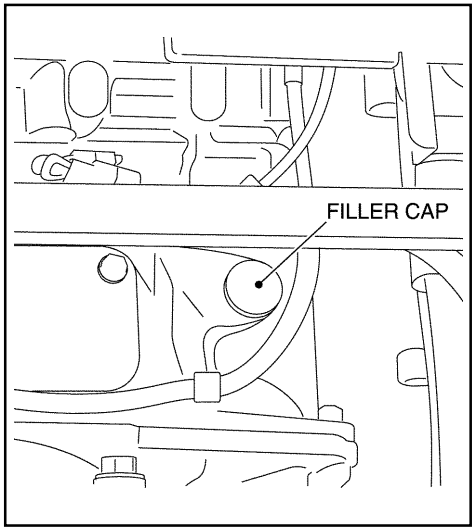

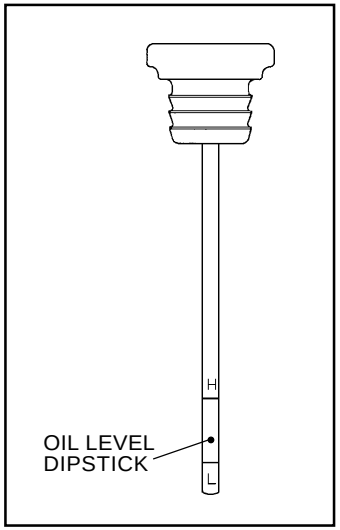

13 MASTER CYLINDER FLUID LEAKAGE

Check the master cylinder and brake piping for fluid leaks.

14 LOAD BACKREST

Check the load backrest for deformation, cracks or damage or loose or missing mounting bolts.
Retighten where needed.

15 FORKS AND FORK STOPPERS

Check that the fork stoppers are properly engaged, the fork lock bolt at the middle of the carriage is not damaged, the forks are not bent and do not have cracks.

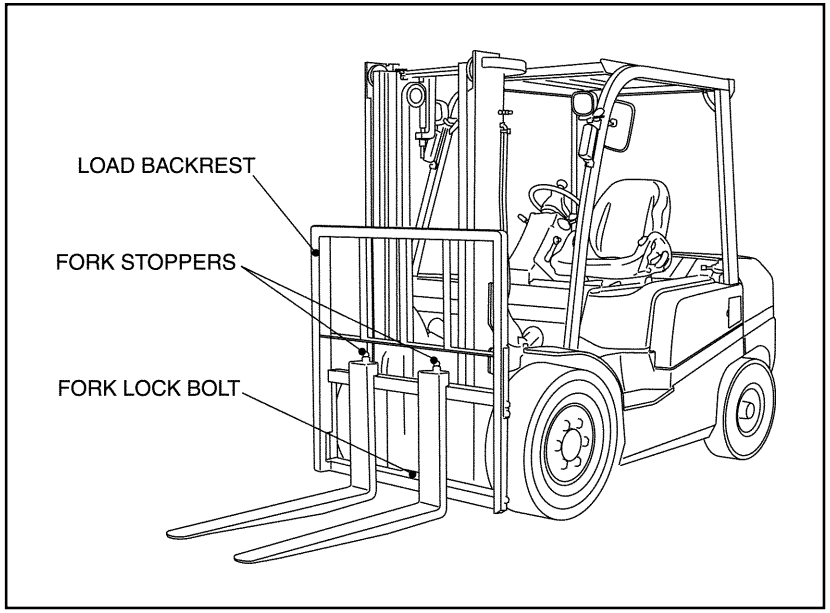

https://truckmanualshub.com/

16 HEAD LIGHTS AND COMBINATION LAMPS

Check for dirty or damaged lens of the head lights. Check also the front and rear combination lamps (side marker lights and turn signals) for a dirty or damaged lens.

Close the engine hood

> ⚠ **CAUTION**
>
> **Take care not to pinch your fingers in the engine hood.**

Reinstall the right and left side-covers and floorboard.
Close the engine hood and lay the floor mat.

17 ADJUSTING OPERATOR'S SEAT AND STEERING COLUMN ANGLE

Seat yourself in the operator's seat and adjust the operator's seat to a position which provides easy access to all foot and hand controls. Also make sure you can operate the steering wheel smoothly.
After adjustment of the operator's seat position and steering column angle, lock the seat and steering column securely.

18 SIDEVIEW MIRRORS

Check the sideview mirrors for contamination or damage.
Adjust the mirrors to gain full rearview when you are seated in the operator's seat.

19 SHIFT LEVERS

Check the directional and speed range shift levers (C type) and shift lever (T type) for looseness and smooth operation.

20 LOAD HANDLING LEVERS

> ⚠ **CAUTION**
>
> **Note that the forks drop when the lift lever is pushed forward even if the engine is not running.**

Check the load handling levers (lift, tilt and attachment) for looseness and smooth operation.

21 PARKING BRAKE OPERATION

Pull the parking brake lever to check if the parking brake is properly applied and the lever is securely locked.

Start the engine

> ⚠ **CAUTION**
>
> **Make sure the shift levers are in neutral and the parking brake is applied before starting the engine.**

22 WARNING LIGHTS

Turn the starter switch from "OFF" to "ON". Make sure the warning lights come on in red and go out soon after the engine has started.

https://truckmanualshub.com/

23 FUEL LEVEL

Check the fuel level using the fuel gauge on the meter panel. Make sure the fuel level is sufficient for the day's work or for each shift. In addition, if the truck is equipped with a water temperature gauge or oil temperature gauge, check it, too, for proper operation.

24 LIGHTS AND LAMPS

Operate the lighting switch to check if the lights and lamps come on and off properly.

25 TURN SIGNALS

Operate the turn signal lever to see if the turn signals blink normally.

26 HORN

Press the horn button at the center of the steering wheel to check if the horn sounds properly.

27 BRAKE PEDAL AND INCHING PEDAL T TYPE

⚠ CAUTION

If brake pedal or inching pedal fails to operate normally or if they have improper height or play, ask your local TCM dealer for inspection and repair.

Press each pedal to check if it operates smoothly. Release the pedal to check if it returns securely.
Also check each pedal for proper height and play.

		Height (A)	Play (B)
1.5- to 1.75-ton	Brake pedal	115 mm (4.5 in.)	10 mm (0.4 in.)
	Inching pedal	115 mm (4.5 in.)	0 mm (0 in.)
2- to 3.5-ton	Brake pedal	117 mm (4.6 in.)	10 mm (0.4 in.)
	Inching pedal	117 mm (4.6 in.)	0 mm (0 in.)

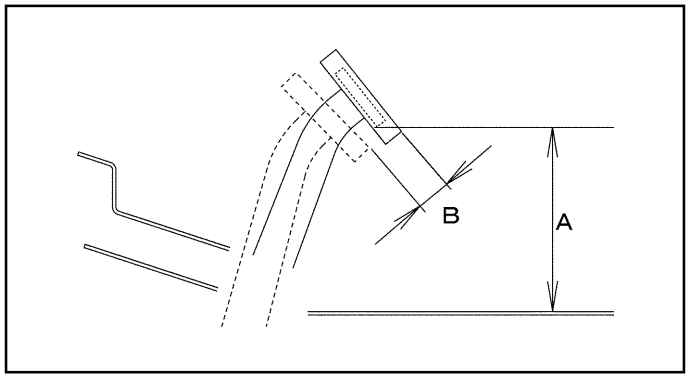

https://truckmanualshub.com/

28 CLUTCH PEDAL AND BRAKE PEDAL C TYPE

CAUTION

If clutch pedal or brake pedal fails to operate normally or if they have improper height or play, ask your local TCM dealer for inspection and repair.

Press each pedal to check if it operates smoothly. Release the pedal to check if it returns securely.
Also check each pedal for proper height and play.

		Height (A)	Play (B)
1.5- to 1.75-ton	Clutch pedal	115 mm (4.5 in.)	0 - 5 mm (0 - 0.2 in.)
	Brake pedal	115 mm (4.5 in.)	10 mm (0.4 in.)
2- to 3.5-ton	Clutch pedal	117 mm (4.6 in.)	0 - 5 mm (0 - 0.2 in.)
	Brake pedal	117 mm (4.6 in.)	10 mm (0.4 in.)

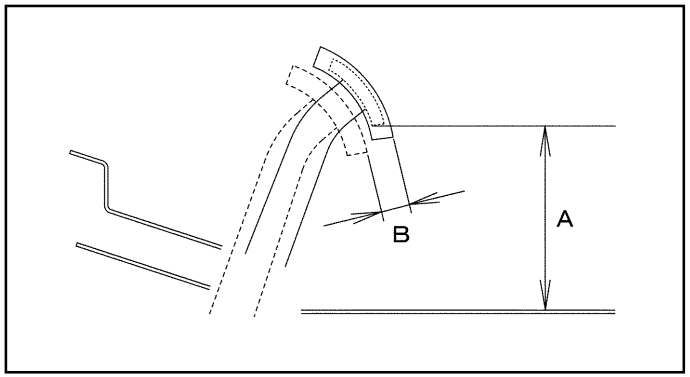

29 MAST OPERATION

Operate each of the lift and tilt levers in full stroke a few times to check if the forks and mast operate smoothly without squeaking. Check also each lever for looseness. (If the truck is equipped with an optional hydraulic attachment, check the attachment itself and its control lever.)

NOTE

WARMING UP CYLINDERS

Before starting the day's work, warm up the cylinders. This lubricates packings and seals in the cylinders to make them ready for operation.

https://truckmanualshub.com/

30 LIFT CHAIN TENSION

Raise the forks 50 mm (2 in.) off the ground or floor surface and check that the right and left lift chains have the same tension.

If uneven tension is found, adjust the tension using the adjusting nut of the chain anchor bolt. After adjustment, securely tighten the lock nut.

In addition, check the chains for deformation, corrosion or damage.

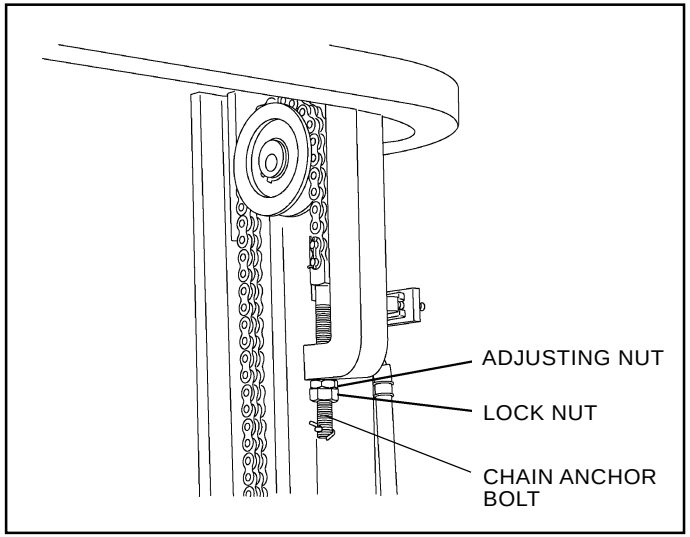

31 STEERING WHEEL

Turn the steering wheel counterclockwise and clockwise to check for play.

The normal play is within the range of 15 to 30 mm (0.6 to 1.2 in.). Check also for vertical looseness.

NOTE

Steering wheel play should be checked with the engine running.

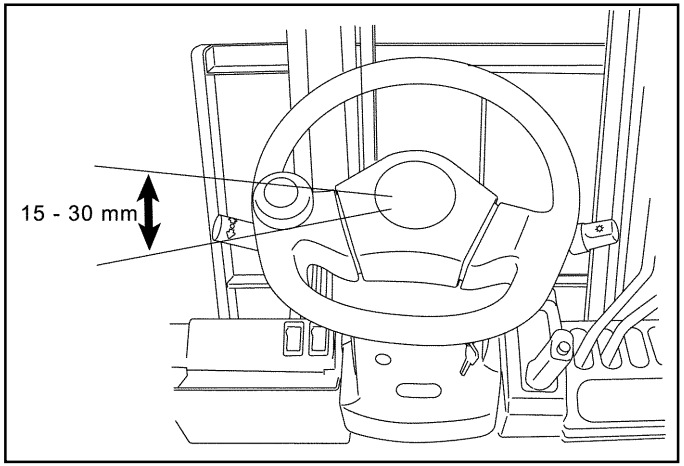

https://truckmanualshub.com/

32 EXHAUST GAS CONDITION

⚠ CAUTION

- **Exhaust fumes are very dangerous. When starting the lift truck in an enclosed space, make sure there is enough ventilation. The exhaust gas check should be done outdoors.**
- **Some parts of the engine are very hot during running. Use special caution to avoid fire hazards. Pay special attention to signs of oil or fuel leaks, and never leave waste cloth or paper inside the engine room.**

Check the condition of exhaust gas after the engine has been warmed up.
Colorless or light blue: Normal (Complete combustion)
Black: ..... Abnormal (Incomplete combustion)
White:..... Abnormal (Oil burns)
Check also the engine for abnormal noise or vibration.

Run the truck at a low speed (at an out-of-traffic area)

33 CLUTCH PEDAL OPERATION TEST C TYPE

Run the truck slowly and press the clutch pedal for proper operation.

34 INCHING PEDAL OPERATION CHECK T TYPE

Run the truck slowly and press the inching pedal to check if the truck slows down.

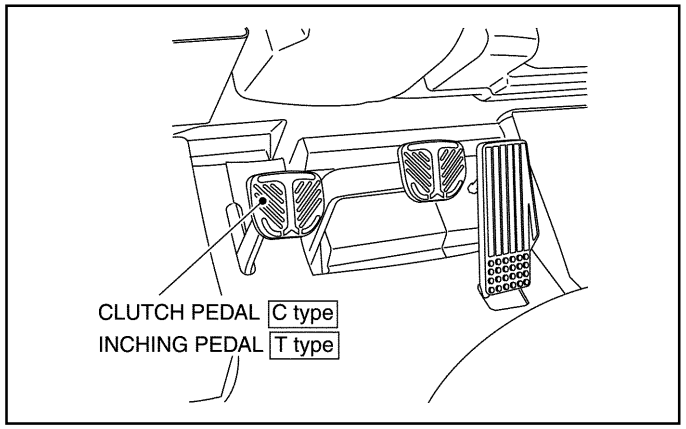

https://truckmanualshub.com/

35 BRAKE TEST

Run the truck slowly and press the brake pedal to check if the truck is braked properly without being pulled to one side.
Make sure the brake lamps come on when the brake pedal is pressed.

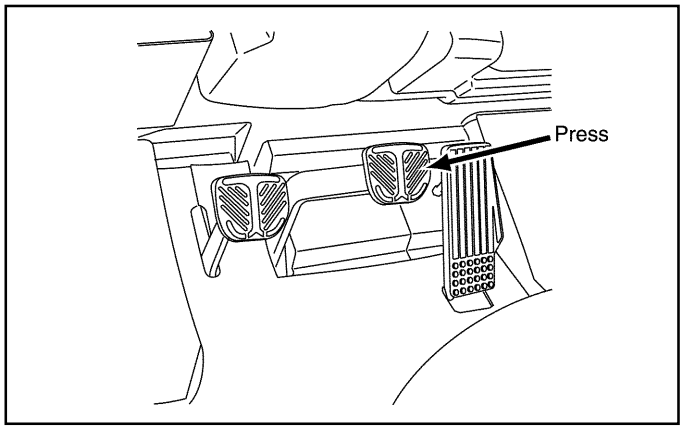

36 STEERING TEST

Run the truck at a low speed and turn the steering wheel a little to the right and left to check if the truck is steered properly.

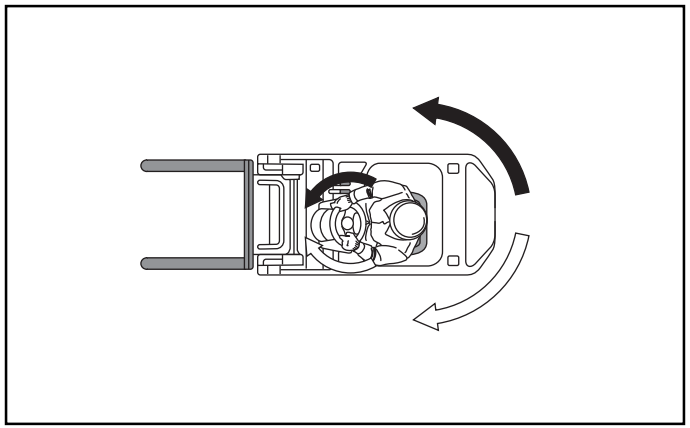

37 PARKING BRAKE TEST

Pull the parking brake lever to check if the truck is properly braked.
Also make sure the truck does not move and keeps its stopping position.

38 BACK-UP LIGHT AND ALARM TEST

Check that the back-up lamp comes on and alarm sounds when the shift lever is shifted into reverse.

https://truckmanualshub.com/

PREVENTIVE MAINTENANCE

ENGINE ROOM

K15, K21, K25

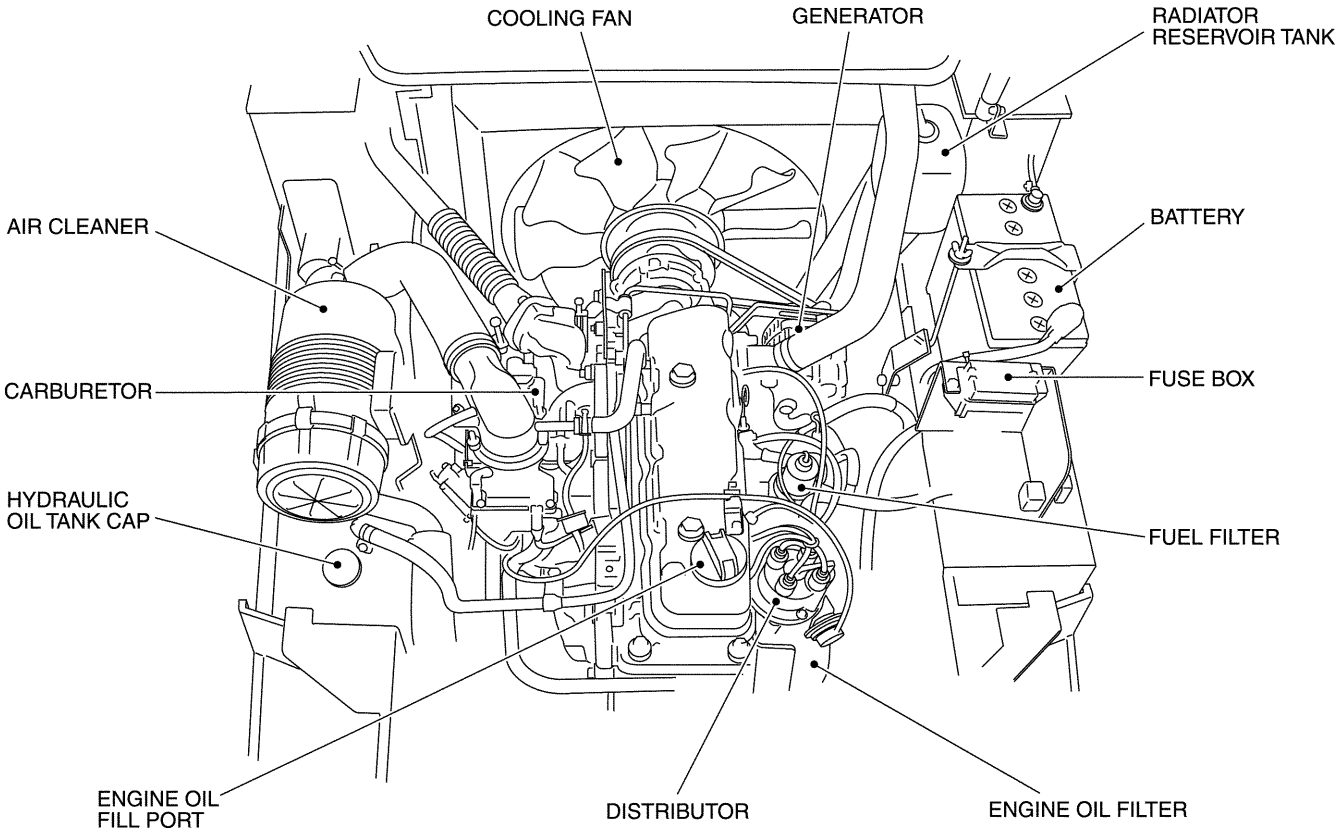

https://truckmanualshub.com/

D1503

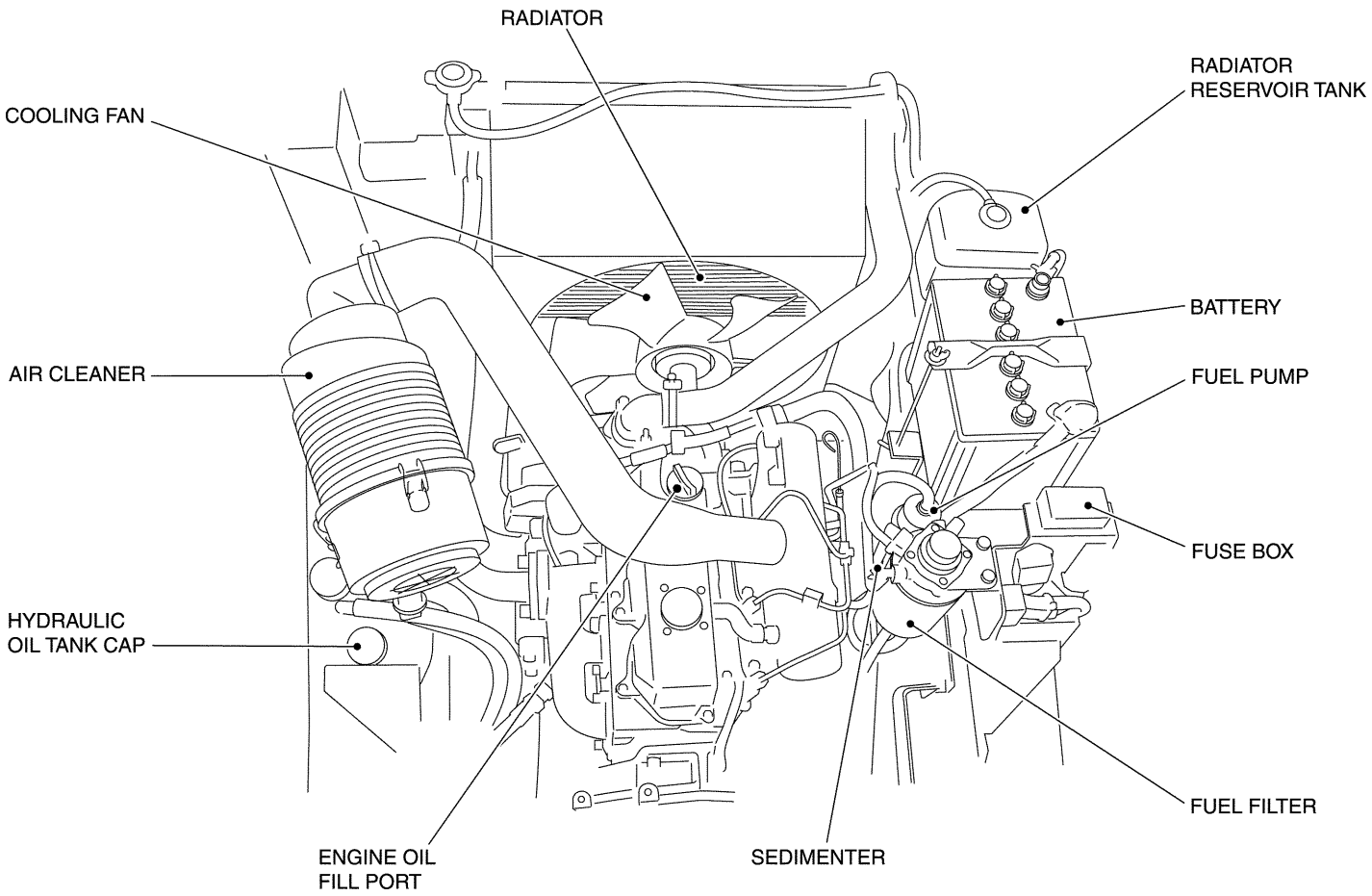

https://truckmanualshub.com/

TD27-II, QD32

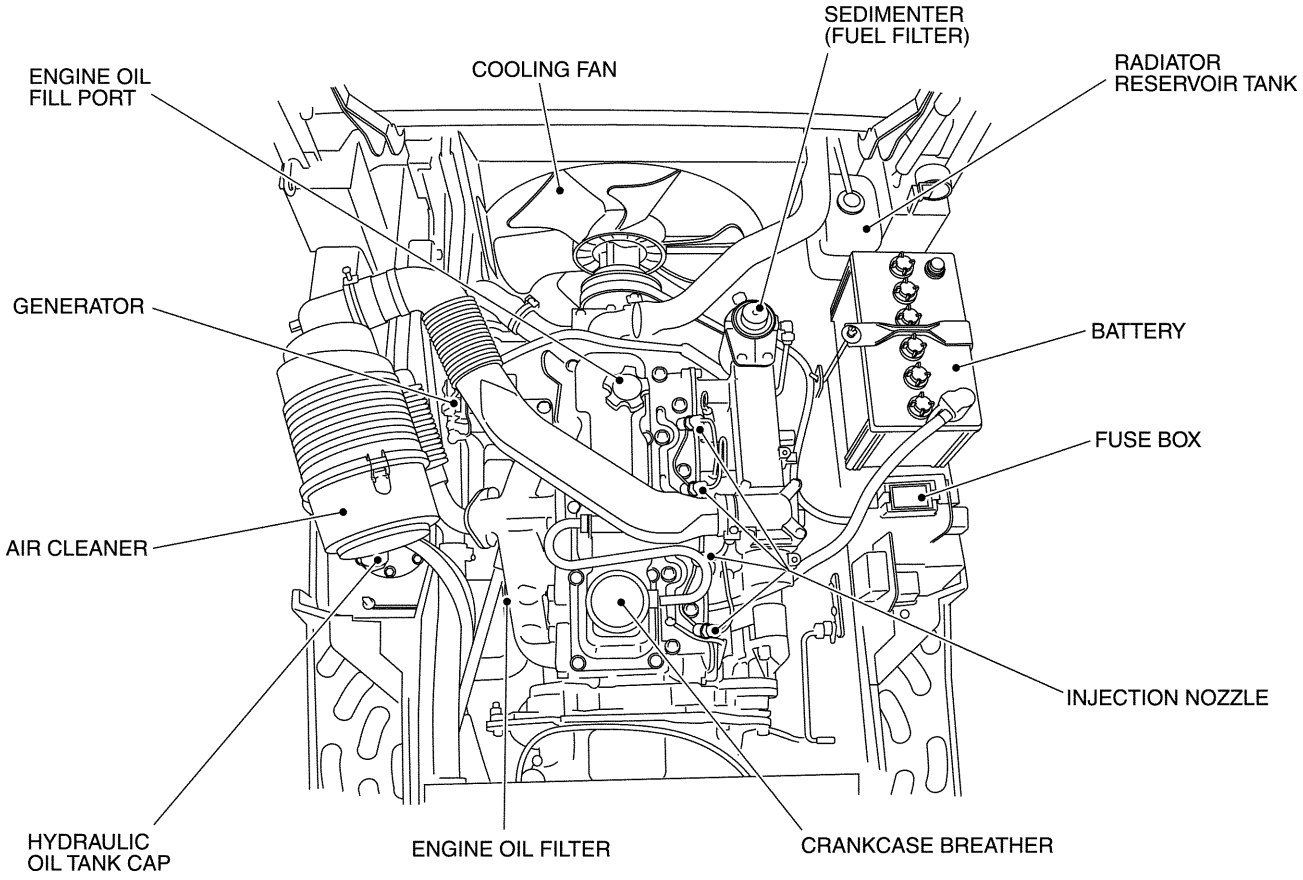

https://truckmanualshub.com/

C240

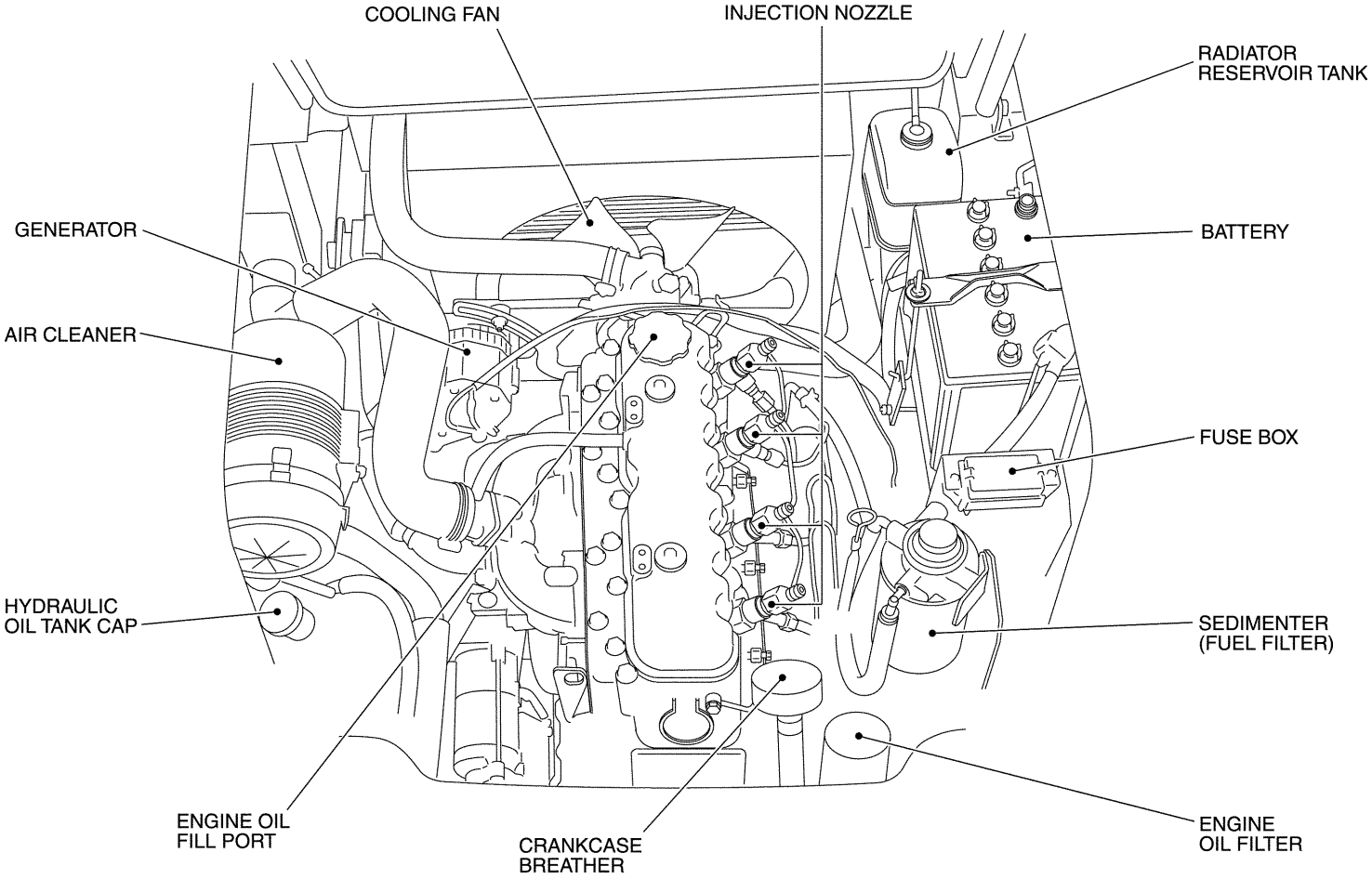

https://truckmanualshub.com/

V3300

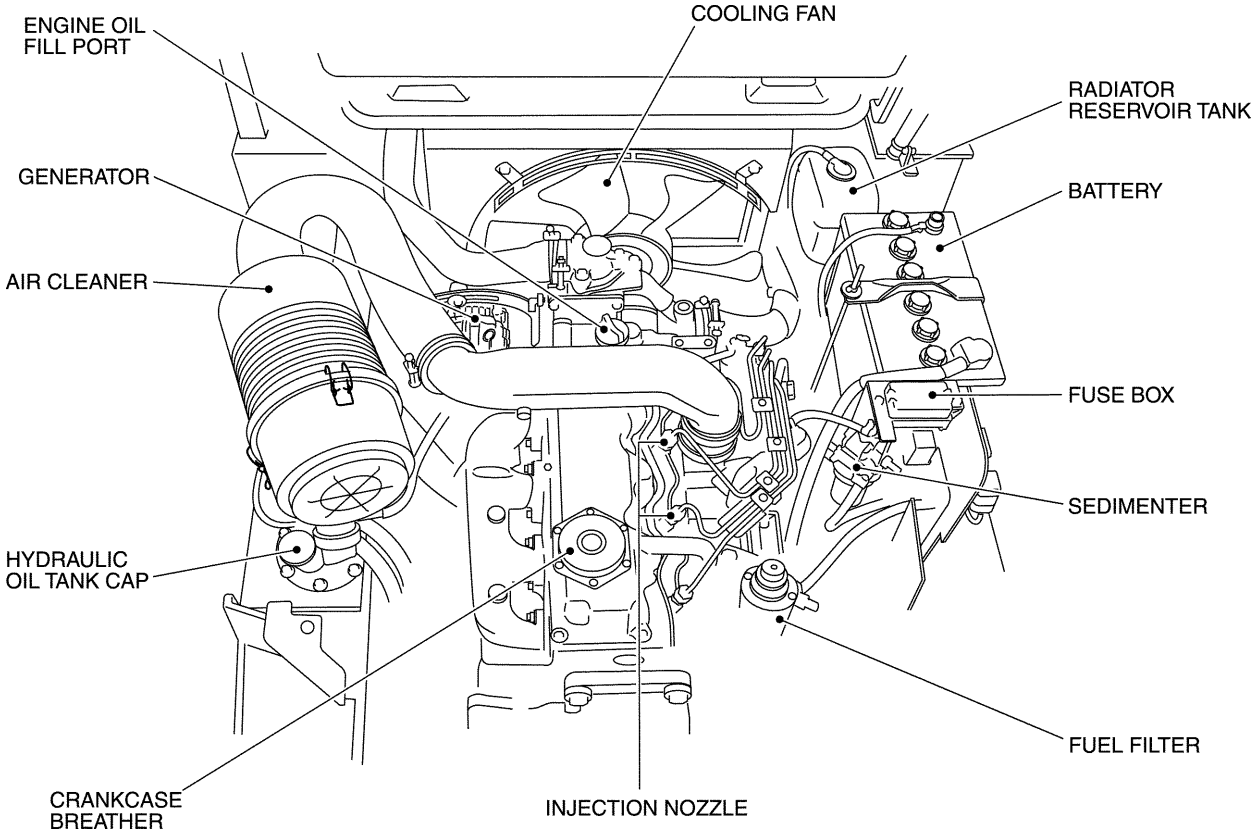

https://truckmanualshub.com/

REMOVING WATER FROM SEDIMENTER

Diesel-powered trucks

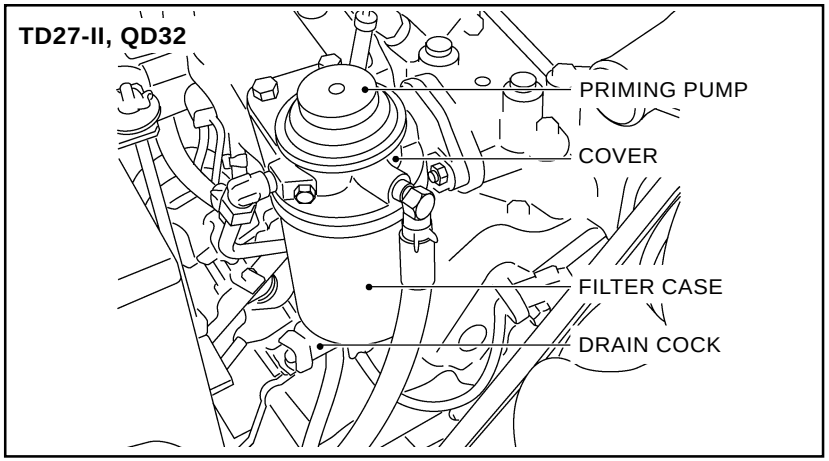

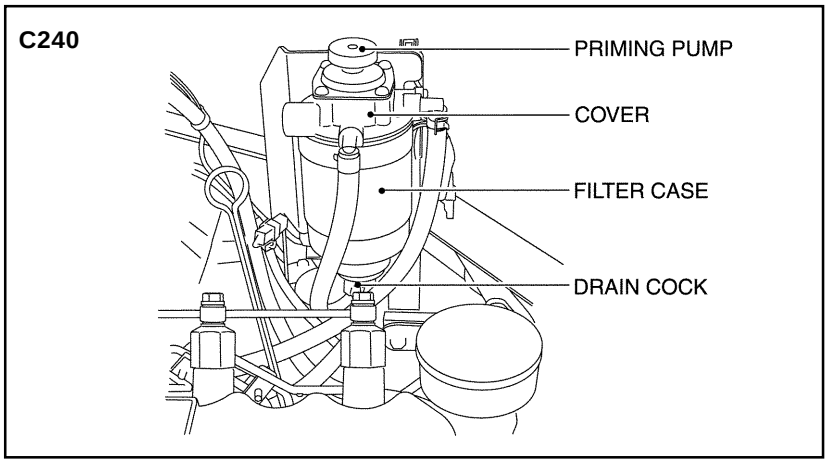

TD27-II, QD32, C240

The sedimenter separates water from fuel. It is integral with the fuel filter.
When the sedimenter warning light comes on, it indicates that more than the specified amount of water has accumulated in the sedimenter. Remove the water in the following manner:

1. Shut down the engine.
2. Turn the drain cock (plug) 4 or 5 turns to loosen it.

> **NOTE**
> Do not loosen the drain cock excessively; otherwise fuel might spill.

3. Pump the priming pump a few times to drain water from inside the sedimenter.
4. Tighten the drain cock (plug) securely and pump the priming pump another few times to make sure there is no fuel leak from the drain cock (plug) .

> **CAUTION**
> **Wipe away any spilt fuel from areas around the sedimenter. There is a danger of causing a fire hazard.**

5. Start the engine and make sure the sedimenter warning light is off.

https://truckmanualshub.com/

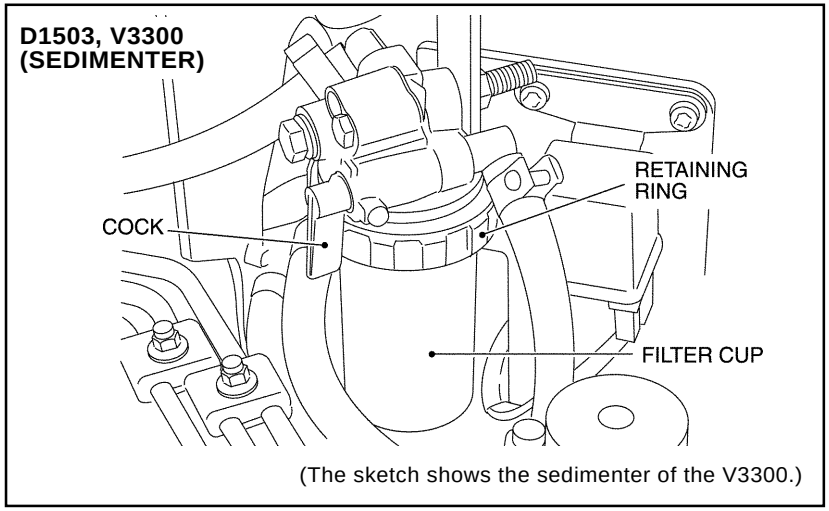

(The sketch shows the sedimenter of the V3300.)

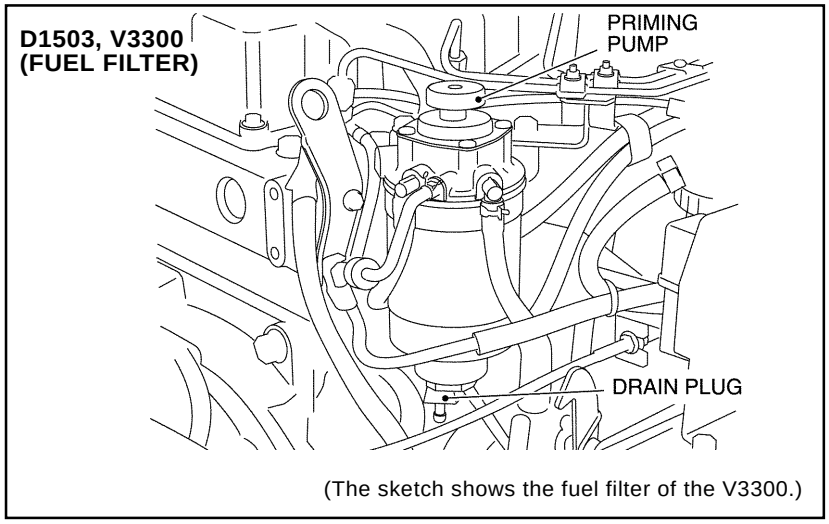

(The sketch shows the fuel filter of the V3300.)

D1503, V3300

The sedimenter separates water from fuel.
When the sedimenter warning light comes on, it indicates that more than the specified amount of water has accumulated in the sedimenter. Remove the water in the following matter:

1. Shut off the engine.
2. Turn the sedimenter cock 90° upward to close it.
3. Remove the retaining ring and drain the filter cup.
4. Reinstall the sedimenter. Reset the cock into the original position.
5. Loosen the fuel filter drain plug.
6. Pump the priming pump on top of the fuel filter a few times to drain water from inside the filter.
7. After draining water, reinstall the drain plug and tighten securely.

CAUTION

Wipe away any spilt fuel from areas around the sedimenter. There is a danger of causing a fire hazard.

8. Start the engine and make sure the sedimenter warning light is off.

https://truckmanualshub.com/

AIR BLEEDING FUEL SYSTEM

Diesel-powered trucks

CAUTION

- **Make sure there is not any fuel leak from the air bleeding plug port. If any, there is a danger of causing a fire hazard.**
- **Wipe away any spilt fuel from areas around the air bleeding plug. There is a danger of causing a fire hazard.**

Whenever the fuel filter is replaced or the fuel tank is drained, air bleed the fuel system in the following manner:

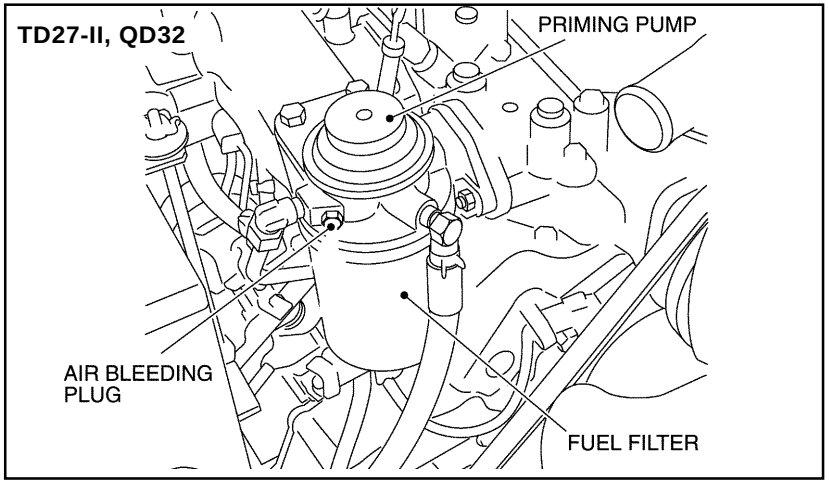

TD27-II, QD32

1. Loosen the air bleeding plug of the fuel filter (sedimenter).
2. Pump the priming pump until the fuel coming from the plug hole is free from bubbles.
3. Reinstall the air bleeding plug securely.
4. Pump the priming pump until the pump becomes hard.

D1503

The D1503 engine has an automatic air bleeding system. Use it in the following manner:

1. Turn the starter switch to the “ON” position.
2. The electromagnetic fuel pump operates to send fuel to the nozzle holder and fuel piping. Any bubbles in the fuel are automatically bled into the fuel tank.
3. Start the engine to check to see if there is no fuel leak in the fuel system.

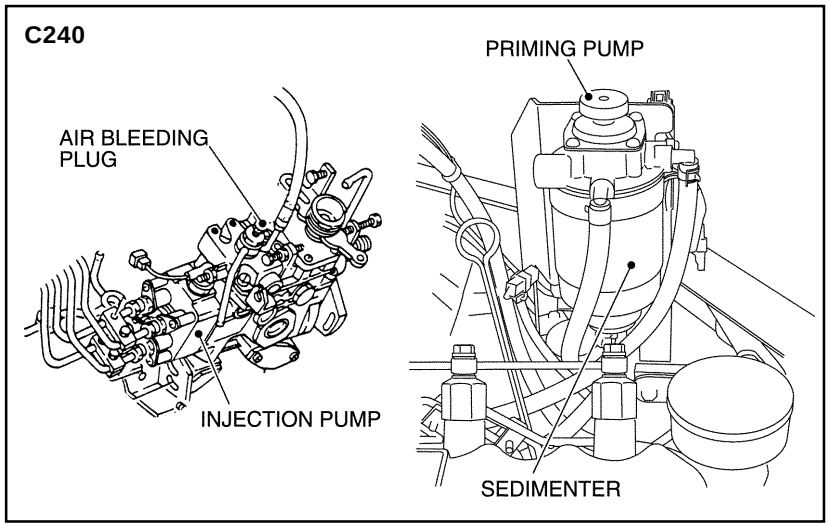

C240

1. Loosen the air bleeding plug (overflow valve) of the injection pump.
2. Pump the priming pump of the sedimenter until the fuel coming from the plug hole of the injection pump is free from bubbles.
3. Reinstall the air bleeding plug securely.

https://truckmanualshub.com/

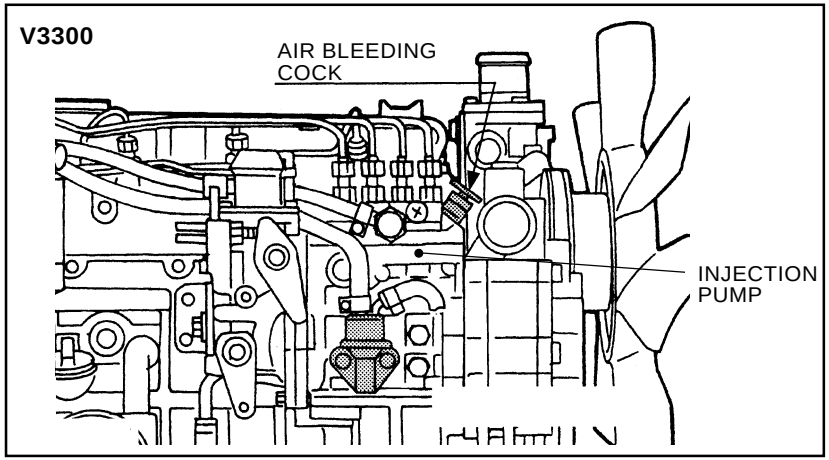

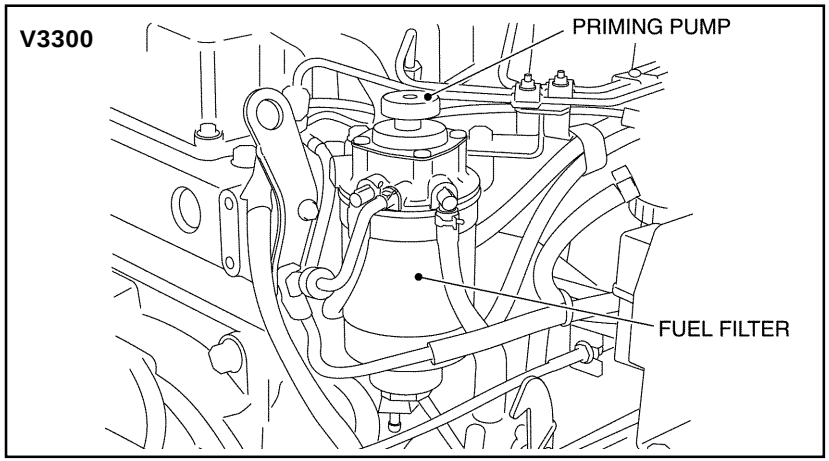

V3300

1. Open the air bleeding cock of the injection pump.
2. Pump the priming pump on top of the fuel filter a few times or until fuel coming from the air bleeding cock of the injection pump is free from air bubbles. Then, close the air bleeding cock.

NOTE

Keep the air bleeding cock always closed except when performing air bleeding; otherwise the engine will stall.

https://truckmanualshub.com/

REPLACING FUSES

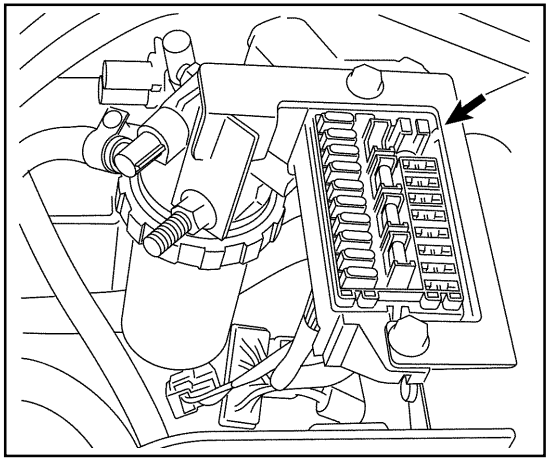

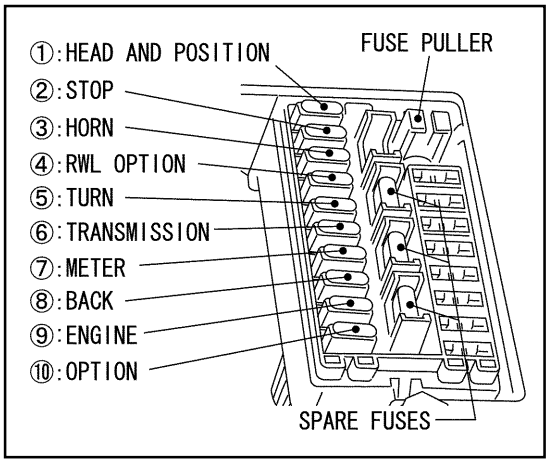

⚠ CAUTION

The fuses protect the electric circuit against overcurrent. Use fuses of the specific ampere rating.

Check to see that the components in each circuit are operating properly. If every component in a circuit is not functioning, it indicates that the corresponding fuse is blown out. Replace the blown fuse with a spare fuse of the same capacity and color. If some of the components in a circuit do not function properly, it suggests that a bulb has burnt out. Replace the burnt bulb with a new one of the same capacity.

①②③④: They function regardless of the key switch position.
⑤⑥⑦⑧⑨⑩: They function when the key switch is in “ON”.

FUSIBLE LINK (MAIN FUSE)

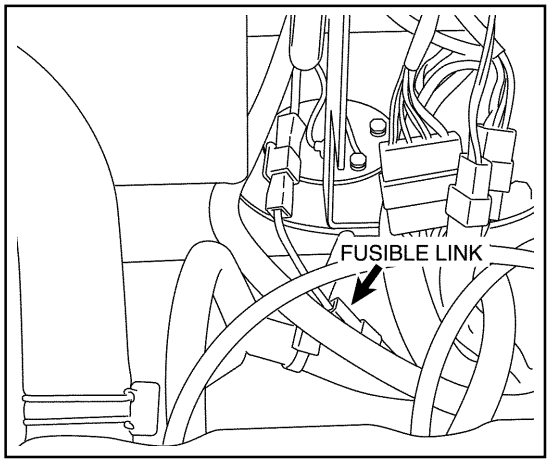

As the main fuse for the entire truck, a fusible link is provided at the positive (+) side of the battery. If the entire electrical circuit of the truck does not function, replace this fusible link with a new one.
If replacement of the fusible link is needed, the cause of blowout should be located and troubleshooted properly. Consult your local TCM dealer.

https://truckmanualshub.com/

REPLACING TIRES AND REPAIRING FLAT TIRE

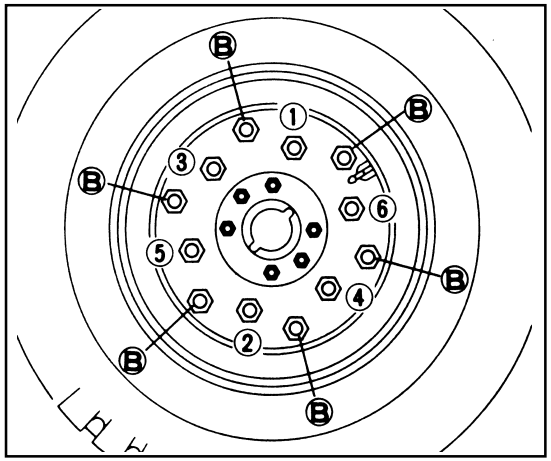

⚠ CAUTION

- **Before removing a tire from the rim, remove the valve core to release the air pressure from the tire completely. In the case of the split type rim, remove air from the tire before loosening the split rim connecting bolt (B); in the case of the side ring type rim, remove air from the tire before removing the side ring (lock ring).**
- **The assembling of a tire, tube, rim, and flap and inflating of a tire which has been removed from the truck should be done only by qualified personnel. The lift truck uses tires which have an inflation pressure far higher than those of general passenger cars. The use of improper parts or work procedure will cause a serious accident. Tires should be inflated with them attached to the truck or by putting in a safety cage, even if you are qualified to inflate tires.**
- **The split rim connecting bolts must be tightened to the specified torque using the special tool, with the tire inflation pressure removed completely.**
- **Install the split rim tire on the truck with the rim connecting bolt head pointing outside.**
- **Replace any deformed or damaged rim or tire with a new one.**

Get tools and jack necessary for replacing tires.

Front wheel

⚠ CAUTION

When removing a tire from the truck, remove air from the tire completely and then remove the hub nuts.

1. Park the truck on a level, hard surface and shut down the engine.
2. Apply the parking brake and block the wheel opposite the one you are going to repair. Put a jack under the truck frame.
3. Jack up the truck to an extent that the tire still remains on the ground. Loosen the hub nuts (① - ⑥). Do not remove them yet.
4. Jack up the truck until the tire leaves off the ground. Remove the hub nuts loosened.
5. Remove the tire from the hub.
6. When reinstalling the tire, use the reverse order of removal.
   - Tighten the hub nuts in a diagonal order and evenly.
   - Hub nut tightening torque: See page 4 - 4.
7. After installing the tire to the truck, adjust the inflation pressure to the standard inflation pressure, if needed.
   - For standard tire inflation pressure, see page 4 - 3.

Rear wheel

Proceed in the same manner as with the front wheel tires, except that the position of the jack goes under the counterweight.

https://truckmanualshub.com/

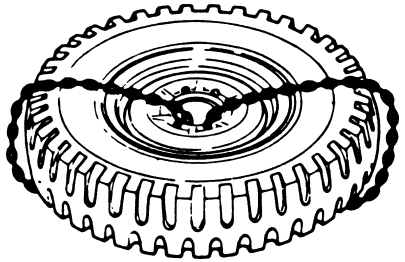

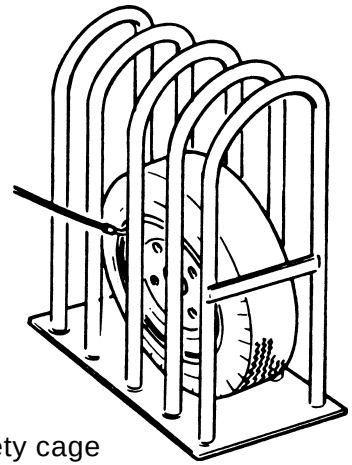

Safety cage

NOTE

- Use tires and rims of the specified size.
- The front or rear tires should be replaced as a set, respectively.

REPLACING LAMP BULBS

CAUTION

When replacement of a bulb is needed, use a genuine part of the same capacity. Use of a bulb of a different capacity might cause a fire hazard.

If any light bulb burns out, replace it with a new one of the same capacity, referring to the following table:

Lamp capacity

Head lamp	12V – 55W
Side marker lamp	12V – 10W
Turn signal (front)	12V – 27W
Turn signal (rear)	12V – 27W
Tail lamp	12V – 8W
License number plate lamp (option)	12V – 10W
Rear work light (option)	12V – 55W
Brake lamp	12V – 23W
Back-up lamp	12V – 10W

https://truckmanualshub.com/

STARTING THE ENGINE WITH AUXILIARY BATTERY

(WHEN YOU CANNOT START THE ENGINE BECAUSE THE BATTERY HAS BEEN EXHAUSTED)

WARNING

Do not push or tow the truck to jump start it when the battery is exhausted. While the engine is not running, power steering and power brake are inoperative.

When the battery has been exhausted, use an auxiliary battery to start the engine.

WARNING

- **When starting the engine using an auxiliary battery, make sure to connect the (-) cable finally. Connect the cable to a point away from the battery, such as the engine hood catch mounting bolt, but not to the (-) terminal of the battery. This will help prevent the occurrence of sparks which might cause a fire.**
- **Make sure that the auxiliary battery voltage is the same as the battery mounted on the truck.**

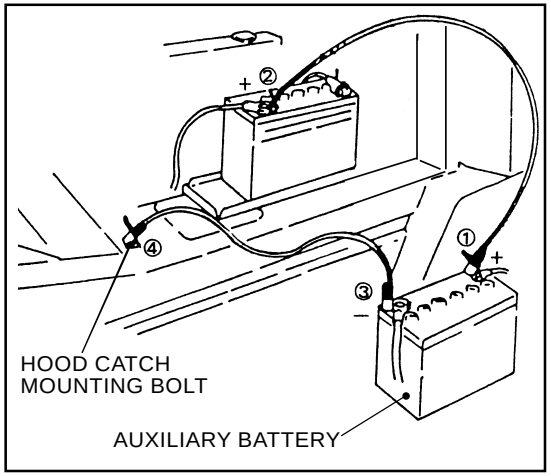

Start the engine with an auxiliary battery in the following manner:

1. Make sure that the auxiliary battery supplies 12 V.
2. Connect the booster cables in the following order:
   ① Connect the red cable (+) to the (+) terminal of the auxiliary battery.
   ② Connect the red cable (+) to the (+) terminal of the battery on the truck.
   ③ Connect the black cable (-) to the (-) terminal of the auxiliary battery.
   ④ Connect the black cable (-) to the (-) terminal of the frame at a point away from the battery on the truck, such as to the engine hood catch mounting bolt.

CAUTION

- **Keep the booster cable in place while the starter motor is turning; otherwise sparks occur to cause an accident.**
- **Never allow the (+) terminal of the booster cable to come in contact with the (-) terminal of the booster cable.**
  Do not use a booster cable with damaged insulating coating; there is a danger of short-circuiting.

3. Start the engine.
4. After the engine has started, remove the booster cables in the reverse order of connection.

https://truckmanualshub.com/

ADJUSTING OPERATING FORCE OF PARKING BRAKE LEVER

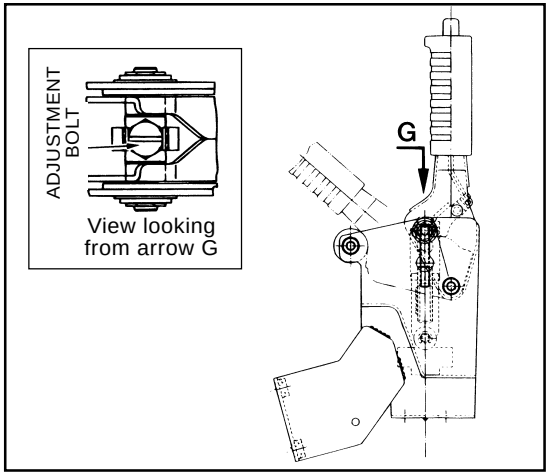

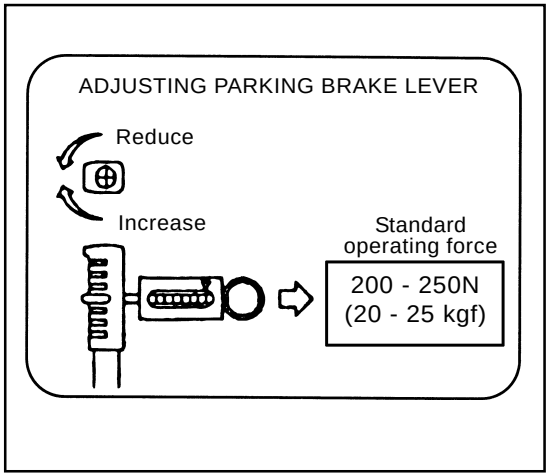

ADJUSTMENT

1. Engage the spring scale to the parking brake lever as shown in the left sketch and measure the force required to operate the lever.
   Standard operating force: 200 – 250 N (20 – 25 kgf) (40 – 50 lbf).
2. If the measurement is not within the range of the standard operating force, turn the adjustment bolt with a screwdriver to adjust the operating force of the lever.
   Reduce by turning the bolt counterclockwise.
   Increase by turning the bolt clockwise.
3. The cable of a new truck tends to elongate. It is advisable to adjust it sometimes after the day's work or each shift.

https://truckmanualshub.com/

PERIODIC INSPECTION

Just as your body needs to undergo physical examinations, your truck needs periodical checks and maintenance.
When the truck appears to be in good condition, checks and maintenance are likely to be neglected. But early discovery of trouble which may decrease truck efficiency and immediate correction, will greatly increase the working capacity of the truck, bring about greater productivity, prolong its life span and make it more economical.

Preoperational checks, the addition of oil, grease and fuel, and cleaning of filter elements should be carried out by the customer and other complicated checks and maintenance should be left to your TCM dealer. If enough knowledge, special tools or equipment is not available, personal injury could occur during checking or servicing. In this manual, the periodic inspection intervals are indicated as the number of months (years) as well as operating hours. Every one month of operation is calculated as 200 operating hours.

CAUTION

Be sure to read "INSPECTION AND SERVICE" in Chapter 1. "SAFETY" before checking or servicing the truck.

PERIODICAL REPLACEMENT OF SAFETY PARTS

In order to perform safe operation, the importance of preventive maintenance of the truck cannot be overemphasized. Especially, the parts listed in the table below must be replaced periodically since they are the most important parts for safety of the truck and operator.
Moreover these safety parts are liable to be damaged and deteriorated in the course of time, and it is difficult to determine by ordinary maintenance whether they are beyond their respective service limits or not. The safety parts must be replaced with new ones when their respective service limits have been reached, even if their appearances are good.

NOTE

The safety parts are, however, not the objects of warranty claim.

	Name of safety parts	Recommended replacement interval (year)
1	Master cylinder and wheel cylinder cups and dust seals	1
2	Power steering hose	2
3	Reserve tank tubing	2 – 4
4	Fuel hose	2 – 4
5	Torque converter rubber hose	2
6	Rubber parts inside power steering unit	2
7	Lift chain	2 – 4
8	Load handling means hose	1 – 2

https://truckmanualshub.com/

MONTHLY (200 OPERATING HOURS) CHECKS

Perform preoperational checks in addition to the following.

The adjustment and replacement of components and parts listed as monthly check items are difficult and need a sufficient technical knowledge and special tools.

Items to be checked
• Air cleaner – Clean element. • Engine cylinder head bolt – Retighten (gas-powered trucks, for the first time only). • Engine oil – Change [1 week (50 operating hours) for the first time only]. • Engine oil filter – Change (first time only). • Fuel filter – Check for clogging (gas-powered trucks). • Cooling system rubber hose – Check for deterioration. • Radiator cap – Check for function and proper installation. • Oil clutch – Check oil level in the tank (trucks with optional oil clutch). • Torque converter inline filler – Change (T type, for first time only). • Front axle mount bolt – Check for looseness. • Front axle – Check for deformation, cracks, or damage. • Tire tread – Check for wear or foreign matter. • Wheel bearing – Check for looseness or noise. • Rear axle – Check for deformation, cracks or damage. • Steering gear box – Check for loose mounting bolt. • Steering gear box – Check for oil leak. • Rod, arm and king pin – Check for looseness, warping or damage. • Rear axle – Check for bend, damage or installation. • Steering cylinder – Check for loose mounting part or joint. • Brake piping – Check for the entrance of air. • Brake system rods and parking brake cables – Check for proper operation and looseness.

(to be continued)

https://truckmanualshub.com/

Items to be checked
• Brake piping – Check for damage, leaks, interference or looseness. • Brake drum – Check for loose mounting. • Forks – Check for cracks or wear. • Mast welded parts – Check for cracks or damage. • Mast support – Check cap bolts (first time only) • Lift cylinders – Check for looseness of tail fixing bolts, piston rod head mounting bolts, cylinder U bolts (first time only). • Carriage – Check for cracks or damage. • Mast rollers – Check loose rollers, cracked or damaged roller pins. • Lift chain – Check for elongation. • Lift chain – Lubricate. • Lift chain and anchor pin – Check for looseness. • Sheaves and sheave bearings – Check for deformation, damage or looseness. • Attachment – Check for proper operation and installation. • Load handling cylinders – Check for worn or damaged pin or bushing. • Control valve – Check for proper operation of relief valve and tilt lock valve. • Wire harness – Check for damage or loose clamp. • Chassis – Lubricate.

CHECKING AND CLEANING AIR CLEANER ELEMENT

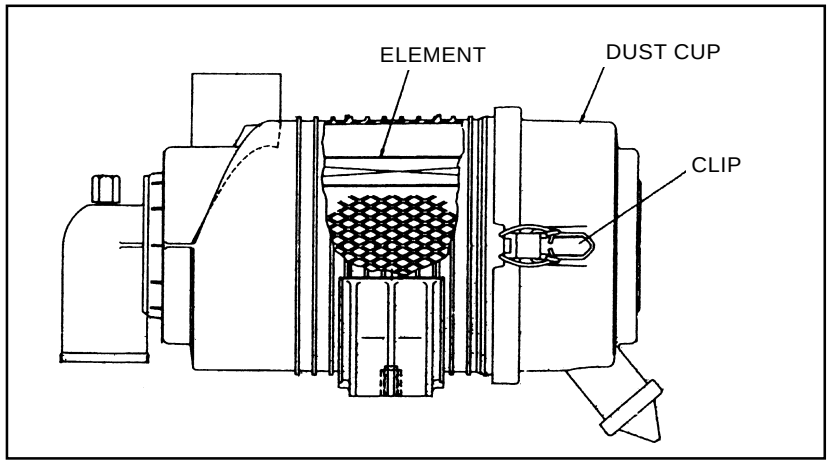

Open the engine hood and disengage the air cleaner case clip and remove the element.
Check the element for contamination or damage. Also check the rubber seal for cracks or contamination.

Cleaning element

⚠ CAUTION
When using compressed air, wear safety glasses.

To clean the element, blow compressed air from inside out or tap lightly by hand.
Also check for a rupture or pin holes in the element.

https://truckmanualshub.com/

CHANGING ENGINE OIL

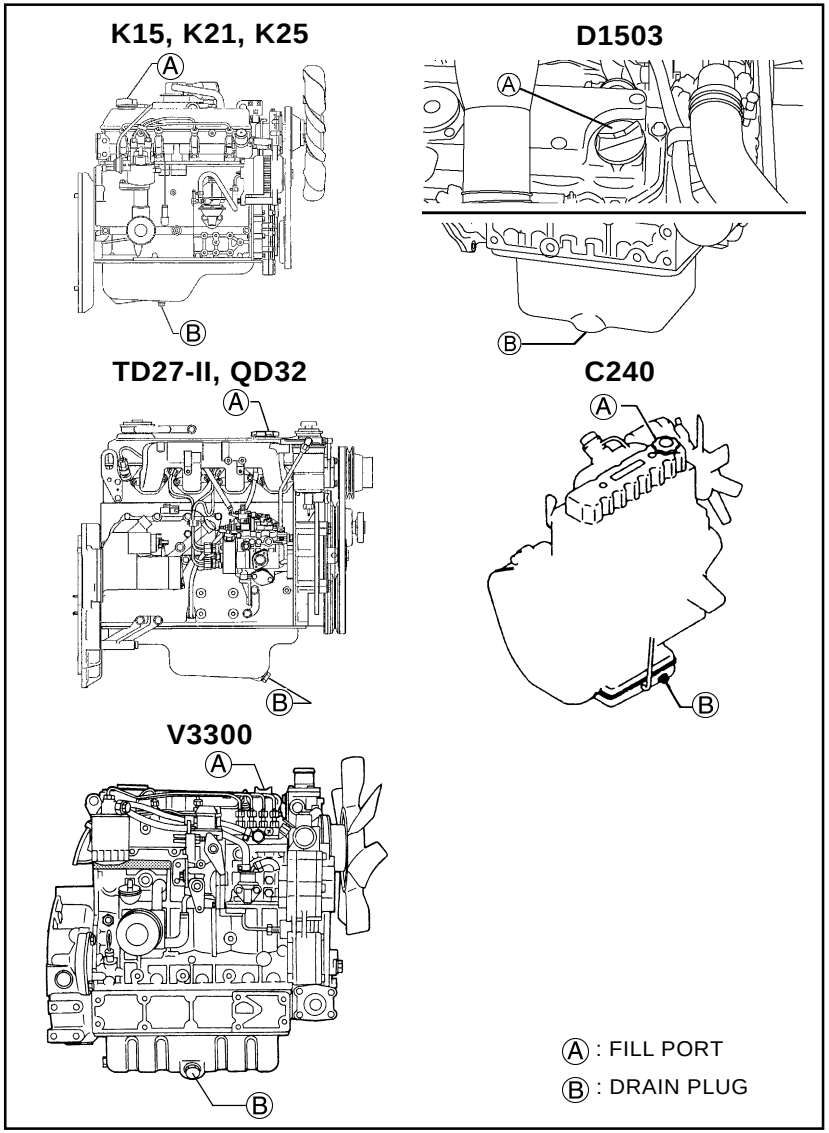

⚠ CAUTION

Do not drain waste oil into a waterway nor throw it away on the ground. Disposal of waste oil should be left to a specialist. TCM dealers will undertake oil change job, if required.

⚠ CAUTION

Do not try to change the engine oil immediately after the engine is shut down.
The engine oil is very hot. Change the engine oil when the oil is properly warm.

Before changing engine oil:

1. When the engine is cold, start the engine and let it run at low rpm to warm it up.
2. Park the truck on a level surface.
3. Pull the parking brake to the full. Shut off the engine and remove the starter key.
4. Open the engine hood.

Oil change (The following explanation is written using the K21 or K25 as an example.)

1. Remove the engine oil fill port cap.
2. Wipe the cap clean with shop rag.
3. Put an oil catching pan under the drain plug of the oil pan.
4. Wipe the drain plug and oil pan clean with shop rag.
5. Loosen the drain plug using a socket wrench.
6. Once the drain plug becomes loose, turn it with fingers.
7. Oil will spout out. Place an oil catching pan properly.
8. Wipe the drain plug clean.

https://truckmanualshub.com/

9. After oil is drained off completely, reinstall the drain plug.
10. Wipe areas around the drain plug clean.
11. Wind cloth around the oil fill port neck to catch spilt oil.
12. Add oil up to the specified level, leaving a room of about one liter. Then, gradually add oil, checking the oil level with the oil level dipstick.
13. Wipe clean areas around the fill port and reinstall the oil fill port cap securely.
14. Start the engine and run it at idle rpm to prime oil throughout the engine.
15. Shut down the engine. After a while, check the oil level using the oil level dipstick. The oil level should be between the H and L marks on the dipstick. If the level is low, add oil.

CHANGING ENGINE OIL FILTER

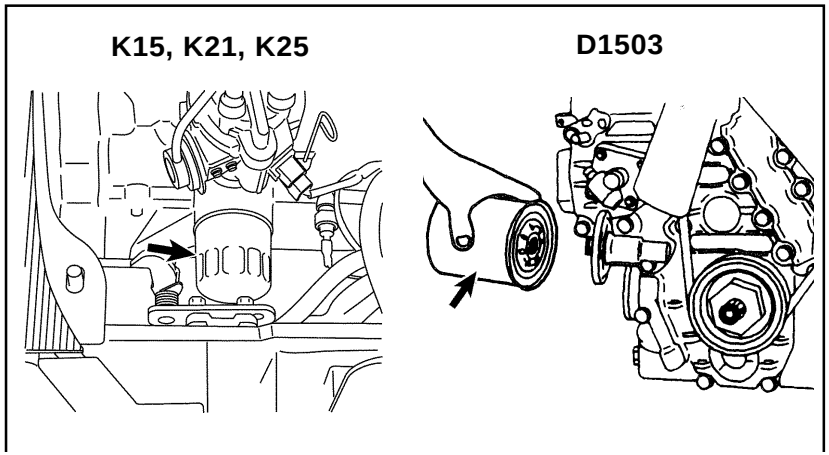

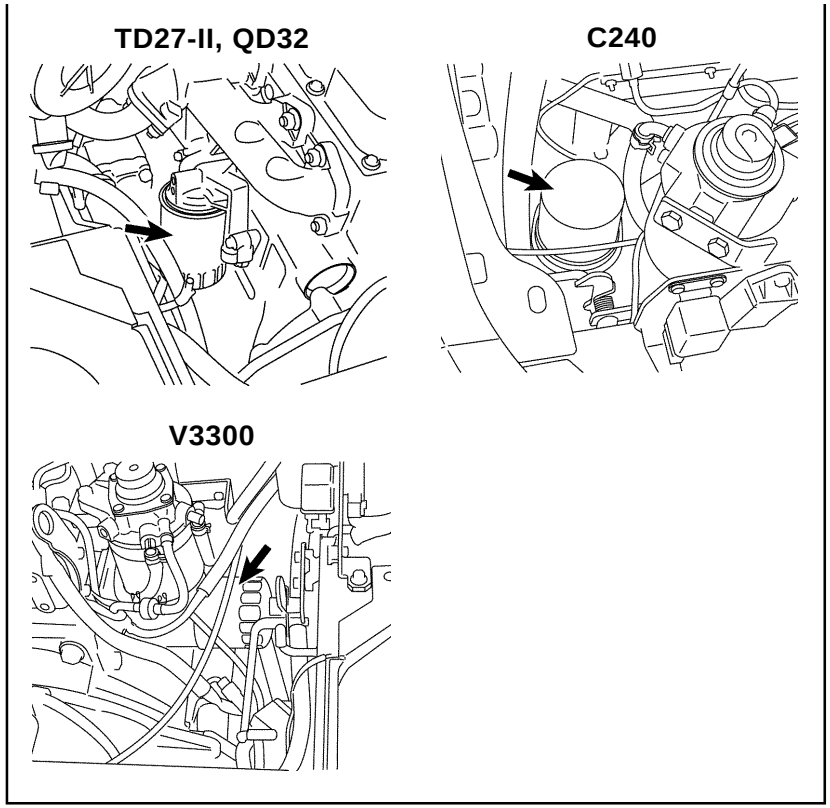

CAUTION

The engine is very hot for a while after the engine is shut down. Change the engine oil filter after the engine cools down enough.

Change the engine oil filter in the following manner:

1. Using a filter wrench, loosen the filter cartridge and remove.
2. Get a new filter cartridge.

https://truckmanualshub.com/

3. Wipe clean the cylinder block in the cartridge mounting area.
4. Apply a thin coat of engine oil on the “O”-ring of the new filter cartridge.
5. Hand tighten the new filter cartridge. After the “O”-ring touches the seal surface, use a filter wrench to tighten the cartridge.
   (For the D1503 and V3300, do not use the filter wrench. Hand tighten securely.)
   - Rough guide for tightening
     K15 · K21 · K25: about 1/3 of a turn
     TD27-II · QD32: about 2/3 of a turn
     C240: about 1/4 of a turn
     D1503 · V3300: Tighten firmly by hand.
6. Make sure there is no oil leak from the filter mounting area. (Add engine oil to the specified level, start the engine and run it at idle rpm for a while.)

NOTE

When removing the filter cartridge, engine oil might spill over the floor. Put an oil receiving pan or cloth.

LUBRICATING LIFT CHAIN

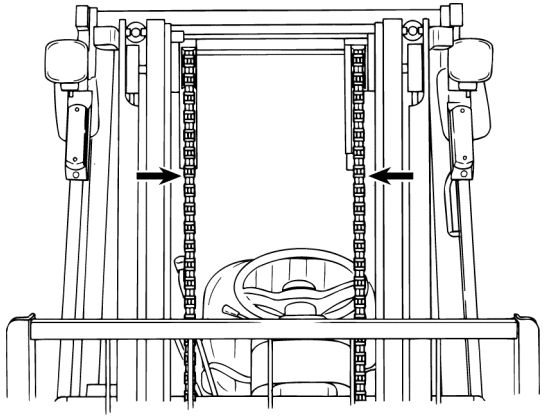

Apply engine oil to the lift chains using an oiler or brush. To allow oil to enter between each pin and link plate of the lift chain, observe the following conditions:

- Loosen the chain sufficiently.
- After applying engine oil, move the mast up and down at least 10 times.

NOTE

If your lift truck is used near a port or coastal area, the lift chains might be damaged from salty breezes. After a storm or typhoon, it is advisable to wash them with water before lubricating in the above manner.

https://truckmanualshub.com/

PERIODIC INSPECTION

GREASING POINTS

- Propeller shaft (2 points) ..... Ⓐ
- Clutch, inching and brake pedal shafts (1point) ..... Ⓑ
- Rear axle (8 points in all) ..... Ⓒ (Axle support (2), king pin (3), knuckle (3))
- Clutch release yoke shaft C type (1 point) ..... Ⓓ
- Mast support (2 points) ..... Ⓔ
- Tilt cylinder (4 points) ..... Ⓕ
- Inner and outer channels in areas which come in contact with end rollers: Apply grease with brush ..... Ⓖ

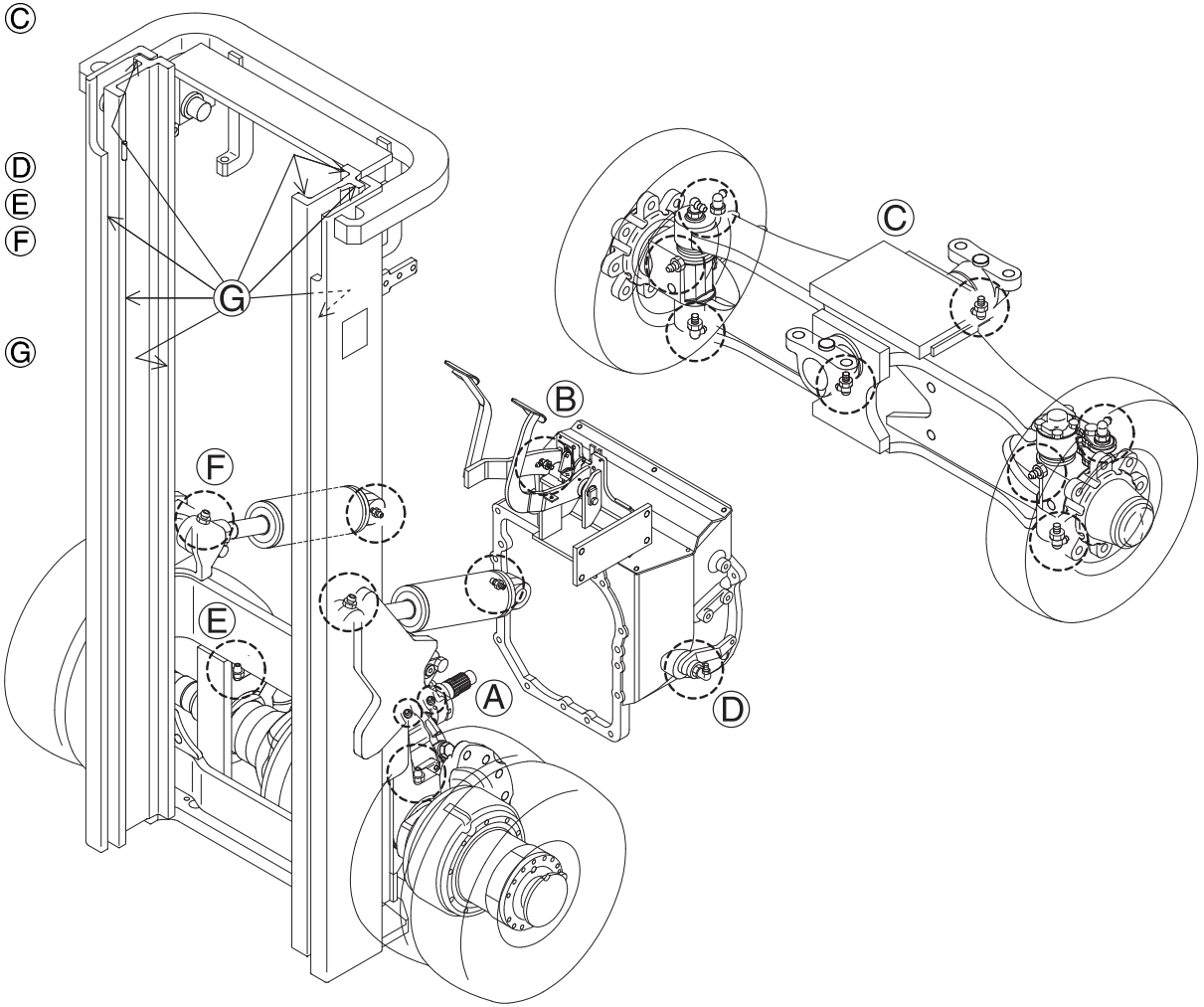

https://truckmanualshub.com/

• Mast rear slipper

Apply grease on the U-shape guides shown in the sketch (for masts with free lift mechanism)

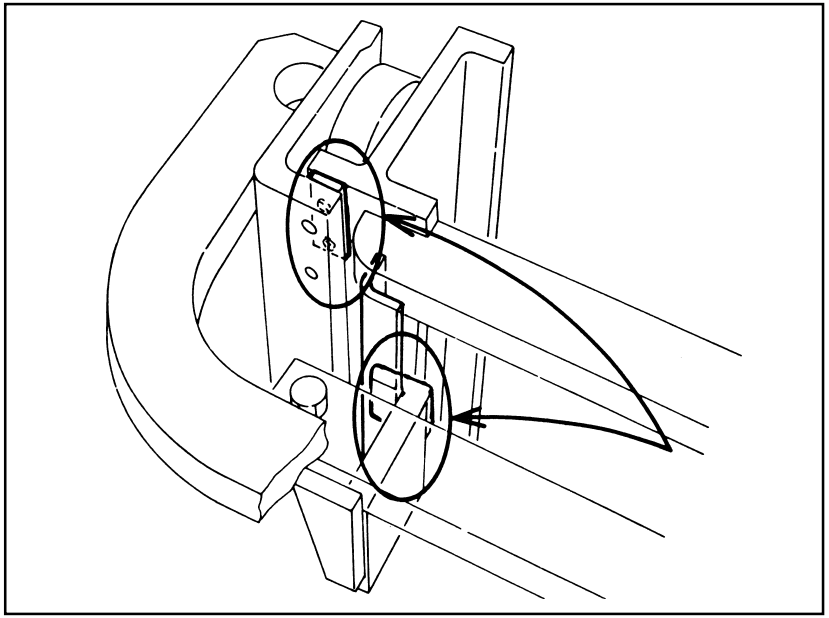

⚠ CAUTION

Do not climb the mast. Do not pour your hand or foot on the connecting members or into the mast assembly. You might get injured if the mast moves accidentally.

https://truckmanualshub.com/

3 MONTHS (600 OPERATING HOURS) CHECKS

Perform the following checks in addition to preoperational checks and one month (200 operating hours) checks.

Items to be checked
• Crankcase – Check the air breather for contamination and clean if necessary • Engine oil filter – Change • Fuel filter – Clean (gas-powered trucks) • Fuel filter – Change (diesel-powered trucks) • Carburator – Check linkage for looseness or contamination. • Fuel tank – Drain water (diesel-powered trucks). • Cooling water – Change (every 2 years for trucks using LLC). • Fork stopper pins – Check for damage or wear. • Distributor – Check for cracked cap (gas-powered trucks) • Spark plug – Adjust the gap (gas-powered trucks). • Spark plug – Clean (gas-powered trucks). • Distributor – Check the air gap between rotor and stator and the general condition of rotor (gas-powered trucks). • Distributor shaft – Lubricate (gas-powered trucks). • Starter pinion gear – Check for proper engagement. • Charger – Check for proper operation. • Battery – Check the specific gravity of the electrolyte. • Electrical wiring – Check for loose connections.

https://truckmanualshub.com/

CLEANING FUEL FILTER Gas-powered trucks

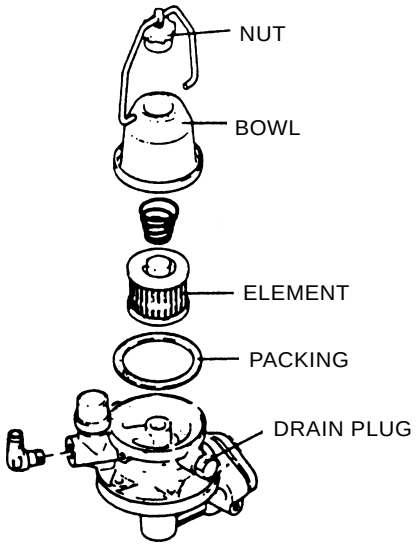

CAUTION

The cleaning and replacement of the fuel filter should be done with the engine shut down. Keep open flame away from the work place.

Loosen the nut and remove the bowl. Remove the element and clean.

When reinstalling the bowl, remember to install the packing. Tighten the nut securely.
Use the drain plug when you want to drain contamination or water from the filter.

CHANGING FUEL FILTER Diesel-powered trucks

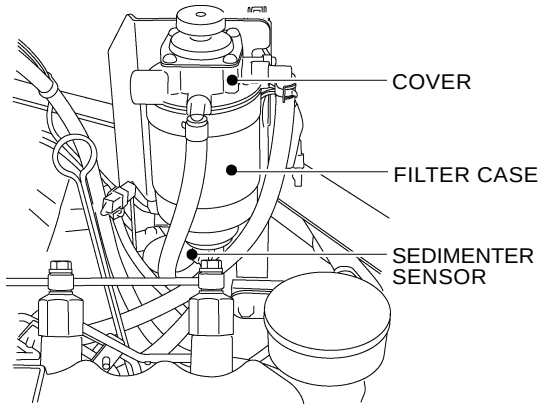

(The sketch shows the fuel filter of the C240.)

CAUTION

Wipe away any spilt fuel around the fuel filter. There is a danger of causing a fire hazard.

Using a filter wrench, remove the fuel case from the cover. Remove the sedimenter sensor from under the filter case. Install the sedimenter sensor to a new filter case. Install the new filter case into the cover.

https://truckmanualshub.com/

6 MONTHS (1200 OPERATING HOURS) CHECKS

Perform the following checks in addition to daily checks, one month (200 operating hours) checks, and 3 months (600 operating hours) checks.

Items to be checked
• Air cleaner element – Change. • Valve clearance – Check. • Blow-by gas reducing device- Check metering valve and piping for clogging or damage. • Injection nozzle – Check injection pressure and spray pattern. • Engine – Check ignition timing (gas-powered trucks). • Fuel tank – Clean inside. • Clutch and brake fluid – Change • Transmission oil (gear oil) – Change (C type). • Torque convertor oil – Change (T type). • Torque converter inline filter – Change (T type). • Front axle – Change oil. • Wheel bearing – Disassemble and change grease. • Mast support – Check for loose cap bolt. • Lift cylinder – Check for looseness of cylinder tail fixing bolts, piston rod head mounting bolts and cylinder fixing U bolts and retighten where necessary. • Hydraulic oil – Change. • Hydraulic oil tank suction strainer – Change. • Hydraulic oil tank return filter – Change. • Control valve – Measure relief pressure. • Operator’s seat – Check for damage and loose mounting bolts.

https://truckmanualshub.com/

ANNUAL (2400 OPERATING HOURS) CHECKS

Perform the following checks in addition to daily checks, one month (200 operating hours) checks, and 3 months (600 operating hours) checks, and 6 months (1200 operating hours) checks.

Items to be checked
• Engine cylinder head bolts – Retighten (C240 engine). • Engine cylinder – Measure compression pressure. • Governor – Check proper operation (maximum rpm under unloaded condition). • Fuel filter – Change (gas-powered trucks). • Injection timing – Check (diesel-powered trucks). • Clutch retainer bearing – Lubricate. • Clutch oil tank – Change clutch oil and clean strainer (trucks with optional oil clutch). • Steering wheel – Apply rubber grease to horn contact ring. • Master cylinder and wheel cylinder – Change piston cup and check valve. • Wheel brake – Disassemble, check, adjust and change brake drum and brake shoe. • Wheel brake – Check back plate for deformation, cracks or loose installation. • Mast support – Check bushings for wear or damage. • Hydraulic pump drive – Check for wear. • Load handling system – Change hoses (every 1 - 2 years). • Ignition plug – Check for burns (gas-powered trucks). • Distributor cap – Check the insertion of high-voltage cable (gas-powered trucks). • Distributor segment – Check for burns (gas-powered trucks). • Distributor center-piece – Check for wear or damage (gas-powered trucks). • High-voltage cable – Check for breakage (gas-powered trucks). • Main frame and cross members – Check for damage, cracks, loose rivets or bolts.

https://truckmanualshub.com/

PERIODIC INSPECTION

PREVENTIVE MAINTENANCE SCHEDULE

This maintenance schedule is worked out on the assumption that the lift truck will be used under typical working conditions. If the lift truck is used under severer working conditions, earlier preventive maintenance is required. (The black dots in the table mean “Change or addition”.)

Ⓖ: Gas-powered trucks, Ⓓ: Diesel-powered trucks

ENGINE

Checking item	Service Required	Tools	Daily	Monthly (200 hrs)	Trimonthly (600 hrs)	Semiannually (1200 hrs)	Annually (2400 hrs)
Engine	Visually check for proper rotation.	Visual	○	○	○	○	○
	Check working noise.	Auditory	○	○	○	○	○
	Check exhaust gas (color).	Visual	○	○	○	○	○
	Check air cleaner element for contamination and clean, if needed.	Visual		○	○	●	●
	Check crankcase air breather for contamination and clean, if needed Ⓓ.	Operate			○	○	○
	Check valve clearance.	Thickness gauge				○	○
	Retighten cylinder head bolts.	Torque wrench		○ (first time only Ⓖ)			○ (C240)
	Check cylinder compression pressure.	Compression gauge					○
Blow-by gas reducing device	Check metering valve and piping for clogging or damage Ⓖ.	Visual & auditory				○	○
Governor	Check maximum speed under unloaded condition.	Tachometer					○
Lubrication system	Check for engine oil leaks.	Visual	○	○	○	○	○
	Check engine oil for level and contamination.	Visual	○	○	○	○	○
	Change engine oil.	Operate		● (at initial 50 hrs)	●	●	●
	Change engine oil filter.	Operate		● (first time only)	●	●	●

https://truckmanualshub.com/

ENGINE

Checking item	Service Required	Tools	Daily	Monthly (200 hrs)	Trimonthly (600 hrs)	Semiannually (1200 hrs)	Annually (2400 hrs)
Fuel system	Check for fuel leaks (piping, pump and tank).	Visual	○	○	○	○	○
	Check for fuel filter for clogging Ⓖ.	Visual		○	○	○	○
	Clean fuel filter Ⓖ.	Operate			○	○	●
	Change fuel filter element Ⓓ.	Operate			●	●	●
	Check injection nozzle for injection pressure and spray pattern Ⓓ.	Nozzle tester				○	○
	Check carburetor for loose linkage and contamination Ⓖ.	Visual			○	○	○
	Check ignition timing Ⓖ.	Timing light				○	○
	Check injection timing Ⓓ.	Operate					○
	Drain water from fuel tank Ⓓ.	Operate			○	○	○
	Clean the inside of fuel tank.	Operate				○	○
	Check fuel level.	Visual	○	○	○	○	○
Cooling system	Check cooling water level.	Visual	○	○	○	○	○
	Check for water leaks.	Visual	○	○	○	○	○
	Check rubber hose for deterioration.	Visual		○	○	○	○
	Check radiator cap for proper function and installation.	Visual		○	○	○	○
	Clean and change water.	Operate			●	●	● (every 2 years when LLC is used.)
	Check fan belt for proper tension and damage.	Visual	○	○	○	○	○

https://truckmanualshub.com/

PERIODIC INSPECTION

POWER TRAINS

Checking item	Service Required	Tools	Daily	Monthly (200 hrs)	Trimonthly (600 hrs)	Semiannually (1200 hrs)	Annually (2400 hrs)
Clutch	Check clutch pedal for play and the clearance between pedal and floorboard when disengaged.	Operate and scale	○	○	○	○	○
	Check for noise and proper disengagement.	Operate	○	○	○	○	○
	Check for slipping and proper engagement.	Operate	○	○	○	○	○
	Check master cylinder and release cylinder for fluid leaks. Change fluid.	Operate	○	○	○	●	●
	Check the function of booster (trucks with power clutch).	Operate	○	○	○	○	○
	Check booster for oil leaks (trucks with power clutch).	Operate	○	○	○	○	○
	Check clutch oil level in tank of trucks with optional oil clutch (Clean strainer whenever oil is changed).	Visual		○	○	○	●
Transmission	Check shift levers for operation and looseness.	Operate	○	○	○	○	○
	Check for oil leaks.	Visual	○	○	○	○	○
	Change oil.	Operate				●	●
Torque converter type transmission	Check for oil leaks.	Visual	○	○	○	○	○
	Check oil level and change oil.	Visual	○	○	○	●	●
	Check shift lever for operation and looseness.	Operate	○	○	○	○	○
	Check control valve and clutch for proper function.	Operate	○	○	○	○	○
	Check inching valve for function.	Operate	○	○	○	○	○
	Check inching pedal for play and travel.	Operate	○	○	○	○	○
	Change inline filter.	Operate		● (first time only)		●	●
Front axle	Check for oil leaks.	Visual	○	○	○	○	○
	Change oil.	Operate				●	●
	Check for loose mount bolt.	Test hammer		○	○	○	○
	Check for deformation, cracks or damage.	Visual		○	○	○	○

https://truckmanualshub.com/

TIRE/WHEEL SYSTEM

Checking item	Service Required	Tools	Daily	Monthly (200 hrs)	Trimonthly (600 hrs)	Semiannually (1200 hrs)	Annually (2400 hrs)
Tire	Check inflation pressure.	Tire gauge	○	○	○	○	○
	Check for cracks or damage.	Visual	○	○	○	○	○
	Check tread depth.	Depth gauge		○	○	○	○
	Check for undue wear.	Visual	○	○	○	○	○
	Check for debris, stones or foreign matter in tread.	Visual		○	○	○	○
Hub, rim mounting bolt, nut	Check for looseness.	Test hammer	○	○	○	○	○
	Check for damage.	Visual	○	○	○	○	○
Rim, side ring	Check rim, side ring, and disk wheel for damage.	Visual	○	○	○	○	○
Wheel bearing	Check for looseness or noise.	Touch		○	○	○	○
	Disassemble and change grease.	Operate				●	●
Axle	Check for deformation, cracks or damage.	Visual		○	○	○	○

STEERING SYSTEM

Checking item	Service Required	Tools	Daily	Monthly (200 hrs)	Trimonthly (600 hrs)	Semiannually (1200 hrs)	Annually (2400 hrs)
Steering wheel	Check for play.	Operate	○	○	○	○	○
	Check for looseness in axial or radial direction. Check steering column for looseness.	Touch	○	○	○	○	○
	Check for proper operation.	Operate	○	○	○	○	○
	Apply rubber grease to horn contact ring	Operate					●
Steering gear box	Check for loose mounting bolt.	Operate		○	○	○	○
	Check for oil leaks.	Visual		○	○	○	○
Rod, arm	Check for looseness.	Operate		○	○	○	○
	Check for bending, damage or wear.	Visual		○	○	○	○

https://truckmanualshub.com/

PERIODIC INSPECTION

STEERING SYSTEM

Checking item	Service Required	Tools	Daily	Monthly (200 hrs)	Trimonthly (600 hrs)	Semiannually (1200 hrs)	Annually (2400 hrs)
Knuckle	Check king pin for looseness or damage.	Touch		○	○	○	○
Rear axle	Check for bending, damage or wear.	Visual		○	○	○	○
	Check mounting condition.	Test hammer		○	○	○	○
	Apply grease to bushings and pins.	Operate		○	○	○	○
Power steering	Check for proper operation.	Operate	○	○	○	○	○
	Check for oil leaks.	Visual	○	○	○	○	○
	Check for loose mounting or linkage.	Visual		○	○	○	○

BRAKE SYSTEM

Checking item	Service Required	Tools	Daily	Monthly (200 hrs)	Trimonthly (600 hrs)	Semiannually (1200 hrs)	Annually (2400 hrs)
Brake pedal	Check for play.	Scale	○	○	○	○	○
	Check for pedal height and returning.	Scale	○	○	○	○	○
	Check for braking or uneven braking.	Operate	○	○	○	○	○
	Check for the entrance of air into braking piping.	Operate		○	○	○	○
	Check booster for proper function and oil leaks (trucks with power brake).	Operate	○	○	○	○	○
Parking brake lever	Check for proper operation and allowance.	Operate	○	○	○	○	○
	Check for braking effect.	Operate	○	○	○	○	○
Rod, cable	Check for proper operation.	Operate	○	○	○	○	○
	Check for loose linkage.	Touch		○	○	○	○
Hose and pipe	Check for damage, leaks or interference.	Visual		○	○	○	○
	Check for loose connections or clamp.	Touch		○	○	○	○

https://truckmanualshub.com/

BRAKE SYSTEM

Checking item	Service Required	Tools	Daily	Monthly (200 hrs)	Trimonthly (600 hrs)	Semiannually (1200 hrs)	Annually (2400 hrs)
Wheel brake	Check for fluid leaks (oil leaks for trucks with power brake).	Visual	○	○	○	○	○
	Check fluid level.	Visual	○	○	○	●	●
	Check master cylinder and wheel cylinder for proper operation. Check them for oil leaks or damage.	Operate	○	○	○	○	○
	Check master cylinder, piston cup and check valve for wear or damage, and replace if needed.	Disassembly					●
Brake drum and brake shoe	Check brake drum for loose installation.	Test hammer		○	○	○	○
	Check lining for wear.	Vernier calipers					○
	Check brake shoe for operation.	Operate					○
	Check anchor pin for corrosion.	Visual					○
	Check return spring for deterioration.	Scale					○
	Check automatic clearance adjuster for operation.	Operate					○
	Check drum for wear or damage.	Visual					○
Back plate	Check for deformation or cracks.	Visual					○
	Check loose installation.	Test hammer					○

https://truckmanualshub.com/

PERIODIC INSPECTION

LOAD HANDLING SYSTEM

Checking item	Service Required	Tools	Daily	Monthly (200 hrs)	Trimonthly (600 hrs)	Semiannually (1200 hrs)	Annually (2400 hrs)
Forks	Check for damage, deformation or wear.	Visual	○	○	○	○	○
	Check fork stopper pin for damage or wear.	Visual	○	○	○	○	○
	Check for roots and teeth welded area for cracks or wear.	Visual		○	○	○	○
Mast and carriage	Check mast cross members for cracked weld or damage.	Visual		○	○	○	○
	Check tilt cylinder bracket and mast for cracks or damage in welded areas.	Visual		○	○	○	○
	Check outer and inner masts for cracked weld or damage.	Visual		○	○	○	○
	Check carriage for cracked weld or damage.	Visual		○	○	○	○
	Check roller bearing for looseness.	Touch		○	○	○	○
	Check mast support bushing for wear or damage.	Visual					○
	Check mast support cap bolts for looseness.	Torque wrench		○ (first time only)		○	○
	Check for looseness of lift cylinder tail bolts, piston rod head bolts, U bolts, piston head guide bolts.	Test hammer		○ (first time only)		○	○
	Check rollers, roller pins and welds for cracks or damage.	Visual		○	○	○	○
	Check the mast for proper operation.	Operate	○	○	○	○	○
Chains and sheaves	Check chains for tension, deformation, damage or corrosion.	Touch	○	○	○	○	○
	Check chains for elongation.	Gauge		○	○	○	○
	Lubricate chains.	Operate		●	●	●	●
	Check loose linkage of chain anchor pin and chain.	Visual		○	○	○	○
	Check sheaves for deformation or damage.	Visual		○	○	○	○
	Check sheave bearings for looseness.	Touch		○	○	○	○
Attachments	Check for operation and installation.	Operate/visual		○	○	○	○

https://truckmanualshub.com/

LOAD HANDLING SYSTEM

Checking item	Service Required	Tools	Daily	Monthly (200 hrs)	Trimonthly (600 hrs)	Semiannually (1200 hrs)	Annually (2400 hrs)
Cylinder	Check piston rod, rod bolt, rod end for looseness, deformation or damage.	Visual/ test hammer	○	○	○	○	○
	Check for proper operation.	Operate	○	○	○	○	○
	Check for oil leaks.	Visual	○	○	○	○	○
	Check pin and cylinder bushing for wear or damage.	Visual		○	○	○	○
Hydraulic pump	Check for oil leaks or noise.	Visual/auditory	○	○	○	○	○
	Check drive for wear.	Visual/auditory					○

HYDRAULIC SYSTEM

Checking item	Service Required	Tools	Daily	Monthly (200 hrs)	Trimonthly (600 hrs)	Semiannually (1200 hrs)	Annually (2400 hrs)
Hydraulic oil tank	Check oil level and change oil, if contaminated.	Visual	○	○	○	●	●
	Change suction strainer.	Operate				●	●
	Change return filter.	Operate				●	●
Control valve lever	Check for loose linkage of the lever.	Operate	○	○	○	○	○
	Check for function of the lever.	Operate	○	○	○	○	○
Control valve	Check for oil leaks.	Visual	○	○	○	○	○
	Check relief valve and tilt-lock valve for function.	Auditory		○	○	○	○
	Measure relief valve pressure.	Oil pressure gauge				○	○
Hose, piping, hose reel, and swivel joint	Check for oil leaks, looseness, deformation or damage.	Visual/touch	○	○	○	○	○
	Change load handling hose.	Operate					● (1 – 2 years)

https://truckmanualshub.com/

PERIODIC INSPECTION

ELECTRICAL SYSTEM

Checking item	Service Required	Tools	Daily	Monthly (200 hrs)	Trimonthly (600 hrs)	Semiannually (1200 hrs)	Annually (2400 hrs)
Ignition device (gas-powered trucks)	Check distributor cap for cracks.	Visual			○	○	○
	Check spark plug for burn.	Visual					○
	Adjust spark plug gap.	Plug gap gauge			○	○	○
	Clean spark plug.	Operate			○	○	○
	Check the insertion of high-voltage cable into distributor cap.	Visual					○
	Check distributor segment for burn.	Visual					○
	Check distributor center-piece for wear or damage.	Visual					○
	Check gap between signal rotor and stator.	Thickness gauge			○	○	○
	Lubricate distributor shaft.	Operate			○	○	○
	Check high-voltage cable for breakage.	Tester					○
Starter	Check proper engagement of pinion gears.	Operate			○	○	○
Charger	Check for proper operation.	Ammeter			○	○	○
Battery	Check electrolyte level and clean.	Visual/operate	○	○	○	○	○
	Check specific gravity of electrolyte.	Gravimeter			○	○	○
Electrical wiring	Check wire harness for damage and loose clamp.	Visual		○	○	○	○
	Check for loose connections.	Touch			○	○	○

https://truckmanualshub.com/

SAFETY DEVICE AND OTHERS

Checking item	Service Required	Tools	Daily	Monthly (200 hrs)	Trimonthly (600 hrs)	Semiannually (1200 hrs)	Annually (2400 hrs)
Overhead guard and load backrest	Check for loose mounting.	Test hammer	○	○	○	○	○
	Check for deformation, cracks or damage.	Visual	○	○	○	○	○
Turn signal	Check for operation and installation. Check for damage or contamination.	Operate/visual	○	○	○	○	○
Alarm	Check for operation and installation.	Operate	○	○	○	○	○
Lights	Check for operation and installation. Check for damage or contamination.	Operate/visual	○	○	○	○	○
Back-up alarm	Check for operation and installation.	Operate	○	○	○	○	○
Sideview mirrors	Check for contamination or damage.	Visual	○	○	○	○	○
	Check for proper visibility.	Visual	○	○	○	○	○
Warning lights, meters	Check for operation.	Operate	○	○	○	○	○
Rear reflector/ License number plate	Check for contamination or damage.	Visual	○	○	○	○	○
Operator's seat	Check for damage or loose mounting bolts.	Visual				○	○
Truck body	Check frame and cross members for damage or cracks.	Visual					○
	Check for loose rivets and bolts.	Test hammer					○
	Check the results of previous checks.	Visual	○	○	○	○	○
	Check general condition of truck.	Visual	○	○	○	○	○
Lubricants and oil change	After cleaning, check for lubrication of each part.	Grease pump		●	●	●	●
	Check condition of lubricants.	Check					○

https://truckmanualshub.com/

MEMO

https://truckmanualshub.com/

The following symbols, found throughout this manual, alert you to potentially hazardous conditions to the owner and the operator.
Become completely familiar with the truck before proceeding with operating, checking and servicing.

This manual and decals affixed to the truck use the following safety alert indications.

SIGNAL WORD	CLASSIFICATION
DANGER	**Failure to follow the instructions in the message will likely cause a serious accident or death.**
WARNING	**Failure to follow the instructions in the message might cause a serious accident or death.**
CAUTION	**Failure to follow the instructions in the message may cause personal injury or damage to the truck or other property.**
NOTE	**The information will help to prolong the service life of the truck. The message is not directly related to accident prevention.**

5. SPECIFICATIONS & SERVICE DATA

CONTENTS

SPECIFICATIONS ..... 5 - 1
EQUIPMENT ..... 5 - 13
LOAD CHART ..... 5 - 14
SERVICE DATA ..... 5 - 15
- SERVICE DATA ..... 5 - 15
- BOLT AND NUT TORQUE ..... 5 - 16
- REFILL CAPACITY ..... 5 - 18

AFTER-THE-SALE SERVICE ..... 5 - 21
- TRUCK SERIAL NUMBER ..... 5 - 21
- SERIAL NUMBERS OF MAJOR COMPONENTS ..... 5 - 21
- NAME PLATE ..... 5 - 21
- ENGINE SERIAL NUMBER ..... 5 - 22
- GENUINE TCM PARTS ..... 5 - 23
- GENUINE TCM LUBRICANTS ..... 5 - 23
- TRUCK DATA ..... 5 - 24

https://truckmanualshub.com/

SPECIFICATIONS

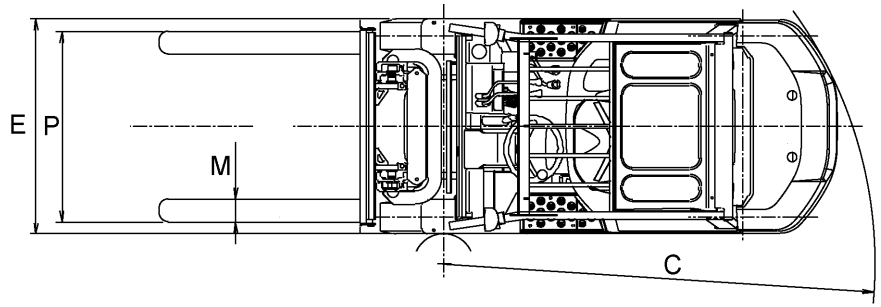

Specifications are subject to change without notice.

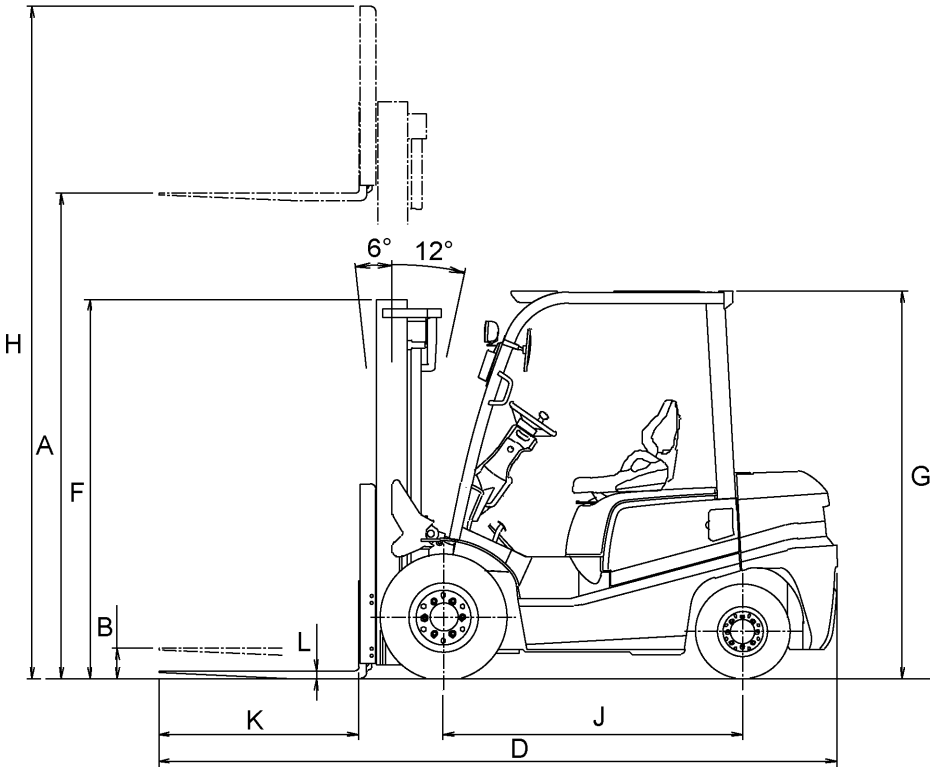

https://truckmanualshub.com/

Leading particulars / Truck model		FG15C13	FG15T13	FD15C13	FD15T13
Rated load	kg (lbs)	1500 EXC 1350 (3000)			
Basic load center	mm (in.)	500 EXC 600 (24)			
Max. height	A mm (in.)	3000 (118.1)			
Free lift	B mm (in.)	155 (6.1)			
Fork lifting speed	mm/s (fpm)				
No load		670 (131.9)		600 (118.1)	
Loaded		590 (116.1)		530 (104.3)	
Traveling speed	km/h (mph)				
Forward 1st speed		8.0 (5.0)	14.5 (9.0)	8.0 (5.0)	14.0 (8.7)
2nd speed		14.5 (9.0)	---	14.0 (8.7)	---
Reverse 1st speed		8.0 (5.0)	14.5 (9.0)	8.0 (5.0)	14.0 (8.7)
2nd speed		14.5 (9.0)	---	14.0 (8.7)	---
Gradeability (1.6 km/h, 1.0 mph)	%				
No load		18		19	
Loaded		24	29	22	24
Min. turning radius	C mm (in.)	1980 (78.0)			
Min. intersecting aisle width	mm (in.)	1780 (70.1)			
Overall length	D mm (in.)	3165 (124.6)			
Overall width	E mm (in.)	1070 (42.1)			
Overall height (mast)	F mm (in.)	1995 (78.5)			
(overhead guard)	G mm (in.)	2070 EXE, EXN, EXC 2130 (81.5)		2070 EXC 2130 (81.5)	
Overall height, mast raised	H mm (in.)	4030 (158.7)			
Wheelbase	mm (in.)	1425 (56.1)			
Tread, front	mm (in.)	890 (35.0)			
rear	mm (in.)	920 (36.2)			
Fork size	mm (in.)				
length (K) x width (M) x thickness (L)		920 x 100 x 35 (36.2 x 3.9 x 1.38)			
Fork spacing	P mm (in.)	200 - 920 (7.9 - 36.2)			
Ground clearance (mast)	mm (in.)	110 (4.3)			
Weight	kg (lbs)	2510 (5530)		2540 (5600)	
Engine					
Model		Nissan K15 gasoline engine		Kubota D1503 diesel engine	
Type		4-cycle water cooling		4-cycle water cooling	
Total displacement	ℓ (cu. in.)	1.486 (91)		1.499 (91.8)	
Rated output		25.0 kW (34 PS)/2400 rpm		21.3 kW (29.0 PS)/2500 rpm	
Maximum torque		110.2 N-m (11.2 kgf-m)/1600 rpm [110.2 N-m (81.3 lbf-ft)/1600 rpm]		98.0 N-m (10.0 kgf-m)/1600 rpm [98.0 N-m (72.3 lbf-ft)/1600 rpm]	
Tire					
Front		6.50-10-10PR(I)			
Rim size		5.00Fx10DT			
Inflation pressure		700 kPa, 7.0 kgf/cm^2 (100 psi)			
Rear		5.00-8-8PR(I)			
Rim size		3.00D-8DT			
Inflation pressure		800 kPa, 8.0 kgf/cm^2 (114 psi)			

https://truckmanualshub.com/

SPECIFICATIONS

Leading particulars / Truck model		FG18C13	FG18T13	FD18C13	FD18T13
Rated load	kg (lbs)	1750 EXC 1580 (3500)			
Basic load center	mm (in.)	500 EXC 600 (24)			
Max. height	A mm (in.)	3000 (118.1)			
Free lift	B mm (in.)	155 (6.1)			
Fork lifting speed	mm/s (fpm)				
No load		670 (131.9)		600 (118.1)	
Loaded		590 (116.1)		530 (104.3)	
Traveling speed	km/h (mph)				
Forward 1st speed		8.0 (5.0)	14.5 (9.0)	8.0 (5.0)	14.0 (8.7)
2nd speed		14.5 (9.0)	---	14.0 (8.7)	---
Reverse 1st speed		8.0 (5.0)	14.5 (9.0)	8.0 (5.0)	14.0 (8.7)
2nd speed		14.5 (9.0)	---	14.0 (8.7)	---
Gradeability (1.6 km/h, 1.0 mph)	%				
No load		18	17	16	17
Loaded		20	24	20	21
Min. turning radius	C mm (in.)	2010 (79.1)			
Min. intersecting aisle width	mm (in.)	1800 (70.9)			
Overall length	D mm (in.)	3195 (125.8)			
Overall width	E mm (in.)	1100 (43.3)			
Overall height (mast)	F mm (in.)	1995 (78.5)			
(overhead guard)	G mm (in.)	2070 EXE, EXN, EXC 2130 (81.5)		2070 EXC 2130 (81.5)	
Overall height, mast raised	H mm (in.)	4030 (158.7)			
Wheelbase	mm (in.)	1425 (56.1)			
Tread, front	mm (in.)	920 (36.2)			
rear	mm (in.)	920 (36.2)			
Fork size	mm (in.)				
length (K) x width (M) x thickness (L)		920 x 100 x 35 (36.2 x 3.9 x 1.38)			
Fork spacing	P mm (in.)	200 - 920 (7.9 - 36.2)			
Ground clearance (mast)	mm (in.)	110 (4.3)			
Weight	kg (lbs)	2670 (5890)		2700 (5950)	
Engine					
Model		Nissan K15 gasoline engine		Kubota D1503 diesel engine	
Type		4-cycle water cooling		4-cycle water cooling	
Total displacement	ℓ (cu. in.)	1.486 (91)		1.499 (91.8)	
Rated output		25.0 kW (34 PS)/2400 rpm		21.3 kW (29.0 PS)/2500 rpm	
Maximum torque		110.2 N-m (11.2 kgf-m)/1600 rpm [110.2 N-m (81.3 lbf-ft)/1600 rpm]		98.0 N-m (10.0 kgf-m)/1600 rpm [98.0 N-m (72.3 lbf-ft)/1600 rpm]	
Tire					
Front		6.50-10-10PR(I)			
Rim size		5.00Fx10TB			
Inflation pressure		700 kPa, 7.0 kgf/cm^2 (100 psi)			
Rear		5.00-8-8PR(I)			
Rim size		3.00D-8DT			
Inflation pressure		800 kPa, 8.0 kgf/cm^2 (114 psi)			

https://truckmanualshub.com/

Leading particulars / Truck model	FG20C3	FG20T3	FD20C3	FD20T3	FD20C3Z	FD20T3Z
Rated load kg (lbs)	2000 EXC 1810 (4000)					
Basic load center mm (in.)	500 EXC 600 (24)					
Max. height A mm (in.)	3000 (118.1)					
Free lift B mm (in.)	110 (4.3)					
Fork lifting speed mm/s (fpm)						
No load	580 (114.2)		670 (131.9)		570 (112.2)	
Loaded	540 (106.3)		630 (124.0)		530 (104.4)	
Traveling speed km/h (mph)						
Forward 1st speed	8.5 (5.3)	19.0 (11.8)	8.5 (5.3)	18.5 (11.5)	8.0 (5.0)	18.5 (11.5)
2nd speed	19.0 (11.8)	---	19.0 (11.8)	---	18.0 (11.2)	---
Reverse 1st speed	8.5 (5.3)	19.0 (11.8)	8.5 (5.3)	18.5 (11.5)	8.0 (5.0)	18.5 (11.5)
2nd speed	19.0 (11.8)	---	19.0 (11.8)	---	18.0 (11.2)	---
Gradeability (1.6 km/h, 1.0 mph) %						
No load	20		20		20	
Loaded	20	28	23	34	21	25
Min. turning radius C mm (in.)	2170 (85.4)					
Min. intersecting aisle width mm (in.)	1950 (76.8)					
Overall length D mm (in.)	3550 (139.8)					
Overall width E mm (in.)	1150 (45.3)					
Overall height (mast) F mm (in.)	2030 (79.9)					
(overhead guard) G mm (in.)	2070 EXE, EXN, EXC 2130 (81.5)					
Overall height, mast raised H mm (in.)	4030 (158.7)					
Wheelbase mm (in.)	1600 (63.0)					
Tread, front mm (in.)	970 (38.2)					
rear mm (in.)	970 (38.2)					
Fork size mm (in.)						
length (K) x width (M) x thickness (L)	1070 x 122 x 40 (42.1 x 4.8 x 1.6)					
Fork spacing P mm (in.)	245 - 1020 (9.6 - 40.2)					
Ground clearance (mast) mm (in.)	110 (4.3)					
Weight kg (lbs)	3210 (7080)		3340 (7360)		3320 (7320)	
Engine						
Model	Nissan K21 gasoline engine		Nissan Diesel TD27-II diesel engine		Isuzu C240PKJ diesel engine	
Type	4-cycle water cooling		4-cycle water cooling		4-cycle water cooling	
Total displacement ℓ (cu. in.)	2.065 (126.4)		2.663 (163)		2.369 (145)	
Rated output	34.6 kW (48.6 PS)/2250 rpm		42.0 kW (57 PS)/2400 rpm [41.0 kW (55 HP)/2300 rpm SAE GROSS]		34.7 kW (47.2 PS)/2500 rpm [46.5 HP/2500 rpm SAE GROSS]	
Maximum torque	153.5 N-m (15.7 kgf-m)/1600 rpm		170 N-m (17.3 kgf-m)/2300 rpm [170 N-m (125 lbf-ft)/2300 rpm]		14.1 kgf-m/1800 rpm	
Tire						
Front	7.00-12-12PR(I)					
Rim size	5.00S-12DT					
Inflation pressure	700 kPa, 7.0 kgf/cm^2 (100 psi)					
Rear	6.00-9-10PR(I)					
Rim size	4.00E-9DT					
Inflation pressure	700 kPa, 7.0 kgf/cm^2 (100 psi)					

https://truckmanualshub.com/

SPECIFICATIONS

Leading particulars / Truck model		FG25C3	FG25T3	FD25C3	FD25T3	FD25C3Z	FD25T3Z
Rated load	kg (lbs)	2500 EXC 2260 (5000)					
Basic load center	mm (in.)	500 EXC 600 (24)					
Max. height	A mm (in.)	3000 (118.1)					
Free lift	B mm (in.)	110 (4.3)					
Fork lifting speed	mm/s (fpm)						
No load		580 (114.2)		670 (131.9)		570 (112.2)	
Loaded		540 (106.3)		630 (124.0)		530 (104.4)	
Traveling speed	km/h (mph)						
Forward 1st speed		8.5 (5.3)	19.0 (11.8)	8.5 (5.3)	18.5 (11.5)	8.0 (5.0)	18.5 (11.5)
Forward 2nd speed		19.0 (11.8)	---	19.0 (11.8)	---	18.0 (11.2)	---
Reverse 1st speed		8.5 (5.3)	19.0 (11.8)	8.5 (5.3)	18.5 (11.5)	8.0 (5.0)	18.5 (11.5)
Reverse 2nd speed		19.0 (11.8)	---	19.0 (11.8)	---	18.0 (11.2)	---
Gradeability (1.6 km/h, 1.0 mph)	%						
No load		18		18		18	
Loaded		19	24	20	28	18	25
Min. turning radius	C mm (in.)	2240 (88.2)					
Min. intersecting aisle width	mm (in.)	2010 (79.1)					
Overall length	D mm (in.)	3625 (142.7)					
Overall width	E mm (in.)	1150 (45.3)					
Overall height (mast)	F mm (in.)	2030 (79.9)					
(overhead guard)	G mm (in.)	2070 EXE, EXN, EXC 2130 (81.5)					
Overall height, mast raised	H mm (in.)	4030 (158.7)					
Wheelbase	mm (in.)	1600 (63.0)					
Tread, front	mm (in.)	970 (38.2)					
rear	mm (in.)	970 (38.2)					
Fork size	mm (in.)						
length (K) x width (M) x thickness (L)		1070 x 122 x 40 (42.1 x 4.8 x 1.6)					
Fork spacing	P mm (in.)	245 - 1020 (9.6 - 40.2)					
Ground clearance (mast)	mm (in.)	110 (4.3)					
Weight	kg (lbs)	3570 (7870)		3700 (8150)		3680 (8110)	
Engine							
Model		Nissan K21 gasoline engine		Nissan Diesel TD27-II diesel engine		Isuzu C240PKJ diesel engine	
Type		4-cycle water cooling		4-cycle water cooling		4-cycle water cooling	
Total displacement	ℓ (cu. in.)	2.065 (126.4)		2.663 (163)		2.369 (145)	
Rated output		34.6 kW (48.6 PS)/2250 rpm		42.0 kW (57 PS)/2400 rpm [41.0 kW (55 HP)/2300 rpm SAE GROSS]		34.7 kW (47.2 PS)/2500 rpm [46.5 HP/2500 rpm SAE GROSS]	
Maximum torque		153.5 N-m (15.7 kgf-m)/1600 rpm		170 N-m (17.3 kgf-m)/2300 rpm [170 N-m (125 lbf-ft)/2300 rpm]		14.1 kgf-m/1800 rpm	
Tire							
Front		7.00-12-12PR(I)					
Rim size		5.00S-12DT					
Inflation pressure		700 kPa, 7.0 kgf/cm^2 (100 psi)					
Rear		6.00-9-10PR(I)					
Rim size		4.00E-9DT					
Inflation pressure		700 kPa, 7.0 kgf/cm^2 (100 psi)					

https://truckmanualshub.com/

Leading particulars / Truck model	FG30C3	FG30T3	FD30C3	FD30T3	FD30C3Z	FD30T3Z
Rated load kg (lbs)	3000 EXC 2720 (6000)					
Basic load center mm (in.)	500 EXC 600 (24)					
Max. height A mm (in.)	3000 (118.1)					
Free lift B mm (in.)	165 (6.5)					
Fork lifting speed mm/s (fpm)						
No load	490 (96.4)		590 (116.1)		460 (90.5)	
Loaded	440 (86.6)		520 (102.4)		450 (88.6)	
Traveling speed km/h (mph)						
Forward 1st speed	9.0 (5.6)	19.5 (12.1)	9.0 (5.6)	19.5 (12.1)	8.5 (5.3)	19.0 (11.9)
2nd speed	19.5 (12.1)	---	19.5 (12.1)	---	19.0 (11.9)	---
Reverse 1st speed	9.0 (5.6)	19.5 (12.1)	9.0 (5.6)	19.5 (12.1)	8.5 (5.3)	19.0 (11.9)
2nd speed	19.5 (12.1)	---	19.5 (12.1)	---	19.0 (11.9)	---
Gradeability (1.6 km/h, 1.0 mph) %						
No load	20		20		20	
Loaded	14	18	15	21	15	18
Min. turning radius C mm (in.)	2400 (94.5)					
Min. intersecting aisle width mm (in.)	2110 (83.1)					
Overall length D mm (in.)	3775 (148.6)					
Overall width E mm (in.)	1225 (48.2)					
Overall height (mast) F mm (in.)	2075 (81.7)					
(overhead guard) G mm (in.)	2090 EXE, EXN, EXC 2150 (82.3)					
Overall height, mast raised H mm (in.)	4250 (167.3)					
Wheelbase mm (in.)	1700 (66.9)					
Tread, front mm (in.)	1000 (39.4)					
rear mm (in.)	970 (38.2)					
Fork size mm (in.)						
length (K) x width (M) x thickness (L)	1070 x 125 x 45 (42.1 x 4.9 x 1.8)					
Fork spacing P mm (in.)	250 - 1090 (9.8 - 42.9)					
Ground clearance (mast) mm (in.)	140 (5.5)					
Weight kg (lbs)	4250 (9370)		4390 (9670)		4370 (9630)	
Engine						
Model	Nissan K21 gasoline engine		Nissan Diesel TD27-II diesel engine		Isuzu C240PKJ diesel engine	
Type	4-cycle water cooling		4-cycle water cooling		4-cycle water cooling	
Total displacement ℓ (cu. in.)	2.065 (126.4)		2.663 (163)		2.369 (145)	
Rated output	34.6 kW (48.6 PS)/2250 rpm		42.0 kW (57 PS)/2400 rpm [41.0 kW (55 HP)/2300 rpm SAE GROSS]		34.7 kW (47.2 PS)/2500 rpm [46.5 HP/2500 rpm SAE GROSS]	
Maximum torque	153.5 N-m (15.7 kgf-m)/1600 rpm		170 N-m (17.3 kgf-m)/2300 rpm [170 N-m (125 lbf-ft)/2300 rpm]		14.1 kgf-m/1800 rpm	
Tire						
Front	28x9-15-12PR(I)					
Rim size	7.00T-15					
Inflation pressure	700 kPa, 7.0 kgf/cm^2 (100 psi)					
Rear	6.50-10-10PR(I)					
Rim size	5.00F-10					
Inflation pressure	700 kPa, 7.0 kgf/cm^2 (100 psi)					

https://truckmanualshub.com/

SPECIFICATIONS

Leading particulars / Truck model		FG35T3S	FD35T3S
Rated load	kg (lbs)	3500 EXC 3180 (7000)	
Basic load center	mm (in.)	500 EXC 600 (24)	
Max. height	A mm (in.)	3000 (118.1)	
Free lift	B mm (in.)	170 (6.7)	
Fork lifting speed	mm/s (fpm)		
No load		450 (88.6)	490 (96.5)
Loaded		400 (78.8)	460 (90.6)
Traveling speed	km/h (mph)		
Forward 1st speed		19.0 (11.7)	19.5 (12.0)
2nd speed		---	----
Reverse 1st speed		19.0 (11.7)	19.5 (12.0)
2nd speed		---	---
Gradeability (1.6 km/h, 1.0 mph)	%		
No load		16	17
Loaded		17	18
Min. turning radius	C mm (in.)	2470 (97.2)	
Min. intersecting aisle width	mm (in.)	2280 (89.8)	
Overall length	D mm (in.)	3870 (152.4)	
Overall width	E mm (in.)	1290 (50.8)	
Overall height (mast)	F mm (in.)	2135 (84.1)	
(overhead guard)	G mm (in.)	2140 EXE, EXN, EXC 2200 (86.6)	
Overall height, mast raised	H mm (in.)	4255 (167.5)	
Wheelbase	mm (in.)	1700 (66.9)	
Tread, front	mm (in.)	1060 (41.7)	
rear	mm (in.)	970 (38.2)	
Fork size	mm (in.)		
length (K) x width (M) x thickness (L)		1070 x 150 x 50 (42.1 x 5.9 x 2.0)	
Fork spacing	P mm (in.)	300 - 1090 (11.8 - 42.9)	
Ground clearance (mast)	mm (in.)	145 (5.7)	
Weight	kg (lbs)	4820 (10605)	4940 (10868)
Engine			
Model		Nissan K25 gasoline engine	Nissan Diesel QD32 diesel engine
Type		4-cycle water cooling	4-cycle water cooling
Total displacement	ℓ (cu. in.)	2.488 (151.8)	3.153 (193.4)
Rated output		39.5 kW (54.3 PS)/2100 rpm	44.0 kW (59.8 PS)/2300 rpm
Maximum torque		188.1 N-m (19.1 kgf-m)/1600 rpm [188.1 N-m (138 lbf-ft)/1600 rpm]	189 N-m (19.3 kgf-m)/1800 rpm [189 N-m (139 lbf-ft)/1800 rpm]
Tire			
Front		250-15-16PR(I)	
Rim size		7.00T-15	
Inflation pressure		850 kPa, 8.7 kgf/cm² (123 psi)	
Rear		6.50-10-12PR(I)	
Rim size		5.00F-10	
Inflation pressure		900 kPa, 9.2 kgf/cm² (131 psi)	

https://truckmanualshub.com/

Leading particulars / Truck model		FHG15C3	FHG15T3	FHD15C3	FHD15T3	FHD15C3Z	FHD15T3Z
Rated load	kg (lbs)	1500 EXC 1350 (3000)					
Basic load center	mm (in.)	500 EXC 600 (24)					
Max. height	A mm (in.)	3000 (118.1)					
Free lift	B mm (in.)	155 (6.1)					
Fork lifting speed	mm/s (fpm)						
No load		680 (133.9)		660 (129.9)		660 (129.9)	
Loaded		600 (118.1)		620 (122.1)		620 (122.1)	
Traveling speed	km/h (mph)						
Forward 1st speed		9.0 (5.6)	19.5 (12.1)	9.0 (5.6)	19.5 (12.1)	9.0 (5.6)	19.5 (12.1)
Forward 2nd speed		19.0 (11.9)	---	19.0 (11.9)	---	19.0 (11.9)	---
Reverse 1st speed		9.0 (5.6)	19.5 (12.1)	9.0 (5.6)	19.5 (12.1)	9.0 (5.6)	19.5 (12.1)
Reverse 2nd speed		19.0 (11.9)	---	19.0 (11.9)	---	19.0 (11.9)	---
Gradeability (1.6 km/h, 1.0 mph)	%						
No load		18		18		18	
Loaded		25	33	25	33	25	31
Min. turning radius	C mm (in.)	1980 (78.0)					
Min. intersecting aisle width	mm (in.)	1780 (70.1)					
Overall length	D mm (in.)	3165 (124.6)					
Overall width	E mm (in.)	1070 (42.1)					
Overall height (mast)	F mm (in.)	1995 (78.5)					
(overhead guard)	G mm (in.)	2070 EXE, EXN, EXC 2130 (81.5)				2070 EXC 2130 (81.5)	
Overall height, mast raised	H mm (in.)	4030 (158.7)					
Wheelbase	mm (in.)	1425 (56.1)					
Tread, front	mm (in.)	890 (35.0)					
rear	mm (in.)	920 (36.2)					
Fork size	mm (in.)						
length (K) x width (M) x thickness (L)		920 x 100 x 35 (36.2 x 3.9 x 1.38)					
Fork spacing	P mm (in.)	200 - 920 (7.9 - 36.2)					
Ground clearance (mast)	mm (in.)	110 (4.3)					
Weight	kg (lbs)	2510 (5530)		2620 (5780)		2610 (5760)	
Engine							
Model		Nissan K21 gasoline engine		Nissan Diesel TD27-II diesel engine		Isuzu C240PKJ diesel engine	
Type		4-cycle water cooling		4-cycle water cooling		4-cycle water cooling	
Total displacement	ℓ (cu. in.)	2.065 (126.4)		2.663 (163)		2.369 (145)	
Rated output		34.6 kW (48.6 PS)/2250 rpm		42.0 kW (57 PS)/2400 rpm		34.3 kW (46.6 PS)/2500 rpm	
Maximum torque		153.5 N-m (15.7 kgf-m)/1600 rpm		170 N-m (17.3 kgf-m)/2300 rpm		137.7 N-m (14.0 kgf-m)/1800 rpm	
Tire							
Front		6.50-10-10PR(I)					
Rim size		5.00Fx10DT					
Inflation pressure		700 kPa, 7.0 kgf/cm^2 (100 psi)					
Rear		5.00-8-8PR(I)					
Rim size		3.00D-8DT					
Inflation pressure		800 kPa, 8.0 kgf/cm^2 (114 psi)					

https://truckmanualshub.com/

SPECIFICATIONS

Leading particulars / Truck model		FHG18C3	FHG18T3	FHD18C3	FHD18T3	FHD18C3Z	FHD18T3Z
Rated load	kg (lbs)	1750 EXC 1580 (3500)					
Basic load center	mm (in.)	500 EXC 600 (24)					
Max. height	A mm (in.)	3000 (118.1)					
Free lift	B mm (in.)	155 (6.1)					
Fork lifting speed	mm/s (fpm)						
No load		680 (133.9)		660 (129.9)		660 (129.9)	
Loaded		600 (118.1)		620 (122.1)		620 (122.1)	
Traveling speed	km/h (mph)						
Forward 1st speed		9.0 (5.6)	19.5 (12.1)	9.0 (5.6)	19.5 (12.1)	9.0 (5.6)	19.5 (12.1)
Forward 2nd speed		19.0 (11.9)	---	19.0 (11.9)	---	19.0 (11.9)	---
Reverse 1st speed		9.0 (5.6)	19.5 (12.1)	9.0 (5.6)	19.5 (12.1)	9.0 (5.6)	19.5 (12.1)
Reverse 2nd speed		19.0 (11.9)	---	19.0 (11.9)	---	19.0 (11.9)	---
Gradeability (1.6 km/h, 1.0 mph)	%						
No load		18	17	17		17	
Loaded		22	31	22	31	22	29
Min. turning radius	C mm (in.)	2010 (79.1)					
Min. intersecting aisle width	mm (in.)	1800 (70.9)					
Overall length	D mm (in.)	3195 (125.8)					
Overall width	E mm (in.)	1100 (43.3)					
Overall height (mast)	F mm (in.)	1995 (78.5)					
(overhead guard)	G mm (in.)	2070 EXE, EXN, EXC 2130 (81.5)				2070 EXC 2130 (81.5)	
Overall height, mast raised	H mm (in.)	4030 (158.7)					
Wheelbase	mm (in.)	1425 (56.1)					
Tread, front	mm (in.)	920 (36.2)					
rear	mm (in.)	920 (36.2)					
Fork size	mm (in.)						
length (K) x width (M) x thickness (L)		920 x 100 x 35 (36.2 x 3.9 x 1.38)					
Fork spacing	P mm (in.)	200 - 920 (7.9 - 36.2)					
Ground clearance (mast)	mm (in.)	110 (4.3)					
Weight	kg (lbs)	2670 (5890)		2780 (6130)		2770 (6110)	
Engine							
Model		Nissan K21 gasoline engine		Nissan Diesel TD27-II diesel engine		Isuzu C240PKJ diesel engine	
Type		4-cycle water cooling		4-cycle water cooling		4-cycle water cooling	
Total displacement	ℓ (cu. in.)	2.065 (126.4)		2.663 (163)		2.369 (145)	
Rated output		34.6 kW (48.6 PS)/2250 rpm		42.0 kW (57 PS)/2400 rpm		34.3 kW (46.6 PS)/2500 rpm	
Maximum torque		153.5 N-m (15.7 kgf-m)/1600 rpm		170 N-m (17.3 kgf-m)/2300 rpm		137.7 N-m (14.0 kgf-m)/1800 rpm	
Tire							
Front		6.50-10-10PR(I)					
Rim size		5.00Fx10TB					
Inflation pressure		700 kPa, 7.0 kgf/cm^2 (100 psi)					
Rear		5.00-8-8PR(I)					
Rim size		3.00D-8DT					
Inflation pressure		800 kPa, 8.0 kgf/cm^2 (114 psi)					

https://truckmanualshub.com/

Leading particulars / Truck model	FHG20C3	FHG20T3	FHD20C3	FHD20T3	FHD20C3A	FHD20T3A
Rated load kg (lbs)	2000 EXC 1810 (4000)					
Basic load center mm (in.)	500 EXC 600 (24)					
Max. height A mm (in.)	3000 (118.1)					
Free lift B mm (in.)	110 (4.3)					
Fork lifting speed mm/s (fpm)						
No load	620 (122.1)		640 (126.0)		670 (131.9)	
Loaded	600 (118.1)		620 (122.0)		630 (124.0)	
Traveling speed km/h (mph)						
Forward 1st speed	9.0 (5.6)	19.0 (11.8)	9.0 (5.6)	18.5 (11.5)	8.5 (5.3)	18.5 (11.5)
2nd speed	19.0 (11.8)	---	18.5 (11.5)	---	19.0 (11.8)	---
Reverse 1st speed	9.0 (5.6)	19.0 (11.8)	9.0 (5.6)	18.5 (11.5)	8.5 (5.3)	18.5 (11.5)
2nd speed	19.0 (11.8)	---	18.5 (11.5)	---	19.0 (11.8)	---
Gradeability (1.6 km/h, 1.0 mph) %						
No load	20		20		20	
Loaded	24	36	28	38	26	36
Min. turning radius C mm (in.)	2170 (85.4)					
Min. intersecting aisle width mm (in.)	1950 (76.8)					
Overall length D mm (in.)	3550 (139.8)					
Overall width E mm (in.)	1150 (45.3)					
Overall height (mast) F mm (in.)	2030 (79.9)					
(overhead guard) G mm (in.)	2070 EXE, EXN, EXC 2130 (81.5)					
Overall height, mast raised H mm (in.)	4030 (158.7)					
Wheelbase mm (in.)	1600 (63.0)					
Tread, front mm (in.)	970 (38.2)					
rear mm (in.)	970 (38.2)					
Fork size mm (in.)						
length (K) x width (M) x thickness (L)	1070 x 122 x 40 (42.1 x 4.8 x 1.6)					
Fork spacing P mm (in.)	245 - 1020 (9.6 - 40.2)					
Ground clearance (mast) mm (in.)	110 (4.3)					
Weight kg (lbs)	3220 (7110)		3340 (7360)		3340 (7360)	
Engine						
Model	Nissan K25 gasoline engine		Kubota V3300 diesel engine		Nissan Diesel QD32 diesel engine	
Type	4-cycle water cooling		4-cycle water cooling		4-cycle water cooling	
Total displacement ℓ (cu. in.)	2.488 (151.8)		3.318 (203.1)		3.153 (193.4)	
Rated output	39.5 kW (54.3 PS)/2100 rpm		50 kW (67 PS)/2500 rpm		44.0 kW (59.8 PS)/2300 rpm [46.3 kW (62 HP)/2300 rpm SAE GROSS]	
Maximum torque	188.1 N-m (19.1 kgf-m)/1600 rpm		226.4 N-m (23.1 kgf-m)/1800 rpm [226.4 N-m (167.1 lbf-ft)/1800 rpm]		189 N-m {19.3 kgf-m)/1800 rpm [189 N-m (139 lbf-ft)/1800 rpm]	
Tire						
Front	7.00-12-12PR(I)					
Rim size	5.00S-12DT					
Inflation pressure	700 kPa, 7.0 kgf/cm^2 (100 psi)					
Rear	6.00-9-10PR(I)					
Rim size	4.00E-9DT					
Inflation pressure	700 kPa, 7.0 kgf/cm^2 (100 psi)					

https://truckmanualshub.com/

SPECIFICATIONS

Leading particulars / Truck model	FHG25C3	FHG25T3	FHD25C3	FHD25T3	FHD25C3A	FHD25T3A
Rated load kg (lbs)	2500 EXC 2260 (5000)					
Basic load center mm (in.)	500 EXC 600 (24)					
Max. height A mm (in.)	3000 (118.1)					
Free lift B mm (in.)	110 (4.3)					
Fork lifting speed mm/s (fpm)						
No load	620 (122.1)		640 (126.0)		670 (131.9)	
Loaded	600 (118.1)		620 (122.0)		630 (124.0)	
Traveling speed km/h (mph)						
Forward 1st speed	9.0 (5.6)	19.0 (11.8)	9.0 (5.6)	18.5 (11.5)	8.5 (5.3)	18.5 (11.5)
2nd speed	19.0 (11.8)	---	18.5 (11.5)	---	19.0 (11.8)	---
Reverse 1st speed	9.0 (5.6)	19.0 (11.8)	9.0 (5.6)	18.5 (11.5)	8.5 (5.3)	18.5 (11.5)
2nd speed	19.0 (11.8)	---	18.5 (11.5)	---	19.0 (11.8)	---
Gradeability (1.6 km/h, 1.0 mph) %						
No load	18		18		20	
Loaded	21	33	24	32	22	30
Min. turning radius C mm (in.)	2240 (88.2)					
Min. intersecting aisle width mm (in.)	2010 (79.1)					
Overall length D mm (in.)	3625 (142.7)					
Overall width E mm (in.)	1150 (45.3)					
Overall height (mast) F mm (in.)	2030 (79.9)					
(overhead guard) G mm (in.)	2070 EXE, EXN, EXC 2130 (81.5)					
Overall height, mast raised H mm (in.)	4030 (158.7)					
Wheelbase mm (in.)	1600 (63.0)					
Tread, front mm (in.)	970 (38.2)					
rear mm (in.)	970 (38.2)					
Fork size mm (in.)						
length (K) x width (M) x thickness (L)	1070 x 122 x 40 (42.1 x 4.8 x 1.6)					
Fork spacing P mm (in.)	245 - 1020 (9.6 - 40.2)					
Ground clearance (mast) mm (in.)	110 (4.3)					
Weight kg (lbs)	3580 (7890)		3700 (8150)		3700 (8150)	
Engine						
Model	Nissan K25 gasoline engine		Kubota V3300 diesel engine		Nissan Diesel QD32 diesel engine	
Type	4-cycle water cooling		4-cycle water cooling		4-cycle water cooling	
Total displacement ℓ (cu. in.)	2.488 (151.8)		3.318 (203.1)		3.153 (193.4)	
Rated output	39.5 kW (54.3 PS)/2100 rpm		50 kW (67 PS)/2500 rpm		44.0 kW (59.8 PS)/2300 rpm [46.3 kW (62 HP)/2300 rpm SAE GROSS]	
Maximum torque	188.1 N-m (19.1 kgf-m)/1600 rpm		226.4 N-m (23.1 kgf-m)/1800 rpm [226.4 N-m (167.1 lbf-ft)/1800 rpm]		189 N-m (19.3 kgf-m)/1800 rpm [189 N-m (139 lbf-ft)/1800 rpm]	
Tire						
Front	7.00-12-12PR(I)					
Rim size	5.00S-12DT					
Inflation pressure	700 kPa, 7.0 kgf/cm² (100 psi)					
Rear	6.00-9-10PR(I)					
Rim size	4.00E-9DT					
Inflation pressure	700 kPa, 7.0 kgf/cm² (100 psi)					

https://truckmanualshub.com/

Leading particulars / Truck model	FHG30C3	FHG30T3	FHD30C3	FHD30T3	FHD30C3A	FHD30T3A
Rated load kg (lbs)	3000 EXC 2720 (6000)					
Basic load center mm (in.)	500 EXC 600 (24)					
Max. height A mm (in.)	3000 (118.1)					
Free lift B mm (in.)	165 (6.5)					
Fork lifting speed mm/s (fpm)						
No load	520 (102.4)		540 (106.3)		590 (116.1)	
Loaded	500 (98.4)		520 (102.4)		520 (102.4)	
Traveling speed km/h (mph)						
Forward 1st speed	9.5 (5.9)	19.5 (12.1)	9.5 (5.9)	19.5 (12.1)	9.0 (5.6)	19.5 (12.1)
2nd speed	19.5 (12.1)	---	19.5 (12.1)	---	19.5 (12.1)	---
Reverse 1st speed	9.5 (5.9)	19.5 (12.1)	9.5 (5.9)	19.5 (12.1)	9.0 (5.6)	19.5 (12.1)
2nd speed	19.5 (12.1)	---	19.5 (12.1)	---	19.5 (12.1)	---
Gradeability (1.6 km/h, 1.0 mph) %						
No load	20		20		20	
Loaded	18	24	16	27	15	24
Min. turning radius C mm (in.)	2400 (94.5)					
Min. intersecting aisle width mm (in.)	2110 (83.1)					
Overall length D mm (in.)	3775 (148.6)					
Overall width E mm (in.)	1225 (48.2)					
Overall height (mast) F mm (in.)	2075 (81.7)					
(overhead guard) G mm (in.)	2090 EXE, EXN, EXC 2150 (82.3)					
Overall height, mast raised H mm (in.)	4250 (167.3)					
Wheelbase mm (in.)	1700 (66.9)					
Tread, front mm (in.)	1000 (39.4)					
rear mm (in.)	970 (38.2)					
Fork size mm (in.)						
length (K) x width (M) x thickness (L)	1070 x 125 x 45 (42.1 x 4.9 x 1.8)					
Fork spacing P mm (in.)	250 - 1090 (9.8 - 42.9)					
Ground clearance (mast) mm (in.)	140 (5.5)					
Weight kg (lbs)	4260 (9390)		4390 (9670)		4390 (9670)	
Engine						
Model	Nissan K25 gasoline engine		Kubota V3300 diesel engine		Nissan Diesel QD32 diesel engine	
Type	4-cycle water cooling		4-cycle water cooling		4-cycle water cooling	
Total displacement ℓ (cu. in.)	2.488 (151.8)		3.318 (203.1)		3.153 (193.4)	
Rated output	39.5 kW (54.3 PS)/2100 rpm		50 kW (67 PS)/2500 rpm		44.0 kW (59.8 PS)/2300 rpm [46.3 kW (62 HP)/2300 rpm SAE GROSS]	
Maximum torque	188.1 N-m (19.1 kgf-m)/1600 rpm		226.4 N-m (23.1 kgf-m)/1800 rpm [226.4 N-m (167.1 lbf-ft)/1800 rpm]		189 N-m (19.3 kgf-m)/1800 rpm [189 N-m (139 lbf-ft)/1800 rpm]	
Tire						
Front	28x9-15-12PR(I)					
Rim size	7.00T-15					
Inflation pressure	700 kPa, 7.0 kgf/cm^2 (100 psi)					
Rear	6.50-10-10PR(I)					
Rim size	5.00F-10					
Inflation pressure	700 kPa, 7.0 kgf/cm^2 (100 psi)					

https://truckmanualshub.com/

EQUIPMENT

Standard equipment

★View mast
★Forks (920 mm for 1.5- to 1.75-ton trucks, 1070 mm for 2- to 3.5-ton trucks)
★J-lug tire
★Power steering
★Overhead guard
★Suspension seat (1.5- to 1.75-ton high power and 2- to 3.5-ton trucks)
★Drawbar
★Cyclone pack air cleaner
★Parking brake lever (w. lock)
★Dual valve (lift and tilt) (EXB)
★Triple valve (excl. EXB)
★Torque converter oil dipstick T type
★Hydraulic oil dipstick
★Cartridge filter T type
★Cut-off valve
(Restricts the fork lowering speed if the lift hose should burst.)
★Tilt-lock valve (Prevents mast from tilting while engine is not running.)
★Flow control valve
★Halogen head lamp
★Rear combination lamp
★Rear/side view mirror
★Back-up buzzer
★Horn
★Neutral switch
★Floor mat
★Engine hood damper stay
★Radiator reservoir tank
★Tilt steering wheel
★Turn signal
★Full-transistor ignition system (G)
★Sedimenter (D)
★Hour meter
★Engine water temp. gauge
★Fuel gauge
★Engine oil pressure gauge
★Charge warning light
★Sedimenter warning light (D)
★Glow plug indication light (D)
★Automatic glow plug unit (D)
★Key stop (D)
★Hand grip
★Glove compartment
★Overhead guard canvas (excl. EXA)
★Tool kit (excl. EXA)

Optional equipment

☆Front double tires (w/ fender)
☆Unique tire
☆Steel cab (2- to 3.5-ton trucks)
☆Steel cab (w./heater) (2- to 3.5-ton trucks)
☆Steel cab (w/ cooler) (2- to 3.5-ton trucks)
☆OK monitors
☆Color tires (white, green)
☆Oil clutch (2- to 3-ton trucks excl. FD20C3Z - FD30C3Z)
☆Power brake (2- to 3-ton trucks of high power specification)
☆Power clutch (2- to 3-ton trucks excl. FD20C3Z - FD30C3Z)
☆Ammeter
☆Spark prevention muffler (D)
☆Exhaust purification muffler
☆DPF muffler (D)
☆Tertiary catalyst muffler (G)
☆Upward-pointed tail pipe
☆Fire extinguisher
☆Tilt cylinder boot
☆LPG unit [LPG only or LPG/gasoline] (G)
☆Rear work light
☆Yellow beacon light
☆Overhead guard with wire netting
☆Paint color specified by the customer
☆Triple (quadruple, quintuple) valves and piping
☆Radiator dust screen (excl. trucks with oil clutch)
☆Fishery specification (excl. 3.5-ton trucks)
☆Non-slip differential (2- to 3.5-ton T type)
☆Double-element air cleaner
☆Pre-cleaner
☆Centralized lubrication system
☆Plate-fin radiator
☆Lifting eye
☆Fingertip control lever
☆Torque converter oil temp. gauge

G: Gas-powered trucks
D: Diesel-powered trucks

https://truckmanualshub.com/

LOAD CHART

⚠ CAUTION

The load charts given below refer to lift trucks of standard specifications and those with high mast whose lifting height is less than 5 m. Note that load charts for lift trucks with a high mast whose lifting height is more than 5 m or those with an attachment have different load charts.

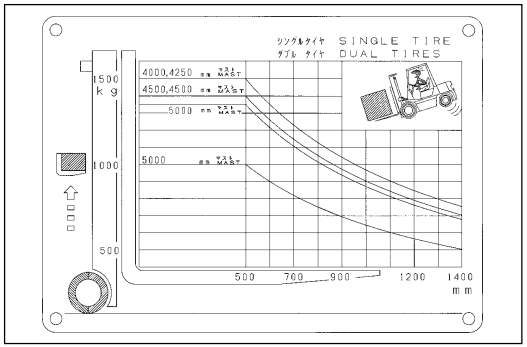

FG15, FD15, FHG15, FHD15

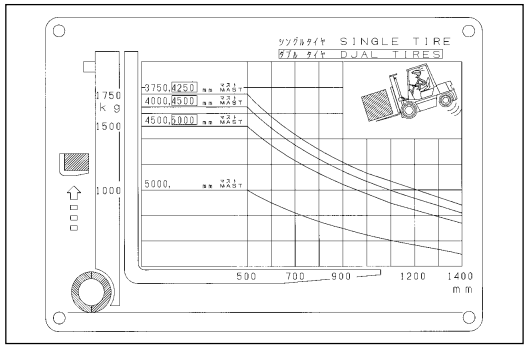

FG18, FD18, FHG18, FHD18

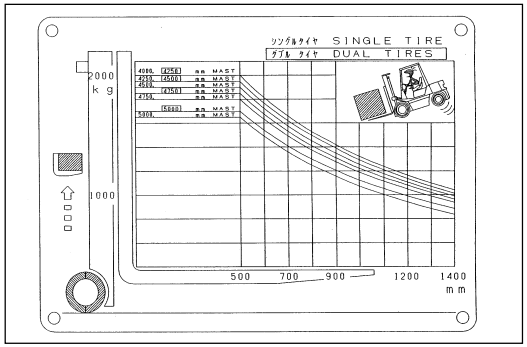

FG20, FD20, FHG20, FHD20

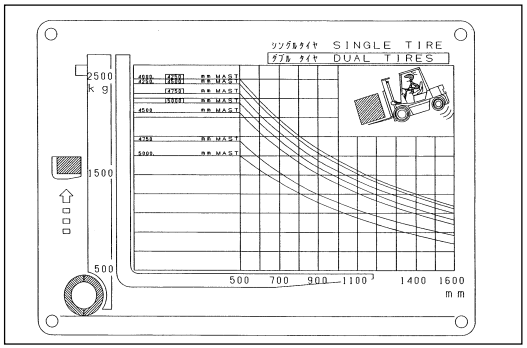

FG25, FD25, FHG25, FHD25

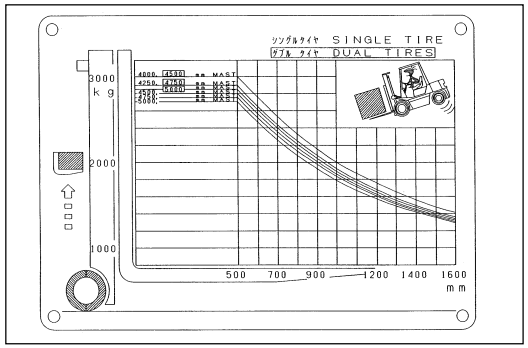

FG30, FD30, FHG30, FHD30

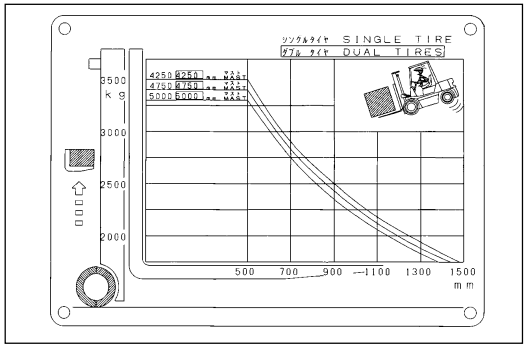

FG35, FD35

https://truckmanualshub.com/

SERVICE DATA

• Standard settings for the engines

	Gasoline engine			Diesel engine				
	K15	K21	K25	D1503	TD27-II	QD32	C240	V3300
Idle (rpm)	700	700	700	930	700	730	700	800
No-load maximum (rpm)	3200	3100	3100	2700	2700	2700	2750	2650
Ignition order	1-3-4-2	1-3-4-2	1-3-4-2	–	–	–	–	–
Ignition timing (BTDC/rpm)	4°/700	2°/700	0°/700	–	–	–	–	–
Spark plug gap (mm)	0.8 - 0.9	0.8 - 0.9	0.8 - 0.9	–	–	–	–	–
Spark plug type	FR2A-D	FR2A-D	FR2A-D	–	–	–	–	–
Fuel injection order	–	–	–	1-2-3	1-3-4-2	1-3-4-2	1-3-4-2	1-3-4-2
Fuel injection timing BTDC	–	–	–	18°	5°	2°	9°	16°
Fuel injection start pressure MPa (kgf/cm^2)	–	–	–	13.7 (140)	9.8 (100)	9.8 (100)	11.76 (120)	13.7 (140)
Compression pressure MPa (kgf/cm^2)/rpm	1.42 (14.5)/250	1.45 (14.8)/250	1.51 (15.5)/250	3.2 – 3.7 (33 – 38)/300	2.94 (30)/200	2.9 (29.6)/200	3.0 (31)/200	2.8 – 3.2 (29 – 33)/350
Valve clearance (both intake and exhaust valves) (mm)	0.38 (when warm)	0.38 (when warm)	0.38 (when warm)	0.18 – 0.22 (when cold)	0.35 (when warm)	0.35 (when warm)	0.45 (when cold)	0.23 – 0.27 (when cold)

Note: For the deflection of the fan belt, see page 4 - 8.

- **Tire inflation pressure:** ..... See page 4 - 3.
- **Lift chain deflection:**
  ..... No difference in deflection between both chains are allowed when they are pressed with the thumbs of both hands at the same time.
- **Steering wheel play (with engine running):**
  .....15 – 30 mm (0.6 – 1.2 in.)
- **Pedal settings:** ..... See page 4 - 12, 4 - 13.

• Vibration in accordance with EN 13059

FG15	FG18	FD15	FD18	1.6 m/s^2
FHG15	FHG18			1.2 m/s^2
FHD15	FHD18			1.3 m/s^2
FG20	FG25	FG30	FG35	1.1 m/s^2
FD20	FD25	FD30	FD35	
FHG20	FHG25	FHG30		
FHD20	FHD25	FHD30		

https://truckmanualshub.com/

BOLT AND NUT TORQUE

Engine mount bolts

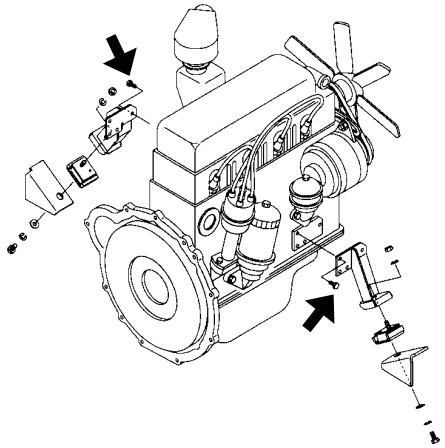

- K15, K21, K25, TD27-II, QD32
  50 – 60 N-m (5 – 6 kgf-m) (36 – 43 ft-lbs)
- D1503
  M12: 100 – 120 N-m (10 – 12 kgf-m) (72 – 87 ft-lbs)
  M10: 50 – 60 N-m (5 – 6 kgf-m) (36 – 43 ft-lbs)
  (An upper right bolt on the right-side bracket)
- C240
  55 – 65 N-m (5.5 – 6.5 kgf-m) (40 – 47 ft-lbs)
- V3300
  100 – 120 N-m (10 – 12 kgf-m) (72 – 87 ft-lbs)

Transmission case mount bolts

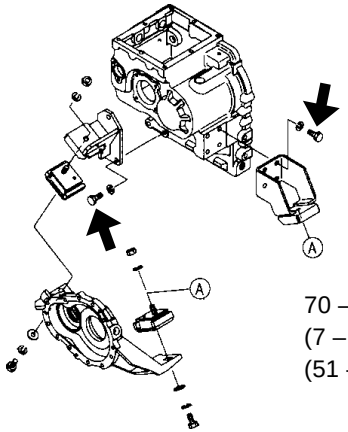

70 – 80 N-m
(7 – 8 kgf-m)
(51 – 58 ft-lbs)

Mast support cap bolts

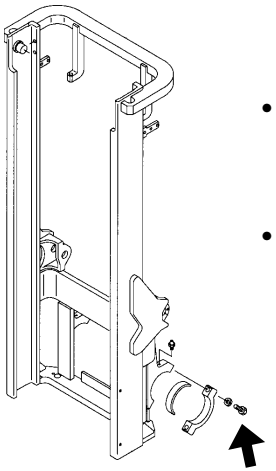

- 1.5- to 1.75-ton
  75 – 111 N-m
  (7.6 – 11.3 kgf-m)
  (55 – 82 ft-lbs)
- 2- to 3.5-ton
  148 – 223 N-m
  (15.1 – 22.7 kgf-m)
  (109 – 164 ft-lbs)

Front axle mount bolts

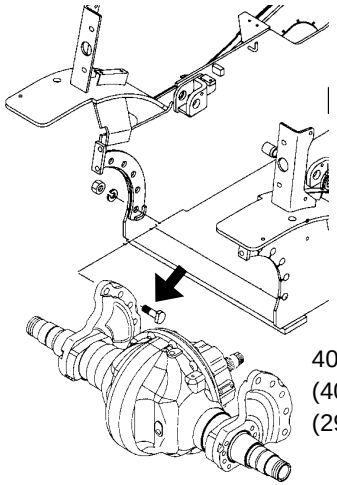

400 – 570 N-m
(40 – 57 kgf-m)
(290 – 410 ft-lbs)

Rear axle mount bolts

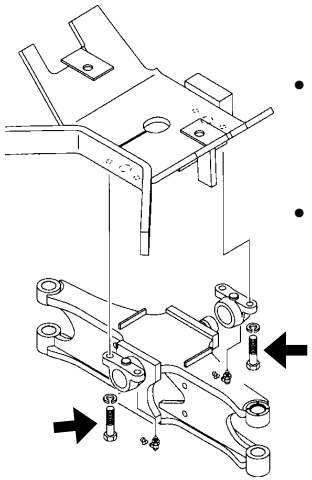

- 1.5- to 1.75-ton
  49 – 74 N-m
  (5 – 7.5 kgf-m)
  (36 – 54 ft-lbs)
- 2- to 3.5-ton
  77 – 115 N-m
  (7.85 – 11.7 kgf-m)
  (57 – 85 ft-lbs)

https://truckmanualshub.com/

Hub nuts (front wheel)

• Single tire

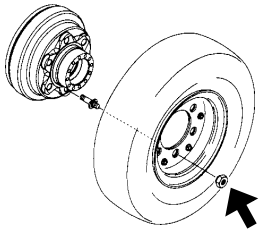

- 1.5- to 1.75-ton
  150 – 175 N-m (15 – 17.5 kgf-m)
  (108 – 127 ft-lbs)
- 2- to 3.5-ton
  471 – 549 N-m (48 – 56 kgf-m)
  (347 – 405 ft-lbs)

• Double tires

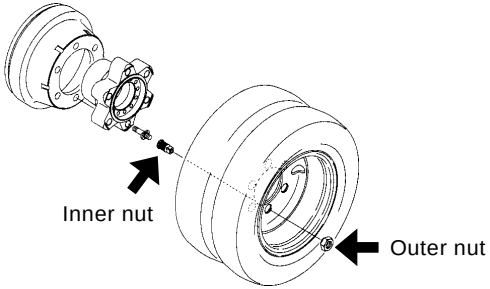

(For both inner and outer nuts)

- 1.5- to 1.75-ton
  230 – 280 N-m (23 – 28 kgf-m)
  (166 – 203 ft-lbs)
- 2- to 3.5-ton
  471 – 549 N-m (48 – 56 kgf-m)
  (347 – 405 ft-lbs)

Hub nuts (rear wheel)

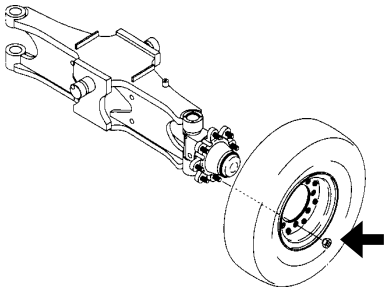

128 – 190 N-m (13 – 19.4 kgf-m)
(94 – 140 ft-lbs)

Drive shaft mount bolts

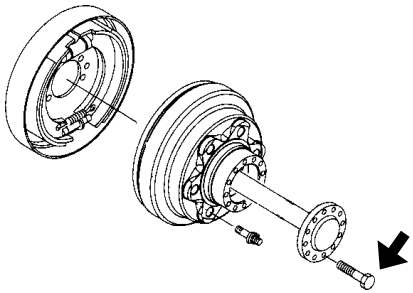

96 – 111 N-m (9.8 – 11.3 kgf-m)
(71 – 82 ft-lbs)

https://truckmanualshub.com/

REFILL CAPACITY

ℓ (U.S. gal.)

Item \ Truck model	FG15, FG18 FD15, FD18		FHG15, FHG18 FHD15, FHD18			Lubricant to be used	Ambient temperature when engine is started	Grade of viscosity
	K15	D1503	K21	TD27-II	C240			
1. Hydraulic oil tank	21 (5.5)		21 (5.5)			Hydraulic oil	–25°C & above (–13°F & above)	ISO VG32
							–40°C & above (–40°F & above)	ISO VG22
2. Brake reservoir tank	0.2 (0.053)		0.2 (0.053)			Brake fluid		FMVSS DOT-3
3. Transmission C type	5.5 (1.45)		5.5 (1.45)			Gear oil	–10°C & above (14°F & above)	SAE 90
							–25°C & above (–13°F & above)	SAE 80W
4. Reduction gear, differential	4.0 (1.06)		4.0 (1.06)				–40°C & above (–40°F & above)	SAE 75W
5. Transmission, torque converter T type	9.0 (2.4)		9.0 (2.4)			Engine oil	–25°C & above (–13°F & above)	SAE 10W
						ATF DEXRON	–40°C & above (–40°F & above)	ATF DEXRON
6. Radiator	C type 7.6 (2.0) / T type 7.4 (1.96)	C type 5.3 (1.40) / T type 5.1 (1.35)	7.1 (1.88)	6.9 (1.83)	C type 8.8 (2.32) / T type 8.6 (2.27)			
7. Fuel tank	50 (13.2)		50 (13.2)			Note 1.		
8. Engine crankcase	3.8 (1.0)	3.8 (1.0)	3.8 (1.0)	5.5 (1.46)	5.2 (1.4)	Engine oil	0°C & above (32°F & above)	SAE 30
							–25°C to 0°C (–13°F to 32°F)	SAE 10W
							–25°C & above (–13°F & above)	SAE 10W-30, 10W-40, 10W-50, 15W-40
							–40°C & above (–40°F & above)	SAE 5W-20, 5W-40
9. Grease fittings	As required					Grease	Consistency number: NLGI No. 0, 1, or 2	

Notes: 1. Use gasoline for gas-powered trucks and light oil for diesel-powered trucks. See page 2 - 22.
2. For more information about lubricants to be used, contact your local TCM dealer.

https://truckmanualshub.com/

SERVICE DATA

ℓ (U.S. gal.)

Item \ Truck model	FG20 – FG30 FD20 – FD30					FHG20 – FHG30 FHD20 – FHD30			FG35 FD35		Lubricant to be used	Ambient temperature when engine is started	Grade of viscosity
	K21	TD27-II		C240		K25	V3300	QD32	QD32	K25			
1. Hydraulic oil tank	32 (8.5)					32 (8.5)			37 (9.8)		Hydraulic oil	–25°C & above (–13°F & above)	ISO VG32
												–40°C & above (–40°F & above)	ISO VG22
2. Brake reservoir tank	0.2 (0.053)					0.2 (0.053)			0.2 (0.053)		Brake fluid		FMVSS DOT-3
3. Transmission C type	5.5 (1.45)					5.5 (1.45)			–		Gear oil	–10°C & above (14°F & above)	SAE 90
												–25°C & above (–13°F & above)	SAE 80W
4. Reduction gear, differential	6.0 (1.58)					6.0 (1.58)			6.0 (1.58)			–40°C & above (–40°F & above)	SAE 75W
5. Transmission, torque converter T type	9.0 (2.4)					9.0 (2.4)			9.0 (2.4)		Engine oil	–25°C & above (–13°F & above)	SAE 10W
											ATF DEXRON	–40°C & above (–40°F & above)	ATF DEXRON
6. Radiator	7.6 (2.0)	C type 10.4 (2.8)	T type 11.5 (3.0)	C type 10.5 (2.8)	T type 11.3 (2.9)	7.6 (2.0)	9.3 (2.5)	12.3 (3.2)	12.3 (3.2)	9.6 (2.5)			
7. Fuel tank	70 (18.5)					70 (18.5)			70 (18.5)		Note 1.		
8. Engine crankcase	3.8 (1.0)	5.4 (1.4)				3.8 (1.0)	10.0 (2.6)	5.4 (1.4)	5.4 (1.4)	3.8 (1.0)	Engine oil	0°C & above (32°F & above)	SAE 30
												–25°C to 0°C (–13°F to 32°F)	SAE 10W
												–25°C & above (–13°F & above)	SAE 10W-30, 10W-40, 10W-50, 15W-40
												–40°C & above (–40°F & above)	SAE 5W-20, 5W-40
9. Grease fittings	As required										Grease	Consistency number: NLGI No. 0, 1, or 2	

Notes: 1. Use gasoline for gas-powered trucks and light oil for diesel-powered trucks. See page 2 - 22.
2. For more information about lubricants to be used, contact your local TCM dealer.

https://truckmanualshub.com/

Brands of Lubricants

	Class / Supplier	API Class CC and Higher	
		CC (for Gasoline & Diesel)	CD (for Diesel)
GASOLINE or DIESEL ENGINE OIL	MOBIL	MOBIL Delvac 1100 Series (10W, 20W-20, 30)	MOBIL Delvac 1300 Series (10W-20, 20W-20, 30)
		MOBIL Delvac 1200 Series (10W, 20W-20, 30)	MOBIL Delvac Super (15W-40), MOBIL Delvac 1 (5W-30)
		MOBIL Delvac Special (10W-30, 20W-40)	MOBIL Delvac SHC (5W-30)
	SHELL	SHELL Rotella TX Oil (10W-30, 20W-50)	SHELL Rimula X Oil (10W, 20W-20, 30)
		SHELL Rotella SX Oil (20W-20, 30)	SHELL Myrina Oil (20W-40, 20W-20, 30)
	ESSO	ESSO Lube HDX (10W, 20W, 30)	ESSO Lube D-3 (10W, 30)
			ESSO Lube XD-3 Extra (10W, 30)
	CALTEX	RPM Delo 400 Oil (15W-40, 10W, 20-20W, 30)	RPM Delo 400 Oil (15W-40, 10W, 20-20W, 30)
		RPM Delo 200 Oil (10W-30, 10W-40, 20W-40, 20W-50, 10W, 20-20W, 30)	RPM Delo 300 Oil (10W, 20-20W, 30)
		RPM Delo 100 Oil (10W, 20-20W, 30)	
HYDRAULIC OIL	Class / Supplier	R & O	ANTIWEAR
	MOBIL	MOBIL DTE Oil Light	MOBIL DTE 24
	SHELL	SHELL Tellus Oil C-32	SHELL Tellus Oil 32
	ESSO	Teresso 32	Nuto HP-32
	CALTEX	Rando Oil 32	Rando Oil HD32
ATF DEXRON	Class / Supplier	GM-make DEXRON or equivalent	
	MOBIL	MOBIL ATF 220	
	SHELL	SHELL Dexron	
	ESSO	ESSO ATF	
	CALTEX	Texamatic Fluid (Dexron II)	
GEAR OIL	Class	API Class GL-4 and Higher	
	Supplier	GL-4	GL-5
	MOBIL	Mobilube 40 Series (75W, 80W, 90)	Mobilube HD (75W, 80W, 80W-90, 90)
	SHELL	SHELL Spirax EP (80W, 90)	SHELL Spirax HP (80W, 90)
	ESSO	ESSO Gear Oil GP (80W, 80W-90, 85W-90)	ESSO Gear Oil GX (80W, 80W-90, 85W-90)
	CALTEX	Universal Thuban (80W, 90)	Multipurpose Thuban EP (80W-90, 80W, 90)
GREASE	Class / Supplier	Lithium Base Multipurpose Grease (NLGI No. 0, 1 or 2)	
	MOBIL	MOBIL Grease 70 Series, MOBIL Grease MP	
	SHELL	SHELL Albania Grease R Series, SHELL Albania Grease EPR Series, SHELL Retinax A	
	ESSO	Beacon Series	
	CALTEX	Marfak All Purpose 2, 3, Marfak Multipurpose 2, 3, Multifak EP 0, 1, 2	
BRAKE FLUID	Class / Supplier	DOT-3 (FMVSS)	
	MOBIL	MOBIL Super Heavy Duty Brake Fluid	
	SHELL	See NOTE.	
	ESSO	See NOTE.	
	CALTEX	Heavy Duty Brake Fluid	

NOTE: Brake fluids supplied by SHELL and ESSO have no particular names. Consult your TCM's dealer or oil supplier.

https://truckmanualshub.com/

AFTER-THE-SALE SERVICE

TRUCK SERIAL NUMBER

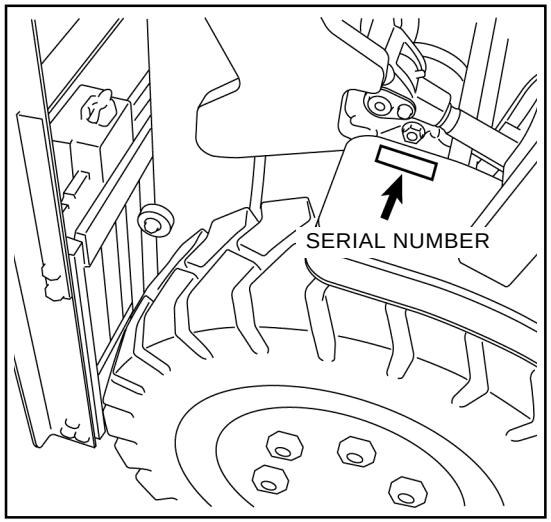

The truck serial number is imprinted on the upper surface of the left fender of the truck.

SERIAL NUMBERS OF MAJOR COMPONENTS

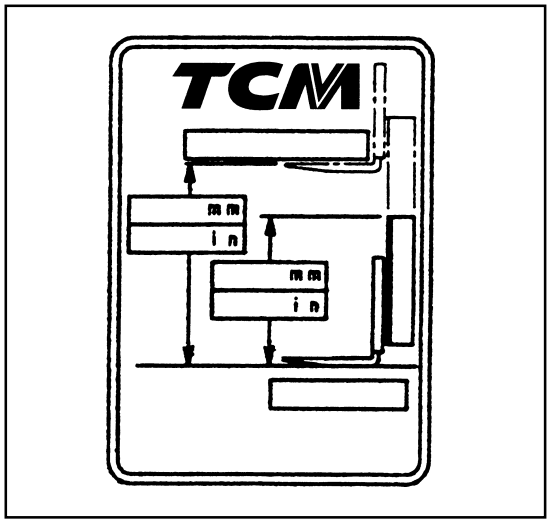

In addition to the truck serial number, the serial numbers (unit numbers) of the major components are imprinted on the truck or indicated on name plates. The above sketch shows the serial number plate of the mast. These decals should be replaced immediately if missing or defaced (damaged or illegible).

NAME PLATE

(EXB)

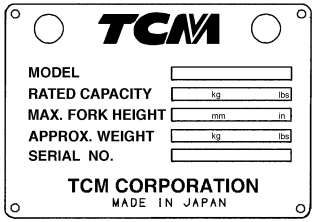

(EXE)

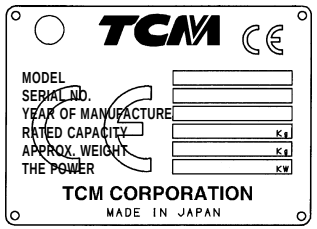

The name plate is located on the front of the front guard. It gives information about the MODEL, RATED LOAD, OPERATING WEIGHT and SERIAL NUMBER of the truck.

https://truckmanualshub.com/

ENGINE SERIAL NUMBER

GASOLINE ENGINE K15, K21, K25

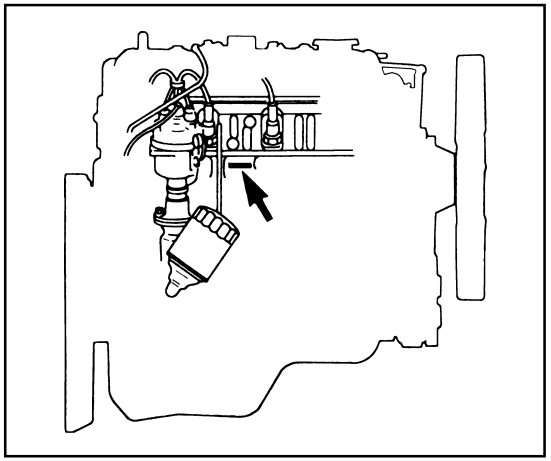

DIESEL ENGINE D1503

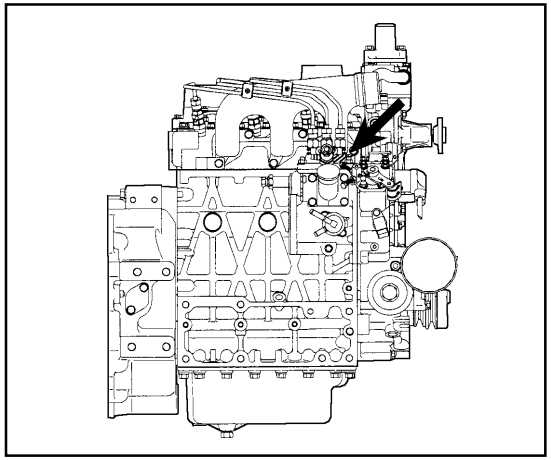

DIESEL ENGINE TD27-II, QD32

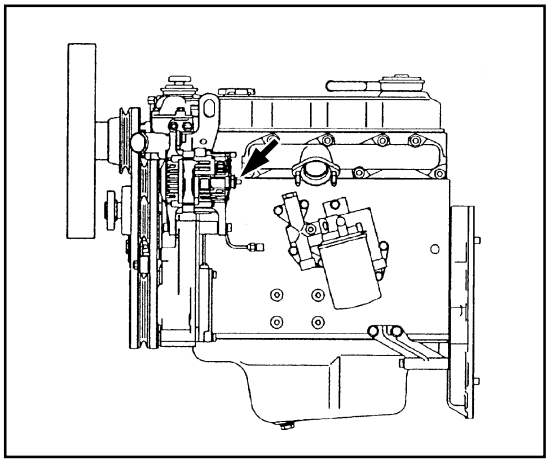

DIESEL ENGINE C240

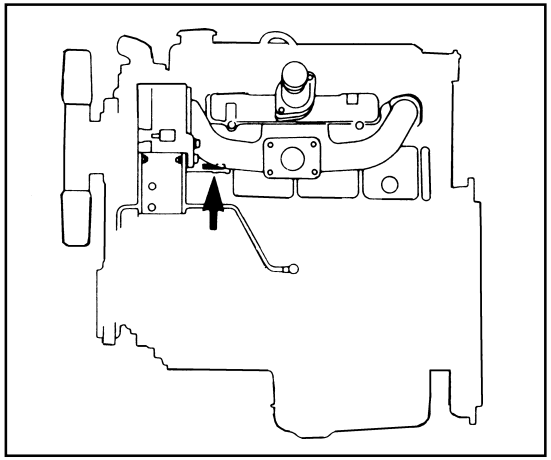

DIESEL ENGINE V3300

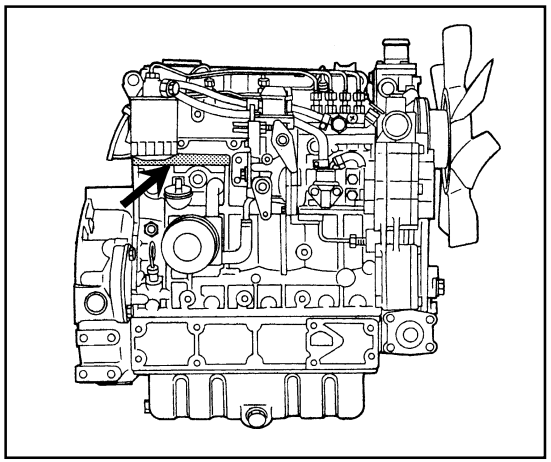

https://truckmanualshub.com/

AFTER-THE-SALE SERVICE

GENUINE TCM PARTS

However excellent a part is, it is inevitably deteriorates in performance with a long-time use. To ensure the best performance of the lift truck, use genuine TCM's parts which are used for new trucks.
When ordering spare parts, be sure to designate TCM's genuine parts.

GENUINE TCM LUBRICANTS

Use genuine TCM's lubricants for lubrication.

https://truckmanualshub.com/

WRITE DOWN DATA OF YOUR TRUCK HERE:

TRUCK

Model .....

Truck Serial No. .....

Service Weight ..... kg (lbs)

Max. Load ..... mm (in.): ..... kg (lbs)

ENGINE

Manufacturer .....

Model .....

Engine Serial No. .....

DATE OF PURCHASE .....

DEALER'S NAME ..... PHONE .....

DEALER'S ADDRESS .....

https://truckmanualshub.com/

MEMO

https://truckmanualshub.com/

6. INDEX

CONTENTS

0 - 9 6-1
A - F 6-1
F - O 6-2
O - S 6-3
T - W 6-4

https://truckmanualshub.com/

0 - 9 / A - F

0 - 9

3 MONTHS (600 OPERATING HOURS) CHECKS 4-39
6 MONTHS (1200 OPERATING HOURS) CHECKS 4-41

A

ACCELERATOR PEDAL 2-15
ADJUSTING OPERATING FORCE OF PARKING BRAKE LEVER 4-30
AIR BLEEDING FUEL SYSTEM 4-24
AIR CLEANER CLOGGING WARNING LIGHT 2-9
ANNUAL (2400 OPERATING HOURS) CHECKS 4-42

B

BASIC LOAD CENTER AND RATED LOAD 3-2
BATTERY 2-21
BATTERY ELECTROLYTE LEVEL WARNING LIGHT 2-10
BEACON LIGHT 2-26
BOLT AND NUT TORQUE 5-16
BRAKE AND CLUTCH FLUID RESERVOIR 2-21
BRAKE PEDAL 2-15

C

CAUTION PLATES 1-41
CHANGING ENGINE OIL 4-34
CHANGING ENGINE OIL FILTER 4-35
CHANGING FUEL FILTER 4-40
CHARGE WARNING LIGHT 2-10
CHECKING AND CLEANING AIR CLEANER ELEMENT 4-33
CLEANING FUEL FILTER 4-40
CLUTCH PEDAL 2-15
COMBINATION LEVER 2-6
COOLING WATER TEMPERATURE GAUGE 2-8

D

DIRECTIONAL SHIFT LEVER 2-13
DOCUMENT POCKET 2-17
DRAWBAR 2-20
DURING BREAK-IN 3-1

E

ENGINE HOOD 2-18
ENGINE HOOD STOPPER 2-19
ENGINE OIL PRESSURE WARNING LIGHT 2-9
ENGINE ROOM 4-17
ENGINE SERIAL NUMBER 5-22
EQUIPMENT 5-13

F

FIRE EXTINGUISHER (FE) 2-26
FOR SUPERVISORS 1-1
FORK LOCK BOLT 2-20

https://truckmanualshub.com/

FORK STOPPER 2-19
FUEL GAUGE 2-8
FUEL LEVEL WARNING LIGHT 2-9
FUEL TANK CAP 2-22
FUSE BOX 2-21
FUSIBLE LINK (MAIN FUSE) 4-26

G

GENUINE TCM LUBRICANTS 5-23
GENUINE TCM PARTS 5-23
GLOVE BOX 2-17
GLOW INDICATOR 2-9
GREASING POINTS 4-37

H

HIGH LOAD BACKREST (HBR) 2-26
HORN BUTTON 2-6
HOUR METER 2-8
HOW THE LIFT TRUCK WORKS? 1-14
HYDRAULIC OIL TANK CAP 2-23

I

INCHING PEDAL 2-15
INSPECTION AND SERVICE 1-31
INSTRUMENTS AND CONTROLS 2-3
INTERLOCK SYSTEM 2-11

L

LEVERS AND PEDALS 2-12
LIFT LEVER 2-12
LIGHTING SWITCH 2-6
LIGHTS AND LAMPS 2-24
LOAD BACKREST 2-18
LOAD CHART 5-14
LOAD HANDLING 1-24
LOAD HANDLING 3-13
LUBRICATING LIFT CHAIN 4-36

M

MAGAZINE BOX 2-17
MEASURES AGAINST COLD OR HOT WEATHER 3-10
METERS AND WARNING LIGHTS 2-7
MONTHLY (200 OPERATING HOURS) CHECKS 4-32

N

NAME PLATE 5-21
NEUTRAL LAMP 2-9

O

OPERATING LIFT TRUCK 3-4
OPERATOR'S SEAT 2-16
OPTIONAL EQUIPMENT 2-26

https://truckmanualshub.com/

O - S

OVERHEAD GUARD 2-17
OVERHEAD GUARD WITH WIRE NETTING 2-26

P

PARKING 1-29
PARKING BRAKE LEVER 2-14
PARKING BRAKE WARNING LIGHT 2-9
PERIODIC INSPECTION 4-31
PERIODICAL REPLACEMENT OF SAFETY PARTS 4-31
PICTORIAL NOMENCLATURE 2-1
PNEUMATIC SHAPED CUSHION TIRE
(UNIQUE TIRE, TR01) 2-26
POWER BRAKE (POB) 2-26
PREOPERATIONAL CHECKS 4-1
PREVENTIVE MAINTENANCE 4-17
PREVENTIVE MAINTENANCE SCHEDULE 4-43
PROPER OPERATION 3-1

R

RADIATOR 2-23
RADIATOR RESERVOIR TANK 2-23
RADIATOR WATER LEVEL WARNING LIGHT 2-10
REAR WORK LIGHT (RWL) 2-26
REFILL CAPACITY 5-18
RELATIONSHIP BETWEEN LOAD AND
STABILITY OF TRUCK 3-1
REMOVING WATER FROM SEDIMENTER 4-22
REPLACING FUSES 4-26
REPLACING LAMP BULBS 4-28
REPLACING TIRES AND REPAIRING FLAT TIRE 4-27

S

SAFETY STEP AND HAND GRIP 2-20
SEAT BELT 2-16
SEAT BELT WARNING LIGHT 2-9
SEDIMENTER WARNING LIGHT 2-10
SERIAL NUMBERS OF MAJOR COMPONENTS 5-21
SERVICE DATA 5-15
SHIFT LEVER 2-13
SIDEVIEW MIRRORS 2-24
SOUND VOLUME-ADJUSTABLE BACK-UP BUZZER 2-26
SPECIFICATIONS 5-1
SPEED ALARM SYSTEM (SAS) 2-26
SPEED RANGE SHIFT LEVER 2-13
SPEEDOMETER (SM) 2-26
STABILITY OF LIFT TRUCK 3-3
STARTER SWITCH 2-5
STARTING THE ENGINE WITH AUXILIARY BATTERY .. 4-29
STEERING COLUMN TILT LEVER 2-14
STEERING WHEEL 2-14
STORING 3-15
SWITCHES 2-27
SWITCHES 2-5

https://truckmanualshub.com/

T

TILT LEVER 2-12
TIRE CHAIN (TC) 2-26
TORQUE CONVERTER OIL FILLER 2-24
TRANSPORTING LIFT TRUCK 3-4
TRAVELING 1-17
TRAVELING AND LOAD HANDLING INTERLOCK SYSTEM 2-11
TRAVELING AND LOAD HANDLING INTERLOCK SYSTEM WARNING LIGHT 2-9
TRAVELING AND STARTING ON A SLOPE 3-3
TRUCK BODY 2-16
TRUCK SERIAL NUMBER 5-21

U

USING INCHING PEDAL 3-3

W

WRITE DOWN DATA OF YOUR TRUCK HERE 5-24

https://truckmanualshub.com/

No. OF-2B0EE

ISSUED: DEC., 2005
REVISED: MAY, 2006
REVISED: FEB., 2007
REVISED: OCT., 2007
REVISED: MAR., 2009

TCM CORPORATION

MARKETING GROUP: 1-15-5, Nishi-shimbashi, Minato-ku, Tokyo
105-0003, Japan
FAX: Japan +81-3-35918154

All rights reserved

JB-0903100(F) Printed in Japan

https://truckmanualshub.com/