https://truckmanualshub.com/

PARTS MANUAL

https://truckmanualshub.com/

MAINTENANCE
FILTERS KIT

FIGURE	REFERENCE	DENOMINATION	AMOUNT
001	KF.30000RE00	C 400/500 H x2/x4 FILTERS KIT	1
001.1	KU1C02032430	OIL FILTER, CARTRIDGE	1
001.2	MN000024	FUEL FILTER, CARTRIDGE	1
001.3	MN000017	PRE-FILTER, FUEL (200h+50h)	1
001.4	46.02311.00	FILTER ELEMENT	1
001.5	46.02312.00	FILTER ELEMENT	1
001.6	46.10047.00	OIL FILTER 180 L	1
001.7	60.20100.00	FILTER ELEMENT	1

https://truckmanualshub.com/

ENGINE
KUBOTA V3600-T (PART 1)

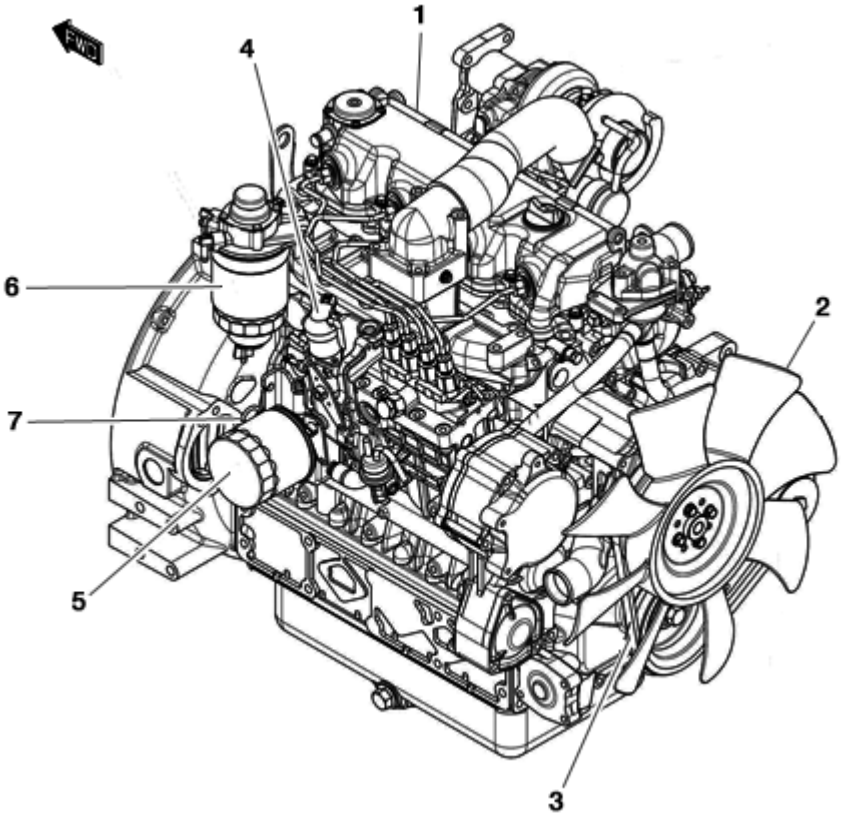

FIGURE	REFERENCE	DENOMINATION	AMOUNT
001	64.02110.01	KUBOTA DIESEL ENGINE 65KW V3300-T	1
002	30.02120.00	FAN	1
003	KU1K01197010	BELT, V	1
004	KU1C01060014	SOLENOID, STOP	1
005	KU1C02032430	OIL FILTER, CARTRIDGE	1
006	MN000024	FUEL FILTER, CARTRIDGE	1
007	KU1C01036412	GAUGE, OIL	1

https://truckmanualshub.com/

ENGINE

KUBOTA V3600-T (PART 1)

CHASSIS: 60884

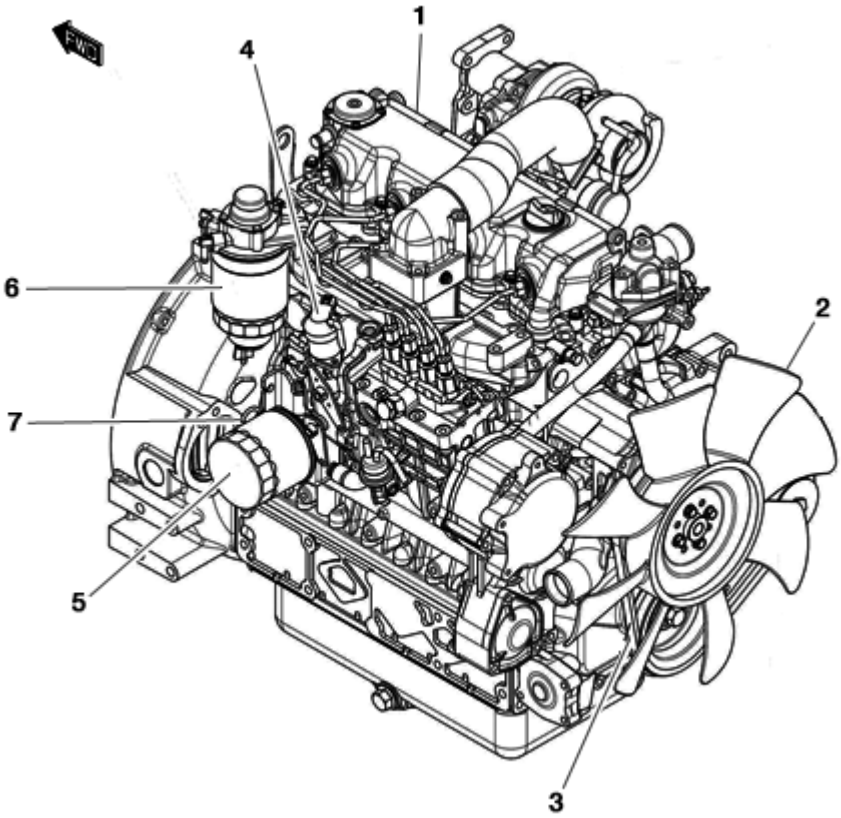

FIGURE	REFERENCE	DENOMINATION	AMOUNT
001	30.02100.02	DIESEL ENGINE 63KW KUBOTA V3600-T-E3B FLEX	1
002	30.02120.00	FAN	1
003	KU1K01197010	BELT, V	1
004	KU1C01060014	SOLENOID, STOP	1
005	KU1C02032430	OIL FILTER, CARTRIDGE	1
006	MN000024	FUEL FILTER, CARTRIDGE	1
007	KU1C01036412	GAUGE, OIL	1

https://truckmanualshub.com/

ENGINE

KUBOTA V3600-T (PART 1)

CHASSIS: 66379

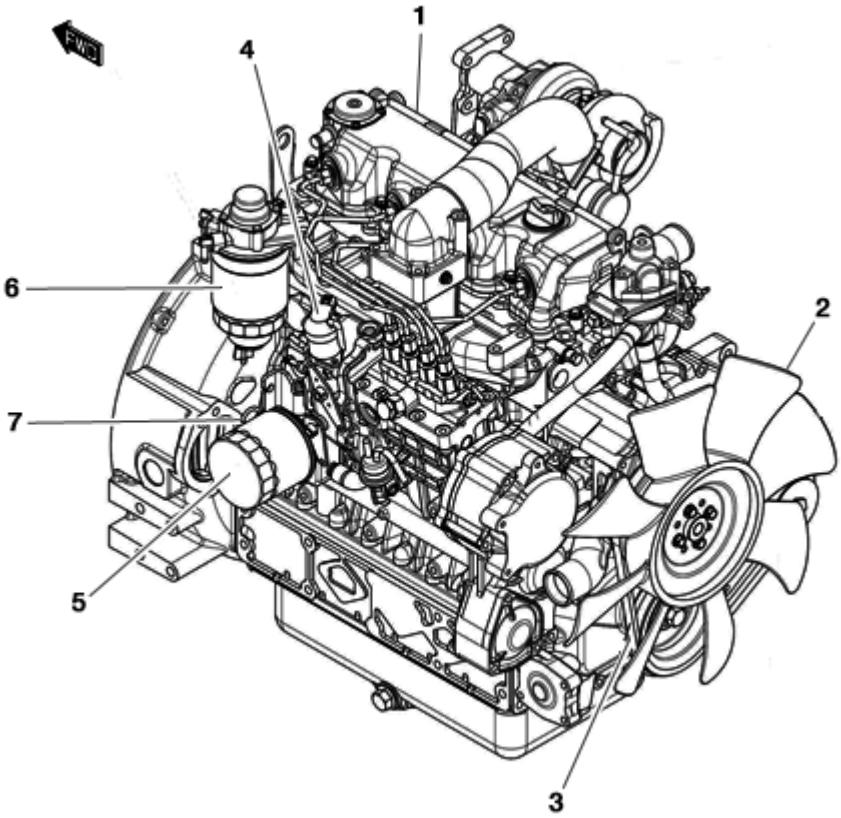

FIGURE	REFERENCE	DENOMINATION	AMOUNT
001	30.02100.02	DIESEL ENGINE 63KW KUBOTA V3600-T-E3B FLEX	1
002	30.02120.01	D430X8 BLOWER FAN	1
003	KU1K01197010	BELT, V	1
004	KU1C01060014	SOLENOID, STOP	1
005	KU1C02032430	OIL FILTER, CARTRIDGE	1
006	MN000024	FUEL FILTER, CARTRIDGE	1
007	KU1C01036412	GAUGE, OIL	1

https://truckmanualshub.com/

ENGINE
KUBOTA V3600-T (PART 2)

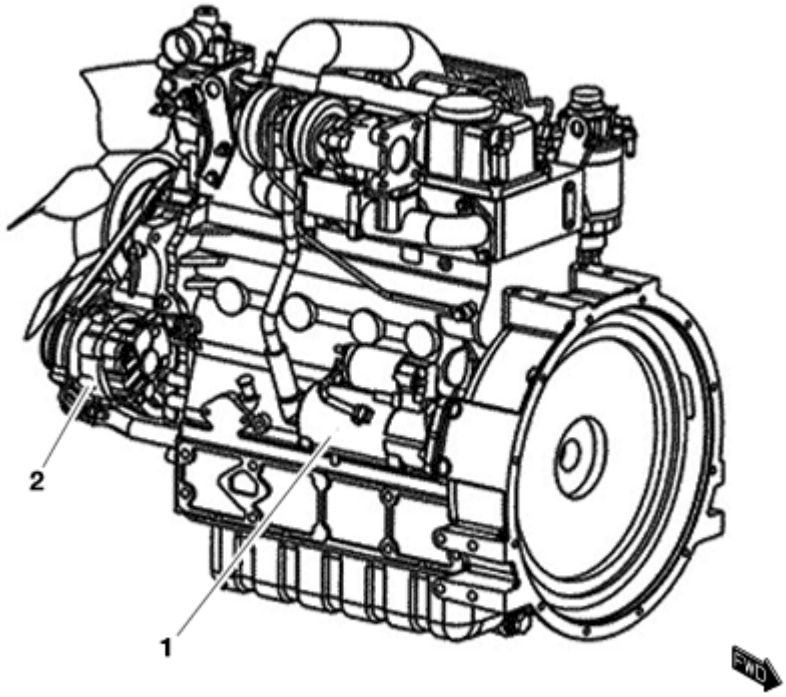

FIGURE	REFERENCE	DENOMINATION	AMOUNT
001	KU1C01063010	STARTER ASSY	1
002	KU1C01164010	ASSY DYNAMO 12V 60A	1

https://truckmanualshub.com/

ENGINE

KUBOTA V3600-T (PART 2)

CHASSIS: 60887

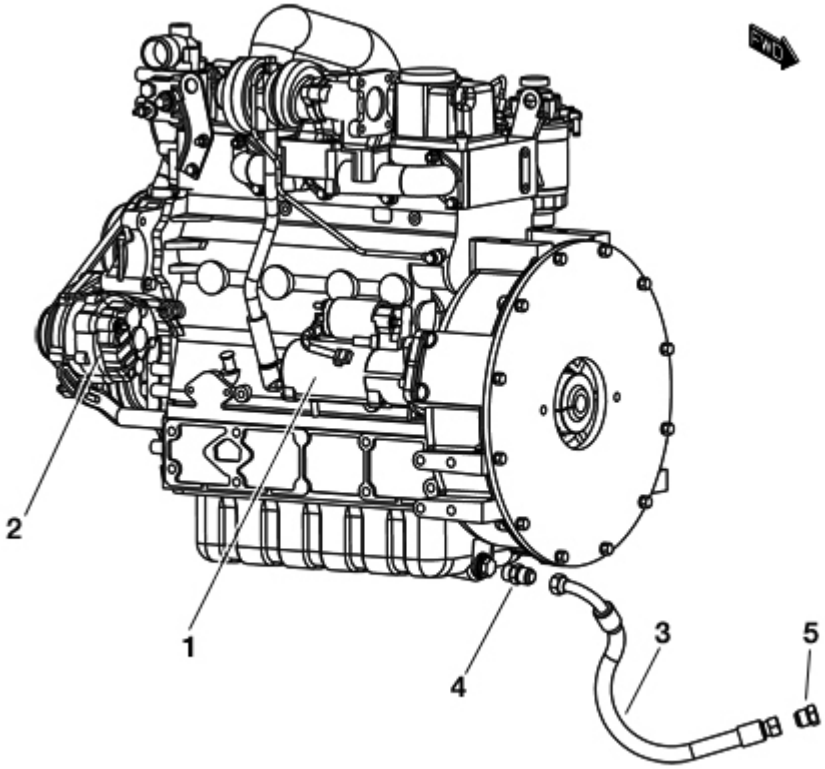

FIGURE	REFERENCE	DENOMINATION	AMOUNT
001	KU1C01063010	STARTER ASSY	1
002	KU1C01164010	ASSY DYNAMO 12V 60A	1
003	30.10380.00	TUBE R1T1/2 550 TL-C90TL7/8J	1
004	64.10328.00	RACORD M/M 7/8SAE-M22X1.5	1
005	64.10329.00	CAP 7/8SAE	1

https://truckmanualshub.com/

ACCESSORY DEUTZ (USA/EU)

ENGINE I-ENGINE

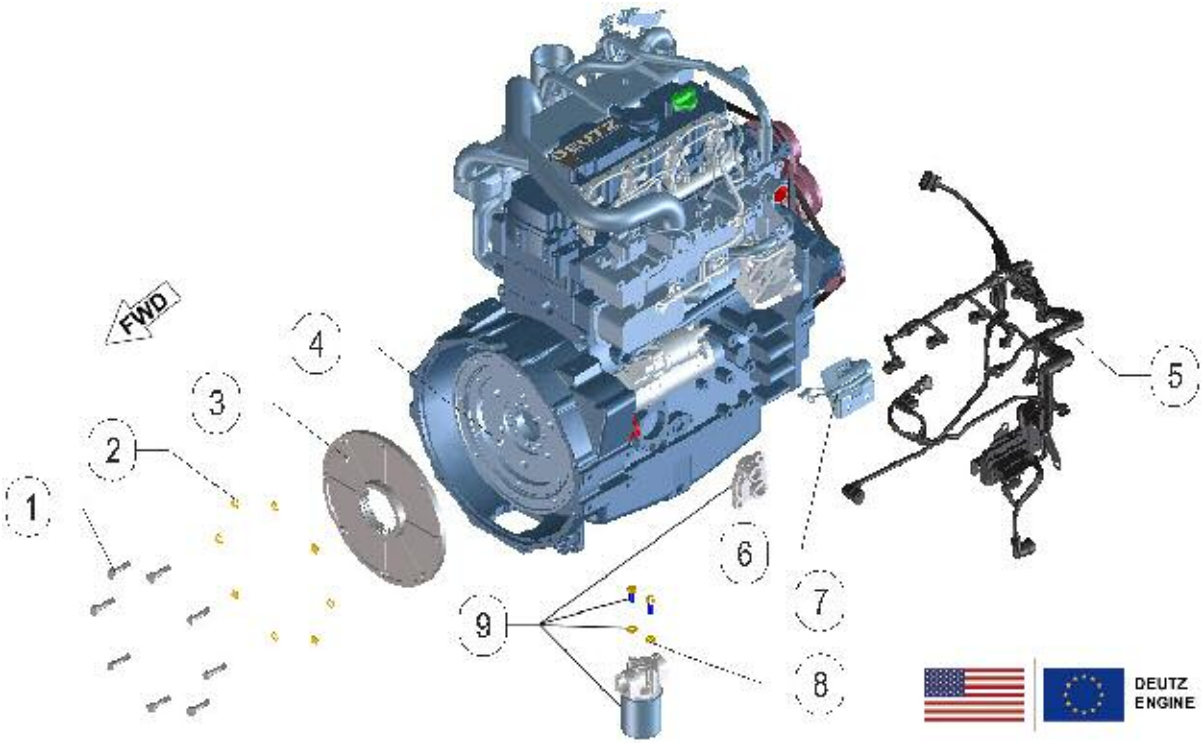

FIGURE	REFERENCE	DENOMINATION	AMOUNT
001	604.10030.86	SCREW DIN931	8
002	104.10000.00	WASHER DIN127 D10	8
003	57.02091.01	COUPLING Z47	1
004	64.02011.00	DIESEL MOTOR DEUTZ TD 3.6 L4	1
005	64.11033.00	SECTION I/E MOTOR DEUTZ TD3.6 T4	1
006	64.11034.00	SECTION I/E DEUTZ TD36T4 STARTER	1
007	603.10025.86	SCREW DIN933	2
008	101.10000.66	WASHER DIN125	2
009	30.02201.00	SET FILTER REM. DEUTZ TD3.6	1

https://truckmanualshub.com/

ACCESSORY DEUTZ (USA/EU)

ENGINE II-ENGINE

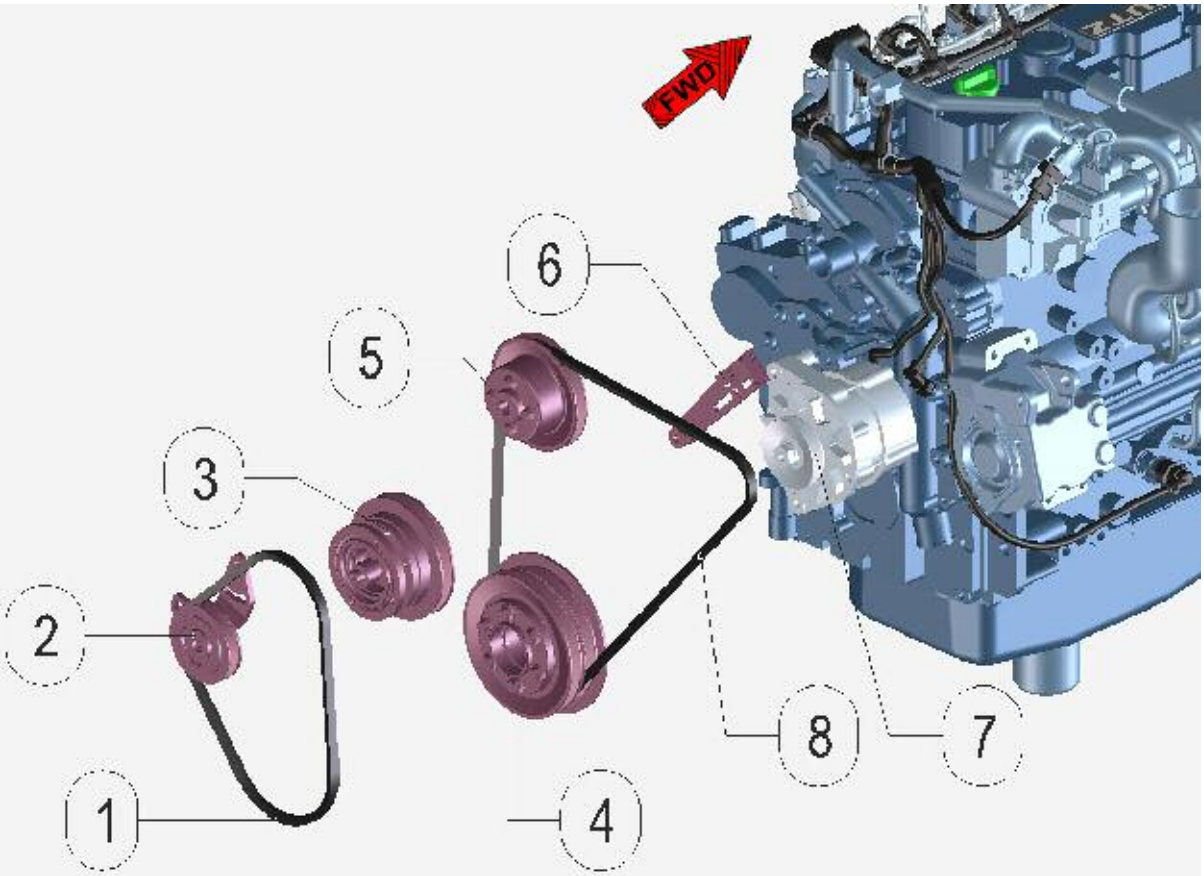

FIGURE	REFERENCE	DENOMINATION	AMOUNT
001	DI04123559	V-BELT	1
002	DI04124398	TENSIONING PULLEY	1
005	DI04124485	V-GROOVED PULLEY	1
006	DI04124703	CLAMPING STRAP	1
007	DI04123605	GENERATOR	1
008	DI04123559	V-BELT	1

https://truckmanualshub.com/

ENGINE
PUMP COUPLING

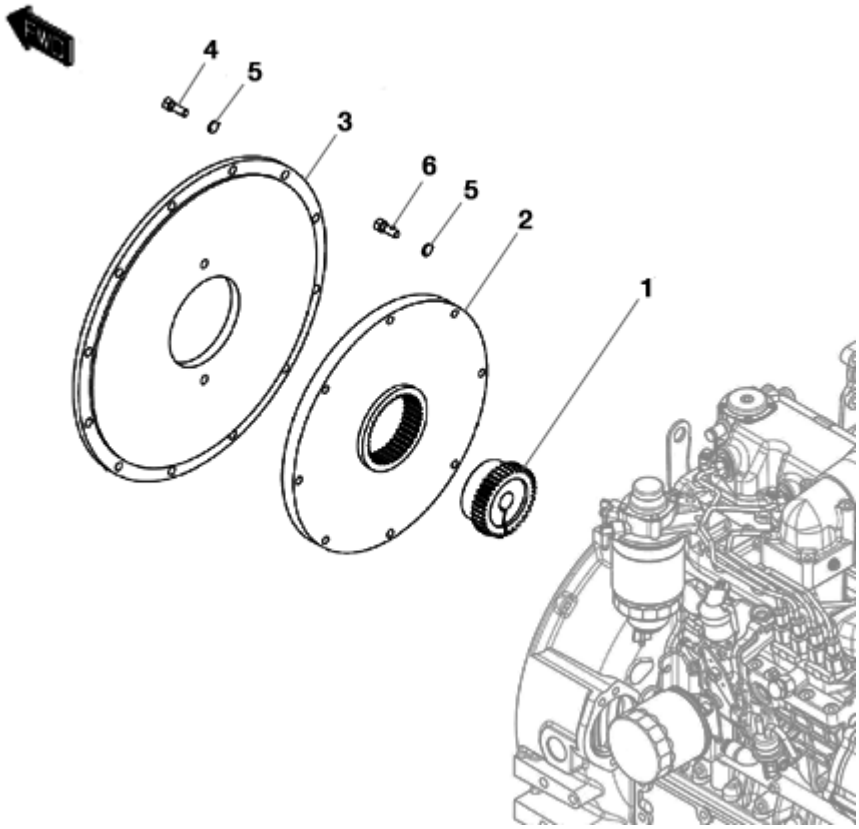

FIGURE	REFERENCE	DENOMINATION	AMOUNT
001	65.03216.00	COUPLING	1
002	57.02091.00	COUPLING Z38	1
003	57.02090.00	COUPLING	1
004	607.10025.90	BOLT DIN933 3/8 25	12
005	104.14000.00	CIR-CLIP EXT. DIN7980	20
006	627.10035.86	BOLT DIN931 WHITWORTH 3/8	8

https://truckmanualshub.com/

ENGINE

PUMP COUPLING

CHASSIS: 72869

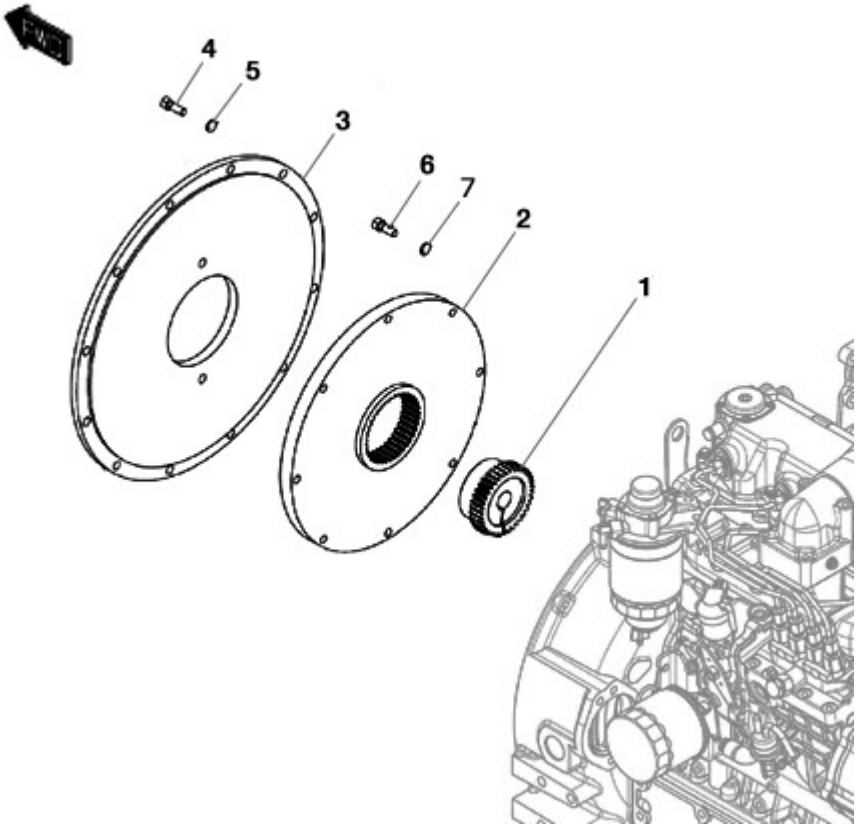

FIGURE	REFERENCE	DENOMINATION	AMOUNT
001	57.02092.01	COUPLING	1
002	57.02091.01	COUPLING Z47	1
003	57.02090.01	COUPLING D127XD451X14	1
004	601.16060.86	HEXAGON SOCKET HEAD SCREW DIN912 M16x60	2
005	104.16000.00	CIR-CLIP EXT. DIN7980	2
006	627.38030.86	SCREW DIN931	8
007	65.03217.00	WASHER 16x7x26	8

https://truckmanualshub.com/

ENGINE
POMPE

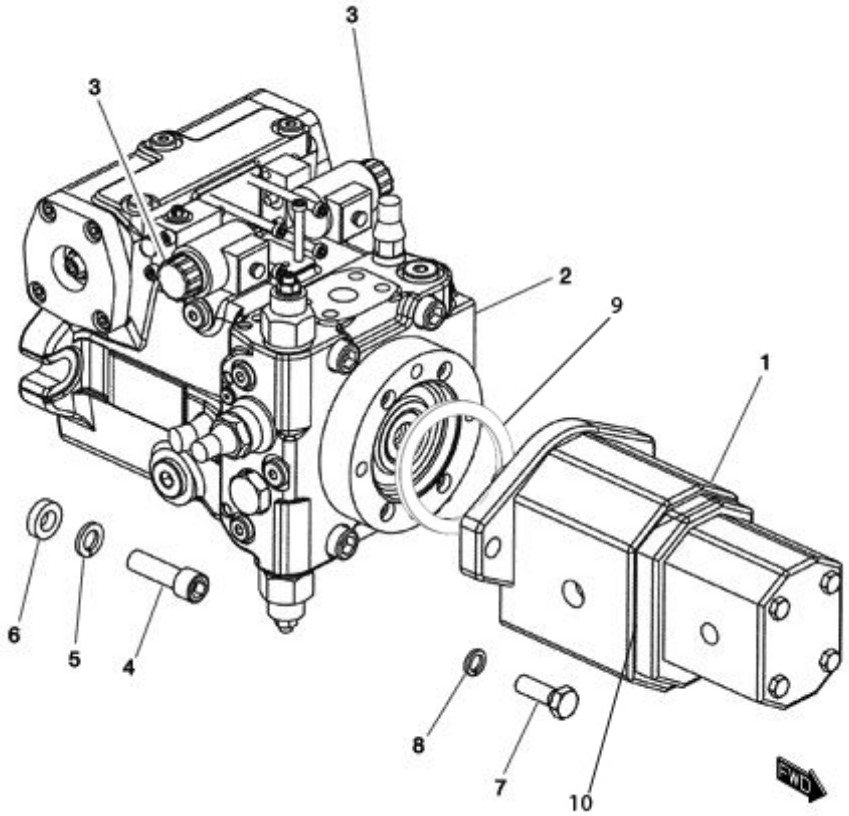

FIGURE	REFERENCE	DENOMINATION	AMOUNT
001	30.10001.00	OIL PUMP DOUBLE 30/10.6CC	1
002	57.03250.01	HYDR. PUMP 56CC HYDROMATIC	1
003	RX.30005.00	SPOOL (FRONT/REAR SPEED)	2
004	601.14045.86	SCREW DIN912	2
005	104.14000.00	CIR-CLIP EXT. DIN7980	2
006	15.30110.00	WASHER	2
007	604.12035.86	SCREW DIN931	2
008	104.12000.00	CIR-CLIP EXT. DIN7980	2
009	08.00316.00	GASKET MET. BUNA D1/2 G	1
010	RQ6630/49A	GASKET MET. BUNA	1

https://truckmanualshub.com/

ENGINE
EXHAUST PIPE

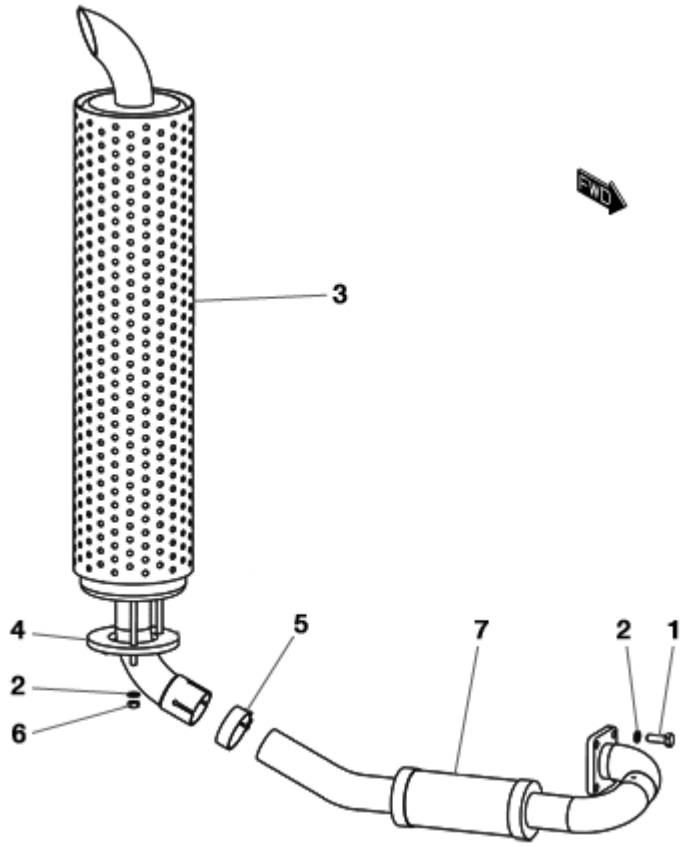

FIGURE	REFERENCE	DENOMINATION	AMOUNT
001	603.10030.86	SCREW DIN933	4
002	104.10000.00	CIR-CLIP EXT. DIN7980	7
003	57.02020.00	EXHAUST	1
003	57.02023.00	SPARKS EXTINGUISHER MUFFLER (OPTIONAL)	1
003	57.02024.00	MUFFLER WITH PURIFIER (OPTIONAL)	1
004	20.02020.00	FLANGE	1
005	935.47051.66	CLAMP	1
006	701.08000.66	NUT DIN934 M8x1,25	3
007	30.02020.00	EXHAUST MANIFOLD	1

https://truckmanualshub.com/

ENGINE
AIR FILTER COMP.

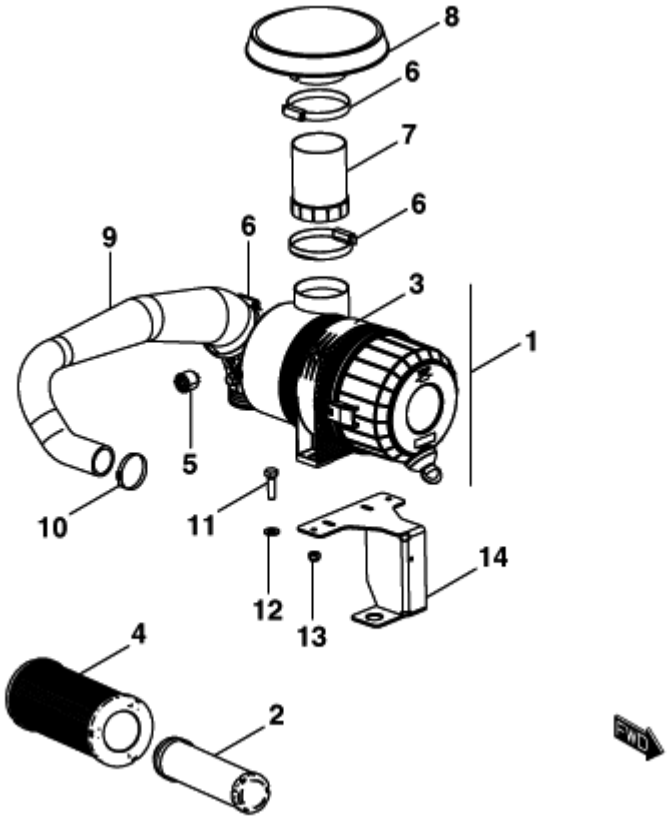

FIGURE	REFERENCE	DENOMINATION	AMOUNT
001	46.02038.00	ENGINE AIR FILTER	1
002	46.02312.00	FILTER ELEMENT	1
003	46.02310.00	HOSE CLAMP FILTER	1
004	46.02311.00	FILTER ELEMENT	1
005	43.50119.00	AIR FILTER INDICATOR	1
006	912.90110.66	HOSE CLAMP Ø90-110	3
007	30.02302.00	TUBE, METALLIC Ø96xØ95x130	1
008	30.02301.00	PROTECTOR	1
009	30.02304.00	ADMISSION TUBE Ø45xØ55x626	1
010	912.40060.66	CLAMP D40-60	1
011	603.08030.86	SCREW DIN933 M8X30	2
012	101.08000.66	WASHER DIN125 D8	2
013	711.08000.66	NUT	2
014	30.02303.00	AIR FILTER SUPPORT	1

https://truckmanualshub.com/

ENGINE
FUEL TANK

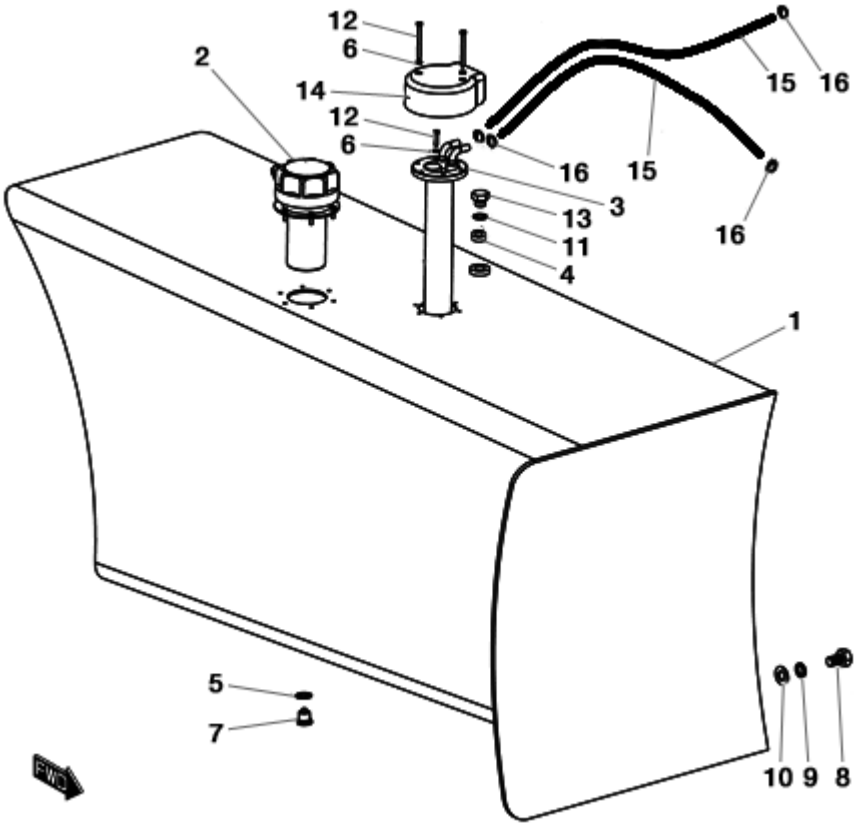

FIGURE	REFERENCE	DENOMINATION	AMOUNT
001	30.02040.00	FUEL TANK 120 L	1
002	30.02042.00	CAP. THEFT PROOF TANK	1
003	30.02041.00	LEVEL	1
004	70.02047.00	FITTING H/H	1
005	107.14000.10	WASHER AL	1
006	104.04000.00	CIR-CLIP EXT. DIN7980	6
007	10.00921.00	CAP. M14X150 DIN 908	1
008	603.12020.86	SCREW DIN933	2
009	104.12000.00	CIR-CLIP EXT. DIN7980	2
010	101.12000.66	WASHER DIN125	2
011	28.00341.00	GASKET MET. BUNA	1
012	615.04050.66	BOLT DIN84 M4x50	2
013	46.09014.00	CAP	1
014	46.10059.00	FUEL LEVEL PROTECTOR	1
015	469.03014.00	HOSE L/P MAT. 8x14	2
016	912.08016.66	CLAMP DIN3017	4
017	615.04020.66	SCREW DIN84	4

https://truckmanualshub.com/

ENGINE
DELIVERY

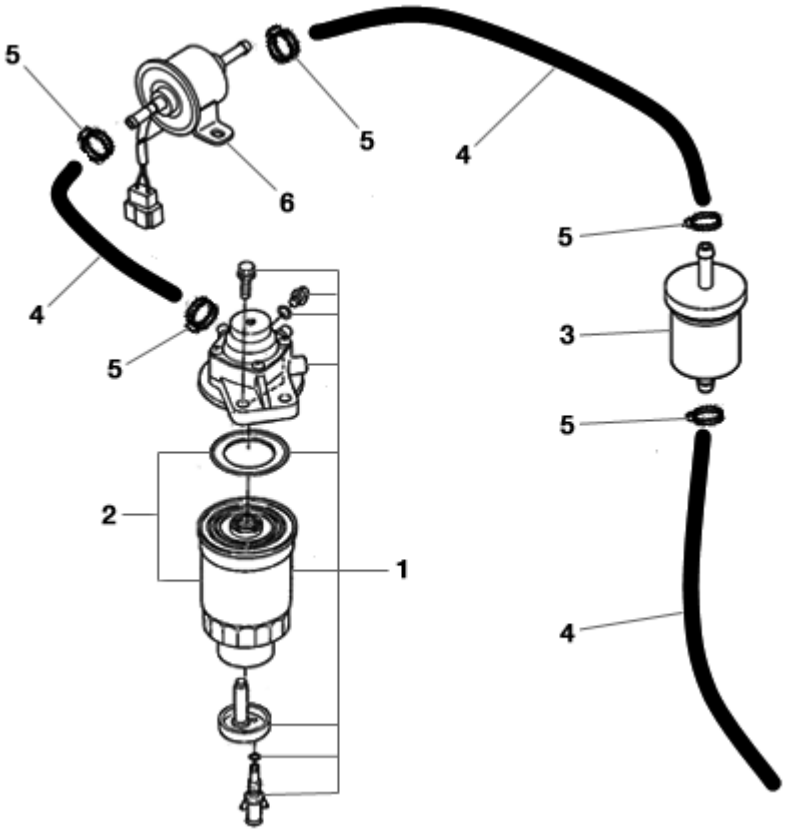

FIGURE	REFERENCE	DENOMINATION	AMOUNT
001	KU1K01143010	ASSY FILTER, FUEL	1
002	MN000024	FUEL FILTER, CARTRIDGE	1
003	MN000017	PRE-FILTER, FUEL (200h+50h)	1
004	469.03014.00	HOSE L/P MAT. 8x14	3
005	912.08016.66	CLAMP DIN3017	5
006	KU1G63952031	ELECTRIC PUMP	1

DEUTZ ENGINE TD3.6

ACCESSORY 1 (ENGINE)

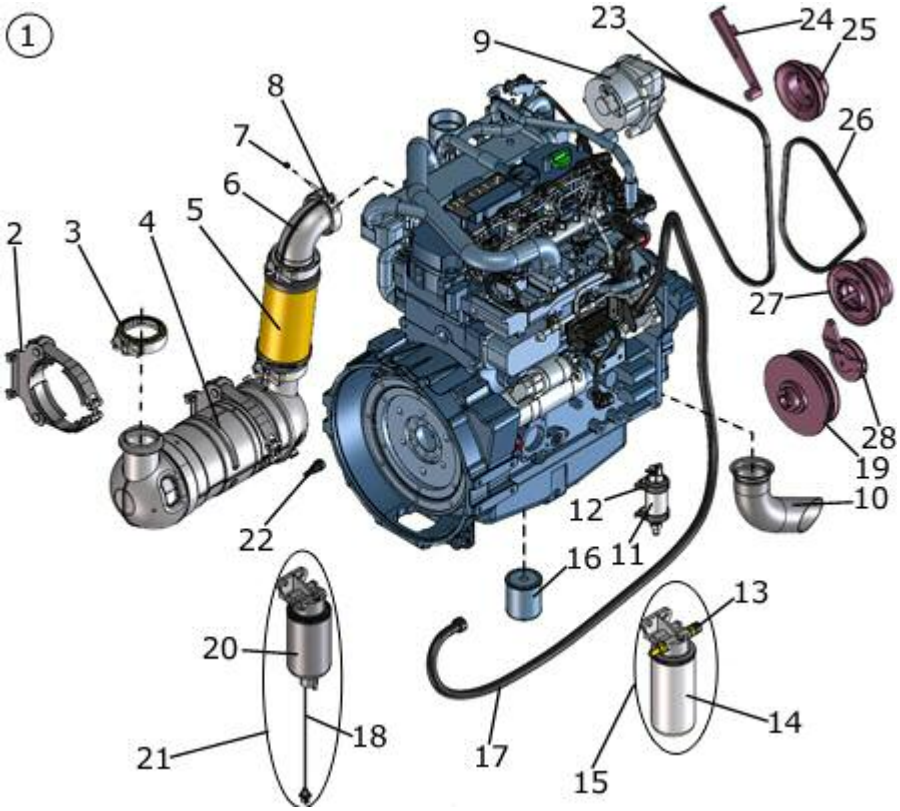

FIGURE	REFERENCE	DENOMINATION	AMOUNT
001	64.02011.00	DIESEL MOTOR DEUTZ TD 3.6 L4	1
002	64.02031.00	SUPPORT DOC DEUTZ TD 3.6	2
003	64.02034.00	EXHAUST CLAMP DEUTZ TD 3.6 L4	3
004	64.02030.00	FILTER DOC DEUTZ TD 3.6 L4	1
005	64.02032.00	EXHAUST PIPE DEUTZ TD 3.6	1
006	64.02033.00	EXHAUST PIPE C90 DEUTZ TD 3.6	1
007	64.02037.00	CREW JOINT DEUTZ TD 3.6	1
008	64.02036.00	SKIP JOINT ESC. DEUTZ TD	1
009	DI04123605	GENERATOR	1
010	64.02205.00	EXHAUST D3` X 236	1
011	64.02014.00	ELECTRIC FUEL PUMP DEUTZ	1
012	DI04122923	CLIP	2
013	DI04213842	PRESSURE SENSOR	1
014	DI04131596	FUEL FILTER	1
015	64.02013.00	FUEL FILTER DEUTZ KIT	1
016	DI01174416	SPIN-ON OIL FILTER	1
017	64.02016.00	DIESEL PIPE 2M 11.5x3.5 DEUTZ	1
018	DI04504704	SENSOR CABLE	1
020	DI04130241	FUEL FILTER	1
021	64.02015.00	FUEL PRE-FILTER DEUTZ KIT	1

https://truckmanualshub.com/

022	64.02017.00	FUEL CONNECTOR RET. DEUTZ TD	1
023	DI04123559	V-BELT	1
024	DI04124703	CLAMPING STRAP	1
025	DI04124485	V-GROOVED PULLEY	1
026	DI04123559	V-BELT	1
028	DI04124398	TENSIONING PULLEY	1

https://truckmanualshub.com/

DEUTZ ENGINE TD3.6

ACCESSORY 2 (ENGINE)

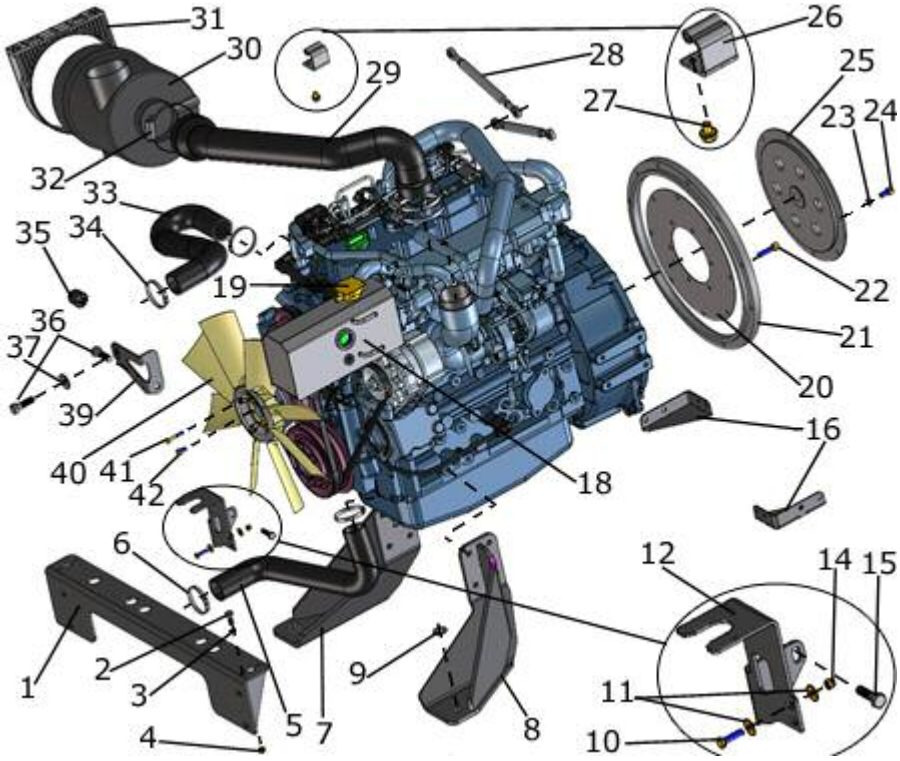

FIGURE	REFERENCE	DENOMINATION	AMOUNT
001	64.02529.00	FIXING BRACKET 743X143X74	1
002	603.08025.86	SCREW DIN933 M8x25	4
003	101.08000.66	WASHER DIN125 D8	4
004	701.08000.67	NUT DIN934 M8x1,25	4
005	64.02528.00	RUBBER TUBE B/P D55X5	1
006	912.40060.66	CLAMP D40-60	2
007	64.02605.00	SUPPORT ENGINE 346X296X159	1
008	64.02604.00	SUPPORT ENGINE 346X296X200	1
009	101.16000.66	WASHER DIN125 D16	2
010	603.06025.86	SCREW DIN933 M6x25	2
011	112.06000.66	CIR-CLIP INT. DIN9021 D6	4
012	63.04421.02	SUPPORT	1
014	711.06000.66	NUT DIN982 M6	2
015	603.08030.86	SCREW DIN933 M8X30	1
016	64.02405.00	FUEL FILTER SUPPORT	2
018	64.02543.00	EXPANSION TANK 3.5L	1
019	32.02151.00	REFRIGERANT CAP 1BAR	1
020	64.03126.00	PLATE D214X1.5	1
021	64.02108.00	COUPLING 24.91X390X450.8	1
022	633.10040.86	SCREW DIN912 M10x40 125	12
023	104.10000.00	WASHER DIN127 D10	8
024	601.10020.96	SCREW DIN912 M10x20	8

https://truckmanualshub.com/

025	64.02107.00	PLATE D320X12.5	1
026	64.08116.00	HINGE 8x40	4
027	634.08010.86	SCREW DIN6921 M8x10	8
028	64.08117.00	SHOCK ABSORBER, HYDR. 9x231.5	2
029	64.02320.01	AIR PIPE D60-70	1
030	64.02116.00	AIRE CLEANER	1
031	46.02310.00	HOSE CLAMP FILTER	1
032	912.90110.66	HOSE CLAMP Ø90-110	1
033	64.02527.01	PIPE RADIATOR 42/52	1
034	912.40060.66	CLAMP D40-60	2
035	43.50119.00	AIR FILTER INDICATOR	1
036	603.08030.86	SCREW DIN933 M8X30	2
037	112.08000.66	CIR-CLIP INT. DIN9021 D8	1
039	64.02549.00	SUPPORT RADIATOR	1

DEUTZ ENGINE TD3.6

ACCESSORY 2 (ENGINE)

FIGURE	REFERENCE	DENOMINATION	AMOUNT
040	64.02021.00	FAN 8P 40º D460	1
041	604.06040.86	SCREW DIN931 M6x40	2
042	603.08015.86	SCREW DIN933 M8x15	4

https://truckmanualshub.com/

DEUTZ ENGINE TD3.6

ACCESSORY 3 (ELECTRICAL SYSTEM)

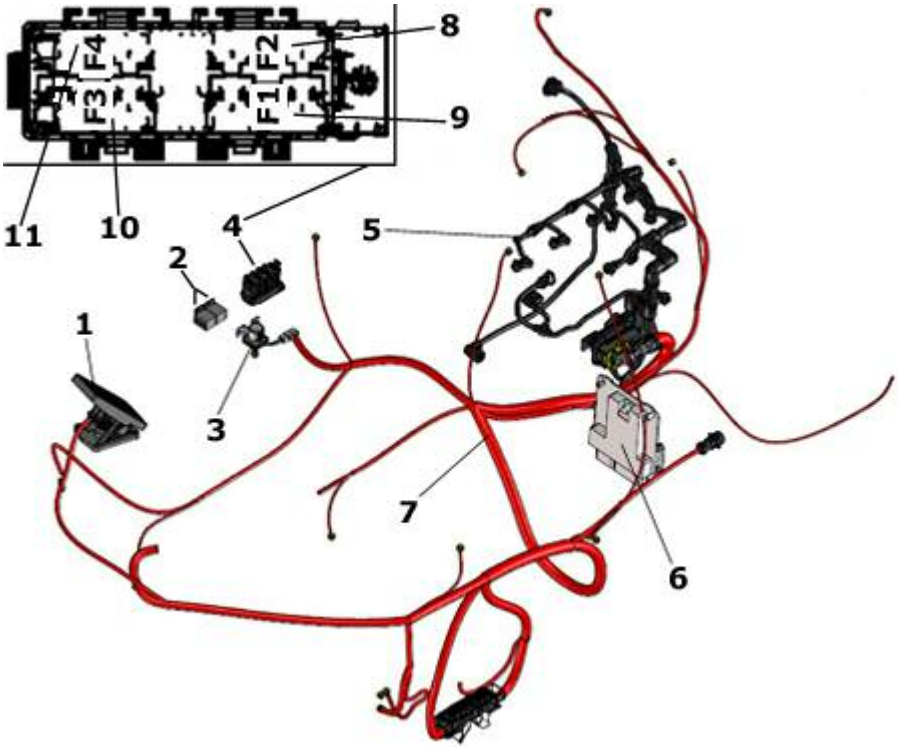

FIGURE	REFERENCE	DENOMINATION	AMOUNT
001	64.11080.00	DEUTZ THROTTLE PEDAL	1
002	43.01530.02	RELAY 40 AMP. 5 CONTAC. 6.3MM	2
003	64.11041.00	RELAY 12V 100A	1
004	64.11300.00	4 FUSE BOX MTA MAXIVAL	1
005	64.11033.00	SECTION I/E MOTOR DEUTZ TD3.6 T4	1
006	64.02012.00	ECU DEUTZ TD 3.6 L4	1
008	32.11028.00	LARGE FUSE 50A	1

https://truckmanualshub.com/

DEUTZ ENGINE TD3.6

ACCESSORY 4 (REFRIGERATION SYSTEM)

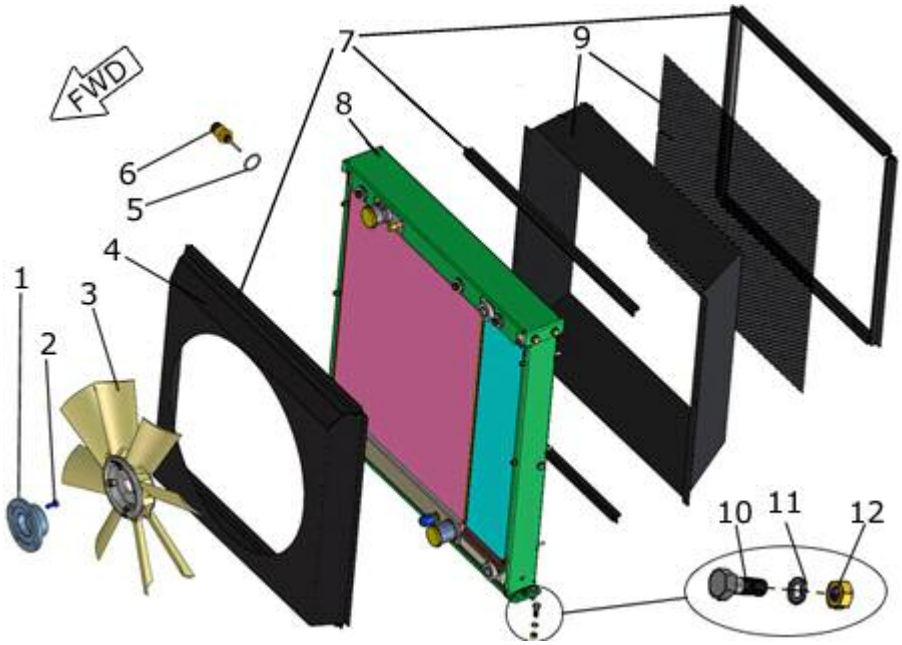

FIGURE	REFERENCE	DENOMINATION	AMOUNT
001	DI04124511	FAN SUPPORT	1
002	603.08020.86	SCREW DIN933 M8x20	4
003	64.02021.00	FAN 8P 40º D460	1
004	64.02539.00	FAN PROTECTOR	1
005	DI01148836	SEALING RING	1
006	64.11043.00	LEVEL SWITCH	1
007	472.00411.00	RUBBER PROFILE MAT.	8
008	64.02525.00	COOLER OIL/WATER	1
009	64.02540.00	RADIATOR PROTECTOR	1
010	603.08025.86	SCREW DIN933 M8x25	4
011	101.08000.66	WASHER DIN125 D8	4
012	701.08000.67	NUT DIN934 M8x1,25	4

https://truckmanualshub.com/

ENGINE
ACCELERATOR PEDAL

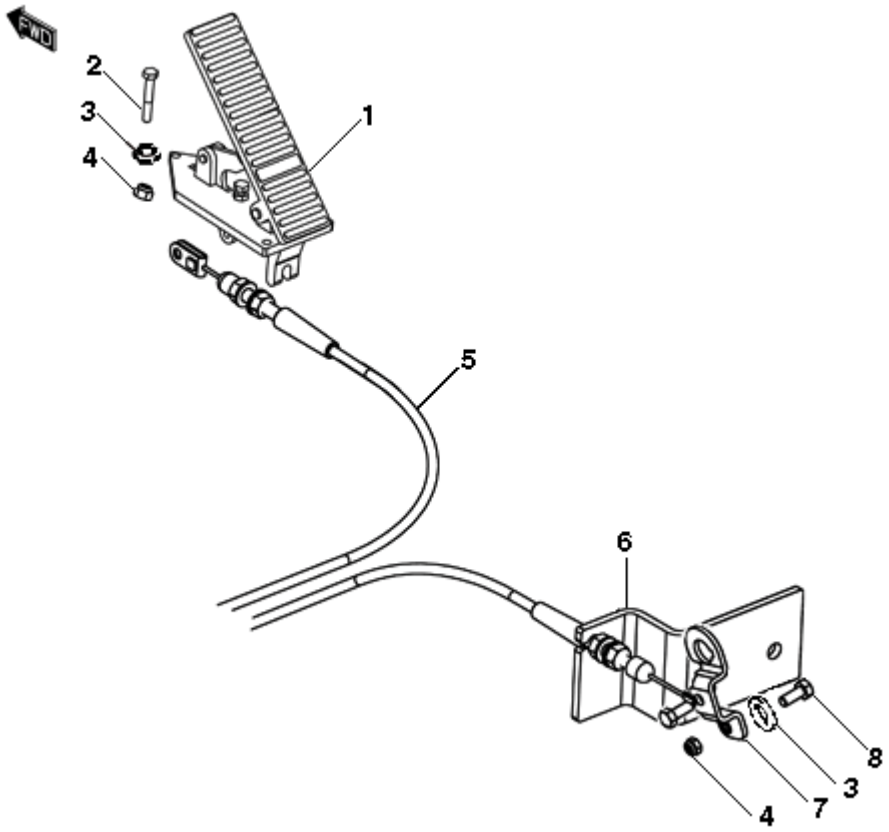

FIGURE	REFERENCE	DENOMINATION	AMOUNT
001	12.02020.00	ACCELERATOR PEDAL VIMOTER	1
002	604.06040.86	SCREW DIN931 M6x40	3
003	101.06000.66	WASHER DIN125 D6	5
004	711.06000.66	NUT DIN982 M6	5
005	57.02041.00	CABLE 1925	1
006	30.02065.00	FIXING SUPPORT	1
007	30.02066.00	ACC.LEVER	1
008	603.06015.86	SCREW DIN933	2

https://truckmanualshub.com/

ENGINE
RADIATOR

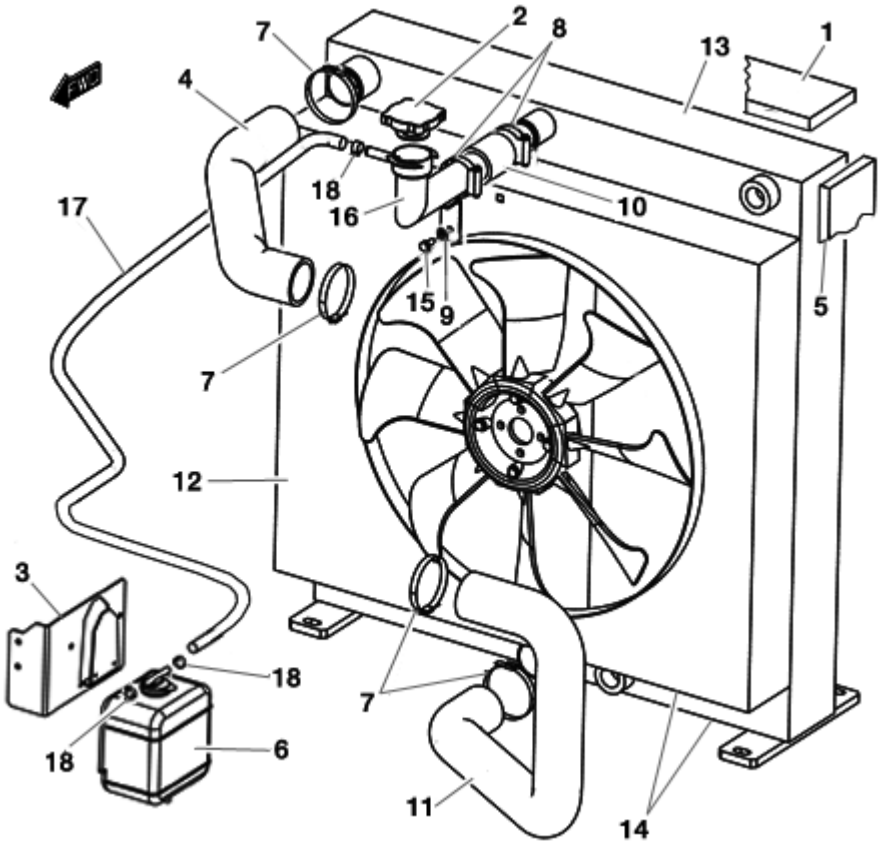

FIGURE	REFERENCE	DENOMINATION	AMOUNT
001	20.02072.01	RADIATOR PROTECTION	1
002	32.02151.00	REFRIGERANT CAP 1BAR	1
003	30.02080.00	STRIGHT SUPPORT	1
004	30.02053.00	RUBBER HOSE B/P Ø45xØ55	1
005	20.02071.01	GUARD RADIATOR	2
006	KU1G64272401	EXPANSION TANK	1
007	912.40060.66	CLAMP D40-60	4
008	912.30045.00	CLAMP	2
009	726.06003.66	NUT	1
010	30.02058.00	RUBBER HOSE B/P Ø35xØ45	1
011	30.02054.00	RUBBER HOSE B/P Ø45xØ55	1
012	30.02052.00	RADIATOR PROTECTOR	1
013	30.02051.00	WATER-OIL RADIATOR	1
014	30.02050.00	RADIATOR	1
015	603.06015.86	SCREW DIN933	1
016	30.02057.00	TUBE, METALLIC Ø35 ELBOW 110x67	1
017	469.03014.00	HOSE L/P MAT. 8x14	1
018	948.01308.00	SPRING CLAMP Ø13	3

https://truckmanualshub.com/

ENGINE
ENGINE SUPPORTS

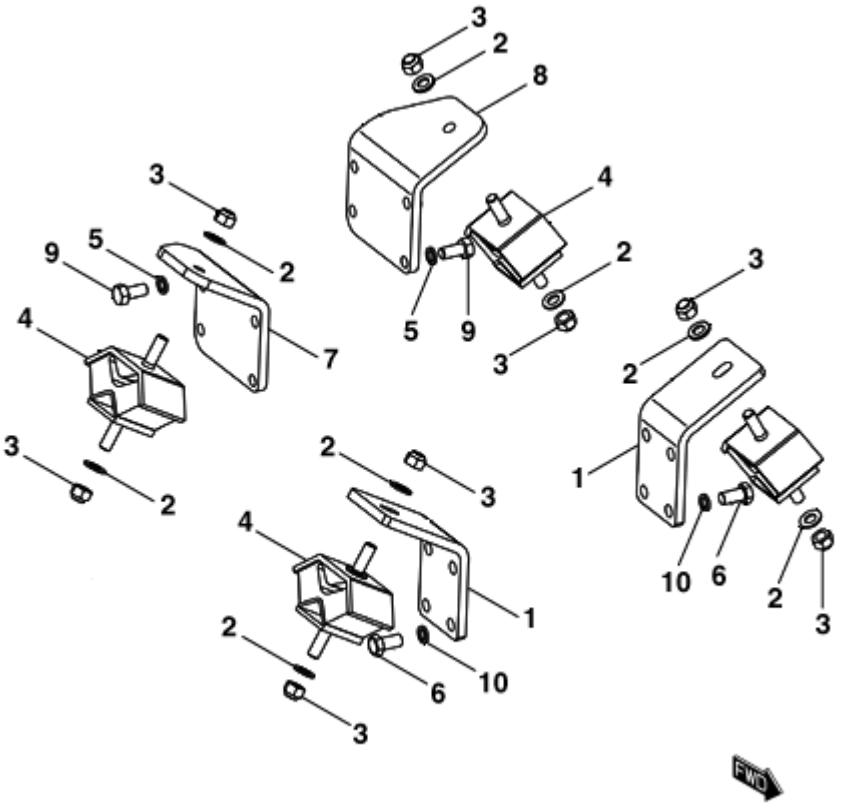

FIGURE	REFERENCE	DENOMINATION	AMOUNT
001	30.02060.00	ENGINE SUPPORT 80X106X167	2
002	101.12000.66	WASHER DIN125	8
003	720.12000.66	NUT M12 SELF-LOCK	8
004	57.02070.00	SHOCK ABSORBER, 60x120x64 60 A	4
005	104.12000.00	CIR-CLIP EXT. DIN7980	16
006	607.12025.66	BOLT DIN933 1/2 -13UNC	8
007	30.02062.00	ENGINE SUPPORT	1
008	30.02061.00	ENGINE SUPPORT	1
009	617.12025.86	SCREW DIN933	8
010	104.14000.00	CIR-CLIP EXT. DIN7980	8

https://truckmanualshub.com/

ENGINE

ENGINE SUPPORTS

CHASSIS: 61308

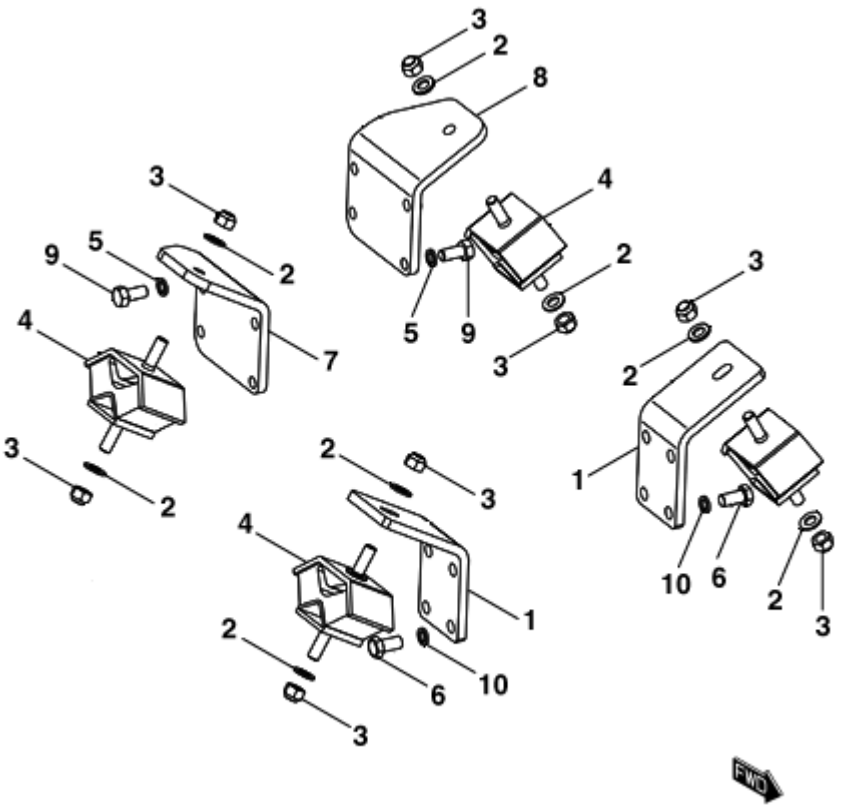

FIGURE	REFERENCE	DENOMINATION	AMOUNT
001	30.02060.00	ENGINE SUPPORT 80X106X167	2
002	101.12000.66	WASHER DIN125	8
003	720.12000.66	NUT M12 SELF-LOCK	8
004	20.02019.00	SHOCK ABSORBER, 60x120x64 70 A	4
005	104.12000.00	CIR-CLIP EXT. DIN7980	16
006	607.12025.66	BOLT DIN933 1/2 -13UNC	8
007	30.02062.00	ENGINE SUPPORT	1
008	30.02061.00	ENGINE SUPPORT	1
009	617.12025.86	SCREW DIN933	8
010	104.14000.00	CIR-CLIP EXT. DIN7980	8

https://truckmanualshub.com/

ENGINE

ENGINE SUPPORTS

CHASSIS: 65357

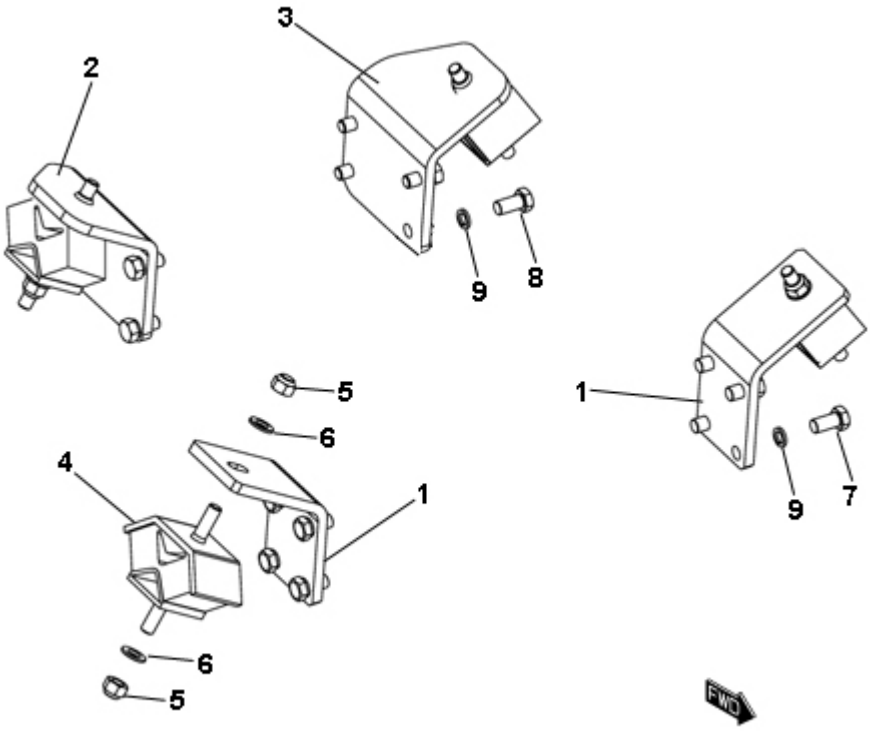

FIGURE	REFERENCE	DENOMINATION	AMOUNT
001	30.02060.01	MOTOR SUPPORT 80X106X167	2
002	30.02062.01	MOTOR MOUNT RIGHT 96X132X163	1
003	30.02061.01	MOTOR MOUNT LEFT 96X132X163	1
004	20.02019.00	SHOCK ABSORBER, 60x120x64 70 A	4
005	711.12000.66	NUT DIN982 M12	8
006	101.12000.66	WASHER DIN125	8
007	607.12025.66	BOLT DIN933 1/2 -13UNC	8
008	617.12025.86	SCREW DIN933	8
009	104.12000.00	CIR-CLIP EXT. DIN7980	16

https://truckmanualshub.com/

TRANSMISSION
REDUCTOR BOX

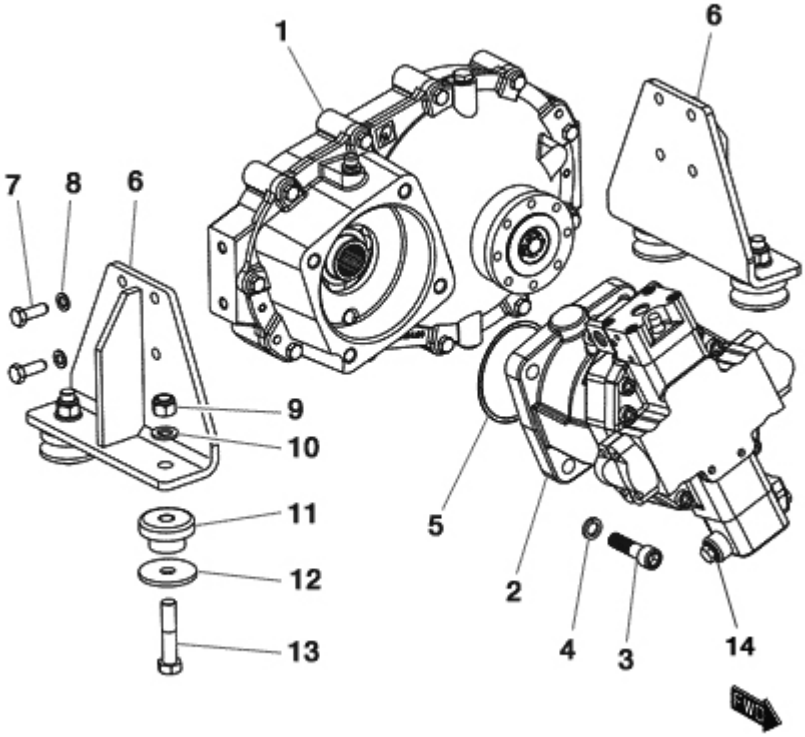

FIGURE	REFERENCE	DENOMINATION	AMOUNT
001	30.03150.00	COMPLETE REDUCTOR BOX	1
002	30.03020.00	HYDR. ENGINE 107CC. PISTONS DA	1
003	601.16060.86	HEXAGON SOCKET HEAD SCREW DIN912 M16x60	4
004	104.16000.00	CIR-CLIP EXT. DIN7980	4
005	201.16003.50	GASKET DIN3770 160X3	1
006	30.03170.00	FIXING SUPPORT 80X203X260	2
007	603.12035.86	SCREW DIN933	8
008	104.12000.00	CIR-CLIP EXT. DIN7980	8
009	711.16000.66	NUT	4
010	101.16000.66	WASHER DIN125 D16	4
011	43.70381.00	PANEL	4
012	43.70833.00	WASHER	4
013	604.16075.86	SCREW DIN931	4
014	RXR909603762	VALVE	1

https://truckmanualshub.com/

TRANSMISSION

TRANSMISSION SUPPORT

CHASSIS: 61325

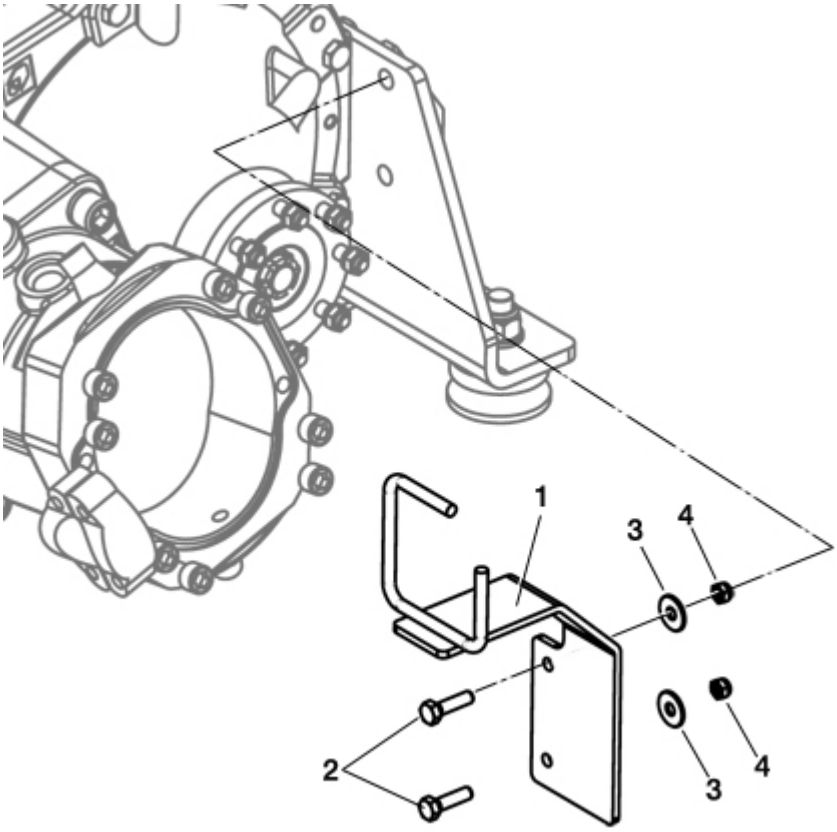

FIGURE	REFERENCE	DENOMINATION	AMOUNT
001	30.10080.00	SUPPORT 80X165X270	1
002	603.08030.86	SCREW DIN933 M8X30	2
003	112.08000.66	CIR-CLIP INT. DIN9021 D8	2
004	711.08000.66	NUT	2

https://truckmanualshub.com/

TRANSMISSION
REDUCTION BOX INNER (PART 1)

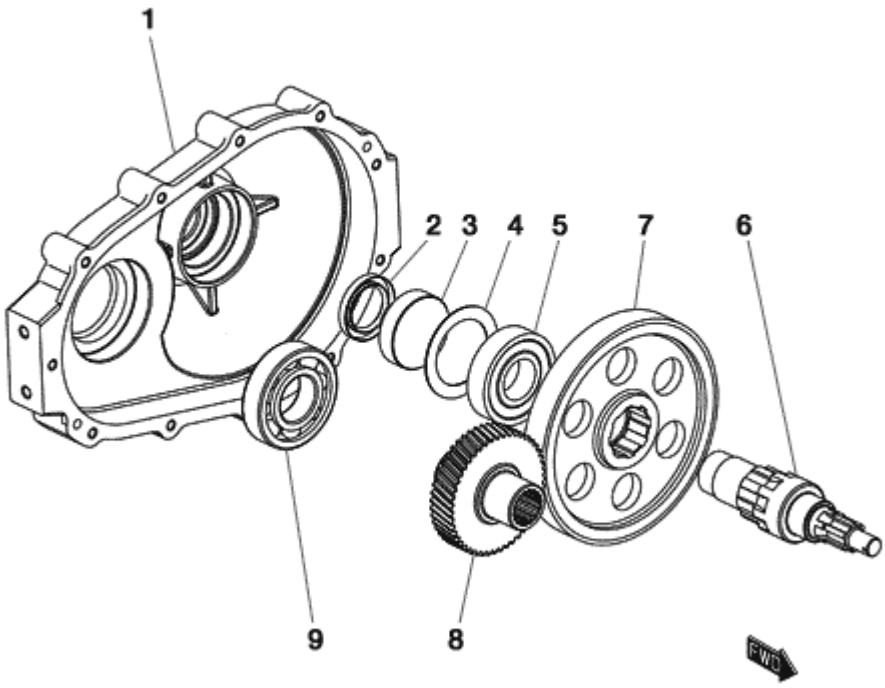

FIGURE	REFERENCE	DENOMINATION	AMOUNT
001	30.03150.00	COMPLETE REDUCTOR BOX	1
002	205.45010.50	SEAL DIN3760	1
003	57.03104.00	REDUCTION GEAR CAP	1
004	43.70403.00	PANEL 1.5X72X100	1
005	301.45025.00	BEARING DIN625	1
006	30.03152.00	SHAFT CIL/ROS	1
007	20.03054.00	GEAR (CH250)	1
008	30.03101.00	GEAR Z49	1
009	301.50027.00	GEAR DIN625	1

https://truckmanualshub.com/

TRANSMISSION
REDUCER BOX INNER (PART 2)

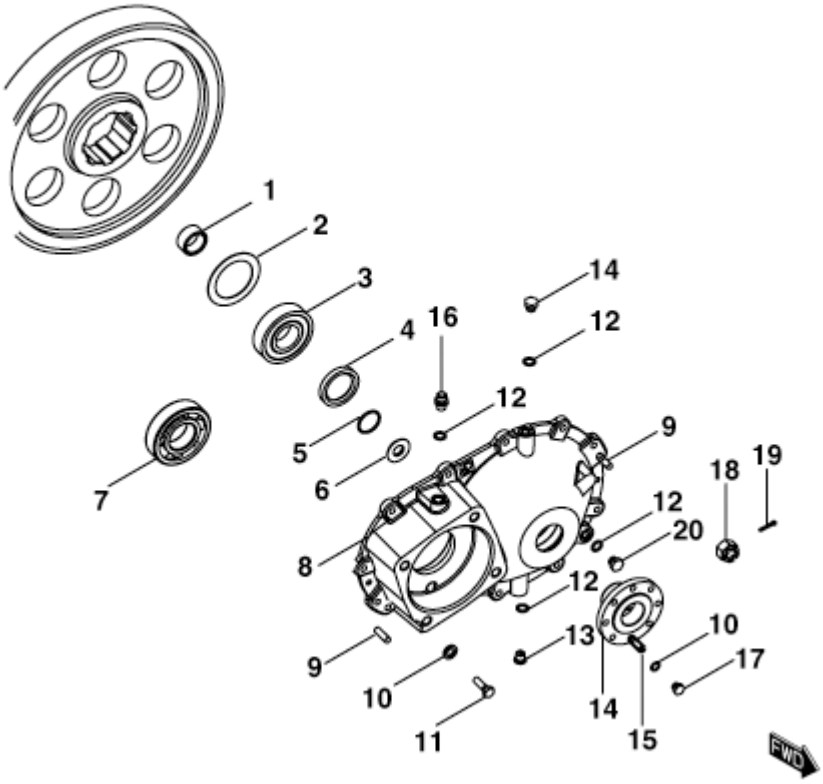

FIGURE	REFERENCE	DENOMINATION	AMOUNT
001	30.03153.00	SUPLEMENT D35X45X21	1
002	43.70403.00	PANEL 1.5X72X100	1
003	301.45025.00	BEARING DIN625	1
004	205.50010.50	SEAL DIN3760	1
005	201.37003.50	O-RING DIN3770	1
006	15.00368.02	WASHER	1
007	301.50027.00	GEAR DIN625	1
008	30.03104.00	REDUCTOR COVER	1
009	403.10035.00	PIN	2
010	104.10000.00	CIR-CLIP EXT. DIN7980	19
011	604.10035.86	SCREW DIN931	11
012	107.14000.10	WASHER AL	4
013	10.00921.00	CAP. M14X150 DIN 908	1
014	80.01035.00	SCREW DIN910*	1
015	15.01034.00	STUD DIN938* 41 M10x1,5	8
016	20.03104.00	CAP	1
017	701.10000.66	NUT DIN934 M10X1,5	8
018	710.20000.66	NUT	1

https://truckmanualshub.com/

TRANSMISSION
REDUCER BOX INNER (PART 2)

FIGURE	REFERENCE	DENOMINATION	AMOUNT
019	401.35040.60	PIN	1
020	80.01035.00	SCREW DIN910*	2

https://truckmanualshub.com/

TRANSMISSION
INCHING PEDAL

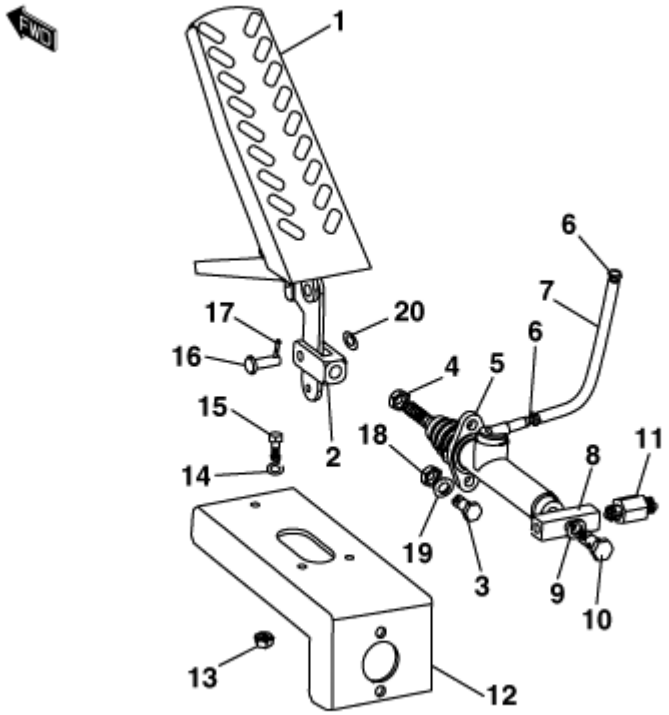

FIGURE	REFERENCE	DENOMINATION	AMOUNT
001	43.80250.01	PEDAL EMBR. 55X116X250	1
002	20.05040.00	ART. FORK	1
003	603.08025.86	SCREW DIN933 M8x25	2
004	701.10000.66	NUT DIN934 M10X1,5	1
005	20.03070.00	BRAKE PUMP	1
006	948.00907.00	CLAMP SPRING D9	2
007	469.15009.00	PLASTIC HOSE 6X9	1
008	20.03075.00	NIPPLE O/H/H	1
009	106.10000.20	WASHER CU	2
010	20.05036.00	FITTING SCREW SIM.	1
011	20.03072.00	SWITCH	1
012	20.03073.00	BRAKE PUMP SUPPORT	1
013	711.06000.66	NUT DIN982 M6	3
014	104.06000.00	CIR-CLIP EXT. DIN7980	3
015	604.06030.86	SCREW DIN931	3
016	01.00514.01	AXLE CIL/CPA	1
017	401.02025.60	PIN	1
018	711.08000.66	NUT	2

https://truckmanualshub.com/

TRANSMISSION
INCHING PEDAL

FIGURE	REFERENCE	DENOMINATION	AMOUNT
019	104.08000.00	CIR-CLIP EXT. DIN7980	2
020	112.08000.66	CIR-CLIP INT. DIN9021 D8	2

https://truckmanualshub.com/

TRANSMISSION

CARDAN JOINT

FIGURE	REFERENCE	DENOMINATION	AMOUNT
001	30.03600.00	CARDAN 181	1
002	30.03602.00	FLANGE	2

https://truckmanualshub.com/

TRANSMISSION (FRONT AXLE)
FRONT AXLE

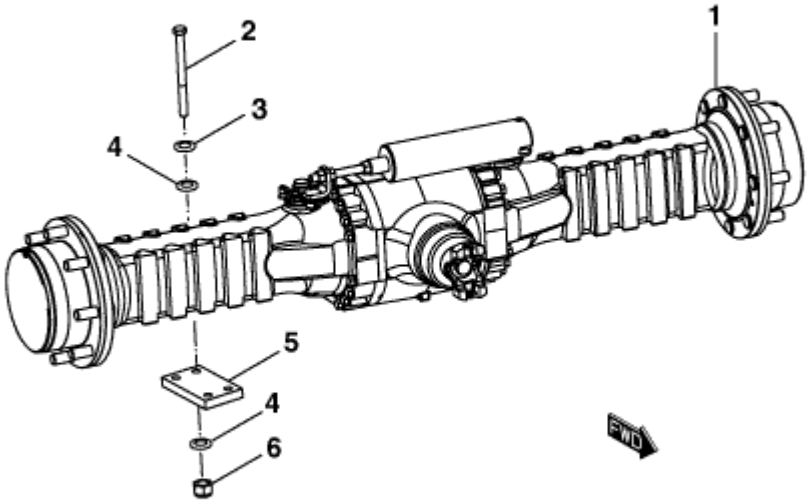

FIGURE	REFERENCE	DENOMINATION	AMOUNT
001	30.03200.00	FRONT AXLE DANA JOKE 1530	1
002	604.20240.86	BOLT DIN931 M20x240	8
003	104.20000.00	CIR-CLIP EXT. DIN7980	8
004	101.20000.66	WASHER DIN125	16
005	30.03250.00	STRIP SUPPORT 25X120X200	2
006	711.20000.66	NUT	8

https://truckmanualshub.com/

TRANSMISSION (FRONT AXLE)
CARTER DIFFÉRENTIEL

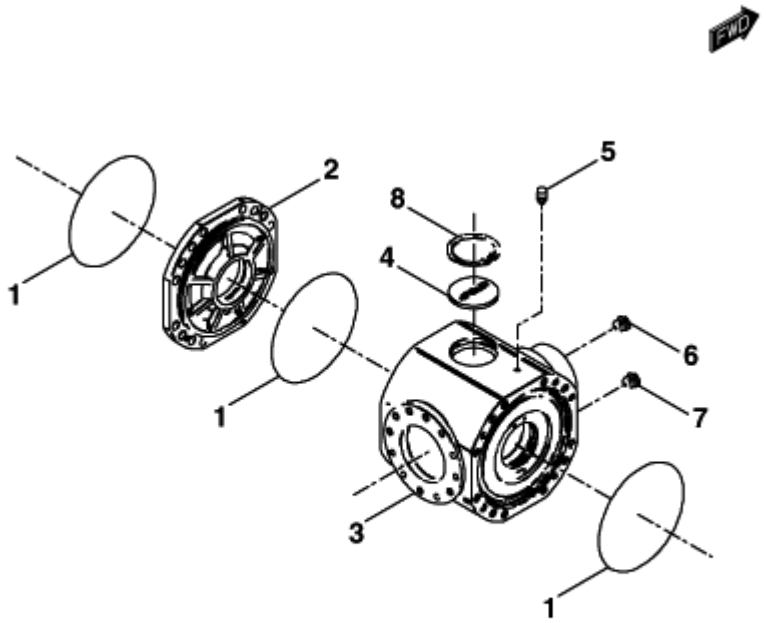

FIGURE	REFERENCE	DENOMINATION	AMOUNT
001	DA001051178	O-RING	3
002	DA1120100703	INTERMEDIATE COVER	1
003	DA1120103701	CASE	1
004	DA1710101504	PLUG	1
005	DA1120101801	VENT	1
006	DA1120161001	PLUG	1
007	DA1120161003	TAPON. 40x72 COMBUSTIBLE	1
008	DA07JM00090	RING	1

https://truckmanualshub.com/

TRANSMISSION (FRONT AXLE)
RING & PINION

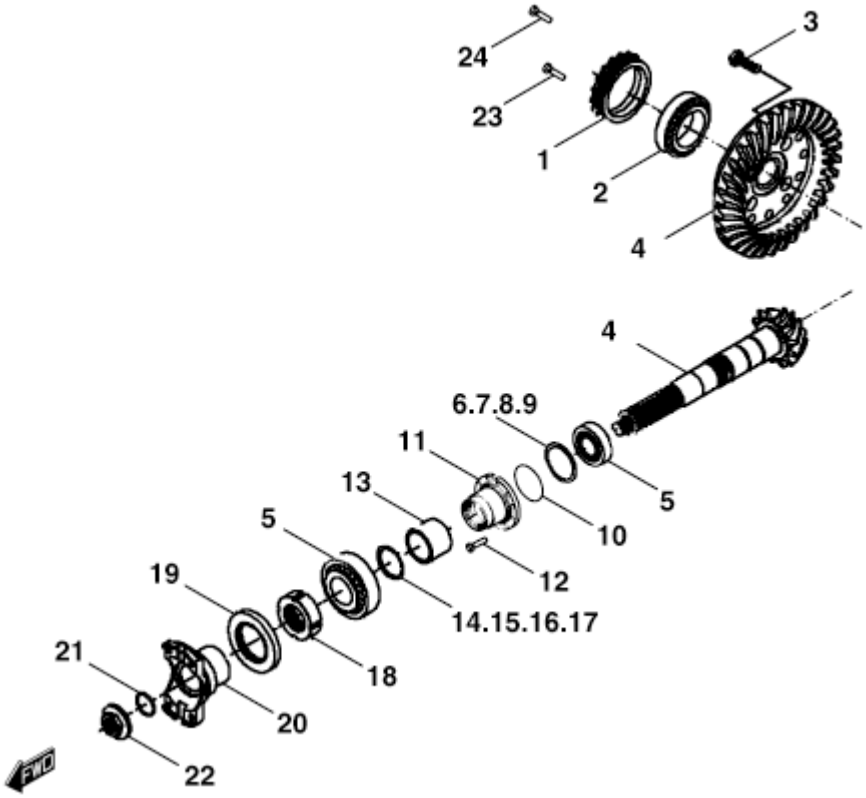

FIGURE	REFERENCE	DENOMINATION	AMOUNT
001	DA1120401602	CLAMP	2
003	DA016283390	SCREW	12
004	DA1120450021	BEVEL GEAR SET	1
005	DA005100162	TAPER ROLLER BEARING	2
006	DA013011279	SHIM	1
007	DA013011281	SHIM	1
008	DA013013055	SHIM	1
009	DA013013066	SHIM	1
013	DA1120400902	SPACER	1
014	DA013013117	SHIM	1
015	DA013013118	SHIM	1
016	DA013013119	SHIM	1
017	DA013013120	SHIM	1
018	DA9530401201	CLAMP	1
019	DA001030730	O-RING	1
020	DA1120473202	FLANGE	1
021	DA001053158	O-RING	1
022	DA3571413901	NUT	1

https://truckmanualshub.com/

TRANSMISSION (FRONT AXLE)
RING & PINION

FIGURE	REFERENCE	DENOMINATION	AMOUNT
023	DA016040417	CYLINDER SCREW	4
024	DA016041214	CYLINDER SCREW	2

https://truckmanualshub.com/

TRANSMISSION (FRONT AXLE)
DIFFERENTIAL

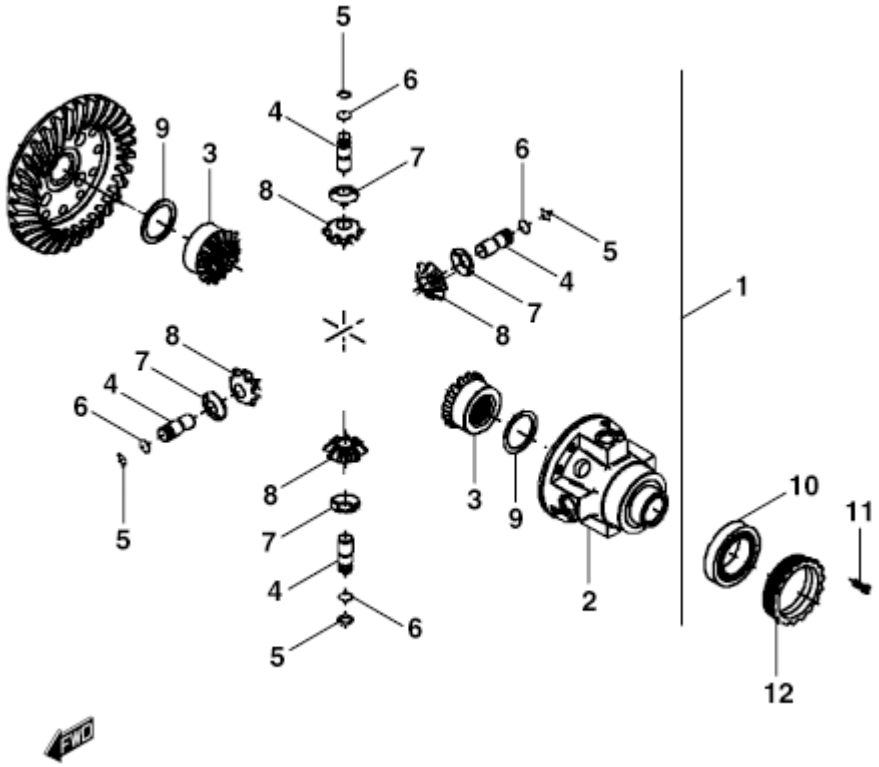

FIGURE	REFERENCE	DENOMINATION	AMOUNT
001	DA1120470201	DIFFERENTIAL	1
002	DA1120400104	DIFFERENTIAL CARRIER	1
003	DA1120400501	DIFFERENTIAL SIDE GEAR	2
004	DA1120470602	PIN	4
005	DA002143244	RING	4
006	DA002063163	RING	4
007	DA1120400801	FRICTION WASHER	4
008	DA1120400404	SATELLITE	4
009	DA1120400701	FRICTION WASHER	2
010	DA005091039	TAPER ROLLER BEARING	2
011	DA016041214	CYLINDER SCREW	1
012	DA1120401602	CLAMP	2

https://truckmanualshub.com/

TRANSMISSION (FRONT AXLE)
REDUCTION

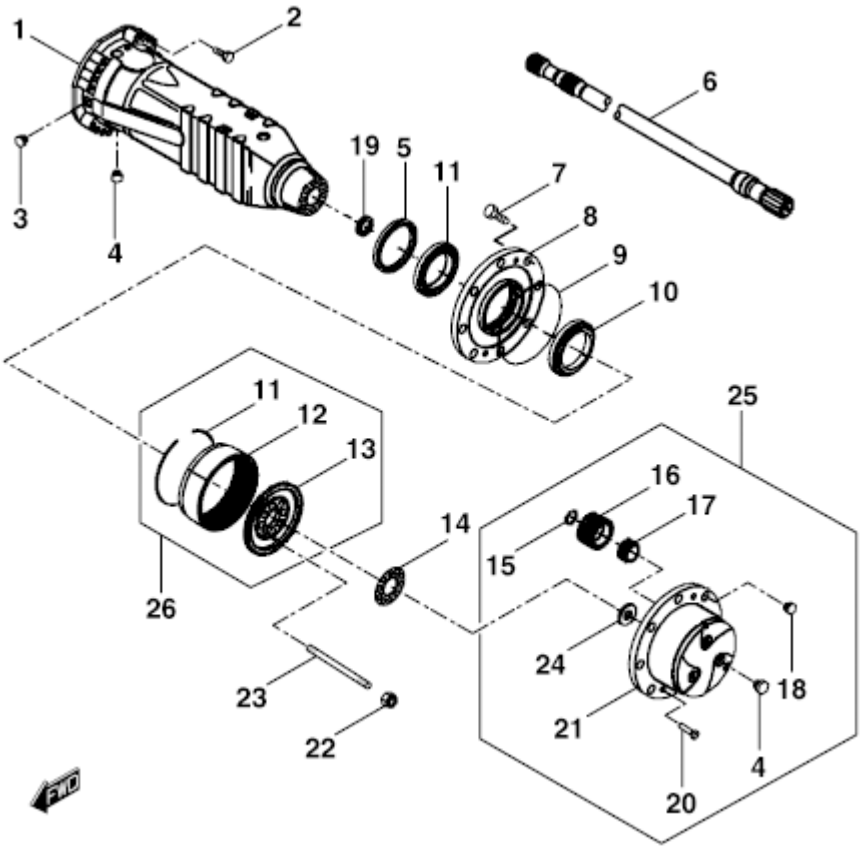

FIGURE	REFERENCE	DENOMINATION	AMOUNT
001	DA1120601821	CASE	2
002	DA1120607001	SCREW	32
003	DA1120161001	PLUG	4
004	DA1120161003	TAPON. 40x72 COMBUSTIBLE	2
005	DA1770600901	SEAL	2
006	DA1120600106	HALF SHAFT	2
007	DA9320607401	WHEEL STUD	16
008	DA1120604901	WHEEL HUB	2
009	DA001051178	O-RING	2
010	DA005103166	BEARING	4
011	DA002063193	RING	2
012	DA1120600504	RING GEAR	2
013	DA1120600707	RING GEAR SUPPORT	2
014	DA1120602601	LOCKING PLATE	2
015	DA002143191	RING	6
016	DA1120600603	PLANET GEAR	6
017	DA1120600802	BEARING	6
018	DA006082833	WHEEL NUT	16

https://truckmanualshub.com/

TRANSMISSION (FRONT AXLE)
REDUCTION

FIGURE	REFERENCE	DENOMINATION	AMOUNT
019	DA001403167	SEAL	2
020	DA016060442	COUNTERSUNK SCREW	4
021	DA1120605004	PLANET GEAR CARRIER	2
022	DA006041159	NUT	16
023	DA1120602501	STUD	16
024	DA1120601702	FRICTION WASHER	2
025	DA2120671019	KIT	2
026	DA2120670707	RING GEAR SUPPORT SET	2

https://truckmanualshub.com/

TRANSMISSION (FRONT AXLE)
BRAKE

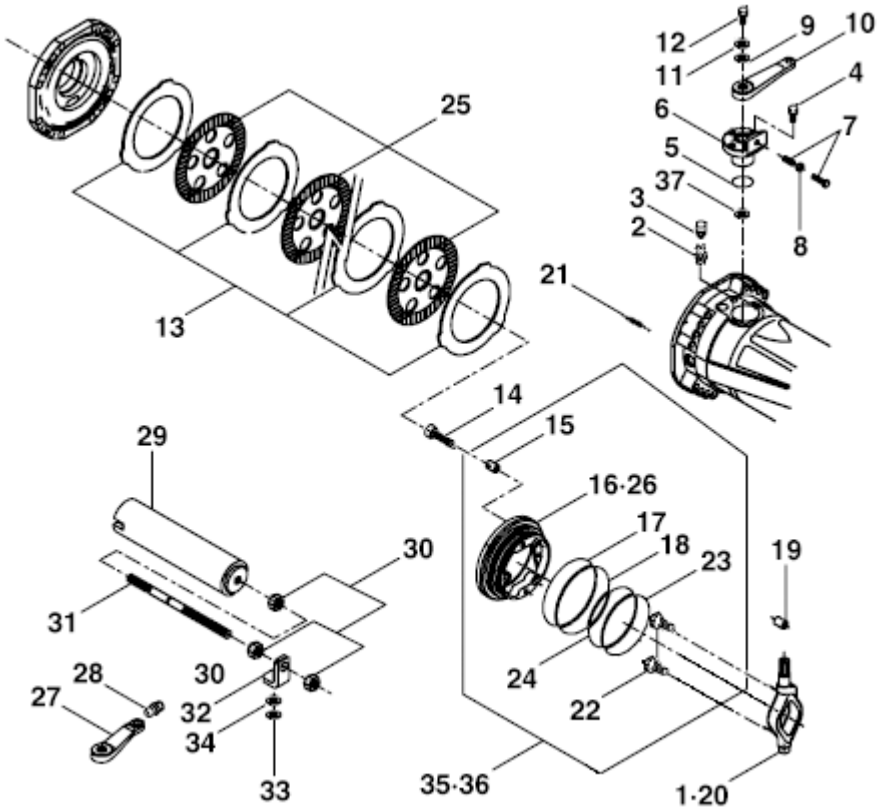

FIGURE	REFERENCE	DENOMINATION	AMOUNT
001	DA1120770101	RIGHT LEVER	1
002	DA7340701401	BOLT, BLEEDING	2
003	DA7340701501	PLUG	2
004	DA016040705	CYLINDER BOLT	6
005	DA001051494	O-RING	2
006	DA1120701504	REDUCTION BUSH	2
007	DA016082083	SCREW	2
008	DA006030195	NUT	2
009	DA001051358	O-RING	2
010	DA1120702703	LEVER	1
011	DA1710700701	WASHER	2
012	DA016060439	COUNTERSUNK BOLT	2
013	DA1120700601	INTERMEDIATE BRAKE DISC	10
014	DA1120703710	ADJUSTING SCREW	6
015	DA1120700203	SPRING	3
016	DA1120700719	LEFT PISTON	1
017	DA1120700902	RING	1
018	DA1120700802	RING	1

https://truckmanualshub.com/

TRANSMISSION (FRONT AXLE)
BRAKE

FIGURE	REFERENCE	DENOMINATION	AMOUNT
019	DA014020913	DOWEL	2
020	DA1120770201	LEFT LEVER	1
021	DA1800700401	SPRING	6
022	DA7380701802	PUSHER	2
023	DA1120700901	RING	1
024	DA1120700801	O-RING	1
025	DA1120761002	BRAKE DISC	8
026	DA1120700720	RIGHT PISTON	1
027	DA1120702704	LEVER	1
028	DA008010212	GREASE FITTING	2
029	DA1120766001	WHEEL CYLINDER	1
030	DA006031196	NUT	3
031	DA1120705502	ROD	1
032	DA1710770301	SUPPORT	1
033	DA002010502	RING	1
034	DA7340703101	SPACER	1
035	DA1120770304	LEFT PISTON KIT	1
036	DA1120770303	RIGHT PISTON KIT	1
037	DA001051588	O-RING	2

https://truckmanualshub.com/

TRANSMISSION (REAR AXLE)
REAR AXLE

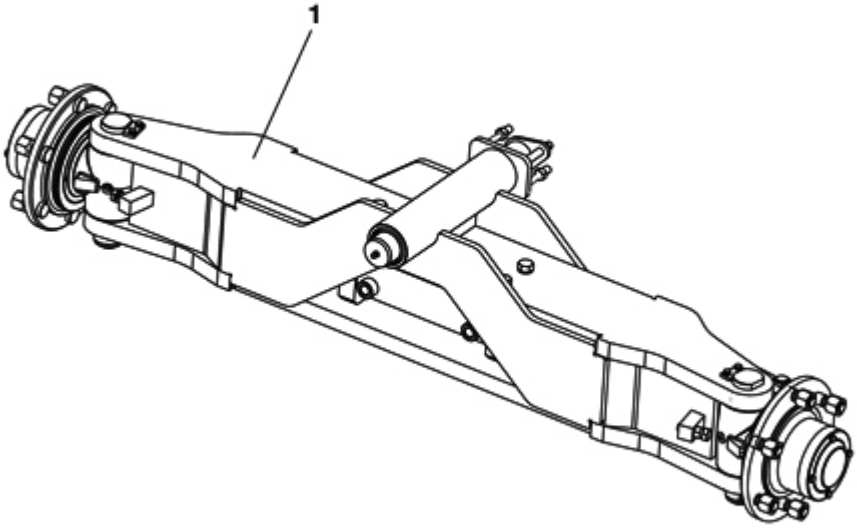

FIGURA	REFERENCIA	DENOMINACIÓN	CANTIDAD
001	30.03560.00	STEERING AXLE 56º	1

https://truckmanualshub.com/

TRANSMISSION (REAR AXLE)

REAR AXLE

BASTIDOR: 65172

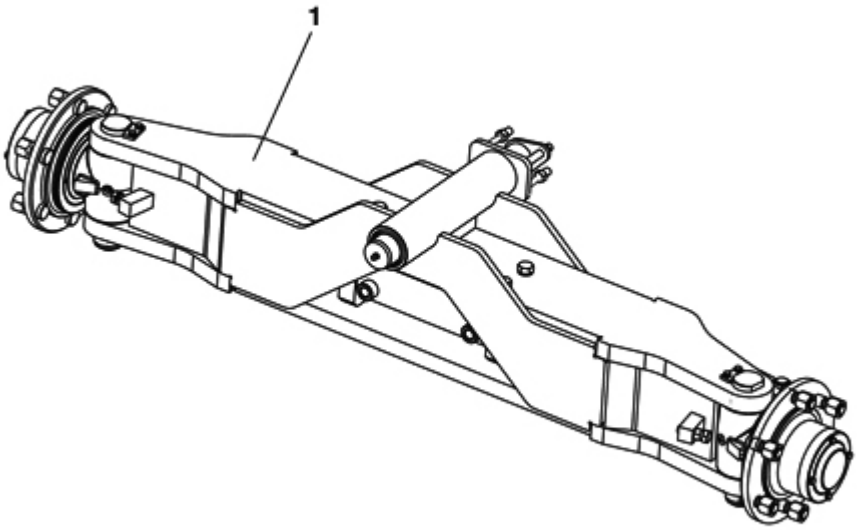

FIGURA	REFERENCIA	DENOMINACIÓN	CANTIDAD
001	30.03560.02	STEERING AXLE 56º	1

https://truckmanualshub.com/

TRANSMISSION (REAR AXLE)

REAR AXLE (PART 1)

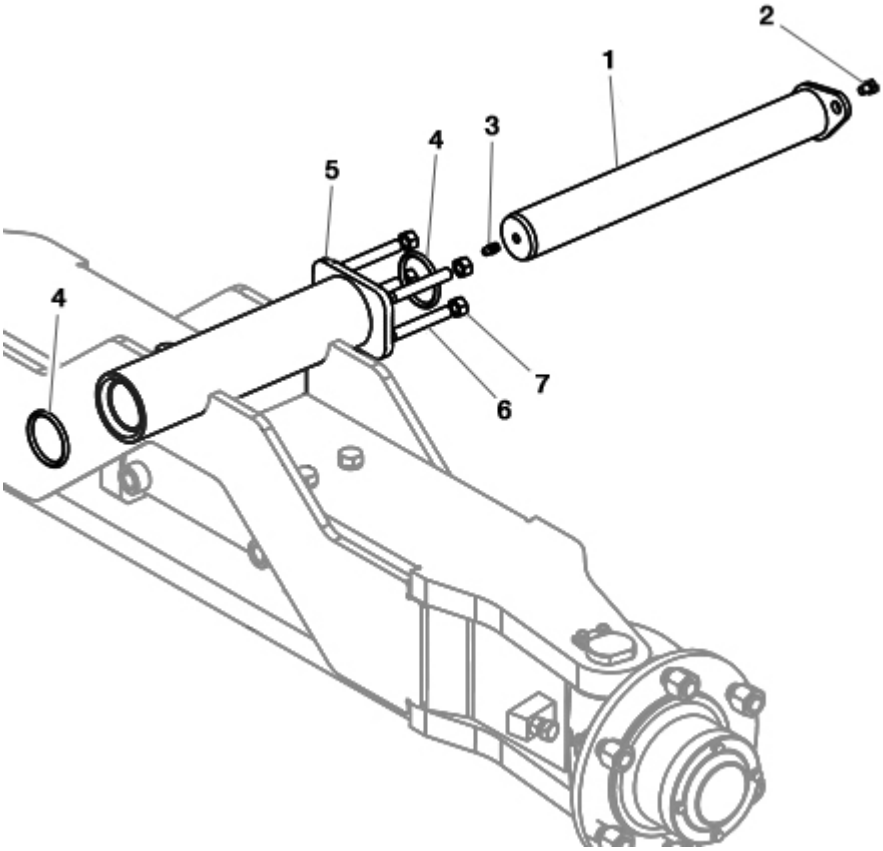

FIGURA	REFERENCIA	DENOMINACIÓN	CANTIDAD
001	30.03580.00	SHAFT CIL/CIL D50X417	1
002	603.08010.86	SCREW DIN933	1
003	901.08000.33	GREASER DIN71412-A	1
004	201.05153.50	O-RING DIN3770	2
005	57.04114.00	PLATE	1
006	612.12080.86	BOLT DIN914 M12x80	4
007	701.12000.66	NUT	4

https://truckmanualshub.com/

TRANSMISSION (REAR AXLE)
REAR AXLE (PART 2)

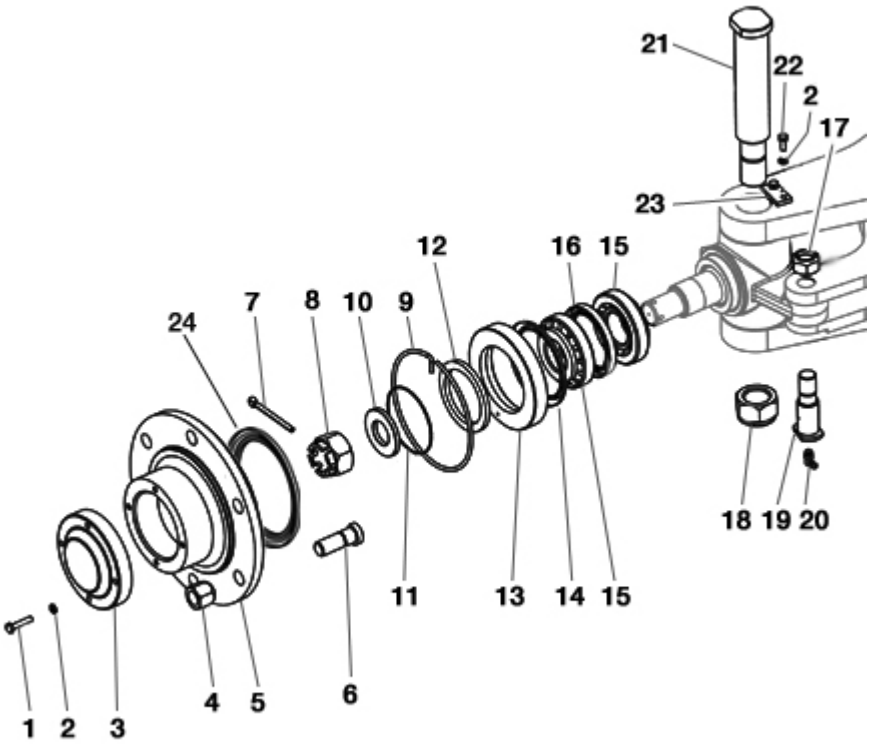

FIGURA	REFERENCIA	DENOMINACIÓN	CANTIDAD
001	603.06030.86	SCREW DIN933	8
002	104.06000.00	CIR-CLIP EXT. DIN7980	12
003	30.03556.00	HUB COVER 29XD120	2
004	15.00453.00	NUT	12
005	30.03555.00	WHEEL HUB D90XD242X95 6 HOLES	2
006	15.00452.00	SCREW FASTENING WHEEL	12
007	401.06070.60	PIN DIN94 6x70	2
008	703.30000.66	NUT DIN935 M30x2	2
009	30.03552.00	RING Ø132xØ4	2
010	30.03550.00	WASHER, FIBER Ø31xØ60x6	2
011	201.08218.50	O-RING DIN3770 82,27x85,83x1,78	2
012	30.03554.00	RING Ø70x89.5	2
013	30.03551.00	NUT, WHEEL HUB 19.3xM129x1.5	2
014	202.80100.50	SEAL DIN3760	2
015	307.40026.00	BEARING DIN720 31308A	4
016	205.70010.50	SEAL DIN3760 70X90X10	2
017	720.20000.66	NUT DIN985 M20x1.5	2
018	01.01319.00	NUT DIN935* M30x2x30	2

https://truckmanualshub.com/

TRANSMISSION (REAR AXLE)
REAR AXLE (PART 2)

FIGURA	REFERENCIA	DENOMINACIÓN	CANTIDAD
019	30.03521.00	SHAFT D25X84	4
020	902.08000.33	GREASER DIN71412-C	2
021	30.03573.00	SHAFT D40XM30X230	2
022	603.06015.86	SCREW DIN933	4
023	15.00832.00	PANEL	2
024	238.85075.50	GASKET	2

https://truckmanualshub.com/

TRANSMISSION (REAR AXLE)

REAR AXLE (PART 2)

BASTIDOR: 65171

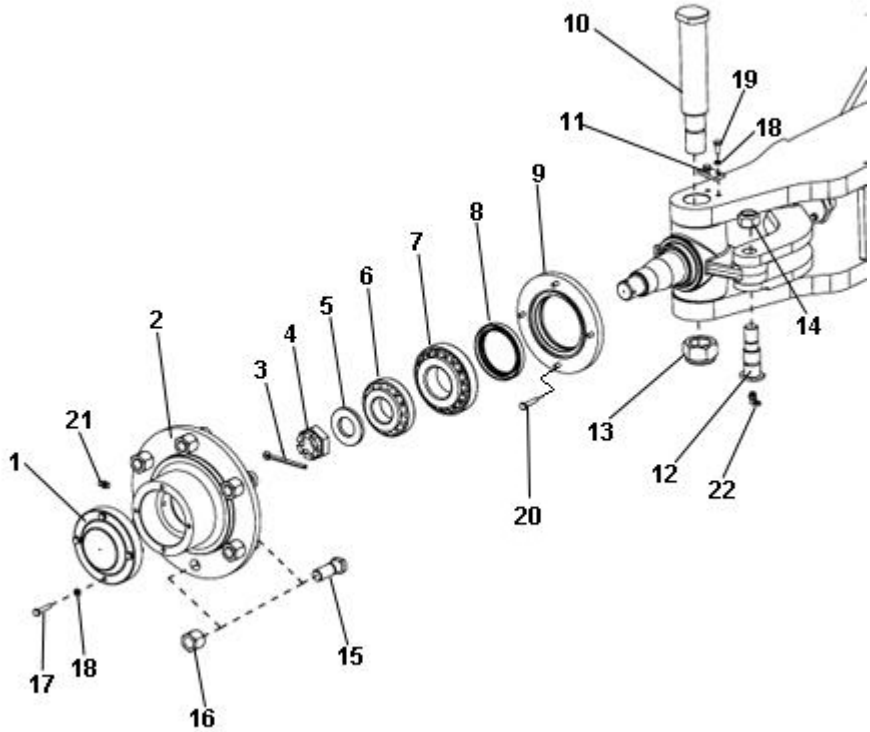

FIGURA	REFERENCIA	DENOMINACIÓN	CANTIDAD
001	30.03556.01	HUB CAP FITTING 33XD120	2
002	30.03555.02	WHEEL HUB D71XD242X103 6AGJ.	2
003	401.06070.60	PIN DIN94 6x70	2
004	715.30000.60	NUT DIN979 M30X2	2
005	30.03550.01	WASHER D31XD60X6 FI	2
006	307.40026.00	BEARING DIN720 31308A	2
007	307.50030.00	DIN720 BEARING 31310	2
008	205.70010.50	SEAL DIN3760 70X90X10	2
009	30.03503.00	SEAL PROTECTOR	2
010	30.03573.00	SHAFT D40XM30X230	2
011	15.00832.00	PANEL	2
012	30.03521.01	SHAFT D25X84	4
013	720.30000.66	NUT	4
014	720.20000.66	NUT DIN985 M20x1.5	2
015	15.00452.00	SCREW FASTENING WHEEL	12
016	15.00453.00	NUT	12
017	603.06030.86	SCREW DIN933	8
018	104.06000.00	CIR-CLIP EXT. DIN7980	12

https://truckmanualshub.com/

TRANSMISSION (REAR AXLE)

REAR AXLE (PART 2)

BASTIDOR: 65171

FIGURA	REFERENCIA	DENOMINACIÓN	CANTIDAD
019	603.06015.86	SCREW DIN933	4
020	601.06020.86	SCREW DIN912	8
021	901.08000.33	GREASER DIN71412-A	2
022	902.08000.33	GREASER DIN71412-C	4

https://truckmanualshub.com/

TRANSMISSION (REAR AXLE)

REAR AXLE (PART 3)

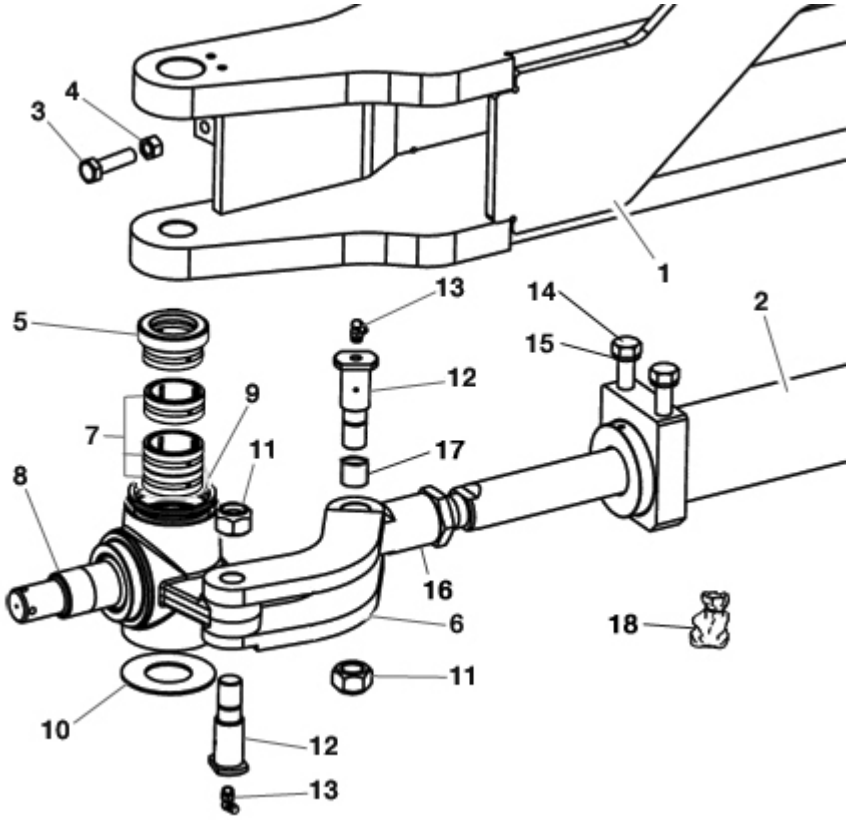

FIGURA	REFERENCIA	DENOMINACIÓN	CANTIDAD
001	30.03561.00	STEERING AXLE FRAME	1
002	30.03562.00	CYLINDER D.70 C.140 L.881	1
003	603.12045.86	SCREW DIN933	2
004	701.12000.66	NUT	2
005	331.40032.00	BEARING DIN5429 NKXR40-Z-A	2
006	30.03570.00	CON ROD D20-25X190	2
007	327.40020.00	BEARING DIN5412 RNA49/32	6
008	30.03571.00	LEFT STUB AXLE D82X203X122	1
008	30.03572.00	RIGHT STUB AXLE D82X203X122	1
009	219.58070.50	RING 58x68x7	2
010	30.03543.00	WASHER Ø41x82 H2	2
011	720.20000.66	NUT DIN985 M20x1.5	4
012	30.03521.00	SHAFT D25X84	4
013	902.08000.33	GREASER DIN71412-C	4
014	20.03708.00	SCREW DIN931*	4
015	104.14000.00	CIR-CLIP EXT. DIN7980	4
016	30.03522.00	SPINDLE HEAD M30X1.5-D45X95	2
017	949.02530.00	BUSHING 25x28x30 DIN 1494	2

https://truckmanualshub.com/

TRANSMISSION (REAR AXLE)
REAR AXLE (PART 3)

FIGURA	REFERENCIA	DENOMINACIÓN	CANTIDAD
018	30.03581.00	GASKET SET, STEERING CYLINDER	1

https://truckmanualshub.com/

TRANSMISSION (REAR AXLE)

REAR AXLE (PART 3)

BASTIDOR: 65171

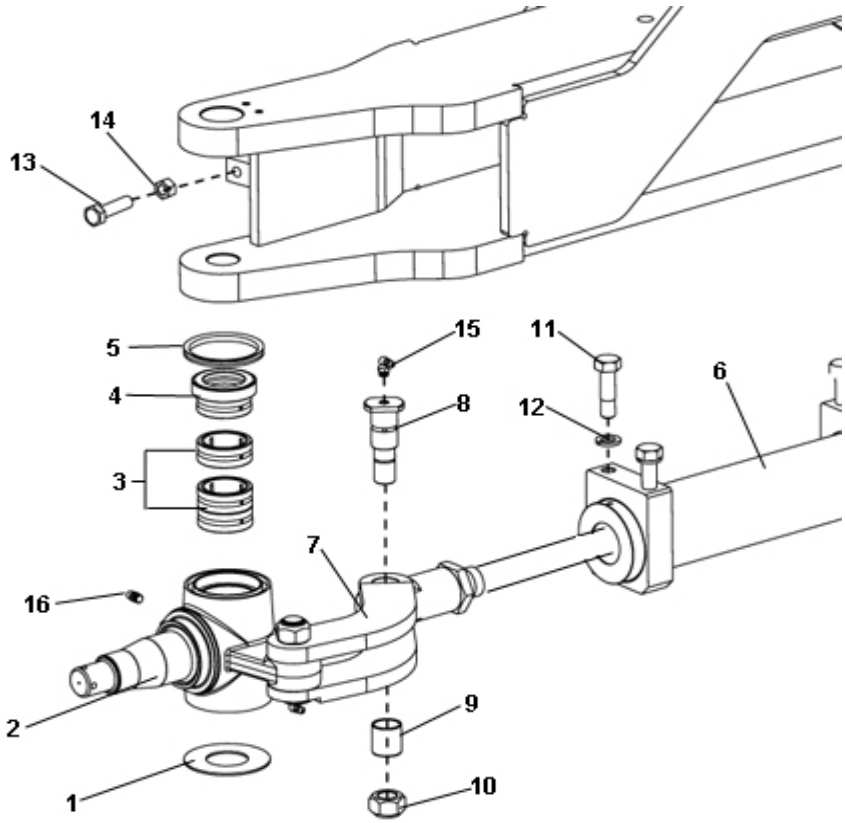

FIGURA	REFERENCIA	DENOMINACIÓN	CANTIDAD
001	30.03543.00	WASHER Ø41x82 H2	2
002	30.03572.01	RIGHT STUB AXLE D82X203X122	1
002	30.03571.01	LEFT STUB AXLE D82X203X122	1
003	327.40020.00	BEARING DIN5412 RNA49/32	2
004	331.40032.00	BEARING DIN5429 NKXR40-Z-A	2
005	219.58070.50	RING 58x68x7	2
006	30.03562.00	CYLINDER D.70 C.140 L.881	1
007	30.03570.00	CON ROD D20-25X190	4
008	30.03521.01	SHAFT D25X84	4
009	949.02530.00	BUSHING 25x28x30 DIN 1494	4
010	720.20000.66	NUT DIN985 M20x1.5	4
011	20.03708.00	SCREW DIN931*	4
012	104.14000.00	CIR-CLIP EXT. DIN7980	4
013	603.12045.86	SCREW DIN933	2
014	701.12000.66	NUT	2
015	902.08000.33	GREASER DIN71412-C	2
016	901.08000.33	GREASER DIN71412-A	2

https://truckmanualshub.com/

TRANSMISSION (REAR AXLE)

REAR AXLE (PART 3)

BASTIDOR: 67458

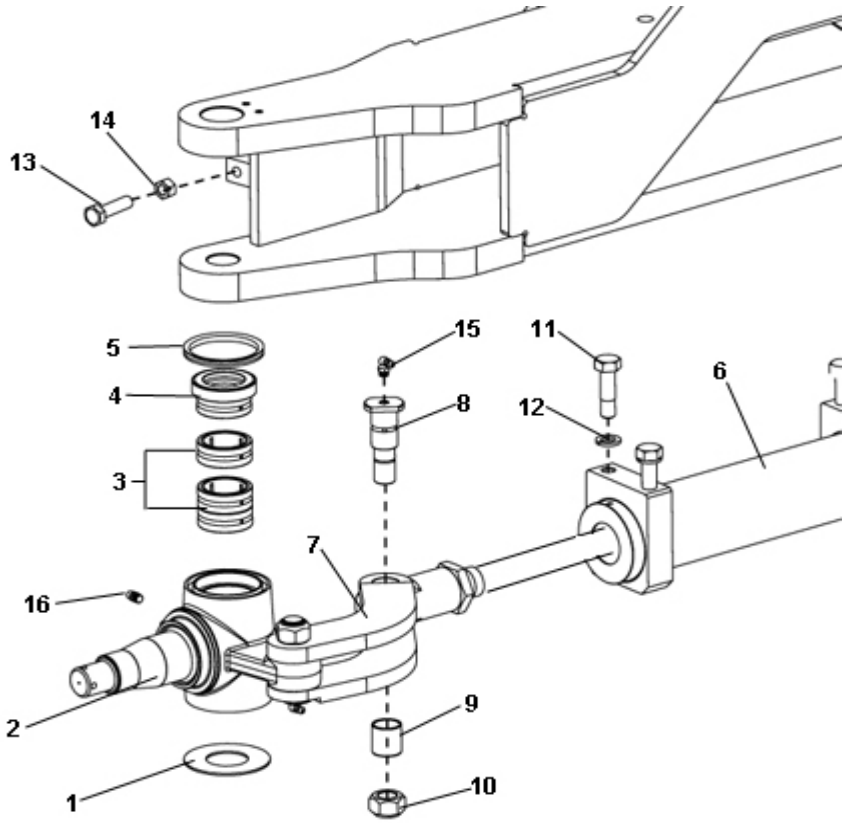

FIGURA	REFERENCIA	DENOMINACIÓN	CANTIDAD
001	30.03543.00	WASHER Ø41x82 H2	2
002	30.03572.01	RIGHT STUB AXLE D82X203X122	1
002	30.03571.01	LEFT STUB AXLE D82X203X122	1
003	327.40020.00	BEARING DIN5412 RNA49/32	2
004	331.40032.00	BEARING DIN5429 NKXR40-Z-A	2
005	219.58070.50	RING 58x68x7	2
006	30.03562.00	CYLINDER D.70 C.140 L.881	1
007	30.03570.00	CON ROD D20-25X190	4
008	30.03521.01	SHAFT D25X84	4
009	949.02530.00	BUSHING 25x28x30 DIN 1494	4
010	720.20000.66	NUT DIN985 M20x1.5	4
011	30.03516.00	SCREW DIN931 M14X58 ESP	4
012	104.14000.00	CIR-CLIP EXT. DIN7980	4
013	603.12045.86	SCREW DIN933	2
014	701.12000.66	NUT	2
015	902.08000.33	GREASER DIN71412-C	2
016	901.08000.33	GREASER DIN71412-A	2

https://truckmanualshub.com/

TRANSMISSION (REAR AXLE)

REAR AXLE (PART 3)

BASTIDOR: 72188

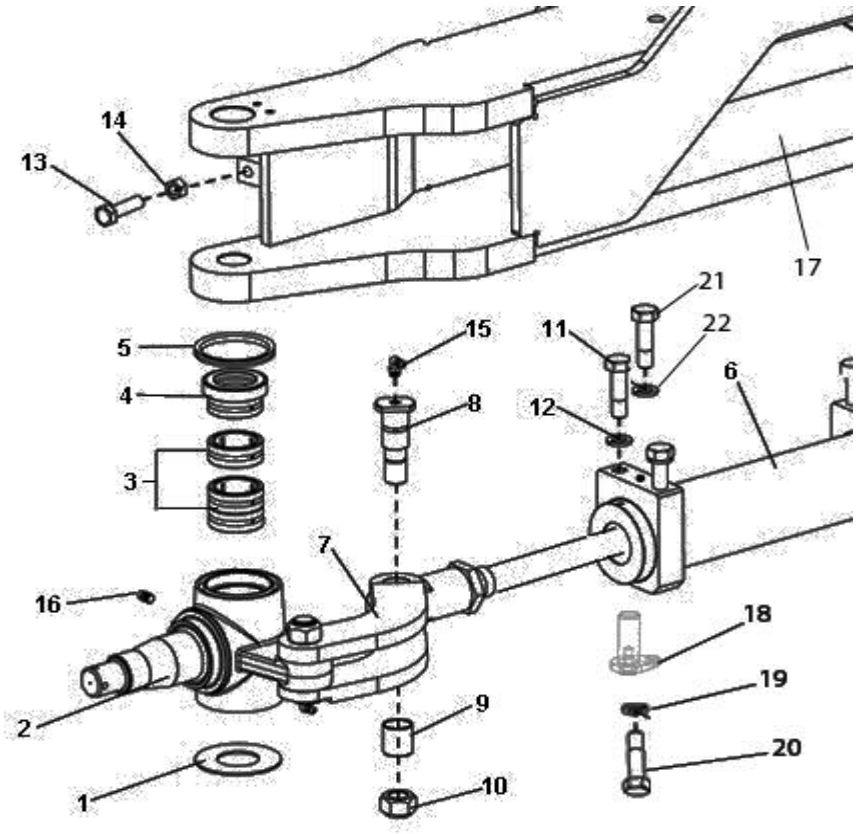

FIGURA	REFERENCIA	DENOMINACIÓN	CANTIDAD
001	30.03543.00	WASHER Ø41x82 H2	2
002	30.03572.01	RIGHT STUB AXLE D82X203X122	1
002	30.03571.01	LEFT STUB AXLE D82X203X122	1
003	327.40020.00	BEARING DIN5412 RNA49/32	2
004	331.40032.00	BEARING DIN5429 NKXR40-Z-A	2
005	219.58070.50	RING 58x68x7	2
006	30.03562.02	CYLINDER D.70 C.77+77 L.881	1
007	30.03570.00	CON ROD D20-25X190	4
008	30.03521.01	SHAFT D25X84	4
009	949.02530.00	BUSHING 25x28x30 DIN 1494	4
010	720.20000.66	NUT DIN985 M20x1.5	4
011	30.03504.00	SCREW DIN931 M14X1,5X52	4
012/022	104.16000.00	CIR-CLIP EXT. DIN7980	6
013	603.12045.86	SCREW DIN933	2
014	701.12000.66	NUT	2
015	902.08000.33	GREASER DIN71412-C	2
016	901.08000.33	GREASER DIN71412-A	2
017	30.03561.01	STEERING AXLE FRAME	1

https://truckmanualshub.com/

TRANSMISSION (REAR AXLE)

REAR AXLE (PART 3)

BASTIDOR: 72188

FIGURA	REFERENCIA	DENOMINACIÓN	CANTIDAD
018	30.03506.00	PUSHPIN WITH PLATE	2
019	104.06000.00	CIR-CLIP EXT. DIN7980	2
020	603.06015.86	SCREW DIN933	2
021	30.03505.00	SCREW DIN931 M14X1,5X52	2

https://truckmanualshub.com/

TRANSMISSION (REAR AXLE)
STEERING CYLINDER MOUNTING

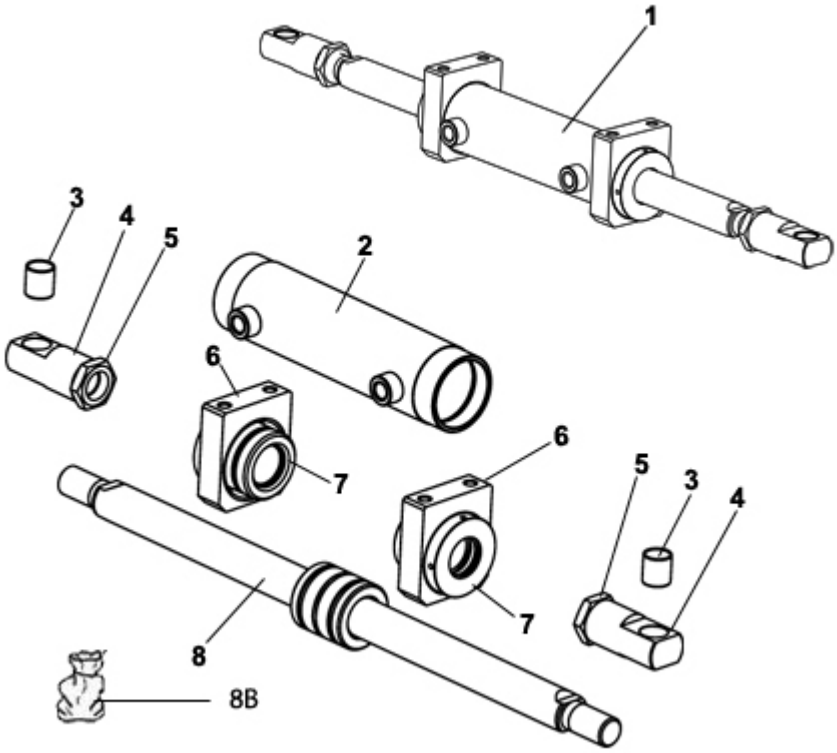

FIGURA	REFERENCIA	DENOMINACIÓN	CANTIDAD
001	30.03562.00	CYLINDER D.70 C.140 L.881	1
002	30.03575.00	cilindre body	1
003	949.02530.00	BUSHING 25x28x30 DIN 1494	2
004	30.03522.00	SPINDLE HEAD M30X1.5-D45X95	2
005	702.30000.66	NUT	2
006	30.03579.00	tube guide sup. 30X108.5X93	2
007	30.03577.00	guide D70XD83X67	2
008	30.03566.01	AXLE	2
008B	30.03581.00	GASKET SET, STEERING CYLINDER	1

https://truckmanualshub.com/

TRANSMISSION (REAR AXLE)

STEERING CYLINDER MOUNTING

BASTIDOR: 72188

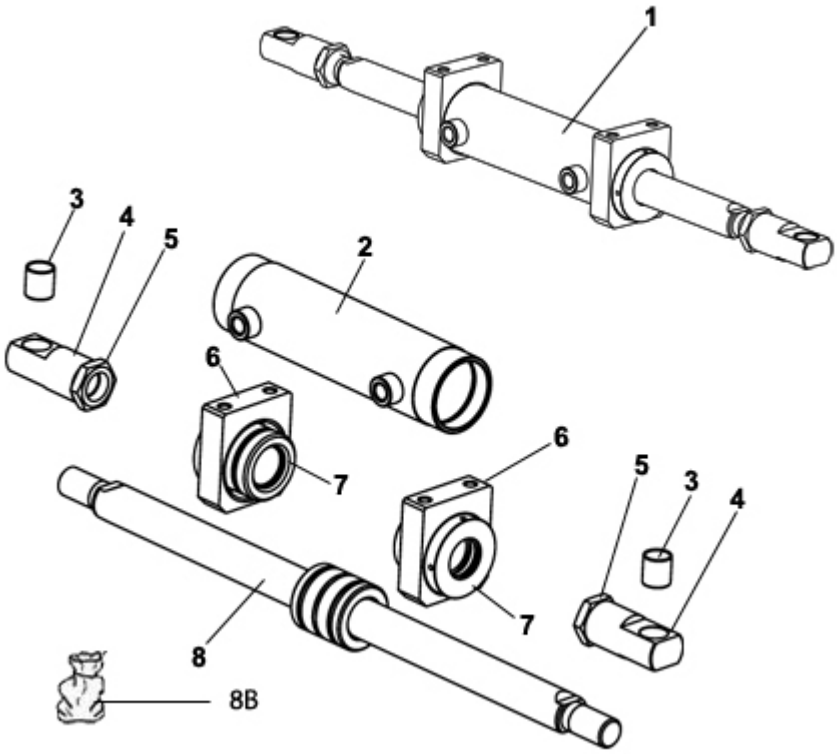

FIGURA	REFERENCIA	DENOMINACIÓN	CANTIDAD
001	30.03562.02	CYLINDER D.70 C.77+77 L.881	1
002	30.03530.00	CILINDRE BODY	1
003	949.02530.00	BUSHING 25x28x30 DIN 1494	2
004	30.03522.00	SPINDLE HEAD M30X1.5-D45X95	2
005	702.30000.66	NUT	2
006	30.03579.01	TUBE GUIDE SUP. 30X108.5X93	2
007	30.03525.00	GUIDE D70XD83X67	2
008	30.03566.01	AXLE	1
008B	30.03581.00	GASKET SET, STEERING CYLINDER	1

https://truckmanualshub.com/

CHASSIS
CHASSIS

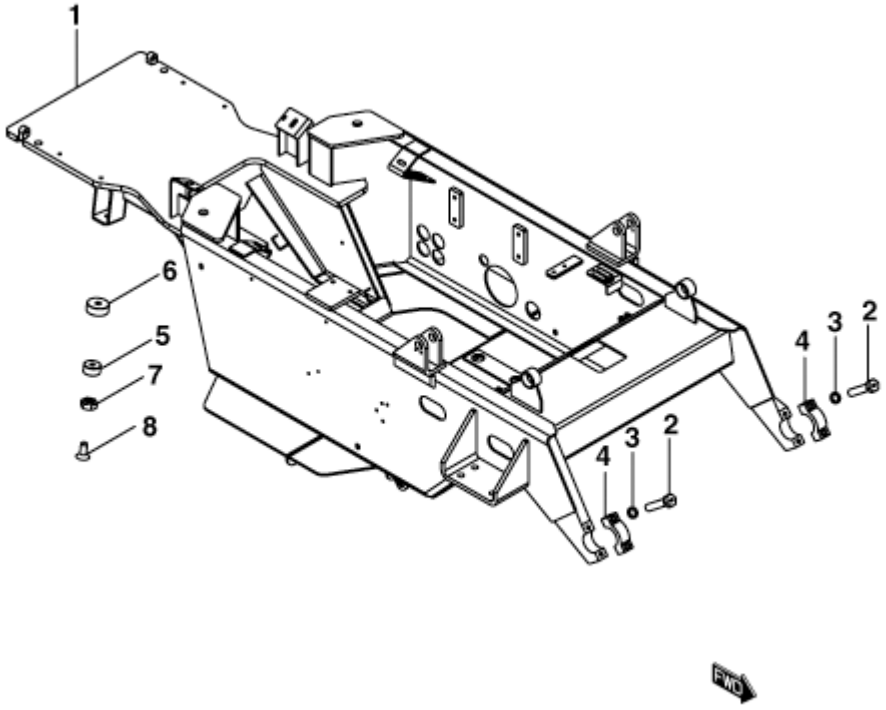

FIGURA	REFERENCIA	DENOMINACIÓN	CANTIDAD
001	30.04000.00	FRAME 724x1234x2960	1
002	604.12060.96	BOLT DIN931 M12x60 12K	4
003	104.12000.00	CIR-CLIP EXT. DIN7980	4
004	30.04006.00	MAST CLAMP 40X53X130	2
005	20.03002.00	BUTT	2
006	20.03003.00	SHOCK ABSORVER SUPPORT	2
007	701.16000.66	NUT	2
008	618.16030.86	SCREW DIN7991	2

https://truckmanualshub.com/

CHASSIS
MAST BUSH

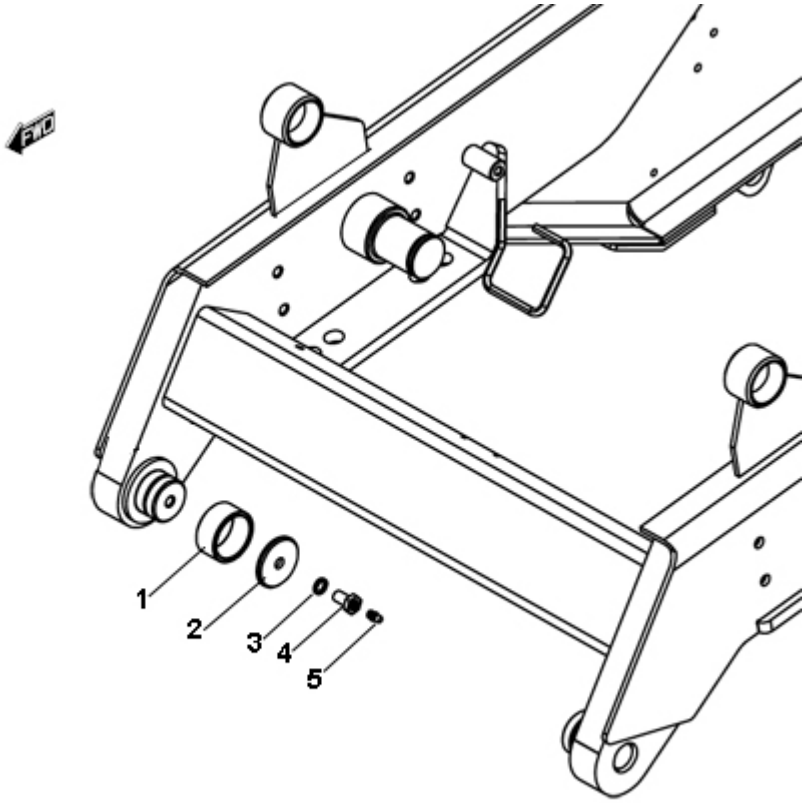

FIGURA	REFERENCIA	DENOMINACIÓN	CANTIDAD
001	30.09020.00	RING D70XD60X40	2
002	30.09021.00	CAP D69XD12.5X5	2
003	104.12000.00	CIR-CLIP EXT. DIN7980	2
004	10.01318.00	CYLINDER ROD HEAD	2
005	902.08000.33	GREASER DIN71412-C	2

https://truckmanualshub.com/

OPERATION BRAKE
FOOT BRAKE

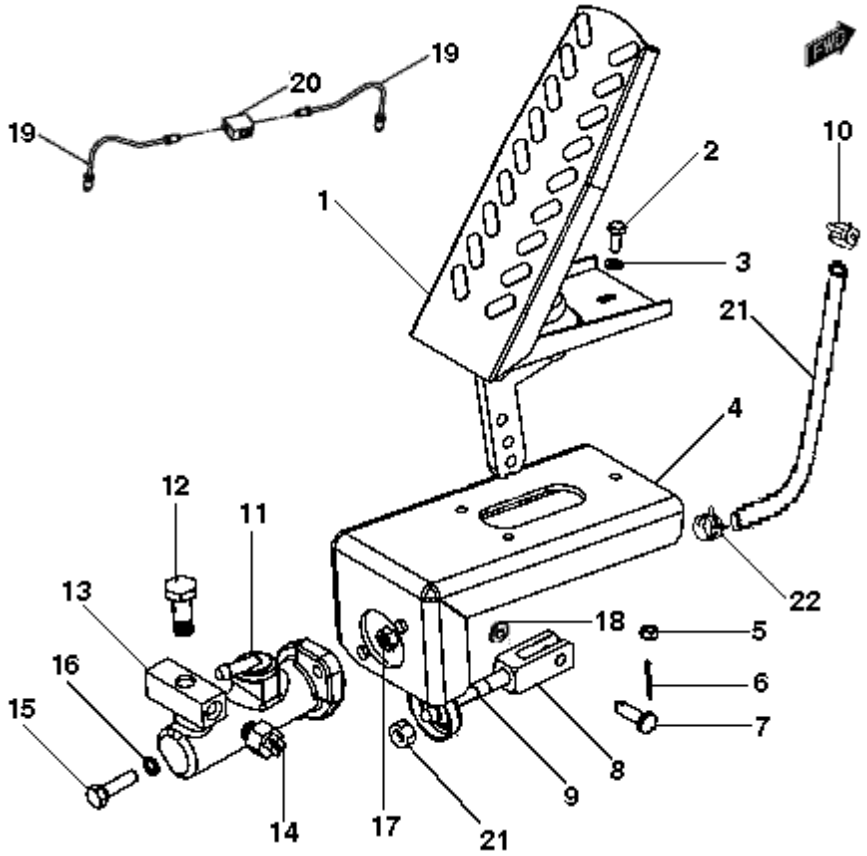

FIGURA	REFERENCIA	DENOMINACIÓN	CANTIDAD
001	43.80251.00	BRAKE PEDAL	1
002	604.08030.86	SCREW DIN931	3
003	104.06000.00	CIR-CLIP EXT. DIN7980	3
004	20.05225.01	BRAKE PUMP SUPPORT	1
005	701.06000.66	NUT	3
006	401.02025.60	PIN	1
007	01.00514.01	AXLE CIL/CPA	1
008	20.05040.00	ART. FORK	1
009	57.05011.00	ROD STRAIGHT	1
010	912.09000.66	CLAMP	2
011	57.05010.00	BRAKE PUMP	1
012	43.70757.00	NIPPLE SCREW SIM.	1
013	20.05055.00	NIPPLE O/H/H	1
014	43.01520.00	BRAKE LIGHT SWITCH	1
015	603.08030.86	SCREW DIN933 M8X30	2
016	104.08000.00	CIR-CLIP EXT. DIN7980	2
017	701.08000.66	NUT DIN934 M8x1,25	2
018	112.08000.66	CIR-CLIP INT. DIN9021 D8	1

https://truckmanualshub.com/

OPERATION BRAKE
FOOT BRAKE

FIGURA	REFERENCIA	DENOMINACIÓN	CANTIDAD
019	64.05128.00	HYDRAULIC STEEL PIPE, BUNDY 4 200X100	2
020	30.05001.00	FITTING H/H/H M12/M12/M12X1.5 FR	1
021	469.15009.00	PLASTIC HOSE 6X9	1

https://truckmanualshub.com/

OPERATION BRAKE
FLUID RESERVOIR FREIN

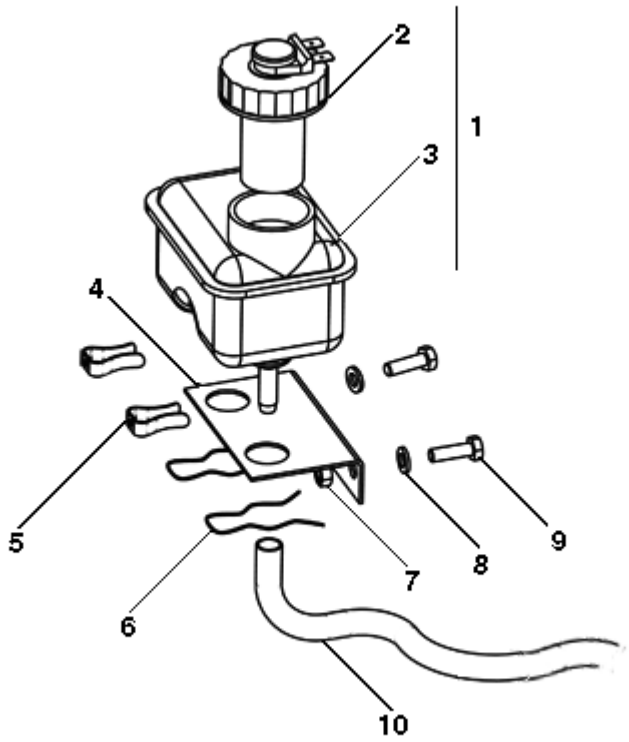

FIGURA	REFERENCIA	DENOMINACIÓN	CANTIDAD
001	46.05014.00	BRAKES FLUID TANK	1
002	46.05011.00	CAP	1
003	46.05020.00	BRAKE LIQUIDE TANK	1
004	46.05015.00	ANGULAR SUPPORT	1
005	948.00907.00	CLAMP SPRING D9	2
006	46.05016.00	CLIP	2
007	701.06000.66	NUT	2
008	104.08000.00	CIR-CLIP EXT. DIN7980	2
009	469.15009.00	PLASTIC HOSE 6X9	1

https://truckmanualshub.com/

STEERING
DIRECTION COLUMN

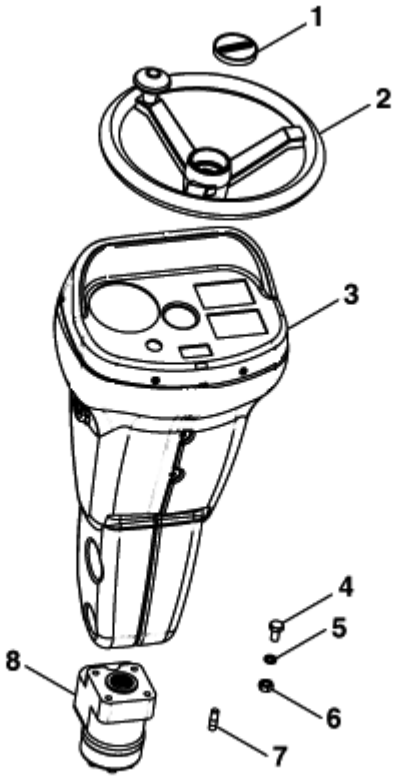

FIGURA	REFERENCIA	DENOMINACIÓN	CANTIDAD
001	00.00626.03	TRIM	1
002	15.01016.01	WHEEL STEERING	1
003	12.06020.01	COLUMNA DIREC.	1
004	603.10020.86	SCREW DIN933	4
005	104.10000.00	CIR-CLIP EXT. DIN7980	8
006	701.10000.66	NUT DIN934 M10X1,5	4
007	15.00435.01	STUD DIN938*	4
008	43.70613.01	STEERING VALVE	1

https://truckmanualshub.com/

STEERING

DIRECTION COLUMN

BASTIDOR: 63368

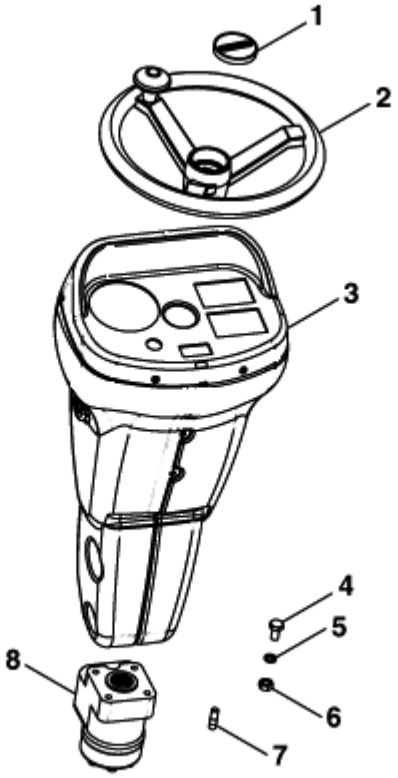

FIGURA	REFERENCIA	DENOMINACIÓN	CANTIDAD
001	00.00626.05	TRIM	1
002	15.01016.01	WHEEL STEERING	1
003	12.06020.01	COLUMNA DIREC.	1
004	603.10020.86	SCREW DIN933	4
005	104.10000.00	CIR-CLIP EXT. DIN7980	8
006	701.10000.66	NUT DIN934 M10X1,5	4
007	15.00435.01	STUD DIN938*	4
008	43.70613.01	STEERING VALVE	1

https://truckmanualshub.com/

STEERING
STEERING (PART 1)

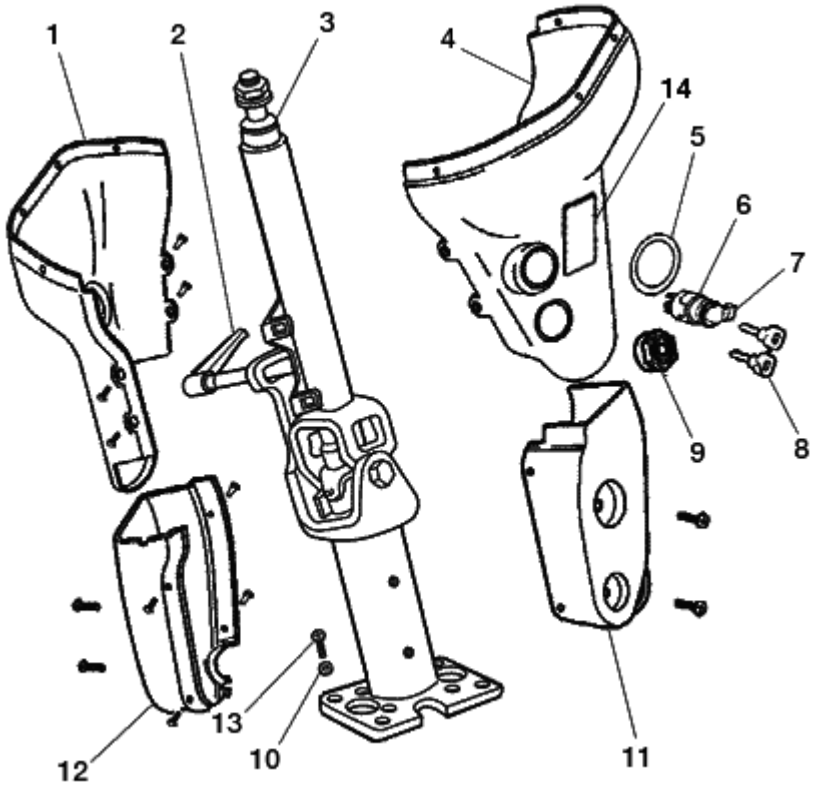

FIGURA	REFERENCIA	DENOMINACIÓN	CANTIDAD
001	12.11026.00	TAPA. IZQ. COLUMNA	1
002	IM.20041.00	LEVER	1
003	12.11037.00	COLUMNA DIREC.	1
004	12.11027.00	TAPA. DCHA. COLUMNA	1
005	12.11042.00	INDICADOR ARRANQUE	1
006	IM.20024.00	SWITCH	1
007	12.11034.00	PROTECTOR CONMUT. ARRANQUE	1
008	IM.20032.00	KEY	1
009	12.11033.00	HORN KPE650	1
010	104.10000.00	CIR-CLIP EXT. DIN7980	4
011	12.11029.00	TAPA. DCHA. PIE COLUMNA	1
012	12.11028.00	TAPA. IZQ. PIE COLUMNA	1
013	603.10020.86	SCREW DIN933	4
014	IM.20022.00	FUSE BOX	1

https://truckmanualshub.com/

STEERING
STEERING (PART 2)

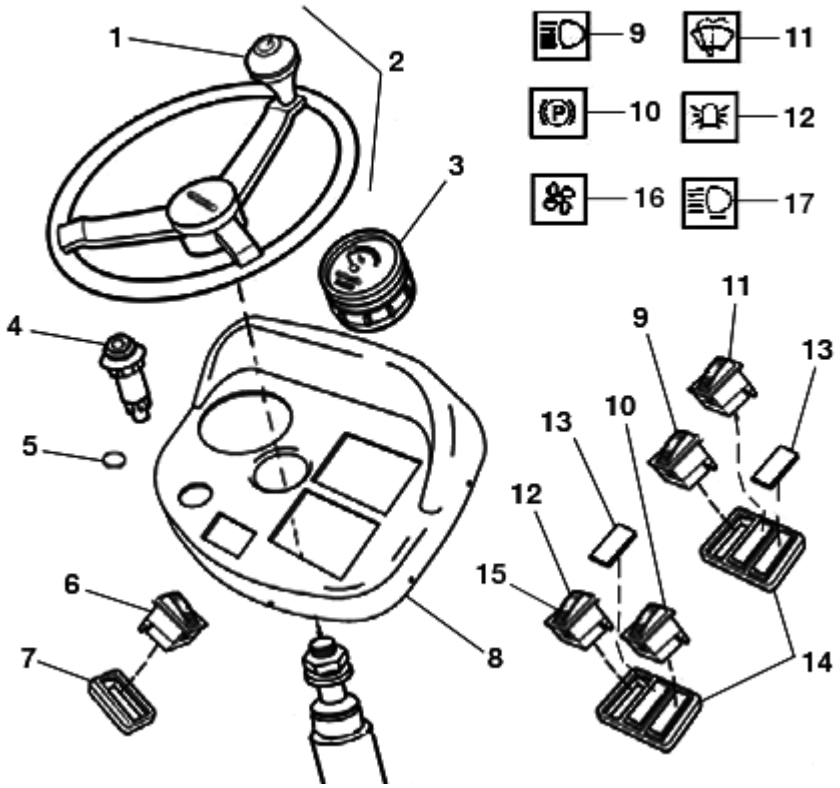

FIGURA	REFERENCIA	DENOMINACIÓN	CANTIDAD
001	15.10161.01	KNOB	1
002	15.01016.01	WHEEL STEERING	1
003	12.11023.00	INDICADOR D.100 9 ESPIAS	1
004	12.11015.00	SWITCH	1
005	12.11038.00	TAPON. D.30	1
006	12.11016.00	FLASHER	1
008	12.11025.00	TABLIER SOPORTE	1
009	12.11017.00	SWITCH	1
010	57.11008.00	HAND BRAKE SWITCH	1
011	12.11014.00	SWITCH	1
012	12.11031.00	INTERRUPTOR IP67	1
013	12.11024.00	CAP	6
014	12.11030.00	SOP. FIJACION INTERRUPTOR	2
015	12.11043.00	GLASS	1
016	12.11020.00	SWITCH	1
017	IM.20016.00	SWITCH	1

https://truckmanualshub.com/

STEERING
STEERING (PART 4)

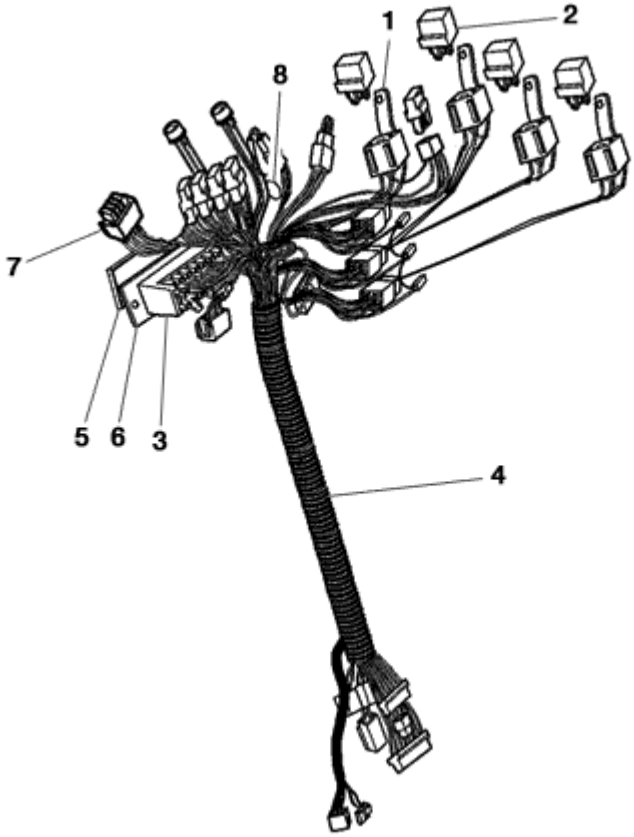

FIGURA	REFERENCIA	DENOMINACIÓN	CANTIDAD
001	IM.20025.00	Flasher relay	1
002	IM.20026.00	RELAY	1
003	IM.20022.00	FUSE BOX	1
004	12.11003.01	TRAMO I/E COLUMNA	1
005	IM.20033.00	COVER	1
006	IM.20023.00	FIXING SUPPORT	1
007	IM.20042.00	CAJA. DIODOS 12 VIAS	1

https://truckmanualshub.com/

WHEEL
FRONT WHEELS

FIGURA	REFERENCIA	DENOMINACIÓN	CANTIDAD
001	30.07020DE00	FULL RIGHT WHEEL 18-19.5	1
001	30.07020IZ00	FULL LEFT WHEEL 18-19.5	1
002	30.07021.00	TIRE TT 18-19.5 16 PR	2
003	30.07022.00	RIM 13.00X19.5	2
004	70.07024.00	VALVE, TUBELESS TR575	2

https://truckmanualshub.com/

WHEEL
REAR WHEELS

FIGURA	REFERENCIA	DENOMINACIÓN	CANTIDAD
001	30.07025.00	FULL WHEEL 8.15-15	2
002	30.07026.00	TIRE LS 8.15-15 14 PR	2
003	30.07028.00	TUBE 8.15-15 TR75 A	2
004	30.07029.00	FLAP 8.15-15	2
005	30.07027.00	WHEEL 6.5X15	2

https://truckmanualshub.com/

BODY
ENGINE COVER

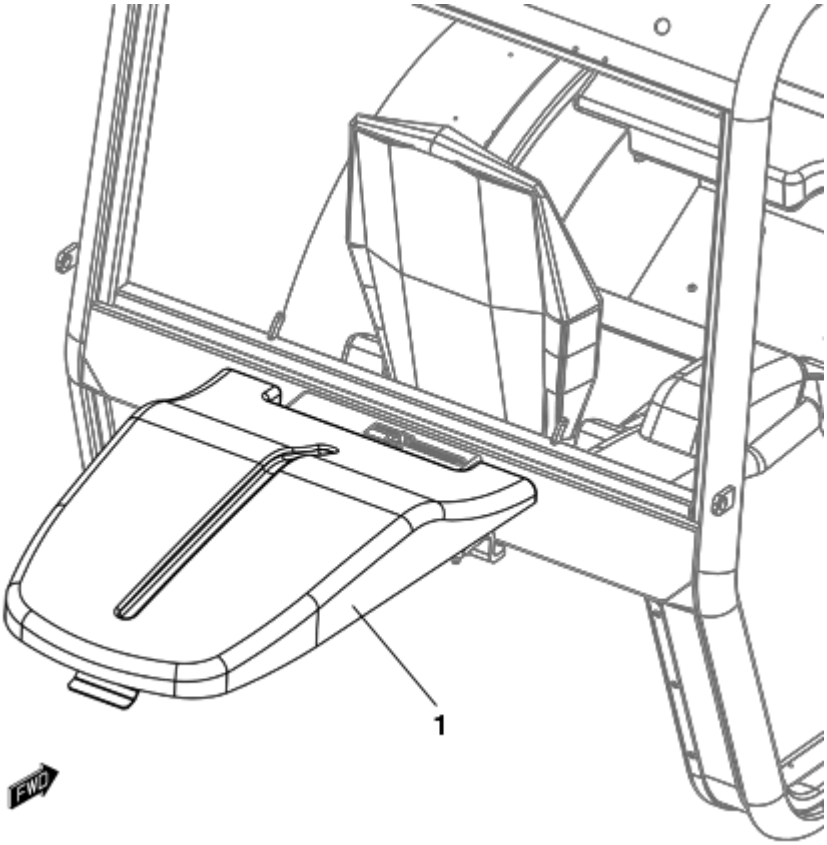

FIGURA	REFERENCIA	DENOMINACIÓN	CANTIDAD
001	30.08014.00	COUNTERWEIGHT COVER 114X535X773	1

https://truckmanualshub.com/

BODY
FRONT SHEETS

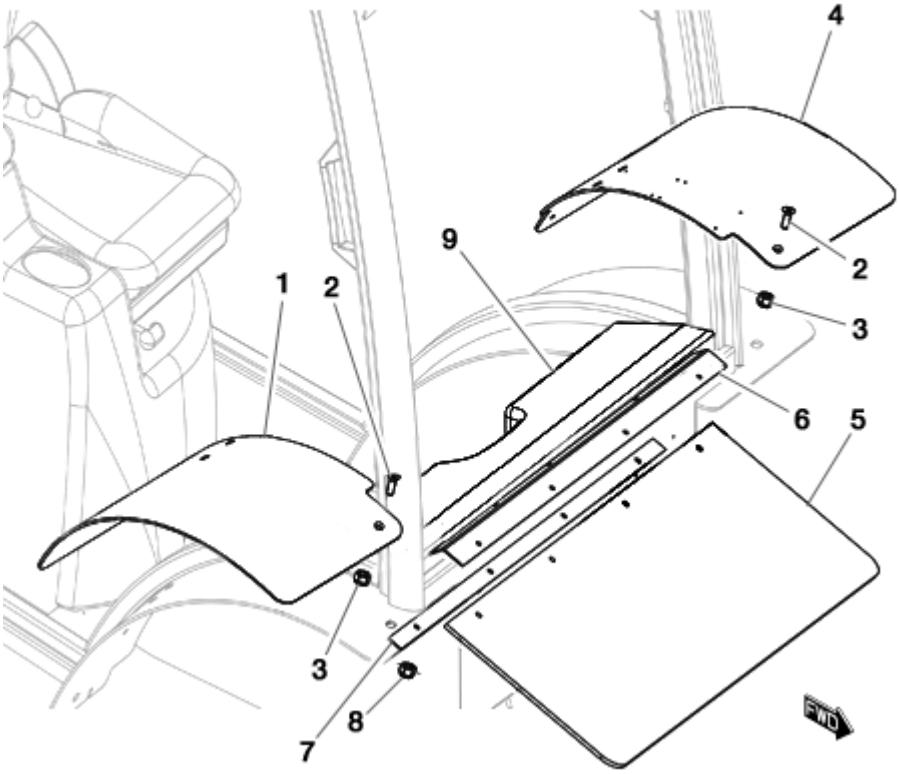

FIGURA	REFERENCIA	DENOMINACIÓN	CANTIDAD
001	57.08060.00	SUPPLEMENT	1
002	618.08025.86	SCREW DIN7991	8
003	711.08000.66	NUT	8
004	57.08061.00	SUPPLEMENT	1
005	30.08030.00	GUARD 5X290X796	1
006	30.08031.00	BRACKET ANG. 2X50X790	1
007	30.08032.00	STRIP SUPPORT 2X20X790	1
008	711.05000.66	NUT	3
009	57.08008.00	SUPPORT COVER	1

https://truckmanualshub.com/

BODY
ENGINE PROTECTOR

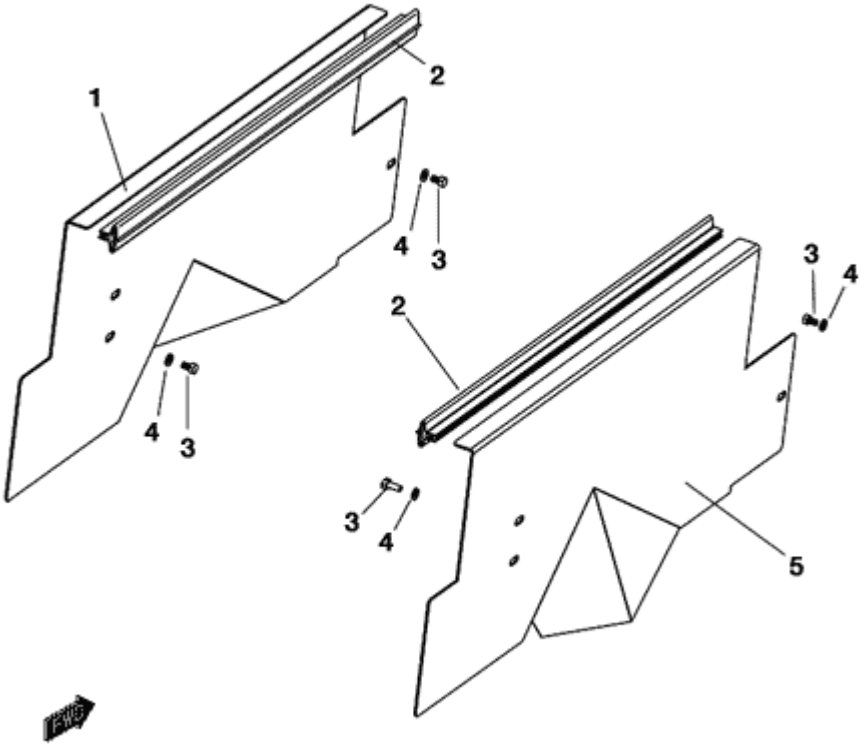

FIGURA	REFERENCIA	DENOMINACIÓN	CANTIDAD
001	30.08020.00	LEFT ENGINE PROTECTOR 2X292X777	1
002	472.00411.00	RUBBER PROFILE MAT.	2
003	603.06015.86	SCREW DIN933	4
004	101.06000.66	WASHER DIN125 D6	4
005	30.08021.00	RIGHT ENGINE PROTECTOR 2X292X777	1

https://truckmanualshub.com/

BODY
CAB SHUTTER

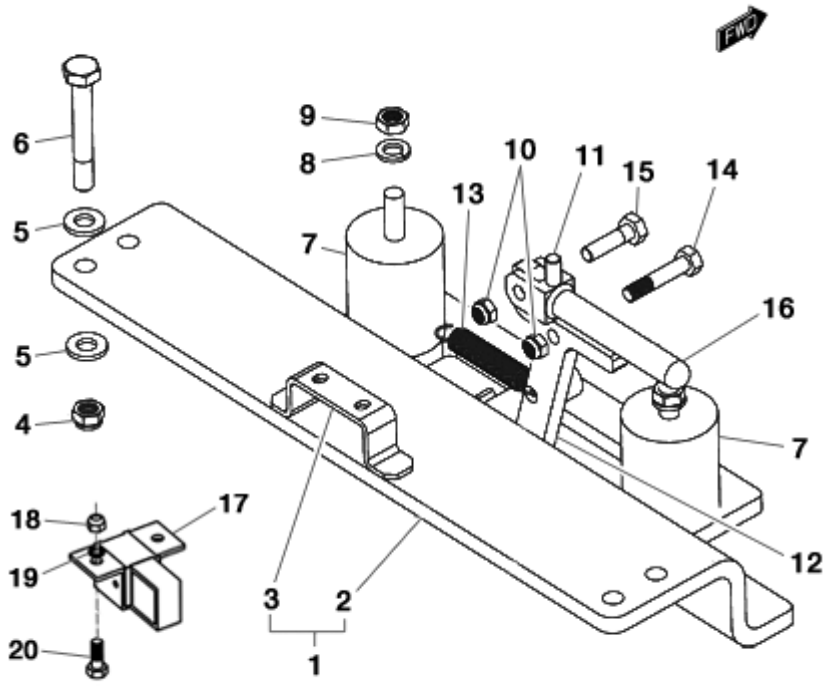

FIGURA	REFERENCIA	DENOMINACIÓN	CANTIDAD
001	30.08024.00	CABIN SUPPORT ASSY 63X196X430	1
002	30.08023.00	FIXING SUPPORT	1
003	57.08018.00	FIXING SUPPORT	1
004	711.10000.66	NUT	4
005	101.10000.66	WASHER DIN125	8
006	604.10070.86	BOLT DIN931 M10x70	4
007	08.00107.02	BUTT	2
008	104.10000.00	CIR-CLIP EXT. DIN7980	2
009	701.10000.66	NUT DIN934 M10X1,5	2
010	711.08000.66	NUT	2
011	57.08026.00	SHAFT	1
012	57.08023.00	PAWL	1
013	01.00223.00	SPRING TENSION	1
014	604.08040.86	SCREW DIN931	1
015	604.08030.86	SCREW DIN931	1
016	57.08024.00	ACC. LEVER	1
017	01.01925.00	LATCH	1
018	701.05000.66	NUT	2

https://truckmanualshub.com/

BODY
CAB SHUTTER

FIGURA	REFERENCIA	DENOMINACIÓN	CANTIDAD
019	104.05000.00	CIR-CLIP EXT. DIN7980	2
020	603.05015.86	SCREW DIN933	2

https://truckmanualshub.com/

BODY
SEAT

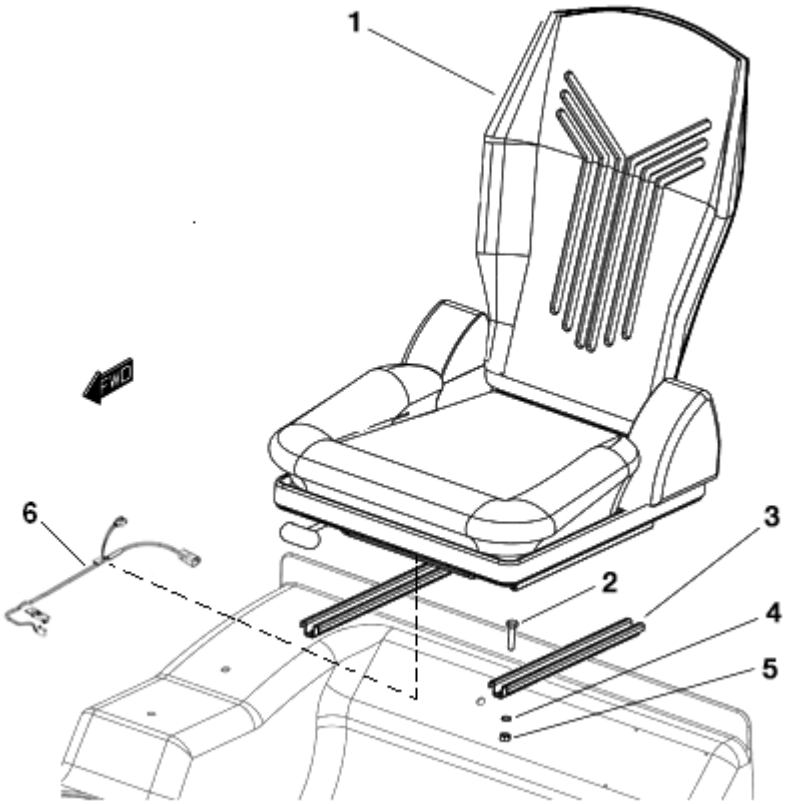

FIGURA	REFERENCIA	DENOMINACIÓN	CANTIDAD
001	57.08003.00	DRIVER SEAT	1
002	603.08035.86	SCREW DIN933	6
003	57.08072.00	SUPPORT	2
004	104.08000.00	CIR-CLIP EXT. DIN7980	6
005	701.08000.66	NUT DIN934 M8x1,25	6
006	57.08073.00	driver seat sensor	1

https://truckmanualshub.com/

BODY

SEAT

BASTIDOR: 69383

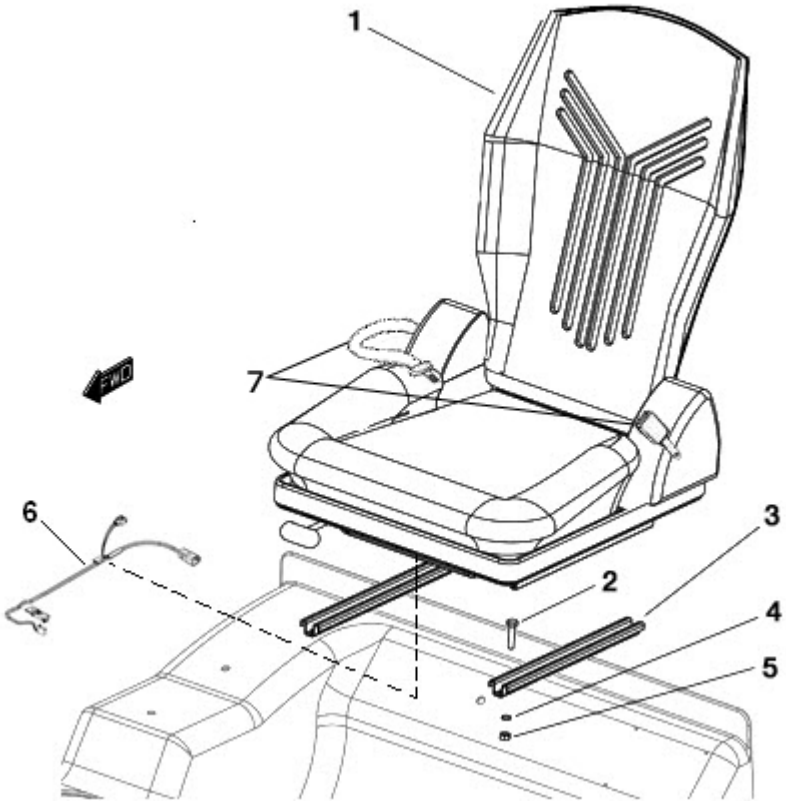

FIGURA	REFERENCIA	DENOMINACIÓN	CANTIDAD
001	57.08003.01	DRIVER SEAT	1
002	603.08035.86	SCREW DIN933	6
003	57.08072.00	SUPPORT	2
004	104.08000.00	CIR-CLIP EXT. DIN7980	6
005	701.08000.66	NUT DIN934 M8x1,25	6
006	57.08073.00	driver seat sensor	1
007	57.08003.91	SEAT BELT	1

https://truckmanualshub.com/

BODY
PROTECTEUR MOTEUR

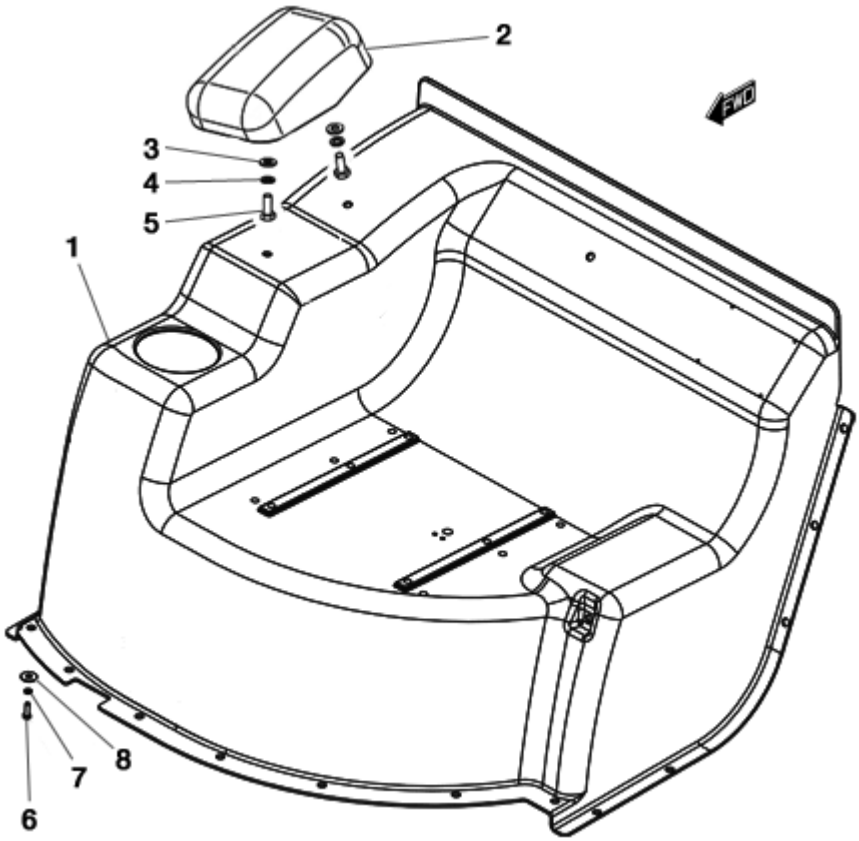

FIGURA	REFERENCIA	DENOMINACIÓN	CANTIDAD
001	12.08002.00	TRANS. GUARD TRANS. 625X820X924 (CH 250)	1
002	12.08003.00	COVERT	1
003	101.10000.66	WASHER DIN125	2
004	104.10000.00	CIR-CLIP EXT. DIN7980	2
005	603.10025.86	SCREW DIN933	2
006	603.06020.86	SCREW DIN933	19
007	104.06000.00	CIR-CLIP EXT. DIN7980	19
008	112.07000.66	WASHER DIN9021 Ø7	19

https://truckmanualshub.com/

BODY

PROTECTEUR MOTEUR

BASTIDOR: 67347

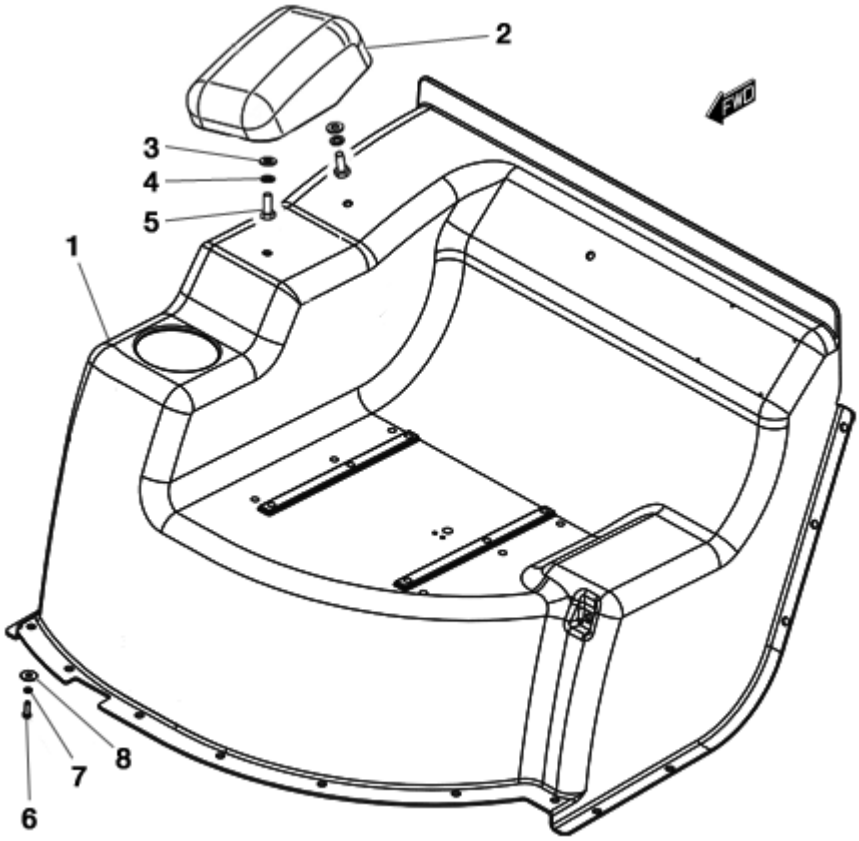

FIGURA	REFERENCIA	DENOMINACIÓN	CANTIDAD
001	12.08002.10	TRANS. PROT. 625X820X924	1
002	12.08003.00	COVERT	1
003	101.10000.66	WASHER DIN125	2
004	104.10000.00	CIR-CLIP EXT. DIN7980	2
005	603.10025.86	SCREW DIN933	2
006	603.06020.86	SCREW DIN933	19
007	104.06000.00	CIR-CLIP EXT. DIN7980	19
008	112.07000.66	WASHER DIN9021 Ø7	19

https://truckmanualshub.com/

BODY
CABIN SUPPORTS

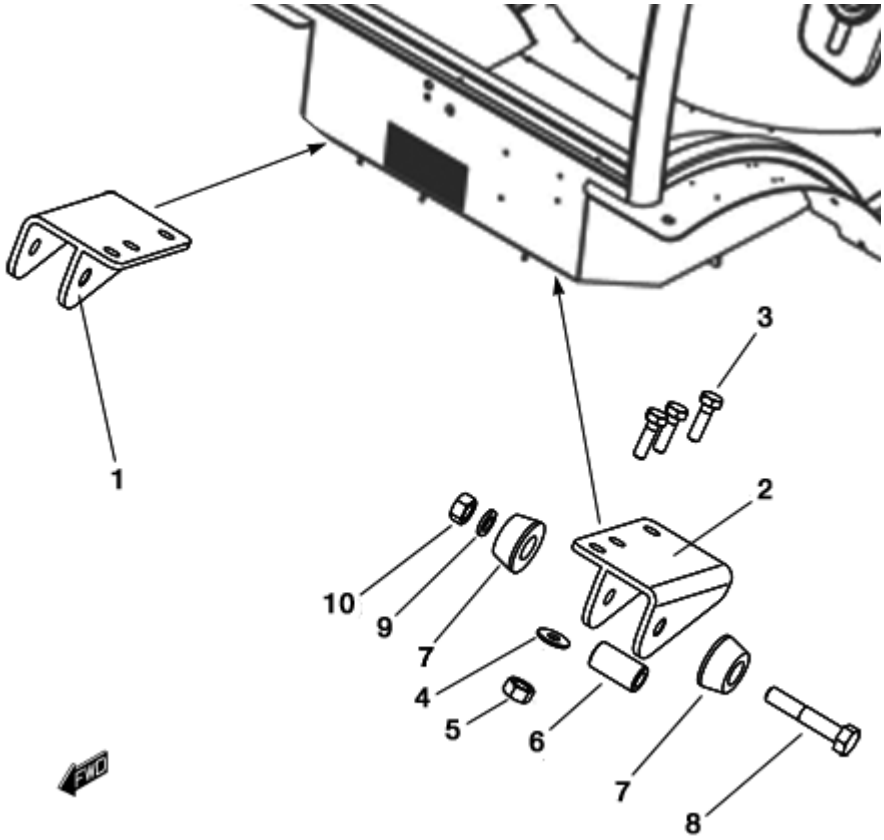

FIGURA	REFERENCIA	DENOMINACIÓN	CANTIDAD
001	20.08010.01	SUPPORT ART.	1
002	20.08009.01	SUPPORT ART.	1
003	604.10035.86	SCREW DIN931	6
004	112.10000.66	CIR-CLIP INT. DIN9021	6
005	711.10000.66	NUT	6
006	15.00114.00	BUSH	2
007	15.00113.00	SHOCK ABSORVER	4
008	604.14070.86	SCREW DIN931	2
009	104.14000.00	CIR-CLIP EXT. DIN7980	2
010	701.14000.66	NUT	2

https://truckmanualshub.com/

BODY
COUNTERWEIGHT

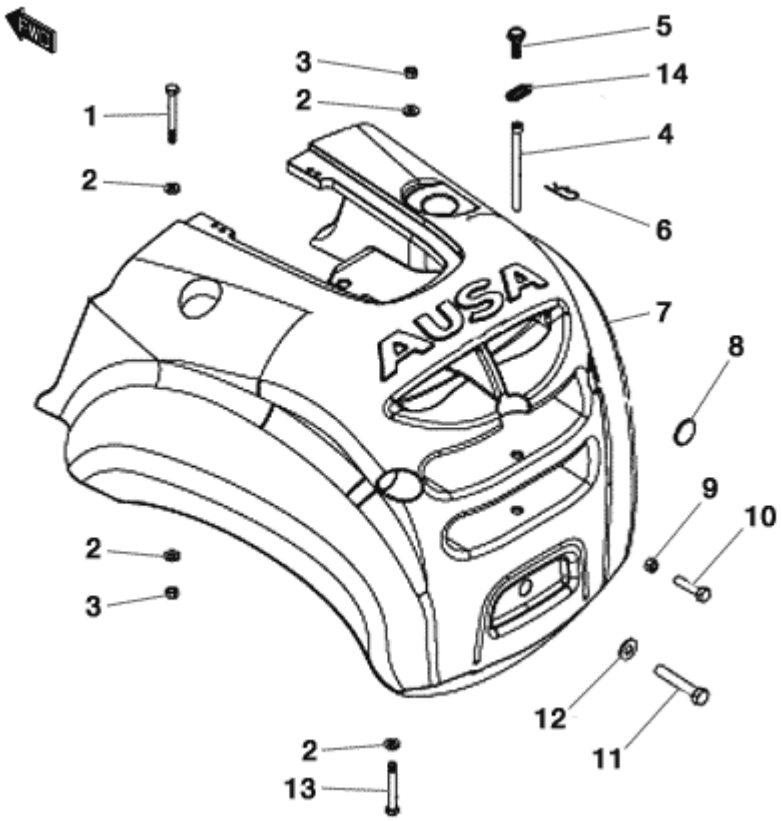

FIGURA	REFERENCIA	DENOMINACIÓN	CANTIDAD
001	604.20180.86	SCREW DIN931	2
002	15.00561.00	WASHER DIN125*	8
003	711.20000.66	NUT	4
004	30.08022.00	SHAFT	1
005	603.05015.86	SCREW DIN933	1
006	15.00836.00	PIN	1
007	30.08010.00	BALLAST WEIGHT 3600 KG	1
008	10.11017.00	RED REFLECTOR	2
009	701.12000.66	NUT	2
010	603.12050.86	SCREW DIN933	2
011	617.30220.86	BOLT DIN 960 M30x2x220	1
012	20.08030.00	WASHER	1
013	604.20160.86	SCREW DIN931	2
014	15.00834.00	CHAIN	1

https://truckmanualshub.com/

OPENED CAB

OPENED CAB (PART 1)

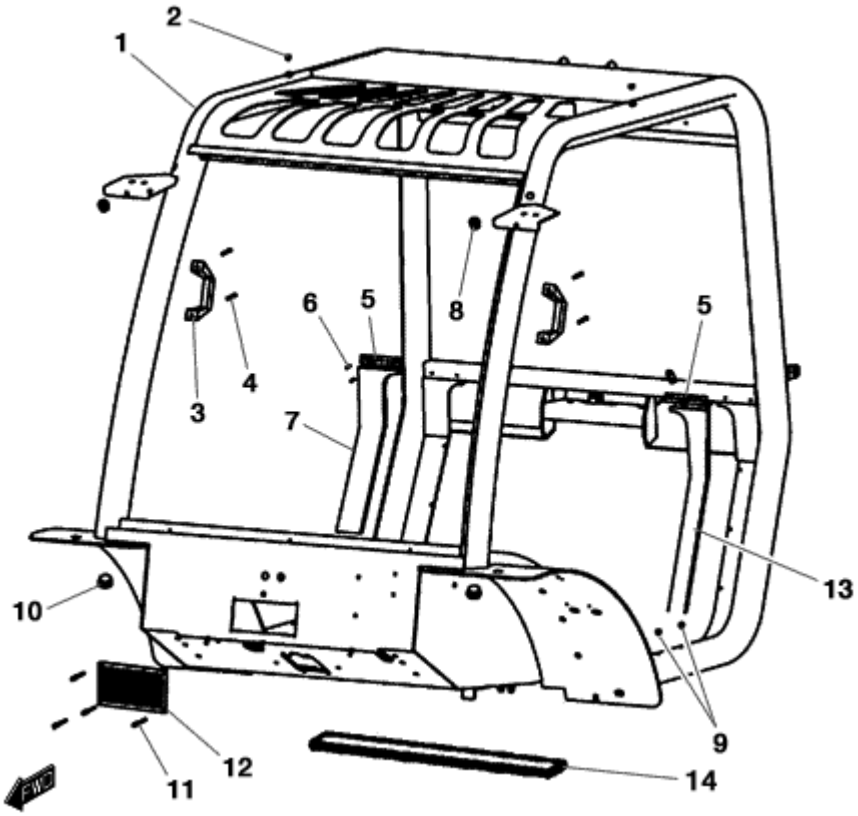

FIGURA	REFERENCIA	DENOMINACIÓN	CANTIDAD
001	57.08001.00	DRIVER PROTECTION	1
002	MA.20047.00	PLASTIC CAP	2
003	MA.10007.00	KNOB	2
004	624.06018.66	SCREW	4
005	MA.20081.00	REAR TRIMMING FIXATION SUPPORT	2
006	MA.20019.00	SCREW DIN7984	4
007	MA.20073.00	CARPET PANEL	1
008	MA.10025.00	GROMMET	3
009	MA.20048.00	PLASTIC CAP	8
010	MA.20046.00	CAP	2
011	502.03012.60	RIVET.	4
012	MA.20012.00	STRAINER	1
013	MA.20074.00	CARPET PANEL	1
014	MA.20013.00	LOWER REAR GASKET	1

https://truckmanualshub.com/

OPENED CAB

OPENED CAB (PART 2)

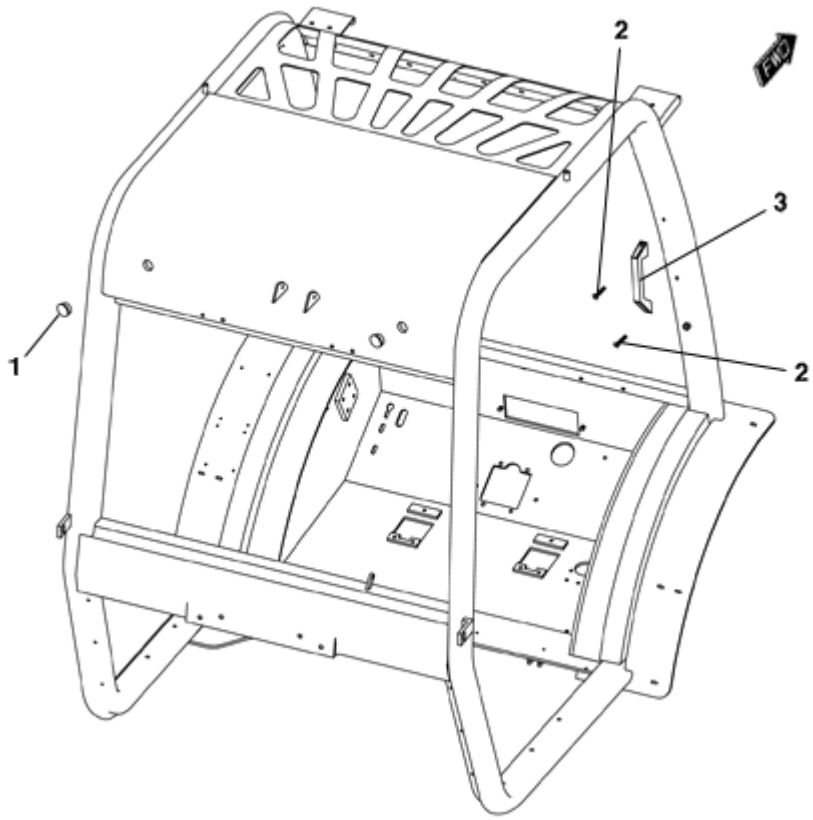

FIGURA	REFERENCIA	DENOMINACIÓN	CANTIDAD
001	MA.20049.00	CAP	2
002	624.06018.66	SCREW	4
003	MA.10007.00	KNOB	2

https://truckmanualshub.com/

OPENED CAB

OPENED CAB (PART 3)

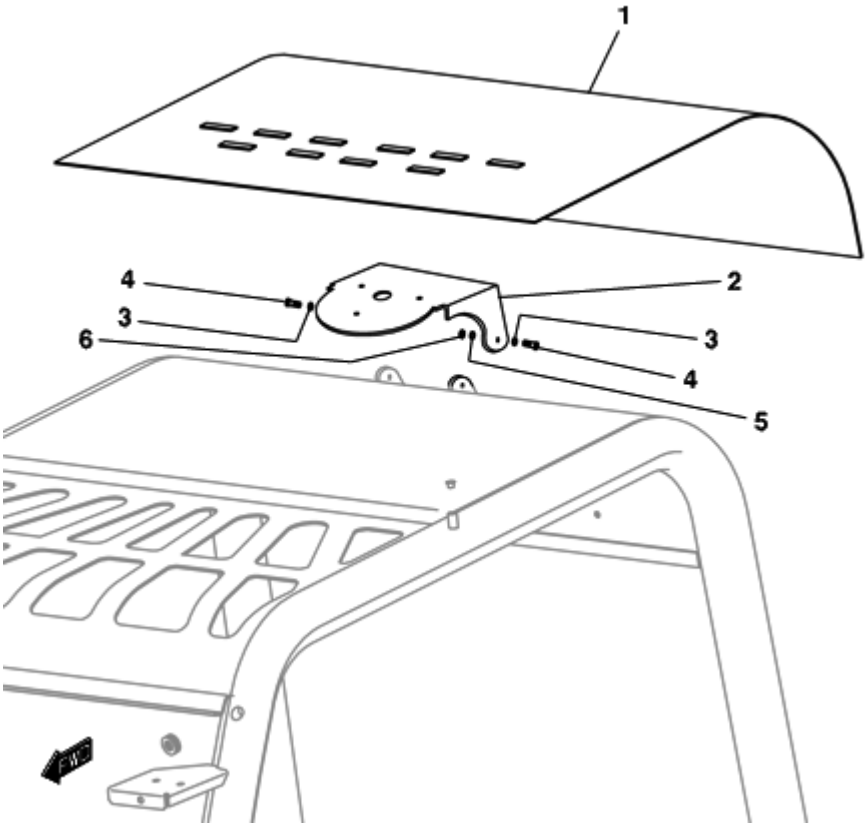

FIGURA	REFERENCIA	DENOMINACIÓN	CANTIDAD
002	70.08106.00	SUPPORT 170x150x2	1
003	112.08000.66	CIR-CLIP INT. DIN9021 D8	4
004	603.08025.86	SCREW DIN933 M8x25	2
005	116.08000.00	WASHER DIN125	2
006	720.08000.66	NUT	2

https://truckmanualshub.com/

OPENED CAB
REAR VIEW MIRRORS

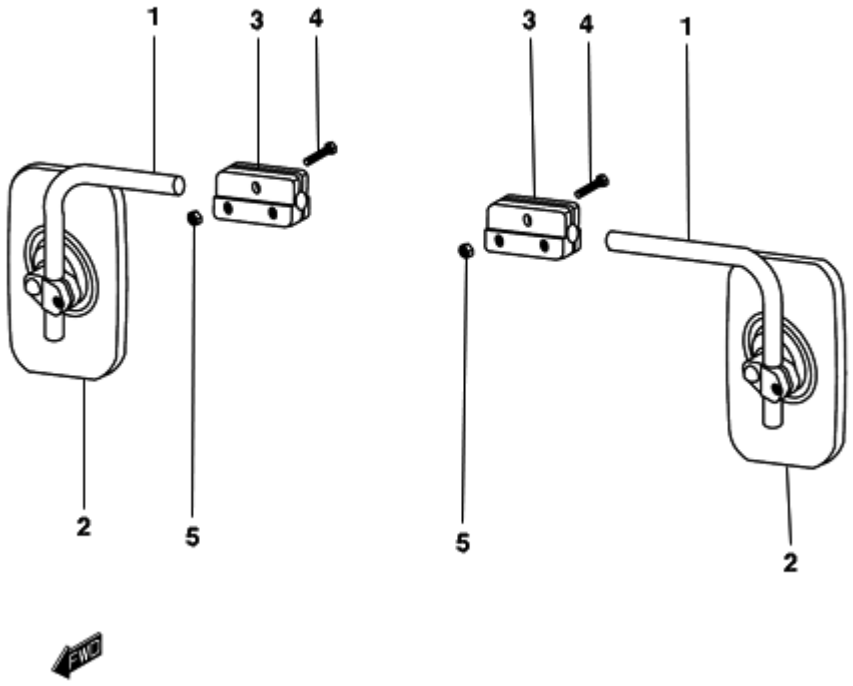

FIGURA	REFERENCIA	DENOMINACIÓN	CANTIDAD
001	MA.10022.00	FIXING SUPPORT	2
002	MA.10021.00	DRIVING MIRROR	2
003	MA.20045.00	FIXING SUPPORT	2
004	603.08035.86	SCREW DIN933	2
005	701.08000.66	NUT DIN934 M8x1,25	2

https://truckmanualshub.com/

OPENED CAB
CARPET

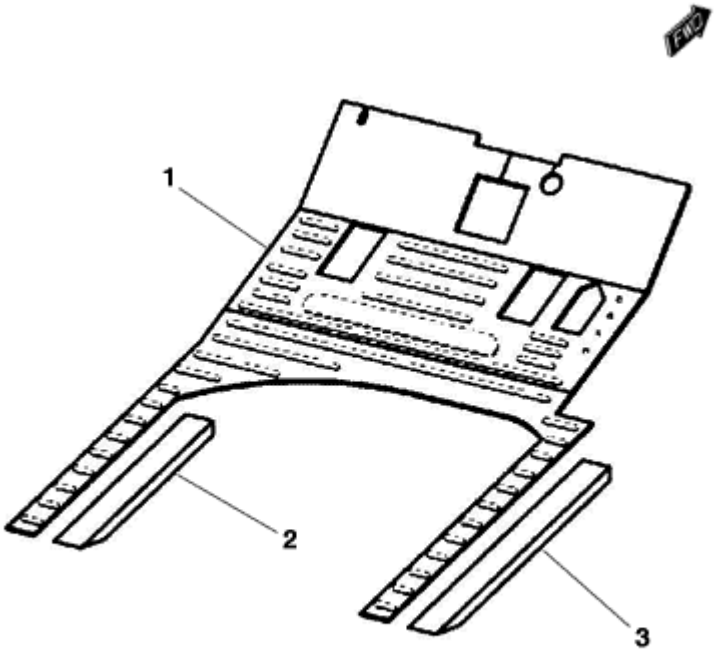

FIGURA	REFERENCIA	DENOMINACIÓN	CANTIDAD
001	57.08019.00	CARPET	1
002	MA.20072.00	SUPPORT	1
003	MA.20071.00	SUPPORT	1

https://truckmanualshub.com/

OPENED CAB
SHOCK ABSORBER

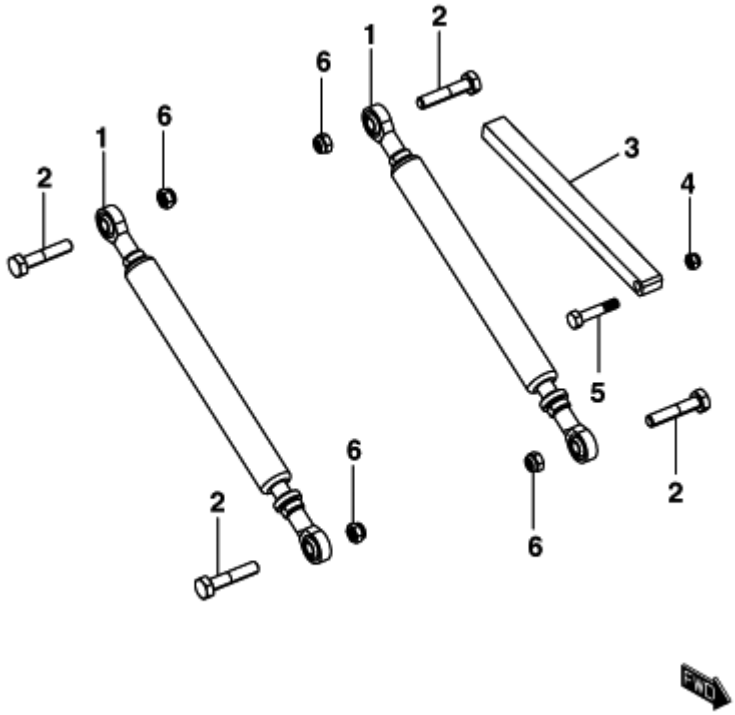

FIGURA	REFERENCIA	DENOMINACIÓN	CANTIDAD
001	57.08040.00	CYLINDER	2
002	604.10050.86	BOLT DIN931 M10x50	4
003	12.04035.01	SAFETY SUPPORT 15X20X228	1
004	711.08000.66	NUT	1
005	604.08040.86	SCREW DIN931	1
006	711.10000.66	NUT	4

https://truckmanualshub.com/

CABIN

OPEN COCKPIT - SEMICLOSED COCKPIT

FIGURA	REFERENCIA	DENOMINACIÓN	CANTIDAD
001	57.08007.00	OPENED CAB TO HALF-CLOSED CAB KIT	1
002	57.12010.00	PLATE AD. INDI	1
003	12.11014.00	SWITCH	1
004	12.11009.00	WINDSCREEN WIPER ELECTRICAL LENGTH	1
005	711.06000.66	NUT DIN982 M6	2
006	101.06000.66	WASHER DIN125 D6	2
007	603.06020.86	SCREW DIN933	2
008	46.08621.00	SCREEN WIPER PUMP TANK	1

https://truckmanualshub.com/

HALF-CLOSED CAB

HALF-CLOSED CAB (PART 1)

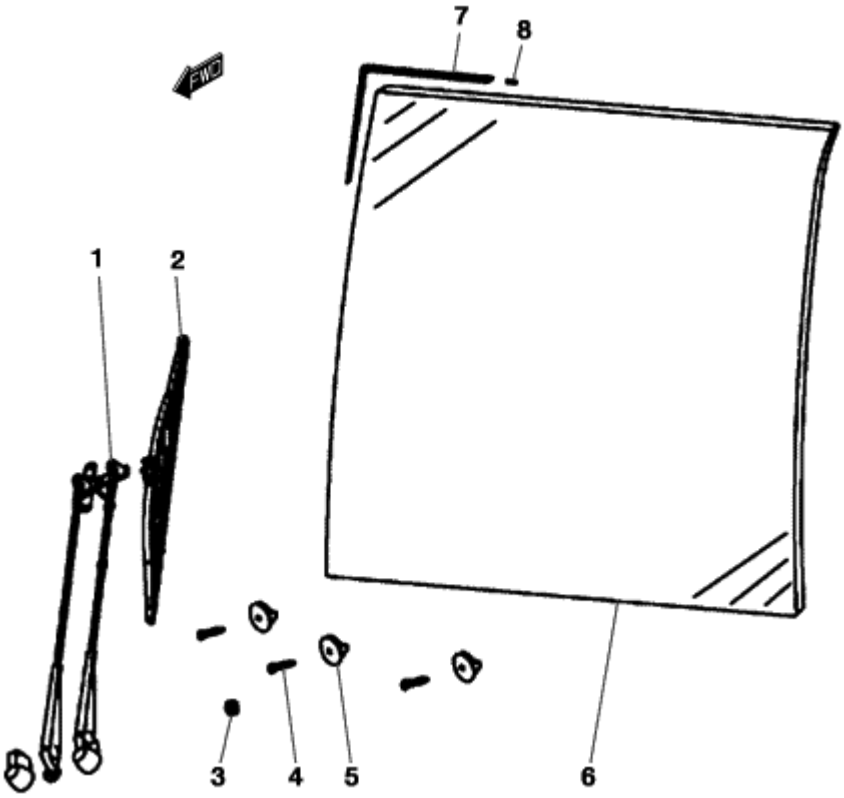

FIGURA	REFERENCIA	DENOMINACIÓN	CANTIDAD
001	MA.20078.00	FRONT WINDSCREEN WIPER ARM	1
002	MA.20079.00	WINDSCREEN WIPER BLADE	1
003	MA.10025.00	GROMMET	1
004	MA.10065.00	SCREW DIN7604	3
005	MA.10029.00	CAP	3
006	MA.20077.00	FRONT GLASS CAB	1
007	MA.20055.00	WINDSCREEN RUBBER PROFILE 8769 L=5M	1

https://truckmanualshub.com/

HALF-CLOSED CAB
HALF-CLOSED CAB (PART 2)

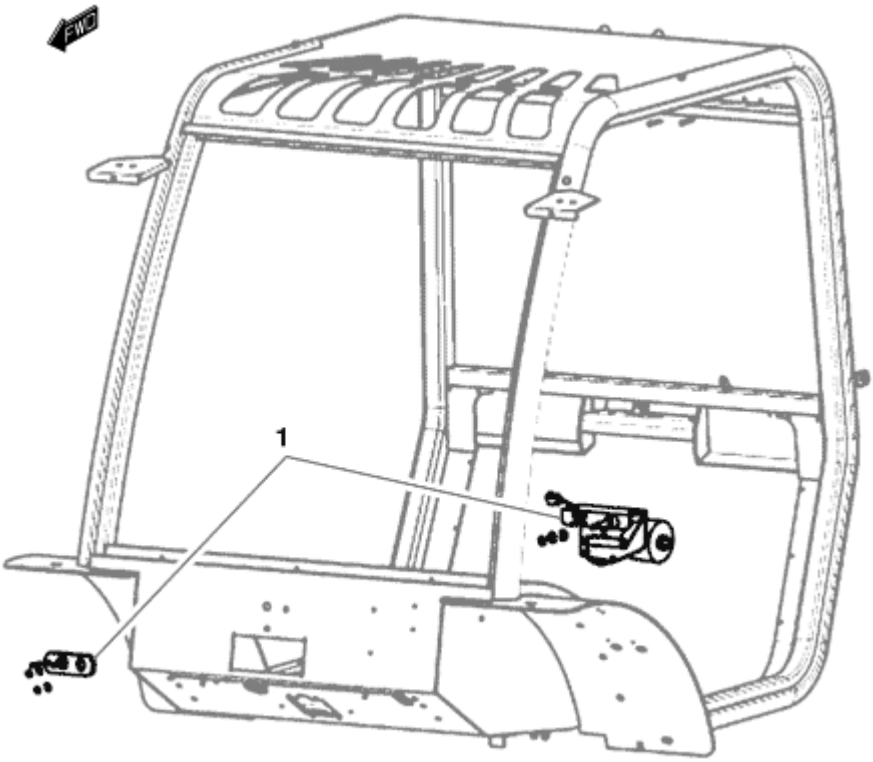

FIGURA	REFERENCIA	DENOMINACIÓN	CANTIDAD
001	MA.20080.00	FRONT WINDSHIELD ENGINE	1

https://truckmanualshub.com/

HALF-CLOSED CAB

HALF-CLOSED CAB (PART 3)

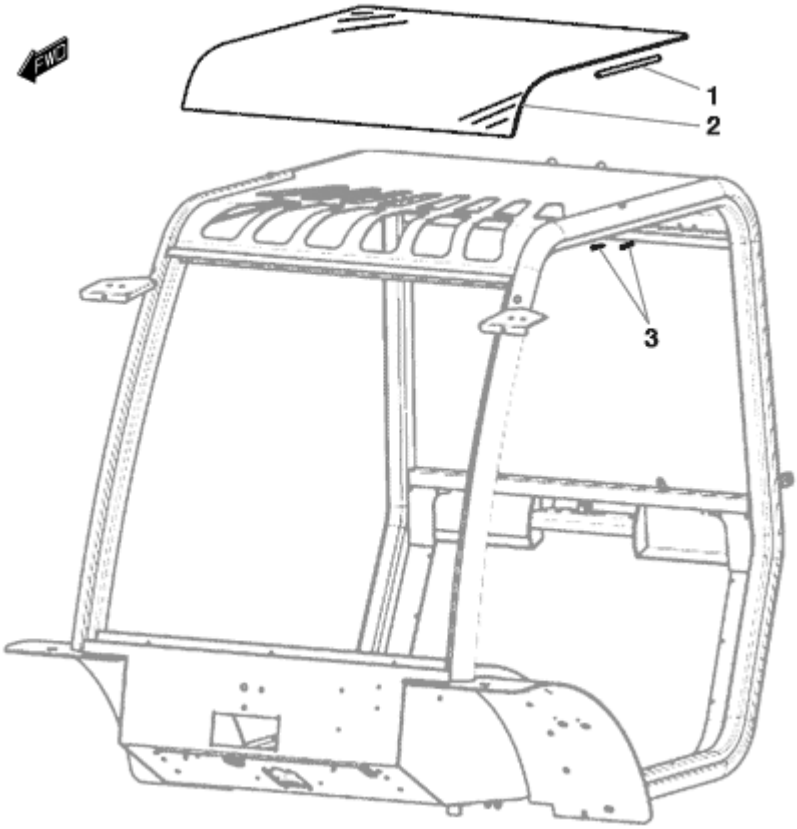

FIGURA	REFERENCIA	DENOMINACIÓN	CANTIDAD
002	MA.20076.00	CABIN GLASS	1
003	MA.20019.00	SCREW DIN7984	4

https://truckmanualshub.com/

HALF-CLOSED CAB

HALF-CLOSED CAB (PART 4)

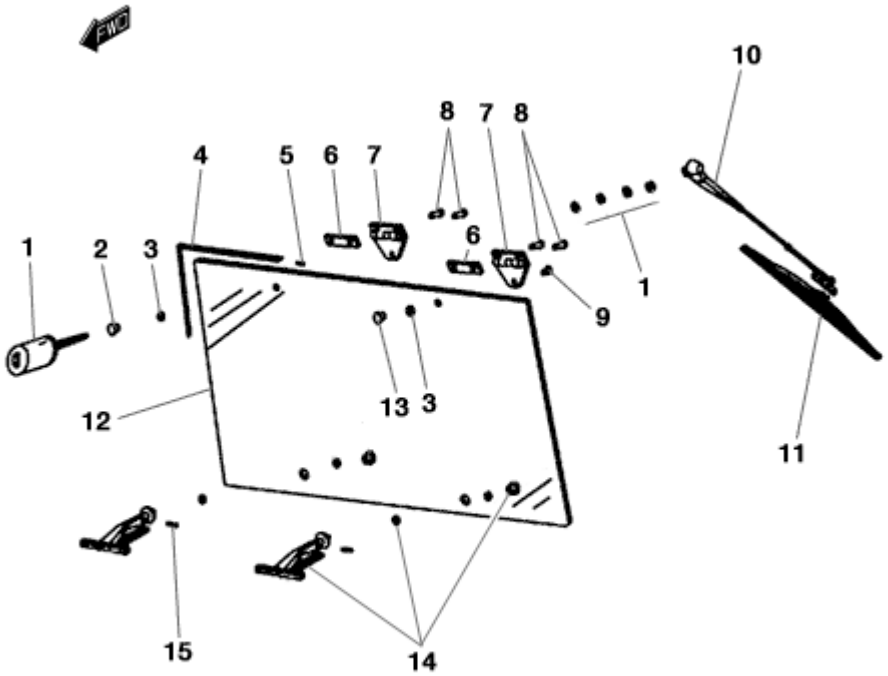

FIGURA	REFERENCIA	DENOMINACIÓN	CANTIDAD
001	MA.20022.00	MOTOR WINDSCREEN WIPER	1
002	MA.20021.00	ACC. FORK	1
003	MA.10050.00	WASHER	4
004	MA.20050.00	RUBBER PROFILE	1
006	MA.20020.00	PANEL	2
007	MA.10006.00	HINGE	2
008	MA.20018.00	SCREW ISO7380	4
009	618.08020.86	SCREW DIN7991 M8x20	1
010	MA.20023.00	WINDSCREEN WIPER ARM	1
011	MA.10031.00	WINDSCREEN WIPER BLADE	1
012	MA.20075.00	REAR CAB GLASS	1
013	MA.10027.00	NUT	1
014	MA.20051.00	HINGE	2
015	402.05014.00	PIN	2

https://truckmanualshub.com/

HALF-CLOSED CAB
HALF-CLOSED CAB (PART 5)

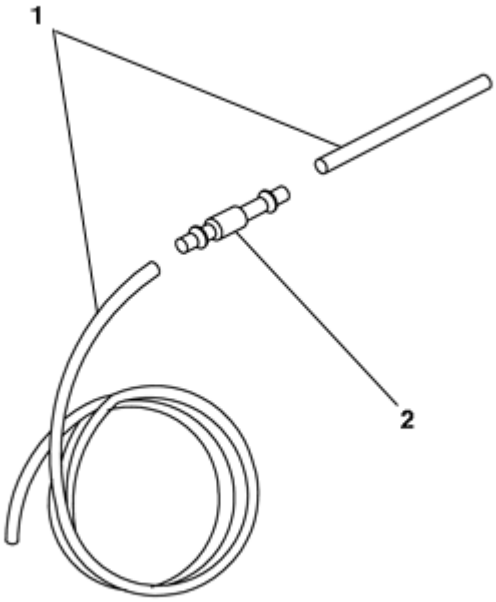

FIGURA	REFERENCIA	DENOMINACIÓN	CANTIDAD
001	MA.10034.00	HOSE TRANS. PLAS	1
002	MA.10033.00	VALVE	1

https://truckmanualshub.com/

HALF-CLOSED CAB

HALF-CLOSED CAB (PART 6)

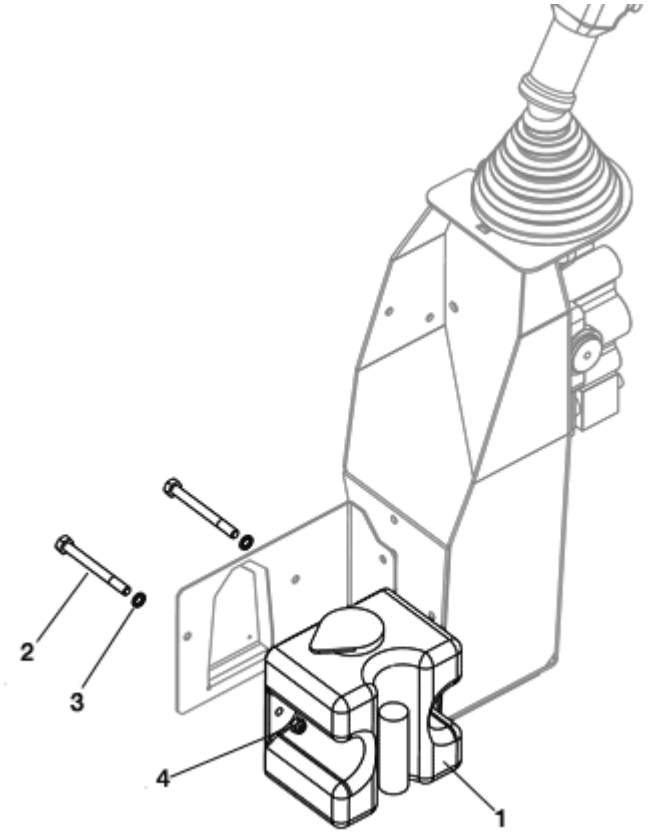

FIGURA	REFERENCIA	DENOMINACIÓN	CANTIDAD
001	46.08621.00	SCREEN WIPER PUMP TANK	1
002	603.06020.86	SCREW DIN933	4
003	101.06000.66	WASHER DIN125 D6	4
004	711.06000.66	NUT DIN982 M6	4

https://truckmanualshub.com/

CLOSED CAB

SEMICLOSE COCKPIT - CLOSE COCKPIT

FIGURA	REFERENCIA	DENOMINACIÓN	CANTIDAD
001	12.08008.00	HALF-CLOSED CAB TO CLOSED CAB KIT	1
003	30.08040.00	GAS SPRING 40X462 2800N	2
004	57.08009.00	COVER SOP. TABLIER 108X163X986	1
005	101.05000.66	WASHER DIN125	2
006	630.05020.96	SCREW ISO7380	2
007	46.00369.00	VALVE	1
008	634.03010.82	SCREW DIN7982*	6
009	46.00368.00	AIR DIFFUSER	2
010	912.40060.66	CLAMP D40-60	4
011	480.00045.00	PVC PIPE 45X49	1
012	806.06030.00	FASTON MALE 6.3MM	3
013	10.14003.00	FASTON CONNECTOR 3 WAYS FEMALE	1
014	623.55016.86	SCREW DIN7971	2
015	46.00370.00	HEATER	1
016	912.20032.00	CLAMP	4
017	464.05025.28	TUBE B / P 16x25	8
018	12.11020.00	SWITCH	1
019	08.00317.00	GASKET MET. BUNA	1

https://truckmanualshub.com/

CLOSED CAB

SEMICLOSE COCKPIT - CLOSE COCKPIT

FIGURA	REFERENCIA	DENOMINACIÓN	CANTIDAD
020	08.00301.02	NIPPLE M/TB	1

https://truckmanualshub.com/

CLOSED CAB

CLOSED CAB (PART 1)

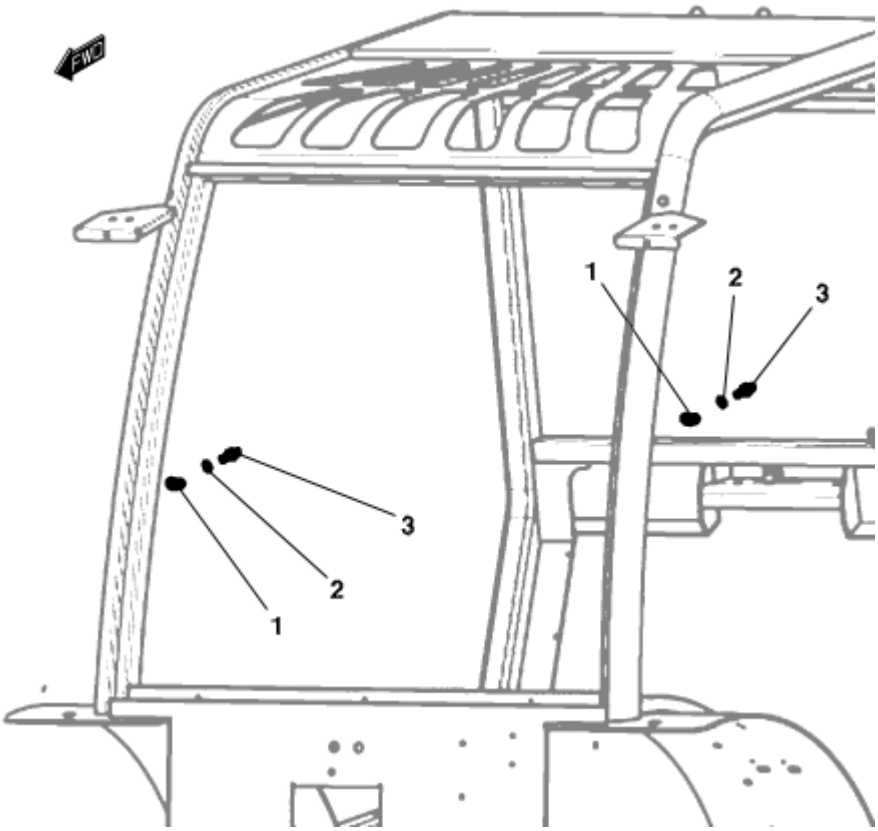

FIGURA	REFERENCIA	DENOMINACIÓN	CANTIDAD
001	MA.20029.00	PROTECTOR	2
002	113.12000.66	WASHER	2
003	MA.10015.00	AXLE CIL/CPL	2

https://truckmanualshub.com/

CLOSED CAB

CLOSED CAB (PART 2)

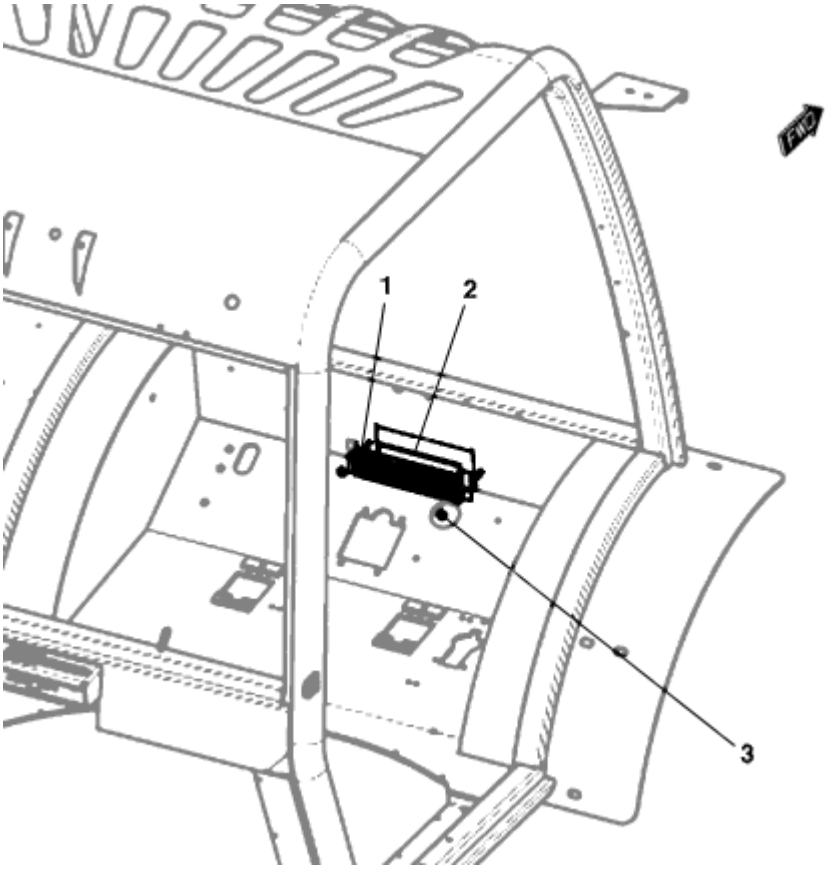

FIGURA	REFERENCIA	DENOMINACIÓN	CANTIDAD
001	MA.20042.00	AIR FILTER SUPPORT	1
002	MA.20041.00	AIR FILTER	1
003	711.06000.66	NUT DIN982 M6	2

https://truckmanualshub.com/

CLOSED CAB
CLOSED CAB (PART 3)

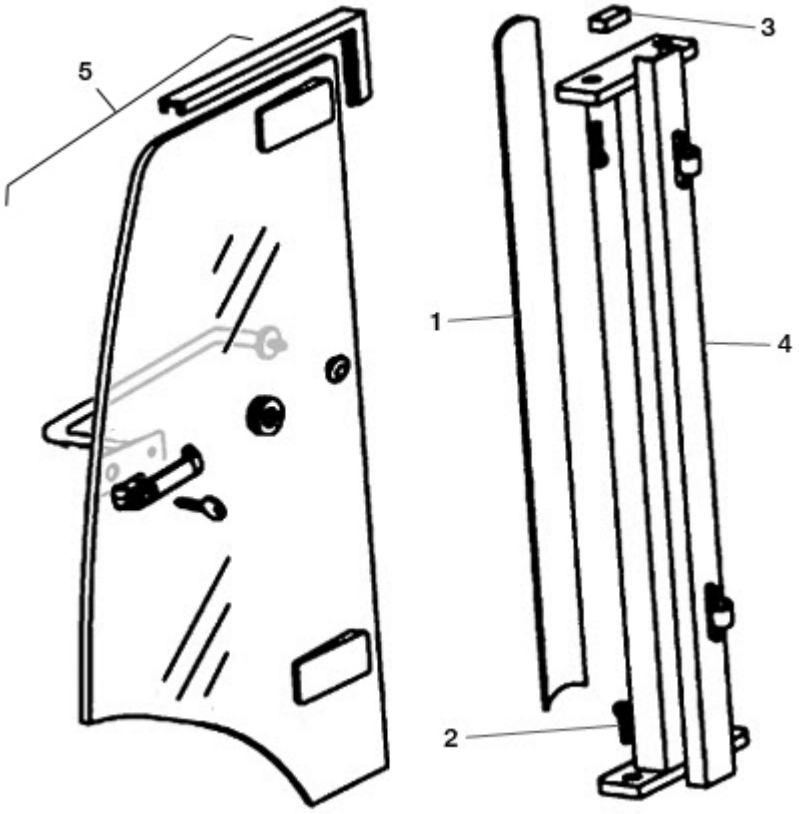

FIGURA	REFERENCIA	DENOMINACIÓN	CANTIDAD
001	MA.20027.00	PROTECTOR	1
001	MA.20036.00	PROTECTOR	1
002	630.08020.86	SCREW ISO7380	8
003	MA.20028.00	SUPLEMENTO PILAR	2
004	MA.20082.00	LEFT HAND CENTRAL CROSSMEMBER	1
004	MA.20083.00	RIGHT HAND CENTRAL CROSSMEMBER	1
005	MA.20030.00	COMPLETE LEFT DOOR ASSY	1
005	MA.20037.00	COMPLETE RIGHT DOOR	1

https://truckmanualshub.com/

CLOSED CAB

CLOSED CAB (PART 4)

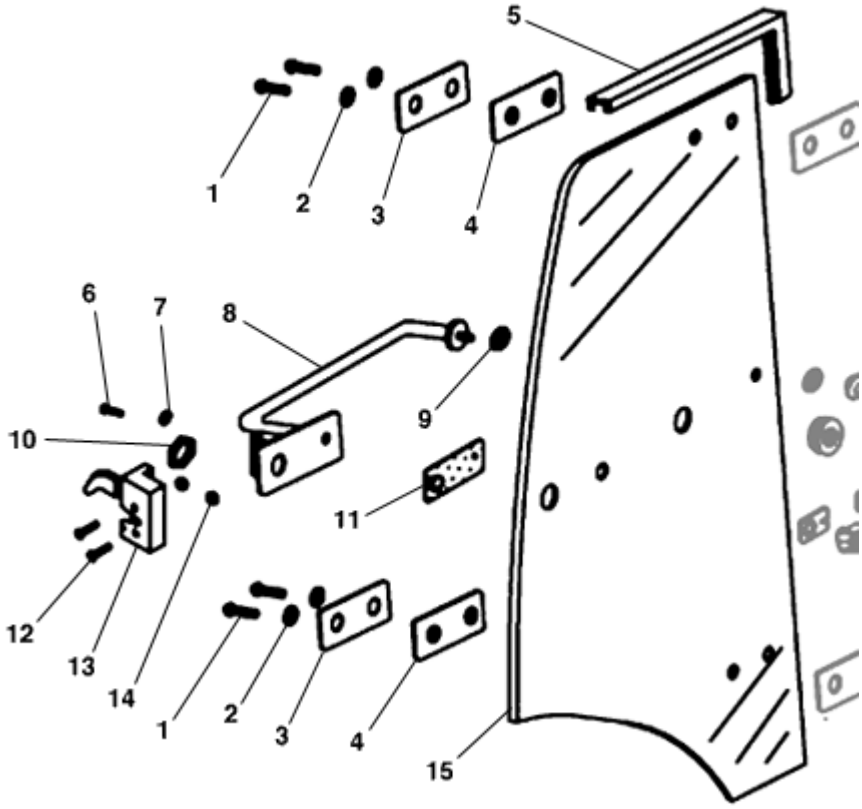

FIGURA	REFERENCIA	DENOMINACIÓN	CANTIDAD
001	603.08020.86	SCREW DIN933 M8x20	8
002	MA.10010.00	WASHER	8
003	MA.20033.00	PLANCHA BRIDA BISAGRA	4
004	MA.10054.00	JUNTA GOMA REC. BISAGRA	8
005	MA.20055.00	WINDSCREEN RUBBER PROFILE 8769 L=5M	2
006	603.06025.86	SCREW DIN933 M6x25	2
007	MA.10009.00	WASHER	2
008	MA.20084.00	LEFT KNOB DOOR	1
008	MA.20085.00	RIGHT KNOB DOOR	1
009	MA.10050.00	WASHER	4
010	MA.10045.00	LEFT EXTERIOR LOCK WITH KEY	1
010	MA.10046.00	RIGHT LOCK WITHOUT KEY	1
011	MA.10053.00	RUBBER GASKET	2
012	MA.20059.01	SCREW DIN7991 M8X40	4
013	MA.10016.00	DOOR HANDLE LEFT.	1
013	MA.10017.00	LOCK RIGHT	1
014	720.08000.66	NUT	4
015	MA.20059.00	LEFT DOOR GLASS	1

https://truckmanualshub.com/

CLOSED CAB
CLOSED CAB (PART 4)

FIGURA	REFERENCIA	DENOMINACIÓN	CANTIDAD
015	MA.20060.00	RIGHT DOOR GLASS	1

https://truckmanualshub.com/

CLOSED CAB

CLOSED CAB (PART 5)

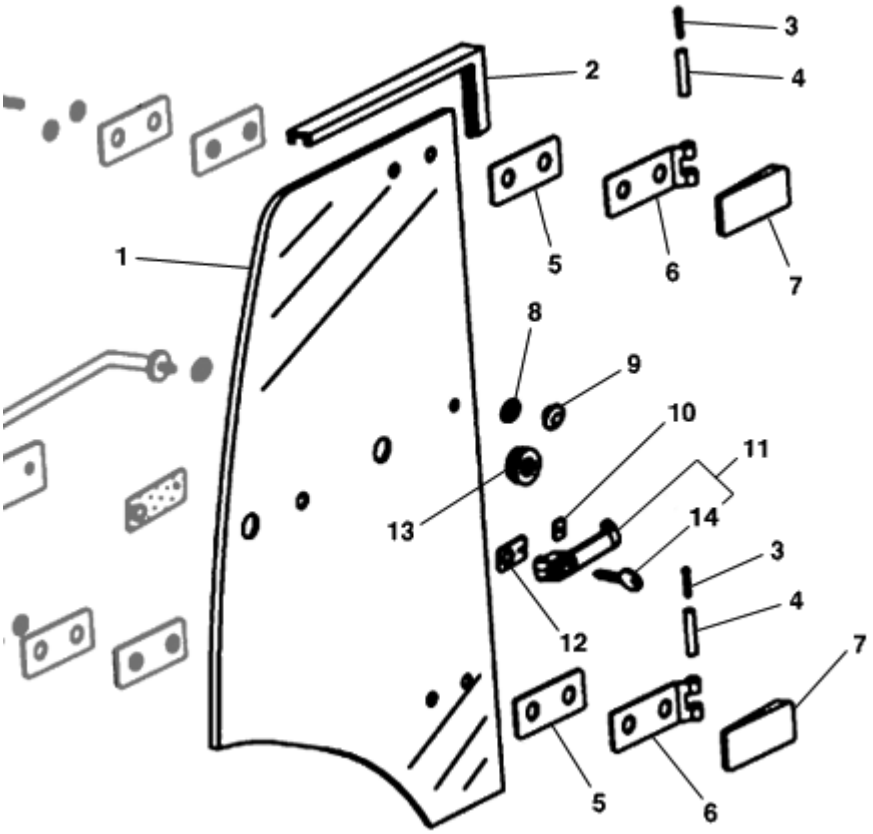

FIGURA	REFERENCIA	DENOMINACIÓN	CANTIDAD
001	MA.20059.00	LEFT DOOR GLASS	1
001	MA.20060.00	RIGHT DOOR GLASS	1
002	MA.20055.00	WINDSCREEN RUBBER PROFILE 8769 L=5M	2
003	901.06000.33	GREASER DIN71412-A	4
004	MA.20058.00	PIN HINGE	4
005	MA.10054.00	JUNTA GOMA REC. BISAGRA	8
006	MA.20056.00	HINGE	4
007	MA.20057.00	HINGE	4
008	MA.10050.00	WASHER	4
009	MA.10027.00	NUT	2
010	MA.10052.00	RUBBER GASKET	2
011	MA.10045.00	LEFT EXTERIOR LOCK WITH KEY	1
011	MA.10046.00	RIGHT LOCK WITHOUT KEY	1
012	MA.10051.00	RUBBER GASKET	2
013	MA.20044.00	FIXATION DOOR KIT	2
014	MA.10085.00	CABIN DOOR KEY	2

https://truckmanualshub.com/

CLOSED CAB

CLOSED CAB (PART 6)

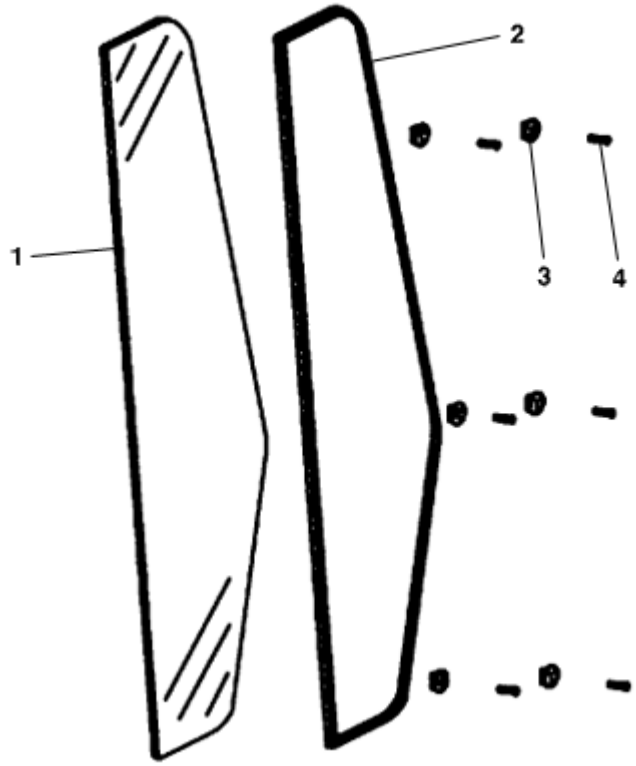

FIGURA	REFERENCIA	DENOMINACIÓN	CANTIDAD
001	MA.20034.00	LEFT GLASS	1
001	MA.20039.00	RIGHT GLASS	1
002	MA.20050.00	RUBBER PROFILE	2
003	MA.10029.00	CAP	12
004	MA.10065.00	SCREW DIN7604	12

https://truckmanualshub.com/

CLOSED CAB
SHOCK ABSORBER

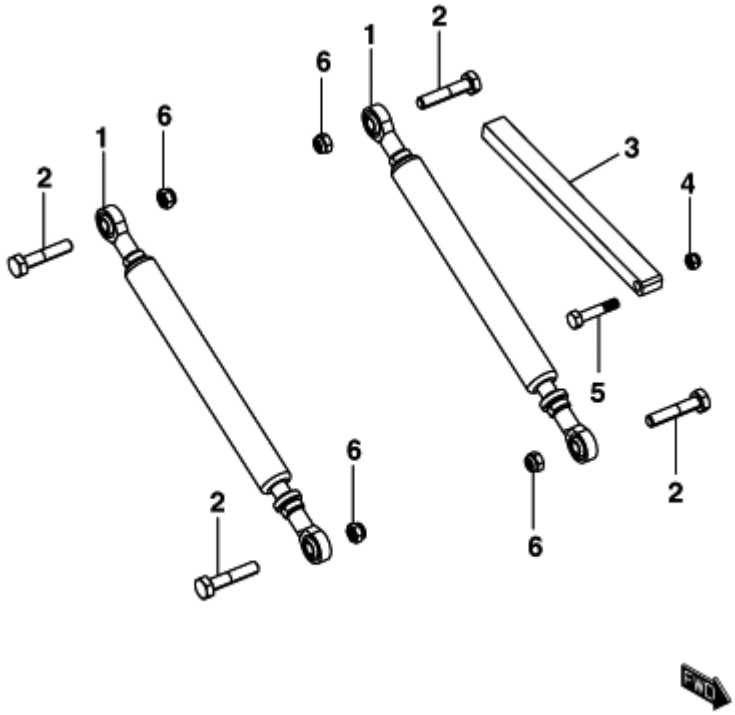

FIGURA	REFERENCIA	DENOMINACIÓN	CANTIDAD
001	30.08040.00	GAS SPRING 40X462 2800N	2
002	604.10050.86	BOLT DIN931 M10x50	4
003	12.04035.01	SAFETY SUPPORT 15X20X228	1
004	711.08000.66	NUT	1
005	604.08040.86	SCREW DIN931	1
006	711.10000.66	NUT	4

https://truckmanualshub.com/

CLOSED CAB
HEATER (PART 1)

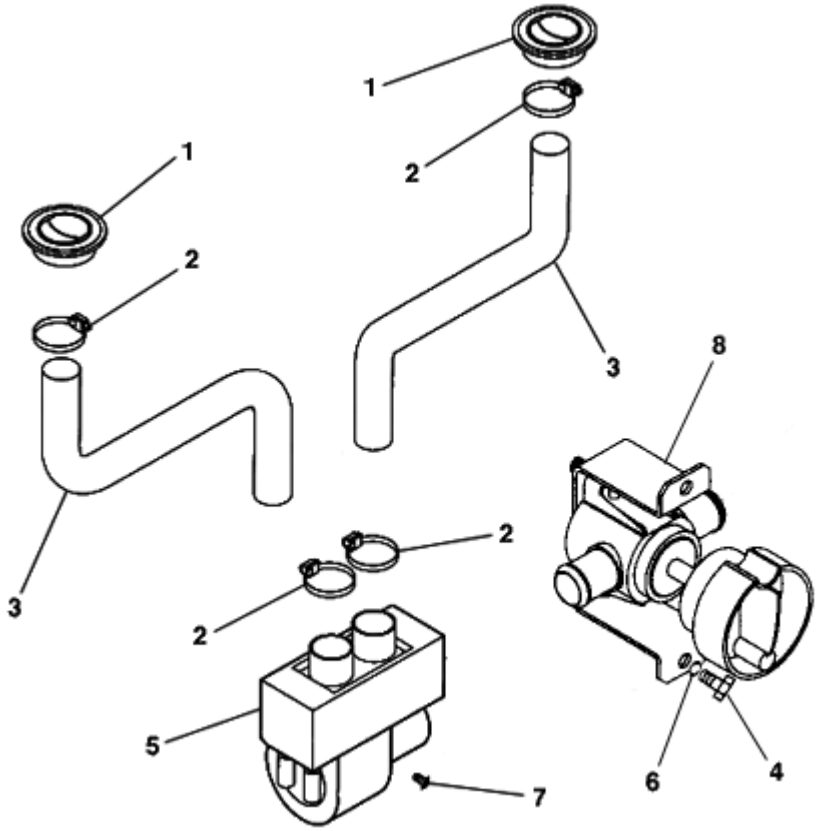

FIGURA	REFERENCIA	DENOMINACIÓN	CANTIDAD
001	46.00368.00	AIR DIFFUSER	2
002	912.40060.66	CLAMP D40-60	4
003	43.70009RE00	ADMISSION TUBE 45x49x500, AIR	2
004	630.05020.96	SCREW ISO7380	2
005	46.00370.00	HEATER	1

https://truckmanualshub.com/

CLOSED CAB
HEATER (PART 2)

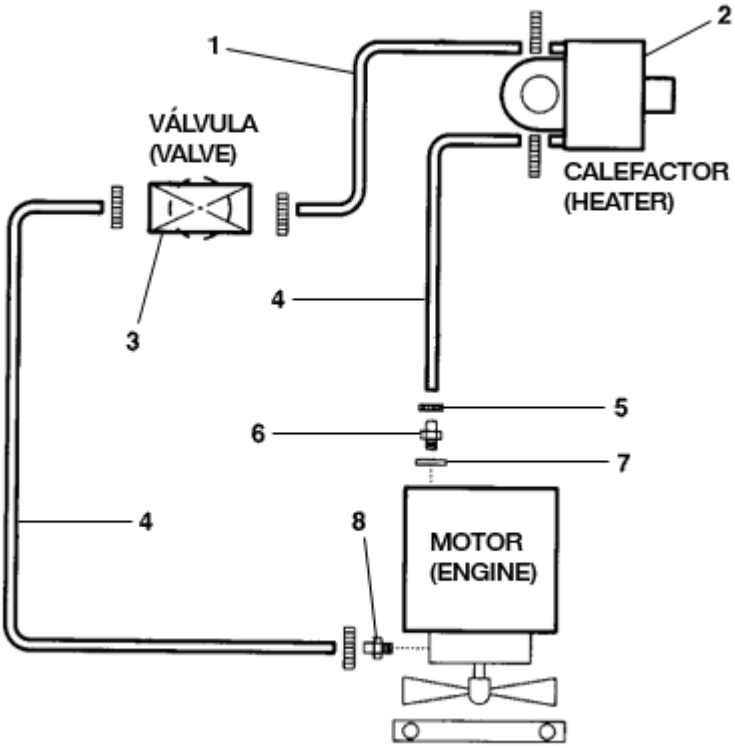

FIGURA	REFERENCIA	DENOMINACIÓN	CANTIDAD
002	46.00370.00	HEATER	1
003	46.00369.00	VALVE	1
004	43.11005.00		2
005	912.20032.00	CLAMP	2
006	08.00301.02	NIPPLE M/TB	1
007	08.00316.00	GASKET MET. BUNA D1/2 G	1
008	46.20110.00		1

https://truckmanualshub.com/

DUPLEX MAST 3,7 M. (FEM IV)

MAST GUIDES

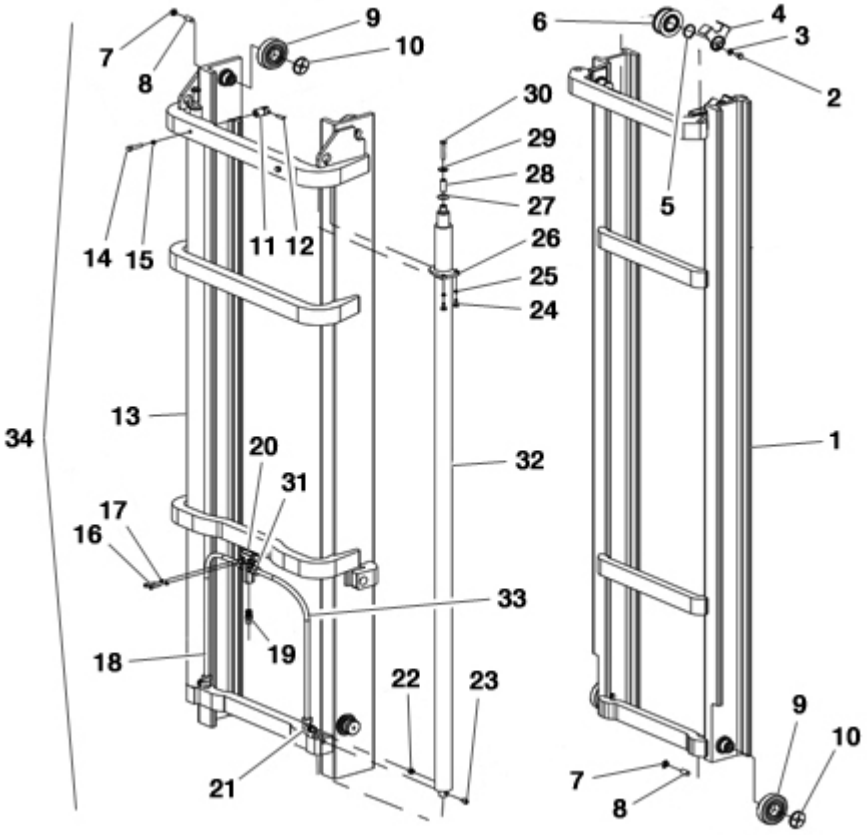

FIGURA	REFERENCIA	DENOMINACIÓN	CANTIDAD
001	EL.60083.00	INNER MAST	1
002	EL.50035.00	SCREW	2
003	EL.50033.00	WASHER	2
004	EL.60031.00	HOSE PROTECTION	2
005	EL.60108.00	WASHER	2
006	EL.30091.00	PULLEY	2
007	EL.60121.00	NUT	8
008	EL.60140.00	SCREW	8
009	EL.60005.00	BEARING	8
010	EL.60006.00	BUSH	8
011	EL.60003.00	CHAIN ANCHOR PIN	2
012	EL.60135.00	CHAIN PIN	4
013	EL.60081.00	OUTER MAST	1
014	EL.60144.00	SCREW	2
016	EL.60111.00	SCREW	2
017	EL.60102.00	WASHER	2
019	EL.60147.00	SB33 VALVE S=19	1
020	EL.60012.00	2 WAY COLLECTOR	1

https://truckmanualshub.com/

DUPLEX MAST 3,7 M. (FEM IV)
MAST GUIDES

FIGURA	REFERENCIA	DENOMINACIÓN	CANTIDAD
021	EL.60142.00	FIXING SUPPORT	2
022	EL.60114.00	LB3 VALVE S=2,3	1
023	EL.60141.00	SCREW	2
024	EL.60110.00	SCREW	4
025	EL.60107.00	WASHER	4
026	EL.60032.00	CYLINDER LOCK	2
027	EL.50037.00	WASHER	2
028	EL.60027.00	SHIM	2
029	EL.60139.00	WASHER	2
030	EL.50036.00	SCREW M12X70	2
031	EL.60143.00	NUT	2
034	30.09150.00	FULL DUPLEX MAST 3,7 M FEM IV	1

https://truckmanualshub.com/

DUPLEX MAST 3,7 M. (FEM IV)
CARRIAGE SUBJECTION

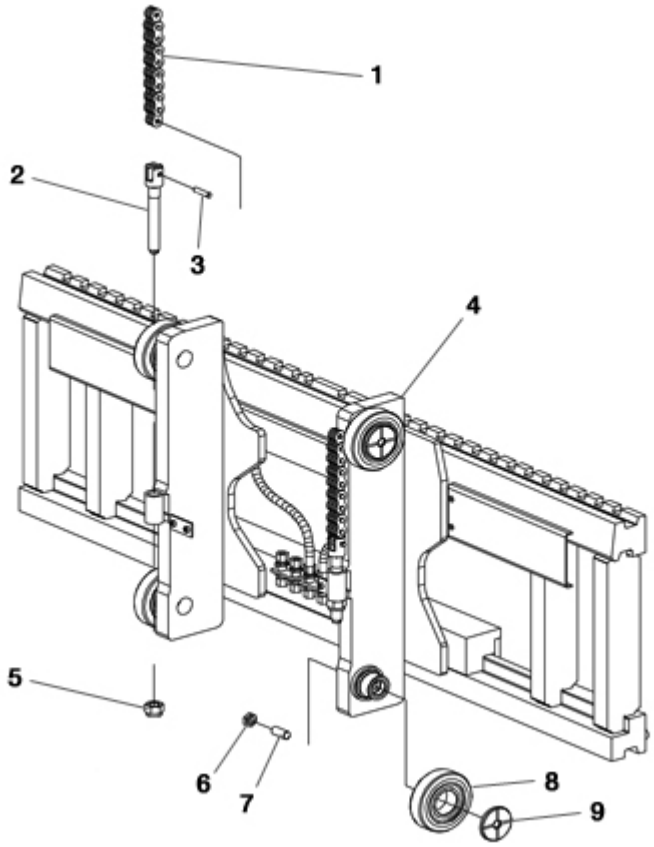

FIGURA	REFERENCIA	DENOMINACIÓN	CANTIDAD
001	EL.60131.00	CARRIAGE CHAIN (2250 MM.)	2
002	EL.60001.00	CHAIN ANCHOR	2
003	EL.60135.00	CHAIN PIN	4
004	EL.60056.00	CARRIAGE 1660mm	1
005	EL.50065.00	NUT	2
006	EL.60121.00	NUT	8
007	EL.60140.00	SCREW	8
008	EL.60005.00	BEARING	8
009	EL.60006.00	BUSH	8

https://truckmanualshub.com/

DUPLEX MAST 3,7 M. (FEM IV)
AUXILIARY REEVING

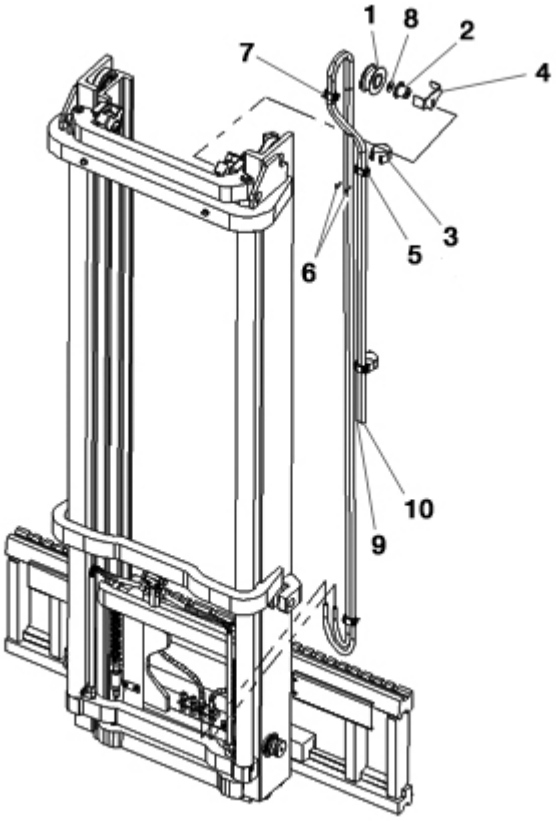

FIGURA	REFERENCIA	DENOMINACIÓN	CANTIDAD
001	EL.60014.00	PULLEY	1
002	EL.60015.00	PULLEY PIN	1
003	EL.60042.00	HOSE PROTECTION	2
004	EL.40120.00	SUPPORT	1
005	EL.60046.00	CLAMP	4
006	EL.60109.00	SCREW	4
007	EL.60118.00	SCREW	4
008	EL.60139.00	WASHER	1
009	EL.60062.00	HOSE 3/8	1
010	EL.60062.00	HOSE 3/8	1

https://truckmanualshub.com/

DUPLEX MAST 3,7 M. (FEM IV)
CARRIAGE

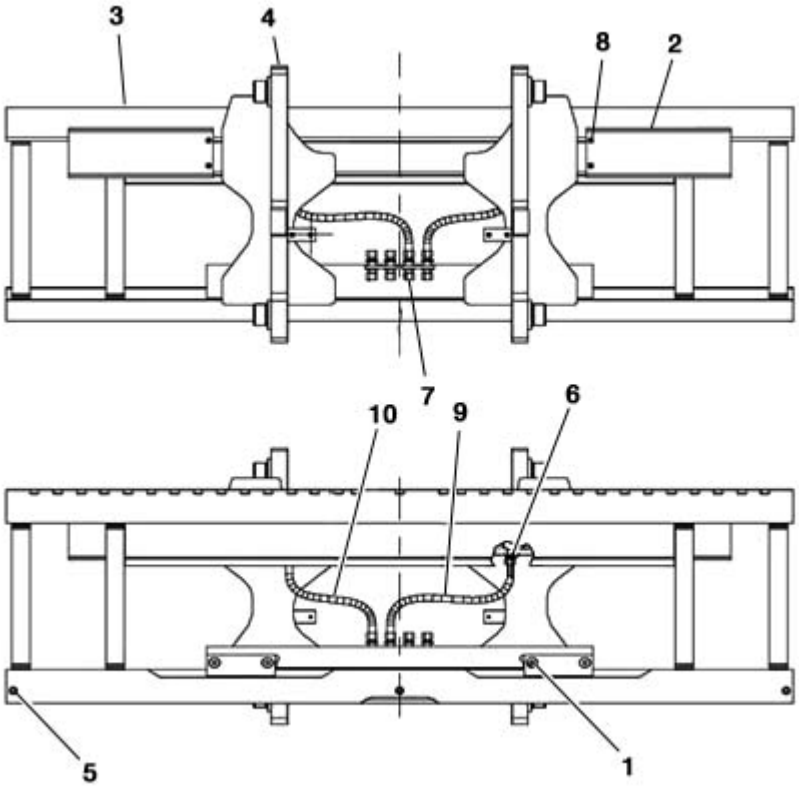

FIGURA	REFERENCIA	DENOMINACIÓN	CANTIDAD
001	EL.60097.00	S. S. ASSEMBLY	1
002	EL.60051.00	SIDE SHIFTER	1
003	EL.60054.00	HOSE PROTECTION	2
004	EL.60055.00	MOBILE CARRIAGE	1
005	EL.60103.00	SCREW	3
006	EL.60115.00	FIXING SUPPORT	2
007	EL.60122.00	FIXING SUPPORT	2
008	EL.60123.00	NUT	4
009	EL.60086.00	HOSE 5/16	1
010	EL.60085.00	HOSE 5/16	1

https://truckmanualshub.com/

DUPLEX MAST 3,7 M. (FEM IV)
LATERAL DISPLACEMENT

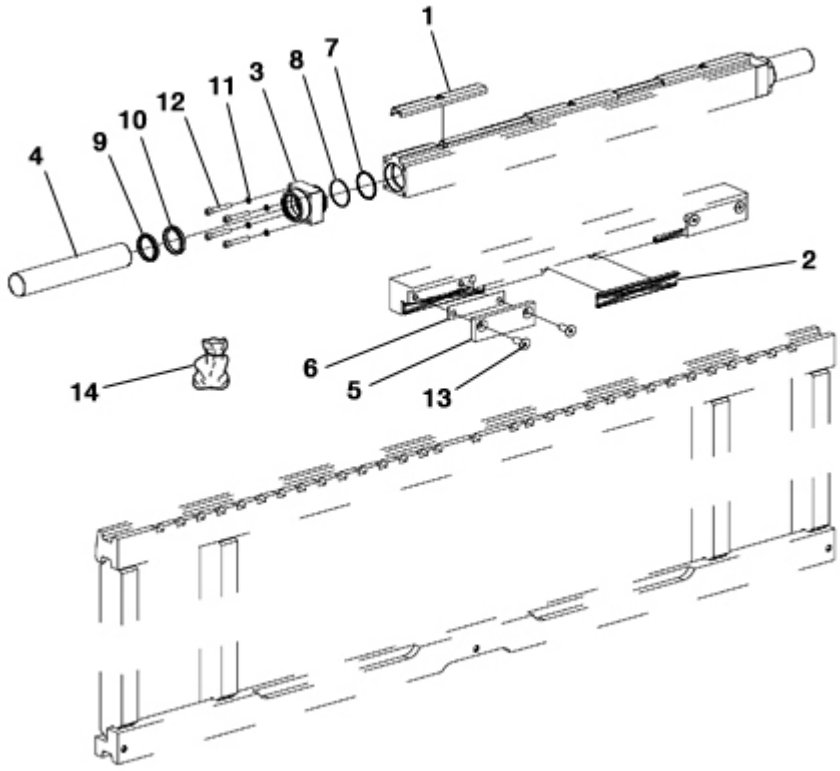

FIGURA	REFERENCIA	DENOMINACIÓN	CANTIDAD
001	EL.60007.00	BUSH	3
002	EL.60008.00	BUSH	3
003	EL.60010.00	PLUG	2
004	EL.60011.00	ROD	2
005	EL.60044.00	PLATE	2
006	EL.60045.00	SHIM	2
007	EL.60098.00	O-RING	2
008	EL.60099.00	PBK RING	2
009	EL.60100.00	RING	2
010	EL.60101.00	GASKET	2
011	EL.50049.00	WASHER	8
012	EL.60120.00	SCREW	8
013	EL.60146.00	SCREW	4
014	EL.60145.00	SEAL KIT	2

https://truckmanualshub.com/

DUPLEX MAST 3,7 M. (FEM IV)
LATERAL CYLINDER

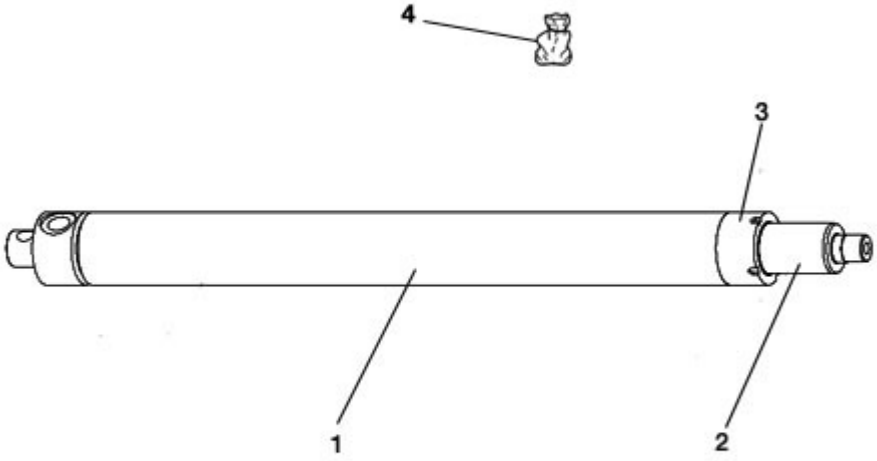

FIGURA	REFERENCIA	DENOMINACIÓN	CANTIDAD
001	EL.60022.00	CYLINDER	2
002	EL.60026.00	ROD ASSY	2
003	EL.60021.00	CYLINDER BODY	2
004	EL.50094.00	FREE LIFT CYLINDER SEALS KIT	2

https://truckmanualshub.com/

DUPLEX MAST 4,5 M. (FEM IV)

MAST GUIDES

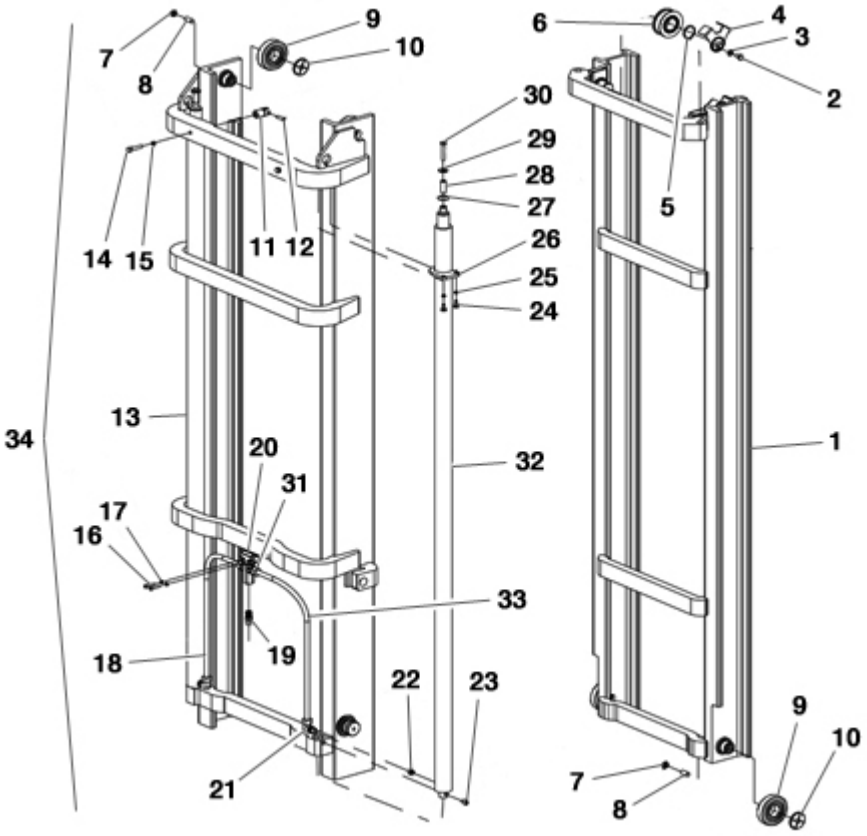

FIGURA	REFERENCIA	DENOMINACIÓN	CANTIDAD
001	EL.60084.00	INNER MAST	1
002	EL.50035.00	SCREW	2
003	EL.50033.00	WASHER	2
004	EL.60031.00	HOSE PROTECTION	2
005	EL.60108.00	WASHER	2
006	EL.30091.00	PULLEY	2
007	EL.60121.00	NUT	8
008	EL.60140.00	SCREW	8
009	EL.60005.00	BEARING	8
010	EL.60006.00	BUSH	8
011	EL.60003.00	CHAIN ANCHOR PIN	2
012	EL.60135.00	CHAIN PIN	4
013	EL.60082.00	OUTER MAST	1
014	EL.60144.00	SCREW	2
015	EL.60104.00	WASHER	2
016	EL.60111.00	SCREW	2
017	EL.60102.00	WASHER	2
019	EL.60147.00	SB33 VALVE S=19	1

https://truckmanualshub.com/

DUPLEX MAST 4,5 M. (FEM IV)
MAST GUIDES

FIGURA	REFERENCIA	DENOMINACIÓN	CANTIDAD
020	EL.60012.00	2 WAY COLLECTOR	1
021	EL.60142.00	FIXING SUPPORT	2
022	EL.60114.00	LB3 VALVE S=2,3	1
023	EL.60141.00	SCREW	2
024	EL.60110.00	SCREW	4
025	EL.60107.00	WASHER	4
026	EL.60032.00	CYLINDER LOCK	3
027	EL.50037.00	WASHER	2
028	EL.60027.00	SHIM	2
029	EL.60139.00	WASHER	2
030	EL.50036.00	SCREW M12X70	2
031	EL.60143.00	NUT	2
032	EL.60091.00	MAST CYLINDER	2
034	30.09250.00	FULL DUPLEX MAST 4,5 M FEM IV	1

https://truckmanualshub.com/

DUPLEX MAST 4,5 M. (FEM IV)
CARRIAGE SUBJECTION

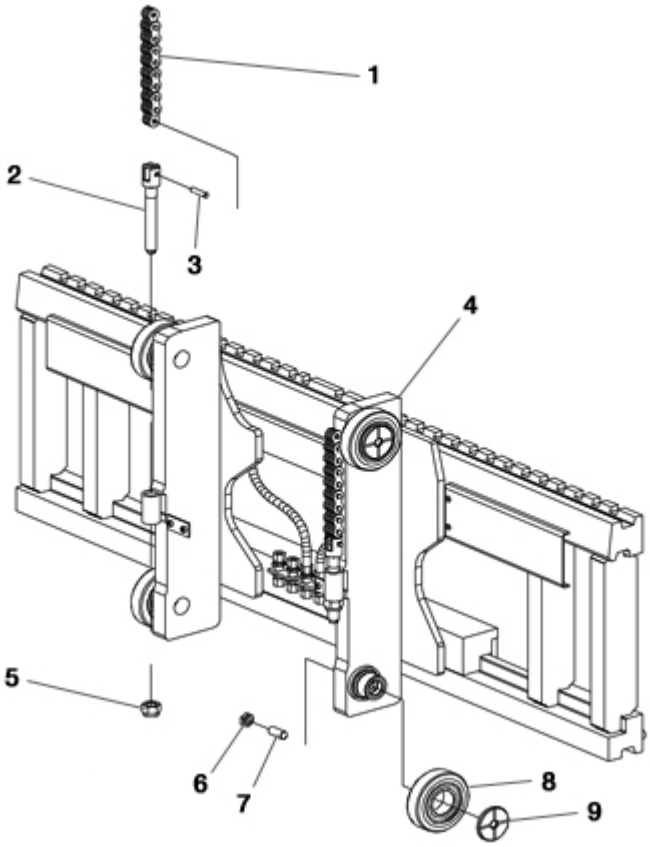

FIGURA	REFERENCIA	DENOMINACIÓN	CANTIDAD
001	EL.60133.00	CARRIAGE CHAIN (2680 MM.)	2
002	EL.60001.00	CHAIN ANCHOR	2
003	EL.60135.00	CHAIN PIN	4
004	EL.60056.00	CARRIAGE 1660mm	1
005	EL.50065.00	NUT	2
006	EL.60121.00	NUT	8
007	EL.60140.00	SCREW	8
008	EL.60005.00	BEARING	8
009	EL.60006.00	BUSH	8

https://truckmanualshub.com/

DUPLEX MAST 4,5 M. (FEM IV)
AUXILIARY REEVING

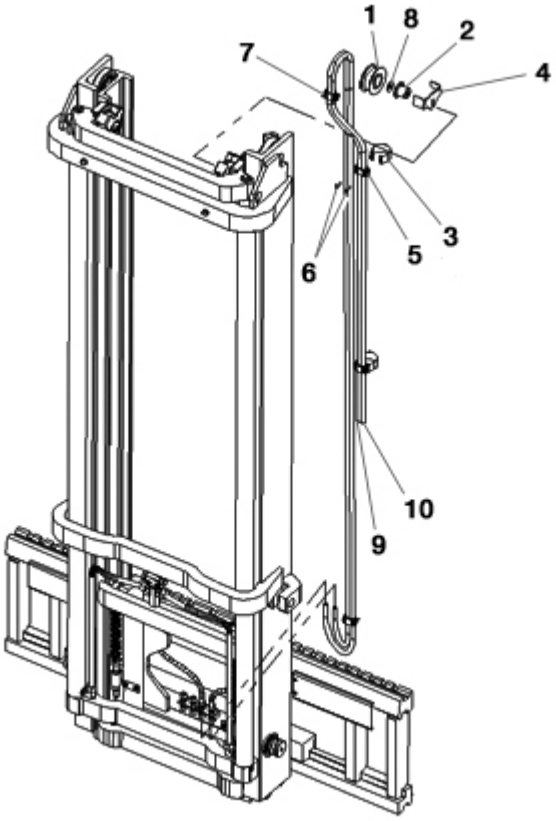

FIGURA	REFERENCIA	DENOMINACIÓN	CANTIDAD
001	EL.60014.00	PULLEY	1
002	EL.60015.00	PULLEY PIN	1
003	EL.40120.00	SUPPORT	2
004	EL.60042.00	HOSE PROTECTION	1
005	EL.60046.00	CLAMP	4
006	EL.60109.00	SCREW	4
007	EL.60118.00	SCREW	4
008	EL.60139.00	WASHER	1
009	EL.60063.00	HOSE 3/8	1
010	EL.60063.00	HOSE 3/8	1

https://truckmanualshub.com/

DUPLEX MAST 4,5 M. (FEM IV)
CARRIAGE

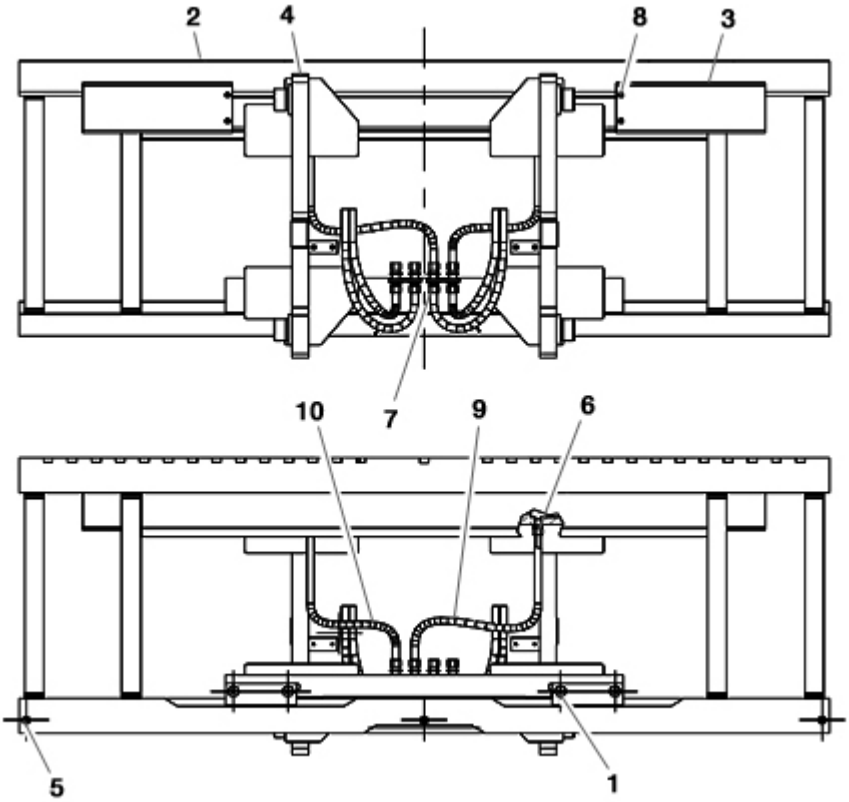

FIGURA	REFERENCIA	DENOMINACIÓN	CANTIDAD
001	EL.60097.00	S. S. ASSEMBLY	1
002	EL.60051.00	SIDE SHIFTER	1
003	EL.60054.00	HOSE PROTECTION	2
004	EL.60055.00	MOBILE CARRIAGE	1
005	EL.60103.00	SCREW	3
006	EL.60115.00	FIXING SUPPORT	2
007	EL.60122.00	FIXING SUPPORT	2
008	EL.60123.00	NUT	4
009	EL.60086.00	HOSE 5/16	1
010	EL.60085.00	HOSE 5/16	1

https://truckmanualshub.com/

DUPLEX MAST 4,5 M. (FEM IV)
LATERAL DISPLACEMENT

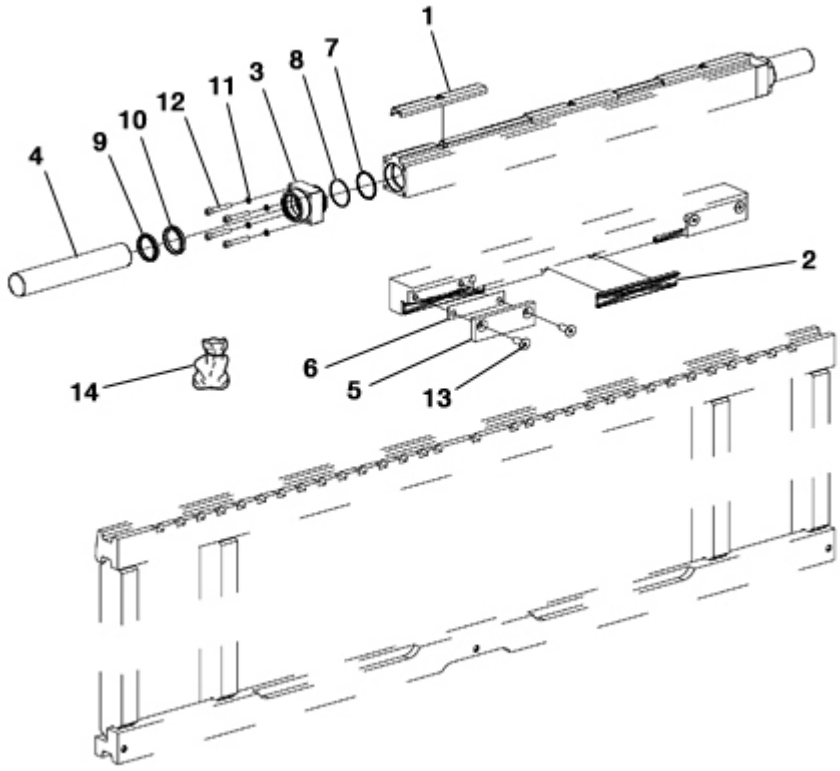

FIGURA	REFERENCIA	DENOMINACIÓN	CANTIDAD
001	EL.60007.00	BUSH	3
002	EL.60008.00	BUSH	3
003	EL.60010.00	PLUG	2
004	EL.60011.00	ROD	2
005	EL.60044.00	PLATE	2
006	EL.60045.00	SHIM	2
007	EL.60098.00	O-RING	2
008	EL.60099.00	PBK RING	2
009	EL.60100.00	RING	2
010	EL.60101.00	GASKET	2
011	EL.50049.00	WASHER	8
012	EL.60120.00	SCREW	8
013	EL.60146.00	SCREW	4
014	EL.60145.00	SEAL KIT	1

https://truckmanualshub.com/

DUPLEX MAST 4,5 M. (FEM IV)
LATERAL CYLINDER

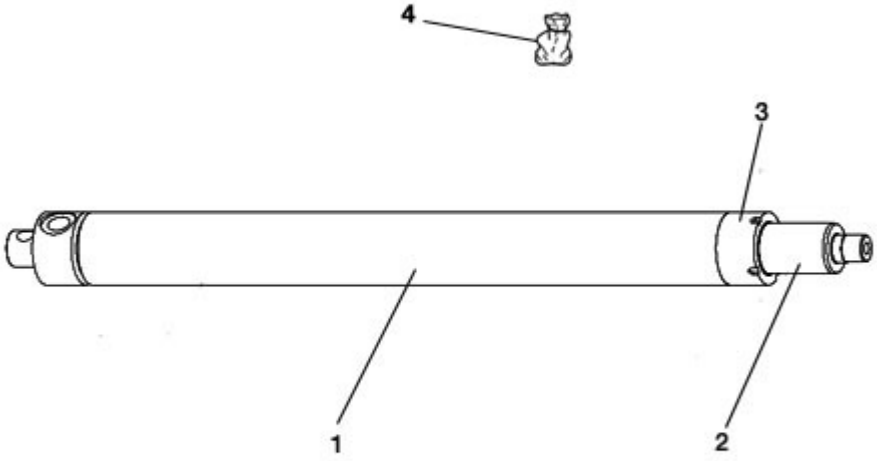

FIGURA	REFERENCIA	DENOMINACIÓN	CANTIDAD
001	EL.60022.00	CYLINDER	2
002	EL.60026.00	ROD ASSY	2
003	EL.60021.00	CYLINDER BODY	2
004	EL.50094.00	FREE LIFT CYLINDER SEALS KIT	2

TRIPLEX MAST 4,25 M. (FEM IV)
MAST GUIDES

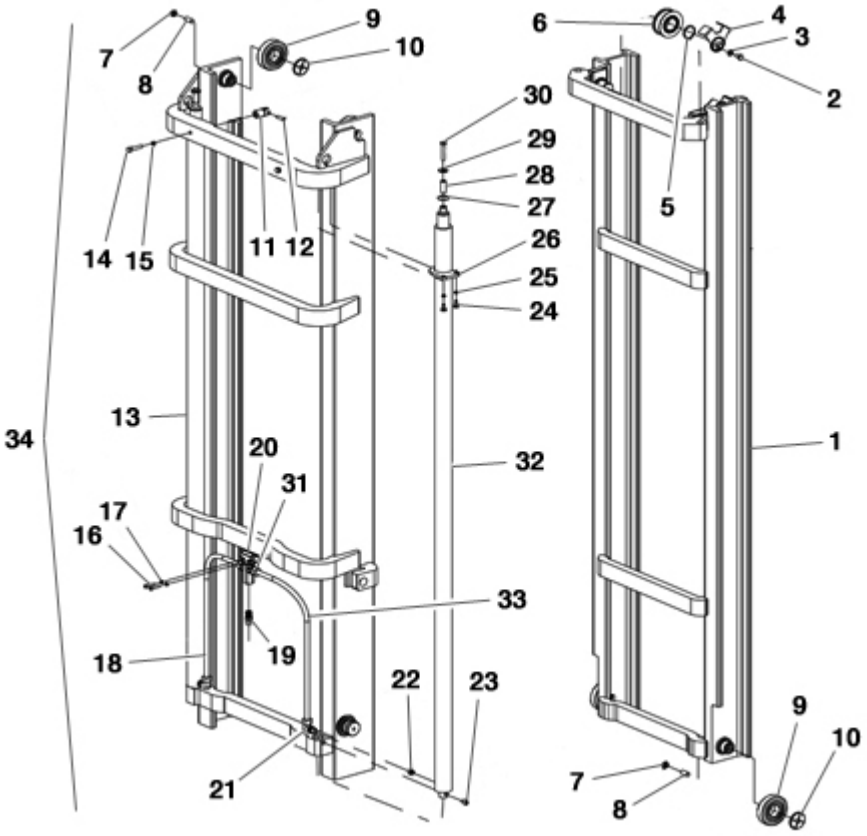

FIGURA	REFERENCIA	DENOMINACIÓN	CANTIDAD
001	EL.50037.00	WASHER	2
002	EL.60001.00	CHAIN ANCHOR	4
003	EL.30091.00	PULLEY	2
004	EL.60003.00	CHAIN ANCHOR PIN	2
005	EL.60004.00	HOSE PROTECTION	4
006	EL.60005.00	BEARING	12
007	EL.60006.00	BUSH	12
008	EL.60013.00	4 WAY COLLECTOR	1
009	EL.60029.00	CHAIN ANCHOR	2
010	EL.50061.00	SUPPORT ASSEMBLY	2
011	EL.60017.00	CLAMP	4
012	EL.60018.00	CLAMP	1
013	EL.60019.00	CLAMP	1
014	EL.60088.00	MAST CYLINDER	2
015	EL.60027.00	SHIM	2
016	EL.60032.00	CYLINDER LOCK	2
016	EL.60064.00	FREE LIFT CYLINDER	2
017	EL.60036.00	FREE LIFT CYLINDER LOCK	2

https://truckmanualshub.com/

TRIPLEX MAST 4,25 M. (FEM IV)
MAST GUIDES

FIGURA	REFERENCIA	DENOMINACIÓN	CANTIDAD
019	EL.60037.00	CHAIN ANCHOR PIN	2
020	EL.60040.00	SHIM	4
021	EL.60041.00	SUPPORT ASSEMBLY	2
022	EL.60072.00	OUTER MAST	1
023	EL.60075.00	INTERMEDIATE MAST	1
024	EL.60078.00	INNER MAST	1
025	EL.60048.00	HOSE	1
026	EL.60102.00	WASHER	6
027	EL.50065.00	NUT	4
028	EL.50030.00	WASHER	2
029	EL.50031.00	SCREW	4
030	EL.60105.00	SCREW	4
031	EL.50032.00	SCREW	2
032	EL.50033.00	WASHER	2
033	EL.60106.00	WASHER	8
034	EL.60107.00	WASHER	4
035	EL.60108.00	WASHER	2
036	EL.60111.00	SCREW	2
037	EL.60113.00	SB35 VALVE S=21,5	1
038	EL.60114.00	LB3 VALVE S=2,3	4
039	EL.50036.00	SCREW M12X70	2
040	EL.60117.00	SCREW	8
041	EL.60121.00	NUT	12
042	EL.60124.00	NUT	4
043	EL.60129.00	MAST CHAIN (1700 MM.)	2
044	EL.60135.00	CHAIN PIN	8
045	EL.60139.00	WASHER	2
046	EL.60140.00	SCREW	12
047	EL.60141.00	SCREW	2
048	EL.60142.00	FIXING SUPPORT	4
049	EL.60143.00	NUT	4
050	EL.60144.00	SCREW	2
051	EL.60047.00	HOSE	1
052	EL.60069.00	HOSE 1/2	1
053	EL.60069.00	HOSE 1/2	1
054	30.09350.00	FULL MAST TRIPLEX 4,25 M FEM IV	1

https://truckmanualshub.com/

TRIPLEX MAST 4,25 M. (FEM IV)
CARRIAGE SUBJECTION

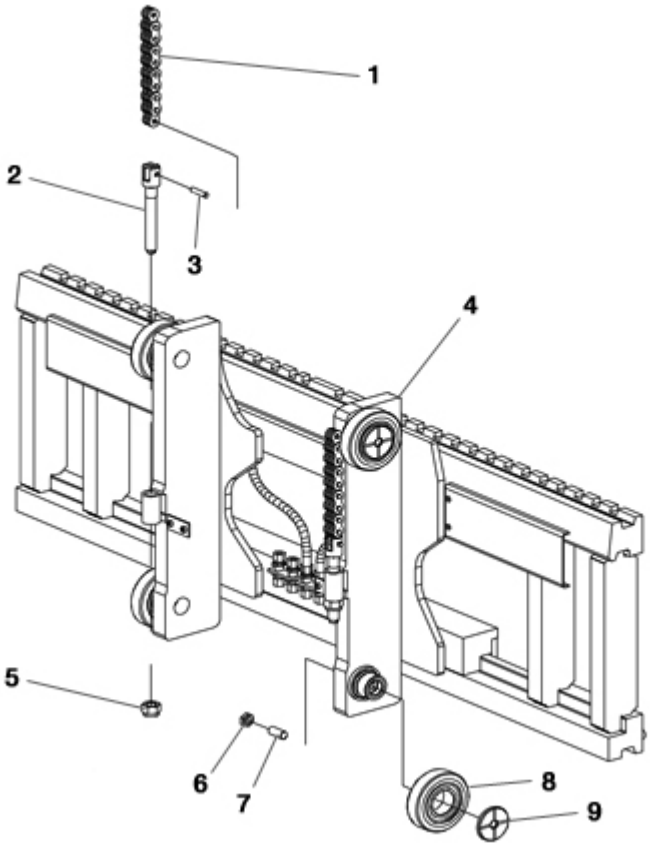

FIGURA	REFERENCIA	DENOMINACIÓN	CANTIDAD
001	EL.60125.00	CARRIAGE CHAIN (1090 MM.)	2
002	EL.60001.00	CHAIN ANCHOR	4
003	EL.60135.00	CHAIN PIN	8
004	EL.60053.00	CARRIAGE	1
005	EL.50065.00	NUT	4
006	EL.60121.00	NUT	12
007	EL.60140.00	SCREW	12
008	EL.60005.00	BEARING	12
009	EL.60006.00	BUSH	12

https://truckmanualshub.com/

TRIPLEX MAST 4,25 M. (FEM IV)
AUXILIARY REEVING

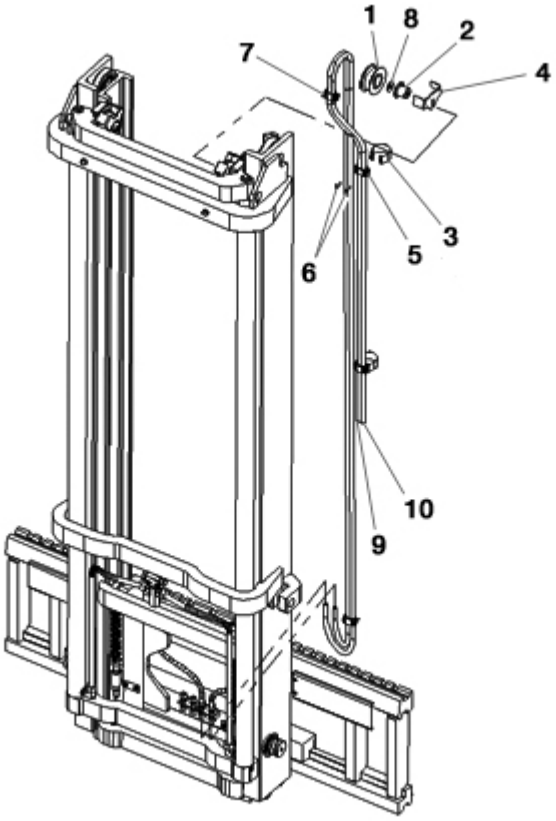

FIGURA	REFERENCIA	DENOMINACIÓN	CANTIDAD
001	EL.40053.00	HOSE PULLEY	1
002	EL.40057.00	PIN	1
003	EL.40120.00	SUPPORT	1
004	EL.60042.00	HOSE PROTECTION	2
005	EL.60043.00	HOSE PROTECTION	2
006	EL.60046.00	CLAMP	4
007	EL.60050.00	CLAMP	2
011	EL.50071.00	WASHER	4
012	EL.60117.00	SCREW	2
013	EL.60136.00	SCREW	4
014	EL.60137.00	SCREW	10
016	EL.60138.00	FIXING SUPPORT	2
017	EL.40056.00	WASHER	1
018	EL.60030.00	HOSE 3/8	1
019	EL.60030.00	HOSE 3/8	1
020	EL.60030.00	HOSE 3/8	1
021	EL.60030.00	HOSE 3/8	1

https://truckmanualshub.com/

TRIPLEX MAST 4,25 M. (FEM IV)
CARRIAGE

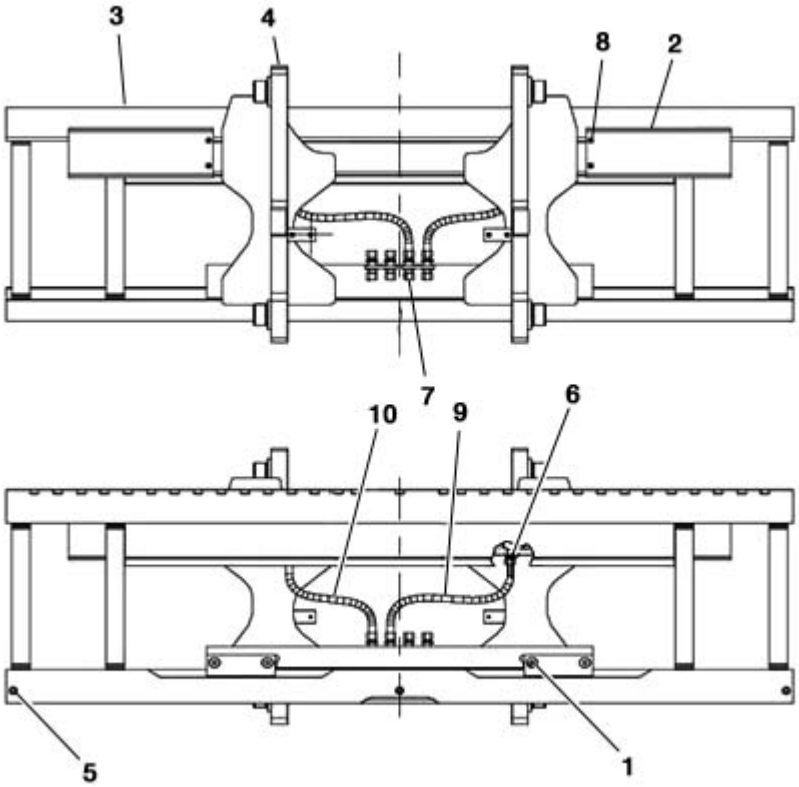

FIGURA	REFERENCIA	DENOMINACIÓN	CANTIDAD
001	EL.60097.00	S. S. ASSEMBLY	1
002	EL.60051.00	SIDE SHIFTER	1
003	EL.60052.00		1
004	EL.60054.00	HOSE PROTECTION	2
005	EL.60103.00	SCREW	3
006	EL.60115.00	FIXING SUPPORT	2
007	EL.60122.00	FIXING SUPPORT	2
008	EL.60123.00	NUT	4
009	EL.60086.00	HOSE 5/16	1
010	EL.60085.00	HOSE 5/16	1

https://truckmanualshub.com/

TRIPLEX MAST 4,25 M. (FEM IV)
LATERAL DISPLACEMENT

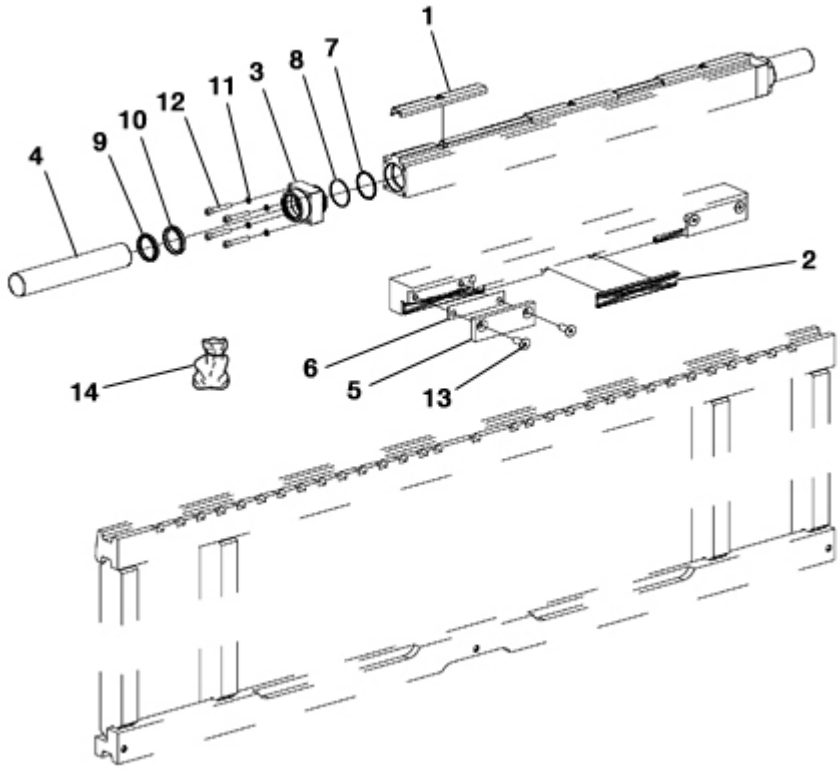

FIGURA	REFERENCIA	DENOMINACIÓN	CANTIDAD
001	EL.60007.00	BUSH	3
002	EL.60008.00	BUSH	3
003	EL.60010.00	PLUG	2
004	EL.60011.00	ROD	2
005	EL.60044.00	PLATE	2
006	EL.60045.00	SHIM	2
007	EL.60098.00	O-RING	2
008	EL.60099.00	PBK RING	2
009	EL.60100.00	RING	2
010	EL.60101.00	GASKET	2
011	EL.50049.00	WASHER	8
012	EL.60120.00	SCREW	8
013	EL.60146.00	SCREW	4
014	EL.60145.00	SEAL KIT	2

https://truckmanualshub.com/

TRIPLEX MAST 4,25 M. (FEM IV)
LATERAL CYLINDER

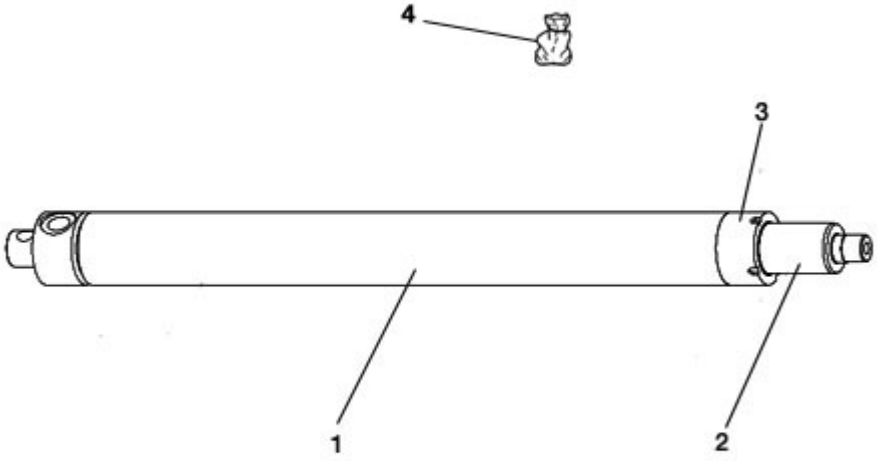

FIGURA	REFERENCIA	DENOMINACIÓN	CANTIDAD
001	EL.60022.00	CYLINDER	2
002	EL.60026.00	ROD ASSY	2
003	EL.60021.00	CYLINDER BODY	2
004	EL.50094.00	FREE LIFT CYLINDER SEALS KIT	2

https://truckmanualshub.com/

TRIPLEX MAST 4,25 M. (FEM IV)
FREE LIFT CYLINDER

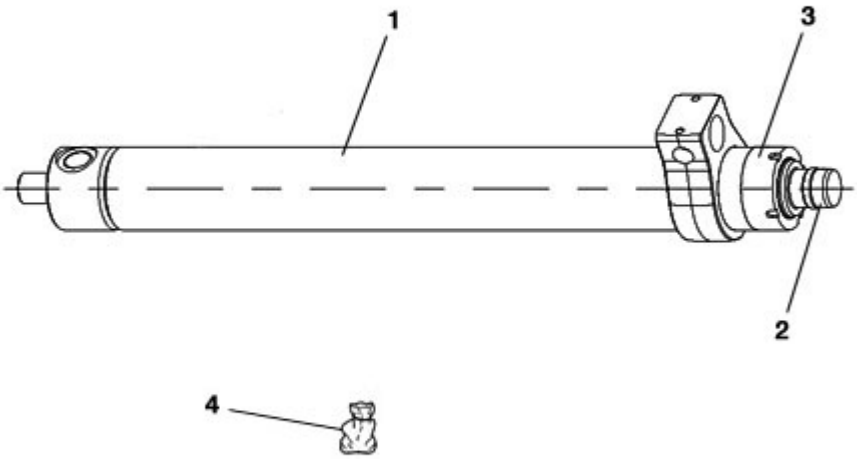

FIGURA	REFERENCIA	DENOMINACIÓN	CANTIDAD
001	EL.60034.00		2
002	EL.60024.00		2
003	EL.60035.00		2
004	EL.50094.00	FREE LIFT CYLINDER SEALS KIT	2

https://truckmanualshub.com/

TRIPLEX MAST 6,8 M. (FEM IV)
MAST GUIDES

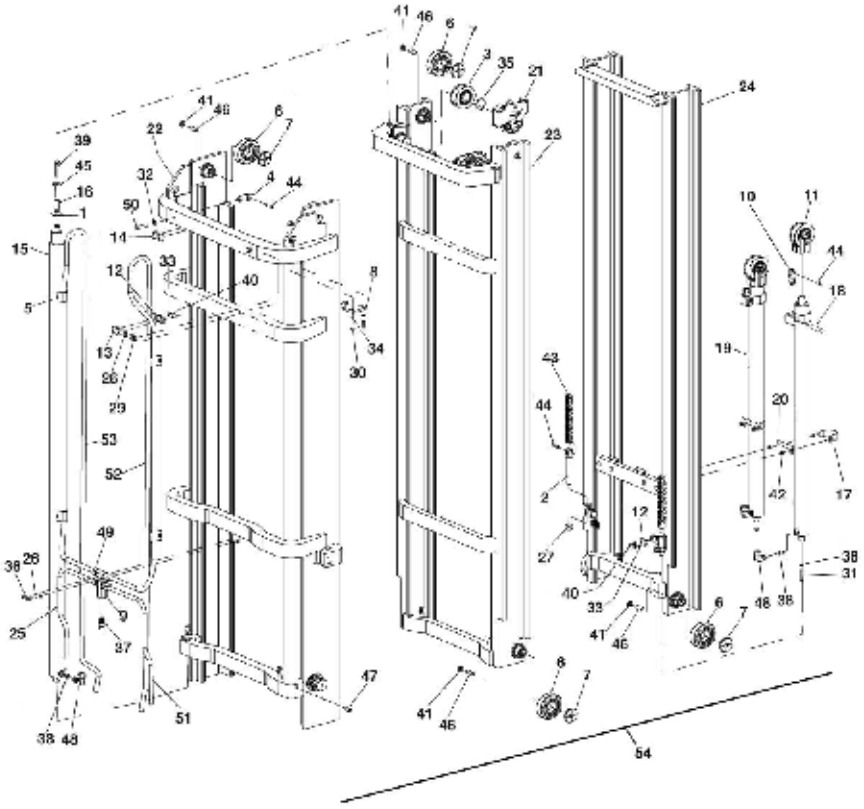

FIGURA	REFERENCIA	DENOMINACIÓN	CANTIDAD
001	EL.50037.00	WASHER	2
002	EL.60001.00	CHAIN ANCHOR	4
003	EL.30091.00	PULLEY	2
004	EL.60003.00	CHAIN ANCHOR PIN	2
005	EL.60004.00	HOSE PROTECTION	4
006	EL.60005.00	BEARING	12
007	EL.60006.00	BUSH	12
008	EL.60013.00	4 WAY COLLECTOR	1
009	EL.60029.00	CHAIN ANCHOR	2
010	EL.50061.00	SUPPORT ASSEMBLY	2
011	EL.60017.00	CLAMP	4
012	EL.60018.00	CLAMP	1
013	EL.60019.00	CLAMP	1
014	EL.60090.00	MAST CYLINDER	2
015	EL.60027.00	SHIM	2
016	EL.60032.00	CYLINDER LOCK	2
017	EL.60065.00	FREE LIFT CYLINDER	2
018	EL.60036.00	FREE LIFT CYLINDER LOCK	2

https://truckmanualshub.com/

TRIPLEX MAST 6,8 M. (FEM IV)
MAST GUIDES

FIGURA	REFERENCIA	DENOMINACIÓN	CANTIDAD
019	EL.60037.00	CHAIN ANCHOR PIN	2
020	EL.60040.00	SHIM	4
021	EL.60041.00	SUPPORT ASSEMBLY	2
022	EL.60073.00	OUTER MAST	1
023	EL.60076.00	INTERMEDIATE MAST	1
024	EL.60079.00	INNER MAST	1
025	EL.60048.00	HOSE	1
026	EL.60102.00	WASHER	6
027	EL.50065.00	NUT	4
028	EL.50030.00	WASHER	2
029	EL.50031.00	SCREW	4
030	EL.60105.00	SCREW	4
031	EL.50032.00	SCREW	2
032	EL.50033.00	WASHER	2
033	EL.60106.00	WASHER	8
034	EL.60107.00	WASHER	4
035	EL.60108.00	WASHER	2
036	EL.60111.00	SCREW	2
037	EL.60113.00	SB35 VALVE S=21,5	1
038	EL.60114.00	LB3 VALVE S=2,3	4
039	EL.50036.00	SCREW M12X70	2
040	EL.60117.00	SCREW	8
041	EL.60121.00	NUT	12
042	EL.60124.00	NUT	4
043	EL.60132.00	MAST CHAIN (2565 MM.)	2
044	EL.60135.00	CHAIN PIN	8
045	EL.60139.00	WASHER	2
046	EL.60140.00	SCREW	12
047	EL.60141.00	SCREW	2
048	EL.60142.00	FIXING SUPPORT	4
049	EL.60143.00	NUT	4
050	EL.60144.00	SCREW	2
051	EL.60047.00	HOSE	1
052	EL.60070.00	HOSE 1/2	1
053	EL.60070.00	HOSE 1/2	1
054	30.09450.00	FULL MAST TRIPLEX 6,8 M. (FEM IV)	1

https://truckmanualshub.com/

TRIPLEX MAST 6,8 M. (FEM IV)
CARRIAGE SUBJECTION

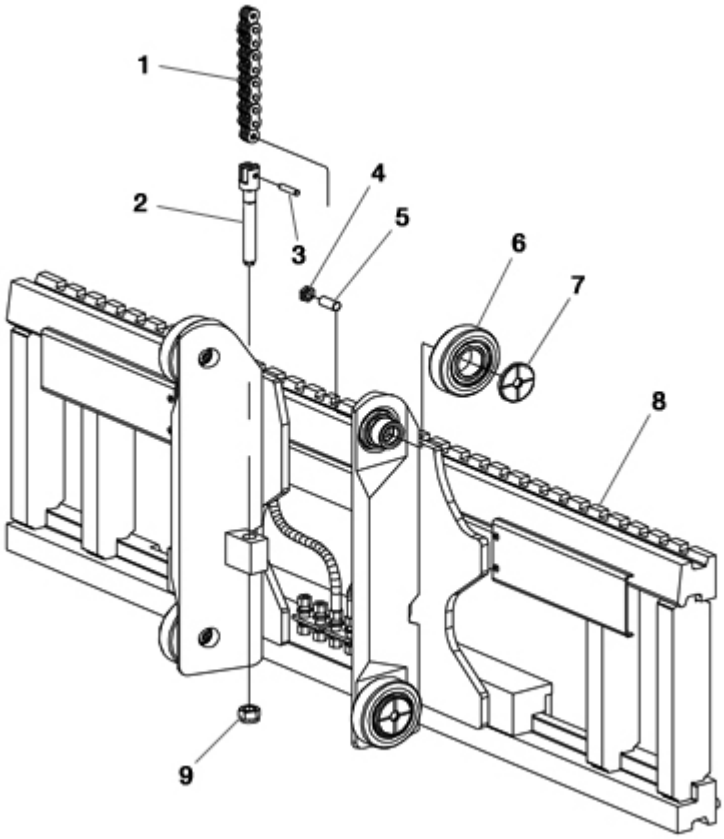

FIGURA	REFERENCIA	DENOMINACIÓN	CANTIDAD
001	EL.60128.00	CARRIAGE CHAIN (1550 MM.)	2
002	EL.60001.00	CHAIN ANCHOR	4
003	EL.60135.00	CHAIN PIN	8
004	EL.60121.00	NUT	12
005	EL.60140.00	SCREW	12
006	EL.60005.00	BEARING	12
007	EL.60006.00	BUSH	12
008	EL.60053.00	CARRIAGE	1
009	EL.50065.00	NUT	4

https://truckmanualshub.com/

TRIPLEX MAST 6,8 M. (FEM IV)
AUXILIARY REEVING

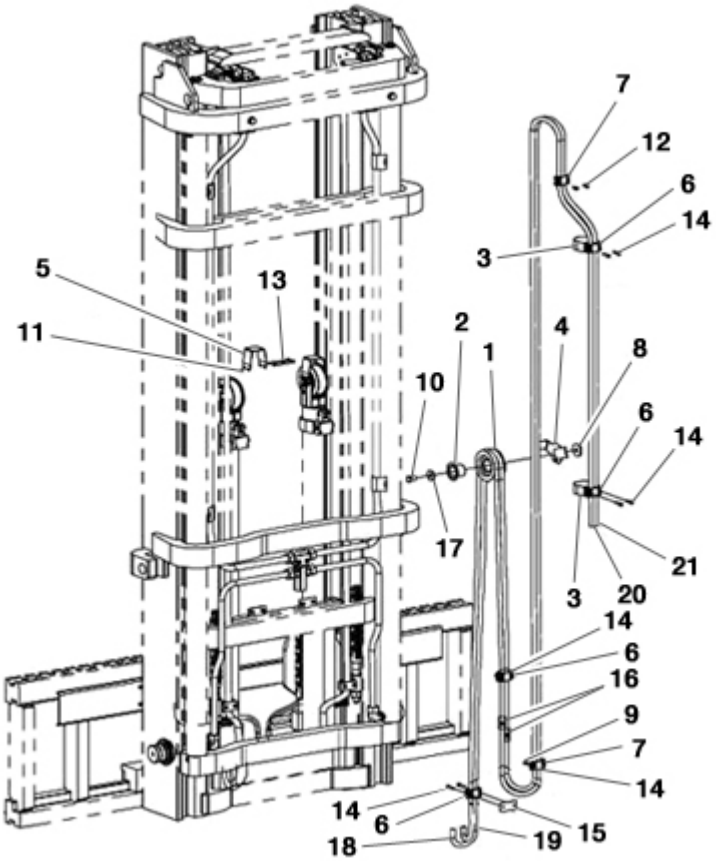

FIGURA	REFERENCIA	DENOMINACIÓN	CANTIDAD
004	EL.60042.00	HOSE PROTECTION	2
005	EL.60043.00	HOSE PROTECTION	2
006	EL.60046.00	CLAMP	4
007	EL.60050.00	CLAMP	2
011	EL.50071.00	WASHER	4
012	EL.60117.00	SCREW	2
013	EL.60136.00	SCREW	4
014	EL.60137.00	SCREW	10
016	EL.60138.00	FIXING SUPPORT	2
018	EL.60030.00	HOSE 3/8	1
019	EL.60030.00	HOSE 3/8	1
020	EL.60030.00	HOSE 3/8	1
021	EL.60030.00	HOSE 3/8	1

https://truckmanualshub.com/

TRIPLEX MAST 6,8 M. (FEM IV)
CARRIAGE

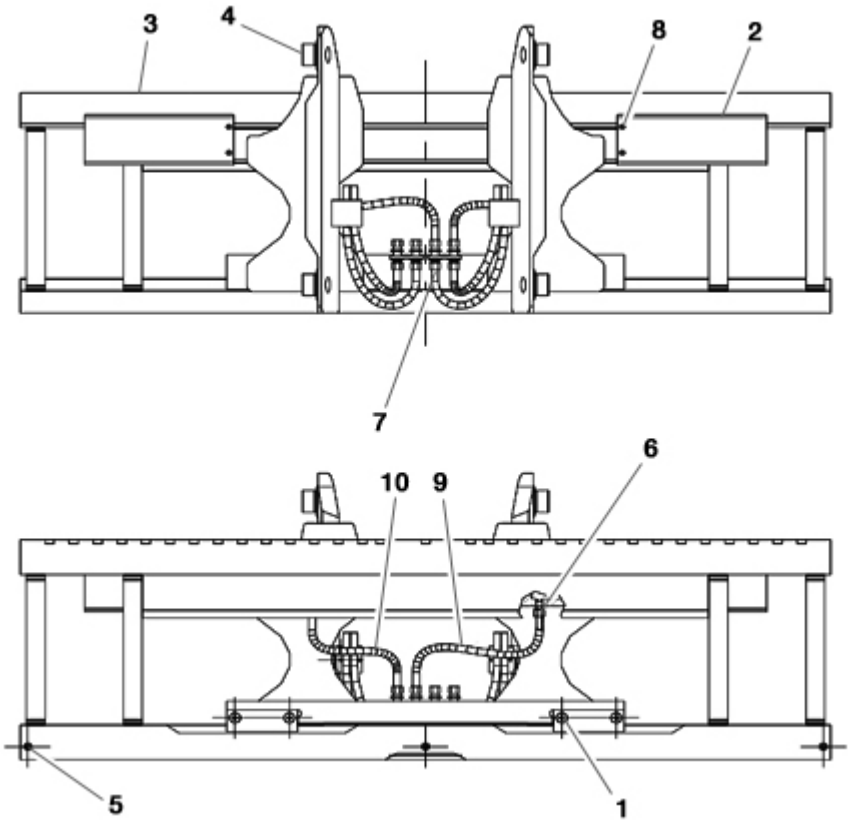

FIGURA	REFERENCIA	DENOMINACIÓN	CANTIDAD
001	EL.60097.00	S. S. ASSEMBLY	1
002	EL.60051.00	SIDE SHIFTER	1
003	EL.60052.00		1
004	EL.60054.00	HOSE PROTECTION	2
005	EL.60103.00	SCREW	3
006	EL.60115.00	FIXING SUPPORT	2
007	EL.60122.00	FIXING SUPPORT	2
008	EL.60123.00	NUT	4
009	EL.60086.00	HOSE 5/16	1
010	EL.60085.00	HOSE 5/16	1

https://truckmanualshub.com/

TRIPLEX MAST 6,8 M. (FEM IV)
LATERAL DISPLACEMENT

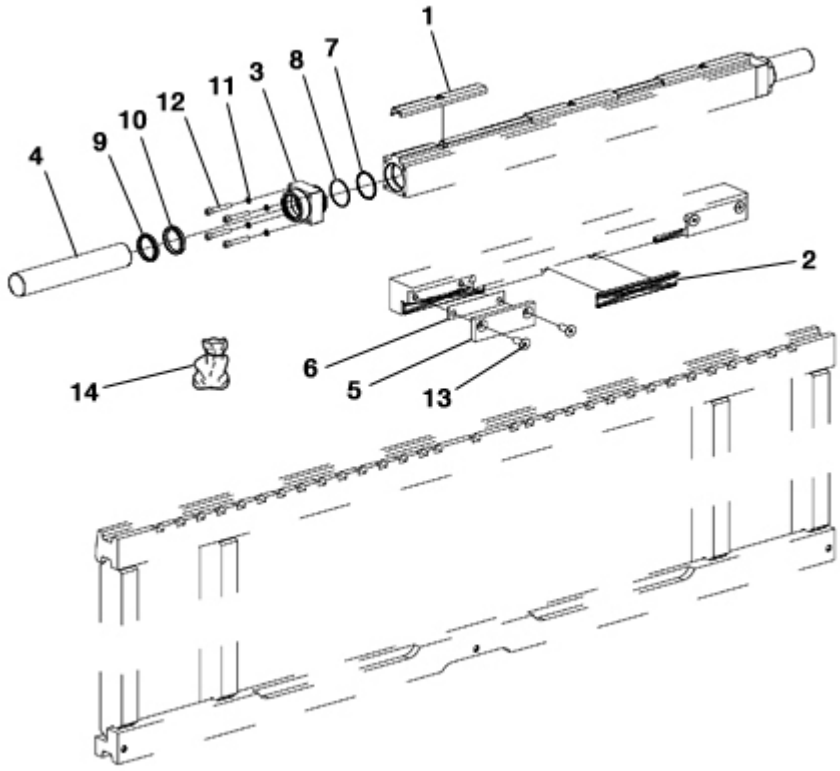

FIGURA	REFERENCIA	DENOMINACIÓN	CANTIDAD
001	EL.60007.00	BUSH	3
002	EL.60008.00	BUSH	3
003	EL.60010.00	PLUG	2
004	EL.60011.00	ROD	2
005	EL.60044.00	PLATE	2
006	EL.60045.00	SHIM	2
007	EL.60098.00	O-RING	2
008	EL.60099.00	PBK RING	2
009	EL.60100.00	RING	2
010	EL.60101.00	GASKET	2
011	EL.50049.00	WASHER	8
012	EL.60120.00	SCREW	8
013	EL.60146.00	SCREW	4
014	EL.60145.00	SEAL KIT	2

https://truckmanualshub.com/

TRIPLEX MAST 6,8 M. (FEM IV)
LATERAL CYLINDER

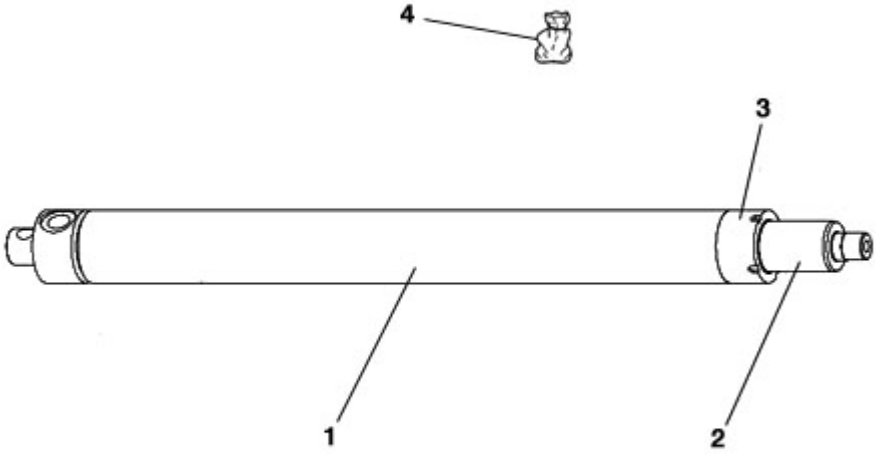

FIGURA	REFERENCIA	DENOMINACIÓN	CANTIDAD
001	EL.60022.00	CYLINDER	2
002	EL.60026.00	ROD ASSY	2
003	EL.60021.00	CYLINDER BODY	2
004	EL.50094.00	FREE LIFT CYLINDER SEALS KIT	2

https://truckmanualshub.com/

TRIPLEX MAST 6,8 M. (FEM IV)
FREE LIFT CYLINDER

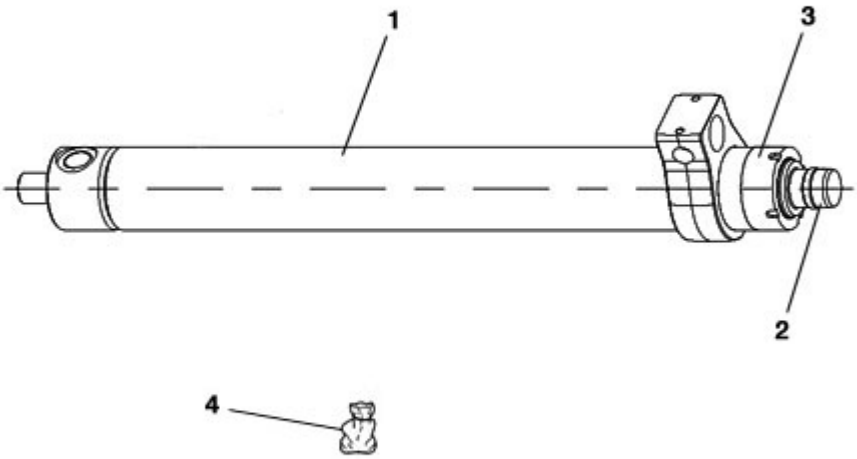

FIGURA	REFERENCIA	DENOMINACIÓN	CANTIDAD
001	EL.60034.00		2
002	EL.60024.00		2
003	EL.60035.00		2
004	EL.50094.00	FREE LIFT CYLINDER SEALS KIT	2

https://truckmanualshub.com/

MACHINE OPERATION TOOLS
INCLINATION CYLINDER

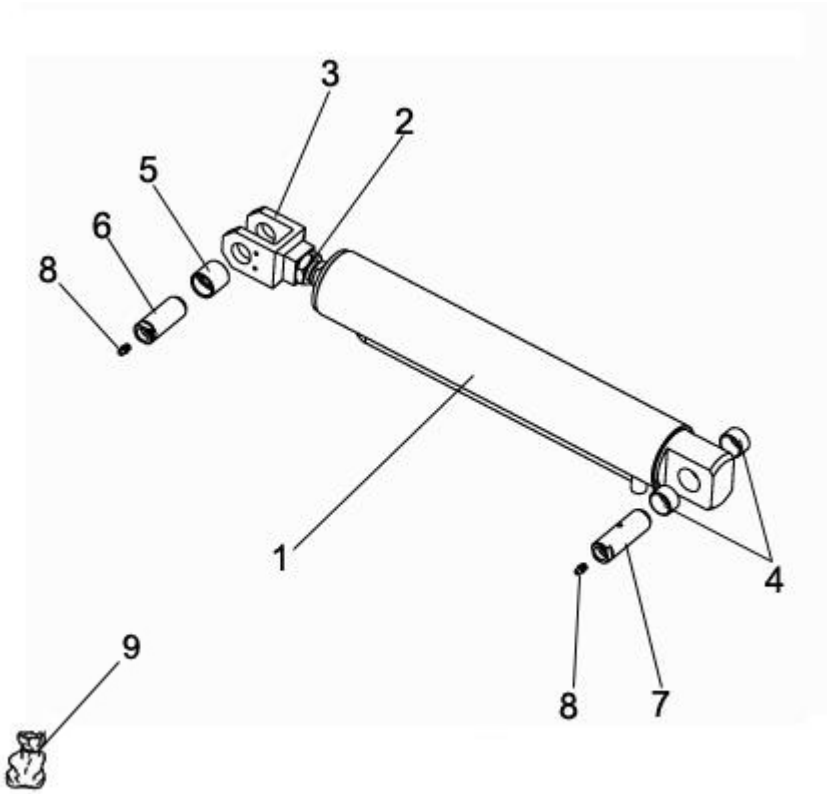

FIGURA	REFERENCIA	DENOMINACIÓN	CANTIDAD
001	30.09010.00	CYLINDER D/E 75X440	2
002	10.01117.00	NUT DIN439	2
003	10.01115.01	CYLINDER ROD HEAD	2
004	949.03020.00	BUSHING 30x34x20 DIN 1494	4
005	08.00527.00	BEARING	1
006	15.01216.00	SHAFT CIL/COA	1
007	42.20102.00	SHAFT CIL/COA	1
008	901.08000.33	GREASER DIN71412-A	2
009	30.09017.00	JOINTS KIT	1

https://truckmanualshub.com/

MACHINE OPERATION TOOLS

INCLINATION CYLINDER

BASTIDOR: 66414

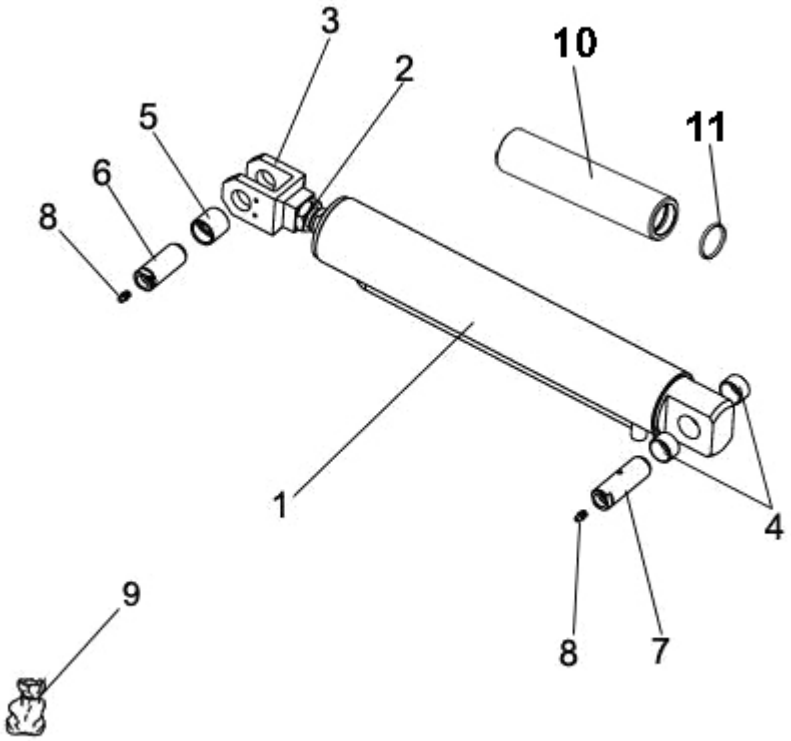

FIGURA	REFERENCIA	DENOMINACIÓN	CANTIDAD
001	30.09010.02	CYLINDER D/E 75X220	2
002	10.01117.00	NUT DIN439	2
003	10.01115.01	CYLINDER ROD HEAD	2
004	949.03020.00	BUSHING 30x34x20 DIN 1494	4
005	08.00527.00	BEARING	1
006	15.01216.00	SHAFT CIL/COA	1
007	42.20102.00	SHAFT CIL/COA	1
008	901.08000.33	GREASER DIN71412-A	2
009	30.09017.00	JOINTS KIT	1
010	30.09018.00	TUBE MET. 50X36X220	1
011	201.34535.50	GASKET DIN3770	1

https://truckmanualshub.com/

MACHINE OPERATION TOOLS
FORKS

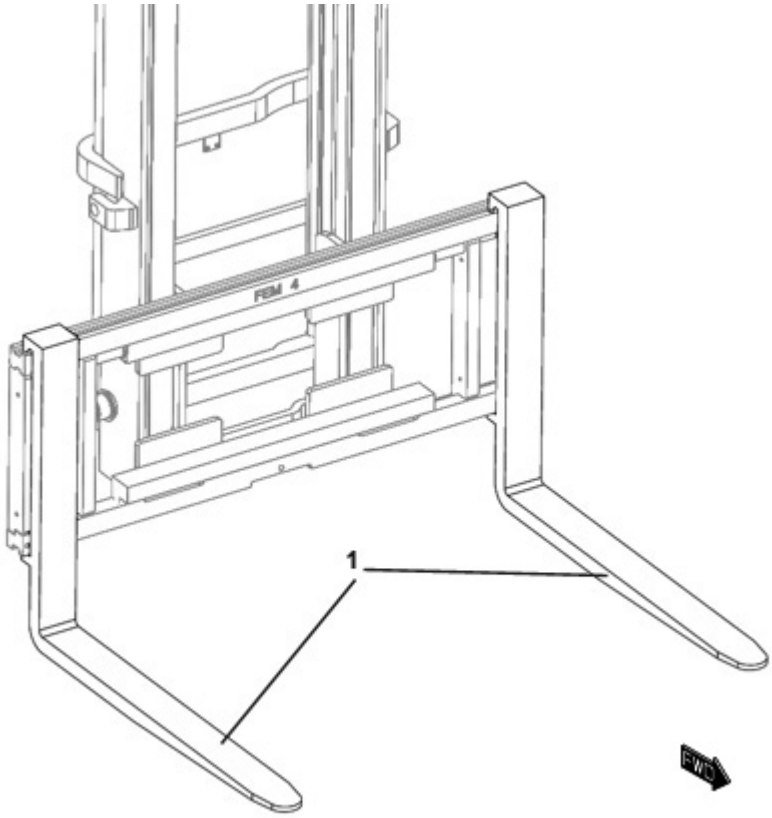

FIGURA	REFERENCIA	DENOMINACIÓN	CANTIDAD
001	30.09002.00	FORK 1200 FEM IV	2

https://truckmanualshub.com/

MACHINE OPERATION TOOLS
LOAD PROTECTOR

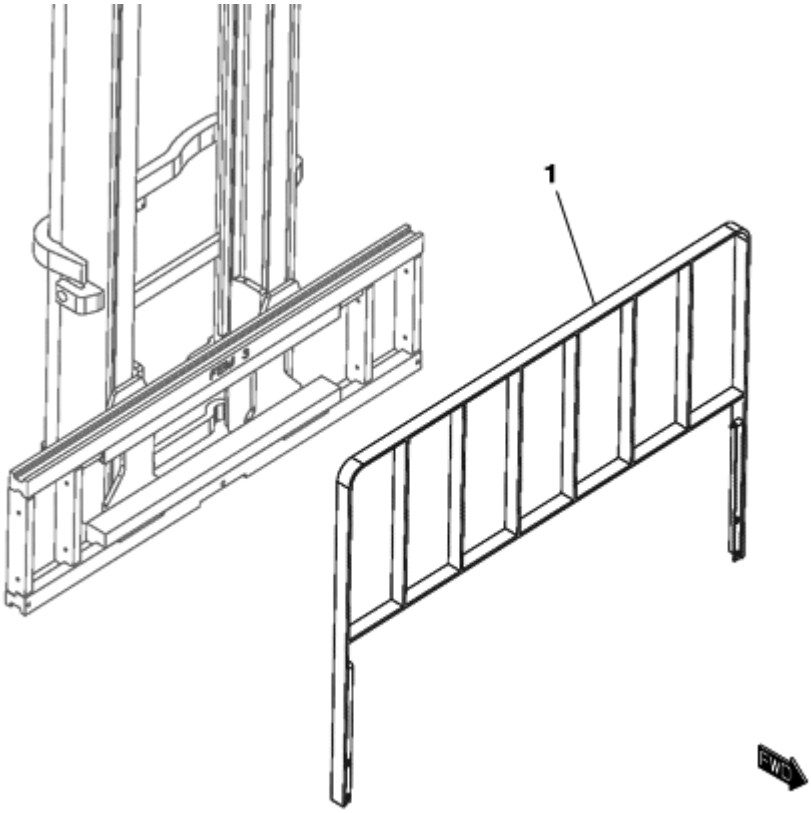

FIGURA	REFERENCIA	DENOMINACIÓN	CANTIDAD
001	30.13100.00	LOAD PROTECTOR 50X1401X1730	1
002	604.10060.86	SCREW DIN931	4
003	104.10000.00	CIR-CLIP EXT. DIN7980	4
004	101.10000.66	WASHER DIN125	4

https://truckmanualshub.com/

MACHINE OPERATION TOOLS
BUCKET

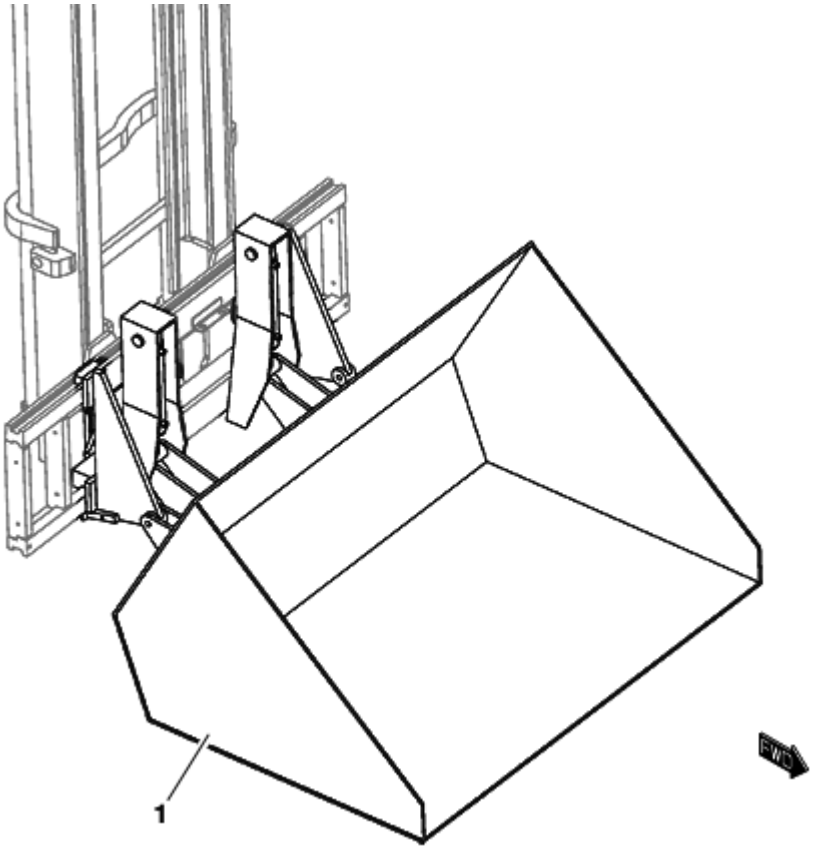

FIGURA	REFERENCIA	DENOMINACIÓN	CANTIDAD
001	30.13203.00	BUCKET 800L FEM4	1
001	30.13204.00	BUCKET 1000L FEM4	1
001	30.13205.00	BUCKET 1500L FEM4	1

https://truckmanualshub.com/

HYDRAULIC DIAGRAM INSTALLATION
JOYSTICK

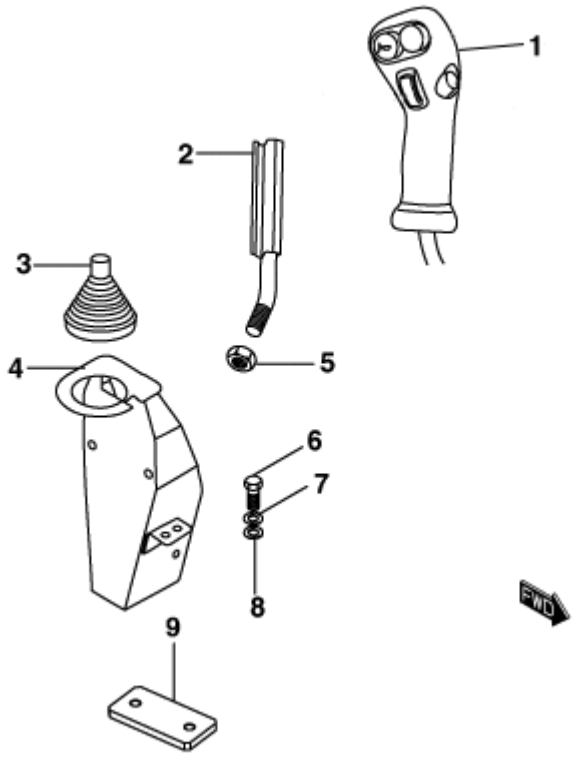

FIGURA	REFERENCIA	DENOMINACIÓN	CANTIDAD
001	12.11013.00	CONTROL LEVER	1
002	10.13154.02	AXLE CIL/ROS	1
003	43.50349.00	DUST EXCLUDER	1
004	12.10011.00	FIXING SUPPORT	1
005	701.10000.66	NUT DIN934 M10X1,5	1
006	603.12025.86	SCREW DIN933	2
007	104.12000.00	CIR-CLIP EXT. DIN7980	2
008	101.12000.66	WASHER DIN125	2
009	30.10030.00	SUPPORT 10X60X120	1

https://truckmanualshub.com/

HYDRAULIC DIAGRAM INSTALLATION
DISTRIBUTOR

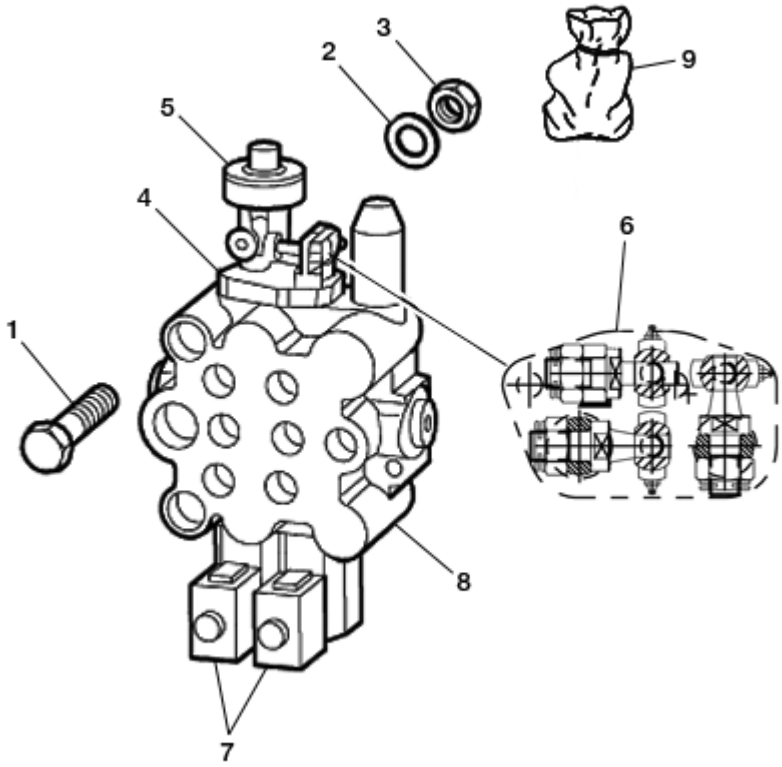

FIGURA	REFERENCIA	DENOMINACIÓN	CANTIDAD
001	604.08055.86	BOLT DIN931 M8x55	1
001B	604.08045.86	SCREW DIN931 M8x45	2
002	104.08000.00	CIR-CLIP EXT. DIN7980	3
003	711.08000.66	NUT	3
004	RQN9700.164	MULTIPLE COVER	1
005	RQ7000/284	COUPLING PIECE	1
006	RQN9700/306	BALL JOINT SET	1
007	RQN2476212	ELECTROMAGNET	2
008	12.10030.00	CONTROL VALVE 2E	1
009	RQN9700/203	GASKET SET	1

https://truckmanualshub.com/

HYDRAULIC DIAGRAM INSTALLATION

HYDRAULIC TANK

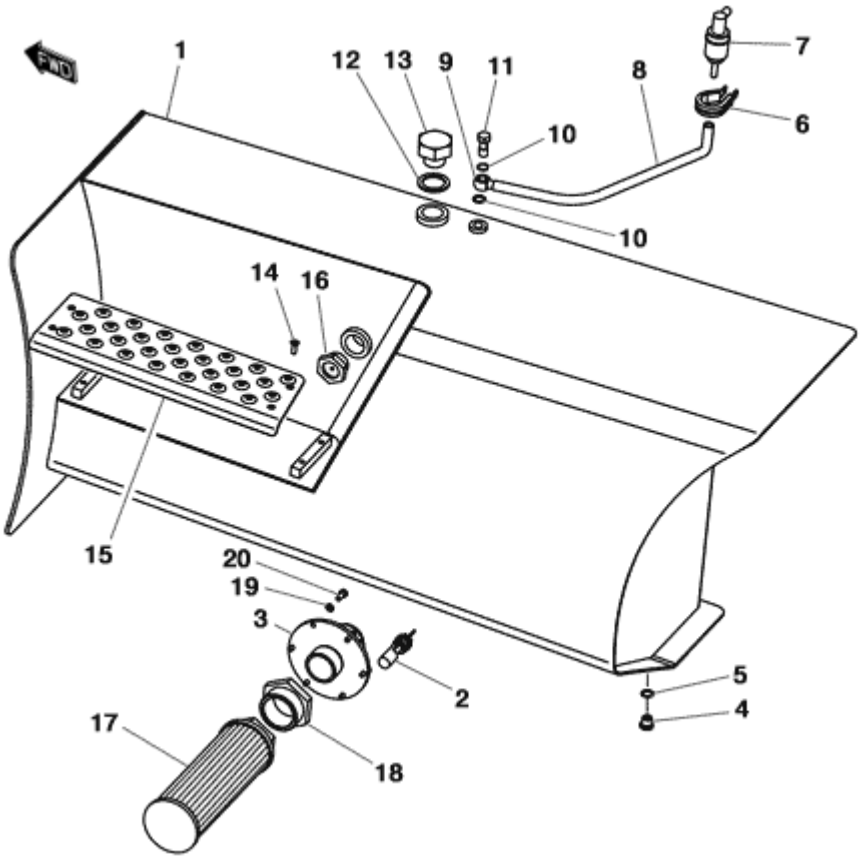

FIGURA	REFERENCIA	DENOMINACIÓN	CANTIDAD
001	30.10040.00	DEPOSIT HYDRAULIC	1
002	43.70261RE00	BUOY OIL LEVEL INDICATOR	1
003	43.70406.00	AD. FILTER SUPPORT	1
004	10.00921.00	CAP. M14X150 DIN 908	1
005	107.14000.10	WASHER AL	1
006	830.03006.00	CLAMP LOOP	1
007	45.01526.00	PREFILTER FUEL/HYDRAULIC	1
008	469.03014.00	HOSE L/P MAT. 8x14	1
009	45.04106.00	NIPPLE O/TB	1
010	28.00341.00	GASKET MET. BUNA	2
011	28.00340.00	NIPPLE SCREW SIM.	1
012	43.13444.00	GASKET MET. BUNA	1
013	70.10246.00	CAP	1
014	618.06015.86	SCREW DIN7991	4
015	30.10043.00	SHEET 3X140X400	1
016	30.10041.00	LEVEL VISUAL INDICATOR 1	1
017	46.10047.00	OIL FILTER 180 L	1
018	46.58082.00	FITTING M/H 2GAS-1.1/2GAS	1

https://truckmanualshub.com/

HYDRAULIC DIAGRAM INSTALLATION
HYDRAULIC TANK

FIGURA	REFERENCIA	DENOMINACIÓN	CANTIDAD
019	104.06000.00	CIR-CLIP EXT. DIN7980	6
020	603.06015.86	SCREW DIN933	6

https://truckmanualshub.com/

HYDRAULIC DIAGRAM INSTALLATION
LINE FILTERS

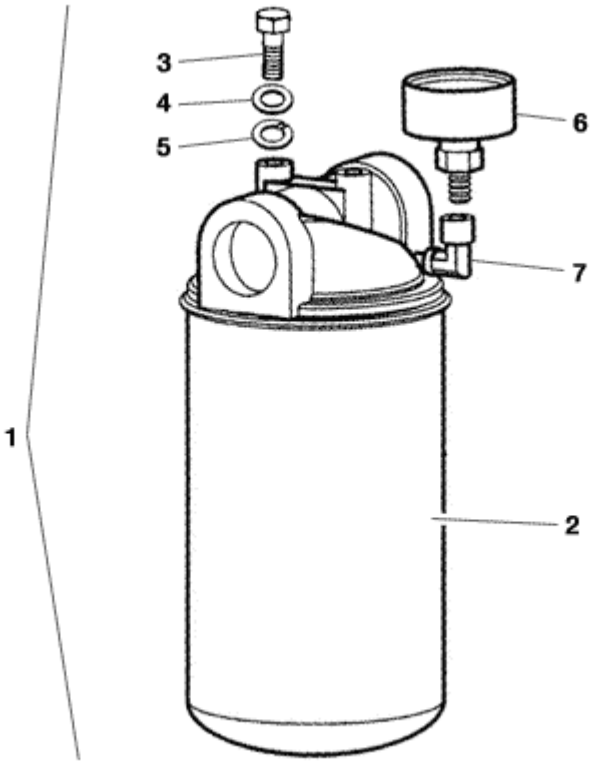

FIGURA	REFERENCIA	DENOMINACIÓN	CANTIDAD
001	60.20101.00	OIL FILTER	1
002	60.20100.00	FILTER ELEMENT	1
003	603.08020.86	SCREW DIN933 M8x20	2
004	101.08000.66	WASHER DIN125 D8	2
005	104.08000.00	CIR-CLIP EXT. DIN7980	2
006	60.20102.00	INDICATOR	1

https://truckmanualshub.com/

HYDRAULIC DIAGRAM INSTALLATION
TRANSMISSION

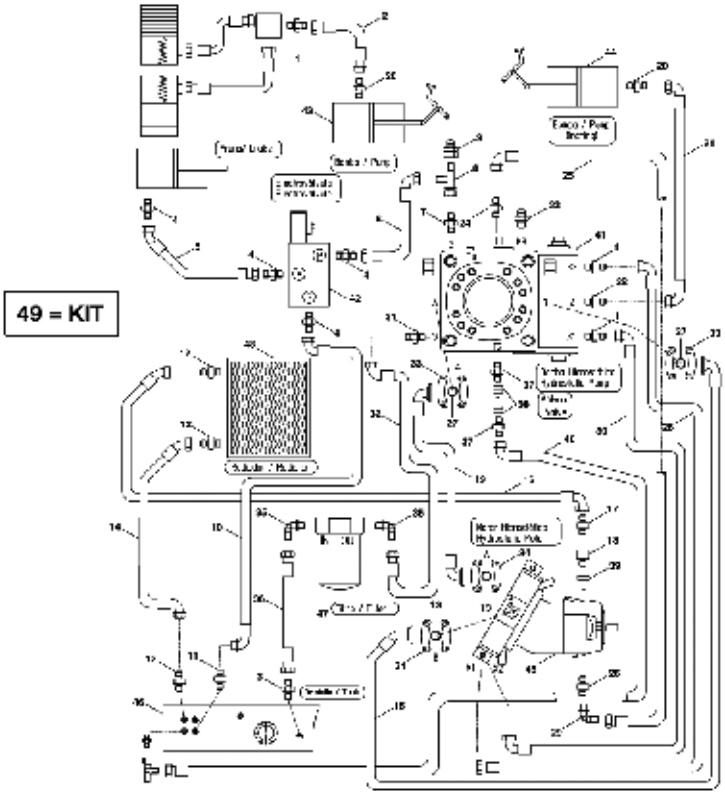

FIGURA	REFERENCIA	DENOMINACIÓN	CANTIDAD
001	57.10316.00	FITTING M/M M14X1.5-M12X1.5	3
002	30.10303.00	HYDRAULIC HOSE R1T1/4 1110 TL-TL	1
003	12.10301.00	FITTING M/M M36-1G	1
004	20.10242.00	NIPPLE M/M	4
005	30.10304.00	HYDRAULIC HOSE R1T1/4 960 TL-C45 TL	1
006	30.10305.00	HYDRAULIC HOSE R1T1/4 660 TL-C90 TL	1
007	46.10846.00	FITTING M/M M16XM14	1
008	46.10401.00	NIPPLE	1
009	46.10402.00	FITTING M/H M16	1
010	30.10308.00	HYDRAULIC HOSE R1T1/4 1770 C90TL-C90TL	1
011	46.10849.00	FITTING M/M M16-3/8BSP	1
012	57.10307.00	FITTING M/M M30X2/3/4BSP	3
013	30.10302.00	GASKET 1	2
014	30.10331.00	HYDRAULIC HOSE R1T3/4 1475 C90 TL-C90 T	1
015	30.10314.00	HYDRAULIC HOSE R1T3/4 880 BR90 - BR90	1
016	30.10309.00	HYDRAULIC HOSE R1T3/4 2525 C90TL-C45TL	1
017	70.10221.00	FITTING M/M M30x1/2BSP	1
018	12.10332.00	FITTING	1

https://truckmanualshub.com/

HYDRAULIC DIAGRAM INSTALLATION
TRANSMISSION

FIGURA	REFERENCIA	DENOMINACIÓN	CANTIDAD
019	30.10315.00	HYDRAULIC HOSE R1T3/4 1400 BR90 - BR90	1
020	57.10317.00	FITTING M/M M14X1.5-7/16-20H UNF |	2
021	30.10307.00	HYDRAULIC HOSE R1T1/4 2740 C90TL-C90TL	1
022	12.10307.00	FITTING M/M M12X1,5-M10X1	1
023	70.10218.00	FITTING M/M M16x2-M12x1.5	1
024	70.10210.00	FITTING M/M M26xM22	1
025	30.10306.00	HYDRAULIC HOSE R1T5/8 1720 TL-C90 TL	1
026	46.10838.00	FITTING M/M M26xM18	1
027	30.10301.00	GASKET 3/4	1
028	30.10316.00	HYDRAULIC HOSE R1T1/4 1690 TL-C90 TL	1
029	46.10839.00	FITTING C90M/TL M26X1.5	1
030	30.10313.00	HYDRAULIC HOSE R1T1 1690 TL-C90 TL	1
031	46.10835.00	FITTING M/M M36xM33	1
032	30.10312.00	HYDRAULIC HOSE R1T1 530 TL-C90 TL	1
033	70.10212.00	CLAMP SAE6000 3/4	1
034	46.10845.00	CLAMP SAE6000 1	2
035	70.10202.00	FITTING C90M/M 11/4G - 11/4G	2
036	30.10311.00	HYDRAULIC HOSE R1T1 570 TL-C90 TL	1
037	46.10824.00	FITTING M/M M22x1/2BSP	2
038	08.00316.00	GASKET MET. BUNA D1/2 G	2
039	46.10827.00	METAL BUNA GASKET M18X1.5	1
040	30.10336.00	HYDRAULIC HOSE R1T1/2 1700 TL-C90 TL	1
041	46.10401.00	NIPPLE	1
041	57.03250.01	HYDR. PUMP 56CC HYDROMATIC	1
042	20.05005.00	VALVE	1
043	57.05010.00	BRAKE PUMP	1
044	20.03070.00	BRAKE PUMP	1
045	30.03020.00	HYDR. ENGINE 107CC. PISTONS DA	1
046	30.10040.00	DEPOSIT HYDRAULIC	1
047	60.20101.00	OIL FILTER	1
048	30.02050.00	RADIATOR	1
049	30.10300.00	PIPES KIT	1

https://truckmanualshub.com/

HYDRAULIC DIAGRAM INSTALLATION

SERVICE DIAGRAM

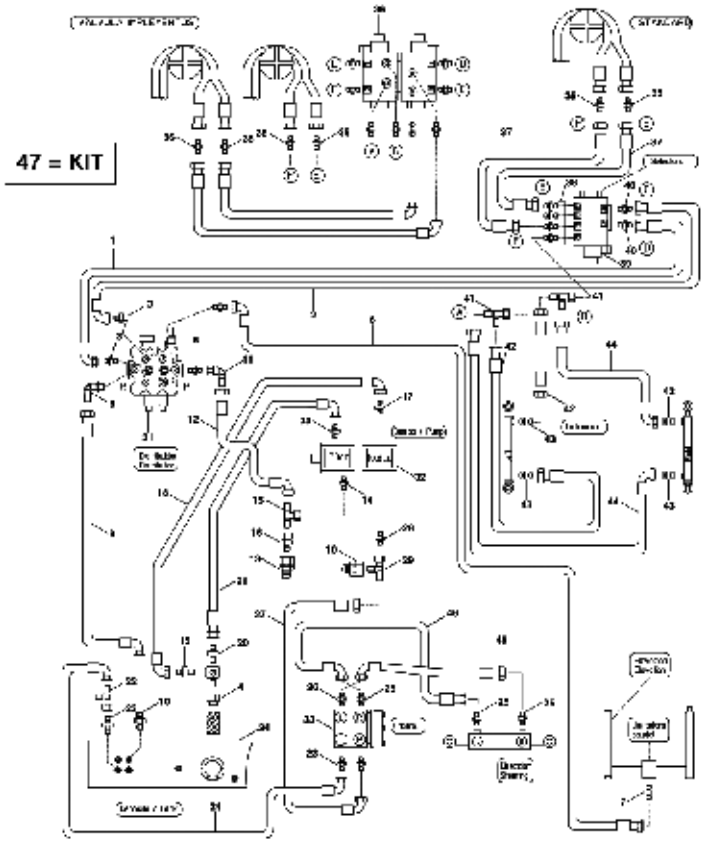

FIGURA	REFERENCIA	DENOMINACIÓN	CANTIDAD
001	30.10317.00	HYDRAULIC HOSE R2T1/2 710 TL-C90 TL	1
002	30.10318.00	HYDRAULIC HOSE R2T1/2 860 TL-C90 TL	1
003	46.10824.00	FITTING M/M M22x1/2BSP	2
004	46.58082.00	FITTING M/H 2GAS-1.1/2GAS	1
005	46.10401.00	NIPPLE	2
005	70.10230.00	FITTING M/M M26x1,5- 1/2G	2
006	30.10319.00	HYDRAULIC HOSE R2T5/8 2460 TL-C90 TL	1
007	70.10207.00	FITTING M/M M26x3/4BSP	1
008	57.10341.00	FITTING	1
009	30.10321.00	HYDRAULIC HOSE R1T1 1680 TL-C90 TL	1
010	57.10343.00	FITTING M/M M36X2-3/4 GAS	2
011	46.10839.00	FITTING C90M/TL M26X1.5	1
012	30.10332.00	HYDRAULIC HOSE R2T5/8 525 TL-C90 TL	1
013	64.10226.00	FITTING	1
014	70.10230.00	FITTING M/M M26x1,5- 1/2G	1
016	30.10333.00	FITTING	1
017	70.10230.00	FITTING M/M M26x1,5- 1/2G	1
018	30.10324.00	HYDRAULIC HOSE R1T3/4 630 C90 TL-C90 TL	1

https://truckmanualshub.com/

HYDRAULIC DIAGRAM INSTALLATION
SERVICE DIAGRAM

FIGURA	REFERENCIA	DENOMINACIÓN	CANTIDAD
019	70.10207.00	FITTING M/M M26x3/4BSP	1
020	12.10301.00	FITTING M/M M36-1G	1
021	30.10325.00	HYDRAULIC HOSE R1T1 620 TL-C90 TL	1
022	46.10911.00	FITTING FORT M/M/TL M22	1
023	46.10824.00	FITTING M/M M22x1/2BSP	2
024	30.10322.00	HYDRAULIC HOSE R1T1/2 2490 C90TL-C90TL	1
025	30.10334.00	FITTING M18X1.5	2
026	70.10229.00	FITTING M/M M18x1/2BSP	3
027	30.10323.00	HYDRAULIC HOSE R2T3/8 1500 TL - C90 TL	1
028	70.10222.00	FITTING M/M M18x3/8BSP	1
029	70.10223.00	FITTING M/M/TL M18x1,5	1
030	70.10226.00	FITTING M/TL M16x2- M18x1,5	1
031	12.10030.00	CONTROL VALVE 2E	1
032	30.10001.00	OIL PUMP DOUBLE 30/10.6CC	1
033	43.70613.01	STEERING VALVE	1
034	30.10040.00	DEPOSIT HYDRAULIC	1
035	57.10334.00	NIPPLE	6
036	30.10400.00	VALVE 8 WAYS	1
037	30.10330.00	HYDRAULIC HOSE R1T3/8 1200 TL - TL	2
038	46.10849.00	FITTING M/M M16-3/8BSP	4
039	30.10401.00	VALVE 6 WAYS-80 L	1
040	70.10253.00	FITTING M/M M22x3/8BSP	2
041	30.10401.00	VALVE 6 WAYS-80 L	1
042	30.10328.00	HYDRAULIC HOSE R1T1/4 635 TL - C90 TL	2
043	70.10239.00	FITTING M/M M16X1,5 - 1/4GAS	4
044	30.10329.00	HYDRAULIC HOSE R1T1/4 2030 TL - C90 TL	2
045	30.10326.00	HYDRAULIC HOSE R2T3/8 2710 TL - C90 TL	1
046	30.10327.00	HYDRAULIC HOSE R2T3/8 3080 TL - C90 TL	1
047	30.10310.00	PIPES KIT	1

https://truckmanualshub.com/

HYDRAULIC DIAGRAM INSTALLATION
VALVES

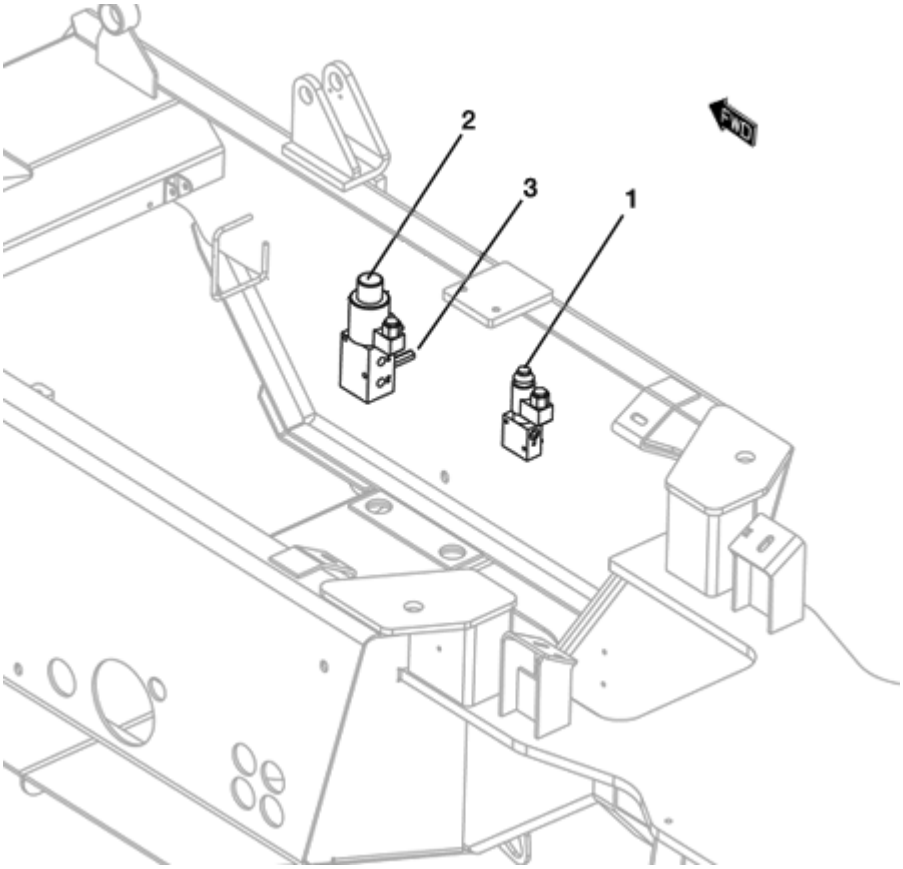

FIGURA	REFERENCIA	DENOMINACIÓN	CANTIDAD
001	20.05005.00	VALVE	1
002	30.10401.00	VALVE 6 WAYS-80 L	1
003	20.10203.00	SPACER	2

https://truckmanualshub.com/

ELECTRIC INSTALLATION
JOYSTICK LEVER

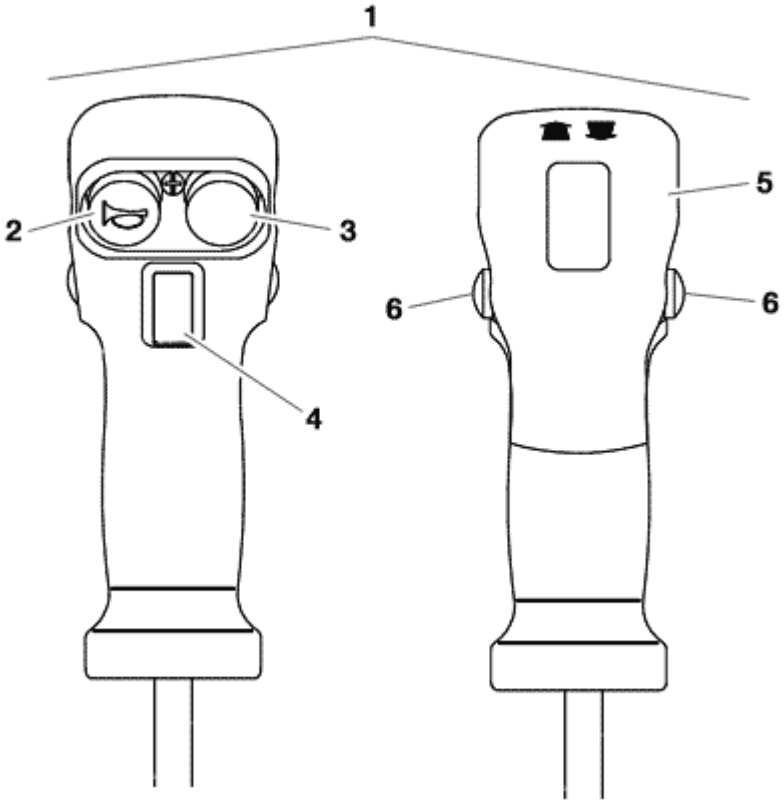

FIGURA	REFERENCIA	DENOMINACIÓN	CANTIDAD
001	12.11013.00	CONTROL LEVER	1
002	10.14322.00	PUSCH BUTTOM	1
003	10.14323.00	SWITCH	1
004	10.14329.01	SWITCH	1
005	20.11017.03	COVER	1
006	10.14319.00	PUSCH BUTTOM	2

https://truckmanualshub.com/

ELECTRIC INSTALLATION
BATTERY

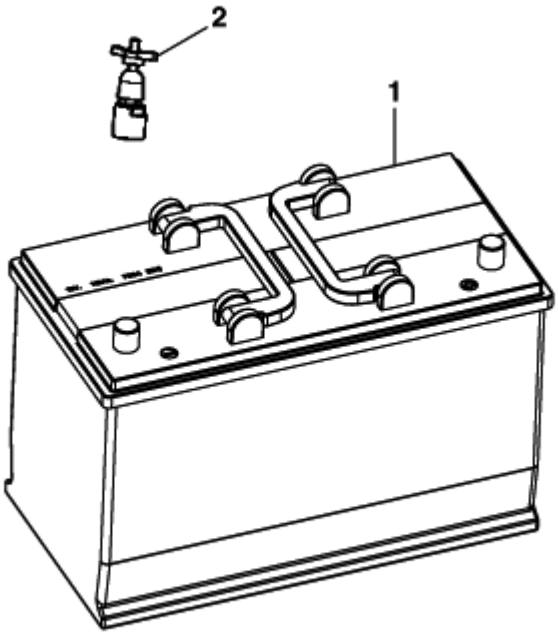

FIGURA	REFERENCIA	DENOMINACIÓN	CANTIDAD
001	64.11110.00	BATTERY MHD 110.0	1
002	20.11007.00	DISCONNECTOR	1

https://truckmanualshub.com/

ELECTRIC INSTALLATION

BATTERY

BASTIDOR: 60884

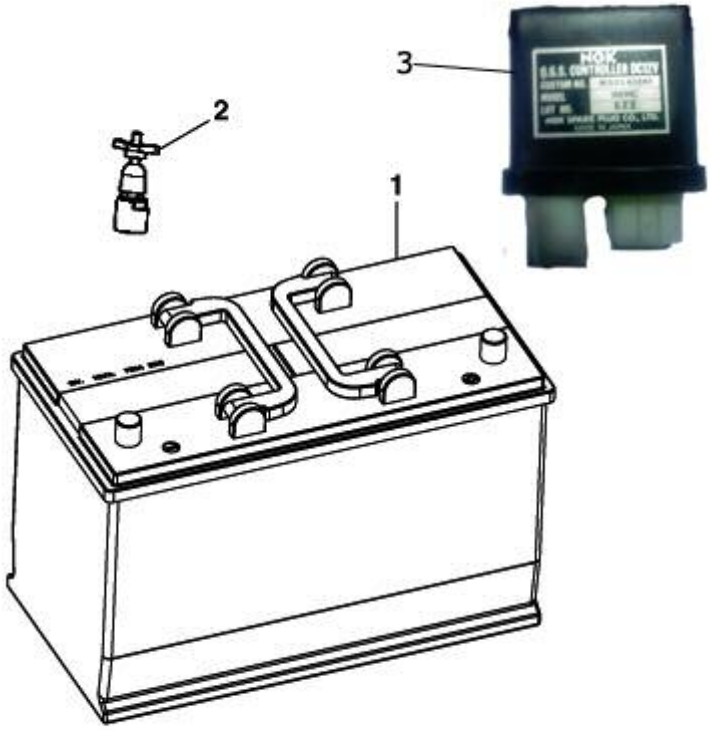

FIGURA	REFERENCIA	DENOMINACIÓN	CANTIDAD
001	64.11110.00	BATTERY MHD 110.0	1
002	20.11007.00	DISCONNECTOR	1
003	70.11334.00		1

https://truckmanualshub.com/

ELECTRIC INSTALLATION

BATTERY

BASTIDOR: 62988

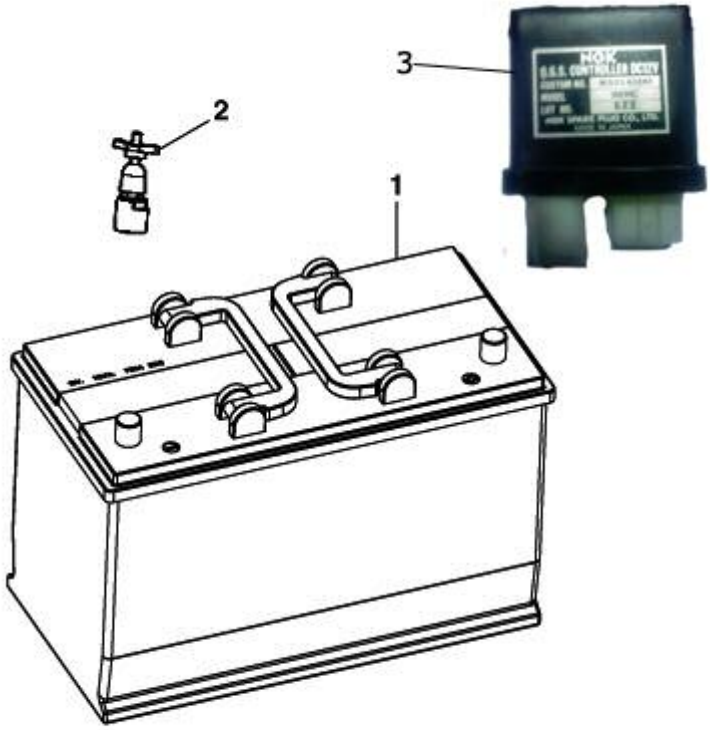

FIGURA	REFERENCIA	DENOMINACIÓN	CANTIDAD
001	64.11110.01		1
002	20.11007.00	DISCONNECTOR	1
003	70.11334.00		1

https://truckmanualshub.com/

ELECTRIC INSTALLATION
BATTERY SUPPORT

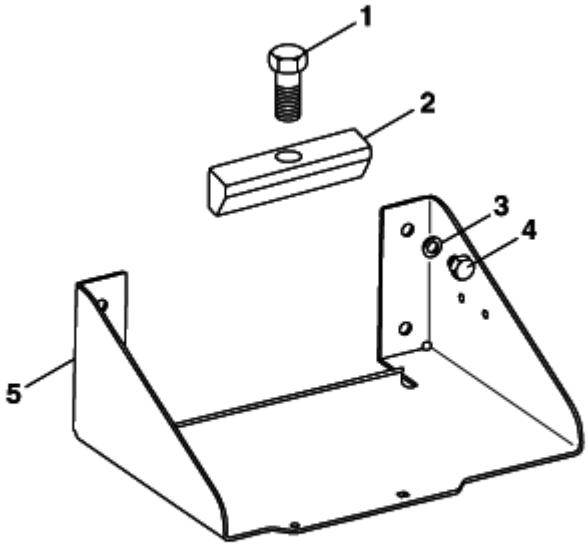

FIGURA	REFERENCIA	DENOMINACIÓN	CANTIDAD
001	604.06030.86	SCREW DIN931	1
002	20.11001.00	TRAMO I/E TRANSMISION	1
003	104.10000.00	CIR-CLIP EXT. DIN7980	4
004	603.10015.86	SCREW DIN933	4
005	57.11100.00	SUPPORT	1

https://truckmanualshub.com/

ELECTRIC INSTALLATION

SUPPORTS AND BRACKETS

BASTIDOR: 62988

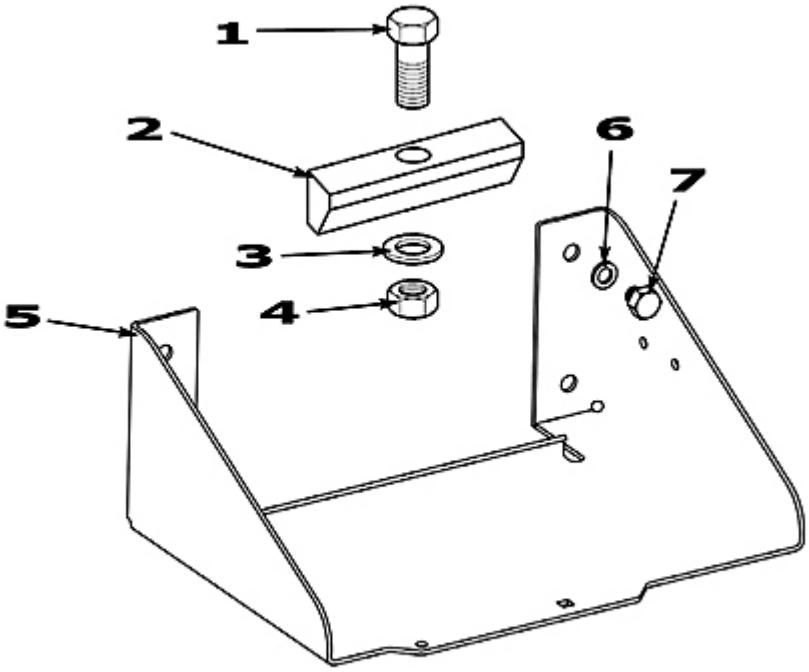

FIGURA	REFERENCIA	DENOMINACIÓN	CANTIDAD
001	604.06030.86	SCREW DIN931	1
002	20.11001.00	TRAMO I/E TRANSMISION	1
003	104.10000.00	WASHER DIN127 D10	4
004	603.10015.86	SCREW DIN933	4
005	57.11100.01	SOP. BATSOP. BATTERY 361X238X140	1

https://truckmanualshub.com/

ELECTRIC INSTALLATION
CABLE INSTALLATION

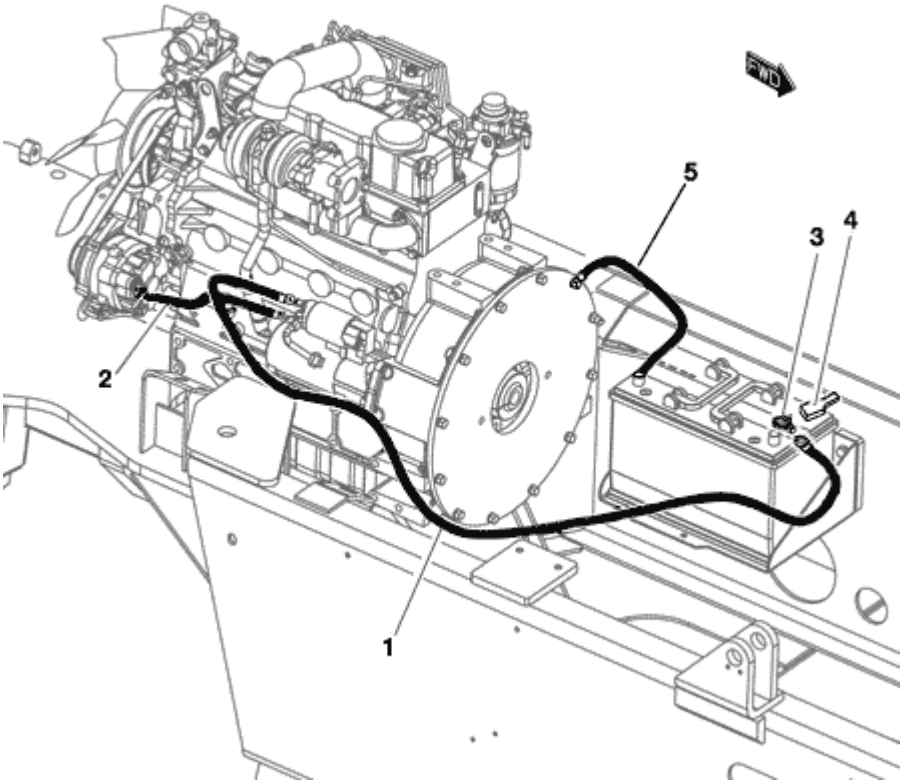

FIGURA	REFERENCIA	DENOMINACIÓN	CANTIDAD
001	57.11004.00	POSITIVE WIRING HARNESS	1
002	57.11006.00	ELECTRICAL CABLE	1
003	64.11114.00		1
004	64.11115.00	PROTECTOR	1
005	57.11005.00	NEG. ELEC. CABLE	1

https://truckmanualshub.com/

ELECTRIC INSTALLATION
MAIN WIRE HARNESS

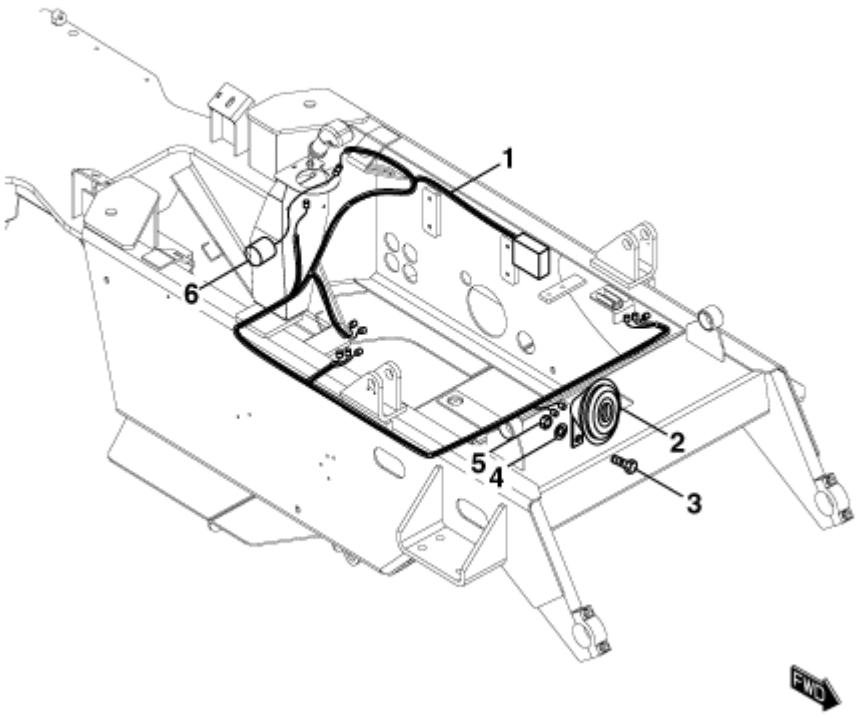

FIGURA	REFERENCIA	DENOMINACIÓN	CANTIDAD
001	57.11001.01	WIRING HARNESS	1
002	70.11309.00	HORN	1
003	603.08020.86	SCREW DIN933 M8x20	1
004	104.08000.00	CIR-CLIP EXT. DIN7980	1
005	711.08000.66	NUT	1
006	02.14110.01	HORN	1

https://truckmanualshub.com/

ELECTRIC INSTALLATION
ENGINE WIRING HARNESS

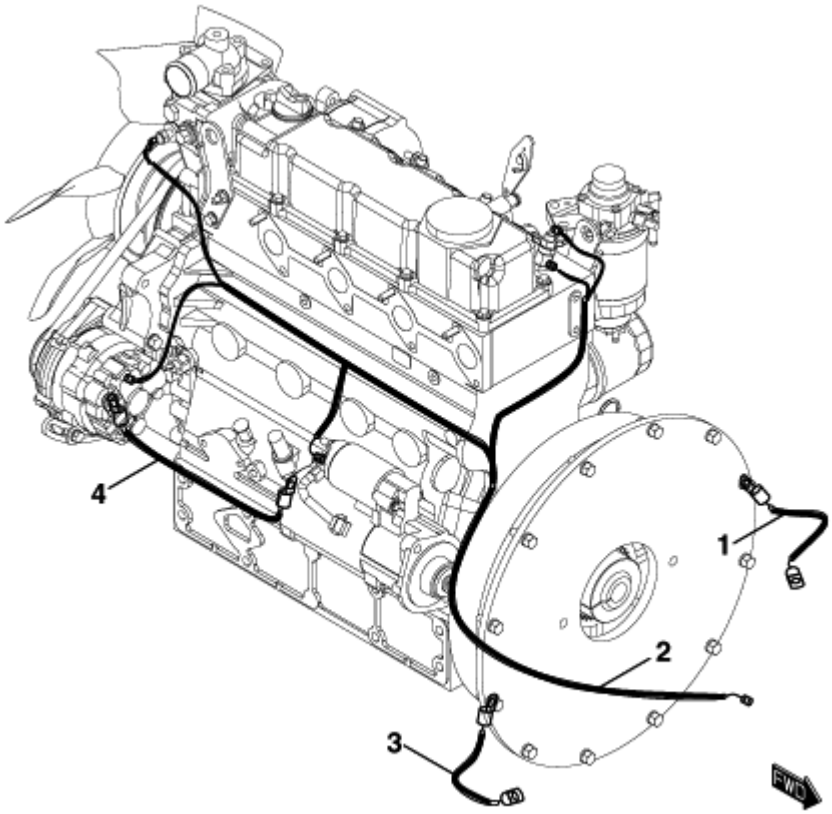

FIGURA	REFERENCIA	DENOMINACIÓN	CANTIDAD
002	57.11003.00	WIRING HARNESS	1
004	57.11006.00	ELECTRICAL CABLE	1

https://truckmanualshub.com/

ELECTRIC INSTALLATION
LIGHTS WIRING HARNESS

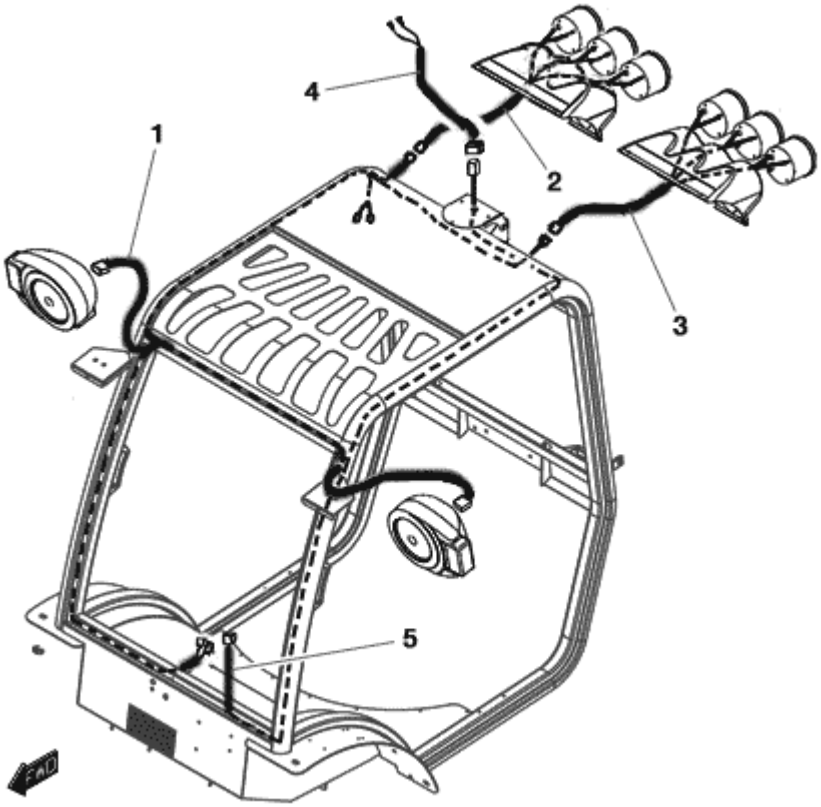

FIGURA	REFERENCIA	DENOMINACIÓN	CANTIDAD
001	12.11010.00	MAIN LIGHTS WIRING HARNESS	1
002	12.11011.00	REAR RIGHT LIGHTS WIRING HARNESS	1
003	12.11012.00	REAR LEFT LIGHTS WIRING HARNESS	1
004	12.11005.00	ROTATIVE BEACON WIRING HARNESS EXTENDED	1
005	12.11004.00	ROTATIVE BEACON WIRING HARNESS	1

https://truckmanualshub.com/

ELECTRIC INSTALLATION
FRONT LIGHTING

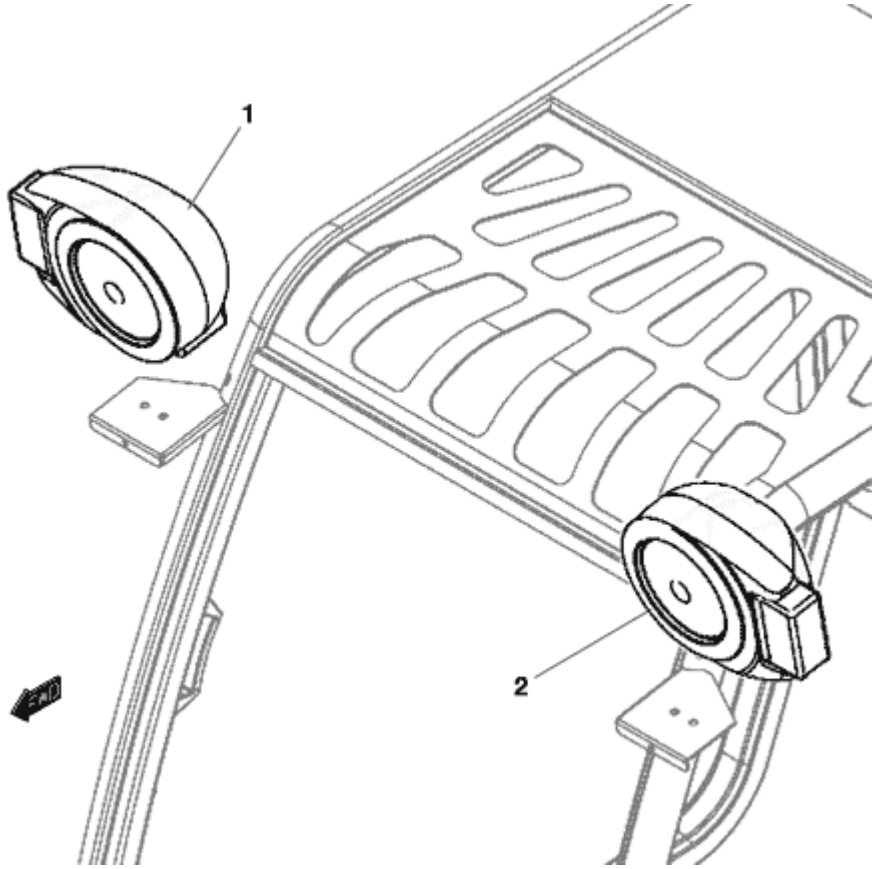

FIGURA	REFERENCIA	DENOMINACIÓN	CANTIDAD
001	46.11061.00	RIGHT FRONT LIGHT	1
002	46.11062.00	LEFT FRONT LIGHT	1

https://truckmanualshub.com/

ELECTRIC INSTALLATION
REAR LIGHTING

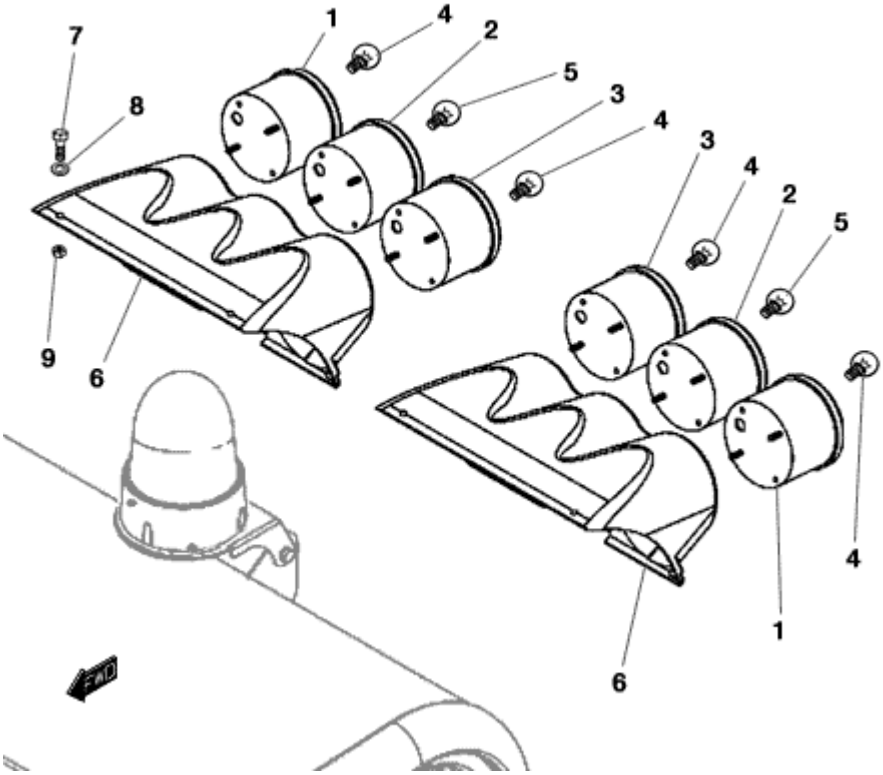

FIGURA	REFERENCIA	DENOMINACIÓN	CANTIDAD
001	13.11119.00	REAR INTERMITENT PILOT	2
002	13.11118.00	BRAKE LIGHT PILOT	2
003	13.11120.00	REVERSE PILOT	2
004	31.01329.00	lamp 12V 21W	4
005	31.01331.00	BULB	2
006	12.11001.01	LIGHTS FIXING SUPPORT 145X198X318	2
007	630.06020.96	SCREW ISO7380	8
008	104.06000.00	CIR-CLIP EXT. DIN7980	8
009	101.06000.66	WASHER DIN125 D6	8

https://truckmanualshub.com/

FINISHING

PLAQUES ET AUTOCOLLANTS (PARTIE 1)

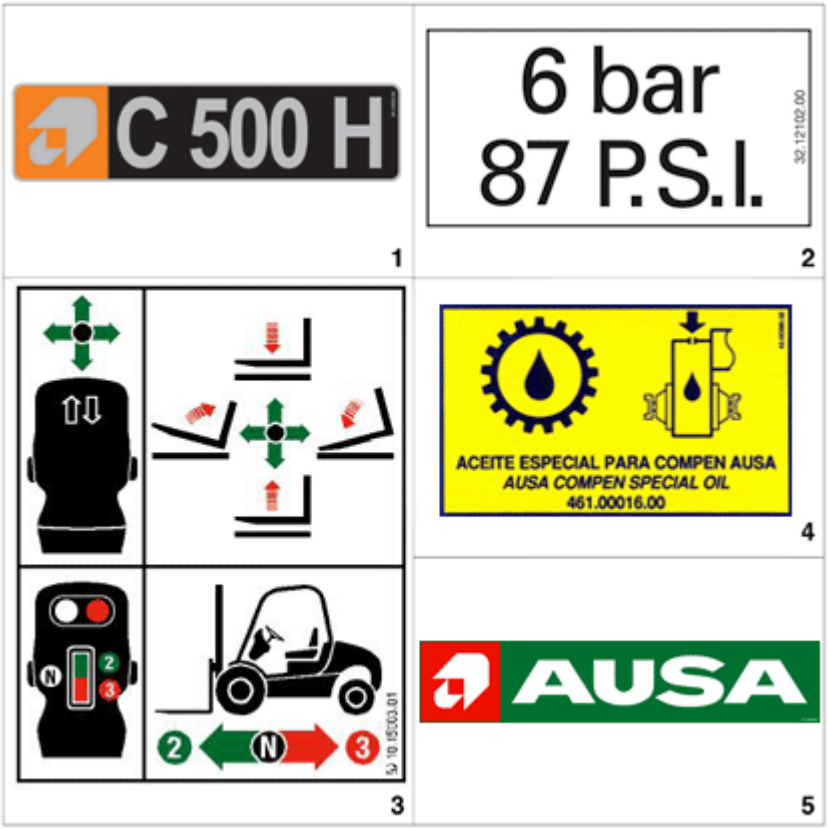

FIGURA	REFERENCIA	DENOMINACIÓN	CANTIDAD
001	30.12002.00	C 500 H INDICATOR 68X269	2
002	32.12102.00	ADH. IND. PLATE 6 BAR 87 PSI	2
003	10.15003.01	PLATE AD. INDI	1
004	01.12108.00	PRESSURE IND. ADHESIVE 8,5 BAR / 123 PSI	2
005	13.12136.00	ADHESIVE 450x92	4

https://truckmanualshub.com/

FINISHING

PLAQUES ET AUTOCOLLANTS (PARTIE 2)

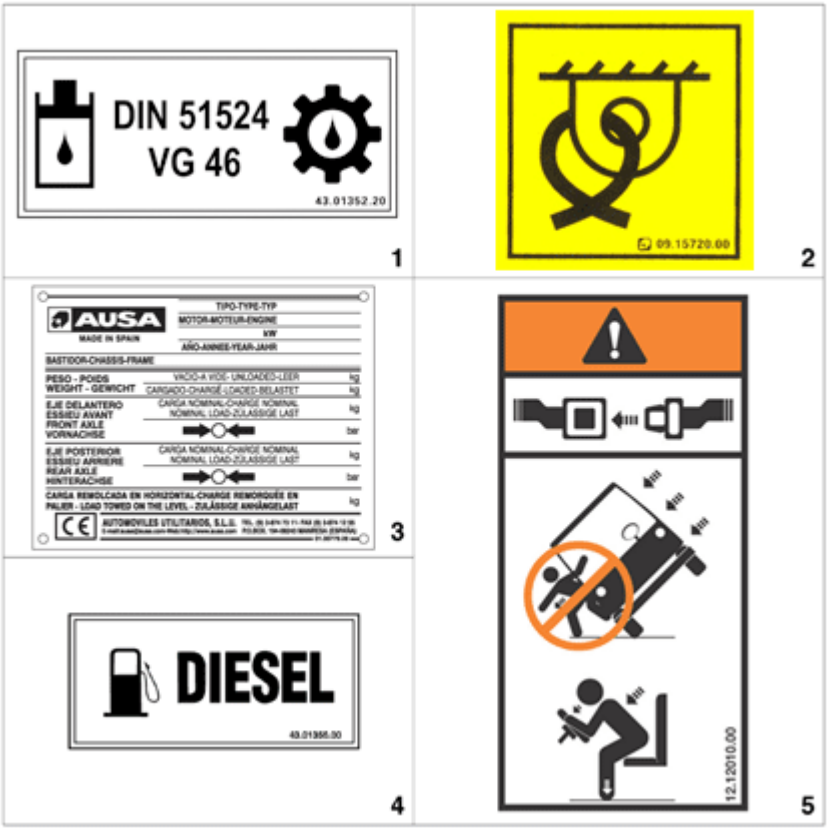

FIGURA	REFERENCIA	DENOMINACIÓN	CANTIDAD
001	43.01352.20	PLATE AD. INDI	1
002	09.15720.00	PLATE AD. INDI	4
004	43.01356.00	PLATE AD. INDI	1
005	12.12010.00	ADHESIVE	1

https://truckmanualshub.com/

FINISHING

PLAQUES ET AUTOCOLLANTS (PARTIE 3)

FIGURA	REFERENCIA	DENOMINACIÓN	CANTIDAD
001	10.15005.01	PLATE AD. INDI	1
002	20.12012.00	PLATE AD. INDI	2
003	43.70780.00	PLATE AD. INDI	1
004	45.19101.00	PLATE AD. INDI	2
005	00.00013.00	ADHESIVE	1
006	01.00757.00	PLATE AD. INDI	1

https://truckmanualshub.com/

FINISHING

PLAQUES ET AUTOCOLLANTS (PARTIE 4)

FIGURA	REFERENCIA	DENOMINACIÓN	CANTIDAD
001	43.01170.02	PLATE AD. INDI	1
002	02.00774.00	PLATE AD. INDI	1
003	58.01353.01	PLATE AD. INDI	2
004	09.12014.00	ADHESIVE	1
005	45.01352.00	PLATE AD. INDI	2

https://truckmanualshub.com/

FINISHING

PLAQUES ET AUTOCOLLANTS (PARTIE 5)

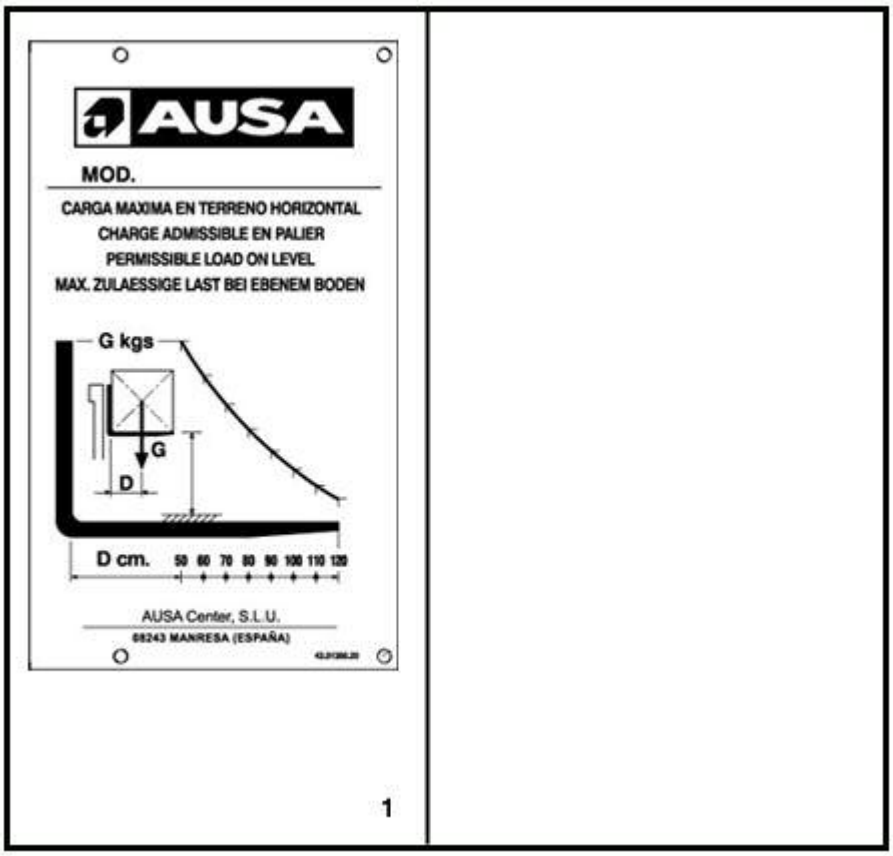

FIGURA	REFERENCIA	DENOMINACIÓN	CANTIDAD
001	43.01350.20	PLATE CHARAC.	1

https://truckmanualshub.com/

FINISHING

PLAQUES ET AUTOCOLLANTS (PARTIE 5)

BASTIDOR: 61283

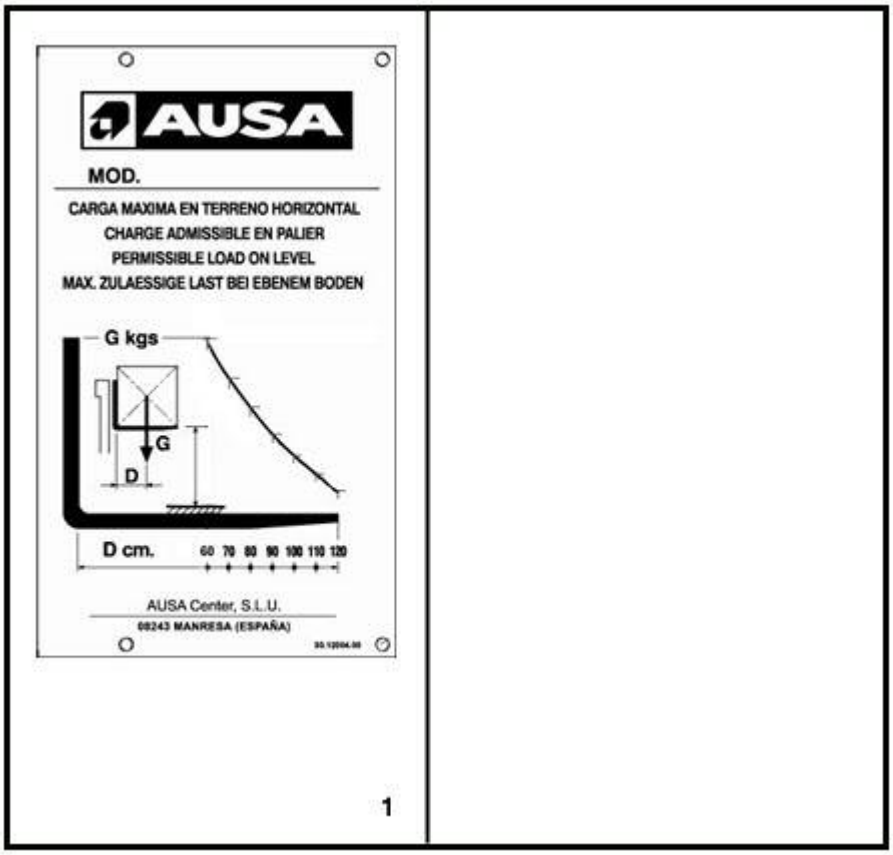

FIGURA	REFERENCIA	DENOMINACIÓN	CANTIDAD
001	30.12004.00		1

https://truckmanualshub.com/

FINISHING
FINISHED FRANCE

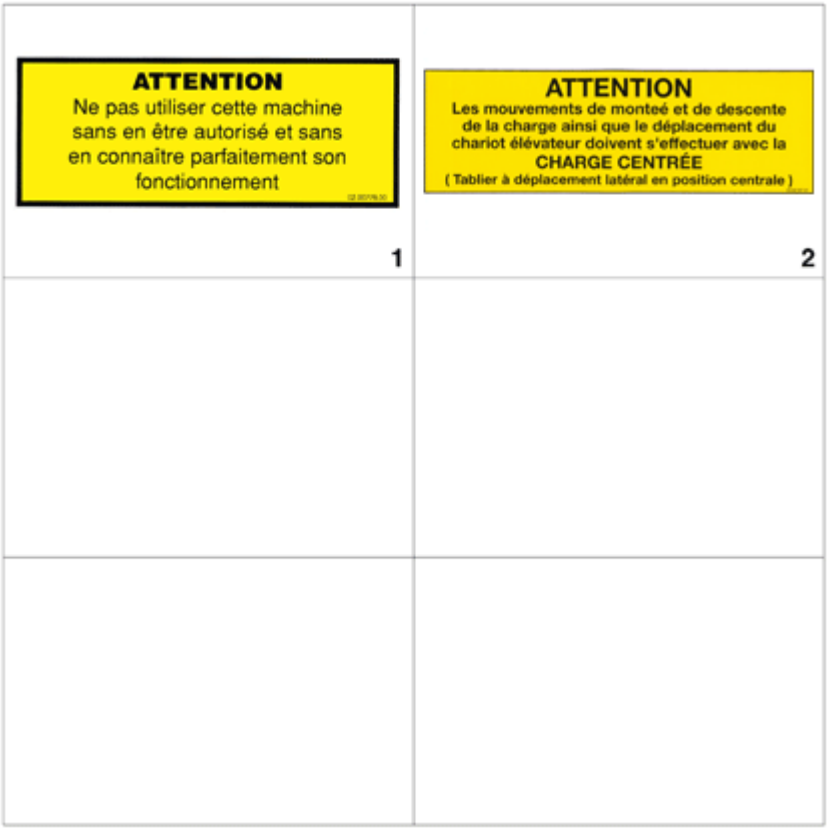

FIGURA	REFERENCIA	DENOMINACIÓN	CANTIDAD
001	02.00778.00	PLATE AD. INDI	1
002	43.02187.01	PLATE AD. INDI	1

https://truckmanualshub.com/

FINISHING
FINISHED UK

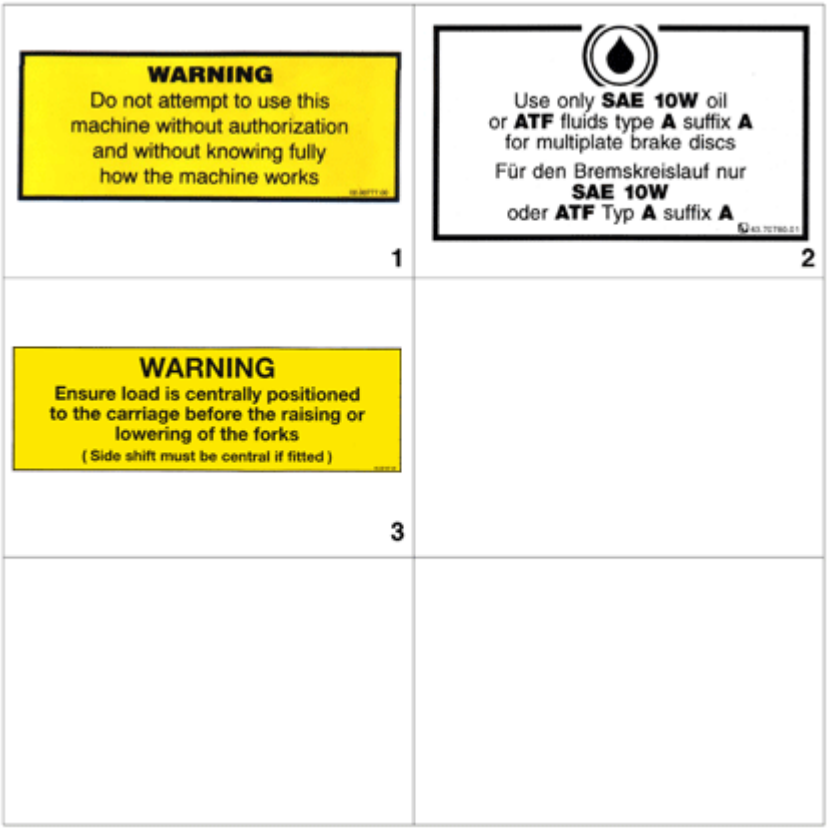

FIGURA	REFERENCIA	DENOMINACIÓN	CANTIDAD
001	02.00777.00	PLATE AD. INDI	1
002	43.70780.01	PLATE AD. INDI	1
003	43.02187.02	PLATE AD. INDI	1

https://truckmanualshub.com/

FINISHING
FINISHED GERMANY

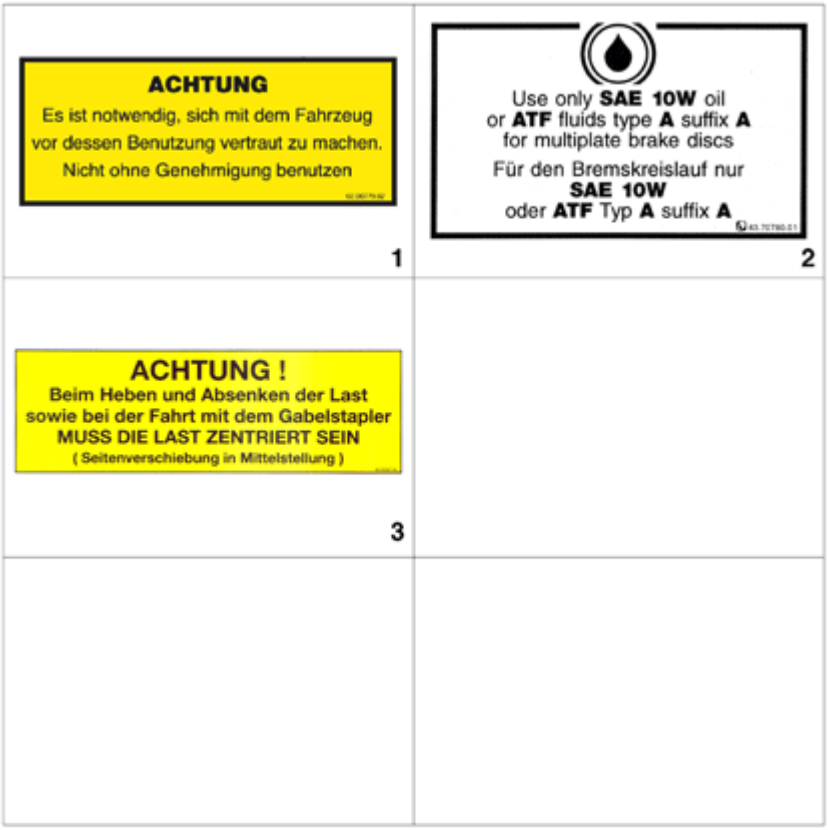

FIGURA	REFERENCIA	DENOMINACIÓN	CANTIDAD
001	02.00779.02	PLATE AD. INDI	1
002	43.70780.01	PLATE AD. INDI	1
003	43.02187.03	PLATE AD. INDI	1

https://truckmanualshub.com/

FINISHING
FINISHED POLAND

FIGURA	REFERENCIA	DENOMINACIÓN	CANTIDAD
001	02.00774.03	AD. INDI. PLATE 50X120 PL.	1
002	43.70780.04	AD. INDI. PLATE 60X100 FRENO	1
003	43.02187.07	AD. INDI. PLATE 70X210 POSLKI	1
004	43.01170.04	AD. INDI. PLATE 90X45 POLSKI	1
005	01.00779.22	PLATE CHARAC.	1
006	02.00765.02	ADH. PLATE 40X80	1

https://truckmanualshub.com/

FINISHING
TOOLS BAG

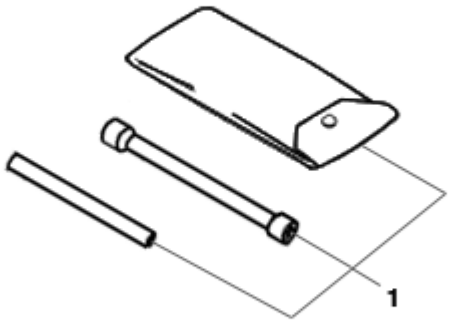

FIGURA	REFERENCIA	DENOMINACIÓN	CANTIDAD
001	30.12010.00	TOOLS BAG 3 KEYS	1

https://truckmanualshub.com/

OPTION AND VARIANTS

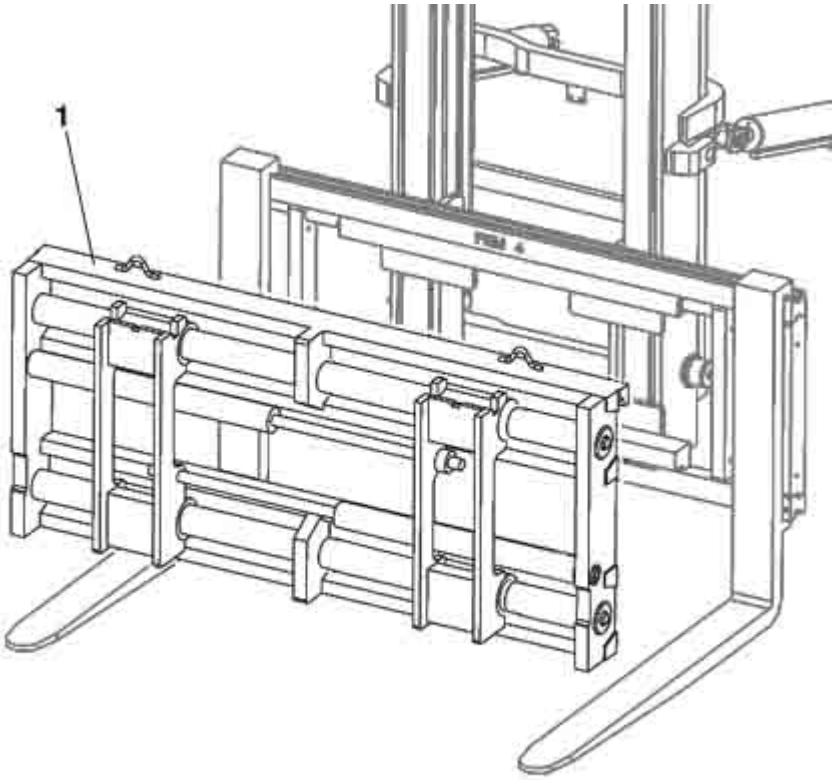

FIGURA	REFERENCIA	DENOMINACIÓN	CANTIDAD
001	30.13151.00	WELDING POSITIONER FEM4	1
001	30.13151.00	WELDING POSITIONER FEM4	1
001	30.13151.00	WELDING POSITIONER FEM4	1
001	30.13151.00	WELDING POSITIONER FEM4	1
001	30.13151.00	WELDING POSITIONER FEM4	1
001	30.13151.00	WELDING POSITIONER FEM4	1

https://truckmanualshub.com/

OPTION AND VARIANTS
BUCKET

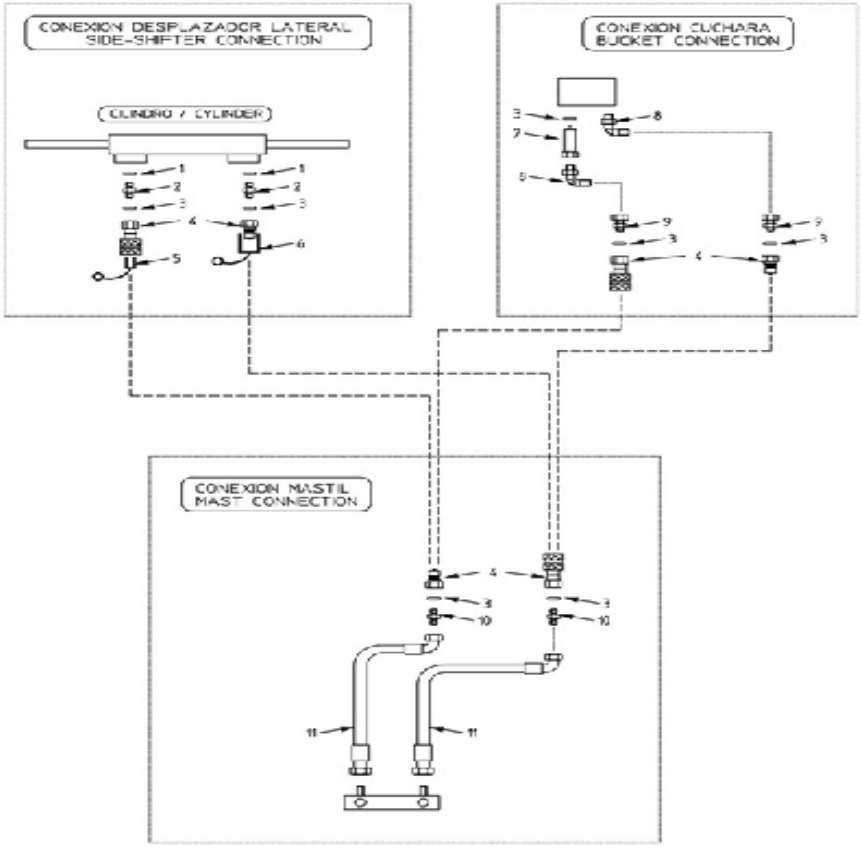

FIGURA	REFERENCIA	DENOMINACIÓN	CANTIDAD
001	28.00341.00	GASKET MET. BUNA	2
002	19.00720.00	NIPPLE M/M	2
003	08.00317.00	GASKET MET. BUNA	7
004	16.01396.01	VALVE	3
005	43.50125.00	CAP	1
006	43.50124.00	CAP	1
007	08.00312.00	NIPPLE M/H	1
008	20.10266.00	NIPPLE	2
011	30.10346.00	TUBE R2T3/8 550 C90-TL M16	2

https://truckmanualshub.com/

ACCESSORY DEUTZ (USA/EU)
EXHAUST-ENGINE

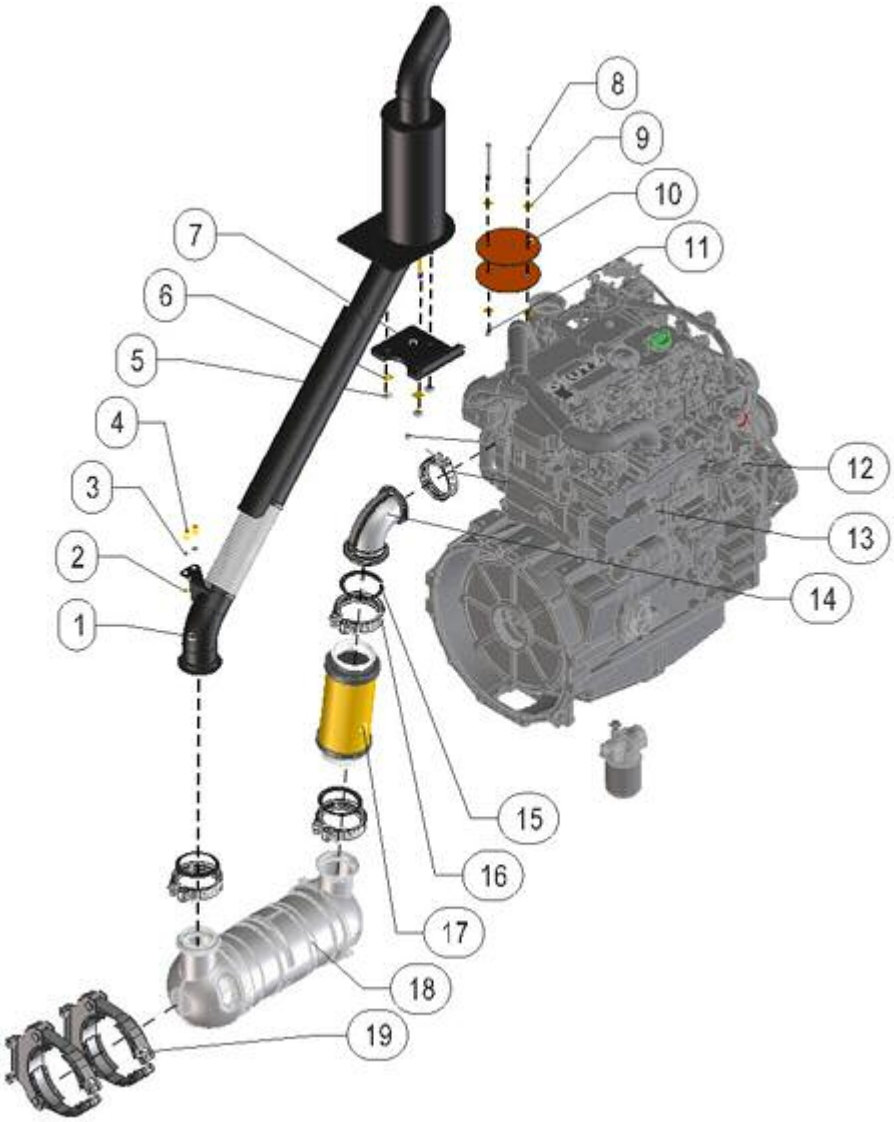

FIGURA	REFERENCIA	DENOMINACIÓN	CANTIDAD
001	30.02030.01	TUBE EXIT GASES D3 "1490 FLE	1
002	101.06000.66	WASHER DIN125 D6	2
003	105.06000.66	CIR-CLIP DIN7980	2
004	603.06015.86	SCREW DIN933	2
005	711.10000.66	NUT	3
006	101.10000.66	WASHER DIN125	3
007	30.02031.00	SUPPORT FIXING ESCAPE 130X150X3	1
008	604.08090.86	BOLT DIN931 M8x90	2
009	101.08000.66	WASHER DIN125 D8	4
010	30.02035.00	TOP EXHAUST D140x2	2
011	711.08000.66	NUT	2
012	64.02037.00	CREW JOINT DEUTZ TD 3.6	1
013	64.02036.00	SKIP JOINT ESC. DEUTZ TD	1
014	64.02033.00	EXHAUST PIPE C90 DEUTZ TD 3.6	1

https://truckmanualshub.com/

015	64.02035.00	EXHAUST MOTOR JOINT DEUTZ TD 3.6 L4	3
016	64.02034.00	EXHAUST CLAMP DEUTZ TD 3.6 L4	3
017	64.02032.00	EXHAUST PIPE DEUTZ TD 3.6	1
018	64.02030.00	FILTER DOC DEUTZ TD 3.6 L4	1
019	64.02031.00	SUPPORT DOC DEUTZ TD 3.6	2

https://truckmanualshub.com/

ACCESSORY DEUTZ (USA/EU)
INTAKE-ENGINE

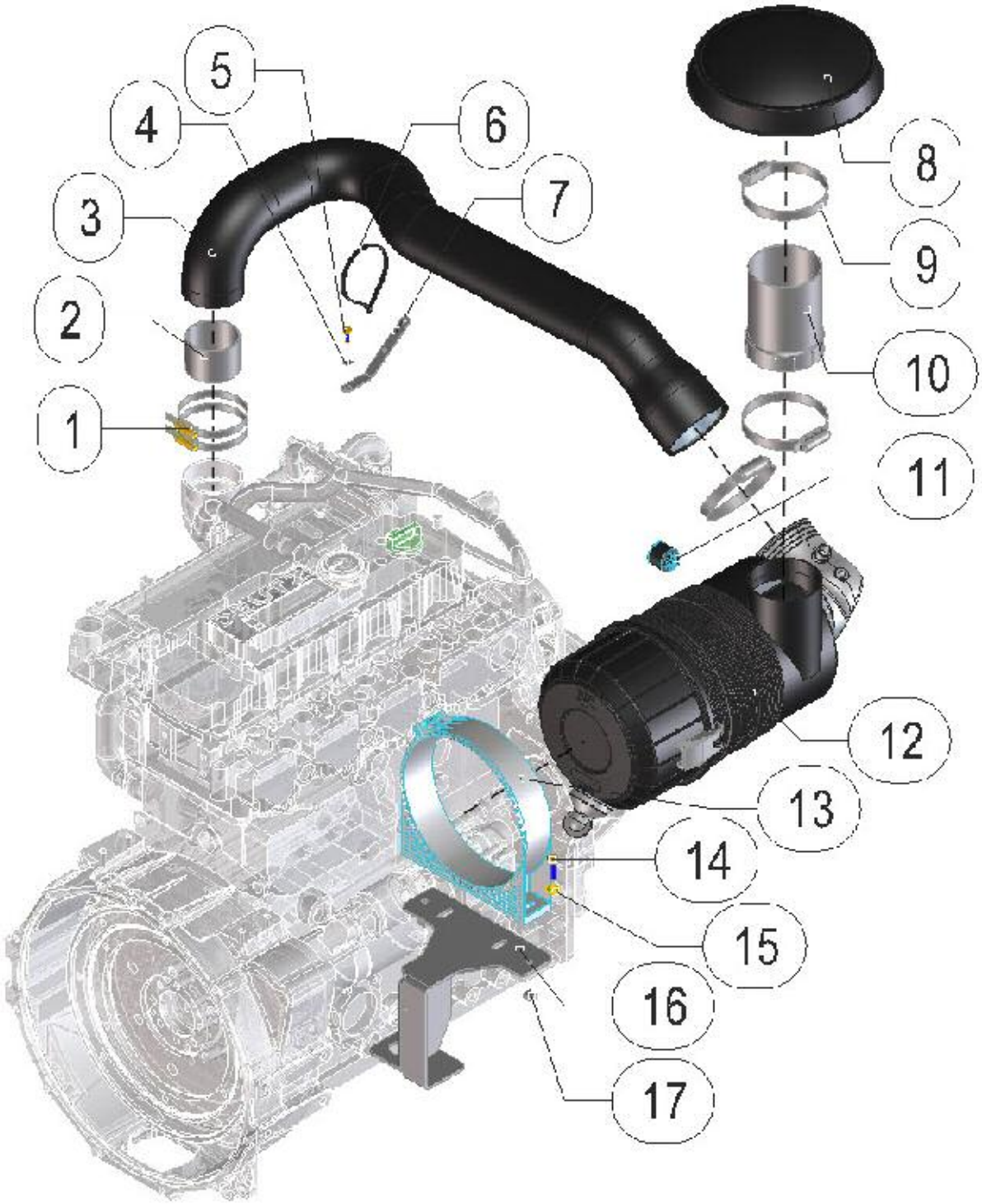

FIGURA	REFERENCIA	DENOMINACIÓN	CANTIDAD
001	912.70090.66	CLAMP D70-90	2
002	64.02324.00	TUBE D70x50x2	1
003	30.02096.00	INTAKE TUBE 80X90X716	1
004	105.06000.66	CIR-CLIP DIN7980	1
005	603.06015.86	SCREW DIN933	1
006	931.05370.00	CLAMP TAPE	1

https://truckmanualshub.com/

007	30.02307.00	ANGLE BRACKET 14x2	1
008	30.02301.00	PROTECTOR	1
009	912.90110.66	HOSE CLAMP Ø90-110	3
010	30.02302.00	TUBE, METALLIC Ø96xØ95x130	1
011	64.11042.00	INDICATOR FILTER AIR 50 mbar	1
012	46.02038.00	ENGINE AIR FILTER	1
013	46.02310.00	HOSE CLAMP FILTER	1
014	603.08030.86	SCREW DIN933 M8X30	2
015	101.08000.66	WASHER DIN125 D8	2
016	30.02303.01	SUPPORT 220X160X168 AIR FILTER	1
017	711.08000.66	NUT	2

ACCESSORY DEUTZ (USA/EU)

POWER SUPPLY PART 1-ENGINE

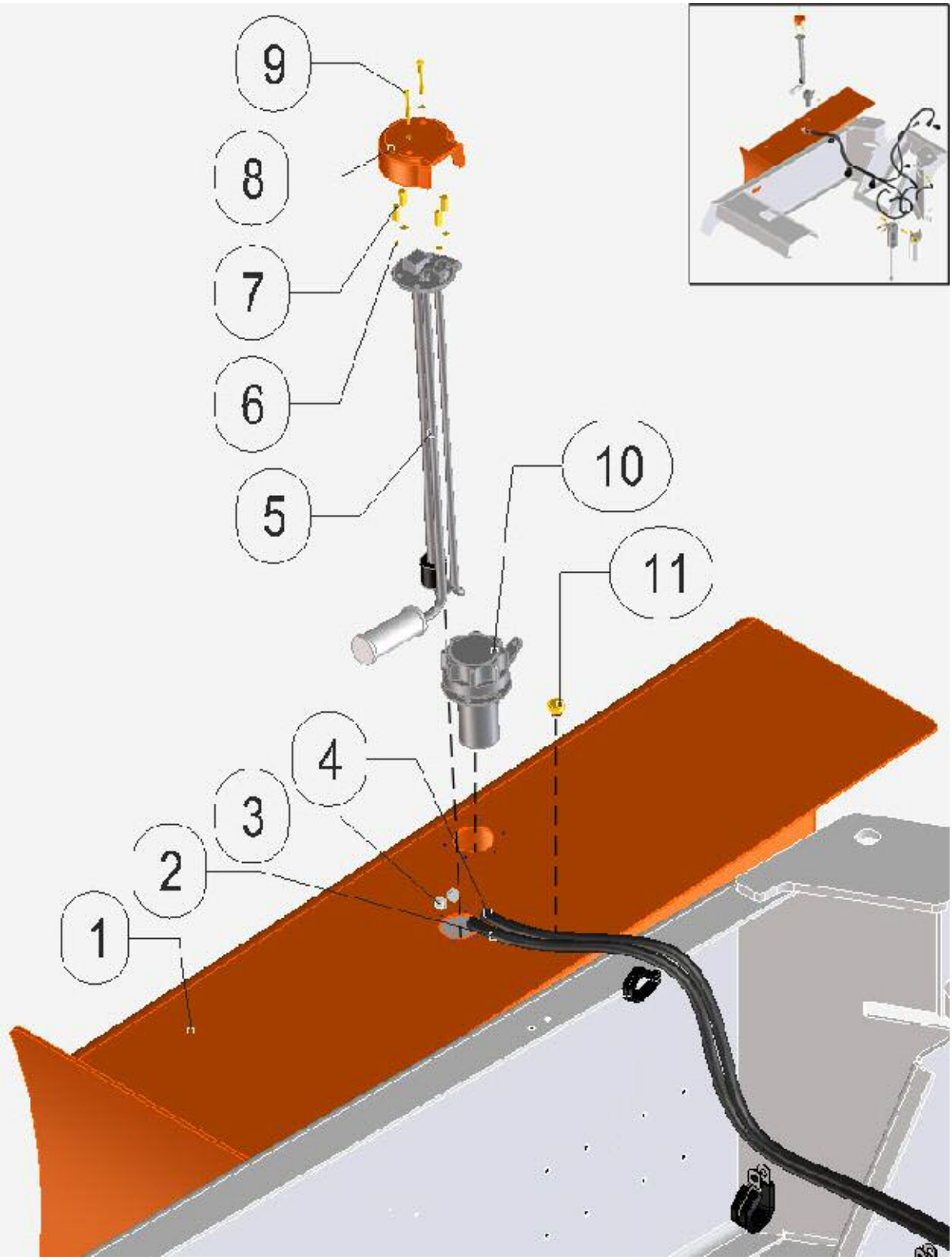

FIGURA	REFERENCIA	DENOMINACIÓN	CANTIDAD
001	30.02040.00	FUEL TANK 120 L	1
002	469.25015.00	TUBE MAT.	1
003	948.01408.00	CLAMP Ø14	8

https://truckmanualshub.com/

004	469.25015.00	TUBE MAT.	1
005	30.02044.00	LEVEL 500MM DIESEL	1
007	615.04020.66	SCREW DIN84	4
008	46.10059.00	FUEL LEVEL PROTECTOR	1
009	615.04050.66	BOLT DIN84 M4x50	2
010	30.02042.00	CAP. THEFT PROOF TANK	1
011	46.09014.00	CAP	1

https://truckmanualshub.com/

ACCESSORY DEUTZ (USA/EU)

POWER SUPPLY PART 2-ENGINE

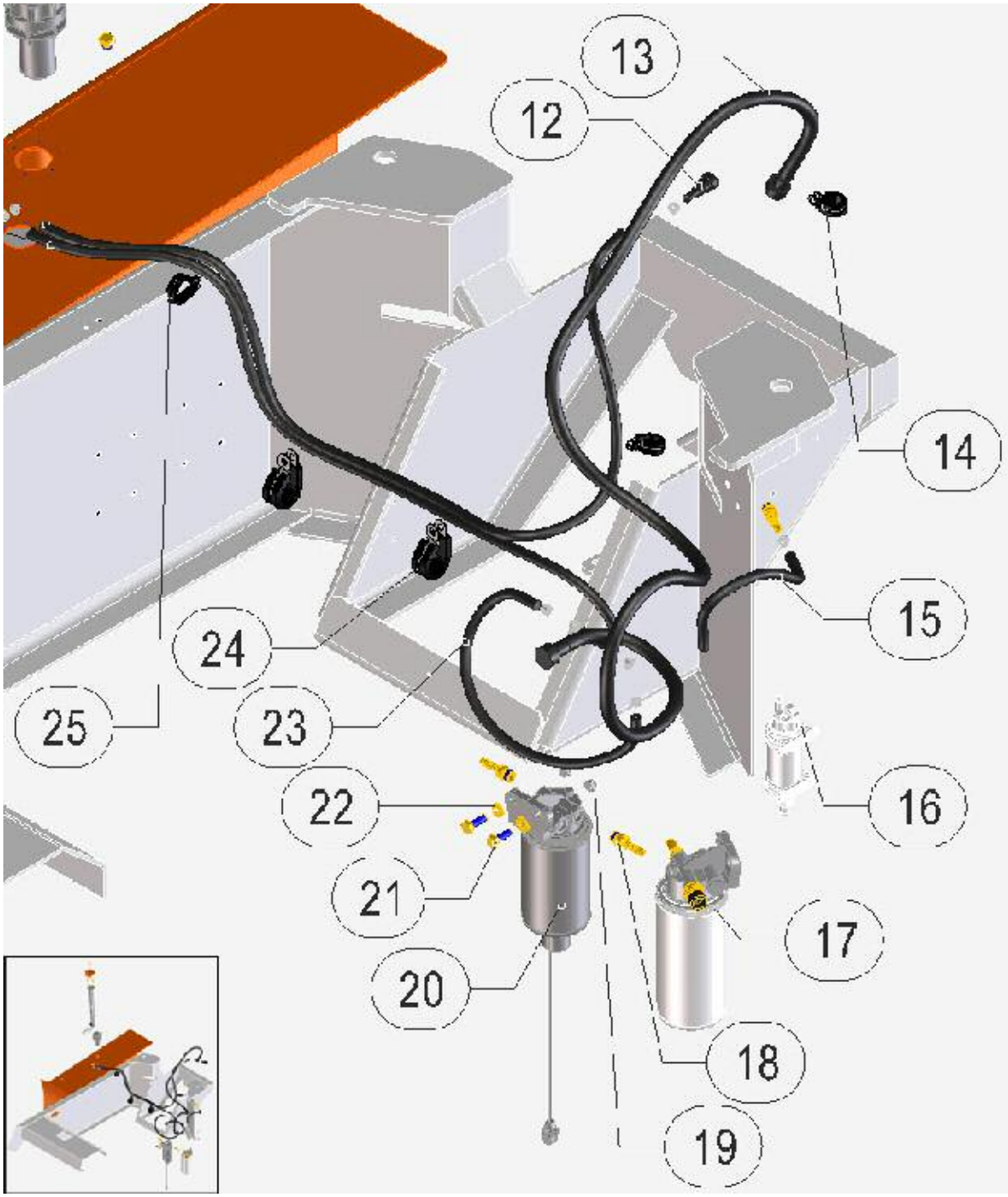

FIGURA	REFERENCIA	DENOMINACIÓN	CANTIDAD
012	64.02017.00	FUEL CONNECTOR RET. DEUTZ TD	1
013	64.02016.00	DIESEL PIPE 2M 11.5x3.5 DEUTZ	1
014	830.02010.00	FLANGE TIE D20X10	3
015	469.25015.00	TUBE MAT.	1
016	64.02014.00	ELECTRIC FUEL PUMP DEUTZ	1
017	64.02013.00	FUEL FILTER DEUTZ KIT	1
018	64.10130.00	TANG FITTING M16x1.5-DN10	3

https://truckmanualshub.com/

019	711.10000.66	NUT	2
020	64.02015.00	FUEL PRE-FILTER DEUTZ KIT	1
021	603.10030.87	SCREW DIN 933 M10x30	2
022	101.10000.66	WASHER DIN125	2
023	469.25015.00	TUBE MAT.	1
024	830.03010.00	FLANGE TIE D20X10	2
025	830.03006.00	CLAMP LOOP	1

https://truckmanualshub.com/

ACCESSORY DEUTZ (USA/EU)
COOLING-ENGINE

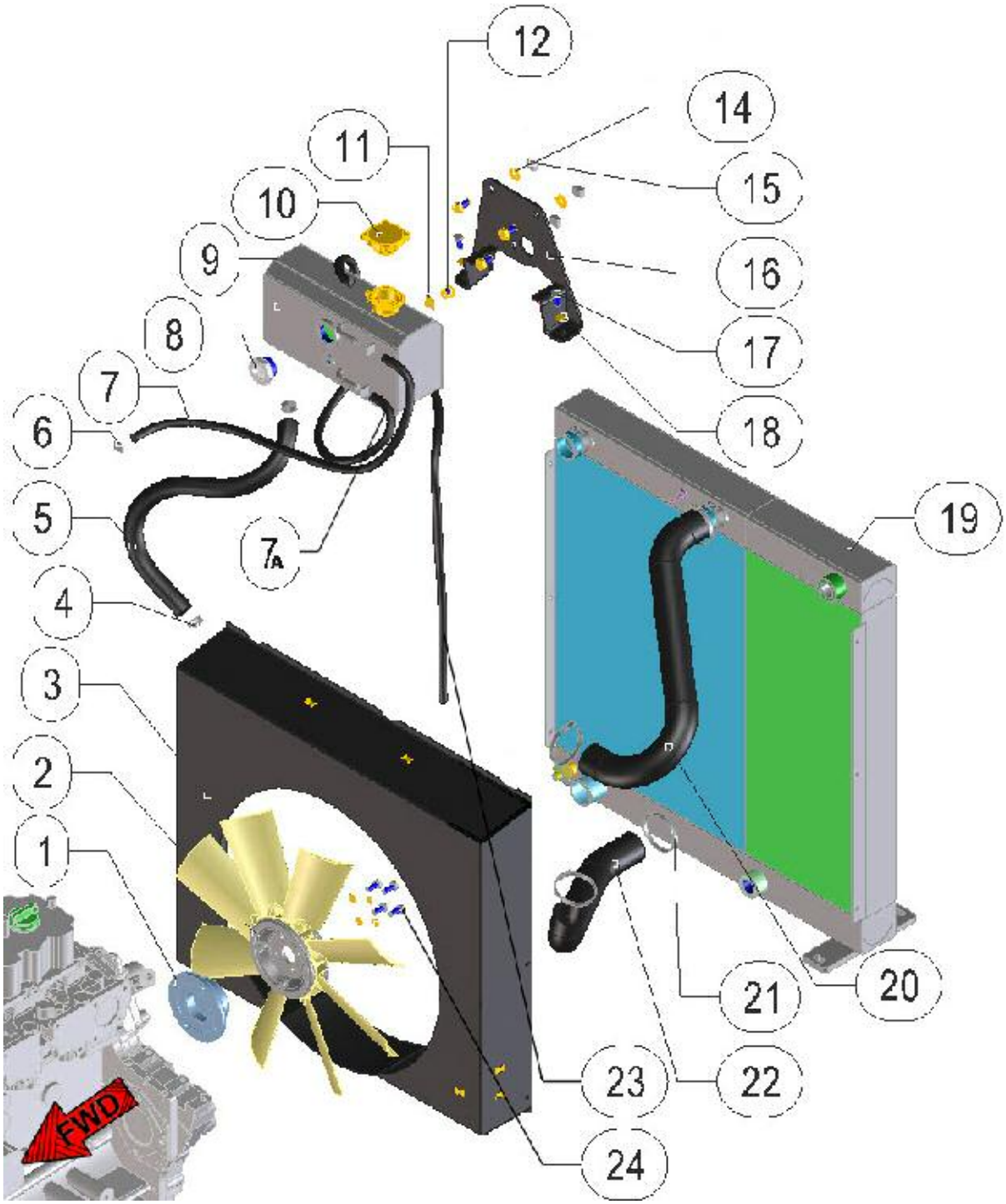

FIGURA	REFERENCIA	DENOMINACIÓN	CANTIDAD
001	64.02020.00	FAN SUPPORT	1
002	64.02021.01	FAN 8P 35° D460	1
003	30.02150.00	GUARD RADIATOR ENGINE DEUTZ	1
004	912.20032.00	CLAMP	2
005	469.45031.00	TUBE B/P 22x31	1
006	912.08016.66	CLAMP DIN3017	4
007	469.03014.00	HOSE L/P MAT. 8x14	1

https://truckmanualshub.com/

007A	469.03014.00	HOSE L/P MAT. 8x14	1
008	30.10041.00	LEVEL VISUAL INDICATOR 1	1
009	64.02543.00	EXPANSION TANK 3.5L	1
010	32.02151.00	REFRIGERANT CAP 1BAR	1
011	107.14000.10	WASHER AL	1
012	80.01035.01	CAP	1
014	101.10000.66	WASHER DIN125	3
015	711.10000.66	NUT	3
016	30.02056.00	SUPPORT FIXING GLASS EXPANSION	1
017	603.08020.86	SCREW DIN933 M8x20	6
018	104.08000.00	CIR-CLIP EXT. DIN7980	6
019	30.02055.01	WATER-OIL RADIATOR	1
020	30.02094.00	TUBE RUBBER B/P 45X52X357	1
021	912.40060.66	CLAMP D40-60	4
022	30.02095.00	TUBE RUBBER B/P 42X50X278	1
023	469.03014.00	HOSE L/P MAT. 8x14	1

https://truckmanualshub.com/

ACCESSORY DEUTZ (USA/EU)
SUSPENSION-ENGINE

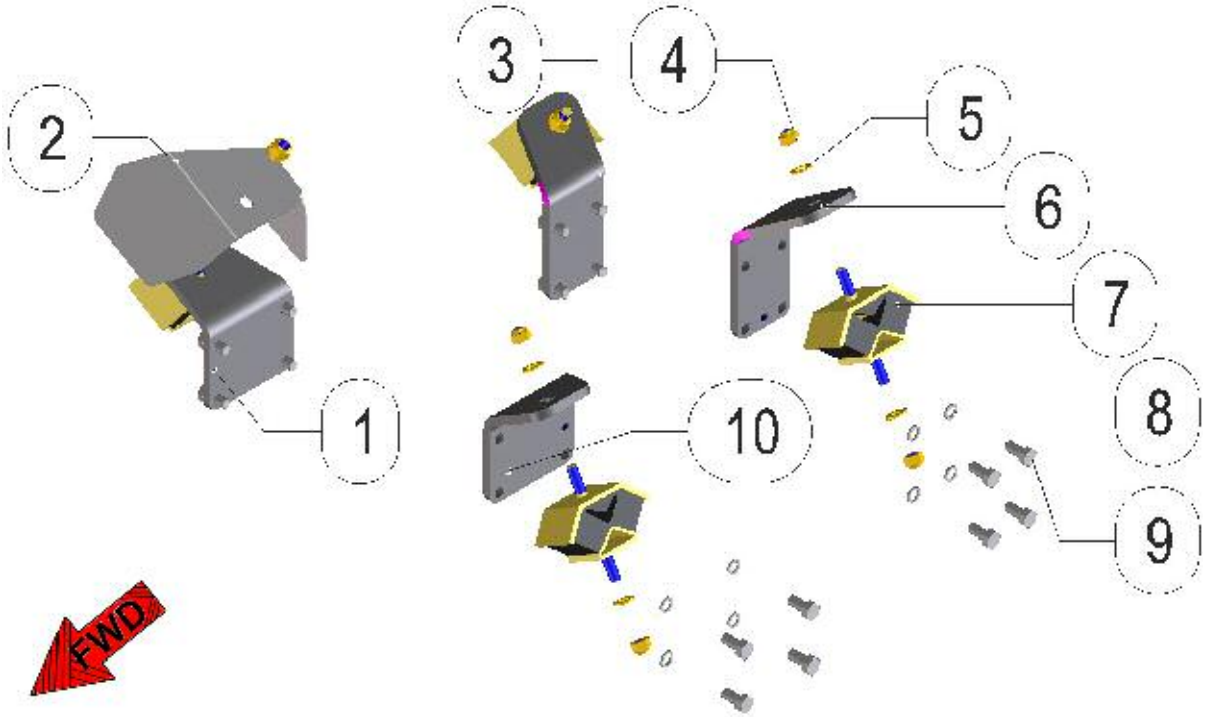

FIGURA	REFERENCIA	DENOMINACIÓN	CANTIDAD
001	30.02093.00	106X125X169 MOTOR BRACKET FRONT RH	1
002	30.02069.00	PROTECTOR THERMAL SILENTBLOCK	1
003	30.02092.00	80X89X186 RIGHT BACK ENGINE SUPPORT	1
004	711.12000.66	NUT DIN982 M12	10
005	101.12000.66	WASHER DIN125	10
006	30.02091.00	80X89X186 LEFT BACK ENGINE SUPPORT	1
007	20.02019.00	SHOCK ABSORBER, 60x120x64 70 A	4
008	104.12000.00	CIR-CLIP EXT. DIN7980	16
009	617.12025.86	SCREW DIN933	16
010	30.02090.00	106X125X169 LEFT FRONT ENGINE BRACKET	1

https://truckmanualshub.com/

ACCESSORY DEUTZ (USA/EU)
FIXED BRIDGE-TRANSMISSION

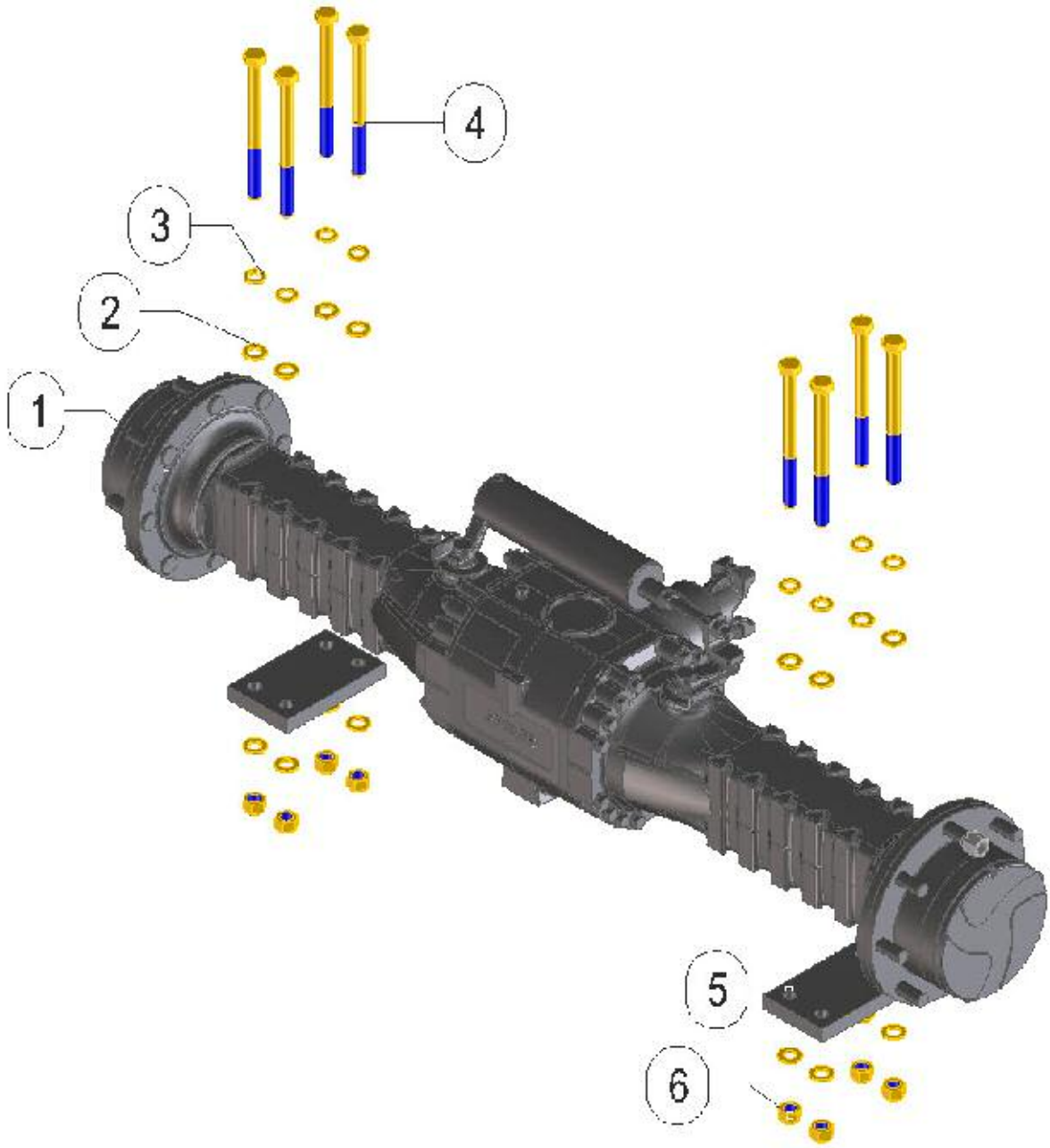

FIGURA	REFERENCIA	DENOMINACIÓN	CANTIDAD
001	30.03200.00	FRONT AXLE DANA JOKE 1530	1
002	101.20000.66	WASHER DIN125	16
003	104.20000.00	CIR-CLIP EXT. DIN7980	8
004	604.20240.86	BOLT DIN931 M20x240	8
005	30.03250.00	STRIP SUPPORT 25X120X200	2
006	711.20000.66	NUT	8

https://truckmanualshub.com/

ACCESSORY DEUTZ (USA/EU)
SIMPLE GUIDELINE BRIDGE-TRANSMISSION

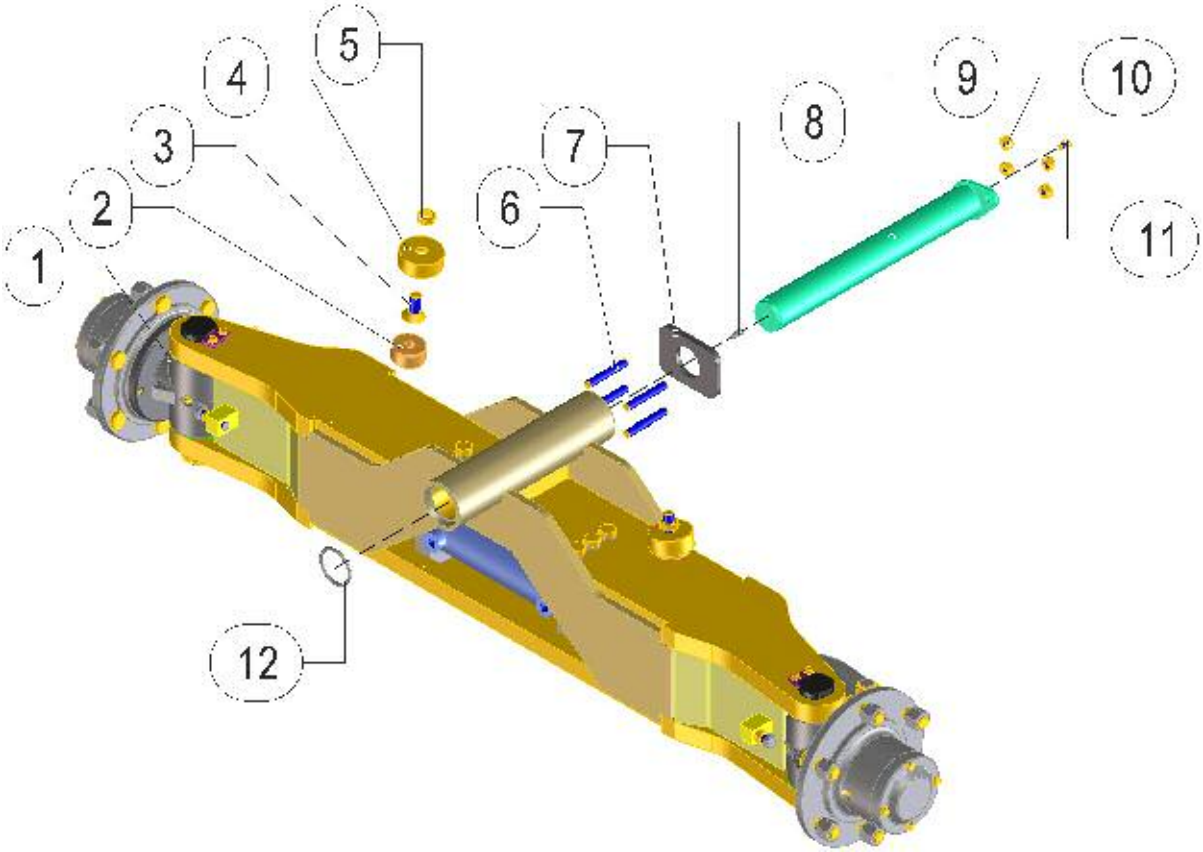

FIGURA	REFERENCIA	DENOMINACIÓN	CANTIDAD
001	30.03560.04	GUIDELINE BRIDGE C400/500H (X2)	1
002	20.03002.00	BUTT	2
003	618.16030.86	SCREW DIN7991	2
004	20.03003.00	SHOCK ABSORVER SUPPORT	2
005	701.16000.66	NUT	2
006	612.12080.86	BOLT DIN914 M12x80	4
007	57.04114.00	PLATE	1
008	901.08000.33	GREASER DIN71412-A	1
009	30.03580.00	SHAFT CIL/CIL D50X417	1
010	701.12000.66	NUT	4
011	603.08010.86	SCREW DIN933	1
012	201.05153.50	O-RING DIN3770	2

https://truckmanualshub.com/

ACCESSORY DEUTZ (USA/EU)

CARDAN JOINT-TRANSMISSION

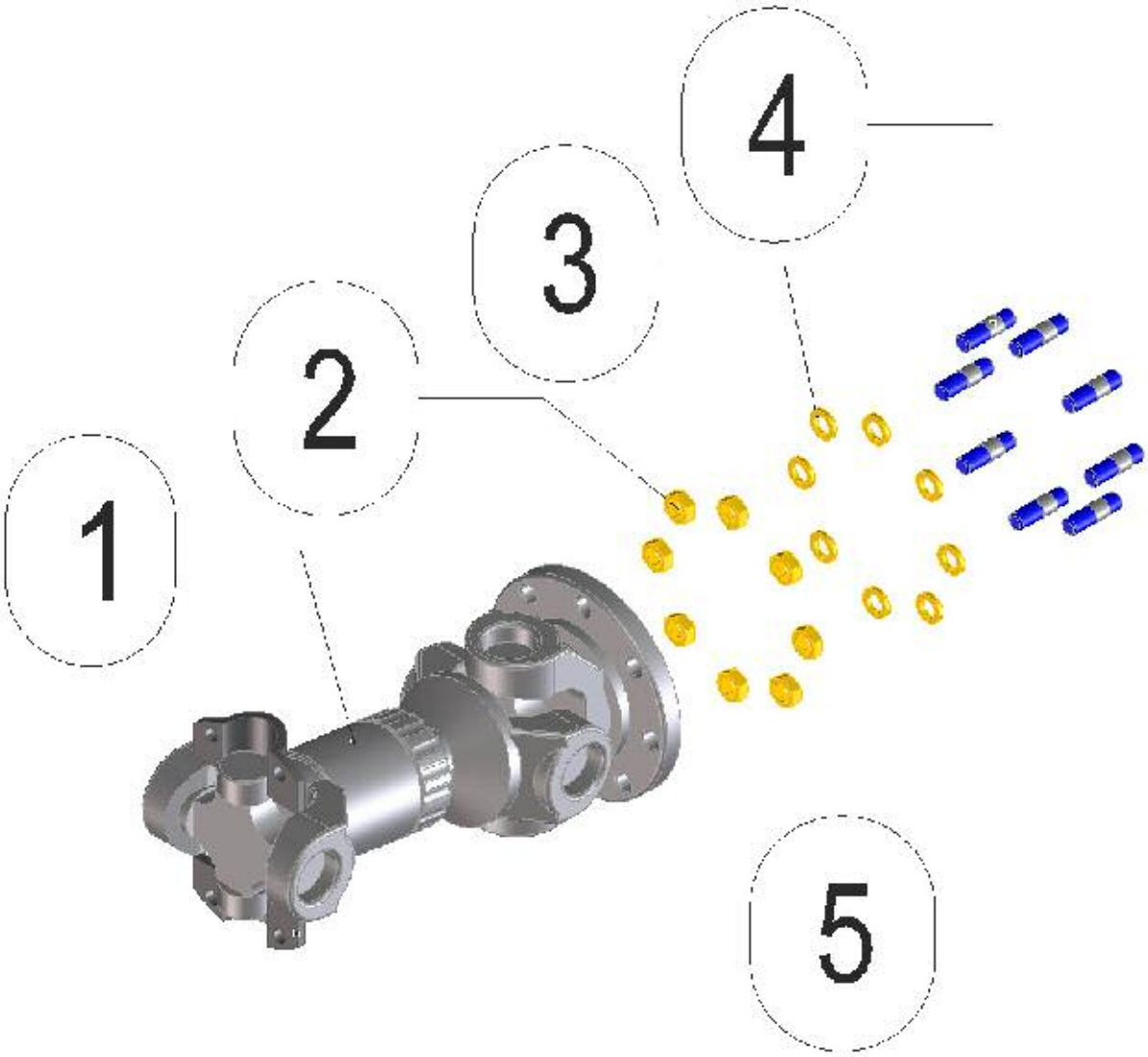

FIGURA	REFERENCIA	DENOMINACIÓN	CANTIDAD
001	30.03600.00	CARDAN 181	1
002	701.10000.66	NUT DIN934 M10X1,5	8
003	104.10000.00	WASHER DIN127 D10	8
004	15.00435.01	STUD DIN938*	8
005	30.03602.00	FLANGE	2

https://truckmanualshub.com/

ACCESSORY DEUTZ (USA/EU)

BODY-ON-FRAME-CHASIS

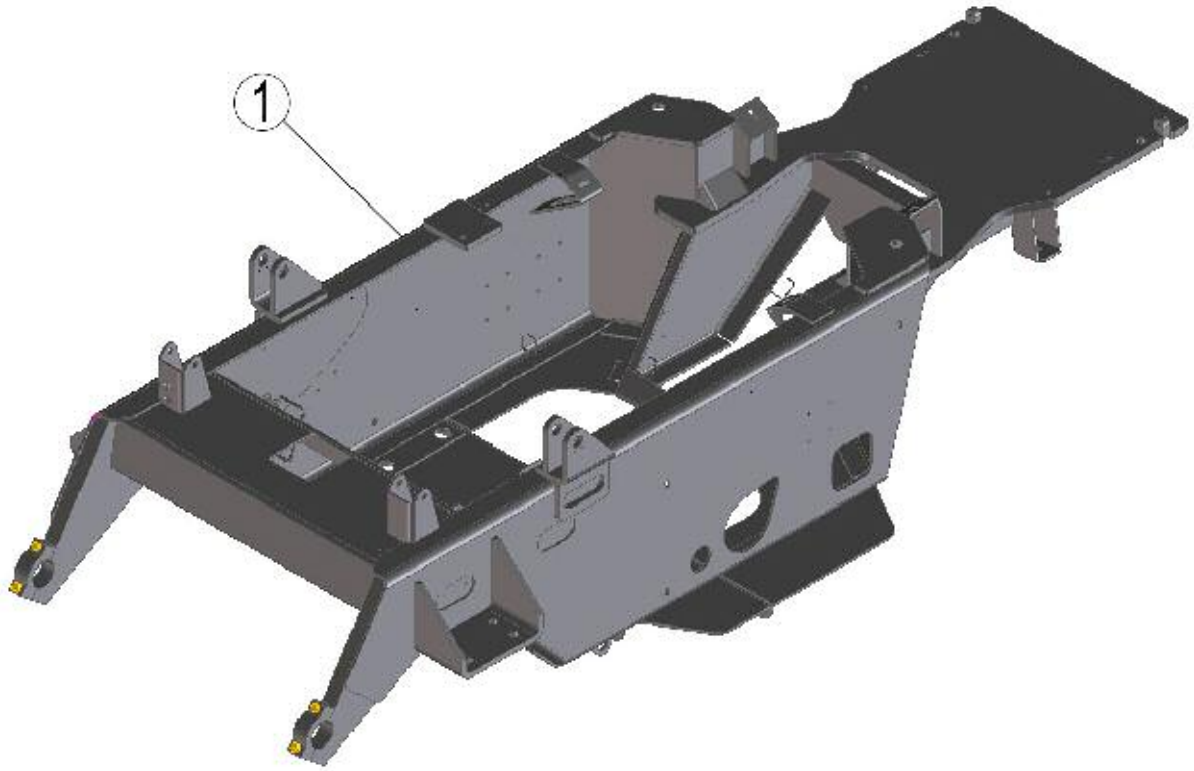

FIGURA	REFERENCIA	DENOMINACIÓN	CANTIDAD
001	30.04000.02	FRAME 724x1234x2960	1

https://truckmanualshub.com/

ACCESSORY DEUTZ (USA/EU)
HYDRAULIC-STEERING

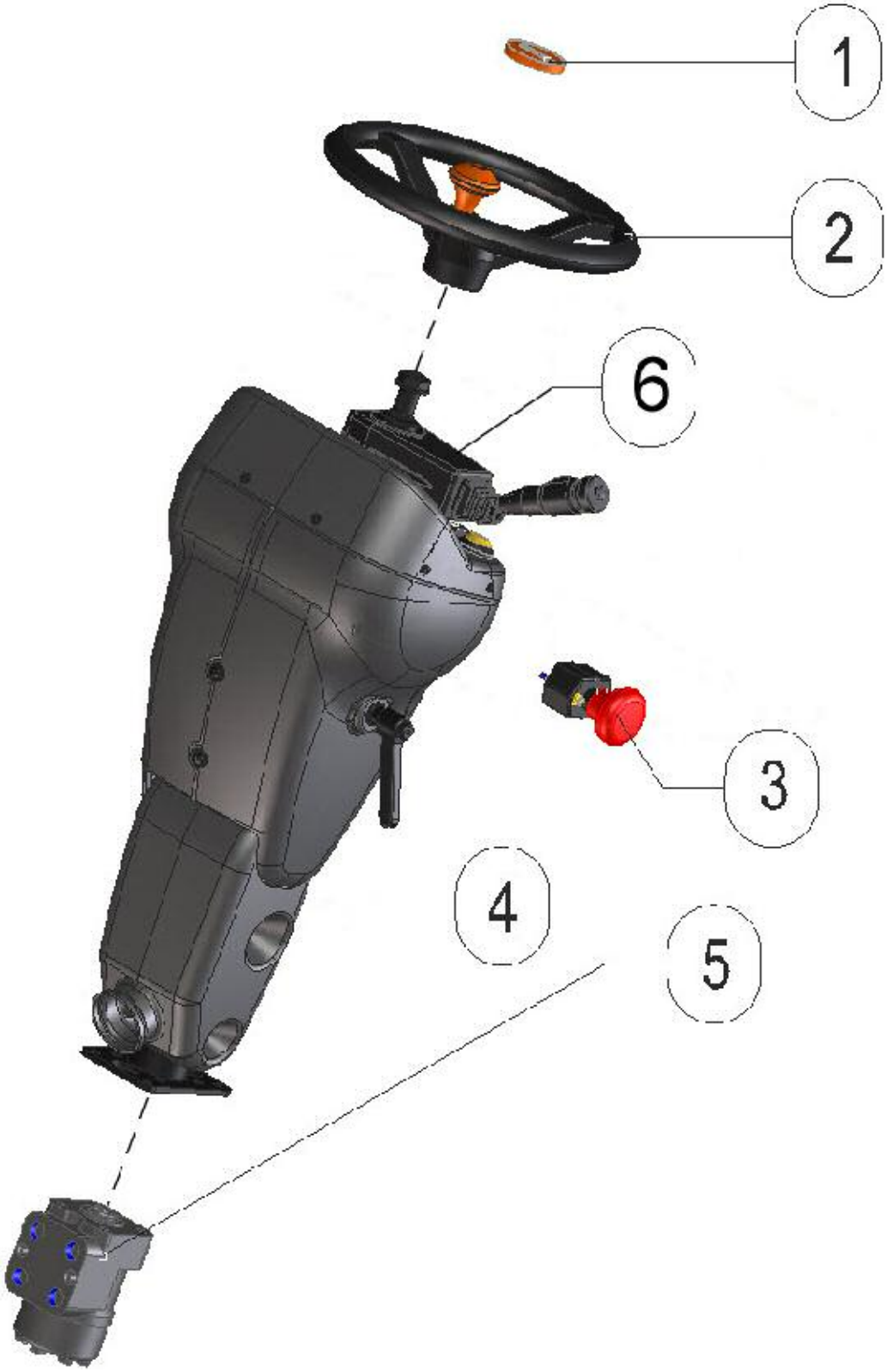

FIGURA	REFERENCIA	DENOMINACIÓN	CANTIDAD
001	00.00626.03	TRIM	1
002	15.01016.01	WHEEL STEERING	1
003	48.11096.00	EMERGENCY SWITCH 1INC 80A	1

https://truckmanualshub.com/

004	30.11020.00	COLUMN ADDRESS C500H DEUTZ	1
005	30.06002.00	HYDR. STEERING 160 CC	1
006	30.11007.00	SWITCH LIGHTS CLEAN	1

https://truckmanualshub.com/

ACCESSORY DEUTZ (USA/EU)

WHEELS-WHEELS

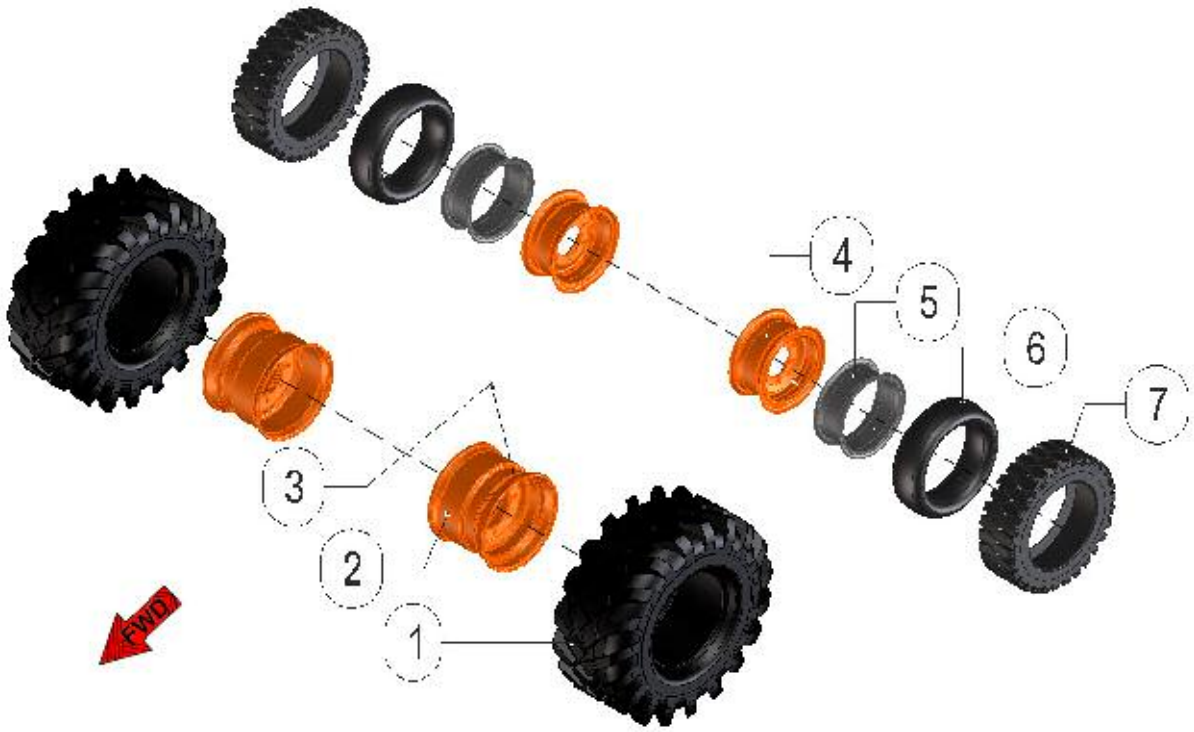

FIGURA	REFERENCIA	DENOMINACIÓN	CANTIDAD
001	30.07021.00	TIRE TT 18-19.5 16 PR	2
002	30.07022.00	RIM 13.00X19.5	2
003	70.07024.00	VALVE, TUBELESS TR575	2
004	30.07027.00	WHEEL 6.5X15	2
005	30.07029.00	FLAP 8.15-15	2
006	30.07028.00	TUBE 8.15-15 TR75 A	2
007	30.07026.00	TIRE LS 8.15-15 14 PR	2

https://truckmanualshub.com/

ACCESSORY DEUTZ (USA/EU)
BODYWORK-PLATES

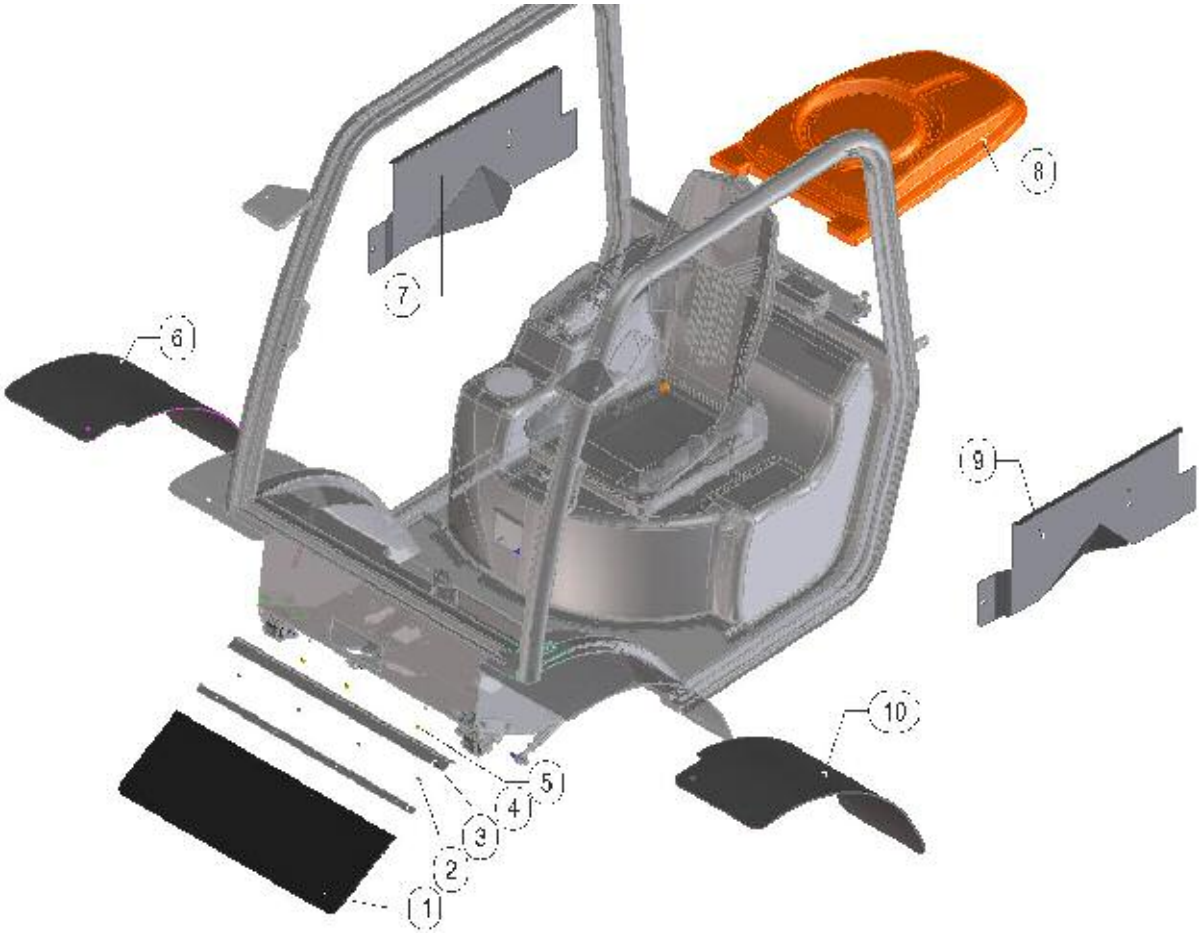

FIGURA	REFERENCIA	DENOMINACIÓN	CANTIDAD
001	30.08030.00	GUARD 5X290X796	1
002	30.08032.00	STRIP SUPPORT 2X20X790	1
003	711.05000.66	NUT	4
004	30.08031.00	BRACKET ANG. 2X50X790	1
005	711.06000.66	NUT DIN982 M6	3
006	57.08060.00	SUPPLEMENT	1
007	30.08021.01	MOTOR PROTECTOR RIGHT 2X292X777	1
008	30.08050.00	COUNTER TOP	1
009	30.08020.01	2X292X777 MOTOR PROTECTOR LEFT	1
010	57.08061.00	SUPPLEMENT	1

https://truckmanualshub.com/

ACCESSORY DEUTZ (USA/EU)

BODYWORK-CABIN I

FIGURA	REFERENCIA	DENOMINACIÓN	CANTIDAD
001	57.08004.00	OPEN-COCKPIT DRIVER PROTECTION	1
002	57.08003.01	DRIVER SEAT	1
003	57.08042.00	BUTT SEAT	1
004	57.08072.00	SUPPORT	2
005	12.04035.01	SAFETY SUPPORT 15X20X228	1
006	711.08000.66	NUT	3
007	604.08040.86	SCREW DIN931	2

https://truckmanualshub.com/

ACCESSORY DEUTZ (USA/EU)

BODYWORK-CABIN II

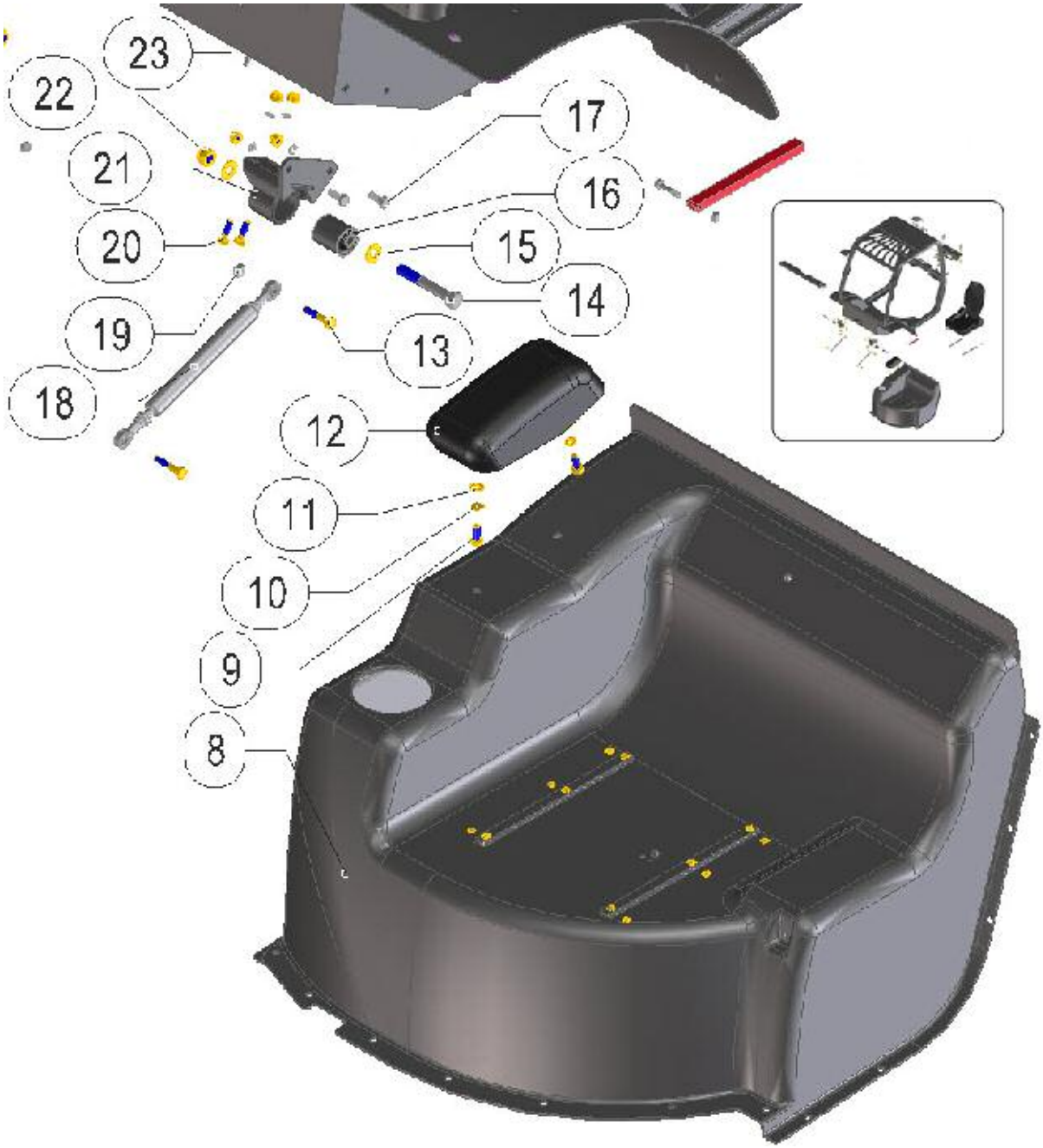

FIGURA	REFERENCIA	DENOMINACIÓN	CANTIDAD
008	12.08002.10	TRANS. PROT. 625X820X924	1
009	603.10025.86	SCREW DIN933	2
010	105.10000.66	WASHER DIN125	4
011	101.10000.66	WASHER DIN125	18
012	12.08003.00	COVERT	1
013	604.10050.86	BOLT DIN931 M10x50	4
014	604.16110.86	DRIVERS SEAT	2
015	101.16000.66	WASHER DIN125 D16	4
016	30.08026.00	ECCENTRIC D48X64 CUSHION	2

https://truckmanualshub.com/

017	604.10025.86	SCREW	4
018	57.08040.00	CYLINDER	2
019	711.10000.66	NUT	6
020	604.10030.86	SCREW DIN931	4
021	30.08027.00	SUPPORT PIN FOR. 128X108X102	2
022	711.16000.66	NUT	2
023	711.10000.86	NUT DIN982 M10 C8	8

https://truckmanualshub.com/

ACCESSORY DEUTZ (USA/EU)

BODYWORK-CABIN III

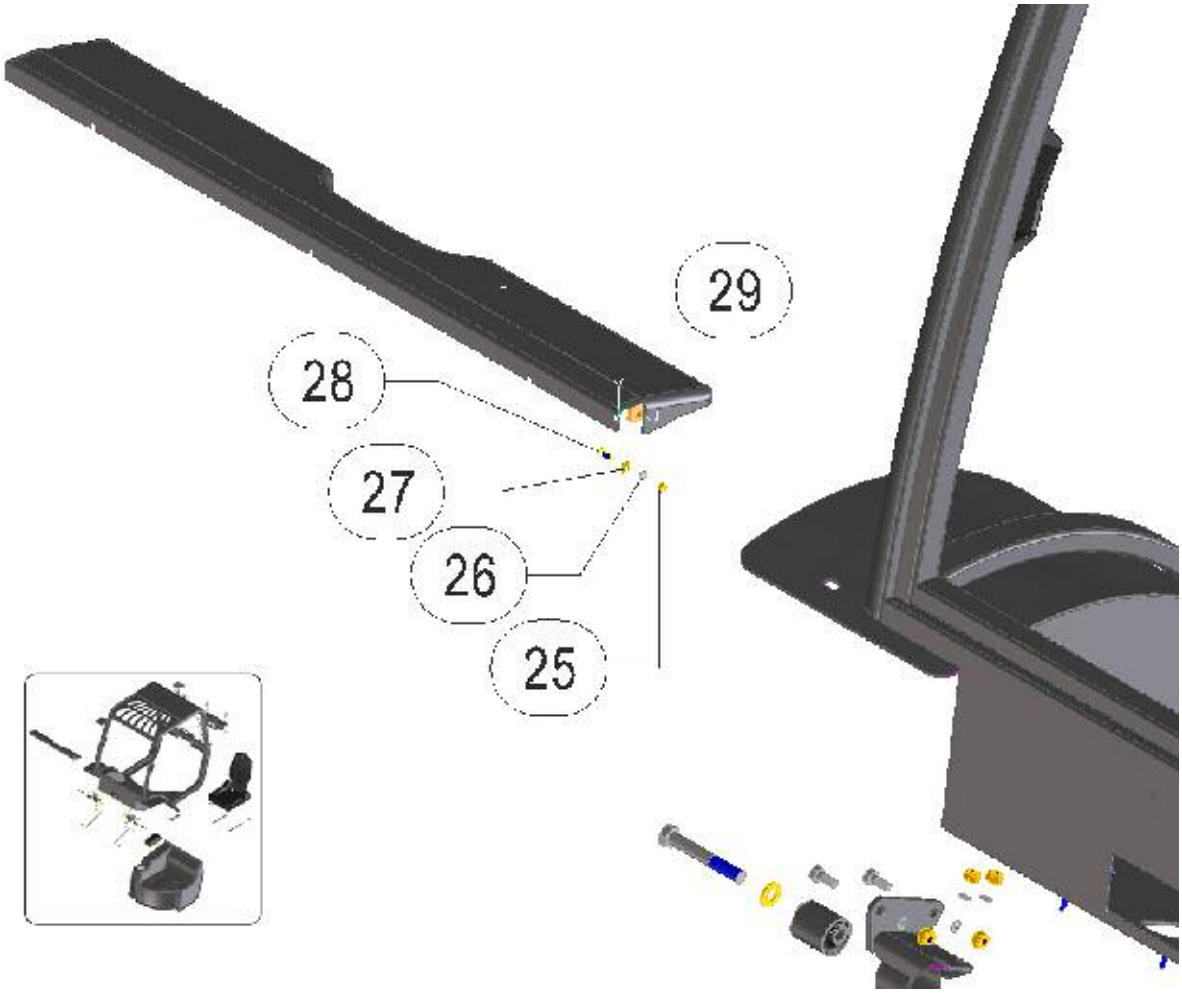

FIGURA	REFERENCIA	DENOMINACIÓN	CANTIDAD
025	701.06000.66	NUT	3
026	105.06000.66	CIR-CLIP DIN7980	2
027	101.06000.66	WASHER DIN125 D6	2
028	603.06025.86	SCREW DIN933 M6x25	2
029	57.08008.00	SUPPORT COVER	1

https://truckmanualshub.com/

ACCESSORY DEUTZ (USA/EU)

BODYWORK-CABIN IV

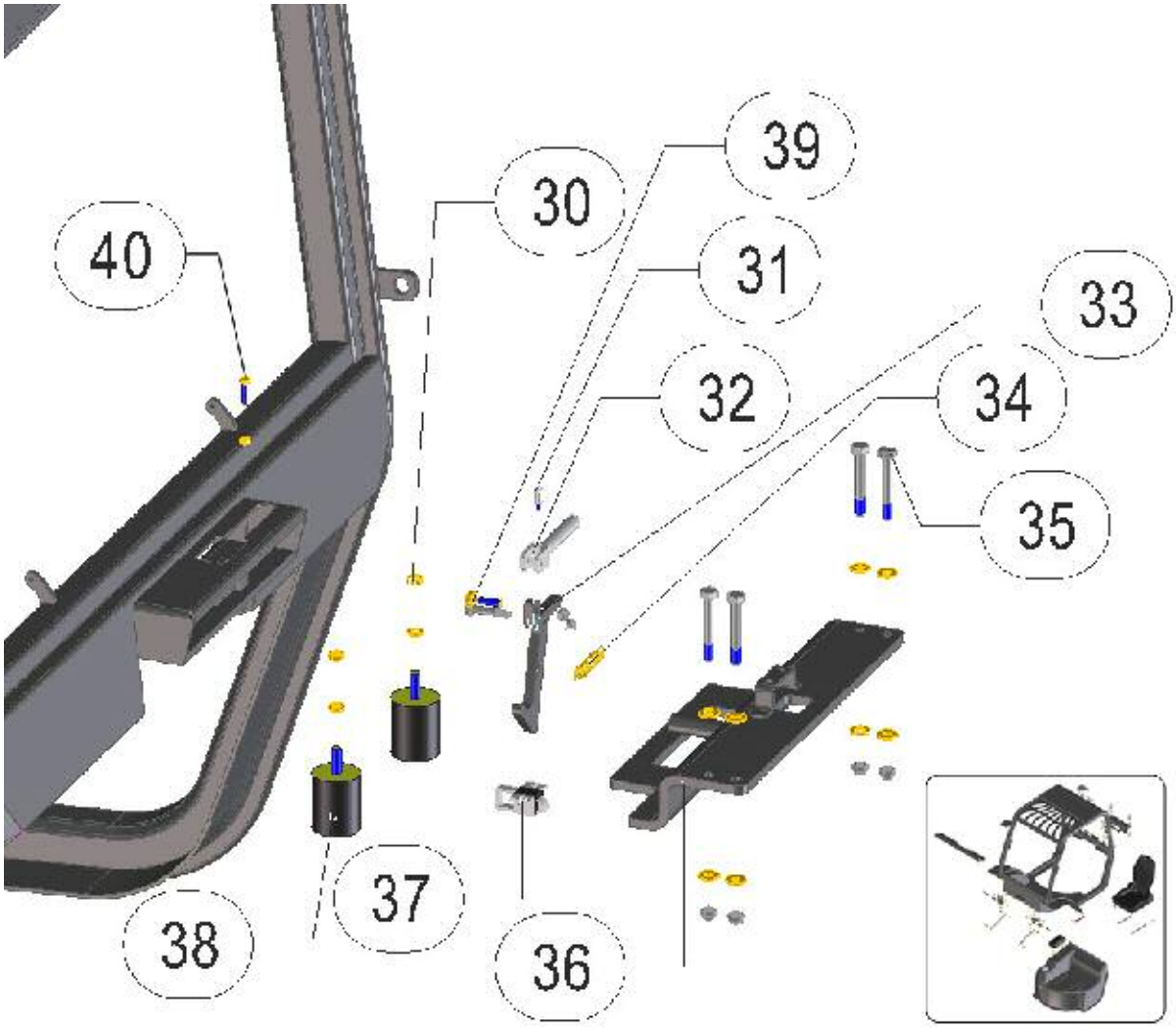

FIGURA	REFERENCIA	DENOMINACIÓN	CANTIDAD
030	701.10000.66	NUT DIN934 M10X1,5	2
031	57.08026.00	SHAFT	1
032	57.08024.00	ACC. LEVER	1
033	57.08023.00	PAWL	1
034	01.00223.00	SPRING TENSION	1
035	604.10070.86	BOLT DIN931 M10x70	4
036	30.08024.01	FIXING BRACKET CLOSE CABIN	1
037	01.01925.00	LATCH	1
038	08.00107.02	BUTT	2
039	604.08030.86	SCREW DIN931	1
040	603.06025.86	SCREW DIN933 M6x25	1

https://truckmanualshub.com/

ACCESSORY DEUTZ (USA/EU)

BODYWORK-COUNTERWEIGHTS I

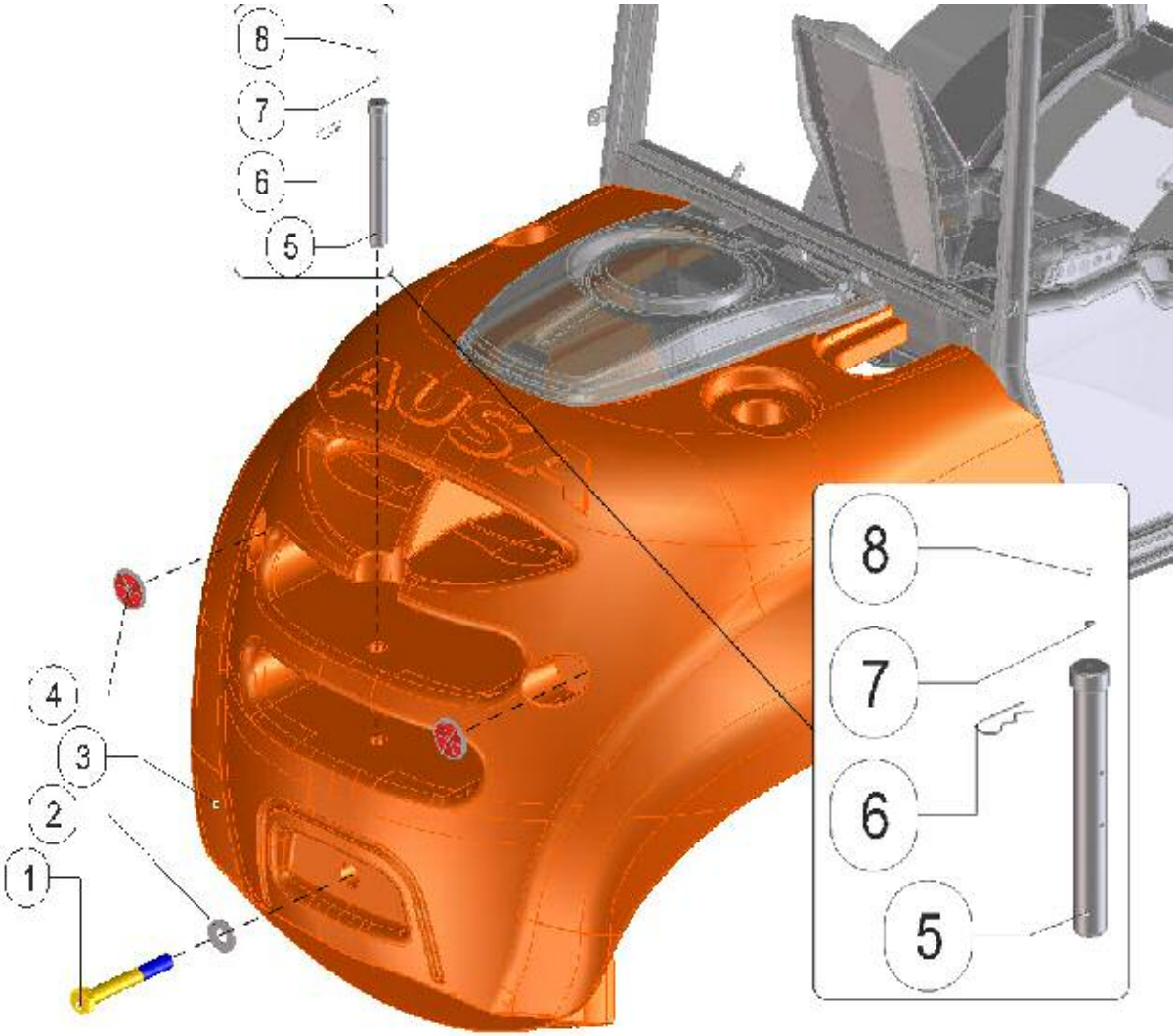

FIGURA	REFERENCIA	DENOMINACIÓN	CANTIDAD
001	617.30220.86	BOLT DIN 960 M30x2x220	1
002	20.08030.00	WASHER	1
003	30.08010.01	WEIGHT 3600KG	1
004	10.11017.00	RED REFLECTOR	2
005	30.08022.10	CPA/GRA D34XD40X305 SHAFT	1
006	15.00836.00	PIN	1
007	701.05000.66	NUT	1
008	603.05015.86	SCREW DIN933	1

ACCESSORY DEUTZ (USA/EU)
BODYWORK-COUNTERWEIGHTS II

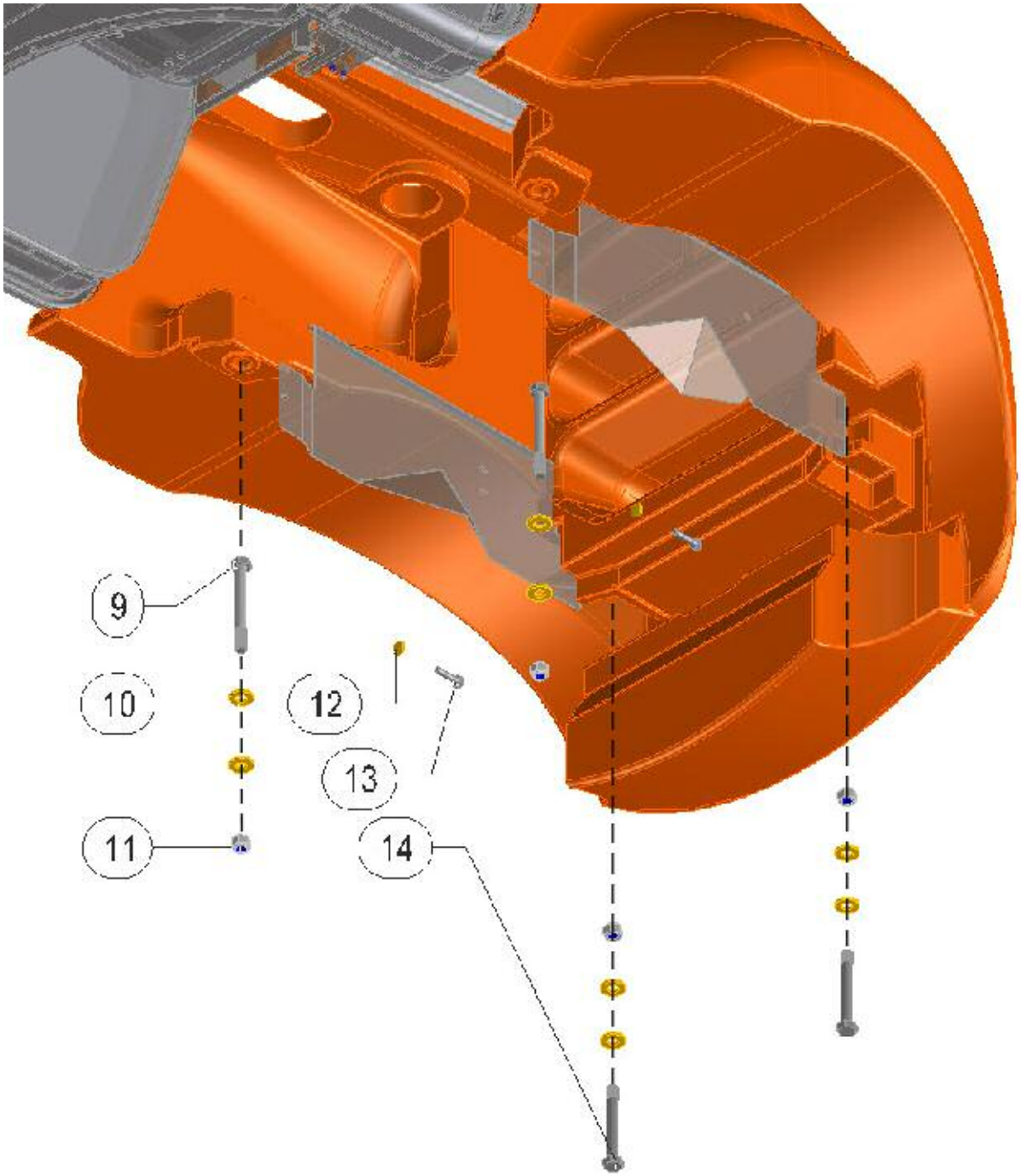

FIGURA	REFERENCIA	DENOMINACIÓN	CANTIDAD
009	604.20180.86	SCREW DIN931	2
010	15.00561.00	WASHER DIN125*	8
011	711.20000.66	NUT	4
012	701.12000.66	NUT	2
013	603.12050.86	SCREW DIN933	2
014	604.20160.86	SCREW DIN931	2

https://truckmanualshub.com/

ACCESSORY DEUTZ (USA/EU)

FEATURES-LIFT

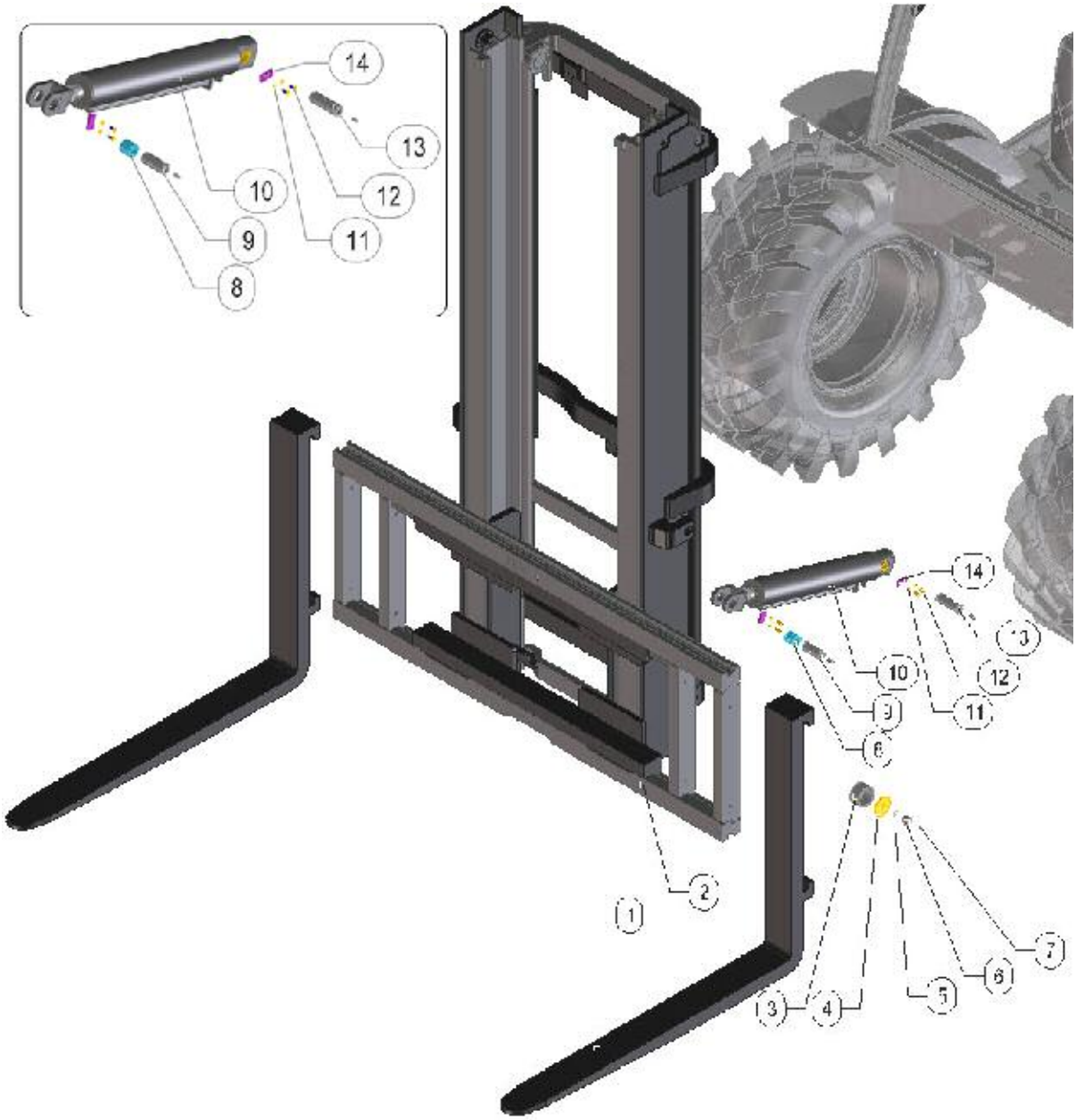

FIGURA	REFERENCIA	DENOMINACIÓN	CANTIDAD
001	30.09002.00	FORK 1200 FEM IV	2

https://truckmanualshub.com/

ACCESSORY DEUTZ (USA/EU)

FUNCTIONS-MAST DUPLEX 3.7 M FEM IV

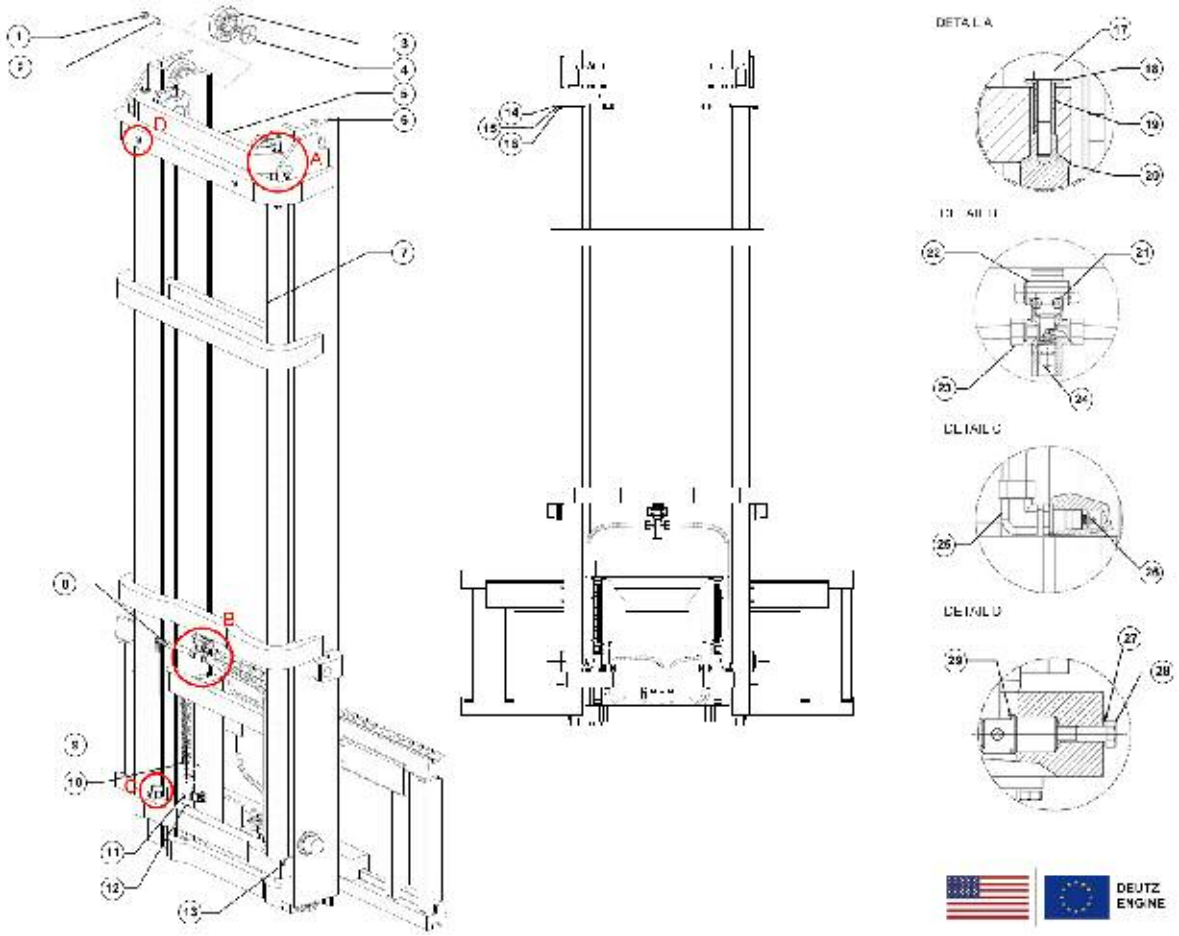

FIGURA	REFERENCIA	DENOMINACIÓN	CANTIDAD

https://truckmanualshub.com/

INDEX

Maintenance

Filters kit 2

Engine

Kubota V3600-T (Part 1) 3
Kubota V3600-T (Part 1) - 60884 4
Kubota V3600-T (Part 1) - 66379 5
Kubota V3600-T (Part 2) 6
Kubota V3600-T (Part 2) - 60887 7

accessory deutz (usa/eu)

ENGINE I-ENGINE 8
ENGINE II-ENGINE 9

Engine

Pump coupling 10
Pump coupling - 72869 11
Pompe 12
Exhaust pipe 13
Air filter comp. 14
Fuel tank 15
Delivery 16

DEUTZ ENGINE TD3.6

ACCESSORY 1 (ENGINE) 17
ACCESSORY 2 (ENGINE) 18
ACCESSORY 3 (ELECTRICAL SYSTEM) 20
ACCESSORY 4 (REFRIGERATION SYSTEM) 21

Engine

Accelerator pedal 22
Radiator 23
engine supports 24
engine supports - 61308 25
engine supports - 65357 26

Transmission

Reductor box 27

https://truckmanualshub.com/

Transmission support - 61325 28
Reduction box inner (Part 1) 29
Reducer box inner (Part 2) 30
Inching pedal 32
Cardan Joint 34

Transmission (Front axle)
Front axle 35
Carter différentiel 36
Ring & pinion 37
Differential 39
Reduction 40
Brake 42

Transmission (Rear axle)
Rear axle 44
Rear axle - 65172 45
Rear axle (PART 1) 46
Rear axle (PART 2) 47
Rear axle (PART 2) - 65171 49
Rear axle (Part 3) 51
Rear axle (Part 3) - 65171 53
Rear axle (Part 3) - 67458 54
Rear axle (Part 3) - 72188 55
Steering cylinder mounting 57
Steering cylinder mounting - 72188 58

Chassis
Chassis 59
mast bush 60

Operation brake
Foot brake 61
Fluid reservoir frein 63

Steering
Direction Column 64
Direction Column - 63368 65
Steering (Part 1) 66
Steering (Part 2) 67
Steering (Part 4) 68

https://truckmanualshub.com/

Wheel

Front Wheels 69
Rear Wheels 70

Body

Engine cover 71
Front sheets 72
Engine Protector 73
Cab shutter 74
Seat 76
Seat - 69383 77
Protecteur moteur 78
Protecteur moteur - 67347 79
Cabin supports 80
Counterweight 81

Opened cab

Opened cab (Part 1) 82
Opened cab (Part 2) 83
Opened cab (Part 3) 84
Rear view mirrors 85
Carpet 86
Shock absorber 87

cabin

OPEN COCKPIT - SEMICLOSED COCKPIT 88

Half-closed cab

Half-closed cab (Part 1) 89
Half-closed cab (Part 2) 90
Half-closed cab (Part 3) 91
Half-closed cab (Part 4) 92
Half-closed cab (Part 5) 93
Half-closed cab (Part 6) 94

Closed cab

SEMICLOSE COCKPIT - CLOSE COCKPIT 95
Closed cab (Part 1) 97
Closed cab (Part 2) 98
Closed cab (Part 3) 99

https://truckmanualshub.com/

Closed cab (Part 4) 100
Closed cab (Part 5) 102
Closed cab (Part 6) 103
Shock absorber 104
Heater (Part 1) 105
Heater (Part 2) 106

Duplex mast 3,7 m. (FEM IV)
Mast guides 107
Carriage subjection 109
Auxiliary reeving 110
Carriage 111
Lateral displacement 112
Lateral cylinder 113

Duplex mast 4,5 m. (FEM IV)
Mast guides 114
Carriage subjection 116
Auxiliary reeving 117
Carriage 118
Lateral displacement 119
Lateral cylinder 120

Triplex mast 4,25 m. (FEM IV)
Mast guides 121
Carriage subjection 123
Auxiliary reeving 124
Carriage 125
Lateral displacement 126
Lateral cylinder 127
Free lift cylinder 128

Triplex mast 6,8 m. (FEM IV)
Mast guides 129
Carriage subjection 131
Auxiliary reeving 132
Carriage 133
Lateral displacement 134
Lateral cylinder 135
Free lift cylinder 136

https://truckmanualshub.com/

Machine operation tools

Inclination cylinder 137
Inclination cylinder - 66414 138
Forks 139
Load protector 140
Bucket 141

Hydraulic diagram installation

Joystick 142
Distributor 143
Hydraulic tank 144
Line filters 146
Transmission 147
Service diagram 149
Valves 151

Electric installation

Joystick lever 152
Battery 153
Battery - 60884 154
Battery - 62988 155
Battery support 156
Supports and brackets - 62988 157
Cable Installation 158
Main wire harness 159
Engine wiring harness 160
Lights wiring harness 161
Front lighting 162
Rear lighting 163

Finishing

Plaques et autocollants (Partie 1) 164
Plaques et autocollants (Partie 2) 165
Plaques et autocollants (Partie 3) 166
Plaques et autocollants (Partie 4) 167
Plaques et autocollants (Partie 5) 168
Plaques et autocollants (Partie 5) - 61283 169
Finished France 170
Finished UK 171
Finished Germany 172
Finished Poland 173

https://truckmanualshub.com/

Tools bag 174

Option and variants

175
Bucket 176

accessory deutz (usa/eu)
EXHAUST-ENGINE 177
INTAKE-ENGINE 178
POWER SUPPLY PART 1-ENGINE 179
POWER SUPPLY PART 2-ENGINE 180
COOLING-ENGINE 181
SUSPENSION-ENGINE 182
FIXED BRIDGE-TRANSMISSION 183
SIMPLE GUIDELINE BRIDGE-TRANSMISSION 184
CARDAN JOINT-TRANSMISSION 185
BODY-ON-FRAME-CHASIS 186
HYDRAULIC-STEERING 187
WHEELS-WHEELS 188
BODYWORK-PLATES 189
BODYWORK-CABIN I 190
BODYWORK-CABIN II 191
BODYWORK-CABIN III 192
BODYWORK-CABIN IV 193
BODYWORK-COUNTERWEIGHTS I 194
BODYWORK-COUNTERWEIGHTS II 195
FEATURES-LIFT 196
FUNCTIONS-MAST DUPLEX 3.7 M FEM IV 197