https://truckmanualshub.com/

CORPORATE OFFICE

JLG INDUSTRIES, INC.
1 JLG Drive
McConnellsburg, PA 17233-9533
USA
Telephone: (717) 485-5161
Fax: (717) 485-6417

EUROPEAN OFFICE

JLG INDUSTRIES (EUROPE)
Kilmartin Place,
Tannochside Park,
Uddingston, Scotland, G71 5PH
Telephone: 01698 811005
Fax: 01698 811055

AUSTRALIAN OFFICE

JLG INDUSTRIES (AUSTRALIA)
P.0. Box 972
11 Bolwarra Road
Port MacQuarie
N.S.W. 44
Australia
Telephone: 1 (065) 811111
Fax: 1 (065) 810122

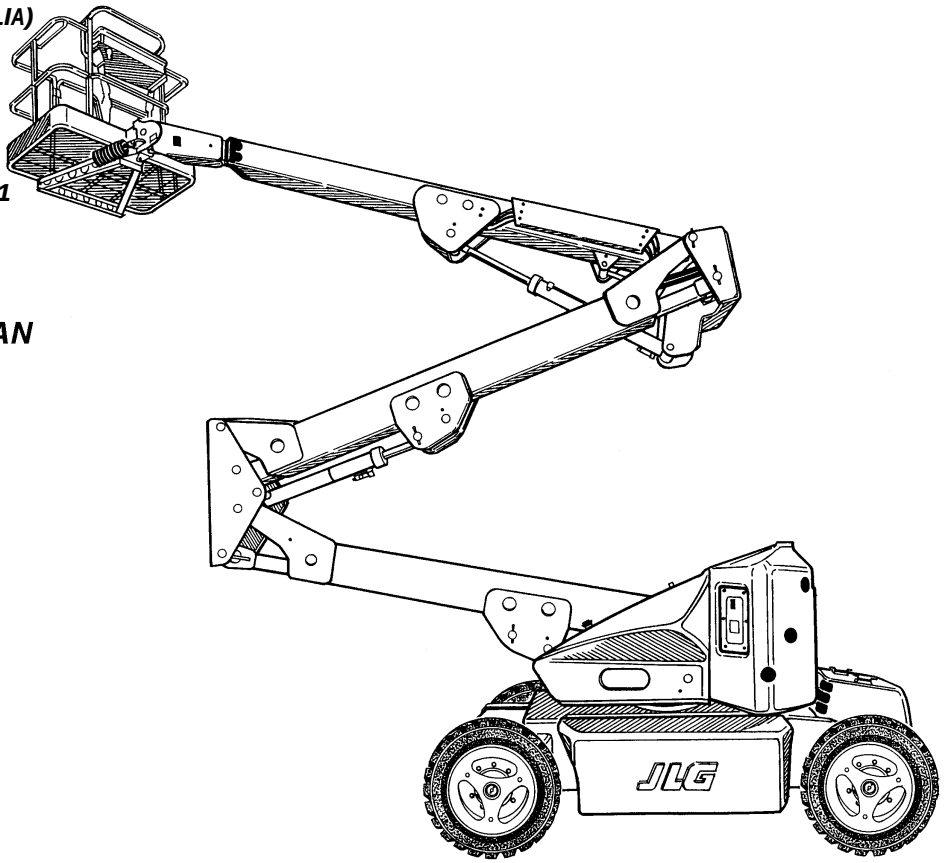

AND AUSTRALIAN SPECS

BS EN ISO 9001 Certificate No. 6917

Models
M45A
M45AJ
E45A
E45AJ

OPERATORS & SAFETY

Issued: April 1, 1999
Updated: March 15, 2000

PRINTED IN U.S.A.

3120883

https://truckmanualshub.com/

https://truckmanualshub.com/

FOREWORD

The purpose of this manual is to provide users with the operating procedures essential for the promotion of proper machine operation for its intended purpose. It is important to over-stress proper machine usage. All information in this manual should be READ and UNDERSTOOD before any attempt is made to operate the machine. **YOUR OPERATING MANUAL IS YOUR MOST IMPORTANT TOOL** - Keep it with the machine. **REMEMBER ANY EQUIPMENT IS ONLY AS SAFE AS THE OPERATOR.**

BECAUSE THE MANUFACTURER HAS NO DIRECT CONTROL OVER MACHINE APPLICATION AND OPERATION, PROPER SAFETY PRACTICES ARE THE RESPONSIBILITY OF THE USER AND HIS OPERATING PERSONNEL.

ALL INSTRUCTIONS IN THIS MANUAL ARE BASED ON THE USE OF THE MACHINE UNDER PROPER OPERATING CONDITIONS, WITH NO DEVIATIONS FROM THE ORIGINAL DESIGN. ALTERATION AND/OR MODIFICATION OF THE MACHINE IS STRICTLY FORBIDDEN, WITHOUT WRITTEN APPROVAL FROM JLG INDUSTRIES, PER OSHA REGULATIONS AND APPLICABLE ANSI STANDARDS.

THIS SAFETY ALERT SYMBOL IS USED TO CALL ATTENTION TO POTENTIAL HAZARDS WHICH MAY LEAD TO SERIOUS INJURY OR DEATH IF IGNORED.

Safety of personnel and proper use of the machine are of primary concern, DANGER, WARNING, CAUTION, IMPORTANT, INSTRUCTIONS and **NOTE** are inserted throughout this manual to emphasize these areas. They are defined as follows:

DANGER

DANGER INDICATES AN IMMINENTLY HAZARDOUS SITUATION WHICH, IF NOT AVOIDED WILL RESULT IN SERIOUS INJURY OR DEATH.]

WARNING

WARNING INDICATES A POTENTIALLY HAZARDOUS SITUATION WHICH, IF NOT AVOIDED COULD RESULT IN SERIOUS INJURY OR DEATH.

CAUTION

CAUTION INDICATES A POTENTIALLY HAZARDOUS SITUATION WHICH, IF NOT AVOIDED, MAY RESULT IN MINOR OR MODERATE INJURY. IT MAY ALSO BE USED TO ALERT AGAINST UNSAFE PRACTICES

IMPORTANT

IMPORTANT OR INSTRUCTIONS INDICATES A PROCEDURES ESSENTIAL FOR SAFE OPERATION AND WHICH, IF NOT FOLLOWED, MAY RESULT IN A MALFUNCTION OR DAMAGE TO THE MACHINE.

IMPORTANT

JLG INDUSTRIES MAY HAVE ISSUED SAFETY RELATED BULLETINS FOR YOUR JLG PRODUCT. CONTACT JLG INDUSTRIES INC. OR THE LOCAL AUTHORIZED JLG DISTRIBUTOR FOR INFORMATION CONCERNING SAFETY RELATED BULLETINS WHICH MAY HAVE BEEN ISSUED FOR YOUR JLG PRODUCT. ALL ITEMS REQUIRED BY THE SAFETY RELATED BULLETINS MUST BE COMPLETED ON THE AFFECTED JLG PRODUCT

Due to continuous product improvements, JLG Industries, Inc. reserves the right to make specification changes without prior notification. Contact JLG Industries, Inc. for updated information.

https://truckmanualshub.com/

This page left blank intentionally.

https://truckmanualshub.com/

All procedures herein are based on the use of the machine under proper operating conditions, with no deviations from original design intent... as per OSHA regulations.

READ & HEED!

The ownership, use, service, and/or maintenance of this machine is subject to various governmental and local laws and regulations. It is the responsibility of the owner/user to be knowledgeable of these laws and regulations and to comply with them. The most prevalent regulations of this type in the United States are the Federal OSHA Safety Regulations*. Listed below, in abbreviated form are some of the requirements of Federal OSHA regulations in effect as of the date of publication of this handbook.

The listing of these requirements shall not relieve the owner/user of the responsibility and obligation to determine all applicable laws and regulations and their exact wording and requirements, and to comply with the requirements. Nor shall the listing of these requirements constitute an assumption of responsibility of liability on the part of JLG Industries, Inc.

1. Only trained and authorized operators shall be permitted to operate the aerial lift.
2. A malfunctioning lift shall be shut down until repaired.
3. The controls shall be plainly marked as to their function.
4. The controls shall be tested each day prior to use to determine that they are in safe operating condition.
5. All personnel in the platform shall, at all times, wear approved fall protection devices and other safety gear as required.
6. Load limits specified by the manufacturer shall not be exceeded.
7. Instruction and warning placards must be legible.
8. Aerial lifts may be field modified for uses other than those intended by the manufacturer only if certified in writing by the manufacturer to be in conformity to JLG requirements and to be at least as safe as it was prior to modification.
9. Aerial lifts shall not be used near electric power lines unless the lines have been de energized or adequate clearance is maintained.
10. Employees using aerial lifts shall be instructed on how to recognize and avoid unsafe conditions and hazards.
11. Ground controls shall not be operated unless permission has been obtained from personnel in the platform, except in case of an emergency.
12. Regular inspection of the job site and aerial lift shall be performed by competent persons.
13. Personnel shall always stand on the floor of the platform, not on boxes, planks, railing or other devices, for a work position.

*Applicable Federal OSHA regulations for the United States, as of the date of publication of this manual, include, but are not limited to, 29 CFR 1910.67, 29 CFR 1926.20, 29 CFR 1926.21, 29 CFR 1926.28, and 29 CFR 1926.453.

https://truckmanualshub.com/

REVISON LOG

April 1, 1999	-	Original Issue
3-9	-	Updated 5-7-99
3-9	-	Updated 5-12-99
2-5	-	Updated 5-21-99
4-3	-	Updated 5-21-99
2-10 & 2-11	-	Updated 6-1-99
3-10 thru 3-12	-	Updated 6-1-99
6-1	-	Updated 6-1-99
3-7	-	Updated 7-13-99
3-13	-	Updated 7-13-99
2-11	-	Updated 8-4-99
4-1	-	Updated 8-4-99
4-5 thru 4-7	-	Updated 8-4-99
3-5 thru 3-8	-	Updated 8-18-99
4-7	-	Updated 9-21-99
2-9	-	Updated 11-3-99
2-11	-	Updated 11-3-99
5-1	-	Updated 11-3-99
6-1	-	Updated 12-1-99
4-1	-	Updated 3-15-00
4-8	-	Updated 3-15-00

https://truckmanualshub.com/

TABLE OF CONTENTS

SUBJECT - SECTION, PARAGRAPH **PAGE NO.**

SECTION - FOREWORD

SECTION 1 - SAFETY PRECAUTIONS

1.1 General 1-1
1.2 Driving/Towing. 1-1
1.3 Electrocution Hazard. 1-2
1.4 Pre-Operational 1-2
1.5 Driving 1-4
1.6 Operation. 1-5
1.7 Towing and Hauling 1-8

SECTION 2 - PREPARATION AND INSPECTION

2.1 General 2-1
2.2 Preparation For Use 2-1
2.3 Delivery and Frequent Inspection 2-1
2.4 Daily Walk-around Inspection 2-4
2.5 Daily Functional Check 2-4
2.6 Torque Requirements 2-5
2.7 Battery Maintenance and Charging 2-8

SECTION 3 - USER RESPONSIBILITIES AND MACHINE CONTROL

3.1 General 3-1
3.2 Personnel Training 3-1
3.3 Operating Characteristics and Limitations 3-2
3.4 Controls and Indicators. 3-2

SECTION 4 - MACHINE OPERATION

4.1 Description 4-1
4.2 General 4-1
4.3 Motor Operation 4-1
4.4 Traveling (Driving) 4-2
4.5 Steering 4-2
4.6 Platform 4-2
4.7 Boom 4-3
4.8 Generator. 4-4
4.9 Machine Function Speeds 4-4
4.10 Shut Down and Park 4-4
4.11 Machine Lifting and Tie Down. 4-5
4.12 Boom Synchronizing Procedure. 4-5

SECTION 5 - OPTIONAL EQUIPMENT

5.1 Motion Alarm 5-1
5.2 Foam Filled Tires. 5-1
5.3 Non-marking Tires. 5-1
5.4 Rotating Beacon 5-1
5.5 Tilt Alarm 5-1
5.6 Wheel Covers 5-1
5.7 Battery Packs. 5-1
5.8 Platform Lights. 5-1
5.9 Control Console Cover 5-1
5.10 Cylinder Bellows 5-1
5.11 Work Platform 5-1

https://truckmanualshub.com/

TABLE OF CONTENTS (continued)

SUBJECT - SECTION, PARAGRAPH **PAGE NO.**

SECTION 6 - EMERGENCY PROCEDURES

6.1 General 6-1
6.2 Emergency Towing Procedures 6-1
6.3 Emergency Controls and Their Locations 6-1
6.4 Emergency Operation 6-2
6.5 Incident Notification 6-2

SECTION 7 - INSPECTION AND REPAIR LOG

LIST OF FIGURES

FIGURE NO. **TITLE** **PAGE NO.**

2-1. Basic Nomenclature 2-3
2-2. Daily Walk-Around Inspection 2-6
2-3. Lubrication Chart 2-10
2-4. Torque Chart 2-12
3-1. Position of Least Forward Stability 3-3
3-2. Position of Least Backward Stability 3-4
3-3. Ground Control Station 3-5
3-4. Platform Console 3-7
3-5. Caution, Danger, Warning Decal Location 3-10
3-6. Control Panel Symbols (Sheet 1 of 2) 3-13
3-7. Control Panel Symbols (Sheet 2 of 2) 3-14
4-1. Grade and Side Slopes 4-3
4-2. Upright Positioning 4-6
4-3. Lifting Chart 4-7
4-4. Chassis & Platform Tie Down 4-8

LIST OF TABLES

TABLE NO. **TITLE** **PAGE NO.**

1-1 Minimum Safe Approach Distances (M.S.A.D.) to energized (exposed or insulated) power lines and parts 1-2
2-1 Lubrication Chart 2-11
3-1 Simultaneous Functions 3-9
7-1 Inspection and Repair Log 7-1

https://truckmanualshub.com/

SECTION 1. SAFETY PRECAUTIONS

1.1 GENERAL

This section prescribes the proper and safe practices for major areas of machine usage. In order to promote proper usage of the machine, it is mandatory that a daily routine be established based on instructions given in this section. A maintenance program must also be established by a qualified person and must be followed to ensure that the machine is safe to operate.

The owner/user/operator of the machine should not accept operating responsibility until this manual has been read and understood, and operation of the machine, under the supervision of an experienced and qualified person, has been completed. If there is a question on application and/or operation, JLG Industries Inc., should be consulted.

⚠ WARNING

MODIFICATION OR ALTERATION OF AN AERIAL PLATFORM SHALL BE MADE ONLY WITH PRIOR WRITTEN PERMISSION OF THE MANUFACTURER.

1.2 DRIVING/TOWING

Before driving the machine, the user must be familiar with the drive, steer and stopping characteristics. This is especially important when driving in close quarters.

The user should be familiar with the driving surface before driving. The surface should be firm and level and grades should not exceed the allowable grade for the machine.

NOTE: *Remember that the key to safe and proper usage is common sense and its careful application.*

The machine is not equipped with provisions for towing. Refer to Section 6 for emergency towing procedures.

SPECIAL NOTE:

⚠ WARNING

FAILURE TO COMPLY WITH SAFETY PRECAUTIONS LISTED IN THIS SECTION AND ON THE MACHINE COULD RESULT IN MACHINE DAMAGE, PERSONNEL INJURY OR DEATH, AND IS A SAFETY VIOLATION.

https://truckmanualshub.com/

Table 1-1. Minimum Safe Approach Distances (M.S.A.D.) to energized (exposed or insulated) power lines and parts

Voltage Range (Phase to Phase)	MINIMUM SAFE APPROACH DISTANCE in Meters
0 to 300V	AVOID CONTACT
Over 300V to 50 KV	3
Over 50KV to 200 KV	5
Over 200 KV to 350 KV	6
Over 350 KV to 500 KV	8
Over 500 KV to 750 KV	11
Over 750 KV to 1000 KV	14

DANGER: DO NOT maneuver machine or personnel inside PROHIBITED ZONE. ASSUME all electrical parts and wiring are ENERGIZED unless known otherwise.

1.3 ELECTROCUTION HAZARD

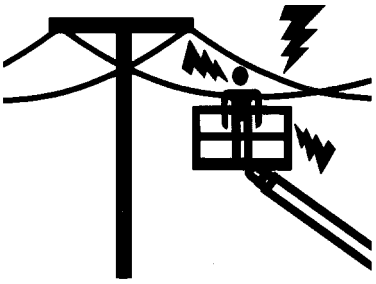

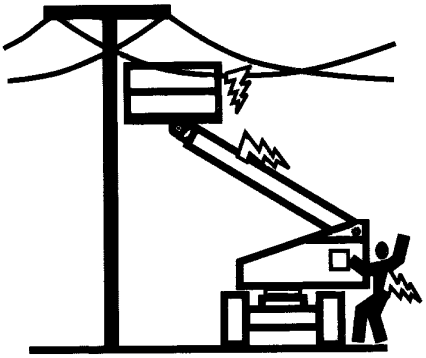

- MAINTAIN SAFE CLEARANCE FROM ELECTRICAL LINES AND APPARATUS. ALLOW FOR BOOM SWAY, ROCK OR SAG AND ELECTRICAL LINE SWAYING. THE MACHINE DOES NOT PROVIDE PROTECTION FROM CONTACT WITH OR PROXIMITY TO AN ELECTRICALLY CHARGED CONDUCTOR.
- MAINTAIN A CLEARANCE OF AT LEAST 3 M (10 FEET) BETWEEN ANY PART OF THE MACHINE OR ITS LOAD AND ANY ELECTRICAL LINE OR APPARATUS CARRYING UP TO 50,000 VOLTS. 30.5 cm ADDITIONAL CLEARANCE IS REQUIRED FOR EVERY ADDITIONAL 30,000 VOLTS OR LESS.

1.4 PRE-OPERATIONAL

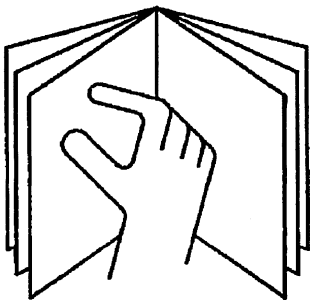

- READ YOUR MANUAL. UNDERSTAND WHAT YOU'VE READ - THEN BEGIN OPERATIONS.
- ALLOW ONLY AUTHORIZED AND QUALIFIED PERSONNEL TO OPERATE MACHINE WHO HAVE DEMONSTRATED THAT THEY UNDERSTAND SAFE AND PROPER OPERATION AND MAINTENANCE OF THE UNIT.

https://truckmanualshub.com/

- AN OPERATOR MUST NOT ACCEPT OPERATING RESPONSIBILITIES UNTIL ADEQUATE TRAINING HAS BEEN GIVEN BY COMPETENT AND AUTHORIZED PERSONS.
- BEFORE OPERATION, CHECK WORK AREA FOR OVERHEAD ELECTRIC LINES, MACHINE TRAFFIC SUCH AS BRIDGE CRANES, HIGHWAY, RAILWAY AND CONSTRUCTION EQUIPMENT.

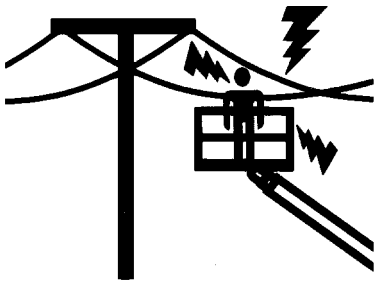

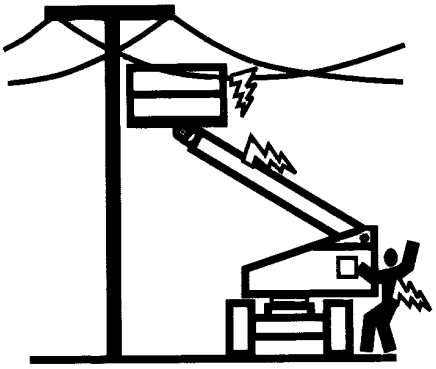

- PRECAUTIONS TO AVOID ALL KNOWN HAZARDS IN THE WORK AREA MUST BE TAKEN BY THE OPERATOR AND HIS SUPERVISOR BEFORE STARTING THE WORK.
- DO NOT OPERATE THIS MACHINE UNLESS IT HAS BEEN SERVICED AND MAINTAINED ACCORDING TO THE MANUFACTURERS SPECIFICATIONS AND SCHEDULE.
- ENSURE DAILY INSPECTION AND FUNCTION CHECK IS PERFORMED PRIOR TO PLACING MACHINE INTO OPERATION.
- NEVER DISABLE OR MODIFY THE FOOTSWITCH OR ANY OTHER SAFETY DEVICE. UNAUTHORIZED MODIFICATION OF THE MACHINE IS A SAFETY VIOLATION.

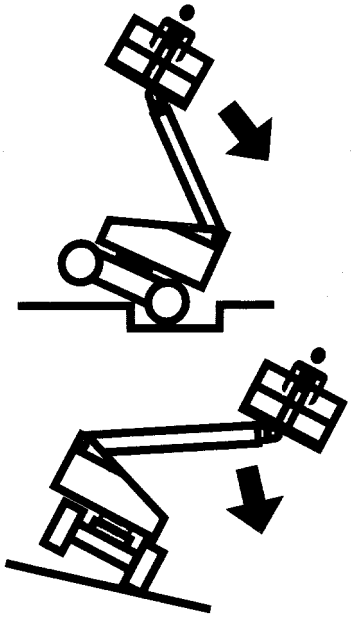

- DO NOT OPERATE MACHINE WHEN WIND CONDITIONS EXCEED 12.5 M/S (30MPH).
- NEVER OPERATE BOOM FUNCTIONS (TELE, SWING, LIFT) WHEN MACHINE IS ON A TRUCK, OTHER VEHICLE, OR ABOVE GROUND STRUCTURE.
- THIS MACHINE CAN BE OPERATED IN NOMINAL AMBIENT TEMPERATURES OF -20° C TO 40° C (0° F TO 104°F). CONSULT FACTORY TO OPTIMIZE OPERATION OUTSIDE THIS RANGE.

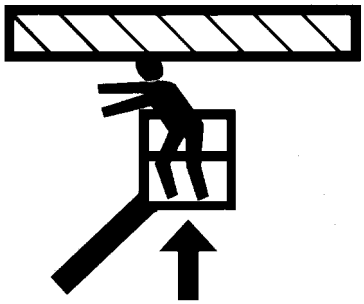

- APPROVED HEAD GEAR MUST BE WORN BY ALL OPERATING AND GROUND PERSONNEL.

https://truckmanualshub.com/

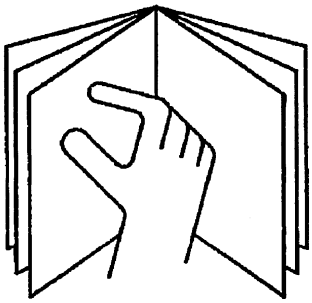

- READ AND OBEY ALL DANGERS, WARNINGS, CAUTIONS AND OPERATING INSTRUCTIONS ON MACHINE AND IN THIS MANUAL.
- BE FAMILIAR WITH LOCATION AND OPERATION OF GROUND STATION CONTROLS.

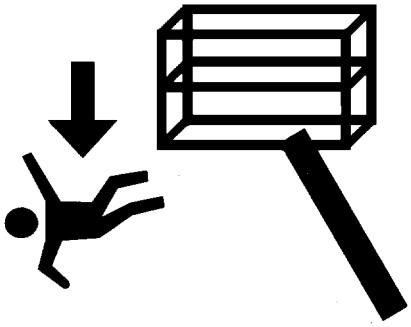

- ALWAYS USE THREE POINT CONTACT WHEN ENTERING OR EXITING THE MACHINE. FACE THE MACHINE WHEN YOU ENTER OR LEAVE. THREE POINT CONTACT MEANS THAT TWO HANDS AND ONE FOOT OR ONE HAND AND TWO FEET ARE IN CONTACT WITH THE MACHINE AT ALL TIMES DURING MOUNT AND DISMOUNT.

1.5 DRIVING

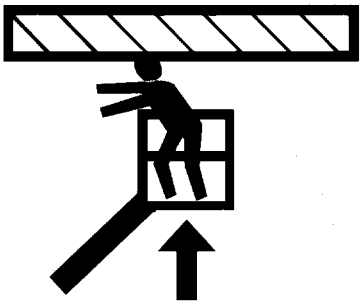

- WATCH FOR OBSTRUCTIONS AROUND MACHINE AND OVERHEAD WHEN DRIVING.
- ALWAYS POSITION BOOM OVER REAR (DRIVE) AXLE IN LINE WITH DIRECTION OF TRAVEL. REMEMBER, IF BOOM IS OVER FRONT (STEER) AXLE, DIRECTION OF STEER AND DRIVE MOVEMENT WILL BE OPPOSITE FROM NORMAL OPERATION.

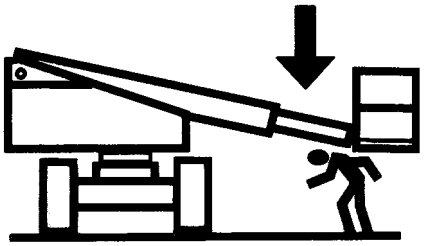

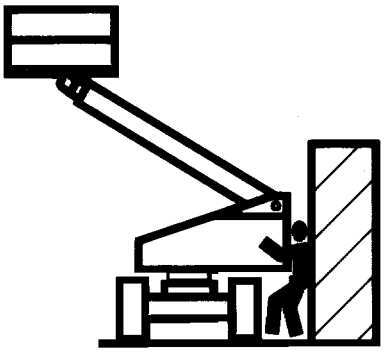

- DO NOT USE DRIVE FUNCTION TO POSITION PLATFORM CLOSE TO OBSTACLES. USE BOOM FUNCTION INSTEAD.
- WHEN DRIVING IN HIGH SPEED, SWITCH TO LOW SPEED BEFORE STOPPING. TRAVEL GRADES IN LOW DRIVE, HIGH ENGINE ONLY.
- DO NOT USE HIGH SPEED DRIVE WHEN IN RESTRICTED OR CLOSE QUARTERS, OR WHEN DRIVING IN REVERSE.
- BE AWARE OF STOPPING DISTANCES WHEN TRAVELING IN HIGH AND LOW SPEEDS.
- ALWAYS POST A LOOKOUT AND SOUND HORN WHEN DRIVING IN AREAS WHERE VISION IS OBSTRUCTED.
- KEEP NON-OPERATING PERSONNEL AT LEAST 2 M (6 FEET) AWAY FROM MACHINE DURING DRIVING OPERATIONS.

https://truckmanualshub.com/

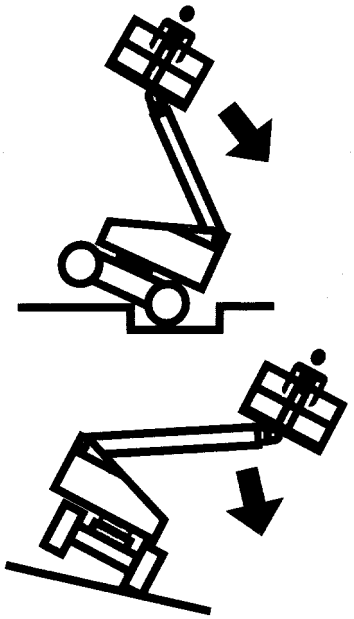

- CHECK TRAVEL PATH FOR PERSONS, HOLES, BUMPS, DROP-OFFS, OBSTRUCTIONS, DEBRIS, AND COVERINGS WHICH MAY CONCEAL HOLES AND OTHER HAZARDS.
- TRAVEL IS PERMITTED ON GRADES NO GREATER THAN THOSE INDICATED ON THE SERIAL NUMBER PLATE.
- DO NOT DRIVE ON SIDESLOPES WHICH EXCEED 5°.
- DO NOT TRAVEL ON SOFT OR UNEVEN SURFACES, AS TIPPING WILL OCCUR.
- DO NOT DRIVE MACHINE NEAR PITS, LOADING DOCKS OR OTHER DROP-OFFS.

1.6 OPERATION.

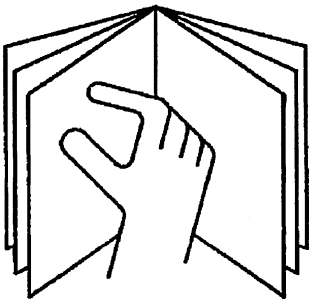

- READ YOUR MANUAL. UNDERSTAND WHAT YOU'VE READ - THEN BEGIN OPERATIONS.

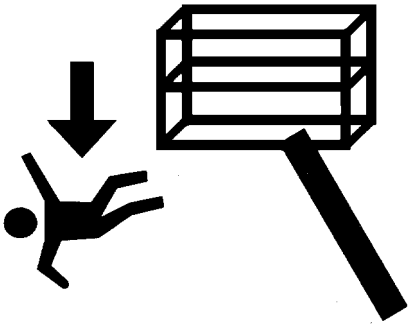

- PRIOR TO ENTERING AND EXITING PLATFORM AT GROUND LEVEL, FULLY LOWER THE BOOM. EXTEND BOOM UNTIL END OF FLY BOOM CONTACTS GROUND. WITH BOOM LIFT IN THIS CONFIGURATION, ENTER AND/OR EXIT PLATFORM THROUGH GATE OPENING.
- JLG RECOMMENDS ALL PERSONS IN THE PLATFORM TO WEAR LANYARDS WITH AN APPROVED FALL PROTECTION DEVICE. SECURE LANYARD TO DESIGNATED LANYARD ATTACH POINT ON PLATFORM. KEEP GATE CLOSED AT ALL TIMES.
- TO AVOID FALLING - USE EXTREME CAUTION WHEN ENTERING OR LEAVING PLATFORM ABOVE GROUND. ENTER OR EXIT THRU GATE ONLY. PLATFORM FLOOR MUST BE WITHIN 30CM (1 FOOT) OF ADJACENT - SAFE AND SECURE - STRUCTURE. ALLOW FOR PLATFORM VERTICAL MOVEMENT AS WEIGHT IS TRANSFERRED TO OR FROM PLATFORM.

https://truckmanualshub.com/

- TRANSFERS BETWEEN A STRUCTURE AND THE AERIAL PLATFORM EXPOSE OPERATORS TO FALL HAZARDS. THIS PRACTICE SHOULD BE DISCOURAGED WHEREVER POSSIBLE. WHERE TRANSFER MUST BE ACCOMPLISHED TO PERFORM THE JOB TWO LANYARDS WITH AN APPROVED FALL PROTECTION DEVICE WILL BE USED. ONE LANYARD SHOULD BE ATTACHED TO THE AERIAL PLATFORM. THE OTHER TO THE STRUCTURE. THE LANYARD THAT IS ATTACHED TO THE AERIAL PLATFORM SHOULD NOT BE DISCONNECTED UNTIL SUCH TIME AS THE TRANSFER TO THE STRUCTURE IS COMPLETE. OTHERWISE, DO NOT STEP OUTSIDE OF PLATFORM.
- DO NOT ADD NOTICE BOARDS OR SIMILAR ITEMS TO THE PLATFORM. ADDITION OF SUCH ITEMS INCREASES THE EXPOSED WIND AREA OF THE MACHINE.
- NEVER POSITION LADDERS, STEPS, OR SIMILAR ITEMS ON UNIT TO PROVIDE ADDITIONAL REACH FOR ANY PURPOSE.
- WHEN RIDING IN OR WORKING FROM PLATFORM, BOTH FEET MUST BE FIRMLY POSITIONED ON THE FLOOR.
- KEEP OIL, MUD AND SLIPPERY SUBSTANCES CLEANED FROM FOOTWEAR AND PLATFORM FLOOR.
- NEVER "WALK" THE BOOM TO GAIN ACCESS TO OR LEAVE PLATFORM.
- NEVER PLACE HANDS OR ARMS IN TOWER BOOM OR UPRIGHT MECHANISM.
- KEEP ALL NON-OPERATING PERSONNEL AT LEAST 2 METERS AWAY FROM THE MACHINE AT ALL TIMES.
- IF PLATFORM OR BOOM IS CAUGHT SO THAT ONE OR MORE WHEELS ARE OFF THE FLOOR, ALL PERSONNEL MUST BE REMOVED FROM PLATFORM BEFORE ATTEMPTING TO FREE MACHINE. USE CRANES, FORKLIFT TRUCKS OR OTHER EQUIPMENT TO REMOVE PERSONNEL AND STABILIZE MACHINE MOTION, IF NECESSARY.

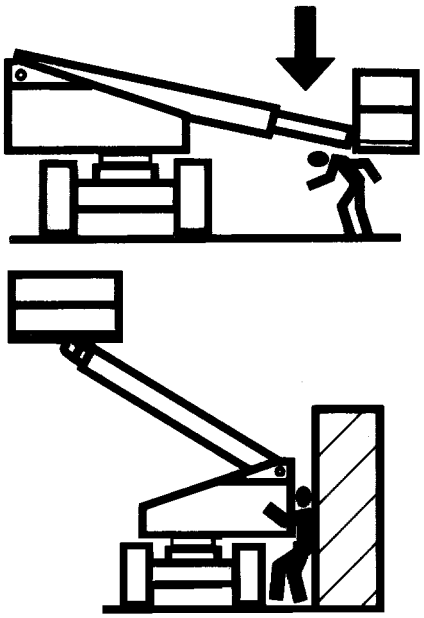

- THE OPERATOR IS RESPONSIBLE TO AVOID OPERATING MACHINE OVER GROUND PERSONNEL AND TO WARN THEM NOT TO WORK, WALK OR STAND UNDER A RAISED BOOM OR PLATFORM. POSITION BARRICADES ON FLOOR IF NECESSARY.

https://truckmanualshub.com/

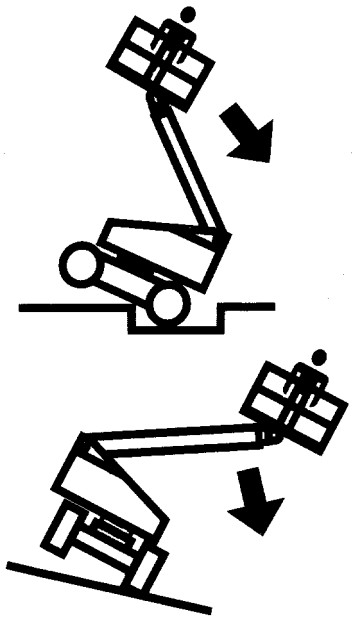

- ENSURE MACHINE IS POSITIONED ON A FIRM, LEVEL AND UNIFORM SUPPORTING SURFACE BEFORE RAISING OR EXTENDING BOOM.

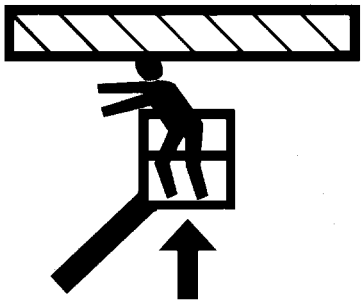

- CHECK CLEARANCES ABOVE, ON SIDES AND BOTTOM OF PLATFORM WHEN RAISING, LOWERING, SWINGING, AND TELESCOPING BOOM.
- EXERCISE EXTREME CAUTION AT ALL TIMES TO PREVENT OBSTACLES FROM STRIKING OR INTERFERING WITH OPERATING CONTROLS AND PERSONS IN PLATFORM.
- ENSURE THAT OPERATORS OF OTHER OVERHEAD AND FLOOR MACHINES ARE AWARE OF THE AERIAL PLATFORMS PRESENCE. DISCONNECT POWER TO OVERHEAD CRANES. POSITION BARRICADES ON FLOOR IF NECESSARY.
- NEVER "SLAM" A CONTROL SWITCH OR LEVER THROUGH NEUTRAL TO THE OPPOSITE DIRECTION. ALWAYS RETURN SWITCH TO NEUTRAL AND STOP; THEN MOVE SWITCH TO THE DESIRED POSITION. OPERATE LEVERS WITH SLOW, EVEN PRESSURE.
- DO NOT CARRY MATERIALS ON PLATFORM RAILING UNLESS APPROVED BY JLG INDUSTRIES INC.
- NEVER PUSH OR PULL THE MACHINE OR OTHER OBJECTS BY TELESCOPING THE BOOM.
- NEVER USE BOOM FOR ANY PURPOSE OTHER THAN POSITIONING PERSONNEL, THEIR TOOLS AND EQUIPMENT.
- NEVER EXCEED MANUFACTURERS RATED PLATFORM CAPACITY - REFER TO CAPACITY DECAL ON MACHINE. DISTRIBUTE LOADS EVENLY ON PLATFORM FLOOR.
- NEVER OPERATE A MALFUNCTIONING MACHINE. IF A MALFUNCTION OCCURS, SHUT DOWN THE MACHINE, RED TAG IT, AND NOTIFY PROPER AUTHORITIES.
- DO NOT REMOVE, MODIFY, OR DISABLE FOOTSWITCH BY BLOCKING OR ANY OTHER MEANS.
- DO NOT ASSIST A STUCK OR DISABLED MACHINE BY PUSHING OR PULLING EXCEPT BY PULLING AT CHASSIS TIE-DOWN LUGS.
- NEVER ATTEMPT USING BOOM AS A CRANE. STRUCTURAL DAMAGE OR TIPPING MAY OCCUR.
- STOW BOOM AND SHUT OFF ALL POWER BEFORE LEAVING MACHINE.
- NO STUNT DRIVING OR HORSEPLAY IS PERMITTED.

https://truckmanualshub.com/

- NEVER ATTEMPT TO FREE A MACHINE STUCK IN SOFT GROUND OR ASSIST A MACHINE UP A STEEP HILL OR RAMP BY USING BOOM "LIFT", "TELESCOPE", OR "SWING" FUNCTIONS.
- NEVER ATTACH WIRE, CABLE, OR ANY SIMILAR ITEMS TO PLATFORM.
- DO NOT PLACE BOOM OR PLATFORM AGAINST ANY STRUCTURE TO STEADY PLATFORM OR SUPPORT STRUCTURES.
- DO NOT USE THE LIFT, SWING, OR TELESCOPE FUNCTIONS FOR THE BOOM, TO MOVE EITHER THE MACHINE OR OTHER OBJECTS.
- HYDRAULIC CYLINDERS SHOULD NEVER BE LEFT FULLY EXTENDED OR RETRACTED FOR ANY LENGTH OF TIME. ALWAYS "BUMP" CONTROL IN OPPOSITE DIRECTION SLIGHTLY WHEN FUNCTION BEING USED REACHES END OF TRAVEL. THIS APPLIES TO MACHINES IN OPERATION OR IN STOWED MODE.
- DO NOT OPERATE ANY MACHINE ON WHICH DANGER, WARNING, CAUTION OR INSTRUCTION PLACARDS OR DECALS ARE MISSING OR ILLEGIBLE.
- MACHINE MUST ALWAYS BE SHUT DOWN WHEN REFUELING. NO SMOKING IS MANDATORY. NEVER REFUEL DURING AN ELECTRICAL STORM. ENSURE THAT FUEL CAP IS CLOSED AND SECURE AT ALL OTHER TIMES.

1.7 TOWING AND HAULING

- DO NOT TOW A MACHINE EXCEPT IN AN EMERGENCY. SEE SECTION 6 FOR EMERGENCY TOWING PROCEDURES.
- LOCK TURNTABLE BEFORE TRAVELING LONG DISTANCES OR BEFORE HAULING MACHINE ON A TRUCK OR TRAILER.

https://truckmanualshub.com/

SECTION 2. PREPARATION AND INSPECTION

2.1 GENERAL

This section provides the necessary information needed by those personnel that are responsible to place the machine in operation readiness, and lists checks that are performed prior to use of the machine. It is important that the information contained in this section be read and understood before any attempt is made to operate the machine. Ensure that all the necessary inspections have been completed successfully before placing the machine into service. These procedures will aid in obtaining maximum service life and safe operation.

IMPORTANT

SINCE THE MACHINE MANUFACTURER HAS NO DIRECT CONTROL OVER THE FIELD INSPECTION AND MAINTENANCE, SAFETY IS THE RESPONSIBILITY OF THE OWNER/OPERATOR.

2.2 PREPARATION FOR USE

Before a new machine is put into operation it must be carefully inspected for any evidence of damage resulting from shipment and inspected periodically thereafter, as outlined in Delivery and Frequent Inspection. (During initial start-up and run,) the unit should be thoroughly checked for hydraulic leaks. A check of all components should be made to assure their security.

All preparation necessary to place the machine in operation readiness status is the responsibility of management personnel. Preparation requires good common sense, (i.e. lift works smoothly and brakes operate properly) coupled with a series of visual inspections. The mandatory requirements are given in the Daily Walk Around Inspection.

It should be assured that the items appearing in the Delivery and Frequent Inspection and Functional Check are complied with prior to putting the machine into service.

2.3 DELIVERY AND FREQUENT INSPECTION

NOTE: *This machine requires periodic safety and maintenance inspections by an authorized JLG Dealer. A decal located on the frame provides a place to record (stamp) inspection dates. Check decal and notify dealer if inspection is overdue.*

The following checklist provides a systematic inspection to assist in detecting defective, damaged, or improperly installed parts. The checklist denotes the items to be inspected and conditions to examine.

Frequent inspection shall be performed every 3 months or 150 hours whichever come first, or more often when required by environment, severity, and frequency of usage.

Chassis

1. Check front tires and wheel assemblies for loose or worn spindles, components and hardware for security, tires for wear, damage and proper inflation.
2. Check front axle for loose, missing, and worn parts, pivot pin for security.
3. Check steering assembly for loose or bent steer cylinder rods, steer cylinder and hydraulic lines for leaks and security, and hardware for proper installation.
4. Check rear tires and wheel assemblies for security, tires for wear, damage and proper inflation.
5. Check drive hubs for damage and leaks, and motors for damage.
6. Check oil level in drive hubs by removing the fill plugs and check plugs on top of each drive hub. Fill each of the cavities until oil flows from each of the check ports. Use Mobil DTE-11. Replace all plugs.
7. Check valves and hydraulic lines for damage, leakage and security.
8. Check pump/motor and accessories for damage, loose or missing parts, leakage and security. Check electrical connections for corrosion and tightness and wiring for insulation damage. Check hydraulic filter for condition of element. Replace as required.

NOTE: *JLG recommends replacing the hydraulic filter element after the first 50 hours of operation and then every 600 hours thereafter, unless operating conditions require earlier replacement.*

9. Check hydraulic reservoir and hydraulic lines for damage, leakage and security.
10. Check batteries for damage, loose or missing vent caps, electrical connections for tightness and evidence of corrosion, and electrolyte level. Add only clean distilled water to battery after it has been charged.
11. If equipped with on-board generator, check engine and accessories for damage, loose or missing parts, leakage and security. Check throttle solenoid and linkage for damage, electrical connections for tightness, and evidence of corrosion and wiring for insu-

https://truckmanualshub.com/

lation damage. Check exhaust for damage, wear and leakage.

Turntable

1. Check turntable for damage, loose or missing parts, and security. Check lift cylinders and hydraulic lines for damage, leakage and security. Check swing drive motor for damage, loose or missing parts, hydraulic lines and component housings for evidence of leakage; worm gear for proper mesh with swing gear.
2. Check swing bearing for damage, wear, lubrication and loose or missing bearing bolts.
3. Check valves and hydraulic lines for damage, leakage, security and electrical connections for tightness and evidence of corrosion.
4. Check ground controls for damage, loose or missing parts, security, electrical connections for tightness and evidence of corrosion and wiring for insulation damage. Assure that all switches function properly.
5. Check all cowl and access doors for damage, proper operation and security.
6. Check Lower Boom pivot bushings for lubrication and wear.
7. Check Lower Boom Lift Cylinder and hydraulic lines for damage, leakage and security.
8. Check all pin and shaft retaining hardware for security and wear.
9. Check all electrical cables for damage, loose and corroded connections.

Boom

1. Check Lower Boom and leveling link for damage, missing parts and security.
2. Check all pin and shaft retaining hardware for security and wear.
3. Check hydraulic lines and electrical cable for damage, missing parts and security.
4. Check limit switch connections and plunger for corrosion and security.
5. Check Lower Upright cross pins and hydraulic lines for damage, wear, lubrication, leakage and security.
6. Check Lower Upright for damage, wear, lubrication and security.
7. Check hydraulic lines mounted on upright for damage, leakage and security.
8. Check Mid Boom pivot shaft and lift cylinder for damage, missing parts and security.
9. Check all pin and shaft retaining hardware for security and wear.
10. Check Upper Upright, cross pins and hydraulic lines for damage, wear, lubrication, leakage and security.
11. Check Upper Upright for damage, wear, lubrication and security.
12. Check hydraulic lines mounted on upright for damage, leakage and security.
13. Check Upper Boom Lift Cylinder and cross pins and hydraulic lines for damage, wear, lubrication, leakage and security.
14. Check Upper Boom pivot pin for damage, wear, lubrication and security.
15. Check Upper Boom for damage, missing parts and security.
16. Check Upper Boom wear pads for damage, missing parts and security.
17. Check Upper Boom telescope cylinder, cross pins and hydraulic lines for damage, wear, lubrication, leakage and security.
18. Check Platform Leveling Cylinder, cross pins and hydraulic lines for damage, wear, lubrication, leakage and security.

Platform

1. Check platform and control console for damage, loose or missing parts, and security.
2. Check control switches and levers for damage, loose or missing parts and security. Assure that lever and lever lock functions properly.
3. Check control switches, levers and electrical connections for tightness and evidence of corrosion, and wiring for defects and chafing damage. Assure that switches function properly.

https://truckmanualshub.com/

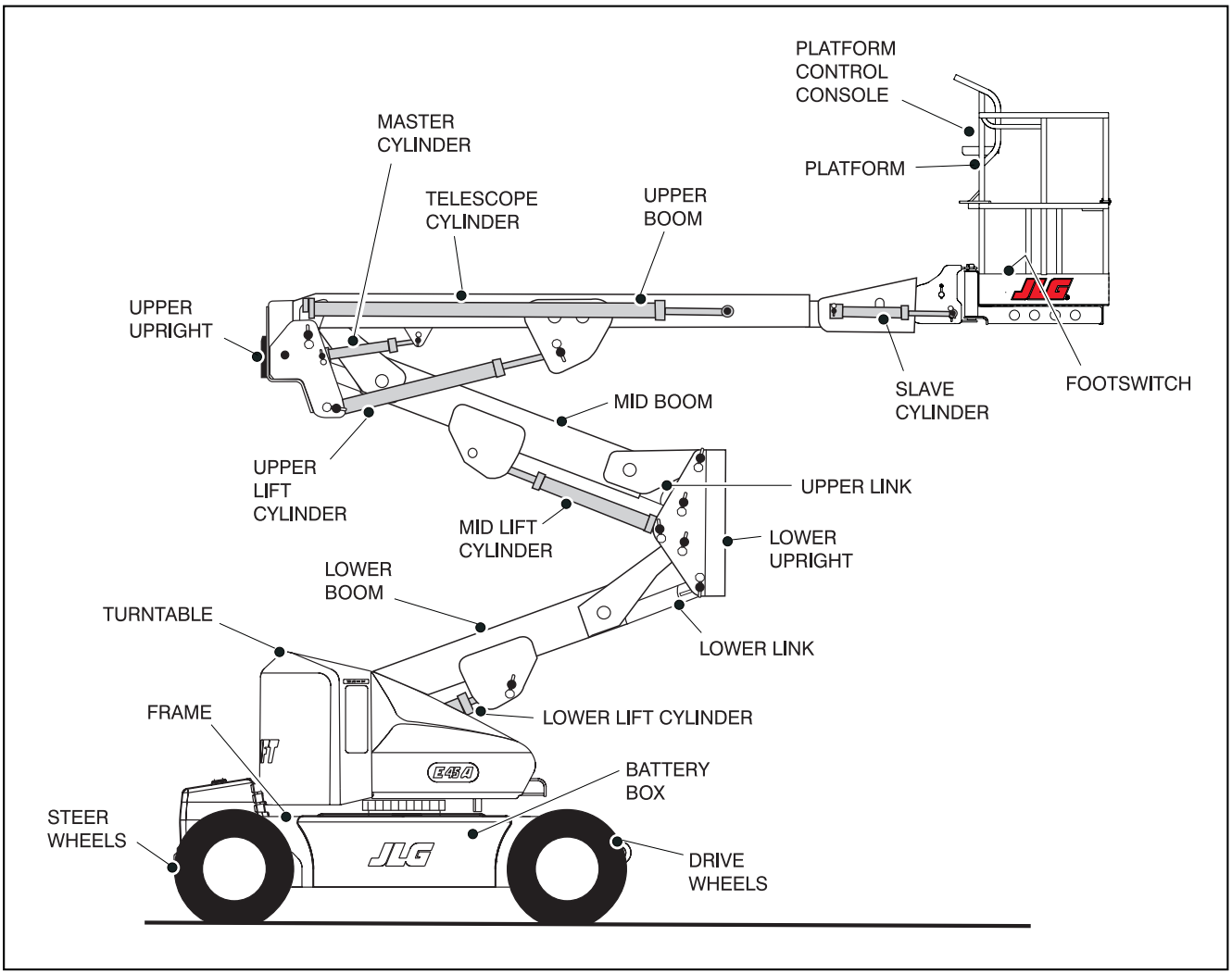

Figure 2-1. Basic Nomenclature

4. Check footswitch for damage, loose or missing parts and security. Assure that footswitch functions properly and that wiring has no defects or chafing.
5. Check Platform Rotator mechanism for proper operation, damage, and security.

NOTE: *Check all DANGER, WARNING, CAUTION, and INSTRUCTION placards for legibility and security on the entire machine.*

⚠ WARNING

TO AVOID INJURY, DO NOT OPERATE MACHINE IF ALL PLACARDS ARE NOT ON MACHINE OR ARE DEFACED AND NOT READABLE. USE OF MACHINE WITHOUT CORRECT PLACARDS IS A SAFETY VIOLATION.

https://truckmanualshub.com/

2.4 DAILY WALK-AROUND INSPECTION

It is the operators responsibility to inspect the machine before the start of each workday. It is recommended that each operator inspect the machine before operation, even if the machine has already been put into service under another operator. This Daily Walk-Around Inspection is the preferred method of inspection. (Figure 2- 3)

In addition to the Daily-Walk Around Inspection be sure to include the following as part of the daily inspection:

1. Overall Cleanliness.

   Check all standing surfaces for hydraulic oil spillage and foreign objects. Ensure overall cleanliness.

2. Placards.

   Keep all information and operating placards clean and unobstructed. Cover when spray painting or shot blasting to protect legibility.

3. Operators and Safety Manual.

   Ensure that a copy of this manual is enclosed in the manual storage holder.

4. Machine Log.

   Ensure a machine operating record or log is kept, check to see that it is current and that no entries have been left uncleared, leaving machine in an unsafe condition for operation.

5. Start each day with fully charged batteries.

⚠ WARNING

TO AVOID INJURY DO NOT OPERATE A MACHINE UNTIL ALL MALFUNCTIONS HAVE BEEN CORRECTED. USE OF A MALFUNCTIONING MACHINE IS A SAFETY VIOLATION.

NOTE: *Check boom limit switches on upright for proper operation and security, both visually and manually. Lower switch cuts out drive speed when Lower Boom is above horizontal. Upper switch cuts out drive speed when Upper Boom is above horizontal. Only creep drive speed will continue to function.*

6. Check platform footswitch for proper operation. Switch must be depressed to operate machine.

7. Check that drive brakes hold when machine is driven up a grade and stopped.

NOTE: *On new machines, those recently overhauled, or after changing hydraulic oil, operate all systems a minimum of two complete cycles and recheck oil level in reservoir.*

8. Assure that all items requiring lubrication are serviced. Refer to Lubrication Chart, Figure 2-4, for specific requirements.

2.5 DAILY FUNCTIONAL CHECK

A functional check of all systems should be performed, once the walk-around inspection is complete, in an area free of overhead and ground level obstructions. First, using the ground controls, check all functions controlled by the ground controls. Next, using the platform controls, check all functions controlled by the platform controls.

⚠ WARNING

TO AVOID SERIOUS INJURY, DO NOT OPERATE MACHINE IF ANY CONTROL LEVERS OR TOGGLE SWITCHES CONTROLLING PLATFORM MOVEMENTS DO NOT RETURN TO THE OFF POSITION WHEN RELEASED.

⚠ WARNING

TO AVOID A COLLISION AND INJURY IF PLATFORM DOES NOT STOP WHEN A CONTROL SWITCH OR LEVER IS RELEASED, REMOVE FOOT FROM FOOTSWITCH OR USE EMERGENCY STOP TO STOP MACHINE.

1. Check boom limit switches. Raise and lower the Lower Boom. Check for smooth operation. Check Boom Upright tilting. (See Section 4).

NOTE: *Perform checks from ground controls first, then from platform controls.*

https://truckmanualshub.com/

2. Raise, extend, retract, and lower the Upper Boom. Check for smooth operation.
3. If tower boom does not rest on stop with machine in the stowed position, this indicates upright is out of plumb.
4. Telescope boom IN and OUT several cycles at various degrees of elevation lengths. Check for smooth telescope operation.
5. Swing turntable to LEFT and RIGHT a minimum of 45 degrees. Check for smooth motion.
6. Check the chassis out of level indicator located on the platform control console by driving, with the machine in level position, up a suitable ramp of at least 4° slope. Check the out of level alarm, with the machine on the ramp, raise the upper boom until it is parallel with the chassis. DO NOT RAISE ABOVE THE PARALLEL POSITION. If the light does not illuminate, return the machine to a level surface, shut down the machine, and contact a qualified technician before resuming operation.

⚠ WARNING

DO NOT DRIVE ON GRADES WHICH EXCEED THE RATED GRADEABILITY OF THE MACHINE AS INDICATED ON THE SERIAL NUMBER PLATE. DO NOT DRIVE ON SIDESLOPES WHICH EXCEED 3 DEGREES.

7. Check that platform self-leveling system functions properly during raising and lowering of boom.
8. Check rotator for smooth operation and assure platform will rotate 75 degrees in both directions from centerline of boom.
9. Drive forward and reverse; check for proper operation.
10. Steer left and right; check for proper operation.
11. Footswitch.

⚠ WARNING

FOOTSWITCH MUST BE ADJUSTED SO THAT FUNCTIONS WILL OPERATE WHEN PEDAL IS APPROXIMATELY AT ITS CENTER OF TRAVEL. IF SWITCH OPERATES WITHIN LAST 1/4" (6 MM) OF TRAVEL, TOP OR BOTTOM, IT SHOULD BE ADJUSTED.

⚠ IMPORTANT

FOOTSWITCH MUST BE DEPRESSED PRIOR TO ACTIVATING ANY FUNCTION CONTROL, OTHERWISE THE FUNCTION WILL NOT WORK.

With footswitch depressed, operate LIFT and hold control. Remove foot from footswitch, motion should stop. If it does not, shut down machine and contact a qualified service technician.

12. Place the GROUND/PLATFORM SELECT switch to GROUND. Platform controls should not operate.
13. Place GROUND/PLATFORM SELECT switch to OFF. Platform/Ground controls should not operate.

2.6 TORQUE REQUIREMENTS

The Torque Chart (Figure 2-5) consists of standard torque values based on bolt diameter and grade, also specifying dry, wet and loctite torque values in accordance with recommended shop practices. This chart is provided as an aid to the operator in the event he/she notices a condition that requires prompt attention during the walk-around inspection or during operation, until the proper service personnel can be notified. The Service and Maintenance section provides specific torque values and periodic maintenance procedures with a listing of individual components. Utilizing this torque chart in conjunction with preventive maintenance section will enhance safety, reliability, and performance of the machine.

https://truckmanualshub.com/

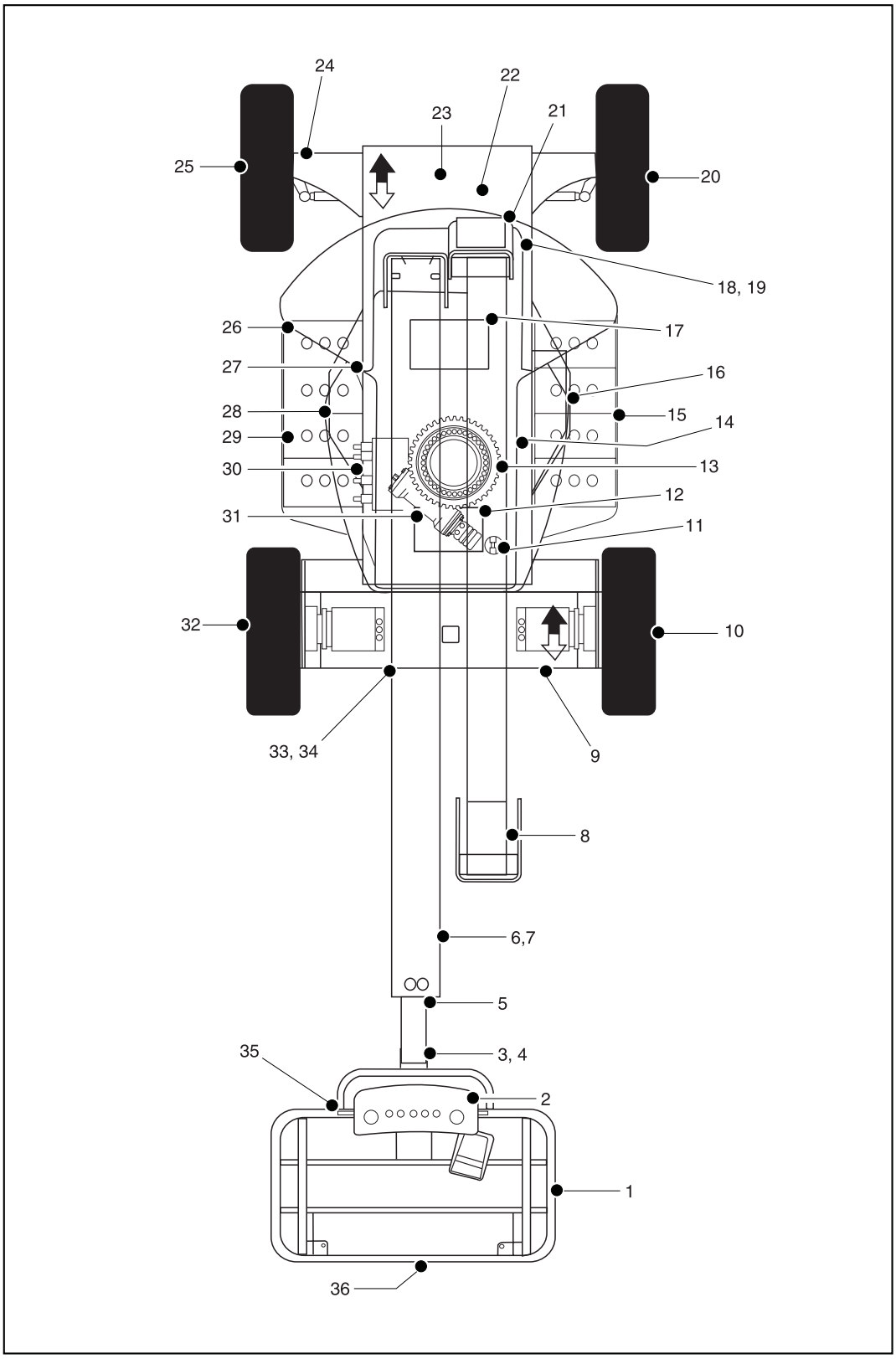

Figure 2-2. Daily Walk-Around Inspection (Sheet 1 of 3)

https://truckmanualshub.com/

GENERAL

Begin your Walk-Around Inspection at item 1, as noted on the diagram. Continue to your right (counterclockwise viewed from the top) checking each item in sequence for the conditions listed in the following checklist.

WARNING

TO AVOID INJURY DO NOT OPERATE MACHINE UNTIL ALL MALFUNCTIONS HAVE BEEN CORRECTED. USE OF A MALFUNCTIONING MACHINE IS A SAFETY VIOLATION.

TO AVOID POSSIBLE INJURY BE SURE MACHINE POWER IS OFF DURING “WALK-AROUND INSPECTION”.

NOTE: *Do not overlook visual inspection of chassis underside. Checking this area may result in discovery of conditions which could cause extensive machine damage.*

1. Platform Assembly - No loose or missing parts; no visible damage. Platform mounting pins secure. Footswitch in good working order; not modified, disabled or blocked.
2. Platform Control Console - Switches and control lever properly secured; no loose or missing parts; no visible damage; placards secure and legible; control lever and switches return to neutral; control lever lock functions properly; emergency stop switch functions properly; control markings legible.
3. Fly Boom Nose and Platform Support - Ensure fly boom nose and platform support are free of debris, obstructions, etc.
4. Rotator Cylinder - No visible damage; motor and cylinder pins secure; hydraulic hoses undamaged, not leaking.
5. Slave Cylinder - No visible damage; pivot pins secure; hydraulic hoses undamaged, not leaking.
6. Boom Sections/Lift Cylinders and Master Cylinder - No visible damage; pivot pins secure; hydraulic hoses undamaged, not leaking.
7. Telescope Cylinder and Power Track - No visible damage; no loose or missing hardware.
8. Limit Switches - Switches operable; no visible damage.
9. Drive Axle and Motor - No loose or missing hardware; No visible damage; no evidence of leakage.
10. Drive Wheel/Tire Assembly, Right Rear - Properly secured; no loose or missing wheel bolts; no visible damage.
11. Hydraulic Oil Filter Housing - Secure; no visible signs of damage or leakage.
12. Hydraulic Pump and Reservoir - Properly secured; no visible damage or hydraulic leaks. Recommended hydraulic fluid level on dipstick (system shut down, boom in stowed position). Breather cap/dipstick secure and working.
13. Turntable Bearing - No loose or missing hardware; no visible damage; evidence of proper lubrication. No loose bolts or looseness between bearing and structure.
14. Fuel Supply - Fuel filler cap secure; Tank - no visible damage, decals secure and legible.
15. Battery Compartment Right Side - Batteries have proper electrolyte level; cables tight; no visible damage or corrosion.
16. Cowling and Latches - All cowling, doors and latches in working condition; properly secured; no loose or missing parts.
17. Battery Charger - No damage; properly secured.
18. Valve - No loose or missing parts; evidence of leakage, unsupported wires or hoses; damaged or broken wires.
19. Boom/Upright - No visible damage; All pins properly secured. Upright in vertical position. If Upright does not rest on stop with machine in the stowed position, this indicates upright is out of plumb.
20. Steer Wheel/Tire Assembly, Right Front - Properly secured; no loose or missing wheel bolts; no visible damage.
21. Counterweight - No loose or missing hardware; properly secured.
22. Steer Cylinder - Properly secured; no visible damage or signs of leakage; evidence of proper lubrication.
23. Engine Oil Supply - Full mark on dipstick; filler cap and filter secure.

Figure 2-2., Daily Walk-Around Inspection (Sheet 2 of 3)

https://truckmanualshub.com/

24. Tie Rod Ends and Steering Spindles - No loose or missing parts; no visible damage. Tie rod end stubs locked.
25. Drive Wheel/Tire Assembly, Left Rear - Properly secured; no loose or missing wheel bolts; no visible damage.
26. Ground Controls - Switches operable; no visible damage; emergency stop switch functions properly; placards secure and legible.
27. Manual Descent Valve - No visible damage; no evidence of leakage.
28. Cowling and Latches - All cowling, doors and latches in working condition; properly secured; no loose or missing parts.
29. Battery Compartment - Batteries have proper electrolyte level; cables tight; no visible damage or corrosion.
30. Control Valve - No loose or missing parts; evidence of leakage; unsupported wires or hoses; damaged or broken wires.
31. Swing Motor and Worm Gear - No loose or missing hardware; no visible damage; evidence of proper lubrication.
32. Drive Wheel/Tire Assembly, Left Rear - Properly secured; no loose or missing wheel bolts; no visible damage.
33. Frame - No visible damage; no loose or missing hardware (top and underside).
34. Cowling and Latches - All cowling, doors and latches in working condition; properly secured; no loose or missing parts.
35. Platform Pivot Pins - Properly secured.
36. Platform Gate - Latch and Hinges in working condition; properly secured; no loose or missing parts.

Figure 2-2., Daily Walk-Around Inspection (Sheet 3 of 3)

2.7 BATTERY MAINTENANCE AND CHARGING

Battery Maintenance, Quarterly

1. Open battery compartment cover to allow access to battery terminals and vent caps.

CAUTION

WHEN ADDING WATER TO BATTERIES, ADD WATER UNTIL ELECTROLYTE COVERS PLATES. DO NOT CHARGE BATTERIES UNLESS ELECTROLYTE COVERS THE PLATES.

NOTE: *When adding distilled water to batteries, non-metallic containers and/or funnels must be used.*

To avoid electrolyte overflow, add distilled water to batteries after charging.

When adding water to the battery, fill only to level indicated or 3/8" above separators.

2. Remove all vent caps and inspect electrolyte level of each cell. Electrolyte level should be to the ring approximately one inch from top of battery. Fill batteries with distilled water only. Replace and secure all vent caps.
3. Remove battery cables from each battery post one at a time, negative first. Clean cables with acid neutralizing solution (e.g. baking soda and water or ammonia) and wire brush. Replace cables and/or cable clamp bolts as required.
4. Clean battery post with wire brush then re-connect cable to post. Coat non-contact surfaces with mineral grease or petroleum jelly.
5. When all cables and terminal posts have been cleaned, ensure all cables are properly positioned and do not get pinched. Close battery compartment cover.
6. Start hydraulic system and ensure that it functions properly.

https://truckmanualshub.com/

Optional On Board Generator

WARNING

EXHAUST GAS HAZARD. RUN THE GENERATOR IN A WELL VENTILATED AREA ONLY.

IMPORTANT

WHEN THE GENERATOR ENABLE CONTROL LOCATED IN THE PLATFORM CONTROL BOX IS IN THE ON POSITION AND THE GROUND EMERGENCY STOP SWITCH IN ON (PULLED OUT), THE GENERATOR WILL START AUTOMATICALLY WHEN THE BATTERIES REACH A LOW-CHARGE STATE AUTOMATICALLY CHARGING THE BATTERIES.

NOTE: *The engine will automatically shut down under the following conditions:*

High Engine Oil Temperature
Low Engine Oil Pressure
Engine Overspeed
Generator Overvoltage

WARNING

TO AVOID INJURY FROM AN EXPLOSION, DO NOT SMOKE OR ALLOW SPARKS OR A FLAME NEAR BATTERY DURING SERVICING. ALWAYS WEAR EYE AND HAND PROTECTION WHEN SERVICING BATTERIES.

Battery Charging (On Board Charger)

1. For maximum battery life:
   a. Avoid completely discharging the batteries.
   b. Fully charge the batteries each day the machine is used.
   c. Charge the batteries at available times between full charges.
   d. Be sure the battery fluid covers the battery plates before charging, but to avoid overflow, do not top off the fluid level until charging.
2. To charge the batteries, connect the charger to a 115 or 220 volt source with a 20 amp minimum capacity.
3. The charge cycle is complete when the ammeter reads 0 amps. Any reading indicates the charge cycle is not complete.
4. The Charger will shut off automatically when the batteries are fully charged.
5. Depleted batteries will take approximately 17 hours to charge.

https://truckmanualshub.com/

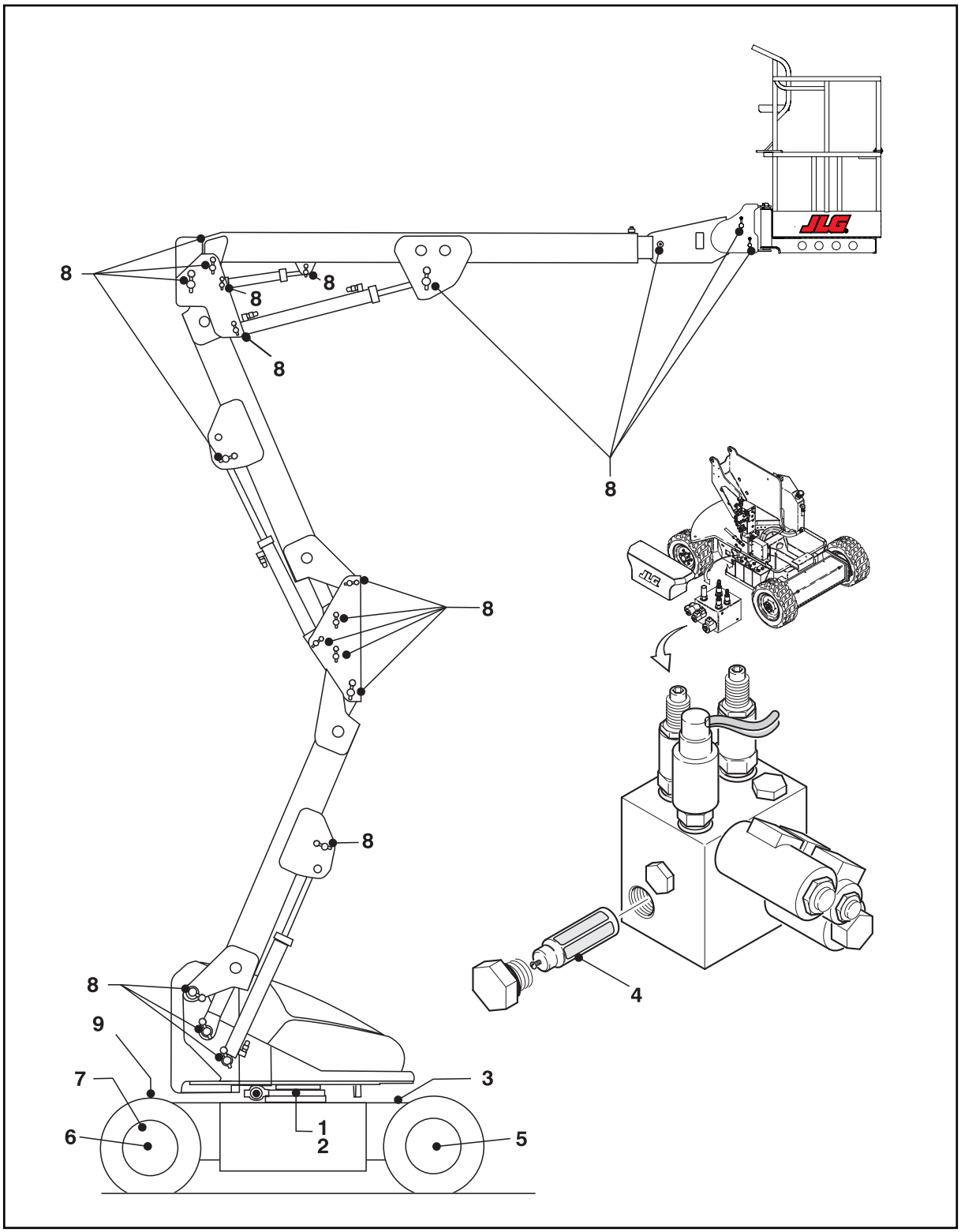

Figure 2-3. Lubrication Chart

https://truckmanualshub.com/

Table 2-1. Lubrication Chart

	Components	Number/Type Lube Points	Capacity	Lube	Interval		Hours		Comments
					3 Months 150 hrs	6 Months 300 hrs	1 Year 600 hrs	2 Years 1200 hrs	
Lubrication									
1	Swing Bearing - Internal Ball Bearing	2 Grease Fittings	A/R	MPG	X				
2a	Swing Bearing - Teeth	Spray On	A/R	OGL	X				More frequent lubrication intervals may be required.
2b	End Bearings - Worm Gear*	2 Grease Fittings	A/R	MPG				X	Remove grease fittings and install plugs after greasing.
3	Hydraulic Fluid (Oil)	Fill Cap	15.1 liters (tank)	HO				X	Check oil every 10 hours of operation. Change oil every 1200 hours of operation.
4	Hydraulic Filter	N/A	N/A	N/A		X			Replace filter element after first 50 hours and every 300 hours thereafter.**
5	Wheel Drive Hub	Fill Plug/Half Full	0.5 liters (1/2 Full)	EPGL				X	Check oil level at side plug on hub daily. Change after first 150 hours then every 1200 hours of operation.
6	Wheel Bearing	Repack	A/R	MPG				X	
7	Spindles/Bushing	N/A	A/R	LL	At Spindle/Bushing Replacement				Coat I.D. of bushings prior to installing king pins.
8	Boom Pivot Pins/ Bushing	N/A	A/R	LL	At boom pivot pins/bushing replacement				Coat I.D. of bushings prior to installing pins.
9	Engine	Fill Cap	Refer to Engine Manual	EO					Check daily. Change in accordance with engine manual.

NOTES:

Lubrication intervals are based on machine operation under normal conditions. For machines used in multi shift operations and/or exposed to hostile environments or conditions, lubrication frequencies must be increased accordingly.

* If necessary install grease fittings into worm gear housing and grease bearings.

CAUTION

DO NOT OVERGREASE BEARINGS. OVERGREASING BEARINGS WILL RESULT IN BLOWING OUTER SEAL IN HOUSING.

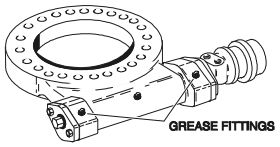

** Under certain conditions, it may be necessary to replace the hydraulic filter on a more frequent basis. A common symptom of a dirty filter is sluggishness experienced in hydraulic functions.

KEY TO LUBRICANTS

EO	Engine Oil
EPGL	Extreme Pressure Gear Lube
HO	Hydraulic Fluid (Mobil DTE-11M)
MPG	Multi-Purpose Grease
LL	Synthetic Lithium Lubricant
OGL	Open Gear Lubricant - Mobiltac 375 or equivalent

Updated 11-3-99

https://truckmanualshub.com/

SIZE	THD	BOLT DIA. (CM)	THREAD STRESS AREA (SQ. CM)	VALUES FOR ZINC PLATED BOLTS ONLY										UNPLATED CAP SCREWS	
				SAE GRADE 5 BOLTS & GRADE 2 NUTS					SAE GRADE 8 BOLTS & GRADE 8 NUTS					UNBRAKO 1960 SERIES SOCKET HEAD CAP SCREW WITH LOC-WEL PATCH	
				CLAMP LOAD (KG)	TORQUE (DRY OR LOC. 263) NM	TORQUE (LUB.) NM	TORQUE (LOCTITE 262) NM	TORQUE (LOCTITE 242 OR 271) NM	CLAMP LOAD (KG)	TORQUE (DRY OR LOC. 263) NM	TORQUE (LUB.) NM	TORQUE (LOCTITE 262) NM	TORQUE (LOCTITE 242 OR 271) NM	CLAMP LOAD (KG)	TORQUE (as received) NM
4	40	0.2845	0.0153	172	1	1	—	—	245	2	1	—	—	—	—
	48		0.0168	191	1	1	—	—	272	2	1	—	—	—	—
6	32	0.3505	0.0232	263	2	2	—	—	372	3	2	—	—	—	—
	40		0.0258	277	2	2	—	—	417	3	2	—	—	—	—
8	32	0.4166	0.0356	408	4	3	—	—	572	5	4	—	—	—	—
	36		0.0374	426	4	3	—	—	599	5	4	—	—	—	—
10	24	0.4826	0.0445	508	5	4	—	—	717	7	5	—	—	—	—
	32		0.0508	583	6	4	—	—	817	8	6	—	—	—	—
1/4	20	0.6350	0.0808	916	11	9	—	12	1297	16	12	—	18	1442	18
	28		0.0925	1052	14	10	—	16	1488	19	14	—	21	1651	19
5/16	18	0.7938	0.1331	1515	23	18	22	26	2141	34	25	30	41	2377	34
	24		0.1473	1678	26	19	23	29	2821	34	27	34	41	2631	37
3/8	16	0.9525	0.1969	2241	41	31	38	48	3175	61	48	54	68	3493	61
	24		0.2230	2540	48	34	43	54	3583	68	48	61	75	3983	68
7/16	14	1.1112	0.2700	3085	68	48	61	75	4332	95	75	85	109	4822	95
	20		0.3015	3425	75	68	68	81	4854	109	81	95	122	5384	102
1/2	13	1.2700	0.3604	4105	102	75	92	115	5783	149	109	130	163	6437	149
	20		0.4061	4854	122	88	108	136	6532	163	122	146	183	7253	156
9/16	12	1.4288	0.4623	5262	149	109	133	163	7539	204	149	188	224	8256	210
	18		0.5156	5874	163	122	148	183	8278	231	176	209	258	9208	224
5/8	11	1.5875	0.5740	6532	204	149	183	224	9231	298	231	244	326	10251	285
	18		0.6502	7394	231	176	207	258	10433	326	244	277	359	11612	298
3/4	10	1.9050	0.8484	9662	353	271	325	387	13653	515	380	408	570	15150	495
	16		0.9474	10796	407	298	363	448	15241	570	434	456	631	16919	542
7/8	9	2.2225	1.1735	13336	583	434	523	644	18870	814	624	658	895	20956	793
	14		1.2929	14697	637	475	576	705	20775	895	678	724	983	23088	861
1	8	2.5400	1.5392	17509	868	651	785	915	23360	1220	922	931	1342	27488	1173
	12		1.6840	19142	949	719	858	997	27080	1356	1003	1079	1492	30074	1241
1-1/8	7	2.8575	1.9380	19187	1085	814	968	1139	31162	1736	1302	1396	1898	34610	1681
	12		2.1742	21546	1193	895	1087	1254	34927	1953	1464	1566	2136	38828	1871
1-1/4	7	3.1750	2.4613	24404	1519	1139	1368	1593	38554	2468	1844	1970	2712	43954	2373
	12		2.7254	27035	1681	1247	1516	1762	43818	2712	2034	2183	2983	48671	2549
1-1/2	6	3.4925	2.9337	29076	1980	1492	1792	2068	47174	3227	2413	2586	3559	52391	3145
	12		3.3401	33113	2278	1708	2042	2373	53570	3688	2766	2935	4068	59648	3308
1-1/2	6	3.8100	3.5687	35381	2630	1980	2379	2746	57380	4284	3200	3430	4712	63731	4122
	12		4.0132	39781	2983	2224	2676	3118	142200	4827	3607	3856	5322	71669	4433

Note: These torque values do not apply to cadium plated fasteners.

SAE GRADE 5

SAE GRADE 8

Figure 2-4. Torque Chart

https://truckmanualshub.com/

SECTION 3. USER RESPONSIBILITIES AND MACHINE CONTROL

3.1 GENERAL

IMPORTANT

SINCE THE MANUFACTURER HAS NO DIRECT CONTROL OVER MACHINE APPLICATION AND OPERATION, CONFORMANCE WITH GOOD SAFETY PRACTICES IN THESE AREAS IS THE RESPONSIBILITY OF THE USER AND HIS/HER OPERATING PERSONNEL.

This section provides the necessary information needed to understand control functions. Included in this section are the operating characteristics and limitations, and functions and purposes of controls and indicators. It is important that the user read and understand the proper procedures before operating the machine. These procedures will aid in obtaining optimum lift service and safe operation.

3.2 PERSONNEL TRAINING

The aerial platform is a personnel handling device; therefore, it is essential that it be operated and maintained only by authorized and qualified personnel who have demonstrated that they understand the proper use and maintenance of the machine. It is important that all personnel who are assigned to and are responsible for the operation and maintenance of the machine undergo a thorough training program and check out period in order to become familiar with the characteristics prior to operating the machine.

Persons under the influence of drugs or alcohol or who are subject to seizures, dizziness or loss of physical control must not be permitted to operate the machine.

Operator Training.

Operator training must include instruction in the following areas:

1. Use and limitations of the platform controls, ground controls, emergency controls and safety systems.
2. Knowledge and understanding of this manual and of the control markings, instructions and warnings on the machine itself.
3. Knowledge and understanding of all safety work rules of the employer and of Federal, State and local statutes, including training in the recognition and avoidance of potential hazards in the work place; with particular attention to the work to be performed.
4. Proper use of all required personnel safety equipment, in particular the wearing of a safety harness or other approved fall protection devices with a lanyard attached to a designated attach point, on the platform, at all times.
5. Sufficient knowledge of the mechanical operation of the machine to recognize a malfunction or potential malfunction.
6. The safest means to operate the machine where overhead obstructions, other moving equipment, and obstacles, depressions, holes, dropoffs, etc. on the supporting surface exist.
7. Means to avoid the hazards of unprotected electrical conductors.
8. Any other requirements of a specific job or machine application.

Training Supervision.

Training must be done under the supervision of a qualified person in an open area free of obstructions until the trainee has developed the ability to safely control a machine in congested work locations.

Operator Responsibility.

The operator must be instructed that he/she has the responsibility and authority to shut down the machine in case of a malfunction or other unsafe condition of either the machine or the job site and to request further information from his/her supervisor or an authorized JLG Distributor before proceeding.

NOTE: *Manufacturer or Distributor will provide qualified persons for training assistance with first unit(s) delivered and thereafter as requested by the user or his/her personnel.*

https://truckmanualshub.com/

3.3 OPERATING CHARACTERISTICS AND LIMITATIONS

General

A thorough knowledge of the operating characteristics and limitations of the machine is always the first requirement for any user, regardless of the users experience with similar types of equipment.

Placards

Important points to remember during operation are provided at the control stations by DANGER, WARNING, CAUTION, IMPORTANT and INSTRUCTION placards. This information is placed at various locations for the express purpose of alerting personnel of potential hazards constituted by the operating characteristics and load limitations of the machine. See FOREWORD for definitions of the above placards.

Capacities

Raising boom above horizontal with or without any load in platform, is based on the following criteria:

1. Machine is positioned on a smooth, firm and level surface.
2. Load is within manufacturers rated design capacity.
3. All machine systems are functioning properly.
4. Proper tire pressure.
5. Machine is as originally equipped from JLG.

Stability

This machine as originally manufactured by JLG Industries, Inc., when operated within its rated capacity on a smooth, firm and level supporting surface and in accordance with the instructions provided on the machine and in this manual, provides a stable machine for all positions.

Machine stability is based on two (2) conditions which are called FORWARD stability and BACKWARD stability. The machine's position of least FORWARD stability is shown in Figure 3-1 and its position of least BACKWARD stability is shown in Figure 3-2.

⚠ WARNING

TO AVOID FORWARD OR BACKWARD UPSET, DO NOT OVERLOAD MACHINE, OPERATE ON OUT-OF-LEVEL SURFACE OR OPERATE WITH THE BOOM UPRIGHT TILTING. (SEE FIGURE 4-2. UPRIGHT POSITIONING).

3.4 CONTROLS AND INDICATORS

These machines are equipped with control panels that use symbols and words to indicate control functions. On some machines, the control panels may use symbols only. Refer to Table 3-1 for these symbols and their corresponding functions.

Ground Control Station

⚠ WARNING

DO NOT OPERATE FROM GROUND CONTROL STATION WITH PERSONNEL IN THE PLATFORM EXCEPT IN AN EMERGENCY.

PERFORM AS MANY PRE-OPERATIONAL CHECK AND INSPECTIONS FROM GROUND CONTROLS AS POSSIBLE.

NOTE: *When machine is shut down the Platform/Ground Select switch and Emergency Stop must be positioned to OFF.*

1. Power/Emergency Stop Switch.

   A two-position red mushroom shaped switch furnishes power to PLATFORM/GROUND SELECT switch when pulled out (on). When pushed in (off), power is shut off to the PLATFORM/GROUND SELECT switch.

2. Platform/Ground Select Switch.

   A three position, key operated switch supplies power to the platform control console when positioned to PLATFORM. With the switch key held in the GROUND position, power is shut off to platform and only ground controls are operable. When released from GROUND position the switch spring returns to the (off) position.

NOTE: *With PLATFORM/GROUND SELECT switch in the center position, power is shut off to controls at both operating stations.*

https://truckmanualshub.com/

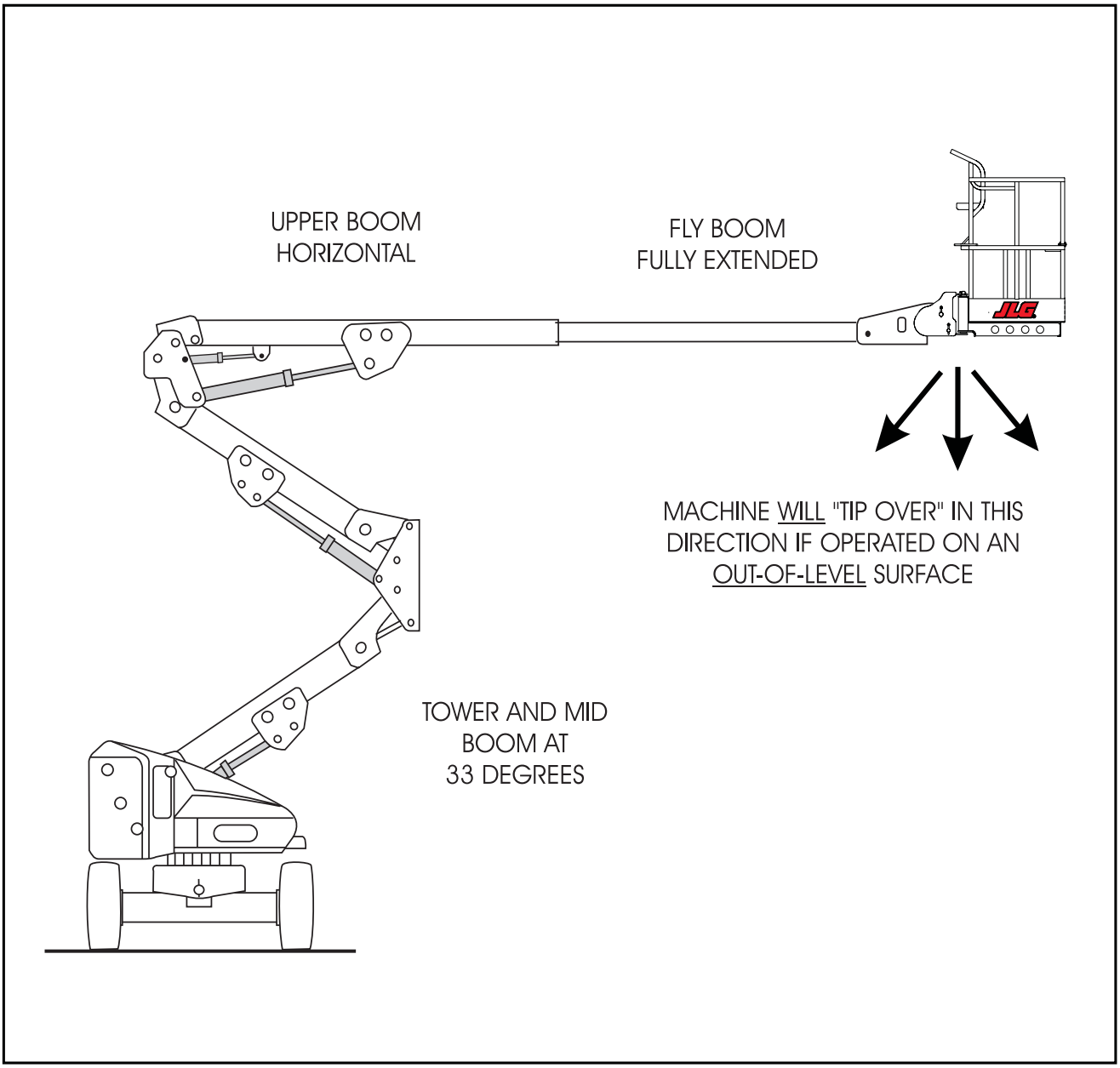

Figure 3-1. Position of Least Forward Stability

https://truckmanualshub.com/

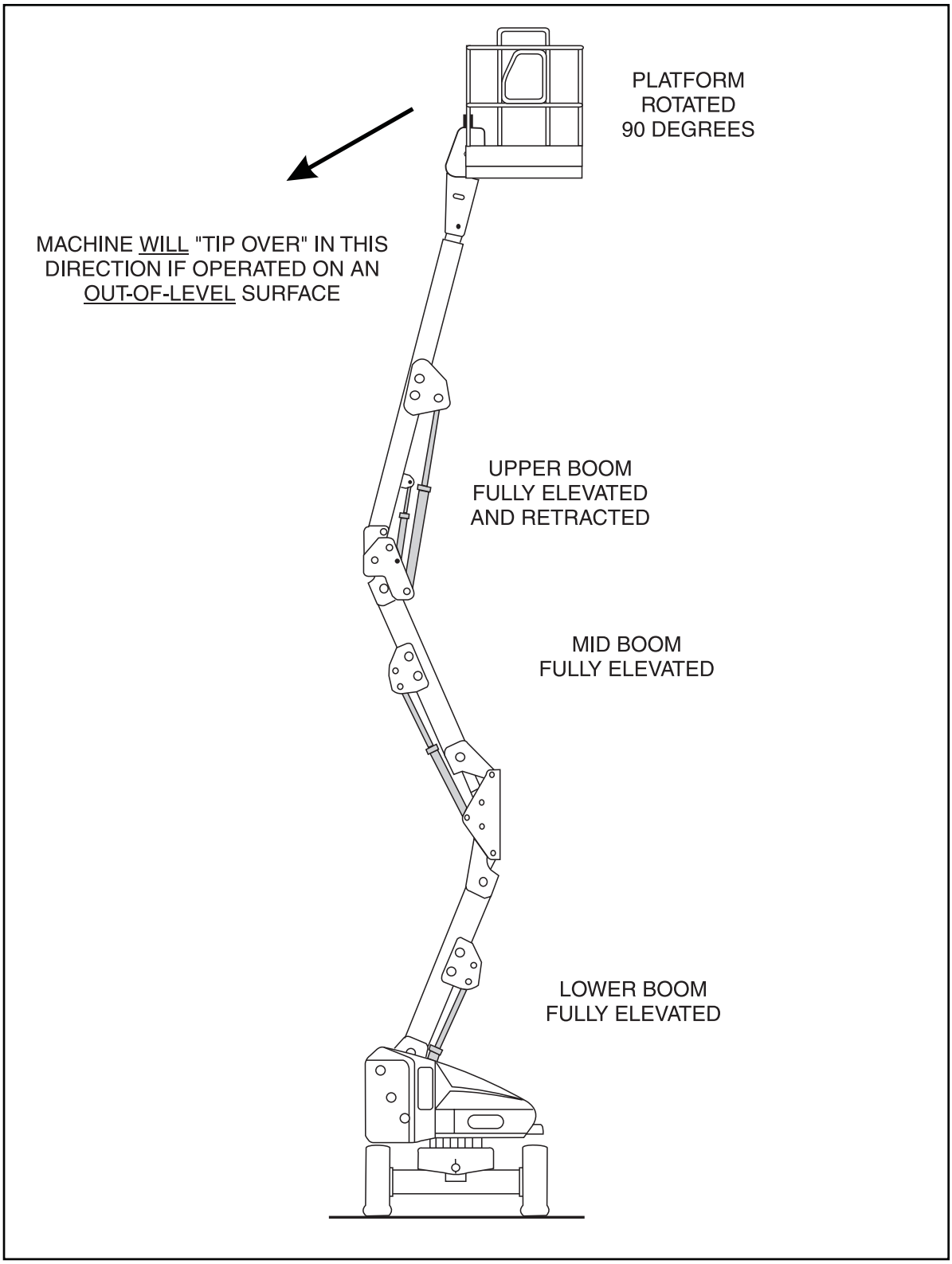

Figure 3-2. Position of Least Backward Stability

https://truckmanualshub.com/

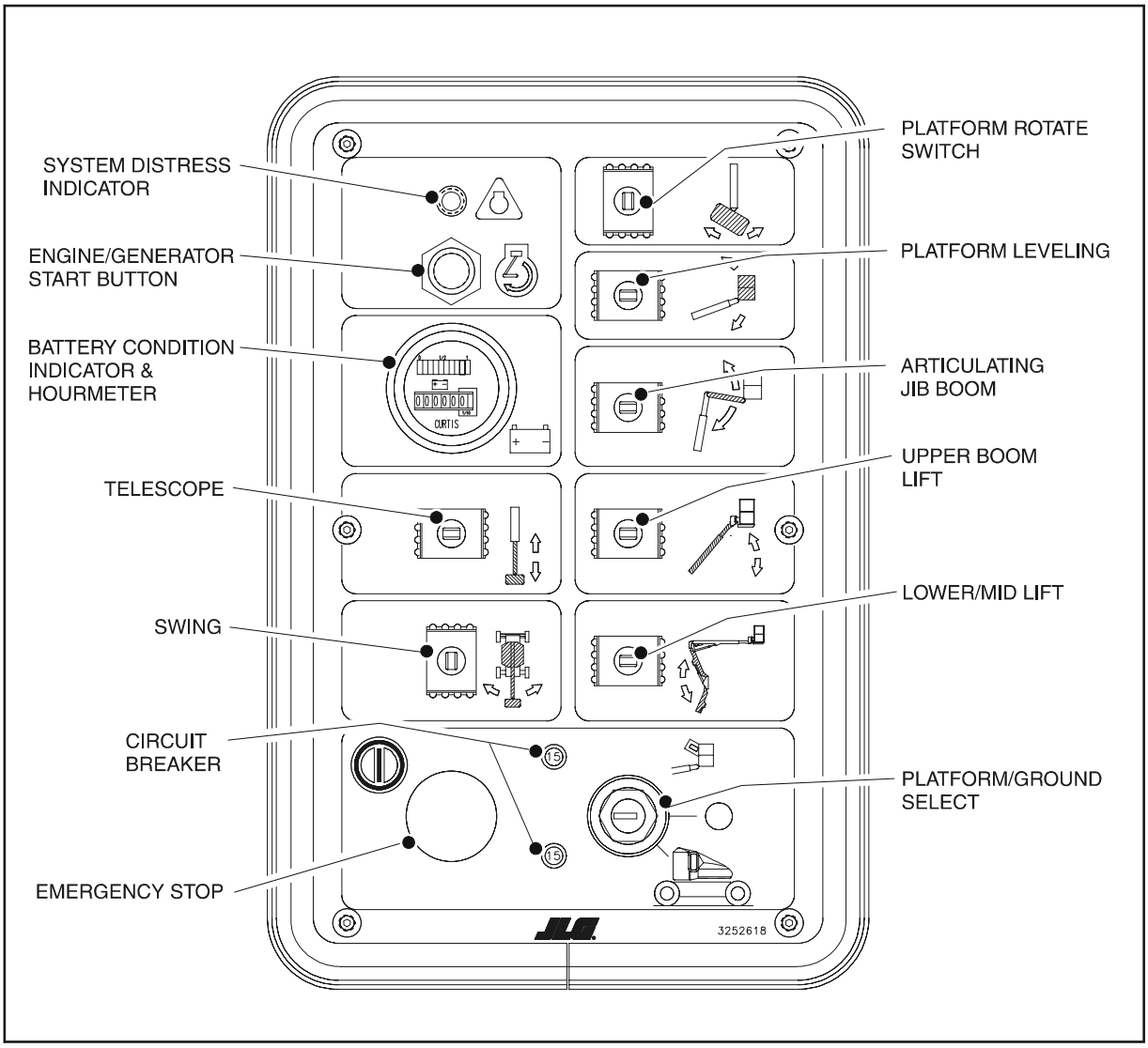

Figure 3-3. Ground Control Station

https://truckmanualshub.com/

3. Rotate.

   A three position ROTATE control switch permits rotation of the platform when positioned to left or right.

4. Platform Leveling Override.

   A three position LEVEL control switch allows the operator to compensate for any difference in the automatic self leveling system by positioning the control switch to UP or DOWN.

5. Articulating Jib Boom (If equipped)

   The Articulating Jib Boom control switch provides raising and lowering of the jib when positioned up or down.

6. Lower Boom Lift.

   Provides for raising and lowering of Lower Boom when positioned to UP or DOWN.

7. Upper Boom Lift.

   Provides for raising and lowering of Upper Boom when positioned to UP or DOWN.

8. Telescope.

   Provides for extension and retraction of Upper Boom when positioned to IN or OUT.

9. Swing.

   The SWING control switch provides 360 degrees non-continuous turntable rotation. To activate SWING, position switch to LEFT or RIGHT.

10. Circuit Breakers.

    The circuit breakers open (pop out) to indicate a short or overload somewhere on the machine.

11. Battery Indicator and Hourmeter.

    An hourmeter, installed in the upper portion of the Ground Control Box, registers the amount of machine operating time. The hourmeter registers up to 9,999.9 hours and cannot be reset.

12. System Distress Indicator.

    The system distress indicator lights to signify an abnormal condition for the generator engine (high oil temperature or low oil pressure) or, on all electric machines, an electrical system fault.

NOTE: *The engine will automatically shut down under the following conditions:*

High Oil Temperature
Low Oil Pressure
Engine Overspeed
Overvoltage

NOTE: *The engine will not start if the batteries are fully charged or if the Generator Enable switch on the platform console is not in the on position.*

13. Generator/Engine Start Button.

    The generator/engine start push-button switch allows the generator to be started manually to top-off the battery charge. The generator will start automatically when the batteries reach a low-charge state and the Generator Enable switch on the platform console is in the on position.

Platform Control Station

1. Footswitch.

   The footswitch is a safety feature. To operate any function, the footswitch must be depressed and the function selected within seven seconds. The enable light in the light panel indicates that the controls are enabled; as long as functions continue to be used the controls remain enabled. If a function is not selected within seven seconds, or if a seven second lapse between ending one function and beginning the next function, the enable light will go out and the footswitch must be recycled to re-enable the controls.

   Releasing the footswitch removes power from all controls and applies the drive brakes.

⚠ WARNING

TO AVOID SERIOUS INJURY, DO NOT REMOVE, MODIFY OR DISABLE THE FOOTSWITCH BY BLOCKING OR ANY OTHER MEANS.

⚠ IMPORTANT

FOOTSWITCH MUST BE DEPRESSED PRIOR TO ACTIVATING ANY FUNCTION CONTROL, OTHERWISE THE FUNCTION WILL NOT OPERATE.

⚠ WARNING

FOOTSWITCH MUST BE ADJUSTED SO THAT FUNCTIONS WILL OPERATE WHEN PEDAL IS APPROXIMATELY AT ITS CENTER OF TRAVEL. IF SWITCH OPERATES WITHIN LAST 1/4" OF TRAVEL, TOP OR BOTTOM, IT SHOULD BE ADJUSTED.

https://truckmanualshub.com/

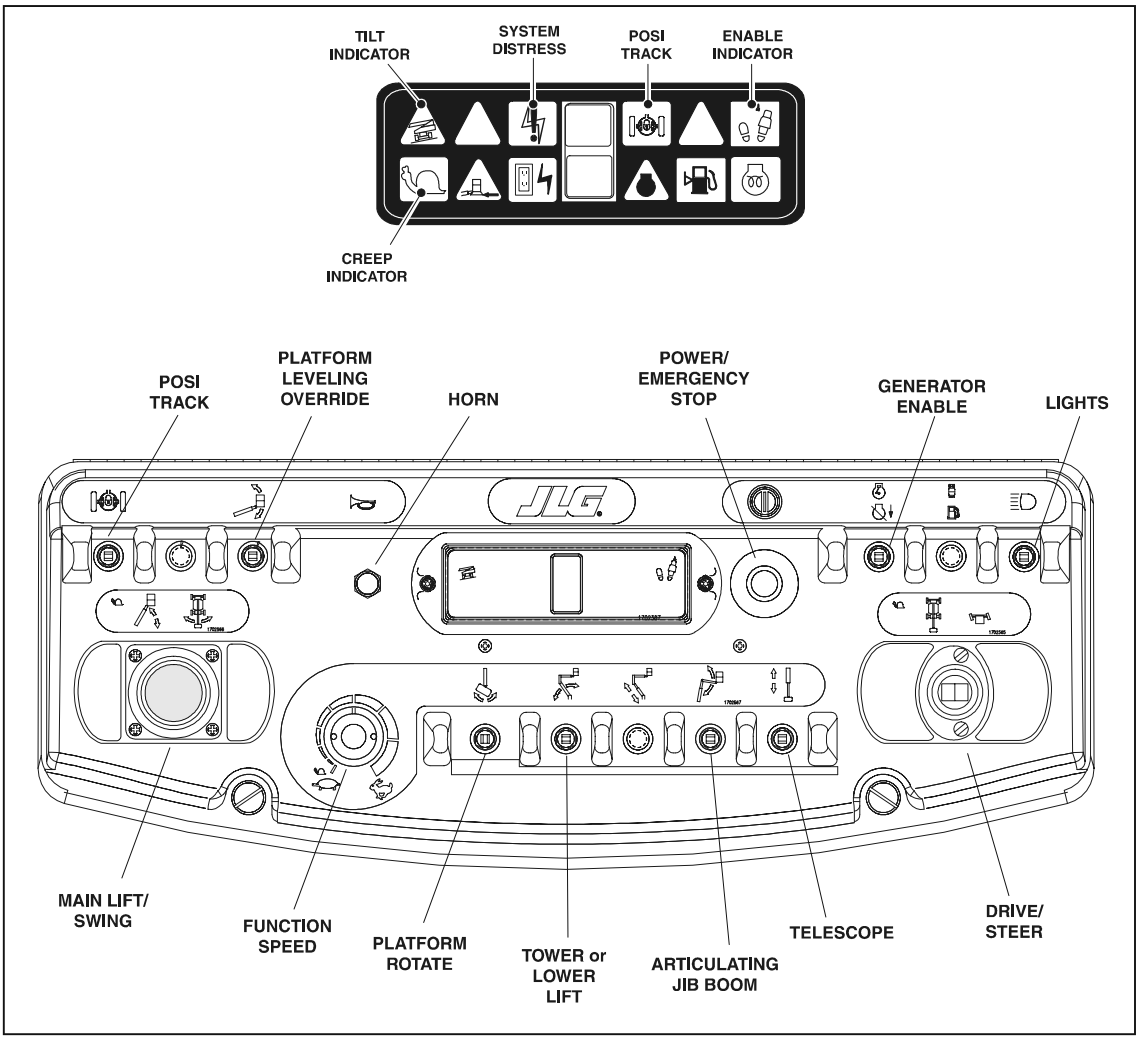

Figure 3-4. Platform Console

2. Power/Emergency Stop.

   A two-position red mushroom shaped switch furnishes power to PLATFORM Controls when pulled out (on). When pushed in (off), power is shut off to the platform functions.

   Within about 2 seconds of pulling the switch out, the machine will perform a diagnostic check of the various electrical circuits, and if everything is OK, the platform alarm will beep once. During this time the lights on the indicator panel will also blink once as a bulb check.

3. Lower Boom Lift.

   Provides for raising and lowering of Lower and Mid Boom when positioned to UP or DOWN. Upper lift will not function when operating lower lift.

NOTE: *Main Lift, Swing, and Drive control levers are spring-loaded and will automatically return to neutral (off) position when released.*

⚠ WARNING

TO AVOID SERIOUS INJURY, DO NOT OPERATE MACHINE IF ANY CONTROL LEVERS OR TOGGLE SWITCHES CONTROLLING PLATFORM MOVEMENT DO NOT RETURN TO THE OFF OR NEUTRAL POSITION WHEN RELEASED.

https://truckmanualshub.com/

4. Main Lift/Swing.

   The dual axis joystick is provided for main lift and swing. Push forward to lift up, pull backward to lift down. Move right to swing right, move left to swing left. Moving the joystick activates switches to provide the functions selected. Proportional control of these functions can be attained by using the Function Speed knob.

NOTE: *Main lift and swing functions may be selected in combination. The handle features a round gate so that maximum speed is reduced when multiple functions are selected.*

Lower lift will not function when operating upper lift.

5. Telescope Control.

   The TELESCOPE control switch affords extension and retraction of the main boom when positioned to IN or OUT.

6. Drive/Steer.

   The DRIVE controller provides for driving either forward or backward when positioned to FORWARD or REVERSE. The controller is ‘ramped’ to allow infinitely variable drive speed between fast and slow.

   Positioning the steer control thumb operated switch RIGHT or LEFT enables steering the machine to the right or left respectively.

NOTE: *When lower boom is raised above horizontal, or the upper boom is raised approximately 16 inches (40.64 cm) above boom rest, the high drive function will automatically switch to low drive. This also occurs when Function Speed Control is clicked on creep.*

NOTE: *DRIVE control lever is spring-loaded and will automatically return to neutral (OFF) position when released.*

7. Posi-Track Control.

   Activating the Posi-Track switch allows the operator to engage positive traction for the time period preset in the controller. Posi-traction occurs by changing the drive motors from a series to parallel arrangement, causing available power to be distributed evenly between the two drive wheels. The control system may also engage the posi-track function automatically.

8. Posi-Track Indicator.

   This indicator lights to show that posi-traction is operating.

9. Platform Leveling Override.

   The PLATFORM LEVEL control switch allows the operator to adjust the level or the platform by positioning the switch to UP or DOWN.

10. Articulating Jib Boom (If Equipped)

    Push toggle switch forward to lift up, pull back to lift down.

11. Platform Rotate.

    The PLATFORM ROTATE control switch allows the operator to rotate the basket to the left or right when positioned to the desired direction.

12. Function Speed Control.

    Adjusts speed of Boom and Swing Functions. Rotate CCW for slower speed and CW for faster speed. To adjust Drive, Swing, and Main Lift to creep, turn knob fully CCW until it clicks.

13. Machine Out Of Level.

    This red illuminator indicates that the chassis is on a slope (over 3 degrees). If the boom is above horizontal and the machine is on a 3 degree slope, an alarm will sound and CREEP is automatically activated.

14. System Distress Indicator.

    The system distress indicator lights to signify an abnormal condition for the generator engine (high oil temperature or low oil pressure) or, on all electric machines, an electrical system fault.

    The four likely causes of a system fault are:

    a. The seven second enable time has been allowed to lapse or a function was selected before depressing the footswitch. The system reads this condition as a fault, just as it would if the footswitch were jammed in the depressed position or a function switch were stuck in the on position. Re-depress the footswitch to power the controls and extinguish the light.

https://truckmanualshub.com/

b. The maximum power limit has been reached and the machine is not moving. This could happen when the machine is stuck or when attempting to travel over rough terrain or on steep grades which exceed the rated gradeability of the machine. This condition is comparable to stalling the engine by asking it to provide more power than it was designed to do.

c. The batteries are nearly depleted, and should be charged very soon to prevent having the machine stop at an inconvenient place.

d. There is some other fault in one of the circuits. If so determine the cause by counting the flash code, a number of flashes followed by a pause followed by another number of flashes, and refer to the service manual.

NOTE: *The engine will automatically shut down under the following conditions:*

High Engine Oil Temperature
Low Engine Oil Pressure
Engine Overspeed
Generator Overvoltage

15. Generator Enable Control.

The Generator Enable control switch, when in the off position, allows the operator to prevent the generator engine from starting when using the machine indoors. When in the on position (and the ground Emergency Stop Switch on [pulled out]), the generator is enabled to automatically start when the batteries need charged.

16. Horn.

A push-type HORN switch supplies electrical power to an audible warning device when pressed.

17. Circuit Breakers.

The circuit breakers open (pop out) to indicate a short or overload somewhere on the machine.

.

Table 3-1.Simultaneous Functions

If This Function is Selected:	These Functions Will Also Work at the Same Time:			
Swing		Lower Lift**	Upper Lift**	Telescope
Lower Lift	Swing*		No	Telescope*
Upper Lift	Swing	No		Telescope
Telescope	Swing*	Lower Lift**	Upper Lift**	
Jib	Swing*	Lower Lift**	Upper Lift**	Telescope
Platform Rotate	No	No	No	No

Note: Boom functions may be slower when selected with another function than when operated individually, due to sharing of oil.

* These functions may move very slowly (or not at all) if the first function selected (Lower Lift or Swing) is being operated at full speed, due to sharing of oil.

** Lower Lift and Upper Lift will not function simultaneously. Upper lift alway prevails.

https://truckmanualshub.com/

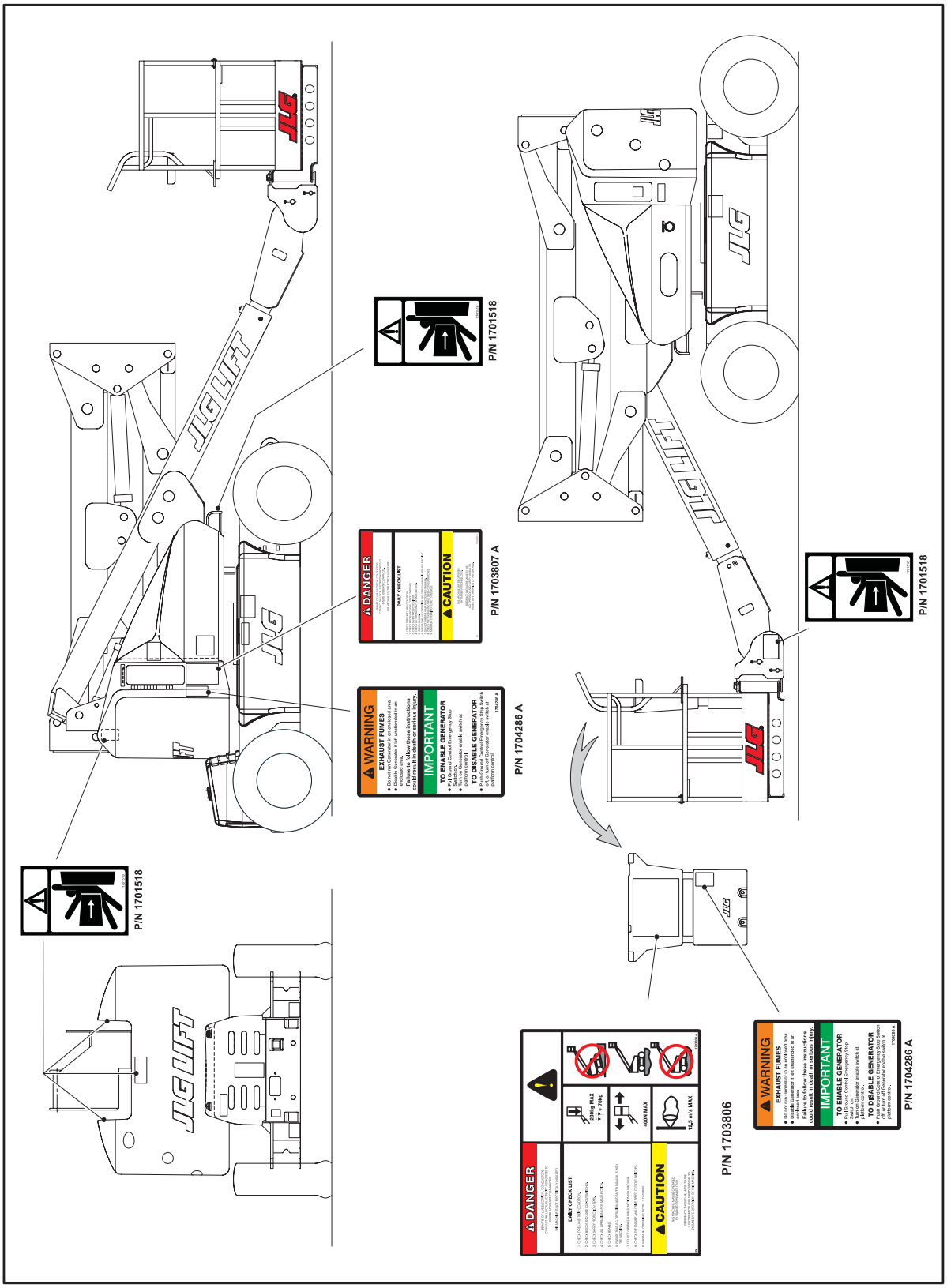

Figure 3-5. Caution, Danger, Warning Decal Location

https://truckmanualshub.com/

1701518

1703806-A

Updated 6-1-99

https://truckmanualshub.com/

1703807-A

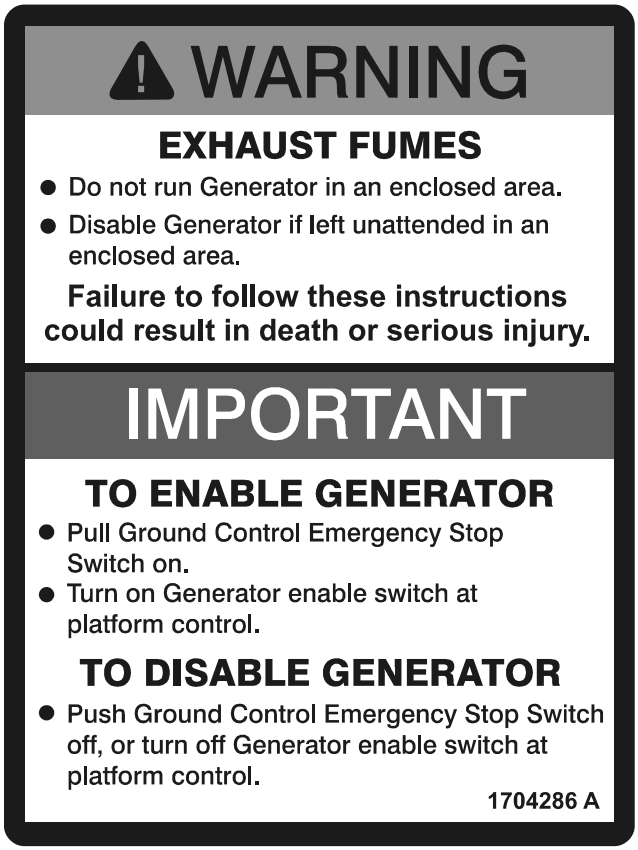

1704286-A

https://truckmanualshub.com/

FUNCTION	SYMBOL	FUNCTION	SYMBOL
DRIVE SELECT	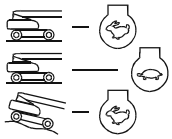	MAIN LIFT	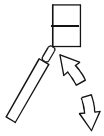
STEER SELECT	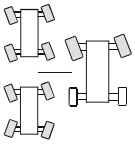	SWING	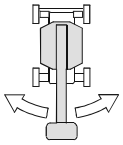
PLATFORM LEVEL	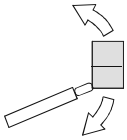	FUNCTION SPEED CONTROL	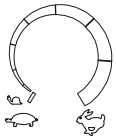
CHASSIS OUT OF LEVEL		PLATFORM ROTATE	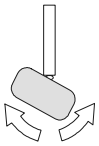
CREEP		TOWER LIFT	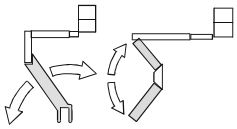
PLATFORM CAPACITY INDICATOR	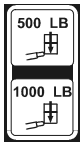	TOWER TELESCOPE	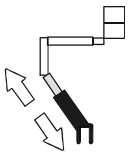
ENGINE DISTRESS		ARTICULATING FLY BOOM	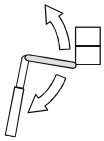
LOW FUEL LEVEL		MAIN TELESCOPE	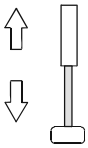
AC GENERATOR ON	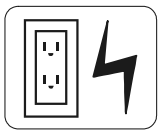	FUEL SELECT	

Figure 3-6. Control Panel Symbols (Sheet 1 of 2)

https://truckmanualshub.com/

FUNCTION	SYMBOL	FUNCTION	SYMBOL
GLOW PLUG INDICATOR		SOFT TOUCH OVERRIDE	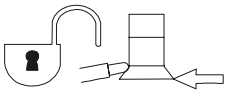
ENABLE INDICATOR		SOFT TOUCH INDICATOR	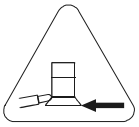
POWER EMERGENCY STOP		DRIVE	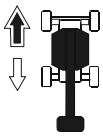
START AUXILIARY POWER		STEER	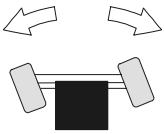

Figure 3-7. Control Panel Symbols (Sheet 2 of 2)

https://truckmanualshub.com/

SECTION 4. MACHINE OPERATION

4.1 DESCRIPTION

This machine is a self-propelled hydraulic lift equipped with a work platform on the end of an elevating, articulating and rotating boom. The JLG Lift's intended purpose is to position personnel with their tools and supplies at positions above ground level, and can be used to reach work areas located above machinery or equipment.

The JLG Lift has a primary operator Control Station in the platform. From this control station, the operator can drive and steer the machine in both forward and reverse directions. The operator can raise or lower the upper or lower boom or swing the boom to the left or right. Standard boom swing is 360 degree non-continuous left and right of the stowed position. The machine has a Ground Control Station which will override the Platform Control Station. Ground Controls operate Upper and Lower Boom Lift and Swing, and are to be used in an emergency to lower the platform to the ground should the operator in the platform be unable to do so. Ground Control also to be used in Pre-Operation check.

Instructions and hazard alerts are posted on the operator control stations and at other places on the machine. It is extremely important that operators know what instructions and hazard alerts are placed on the machine, and review these periodically so that they are fresh in their minds. Vibrations emitted by these machines are not hazardous to an operator in the work platform.

The JLG Lift is designed to provide efficient and safe operation when maintained and operated in accordance with warnings on the machine, in the Operators & Safety Manual, and all jobsite and government rules and regulations. As with any type of machinery, the operator is very important to efficient and safe operation. It is absolutely necessary that the JLG Lift be regularly maintained in accordance with this section and the Preparation and Inspection section, and that any evidence of lack of maintenance, malfunction, excessive wear, damage or modification to the machine be reported immediately to the machine owner or the jobsite supervisor or safety manager and that the machine be taken out of service until all discrepancies are corrected.

The JLG Lift is not intended to be used to lift material other than supplies which personnel in the platform require to do their job. Supplies or tools which extend outside the platform are prohibited. It must not be used as a forklift, crane, support for overhead structure, or to push or pull another object.

The JLG Lift is powered using a hydraulic pump and cylinders for various functions. The hydraulic components are controlled by electrically activated hydraulic valves using switches and control levers. The speeds of boom functions are variable from zero to maximum speed depending upon the position of the function speed control. Functions controlled by toggle switches are either on or off. A foot operated switch in the platform must be depressed before any controls will function and provides a means of emergency stop when the operators foot is removed from the footswitch.

The JLG Lift is a two wheel drive machine with drive power being supplied by 2 electric motors thru planetary gear reducers.

The unrestricted capacity of the JLG Lift is 230 kg. This means that with a platform load of 230 kg. or less, the platform may be positioned anywhere the boom will reach, with the machine on a smooth, firm, and level surface.

4.2 GENERAL

This section provides the necessary information needed to operate the machine. Included in this section are procedures for traveling, steering, parking, platform loading and transporting. It is important that the user read and understand the proper procedures before operating the machine.

4.3 MOTOR OPERATION

Power/Emergency Stop

This red, mushroom-shaped switch provides battery power to the Platform/Ground Select switch, when pulled out (on), for all machine functions. The switch should be pushed in (off) when recharging the batteries or parking the machine overnight.

NOTE: *If equipped with the optional on-board generator, the Emergency Stop switch must be left on (pulled out) to allow for automatic charging of the batteries.*

Within about 2 seconds of pulling the switch out, the machine will perform a diagnostic check of the various electrical circuits, and if everything is OK, the platform alarm will beep once. During this time the lights on the indicator panel will also blink once as a bulb check.

https://truckmanualshub.com/

Platform/Ground Select Switch

The Platform/Ground Select switch functions to direct battery power to the desired control station when the POWER/EMERGENCY STOP switch is pulled out (on). With the switch held in the GROUND position battery power is supplied to the ground control station. When the switch is in the PLATFORM position, battery power is supplied to the platform control station.

Motor Activation

IMPORTANT

FOOTSWITCH MUST BE DEPRESSED PRIOR TO ACTIVATING ANY FUNCTION, OTHERWISE FUNCTION WILL NOT OPERATE.

The motor becomes activated and operates the desired function when the Emergency Stop switch is pulled out (on), the Platform/Ground select switch is in the appropriate position and the Footswitch is depressed.

CAUTION

IF A MOTOR MALFUNCTION NECESSITATES UNSCHEDULED SHUTDOWN, DETERMINE AND CORRECT CAUSE BEFORE RESUMING ANY OPERATION.

IMPORTANT

ALWAYS POSITION EMERGENCY STOP SWITCH TO THE ‘OFF’ POSITION (PUSHED IN) WHEN MACHINE IS NOT IN USE.

4.4 TRAVELING (DRIVING)

NOTE: *When lower boom is raised above horizontal, or the upper boom is raised approximately 40 cm above boom rest, the high drive function will automatically be in low drive.*

IMPORTANT

IF THE MACHINE IS OPERATED AT A VERY SLOW SPEED OR STALLED WHEN CLIMBING A GRADE OF 20% OR GREATER, DRIVE FUNCTION WILL STOP. REMOVE FOOT FROM FOOTSWITCH, AND DEPRESS FOOTSWITCH TO RESET.

WARNING

DO NOT DRIVE WITH BOOM ABOVE HORIZONTAL EXCEPT ON A SMOOTH, FIRM AND LEVEL SURFACE.

TO AVOID LOSS OF TRAVEL CONTROL OR “TIP OVER” ON GRADES AND SIDE SLOPES, DO NOT DRIVE MACHINE ON GRADES EXCEEDING THOSE SPECIFIED ON THE SERIAL NUMBER PLATE.

DO NOT DRIVE ON SIDESLOPES WHICH EXCEED 3 DEGREES.

AVOID ANY TERRAIN FEATURES WHICH COULD CAUSE THE MACHINE TO TIPOVER.

USE EXTREME CAUTION WHEN DRIVING IN REVERSE AND AT ALL TIMES WHEN DRIVING WITH PLATFORM ELEVATED AND WHEN DRIVING WITH ANY PART OF MACHINE WITHIN 6 FEET OF ANY OBSTRUCTION.

CAUTION

BEFORE DRIVING, MAKE SURE BOOM IS POSITIONED OVER REAR DRIVE AXLE. IF BOOM IS OVER STEER WHEELS, STEER AND DRIVE CONTROLS WILL MOVE IN OPPOSITE DIRECTIONS TO MACHINE MOTION.

Traveling Forward and Reverse

IMPORTANT

FOOTSWITCH MUST BE DEPRESSED PRIOR TO ACTIVATING ANY FUNCTION, OTHERWISE FUNCTION WILL NOT OPERATE.

1. If machine is shut down, pull out Emergency Stop at Ground Controls and place Platform/Ground Select switch to PLATFORM.
2. At Platform Controls, pull out Emergency Stop switch and activate footswitch.
3. Position Drive controller to FORWARD or REVERSE as desired. Angle of controller will determine travel speed.

4.5 STEERING

Depress footswitch, position thumb switch on Drive/Steer controller to RIGHT for steering right, or to LEFT for steering left.

4.6 PLATFORM

Loading From Ground Level

1. Position chassis on a smooth, firm and level surface.

https://truckmanualshub.com/

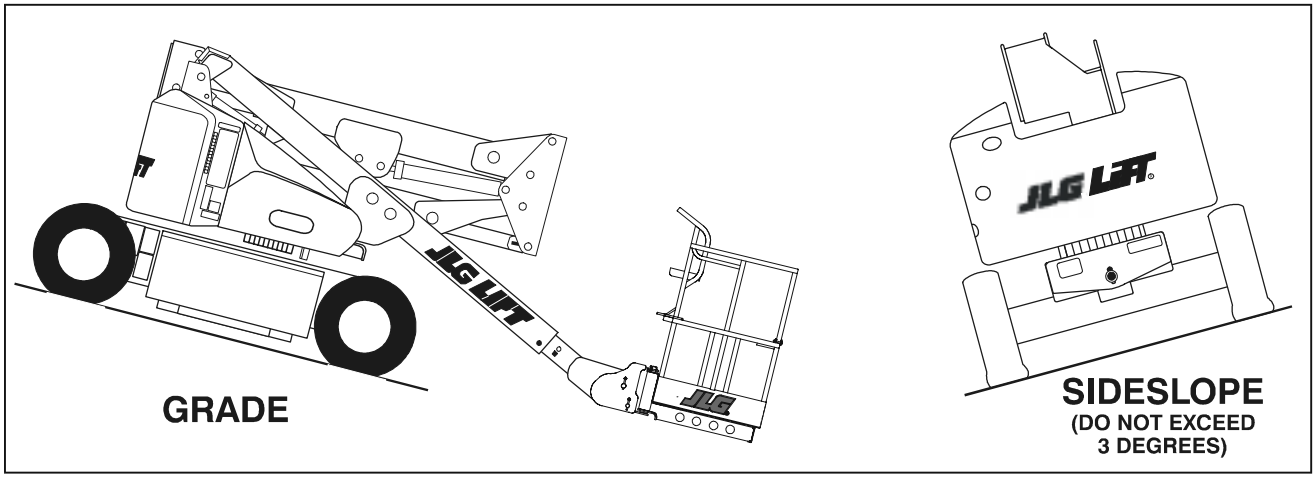

Figure 4-1. Grade and Side Slopes

2. If total load (personnel, tools and supplies) is 230 kg. or less, distribute load uniformly on platform floor and proceed to work position.

Loading From Positions Above Ground Level

Before loading weight to platform above ground level:

1. Determine what the total weight will be after additional weight is loaded (personnel, tools and supplies).
2. If total weight in platform will be 230 kg. or less, proceed with adding weight.

Platform Level Adjustment

1. Leveling UP. Depress footswitch to raise platform, position PLATFORM/LEVEL control switch UP and hold until platform is level.
2. Leveling DOWN. Depress footswitch to lower platform, position PLATFORM/LEVEL control switch to DOWN and hold until platform is level.

Platform Rotation

1. Depress footswitch to rotate platform to the left, PLATFORM ROTATE control switch is positioned to the LEFT and held until desired position is reached.
2. Depress footswitch to rotate platform to the right, PLATFORM ROTATE control switch is positioned to the RIGHT and held until desired position is reached.

4.7 BOOM

⚠ WARNING

A RED TILT WARNING LIGHT IS LOCATED ON THE CONTROL CONSOLE WHICH LIGHTS WHEN THE CHASSIS IS ON A 3 DEGREE OR GREATER SLOPE. DO NOT SWING OR RAISE BOOM ABOVE HORIZONTAL WHEN LIGHT IS LIT.

DO NOT DEPEND ON TILT ALARM AS A LEVEL INDICATOR FOR THE CHASSIS. TILT ALARM INDICATES CHASSIS IS ON A SEVERE SLOPE (3 DEGREE OR GREATER). CHASSIS MUST BE LEVEL BEFORE SWINGING, OR RAISING BOOM ABOVE HORIZONTAL.

TO AVOID UPSET IF RED TILT WARNING LIGHT LIGHTS WHEN BOOM IS RAISED ABOVE HORIZONTAL, LOWER PLATFORM TO GROUND LEVEL. THEN REPOSITION MACHINE SO THAT CHASSIS IS LEVEL BEFORE RAISING BOOM.

TRAVELING WITH BOOM BELOW HORIZONTAL IS PERMITTED ON GRADES NOT EXCEEDING THOSE SPECIFIED ON THE SERIAL NUMBER PLATE.

TO AVOID SERIOUS INJURY, DO NOT OPERATE MACHINERY IF ANY CONTROL LEVER OR TOGGLE SWITCH CONTROLLING PLATFORM MOVEMENT DOES NOT RETURN TO THE ‘OFF’ OR NEUTRAL POSITION WHEN RELEASED.

TO AVOID A COLLISION AND INJURY IF PLATFORM DOES NOT STOP WHEN A CONTROL SWITCH OR LEVER IS RELEASED, REMOVE FOOT FROM FOOTSWITCH OR USE EMERGENCY STOP SWITCH TO STOP THE MACHINE.

https://truckmanualshub.com/

Swinging the Boom

Depress footswitch to swing boom, with footswitch activated, position SWING control switch to RIGHT or LEFT for direction desired.

IMPORTANT

WHEN SWINGING THE BOOM MAKE SURE THERE IS AMPLE ROOM FOR THE BOOM TO CLEAR SURROUNDING WALLS, PARTITIONS AND EQUIPMENT.

Raising and Lowering the Lower and Mid Boom

Depress footswitch to raise or lower the Lower and Mid Boom, with footswitch activated, position Lower Boom Lift switch to UP or DOWN as desired.

Raising and Lowering the Upper Boom

Depress footswitch to raise or lower the Upper Boom, with footswitch activated, position Upper Boom Lift switch to UP or DOWN until desired height is reached.

4.8 GENERATOR

The machine is equipped with an engine powered DC generator connected in parallel to the 48V DC battery bank.

Automatic Operating Mode

The generator will operate in automatic mode always when the following two conditions apply.

1. Ground Control EMS is pulled out (on), **and**:
2. The Generator Enable switch on the platform control console is in the On or Enable position.

When the above conditions apply, the generator's controller will monitor status of the batteries, will turn on automatically when the battery voltage drops as a result of discharge and will turn off when batteries are fully charged.

Battery Only Operating Mode

The machine will operate in the battery only mode when the following two conditions apply:

1. Ground Control EMS is pulled out, **and**:
2. The switch on the platform control console is in the Off or Disable position.

In this mode the machine will operate as a conventional battery operated unit. The batteries can be used until they are fully discharged.

Manual (Charge) Operating Mode

The generator will operate in manual mode always when the following three conditions apply.

1. Ground Control EMS is pulled out, **and**:
2. The switch on the platform control console is in the On or Enable position **and**:
3. The Manual Charge push button is activated.

Activation of the Manual Charge button will start the engine and initiate the charging cycle even if the batteries are charged above the level of automatic start. The operator can initiate the charge cycle to charge the batteries to the maximum level. The charging cycle will include finishing phase similar to conventional chargers.

4.9 MACHINE FUNCTION SPEEDS

The Function Speed Control affects the speed of boom functions Lower Lift, Telescope, and Rotate. Turn the control CW to increase function speed or CCW to decrease function speed. When in the CCW maximum position, Drive is placed in creep speed.

4.10 SHUT DOWN AND PARK

NOTE: *When parking battery powered units overnight, batteries should be charged in accordance with instructions in Section 2 to ensure readiness for following workday.*

NOTE: *Electric machines are equipped with a static strap due to static electricity build-ups. Strap is located under rear of machine chassis.*

To shut down and park the machine, the procedures are as follows:

1. Drive machine to a reasonably well protected area.
2. Ensure boom is lowered over rear drive axle.
3. Shut down Emergency Stop at Platform Controls.
4. Shut down Emergency Stop at Ground Controls. Position Platform/Ground Select switch to center OFF.
5. If necessary, cover Platform Controls to protect instruction placards, warning decals and operating controls from hostile environment.

https://truckmanualshub.com/

4.11 MACHINE LIFTING AND TIE DOWN

Lifting

1. Call JLG Industries or weigh the individual unit to obtain GVW.
2. Place the boom in the stowed position.
3. Remove all loose items from the machine.
4. Properly adjust the rigging to prevent damage to the machine and so the machine remains level.

Tie Down

1. Place the boom in the stowed position.
2. Remove all loose items from the machine.
3. Secure the chassis and the platform using straps or chains of adequate strength.

4.12 BOOM SYNCHRONIZING PROCEDURE

NOTE: *If the Lower Boom assembly does not fully lower:*

1. Remove all personnel from the platform.
2. Pull the red knob located besided the main control valve.
3. From Ground Control, activate the lift control switch, raise Lower Boom 1.8 m (6 feet).
4. After raising Lower Boom, release the red knob.
5. Activate Lower Boom Down, fully lower boom.
6. Repeat step 1 thru 5 if necessary.

https://truckmanualshub.com/

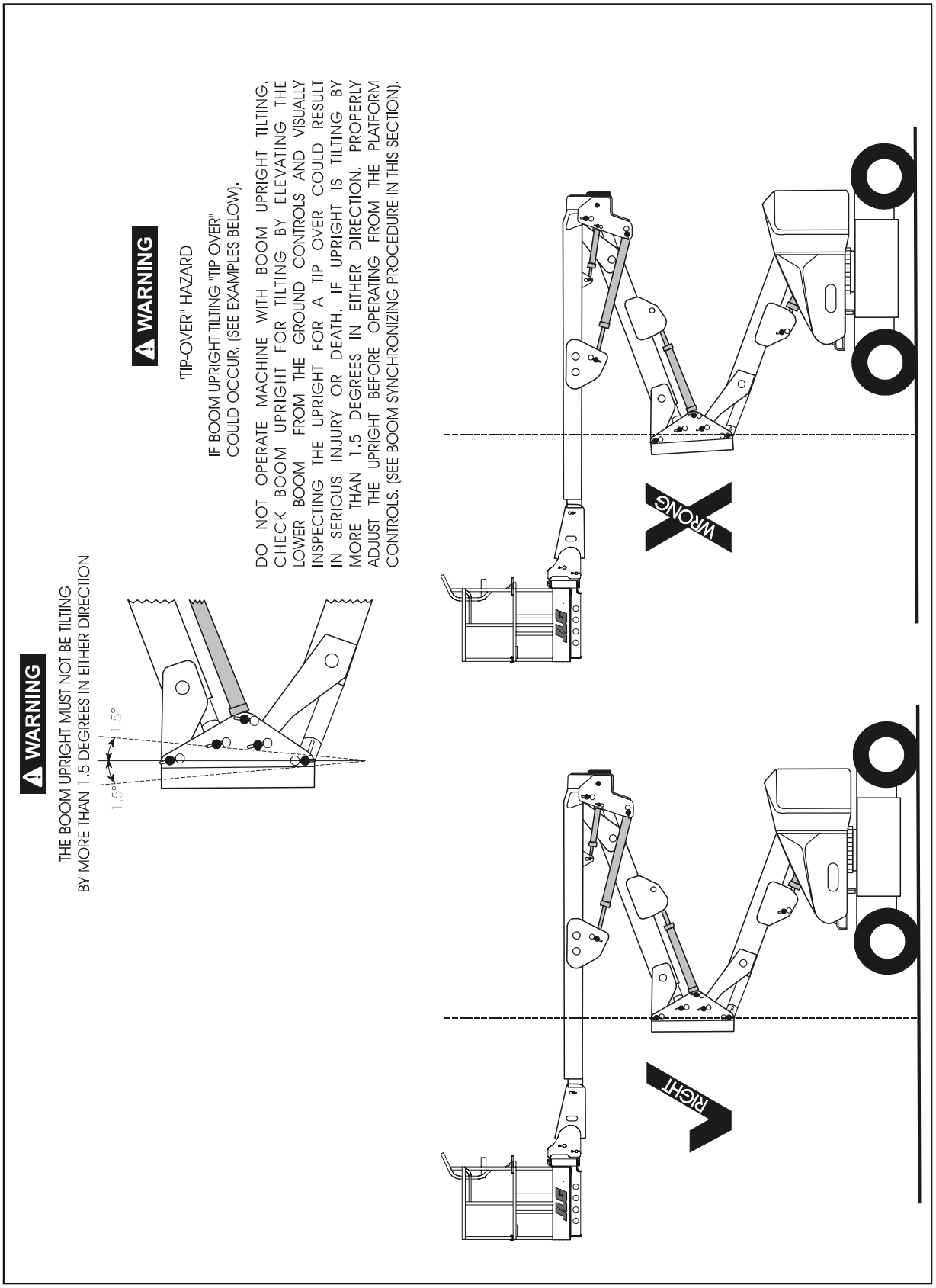

Figure 4-2. Upright Positioning

https://truckmanualshub.com/

Lifting Instructions:

1. Call JLG Industries or weigh the individual unit to obtain GVW.
2. Place the boom in the stowed position.
3. Remove all loose items from the machine.
4. Properly adjust the rigging to prevent damage to the machine and so the machine remains level.

MODELS	"A" Dimension Steer Axle To Center of Gravity	Gross Weight Standard Machine
E45A	1117 mm (44 inches)	5806 kg (12,800 lbs)
E45AJ	1168 mm (46 inches)	6690 kg (14,750 lbs)
M45A	1117 mm (44 inches)	5806 kg (12,800 lbs)
M45AJ	1168 mm (46 inches)	6690 kg (14,750 lbs)

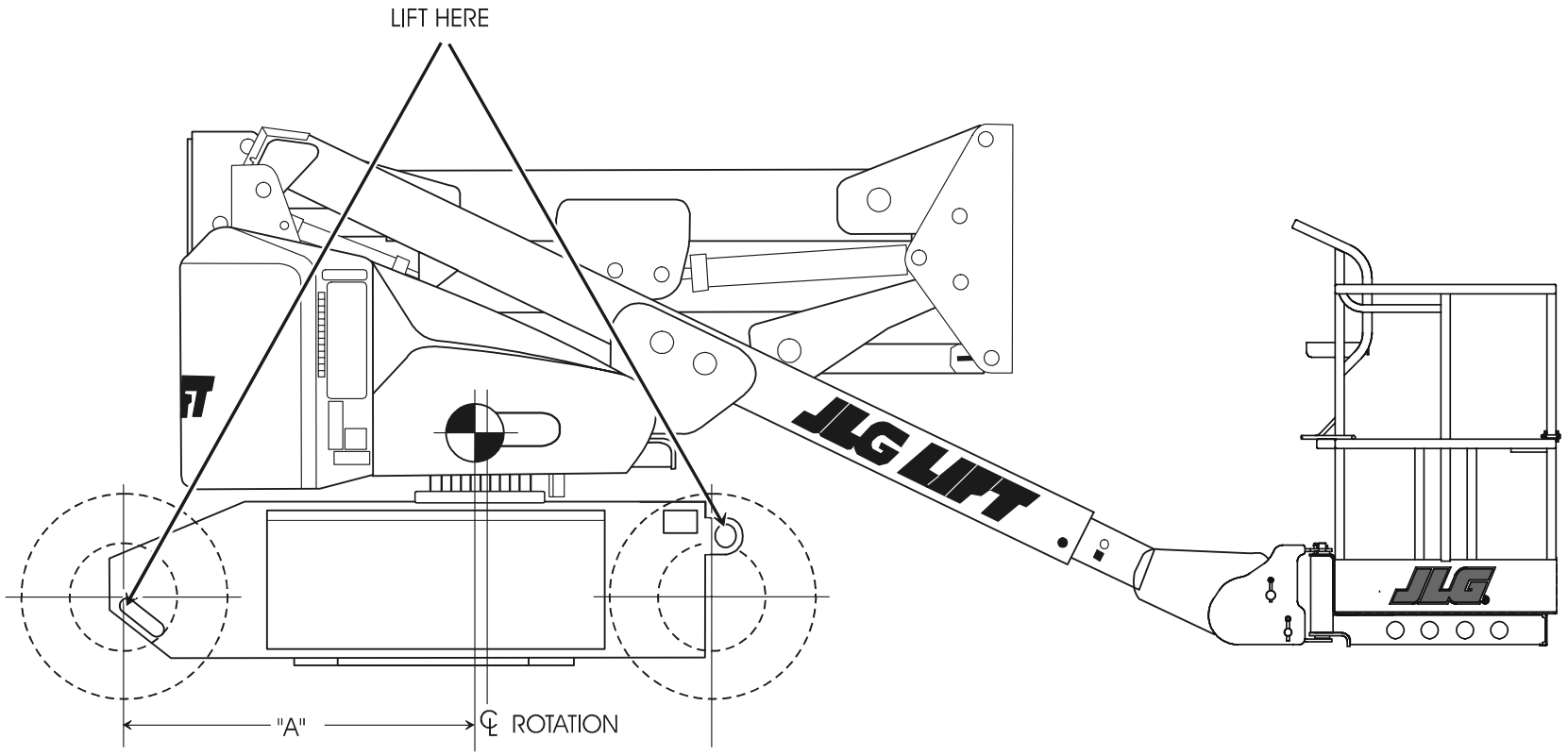

Figure 4-3. Lifting Chart

https://truckmanualshub.com/

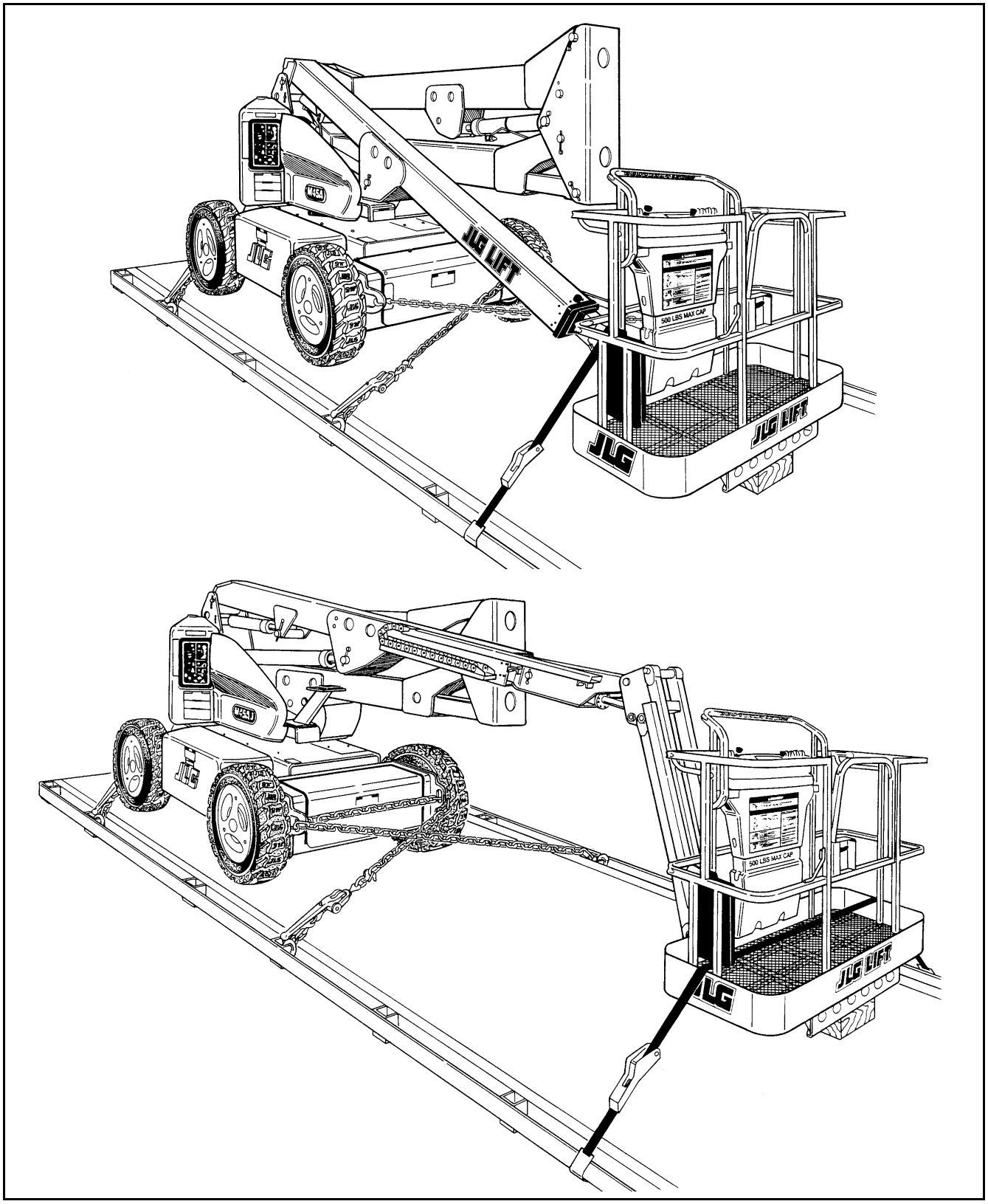

Figure 4-4. Chassis & Platform Tie Down

https://truckmanualshub.com/

SECTION 5. OPTIONAL EQUIPMENT

5.1 MOTION ALARM

A motion alarm horn provides an audible warning when the platform controls are selected at the PLATFORM/ GROUND SELECT switch, the EMERGENCY STOP switch is ON, and the footswitch is depressed. The alarm warns personnel in the jobsite area to avoid the operating machine.

5.2 FOAM FILLED TIRES

NOTE: *Foam Filled tires are required on J model machines.*

Eliminates flats by filling tires with polyurethane foam. For use where sharp objects are frequently encountered on operating surface of jobsite.

5.3 ROTATING BEACON

An amber rotating beacon may be installed on the machine hood, and is activated whenever platform controls are selected at the PLATFORM/GROUND SELECT switch. When activated, the light provides a visual warning of the machine's operation.

5.4 TILT ALARM

An audible warning horn that will sound when the machine is out of level three degrees in any direction with the boom raised above horizontal.

5.5 WHEEL COVERS

Provide protection for wheels and wheel bearings from dirt, grease, mud, rocks, etc.

5.6 BATTERY PACKS

Spare battery packs are available to enable the operator to remove battery packs for charging and replace them with fresh battery packs to keep machine operating with minimal down time. Battery packs are interchangeable and include applicable cables and connectors for "plug-in" use.

5.7 PLATFORM LIGHTS

Platform lights may be installed on the machine platform rails, to provide more lighting for the operator.

5.8 CONTROL CONSOLE COVER

The control console cover is a one piece clear acrylic cover which attaches to the platform rails over the control console. The cover, when in position, will protect the entire platform control console and the control handle on the right side of the console.

5.9 CYLINDER BELLOWS

A one piece accordion shaped rubber bellows may be attached to the rod end of the cylinder barrel and the cylinder rod as close to the rod attach bushing as possible. The bellows affords protection to the cylinder rod in either the extended or retracted position. The bellows are installed on the lift cylinders, slave cylinder, master cylinder, and steer cylinder.

5.10 WORK PLATFORM

These machines are available with a 0.76 x1.52M size platform.

https://truckmanualshub.com/

This page left blank intentionally.

https://truckmanualshub.com/

SECTION 6. EMERGENCY PROCEDURES

6.1 GENERAL

This section provides information on the procedures to be followed and on the systems and controls to be used in the event an emergency situation is encountered during machine operation. Prior to operation of the machine and periodically thereafter , the entire operating manual, including this section, should be reviewed by all personnel whose responsibilities include any work or contact with the machine.

6.2 EMERGENCY TOWING PROCEDURES

Towing this machine is prohibited, unless properly equipped. However, provisions for moving the machine, in case of a malfunction or power failure, have been incorporated. The following procedures are to be used ONLY for emergency movement to a suitable maintenance area.

1. Chock wheels securely.
2. Disengage drive hubs by reversing disconnect caps.
3. Connect suitable equipment, remove chocks, and move machine.

After moving machine, complete the following procedures:

1. Position machine on a firm and level surface.
2. Chock wheels securely.
3. Engage drive hubs by reversing disconnect caps on hubs.
4. Remove chocks from wheels as needed.

6.3 EMERGENCY CONTROLS AND THEIR LOCATIONS

Emergency Stop Switch.

There is one of these red mushroom shaped switches at either Ground Controls or Platform Controls. When depressed it will immediately stop all functions at that station and shut down the machine.

⚠ WARNING

CHECK DAILY TO MAKE SURE EMERGENCY STOP SWITCH IS FUNCTIONING AND THAT CONTROL INSTRUCTIONS ARE IN PLACE AND LEGIBLE.

Ground Control Station

The Ground Control Station is located on the left side of the turntable. The controls on this panel provide the means for overriding the platform controls and for controlling boom swing and lift from the ground. The PLATFORM/GROUND SELECT SWITCH is a self-centering switch. Hold SELECT SWITCH in GROUND position and operate the desired function switch.

Manual Descent System

The manual descent system is used, in the event of total power failure, to lower the upper and lower booms using gravity. To operate the manual descent system, proceed as follows:

1. Locate manual descent knob on main valve and turn CW(clockwise). Install handle into manual descent pump and lower the Mid and Lower Booms by pumping the handle until they are completely lowered.
2. Turn manual descent knob CCW (counterclockwise) and lower the Upper (or main) Boom by pumping the handle until it is completely lowered. Return manual descent knob to center position and stow handle in bracket provided.

Manual Swing Override

The manual swing override is used to manually swing boom and turntable assembly in the event of a total power failure when the platform is positioned over a structure or obstacle. To operate the manual swing override, proceed as follows:

1. Using a 7/8 inch socket and ratchet wrench, locate nut on swing worm gear on left side of machine. Install wrench on nut and ratchet in the direction desired.

https://truckmanualshub.com/

6.4 EMERGENCY OPERATION

Use of Ground Controls

1. Know how to use Ground Controls in an emergency situation.

   Ground personnel must be thoroughly familiar with the machine operating characteristics and the ground control functions. Training should include operation of the machine, review and understanding of this section and hands-on operation of the controls in simulated emergencies.

Operator Unable to Control Machine

IF THE PLATFORM OPERATOR IS PINNED, TRAPPED OR UNABLE TO OPERATE OR CONTROL MACHINE:

1. Operate the machine from ground controls only with the assistance of other personnel and equipment (cranes, overhead hoists, etc.) as may be required to safely remove the danger or emergency condition.
2. Other qualified personnel on the platform may use the platform controls. DO NOT CONTINUE OPERATION IF CONTROLS DO NOT FUNCTION PROPERLY.
3. Cranes, forklift trucks or other equipment which may be available are to be used to remove platform occupants and stabilize motion of the machine in case machine controls are inadequate or malfunction when used.

Platform or Boom Caught Overhead

If the platform or boom becomes jammed or snagged in overhead structures or equipment, do not continue operation of the machine from either the platform or the ground until the operator and all personnel are safely moved to a secure location. Only then should an attempt be made to free the platform using any necessary equipment and personnel. Do not operate controls to cause one or more wheels to leave the ground.

Following any accident, thoroughly inspect the machine and test all functions first from the ground controls, then from the platform controls. Do not lift above 3 meters until you are sure that all damage has been repaired, if required, and that all controls are operating correctly.

6.5 INCIDENT NOTIFICATION

It is imperative that JLG Industries, Inc. be notified immediately of any incident involving a JLG product. Even if no injury or property damage is evident, the factory should be contacted by telephone and provided with all necessary details.

Contact your local JLG office.

It should be noted that failure to notify the manufacturer of an incident involving a JLG Industries product within 48 hours of such an occurrence may void any warranty consideration on that particular machine.

https://truckmanualshub.com/

SECTION 7. INSPECTION AND REPAIR LOG

Table 7-1.Inspection and Repair Log

Date	Comments

https://truckmanualshub.com/

Table 7-1.Inspection and Repair Log

Date	Comments

https://truckmanualshub.com/

JLG® JLG Industries, Inc.

TRANSFER OF OWNERSHIP

To: JLG, Gradall, Lull and Sky Trak product owner:

If you now own, but ARE NOT the original purchaser of the product covered by this manual, we would like to know who you are. For the purpose of receiving safety-related bulletins, it is very important to keep JLG Industries, Inc. updated with the current ownership of all JLG products. JLG maintains owner information for each JLG product and uses this information in cases where owner notification is necessary.

Please use this form to provide JLG with updated information with regard to the current ownership of JLG Products. Please return completed form to the JLG Product Safety & Reliability Department via facsimile (717) 485-6573 or mail to address as specified on the back of this form.

Thank you,
Product Safety & Reliability Department
JLG Industries, Inc.
1 JLG Drive
McConnellsburg, PA 17233-9533
Telephone: (717) 485-5161
Fax: (717) 485-6573

NOTE: Leased or rented units should not be included on this form.

Mfg. Model: _____

Serial Number: _____

Previous Owner: _____

Address: _____

City: _____ State: _____

Zip: _____ Telephone: (_____) _____

Date Of Transfer: _____

Current Owner: _____

Address: _____

City: _____ State: _____

Zip: _____ Telephone: (_____) _____

Who in your organization should we notify?

Name: _____

Title: _____

Please cut on the dotted line and fax to 717-485-6573

https://truckmanualshub.com/

https://truckmanualshub.com/

https://truckmanualshub.com/

Corporate Office
JLG Industries, Inc.
1 JLG Drive
McConnellsburg PA. 17233-9533
USA
Phone: (717) 485-5161
Customer Support Toll Free: (877) 554-5438
Fax: (717) 485-6417

JLG Worldwide Locations

JLG Industries (Australia)
P.O. Box 5119
11 Bolwarra Road
Port Macquarie
N.S.W. 2444
Australia
Phone: (61) 2 65 811111
Fax: (61) 2 65 810122

JLG Industries (UK)
Unit 12, Southside
Bredbury Park Industrial Estate
Bredbury
Stockport
SK6 2sP
England
Phone: (44) 870 200 7700
Fax: (44) 870 200 7711

JLG Deutschland GmbH
Max Planck Strasse 21
D-27721 Ritterhude/lhlpohl
Bei Bremen
Germany
Phone: (49) 421 693 500
Fax: (49) 421 693 5035

JLG Industries (Italia)
Via Po. 22
20010 Pregnana Milanese - MI
Italy
Phone: (39) 02 9359 5210
Fax: (39) 02 9359 5845

JLG Latino Americana Ltda.
Rua Eng. Carlos Stevenson,
80-Suite 71
13092-310 Campinas-SP
Brazil
Phone: (55) 19 3295 0407
Fax: (55) 19 3295 1025

JLG Europe B.V.
Jupiterstraat 234
2132 HJ Foofddorp
The Netherlands
Phone: (31) 23 565 5665
Fax: (31) 23 557 2493

JLG Industries (Norge AS)
Sofeimyrveien 12
N-1412 Sofienyr
Norway
Phone: (47) 6682 2000
Fax: (47) 6682 2001

JLG Polska
Ul. Krolewska
00-060 Warsawa
Poland
Phone: (48) 91 4320 245
Fax: (48) 91 4358 200

JLG Industries (Europe)
Kilmartin Place,
Tannochside Park
Uddingston G71 5PH
Scotland
Phone: (44) 1 698 811005
Fax: (44) 1 698 811055

JLG Industries (Pty) Ltd.
Unit 1, 24 Industrial Complex
Herman Street
Meadowdale
Germiston
South Africa
Phone: (27) 11 453 1334
Fax: (27) 11 453 1342

Plataformas Elevadoras
JLG Iberica, S.L.
Trapadella, 2
P.I. Castellbisbal Sur
08755Castellbisbal
Spain
Phone: (34) 93 77 24700
Fax: (34) 93 77 11762

JLG Industries (Sweden)
Enkopingsvagen 150
Box 704
SE - 175 27 Jarfalla
Sweden
Phone: (46) 8 506 59500
Fax: (46) 8 506 59534