https://truckmanualshub.com/

Plastics

Plastics are divided into 2 main groups; meltable (thermoplastics) and non-meltable (thermosets).

Thermoplastics are cast or injection moulded and unlike thermosets they lack bonds between the plastic molecules. Thermoplastics can be recycled with good results.

Thermoplastic recycling is a good way to conserve base materials and save money. There are different types of thermoplastics and it is important to keep them separate during recycling work so that the mechanical properties of the recycled material are not impaired. Certain material combinations can be compensated using additives that make the plastics miscible. Mixing in new base material can also improve the properties.

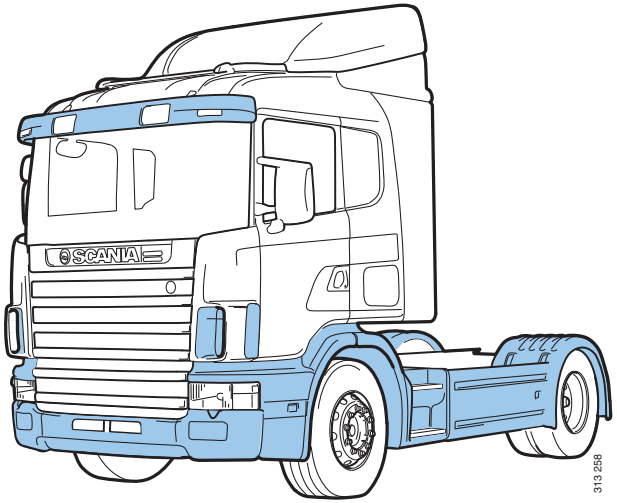

Parts made of thermoplastic

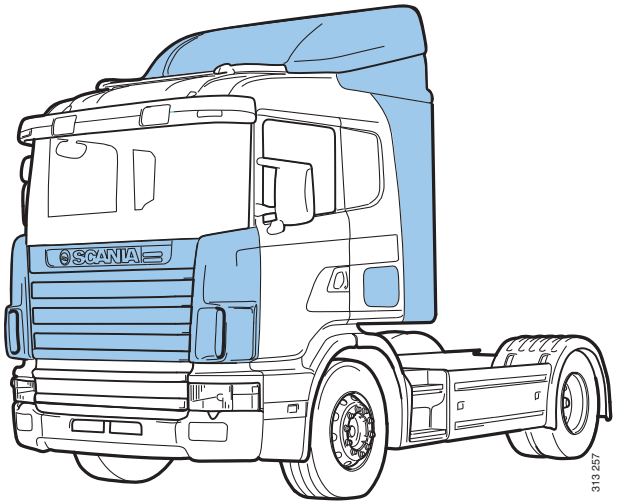

Parts made of thermosets

© Scania CV AB 2012, Sweden

Examples of plastics that are not suitable for mixing are listed in the table below:

Mixing material		Base material									
		ABS	PA	PBT	PC	PC+ABS	PC+PBT	PE	PMMA	PP	PVC
	ABS	A	B	A	A	A	A	C	A	C	A
	PA	B	A	B	C	C	C	B	B	B	C
	PBT	A	B	A	A	A	A	B	B	B	C
	PC	A	C	A	A	A	A	B	A	B	C
	PC+ABS	A	B	A	A	A	A	B	A	B	C
	PC+PBT	A	C	A	A	A	A	B	A	B	C
	PE	C	B	C	B	C	C	A	C	A	B
	PMMA	A	B	B	A	A	A	B	A	B	B
	PP	C	B	C	C	C	C	B	A	B	A
	PVC	A	C	C	C	C	C	B	A	B	A

A	=	Compatible
B	=	Compatible in pure mixtures (<5%)
C	=	Incompatible

Painting thermoplastics is disadvantageous with respect to recycling even though there are methods of separating the paint. Plastics age and become brittle. Take a random sample for measuring the melting index to see how far degradation has advanced. See ISO 1133.

Pure plastic that does not contain a high degree of other material (maximum 5% of another plastic), and has not degraded due to long periods of damp or heat treatment can be classified as new plastic, though with reduced properties.

Mixed material or material with molecules degraded to short chains can only be reshaped to very simple products or used for energy recovery.

© Scania CV AB 2012, Sweden

https://truckmanualshub.com/

Thermosets are plastic prepared with hardeners which bind the plastic molecules to each other. Thermosets are strong and rigid but brittle. Therefore it is often reinforced with for example glass fibre mat.

Thermosetting plastics are more difficult to recycle as it is not possible to melt and reshape them. The methods of recycling available today are energy recovery and, to a certain degree, pulverisation for filling.

© Scania CV AB 2012, Sweden

https://truckmanualshub.com/

Marking of plastics

Scania marks all its plastics (where there is space for a mark) in compliance with Scania Standard STD 387, which in turn is based on ISO 11469 - Generic identification and marking of plastic products.

The marks consists of international designations according to the following standards:

ISO 1043	Plastics - Symbols and abbreviations
ISO 1433	Vulcanised rubber - Choice of required properties
ISO 1629	Rubber and latex - Terminology

The marks start and finish with the arrow symbols > and <.

A short description of the most common thermoplastics used by Scania follows below. Plastics are designated by 2 to 4 capital letters (e.g. >ABS<) and sometimes a mixture of 2 materials (e.g. >ABS+PC<).

There are often fillers (T for Talcum powder, M for Mineral and G for Glass) and the amount of filler as a percentage (e.g. >ABS-T20<, which means ABS with 20% talcum powder).

Part numbers are necessary for identification of parts in production as well as for maintenance and spare parts. Part numbers comprise a five, six or seven digit serial number, e.g. 1234567-LH (part number - left-hand).

The marked date refers to the date of manufacture. The marked date often comprises a date and a time or just a date field.

© Scania CV AB 2012, Sweden

Plastics designations

>ABS<

Acrylonitrile butadiene styrene:

ABS is easy to recycle and can be mixed with PC to form PC+ABS after recycling, which is advantageous since pure ABS can loose impact resistance when remelted.

>ASA<

Acrylonitrile styrene acrylate:

Used for A-pillar panels, windscreen wiper panels, hinge covers, rear view mirror holders and roof hatch panels. Weather and colour resistant. Easy to recycle.

>EPDM<

Ethylene propylene diene monomer (rubber).

>HDPE<

High density polyethylene.

>NR<

Nitrile rubber.

>PA<

Polyamide:

The designation is often followed by one of the figures 6, 6.6, 11 or 12. Used primarily for engine compartment components, compressed air and fuel pipes. Recycling is limited by the availability of material. Material characteristics are not degraded significantly if recycling takes the moisture problem into consideration.

© Scania CV AB 2012, Sweden

>PBT<

Polybutyleneterephthalate:

Recycling is limited by the relatively small amount of available material and poor availability of material data for recycled material.

>PMMA<

Polymethylmethacrylate:

Better known as plexiglas. Used primarily for covers for lighting and instruments. Easy to recycle.

>PC<

Polycarbonate:

At Scania, PC rarely occurs in its pure form but often in combination with PBT or ABS.

>PC+PBT<

A mixture of PC and PBT, combining the best characteristics from both materials. The material is sensitive to moisture and high temperatures during production.

Recycling is difficult to assess as the material degrades at high temperatures and after exposure to moisture for long periods.

>PC+ABS<

Mixture of PC and ABS. Recycling is easier than PC+PBT and works well for material for simpler products.

© Scania CV AB 2012, Sweden

>PE<

Polyethylene:

Several designations can occur depending on the density:

PE - LD where LD means Low Density

PE - HD where HD means High Density

Used for certain fuel tanks, etc. Polyethylene is the most recycled material in the world. The material absorbs fuel which later, and if recycled, emits odour. Material from fuel tanks should therefore undergo special treatment and be used for energy recovery.

>PP<

Polypropylene.

Normally used for interiors, in low temperature applications around the engine and even externally in some cases. PP is easy to recycle.

>PPO<

Polyphelylene oxide.

>PUR<

Polyurethane (Thermosets):

Used in squab cushions, armrests and noise reduction mats. This material is difficult to recycle at present.

>PVC<

Polyvinyl chloride:

Used for e.g. cable insulation. This material is difficult to recycle as it is sensitive to impurities. In addition hydrochloric acid is created when burned.

© Scania CV AB 2012, Sweden

>TPEL<

Thermoplastic elastomer (rubber).

>UP<

Unsaturated polyester (Thermosets):

At Scania, UP primarily occurs as pressed SMC - Sheet Moulding Compound. SMC is a semi-finished product comprising fibres (usually glass fibres) and UP mixed with filling, release agent, hardener and sometimes paint. Mainly used for air deflector kits and exterior panels.

Colour codes

>ABS<	Acrylonitrile butadiene styrene
>PA<	Polyamide
>PE<	Polyethylene
>PMMA<	Polymethylacrylate
>PP<	Polypropylene
>PVC<	Polyvinyl chloride
>PUR<	Polyurethane
>"other"<	Other polymer materials

Dark blue parts without any markings, e.g. rubber parts, should be sorted as other polymer materials.

© Scania CV AB 2012, Sweden

https://truckmanualshub.com/

Overview

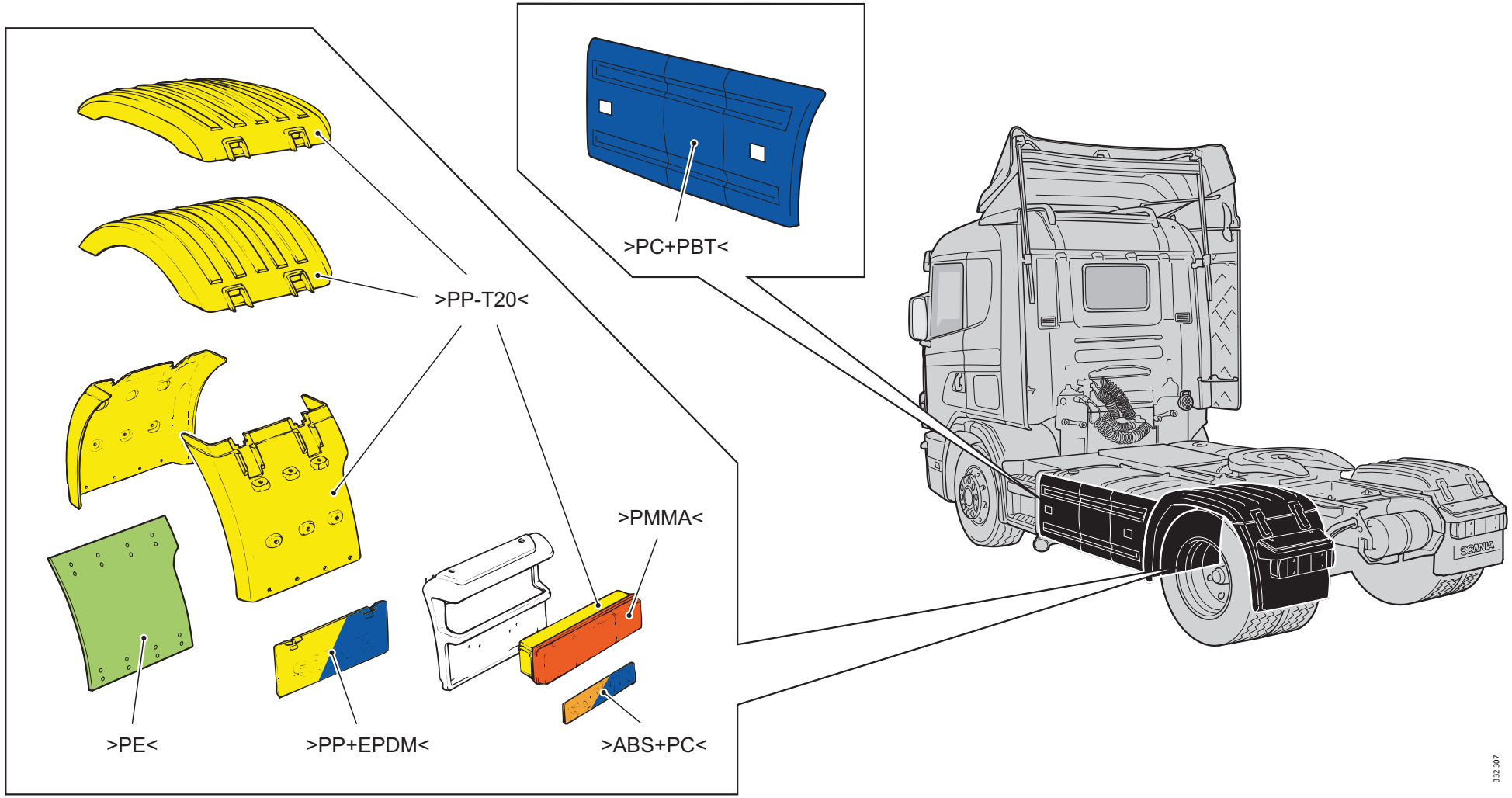

© Scania CV AB 2012, Sweden

https://truckmanualshub.com/

Identification of materials

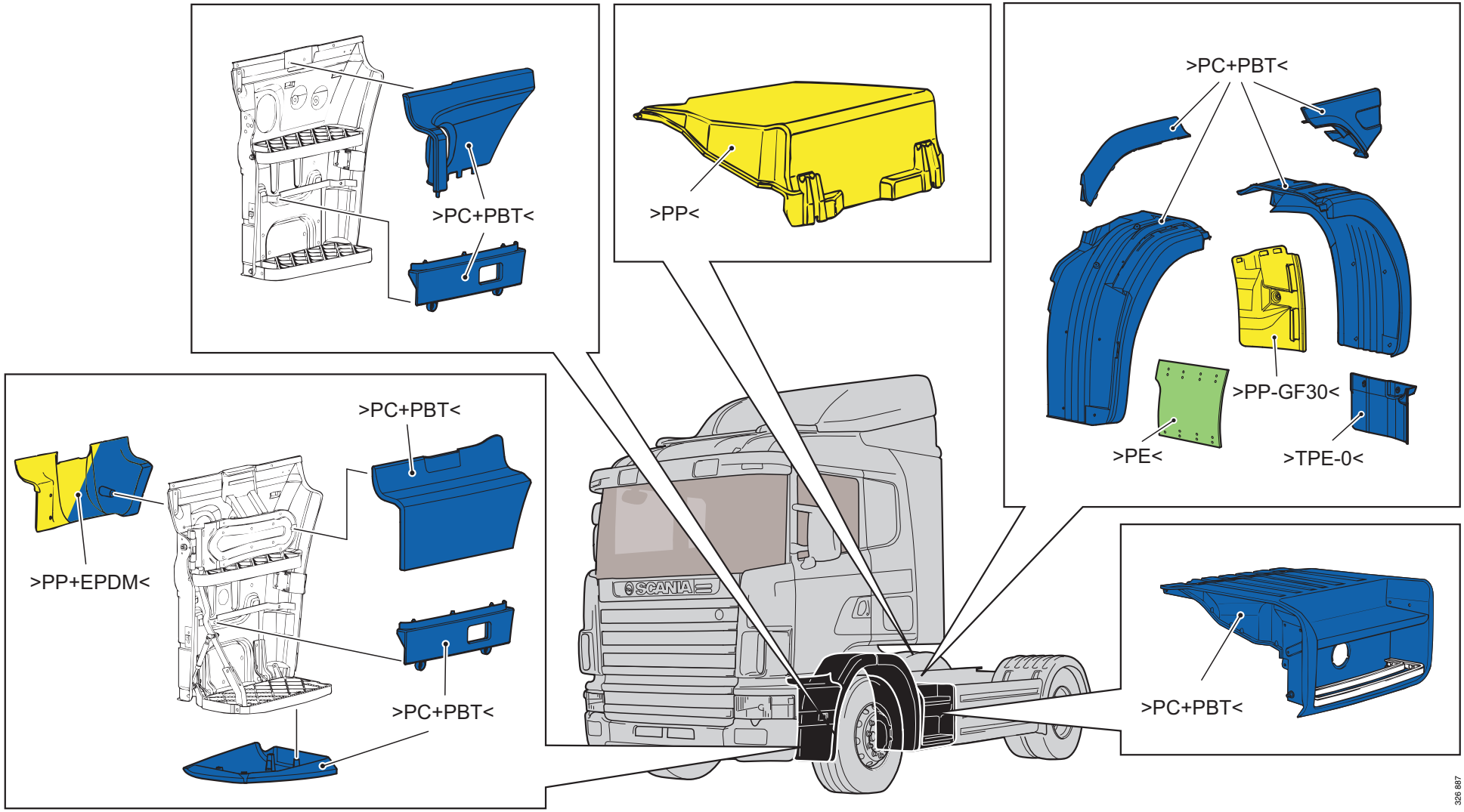

© Scania CV AB 2012, Sweden

https://truckmanualshub.com/

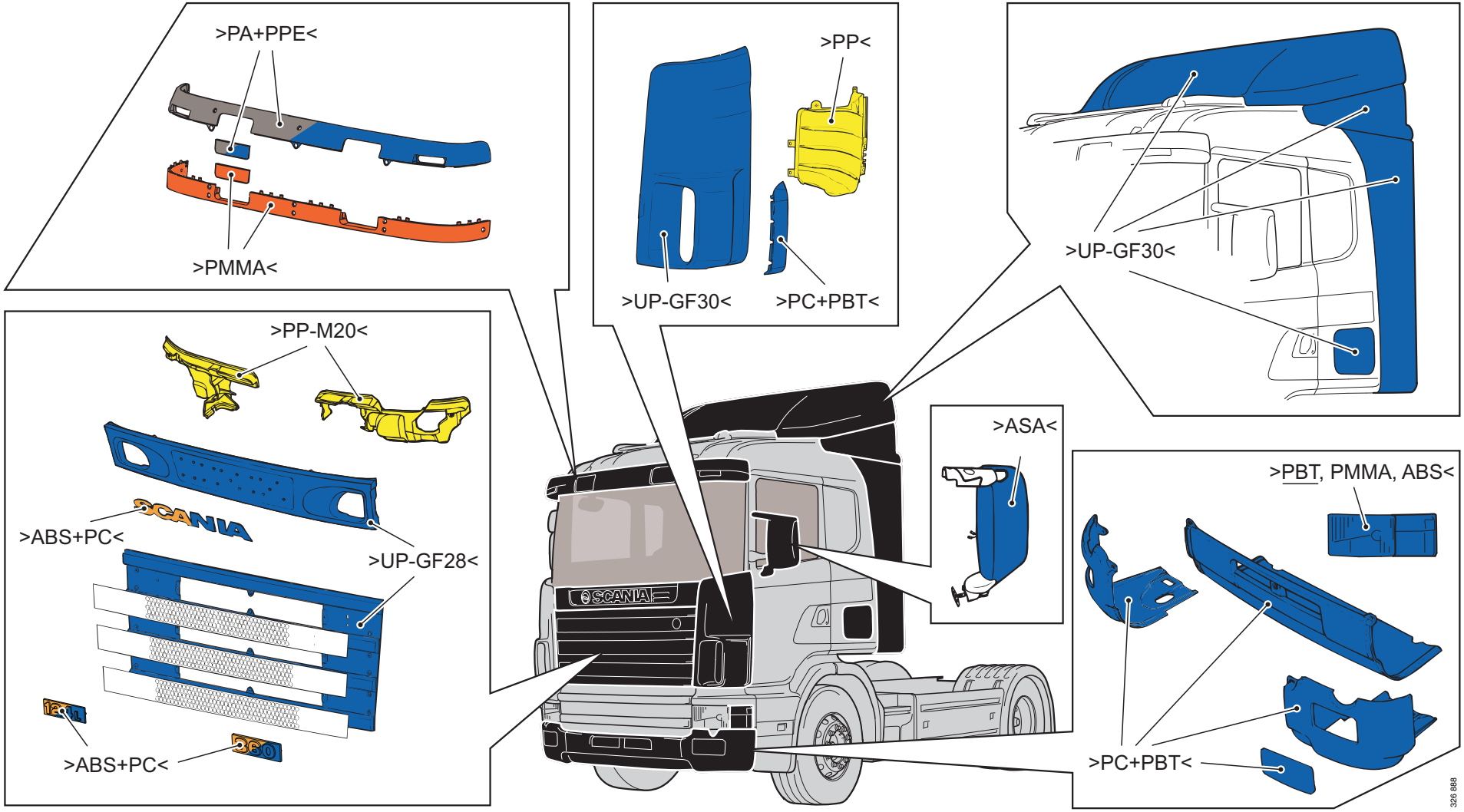

© Scania CV AB 2012, Sweden

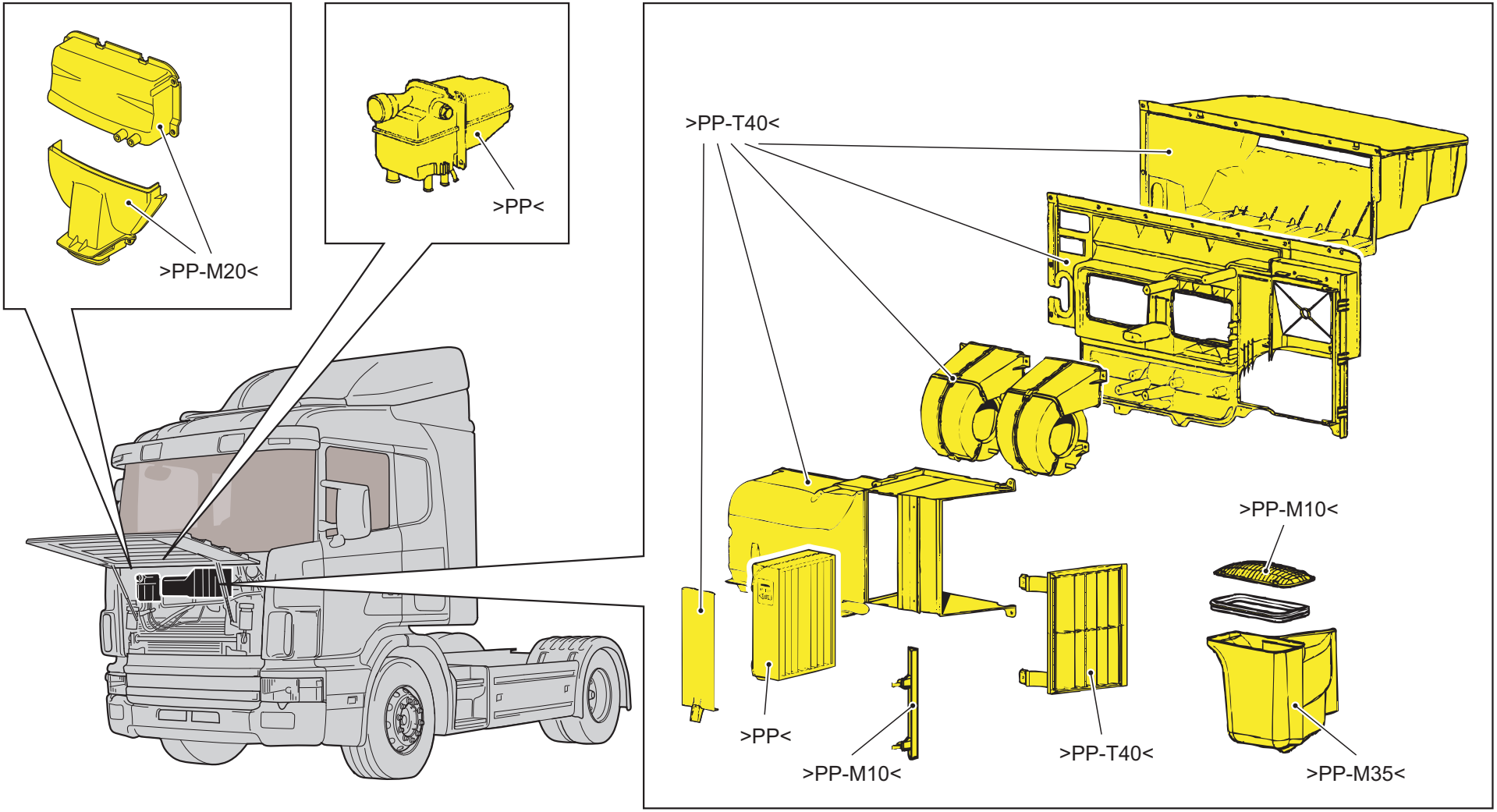

© Scania CV AB 2012, Sweden

https://truckmanualshub.com/

Identification of materials

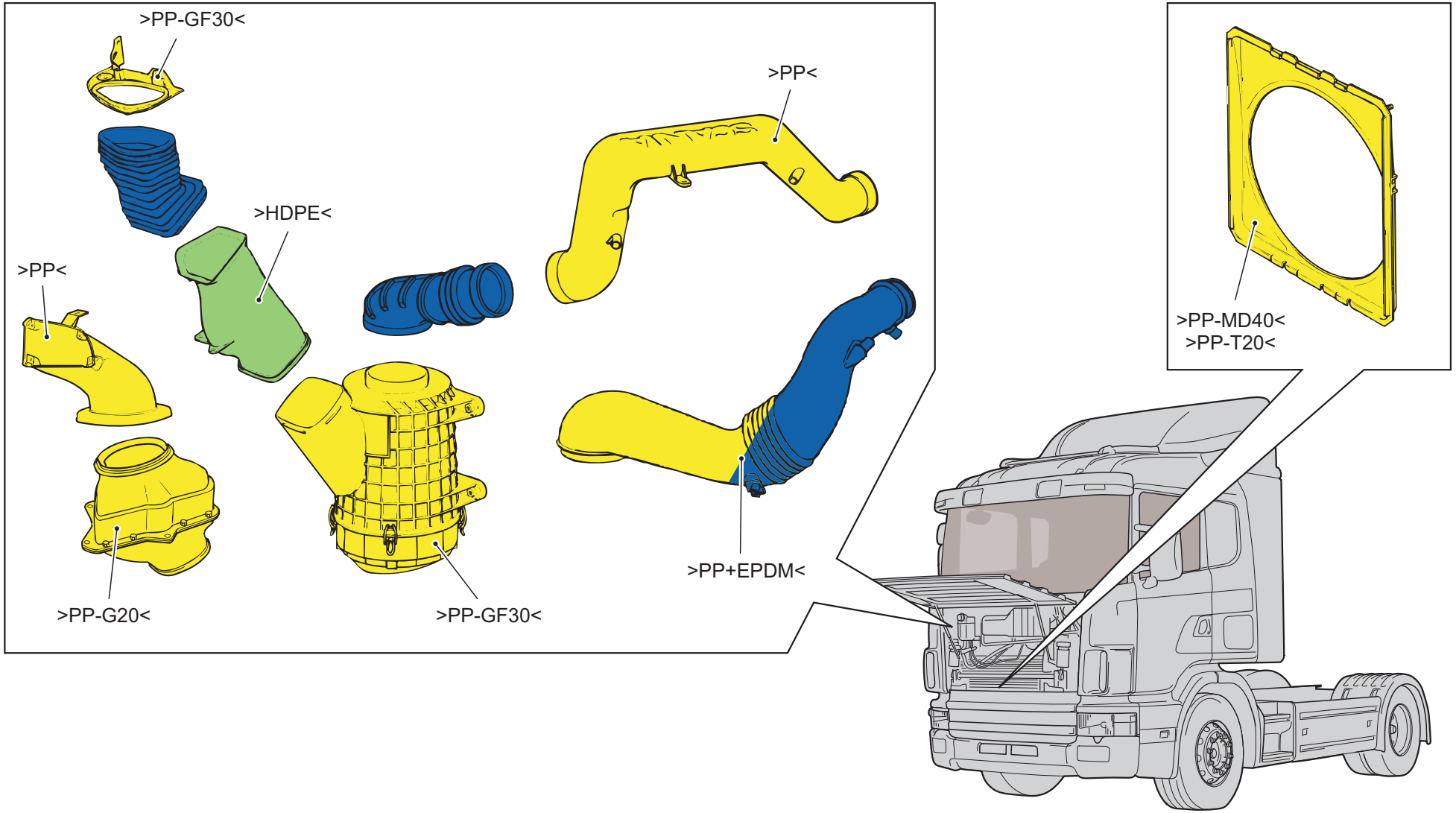

© Scania CV AB 2012, Sweden

https://truckmanualshub.com/

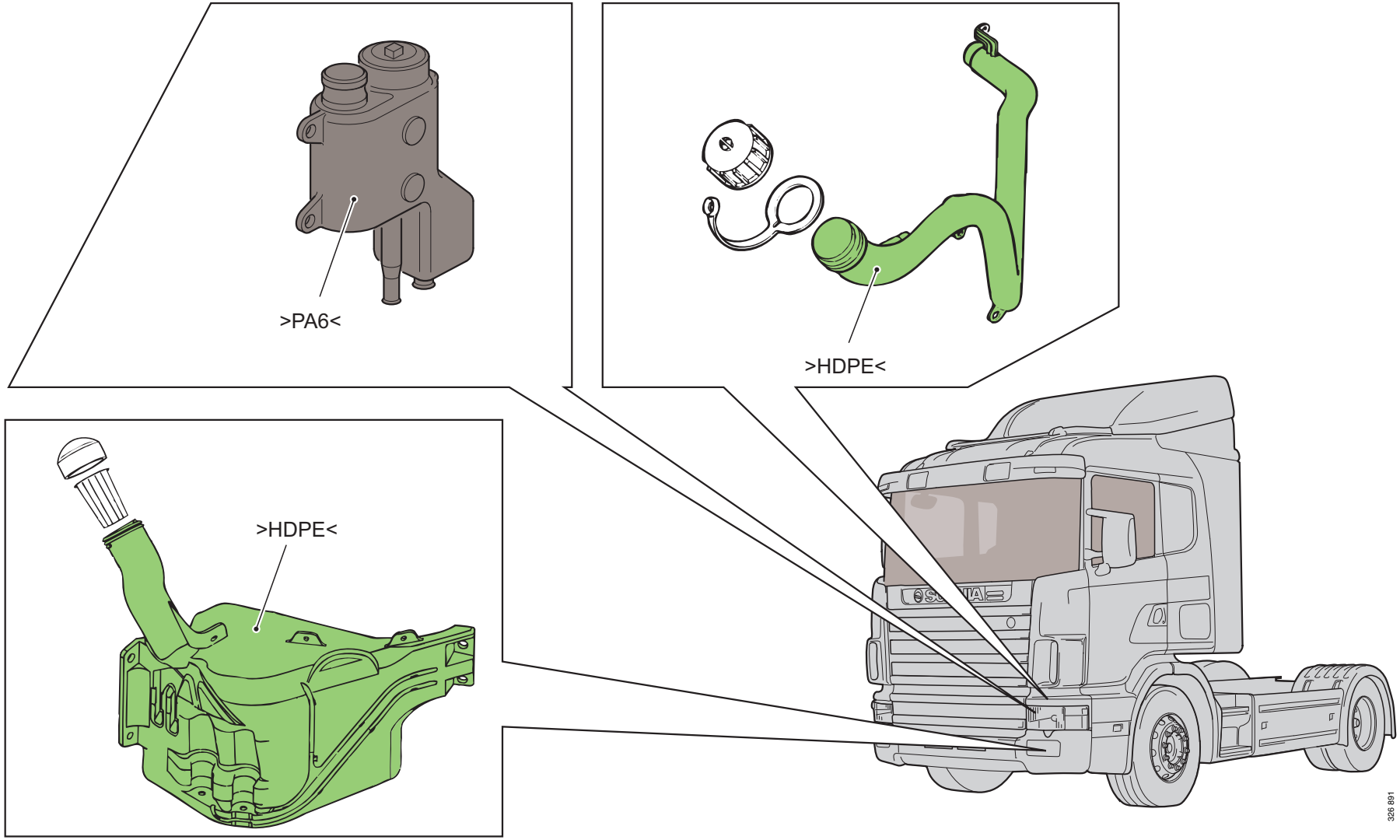

© Scania CV AB 2012, Sweden

https://truckmanualshub.com/

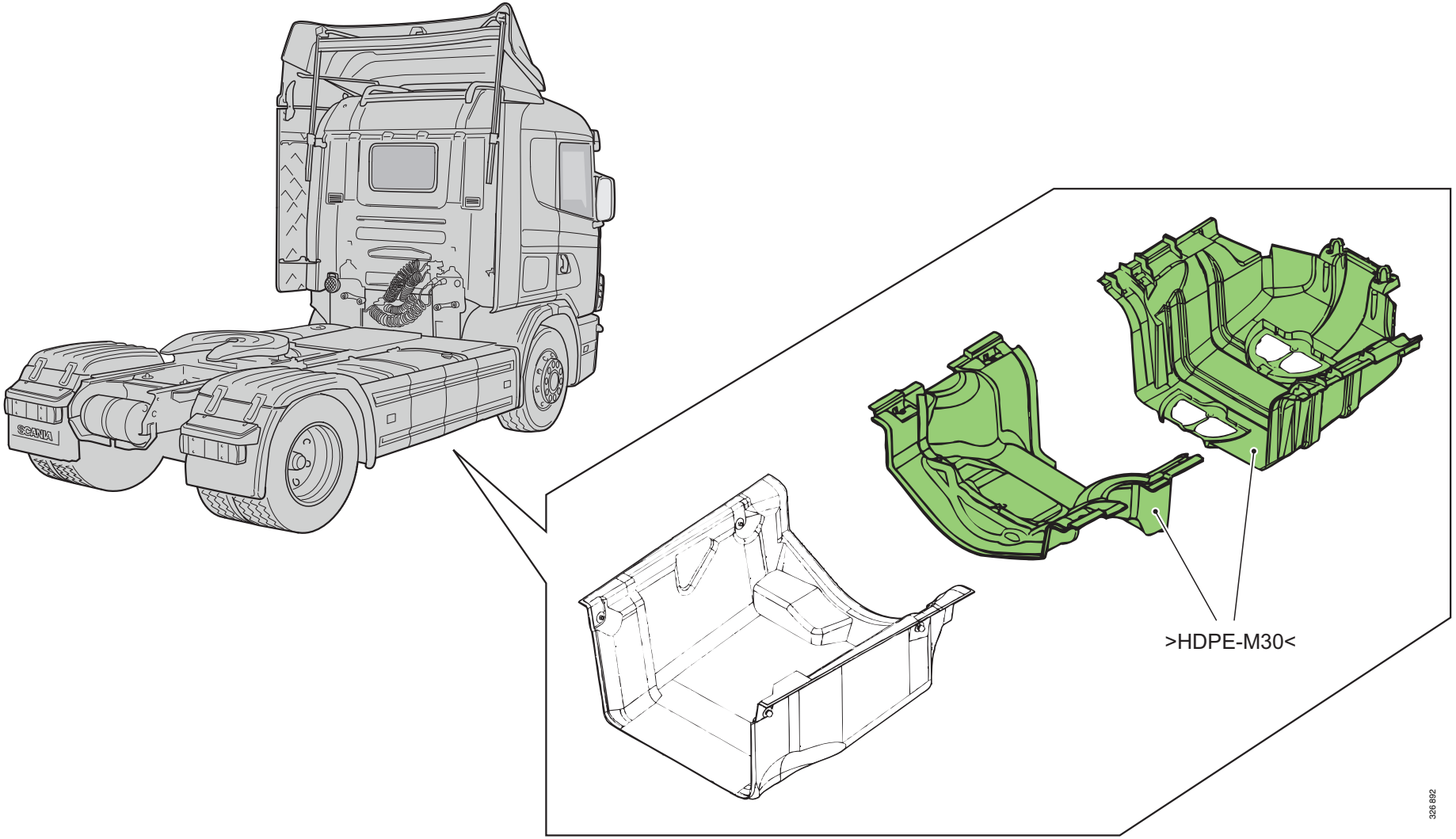

© Scania CV AB 2012, Sweden

https://truckmanualshub.com/

Identification of materials

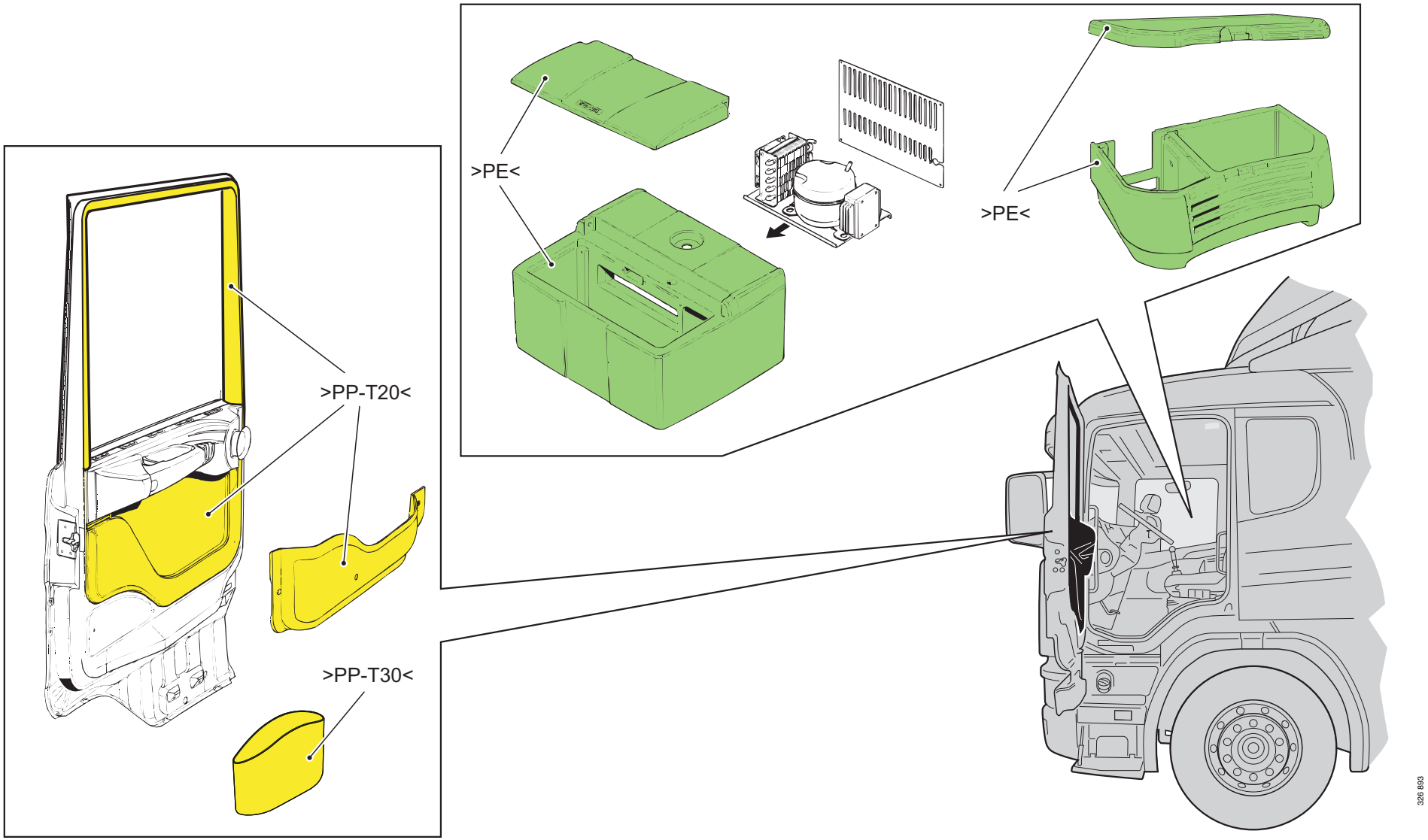

© Scania CV AB 2012, Sweden

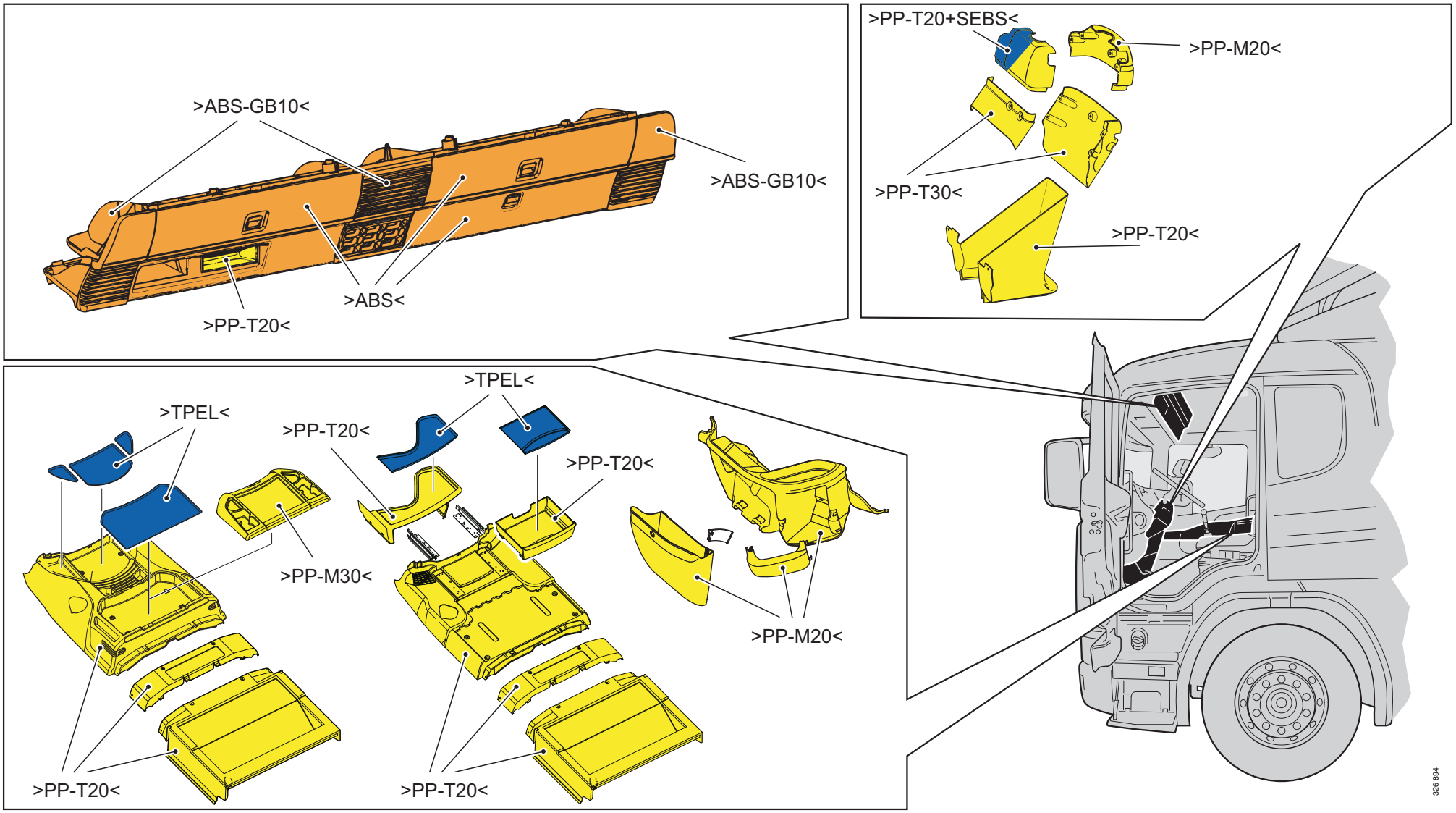

© Scania CV AB 2012, Sweden

https://truckmanualshub.com/

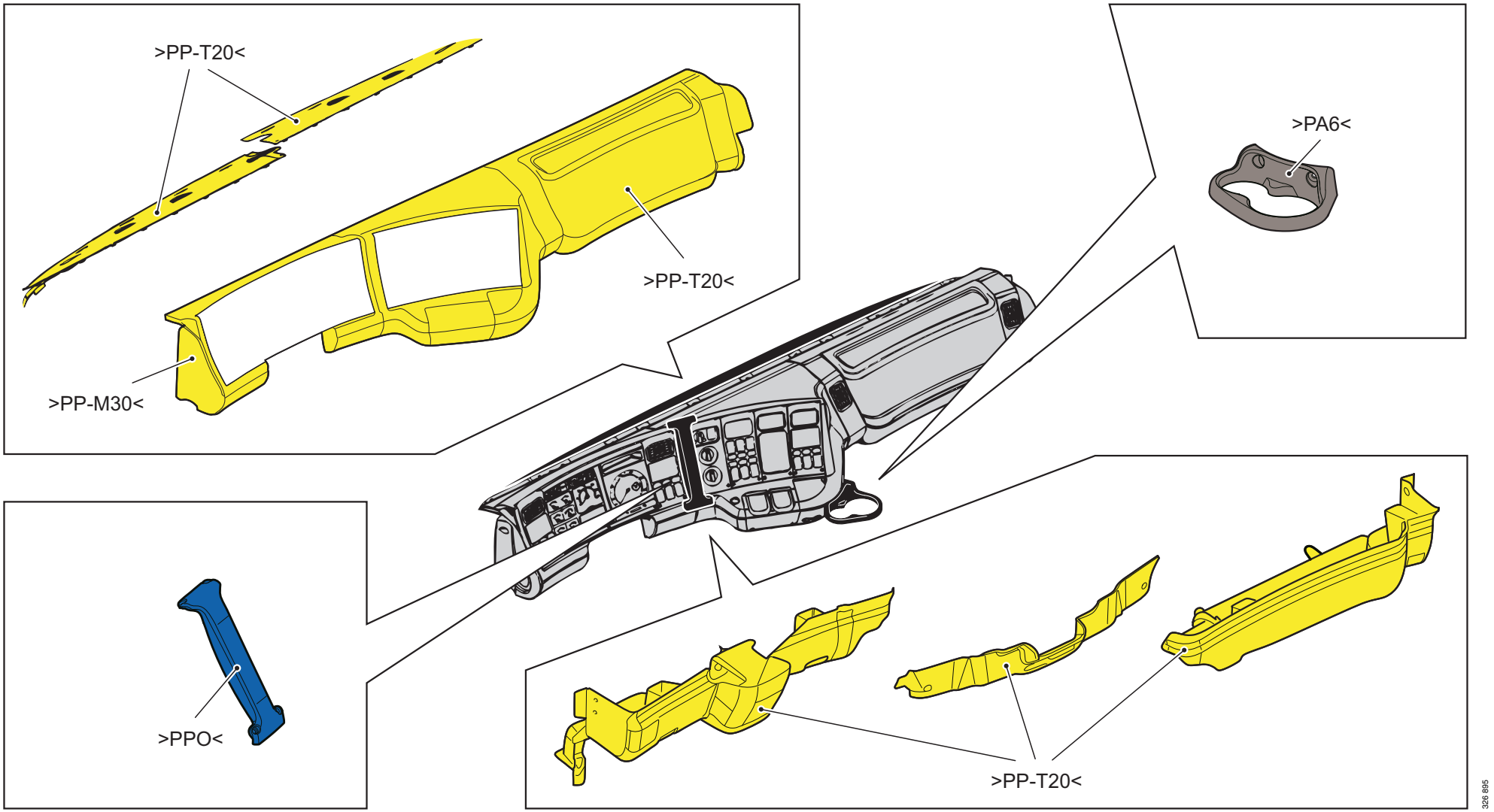

© Scania CV AB 2012, Sweden

https://truckmanualshub.com/

Identification of materials

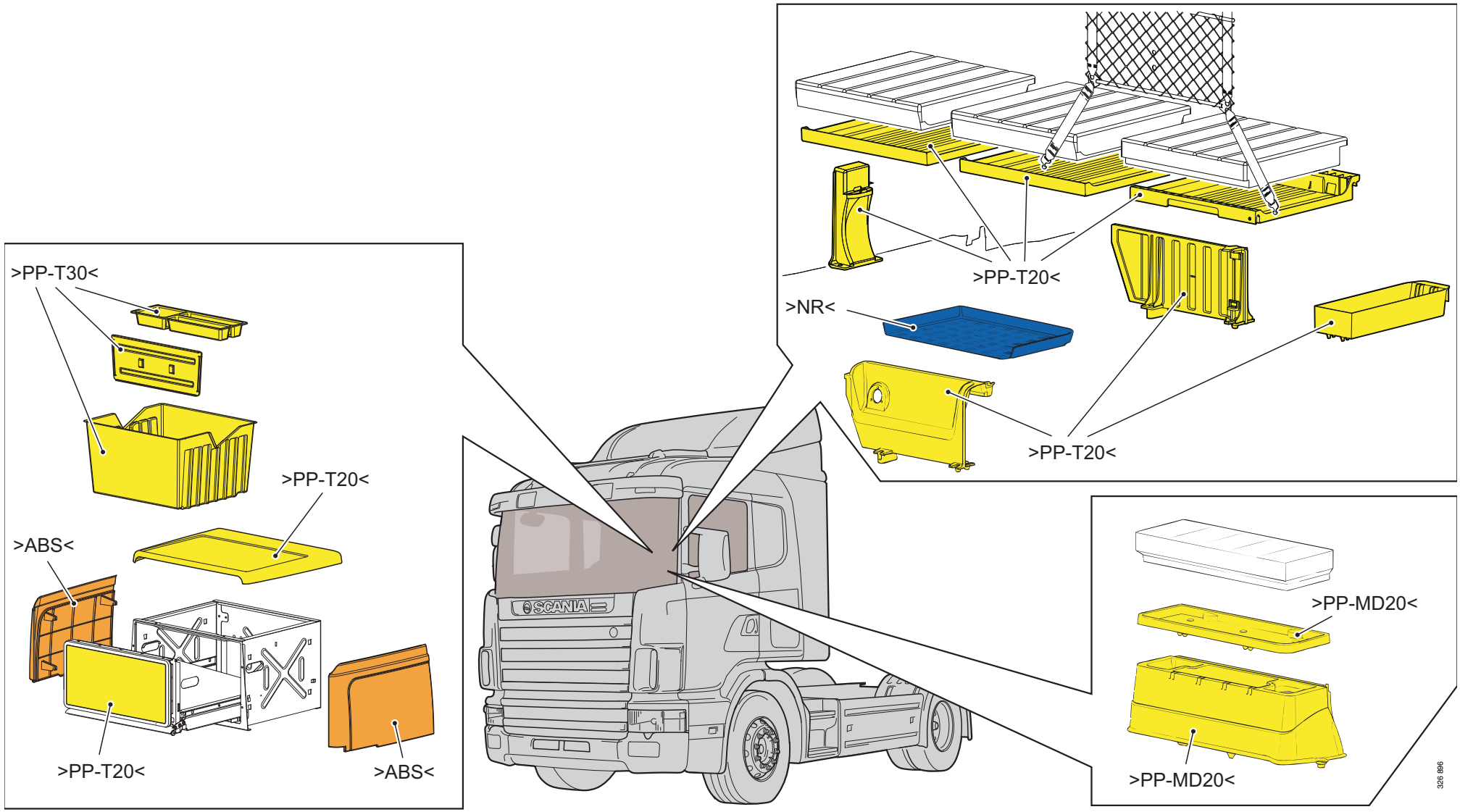

© Scania CV AB 2012, Sweden

https://truckmanualshub.com/

Identification of materials

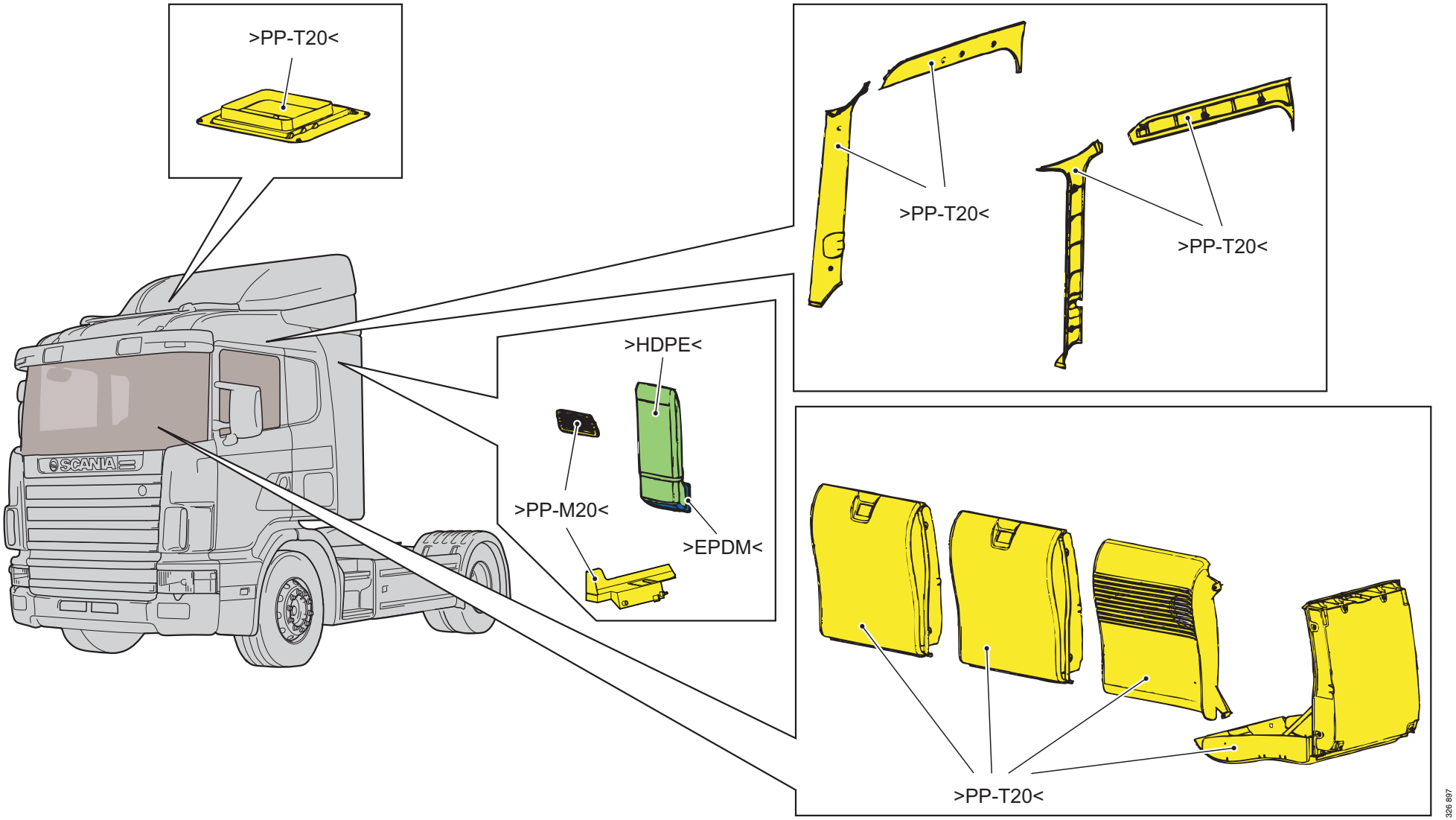

© Scania CV AB 2012, Sweden

https://truckmanualshub.com/

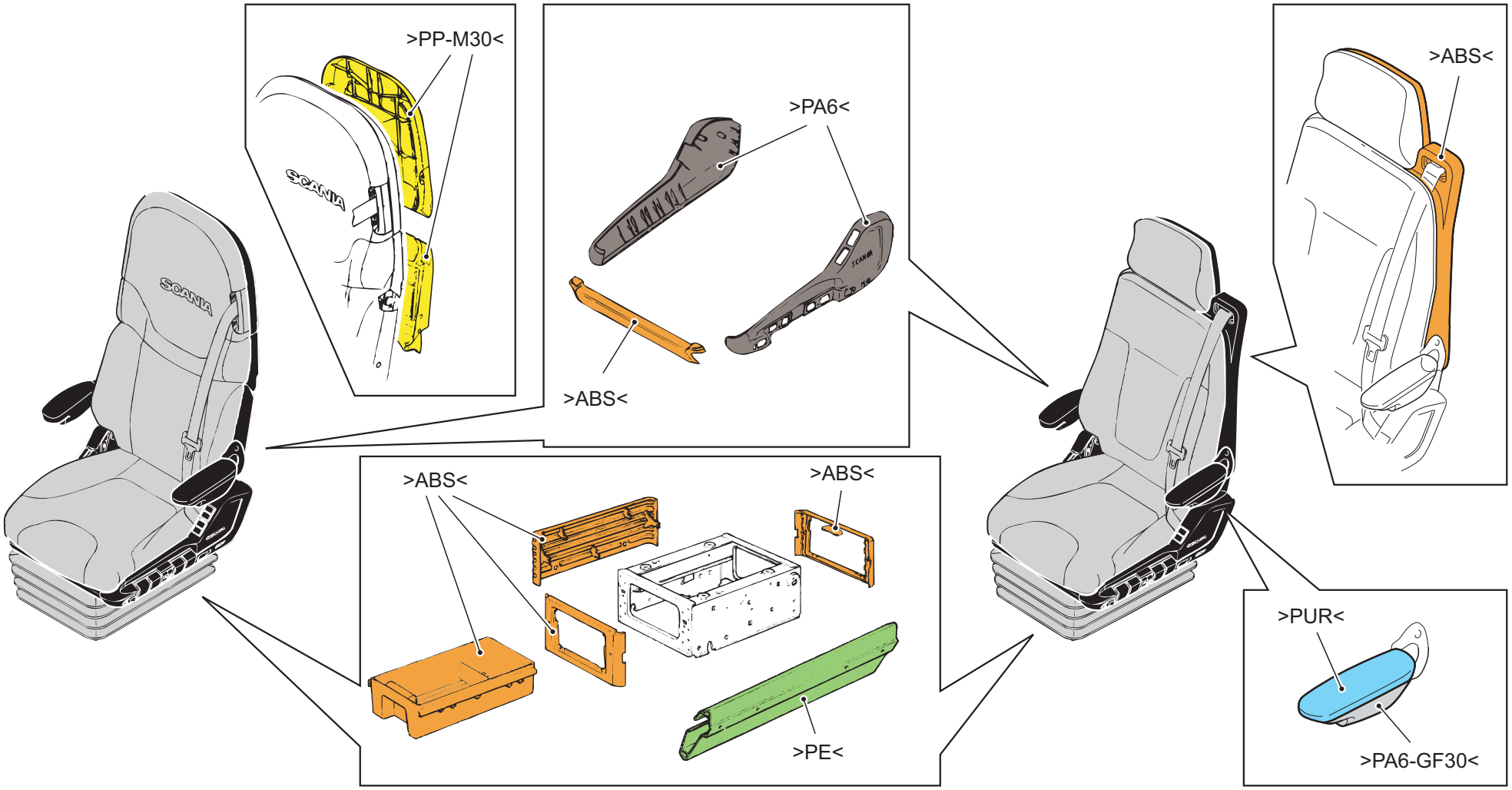

© Scania CV AB 2012, Sweden

https://truckmanualshub.com/

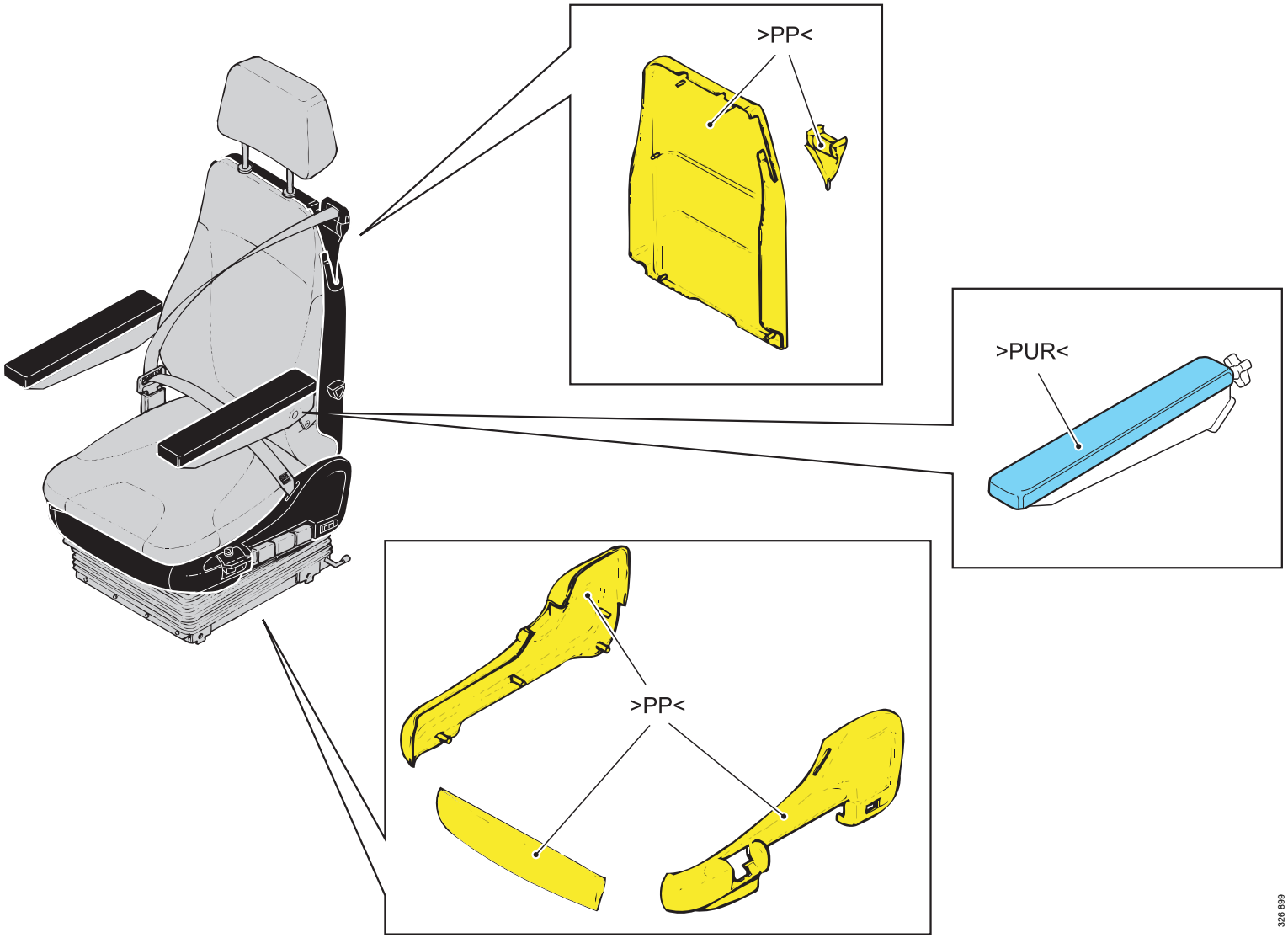

© Scania CV AB 2012, Sweden