https://truckmanualshub.com/

LOVOL

Parts Catalogue of Lovol
TB2SA604-002K Wheeled Tractor

Lovol Heavy Industry Co., Ltd.

https://truckmanualshub.com/

Introduction

This catalogue systematically introduces, through the parts figures and parts lists, the names, part numbers, belonging assemblies, and quantities of main components for Lovol TB2SA604–002K wheeled tractor, in order to facilitate user's use in maintenance, repair of tractors, the selection and purchase of parts, as well as helping users to understand the structure of the tractor and the assembling relationships of the components.

Parts Catalogue for Lovol TB2SA604–002K Wheeled Tractor

Prepared by Lovol Heavy Industry Co., Ltd.

Internal data, please keep with care

☆ ☆ ☆

Format: 889mm × 1194mm 1/16 Serial No.: TB2SA604–002K–TC–1

https://truckmanualshub.com/

Foreword

Lovol wheel tractor is one of the leading products of Lovol Heavy Industry Co., Ltd. Matched with corresponding agricultural implements, they are capable of conducting various field operations, such as plowing, harrowing, sowing, and reaping, as well as providing the fixed power for conveyance operation, power generation, and irrigation and drainage.

With the development of scientific technology and demands of users, the product structure may be improved and perfected continually. Besides the revisions in republication, the contents in this catalogue may differ from the actual configuration, without any prior notification. Please be noted that the user should not claim any improper demands on the basis of the parts lists and parts figures in this catalogue.

As it is difficult to avoid any limitations due to the coverage of vast contents in this catalogue, the vast users are encouraged to advance your precious comments and suggestions for our further improvement and perfection.

Lovol Heavy Industry Co., Ltd. reserved the copyright, revision right, and explanation right for this parts catalogue. Without the prior consent of Lovol Heavy Industry Co., Ltd., it ′s prohibited for any entity or individual to reprint, publish or reproduce, etc this parts catalogue.

Lovol Heavy Industry Co., Ltd.

June, 2018

https://truckmanualshub.com/

Catalogue

Label	Part code and specifications	Part name	Page code
A Engine matching part			
1	TS04110080000K	Air Filter System Assembly(002)	2
2	TS04131090000K	Cooling System Assembly(002)	4
3	TS04132010000	Water Tank Base Plate Mounting Assembly	6
4	TS04201010000	Hand Throttle Control Assembly	8
5	TS04202010000	Foot Throttle Control Assembly	10
6	TS04203010000	Throttle Wire Assembly	12
7	TS04220020000	Exhaust System Assembly	14
B Drive line part			
8	TB550.211B	Clutch Assembly	16
9	TS04212060000K	Clutch Control Assembly(001)	18
10	TB604.371	Gearbox Housing Assembly	20
11	TB604.372T	Main Transmission Assembly-1	22
12	TB604.372T	Main Transmission Assembly-2	24
13	TB604.373T	Gearbox Assistant Gear Assembly	26
14	TS04374010000	Gearbox Control Mechanism Assembly-1	28
15	TS04374010000	Gearbox Control Mechanism Assembly-2	30
16	TS04374010000	Gearbox Control Mechanism Assembly-3	32
17	TS04374010000	Gearbox Control Mechanism Assembly-4	34
18	TB604.375B	Breather assembly	36
19	TB554.381	Shuttle Shift Assembly（005）	38
20	TB554.382	Rear Axle Central Transmission Assembly-1(005)	40
21	TB554.382	Rear Axle Central Transmission Assembly-2(005)	42
22	TS04383010000	Differential Lock Control Mechanism Assembly	44
23	TC02384040000K	Rear Axle Housing Assembly	46
24	TS04385010000	Shuttle Shift Control Mechanism Assembly	48

https://truckmanualshub.com/

Catalogue

Label	Part code and specifications	Part name	Page code
25	TB550.391	Left Final Transmission Assembly(007)	50
26	TB550.392	Right Final Transmission Assembly(006)	52
27	TC02411020000K	PTO Gear Assembly	54
28	TB550.412A	PTO Shaft Assembly(004)	56
29	TS04413010000	PTO Control Assembly	58
30	TB554.421B	Transfer Case Housing Assembly (006)	60
31	TB554.421B	Transfer Case Body Assembly (006) (extension)	62
32	TB554.422	Transfer Case Transmission Assembly(005)	64
33	TS04423010000	Transfer Case Control Assembly	66
C Front axle (shaft) part			
34	TC02311210000	Front Driving Axle Assembly (001)	68
35	TB554.312	Front Bracket Assembly（005）	70
D Running system part			
36	FT404.32F.001	Front Drive Wheel Assembly(005)	72
37	FT550.34F.001	Rear Driving Wheel Assembly (005)	74
E Steering system part			
38	TC04401080000	Steering Gear and Steering Column Assembly	76
39	TS04402070000K	Fully Hydraulic Steering Assembly-1	78
40	TS04402070000K	Fully Hydraulic Steering Assembly-2	80
F Braking system part			
41	TB704.431	Left Brake Assembly	82
42	TB704.432	Right Brake Assembly	84
43	TS04433010000	Braking System Control Mechanism Assembly-1	86
44	TS04433010000	Braking System Control Mechanism Assembly-2	88
45	TS04433010000	Braking System Control Mechanism Assembly-3	90
46	TS04801010000K	Air valve brake assembly	92
47	TS04802010000K	Gas Holder Installation Assembly	94

https://truckmanualshub.com/

Catalogue

Label	Part code and specifications	Part name	Page code
48	TS04803050000K	Air Conveying Pipeline Assembly(001)	96
G Hydraulic hitch and work device			
49	TB400.35C	Towing Mechanism Installation Assembly(002)	98
50	TC02530010000K	Up-down Adjustable Traction Connector	100
51	TC02551230000K	Lifter Installation Assembly-1(003)	102
52	TC02551230000K	Lifter Installation Assembly-2(003)	104
53	TC02551230000K	Lifter Installation Assembly-3(003)	106
54	TS04552010000	Raiser Control Assembly	108
55	TC02553070000K	Hydraulic Auxiliary Oil Tank Assembly (003)	110
56	TC02561060000K	Hitch Assembly-1	112
57	TC02561060000K	Hitch Assembly-2	114
58	TS04581070000K	Oil Pump/Pipe/Filter Assembly(001)	116
59	TC02582090000K	Multi-way Valve Oil Pipe Assembly (001)	118
60	TB300.583A	Single-way Hydraulic Outlet Assembly 2(003)	120
H Cab, driver's seat, covering panel, etc			
61	TC02440090000K	Seat Installation Assembly(001)	122
62	TS04452010000	Floor Assembly-1	124
63	TS04452010000	Floor Assembly-2	126
64	TS04452010000	Floor Assembly-3	128
65	TS04453020000K	Upholstery Assembly(001)	130
66	TS04454010000	Control Cover Assembly	132
67	TS04455020000	Rear Mudguard Trimming Assembly	134
68	TB1S456020000K	Dashboard Assembly(001)	136
69	TS04457010000	Front Connection Assembly	138
70	TS04458010000	Rear Connection Assembly	140
71	TS04461010000K	Safety Frame Assembly (002)	142
72	TS04471030000K	Bonnet Assembly(002)-1	144

https://truckmanualshub.com/

Catalogue

Label	Part code and specifications	Part name	Page code
73	TS04471030000K	Bonnet Assembly(002)-2	146
74	TS04471030000K	Bonnet Assembly(002)-3	148
75	TS04473010000	Bonnet Locking Device Assembly(006)	150
76	TB400.475A	Left Front Mud Gaurd Assembly	152
77	TS04475080000K	Bonnet Seal Installation Assembly（002）	154
78	TB400.476A	Right Front Mud Guard Assembly	156
79	TS04490010000	Tool Kit Assembly	158
80	TB1S501020000K	Oil Tank Installation Assembly-1(001)	160
81	TB1S501020000K	Oil Tank Installation Assembly-2(001)	162
82	TS04503010000	Fuel Tank Fitting Assembly	164
83	TB1S620010000K	Safety Belt Installation Assembly (001)	166
84	TS04741010000K	Front Ballast Frame Assembly	168
85	TC02740010000K	Front Ballast Assembly	170
86	FT600.91.001	Rear Ballast Assembly（007）	172
J Electrical and accessory parts			
87	TS04481080000K	Harness Installation Assembly, Engine(001)	174
88	TS04482010000K	Body Harness Installation Assembly	176
89	TS04483020000K	Front Lamp Harness Installation Assembly(004)	178
90	TS04484040000K	Harness Installation Assembly, Rear Lamp (002)	180
91	TS04484040000K	Harness Installation Assembly, Rear Lamp (002)(extension)	182
92	TS04485010000	Battery Installation Assembly	184
93	TS04487010000	Combination Instrument Assembly	186
94	TB550.489B	Preheating Device Assembly	188

https://truckmanualshub.com/

TS04110080000K Air Filter System Assembly(002)

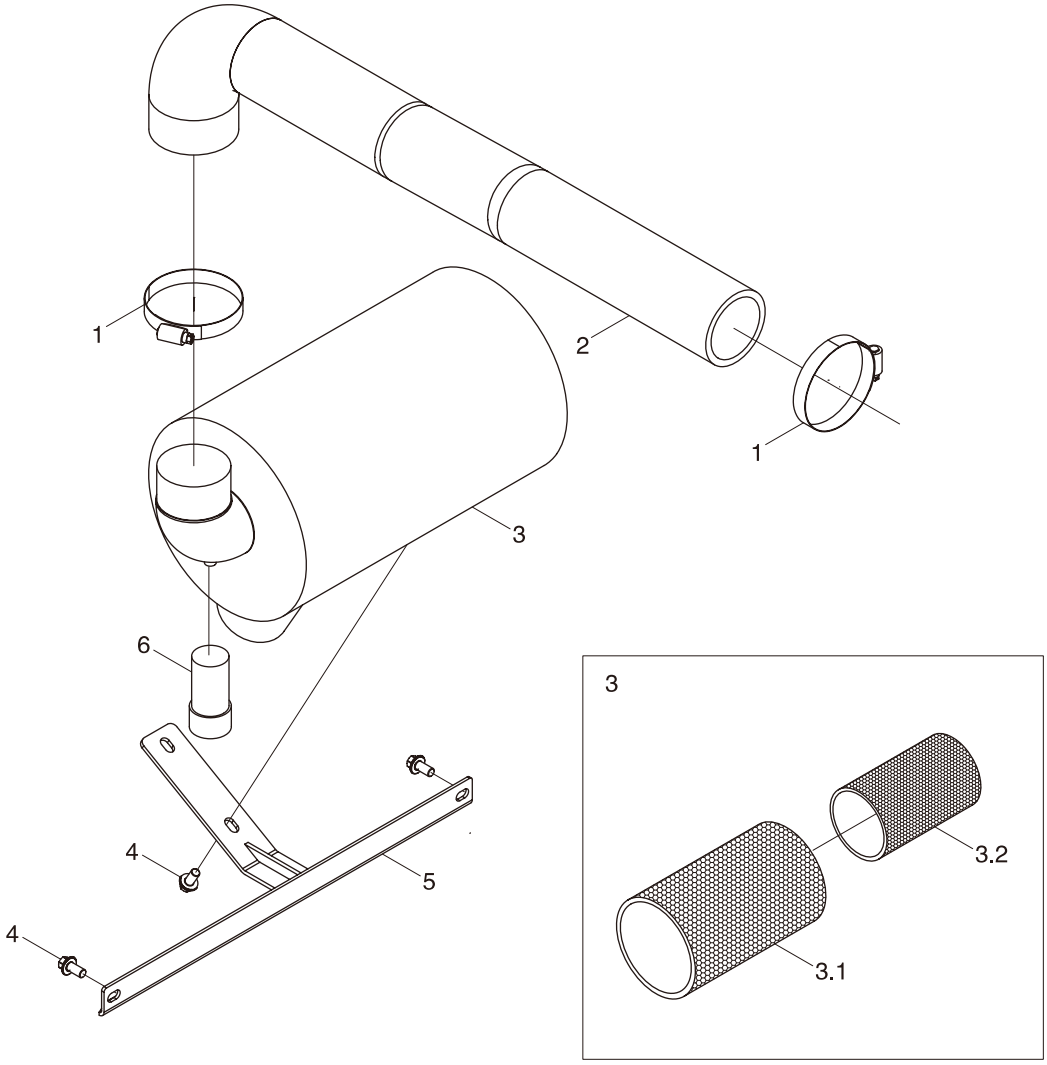

https://truckmanualshub.com/

TS04110080000K Air Filter System Assembly(002)

No.	Part code and specification	Part name	Quantity	Remark
	TS04110080000K	Air Filter System Assembly	1	
1	Q67683	B–Type Worm Transmission Hose Clamp	2	
2	TS04110080004K	Air Filter Connecting Hose	1	
3	TS04110080005K	Air Filter Assembly	1	
3.1	TS04110080007K	Security Filter Element	1	
3.2	TS04110080006K	Main Filter Element	1	
4	GBT16674.1–M8X16–8.8–A2L	Hexagon Flange Nut	4	
5	TS04110080001K	Air Filter Bracket Weldment	1	
6	TD900.11A–01	Air Filter Maintenance Indicator	1	

https://truckmanualshub.com/

TS04131090000K Cooling System Assembly(002)

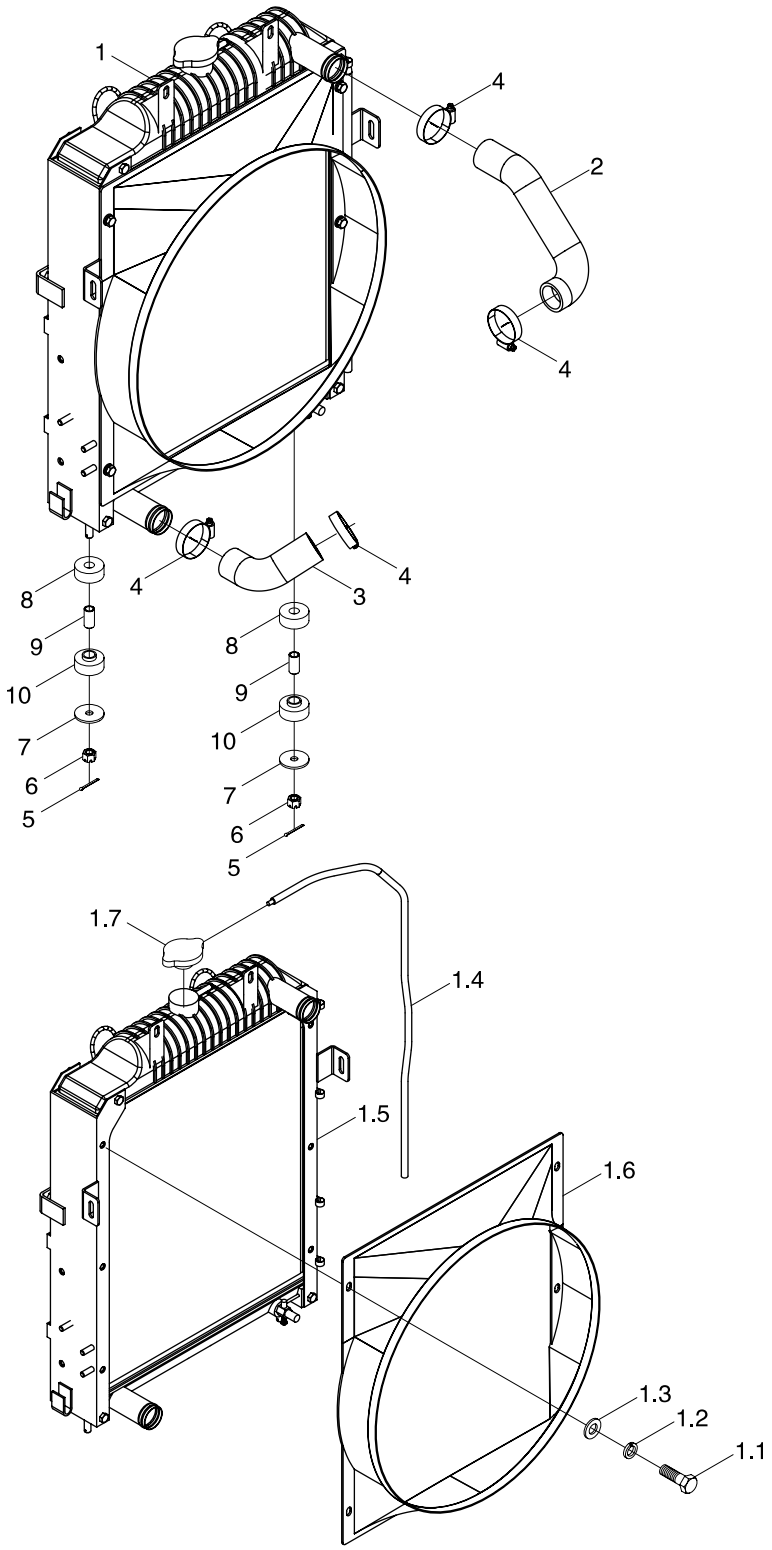

https://truckmanualshub.com/

TS04131090000K Cooling System Assembly(002)

No.	Part code and specification	Part name	Quantity	Remark
	TS04131090000K	Cooling System Assembly	1	
1	TS04131090001K	Radiator Assembly	1	
1.1	GBT5783-M8X16-8.8-A2L	Hexagon Bolt	6	
1.2	GBT93-8-A3L	Standard Spring Washer	6	
1.3	GBT97.1-8-A3L	Flat Washer	6	
1.4	TH400.13.1-03	Overflow Pipe	1	
1.5	TS04131090002K	Water Cooling Radiator Assembly	1	
1.6	TS04131090003K	Wind Guide Cover	1	
1.7	TB400.13.1	I-type Radiator Cap-Pressure Mark 0.5	1	
2	TS04131090004K	Water Tank Inlet Hose	1	
3	TB550.13Q-02	Water Tank Outlet Hose	1	
4	Q67657	B-Type Worm Transmission Hose Clamp	4	
5	GBT91-2.5X28-A3L	Split Pin	2	
6	GBT6178-M10-8-A3L	Hexagon Slotted Nut, Style 1	2	
7	FT650.13.116	Washer	2	
8	TA700.131-01	Rubber Pad	2	
9	TA700.131-02	Sleeve	2	
10	TD800.131-11	Rubber Washer	2	

https://truckmanualshub.com/

TS04132010000 Water Tank Base Plate Mounting Assembly

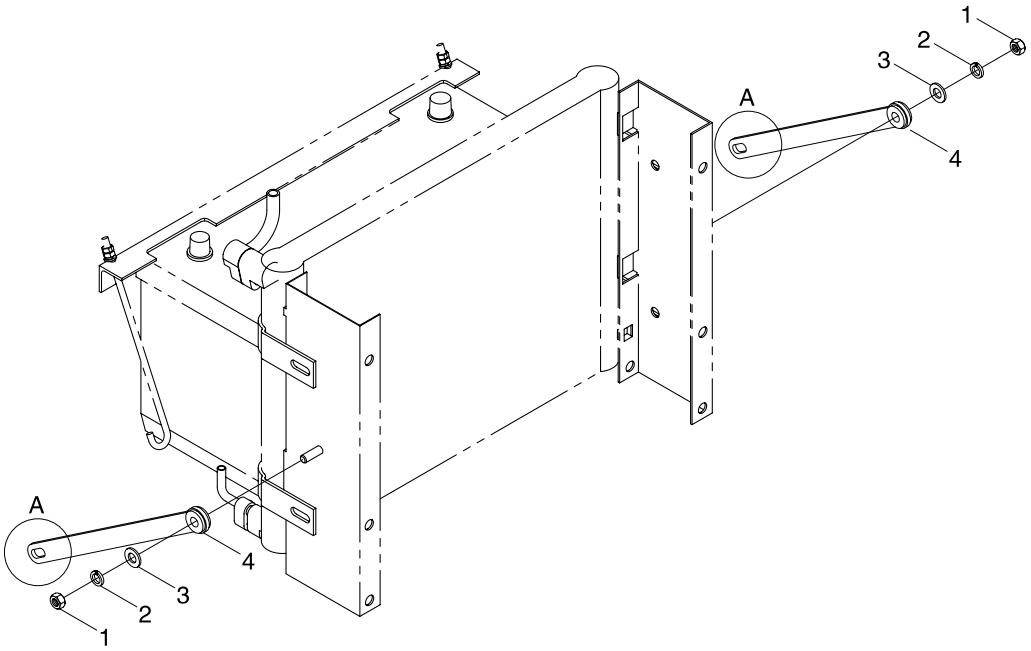

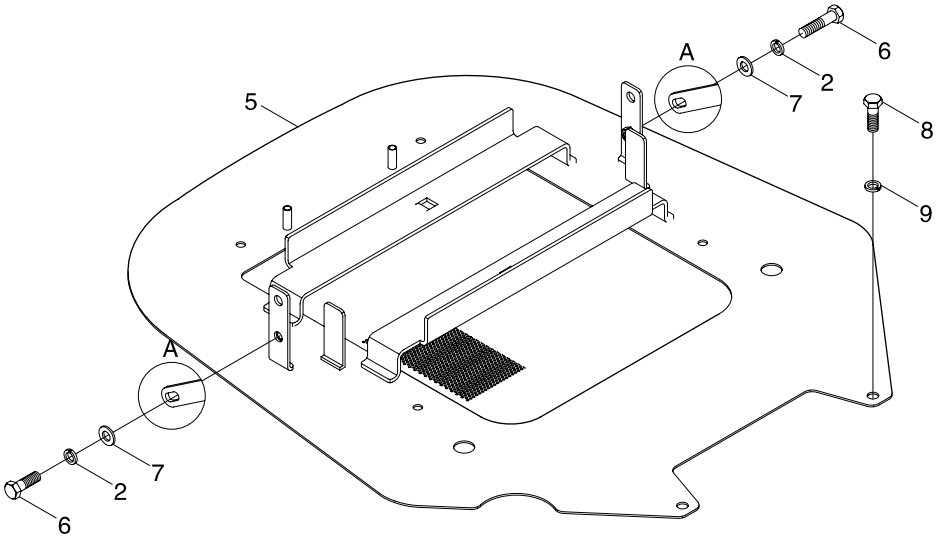

https://truckmanualshub.com/

TS04132010000 Water Tank Base Plate Mounting Assembly

No.	Part code and specification	Part name	Quantity	Remark
	TS04132010000	Water tank base plate mounting assembly	1	
1	GBT6170–M8–8–A2L	Hexagon nut, style 1	2	
2	GBT93–8–A0P	Standard spring washer	7	
3	GBT96.1–8–A0P	Big washer	2	
4	TS04132010005	Pull rod assembly	2	
5	TS04132010001	Water tank base plate welding	1	
6	GBT5783–M8X20–8.8–A2L	Hexagon flange nut	5	
7	GBT97.1–8–A0P	Plain washer	2	
8	GBT5783–M10X20–8.8–A3L	Hexagon flange nut	2	
9	GBT93–10–A0P	Standard spring washer	2	

https://truckmanualshub.com/

TS04201010000 Hand Throttle Control Assembly

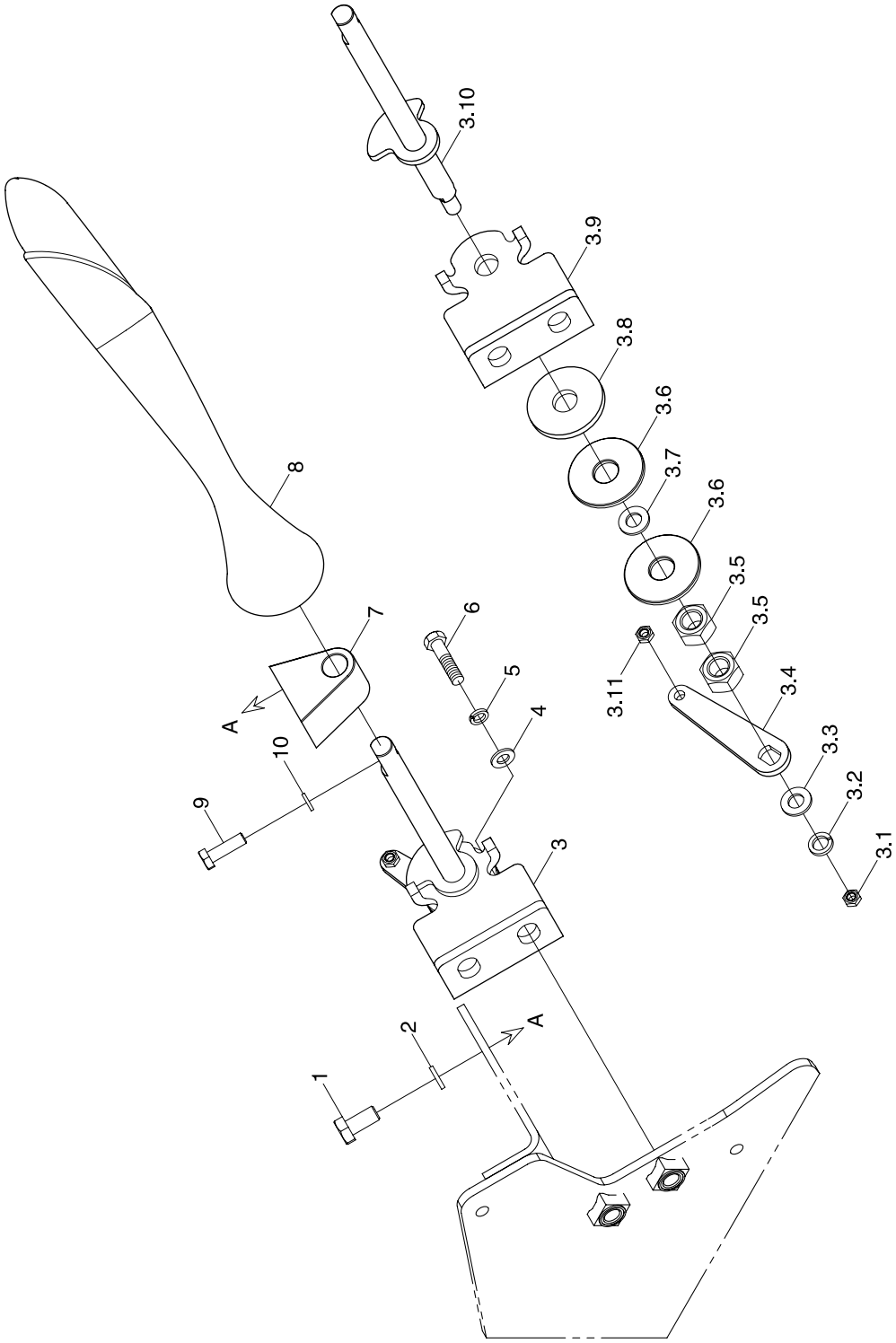

https://truckmanualshub.com/

TS04201010000 Hand Throttle Control Assembly

No.	Part code and specification	Part name	Quantity	Remark
	TS04201010000	Hand throttle control assembly	1	
1	GBT5783-M8X16-8.8-A2L	Hexagon head bolt	2	
2	GBT93-8-A0P	Standard spring washer	2	
3	TS04201010001	Hand throttle control mechanism	1	
3.1	GBT6170-M8-8-A2L	Hexagon nut, style 1	1	
3.2	GBT93-8-A0P	Standard spring washer	1	
3.3	GBT97.1-8-A0P	Plain washer	1	
3.4	TG1204.20A.2-02	Hand throttle rocker arm	1	
3.5	GBT6170-M12-8-A3L	Hexagon nut, style 1	2	
3.6	FT300.43.160	Large washer	2	
3.7	GBT955-12	Spring washer	1	
3.8	FT300.43.159	Hand brake friction disc	1	
3.9	TS04201010004	Hand throttle support plate	1	
3.10	TS04201010002	Hand throttle control lever weldment	1	
3.11	GBT6184-M5-8	Prevailing torque type all-metal hexagon nut, style 1	1	
4	GBT97.1-10-A0P	Plain washer	2	
5	GBT93-10-A0P	Standard spring washer	2	
6	GBT5783-M10X25-8.8-A3L	Hexagon head bolt	2	
7	TS06201010002	Rotary shaft guide seat	1	
8	TS06201010001	Hand throttle control lever assembly	1	
9	GBT5783-M6X20-8.8-A2L	Hexagon head bolt	1	
10	GBT93-6-A0P	Standard spring washer	1	

https://truckmanualshub.com/

TS04202010000 Foot Throttle Control Assembly

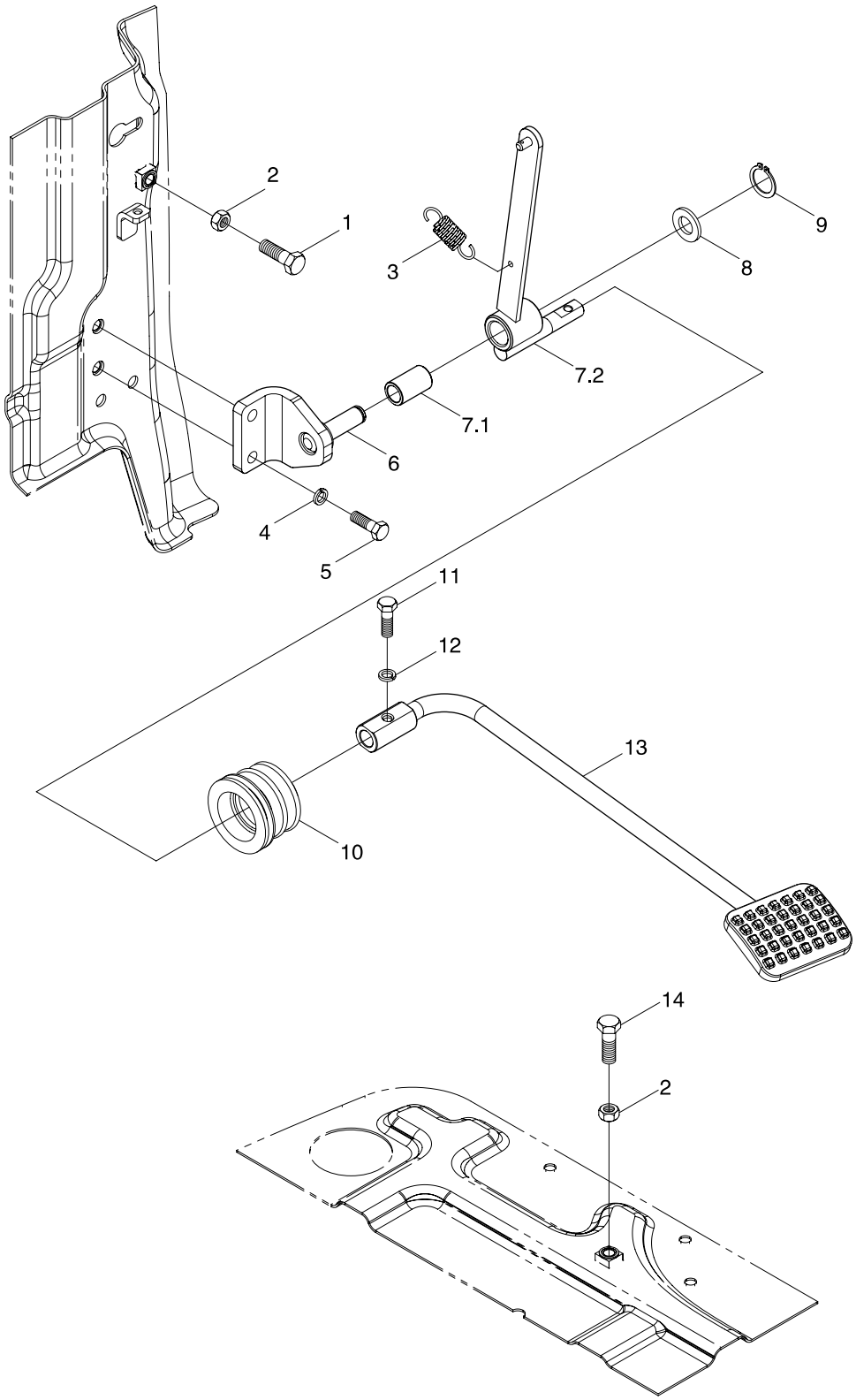

https://truckmanualshub.com/

TS04202010000 Foot Throttle Control Assembly

No.	Part code and specification	Part name	Quantity	Remark
	TS04202010000	Foot throttle control assembly	1	
1	GBT5782–M8X45–8.8–A2L	Hexagon head bolt	1	
2	GBT6170–M8–8–A2L	Hexagon nut, style 1	2	
3	TB604.202A–01	Return spring	1	
4	GBT93–8–A0P	Standard spring washer	2	
5	GBT5783–M8X20–8.8–A2L	Hexagon head bolt	2	
6	TS04202010003	Rotary shaft bracket weldment	1	
7	TS04202010002	Rotary shaft bush unit	1	
7.1	TB604.202A.1–01	Sleeve bush	1	
7.2	TS04202010002	Rotary shaft bush weldment	1	
8	GBT97.1–12–A0P	Plain washer	1	
9	GBT894.1–12	Circlip for shaft	1	
10	TB400.474E–01	Dustproof sleeve	1	
11	GBT5783–M6X20–8.8–A2L	Hexagon head bolt	1	
12	GBT93–6–A0P	Standard spring washer	1	
13	TS04202010001	Pedal rocker arm weldment	1	
14	GBT5783–M8X35–8.8–A2L	Hexagon head bolt	1	

https://truckmanualshub.com/

TS04203010000 Throttle Wire Assembly

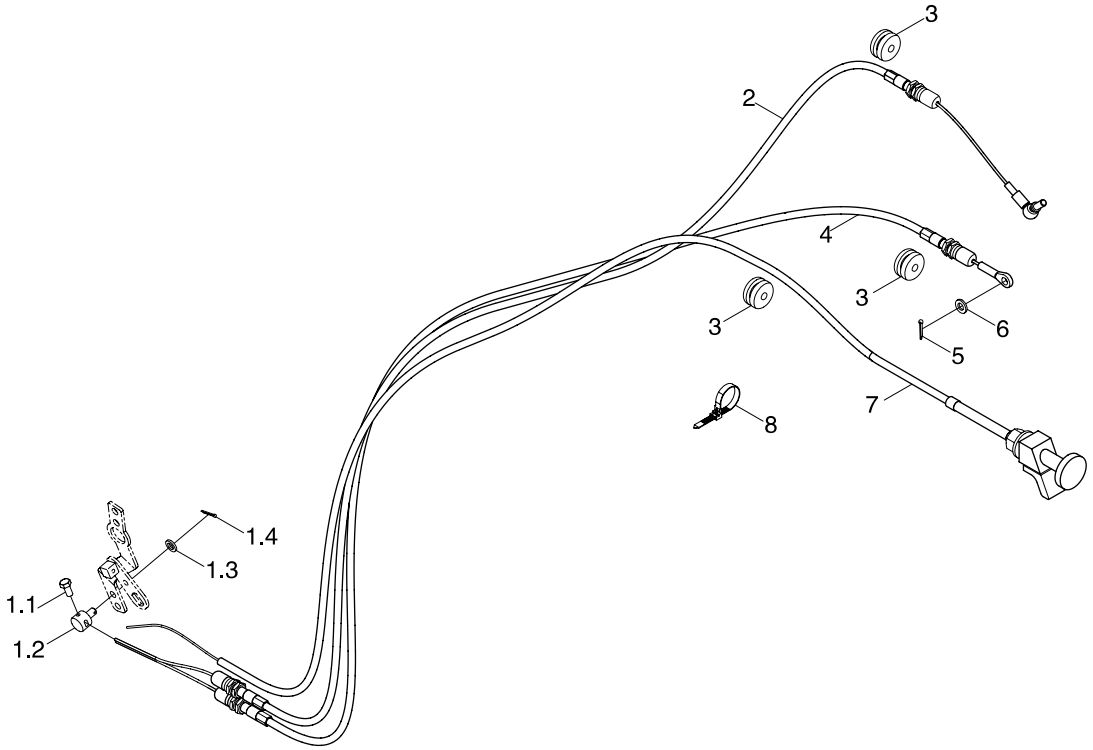

https://truckmanualshub.com/

TS04203010000 Throttle Wire Assembly

No.	Part code and specification	Part name	Quantity	Remark
	TS04203010000	Throttle wire assembly	1	
1	TF1354.203.1	Throttle wire fixing seat unit	1	
1.1	GBT5781–M5X10–4.8–A2L	Hexagon head bolt	1	
1.2	TF1354.203.1–01	Throttle wire fixing seat	1	
1.3	GBT848–6–A0P	Small washer	1	
1.4	GBT91–1.6X12–A0P	Split pin	1	
2	TS04203010001	Hand throttle wire assembly	1	
3	TG1204.20A–02	Rubber band	3	
4	TS04203010002	Foot throttle wire assembly	1	
5	GBT91–2X12–A0P	Split pin	1	
6	GBT97.1–6–A0P	Plain washer	1	
7	TS04203010003	Flameout wire fixing hole plug	1	
8	Q67405100	Plastic fastening strap	On demand	

https://truckmanualshub.com/

TS04220020000 Exhaust System Assembly

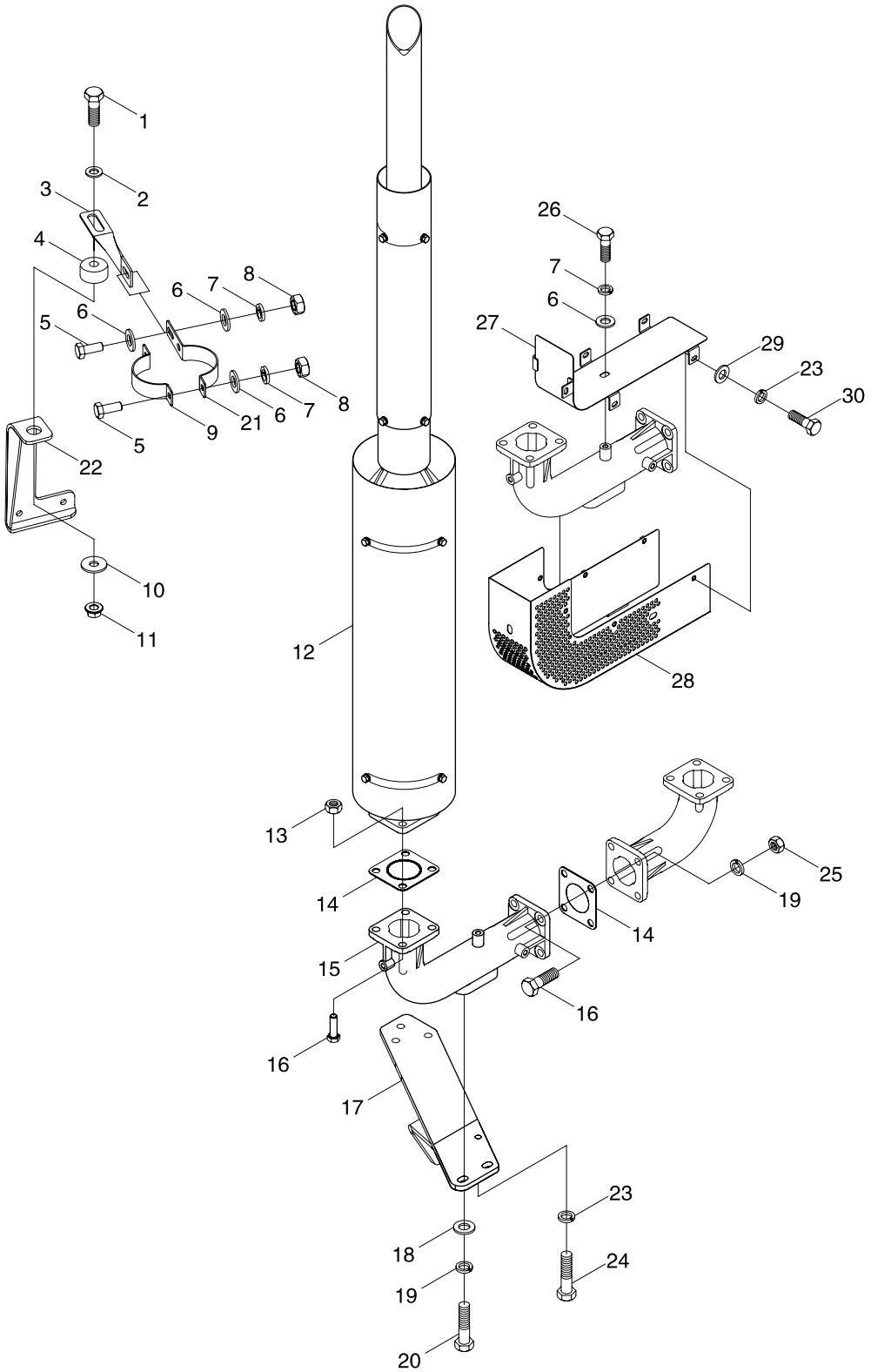

https://truckmanualshub.com/

TS04220020000 Exhaust System Assembly

No.	Part code and specification	Part name	Quantity	Remark
	TS04220020000	Exhaust System Assembly	1	
1	GBT5782–M12 × 50–8.8–A3L	Hexagon Head Bolt	1	
2	GBT97.1–12–A0P	Plain Washer	1	
3	TD800.22N–01	Pull Rod	1	
4	TD900.22B–03	Upper Rubber Gasket	1	
5	GBT5783–M8 × 20–8.8–A2L	Hexagon Head Bolt	5	
6	GBT97.1–8–A0P	Plain Washer	4	
7	GBT93–8–A0P	Standard Spring Washer	7	
8	GBT6170–M8–8–A2L	Hexagon Nut, Style 1	3	
9	TS04220020005	Right Clasp	1	
10	GBT96.1–12–A0P	Large Washer	1	
11	SPL6177.1–M12–F3	Hexagon Flange Nut	1	
12	TS04220010001	Muffler Assembly	1	
13	SPL6175PT–M10 × 1.5–8F3	Spiralock Type 2 Hexagon Self–Locking Locknut	4	
14	FT300.22.030	Seal Gasket Unit	2	
15	TS04220010002	Exhaust Bending Pipe 1	1	
16	GBT5783–M10 × 35–8.8–A3L	Hexagon Head Bolt	8	
17	TS04220010005	Fixing Bracket Weldment	1	
18	GBT97.1–10–A0P	Plain Washer	2	
19	GBT93–10–A0P	Standard Spring Washer	9	
20	GBT5783–M10 × 25–8.8–A3L	Hexagon Head Bolt	5	
21	TS04220020004	Left Clasp	1	
22	TS04220020001	Bracket Weldment	1	
23	GBT93–6–A0P	Standard Spring Washer	5	
24	GBT5783–M6 × 16–8.8–A2L	Hexagon Head Bolt	1	
25	GBT6170–M10–8–A3L	Hexagon Nut, Style 1	4	
26	GBT5783–M8 × 16–8.8–A2L	Hexagon Head Bolt	3	
27	TS04220010011	Upper Shield Screen Weldment	1	
28	TS04220010010	Lower Shield Screen Weldment	1	
29	GBT97.1–6–A0P	Plain Washer	4	
30	GBT5783–M6 × 12–8.8–A2L	Hexagon Head Bolt	4	

https://truckmanualshub.com/

TB550.211B Clutch assembly

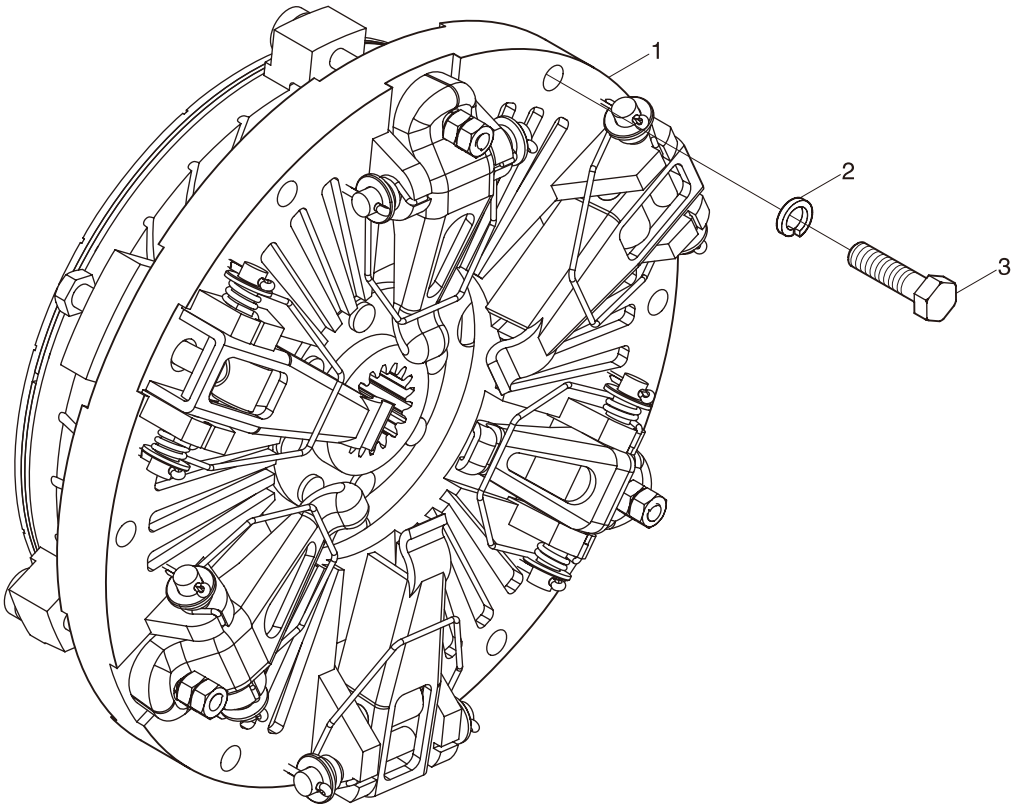

https://truckmanualshub.com/

TB550.211B Clutch assembly

No.	Part code and specification	Part name	Quantity	Remark
	TB550.211B	Clutch assembly	1	
1	TB550.211B.1	Clutch subassembly	1	
2	GBT93–8–A0P	Spring washer	12	
3	TD800.212B–02	Bolt M8X95	12	

https://truckmanualshub.com/

TS04212060000K Clutch Control Assembly(001)

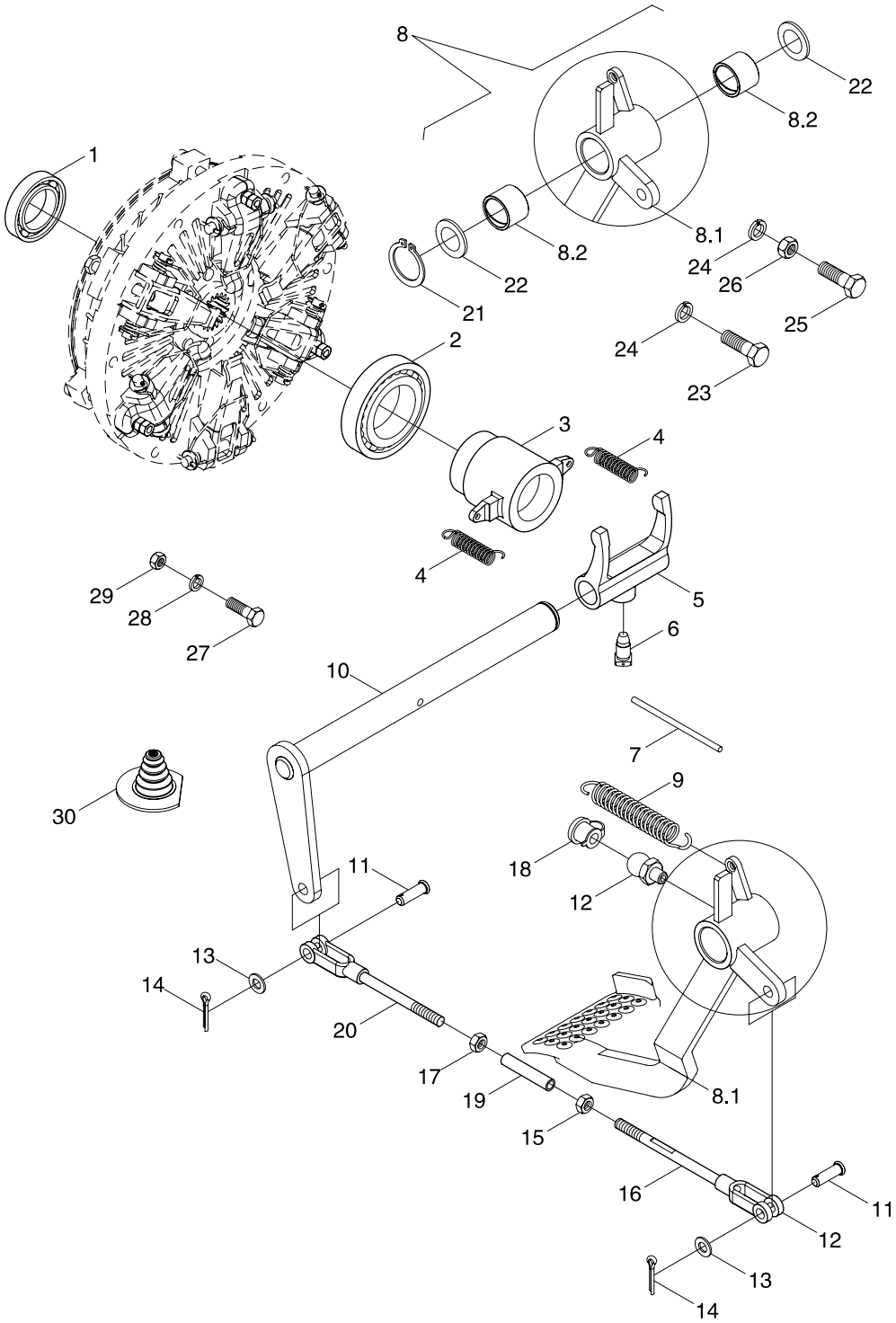

https://truckmanualshub.com/

TS04212060000K Clutch Control Assembly(001)

No.	Part code and specification	Part name	Quantity	Remark
	TS04212060000K	Clutch Control Assembly	1	
1	GBT276-6204-2RS	Deep Groove Ball Bearing	1	
2	TA800.212-02	Release Bearing 996713	1	
3	FT400.21B.101	Release Bearing Seat	1	
4	TB604.212-03	Thrust Bearing Seat Return Spring	2	
5	FT300.21.103	Release Fork	1	
6	FT300.21.113	Thrust Screw	1	
7	TA800.212B-02	Low Carton Steel Wire Sz-1.4	1	
8	TB604.212.1	Clutch Pedal Unit	1	
8.1	TB604.212.1.1	Clutch Pedal Weldment	1	
8.2	FT300.37.159	Release Fork Shaft Bush	2	
9	TD800.43-01	Pedal Return Spring	1	
10	TB604.212.3	Clutch Rocker Shaft Weldment	1	
11	GBT882-B10X32-A3L	Pin Shaft	2	
12	JBT7940.1-M8X1	Straight Forced Filling Oil Cup	1	
13	GBT97.1-10-A3L	Flat Washer	2	
14	GBT91-3.2X20-A3L	Split Pin	2	
15	GBT6171-M12X1.5-8-A3L	Hexagon Nut, Type-1	1	
16	TB604.212A.5	Upper Pull Rod Weldment	1	
17	GBT6171-M12X1.5-LH-8-A3L	Hexagon Nut, Type-1	1	
18	JBT7940.2-90dM8X1	Joint Fill Oil Cup	2	
19	TE354.433-03	Connecting Rod	1	
20	TB604.212.6	Lower Pull Rod Weldment	1	
21	GBT894.1-25	Circlip For Shaft	1	
22	TE250.433C-02	Washer	2	
23	GBT5783-M10X40-8.8-A3L	Hexagon Bolt	6	
24	GBT93-10-A3L	Standard Spring Washer	7	
25	GBT5783-M10X70-8.8-A2L	Hexagon Bolt	1	
26	GBT6170-M10-8-A3L	Hexagon Nut, Type-1	1	
27	GBT5783-M8X30-8.8-A2L	Hexagon Bolt	1	
28	GBT93-8-A3L	Standard Spring Washer	1	
29	GBT6172.1-M8-04-A2L	Hexagon Thin Nut	1	
30	TB604.212-02	Dustproof Sleeve	1	

https://truckmanualshub.com/

TB604.371 Gearbox Housing Assembly

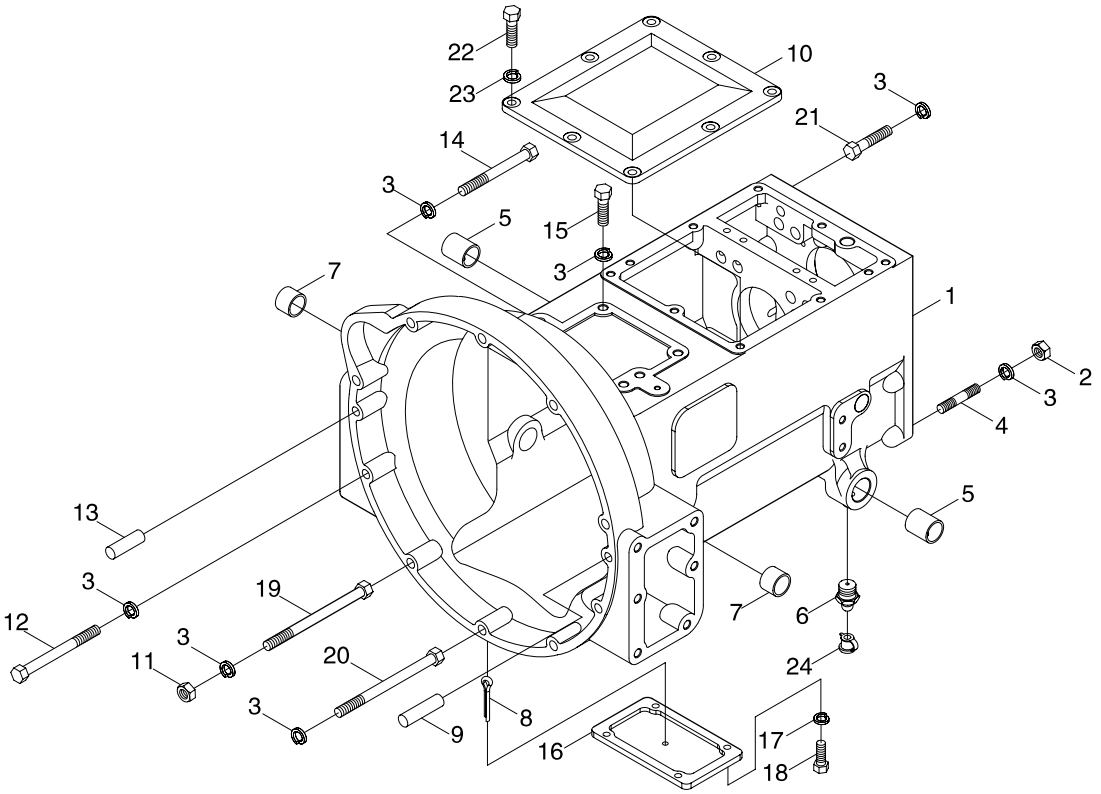

https://truckmanualshub.com/

TB604.371 Gearbox Housing Assembly

No.	Part code and specification	Part name	Quantity	Remark
	TB604.371	Gearbox housing assembly	1	
1	TB604.371–01	Gearbox housing	1	
2	GBT6171–M12 × 1.5–A3L	Nut	10	
3	GBT93–12–A0P	Washer	24	
4	GBT899–AM12–M12 × 1.5 × 35–8.8–A3L	Stud	10	
5	FT300.37.158	Pedal shaft liner	2	
6	JBT7940.1–M10 × 1	Oil cup	2	
7	FT300.37.159	Release fork shaft bushing	2	
8	GBT91–5 × 32–A0P	Split pin	1	
9	GBT119.1–12m6 × 30–A0P	Pin	3	
10	TB604.371–02	Gearbox upper cover	1	
11	GBT6170–M12–8–A3L	Nut	3	
12	GBT5782–M12 × 110–8.8–A2L	Bolt	1	
13	GBT119.1–12m6 × 22–A0P	Pin	1	
14	GBT5782–M12 × 70–8.8–A2L	Bolt	2	
15	GBT5783–M12 × 35–8.8–A3L	Bolt	4	
16	TB400.371E–03	Lower plug cover	1	
17	GBT93–10–A0P	Washer	4	
18	GBT5783–M10 × 25–8.8–A3L	Bolt	4	
19	TB550.371–01	Bolt M12 × 160	3	
20	TB550.371–02	Bolt M12 × 125	1	
21	GBT5785–M12 × 1.5 × 55–8.8–A3L	Hex bolt	2	
22	GBT5783–M8 × 20–8.8–A2L	Hex bolt	8	
23	GBT93–8–A0P	Standard spring washer	8	
24	TD800.311C.1–01	Oil cup dustproof cap	2	

https://truckmanualshub.com/

TB604.372T Main Transmission Assembly−1

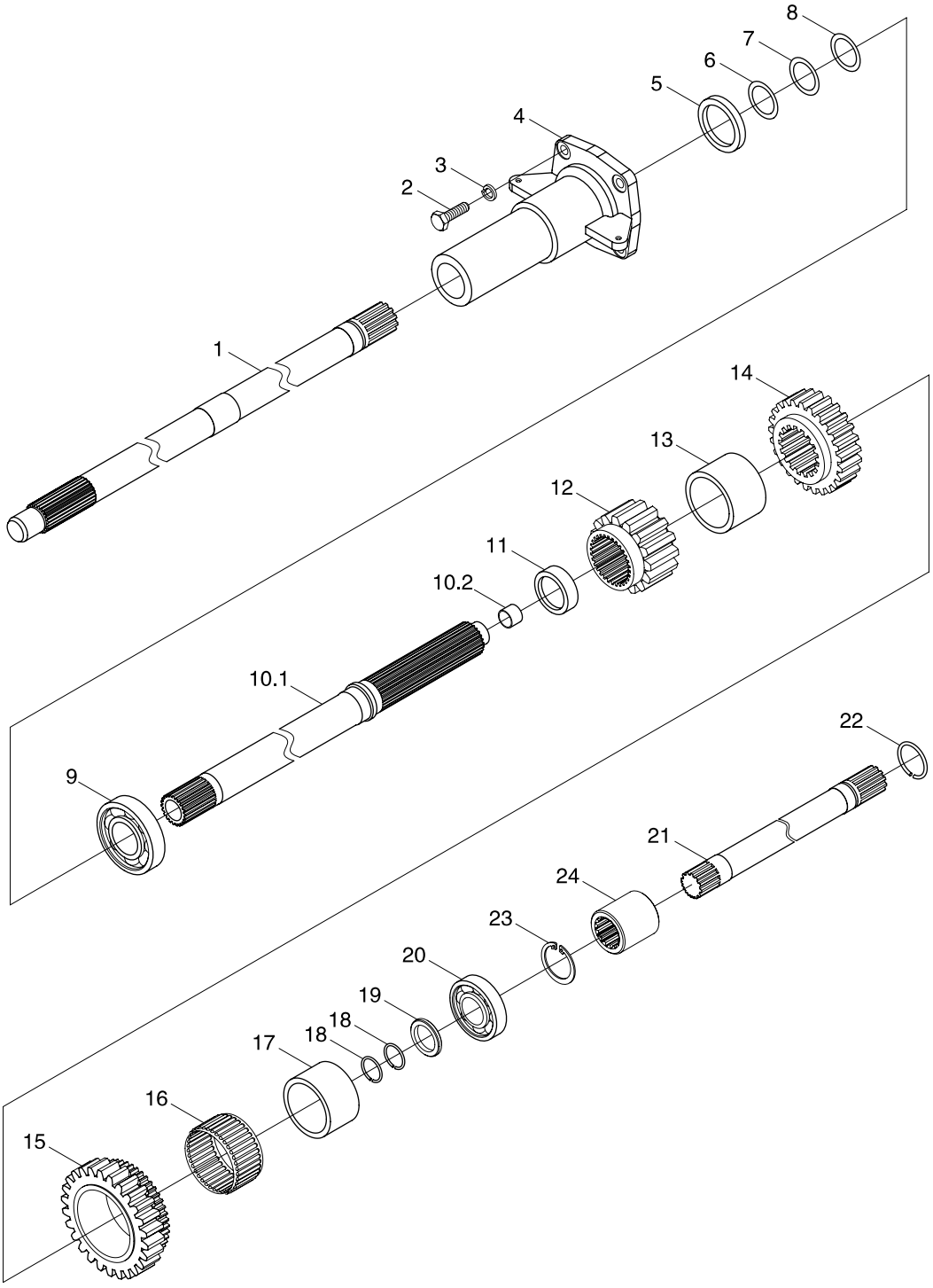

https://truckmanualshub.com/

TB604.372T Main Transmission Assembly-1

No.	Part code and specification	Part name	Quantity	Remark
	TB604.372T	Main transmission assembly	1	
1	FT400.37B.201	Auxiliary clutch shaft	1	
2	GBT5783-M8X25-8.8-A2L	Hex head bolt	4	
3	GBT93-8-A0P	Washer	4	
4	FT300.37B.124	Ⅰ shaft bearing cap	1	
5	GBT9877.1-FB40X62X8D	Inner skeleton rotary shaft lip seal	1	
6	TB604.372T-12	Adjusting gasket, Ⅰ shaft	As required	
7	TB604.372T-13	Adjusting gasket, Ⅰ shaft	As required	
8	TB604.372T-14	Adjusting gasket, Ⅰ shaft	As required	
9	GBT276-6208	Bearing	1	
10	TB604.372T.1	Ⅰ shaft cluster	1	
10.1	TB604.372T.1-01	Ⅰ shaft	1	
10.2	FT300.37.170	Bush	1	
11	TB604.372T-15	Gear spacer bush, Ⅰ gear	1	
12	TB604.372T-01	Driving gear, Ⅰ gear	1	
13	TB604.372T-02	Gear spacer bush, Ⅰ - Ⅱ gear	1	
14	TB604.372T-03	Driving gear, Ⅱ gear	1	
15	TB604.372T-05	Driving gear, Ⅲ gear	1	
16	TB604.372T-17	Needle bearing K47X52X28	1	
17	TB604.372T-16	Gear bush, Ⅲ gear	1	
18	GBT3452.1-23.6X1.80G	O-ring	2	
19	TB604.372T-04	Retainer ring	1	
20	GBT276-6007	Bearing	1	
21	FT300.37J.137	PTO connecting shaft	1	
22	GBT895.2-24	Retainer ring	1	
23	GBT893.1-21	Hole circlip	1	
24	FT300.37.136	Connecting sleeve	1	

https://truckmanualshub.com/

TB604.372T Main Transmission Assembly−2

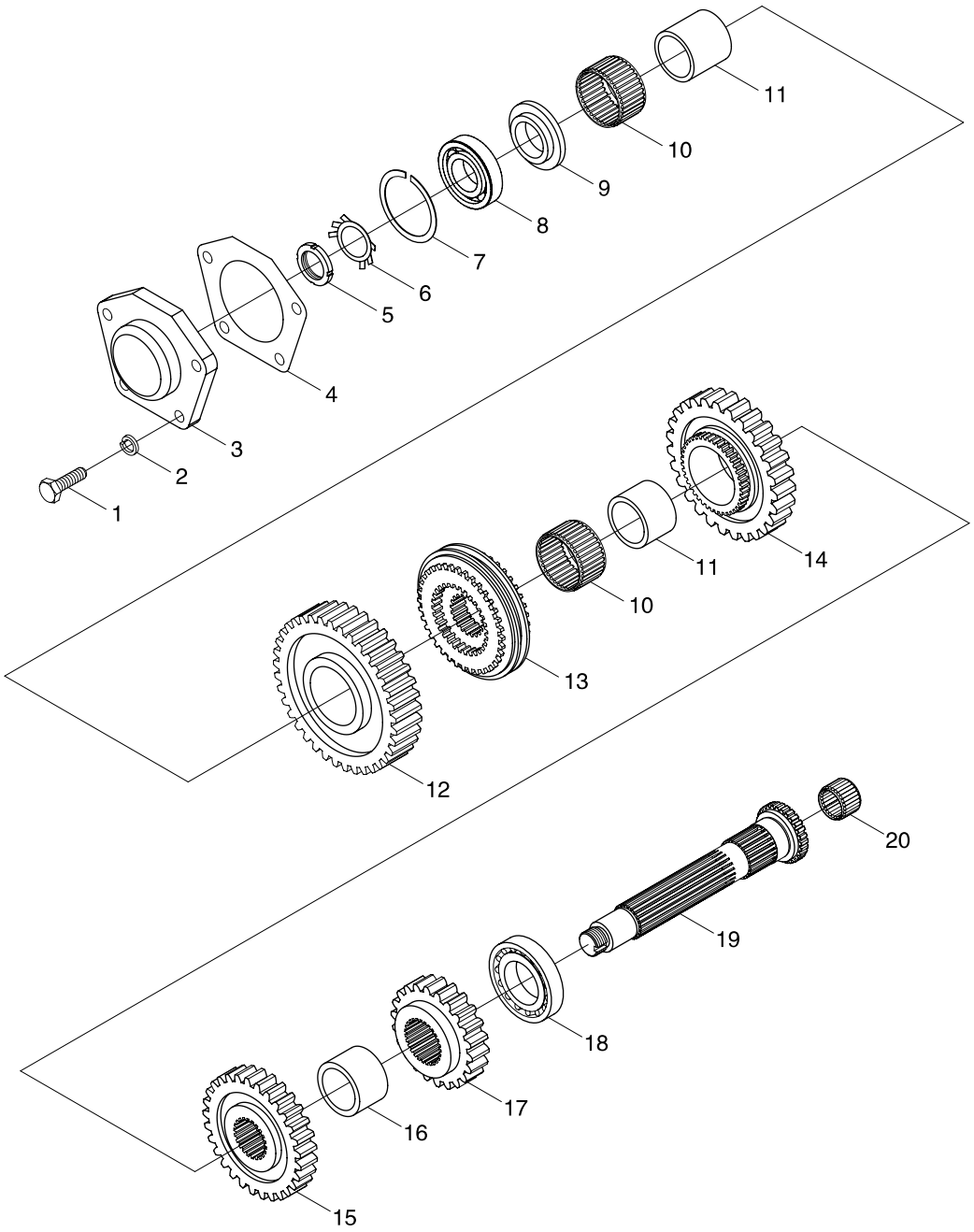

https://truckmanualshub.com/

TB604.372T Main Transmission Assembly-2

No.	Part code and specification	Part name	Quantity	Remark
	TB604.372T	Main transmission assembly	1	
1	GBT5783-M8X25-8.8-A2L	Hex head bolt	4	
2	GBT93-8-A0P	Washer	4	
3	FT300.37.120	Ⅱ shaft bearing cap	1	
4	FT300.37.119	Paper pad, Ⅱ shaft bearing cap	1	
5	GBT812-M24X1.5	Nut	1	
6	GBT858-24	Washer	1	
7	GBT305-72-78.6	Stop ring	1	
8	GBT276-6306N	Bearing	1	
9	TB604.372T-11	Shaft end ring, Ⅱ shaft	1	
10	TB550.372-05	Needle bearing K43X49X30	2	
11	FT300.37M.114	Gear bush, Ⅰ - Ⅱ gear	2	
12	TB604.372T-10	Driven gear, Ⅰ gear	1	
13	TE354.361T.3	Synchronizer assembly	1	
14	TB604.372T-09	Driven gear, Ⅱ gear	1	
15	TB604.372T-07	Driven gear, Ⅲ gear	1	
16	FT300.37.110	Gear spacer bush, Ⅲ - Ⅳ gear	1	
17	TB604.372T-06	Driven gear, Ⅳ gear	1	
18	GBT283-NUP208E	Bearing	1	
19	TB604.372T-08	Ⅱ shaft	1	
20	TB550.372-17	Bearing K22X28X20	1	

https://truckmanualshub.com/

TB604.373T Gearbox Assistant Gear Assembly

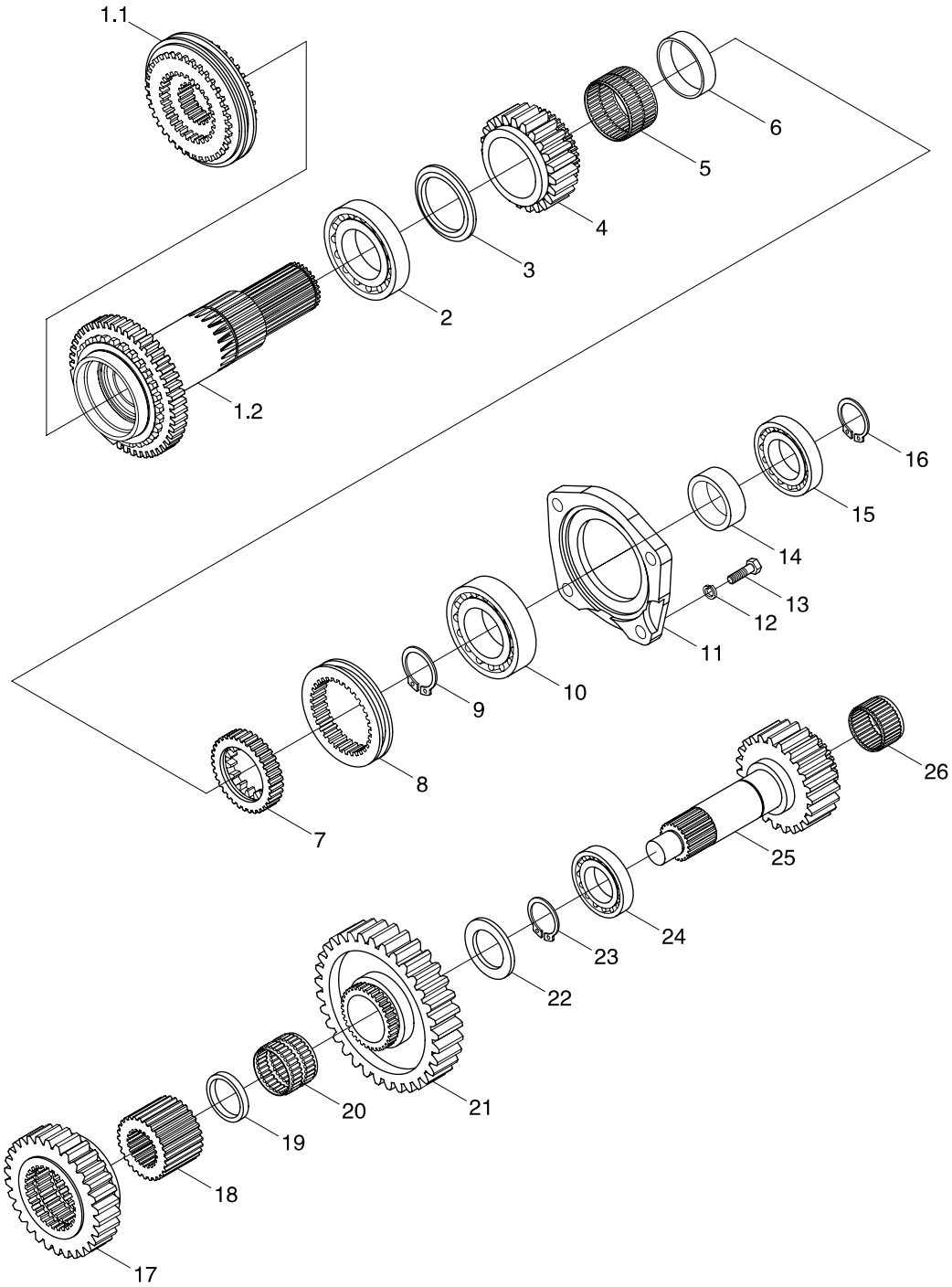

https://truckmanualshub.com/

TB604.373T Gearbox Assistant Gear Assembly

No.	Part code and specification	Part name	Quantity	Remark
	TB604.373T	Assistant gear assembly	1	
1	TB604.373T.2	Synchronizer installation assembly	1	
1.1	TB604.372T.2	Synchronizer assembly	1	
1.2	TB604.373T.1	4th gear synchronous cone ring weldment	1	
2	GBT283-NUP210E	Bearing	1	
3	TB550.373-02	Circlip	1	
4	TB550.373-03b	Middle gear driving gear	1	
5	TB550.373-12	Roller bearing	1	
6	TB550.373-04b	Spacing sleeve	1	
7	TB550.373-05b	Middle gear meshing gear seat	1	
8	TB550.373-06a	Middle gear meshing sleeve	1	
9	GBT894.1-50	Circlip	1	
10	GBT283-NUP308E	Bearing	1	
11	FT300.37.139	Assistant gear bearing cover	1	
12	GBT93-10-A0P	Washer	4	
13	GBT5783-M10X30-8.8-A3L	Hex bolt	4	
14	FT300.37J.180	Spacing sleeve	1	
15	GBT283-NF208	Bearing	1	
16	GBT894.1-40	Circlip	1	
17	TB550.373-08	Middle gear driven gear	1	
18	TB550.373-09	Reverse gear meshing seat	1	
19	FT300.37.111	Spacing sleeve	1	
20	QLWZB120-K35X43X34ZW	Needle bearing	1	
21	FT450.37.103	Assistant gear driven gear	1	
22	TB550.373-11a	Limiting circlip	1	
23	GBT894.1-35	Circlip	1	
24	GBT283-NUP307E	Bearing	1	
25	TB550.373-10	Assistant gear driven shaft	1	
26	JBT7918-K25X31X20	Roller bearing	1	

https://truckmanualshub.com/

TS04374010000 Gearbox Control Mechanism Assembly−1

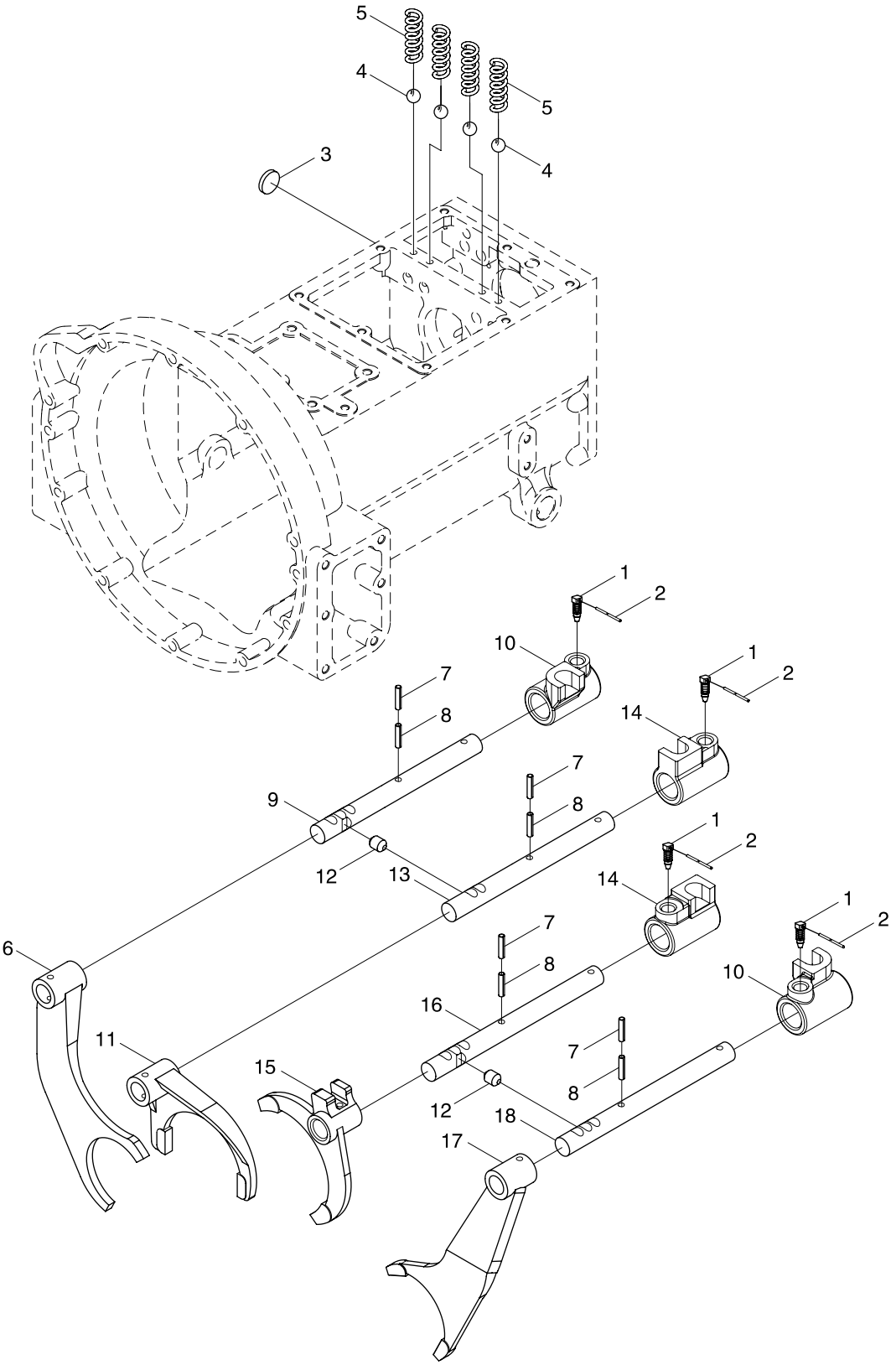

https://truckmanualshub.com/

TS04374010000 Gearbox Control Mechanism Assembly-1

No.	Part code and specification	Part name	Quantity	Remark
	TS04374010000	Gearbox control mechanism assembly	1	
1	TB504.374-01	Fastening screw	4	
2	TF1004.374-02	Low-carbon steel wire SZ-1.4X250	4	
3	Q72214	Bowl type expansion plug	2	
4	GBT308-8-G100-b	Steel ball	4	
5	FT300.37.135	Shift fork shaft locating spring	4	
6	TB550.374-03a	High-low gear shift fork	1	
7	GBT879.1-3X24	Spring-type straight pin	4	
8	GBT879.1-5X24	Spring-type straight pin	4	
9	TB604.374B-03	High-low gear shift fork fork	1	
10	TB604.374B-05	I/II speed shifting block	2	
11	TB550.374-04a	Intermediate gear shift fork	1	
12	FT300.37.151	Interlock pin	2	
13	TB604.374B-04	Intermediate gear shift fork shaft	1	
14	TB604.374B-06	III/IV speed shifting block	2	
15	TB604.374A-01	III/IV speed shift fork	1	
16	TB604.374B-02	III/IV speed shift fork shaft	1	
17	TB604.374A-04	I/II speed shift fork	1	
18	TB604.374B-01	I/II speed shift fork shaft	1	

https://truckmanualshub.com/

TS04374010000 Gearbox Control Mechanism Assembly−2

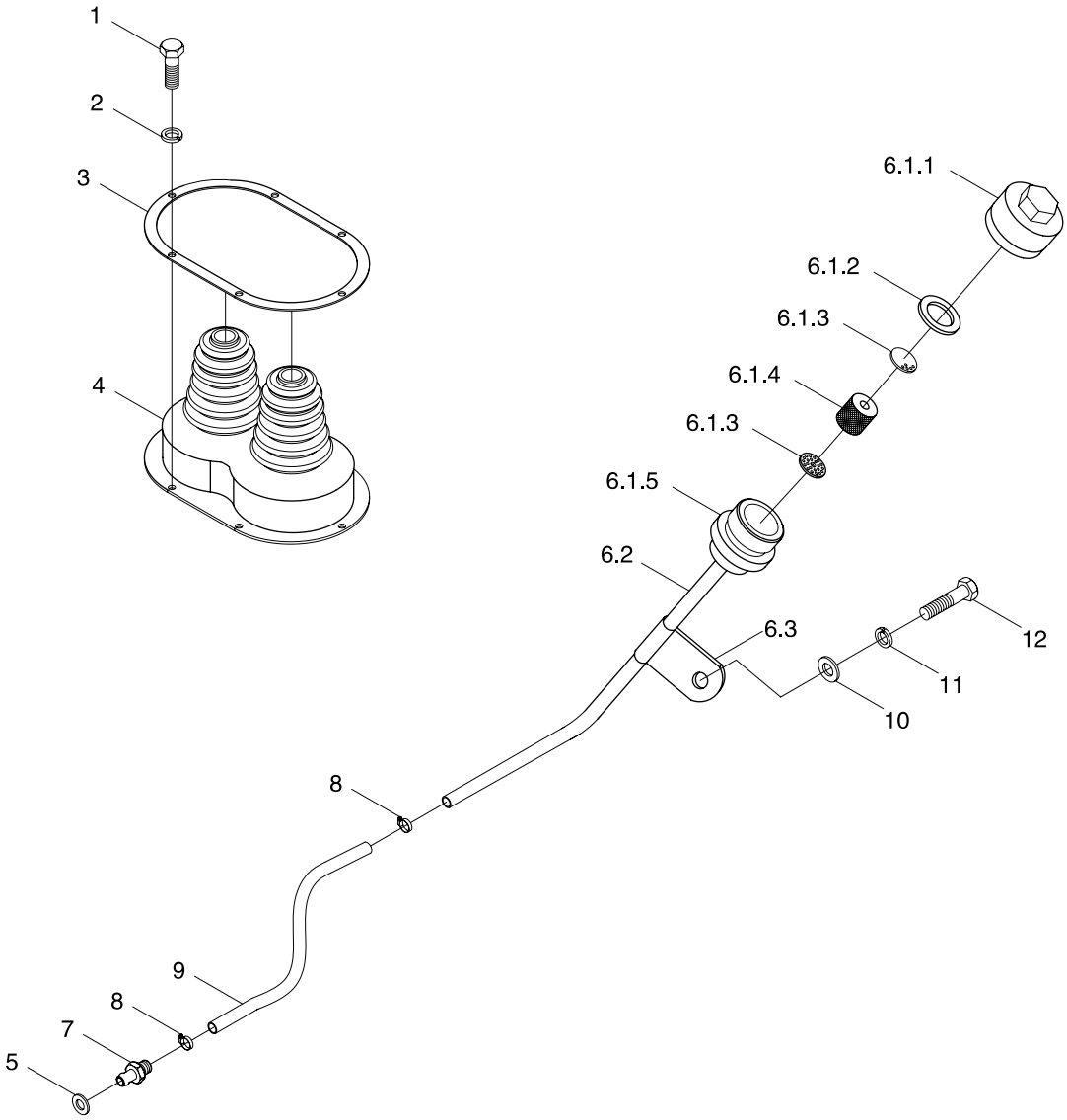

https://truckmanualshub.com/

TS04374010000 Gearbox Control Mechanism Assembly-2

No.	Part code and specification	Part name	Quantity	Remark
	TS04374010000	Gearbox control mechanism assembly	1	
1	GBT5783-M6X20-8.8-A2L	Hexagon head bolt	6	
2	GBT93-6-A0P	Standard spring washer	6	
3	TB604.374B-09	Shield press plate	1	
4	TB604.374B-08	Gearshift lever shield	1	
5	JBT982-12	Compound seal washer	1	
6	TA700.55.6	Breather assembly	1	
6.1	TG1204.505.2	Breather	1	
6.1.1	FT700.55D.136	Breather cover	1	
6.1.2	GBT893.1-26	Circlip	1	
6.1.3	FT650.40.167	Seat plate	2	
6.1.4	FT700.55D.109	Breather filter cartridge	1	
6.1.5	TG1204.505.2-01	Breather body	1	
6.2	TA700.55.6-01	Breather pipe	1	
6.3	TA700.55.6-02	Breather installation plate	1	
7	TE354.371-01	Breather joint	1	
8	Q67512	A-type worm drive type hose clamp	2	
9	TS04374010010	Breathing hose	1	
10	GBT97.1-8-A0P	Plain washer	1	
11	GBT93-8-A0P	Standard spring washer	1	
12	GBT5783-M8X16-8.8-A2L	Hexagon head bolt	1	

https://truckmanualshub.com/

TS04374010000 Gearbox Control Mechanism Assembly−3

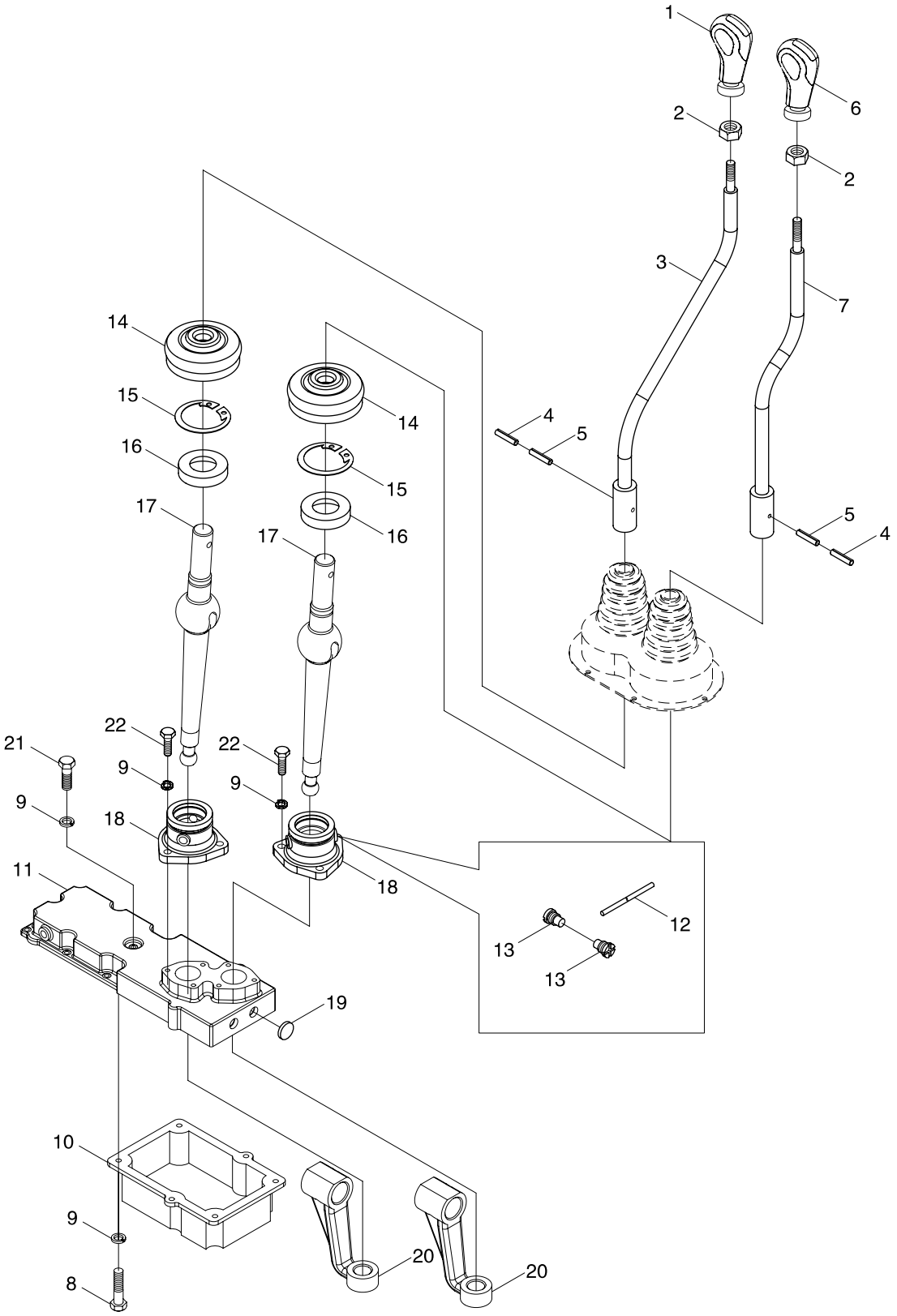

https://truckmanualshub.com/

TS04374010000 Gearbox Control Mechanism Assembly-3

No.	Part code and specification	Part name	Quantity	Remark
	TS04374010000	Gearbox control mechanism assembly	1	
	TS04374010005	Side control mechanism assembly	1	
1	TS04374010001	Main shift control lever assembly	1	
2	GBT6172.1-M10-04-A3L	Hexagon thin nut	2	
3	TB604.374B.1.1	Main shift lever weldment	1	
4	GBT879.1-3X28	Spring-type straight pin	2	
5	GBT879.1-5X28	Spring-type straight pin	2	
6	TS04374010002	Auxiliary gearshift control lever	1	
7	TS04374010007	Auxiliary shift lever weldment	1	
8	GBT5783-M8X20-10.9-A2L	Hexagon head bolt	6	
9	GBT93-8-A0P	Standard spring washer	20	
10	TB604.374B.1-02	Side control lower cover	1	
11	TB604.374B.1-01	Side control upper cover	1	
12	TF1004.374-02	Low-carbon steel wire SZ-1.4 X 250	4	
13	FT800A.37.326	Shift lever location pin	4	
14	FT300.37.166a	Shift lever dustproof cover	2	
15	GBT893.1-40	Circlip for hole	2	
16	FT800A.37.305	Nylon seat	2	
17	TB604.374B.1-09	Lower control lever	2	
18	TB504.374-06	Auxiliary shift lever bracket	2	
19	Q72220	Bowl type expansion plug	2	
20	TB604.374B.1-06	Side control external shift block	2	
21	GBT5782-M8X55-8.8-A2L	Hexagon head bolt	1	
22	GBT5783-M8X25-8.8-A2L	Hexagon head bolt	13	

https://truckmanualshub.com/

TS04374010000 Gearbox Control Mechanism Assembly−4

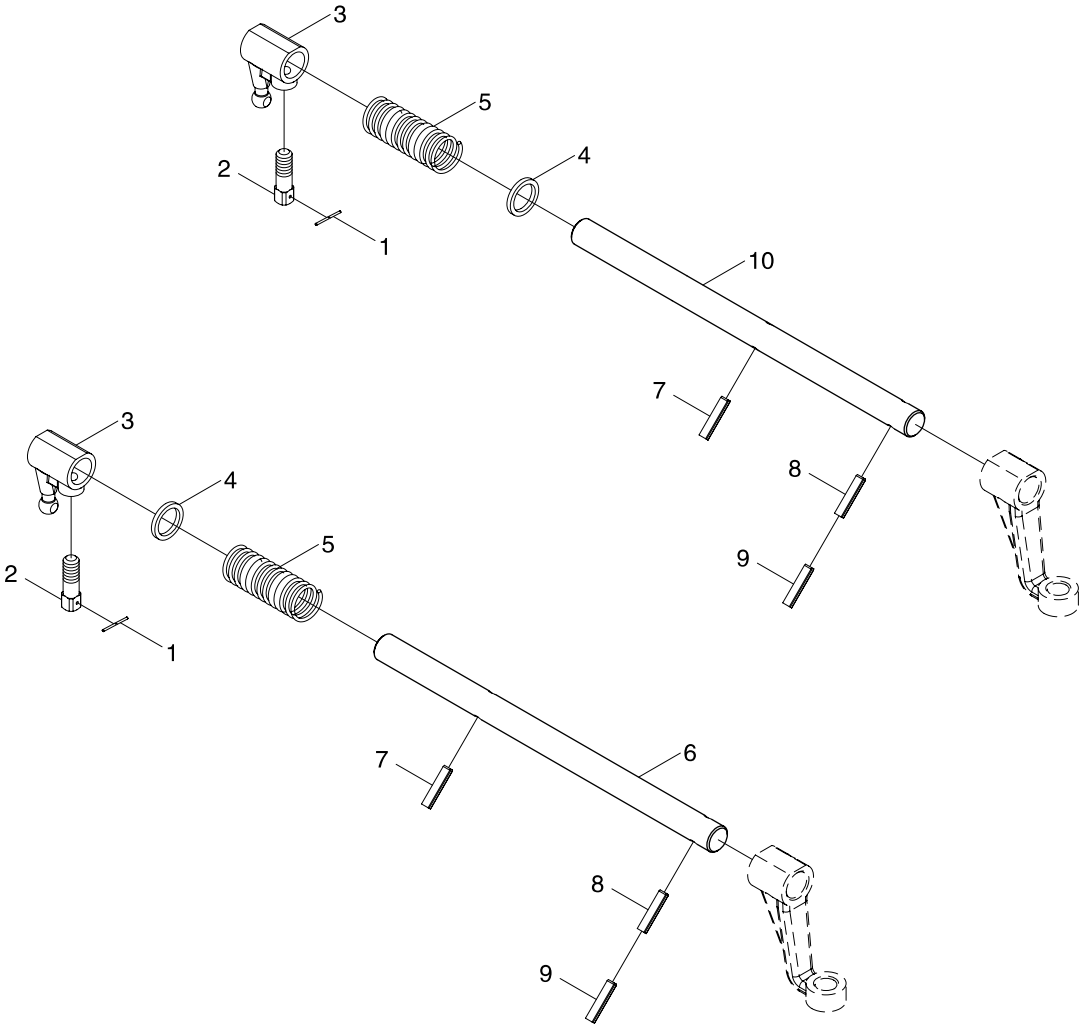

https://truckmanualshub.com/

TS04374010000 Gearbox Control Mechanism Assembly-4

No.	Part code and specification	Part name	Quantity	Remark
	TS04374010000	Gearbox control mechanism assembly	1	
	TS04374010005	Side control mechanism assembly	1	
1	TF1004.374-02	Low-carbon steel wire SZ-1.4X250	2	
2	TB504.374-01	Fastening screw	2	
3	TB604.374B.1-05	Side control internal shift block	2	
4	TB604.374B.1-08	Spring washer	2	
5	TB604.374B.1-07	Location spring	2	
6	TB604.374B.1-03	Main shift lever	1	
7	GBT879.1-6X24	Spring-type straight pin	2	
8	GBT879.1-3.5X28	Spring-type straight pin	2	
9	GBT879.1-6X28	Spring-type straight pin	1	
10	TB604.374B.1-04	Auxiliary shift lever	1	

https://truckmanualshub.com/

TB604.375B Breather assembly

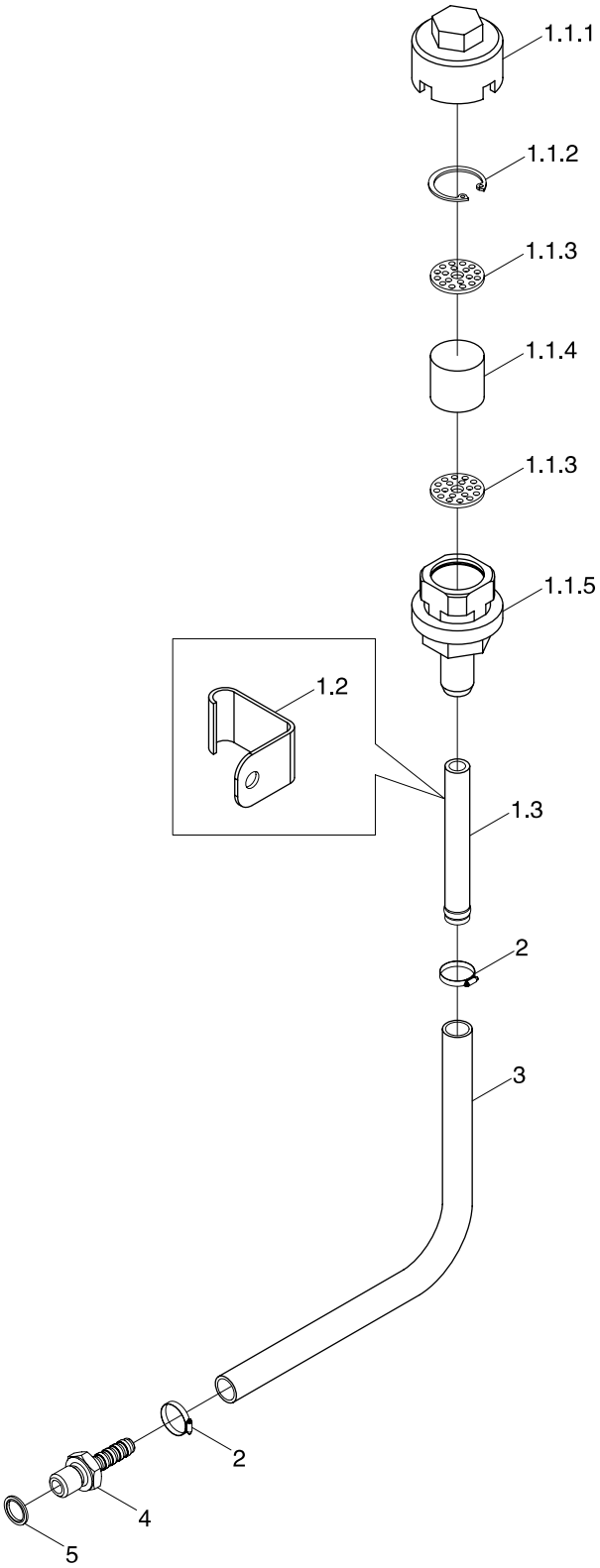

https://truckmanualshub.com/

TB604.375B Breather assembly

No.	Part code and specification	Part name	Quantity	Remark
	TB604.375B	Breather assembly	1	
1	TB604.375.1	Breather assembly	1	
1.1	TG1204.505.2	Breather	1	
1.1.1	FT700.55D.136	Breather cover	1	
1.1.2	GBT893.1–26	Circlip for hole	1	
1.1.3	FT650.40.167	Seat plate	2	
1.1.4	FT700.55D.109	Breather filter cartridge	1	
1.1.5	TG1204.505.2–01	Breather body	1	
1.2	TB604.375.1–01	Breather installation plate	1	
1.3	TB704.374.1–01	Breather pipe	1	
2	Q67512	A–type worm drive type hose clamp	2	
3	TS04374010010	Breather hose	1	
4	TE354.371–01	Pipe joint	1	
5	JBT982–12	Compound seal washer	1	

https://truckmanualshub.com/

TB554.381 Shuttle Shift Assembly（005）

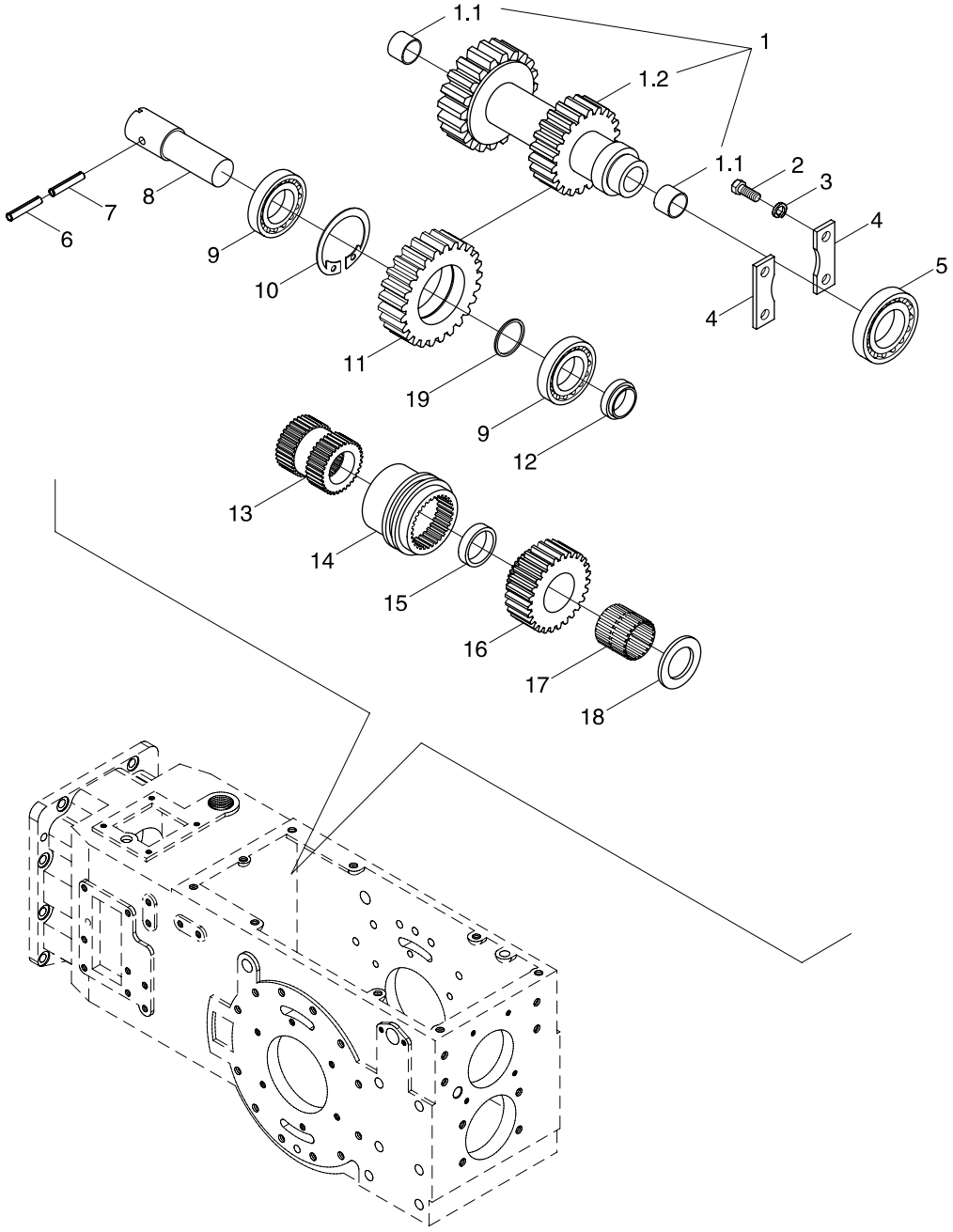

https://truckmanualshub.com/

TB554.381 Shuttle Shift Assembly（005）

No.	Part code and specification	Part name	Quantity	Remark
	TB554.381	Shuttle Shift Assembly	1	
1	TB450.38J.1	Reverse Middle Shaft Assembly	1	
1.1	FT300.37.170	Sleeve	2	
1.2	TB450.38J.1-01	Reverse Middle Gear Shaft	1	
2	GBT5783-M10X25-8.8-A3L	Hexagon Bolt	4	
3	GBT93-10-A0P	Standard Spring Washer	4	
4	FT300.38J.204	Bearing Pressure Plate	2	
5	GBT283-NJ208E	Column Roller Bearing	1	
6	GBT879.1-5X30	Spring Column Pin	1	
7	GBT879.1-8X30	Spring Column Pin	1	
8	TB450.38J-07	Reverse Idler Gear Shaft	1	
9	GBT283-NJ206E	Column Roller Bearing	2	
10	GBT893.1-62	Circlips For Hole	1	
11	TB450.38J-06	Reverse Idler Gear	1	
12	TB450.38J-08	Reverse Idler Gear Shaft Spacer Sleeve	1	
13	TB450.38J-01	Meshing Seat	1	
14	TB450.38J-02	Gearshift Shift Collar	1	
15	TB450.38J-03	Spacer Bush	1	
16	TB450.38J-04	Reverse Driven Gear	1	
17	QSFZB019-K35X43X34ZW	Roller Needle Bearing	1	
18	FT300.38J.202	Adjusting Washer	1	
19	TB554.381-02	Washer	1	

https://truckmanualshub.com/

TB554.382 Rear Axle Central Transmission Assembly−1（005）

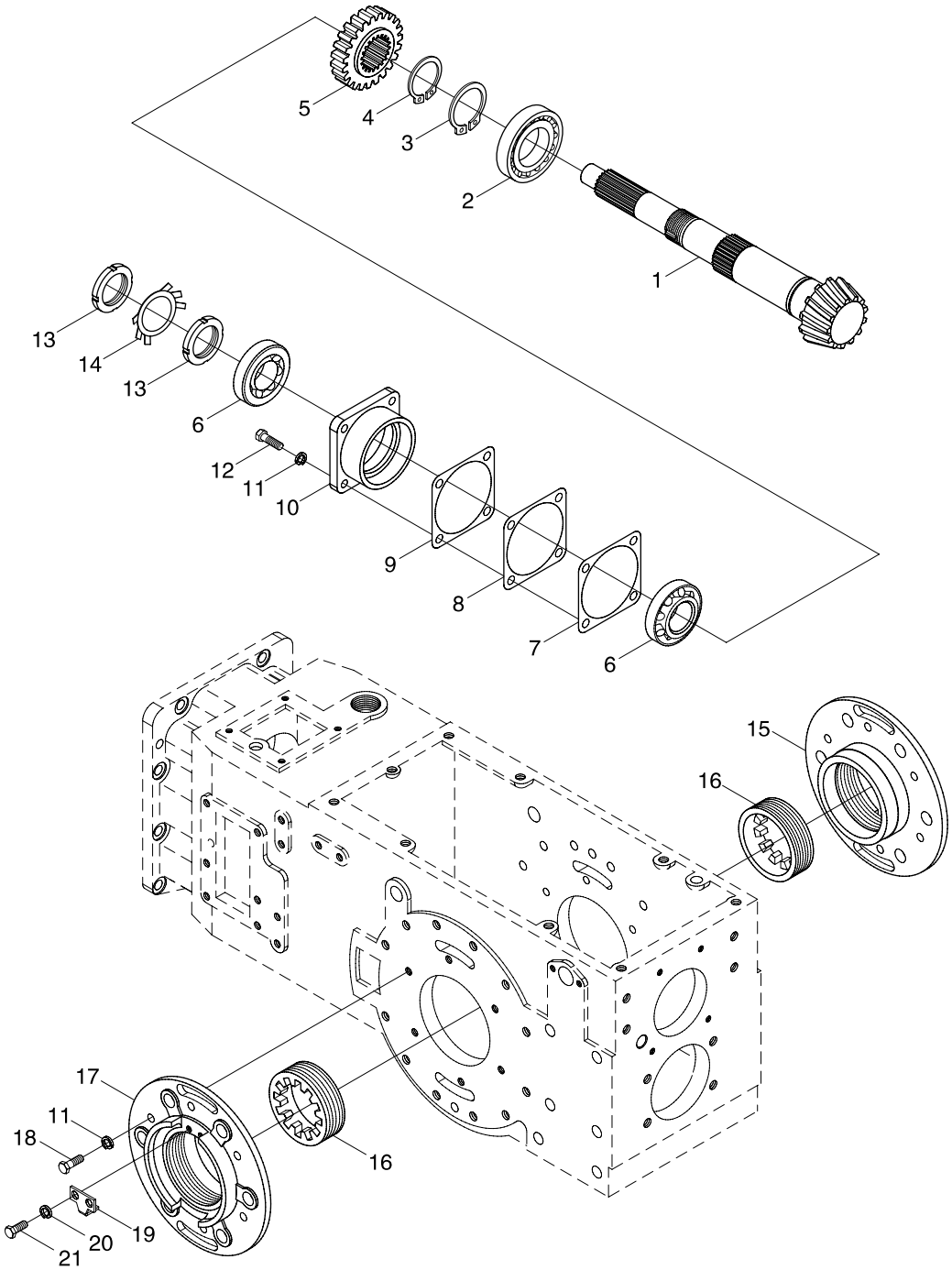

https://truckmanualshub.com/

TB554.382 Rear Axle Central Transmission Assembly-1（005）

No.	Part code and specification	Part name	Quantity	Remark
	TB554.382	Rear Axle Central Transmission Assembly	1	
1	TB450.38J-05	Small Taper Gear Shaft	1	
2	GBT283-NUP2210E	Column Roller Bearing	1	
3	GBT894.1-50	Circlip For Shaft	1	
4	GBT894.1-48	Circlip For Shaft	1	
5	TB554.382-02	Front Drive Output Gear	1	
6	GBT297-32208	Tapered Roller Bearing	2	
7	FT300.38.118	Taper Gear Shaft Adjusting Gasket	1	
8	FT300.38.119	Taper Gear Shaft Adjusting Gasket	1	
9	FT300.38.120	Taper Gear Shaft Adjusting Gasket	1	
10	FT300.38.117	Bearing Seat	1	
11	GBT93-10-A0P	Standard Spring Washer	16	
12	GBT5783-M10X30-8.8-A3L	Hexagon Bolt	4	
13	GBT812-M39X1.5	Round Nut	2	
14	GBT858-39	Thrust Washer For Round Nut	1	
15	FT300.38.177	Right Differential Bearing Seat	1	
16	FT300.38.151	Adjusting Nut	2	
17	FT300.38.142	Left Differential Bearing Seat	1	
18	GBT5783-M10X25-8.8-A3L	Hexagon Bolt	12	
19	FT300.38.161	Lock Washer	2	
20	GBT93-8-A0P	Standard Spring Washer	4	
21	TB554.382-01	Bolt	4	

https://truckmanualshub.com/

TB554.382 Rear Axle Central Transmission Assembly−2（005）

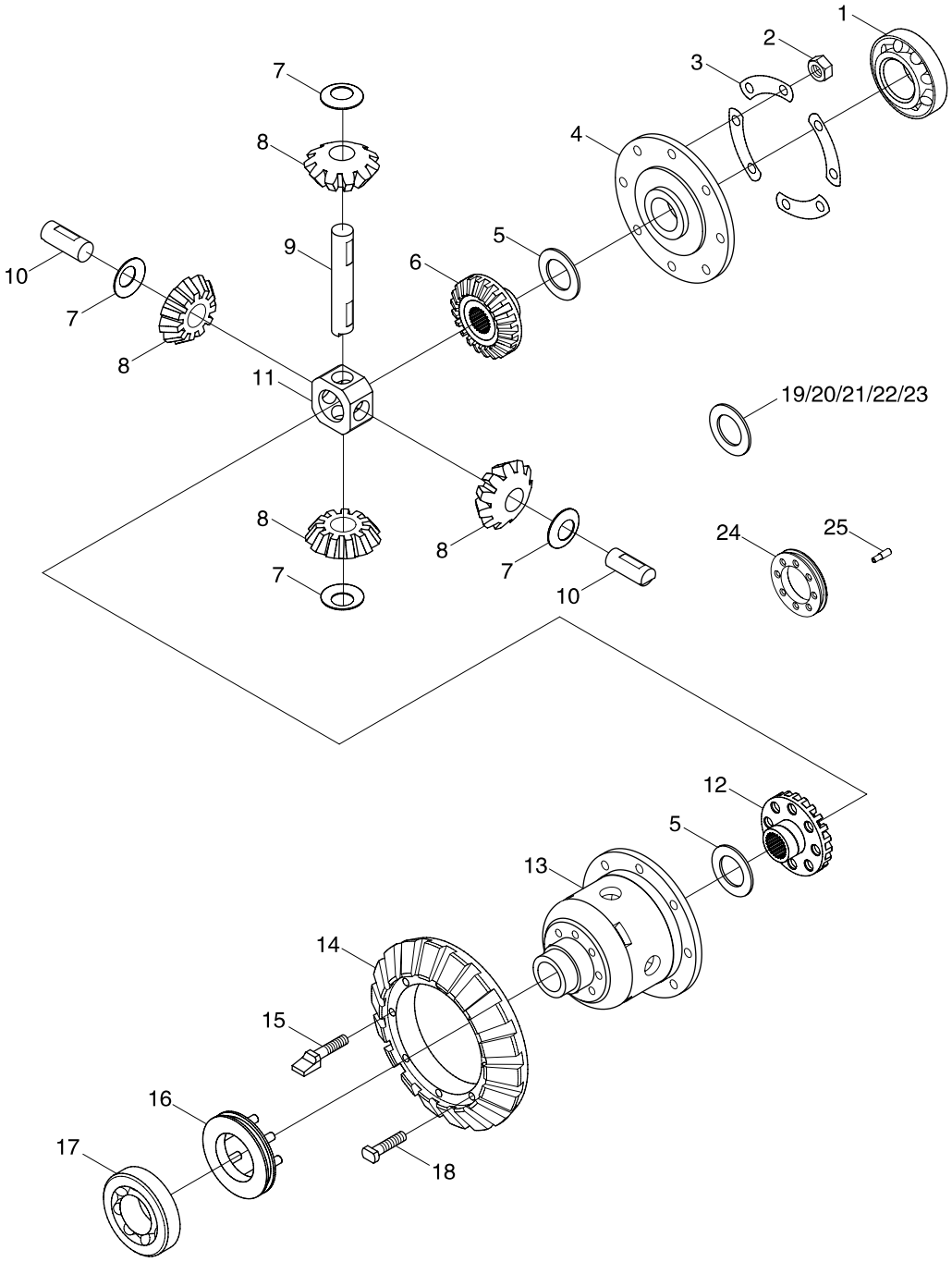

https://truckmanualshub.com/

TB554.382 Rear Axle Central Transmission Assembly-2（005）

No.	Part code and specification	Part name	Quantity	Remark
	TB554.382	Rear Axle Central Transmission Assembly	1	
	FT300.38.012	Differential Assembly	1	
1	GBT297-32013	Tapered Roller Bearing	1	
2	GBT6170-M12-8-A3L	Hexagon Nut, Type-1	8	
3	FT300.38.152	Locking Washer	4	
4	FT300.38.181	Differential Cover	1	
5	FT300.38.147	Half Shaft Gear Washer	1	
6	FT300.38.144	Right Half Shaft Gear	1	
7	FT300.38.148	Planet Gear Washer	4	
8	FT300.38.145	Planet Gear	4	
9	FT300.38.182	Long Planetary Gear Shaft	1	
10	FT300.38.183	Short Planetary Gear Shaft	2	
11	FT300.38.184	Central Ring	1	
12	FT300.38.143	Left Half Shaft Gear	1	
13	FT300.38.180	Differential Housing	1	
14	FT300.38.141	Big Taper Gear	1	
15	FT300.38.185	Planet Gear Shaft Thrust Bolt	4	
16	FT300.38.019	Differential Lock Assembly	1	
17	GBT297-30211	Tapered Roller Bearing	1	
18	FT300.38.186	Fixing Bolt	4	
19	FT300.38.196	Half Shaft Gear Washer	1	
20	FT300.38.197	Half Shaft Gear Washer	1	
21	FT300.38.198	Half Shaft Gear Washer	1	
22	FT300.38.199	Half Shaft Gear Washer	1	
23	FT300.38.200	Half Shaft Gear Washer	1	
24	FT300.38.157	Differential lock body	1	
25	FT300.38.156	Differential lock pin	8	

https://truckmanualshub.com/

TS04383010000 Differential Lock Control Mechanism Assembly

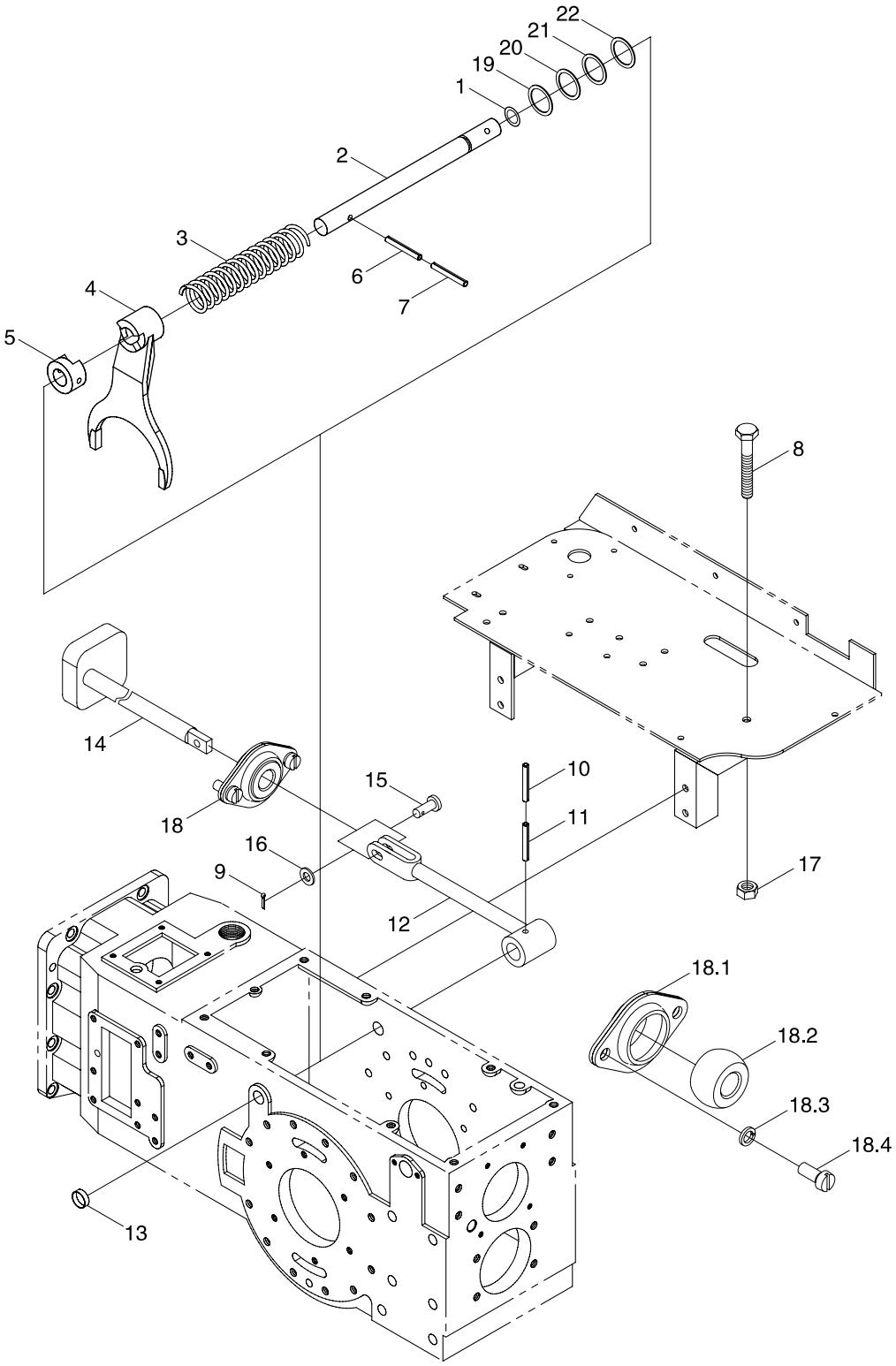

https://truckmanualshub.com/

TS04383010000 Differential Lock Control Mechanism Assembly

No.	Part code and specification	Part name	Quantity	Remark
	TS04383010000	Differential lock control mechanism assembly	1	
1	GBT3452.1-15.0X2.65G	O-ring sealant used for hydraulic or pneumatic parts	1	
2	FT300.38.158a	Differential lock shift fork shaft	1	
3	FT300.38.160	Differential lock retraction spring	1	
4	FT300.38.159a	Differential lock shift fork	1	
5	FT300.38.190	Differential lock shift block	1	
6	GBT879.1-6X40	Spring-type straight pin	1	
7	GBT879.2-3.5X40	Spring-type straight pin	1	
8	GBT5781-M8X45-4.8-A2L	Hexagon head bolt	1	
9	GBT91-2X14-A0P	Split pin	1	
10	GBT879.1-6X35	Spring-type straight pin	1	
11	GBT879.2-3.5X35	Spring-type straight pin	1	
12	TS04383010003	Rocker arm weldment	1	
13	Q72220	Bowl-shape expansion plug	1	
14	TS04383010001	Differential lock pedal unit	1	
15	GBT882-B6X28	Pin shaft	1	
16	GBT97.1-6-A0P	Plain washer	1	
17	GBT6170-M8-8-A2L	Hexagon nut, style 1	1	
18	TG1204.435.4	Seal lining seat assembly	1	
18.1	TG1204.435.2-01	Spherical shaft seat	1	
18.2	TG1204.435.2-02	Spherical shaft lining	1	
18.3	GBT93-6	Standard spring washer	1	
18.4	GBT818-M6X14-4.8-A2L	Cross recessed pan head screw	1	
19	TB554.383-05	Adjusting washer	On demand	
20	TB554.383-06	Adjusting washer	On demand	
21	TB554.383-07	Adjusting washer	On demand	
22	TB554.383-08	Adjusting washer	On demand	

https://truckmanualshub.com/

TC02384040000K Rear Axle Housing Assembly(001)

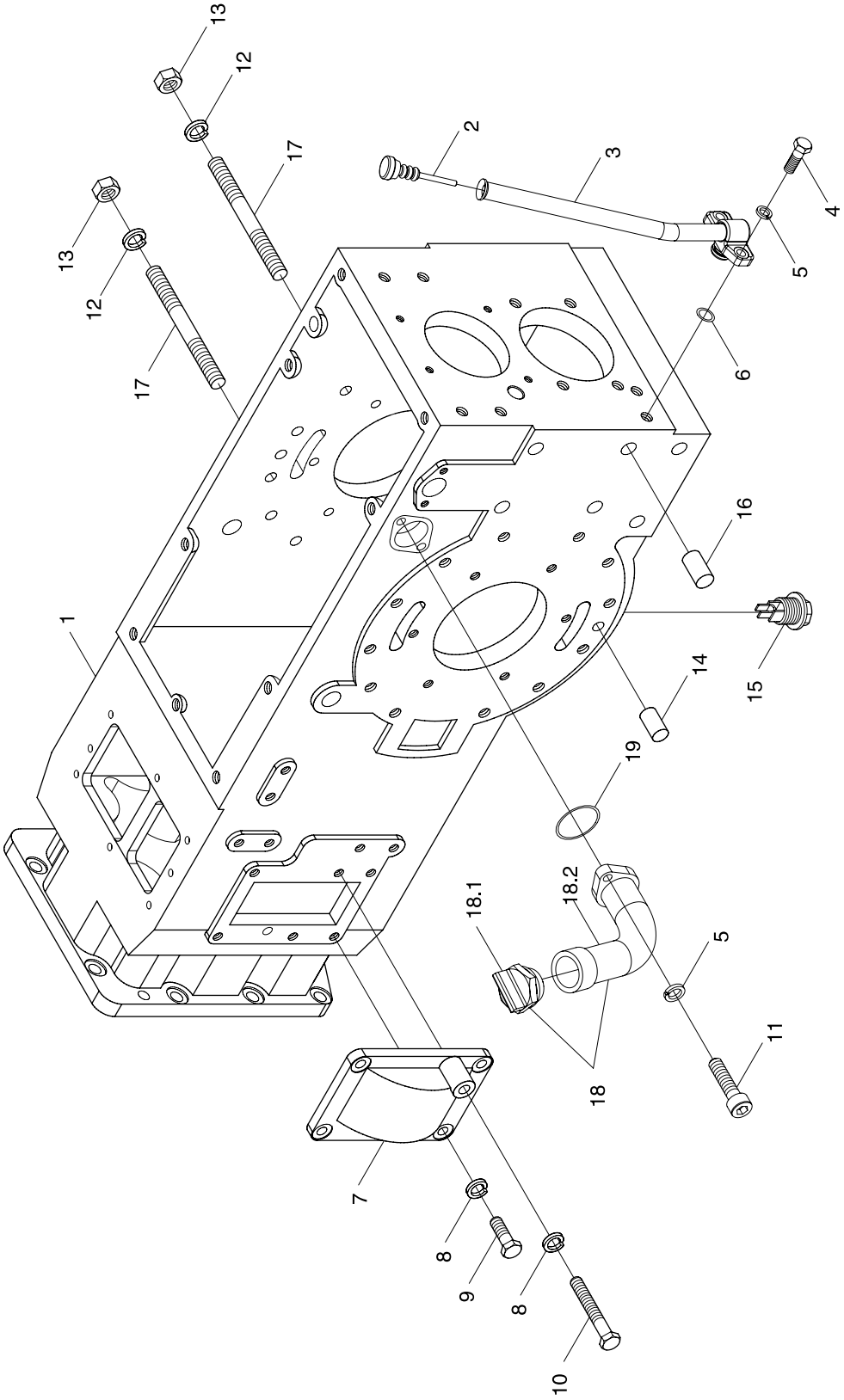

https://truckmanualshub.com/

TC02384040000K Rear Axle Housing Assembly(001)

No.	Part code and specification	Part name	Quantity	Remark
	TC02384040000K	Rear axle housing assembly	1	
1	TB604.384A-01	Rear axle housing	1	
2	TB604.384.4	Oil dipstick assembly	1	
3	TC02384010001K	Oil dipstick pipe weldment	1	
4	GBT5783-M8X20-8.8-A2L	Hexagon head bolt	2	
5	GBT93-8-A3L	Standard spring washer	4	
6	GBT3452.1-15.0X2.65G	O-ring sealant used for hydraulic or pneumatic parts	1	
7	FT300.38J.206	Reverse gear side cover	1	
8	GBT93-10-A3L	Standard spring washer	6	
9	GBT5783-M10X25-8.8-A3L	Hexagon head bolt	5	
10	GBT5782-M10X60-8.8-A3L	Hexagon head bolt	1	
11	GBT70.1-M8X20-8.8-A2L	Hexagon socket head cap screw	2	
12	GBT93-12-A3L	Standard spring washer	24	
13	GBT6171-M12X1.25-10-A2L	Hexagon nut, style 1	24	
14	GBT119.1-12m6X28-A3L	Column pin	2	
15	FT65.38.026	Oil plug assembly	1	
16	TB554.384-02	Pin	4	
17	GBT899-AM12-M12X1.25X80-10.9-A2L	Double-headed stud	24	
18	TB604.384.3	Rear axle oil filler assembly	1	
18.1	TB604.384.3.1	Oil filler welding assembly	1	
18.2	TB604.384.3.2	Oil filler plug assembly	1	
19	GBT3452.1-32.5X1.80G	O-ring sealant used for hydraulic or pneumatic parts	1	

https://truckmanualshub.com/

TS04385010000 Shuttle Shift Control Mechanism Assembly

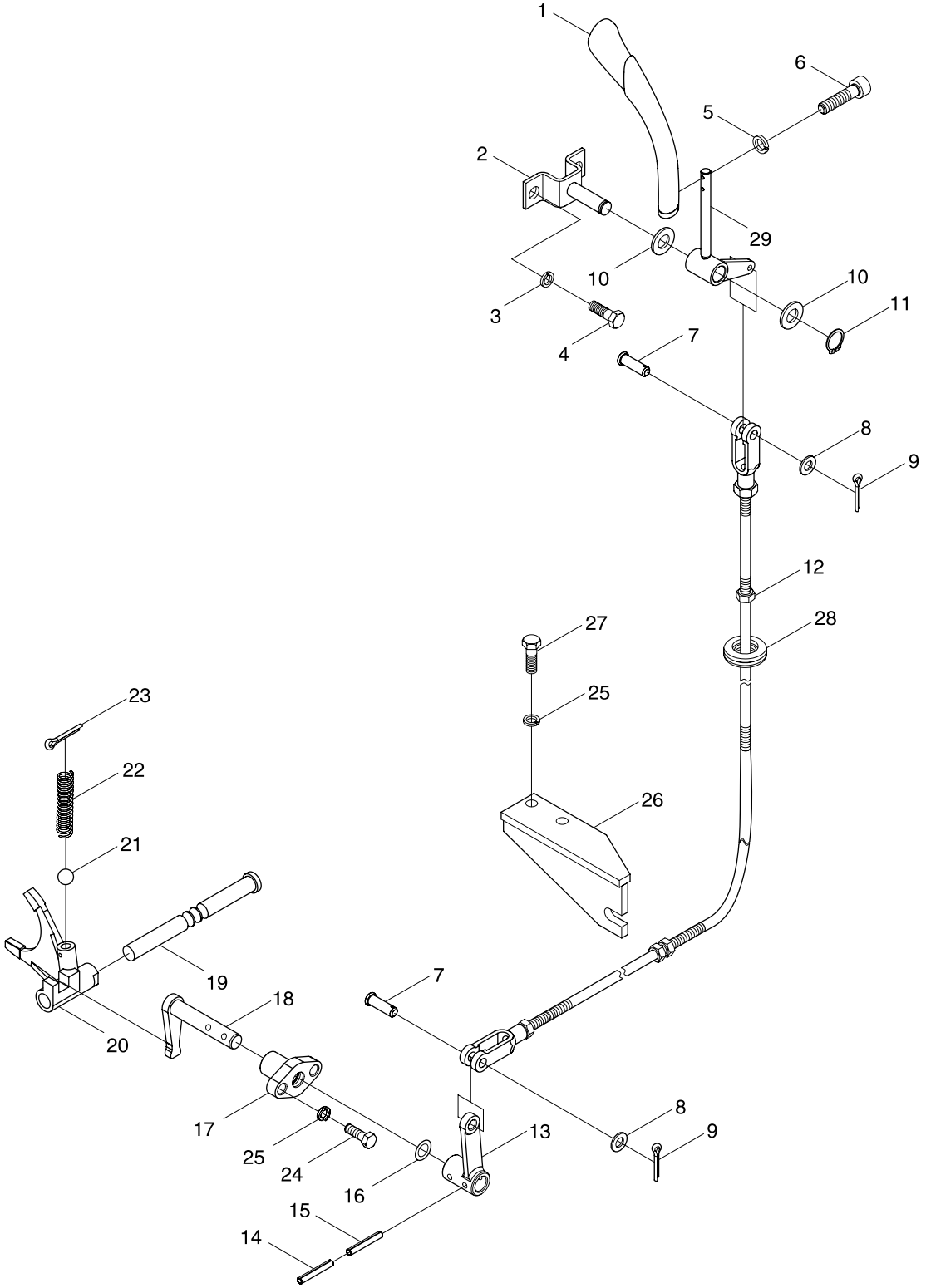

https://truckmanualshub.com/

TS04385010000 Shuttle Shift Control Mechanism Assembly

No.	Part code and specification	Part name	Quantity	Remark
	TS04385010000	Shuttle shift control mechanism assembly	1	
1	TS04385010008	Shuttle shift control mechanism assembly	1	
2	TS04385010003	Bracket weldment	1	
3	GBT93-8-A0P	Standard spring washer	2	
4	GBT5783-M8X20-8.8-A2L	Hexagon head bolt	2	
5	GBT93-6-A0P	Standard spring washer	2	
6	GBT70.1-M6X20-10.9-A3L	Hexagon socket button head screw	2	
7	TG1654.373B.1-01	Pin shaft	2	
8	GBT97.1-8-A0P	Plain washer	2	
9	GBT91-3.2X20-A0P	Split pin	2	
10	TD950.373.2-02	Bush	2	
11	GBT894.2-20	Circlip for shaft	1	
12	TB604.385.3	Shuttle shift flexible shaft subassembly	1	
13	TB604.385-02	Rocker arm	1	
14	GBT879.1-3.5X28	Spring-type straight pin	2	
15	GBT879.1-6X28	Spring-type straight pin	2	
16	GBT3452.1-16.0X2.65G	O-ring sealant used for hydraulic or pneumatic parts	1	
17	TB554.385A-01	Shift lever shaft bush	1	
18	TB554.385-01	Shifting lever rocker arm	1	
19	FT300.38J.203	Fork shaft, reverse gear	1	
20	FT300.38J.218	Shift fork, reverse gear	1	
21	GBT308-9.5-G100-b	Steel ball	1	
22	FT704.42B.163	Retaining spring, fork shaft	1	
23	GBT91-4X32-A0P	Split pin	1	
24	TB400.385-09	Bolt	2	
25	GBT93-10-A0P	Standard spring washer	4	
26	TB604.385.2	Support plate weldment	1	
27	GBT5783-M10X25-8.8-A3L	Hexagon head bolt	2	
28	FT800A.48L.101	Wire through ring (1)	1	
29	TS04385010005	Shuttle shift control lever weldment	1	

https://truckmanualshub.com/

TB550.391 Left Final Transmission Assembly(007)

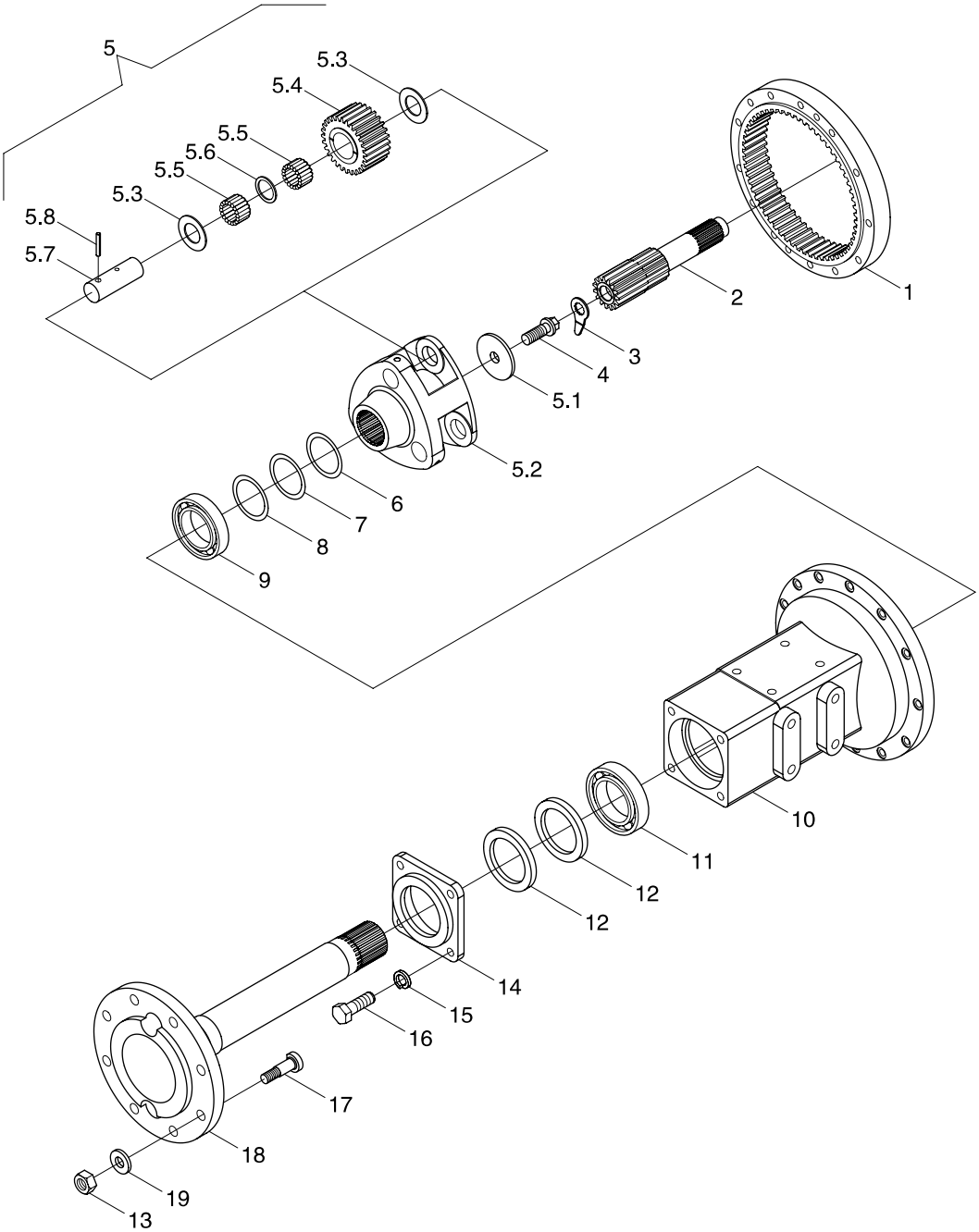

https://truckmanualshub.com/

TB550.391 Left Final Transmission Assembly(007)

No.	Part code and specification	Part name	Quantity	Remark
	TB550.391	Left Final Transmission Assembly	1	
1	TB550.391-04	Final Transmission Gear Ring	1	
2	TB550.391-03	Left Final Transmission Half Shaft	1	
3	FT300.39.110	Driving Shaft Lock Piece	1	
4	FT300.39.112	Driving Shaft Lock Bolt	1	
5	TB550.391.1	Final Transmission Planet Bracket Assembly	1	
5.1	FT300.39.111	Retainer Block	1	
5.2	TB550.391.1-01	Final Transmission Planet Bracket	1	
5.3	TB550.391.1-05	Planet Gear Roll Needle Outer Spacer Ring	6	
5.4	TB550.391.1-02	Final Transmission Planet Gear	3	
5.5	GBT309-6X23.8-G2X-3X-5	Needle	132	
5.6	TB550.391.1-04	Planet Gear Roll Needle Inner Spacer Ring	3	
5.7	TB550.391.1-03	Final Transmission Planet Gear Shaft	3	
5.8	QLWZB140-8X32	Pin	3	
6	FT300.39.121	Adjusting Washer	1	
7	FT300.39.122	Adjusting Washer	1	
8	FT300.39.123	Adjusting Washer	1	
9	GBT276-6211	Deep Groove Ball Bearing	1	
10	TB550.391-01	Left Half Shaft Housing Body	1	
11	GBT276-6214	Deep Groove Ball Bearing	1	
12	GBT9877.1-FB80X105X10D	Seal Ring	2	
13	GBT6176-M18X1.5-LH-10-A3L	Hexagon Nut, Type-2	8	
14	TB550.391-05	Half Shaft Oil Seal Seat	1	
15	GBT93-12-A0P	Standard Spring Washer	4	
16	GBT5783-M12X30-8.8-A3L	Hexagon Bolt	4	
17	FT65.38.222	Rear Hub Bolt (Left)	8	
18	TB550.391-02	Driving Shaft	1	
19	FT804.31B.120	Washer	8	

https://truckmanualshub.com/

TB550.392 Right Final Transmission Assembly（006）

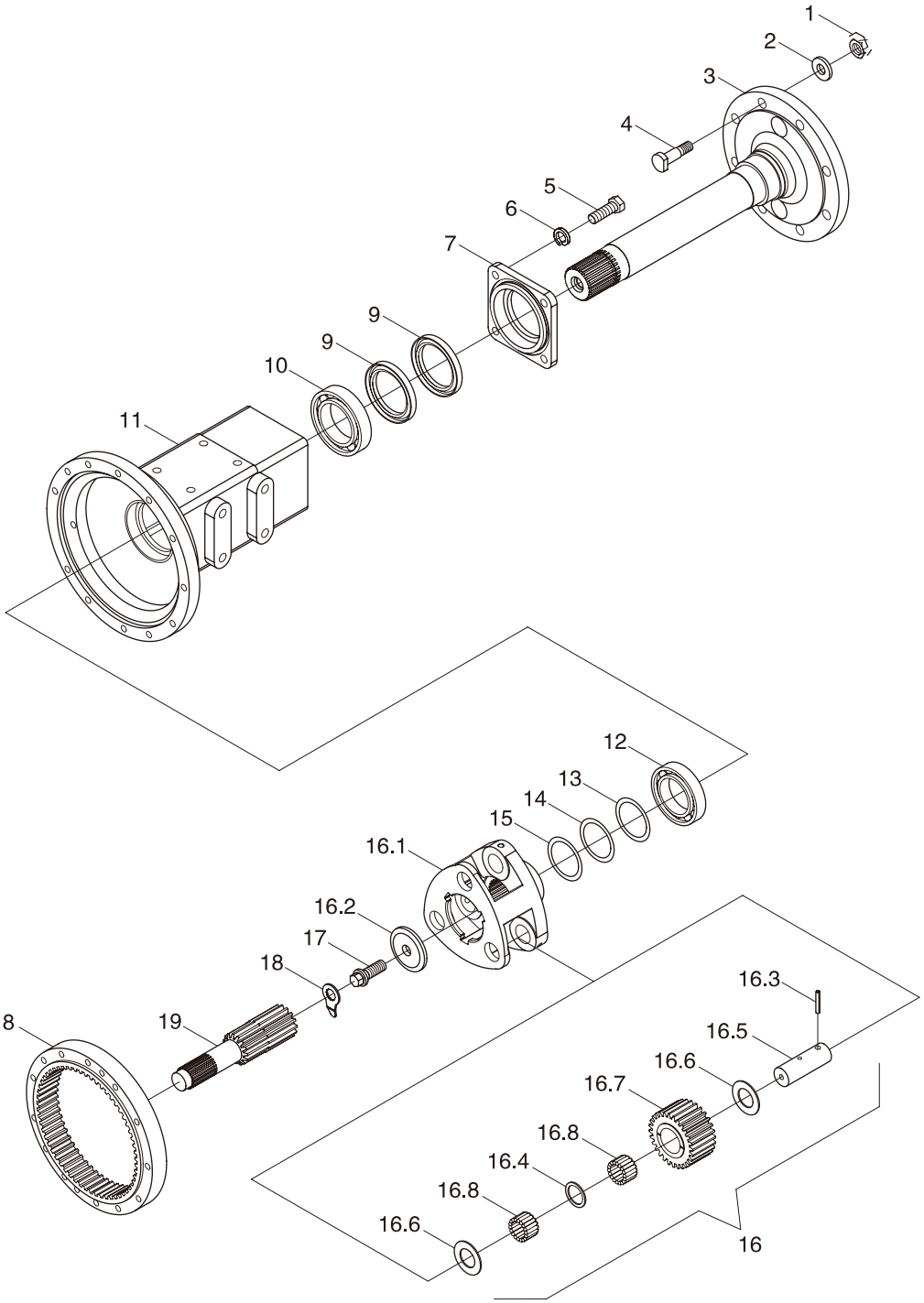

https://truckmanualshub.com/

TB550.392 Right Final Transmission Assembly（006）

No.	Part code and specification	Part name	Quantity	Remark
	TB550.392	Right Final Transmission Assembly	1	
1	GBT6176-M18X1.5-10-A3L	Hexagon Nut, Type-2	8	
2	FT804.31B.120	Washer	8	
3	TB550.391-02	Driving Shaft	1	
4	FT65.38.140a	Rear Hub Bolt	8	
5	GBT5783-M12X30-8.8-A3L	Hexagon Bolt	4	
6	GBT93-12-A0P	Standard Spring Washer	4	
7	TB550.391-05	Half Shaft Oil Seal Seat	1	
8	TB550.391-04	Final Transmission Gear Ring	1	
9	GBT9877.1-FB80X105X10D	Seal Ring	2	
10	GBT276-6214	Deep Groove Ball Bearing	1	
11	TB550.392-01	Right Half Shaft Housing	1	
12	GBT276-6211	Deep Groove Ball Bearing	1	
13	FT300.39.121	Adjusting Washer	1	
14	FT300.39.122	Adjusting Washer	1	
15	FT300.39.123	Adjusting Washer	1	
16	TB550.391.1	Final Transmission Planet Bracket Assembly	1	
16.1	TB550.391.1-01	Final Transmission Planet Bracket	1	
16.2	FT300.39.111	Retainer Block	1	
16.3	QLWZB140-8X32	Pin	3	
16.4	TB550.391.1-04	Planet Gear Roll Needle Inner Spacer Ring	3	
16.5	TB550.391.1-03	Final Transmission Planet Gear Shaft	3	
16.6	TB550.391.1-05	Planet Gear Roll Needle Outer Spacer Ring	6	
16.7	TB550.391.1-02	Final Transmission Planet Gear	3	
16.8	GBT309-6X23.8-G2X-3X-5	Needle	132	
17	FT300.39.112	Driving Shaft Lock Bolt	1	
18	FT300.39.110	Driving Shaft Lock Piece	1	
19	TB550.392-02	Right Final Transmission Half Shaft	1	

https://truckmanualshub.com/

TC02411020000K PTO Gear Assembly(001)

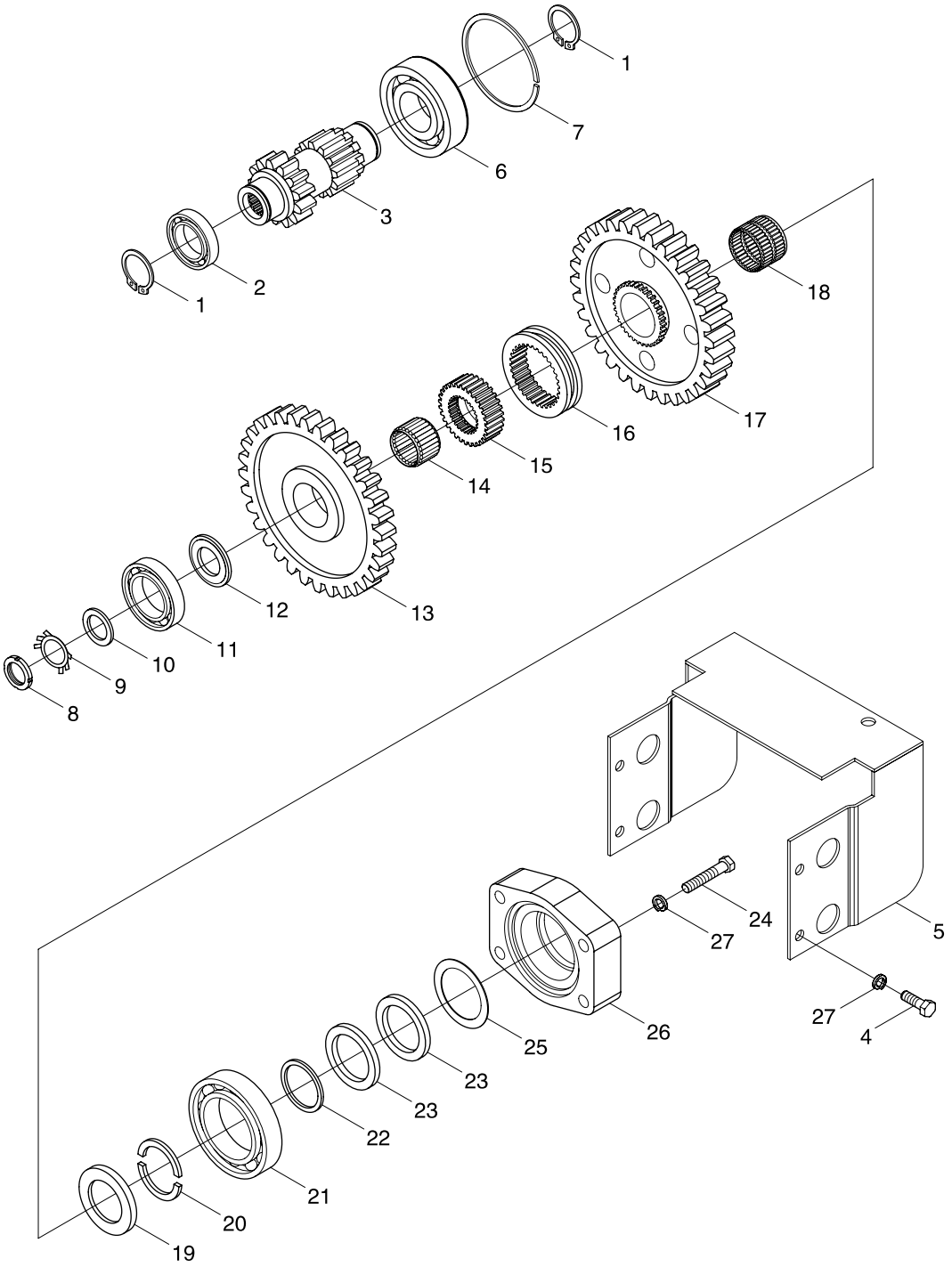

https://truckmanualshub.com/

TC02411020000K PTO Gear Assembly(001)

No.	Part code and specification	Part name	Quantity	Remark
	TC02411020000K	PTO gear assembly	1	
1	GBT894.1-40	Circlip for shaft	2	
2	GBT276-6208	Deep-grooved ball bearing	1	
3	TB550.411A-01	PTO high-speed driving gear	1	
4	GBT5782-M12X55-8.8-A3L	Hexagon head bolt	4	
5	TC02411010001K	PTO protection shield weldment	1	
6	GBT276-6308N	Deep-grooved ball bearing	1	
7	GBT305-90-96.5	Thrust ring	1	
8	GBT812-M25X1.5	Round nut	2	
9	GBT858-25	Stop washer for round nut	1	
10	FT300.41.122	Washer	1	
11	GBT276-6306	Deep-grooved ball bearing	1	
12	FT300.41C.118	PTO front circlip	1	
13	TB550.411A-02	PTO high-speed driven gear	1	
14	JBT7918-K35X40X27	Radial roller needle and retainer subassembly	1	
15	FT300.41C.117	PTO joggle seat	1	
16	FT300.41C.116	PTO joggle sleeve	1	
17	TB550.411-03	PTO low-speed driven gear	1	
18	TB550.411-04	Needle bearingKK40X46X34	1	
19	FT300.41E.114	Rear circlip	1	
20	FT300.41E.119	Thrust ring	1	
21	GBT276-6309	Deep-grooved ball bearing	1	
22	FT300.41E.113	PTO shaft bearing washer	1	
23	GBT9877.1-FB50X72X8D	Rubber covered rotary shaft lip seal	2	
24	GBT5783-M12X25-8.8-A3L	Hexagon head bolt	4	
25	FT300.41E.115	Oil seal circlip	1	
26	FT300.41E.101	Rear end cover I	1	
27	GBT93-12	Standard spring washer	8	

https://truckmanualshub.com/

TB550.412A PTO Shaft Assembly(004)

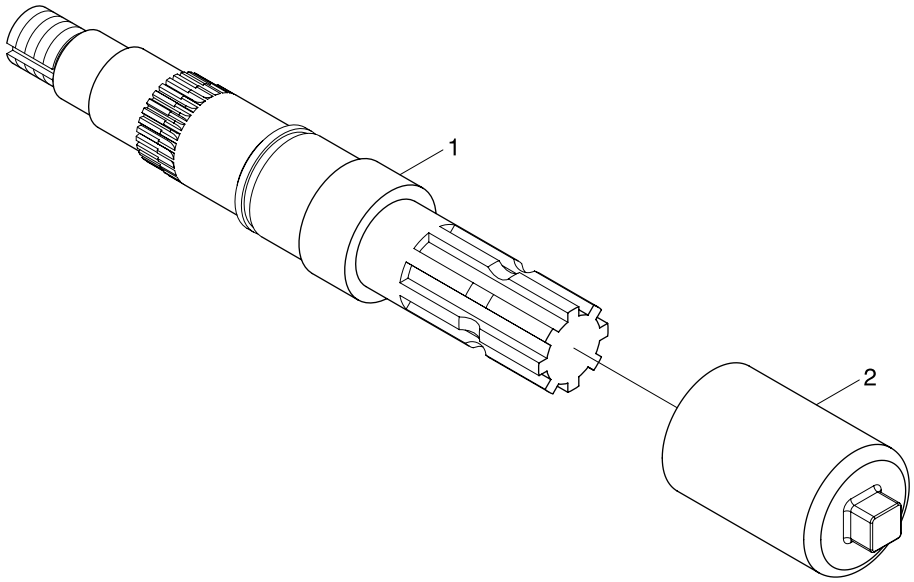

https://truckmanualshub.com/

TB550.412A PTO Shaft Assembly(004)

No.	Part code and specification	Part name	Quantity	Remark
	TB550.412A	PTO shaft assembly	1	
1	TB550.412A–01	Type I35 PTO shaft	1	
2	TB550.412–02	PTO shaft head shield	1	

https://truckmanualshub.com/

TS04413010000 PTO Control Assembly

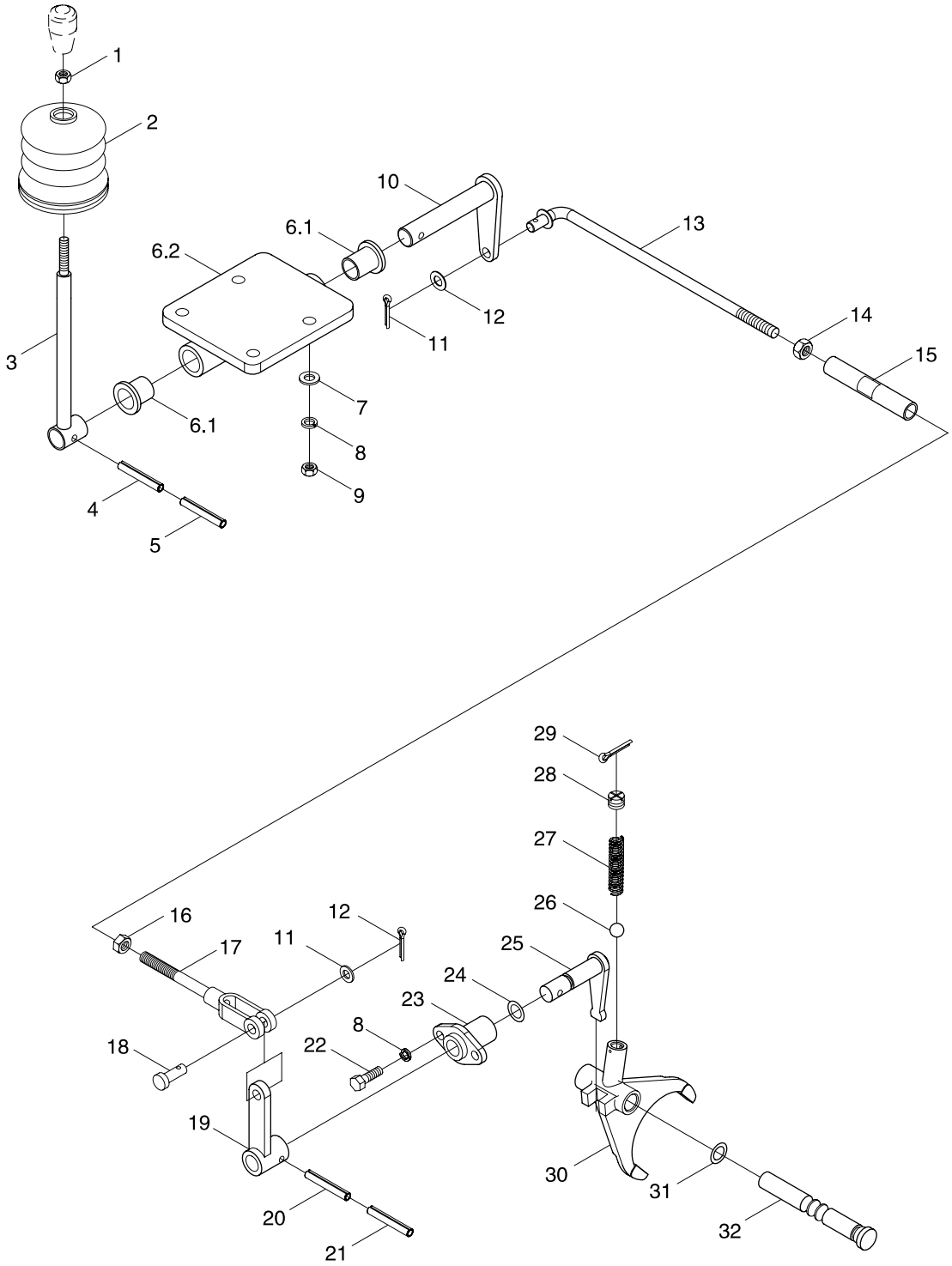

https://truckmanualshub.com/

TS04413010000 PTO Control Assembly

No.	Part code and specification	Part name	Quantity	Remark
	TS04413010000	PTO control assembly	1	
1	GBT6170-M10-8-A3L	Hexagon nut, style 1	1	
2	TB704.413A-02	Dustproof ring	1	
3	TB504.413A.2	PTO control lever weldment	1	
4	GBT879.1-6X32	Spring-type straight pin	1	
5	GBT879.1-3.5X32	Spring-type straight pin	1	
6	TS04413010003	Support seat press	1	
6.1	TB480.413A.1-01	Nylon bush	2	
6.2	TB704.413A.3.1	Support seat weldment	1	
7	GBT97.1-8-A0P	Plain washer	4	
8	GBT93-8-A0P	Standard spring washer	6	
9	GBT6170-M8-8-A2L	Hexagon nut, style 1	4	
10	TS04413010004	Control rocker arm weldment	1	
11	GBT91-3.2X16-A0P	Split pin	2	
12	GBT97.1-10-A0P	Plain washer	2	
13	TS04413010005	Intermediate drawbar	1	
14	GBT6171-M10X1-LH-8-A2L	Hexagon nut, style 1	1	
15	FT800A.21.353	Countershaft	1	
16	GBT6171-M10X1-8-A2L	Hexagon nut, style 1	1	
17	TB504.413A.5	Short pull rod weldment	1	
18	GBT882-B10X30	Pin shaft	1	
19	TB480.413.2	Rocker arm weldment	1	
20	GBT879.1-6X26	Spring-type straight pin	1	
21	GBT879.1-3.5X26	Spring-type straight pin	1	
22	GBT5783-M8X20-8.8-A2L	Hexagon head bolt	2	
23	FT300.41E.109	Dial lever bush	1	
24	GBT3452.1-16.0X2.65G	O-ring sealant used for hydraulic or pneumatic parts	1	
25	TB550.413-04	Finger-shaped dial lever	1	
26	GBT308-9.5-G100-b	Steel ball	1	
27	FT704.42B.163	Shift fork shaft locating spring	1	
28	TB550.413-03	Screw	1	
29	GBT91-2.5X32-A0P	Split pin	1	
30	TB550.413-01a	PTO control shift fork	1	
31	GBT3452.1-11.2X2.65G	O-ring sealant used for hydraulic or pneumatic parts	1	
32	FT300.41C.107a	PTO shift fork shaft	1	

https://truckmanualshub.com/

TB554.421B Transfer Case Housing Assembly（006）

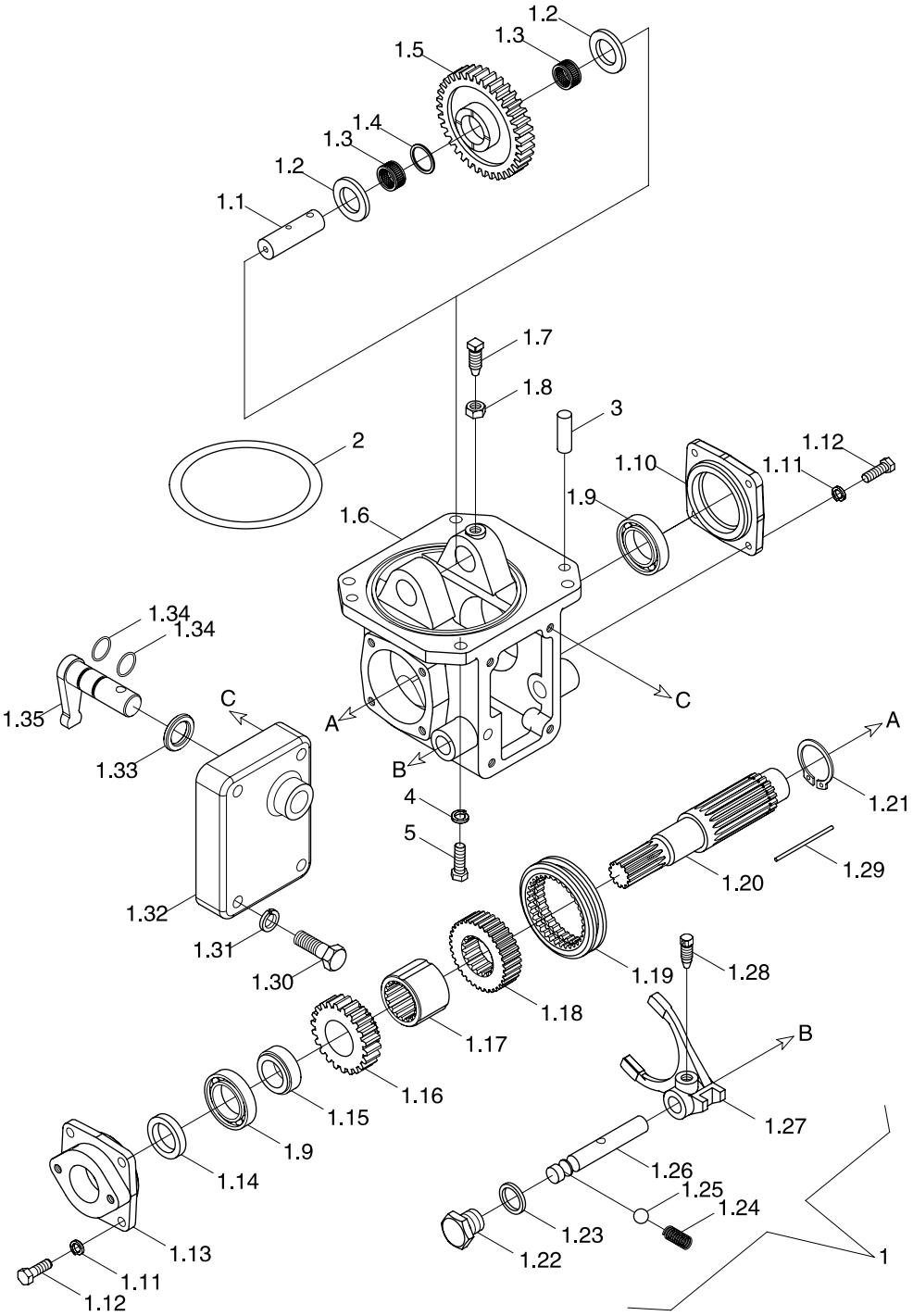

https://truckmanualshub.com/

TB554.421B Transfer Case Housing Assembly（006）

No.	Part code and specification	Part name	Quantity	Remark
	TB554.421B	Transfer Case Housing Assembly	1	
1	TB554.421B.1	Transfer Case Body Assembly	1	
1.1	TB554.421B.1-05	Idler Shaft	1	
1.2	FT304.42F.103	Thrust Ring	2	
1.3	JBT7918-K25X31X20	Needle And Carrier Combination	2	
1.4	FT304.42.126	Needle Inner Spacer Sleeve	1	
1.5	TB554.421B.1-01	Transfer Case Idler	1	
1.6	TB554.421B.1-03	Transfer Case Housing	1	
1.7	FT304.42.112	Thrust Screw	1	
1.8	GBT6173-M10X1-05-A2L	Hexagon Thin Nut	1	
1.9	GBT276-6306	Deep Groove Ball Bearing	2	
1.10	FT304.42.117	Bearing Cover	1	
1.11	GBT93-8-A0P	Standard Spring Washer	8	
1.12	GBT5783-M8X20-8.8-A2L	Hexagon Bolt	8	
1.13	FT304.42F.106	Bearing Seat	1	
1.14	GBT9877.1-FB30X52X7D	Seal Ring	1	
1.15	FT804.42.119a	Spacer Bush	1	
1.16	TB554.421B.1-02	Transfer Case Driven Gear	1	
1.17	TB554.421B.1-06	Gear Bush	1	
1.18	FT804.42.115	Mesh Gear Seat	1	
1.19	TB504.421.1-04	Shift Collar	1	
1.20	TB554.421B.1-04	Transfer Case Gear Shaft	1	
1.21	GBT894.1-38	Circlip For Shaft	1	
1.22	FT804.42.110	Screw Plug	2	
1.23	JBT982-18	Combined Seal Gasket	2	
1.24	FT800.37.139	Spring	1	
1.25	GBT308-10-G100-b	Steel Ball	1	
1.26	TB554.421B.1-08	Fork Shaft	1	
1.27	TB554.421B.1-07	Release Fork	1	
1.28	FT800.37.194	Locking Screw	1	
1.29	TA800.212B-02	Low Carton Steel Wire Sz-1.4	1	
1.30	GBT5782-M10X45-8.8-A3L	Hexagon Bolt	4	

https://truckmanualshub.com/

TB554.421B Transfer Case Housing Assembly（006）(extension)

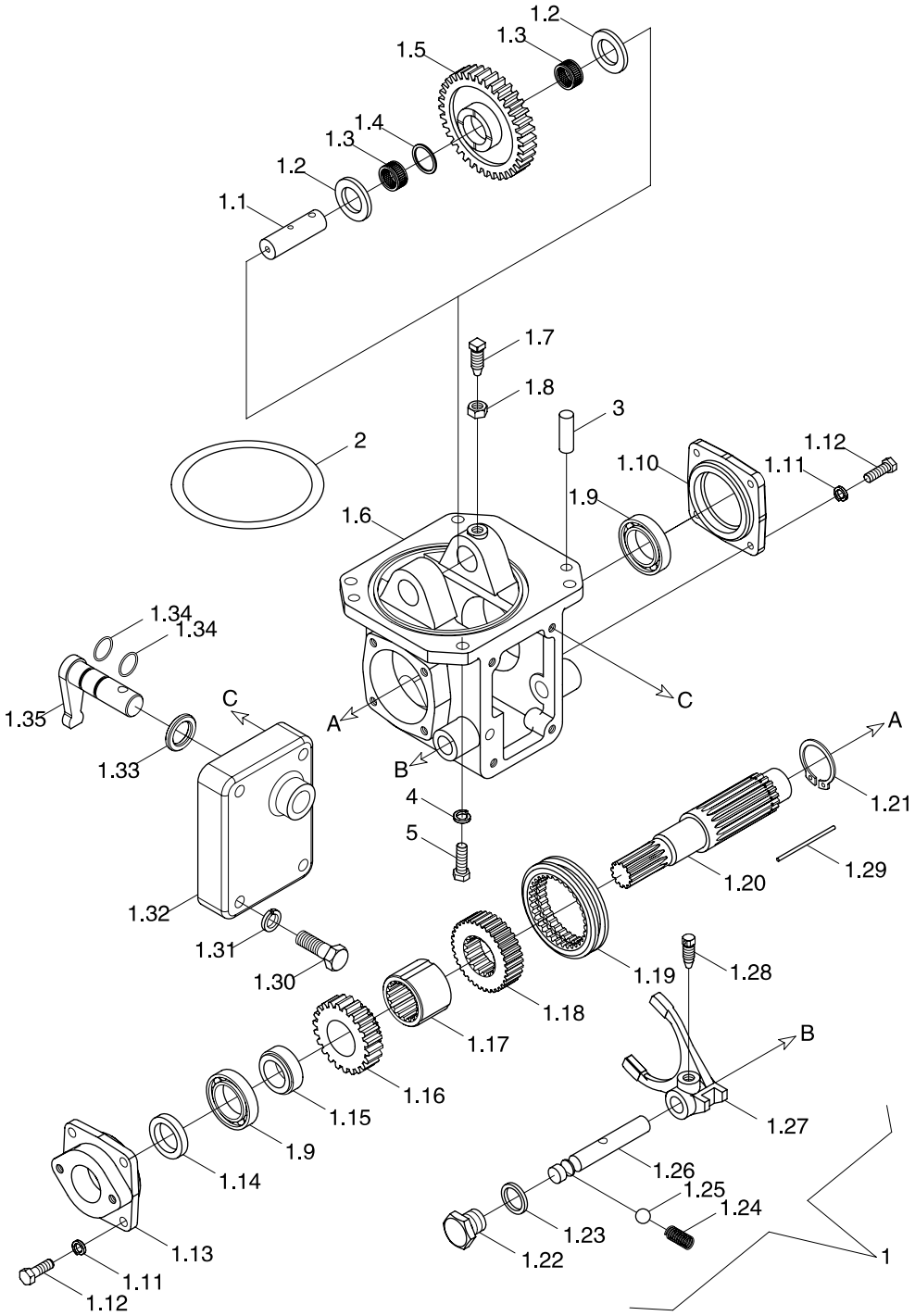

https://truckmanualshub.com/

TB554.421B Transfer Case Housing Assembly（006）(extension)

No.	Part code and specification	Part name	Quantity	Remark
1.31	GBT93-10-A0P	Standard Spring Washer	4	
1.32	TB554.423B-01	Side Cover	1	
1.33	TB554.423B-02	Rotary Shaft Spacer Bush	1	
1.34	GBT3452.1-17.0X1.80G	Rubber O-Seal Ring	2	
1.35	TB554.423B.1	Rotary Shaft Weldment	1	
2	GBT3452.1-132X3.55G	Rubber O-Seal Ring	1	
3	GBT119.1-10m6X20-A0P	Column Pin	2	
4	GBT93-10	Standard Spring Washer	4	
5	GBT5783-M10X30-8.8-A3L	Hexagon Bolt	4	

https://truckmanualshub.com/

TB554.422 Transfer Case Transmission Assembly(005)

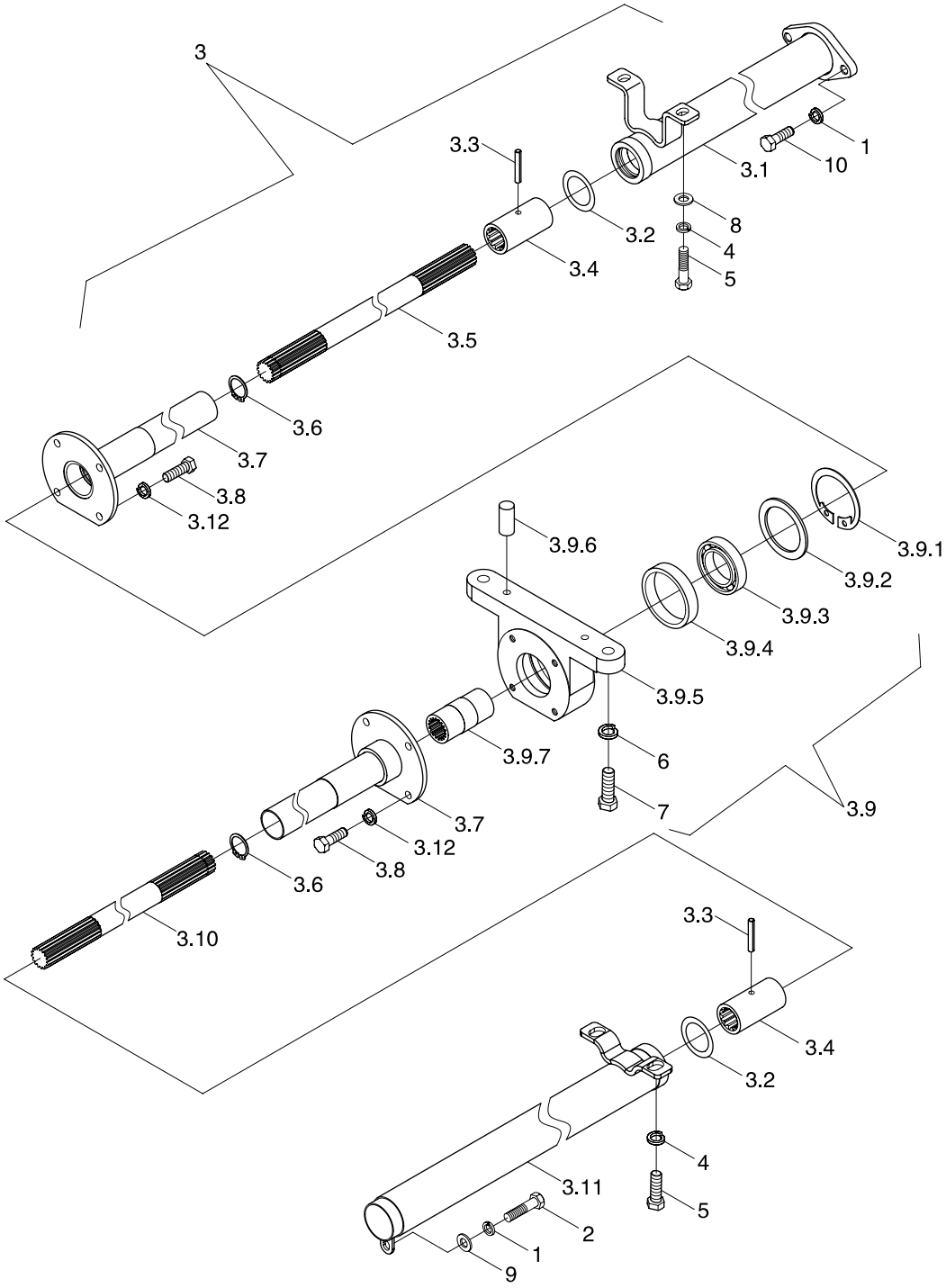

https://truckmanualshub.com/

TB554.422 Transfer Case Transmission Assembly(005)

No.	Part code and specification	Part name	Quantity	Remark
	TB554.422	Transfer Case Transmission Assembly	1	
1	GBT93-8-A3L	Standard Spring Washer	3	
2	GBT5783-M8X16-8.8-A2L	Hexagon Bolt	1	
3	TB554.422.3	Transmission Shaft Assembly	1	
3.1	FT304.42F.015	Bonnet (1) Weldment	1	
3.2	GBT3452.1-34.5X3.55G	Rubber O-Seal Ring	2	
3.3	GBT879.1-6X35	Spring Column Pin	2	
3.4	FT304.42.107a	Spline Bush	2	
3.5	FT404.42.128	Rear Transmission Shaft	1	
3.6	GBT894.1-26	Circlip For Shaft	2	
3.7	FT304.42X.017	Sheath (2) Welding	2	
3.8	GBT5783-M8X20-8.8-A2L	Hexagon Bolt	8	
3.9	TB554.422.1	Middle Bearing Seat Assembly	1	
3.9.1	GBT893.2-72	Circlips For Hole	1	
3.9.2	FT304.42X.136	Spacer Ring	1	
3.9.3	GBT276-6007-2RS	Deep Groove Ball Bearing	1	
3.9.4	FT304.42X.137	Rubber Ring	1	
3.9.5	FT304.42X.138	Middle Bearing Seat	1	
3.9.6	GBT119.1-8m6X20-A0P	Column Pin	2	
3.9.7	FT304.42X.135	Middle Spline Bush	1	
3.10	TB554.422-01	Front Transmission Shaft	1	
3.11	TB554.422.2	Sheath (3) Welding	1	
3.12	GBT93-8-A3L	Standard Spring Washer	8	
4	GBT93-10-A3L	Standard Spring Washer	4	
5	GBT5783-M10X25-8.8-A3L	Hexagon Bolt	4	
6	GBT93-12-A3L	Standard Spring Washer	2	
7	GBT5783-M12X40-8.8-A3L	Hexagon Bolt	2	
8	GBT97.1-10-A3L	Flat Washer	4	
9	GBT97.1-8-A3L	Flat Washer	1	
10	GBT5783-M8X20-8.8-A2L	Hexagon Bolt	2	

https://truckmanualshub.com/

TS04423010000 Transfer Case Control Assembly

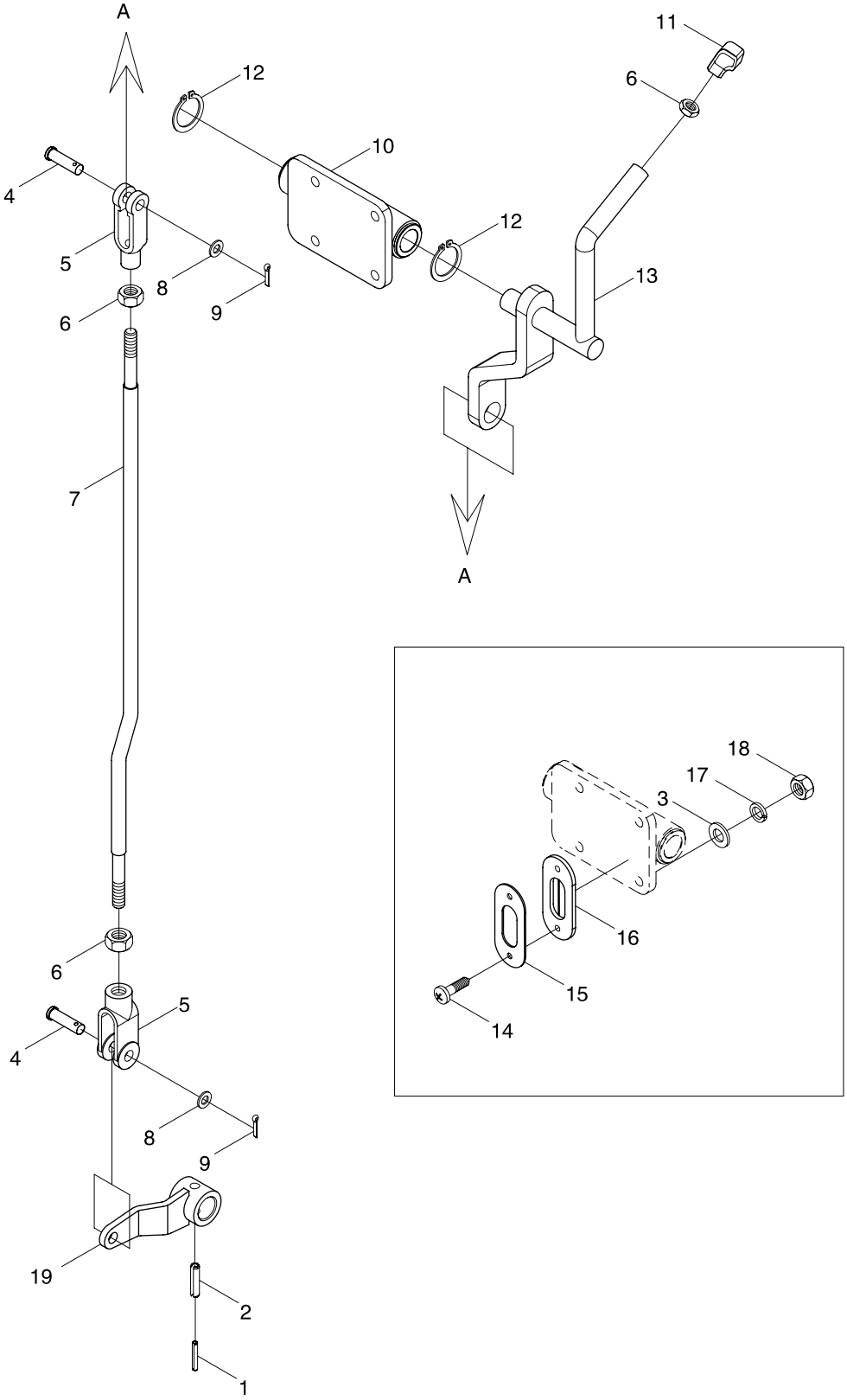

https://truckmanualshub.com/

TS04423010000 Transfer Case Control Assembly

No.	Part code and specification	Part name	Quantity	Remark
	TS04423010000	Transfer case control assembly	1	
1	GBT879.1-5X32	Elastic cylindrical pin	1	
2	GBT879.1-8X32	Elastic cylindrical pin	1	
3	GBT97.1-8-A0P	Plain washer	4	
4	GBT882-B10X30-A0P	Pin shaft	2	
5	FT300.43.108	Pull rod front fork	2	
6	GBT6170-M10-8-A3L	Hexagon nut, style 1	3	
7	TS04423010004	Pull rod	1	
8	GBT97.1-10-A0P	Plain washer	2	
9	GBT91-3.2X16-A0P	Cotter pin	2	
10	TS04423010003	Support seat press	1	
11	TS04423010001	Transfer case control handle	1	
12	GBT894.1-22	Circlip for shaft	2	
13	TS04423010002	Control rotary shaft weldment	1	
14	GBT823-M6X12-4.8-A2L	Cross recessed small pan head screw	2	
15	TS04423010013	Press plate	1	
16	TS04423010012	Seal gasket	1	
17	GBT93-8-A0P	Standard spring washer	4	
18	GBT6170-M8-8-A2L	Hexagon nut, style 1	4	
19	TS04423010005	Rocker arm weldment	1	

https://truckmanualshub.com/

TC02311210000 Front Driving Axle Assembly(001)

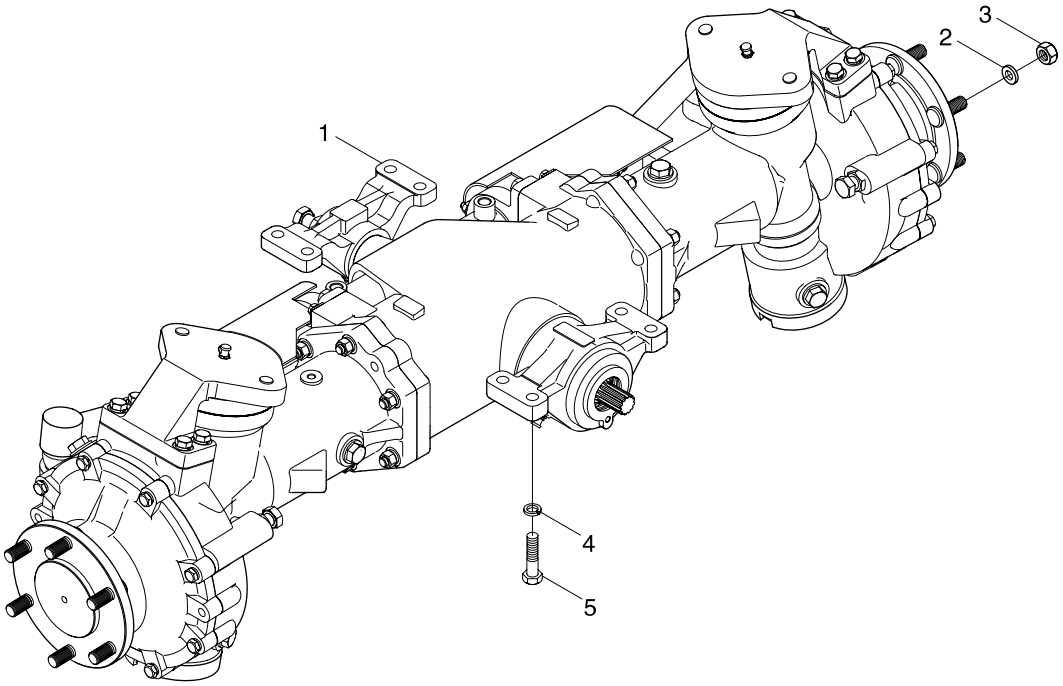

https://truckmanualshub.com/

TC02311210000 Front Driving Axle Assembly(001)

No.	Part code and specification	Part name	Quantity	Remark
	TC02311210000	Front Driving Axle Assembly	1	
1	TC02311210001	Front Driving Axle Sub-Assembly	1	
2	FT400.31B.103	Washer	12	
3	GBT6176-M14X1.5-10-A3L	Hexagon Nut, Type-2	12	
4	GBT93-14-A0P	Standard Spring Washer	8	
5	GBT5783-M14X45-10.9-A3L	Hexagon Bolt	8	

https://truckmanualshub.com/

TB554.312 Front Bracket Assembly（005）

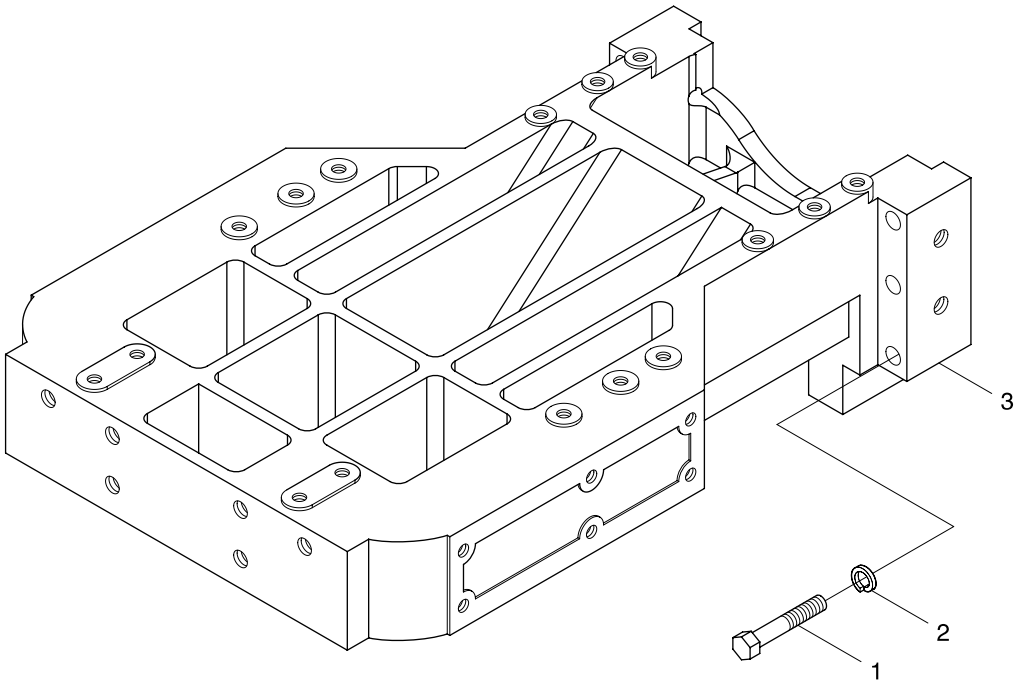

https://truckmanualshub.com/

TB554.312 Front Bracket Assembly（005）

No.	Part code and specification	Part name	Quantity	Remark
	TB554.312	Front bracket assembly	1	
1	TC02312010002	Hex bolt M16X105-10.9-A2L	6	
2	TB604.312-04	Washer	6	
3	TB554.312-01	Front bracket	1	

https://truckmanualshub.com/

FT404.32F.001 Front Drive Wheel Assembly(005)

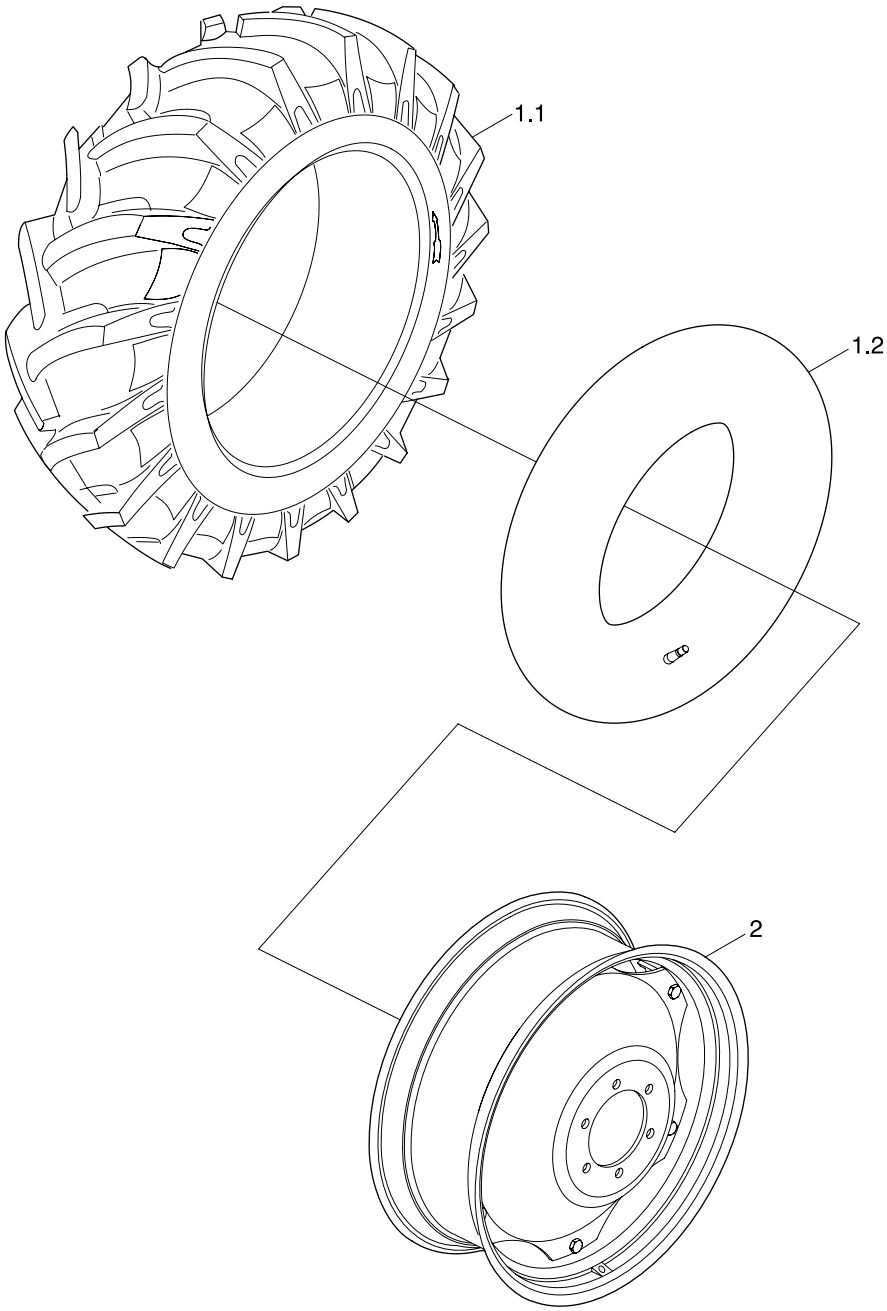

https://truckmanualshub.com/

FT404.32F.001 Front Drive Wheel Assembly(005)

No.	Part code and specification	Part name	Quantity	Remark
	FT404.32F.001	Front drive wheel assembly	1	
1	TB704.32B.2	Inner tube/tyre assembly 8.3–20	1	
1.1	GBT2979–8.3–20–6PR–R	General section bias tyre of tractor drive wheel	1	
1.2	GBT2979–8.3–20–R	Inner tube of tractor drive wheel	1	
2	FT404.32F.011	Rim welding	1	

https://truckmanualshub.com/

FT550.34F.001 Rear Driving Wheel Assembly (005)

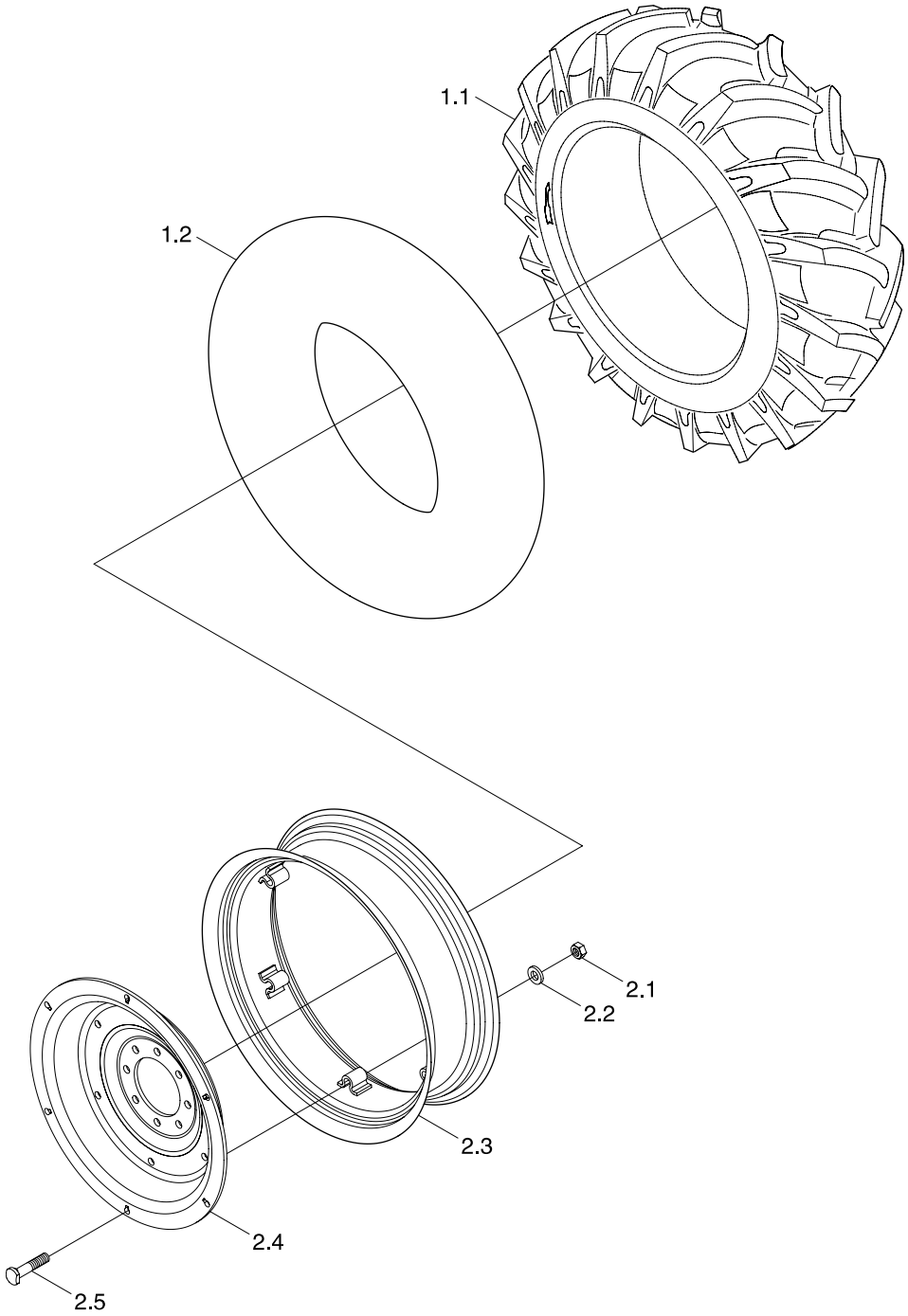

https://truckmanualshub.com/

FT550.34F.001 Rear Driving Wheel Assembly (005)

No.	Part code and specification	Part name	Quantity	Remark
	FT550.34F.001	Rear Driving Wheel Assembly	1	
1	TB604.34A.1.2	Tires Assembly	1	
1.1	GBT2979–14.9–28–6PR–R	Driving Wheel Outer Tube	1	
1.2	GBT2979–14.9–28–R	Driving Wheel Inner Tube	1	
2	FT550.34F.011	Rim Spoke Assembly	1	
2.1	GBT6171–M16X1.5–10–A3L	Nut	6	
2.2	FT654.32.104	Washer	6	
2.3	FT550.34F.012	Rim Weldment	1	
2.4	FT550.34.105b	Spoke	1	
2.5	FT650.34.107	Rim Bolt	6	

https://truckmanualshub.com/

TC04401080000 Steering Gear and Steering Column Assembly

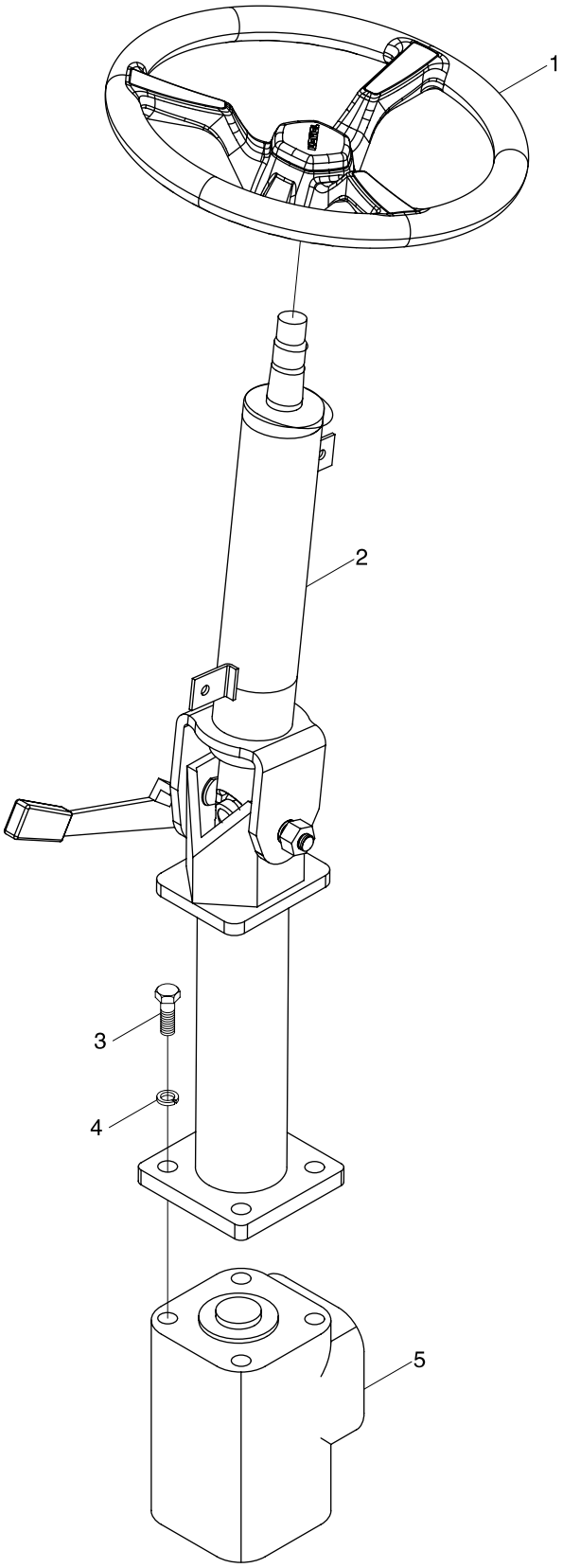

https://truckmanualshub.com/

TC04401080000 Steering Gear and Steering Column Assembly

No.	Part code and specification	Part name	Quantity	Remark
	TC04401080000	Steering gear and steering column assembly	1	
1	TS04401010001	Steering wheel assembly	1	
2	TS04401010002	Steering column assembly	1	
3	GBT5783–M10X30–8.8–A3L	Hexagon head bolt	4	
4	GBT93–10–A0P	Standard spring washer	4	
5	TC04400010009	Hydraulic steering gear assembly	1	

https://truckmanualshub.com/

TS04402070000K Fully Hydraulic Steering Assembly−1

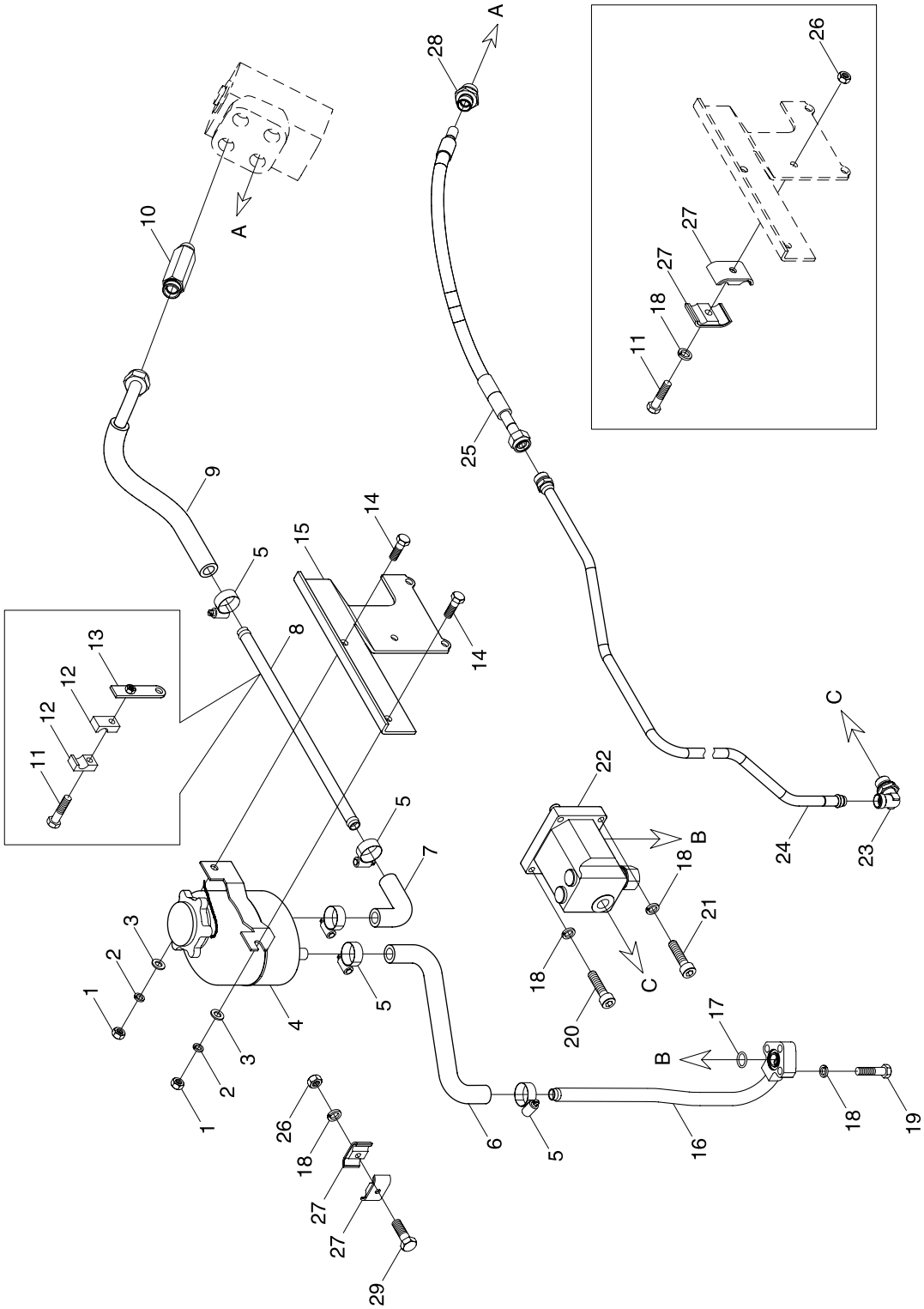

https://truckmanualshub.com/

TS04402070000K Fully Hydraulic Steering Assembly-1

No.	Part code and specification	Part name	Quantity	Remark
	TS04402070000K	Fully Hydraulic Steering Assembly	1	
1	GBT6170-M10-8-A3L	Hexagon Nut, Type-1	2	
2	GBT93-10-A3L	Standard Spring Washer	2	
3	GBT97.1-10-A3L	Flat Washer	2	
4	TS04402010019	Steering Oil Tank and Breather Assembly	1	
5	Q67632	B-Type Worm Transmission Hose Clamp	5	
6	TC04402010006	Gear Pump Oil Inlet Rubber Pipe	1	
7	TS04402010006	Oil Return Rubber Hose	1	
8	TS04402010007	Oil Return Steel Pipe	1	
9	TC02402290001K	Redirector Oil Return Pipe Assembly	1	
10	TC04402080012	End Straight Thread Connector Body L16	1	
11	GBT5783-M8X40-8.8-A2L	Hexagon Bolt	2	
12	TG1204.402-01	Single Hole Pipe Clamp	2	
13	TS04402010012	Pipe Clamp Bracket 2	1	
14	GBT5783-M10X25-8.8-A3L	Hexagon Bolt	2	
15	TS04402010011	Steering Oil Tank Bracket	1	
16	TC04402010003	Gear Pump Oil Suction Steel Pipe Weldment	1	
17	GBT3452.1-17.0X2.65G	Rubber O-Seal Ring	1	
18	GBT93-8-A3L	Standard Spring Washer	9	
19	GBT5783-M8X30-8.8-A2L	Hexagon Bolt	3	
20	GBT70.1-M8X30-8.8	Inner Hexagon Screw	2	
21	GBT70.1-M8X65-8.8	Inner Hexagon Screw	2	
22	TC02402350001K	Permanent Overflow Pump	1	
23	TC04400020003	Adjustable Joint	1	
24	TC04402010005	Oil Outlet Pipe Assembly Of Gear Pump	1	
25	TC04402010007	High Pressure Hose Assembly	1	
26	GBT6170-M8-8-A2L	Hexagon Nut, Type-1	1	
27	TC04402010017	Oil Pipe Clip and Rubber Pad Subassembly 16-12	4	
28	GE20D18.24.93.5	End Straight Thread Connector Body	2	
29	GBT5783-M8X35-8.8-A2L	Hexagon Bolt	1	

https://truckmanualshub.com/

TS04402070000K Fully Hydraulic Steering Assembly−2

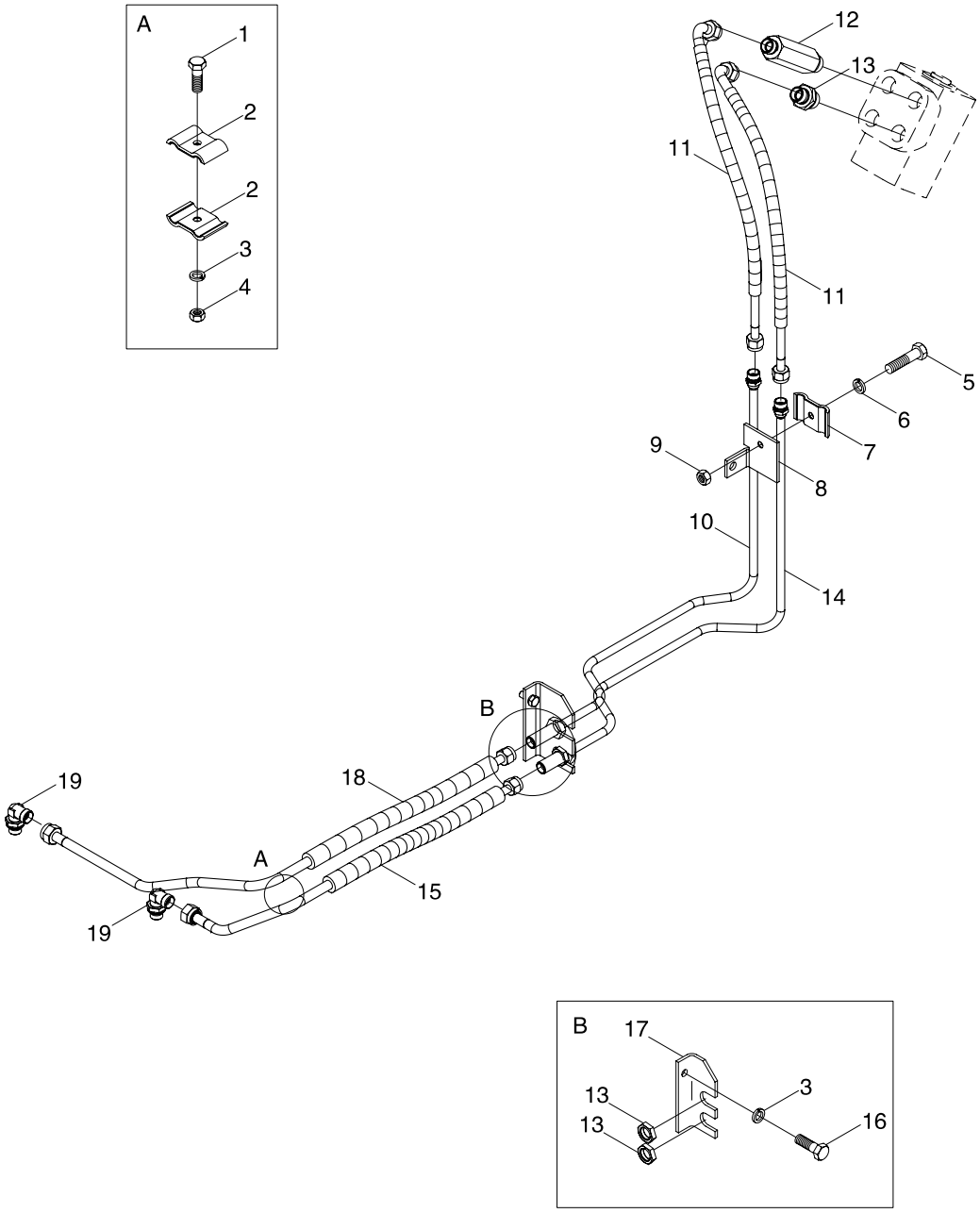

https://truckmanualshub.com/

TS04402070000K Fully Hydraulic Steering Assembly-2

No.	Part code and specification	Part name	Quantity	Remark
	TS04402070000K	Fully Hydraulic Steering Assembly	1	
1	GBT5783-M8X25-8.8-A2L	Hexagon Bolt	1	
2	TC02402200018K	Oil Pipe Clamp	2	
3	GBT93-8-A3L	Standard Spring Washer	2	
4	GBT6170-M8-8-A2L	Hexagon Nut, Type-1	1	
5	GBT5783-M6X25-8.8-A2L	Hexagon Bolt	1	
6	GBT93-6-A3L	Standard Spring Washer	1	
7	TC04402010023	Oil Pipe Clip and Rubber Pad Subassembly 10-10/40	1	
8	TS04402070002K	Bracket	1	
9	GBT6170-M6-8-A2L	Hexagon Nut, Type-1	1	
10	TC04402010009	Left Steering Steel Pipe	1	
11	TC04402010008	Left and Right Steering Rubber Pipe Assembly	2	
12	TC04402080010	End Straight Thread Connector Body L12	1	
13	GBT3763-M16X1.5	Nut	2	
14	TC04402010013	Right Steering Steel Pipe	1	
15	TC02402200001	Right Steering Oil Pipe Assembly	1	
16	GBT5783-M8X20-8.8-A2L	Hexagon Bolt	1	
17	TS04402070001K	Oil Pipe Bracket	1	
18	TC02402200002	Left Steering Oil Pipe Assembly	1	
19	GL06701050023	24° cone connector - straight thread elbow L12	2	

https://truckmanualshub.com/

TB704.431 Left Brake Assembly

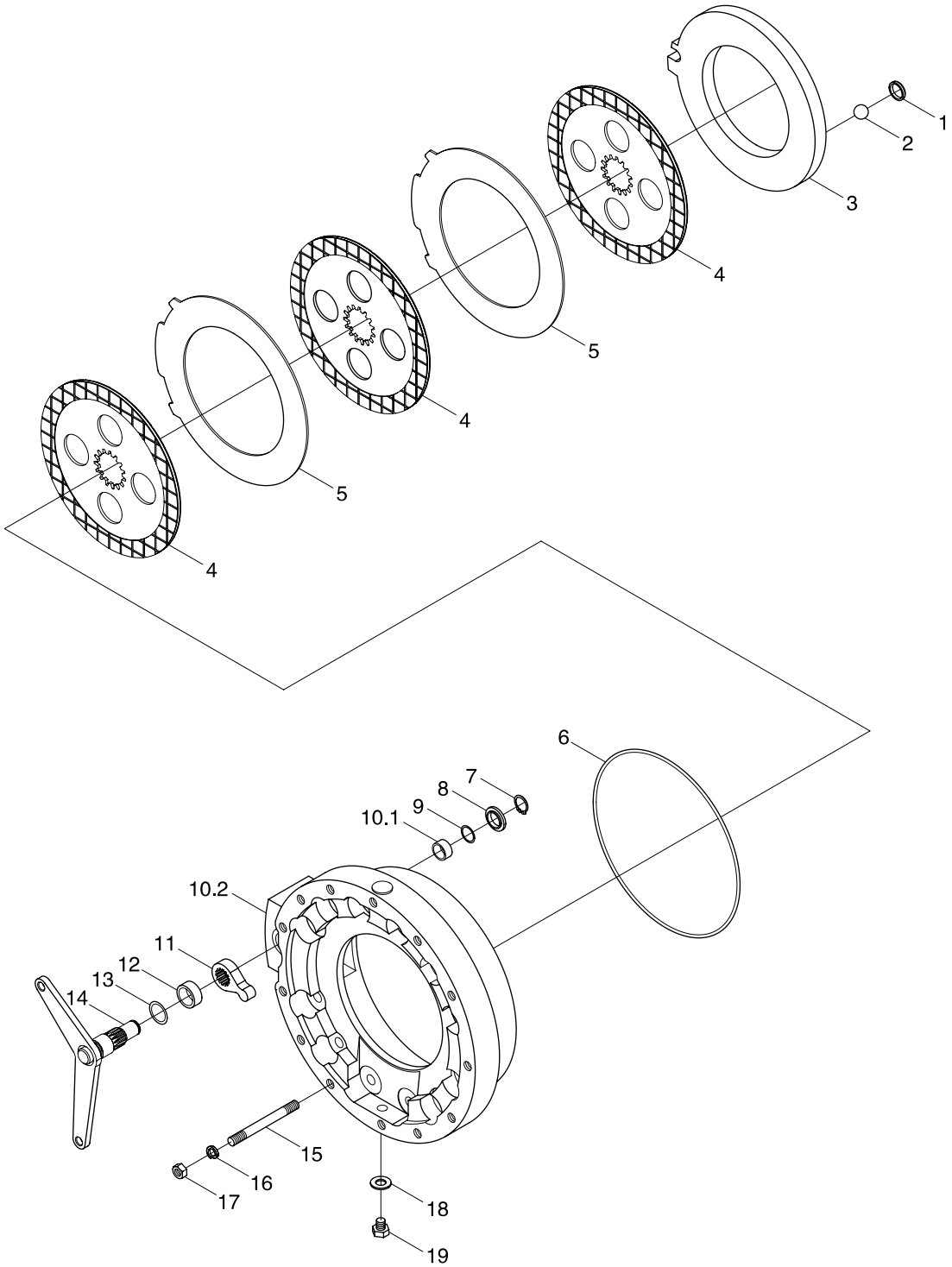

https://truckmanualshub.com/

TB704.431 Left Brake Assembly

No.	Part code and specification	Part name	Quantity	Remark
	TB704.431	Left brake assembly	1	
1	FT300.43.102	Plug piece	6	
2	GBT308-18.000-G100-b	Steel ball	6	
3	TB550.431-01	Left brake platen	1	
4	TB550.431.3	Brake friction disc assembly	3	
5	FT300.43.105	Spacing plate	2	
6	FT300.43.101	O-ring	1	
7	GBT894.1-18	Circlip for shaft	1	
8	FT300.43.109a	Washer	1	
9	GBT3452.1-18.0X2.65G	O-ring	1	
10	TB550.431.1	Left brake housing assembly	1	
10.1	TB550.431.1-02	Crankshaft lining	1	
10.2	TB550.431.1-01	Left brake housing	1	
11	TB550.431-02	Shift block	1	
12	FT300.43.107	Spacing sleeve	1	
13	GBT3452.1-20.0X2.65G	O-ring	1	
14	TB704.431.1	Left crank unit	1	
15	GBT898-AM12-M12X1.25X80-10.9-A2L	Stud	13	
16	GBT93-12	Washer	13	
17	GBT6171-M12X1.25-10-A3L	Nut	13	
18	FT300.43.153	Final transmission oil drainage port washer	1	
19	FT300.43.154	Screw plug	1	

https://truckmanualshub.com/

TB704.432 Right Brake Assembly

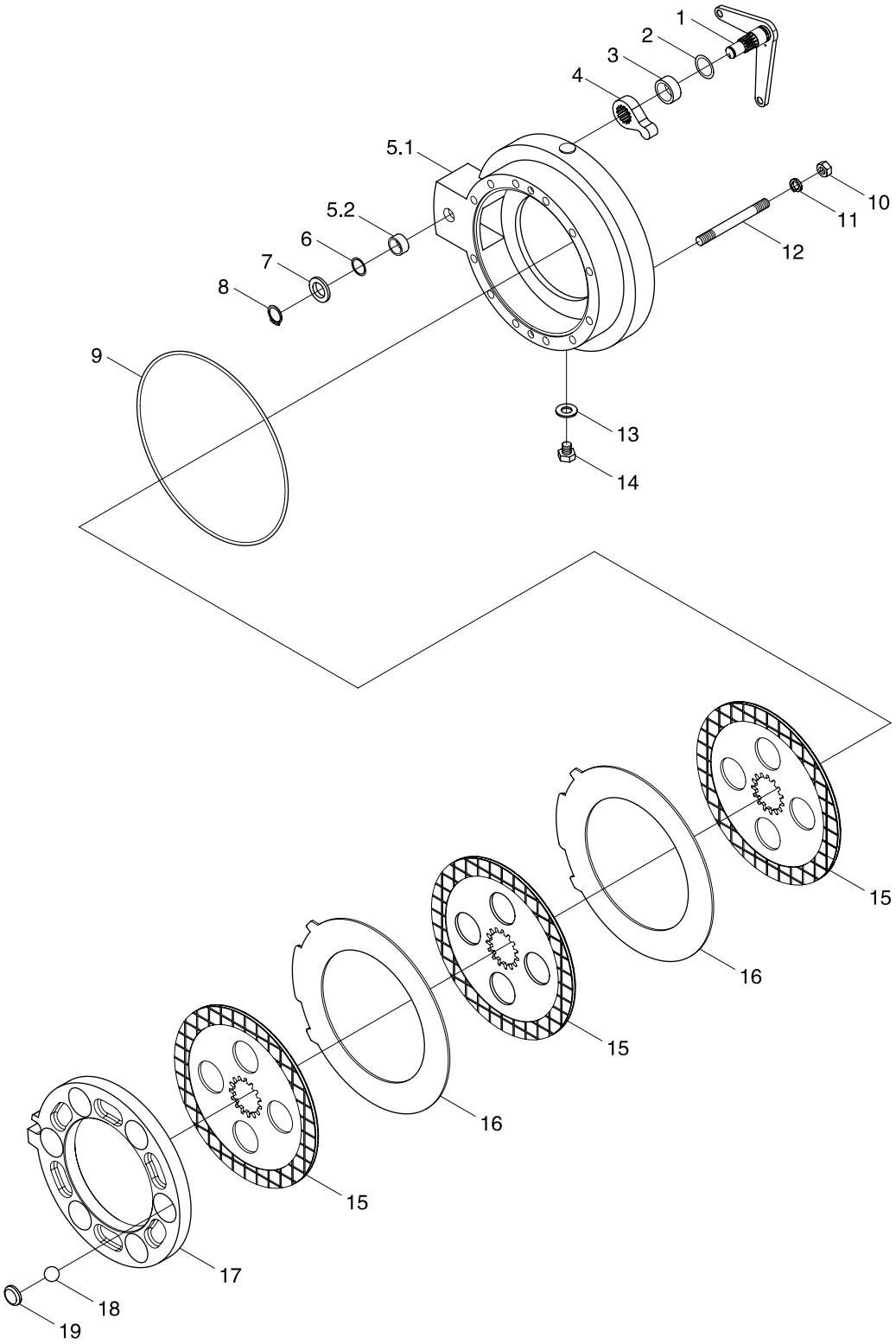

https://truckmanualshub.com/

TB704.432 Right Brake Assembly

No.	Part code and specification	Part name	Quantity	Remark
	TB704.432	Right brake assembly	1	
1	TB704.432.1	Right crank unit	1	
2	GBT3452.1-20.0X2.65G	O-ring	1	
3	FT300.43.107	Spacing sleeve	1	
4	TB550.431-02	Shift block	1	
5	TB550.432.1	Right brake housing assembly	1	
5.1	TB550.432.1-01	Right brake housing	1	
5.2	TB550.431.1-02	Crank shaft bushing	1	
6	GBT3452.1-18.0X2.65G	O-ring	1	
7	FT300.43.109a	Washer	1	
8	GBT894.1-18	Circlip for shaft	1	
9	FT300.43.101	O-ring	1	
10	GBT6171-M12X1.25-10-A3L	Nut	13	
11	GBT93-12	Washer	13	
12	GBT899-AM12-M12X1.25X80-10.9-A2L	Stud	13	
13	FT300.43.153	Final transmission oil drainage port washer	1	
14	FT300.43.154	Screw plug	1	
15	TB550.431.3	Brake friction disc assembly	3	
16	FT300.43.105	Spacing plate	2	
17	TB550.432-01	Right brake platen	1	
18	GBT308-18.000-G100-b	Steel ball	6	
19	FT300.43.102	Plug piece	6	

https://truckmanualshub.com/

TS04433010000 Braking System Control Mechanism Assembly−1

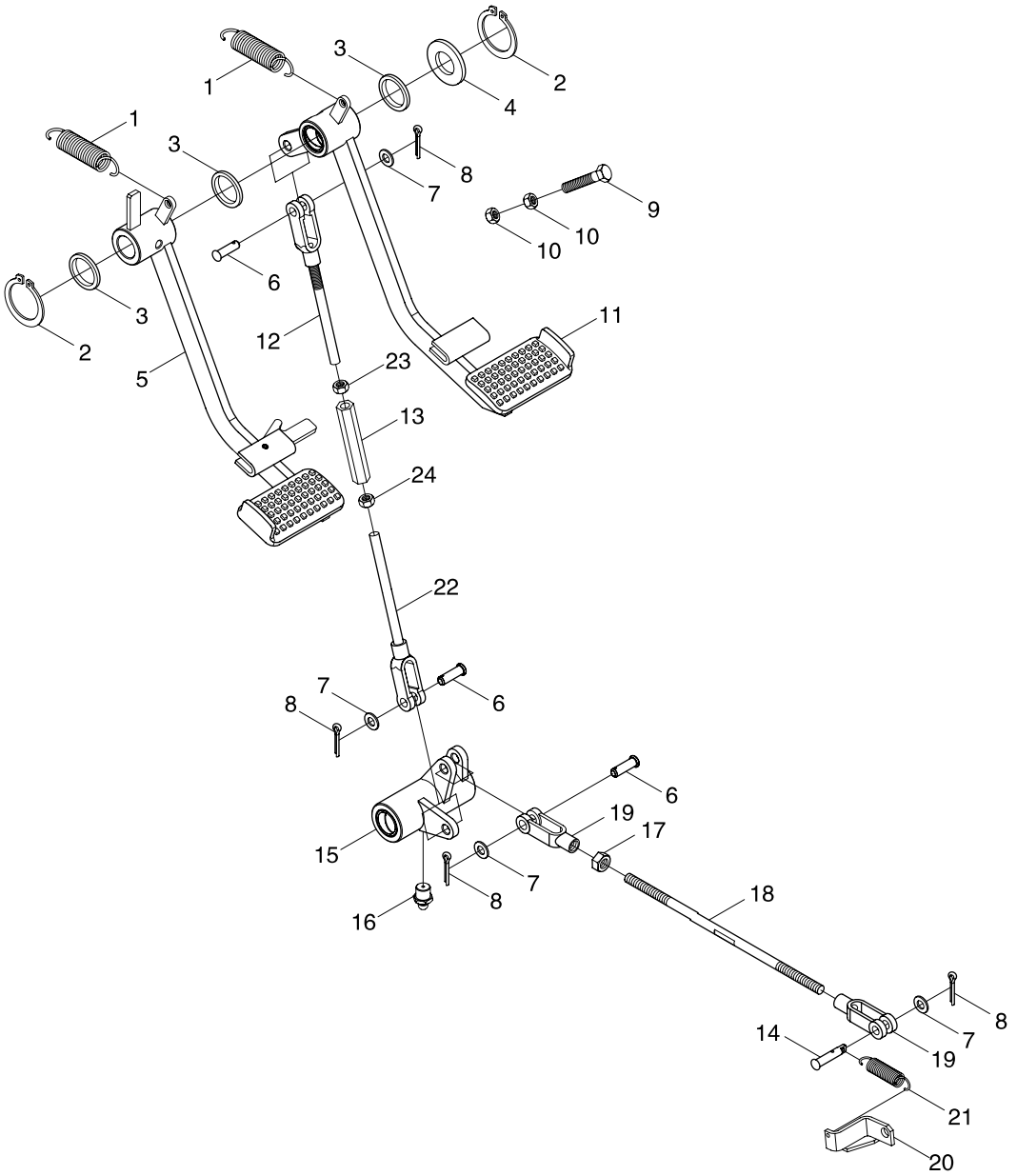

https://truckmanualshub.com/

TS04433010000 Braking System Control Mechanism Assembly-1

No.	Part code and specification	Part name	Quantity	Remark
	TS04433010000	Brake System Control Assembly	1	
1	TE250.212D-05	Clutch Pedal Return Spring	2	
2	GBT894.1-25	Circlip For Shaft	2	
3	GBT97.1-24-A3L	Flat Washer	1	
4	TE250.433C-02	Washer	7	
5	TS04433010025	Left Brake Pedal Unit	1	
6	GBT882-B10X30-A3L	Pin Shaft	2	
7	GBT97.1-10-A3L	Flat Washer	4	
8	GBT91-3.2X22-A3L	Split Pin	4	
9	GBT5783-M10X45-8.8-A3L	Hexagon Bolt	2	
10	GBT6170-M10-8-A3L	Hexagon Nut, Type-1	4	
11	TS04433010028	Right Brake Pedal Unit	1	
12	TB604.212A.5	Upper Pull Rod Weldment	1	
13	TE354.433-03	Connecting Rod	1	
14	TB704.433-04	Connecting Pin	1	
15	TB604.433E.5	Rocker Unit Hub	1	
16	JBT7940.1-M8X1	Straight Forced Filling Oil Cup	3	
17	GBT6170-M10-LH-8-A3L	Hexagon Nut, Type-1	1	
18	TB604.433E-03	Lower Pull Rod	1	
19	TA700.431A-01	Dextrorotation Long Hole Connect Fork	2	
20	TB704.433.5	Right Return Spring Connecting Plate Weldment	1	
21	TB504.433-09	Return Spring	1	
22	TB604.433E.10	Brake Lower Pull Rod Weldment	1	
23	GBT6171-M12X1.5-8-A3L	Hexagon Nut, Type-1	1	
24	GBT6171-M12X1.5-LH-8-A3L	Hexagon Nut, Type-1	1	

https://truckmanualshub.com/

TS04433010000 Braking System Control Mechanism Assembly−2

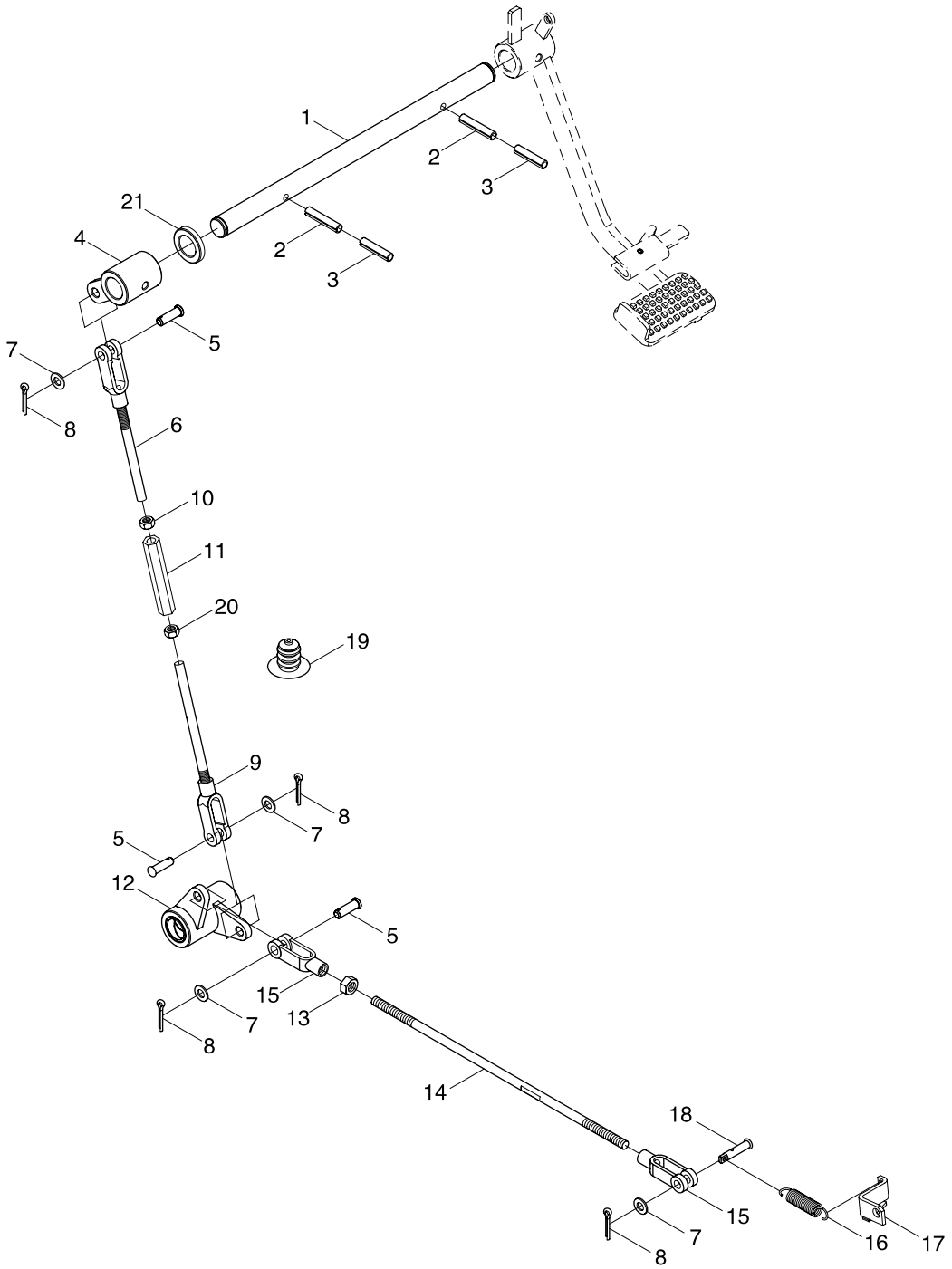

https://truckmanualshub.com/

TS04433010000 Braking System Control Mechanism Assembly-2

No.	Part code and specification	Part name	Quantity	Remark
	TS04433010000	Brake System Control Assembly	1	
1	TB604.433E-01	Support Shaft	1	
2	GBT879.1-5X40	Spring Column Pin	2	
3	GBT879.1-8X40	Spring Column Pin	2	
4	TB604.433E.3	Left Draw Arm Weldment	1	
5	GBT882-B10X30-A3L	Pin Shaft	5	
6	TB604.212A.5	Upper Pull Rod Weldment	1	
7	GBT97.1-10-A3L	Flat Washer	5	
8	GBT91-3.2X22-A3L	Split Pin	6	
9	TB604.433E.10	Brake Lower Pull Rod Weldment	1	
10	GBT6171-M12X1.5-8-A3L	Hexagon Nut, Type-1	1	
11	TE354.433-03	Connecting Rod	1	
12	TB604.433E.4	Rocker Unit Hub	1	
13	GBT6170-M10-LH-8-A3L	Hexagon Nut, Type-1	1	
14	TB604.433E-03	Lower Pull Rod	1	
15	FT300.43.110	Pull Rod Rear Fork	2	
16	TB504.433-09	Return Spring	1	
17	TB704.433.6	Left Return Spring Connecting Plate Weldment	1	
18	TB704.433-04	Connecting Pin	1	
19	TB604.433E-06	Dustproof Sleeve	2	
20	GBT6171-M12X1.5-LH-8-A3L	Hexagon Nut, Type-1	1	
21	TS04433010011	Brake Rocker Arm Spacing Sleeve	1	

https://truckmanualshub.com/

TS04433010000 Braking System Control Mechanism Assembly−3

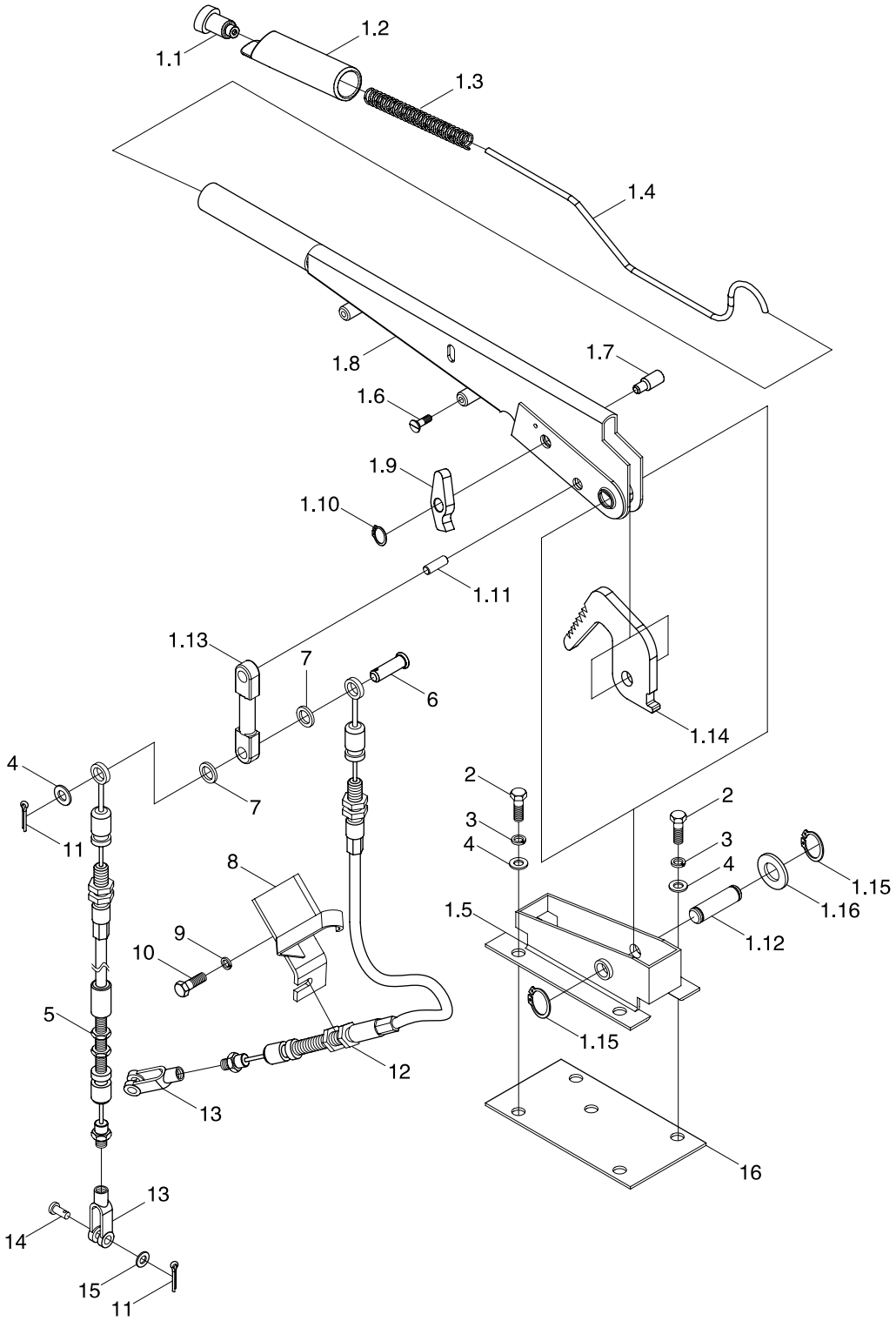

https://truckmanualshub.com/

TS04433010000 Braking System Control Mechanism Assembly-3

No.	Part code and specification	Part name	Quantity	Remark
	TS04433010000	Brake System Control Assembly	1	
1	TS04433010001	Controlling Handle Assembly	1	
1.1	FT800A.21.045	Button Assembly	1	
1.2	FT800A.21.319	Controlling Handle Sleeve	1	
1.3	FT800.43.180	Spring	1	
1.4	FT800A.21.315	Top Rod	1	
1.5	TS06212010003	Fixing Seat Weldment	1	
1.6	GBT68-M4X10-4.8-A2L	Slotted Screw	4	
1.7	FT800A.21.322	Small Pin Shaft	1	
1.8	FT800A.21.044	Controlling Handle Assembly	1	
1.9	FT800A.21.314	Pawl	1	
1.10	GBT894.1-6	Circlip For Shaft	1	
1.11	FT800A.21.323	Pin	1	
1.12	FT800A.21.321	Pin Shaft	1	
1.13	TB604.433E.9-01	Short Pull Rod	1	
1.14	FT800A.43.310	Ratchet Wheel	1	
1.15	GBT894.1-13	Circlip For Shaft	2	
1.16	TS06212010009	Washer	2	
2	GBT5783-M8X20-8.8-A2L	Hexagon Bolt	4	
3	GBT93-8-A3L	Standard Spring Washer	4	
4	GBT97.1-8-A3L	Flat Washer	5	
5	TS04433010006	Right Brake Pull Wire Assembly	1	
6	GBT882-B8X40-A3L	Pin Shaft	1	
7	TB604.433E-04	Small Retainer Ring	2	
8	TS04433010012	Left Pull Wire Support Seat Weldment	1	
9	GBT93-10-A3L	Standard Spring Washer	2	
10	GBT5783-M10X20-8.8-A3L	Hexagon Bolt	2	
11	GBT91-2X20-A3L	Split Pin	1	
12	TS04433010007	Left Brake Wire Assembly	1	
13	TA700.431A-01	Dextrorotation Long Hole Connect Fork	2	
14	GBT882-B10X30-A3L	Pin Shaft	1	
15	GBT97.1-10-A3L	Flat Washer	1	
16	TS04433010002	Dustproof Mat	1	

https://truckmanualshub.com/

TS04801010000K Air valve brake assembly

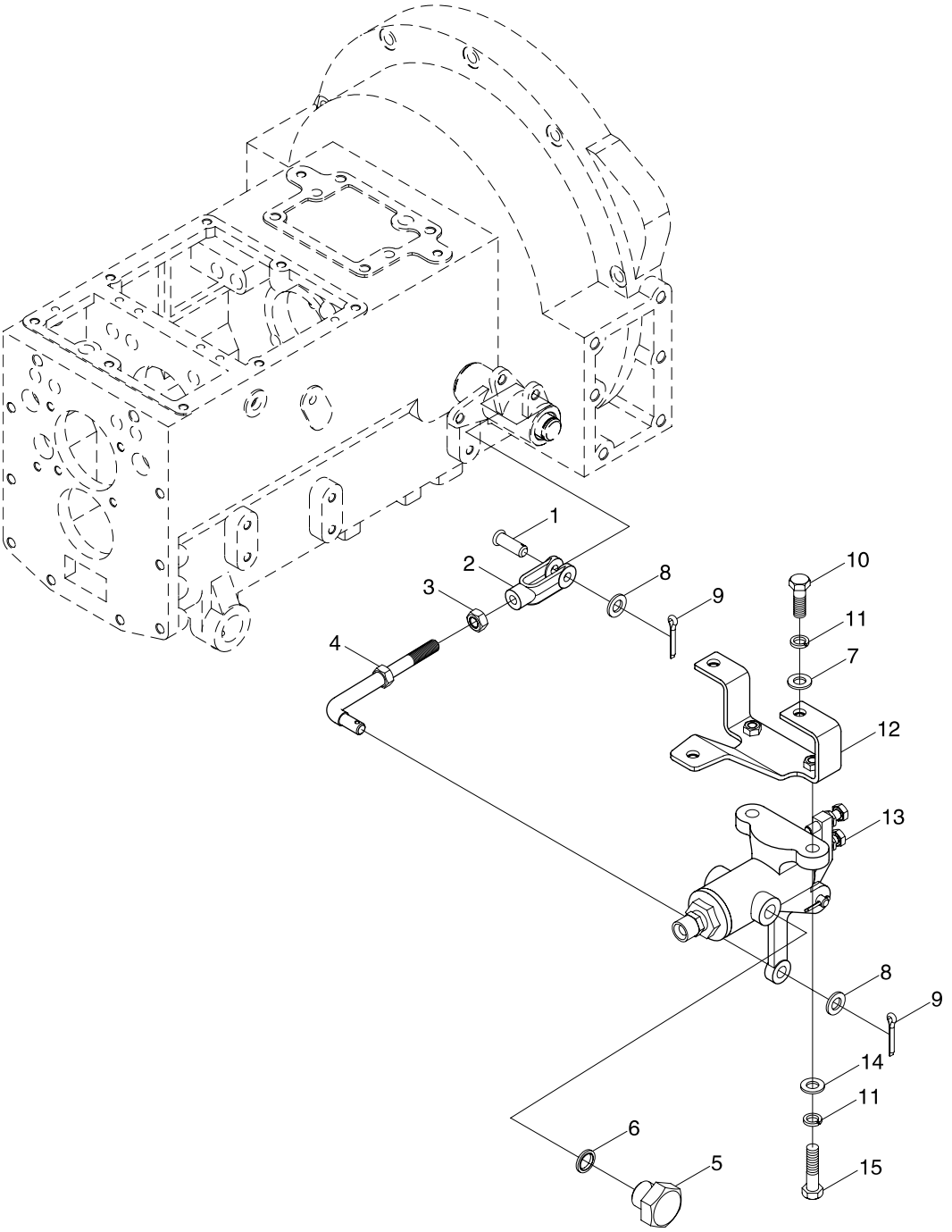

https://truckmanualshub.com/

TS04801010000K Air valve brake assembly

No.	Part code and specification	Part name	Quantity	Remark
	TS04801010000K	Air valve brake assembly	1	
1	GBT882–B10X28–A0P	Pin shaft	1	
2	FT300.80.105	Adjusting fork	1	
3	GBT6170–M10–8–A3L	Hexagon nut, style 1	1	
4	TS04801010002	Brake valve adjusting pull rod subassembly	1	
5	Q617B14	Hexagon head screw plug	1	
6	JBT982–14	Compound seal washer	1	
7	GBT96.1–8–A0P	Large washer	3	
8	GBT848–10–A0P	Small washer	3	
9	GBT91–3.2X16–A0P	Split pin	2	
10	GBT5783–M8X20–8.8–A2L	Hexagon head bolt	3	
11	GBT93–8–A0P	Standard spring washer	5	
12	TS04801010004	Brake valve installation bracket weldment	1	
13	FT300.80.011	Air brake valve assembly	1	
14	GBT97.1–8–A0P	Plain washer	2	
15	GBT5783–M8X30–8.8–A2L	Hexagon head bolt	2	

https://truckmanualshub.com/

TS04802010000K Gas Holder Installation Assembly

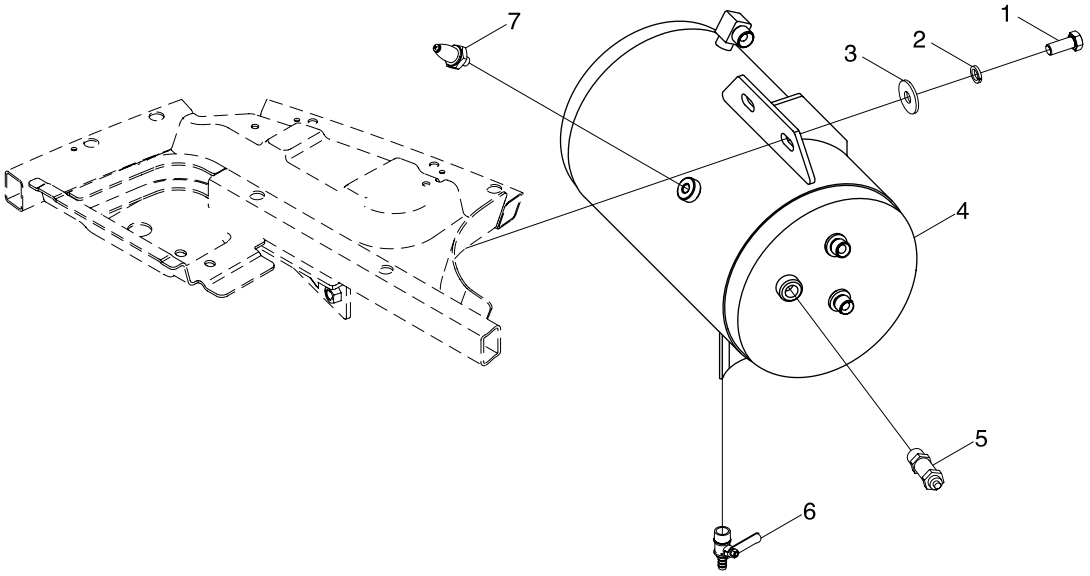

https://truckmanualshub.com/

TS04802010000K Gas Holder Installation Assembly

No.	Part code and specification	Part name	Quantity	Remark
	TS04802010000K	Gas holder installation assembly	1	
1	GBT5783–M12X30–8.8–A3L	Hexagon head bolt	2	
2	GBT93–12–A0P	Standard spring washer	2	
3	GBT96.1–12–A0P	Large washer	2	
4	TS04802010001K	Gas holder weldment	1	
5	FT300.80.034	Safety valve assembly	1	
6	FT300.80.033	Water drainage valve assembly	1	
7	TC02484060001K	Air pressure alarm	1	

https://truckmanualshub.com/

TS04803050000K Air Conveying Pipeline Assembly(001)

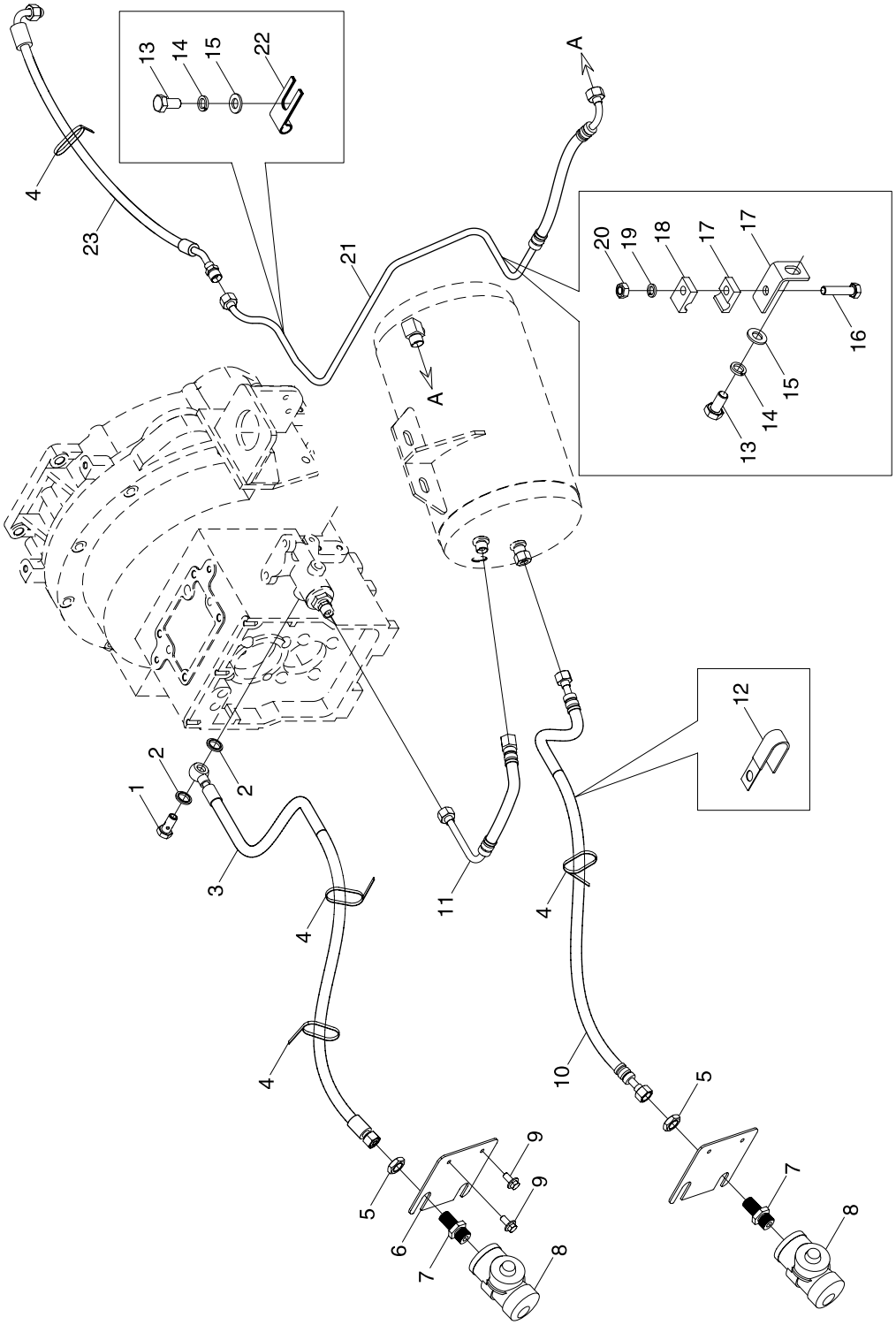

https://truckmanualshub.com/

TS04803050000K Air Conveying Pipeline Assembly(001)

No.	Part code and specification	Part name	Quantity	Remark
	TS04803050000K	Air Conveying Pipeline Assembly	1	
1	FT65.50.106	Hollow Bolt	1	
2	JBT982-14	Combined Seal Gasket	2	
3	TS04803010003K	Air Conveying Pipe Assembly	1	
4	Q67405200	Plastic Fastening Strip	4	
5	GBT6173-M18X1.5-05-A3L	Hexagon Thin Nut	2	
6	TS04803030001K	Joint Mounting Plate	1	
7	TD800.803D-01	Output Joint	2	
8	TD800.803D.1	Quick Joint	2	
9	GBT16674.1-M6X12-8.8-A2L	Hexagon Flange Nut	2	
10	TS04803010005K	Air Conveying Pipe Assembly	1	
11	TS04803010006	Brake Valve Inlet Pipe Assembly	1	
12	TD800.803-07	Tighten Clip	1	
13	GBT5783-M10X20-8.8-A3L	Hexagon Bolt	2	
14	GBT93-10-A3L	Standard Spring Washer	2	
15	GBT97.1-10-A3L	Flat Washer	2	
16	GBT5783-M8X35-8.8-A2L	Hexagon Bolt	1	
17	TS04803010007	Pipe Clamp Bracket	1	
18	TB454.40X-01	Single Hole Pipe Clamp	2	
19	GBT93-8-A3L	Standard Spring Washer	1	
20	GBT6170-M8-8-A2L	Hexagon Nut, Type-1	1	
21	TS04803010004	Air Reservoir Inlet pipe Assembly	1	
22	TE350.80A-01	Pipe Clamp	1	
23	TS04803020001K	Air Compressor Outlet Pipe Assembly	1	

https://truckmanualshub.com/

TB400.35C Towing Mechanism Installation Assembly(002)

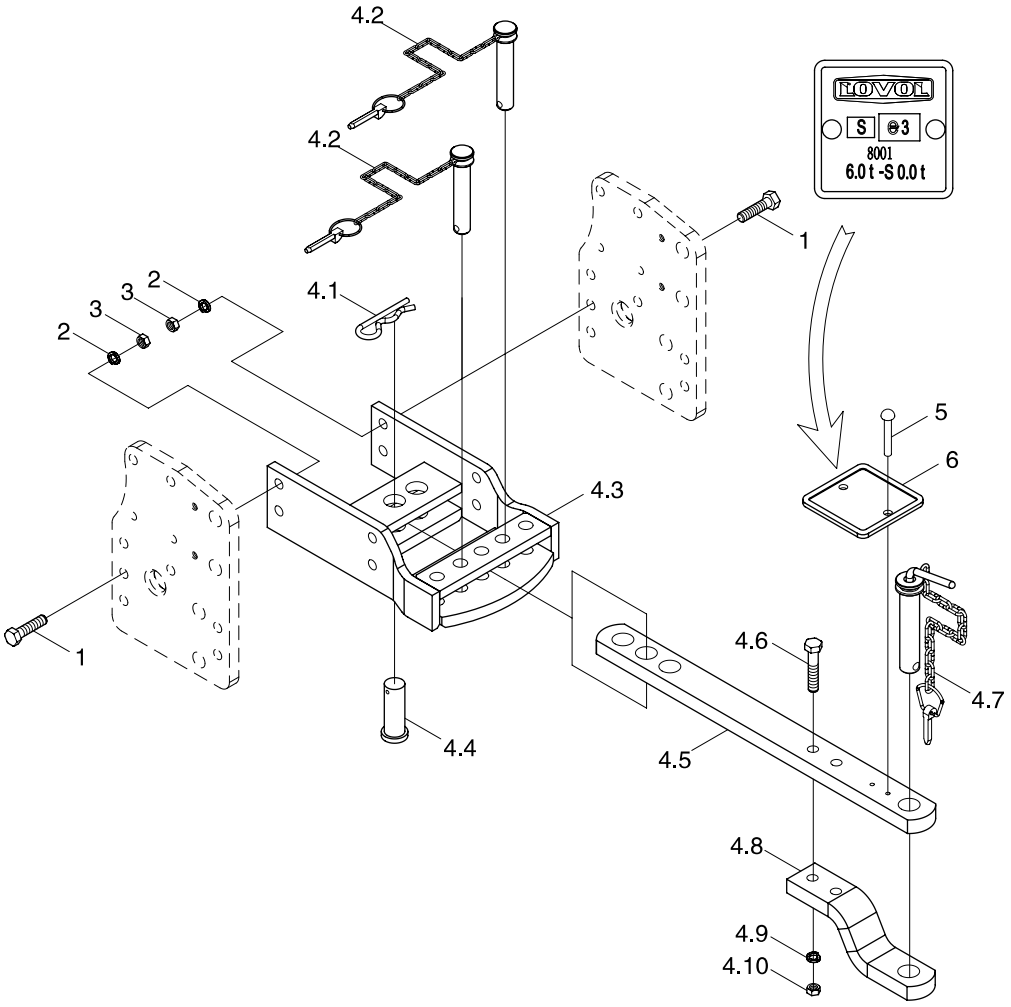

https://truckmanualshub.com/

TB400.35C Towing Mechanism Installation Assembly(002)

No.	Part code and specification	Part name	Quantity	Remark
	TB400.35C	Towing Mechanism Installation Assembly	1	
1	GBT5783-M16X60-8.8-A3L	Hexagon Bolt	8	
2	GBT93-16-A0P	Standard Spring Washer	8	
3	GBT6170-M16-8-A3L	Hexagon Nut, Type-1	8	
4	TB400.35C.1	Traction Device Assembly	1	
4.1	FT65.35.103	Spring Lock Pin	1	
4.2	TB400.35.1.1	Limiting Pin And Lock Pin Assembly	2	
4.3	TB400.35C.1.1	Towing Bracket Weldment	1	
4.4	FT300.35A.103	Connecting Pin	1	
4.5	TB400.35C.1-01	Swing Rod	1	
4.6	TB400.35.1-03	Bolt M16X75	6	
4.7	TB400.35.1.2	Towing Pin And Lock Pin Assembly	1	
4.8	TB400.35.1-02	Connecting Swing Rod	1	
4.9	GBT93-16-A0P	Standard Spring Washer	2	
4.10	GBT6170-M16-8-A3L	Hexagon Nut, Type-1	2	
5	GBT827-3X8-A0P	Label Rivet	2	
6	TB400.35-01	Towing Sign Plate	1	

https://truckmanualshub.com/

TC02530010000K Up−down Adjustable Traction Connector

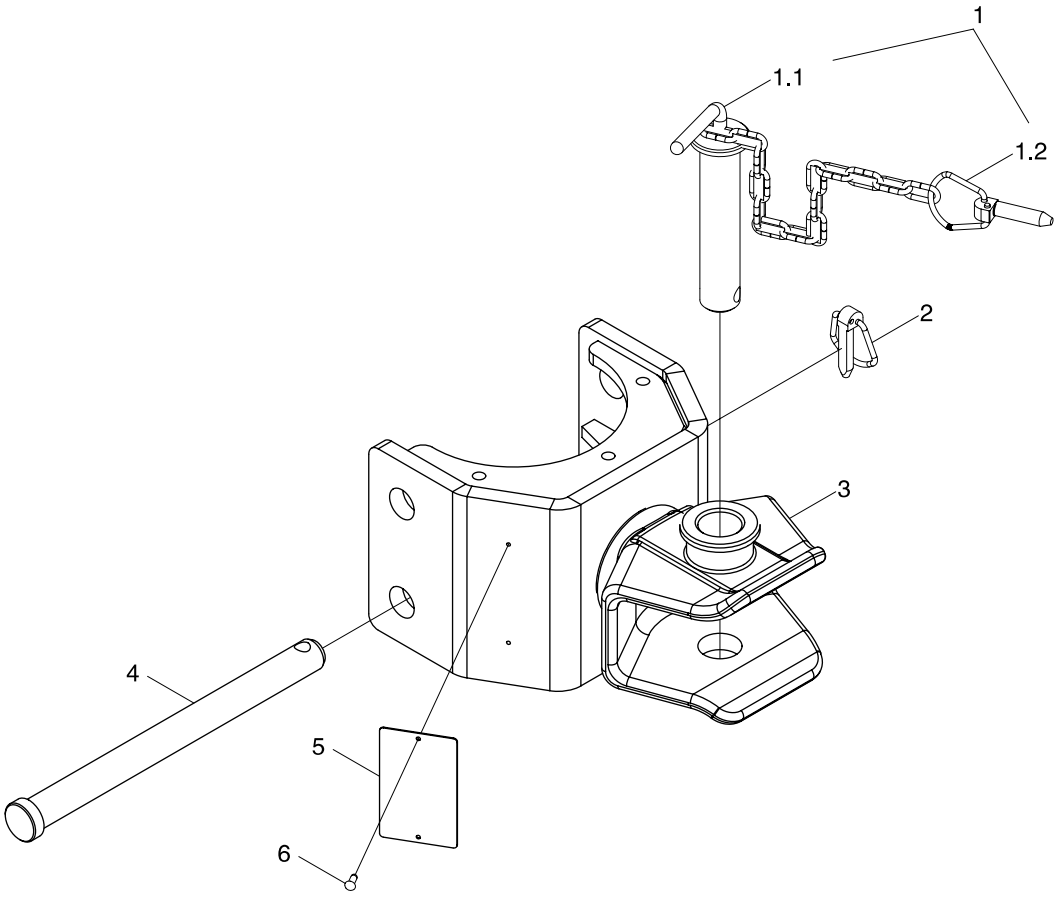

https://truckmanualshub.com/

TC02530010000K Up–down Adjustable Traction Connector

No.	Part code and specification	Part name	Quantity	Remark
	TC02530010000K	Up–down adjustable traction connector	1	
1	TA700.53C.1.3	Trailer pin and lock pin assembly	2	
1.1	TA700.53C.1.3.1	Trailer pin weldment	1	
1.2	TD800.35A.1.1.1	Lock pin and chain assembly	1	
2	FT300.56.029	Lock pin assembly	1	
3	TB400.53B.1	Trailing device assembly weldment	1	
4	FT300.53.101a	Connecting pin	2	
5	TC02530010001K	Trailing identification label	2	
6	GBT827–3X8–A0P	Label rivet	1	

https://truckmanualshub.com/

TC02551230000K Lifter Installation Assembly−1(003)

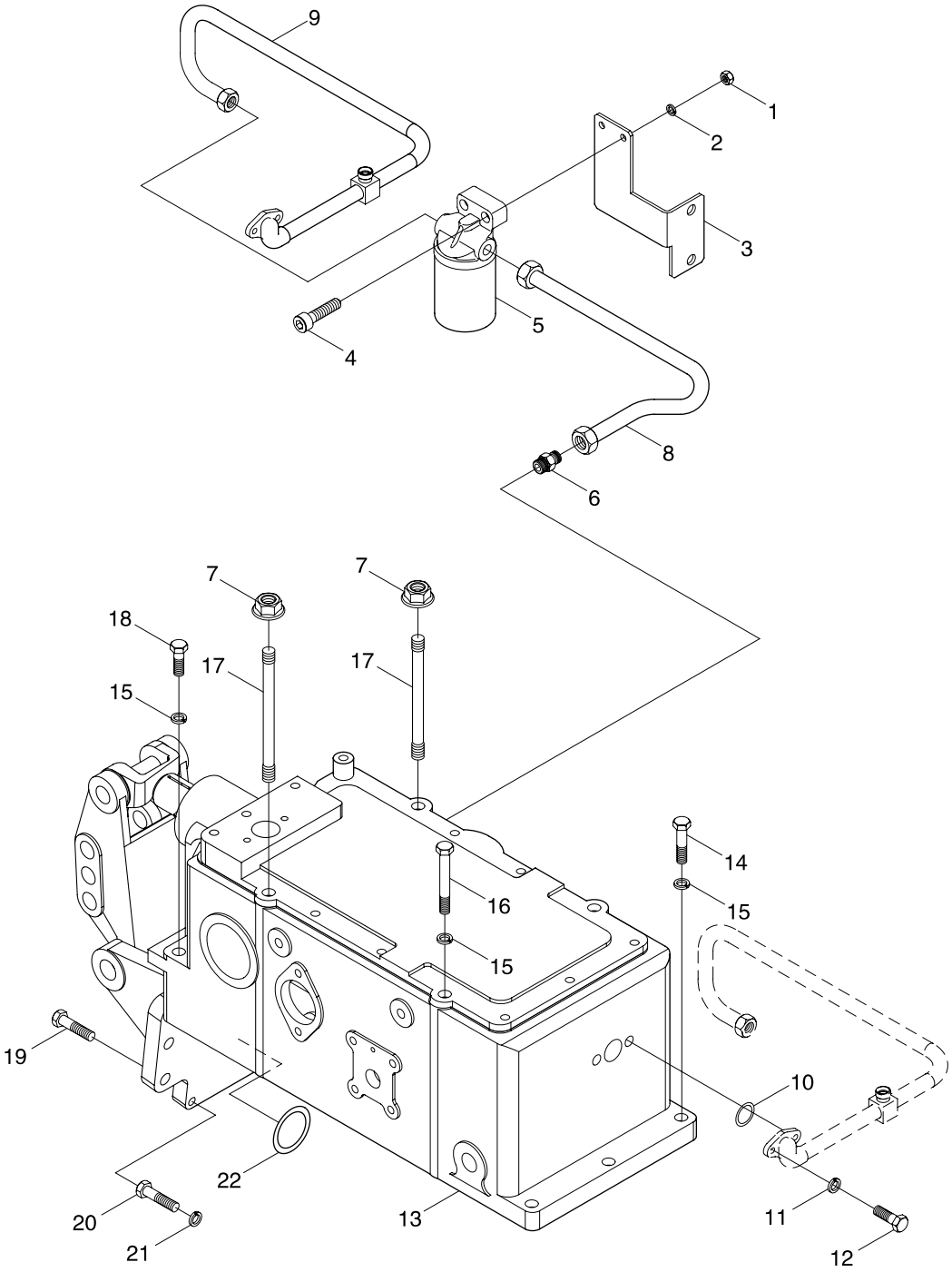

https://truckmanualshub.com/

TC02551230000K Lifter Installation Assembly-1(003)

No.	Part code and specification	Part name	Quantity	Remark
	TC02551230000K	Lifter Installation Assembly	1	
1	GBT6170-M10-8-A3L	Hexagon Nut, Type-1	2	
2	GBT93-10-A3L	Standard Spring Washer	2	
3	TC02582070015	Bracket Weldment	1	
4	GBT70.1-M10X40-8.8-A3L	Inner Hexagon Screw	2	
5	TC02582070001	Oil Return Filter Assembly	1	
6	TC02582070006	End Straight M22-18 Subassembly	3	
7	SPL-CO-M12-10-F3	Hexagon Nut	2	
8	TC02582070003	Oil Return Pipe Assembly	1	
9	TC02582080001	Oil Filter Into Pipe Assembly	1	
10	GBT3452.1-25.8X2.65G	Rubber O-Seal Ring	1	
11	GBT93-8-A3L	Standard Spring Washer	2	
12	GBT5783-M8X30-8.8-A2L	Hexagon Bolt	2	
13	TC02551200005K	Lifter Assembly	1	
14	GBT5783-M12X40-10.9-A3L	Hexagon Bolt	3	
15	TB404.312B-01	Washer	7	
16	FT300.55B.136	Bolt M12X235	2	
17	TB300.55-01	Double End Studs	2	
18	GBT5783-M12X100-10.9-A3L	Hexagon Bolt	2	
19	GBT16674.1-M12X50-10.9-A3L	Hexagon Flange Nut	4	
20	GBT5783-M8X30-10.9-A2L	Hexagon Bolt	2	
21	TB300.55-02	Washer	2	
22	GBT3452.1-103X2.65G	Rubber O-Seal Ring	1	

https://truckmanualshub.com/

TC02551230000K Lifter Installation Assembly−2(003)

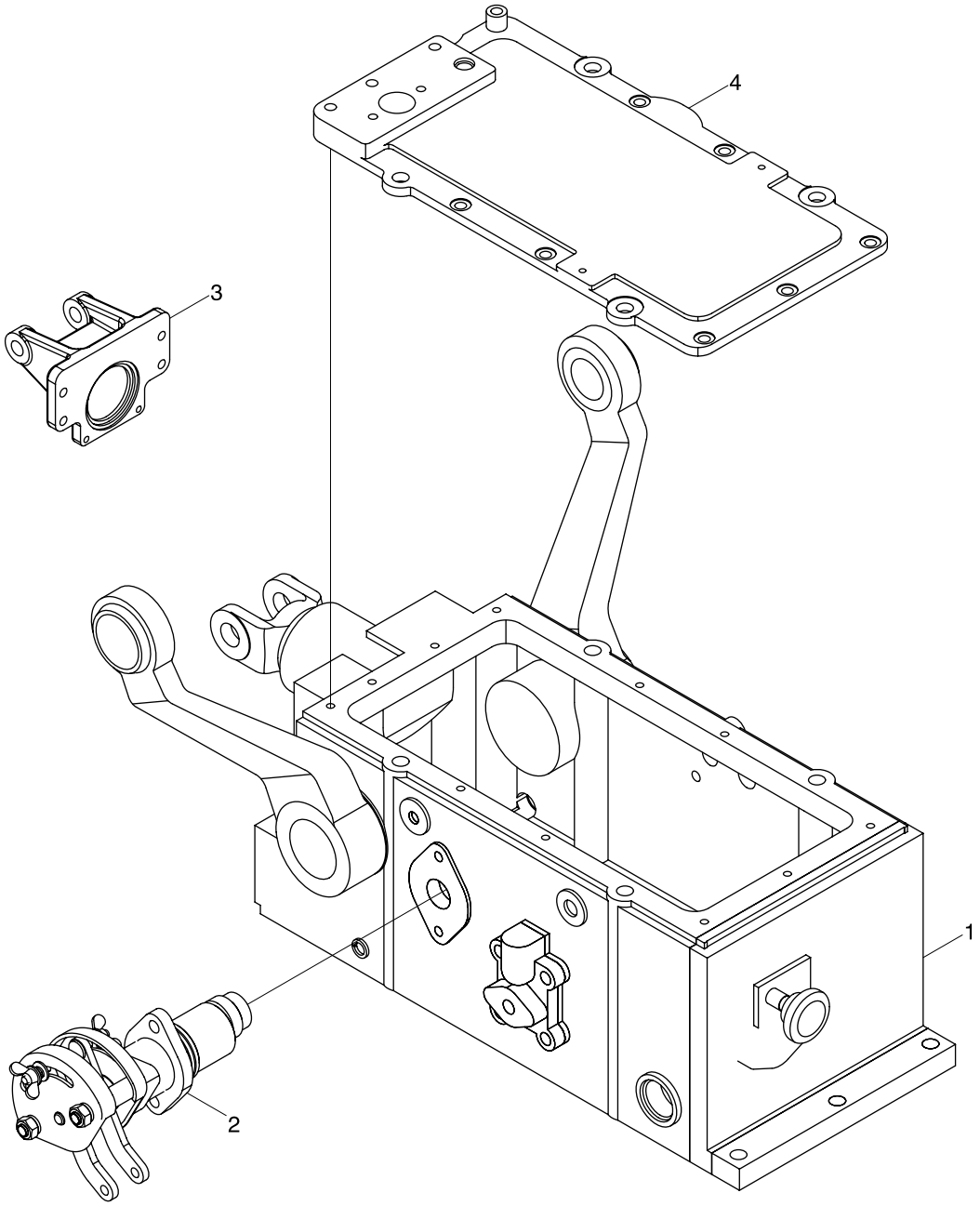

https://truckmanualshub.com/

TC02551230000K Lifter Installation Assembly–2(003)

No.	Part code and specification	Part name	Quantity	Remark
	TC02551230000K	Lifter Installation Assembly	1	
1	TC02551200006K	Lifter Housing	1	
2	TB504.551F.5.1	Distributor Control Mechanism Assembly	1	
3	TC02551050001K	Upper Suspension Point Rocker Bracket	1	
4	TC02551200007K	Lifter Upper Cover	1	

https://truckmanualshub.com/

TC02551230000K Lifter Installation Assembly−3(003)

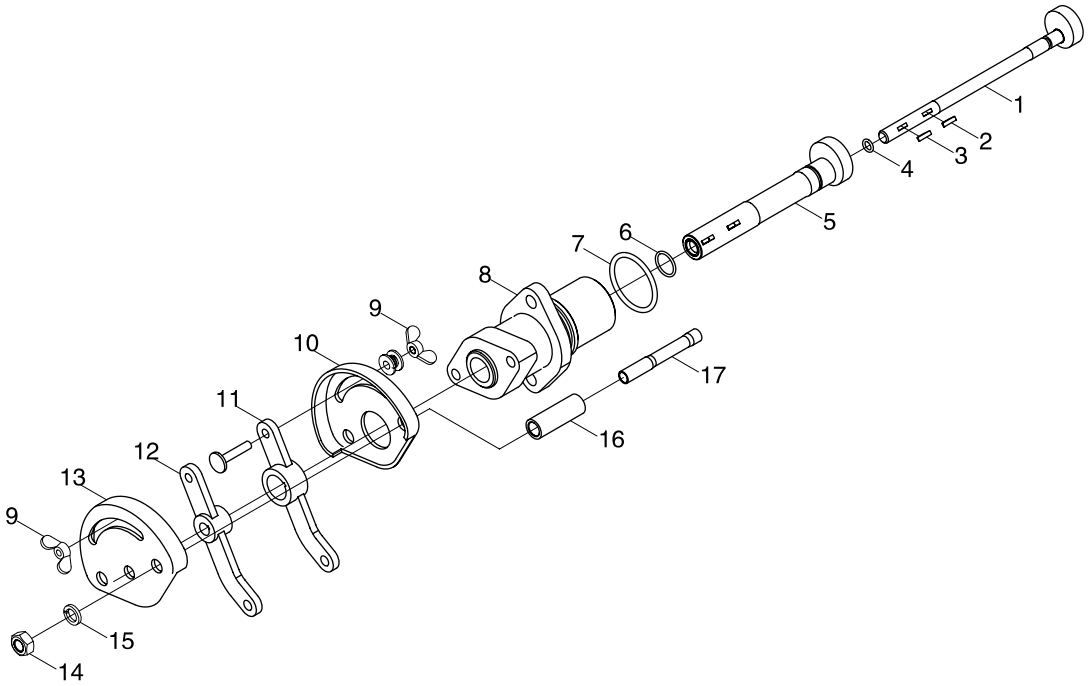

https://truckmanualshub.com/

TC02551230000K Lifter Installation Assembly-3(003)

No.	Part code and specification	Part name	Quantity	Remark
	TC02551230000K	Lifter Installation Assembly	1	
1	TB504.551F.5.1	Distributor Control Mechanism Assembly	1	
2	TB504.551.1.1.4	Force Adjusting Eccentric Wheel Weldment Assembly	1	
3	GBT1099.1-3X5X13	Semicircle Key	1	
4	GBT1099.1-2.5X3.7X10	Semicircle Key	1	
5	GBT3452.1-6.90X1.80G	Rubber O-Seal Ring	1	
6	TB504.551.1.1.3	Position Adjusting Eccentric Wheel Weldment Assembly	1	
7	GBT3452.1-17.0X1.80G	Rubber O-Seal Ring	1	
8	GBT3452.1-41.2X3.55G	Rubber O-Seal Ring	1	
9	TB504.551.1.1-01	Seat	1	
10	GBT62-M6-A2L	Butterfly Nut	2	
11	TB504.551B.1.1-02	Position Adjusting Sector Plate	1	
12	TB504.551F.5.1.2	Position Adjusting Rocker Weldment	1	
13	TB504.551F.5.1.1	Force Adjusting Rocker Weldment	1	
14	TB504.551B.1.1-01	Force Adjusting Sector Plate	1	
15	GBT6170-M10-8-A3L	Hexagon Nut, Type-1	2	
16	GBT93-10-A0P	Standard Spring Washer	2	
17	TB504.551.1.1-04	Spacer Bush	2	
18	GBT898-M10X65-8.8-A2L	Double End Studs	2	

https://truckmanualshub.com/

TS04552010000 Raiser Control Assembly

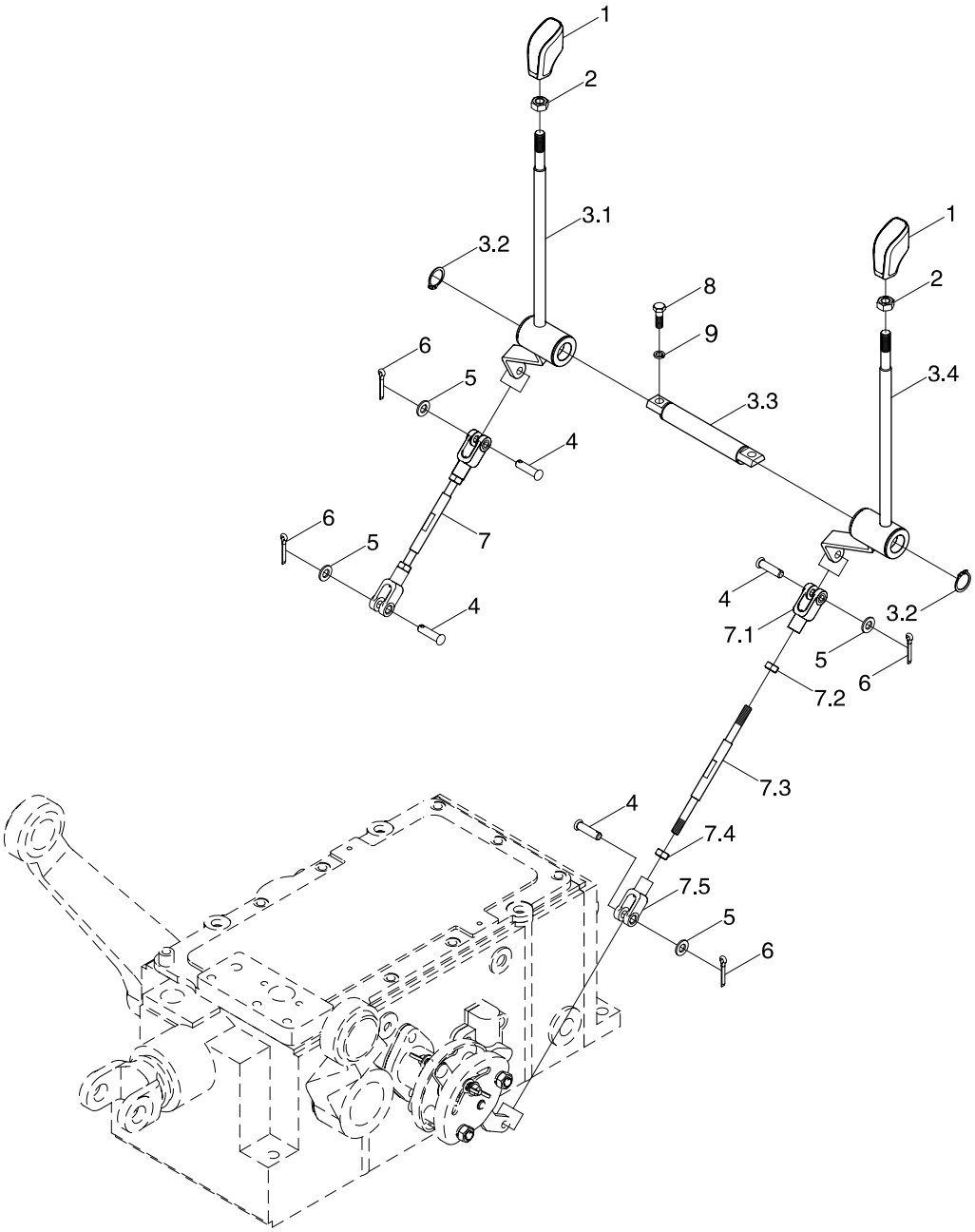

https://truckmanualshub.com/

TS04552010000 Raiser Control Assembly

No.	Part code and specification	Part name	Quantity	Remark
	TS04552010000	Raiser control assembly	1	
1	TS04552010011	Raiser control handle head	2	
2	GBT6170–M10–8–A3L	Hexagon nut, style 1	2	
3	TS04552010010	Raiser control assembly	1	
3.1	TS04552010002	Raiser control press 1	1	
3.2	GBT894.1–20	Circlip for shaft	2	
3.3	TS04552010001	Fixing shaft	1	
3.4	TS04552010007	Raiser control press 2	1	
4	GBT882–B8X30–A0P	Pin shaft	4	
5	GBT97.1–8–A0P	Plain washer	4	
6	GBT91–3.2X16–A0P	Cotter pin	4	
7	TS04552010012	Adjusting lever assembly	2	
7.1	TB504.552D.3–03	Righthand connecting fork	1	
7.2	GBT6170–M8–8–A2L	Hexagon nut, style 1	1	
7.3	TS04552010013	Control pull rod	1	
7.4	GBT6170–M8–LH–8–A2L	Hexagon nut, style 1	1	
7.5	TB504.552D.3–02	Lefthand connecting fork	1	
8	GBT5783–M8X20–8.8–A2L	Hexagon head bolt	2	
9	GBT93–8–A0P	Standard spring washer	2	

https://truckmanualshub.com/

TC02553070000K Hydraulic Auxiliary Oil Tank Assembly (003)

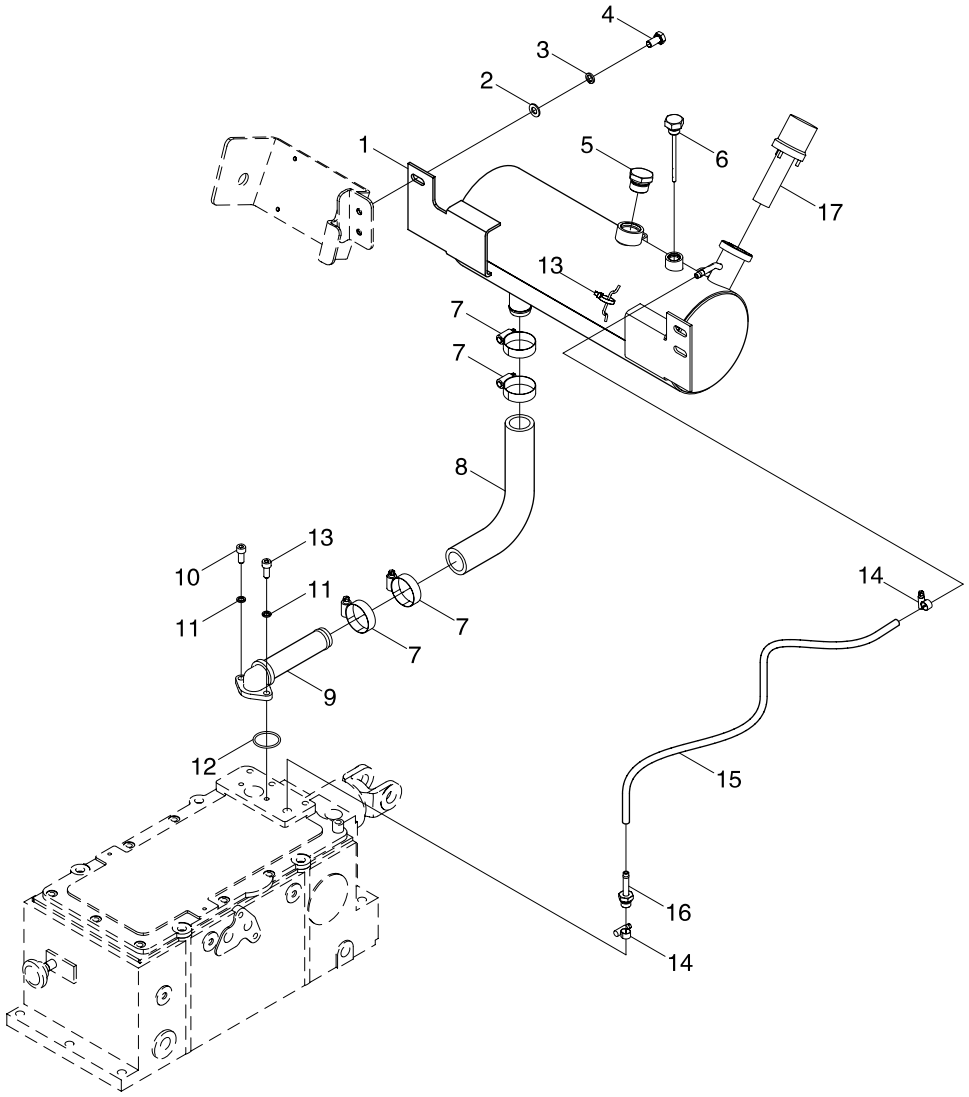

https://truckmanualshub.com/

TC02553070000K Hydraulic Auxiliary Oil Tank Assembly (003)

No.	Part code and specification	Part name	Quantity	Remark
	TC02553070000K	Hydraulic Auxiliary Oil Tank Assembly	1	
1	TC02553070013K	Auxiliary Oil Tank Weldment	1	
2	GBT97.1-10-A3L	Flat Washer	3	
3	GBT93-10-A3L	Standard Spring Washer	3	
4	GBT5783-M10X25-8.8-A3L	Hexagon Bolt	3	
5	TC04553010011K	Screw Plug Subassembly	1	
6	TC02553010003	Oil Dipstick Assembly	1	
7	Q67645	B-Type Worm Transmission Hose Clamp	4	
8	TC02553070020K	Connecting Rubber Pipe	1	
9	TC02553050005K	Connecting Oil Pipe Weldment	1	
10	GBT70.1-M8X20-8.8-A2L	Inner Hexagon Screw	2	
11	GBT93-8-A3L	Standard Spring Washer	2	
12	GBT3452.1-34.5X2.65G	Rubber O-Seal Ring	1	
13	Q67405100	Plastic Fastening Strip	1	
14	Q67512	A-Type Worm Transmission Hose Clamp	2	
15	TC02553020003	Breath Hose	1	
16	TC02553010005	Breather Joint Weldment	1	
17	TD800.556.4	Oil Tank Air Filter	1	

https://truckmanualshub.com/

TC02561060000k Hitch Assembly−1

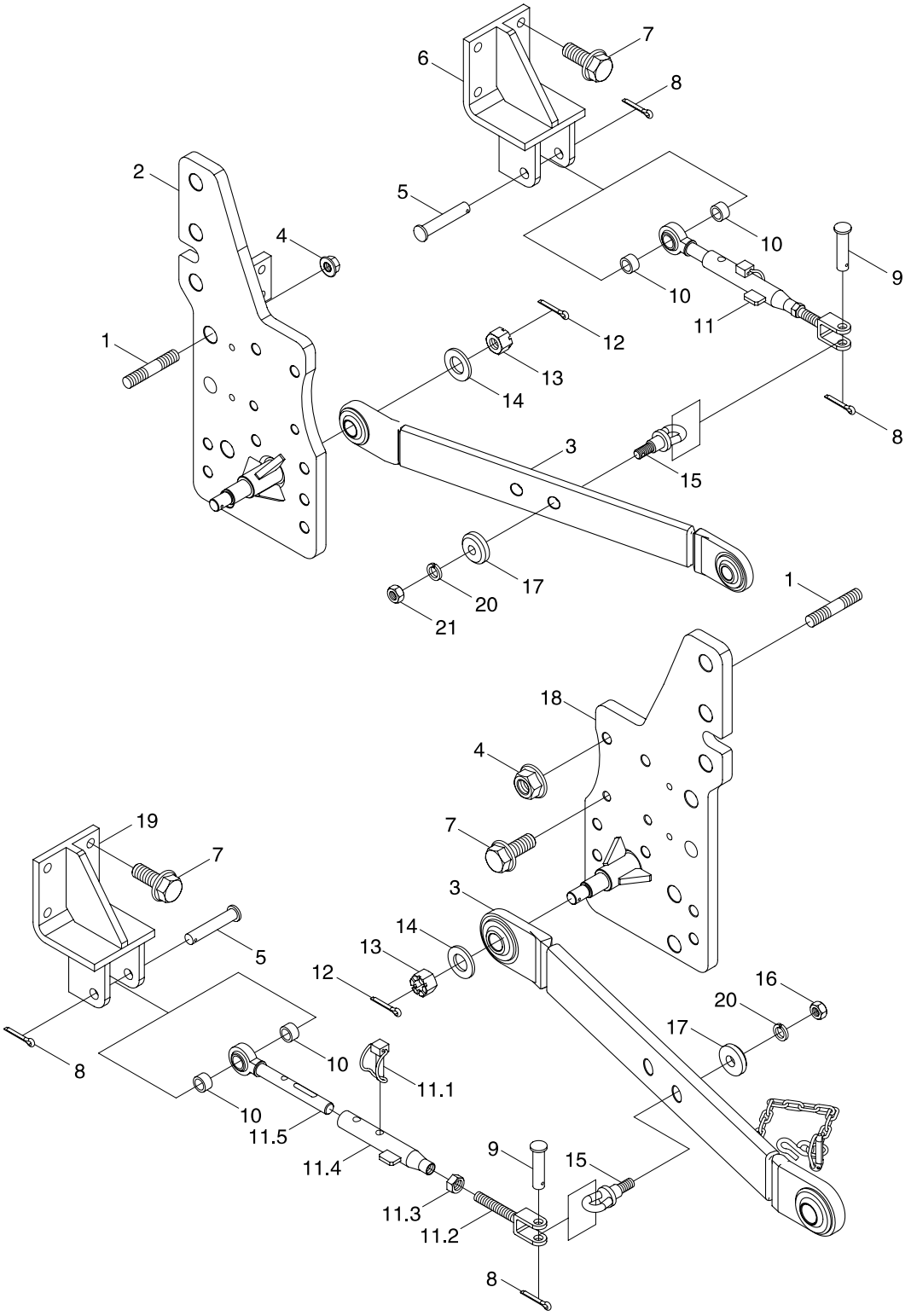

https://truckmanualshub.com/

TC02561060000k Hitch Assembly-1

No.	Part code and specification	Part name	Quantity	Remark
	TC02561060000k	Hitch assembly	1	
1	GBT899-AM16-M16X1.5X45-10.9-A3L	Double-headed stud	8	
2	TC02561060004K	Right support plate weldment	1	
3	FT500A.56.012	Lower pull rod assembly	2	
4	SPL-CO-M16X1.5-10-F3	Hexagon flange nut	8	
5	FT300.56A.102	Limit lever connecting pin	2	
6	FT300.56A.019	Right limit lever bracket weldment	1	
7	GBT16674.1-M16X40-10.9-A3L	Hexagon flange bolt	8	
8	GBT91-5X32-A0P	Split pin	4	
9	GBT882-B18X55-A0P	Pin shaft	2	
10	FT300.56A.103	Sleeve	4	
11	FT300.56A.016a	Limit lever assembly	2	
11.1	FT300.56A.023	Limit lever lock pin combination	1	
11.2	FT300.56A.161	Limit lever adjusting screw rod	1	
11.3	GBT6170-M22-8-A9L	Hexagon nut, style 1	1	
11.4	FT300.56A.022a	Telescopic pipe weldment	1	
11.5	FT300.56A.021a	Telescopic lever ball head assembly	1	
12	GBT91-4X36-A0P	Split pin	2	
13	GBT6178-M20-8-A9L	Hexagon slotted nut, style 1	2	
14	GBT97.1-20-A0P	Plain washer	2	
15	FT300.56A.110a	Limit lever rear connecting pin	2	
16	GBT6170-M20-8-A3L	Hexagon nut, style 1	2	
17	FT300.56A.111a	Round plate	2	
18	TC02561060001K	Left support plate weldment	1	
19	FT300.56A.017	Left limit lever bracket weldment	1	
20	GBT93-20-A0P	Standard spring washer	2	

https://truckmanualshub.com/

TC02561060000k Hitch Assembly−2

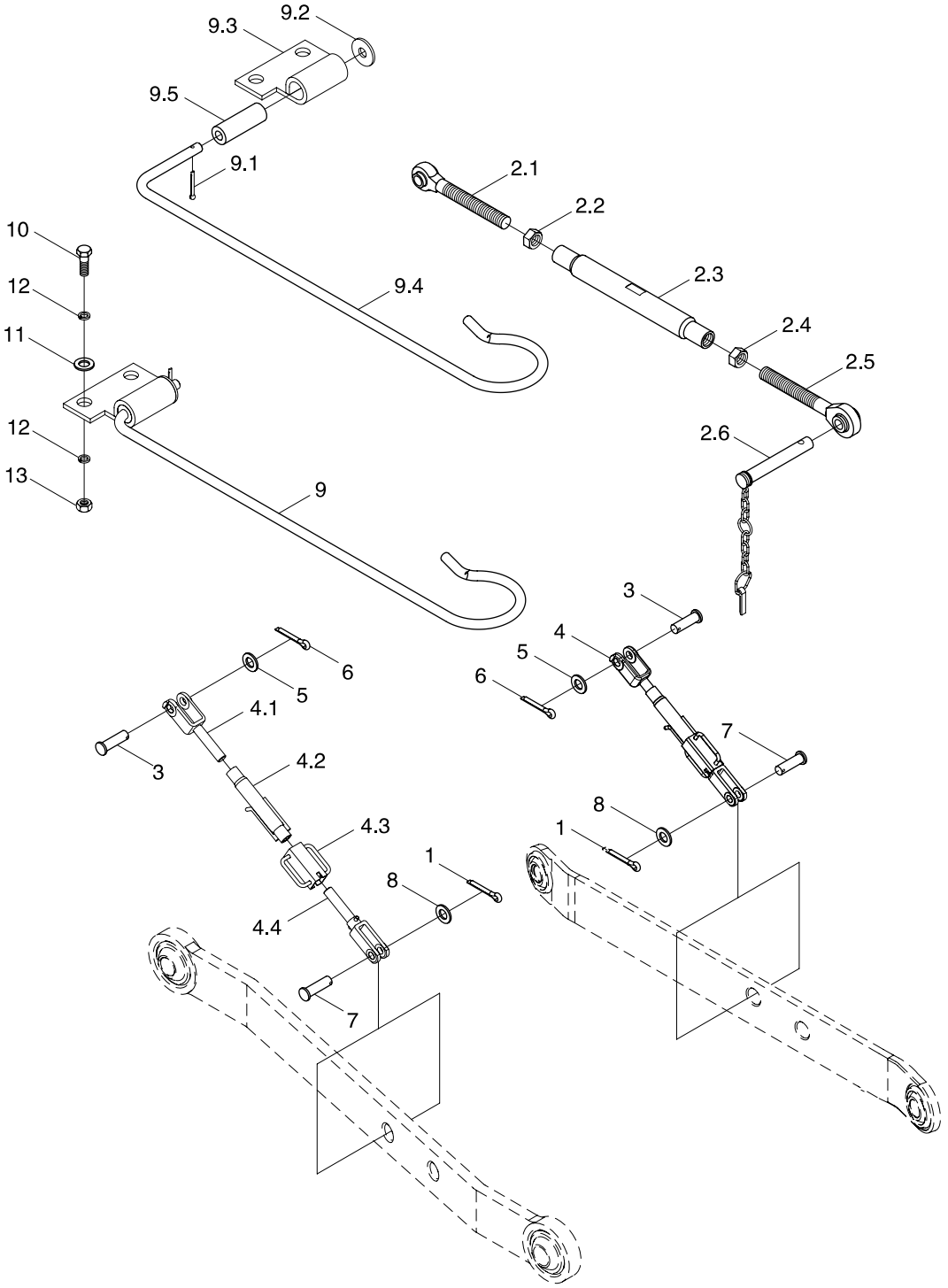

https://truckmanualshub.com/

TC02561060000k Hitch Assembly-2

No.	Part code and specification	Part name	Quantity	Remark
	TC02561060000k	Hitch assembly	1	
1	GBT91-5X32-A0P	Pin	2	
2	FT500A.56.011a	Upper pull rod assembly	1	
2.1	FT500A.56.026	Front adjusting lever assembly of upper pull rod	1	
2.2	GBT6173-M27X2-05-A3L	Hexagon thin nut	1	
2.3	FT500A.56.027	Adjusting screw pipe weldment	1	
2.4	GBT6173-M27X2-LH-05-A3L	Hexagon thin nut	1	
2.5	FT500A.56.024	Rear adjusting lever assembly of upper pull rod	1	
2.6	FT65.56.015	Upper pull rod lock pin assembly	1	
3	FT500A.56.101	Upper connecting pin of lifting rod	2	
4	TB400.56E.1	Lifting rod assembly	2	
4.1	TB400.56E.1-01	Upper connecting fork of lifting rod	1	
4.2	TB400.56E.1.1	Adjusting screw pipe weldment	1	
4.3	TB400.56E.1.2	Lifting rod adjusting sleeve weldment	1	
4.4	TB400.56E.1.3	Lower connecting fork weldment	1	
5	FT500A.56.118	Washer	2	
6	GBT91-5X40-A0P	Split pin	2	
7	FT300.56A.112	Lower connecting pin of lifting rod	2	
8	GBT97.1-24-A0P	Plain washer	2	
9	TB500.56B.6	Upper pull rod fixing clamp combination	1	
9.1	GBT91-2X14-A0P	Split pin	1	
9.2	GBT96.1-6-A0P	Large washer	1	
9.3	TE300.56.6-01	Fixing seat	1	
9.4	TB500.56B.6-01	Upper pull rod fixing hook	1	
9.5	TE300.56.6-03	Nylon bushing	1	
10	GBT5783-M8X20-8.8-A2L	Hexagon head bolt	2	
11	GBT97.1-8-A0P	Plain washer	2	
12	GBT93-8-A0P	Standard spring washer	2	
13	GBT6170-M8-8-A2L	Hexagon nut, style 1	2	

https://truckmanualshub.com/

TS04581070000K Oil Pump/Pipe/Filter Assembly(001)

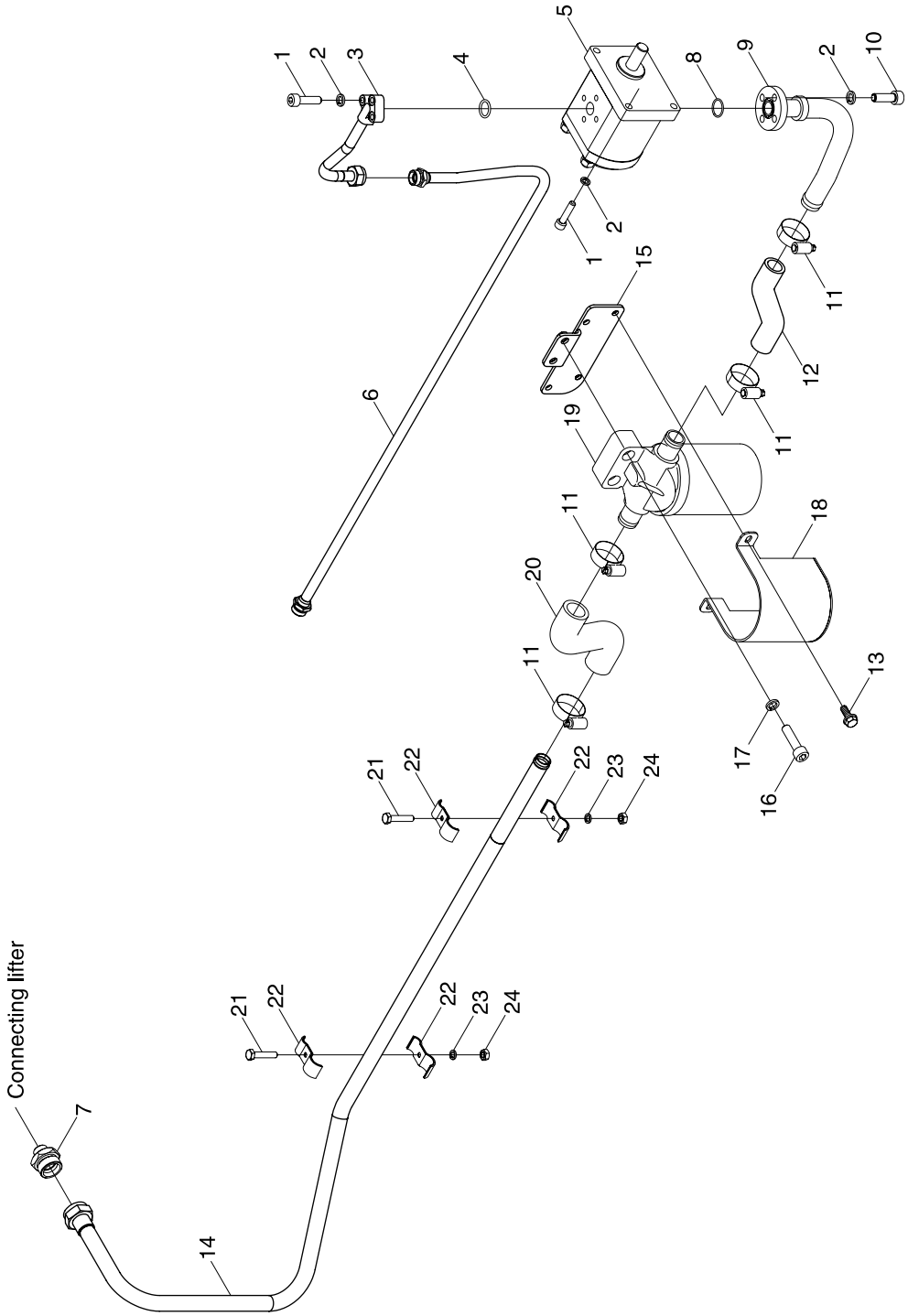

https://truckmanualshub.com/

TS04581070000K Oil Pump/Pipe/Filter Assembly(001)

No.	Part code and specification	Part name	Quantity	Remark
	TS04581070000K	Oil Pump/Pipe/Filter Assembly	1	
1	GBT70.1-M8X30-8.8-A2L	Inner Hexagon Screw	7	
2	GBT93-8-A3L	Standard Spring Washer	11	
3	TS04581070010K	Pressure Oil Pipe Assembly 1	1	
4	GBT3452.1-18.0X2.65G	Rubber O-Seal Ring	1	
5	TC02581240001K	Gear Pump	1	
6	TS04581070008K	Pressure Oil Pipe Assembly 2	1	
7	TC03581030007	End Straight Joint Assembly M33-28	1	
8	GBT3452.1-21.2X1.80G	Rubber O-Seal Ring	1	
9	TS04581070002K	Oil Suction Pipe Weldment Assembly	1	
10	GBT70.1-M8X25-8.8-A2L	Inner Hexagon Screw	4	
11	Q67638	B-Type Worm Transmission Hose Clamp	4	
12	TS04581070007K	Oil Suction Filter Outlet Pipe	1	
13	GBT16674.1-M8X16-8.8-A2L	Hexagon Flange Nut	4	
14	TC02581480001K	Oil Suction Steel Pipe Assembly	1	
15	TS04581070004K	Oil Suction Filter Fixing Plate Weldment	1	
16	GBT70.1-M10X40-8.8-A3L	Inner Hexagon Screw	2	
17	GBT93-10-A3L	Standard Spring Washer	2	
18	TC02581130008K	Oil Filter Shield Weldment	1	
19	TB504.581E.2	Absorb Oil Filter Assembly	1	
20	TS04581070001K	Oil Suction Rubber Hose	1	
21	GBT5783-M6X25-8.8-A2L	Hexagon Bolt	2	
22	TB504.581E.1	Oil Pipe Clamp And Rubber Washer	4	
23	GBT93-6-A3L	Standard Spring Washer	2	
24	GBT6170-M6-8-A2L	Hexagon Nut, Type-1	2	

https://truckmanualshub.com/

TC02582090000K Multi−way Valve Oil Pipe Assembly (001)

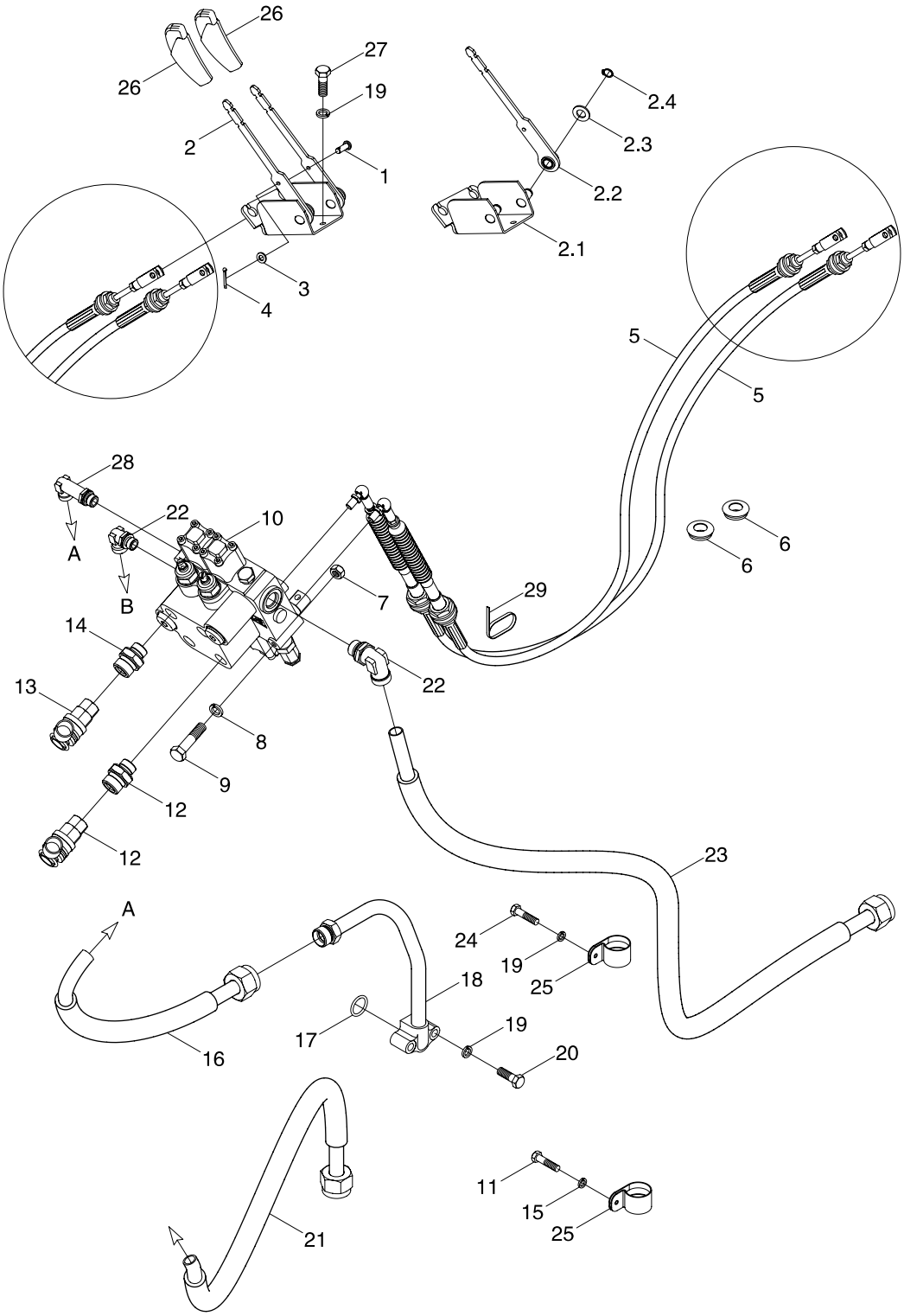

https://truckmanualshub.com/

TC02582090000K Multi-way Valve Oil Pipe Assembly (001)

No.	Part code and specification	Part name	Quantity	Remark
	TC02582090000K	Multi-way valve oil pipe assembly	1	
1	TG1654.583C-01	Pin shaft	2	
2	TS04582010058	Multi-way valve control assembly	1	
2.1	TS04582010059	Installation seat weldment	1	
2.2	TS04582010043	Control handle press	2	
2.3	GBT97.1-14-A0P	Plain washer	2	
2.4	GBT894.1-14	Circlip for shaft	2	
3	GBT97.1-6-A0P	Plain washer	2	
4	GBT91-2X14-A0P	Split pin	2	
5	TS04582020001	Flexible shaft mechanism assembly	2	
6	TS04582010027	Rubber ring	2	
7	GBT6170-M6-8-A2L	Hexagon nut, style 1	3	
8	GBT93-6-A0P	Standard spring washer	3	
9	GBT5782-M6X60-8.8-A1L	Hexagon head bolt	3	
10	TC04582140010	Multi-way valve assembly	1	
11	GBT5783-M10X16-8.8-A3L	Hexagon head bolt	1	
12	TC02580010001K	Quick-change connector	2	
13	FT354.58A.030	Quick-change connector	2	
14	TC04582140009	Straight thread connector, body M18 assembly	4	
15	GBT93-10-A0P	Standard spring washer	1	
16	TC04582300012	Lifter oil inlet pipe assembly	1	
17	GBT3452.1-20.0X2.65G	O-ring sealant used for hydraulic or pneumatic parts	1	
18	TC04582300005	Lifter oil inlet steel pipe weldment	1	
19	GBT93-8-A0P	Standard spring washer	6	
20	GBT5783-M8X35-8.8-A2L	Hexagon head bolt	2	
21	TC04582300013	Multi-way valve oil return rubber pipe assembly	1	
22	TC04582140012	Adjustable joint M18-15 assembly	2	
23	TC04582300001	Multi-way valve oil inlet rubber pipe assembly	1	
24	GBT5783-M8X16-8.8-A2L	Hexagon head bolt	1	
25	TD924.582-01	Pipe clip	2	
26	TS04582010025	Handle head	2	
27	GBT5783-M8X20-8.8-A2L	Hexagon head bolt	3	
28	TC04582300011	Adjustable joint M18-15 combination	1	
29	Q67405200	Plastic fastening strap	1	

https://truckmanualshub.com/

TB300.583A Single−way Hydraulic Outlet Assembly 2(003)

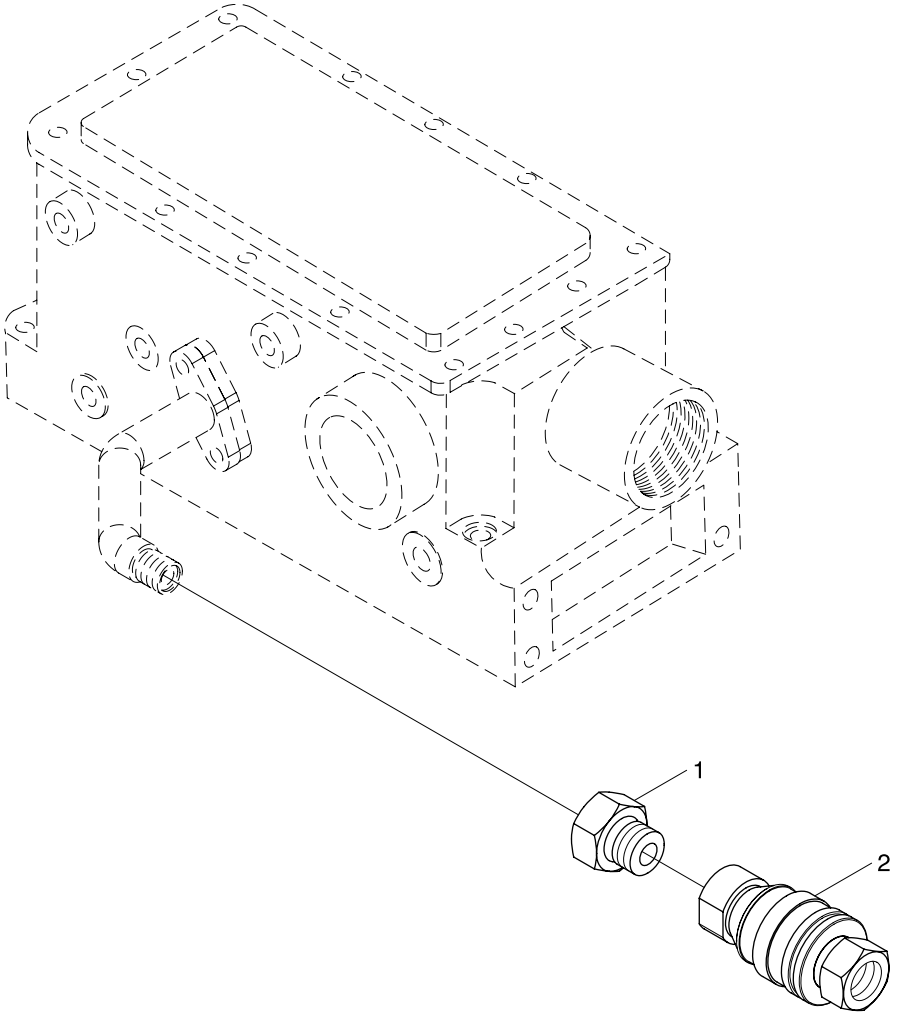

https://truckmanualshub.com/

TB300.583A Single–way Hydraulic Outlet Assembly 2(003)

No.	Part code and specification	Part name	Quantity	Remark
	TB300.583A	Single–way hydraulic outlet assembly 2	1	
1	FT354.58A.104	Oil pipe joint (British system)	1	
2	FT354.58A.030	Quick–adapt joint	1	

https://truckmanualshub.com/

TC02440090000K Seat Installation Assembly(001)

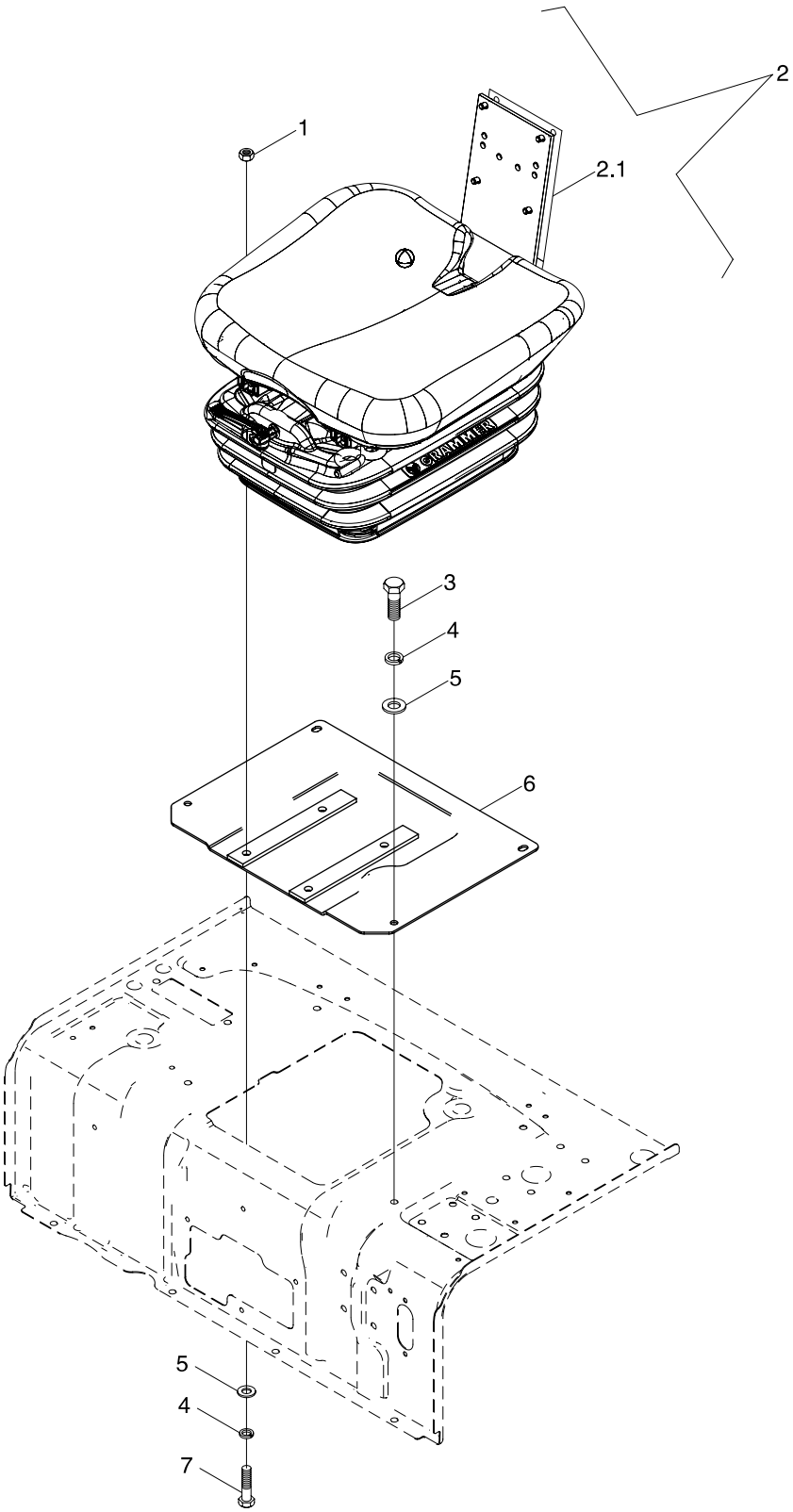

https://truckmanualshub.com/

TC02440090000K Seat Installation Assembly(001)

No.	Part code and specification	Part name	Quantity	Remark
	TC02440090000K	Seat Installation Assembly	1	
1	GBT6170-M8-8-A2L	Hexagon Nut, Type-1	4	
2	TC02440050001K	Seat Assembly	1	
2.1	TC02440050002K	Seat	1	
3	GBT5783-M8X25-8.8-A2L	Hexagon Bolt	4	
4	GBT93-8-A3L	Standard Spring Washer	8	
5	GBT97.1-8-A3L	Flat Washer	8	
6	TC02440090002K	Seat Installation Plate Weldment	1	
7	GBT5783-M8X30-8.8-A2L	Hexagon Bolt	4	

https://truckmanualshub.com/

TS04452010000 Floor Assembly−1

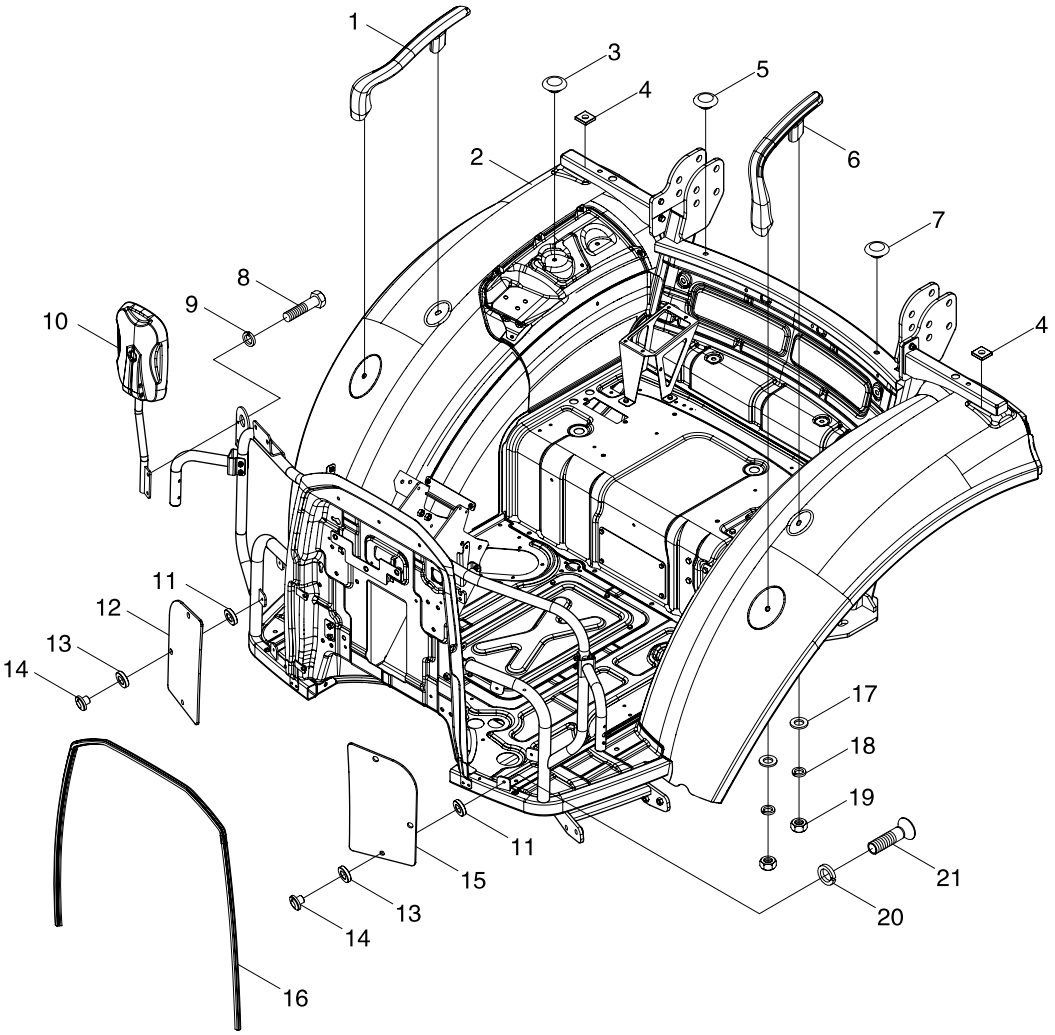

https://truckmanualshub.com/

TS04452010000 Floor Assembly-1

No.	Part code and specification	Part name	Quantity	Remark
	TS04452010000	Floor assembly	1	
1	TS06452014200	Right handle	1	
2	TS04452010001	Floor welding assembly	1	
3	TS06451019003	Processing hole plug cover 3	1	
4	TS06455013000	Rear mudguard fixing gasket	2	
5	TS06451019001	Processing hole plug cover 1	1	
6	TS06452014100	Left handle	1	
7	TS06451019004	Processing hole plug cover 4	1	
8	GBT5783-M6 × 16-8.8-A2L	Hexagon head bolt	2	
9	GBT93-6-A0P	Standard spring washer	2	
10	TS04452015200	Right rearview mirror assembly	1	
11	TA700.452B-06	Rubber washer	6	
12	TS04452013200	Right front windshield	1	
13	TA700.452B-03	Rubber washer	7	
14	TA700.452B-02	Plastic cast nut	6	
15	TS04452013100	Left front windshield	1	
16	TS04452016000	Front wall seal strip	1	
17	GBT96.1-8-A0P	Large washer	4	
18	GBT93-8-A0P	Standard spring washer	4	
19	GBT6170-M8-8-A2L	Hexagon nut , Style 1	4	
20	GBT93-5-A0P	Standard spring washer	6	
21	GBT818-M5 × 16-4.8-A2L	Cross recessed pan head screw	6	

https://truckmanualshub.com/

TS04452010000 Floor Assembly−2

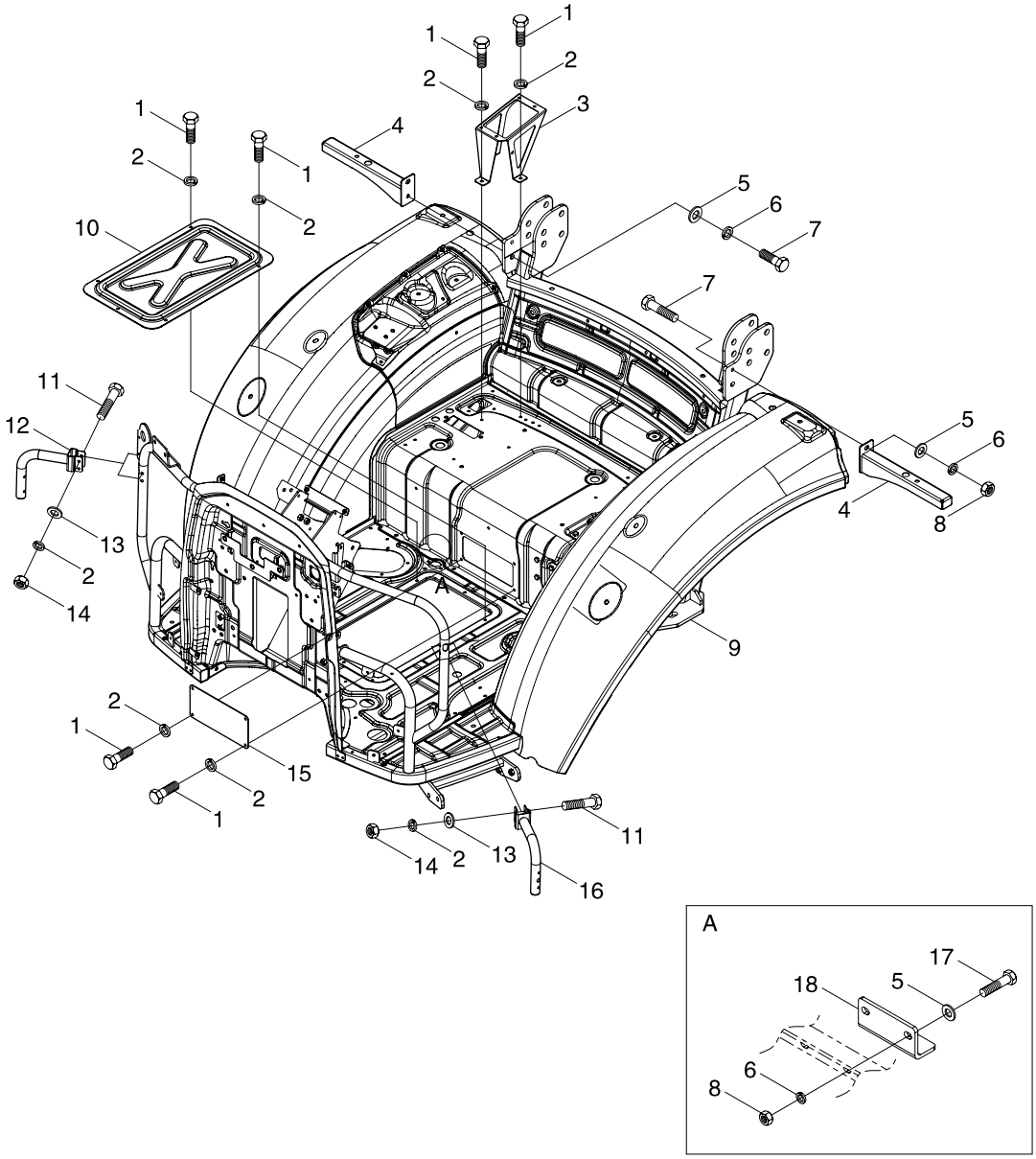

https://truckmanualshub.com/

TS04452010000 Floor Assembly–2

No.	Part code and specification	Part name	Quantity	Remark
	TS04452010000	Floor assembly	1	
	TS04452010001	Floor welding assembly	1	
1	GBT5783–M6 × 16–8.8–A2L	Hexagon head bolt	13	
2	GBT93–6–A0P	Standard spring washer	17	
3	TS04452011150	Central electric box bracket weldment	1	
4	TS04452011030	Rear connecting board weldment	2	
5	GBT97.1–8–A0P	Plain washer	8	
6	GBT93–8–A0P	Standard spring washer	8	
7	GBT5783–M8 × 25–8.8–A2L	Hexagon head bolt	6	
8	GBT6170–M8–8–A2L	Hexagon nut, style 1	4	
9	TS04452011000	Floor body weldment	1	
10	TS04451012001	Gearbox inspection window cover plate	1	
11	GBT5782–M6 × 40–8.8–A2L	Hexagon head bolt	4	
12	TS04452011210	Position lamp bracket right pieces weldment	1	
13	GBT97.1–6–A0P	Plain washer	4	
14	GBT6170–M6–8–A2L	Hexagon nut, style 1	4	
15	TB550.452H–24	Rear floor cover	1	
16	TS04452011190	Position lamp bracket left pieces weldment	1	
17	GBT5783–M8 × 20–8.8–A2L	Hexagon head bolt	2	
18	TS04451012114	Handbrake cable fixing bracket	1	

https://truckmanualshub.com/

TS04452010000 Floor Assembly−3

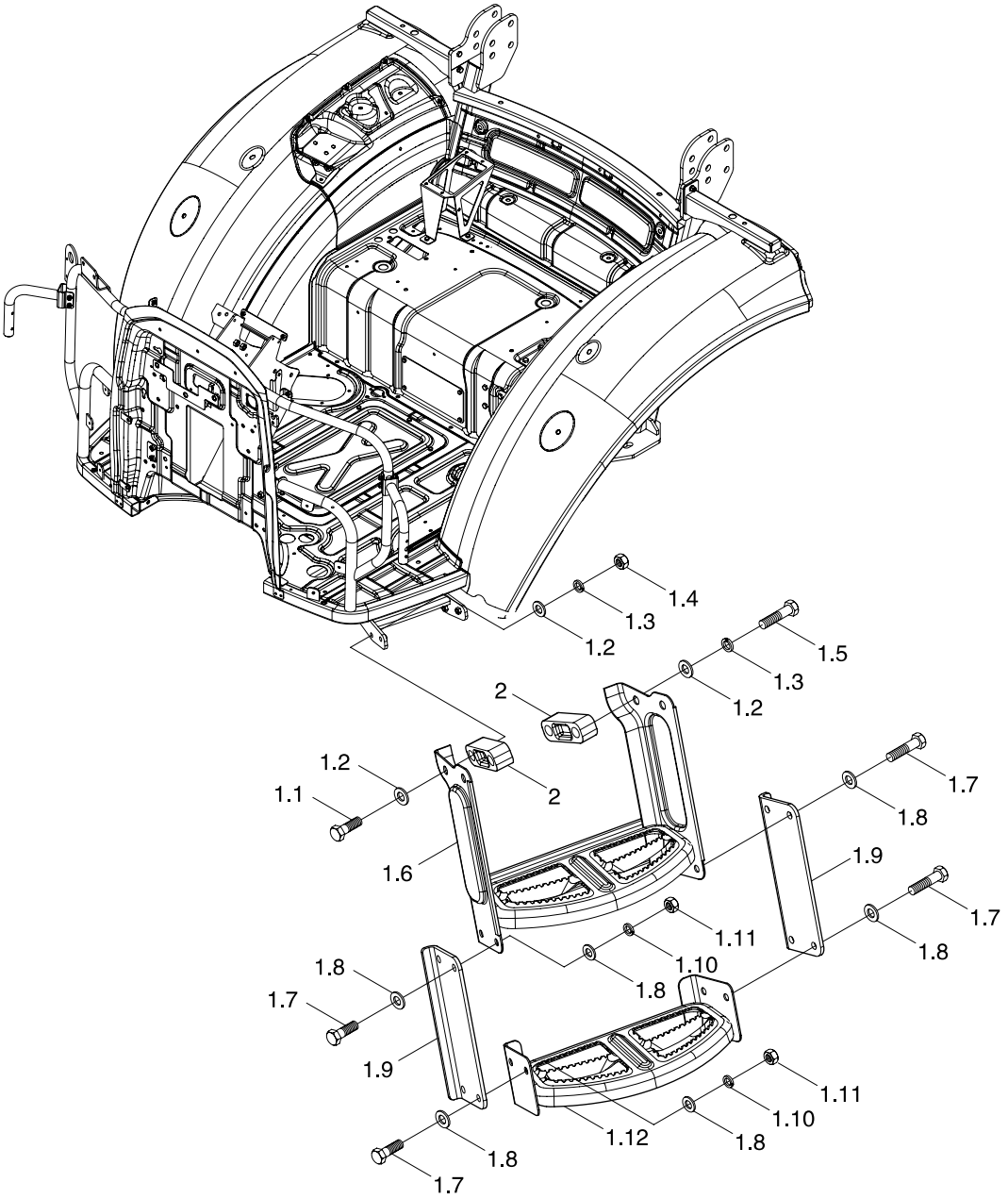

https://truckmanualshub.com/

TS04452010000 Floor Assembly–3

No.	Part code and specification	Part name	Quantity	Remark
	TS04452010000	Floor assembly	1	
1	TS04451017000	Left boarding ladder assembly	1	
1.1	GBT5782–M10 × 60–8.8–A2L	Hexagon head bolt	1	
1.2	GBT95–10–A0P	Plain washer	5	
1.3	GBT93–10–A0P	Standard spring washer	4	
1.4	GBT6170–M10–8–A3L	Hex nut, style 1	1	
1.5	GBT5782–M10 × 55–8.8–A2L	Hexagon head bolt	3	
1.6	TS04451017100	Left boarding ladder weldment	1	
1.7	GBT5783–M8 × 25–8.8–A2L	Hexagon head bolt	8	
1.8	GBT97.1–8–A0P	Plain washer	16	
1.9	TS04451017107	Rope ladder hanging plate	2	
1.10	GBT93–8–A0P	Standard spring washer	8	
1.11	GBT6170–M8–10–A2L	Hex nut, style 1	8	
1.12	TS04451017106	First step pedal weldment	1	
2	TS04451017301	Boarding ladder support seat	2	

https://truckmanualshub.com/

TS04453020000K Upholstery Assembly(001)

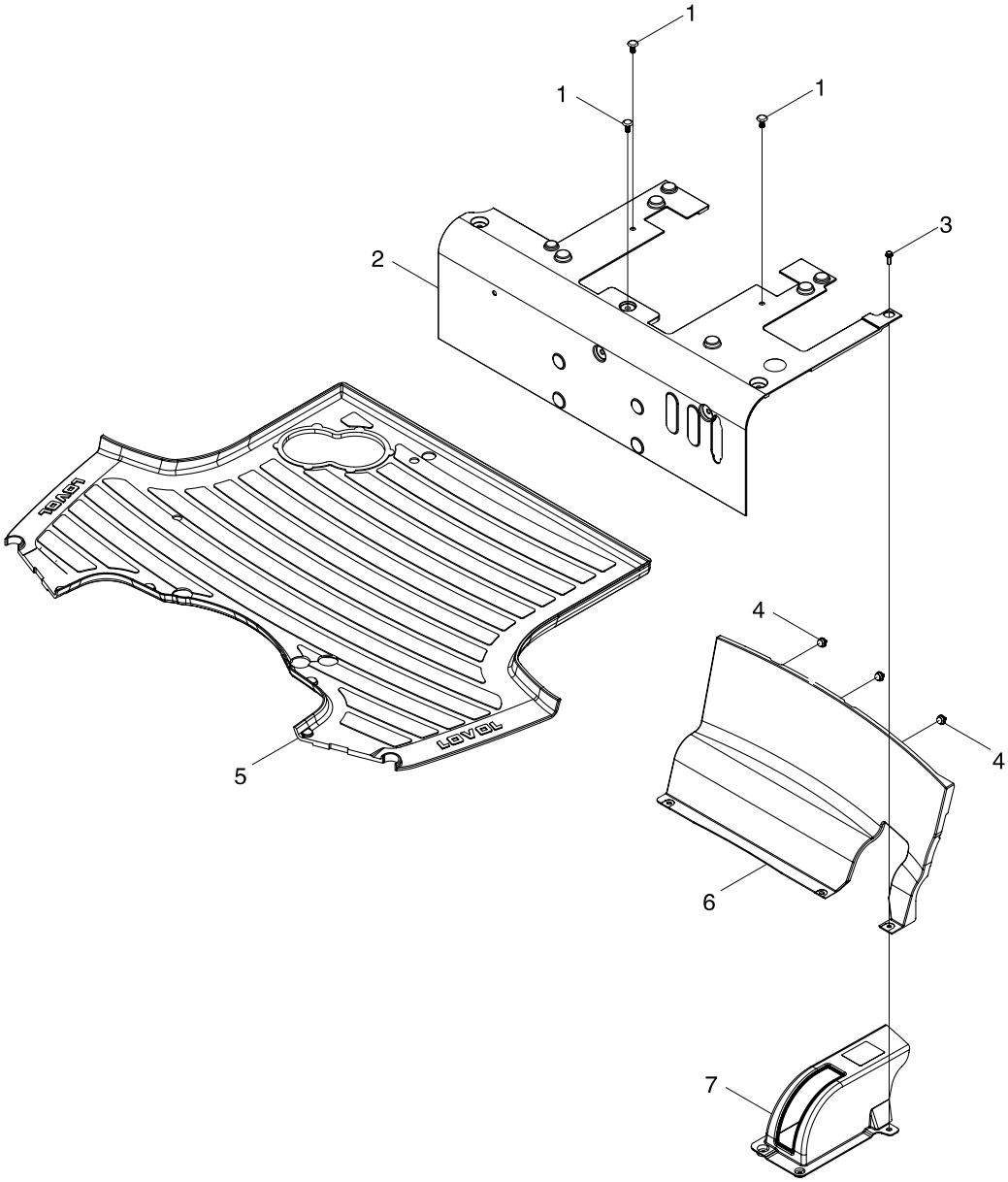

https://truckmanualshub.com/

TS04453020000K Upholstery Assembly(001)

No.	Part code and specification	Part name	Quantity	Remark
	TS04453020000K	Upholstery Assembly	1	
1	Q69208	Plastic Split Pin	8	
2	TS04453022100	Middle Floor Mat	1	
3	GBT16674.1-M6X20-8.8-A2L	Hexagon Flange Nut	5	
4	TS06453020001	Plastic Buckle BL033	3	
5	TS04453022000	Floor Mat	1	
6	TS04453023300	Into Upholstery	1	
7	TS04453023701	Parking Brake Bonnet	1	

https://truckmanualshub.com/

TS04454010000 Control Cover Assembly

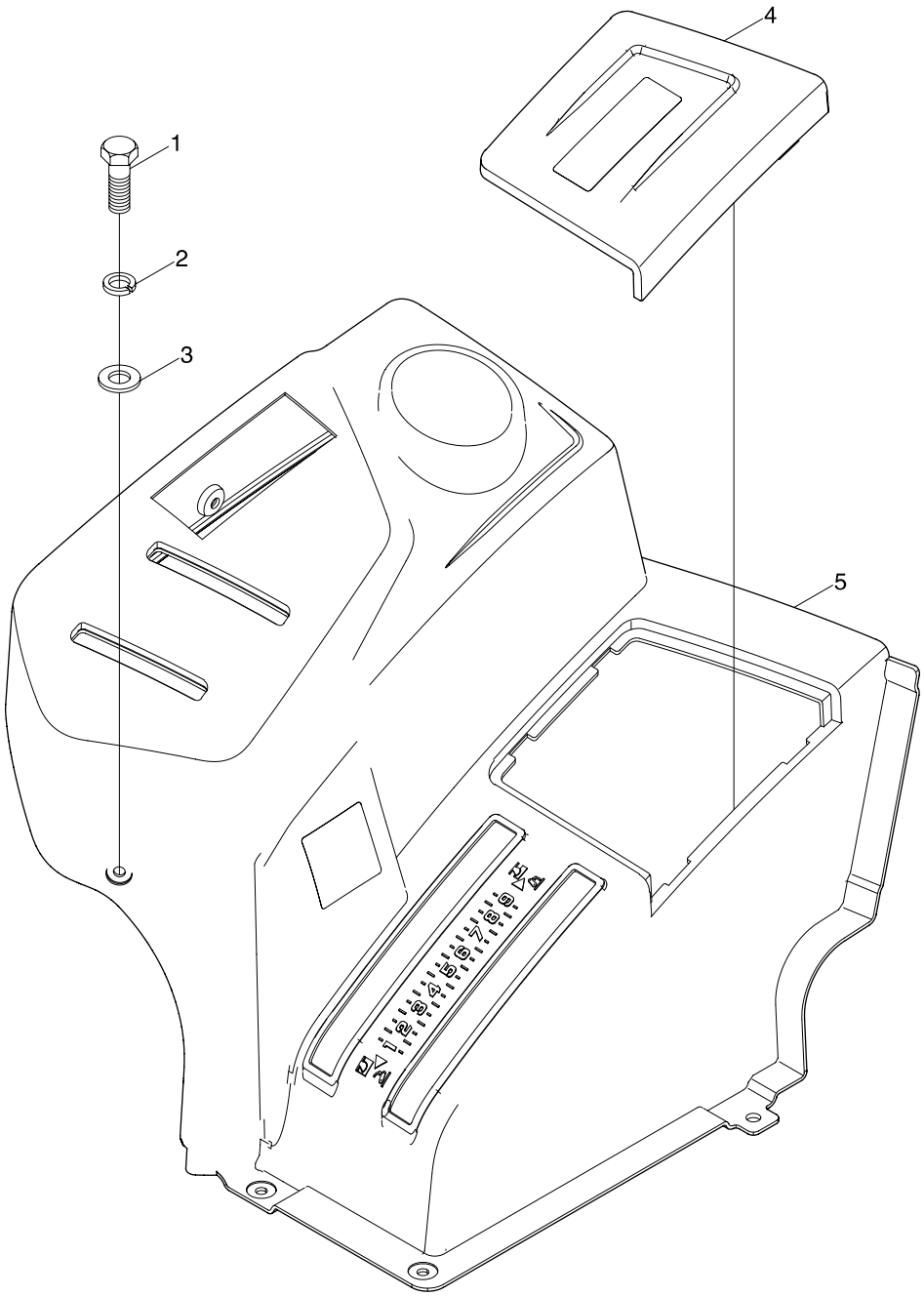

https://truckmanualshub.com/

TS04454010000 Control Cover Assembly

No.	Part code and specification	Part name	Quantity	Remark
	TS04454010000	Control cover plate assembly	1	
1	GBT818–M6 × 20–4.8–A2L	Cross recessed pan head screw	8	
2	GBT93–6–A3L	Standard spring washer	8	
3	GBT97.1–6–A3L	Plain washer	8	
4	TS04454010001	Control cover plate	1	
5	TS04454010002	Electric box cover	1	

https://truckmanualshub.com/

TS04455020000 Rear Mudguard Trimming Assembly

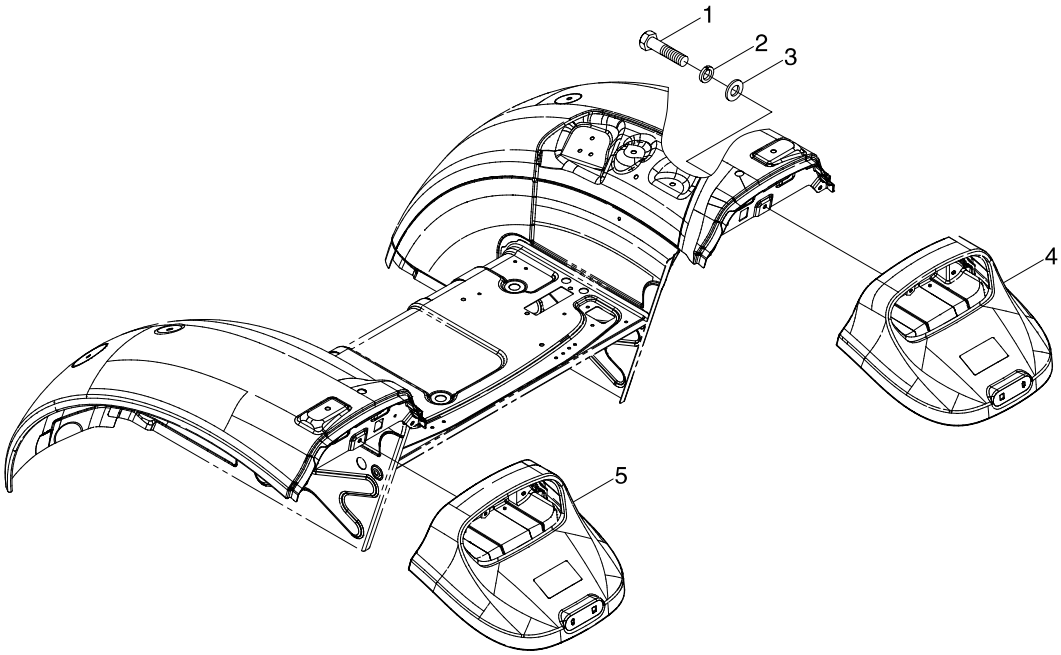

https://truckmanualshub.com/

TS04455020000 Rear Mudguard Trimming Assembly

No.	Part code and specification	Part name	Quantity	Remark
	TS04455020000	Rear mudguard trimming assembly	1	
1	GBT5783–M8 × 16–8.8–A2L	Hexagon head bolt	10	
2	GBT93–8–A3L	Standard spring washer	10	
3	GBT97.1–8–A3L	Plain washer	10	
4	TS04454019000	Right rear mudguard trimming assembly	1	
5	TS04454018000	Left rear mudguard trimming assembly	1	

https://truckmanualshub.com/

TB1S456020000K Dashboard Assembly(001)

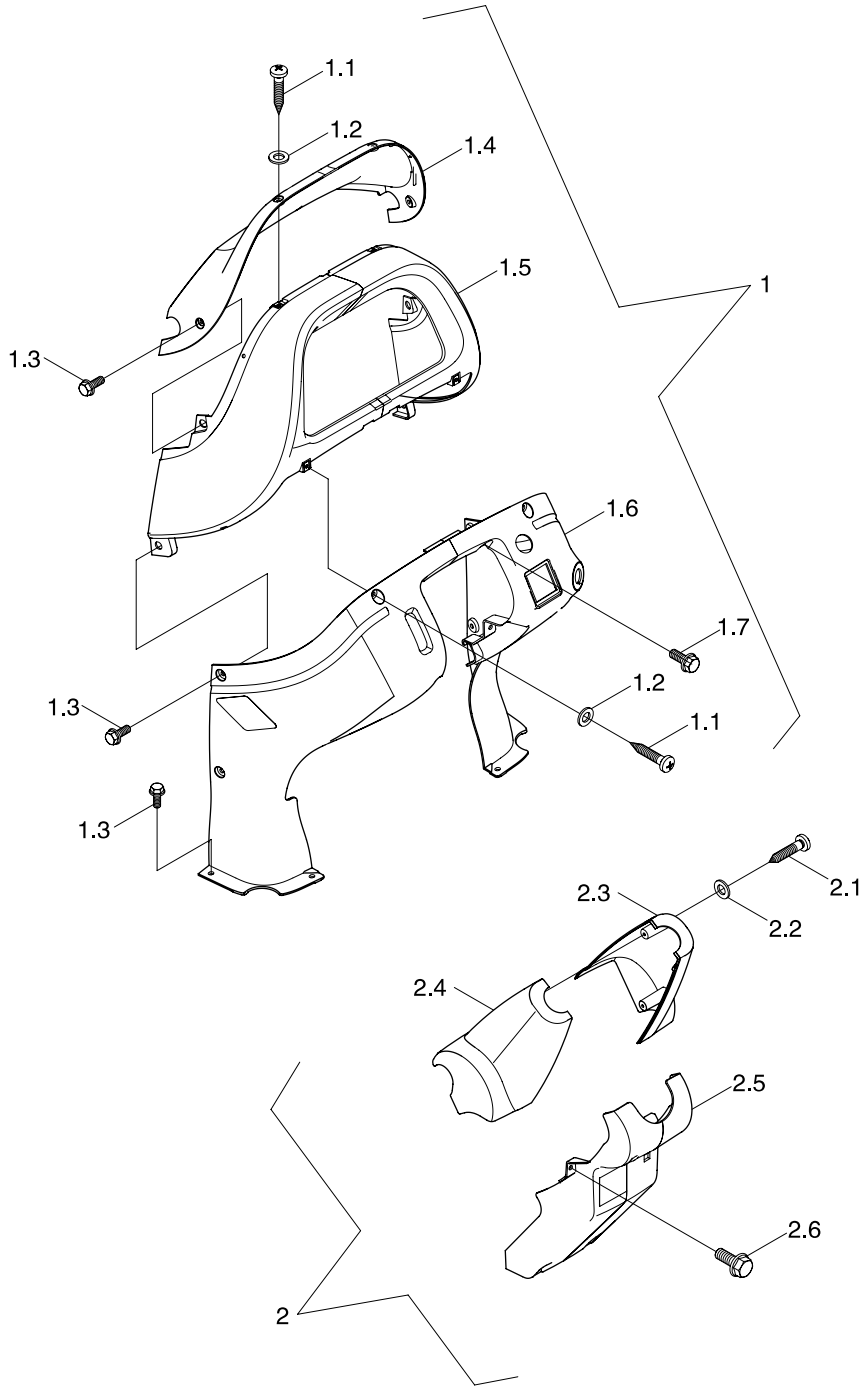

https://truckmanualshub.com/

TB1S456020000K Dashboard Assembly(001)

No.	Part code and specification	Part name	Quantity	Remark
	TB1S456020000K	Dashboard Assembly	1	
1	TS04456020001	Dashboard Box	1	
1.1	GBT845-ST4.8X16-O	Screw	4	
1.2	GBT97.1-6-O	Flat Washer	4	
1.3	GBT16674.1-M6X20-8.8-A2L	Hexagon Flange Nut	4	
1.4	TS04456020002	Upper Cover	1	
1.5	TS04456010003	Dashboard Middle Cover	1	
1.6	TS04456020004	Lower Cover	1	
1.7	GBT5789-M6X16-8.8-A2L	Hexagon Flange Nut	4	
2	TS04456010005	Steering Gear Housing	1	
2.1	GBT845-ST4.8X16-O	Screw	2	
2.2	GBT97.1-6-O	Flat Washer	2	
2.3	TS06456010008	Steering Gear Right Cover Plate	1	
2.4	TS06456010007	Steering Gear Left Cover Plate	1	
2.5	TS04456010006	Steering Gear Low Cover Plate	1	
2.6	GBT16674.1-M6X20-8.8-O	Hexagon Flange Nut	4	

https://truckmanualshub.com/

TS04457010000 Front Connecting Assembly

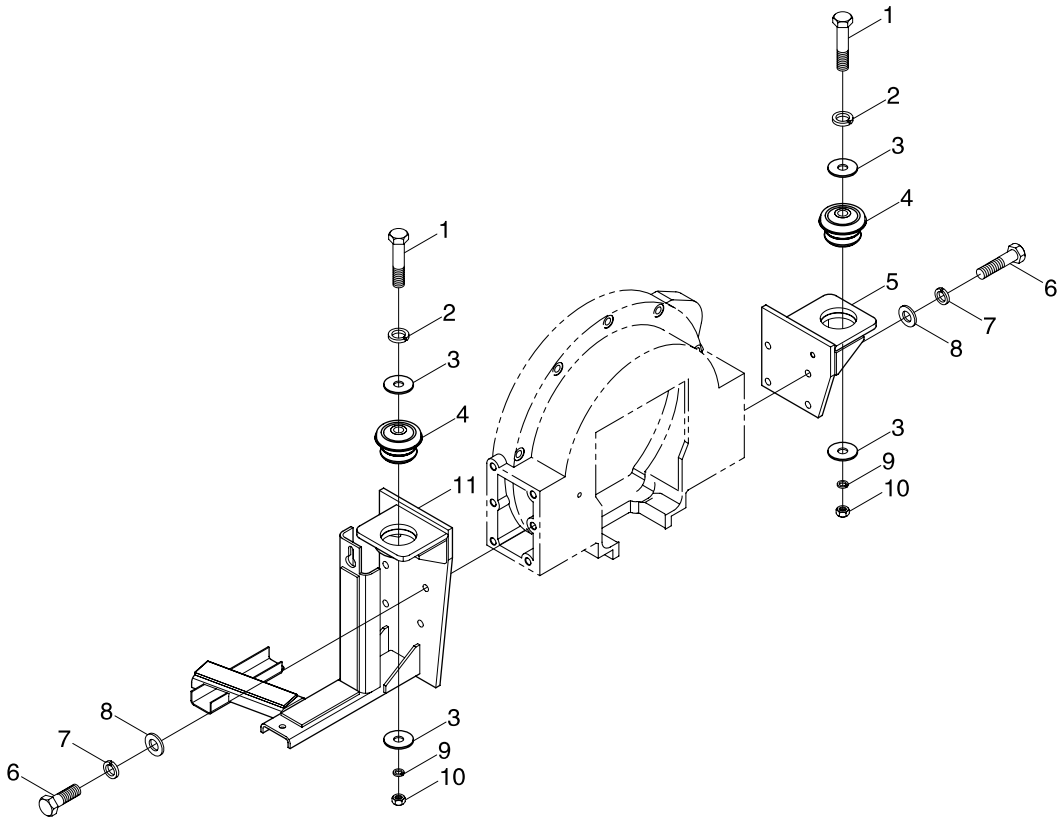

https://truckmanualshub.com/

TS04457010000 Front Connecting Assembly

No.	Part code and specification	Part name	Quantity	Remark
	TS04457010000	Front Connecting Assembly	1	
1	GBT5783-M16X80-10.9-A3L	Hexagon Bolt	2	
2	GBT96.1-16-A0P	Big Washer	2	
3	TB400.457B-02	Retainer Ring	4	
4	TB400.457B-01	Shock Absorber	2	
5	TS04457010004	Right Front Connection Weldment	1	
6	GBT5783-M12X35-10.9-A3L	Hexagon Bolt	10	
7	GBT93-12-A0P	Standard Spring Washer	10	
8	GBT97.1-12-A0P	Flat Washer	10	
9	GBT93-16-A0P	Standard Spring Washer	2	
10	GBT6170-M16-10-A3L	Hexagon Nut, Type-1	2	
11	TS04457010001	Left Front Connection Weldment	1	

https://truckmanualshub.com/

TS04458010000 Rear Connection Assembly

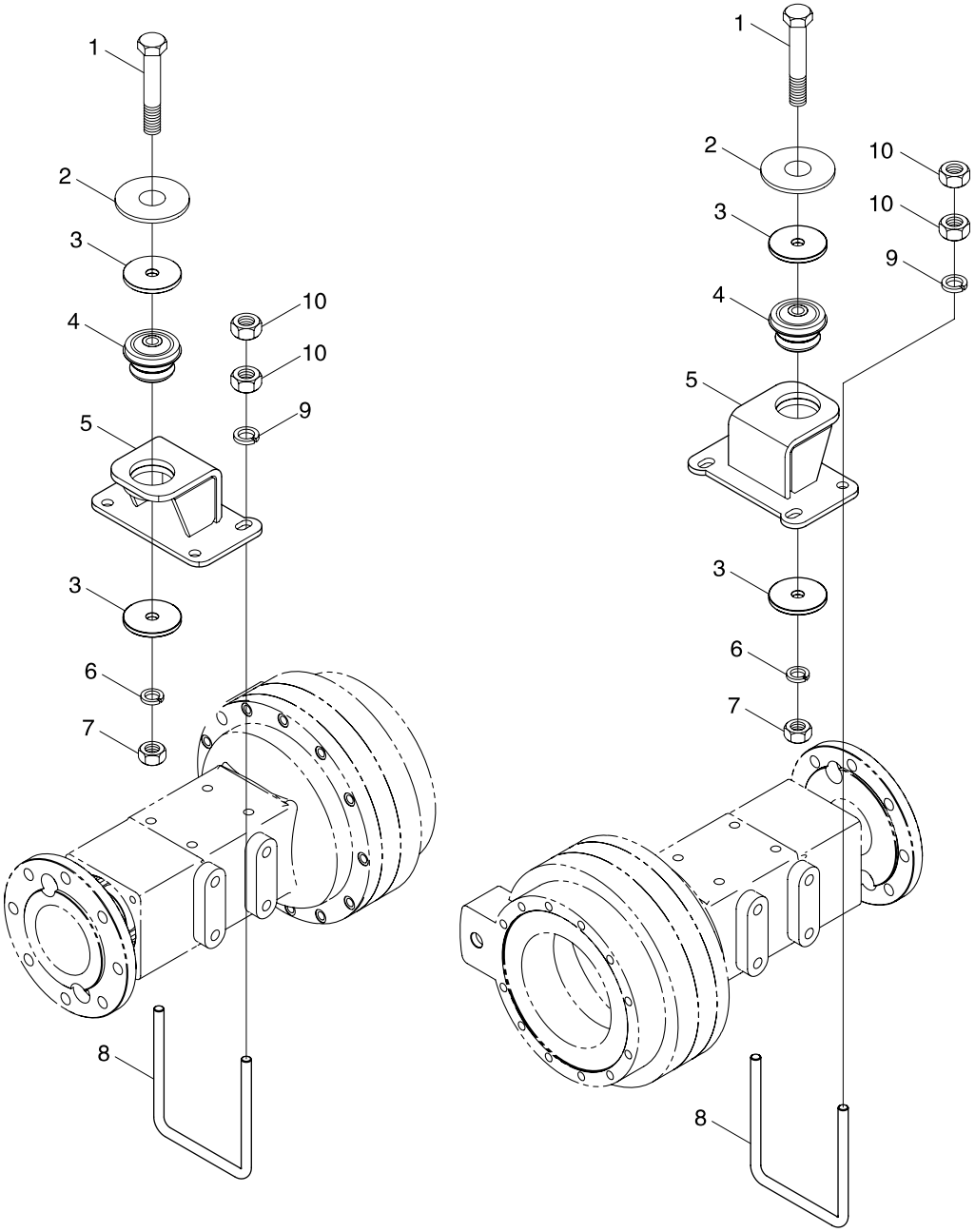

https://truckmanualshub.com/

TS04458010000 Rear Connection Assembly

No.	Part code and specification	Part name	Quantity	Remark
	TS04458010000	Rear connection assembly	1	
1	GBT5783–M16X90–10.9–A2L	Hexagon head bolt	2	
2	GBT96.1–16–A0P	Large washer	2	
3	TB400.457B–02	Circlip	4	
4	TB400.457B–01	Shock absorbing block	2	
5	TS04458010001	Rear connection weldment	2	
6	GBT93–16–A0P	Standard spring washer	2	
7	GBT6170–M16–10–A3L	Hexagon nut, style 1	2	
8	FT400.46.350	U–bolt	4	
9	GBT97.1–14–A0P	Plain washer	8	
10	GBT6170–M14–8–A3L	Hexagon nut, style 1	16	

https://truckmanualshub.com/

TS04461010000K Safety Frame Assembly (002)

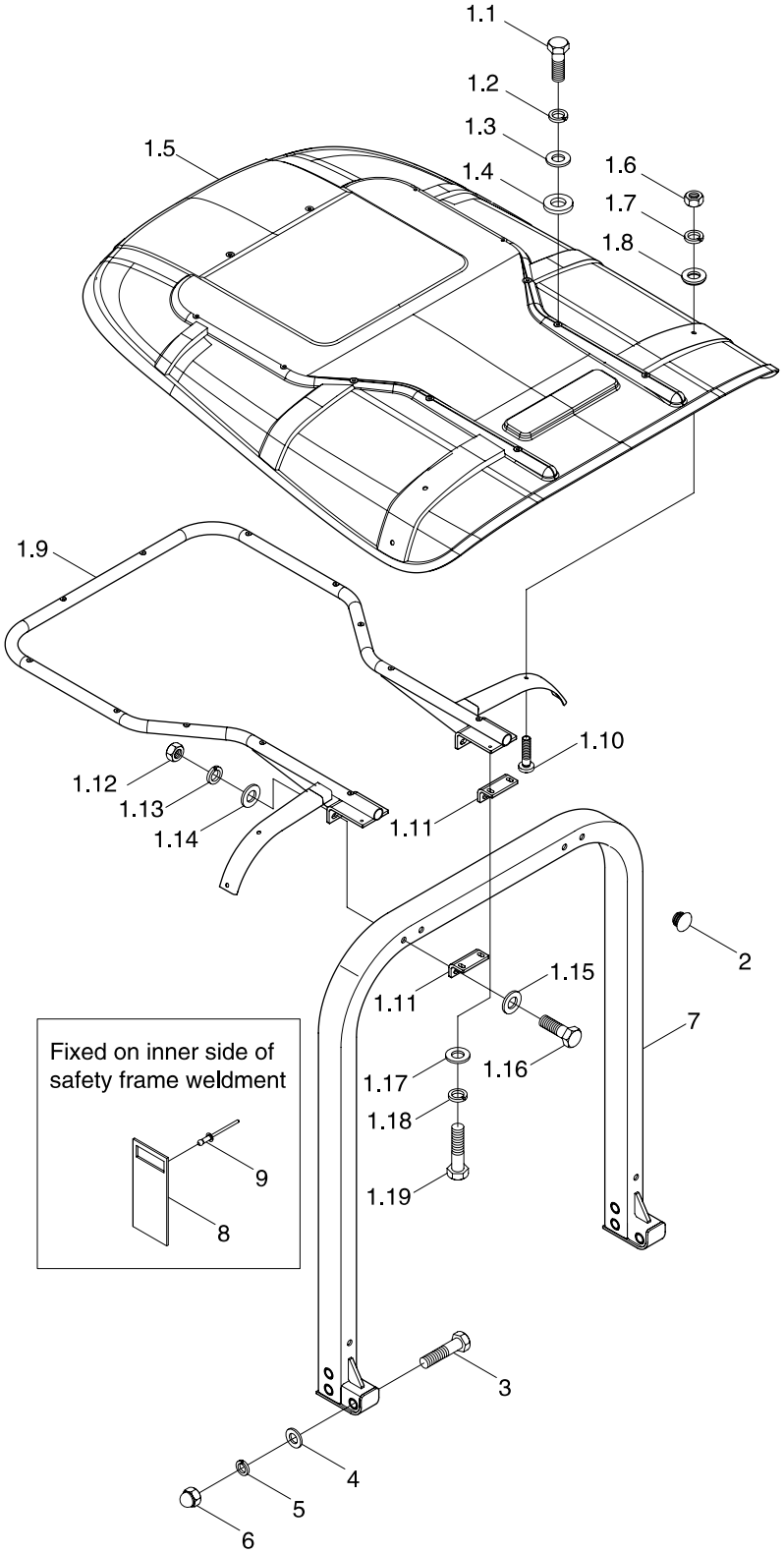

https://truckmanualshub.com/

TS04461010000K Safety Frame Assembly (002)

No.	Part code and specification	Part name	Quantity	Remark
	TS04461010000K	Safety frame assembly	1	
1	TB400.46C.3	Sunshade assembly	1	
1.1	GBT5783-M6X25-8.8-A2L	Hexagon head bolt	12	
1.2	GBT93-6-A0P	Standard spring washer	12	
1.3	GBT97.1-6-A0P	Plain washer	12	
1.4	TE254.46.2.1-02	Rubber washer	12	
1.5	TB400.46C.3.1	Sunshade	1	
1.6	GBT6170-M10-8-A3L	Hexagon nut, type 1	4	
1.7	GBT93-10-A0P	Standard spring washer	4	
1.8	FT400.46.021	Washer subassembly	4	
1.9	TB400.46C.3.3	Sunshade fixing frame weldment	1	
1.10	GBT818-M10X30-4.8-A3L	Cross recessed pan head screw	4	
1.11	TB400.46C.3-01	Fixing frame	2	
1.12	GBT6170-M12-10-A3L	Hexagon nut, type 1	4	
1.13	GBT93-12-A0P	Standard spring washer	4	
1.14	GBT96.1-12-A3L	Large washer	4	
1.15	GBT97.1-12-A0P	Plain washer	4	
1.16	GBT5782-M12X110-10.9-A2L	Hexagon head bolt	4	
1.17	GBT96.1-8-A3L	Large washer	4	
1.18	GBT93-8-A0P	Standard spring washer	4	
1.19	GBT5783-M8X20-10.9-A2L	Hexagon head bolt	4	
2	TB400.46C-01	Plug cover	4	
3	GBT5783-M16X90-8.8-A2L	Hexagon head bolt	6	
4	GBT97.1-16-A0P	Plain washer	6	
5	GBT93-16-A0P	Standard spring washer	6	
6	GBT802-M16-6	Compound cap nut	6	
7	TS04461012010K	Safety frame weldment	1	
8	TS04461012012K	EC identification nameplate	1	
9	GBT12618-3X15	Mushroom head break mandrel blind rivet	2	

https://truckmanualshub.com/

TS04471030000K Bonnet Assembly(002)−1

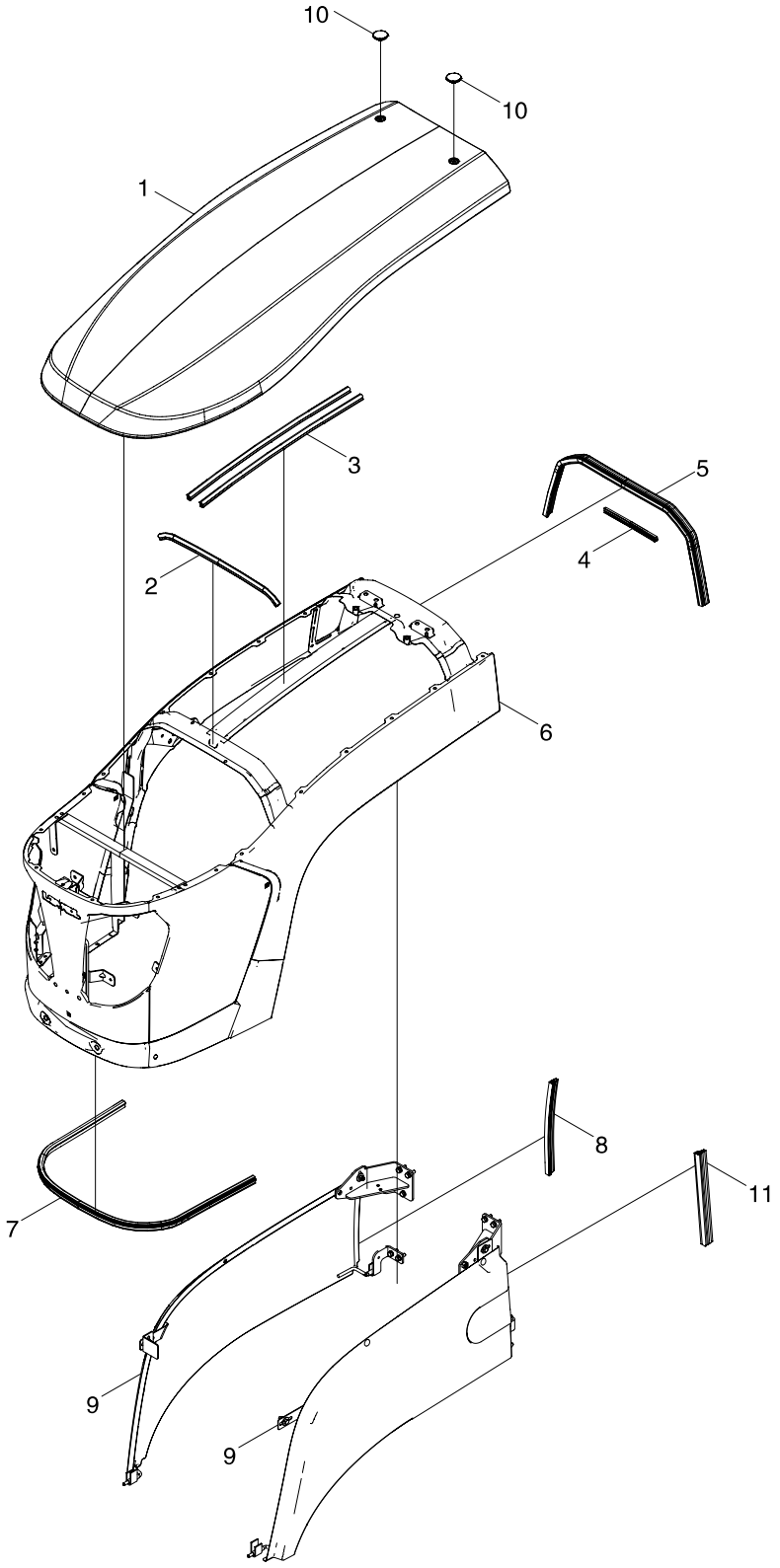

https://truckmanualshub.com/

TS04471030000K Bonnet Assembly(002)–1

No.	Part code and specification	Part name	Quantity	Remark
	TS04471030000K	Bonnet Assembly	1	
1	TS04471012001	Bonnet Up Cover Plate	1	
2	TS04471010007	Front Shock Washer	1	
3	TS04471010004	Middle Shock Washer	2	
4	TS04471010008	Back Shock Rubber Strip	1	
5	TS04471010001	Bonnet Rear Seal Strip	1	
6	TS04471011000	Bonnet Weldment Assembly	1	
7	TS04471010002	Front Lower Cushion Rubber Piece	1	
8	TS04471010009	Bonnet Right Rear Seal Strip	1	
9	TS04471030001K	Lower Side Plate	1	
10	TS06471010005	Rubber Plug	2	
11	TS04471010006K	Bonnet Left Rear Seal Strip	1	

https://truckmanualshub.com/

TS04471030000K Bonnet Assembly(002)−2

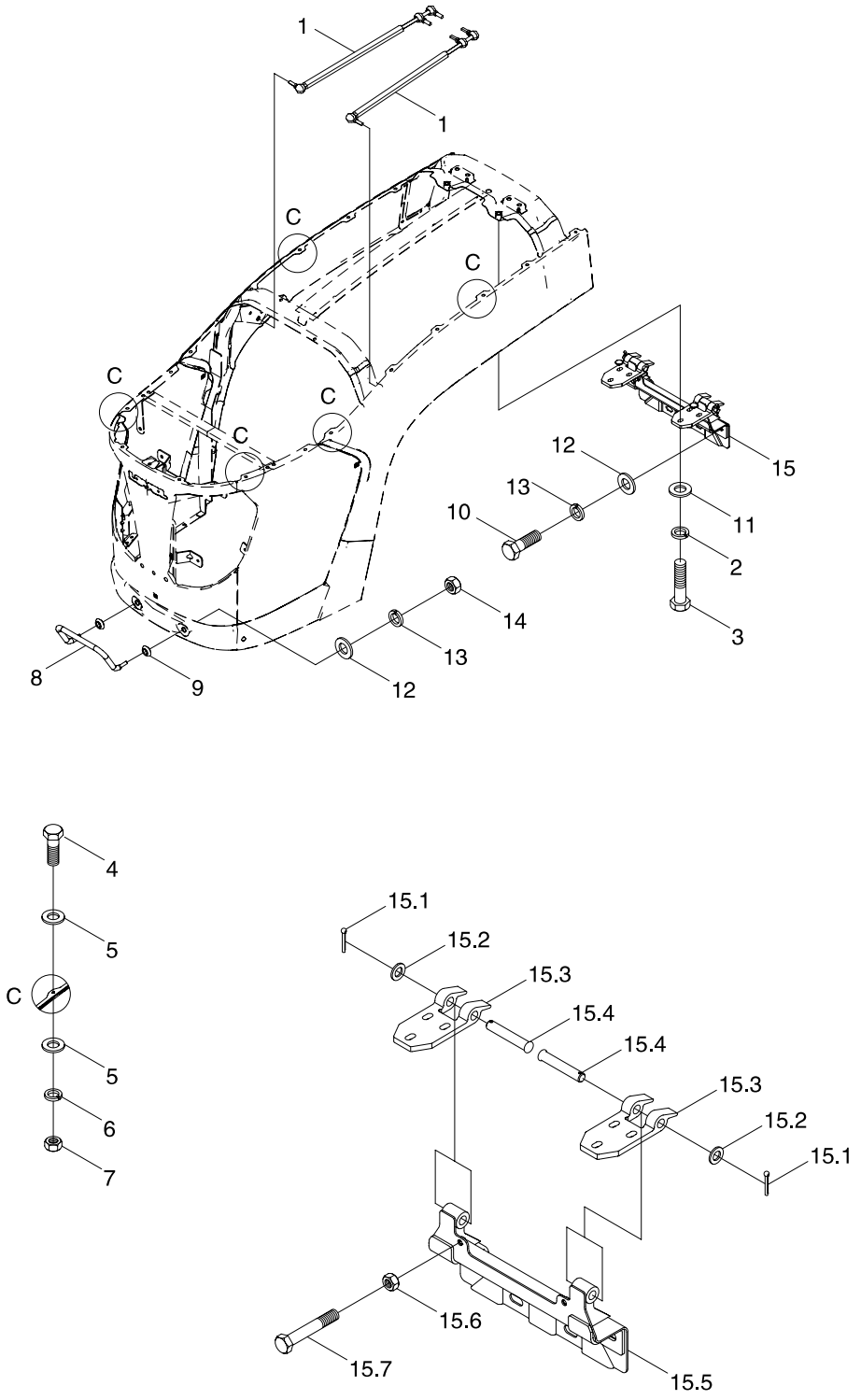

https://truckmanualshub.com/

TS04471030000K Bonnet Assembly(002)-2

No.	Part code and specification	Part name	Quantity	Remark
	TS04471030000K	Bonnet Assembly	1	
1	TS04471019000	Bonnet Pneumatic Spring Assembly	2	
2	GBT93-10-A3L	Standard Spring Washer	6	
3	GBT5783-M10X35-8.8-A3L	Hexagon Bolt	6	
4	GBT5783-M6X16-8.8-A2L	Hexagon Bolt	18	
5	GBT97.1-6-A3L	Flat Washer	36	
6	GBT93-6-A3L	Standard Spring Washer	18	
7	GBT6170-M6-8-A2L	Hexagon Nut, Type-1	18	
8	TS04471010003	Handle	1	
9	TD800.471A-05	Washer	2	
10	GBT5783-M12X35-8.8-A3L	Hexagon Bolt	3	
11	GBT96.1-12-A3L	Big Washer	3	
12	GBT97.1-12-A3L	Flat Washer	2	
13	GBT93-12-A3L	Standard Spring Washer	5	
14	GBT6170-M12-8-A3L	Hexagon Nut, Type-1	2	
15	TS04471013000	Bonnet Hinge Assembly	1	
15.1	GBT91-4X32-A0P	Split Pin	2	
15.2	GBT97.1-16-A0P	Flat Washer	2	
15.3	FT800B.47B.161	Hinge Upper Seat	2	
15.4	GBT882-B16X90-A0P	Pin Shaft	2	
15.5	TS04471013001	Bonnet Low Bracket Weldment	1	
15.6	GBT6170-M8-8-A2L	Hexagon Nut, Type-1	2	
15.7	GBT5783-M8X50-8.8-A2L	Hexagon Bolt	2	
16	GBT96.1-10-A3L	Big Washer	6	

https://truckmanualshub.com/

TS04471030000K Bonnet Assembly(002)−3

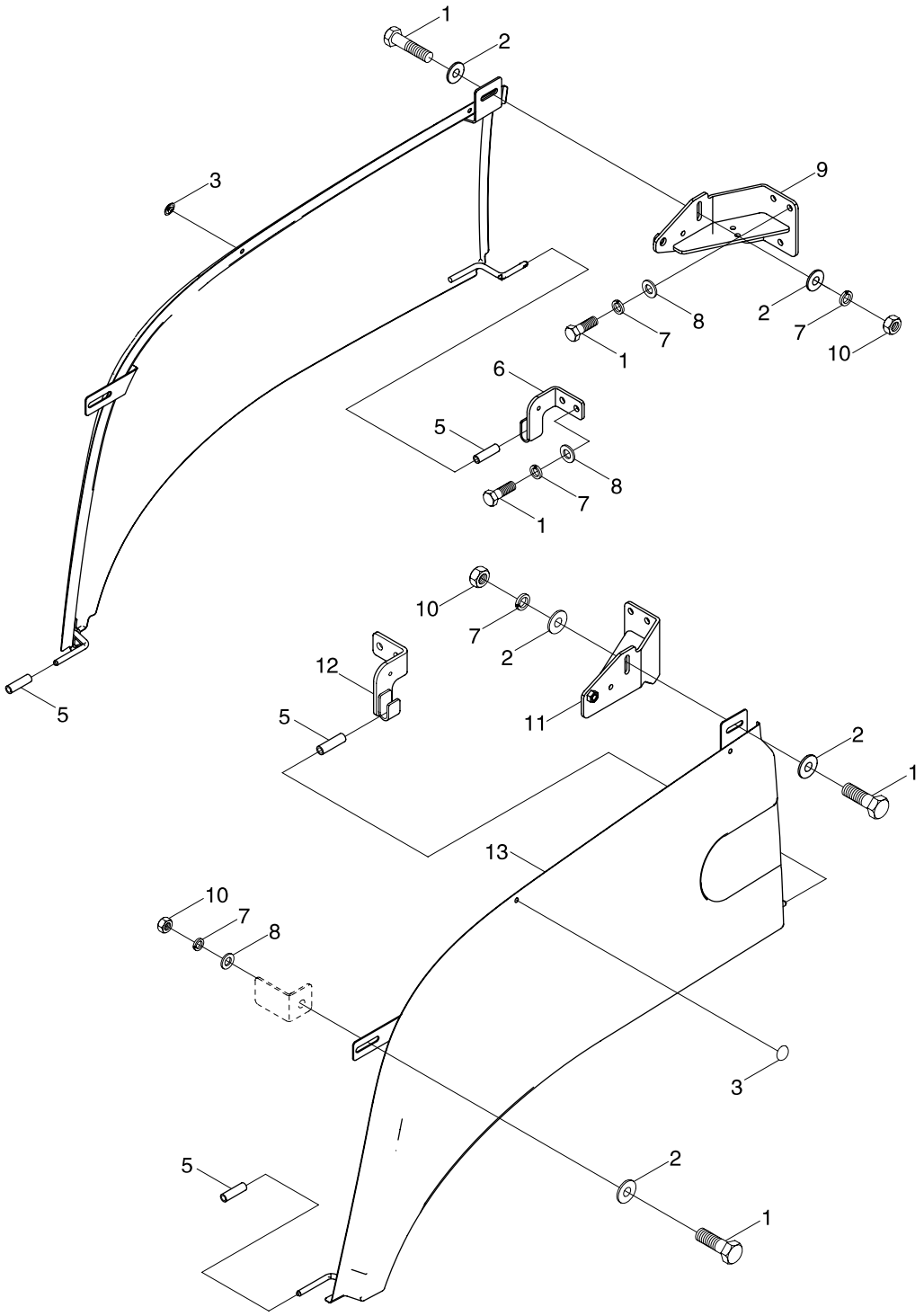

https://truckmanualshub.com/

TS04471030000K Bonnet Assembly(002)-3

No.	Part code and specification	Part name	Quantity	Remark
	TS04471030000K	Bonnet Assembly	1	
	TS04471030001K	Lower Side Plate	1	
1	GBT5783-M8X25-8.8-A2L	Hexagon Bolt	14	
2	GBT96.1-8-A3L	Big Washer	6	
3	TS06471014003	Auxiliary Hole Plug Cover	4	
4	TS04471014200	Right Lower Plate Weldment	1	
5	TS06471014002	Rubber Sleeve	4	
6	TS04471014004	Right Rear Lower Fixing Seat Weldment	1	
7	GBT97.1-8-A3L	Flat Washer	12	
8	GBT93-8-A3L	Standard Spring Washer	14	
9	TS04471014003	Right Rear Upper Fixing Seat Weldment	1	
10	GBT6170-M8-8-A2L	Hexagon Nut, Type-1	4	
11	TS04471014001	Left Rear Upper Fixing Seat Weldment	1	
12	TS04471014002	Left Rear Lower Fixing Seat Weldment	1	
13	TS04471030002K	Left Lower Plate Weldment	1	

https://truckmanualshub.com/

TS04473010000 Bonnet Locking Device Assembly(006)

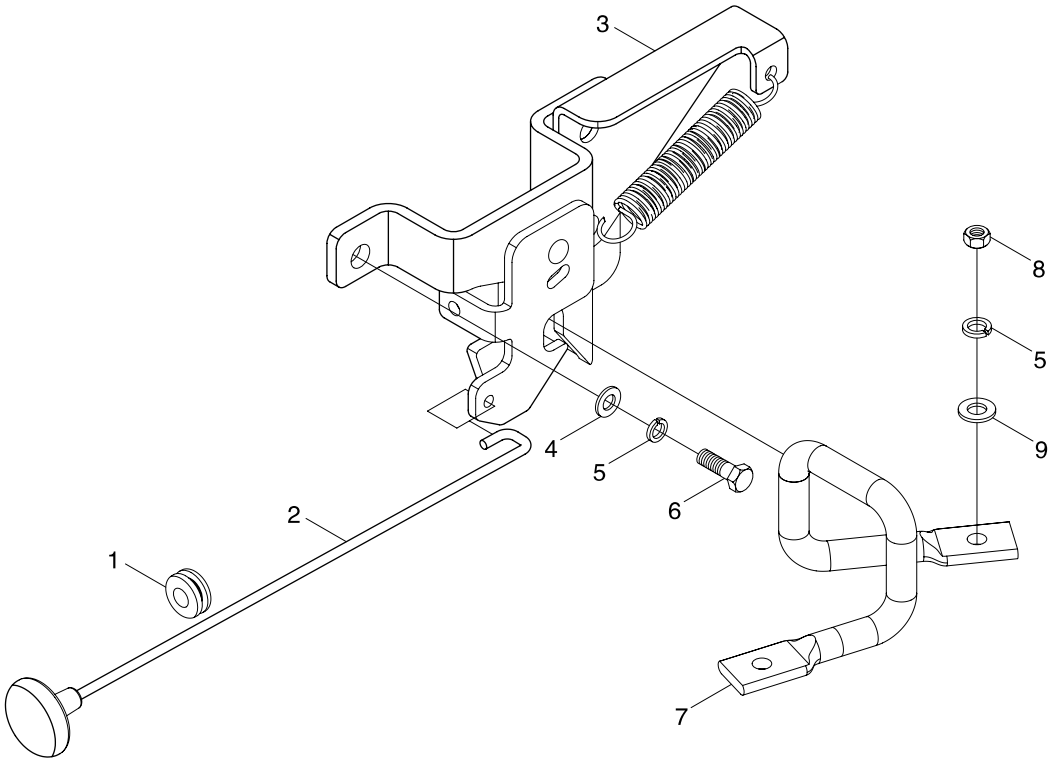

https://truckmanualshub.com/

TS04473010000 Bonnet Locking Device Assembly(006)

No.	Part code and specification	Part name	Quantity	Remark
	TS04473010000	Bonnet Locking Device Assembly	1	
1	TB450.473-02	Rubber Ring	1	
2	TS04473010006	Pull Rod	1	
3	TS06473010002	Bonnet Lock	1	
4	GBT97.1-8-A0P	Flat Washer	3	
5	GBT93-8-A0P	Standard Spring Washer	5	
6	GBT5783-M8X25-8.8-A2L	Hexagon Bolt	3	
7	TS04473010015	Bonnet Lock Pillar	1	
8	GBT6170-M8-8-A2L	Hexagon Nut, Type-1	2	
9	GBT96.1-8-A0P	Big Washer	2	

https://truckmanualshub.com/

TB400.475A Left Front Mud Gaurd Assembly

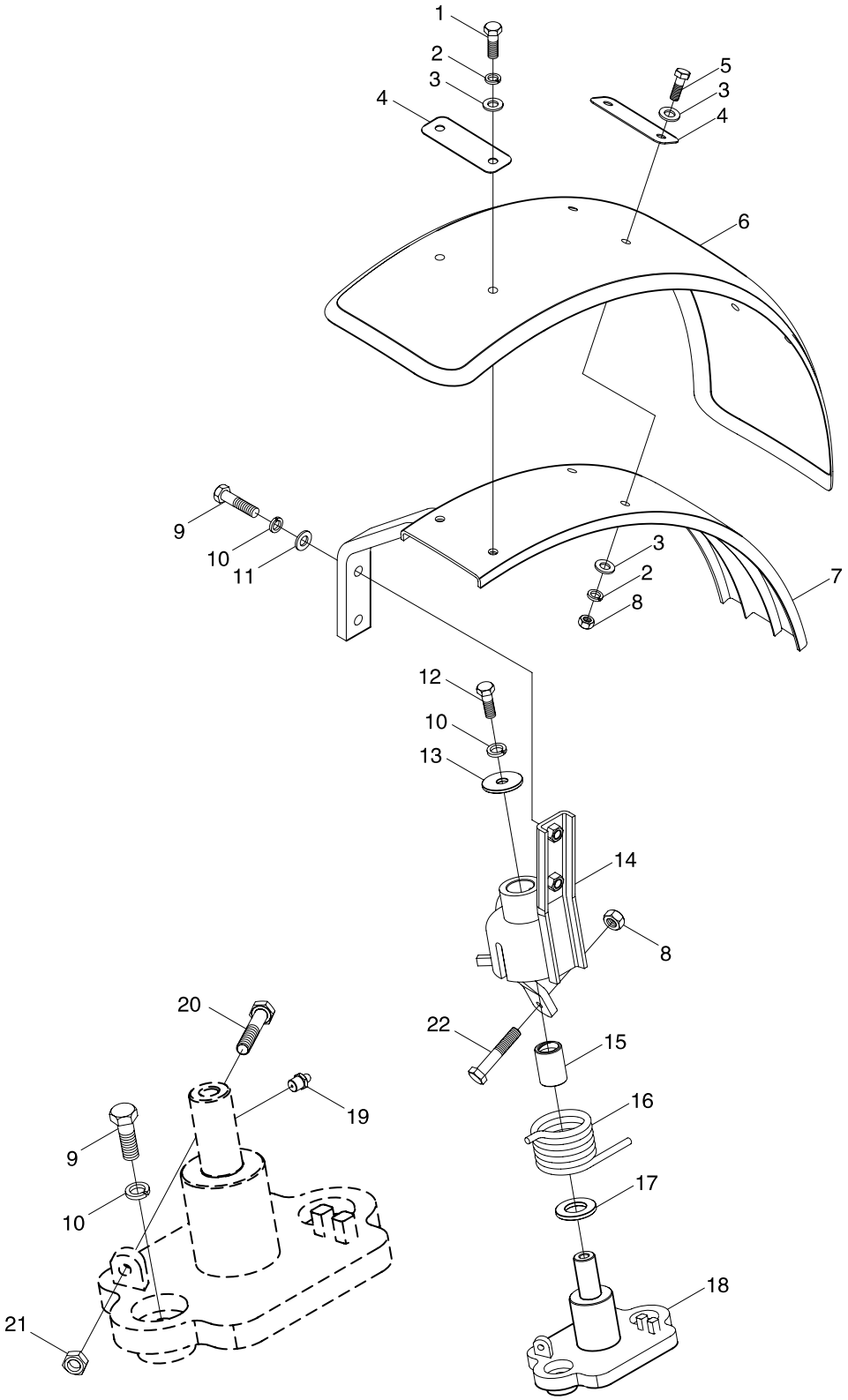

https://truckmanualshub.com/

TB400.475A Left Front Mud Gaurd Assembly

No.	Part code and specification	Part name	Quantity	Remark
	TB400.475A	Left Front Mud Guard Assembly	1	
1	GBT5783–M10 × 35–8.8–A3L	Hexagon Bolt	2	
2	GBT93–10–A0P	Standard Spring Washer	6	
3	GBT97.1–10–A0P	Flat Washer	10	
4	TB400.475A–04	Strengthen Plate	3	
5	GBT5783–M10 × 30–8.8–A3L	Hexagon Bolt	4	
6	TB400.475A–03	Left Front Mud Guard	1	
7	TB400.475A.2	Upper Bracket Weldment	1	
8	GBT6170–M10–8–A3L	Hexagon Nut, Type–1	5	
9	GBT5783–M12 × 40–8.8–A3L	Hexagon Bolt	4	
10	GBT93–12–A0P	Standard Spring Washer	5	
11	GBT97.1–12–A0P	Flat Washer	2	
12	GBT5783–M12 × 30–10.9–A3L	Hexagon Bolt	1	
13	TB400.475–07	Washer 2	1	
14	TB400.475A.3	Lower Bracket Weldment	1	
15	TB400.475A–01	Sleeve	1	
16	TB400.475A–02	Left Torque Spring	1	
17	TB400.475–06	Washer	1	
18	TB400.475A.1	Left Installation Plate Weldment	1	
19	JB/T 7940.1–M10 × 1	Straight Forced Filling Oil Cup	1	
20	GBT5783–M8 × 45–8.8–A2L	Hexagon Bolt	1	
21	GBT6170–M8–8–A2L	Hexagon Nut, Type–1	1	
22	GBT5783–M10 × 55–8.8–A2L	Hexagon Bolt	1	

https://truckmanualshub.com/

TS04475080000K Bonnet Seal Installation Assembly（002）

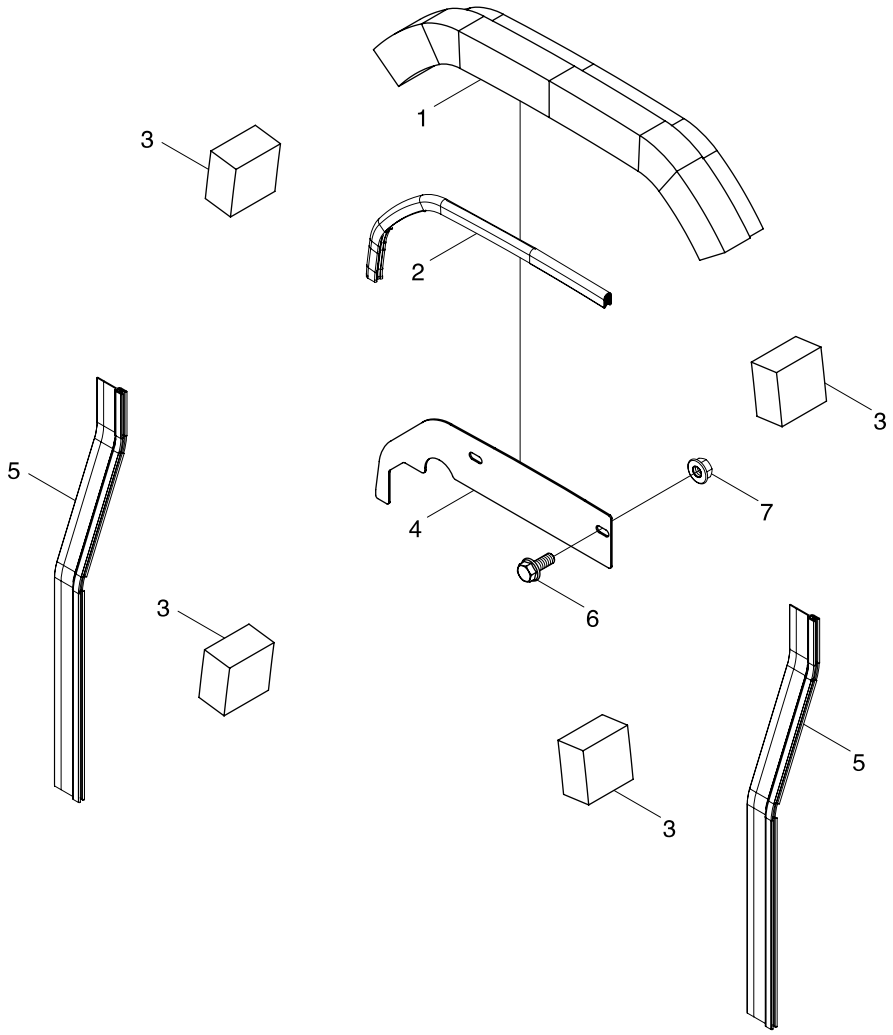

https://truckmanualshub.com/

TS04475080000K Bonnet Seal Installation Assembly（002）

No.	Part code and specification	Part name	Quantity	Remark
	TS04475080000K	Bonnet Seal Installation Assembly	1	
1	TS04475010002	Up Seal Cotton	1	
2	TS04475080002K	Seal Strip	1	
3	TS04475010001	Side Seal Cotton	2	
4	TS04475080001K	Seal Spacer Plate	1	
5	TS04475010005	Seal Strip	2	
6	GBT16674.1-M8X20-8.8-A2L	Hexagon Flange Nut	2	
7	GBT6177.1-M8-8-A2L	Hexagon Flange Nut	2	

https://truckmanualshub.com/

TB400.476A Right Front Mud Guard Assembly

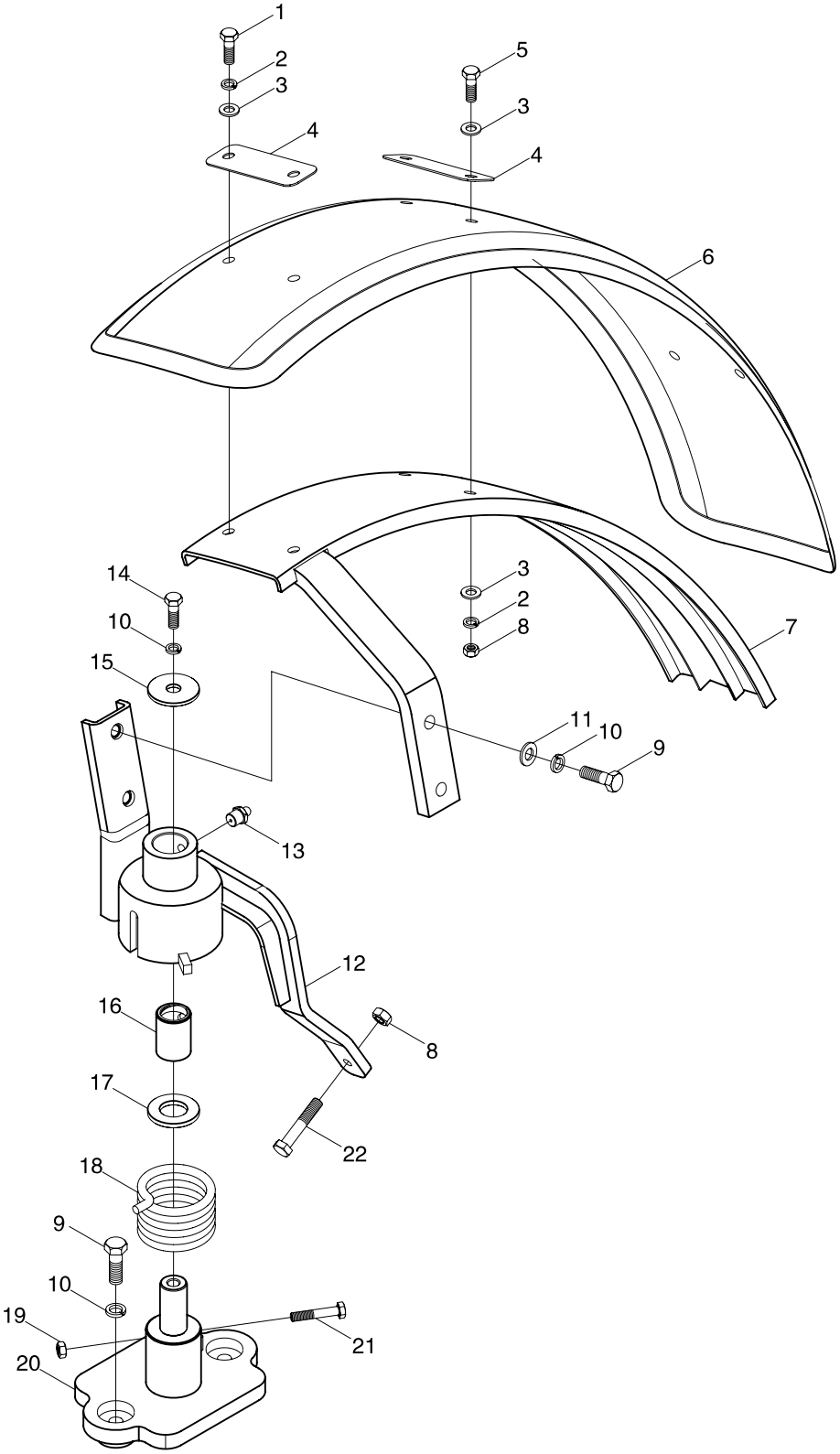

https://truckmanualshub.com/

TB400.476A Right Front Mud Guard Assembly

No.	Part code and specification	Part name	Quantity	Remark
	TB400.476A	Right Front Mud Guard Assembly	1	
1	GBT5783–M10 × 35–8.8–A2L	Hexagon Bolt	2	
2	GBT93–10–AOP	Standard Spring Washer	6	
3	GBT96.1–10–A2	Flat Washer	10	
4	TB400.475A–04	Strengthen Plate	3	
5	GBT5782–M10 × 30–8.8–A3L	Hexagon Bolt	4	
6	TB400.475A–03	Left Front Mud Guard	1	
7	TB400.476A.2	Upper Bracket Weldment	1	
8	GBT6170–M10–8–A3L	Hexagon Nut, Type–1	5	
9	GBT5783–M12 × 40–8.8–A3L	Hexagon Bolt	4	
10	GBT93–12–AOP	Standard Spring Washer	5	
11	GBT97.1–12–AOP	Flat Washer	2	
12	TB400.476A.3	Lower Bracket Weldment	1	
13	JB/T 7940.1–M10 × 1	Straight–Through Type Pressure Live Oil Cup	1	
14	GBT5783–M12 × 30–10.9–A3L	Hexagon Bolt	1	
15	TB400.475–07	Washer 2	1	
16	TB400.475A–01	Sleeve	1	
17	TB400.475–06	Washer	1	
18	TB400.476A–01	Right Torsion Spring	1	
19	GBT6170–M8–8–A2L	Hexagon Nut, Type–1	1	
20	TB400.476A.1	Right Installation Plate Weldment	1	
21	GBT5783–M8 × 45–8.8–A2L	Hexagon Bolt	1	
22	GBT5783–M10 × 55–8.8–A3L	Hexagon Bolt	1	

https://truckmanualshub.com/

TS04490010000 Tool Kit Assembly

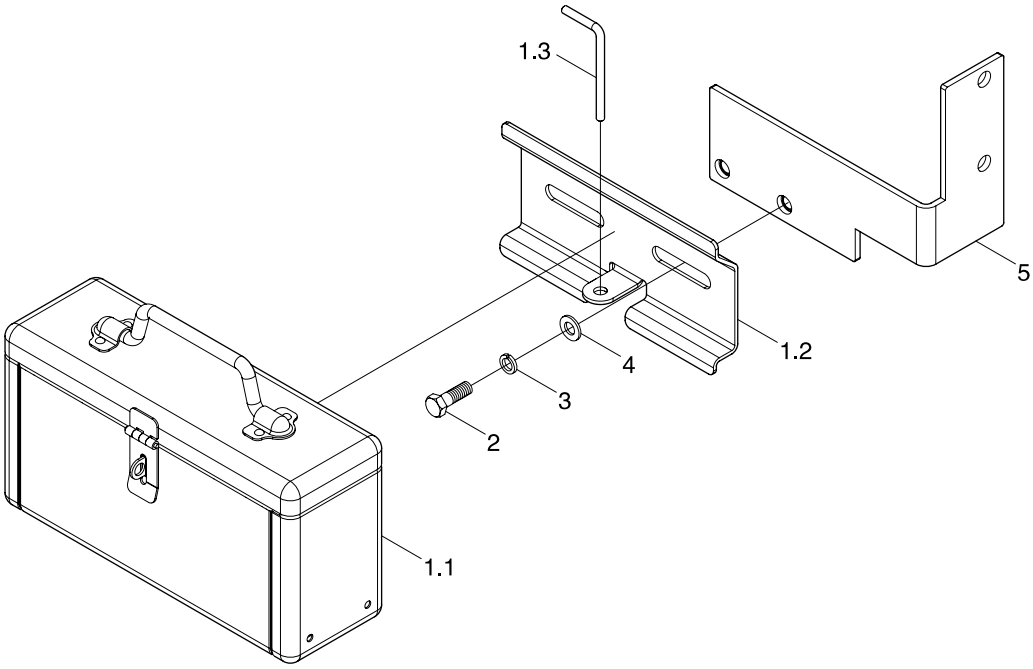

https://truckmanualshub.com/

TS04490010000 Tool Kit Assembly

No.	Part code and specification	Part name	Quantity	Remark
	TS04490010000	Tool kit assembly	1	
1	TB400.49.1	Tool kit supply assembly	1	
1.1	TB400.49.1.1	Tool kit welding and riveting assembly	1	
1.2	FT65.49.103	Fixing plate	1	
1.3	FT65.49.102	Latch	1	
2	GBT5783-M12X25-8.8-A3L	Hexagon head bolt	2	
3	GBT93-12-A0P	Standard spring washer	2	
4	GBT97.1-12-A0P	Plain washer	2	
5	TS04490010003	Installation bracket weldment	1	

https://truckmanualshub.com/

TB1S501020000K Oil Tank Installation Assembly−1(001)

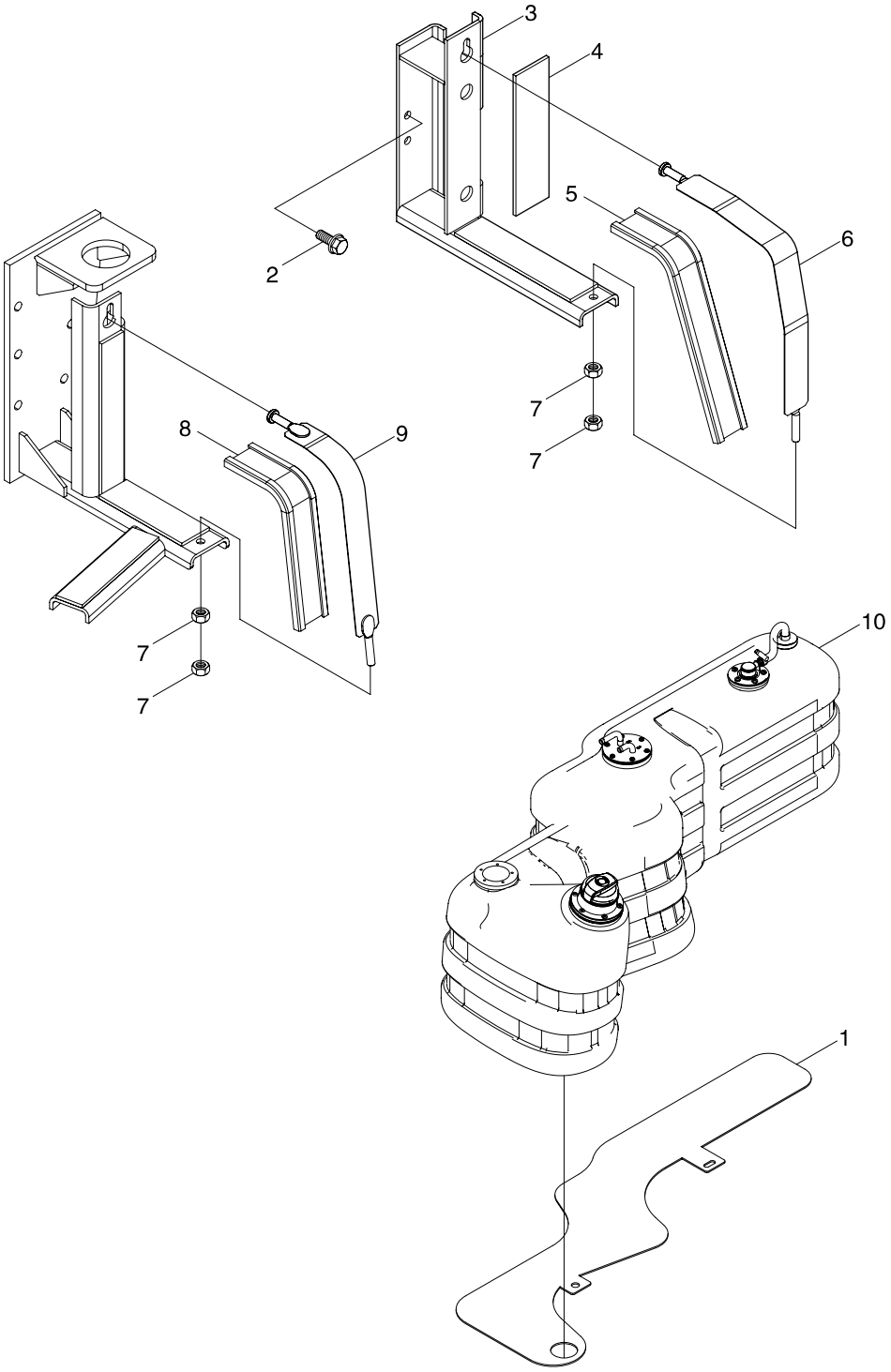

https://truckmanualshub.com/

TB1S501020000K Oil Tank Installation Assembly–1(001)

No.	Part code and specification	Part name	Quantity	Remark
	TB1S501020000K	Oil Tank Installation Assembly	1	
1	TS04501010012	Oil Tank Protection Plate	1	
2	GBT5789–M10X20–10.9–A3L	Hexagon Flange Nut	2	
3	TB604.501.2	Rear Bracket Weldment	1	
4	TB604.501–01	Rubber Washer	1	
5	TB604.501–02	Tie Rubber Strip	1	
6	TS04501010008	Rear Fastening Tie Weldment	1	
7	GBT6170–M10–8–A3L	Hexagon Nut, Type–1	4	
8	TS04501010009	Tie Rubber Strip	1	
9	TS04501010003	Front Band Weldment	1	
10	TB1S501020001K	Oil Tank Assembly	1	

https://truckmanualshub.com/

TB1S501020000K Oil Tank Installation Assembly−2(001)

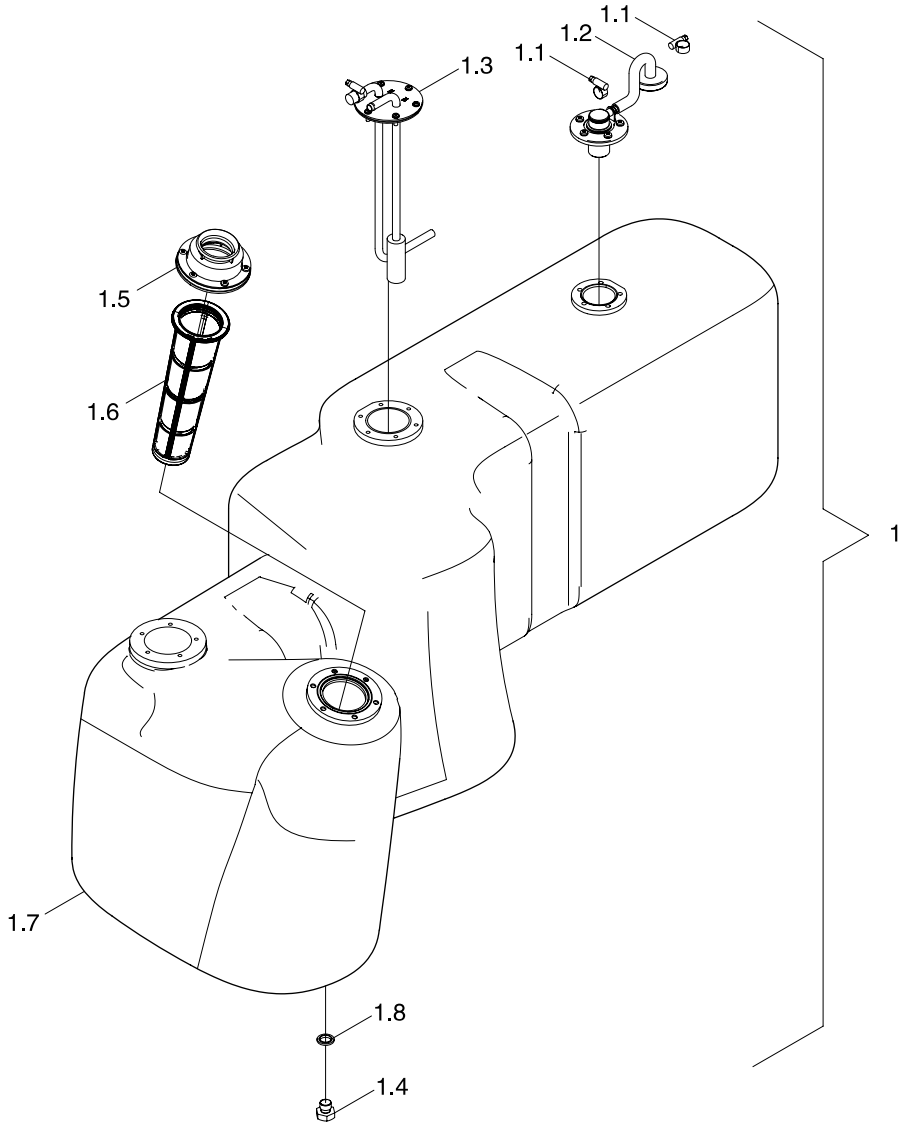

https://truckmanualshub.com/

TB1S501020000K Oil Tank Installation Assembly–2(001)

No.	Part code and specification	Part name	Quantity	Remark
	TB1S501020000K	Oil Tank Installation Assembly	1	
1	TB1S501020001K	Oil Tank Assembly	1	
1.1	Q67516	A–Type Worm Transmission Hose Clamp	2	
1.2	TS04501010006	Breath Assembly	1	
1.3	TS04501010011	Oil Outlet Assembly	1	
1.4	Q617B12	Hexagon Plug	1	
1.5	TS04501010010	Filling Cap Assembly	1	
1.6	TF1004.501.1–02	Filter Mesh	1	
1.7	TS04501010002	Oil Tank Housing	1	
1.8	JBT982–12	Combined Seal Gasket	1	

https://truckmanualshub.com/

TS04503010000 Delivery Pipeline Assembly

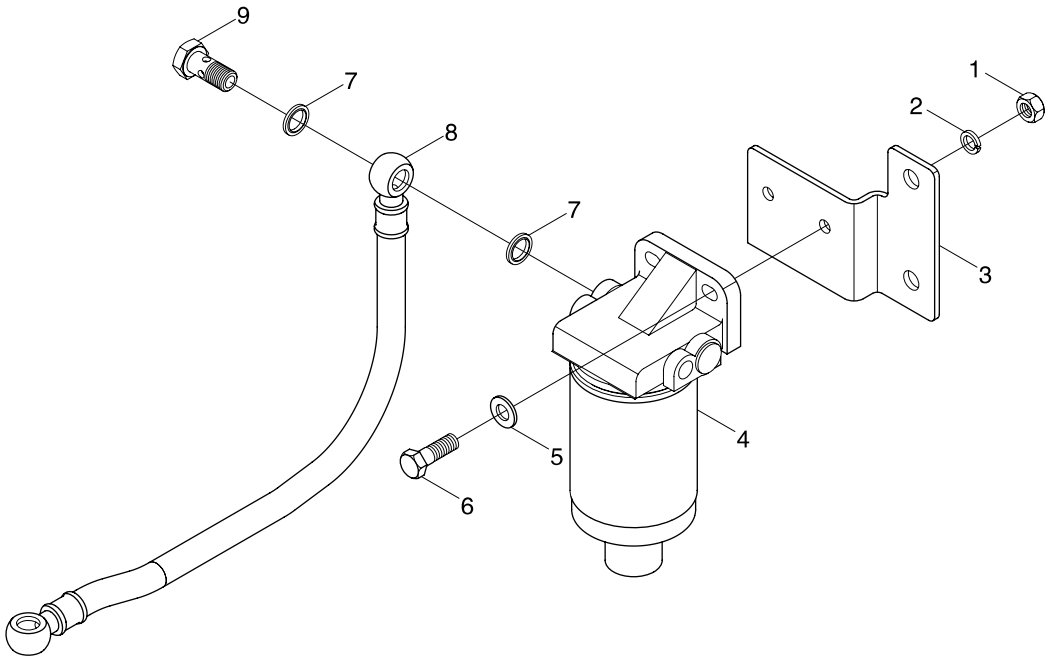

https://truckmanualshub.com/

TS04503010000 Delivery Pipeline Assembly

No.	Part code and specification	Part name	Quantity	Remark
	TS04503010000	Delivery pipeline assembly	1	
1	GBT6170-M8-8-A2L	Hexagon nut , Style 1	2	
2	GBT93-8-A0P	Standard spring washer	2	
3	TS04503010002	Bracket	1	
4	TB604.504-03	Spin-on diesel filter assembly	1	
5	GBT95-8-A0P	Plain washer	2	
6	GBT5783-M8X30-8.8-A2L	Hexagon head bolt	2	
7	JBT982-14	Compound seal washer	2	
8	TA700.503A.2	Oil outlet pipe assembly	1	
9	FT65.50.106	Hollow bolt	1	

https://truckmanualshub.com/

TB1S620010000K Safety Belt Installation Assembly (001)

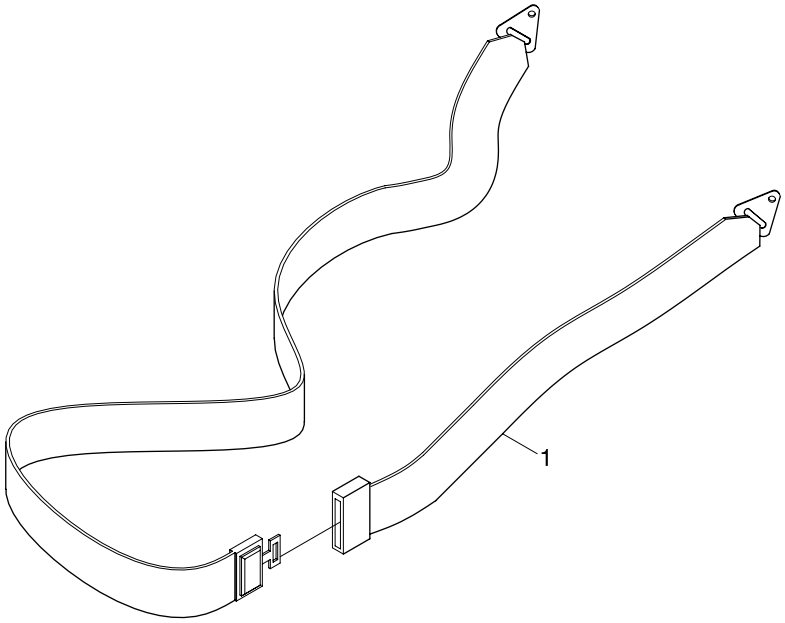

https://truckmanualshub.com/

TB1S620010000K Safety Belt Installation Assembly (001)

No.	Part code and specification	Part name	Quantity	Remark
	TB1S620010000K	Safety Belt Installation Assembly	1	
1	TB1S620010000K	Safety Belt Installation Assembly	1	

https://truckmanualshub.com/

TS04741010000K Front Ballast Frame Assembly

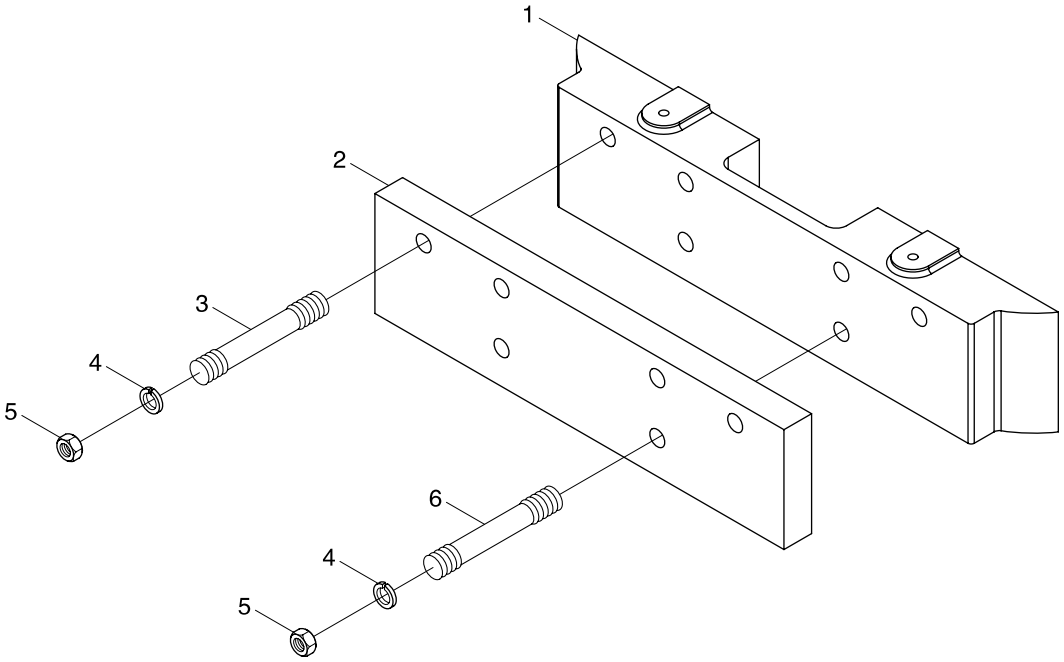

https://truckmanualshub.com/

TS04741010000K Front Ballast Frame Assembly

No.	Part code and specification	Part name	Quantity	Remark
	TS04741010000K	Front ballast frame assembly	1	
1	TB400.74D-01	Ballast frame	1	
2	TS04741010001K	Backing block	1	
3	TS04741010002K	Double-headed stud M16X145	4	
4	GBT93-16-A0P	Standard spring washer	6	
5	GBT6170-M16-8-A3L	Hexagon nut, style 1	6	
6	TS04741010003K	Double-headed stud M16X165	2	

https://truckmanualshub.com/

TC02740010000K Front Ballast Assembly

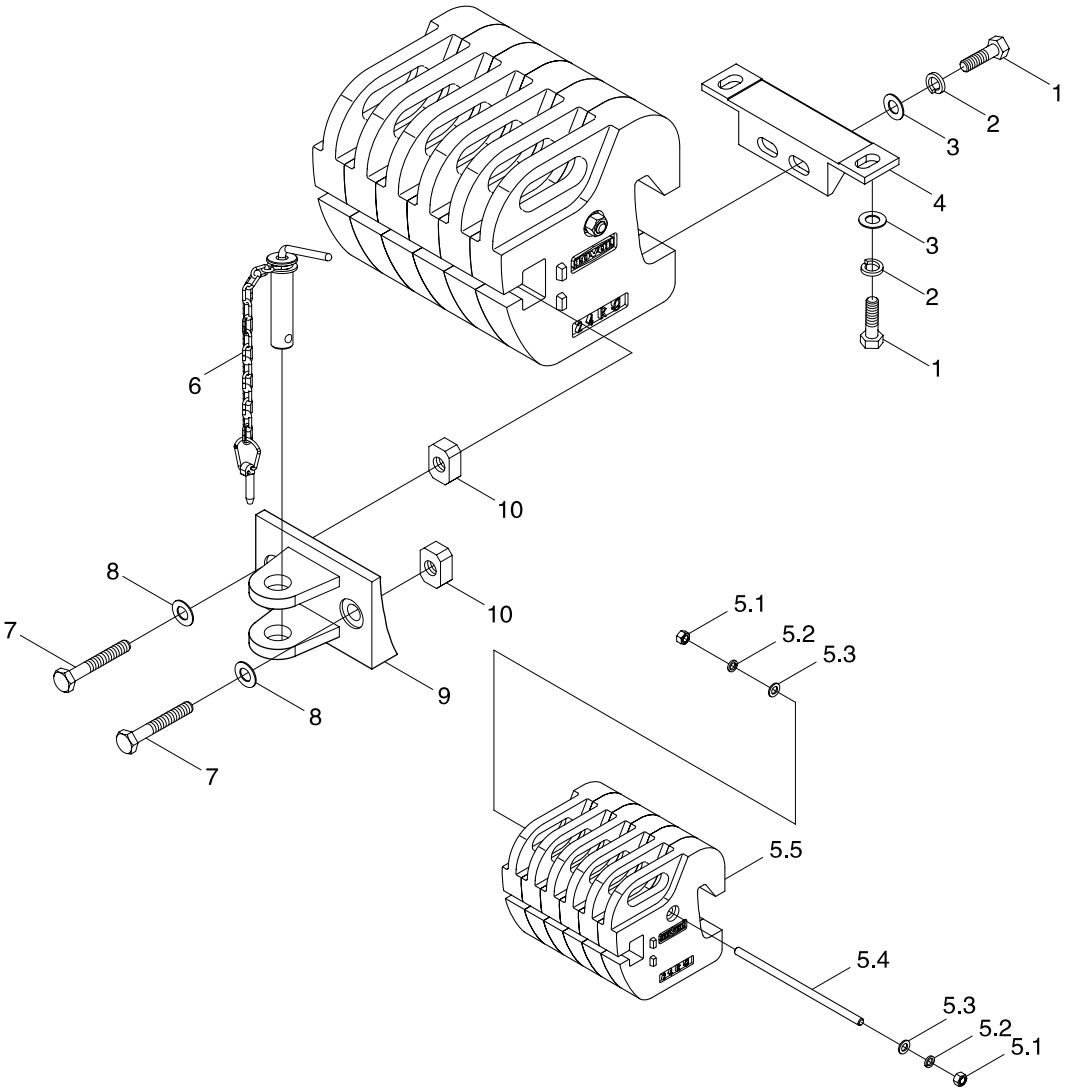

https://truckmanualshub.com/

TC02740010000K Front Ballast Assembly

No.	Part code and specification	Part name	Quantity	Remark
	TC02740010000K	Front ballast assembly	1	
1	GBT5783–M16X35–8.8–A3L	Hexagon head bolt	4	
2	GBT93–16–A0P	Standard spring washer	4	
3	GBT97.1–16–A0P	Flat washer	4	
4	TB404.74B–01	Fixing frame	1	
5	TC02740010001K	Front ballast subassembly	1	
5.1	GBT6170–M16–8–A3L	Hexagon nut, style 1	2	
5.2	GBT93–16–A0P	Standard spring washer	2	
5.3	GBT97.1–16–A0P	Flat washer	2	
5.4	FT404.74A.108	Connecting bolt	1	
5.5	TC02740010002K	Ballast block	6	
6	TB400.74A.2	Traction pin and lock pin assembly	1	
7	GBT5785–M20X1.5X80–8.8–A3L	Hexagon head bolt	2	
8	GBT97.1–20–A0P	Flat washer	2	
9	TB400.74A–04	Traction lug	1	
10	FT650.74.108	Traction nut	2	

https://truckmanualshub.com/

FT600.91.001 Rear Ballast Assembly（007）

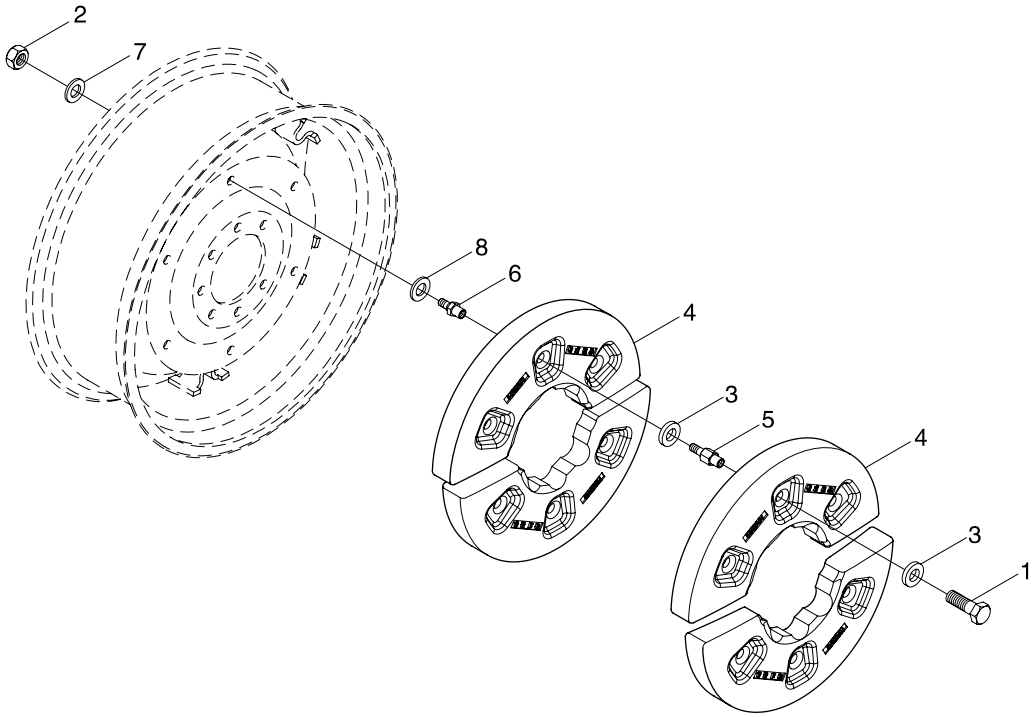

https://truckmanualshub.com/

FT600.91.001 Rear Ballast Assembly（007）

No.	Part code and specification	Part name	Quantity	Remark
	FT600.91.001	Rear Ballast Assembly	1	
1	GBT5783-M16X40-8.8-A3L	Hexagon Bolt	6	
2	GBT6170-M16-8-A3L	Hexagon Nut, Type-1	6	
3	FT650.34.104	Washer	12	
4	FT650.34.101	Rear Ballast	4	
5	FT650.34.103	Rear Ballast Screw 2	6	
6	FT650.34.102	Rear Ballast Screw 1	6	
7	GBT97.1-16-A0P	Flat Washer	6	
8	GBT95-18-A0P	Flat Washer	6	

https://truckmanualshub.com/

TS04481080000K Harness Installation Assembly, Engine(001)

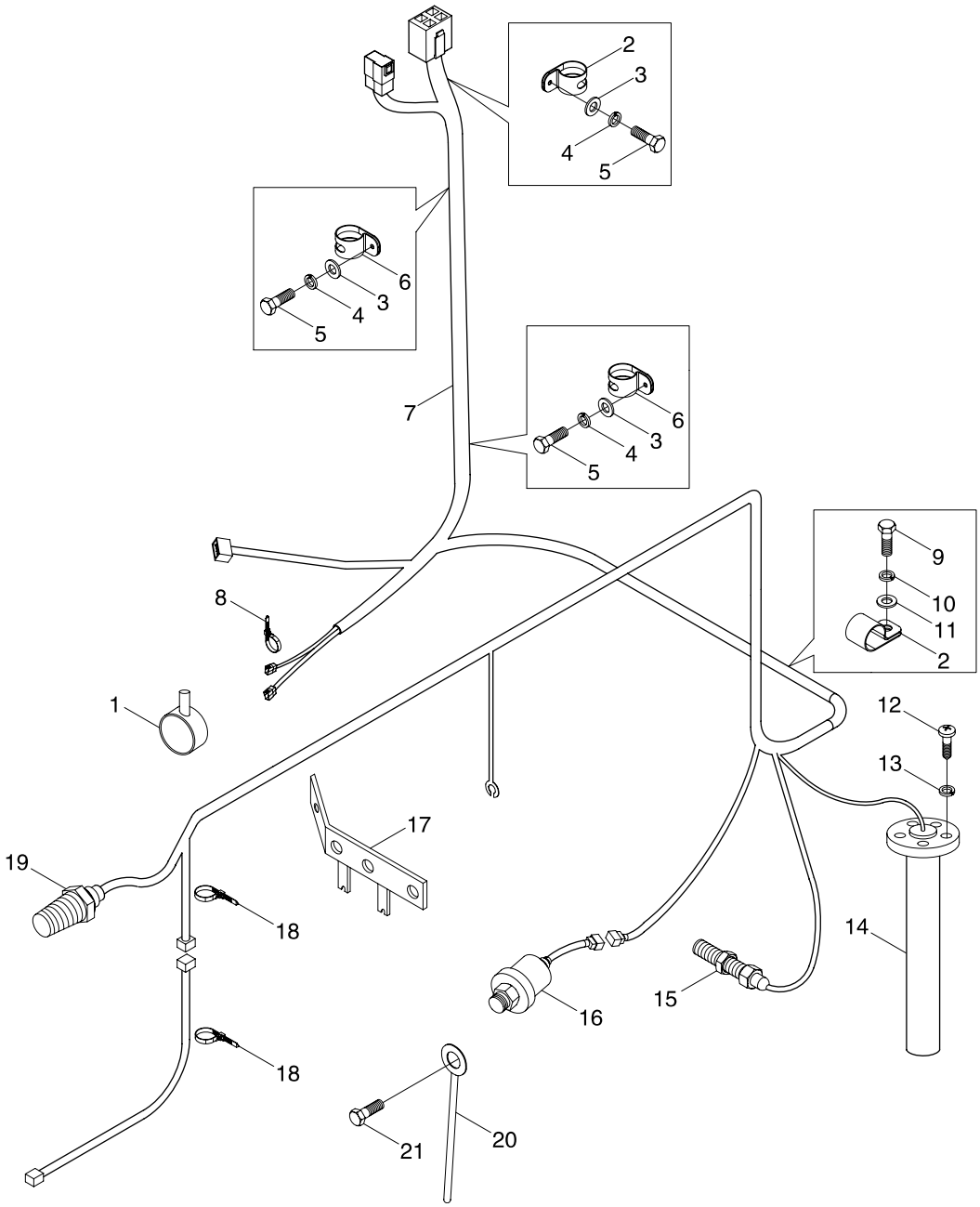

https://truckmanualshub.com/

TS04481080000K Harness Installation Assembly, Engine(001)

No.	Part code and specification	Part name	Quantity	Remark
	TS04481080000K	Harness installation assembly, engine(001)	1	
1	3203505D9-L	Lock cable ties	4	
2	TF1204.481B-01	Harness fastener	2	
3	GBT97.1-6-A3L	Plain washer	2	
4	GBT93-6-A3L	Standard spring washer	2	
5	GBT5783-M6X25-8.8-A2L	Hexagon head bolt	2	
6	TS06482010005	Harness fastener	2	
7	TS04481080001K	Engine harness assembly	1	
8	Q67405400	Plastic fastenging strap	1	
9	GBT5783-M10X20-8.8-A3L	Hexagon head bolt	2	
10	GBT93-10-A3L	Standard spring washer	2	
11	GBT97.1-10-A3L	Plain washer	2	
12	GBT818-M4X10-4.8-A2L	Cross recessed pan head screw	5	
13	GBT93-4-A3L	Standard spring washer	5	
14	TS04481010002	Oil amount sensor assembly	1	
15	TS10481010002	Rotating speed sensor	1	
16	FT65.48.073a	Oil pressure alarm	1	
17	TS04481010008	Harness fixing plate	1	
18	Q67405100	Plastic fastenging strap	2	
19	FT65.48.072	Water temperature sensor	1	
20	TS04481010003	Bonding	1	
21	GBT5783-M8X16-8.8-A2L	Hexagon head bolt	1	

https://truckmanualshub.com/

TS04482010000K Body Harness Installation Assembly

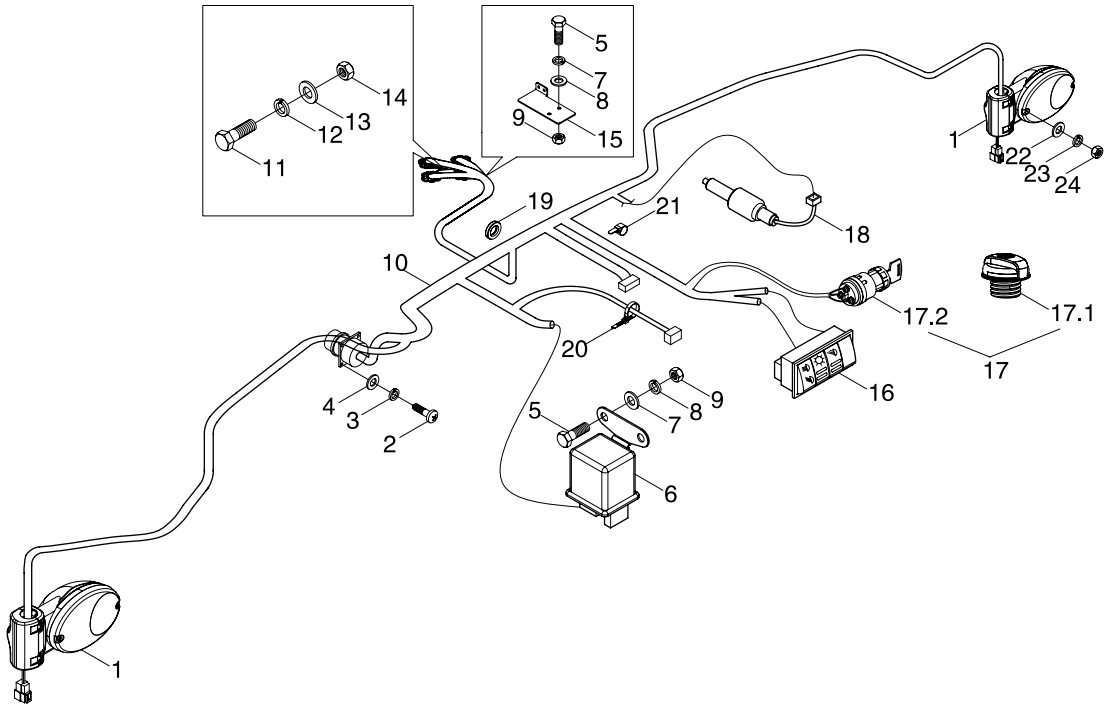

https://truckmanualshub.com/

TS04482010000K Body Harness Installation Assembly

No.	Part code and specification	Part name	Quantity	Remark
	TS04482010000K	Body Harness Installation Assembly	1	
1	TS04482010002K	Right Armrest Light Assembly	2	
2	GBT818-M3X20-4.8-A2L	Cross Screw	4	
3	GBT93-3-A3L	Standard Spring Washer	4	
4	GBT97.1-3-A3L	Flat Washer	4	
5	GBT5783-M6X20-8.8-A2L	Hexagon Bolt	4	
6	FT300.48.055	Starting Relay	1	
7	GBT97.1-6-A3L	Flat Washer	4	
8	GBT93-6-A3L	Standard Spring Washer	4	
9	GBT6170-M6-8-A2L	Hexagon Nut, Type-1	2	
10	TS04482010001K	Body Harness Assembly	1	
11	GBT5783-M8X20-8.8-A2L	Hexagon Bolt	1	
12	GBT93-8-A3L	Standard Spring Washer	1	
13	GBT97.1-8-A3L	Flat Washer	1	
14	GBT6170-M8-8-A2L	Hexagon Nut, Type-1	1	
15	TS04482010011	Inserts Fixing Plate Weldment	1	
16	TS04482150002	Two Gang Paddle Switch	1	
17	TS04482150003	Two Locks Assembly	1	
17.1	TS04501010005	Oil Tank Cover	1	
17.2	TB550.482.3	Ignition Lock	1	
18	TB550.484.2	Brake Light Switch	2	
19	TS04482010008	Rubber Ring	1	
20	Q67405200	Plastic Fastening Strip	1	
21	3203505D9-L	Tie	7	
22	GBT97.1-5-A3L	Flat Washer	2	
23	GBT93-5-A3L	Standard Spring Washer	2	
24	GBT6170-M5-8-A2L	Hexagon Nut, Type-1	2	

https://truckmanualshub.com/

TS04483020000K Front Lamp Harness Installation Assembly(004)

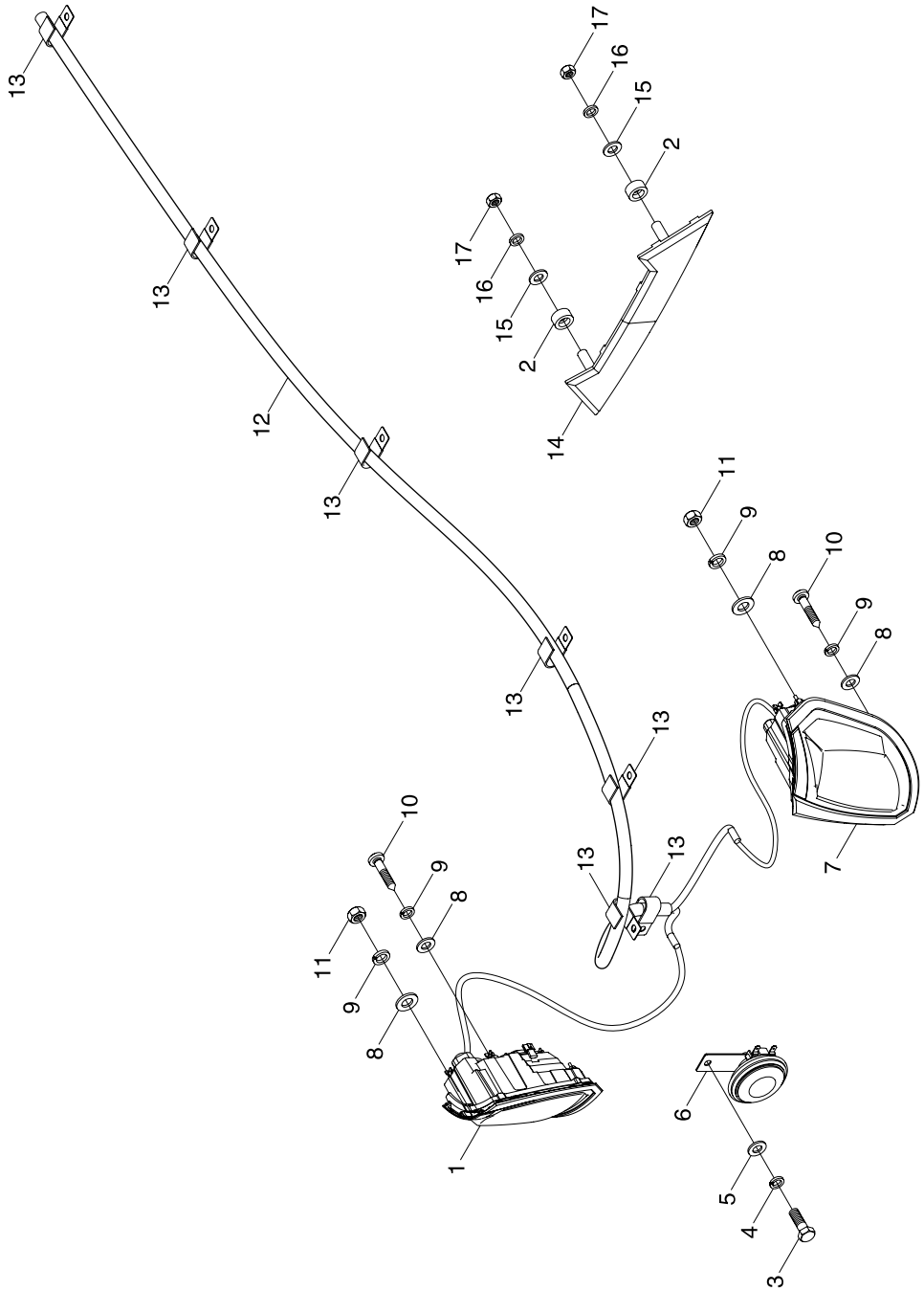

https://truckmanualshub.com/

TS04483020000K Front Lamp Harness Installation Assembly(004)

No.	Part code and specification	Part name	Quantity	Remark
	TS04483020000K	Front Lamp Harness Installation Assembly	1	
1	TS04483020002K	Right Front Big Lamp Assembly	1	
2	TS04483010007	Washer	2	
3	GBT5783-M8X25-8.8-A2L	Hexagon Bolt	1	
4	GBT93-8-A3L	Standard Spring Washer	1	
5	GBT97.1-8-A3L	Flat Washer	1	
6	TD800.483B.3	Electric Horn	1	
7	TS04483020001K	Left Front Big Lamp Assembly	1	
8	GBT97.1-6-A3L	Flat Washer	8	
9	GBT93-6-A3L	Standard Spring Washer	8	
10	GBT818-M6X20-4.8-A2L	Cross Screw	4	
11	GBT6170-M6-8-A2L	Hexagon Nut, Type-1	4	
12	TS04483010001	Front Lamp Harness Assembly	1	
13	FT65.48.095	Harness Fixing Clamp (1)	7	
14	TS04483010005	Adorning Strip	1	
15	GBT97.1-5-A3L	Flat Washer	2	
16	GBT93-5-A3L	Standard Spring Washer	2	
17	GBT6170-M5-8-A2L	Hexagon Nut, Type-1	2	

https://truckmanualshub.com/

TS04484040000K Harness Installation Assembly, Rear Lamp (002)

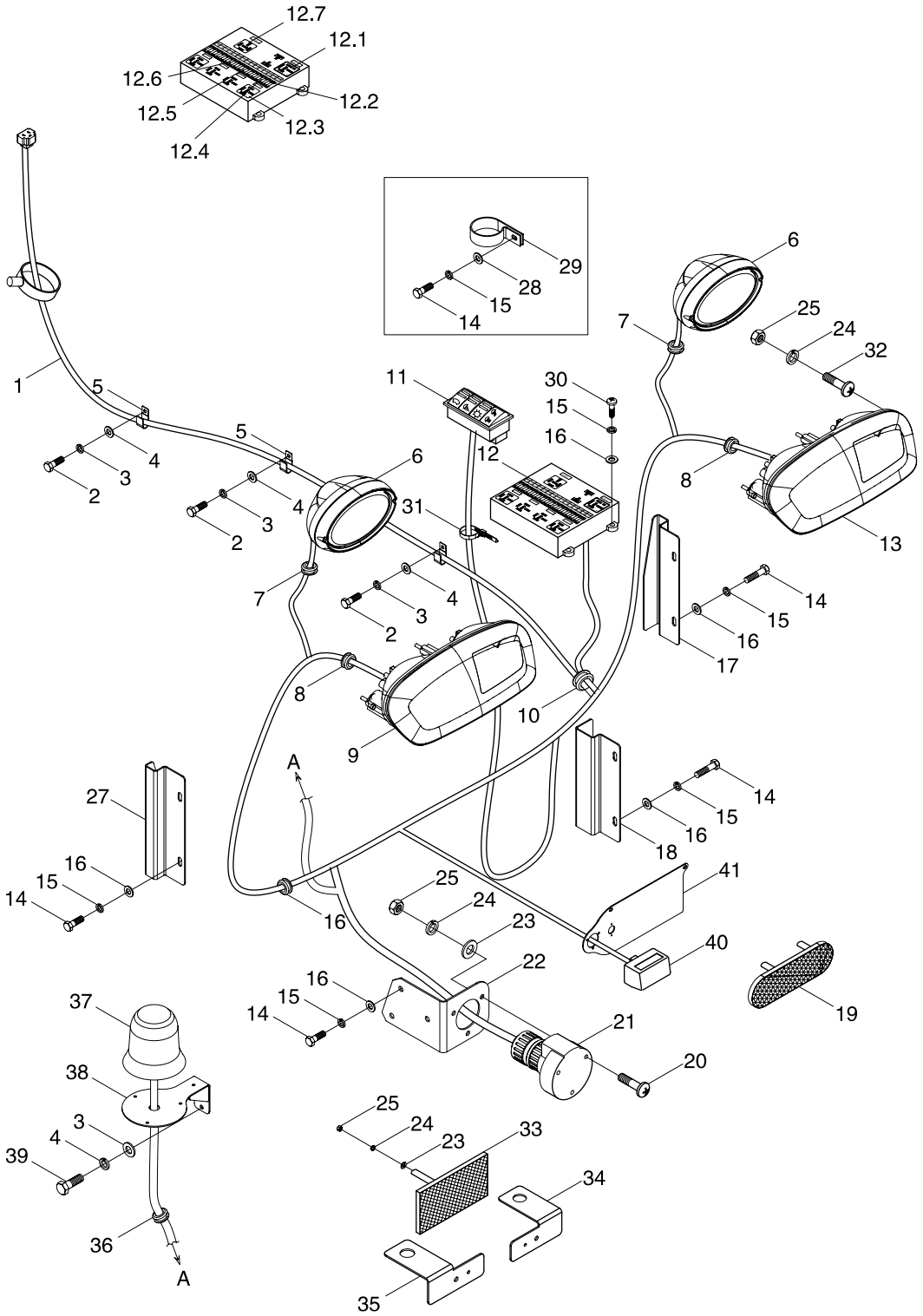

https://truckmanualshub.com/

TS04484040000K Harness Installation Assembly, Rear Lamp (002)

No.	Part code and specification	Part name	Quantity	Remark
	TS04484040000K	Harness installation assembly, rear lamp	1	
1	TS04484040001K	Rear lamp harness assembly	1	
2	GBT5783-M8X20-8.8-A2L	Hexagon head bolt	3	
3	GBT93-8-A0P	Standard spring washer	5	
4	GBT97.1-8-A0P	Plain washer	5	
5	TS06482010005	Harness fastener	5	
6	TS06484020006	Rear lamp assembly	2	
7	TD800.484B-03	Wire through ring	4	
8	TS04484020003	Wire through ring	2	
9	TS06484010001	Left rear taillamp assembly	1	
10	FT65.48.092	Wire through ring (3)	2	
11	TS04484040003K	Five-function rocker switch	1	
12	TS04484040002K	Central electric box assembly	1	
12.1	GE20H16Y.34.6-04	Main power source relay	1	
12.2	TC02482010003K	Warning type fuse (10A)	5	
12.3	FT300.48.513	Electronic flasher	1	
12.4	TC02482010007K	Warning type fuse (7.5A)	3	
12.5	TC02482010002K	Warning type fuse (5A)	5	
12.6	TC02482010004K	Warning type fuse (15A)	6	
12.7	FT300.48D.2.2.2	Preheating relay	1	
13	TS06484010002	Right rear taillamp assembly	1	
14	GBT5783-M6X20-8.8-A2L	Hexagon head bolt	10	
15	GBT93-6-A0P	Standard spring washer	14	
16	GBT97.1-6-A0P	Plain washer	13	
17	TS04484020007	Harness shield 2	1	
18	TS04484020008	Harness shield 3	1	
19	TS06484010005	Retro reflector	2	
20	GBT819.1-M5X35-4.8-A1L	Cross recessed countersunk head screw	3	
21	TD900.484.2	Rear trailer socket	1	
22	TS04484010005	Trailer socket fixing plate weldment	1	
23	GBT97.1-5-A0P	Plain washer	9	
24	GBT93-5-A0P	Standard spring washer	9	

https://truckmanualshub.com/

TS04484040000K Harness Installation Assembly, Rear Lamp (002)(extension)

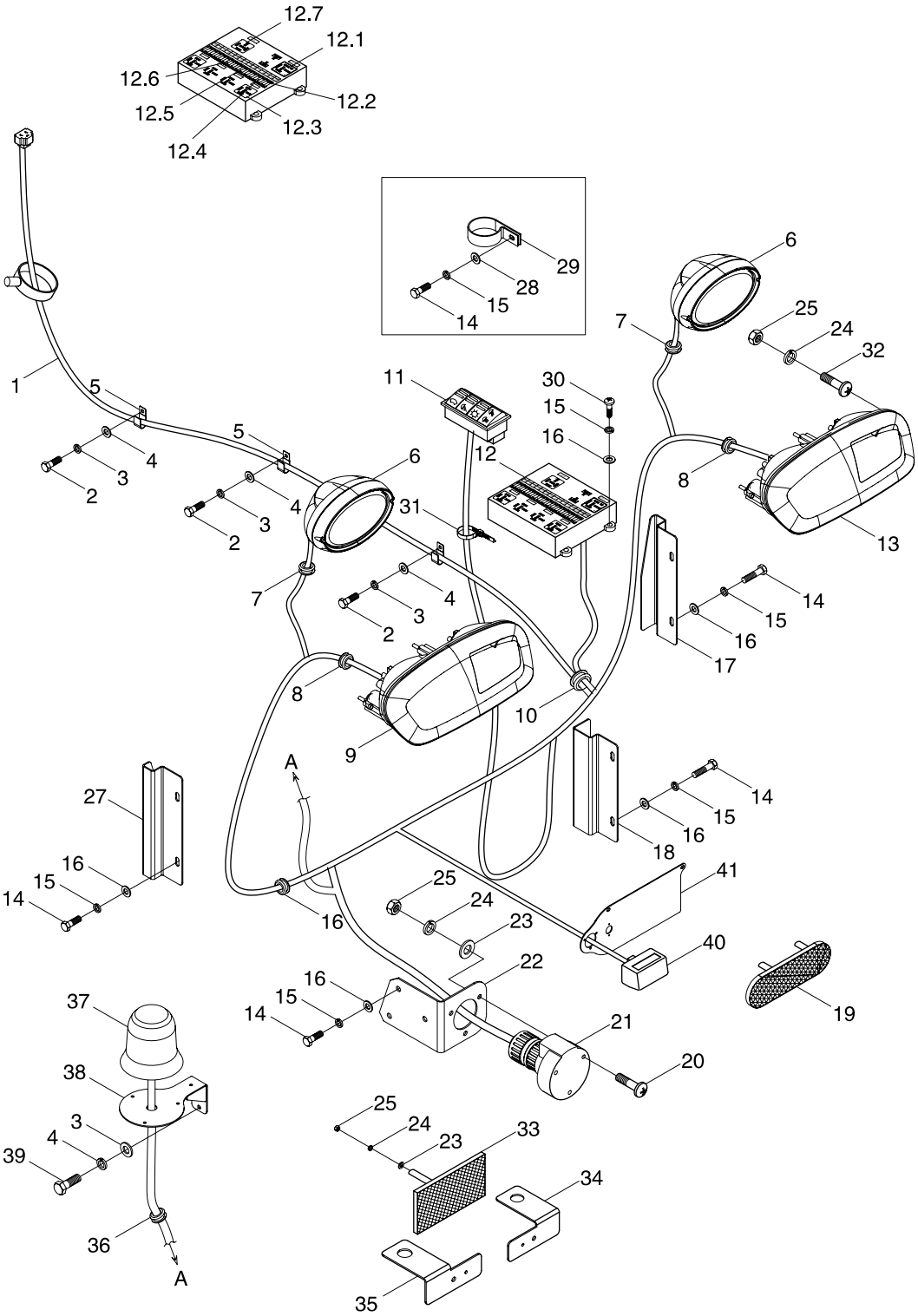

https://truckmanualshub.com/

TS04484040000K Harness Installation Assembly, Rear Lamp (002)(extension)

No.	Part code and specification	Part name	Quantity	Remark
25	GBT6170–M5–8–A2L	Hexagon nut, style 1	6	
26	TS04484020002	Wire through ring	1	
27	TS04484020006	Harness shield 1	1	
28	GBT96.1–6–A0P	Large washer	1	
29	TS04481010006	Harness fastener	1	
30	GBT818–M6X25–4.8–A2L	Cross recessed pan head screw	4	
31	3203505D9–L	Lock cable ties	14	
32	GBT818–M5X12–4.8–A2L	Cross recessed pan head screw	2	
33	TD800.484B.5	Reflector assembly	2	
34	TD800.484B–02	Reflector installation plate (right)	1	
35	TD800.484B–01	Reflector installation plate (left)	1	
36	FT65.48.093	Wire through ring (1)	2	
37	TS04486010002K	Rotary warning lamp assembly	1	
38	TS10484010005	Warning lamp bracket weldment	1	
39	GBT5783–M8X70–8.8–A2L	Hexagon head bolt	2	
40	TA700.484A.2.1	License lamp	1	
41	TB500.484A.1	License lamp installation plate weldment	1	

https://truckmanualshub.com/

TS04485010000 Battery Installation Assembly

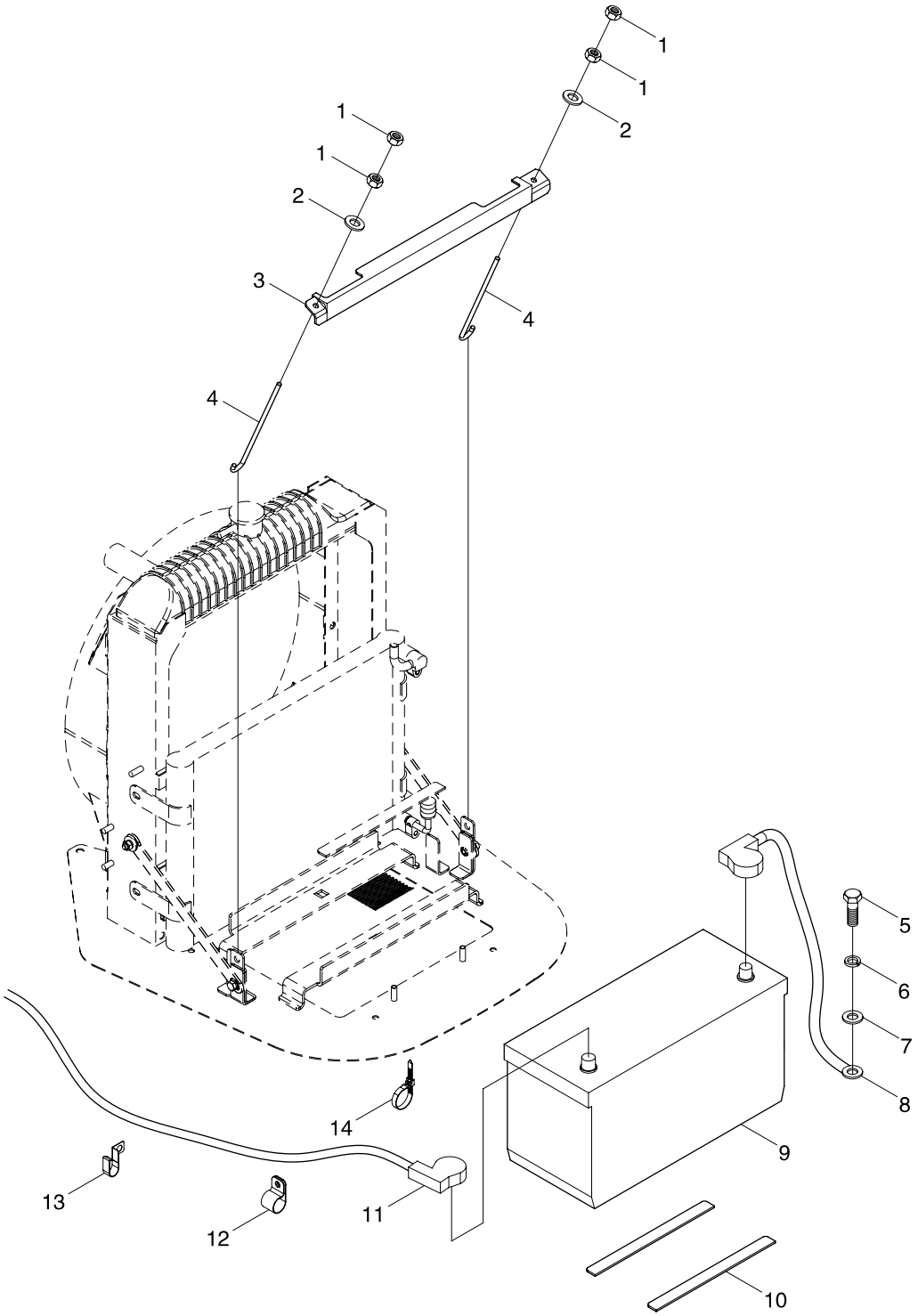

https://truckmanualshub.com/

TS04485010000 Battery Installation Assembly

No.	Part code and specification	Part name	Quantity	Remark
	TS04485010000	Battery installation assembly	1	
1	GBT6170–M6–8–A2L	Hexagon nut, style 1	4	
2	GBT97.1–6–A0P	Plain washer	2	
3	TS04485010004	Pressure plate welding assembly	1	
4	TS04485010002	Pull rod	2	
5	GBT5783–M8X25–8.8–A2L	Hexagon head bolt	1	
6	GBT93–8–A0P	Standard spring washer	1	
7	GBT97.1–8–A0P	Plain washer	1	
8	TB400.485A.2	Battery bonding	1	
9	FT450.48.010	Maintenance free lead acid battery	1	
10	TB450.485.1	Battery shock absorbing pad	2	
11	TB400.485A.1	Power source wire assembly	1	
12	TS04481010006	Harness fastening clip	1	
13	TD800.485A–04	Harness fastening clip	1	
14	Q67405100	Plastic fastening strap	1	

https://truckmanualshub.com/

TS04487010000 Compound Instrument Assembly

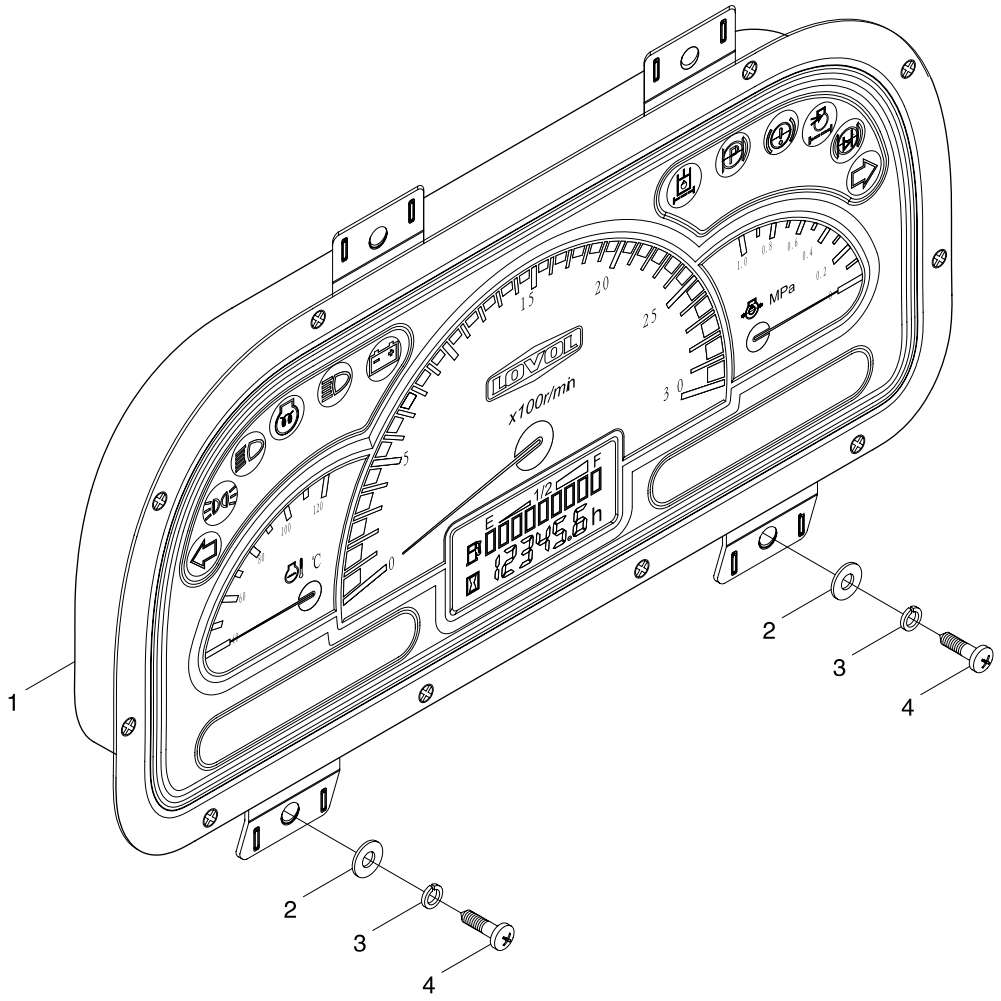

https://truckmanualshub.com/

TS04487010000 Compound Instrument Assembly

No.	Part code and specification	Part name	Quantity	Remark
	TS04487010000	Compound instrument assembly	1	
1	TS04487010001	Compound instrument assembly	1	
2	GBT96.1–6–A0P	Large washer	4	
3	GBT93–6–A0P	Standard spring washer	4	
4	GBT818–M6X16–4.8–A2L	Cross recessed pan head screw	4	

https://truckmanualshub.com/

TB550.489B Preheating Equipment Assembly

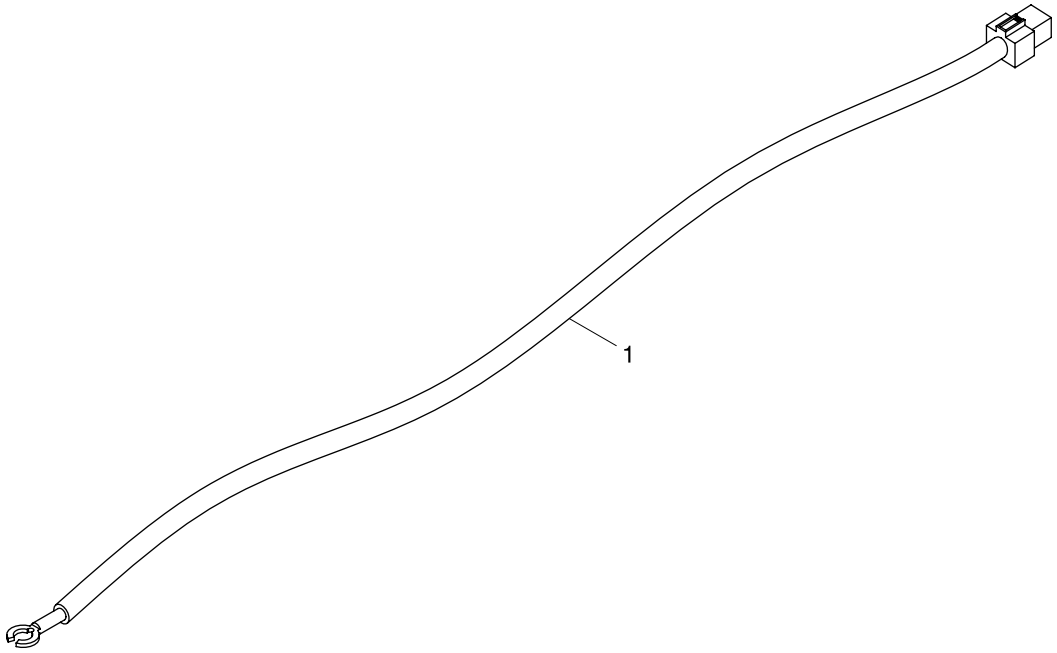

https://truckmanualshub.com/

TB550.489B Preheating Equipment Assembly

No.	Part code and specification	Part name	Quantity	Remark
	TB550.489B	Preheating Equipment Assembly	1	
1	TB550.489B.1	Preheating Line	1	