OPERATOR'S MANUAL

J1

TASK SUPPORT VEHICLE

U.S. Patent Nos. D730,614; D733,389; D733,390; 9,440,830 and D734,589 Other patents pending

NOTE:This vehicle is for indoor and level surface use only.

NOTE: For the most current parts information and service updates, please refer to the Big Joe Support site at www.bigjoesupport.com

Big Lift LLC
www.bigjoeforklifts.com

Manual Part No. 901628
05/15/2020

https://truckmanualshub.com/

https://manuals.hub.com/

WARNING

Do not operate this vehicle unless you have been authorized and trained to do so, and have read all warnings and instructions in Operator's Manual and on this vehicle. Read, understand and comply with the information on the vehicle's nameplate at all times.

Do not operate this vehicle until you have performed the daily operation's check list. Verify and inspect tires, horn, battery, controller, lift and hydraulic systems, brakes, steering mechanism and guards. Verify that all emergency controls, personal protection and safety devices are in place and functioning correctly and ensure the vehicle is free of fluid leaks and has no loose or missing parts. Report any problems to the designated authority and do not use the vehicle until they are corrected by a qualified service technician.

This vehicle must not be modified without the manufacturer's consent. Components critical to the vehicles stability such as batteries shall not be replaced with lighter weight components.

Operate vehicle only from designated platform operating position. Use this vehicle indoors on level surfaces only. Never operate on ramps and slopes or uneven floors. This vehicle is not for use on mezzanines or balcony areas. Before operating, inspect the floor area it will be used on and be certain it will support the vehicle at full capacity and lift height. Identify and avoid holes, drop-offs, bumps and obstructions.

Before and during all vehicle operations ensure that adequate clearance is maintained from overhead obstructions and energized electrical conductors and parts.

Before elevating platform be sure guardrail access gates are in place and lowered. Keep feet on platform floor at all times while using vehicle, never climb onto guard rails or platform shelf. Do not use ladders, planks or other devices to achieve additional height on platform.

When transferring loads to platform or platform shelf, do not exceed capacity ratings on vehicle nameplate. Ensure loads are centered and do not contact any obstructions in the vehicle's vicinity. Do not stabilize the platform by contact with adjacent objects such as racks or shelving. Do not use the platform as a crane.

Take care to prevent electrical cords, hoses or other equipment from entangling in platform. Ensure area surrounding the vehicle is free of personnel and equipment before lowering platform.

Maintain a clear view of the ground while travelling and a safe distance from obstacles in the vehicle or platform's path. Ensure personnel in the vicinity are aware of the vehicle's movement. Travel at a safe speed for the conditions the vehicle is operating in.

https://forkmanuals.com/

Observe applicable traffic regulations. Yield right of way to pedestrians. Slow down and sound horn at cross aisles and wherever vision is obstructed. Avoid hazardous locations.

Enter and exit platform only through raised access gates and with the platform fully lowered and vehicle stopped. When leaving vehicle unattended, remove key to prevent unauthorized use.

PROPOSITION 65

WARNING

In accordance to
California Health & Safety Code Sections 25249.5 et. seq.
this warning is to let you know that this product can expose you to chemicals known to the state of California to cause cancer, birth defects and other reproductive harm.
For more information visit: www.p65warnings.ca.gov

https://truckmanualshub.com/

FOREWORD

As an operator, you are responsible for a vehicle that is useful, powerful, and can be hazardous if not operated as described. Observing and adhering to the safety warnings in this manual cannot be overemphasized and is absolutely necessary for your well being and, for the well being of those around you.

It is an OSHA requirement that this manual and parts and service manual remain with the vehicle at all times as a handy reference guide to operation.

Detailed maintenance procedures are found in the parts and service manual, and are to be performed only by a qualified service technician. For further information on obtaining a complete parts and service manual, see page 24 of this manual.

The operator who knows his/her vehicle will learn to spot problems as they develop. This is accomplished by performing the Daily Operator's Check list and reporting any problems to the designated authority.

TABLE OF CONTENTS

SAFETY SYMBOLS 6

GENERAL DESCRIPTION 6

NAME PLATE AND WARNING DECALS 8

BEFORE OPERATION 9

CONTROLS 12

INSTRUMENT PANEL 14

OPERATION 16

- SAFETY REGULATIONS FOR OPERATION 16
- DRIVING PROCEDURES 16
- STOPPING PROCEDURES 17
- LIFTING AND LOWERING 18
- EMERGENCY LOWERING 18
- PICKING UP A LOAD 19
- TRANSPORTING LOADS 19
- PLACING LOADS 20
- OVERHEAD MAINTENANCE 20
- PARKING 20
- MOVING A DISABLED VEHICLE 20

BATTERY MAINTENANCE 21

LUBRICATION 22

NOTICE - OBTAINING A PARTS AND SERVICE MANUAL 23

https://forkliftmanuals.com/

SAFETY SYMBOLS

WARNING and **CAUTION** are both signal words intended to alert the operator to the existence and relative degree of a hazard. They are both preceded by a safety alert symbol consisting of an exclamation mark enclosed by a triangle.

A **Warning** indicates a hazard which could result in injury or death if proper precautions are not taken.

A **Caution** indicates a reminder of routine safety practices.

A prohibition slash (circle with diagonal slash through it) indicates a procedure or action that should **not** be performed under any circumstances, as both personal injury and/or damage to equipment will result.

GENERAL DESCRIPTION

The self-propelled J1 elevating work platform lifts and transports up to 1,000 pounds capacity including load and operator. Please see the name plate Figure 2 for specific capacity information. The vehicle enables general maintenance work and efficient selection and moving of materials in any area or at any level of the warehouse or storeroom. This vehicle is not for use on mezzanines or balcony areas. The design permits one man to perform all operations of selecting stock, driving vehicle, and replacing the stock at the designated place. The battery-powered vehicle is quiet and allows operation in closed areas without special provisions for ventilation.

Users shall comply with all requirements indicated in applicable OSHA standards and the current edition of A.N.S.I. A92.6. By following these requirements and the recommendations contained in this manual, you will receive many years of dependable service from your vehicle.

The AC drive motor propels the vehicle in forward or reverse direction. The vehicle can be driven with the platform raised or lowered; however the speed is restricted as the platform is raised.

On demand power steering makes the vehicle highly maneuverable and extremely quiet.

The control arms are used to operate the work vehicle and provide operator safety.

The pick tray is used to place and transport merchandise.

The operator platform contains the “deadman” footswitch vehicle must be depressed for the vehicle to operate.

The folding rear tray provides for transporting up to a 200 pound load.

https://truckmanualshub.com/

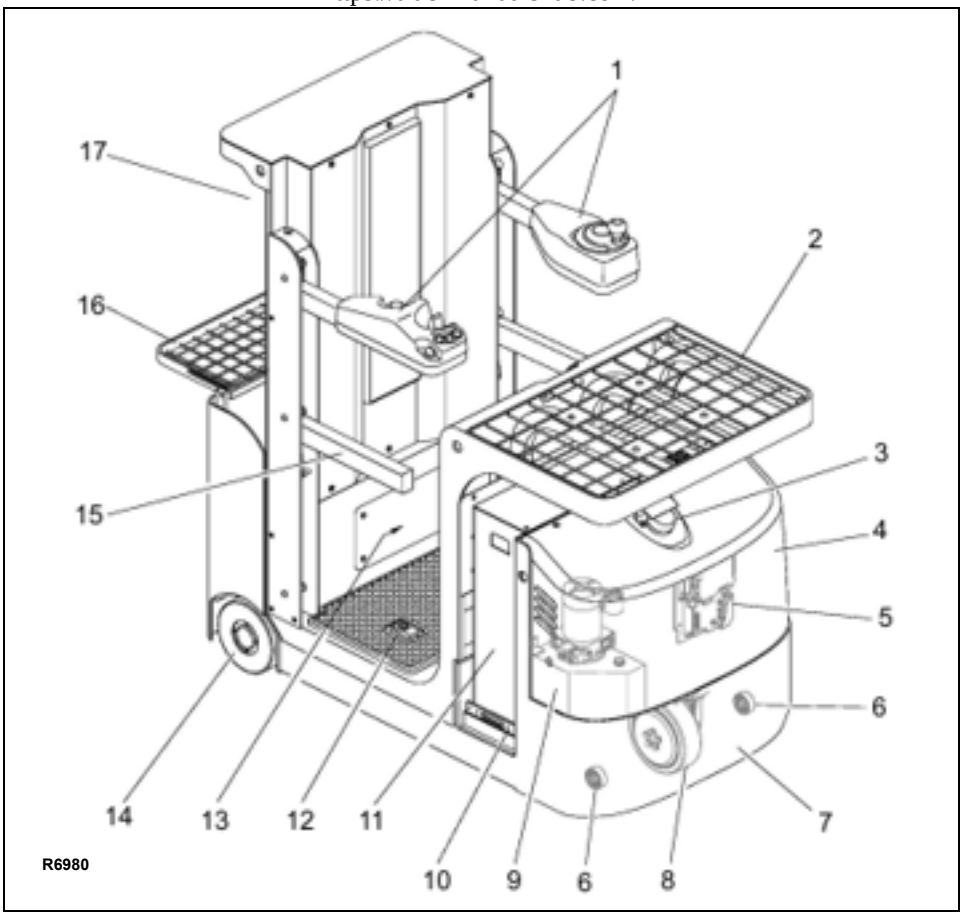

Figure 1 J1 Elevating Work Platform

ITEM	COMPONENT
1	Control arms
2	Pick tray
3	Warning light
4	Cover
5	Control panel
6	Casters
7	Frame
8	Drive wheel
9	Hydraulic pump and reservoir

ITEM	COMPONENT
10	Battery retainer
11	Battery
12	“Deadman” footswitch
13	Operator platform
14	Load wheels
15	Side gates
16	Rear tray for additional capacity and storage
17	Mast

https://forkliftmanuals.info/

NAME PLATE AND WARNING DECALS

Warning decals are located to the left of the Instrument panel. The name plate is mounted on the right side of the Instrument panel.

If the name plate or warning decals are lost or damaged they should be replaced immediately. Have your supervisor or the designated authority contact Big Lift LLC's Authorized Dealer for replacement.

The name plate shows the model, serial number, capacity, lift height, vehicle weight and minimum battery weight. See Figure 2.

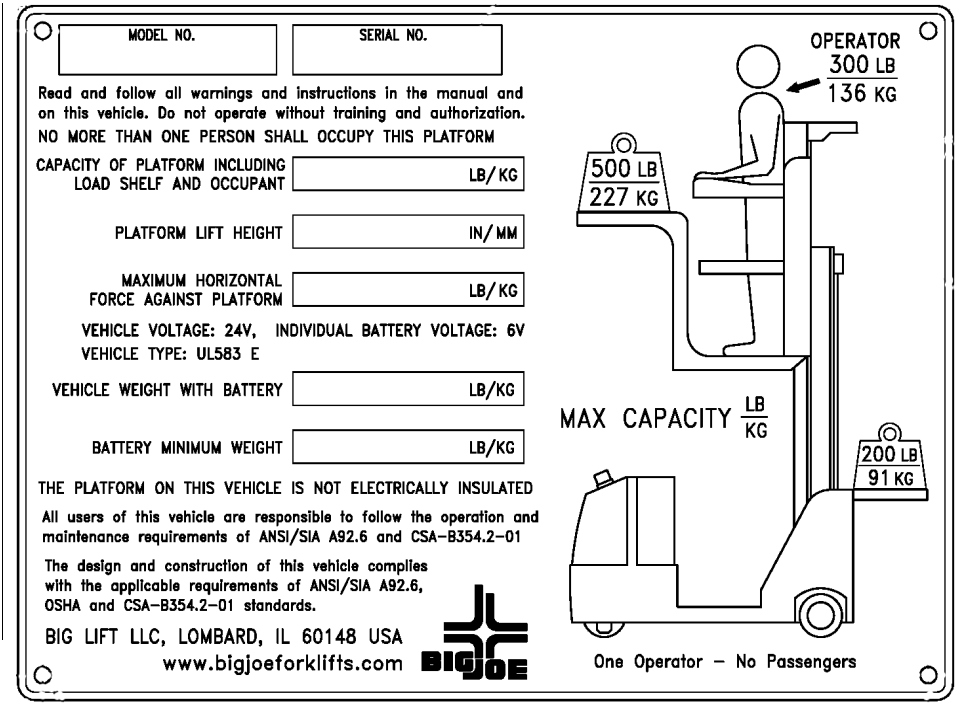

Figure 2 Name Plate

https://forkliftmanuals.com

Table 1 covers important inspection points on vehicles which should be checked prior to operation. Depending on use, some vehicles may require additional checks.

Figure 3 shows a sample format for an Operator Checklist, which can be modified as necessary to fit your operation.

WARNING:
Periodic maintenance of this vehicle by a **QUALIFIED SERVICE TECHNICIAN** is required.

WARNING:
A **QUALIFIED SERVICE TECHNICIAN** should check the vehicle regularly during preventive maintenance for proper lubrication, proper fluid levels, brake maintenance, motor maintenance and other areas specified in the parts and service manual maintenance section.

WARNING:
If the vehicle is found to be unsafe and in need of repair, or contributes to an unsafe condition, report it immediately to the designated authority. Do not operate it until it has been restored to a safe operating condition. Do not make any unauthorized repairs or adjustments. All service must be performed by a **QUALIFIED SERVICE TECHNICIAN** using Big Joe OEM parts.

PREPARING FOR OPERATION

Preparing the vehicle for operation after delivery or transport:

1. Check that the equipment is complete.
2. Check the hydraulic oil level. Refer to page 22.
3. Install the battery if necessary.
4. Charge the batteries. Refer to page 21.
5. Visually inspect the entire vehicle for obvious damage.

DURING INITIAL USE

Operating the vehicle with no load or under light load conditions for initial use is recommended. A light load is 30 to 50% of the rated load. During the first 100 hours of operation observe the following:

1. Prevent the new battery from over-discharging.
2. Perform preventive maintenance services carefully and completely.
3. Avoid sudden stops, starts or turns.
4. Perform oil changes and lubrication earlier than specified.

https://truckmanualshub.com/

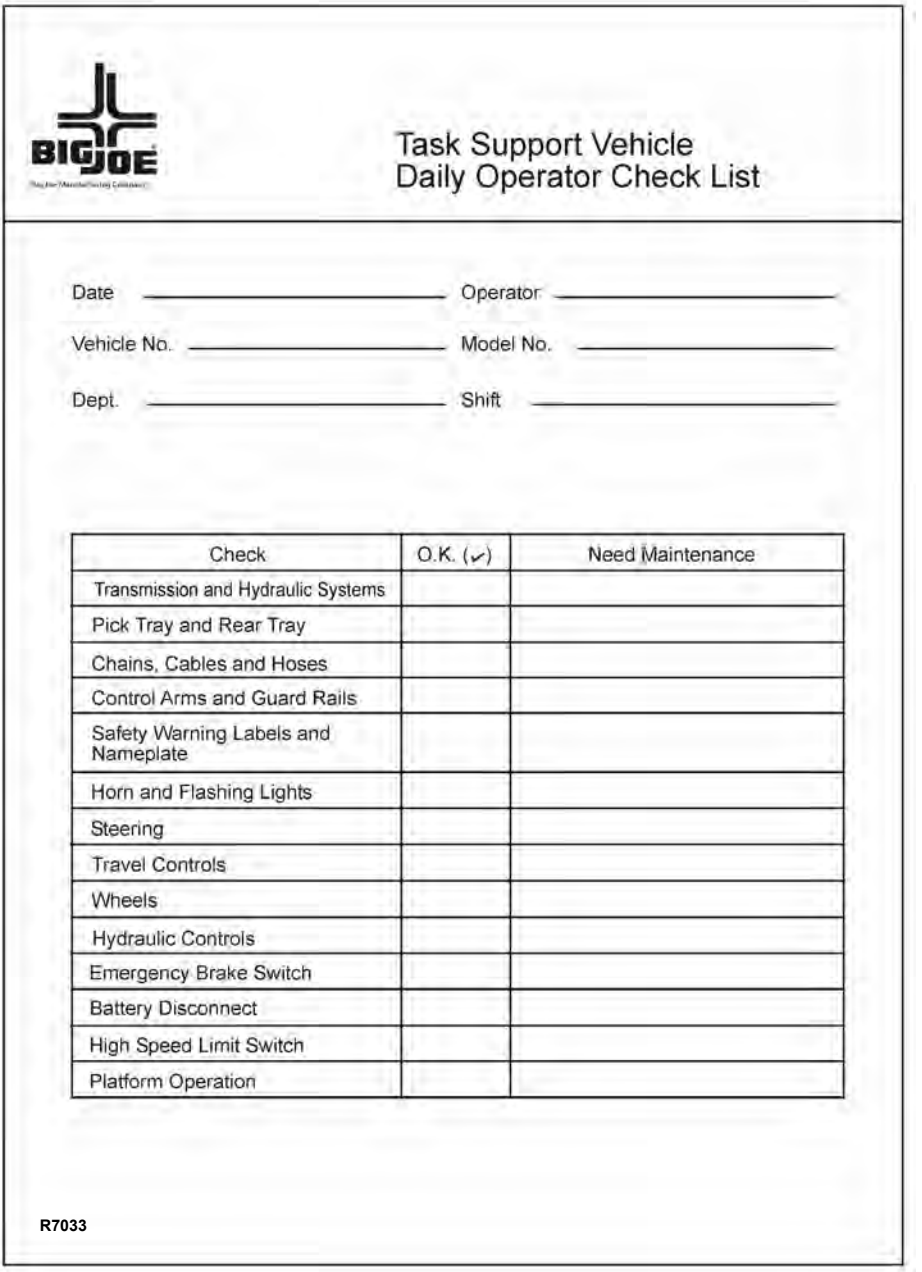

BIG JOE

Task Support Vehicle
Daily Operator Check List

Date _____ Operator _____

Vehicle No. _____ Model No. _____

Dept. _____ Shift _____

Check	O.K. (✓)	Need Maintenance
Transmission and Hydraulic Systems		
Pick Tray and Rear Tray		
Chains, Cables and Hoses		
Control Arms and Guard Rails		
Safety Warning Labels and Nameplate		
Horn and Flashing Lights		
Steering		
Travel Controls		
Wheels		
Hydraulic Controls		
Emergency Brake Switch		
Battery Disconnect		
High Speed Limit Switch		
Platform Operation		

R7033

Figure 3 Sample of Operator Check List

https://truckmanuals.net.com/

Table 1 - Operator Check List

ITEM	PROCEDURE
Transmission and hydraulic systems	Check for signs of fluid leakage.
Pick tray and rear tray	Check for cracks and damage and that it is properly secured.
Chains, cables and hoses	Check that they are in place, properly secured and not damaged.
Control arms and guard rails	Check that vehicle operation is disabled when arms and guard rails are raised.
Safety warning label and nameplate	Check that warning labels, nameplate, etc., are in good condition and legible.
Horn and flashing lights	Check that horn sounds when operated and flashing lights are operable.
Steering	Check for binding or looseness in steering arm when steering.
Travel controls	Check that travel control on right control arm operates in all speed ranges in forward and reverse.
Wheels	Check drive wheel for cracks or damage. Move vehicle to check load wheels and casters for freedom of rotation.
Hydraulic controls	Check operation of lift and lower to their maximum positions.
Emergency power disconnect switch	Check that brakes actuate when emergency power disconnect switch is depressed.
Battery disconnect	Check that battery can be disconnected and reconnected. Check for connector damage.
Speed limit switches	Allow for enough space to operate vehicle in all speeds Test drive the vehicle to check for speed reductions when elevated. TRIMAST vehicles have three speed reductions, Telescopic vehicles have two speed reductions.
Platform Operation	Check that all controls in the platform operating compartment are operational.

https://truckmanualshub.com/

CONTROLS

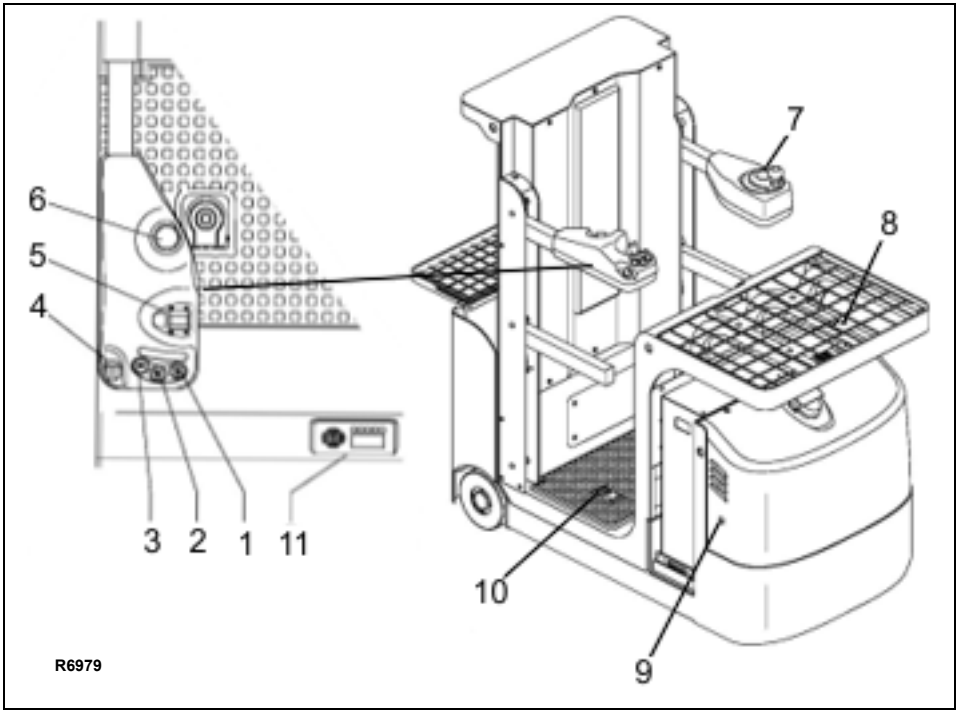

Figure 4 Controls

ITEM	COMPONENT
1	Lift button
2	Lower button
3	Horn button
4	Keyswitch
5	Travel switch
6	Emergency power disconnect switch

ITEM	COMPONENT
7	Steering control
8	Battery disconnect and charger
9	Emergency lowering button
10	“Deadman” footswitch
11	Instrument panel

https://truckmanuals.net/

LIFT BUTTON (1, Figure 4)

To raise the platform, push and hold the LIFT button until desired height is reached. Guard rails need to be in lowered position and “deadman” footswitch needs to be engaged for travel and lift.

LOWER BUTTON (2, Figure 4)

To lower the platform, push and hold the LOWER button until the desired height is reached. Guard rails need to be in lowered position and foot pedal needs to be engaged for travel and lift.

HORN BUTTON (3, Figure 4)

Sounds the horn.

KEYSWITCH (4, Figure 4)

The keyswitch has two positions, ON and OFF. Remove the key to prevent unauthorized use.

TRAVEL SWITCH (5, Figure 4)

This switch controls forward, neutral and reverse travel. Travel direction is also indicated on the instrument panel.

EMERGENCY POWER DISCONNECT SWITCH (6, Figure 4)

Pushing down the emergency power disconnect switch disconnects the main power, deactivates all electrical functions, causing the vehicle to brake automatically.

STEERING CONTROL (7, Figure 4)

This control is operated in the conventional manner. Drive wheel direction is also indicated on the instrument panel.

BATTERY DISCONNECT (8, Figure 4)

The battery disconnect can be used to cut off all power to the vehicle. It is also used to connect the batteries to the battery charger.

EMERGENCY LOWERING BUTTON (9, Figure 4)

Press this button to lower the platform in case of an emergency.

“DEADMAN” SWITCH (10, Figure 4)

Operator must stand on this pedal to to activate the controls.

INSTRUMENT PANEL (11, Figure 4)

The instrument panel contains the following displays and controls:

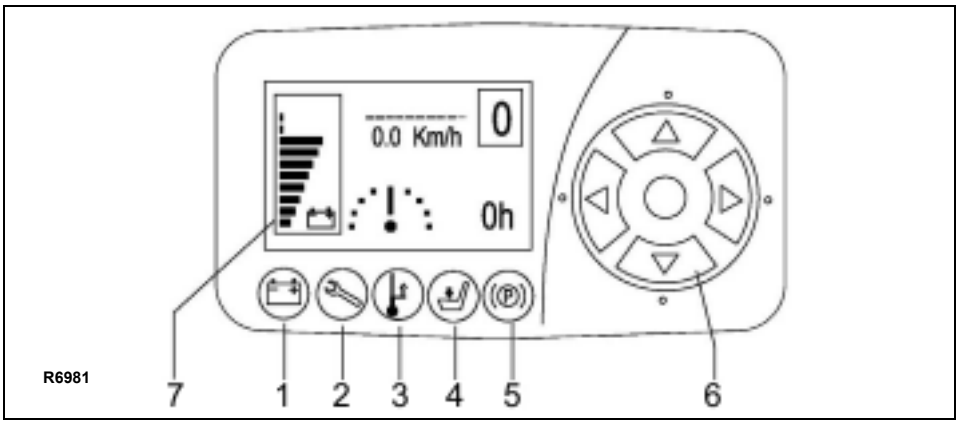

Figure 5 Instrument Panel

LOW BATTERY ALARM LED (1, Figure 5)

This LED lights when the measured battery voltage is equal or less than 40% nominal battery voltage.

FAULT ALARM LED (2, Figure 5)

When a fault is detected, this LED will light. The display (7, **Figure 5**) will display the warning and fault indication. Report alarm to the designated authority and do not use the vehicle until corrected by a qualified mechanic.

TEMPERATURE ALARM LED (3, Figure 5)

When the temperature of the drive motor is too high, the LED will illuminate. Temporarily stop operation until the temperature drops and notify an authorized technician.

DRIVE PEDAL ALARM LED (4, Figure 5)

When the drive pedal is released, this LED will illuminate.

BRAKE ALARM LED (5, Figure 5)

This LED will illuminate when the brake is actuated.

FUNCTION KEYS (6, Figure 5)

Use the left arrow button to adjust the speed mode. Use the down arrow button to switch the driving mode.

DISPLAY (7, Figure 5)

The display has the following functions:

https://truckmanualspdf.com

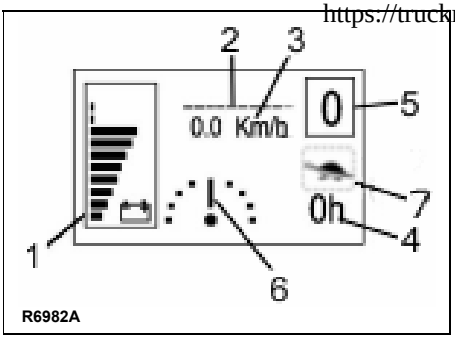

Figure 6 Instrument Panel

Battery Indicator (1, Figure 6): The state of charge is displayed by ten notches. Each notch represents 10% of the battery charge. For example, the illustration shows the battery has 80% charge.

Information Display (2, Figure 6): Displays the warnings and faults. Report warnings and faults to the designated authority and do not use the vehicle until corrected by a qualified mechanic.

Speed Display (3, Figure 6): Indicates the vehicle's speed.

Hour Meter Display (4, Figure 6):

Displays the amount of hours that the vehicle has been operated

Speed Mode Display (5, Figure 6): There are four speed ranges available in both the high speed driving mode and the crawl speed driving mode. Use the "left" function key (6, Figure 5) to select the desired mode. "1" indicates the slowest speed while "4" indicates the highest speed.

CAUTION:

When the platform rises the vehicle automatically enters crawl speed.

Steering Display (6, Figure 6): One of nine notches will indicate the steering angle of the drive wheel.

Driving Mode Display (7, Figure 6): The vehicle can be operated in two driving modes, normal speed or crawl speed. Use the "down" function key (6, Figure 5) to switch the driving mode. The crawl speed will automatically come on when the operator platform reaches the speed limit switch. When you are in crawl speed, a "Turtle" (7, Figure 6) shows on the display.

	Crawl Speed.

https://forklifttraining.com/

SAFETY REGULATIONS FOR OPERATION

Operator Authorization: The vehicle may only be used by trained personnel, who have been authorized to operate the vehicle by the supervisor or the designated authority.

Operator's Responsibilities: The operator must be informed of his duties and responsibilities and be trained in the operation of the vehicle and shall be familiar with the operator's manual.

Unauthorized Use of Vehicle: The operator is responsible for the vehicle during the time it is in use. He/she shall prevent unauthorized persons from driving or operating the vehicle. It is forbidden to carry passengers or to lift personnel.

Damage and Faults: The supervisor or the designated authority must be immediately informed of any damage or fault codes. Vehicles not safe for operation must not be used until they have been repaired.

Repairs: The operator must not carry out any repairs or alterations to the vehicle. The operator must never disable or adjust safety mechanisms or switches.

Hazardous area: A hazardous area is defined as the area in which a person is at risk due to vehicle movement, lifting operations, or the load itself. This also includes areas which can be reached by falling loads or lowering equipment.

- Unauthorized persons must be kept away from hazardous area.
- Where there is danger to personnel, a warning (the horn) must be sounded with sufficient notice.
- If unauthorized personnel are still within the hazardous area the vehicle shall be brought to a halt immediately.

Safety devices and warning signs: Safety devices, warning signs and warning instruction shall be strictly observed.

DRIVING PROCEDURES

The vehicle can be driven with the platform raised or lowered; however, the speed is restricted when the platform is raised above a preset limit.

WARNING:

Do not leave the platform cage floor area while the operator platform is elevated. Do not lean out from the outside of a cage rail. Climbing on the guard rails and/or trays is strictly prohibited and can lead to severe injury or death.

WARNING:

Only one person is permitted in the operator's compartment at all time.

https://truckmanuals.hub.com/

Proceed as follows to start and stop the vehicle.

1. Step on the operator platform with your back against the back rest.
2. Lower the control arms and guard rails.
3. Turn on the keyswitch (4, Figure 7) and pull up on the emergency power disconnect switch (6, Figure 7).
4. Step on “deadman” footswitch (10, Figure 7) to activate the electrical controls.
5. Adjust the driving mode (4, Figure 6) using the “down” key (6, Figure 5).
6. Select the speed mode (5, Figure 6) using the “left” function key (6, Figure 5).
7. Use the steering control (7, Figure 7) to steer the vehicle in the required direction. Drive wheel direction is indicated on the instrument panel.
8. Using your right hand, move the travel switch (5, Figure 7) to the desired direction.

WARNING:

The vehicle is equipped with a level sensor. When the vehicle is elevated and on a slope greater than 4.5 degree, the level sensor sounds an alarm beeper. The truck is only to be used indoors on a level surface. This vehicle is not for use on mezzanines or balcony areas.

STOPPING PROCEDURES

The brake pattern of the vehicle depends largely on the ground conditions. The driver must take this into account when operating the vehicle. The driver must be looking ahead when traveling. If there is no hazard, brake moderately to avoid moving the load.

The vehicle can brake in three different ways;

Coasting Brake: release the drive pedal (10, Figure 7) and allow the vehicle to coast to a stop.

Reverse Braking: To stop faster, slowly move the travel switch (5, Figure 7) to the opposite direction, this is also referred to as “plugging”.

NOTE: The vehicle direction may be reversed while moving. The control will cycle the motor to stop and then reverse in a timed sequence without danger to the equipment. Exercise caution when doing so, especially when traveling at maximum speed.

Emergency Braking: To stop rapidly when an emergency exists, press the emergency power disconnect switch (6, Figure 7).

WARNING:

Except in an emergency, do not stop suddenly.

https://truckmanualshub.com/

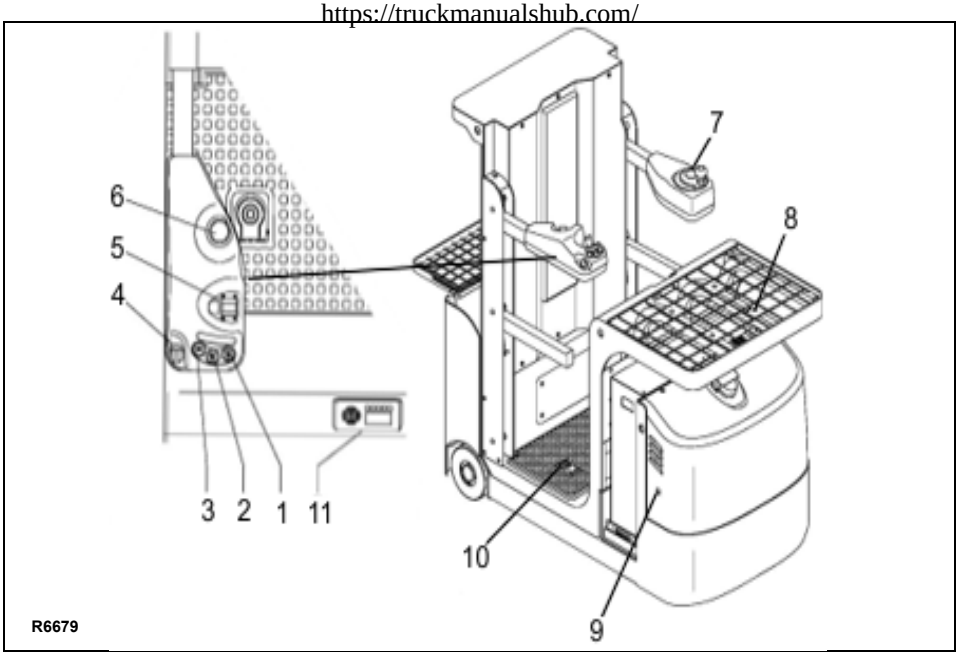

Figure 7 Operation

LIFTING AND LOWERING

WARNING:

Ensure there are no other people standing underneath the raised platform. Instruct other people to move out of the hazardous area.

Lifting: Press and hold the lift button (1, Figure 7) until you reach the desired height.

WARNING:

Never raise the guard rails when the vehicle is in an elevated position.

Lowering: Press and hold the lower button (2, Figure 7) until you reach the desired height.

CAUTION:

Lowering, the vehicle sounds an intermittent alarm beeper.

EMERGENCY LOWERING

If a condition exists where lowering without power is necessary, instruct someone on the ground to push solenoid valve button (1, Figure 8) through hole in the cover (9, Figure 7).

WARNING:

Do not leave the platform cage floor area while the operator platform is elevated. Do not lean out from the outside of a cage rail. Climbing on the guard rails and/or trays is strictly prohibited and can lead to severe injury or death.

https://truckmanualshub.com/

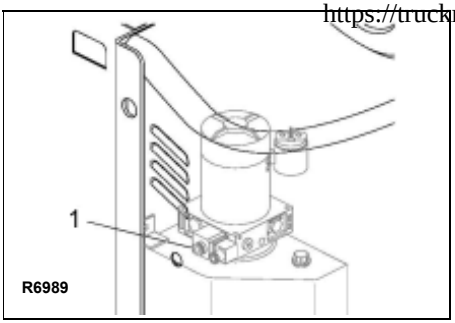

Figure 8 Lowering Control

PICKING UP A LOAD

1. Drive the vehicle carefully up to the storage location (4, Figure 9).
2. Press the lift button (1) until pick tray (3) reaches the desired height.
3. Move the load from storage location (4) to tray (3).
4. Press the lower button (2) until the platform is completely lowered.

TRANSPORTING LOADS

1. Always transport load with the platform completely lowered.
2. Always transport loads on the pick tray or the rear tray.
3. Always be prepared to brake. Only stop suddenly in emergency situations.
4. Reduce speed in tight areas.

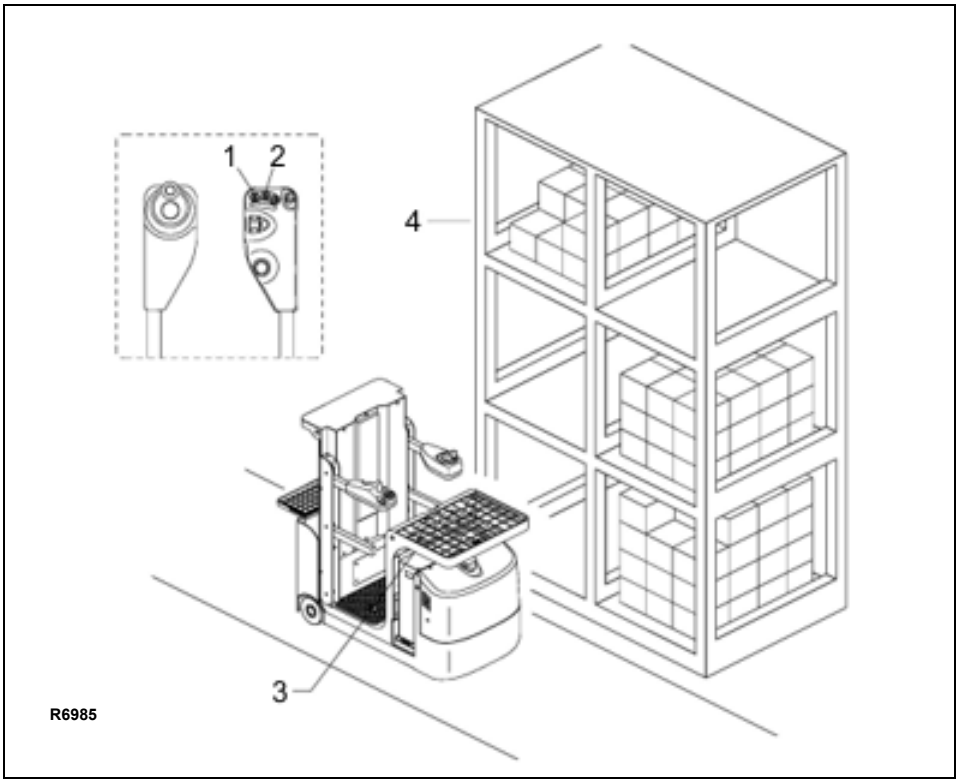

Figure 9 Order Picking

PLACING LOADS

https://truckmanualshub.com/

1. Drive the vehicle carefully up to the storage location (4, Figure 9).
2. Press the lift button (1) until pick tray (3) reaches the desired height.

WARNING:

Ensure storage location is suitable for storing the load (size and capacity).

3. Move the load from tray (3) to storage location (4).
4. Press the lower button (2) until the platform is completely lowered.

OVERHEAD MAINTENANCE

When performing overhead maintenance, please ensure there are no obstacles, beams or other obstructions before elevating lift. Always fully lower the platform before moving to the next maintenance position. Ensure a safe work environment before proceeding with maintenance and never operate the lift outside.

PARKING

When leaving the vehicle, it must be securely parked even for a short time.

1. Park the vehicle in its designated parking area.

WARNING:

Do not park the vehicle on a slope. The platform must be completely lowered.

2. Lower the platform completely.
3. Set the emergency power disconnect switch to apply the brake.
4. Turn keyswitch to off position. Remove key for added security.
5. Pull out battery disconnect.

MOVING A DISABLED VEHICLE

Do not attempt to move a disabled vehicle; notify your supervisor or proper authority.

SAFETY REGULATIONS FOR HANDLING ACID BATTERIES

Securely park and disable the vehicle before carrying out any work on the batteries.

Refer to Supplement 245 * for battery safety and maintenance.

Maintenance personnel: Batteries may only be charged by trained personnel. Service and replacement may only be performed by your Big Lift Dealer.

Fire protection:

- Smoking and open flames must be avoided when working with batteries.
- The area must be well vented.
- Fire protection equipment must be provided.

Battery maintenance: The battery cell covers must be kept dry and clean. The terminals must be clean, secure and have a light coating of dielectric grease. Batteries with non insulated terminals must be covered with a non slip insulation mat.

WARNING:

Wear glasses for eye protection. Wear rubber overshoes, protective wear and rubber gloves when servicing batteries.

Battery storage: If batteries are taken out of service for a lengthy period of time they should be stored in the fully charged condition in a dry, frost-free room.

CHARGING THE BATTERY

Before charging, check all cables and plug connections for visible signs of damage.

It is essential to follow the safety regulations of the battery and charger.

1. Park the vehicle at charging station with platform lowered and keyswitch OFF.
2. Apply the emergency parking brake.
3. Disconnect plug (1, Figure 6) from the vehicle and connect it to charger's plug (2).
4. Connect cord (3) and charge the battery according to Supplement 374 *.

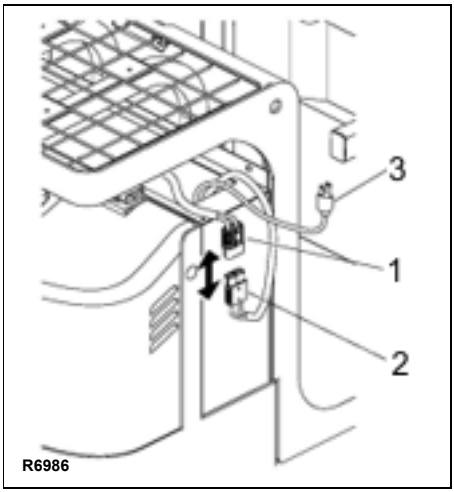

Figure 10 Charging the Battery

* Please refer to the Big Joe Support site at www.bigjoesupport.com

https://forklift-manuals.com/

Refer to Table 2 for the recommended types of grease and oil. Table 3 in conjunction with Figure 11 identifies the items requiring lubrication.

Table 2 Recommended Lubricants (See Table 3 for Application)

No. 1	Grease—Polylub GA352P.
No. 2	Hydraulic oil-L-HM46#

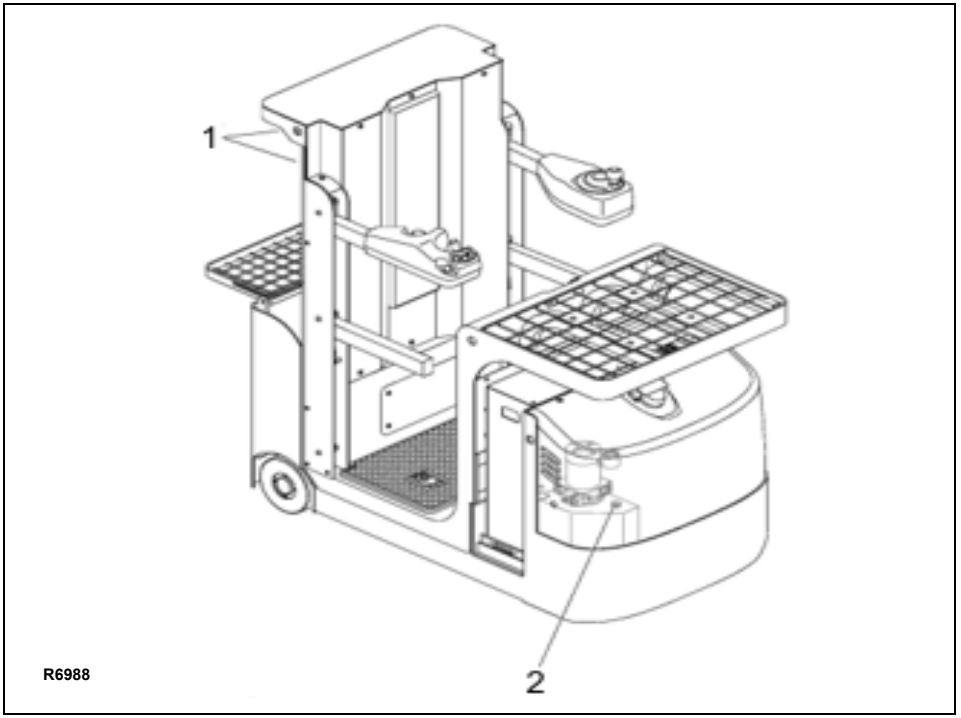

Figure 11 Lubrication Diagram

Table 3 Lubrication Chart

FIG 3-2 INDEX NO.	LOCATION	METHOD OF APPLICATION	TYPE (Table 3-3)	APPLICATION OF LUBRICANT
1	Mast	Spray	No. 1	Full length of channel where rollers operate.
2	Hydraulic Reservoir	Can	No. 2	With platform fully lowered, fill reservoir with hydraulic oil to level on dip stick.

https://forkliftmanuals.info

NOTICE - OBTAINING A PARTS AND SERVICE MANUAL

A complete parts and service manual covering this vehicle is available from Big Lift LLC. To order, obtain the serial number of your vehicle and contact your Big Joe Authorized Dealer. You may also visit www.bigjoesupport.com.

https://truckmanualshub.com/

Big Lift LLC