https://truckmanualshub.com/

ANTONIO CARRARO

Tractor people

TRX

TRG

THE ERGIT100 SERIES

https://truckmanualshub.com/

ERGIT 100:
A NEW TRACTOR CONCEPT

Antonio Carraro SPA produces specialized tractors for professionals wishing to experience the emotion of owning something unique and precious that is guaranteed by a one-hundred-year-old brand at the cutting-edge of "Italian Style".

The Ergit 100 series is a new tractor concept. It is the outcome of a construction philosophy based on engineering simplification and the selection of top quality components; factors that allow the company to give these models a 2-year warranty. The care taken in design assures a pleasant and relaxed driving experience. It is not only attractive, but also performance enhancing as it allows for total operator visibility in all directions and ease when working in small spaces. The engines, with power outputs from 70 to 100 hp, offer exceptional torque and power levels combined with lower fuel consumption. The bodywork is painted with environmentally-friendly hydrosoluble enamels. Each technical solution is the result of choices that are based on socio-environmental benefits in terms of reduced pollution and noise levels.

ANTONIOCARRARO
100 YEARS
1910-2010

THE ERGIT 100 SERIES

Star light

https://truckmanualshub.com/

TRX / TRG: “tailored” & “top of range”

TRX and **TRG** are two specialized multi-purpose tractors designed to work in the open field, in orchards and vineyards; both on flat and sloping terrain. TRX is a specialized “tailored” isodiametric (4 same size tires) tractor, while the TRG features enlarged rear wheels and is the most powerful tractor in the Ergit 100 series. Both are extraordinarily handy thanks to their extremely tight turning radius.

This is due to their finely-tuned engines and their constant ground adherence, which is ensured by the projecting engine configuration and the 4-wheel drive. Their extraordinary versatility is achieved by their reversible driving position: each vehicle can change position in order to use an extensive range of plowing, spraying, harvesting, towing, groundcare, forestry and worksite equipment. The reversible driving position and the ergonomic controls simplify work, thus eliminating operator stress and fatigue.

TRX

https://truckmanualshub.com/

DESIGN
TECHNOLOGY
INNOVATION

TRG

https://truckmanualshub.com/

MULTI-FUNCTIONALITY: all-in-one

The use of TRX and TRG can be changed thanks to the integrated lifting, hydraulic system, and PTO assembly. All of which make it possible to rapidly interchange the towing or frontal equipment that can also be mounted together.

MANY TRACTORS IN ONE

https://truckmanualshub.com/

Plows, tillers, forklifts, mowers, excavators, reach mowers, snow blowers, grass cutters, trailers, sprayers and shredders are just some of the more common implements that can be used with the Ergit 100 series of tractors. The tires are interchangeable, as every type of terrain requires its own tire that can optimize tractor performance. Dimensions and clearances are other factors that can extend the multi-functionality of TRX and TRG by making them perfect for operating in tight spaces.

https://truckmanualshub.com/

TRADITIONAL TRACTOR

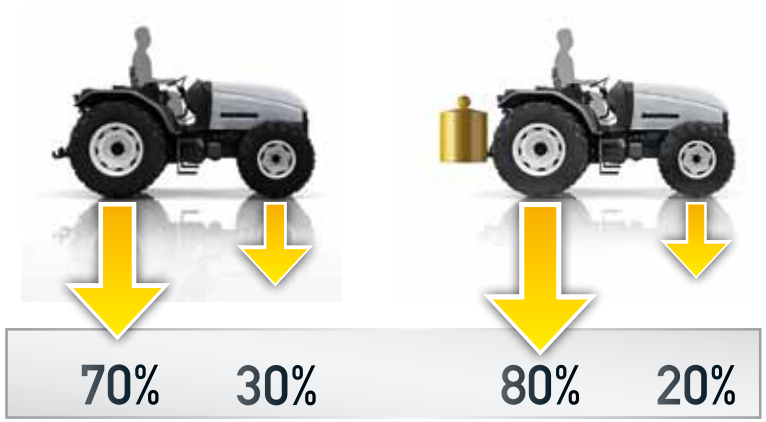

AC TRACTOR

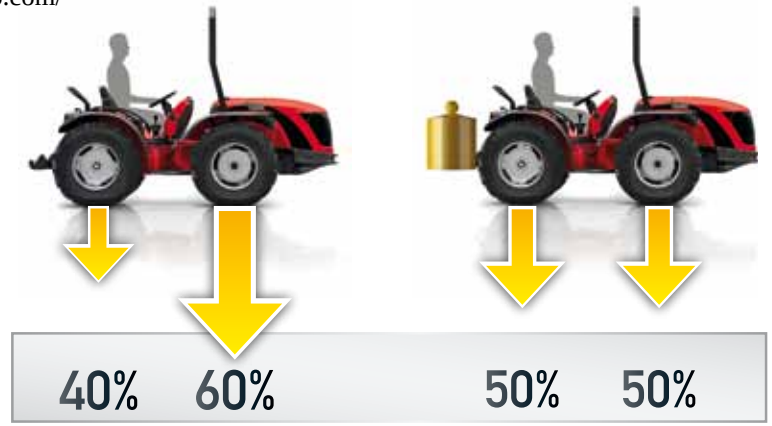

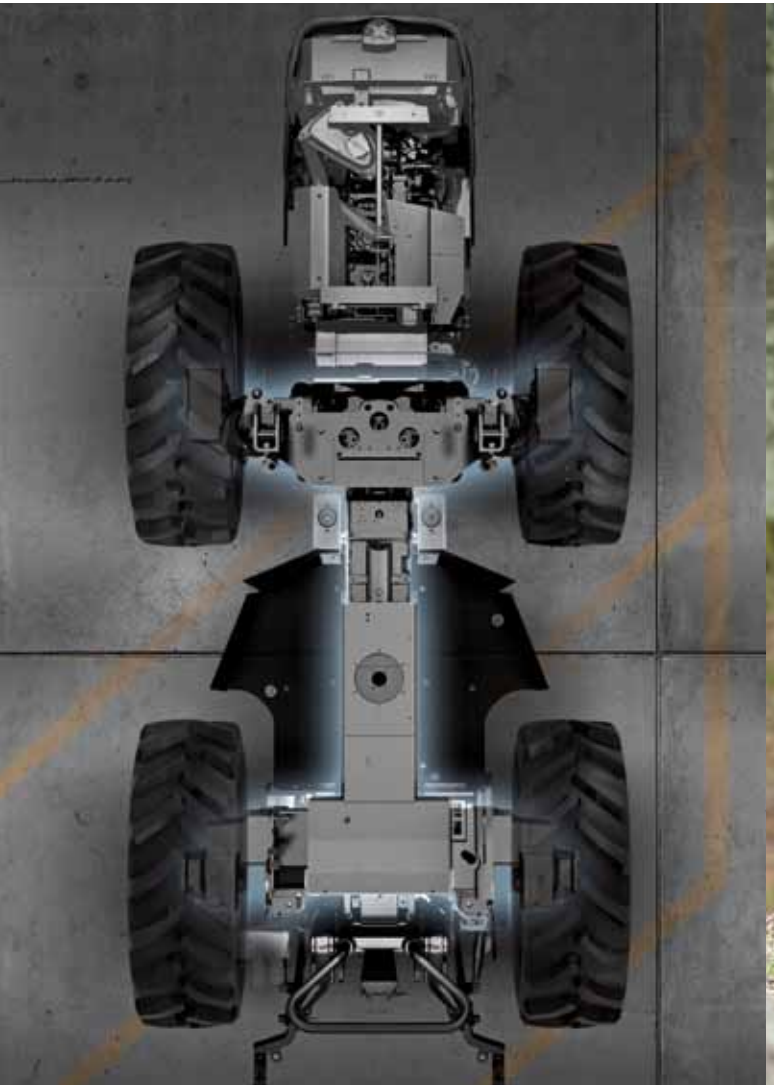

https://truckmanualshub.com/

ACTIO™: the exclusive chassis designed by Antonio Carraro

ACTIO™, This Full Chassis with Oscillation is comprised of a solid cast-iron chassis fixed to the axles and housing the tractor transmission. It features a central joint with a longitudinal oscillation of up to 15°. The two oscillating ends follow the contour of the terrain independently, thus assuring stability and traction at all times. The constant adherence of the tires to the ground allows engine power to be entirely transferred to the ground, thus increasing performance and safety.
The ACTIO™ chassis requires a "projecting" engine configuration in order to assure a low center of gravity and an equal division of the weight of the tractor: 60% on the front axle; 40% on the rear axle. This is an ideal balance with implements attached as it distributes 50% of the weight on each axle.

PLUS

+ ***Stability:*** *baricentro basso e 4 ruote motrici*
+ ***Safety:*** *peace of mind*
+ ***Comfort:*** *driving position centered over chassis oscillation*
+ ***Agility:*** *short wheelbase and reduced turning radius*
+ ***Adherence:*** *equal division of weight*
+ ***Traction:*** *4 drive wheels always firmly in contact with the ground*

https://truckmanualshub.com/

RGS™: two sides of the same coin

VERSATILITY
CREATIVITY
SAVING

RGS™

RGS™ Rev-Guide System, is the AC reversible driving system on a rotating turret which inverts the driving direction in just a few seconds in order to work efficiently with towed or frontal equipment. Simply turn the seat/steering wheel/dash/pedal assembly 180° for an identical, but reverse, driving direction. If equipped with a Joystick*, all the auxiliary controls remain in an ergonomic position. The RGS™ system is an integral part of the tractor's multifunctional feature. It simplifies use and improves the precision and quality of performance.

PLUS

+ ***Comfort:*** *simple and intuitive RGS™ system without double controls*
+ ***Visibility of equipment:*** *driving position in the center of the vehicle, in both directions*
+ ***Versatility:*** *greater profitability of tractor*

*optional

Low center of gravity, constant contact, stability, efficient braking and protected driving position are just some of the "active" safety features not to mention the "passive" features, such as quality of components, design, and eco-friendly engines. The braking system is comprised of 4 hydraulically-controlled, self-adjusting disc brakes in an oil bath which assures emergency braking modularity and reliability even when the front axle is disengaged. The overall safety of the vehicle has allowed it be approved for speeds of up to **40 Km/h (25 mph)**. The rear three-point lift features controlled position and force of the implement, which optimizes adherence of the tractor, such that it always stays "glued to the ground".
The vehicle and its equipment follow the contour of the terrain without lifting, thus assuring maximum efficiency. The electro-hydraulically controlled differentials lock at the rear and the front and rear in order to prevent slippage and assure that the tractor tires always have traction. The driving position is located at the center of the vehicle and features a roll-bar or cab approved to safety standards to ensure maximum operator protection.

AC TRACTOR

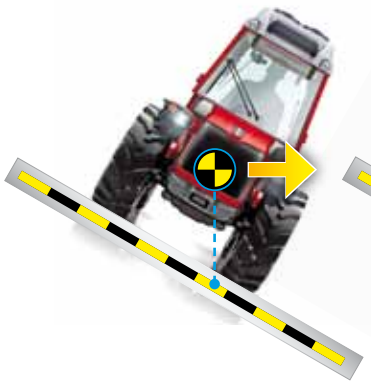

TRADITIONAL TRACTOR

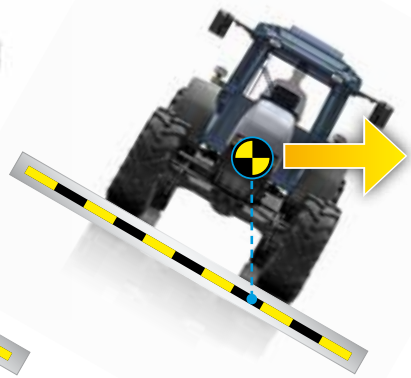

https://truckmanualshub.com/

SAFETY: active and passive

https://truckmanualshub.com/

ERGONOMICS & COMFORT

The tapered and racy design helps the tractor to maneuver in fields and increases operator visibility of the equipment and the surrounding terrain. The spacious driving position is easy to access and protects the operator. The operating station is suspended on **silent-blocks**, which absorb vibrations and dampen noise.

Thanks to the ACTIO™ Chassis, the driving position coincides with the center of oscillation of the tractor. Sideways jerking and stress are very limited and operator fatigue is reduced, even after many hours. The on-board instrumentation is elegant, functional and intuitive: backlit anti-reflection screen for nighttime use; "on-off" information system; digital tachometer and PTO rev counter; and electro-hydraulic pushbutton controls.

https://truckmanualshub.com/

AC TRACTOR

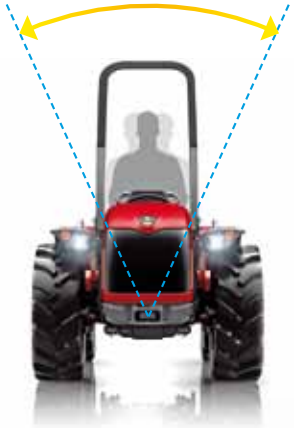

TRADITIONAL TRACTOR

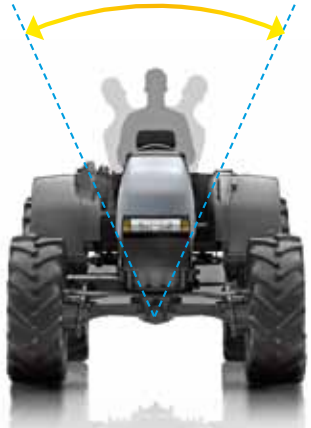

The lighting equipment, integrated into the mudguards, is comprised of reflecting parabolic optical assemblies, which offer a wide range of illumination covering the roadway, the equipment, and the surrounding field. Maintenance is practical and fast thanks to the fact that the bonnet can be fully opened and the side panels and battery cover can be easily removed.

PLUS

+ ***Efficiency:*** *Reduced fatigue & increased tractor performance*

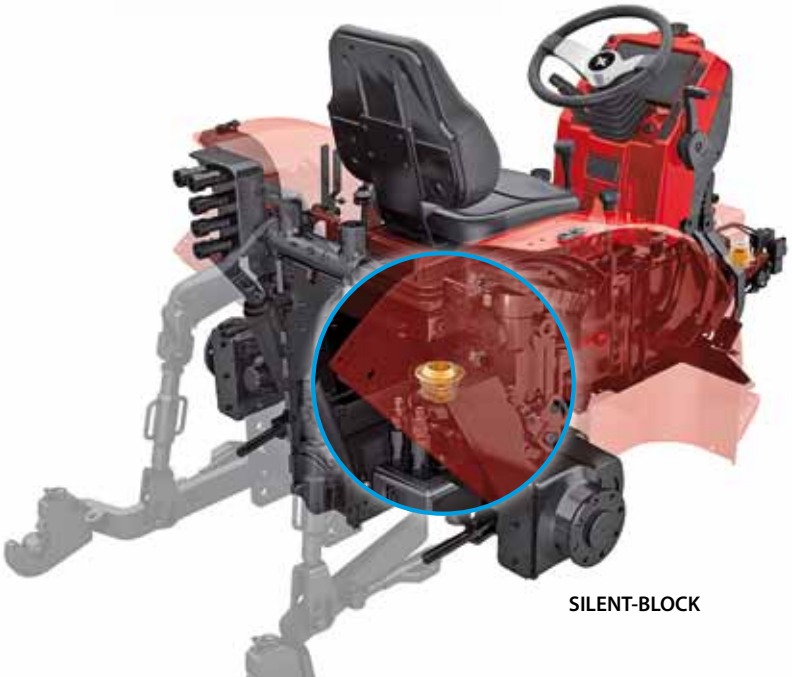

SILENT-BLOCK

https://truckmanualshub.com/

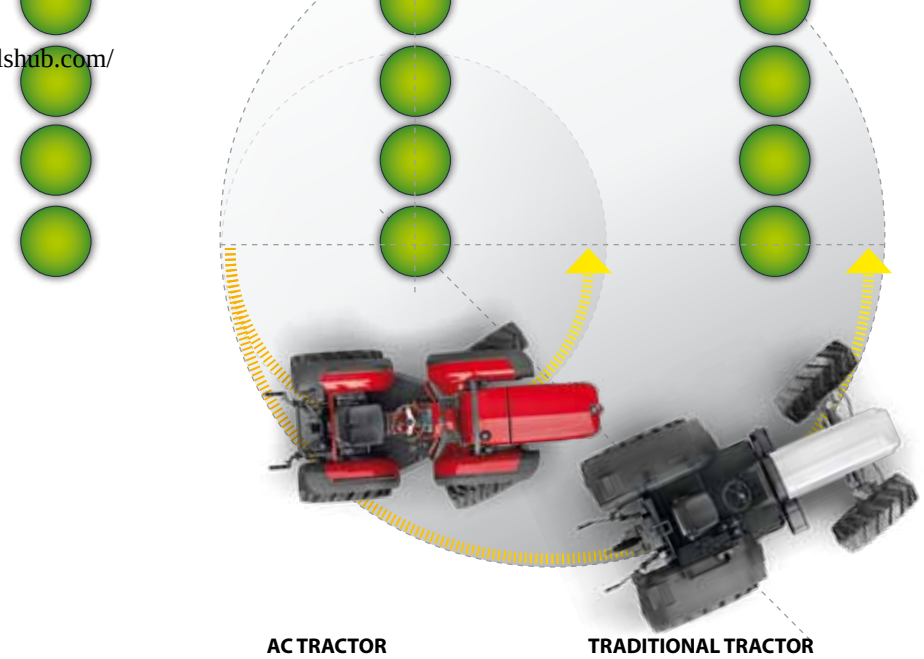

STEERING: precise and tight

AGILITY
PRECISION
SPEED

The short wheelbase and tight steering radius make the tractor extremely agile in crop rows. To further reduce the turning radius, the steering brakes can be utilized, while accentuating the "superbend" effect obtained thanks to the double-acting constant velocity joints. The front wheel on the inside of the curve naturally increases the steering angle without the vehicle being allowed to stick. The smooth and sensitive hydroguide steering wheel assures precise maneuvering on steep slopes, in crossways movements, in narrow paths, among crop rows and in car parks.
The hydraulic hydroguide system is independent; powered by its own hydraulic pump and fitted with an oil-filtering system.

PLUS

+ ***Handiness:*** *comfort*

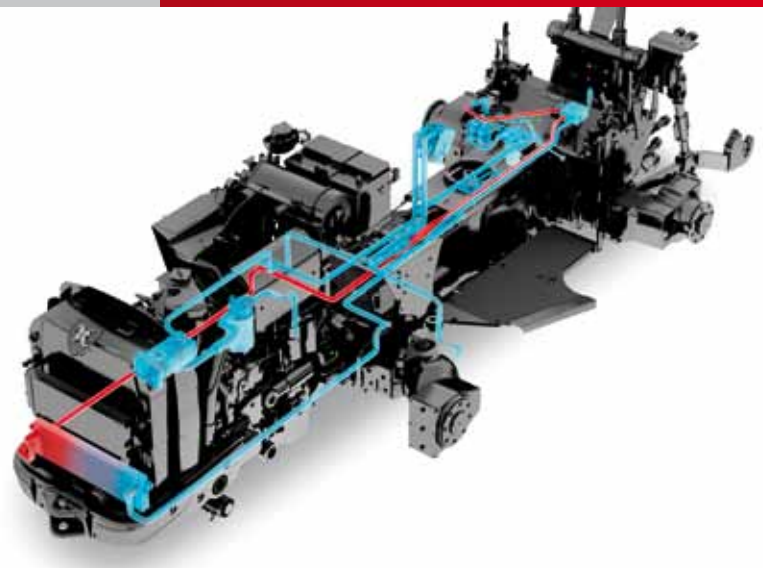

https://truckmanualshub.com/

MACHINE AND EQUIPMENT: an integrated technological system

The integrated lifting - hydraulic system - PTO assembly can mount a large variety of implements at both the front and rear. The lift is a single group with vertical cylinders, featuring a 3-point hitch, a pump, and an independent hydraulic system. The rear electronic* lift, featuring draft and position control, controls the equipment precisely and optimizes the stability of the tractor allowing it to follow the contour of the terrain without slipping or sliding sideways.

*optional

https://truckmanualshub.com/

MACHINE AND EQUIPMENT: **an integrated technological system**

The front lift optimizes combined processes such as a front grass shredder with a rear between-row mower, a front vine trimmer with a rear side-shoot remover, a front vine trimmer with a rear mulcher, or a front snow blade with a rear salt/sand spreader. The clutch of the PTO with an electro-hydraulic progressive engagement command features a safety button for preventing involuntary starting and stopping the engine with the PTO engaged.

PLUS

+ ***Practicality:*** *engagement facilitated by the cardan shaft*
+ ***2 Speeds:*** *fuel saving*
+ ***Comfort:*** *the PTO can be engaged while the tractor is moving*
+ ***Efficiency:*** *less heat build-up*
+ ***Multifunctionality:*** *hydraulic engines run at a constant speed*
+ ***Functionality:*** *engagement without stalling the engine*
+ ***Lifetime:*** *safeguard of PTO shaft*
+ ***Comfort:*** *less operator stress*

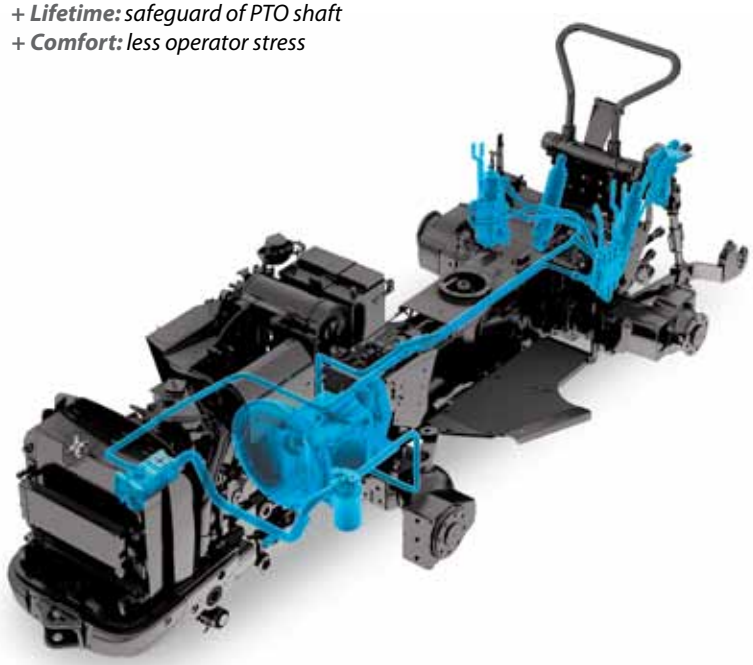

https://truckmanualshub.com/

Buttons for lifting position with memory*: two potentiometers for adjusting position, draft, and hydraulic lift block for road transport.

Vertical hydraulic tie-rod and 3-point hitch* allow adjustments to be made from the driver's seat.

The slider* tow hook with rapid vertical adjustment, is used to optimize the connection height of the towed equipment.

Two speed PTO: 540 rpm, 540 E (750 rpm) and synchronized with gear speeds.
The PTO shaft of the ASAE 1 3/8 type is the same for all speeds.

Hydraulic system with 3 manifolds:
1 double-acting, 1 double-acting with floating position and stop lever,
1 single-acting + oil return tap.
Total: 6 rear quick-couplers.

The front lift* optimizes work combined with rear tools.

The front PTO* (1000 rpm) with electro-hydraulic controls and progressive engagement with safety button is maintenance free.

The rear differential lock prevents slipping and optimizes traction. The front traction disengagement is useful when travelling along roads and prevents damage from being done to delicate grounds.

*optional

https://truckmanualshub.com/

CAB: "Starlight"

COMFORT
VISIBILITY
SAFETY

This original and approved AC product features a spherically curved, simple and essential design. The airtight seals and integrated hinges allow the **"Starlight"*** cabin to enter the narrowest rows without damaging flowering plants or fruit. The front and rear windows offer full visibility of equipment and the roadway. The ventilation system features a rapid front windscreen defogging system.

The acoustic comfort on board the "Starlight" is similar to that of a car due to the internal layer of sound-absorbing material on the cabin walls. "Starlight" features a car radio*, a removable license-plate holder, and adjustable rear-view mirrors

https://truckmanualshub.com/

The forced ventilation of the air-conditioning system generates an internal pressurization effect. The incoming air is cleaned by a large filter, with an available activated carbon filter*.

The air-conditioning is achieved by a powerful system running on R134A ecological coolant, which also refreshes the cabin air using a low rev motor. The heating system utilizes a powerful heat-exchanger which is most exceptional even in the coldest weather.

Star light

Easy access to the driving position with all-around visibility.

Removable license-plate holder.

Cabin controls (windshield wipers, work lights, rotating beacon) in an ergonomic position, even when reversing.

The panoramic roof with sunblind and full glass doors offer full top and side visibility.

*optional

https://truckmanualshub.com/

TRANSMISSION AND GEARS: many speeds in a logical sequence

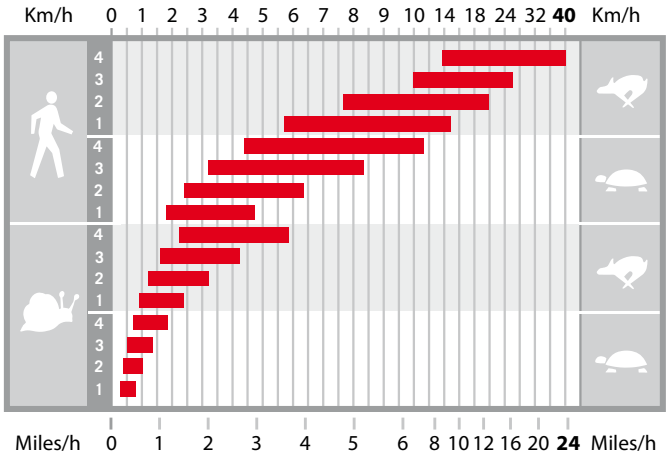

The tractors in the Ergit 100 series utilize large, extraordinarily reliable, smooth engaging clutches that do not require adjustment thanks to the hydraulic control, which recovers the play caused by wear over time. The gear has a helical profile: 32 speeds, 16 FW and 16 RV, with a synchronized inverter that can be engaged even when the tractor is moving. The small gap between one gear and the next assures operative continuity in all circumstances.
The electro-hydraulically controlled **HI-LO*** system can be engaged while the tractor is moving at any speed and can reduce the selected speed by 20%, thus obtaining a range of 32+32 speeds. It is comprised of two clutches packs, with sintered disks in an oil bath. The electro-hydraulic engagement of one clutch automatically disengages the other, as it is mechanically activated by a series of springs. This technical solution avoids the tractor from going into neutral with engine switched off.

*optional N.b. HI-LO not included on model 10400

PLUS

+ ***Reliability:*** *long lifetime of the clutch*
+ ***Efficiency:*** *wide range of speeds*
+ ***Comfort:*** *smooth engagement without jerking the engine*
+ ***Saving:*** *lower fuel consumption and reduced running costs*

https://truckmanualshub.com/

ENGINE: powerful and quiet

The engines are at the top of their category and offer unbeatable torque and power performance as well as lower fuel consumption, lower noise, and lower carbon emissions. All the engines comply with "STAGE 3A" standards which limit the harmful emissions of diesel engines. Intercoolers, turbos, electronic EGR's, and multivalves, are utilized depending on the model of tractor. Thanks to this new generation of engines, the company has achieved new goals in terms of efficiency and cost-effectiveness.

TRX: 4 versions			
7800**	8400	9800**	10400*
70 HP	70 HP	87 HP	96 HP
4 cylinders	3 cylinders turbo	4 cylinders turbo	4 cylinders turbo
3300cc	2230cc	3300cc	3000cc
16 valves	intercooler	16 valves	intercooler

TRG: 2 versions	
9800**	10400*
87 HP	96 HP
4 cylinders turbo	4 cylinders turbo
3300cc	3300cc
16 valves	intercooler

* engines with balance shafts.

** engines featuring balance shafts with injection systems and electronically-controlled EGR's.

PLUS

+ ***Reliability:*** *quality of components*
+ ***Performance:*** *maximum efficiency*
+ ***Comfort:*** *minimum vibrations, noise, and emissions*
+ ***Saving:***
  - *less maintenance costs*
  - *rapid amortisation*
  - *lower fuel consumption*

https://truckmanualshub.com/

ELECTRO-HYDRAULIC JOYSTICK: all functions at your fingertips

The **ON/OFF JOYSTICK*** allows practical operation of the lift and the front and rear hydraulic quick-couplers. It is compatible with the standard controls of the draft and position control. The operator adjusts all the hydraulic functions including the lifting speed. The draft control assures maximum stability of plowing equipment and load handling, which results in maximum productivity.

PLUS

+ ***Ergonomic:*** *handy to use*
+ ***Comfort:*** *stress-free operation*
+ ***Saving:*** *reduction in cycle times*

HARMONY
TECHNOLOGY
PROGRESS

The **JPM PROPORTIONAL JOYSTICK™*** allows practical operation of the lift and the front and rear hydraulic quick-couplers. It also adjusts the oil flow towards the hydraulic connectors and lift, thus assuring total control of speed and movements of the attached implement. A hydraulic quick-coupler constant flow adjuster controls the operation and speed of the hydraulic motors and at the same time, controls implement hydraulic movements. A descent adjuster controls the implement lowering speed without interfering with lifting speed. An external switch simplifies attaching of the implement.

Many different functions, always within easy reach, are easy to use thanks to the colored buttons arranged in a logical sequence on the joystick.

*optional

https://truckmanualshub.com/

OPTIONAL

BULLBAR
Tubular steel guard protecting the bodywork; integrates the third-point for the front lift.

FRONT LIFT AND PTO
Used together with the bullbar, it allows all the frontal equipment to be used with multiple hydraulic connectors.

FRONT BALLAST
Perfectly integrated into the bodywork of the tractor; it does not alter the wheelbase or dimensions of the tractor.

HEADLIGHT GRILLES
Protecting the light assemblies, they also make the bodywork look more appealing.

SLIDER HOOK
Integrated into the rear lift, it gives the operator various options for the practical setting up of the tractor and the rapid alignment of the towed equipment.

VERTICAL TIE-ROD AND HYDRAULIC THIRD-POINT
Optimizes the positioning and inclination of the equipment.

RAPID REAR COUPLINGS
On/off joystick > 6 rear couplings
JPM joystick > 6 rear couplings + 1 connector with constant flow and oil flow adjuster
Vertical tie-rods + hydraulic third hitch > 4 rear independent mini couplings

QUICK COUPLERS
Front lift > 6 rear couplings + 2 replicated

HI-LO
HI-LO system which can be electro-hydraulically engaged when loaded thus reducing set speeds by 20% (64 speeds, 32 forward and 32 reverse) (except 10400)

REAR CAST IRON WHEEL FLANGES
Flanges that increase the weight of the tractor at the rear

ELECTRONIC LIFT
Lift with button adjustment for precision tool management.

PNEUMATIC SEAT
Latest generation air-suspension seat.

https://truckmanualshub.com/

TRX: the specialized “tailored” tractor

GRIT
RATIONALITY
PROFITABILITY

https://truckmanualshub.com/

TRG: the series flagship

PERSONALITY
ENDURANCE
POWER

https://truckmanualshub.com/

SAT: Customer Service Team

RICAMBI ORIGINALI
GENUINE SPARE PARTS

Antonio Carraro® Original Spare Parts and Assistance

The AC dealer network utilizes modern equipment and instruments that have been especially designed and built for maintenance work on AC tractors. The technicians at every authorized dealership periodically attend technical training courses at the Parent Company's facilities. Each authorized workshop employs highly qualified staff and provides an extensive range of services in order to offer its Customers maximum peace of mind and total protection. AC dealers can give their Customers information on all the services related to the care of AC tractors.

https://truckmanualshub.com/

24 months of warranty

The experience gained during the years and the investments made in terms of materials and human resources have allowed Antonio Carraro to design and market the Ergit 100 Series with a standard 24 month warranty for the end customer. Customer satisfaction and safety is what counts most for Antonio Carraro. 24 months means giving Customers greater trust in what they have purchased and the certainty that they can count on a constantly available and highly qualified assistance service. A net of authorized centers assure efficient and professional maintenance on tractors.

After-sales service

Thanks to the capillary network of dealers and the competence of the Service Managers, the Parent Company can assure all-around skills. With the right maintenance work, every AC tractor will continue to provide excellent performance throughout its operating lifetime.

Original Antonio Carraro Spare Parts

Original Antonio Carraro Spare Parts is a registered trademark. The elevated standards of design and the stringent tests carried out during the entire production process assure maximum quality levels. With Original AC Spare Parts, Customers can be certain of maintaining tractor performance unaltered over time, thus preserving the safety and the value of the tractor.

https://truckmanualshub.com/

TECHNICAL DATA: TRX

THE ERGITRAC 100 SERIES

Model	TRX 7800	TRX 8400	TRX 9800	TRX 10400
Chassis	"ACTIO™" – Full chassis with oscillation • Reversibility RGS™ • Steering wheels			
	• 4 equal wheel drive - Front and rear final drive			
Engine Type	Diesel direct injection with counter rotating weight system (except 8400 model)			
Emissions Regulations	Stage 3A	Stage 3A	Stage 3A	Stage 3A
N° Cylinders	4 - 16 Valves	3 Turbo Intercooler	4 - 16 Valves • Turbo	4 Turbo Intercooler
Displacement (CC)	3319	2228	3319	2970
Power kW/HP (97/68/CE)	52/71	51,5/70	64/87	70/95
Maximum engine revs	2500	2300	2500	2600
Torque max (Nm/revs)	236/1600	255/1650	286,7/1850	420/1000
Cooling	Water	Water	Water	Water
Tank Capacity (litres/gal):				
With roll bar	60/15.85	60/15.85	60/15.85	60/15.85
With cab	50/13.2	50/13.2	50/13.2	50/13.2
Transmission	Synchronized 32 speed gear box: 16 forward and 16 reverse with synchronized inverter			
PTO	Rear, independent and synchronized at 540/540E rpm with progressive			
	electrohydraulic engagement			
Shaft	Profile 1" 3/8 with 6 splines with facilitated engagement			
Transmission clutch	Hydraulic control			
Drive disengagement	Electrohydraulic control on the front			
Rear hydraulic lift	Draft and position control with 3 point hitch			
Operating Pressure (bar/psi)	160/2320			
Capacity (Kg/lbs)	2400/5291			
Steering	Hydraulic with 2 pistons			
Brakes	Standard: hydraulic front and rear disk brakes in oil bath, rear steering brakes			
	Independent emergency and parking brake: band type on transmission			
Platform	Suspended on Silent Block			
Weight in order of speed:				
With roll bar (Kg/lbs)	2170÷2270 / 4784÷5004	2050÷2150 / 4520÷4740	2170÷2270 / 4784÷5004	2090÷2190 /4607÷4828
With cab (Kg/lbs)	2245÷2345 / 4950÷5170	2210÷2310 / 4870÷5092	2245÷2345 / 4950÷5170	2200÷2300 / 4850÷5070

Standard Features

• Reversible control tower • Rear or front/rear differential lock with electrohydraulic control • Hydraulic system with 2 separate hydraulic pumps • Adjustable steering wheel • Lifting arms with quick release couplings • Adjustable, suspension seat with safety belt • Protection roll bar • Adjustable wheel rims • 3 lever ancillary rear hydraulic system • Rear adjustable height tow hitch • Front tow hitch • Multifunctional digital instrument Km/h and PTO • Battery • Electrical power point • Safety starting device on the inverter and PTO

Optional Features

• HI-LO system which can be electro-hydraulically engaged when loaded thus reducing set speeds by 20% (64 speeds, 32 forward and 32 reverse) (except for 10400) • Star Light cab with air conditioning system and window on the roof, suspended on Silent Blocks • Lift and hydraulic quick couplers controlled by "ON/OFF" or "Proportional" Joystick • Support with six front ballast weights • Hydraulic third hitch and vertical tie-rod with electro-hydraulic control • Front power lift • Front PTO 1000 rpm with electrohydraulic control • Up to five types of front hydraulic system with a maximum of 11 hydraulic quick couplers • Electronic lift with draft and position control • Adjustable lifting arms with quick release couplings • Pneumatic seat • Slider tow hitch • Rear oscillating tow bar • Pair of front/rear ballasts • Cast iron wheel flanges for 20" rear wheels • Front bullbar • Front lamp guards

https://truckmanualshub.com/

DIMENSIONS
TRX

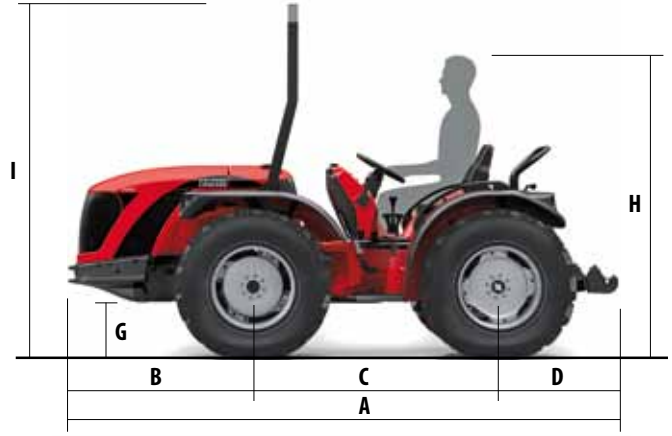

	250/80 R18	280/70 R18	9.5 R20	300/70 R20	11.2 R20	320/70 R20	300/80-15.3
E	250/9.84	280/11.02	245/9.64	300/11.81	275/10.82	320/12.60	300/11.81

	320/65 R18	340/65 R18	400/55-17.5 Terra Twin	31x15.50-15 Terra	31x15.50-15 Softrac	36x13.50-15 Multitrac
E	320/12.60	340/13.38	400/15.74	395/15.55	395/15.55	380/14.96

Wheels / Dimensions (mm/inch)

Front	Rear	A	B	C	D	F	G	H**	I	L*	M	N*	O
250/80-18	**250/80-18**	3405/134.0	1190/46.8	1495/58.8	720/28.3	2135/84.0	275/10.8	1908/75.1	2320/91.3	1380/54.3	1130/44.5	1350/53.1	1100/43.3
280/70 R18	**280/70 R18**	3405/134.0	1190/46.8	1495/58.8	720/28.3	2135/84.0	275/10.8	1908/75.1	2320/91.3	1420/55.9	1140/44.8	1410/55.5	1130/44.5
9.5 R20	**9.5 R20**	3405/134.0	1190/46.8	1495/58.8	720/28.3	2170/85.4	310/12.2	1938/76.3	2355/92.7	1390/54.7	1145/45.0	1390/54.7	1145/45.0
300/70 R20	**300/70 R20**	3405/134.0	1190/46.8	1495/58.8	720/28.3	2170/85.4	310/12.2	1943/76.5	2355/92.7	1410/55.5	1115/43.9	1410/55.5	1115/43.9
11.2 R20	**11.2 R20**	3405/134.0	1190/46.8	1495/58.8	720/28.3	2195/86.4	335/13.2	1963/77.3	2380/93.7	1390/54.7	1115/43.9	1415/55.7	1140/44.8
320/70 R20	**320/70 R20**	3405/134.0	1190/46.8	1495/58.8	720/28.3	2195/86.4	335/13.2	1963/77.3	2380/93.7	1460/57.4	1140/44.8	1435/56.5	1115/43.9
300/80-15.3	**300/80-15.3**	3405/134.0	1190/46.8	1495/58.8	720/28.3	2135/84.0	275/10.8	1908/75.1	2320/91.3	1445/56.9	1145/45.0	1440/44.9	1140/44.8
320/65 R18	**320/65 R18**	3405/134.0	1190/46.8	1495/58.8	720/28.3	2135/84.0	275/10.8	1908/75.1	2320/91.3	1460/57.4	1140/44.8	1450/57.1	1130/44.5
340/65 R18	**340/65 R18**	3405/134.0	1190/46.8	1495/58.8	720/28.3	2145/84.4	285/11.2	1908/75.1	2330/91.7	1485/58.4	1140/44.8	1475/58.1	1130/44.5
400/55-17.5	**400/55-17.5**	3405/134.0	1190/46.8	1495/58.8	720/28.3	2120/83.4	260/10.2	1898/74.7	2305/90.7	1690/66.5	1290/50.8	1690/66.5	1290/50.8
31x15.50-15	**31x15.50-15**	3405/134.0	1190/46.8	1495/58.8	720/28.3	2100/82.6	240/9.45	1863/73.3	2285/89.9	1690/66.5	1295/51.0	1690/66.5	1295/51.0
36x13.50-15	**36x13.50-15**	3405/134.0	1190/46.8	1495/58.8	720/28.3	2125/83.6	265/10.4	1898/74.7	2310/90.9	1645/64.7	1265/49.8	1645/64.7	1265/49.8

*Min. external width **Height calculated with the operator of average height sitting (cm/in 175/68.9)

https://truckmanualshub.com/

TECHNICAL DATA: TRG

THE ERGIT 100 SERIES

Model	TRG 9800	TRG 10400
Chassis	"ACTIO™" – Full chassis with oscillation • Reversibility RGS™ • Steering wheels	
	• 4 unequal wheel drive - Front and rear final drive	
Engine Type	Diesel direct injection with counter rotating weight system	
Emissions Regulations	Stage 3A	Stage 3A
N° Cylinders	4 - 16 Valves • Turbo	4 Turbo Intercooler
Displacement (CC)	3319	2970
Power kW/HP (97/68/CE)	64/87	70/95
Maximum engine revs	2500	2600
Torque max (Nm/revs)	286,7/1850	420/1000
Cooling	Water	water
Tank Capacity (litres/gal):	60	60
Transmission	Synchronized 32 speed gear box: 16 forward and 16 reverse with synchronized inverter	
PTO	Rear, independent and synchronized at 540/540E rpm with progressive	
	electrohydraulic engagement	
Shaft	Profile 1" 3/8 with 6 splines with facilitated engagement	
Transmission clutch	Hydraulic control	
Drive disengagement	Electrohydraulic control on the front	
Rear hydraulic lift	Draft and position control with 3 point hitch	
Operating Pressure (bar/psi)	160/2320	
Capacity (Kg/lbs)	2400/5291	
Steering	Hydraulic with 2 pistons	
Brakes	Standard: hydraulic front and rear disk brakes in oil bath, rear steering brakes	
	Independent emergency and parking brake: band type on transmission	
Platform	Suspended on Silent Block	
Weight in order of speed:		
With roll bar (Kg/lbs)	2280÷2460 / 5026÷5423	2200÷2380 / 4850÷5247
With cab (Kg/lbs)	2350÷2490 / 5180÷5490	2280÷2460 / 5026÷5423

Standard Features

• Reversible control tower • Rear or front/rear differential lock with electrohydraulic control • Hydraulic system with 2 separate hydraulic pumps • Adjustable steering wheel • Lifting arms with quick release couplings • Adjustable, suspension seat with safety belt • Protection roll bar • Adjustable wheel rims • 3 lever ancillary rear hydraulic system • Rear adjustable height tow hitch • Front tow hitch • Multifunctional digital instrument Km/h and PTO • Battery • Electrical power point • Safety starting device on the inverter and PTO

Optional Features

• HI-LO system which can be electro-hydraulically engaged when loaded thus reducing set speeds by 20% (64 speeds, 32 forward and 32 reverse) (not for 10400) • Star Light cab with air conditioning system and window on the roof, suspended on Silent Blocks • Lift and hydraulic connectors controlled by "ON/OFF" or "Proportional" Joystick • Support with six front ballast weights • Hydraulic third hitch and vertical tie-rod with electro-hydraulic control • Front power lift • Front PTO 1000 rpm with electrohydraulic control • Up to five types of front hydraulic system with a maximum of 11 hydraulic quick couplers • Electronic lift with draft and position control • Adjustable lifting arms with quick release couplings • Pneumatic seat • Slider tow hitch • Rear oscillating tow bar • Pair of front/rear ballasts • Cast iron wheel flanges for 20" and 24" rear wheels • Front bullbar • Front lamp guards

https://truckmanualshub.com/

DIMENSIONS
TRG

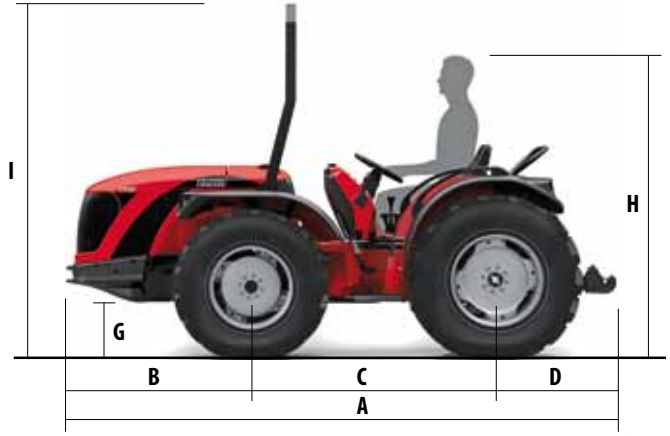

Front wheels	11.2 R20	320/70 R20	300/80-15.3	300/80-15.3	320/65 R18	320/70 R20
L	275/10.82	320/12.60	300/11.81	300/11.81	320/12.60	320/12.60

Rear wheels	320/85 R24	360/70 R24	360/70 R20	380/70 R20	420/65 R20	420/65 R24
L	320/12.60	360/12.60	360/12.60	380/14.96	420/16.53	420/16.53

Wheels Dimensions (mm/inch)

Front	Rear	A	B	C	D	F	G	H**	I	L*	M	N*	O
11.2 R20	**320/85 R24**	3505/138.0	1220/48.0	1620/63.8	665/26.2	2325/91.5	410/16.1	2095/82.5	2360/93.0	1415/55.7	1140/44.8	1390/54.7	1070/42.1
320/70 R20	**360/70 R24**	3505/138.0	1220/48.0	1620/63.8	665/26.2	2325/91.5	410/16.1	2095/82.5	2360/93.0	1460/57.5	1140/44.8	1475/58.1	1120/44.1
300/80-15.3	**360/70 R20**	3505/138.0	1220/48.0	1620/63.8	665/26.2	2280/89.7	355/13.0	2040/80.3	2305/90.7	1470/57.9	1170/46.0	1485/58.4	1130/44.5
300/80-15.3	**380/70 R20**	3505/138.0	1220/48.0	1620/63.8	665/26.2	2280/89.7	355/13.0	2040/80.3	2305/90.7	1470/57.9	1170/46.0	1510/59.4	1130/44.5
320/65 R18	**420/65 R20**	3505/138.0	1220/48.0	1620/63.8	665/26.2	2280/89.7	355/13.0	2040/80.3	2305/90.7	1570/61.8	1250/49.2	1610/63.4	1190/46.5
320/70 R20	**420/65 R24**	3505/138.0	1220/48.0	1620/63.8	665/26.2	2325/91.5	410/16.1	2095/82.5	2360/93.0	1495/58.8	1175/46.2	1535/60.4	1115/43.9

*Min. external width

**Height calculated with the operator of average height sitting (cm/in 175/68.9)

The description and illustrations in this brochure are provided simply for information purposes; they are not binding and may be varied at any time without notice.

https://truckmanualshub.com/

DEALER:

ANTONIO CARRARO SPA
Via Caltana, 24
35011 Campodarsego Padova ITALY
info@antoniocarraro.it
antoniocarraro.com

COD. 4 7318 128 - 06/2010