OPERATOR'S MANUAL

https://www.hinesmanuals.com

BIG JOE®

COUNTER-BALANCE LIFT TRUCK

$5.00

P/N 901345 REV.B

https://truckmanualshub.com/

WARNING

DO NOT OPERATE THIS TRUCK UNLESS YOU HAVE BEEN TRAINED AND AUTHORIZED TO DO SO, AND HAVE READ ALL WARNINGS AND INSTRUCTIONS IN OPERATORS MANUAL AND ON THIS TRUCK.

DO NOT OPERATE THIS TRUCK UNTIL YOU HAVE CHECKED ITS CONDITION. GIVE SPECIAL ATTENTION TO TIRES, HORN, LIGHTS, BATTERY, CONTROLLER, LIFT AND TILT SYSTEMS (INCLUDING FORKS OR ATTACHMENTS, CHAINS, CABLES AND LIMIT SWITCHES), BRAKES, STEERING MECHANISM, GUARDS AND SAFETY DEVICES.

OPERATE TRUCK ONLY FROM OPERATING POSITION. NEVER PLACE ANY PART OF YOUR BODY INTO THE MAST STRUCTURE OR BETWEEN THE MAST AND THE TRUCK. DO NOT CARRY PASSENGERS. KEEP FEET CLEAR OF TRUCK.

OBSERVE APPLICABLE TRAFFIC REGULATIONS. YIELD RIGHT OF WAY TO PEDESTRIANS. SLOW DOWN AND SOUND HORN AT CROSS AISLES AND WHEREVER VISION IS OBSTRUCTED.

START, STOP, TRAVEL, STEER AND BRAKE SMOOTHLY. SLOW DOWN FOR TURNS AND ON UNEVEN OR SLIPPERY SURFACES THAT COULD CAUSE TRUCK TO SLIDE OR OVERTURN. USE SPECIAL CARE WHEN TRAVELING WITHOUT LOAD AS THE RISK OF OVERTURN MAY BE GREATER.

TRAVEL WITH LIFTING MECHANISM AS LOW AS POSSIBLE. ALWAYS LOOK IN DIRECTION OF TRAVEL. KEEP A CLEAR VIEW, AND WHEN LOAD INTERFERES WITH VISIBILITY TRAVEL WITH LOAD OR LIFTING MECHANISM TRAILING.

USE SPECIAL CARE WHEN OPERATING ON RAMPS - TRAVEL SLOWLY, AND DO NOT ANGLE OR TURN. TRAVEL WITH LIFTING MECHANISM DOWNHILL.

DO NOT OVERLOAD TRUCK. CHECK CAPACITY PLATE FOR LOAD WEIGHT AND LOAD CENTER INFORMATION.

WHEN USING FORKS, SPACE FORKS AS FAR APART AS LOAD WILL PERMIT. BEFORE LIFTING, BE SURE LOAD IS CENTERED, FORKS ARE COMPLETELY UNDER LOAD, AND LOAD IS AS FAR BACK AS POSSIBLE AGAINST LOAD BACKREST.

DO NOT HANDLE UNSTABLE OR LOOSELY STACKED LOADS. USE SPECIAL CARE WHEN HANDLING LONG, HIGH OR WIDE LOADS, TO AVOID LOSING THE LOAD, STRIKING BYSTANDERS, OR TIPPING THE TRUCK.

DO NOT HANDLE LOADS WHICH ARE HIGHER THAN THE LOAD BACKREST OR LOAD BACKREST EXTENSION UNLESS LOAD IS SECURED SO THAT NO PART OF IT COULD FALL BACKWARD.

ELEVATE FORKS OR OTHER LIFTING MECHANISM ONLY TO PICK UP OR STACK A LOAD. LIST AND LOWER WITH MAST VERTICAL OR TILTED SLIGHTLY BACK - NEVER FORWARD. WATCH OUT FOR OBSTRUCTIONS, ESPECIALLY OVERHEAD.

OPERATE TILTING MECHANISM SLOWLY AND SMOOTHLY. DO NOT TILT FORWARD WHEN ELEVATED EXCEPT TO PICK UP OR DEPOSIT A LOAD. WHEN STACKING, USE ONLY ENOUGH BACKWARD TILT TO STABILIZE LOAD.

DO NOT ALLOW ANYONE TO STAND OR PASS UNDER LOAD OR LIFTING MECHANISM.

WHEN LEAVING TRUCK, NEUTRALIZE TRAVEL CONTROL. FULLY LOWER LIFTING MECHANISM AND SET BRAKE WHEN LEAVING TRUCK UNATTENDED. ALSO SHUT OFF POWER.

https://truckmanuals.to.com/

FOREWORD

As a lift truck operator, you are responsible for a machine that is useful, powerful, and can be hazardous if not operated as described. Your Big Joe truck may weigh more than some cars, depending on the model. Observing and practicing the safety warnings in this manual cannot be overemphasized. Just knowing the warnings, however, is no substitute for **common sense**. Using your common sense will, in almost all cases, prevent accidents. Think of the truck as your own. In this way you will learn its capabilities and limitations.

This manual is intended to remain with the truck at all times as a handy reference guide to operation. Detailed maintenance procedures are found in the parts and service manual for the specific truck model, and are to be performed only by a qualified technician. For further information on obtaining a complete parts and service manual, see page 25 of this manual.

The operator who knows his truck will learn to spot problems as they develop. This is accomplished by performing the Daily Checks and reporting any problems to the designated authority.

TABLE OF CONTENTS

SAFETY SYMBOLS 2
GENERAL DESCRIPTION 2
NAME PLATE AND WARNING DECAL 2
LOAD CAPACITY 4
BEFORE OPERATION 5
- Optional Features 8

INSTRUMENTS AND CONTROLS 7
- Optional Features 8

OPERATION 9
- Forward and Reverse Travel and Speed Control 9
- Steering 10
- Stopping 10
- Parking 11
- Battery Charging 11
- Load Handling 11
- Moving a Disabled Truck 12

NOTICE - OBTAINING A PARTS AND SERVICE MANUAL 25

https://truckmanuals.info.com/

SAFETY SYMBOLS

WARNING and **CAUTIONS** are both signal words intended to alert the viewer to the existence and relative degree of a hazard. They are both preceded by a safety alert symbol consisting of an exclamation mark enclosed by a triangle.

A **Warning** indicates a hazard which could result in injury or death if proper precautions are not taken.

A **Caution** indicates a reminder of routine safety practices.

A prohibition slash (circle with diagonal slash through it) indicates a procedure or action that should **not** be performed under any circumstances, as both personal injury and/or damage to equipment will result.

GENERAL DESCRIPTION

Trucks in the Big Joe Counterbalance series utilize a weighted frame to counterbalance the load. Some models are equipped with tilt cylinders used to tilt the mast back during transport.

Control for steering, braking, forward and reverse travel, horn and speed control are all located on the control handle.

All trucks feature an automatic high speed cut-off circuit which locks out high speed when the forks are elevated.

Trucks in this series may vary in load capacity, battery arrangement, instrumentation and lift/lower controls, depending on model and options.

NAME PLATE AND WARNING DECAL

Name plate and warning decal locations may vary between models, but they are always near the steering arm within sight of the operator.

If the name plate or warning deal are lost or damaged they should be replaced immediately. Have your supervisor or the designated authority contact Big Joe Authorized Dealer for replacement.

The name plate shows the model number; serial number; truck type; battery type, voltage and minimum weight; and, maximum lift height. It also contains information on the load capacity and load center. The warning decal contains warnings which also appear, with illustrations, in the Operating Precautions section of this manual.

https://truckmanualshub.com/

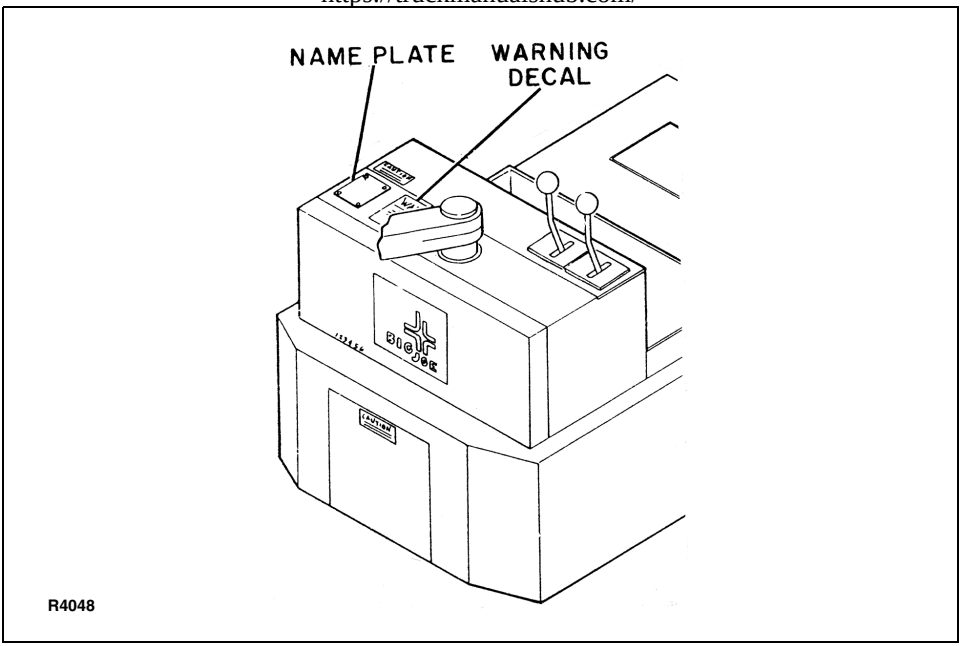

Name Plate and Warning Decal Locations - Typical

WARNING:

This truck is equipped with a battery. Read and heed the warning decal located near the battery. An example is shown here:

https://forklifttrainer.com/

The further the load center is from the backrest, the lower the load capacity. The load center must also be no higher than that specified above the lifting surface (Top side of forks). For example, a load capacity of 3,000 pounds with a load center of 24 inches means that the can be used to lift 3,000 pounds only when the load's center of gravity is no more than 24 inches from the face of the forks or 24 inches above the top side of the forks. Note that a truck undergoing speed changes is less stable than a standing truck. If you are not sure that the truck can lift a certain load, consult your supervisor or the designated authority.

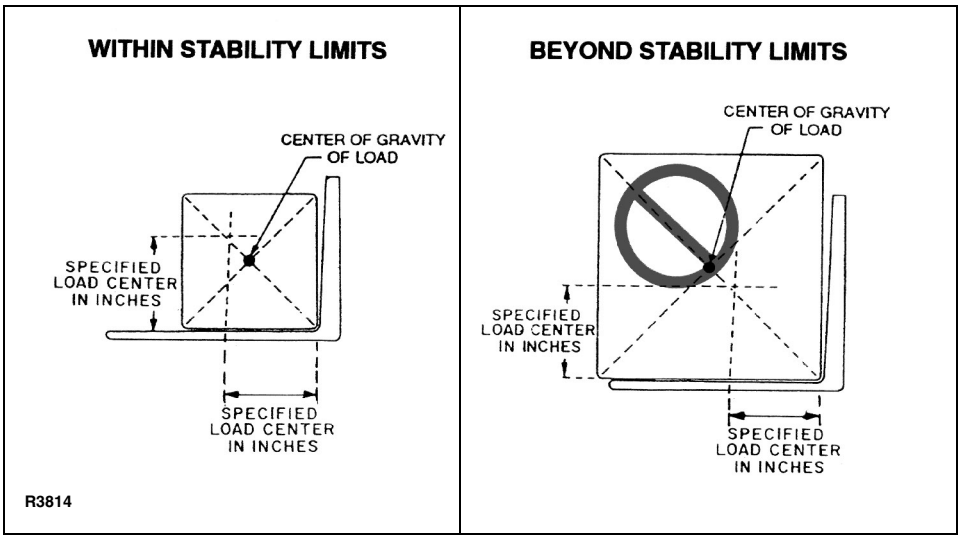

Load Center

https://forkliftmanuals.com/

The table on page 6 covers important inspection points on trucks which should be checked prior to operation. Depending on use, some trucks may require additional checks.

The illustration below shows a sample format for a Operator Checklist, which can be modified as necessary to fit your operation.

WARNING:

Periodic maintenance of this truck by a QUALIFIED TECHNICIAN is required.

WARNING:

A QUALIFIED SERVICE TECHNICIAN should check the truck monthly for proper lubrication, proper fluid levels, brake maintenance, motor maintenance and other areas specified in the parts and service manual maintenance section.

WARNING:

If the truck is found to be unsafe and in need of repair, or contributes to an unsafe condition, report it immediately to the designated authority. Do not operate it until it has been restored to a safe operating condition. Do not make any unauthorized repairs or adjustments. All service must be performed by a qualified maintenance technician.

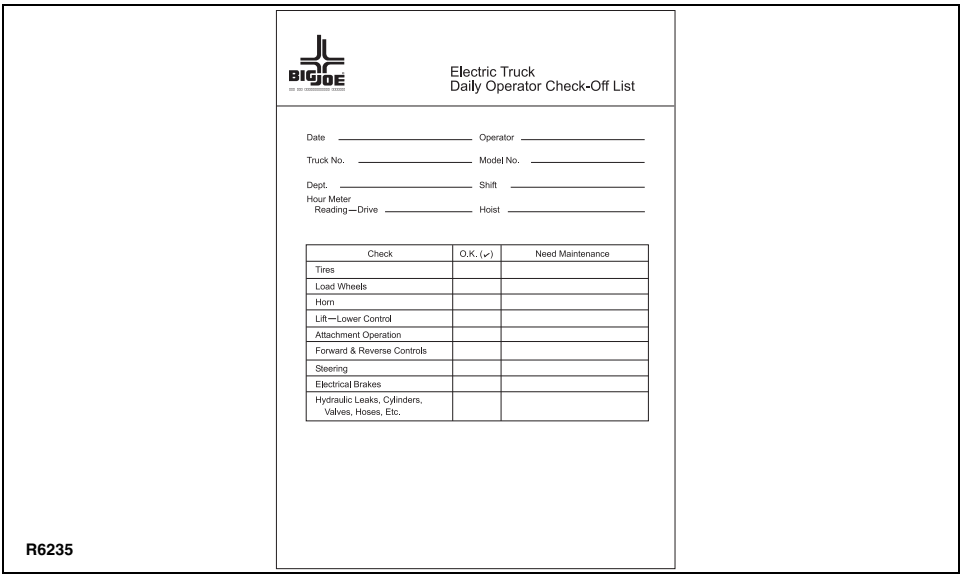

BIG JOE

Electric Truck
Daily Operator Check-Off List

Date _____ Operator _____

Truck No. _____ Model No. _____

Dept. _____ Shift _____

Hour Meter Reading—Drive _____ Hoist _____

Check	O.K. (✓)	Need Maintenance
Tires		
Load Wheels		
Horn		
Lift—Lower Control		
Attachment Operation		
Forward & Reverse Controls		
Steering		
Electrical Brakes		
Hydraulic Leaks, Cylinders, Valves, Hoses, Etc.		

R6235

Sample of Operator Check List

https://forkliftmanuals.info/

ITEM	PROCEDURE
Transmission and hydraulic systems	Check for signs of fluid leakage.
Forks	Check for cracks and damage and that they are properly secured.
Chains, cables and hoses	Check that they are in place, properly secured and not damaged.
Guards and load backrest	Check that safety guards are in place, properly secured and not damaged.
Safety signs	Check that warning labels, nameplate, etc., are in good condition and legible.
Horn	Check that horn sounds when operated.
Steering	Check for binding or looseness in steering arm when steering.
Travel controls	Check that speed controls on control handle operate in all speed ranges in forward and reverse and that belly button switch functions.
Wheels	Check drive wheel for cracks or damage. Move truck to check load wheels for freedom of rotation.
Hydraulic controls	Check operation of lift and lower, and tilt to their maximum positions.
Brakes	Check that brakes actuate when steering arm is raised to upright position, and when lowered to horizontal position. Check that dynamic brake (if so equipped) actuates when dynamic brake pushbutton on control handle is pressed.
Deadman/Parking brake	Check that steering arm raises to upright position when released and brake applies.
Battery disconnect	Check that battery can be disconnected and reconnected. Check for connector damage.
High speed limit switch	Allow for enough space to operate truck in high speed. Elevate forks approximately two feet, then test drive truck to check if high speed is cut out.

http://truckmanuals.net/

The steering arm and control handle provide controls for steering, forward and reverse speed control, braking, and horn. Control handles on some models have pushbuttons for raising and lowering the forks, and for an additional “dynamic brake” independent from the mechanical brake. Control handles on all models have a “belly-button” reversing switch which reverses the direction of the truck upon contact with the operator.

Detailed operating instructions are in the Operation section of this manual.

A battery disconnect is mounted near the steering arm. Pulling the disconnect removes all power from truck circuits in the event of an emergency.

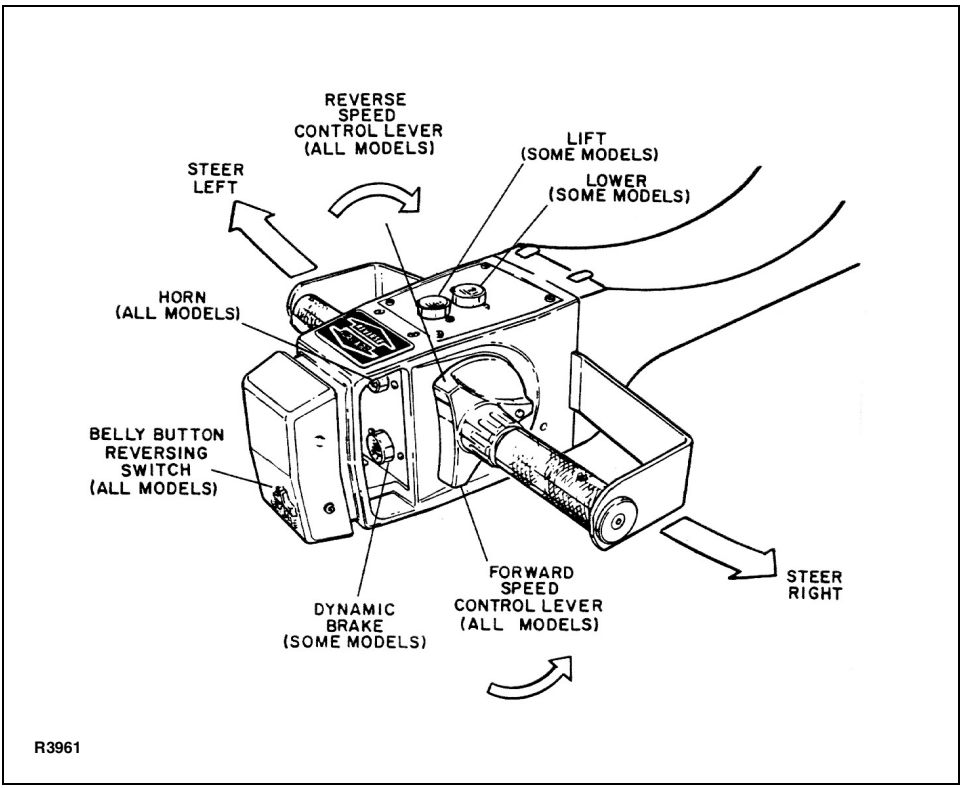

Control Handle

https://truckmanuals.info/

All models come standard with a lift/lower control lever mounted near the steering arm. Some models have additional control levers for operating a tilt mechanism which tilts the mast forward or back. Other models have additional control levers for the operations of additional accessories.

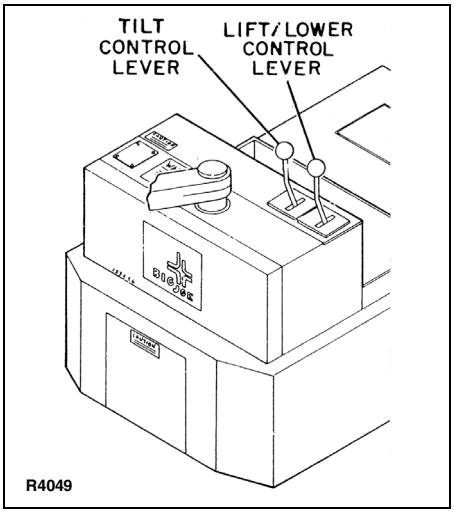

Lift/Lower and Tilt Control Lever

Optional Features

The optional remote lift/lower control (if equipped) allows the operator to raise and lower the forks while standing away from the control handle.

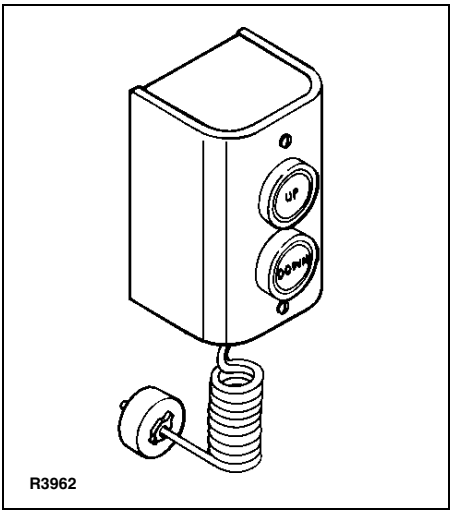

Optional Remote Lift/Lower Control

Other options are the battery capacity indicator, hourmeter and keyswitch which mount on the panel near the control handle. The battery capacity indicator monitors the battery discharge rate to indicate the remaining battery capacity. The hour meter records the accumulated hours that electrical energy is being drawn from the battery to run the pump and drive motors. The keyswitch provides added security to the truck, preventing unauthorized personnel from operating the machine.

https://forkliftmanuals.info.com/

Forward and Reverse Travel and Speed Control

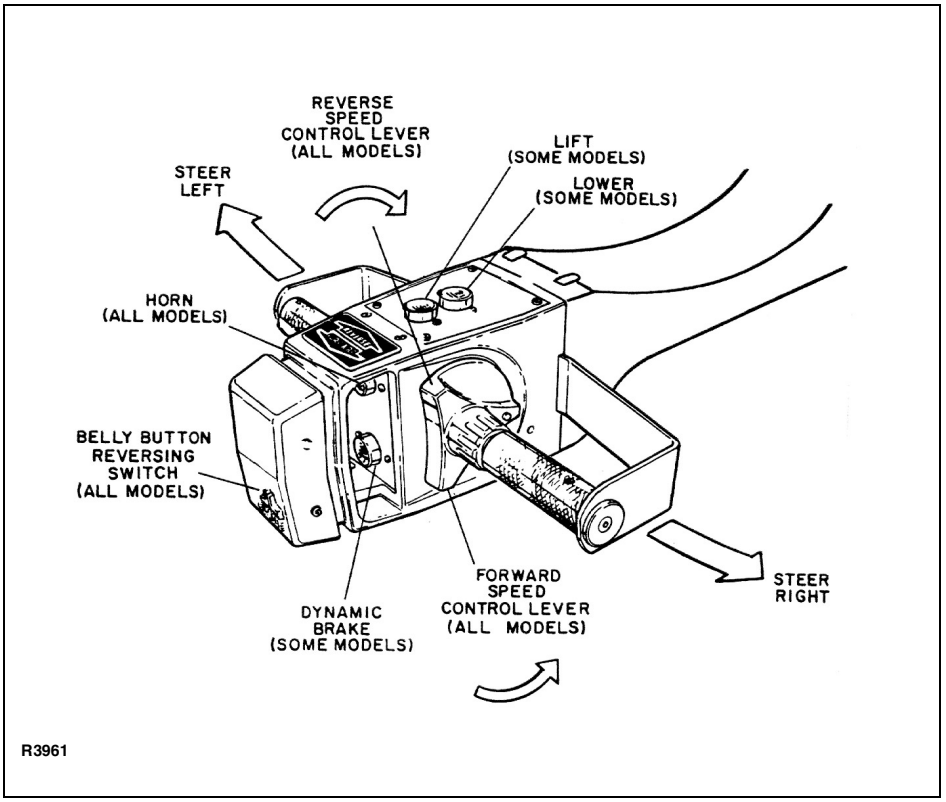

Control Handle

All directional and speed controls are located on the control handle.

Forward and reverse are controlled by rotating the speed control lever as shown. The lever is spring loaded to return to neutral when released. Further rotation in either direction will progress the truck from slow to maximum travel speed.

To change directions or to stop the truck, rotate the speed control lever in the opposite direction. The truck will come to a stop and then, unless the controls are returned to the center neutral position, accelerate in the opposite direction.

https://truckmanualshub.com/

Steering

Moving the control handle (which connects to the steering arm) right or left will turn the truck right or left. When maneuvering around corners, make square turns and be sure there is adequate clearance.

Stopping

Stop the truck as gradually as possible. Unnecessary rapid stopping could be hazardous. Load could become unstable.

There are four possible ways to stop the truck:

1. **Plugging:** This electrical braking function consists of rotating the speed control lever in the opposite direction of travel and then releasing it when the truck stops. Plugging is a convenient way to stop the truck during normal operation. If the control is not released, the truck will accelerate in the opposite direction.
2. **Steering arm in horizontal position:** Lowering the steering arm to the horizontal position applies brake pad pressure to the brake disc. Lowering the steering arm below the horizontal position increases the braking force and de-energizes the controls.

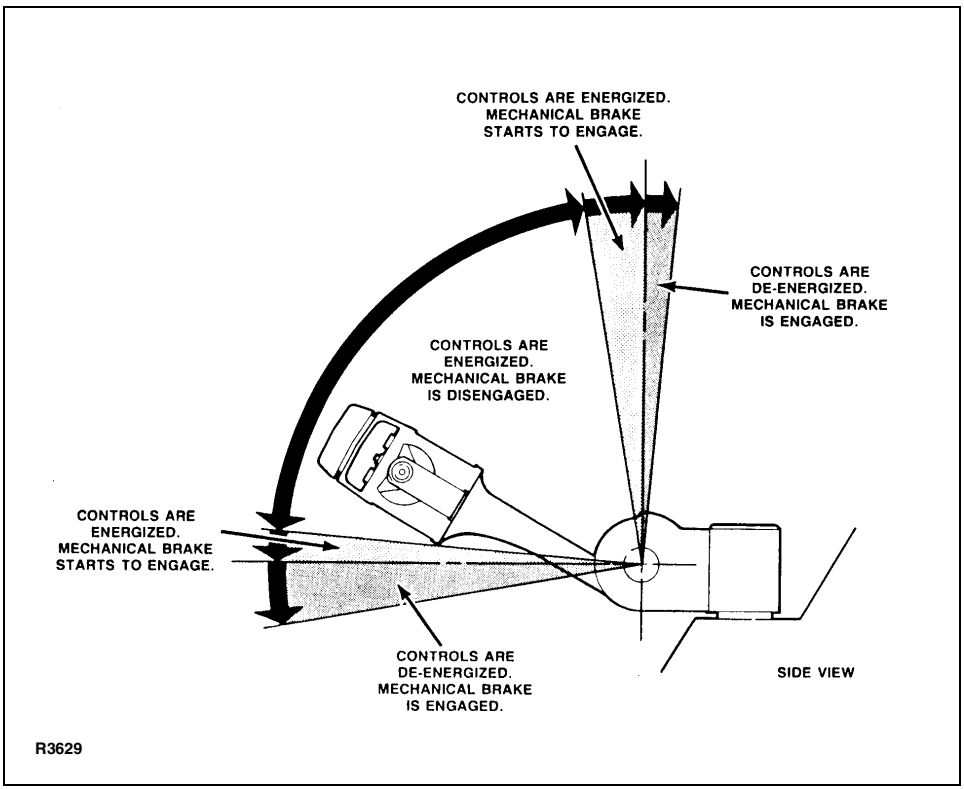

Steering Arm Braking Positions

https://truckmanualshub.com/

3. **Steering arm in vertical position:** Raising the steering arm to near vertical position applies brake pad pressure to the brake disc. Further vertical positioning increases the braking force and de-energizes the controls. This position services as a parking brake. As a safety precaution, the steering arm is spring loaded to return to the vertical position in the event the driver releases the control handle during operation. This is know as deadman braking.
4. **Dynamic Brake:** The dynamic brake (some models) serves as a secondary braking system completely independent from the mechanical brake. Pressing the dynamic brake pushbutton applies a constant DC voltage across the drive motor field coils to stop the motor.

WARNING:

The dynamic brake pushbutton should not be held in place longer than one or two seconds. Excessive use may blow the 40 Amp fuse, which will render dynamic brake inoperative.

Parking

When parking the truck, do not obstruct traffic lanes or aisles.

1. Park the truck in its designated parking area.
2. Raise the steering arm until vertical to apply the parking brake.
3. Fully lower forks.
4. Turn keyswitch (if so equipped) to off position. Remove key for added security.
5. Pull out battery disconnect.

Battery Charging

Refer to DOC 245 for battery safety and maintenance.

NOTE: Battery charging instructions are contained in the service manual.

Load Handling

WARNING:

Handle only loads arranged for stability and always use caution. Raise and lower the load smoothly to prevent the load from falling.

WARNING:

Always be sure the load and load center are within the capacity of the truck. If in doubt check the nameplate.

1. Approach the load slowly.
2. Stop the truck when the forks are just in front of the load.

https://truckmanualshub.com/

3. Adjust the forks to the maximum practical width to support the load to be lifted.
4. Raise or lower the forks until they are properly aligned with the pallet openings.
5. Move the truck slowly into position so that the forks are centered about the load.
6. Make sure the load is against the backrest and then raise the forks until the pallet clears the rack. Tilt (if so equipped) the forks slightly backward.
7. Move the truck away from the rack until the load clears the rack and then lower the forks.
8. Lead the truck by the control handle with the load trailing except when in confined areas. Ramps should be traveled with operator uphill of truck when empty, or operator downhill of truck with load on forks.
9. Always look in the direction of travel. Move slowly and check clearances when approaching obstructions.
10. Do not make sudden starts and stops. Operate truck smoothly and gradually.
11. Travel slowly and squarely around corners. Remember that the trailing load wheels do not follow the turn path of the drive wheel; instead, they tend to cut the corner.
12. Line up the truck with the unloading area.
13. Stop the truck and raise or lower the forks until the pallet is in position with the unloading area.
14. Check the load alignment with surrounding objects.
15. Be careful not to damage or move adjacent loads and objects.
16. Slowly move into position.
17. Lower the forks and tilt forward until the load is resting on its own. Be sure there is no downward force on the forks on the rack or floor.
18. Move the truck back until the forks are clear of the pallet.
19. If forks are elevated, lower to travel position.

Moving a Disabled Truck

Do not attempt to move a disabled truck; notify your supervisor or proper authority.

The following operating instructions appear on the truck warning decal, which is located near the steering arm.

https://truckmanualshub.com/

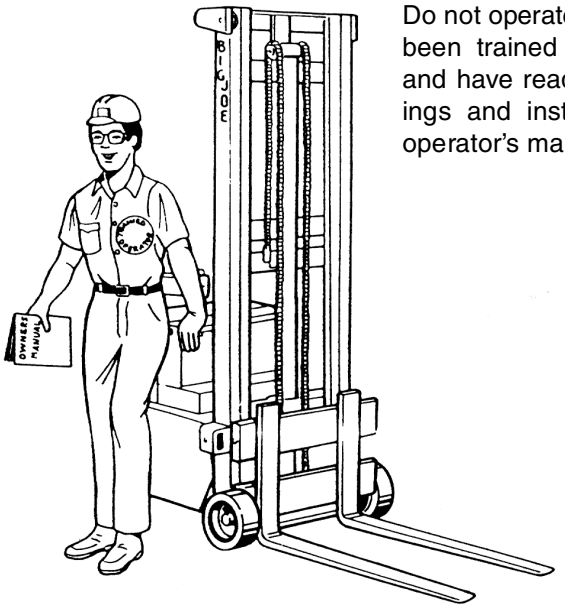

R4050

Do not operate this truck unless you have been trained and authorized to do so, and have read and understand all warnings and instructions contained in this operator's manual and on this truck.

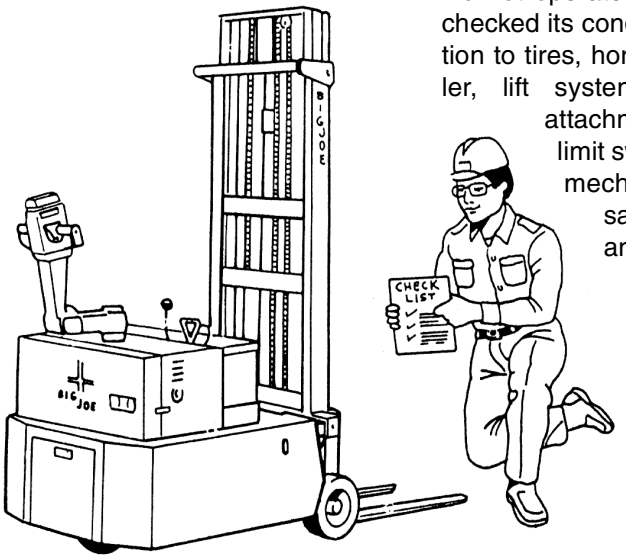

R4051

Do not operate this truck until you have checked its condition. Give special attention to tires, horn, lights, battery, controller, lift systems (including forks or attachments, chains, cables and limit switches), brakes, steering mechanism, guards and safety devices. If you have any questions, notify your supervisor or proper authority.

https://truckmanualshub.com/

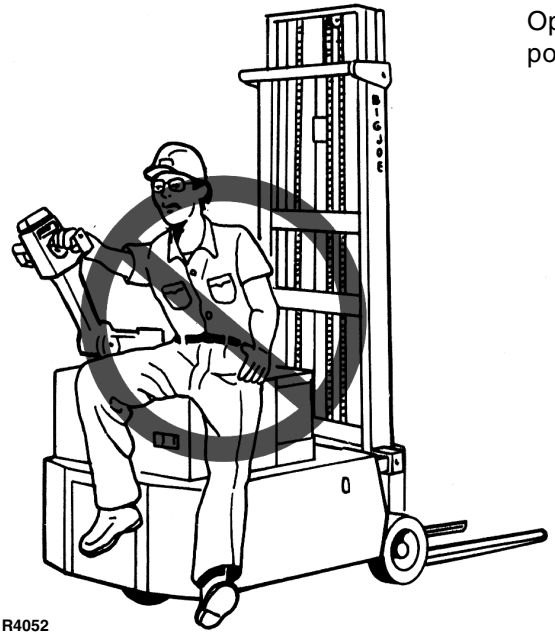

Operate truck only from walking position.

Never place any part of the body into the mast structure or between the mast and the truck.

https://truckmanualshub.com/

Do not carry passengers.

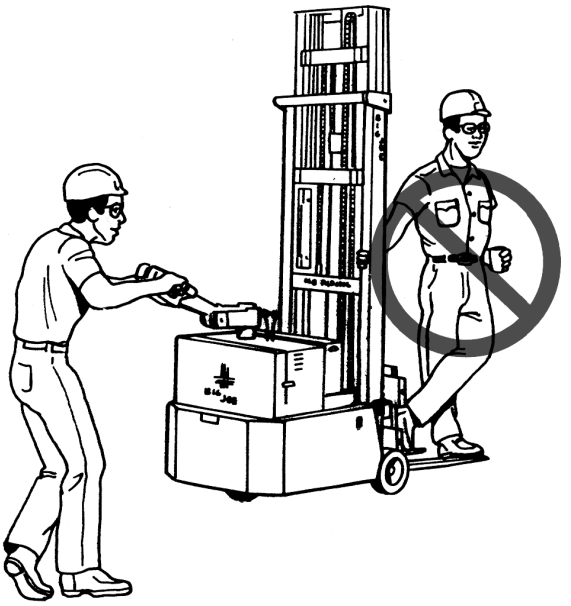

R4054

Keep feet clear of truck.

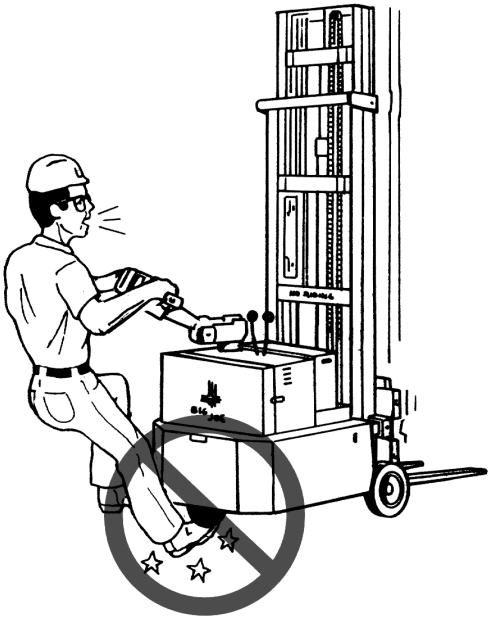

R4055

https://truckmanualshub.com/

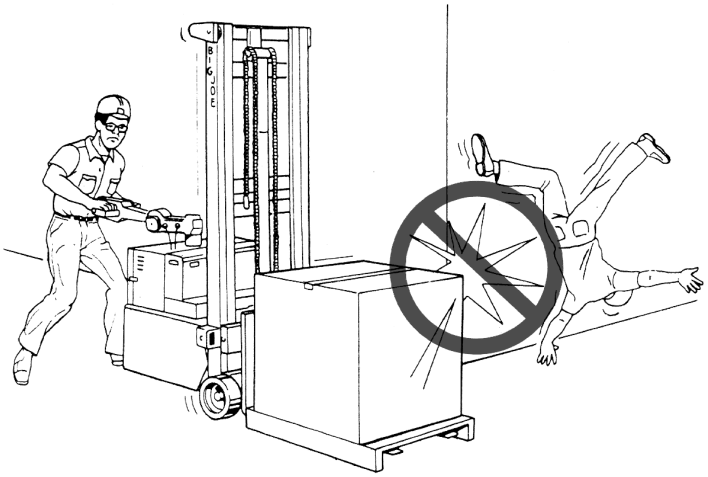

Observe applicable traffic regulations. Yield right-of-way to pedestrians. Slow down and sound horn at cross aisles and wherever vision is obstructed.

R4056

Start, stop, travel, steer and brake smoothly. Slow down for turns and on uneven or slippery surfaces that could cause truck to slide or overturn. Use special care when traveling without load as the risk of overturn may be greater.

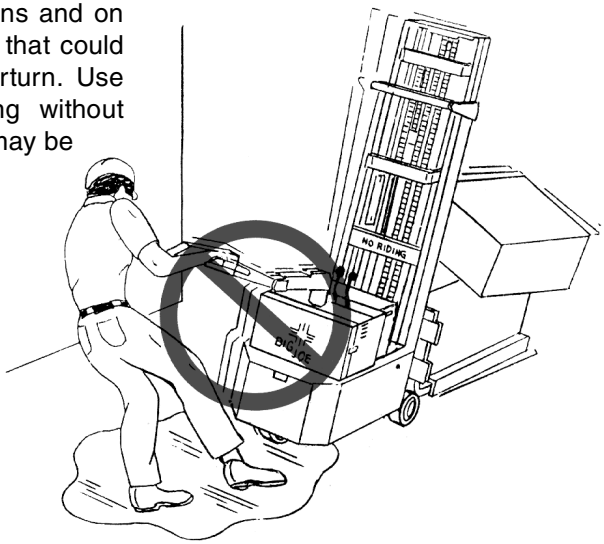

R4057

https://truckmanualshub.com/

Travel with lifting mechanism as low as possible and tilted back. Always look in direction of travel. Keep a clear view, and when load interferes with visibility, travel with load or lifting mechanism trailing.

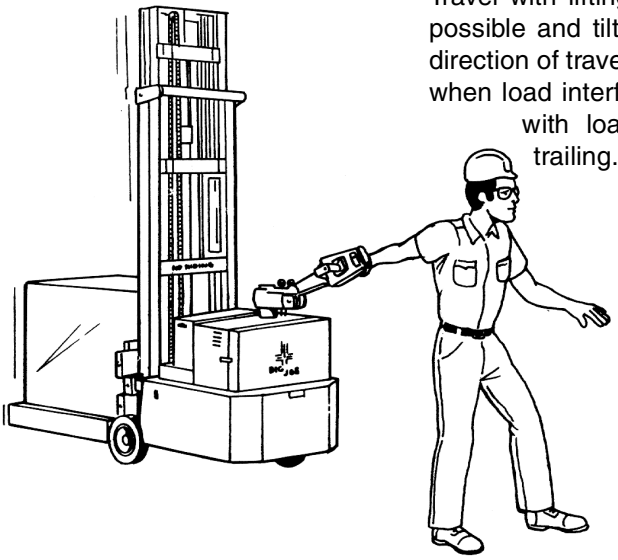

R4058

Use special care when operating on ramps; travel slowly, and do not angle or turn. Travel unloaded with lifting mechanism downhill, and travel loaded with load uphill.

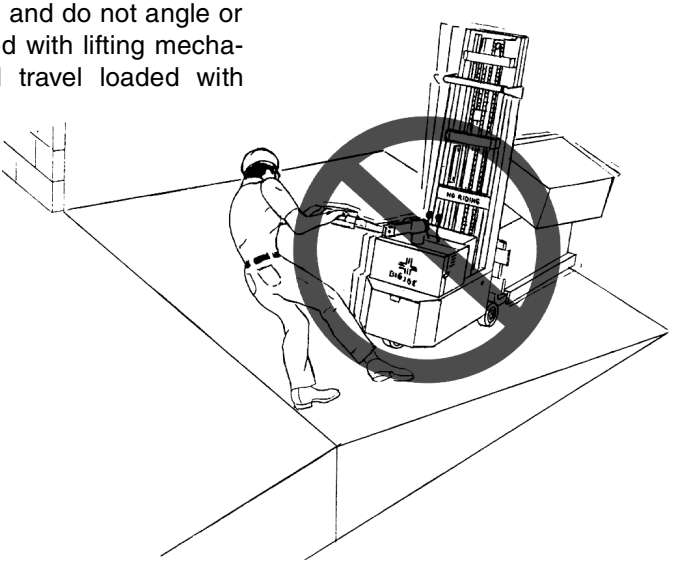

R4059

https://truckmanualshub.com/

Do not overload truck. Check capacity plate for load weight and load center information.

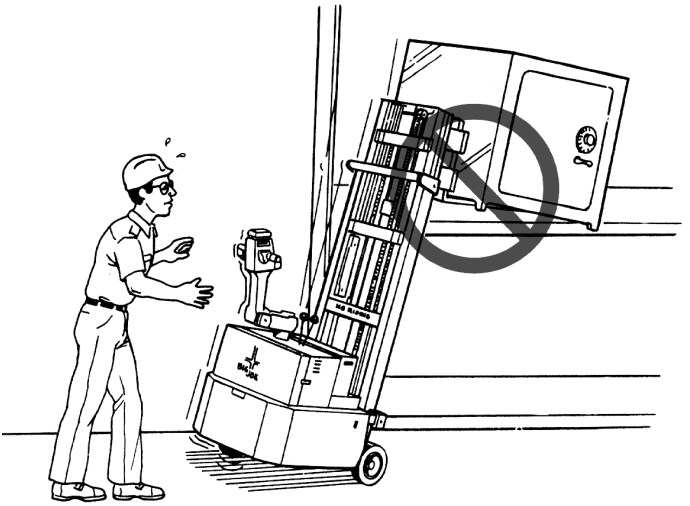

R4060

When using forks, space forks as far apart as load will permit. Before lifting, be sure load is centered, forks are completely under load, and load is as far back as possible against load backrest.

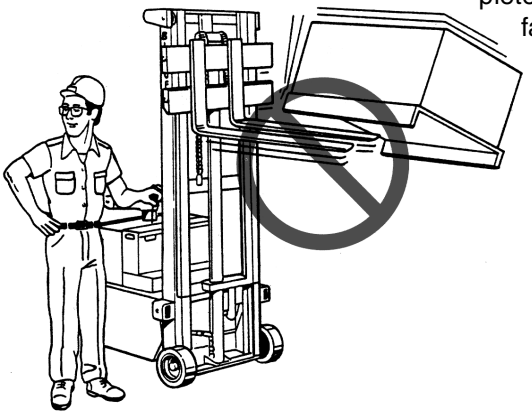

R4061

https://truckmanualshub.com/

Do not handle unstable or loosely stacked loads. Use special care when handling long, high or wide loads to avoid losing the load, striking bystanders or tipping the truck.

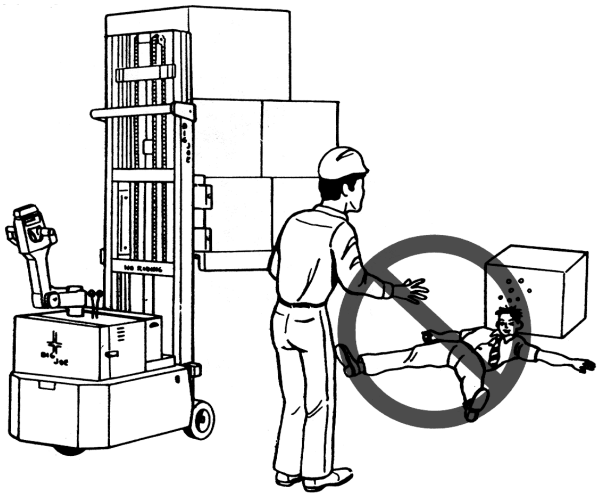

R4062

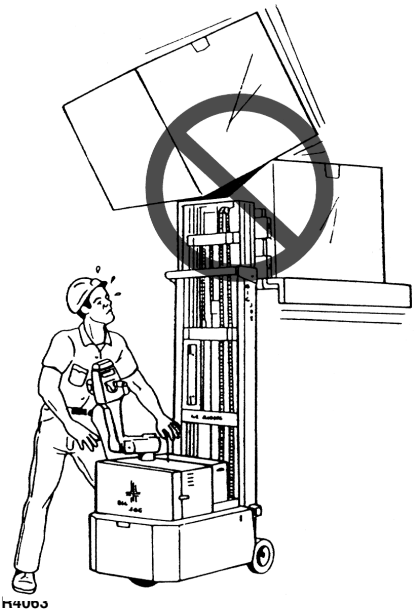

R4063

Do not handle loads which are higher than the load backrest or load backrest extension unless load is secured so that no part of it could fall backward.

https://truckmanualshub.com/

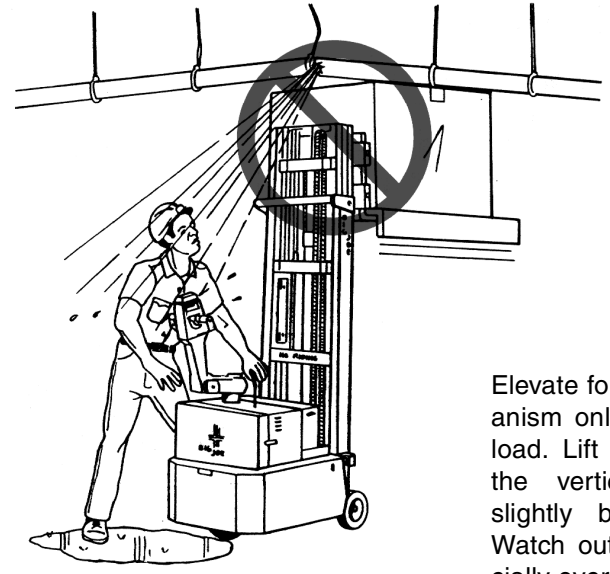

R4064

Elevate forks or other lifting mechanism only to pick up or stack a load. Lift and lower with mast in the vertical position or tilted slightly back - never forward. Watch out for obstructions, especially overhead.

Operate tilting mechanism slowly and smoothly. Do not tilt forward when elevated except to pick up or deposit a load. When stacking use only enough backward tilt to stabilize load.

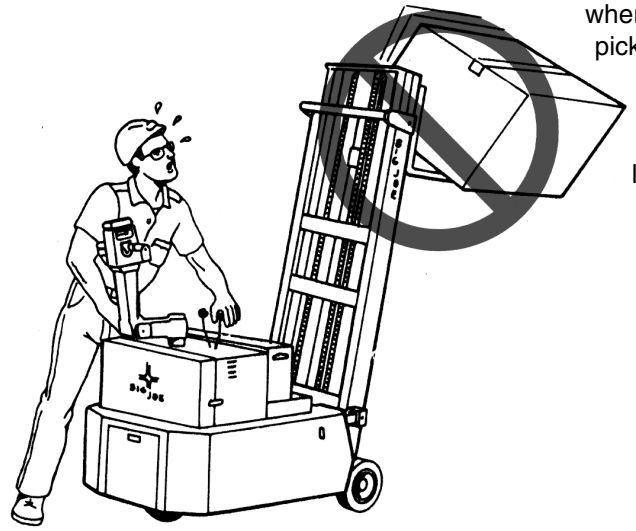

R4065

https://truckmanualshub.com/

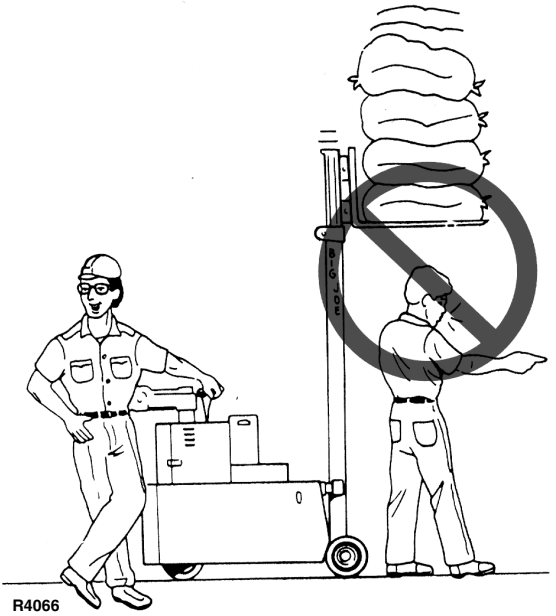

R4066

Do not allow anyone to stand or pass under a load or lifting mechanism.

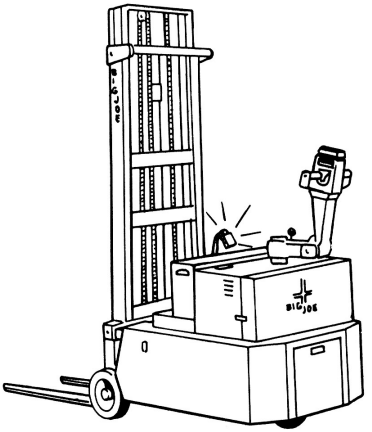

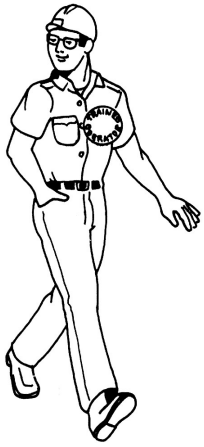

When leaving truck neutralize travel control. Fully lower lifting mechanism and set brake. When leaving truck unattended also shut off power.

R4067

https://truckmanualshub.com/

https://trucknmanualshub.com/

https://truckmanualshub.com/

NOTICE - OBTAINING A PARTS AND SERVICE MANUAL

https://forkliftmanuals.info.com

A complete parts and service manual covering this truck is available from Big Joe Manufacturing Company. To order, obtain the serial number of your truck and contact your Big Joe Authorized Dealer.

https://truckmanualshub.com/