SUSPENSION

TABLE OF CONTENTS

page page

SUSPENSION - ELECTRICAL DIAGNOSTICS 1
SUSPENSION - SERVICE INFORMATION 27

SUSPENSION - ELECTRICAL DIAGNOSTICS

TABLE OF CONTENTS

page

ACTIVE CHASSIS - ELECTRICAL DIAGNOSTICS 2

ACTIVE CHASSIS - ELECTRICAL DIAGNOSTICS

TABLE OF CONTENTS

page

ACTIVE CHASSIS - ELECTRICAL DIAGNOSTICS
DIAGNOSIS AND TESTING
C143D-STABILIZER SELECT SWITCH PERFORMANCE 3
C143E - STABILIZER BAR SWITCH CIRCUIT LOW 7
C143F-STABILIZER SELECT SWITCH CIRCUIT HIGH 11
C2124-STABILIZER BAR INDICATOR CONTROL CIRCUIT 15
CHECKING STABILIZER SELECT SWITCH OPERATION 22
FDCM VERIFICATION TEST 26

ACTIVE CHASSIS - ELECTRICAL DIAGNOSTICS

DIAGNOSIS AND TESTING

C143D-STABILIZER SELECT SWITCH PERFORMANCE

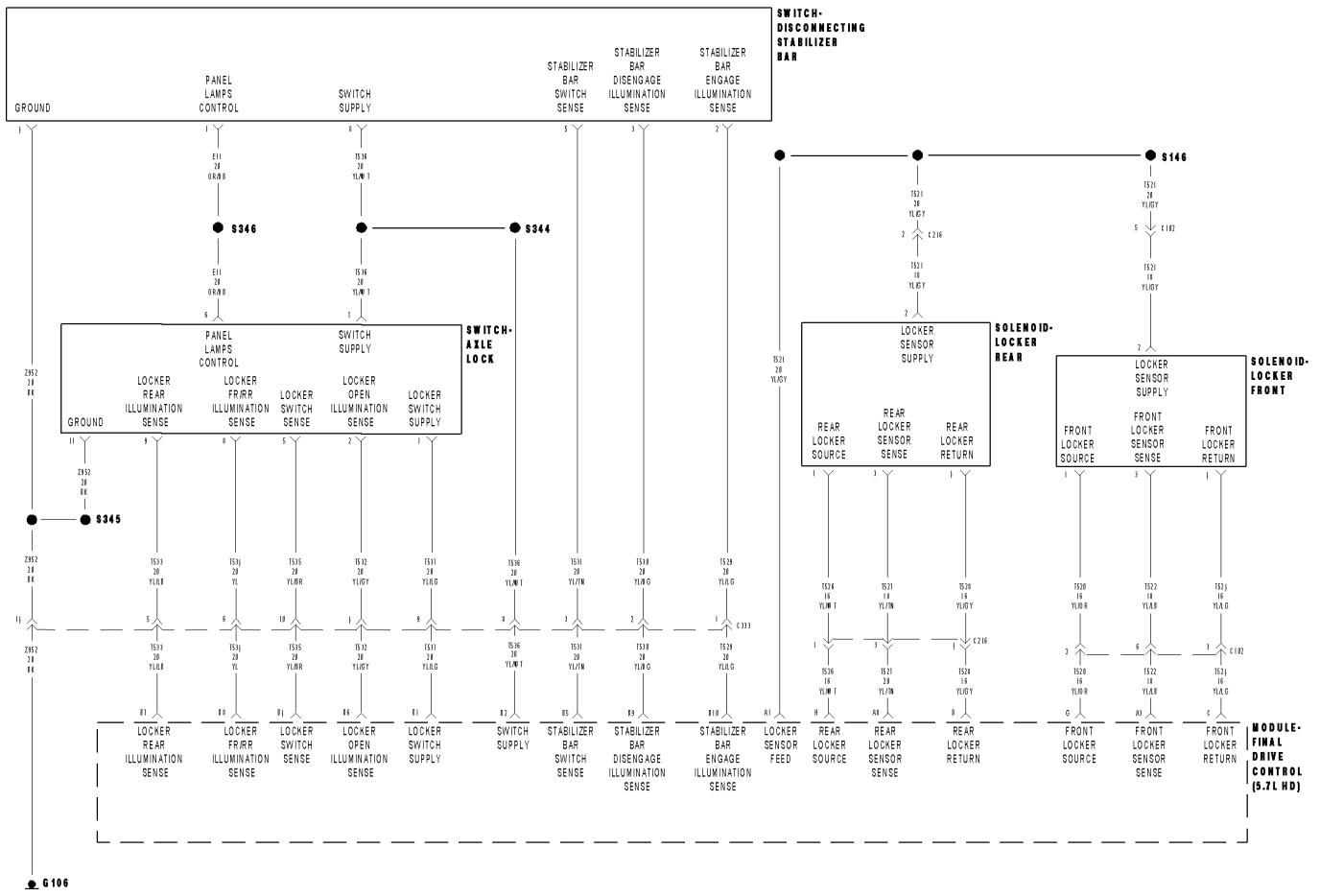

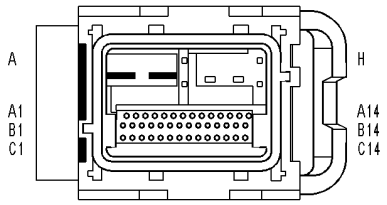

MODULE-FINAL DRIVE CONTROL (5.7L HD)

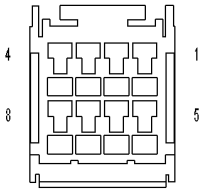

SWITCH-DISCONNECTING STABILZER BAR

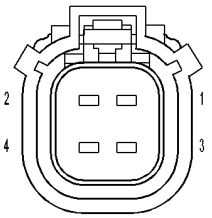

SOLENOID-LOCKER REAR

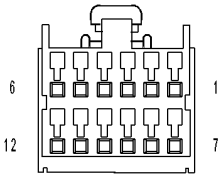

SWITCH-AXLE LOCK

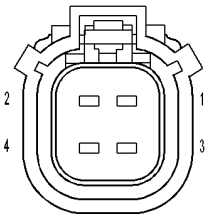

SOLENIOD-LOCKER FRONT

81459daf

C143D-STABILIZER SELECT SWITCH PERFORMANCE (CONTINUED)

For a complete wiring diagram **Refer to Section 8W**.

- **When Monitored:**
  Ignition on.
- **Set Condition:**
  During switch operation, the FDCM senses the Disconnecting Stabilizer Bar Switch resistance is out of specification.

Possible Causes
SWITCH INTERMITTENT
DISCONNECTING STABILIZER BAR SWITCH
(T531) STABILIZER BAR SWITCH SENSE CIRCUIT OPEN/HIGH RESISTANCE
(T536) SWITCH SUPPLY CIRCUIT
FDCM

1. DTC ACTIVE

CAUTION: Before removing the FDCM harness connector, clean the connector and locking cam area of dirt and debris. Failure to do so can result in the connector being jammed or damage to the locking cams on the harness connector or module. Do not force the assist arm when releasing or installing the harness connector.

Turn the ignition on, engine not running

With the DRBIII®, read FDCM DTC(s).

Is the DTC active at this time?

Yes >> Go To 2

No >> Go To 5

---

2. DISCONNECTING STABILIZER SWITCH OPERATION

NOTE: Before continuing with the below diagnostic test, ensure the FDCM harness connector seal is installed correctly. Inspect the terminals on both harness connector and the module for damage. Failure to do so can result in misdiagnoses of the system.

Turn the ignition off.

Disconnect the Disconnecting Stabilizer Bar Switch harness connector.

Remove the Disconnecting Stabilizer Bar Switch.

Measure the resistance on the Disconnecting Stabilizer Bar Switch between the Switch Supply terminal and the Stabilizer Bar Switch Sense terminal.

The resistance must read as follows for each position of the switch.

- **Off Road: 33 ohms +/- 5%**
- **On Road: 420 ohms +/- 5%**
- **Switch Not Applied: 2.2k ohms +/- 5%**

Does the ohmmeter read correctly for each position of the Disconnecting Stabilizer Bar Switch?

Yes >> Go To 3

No >> Replace the Axle Locker Switch.
Perform FDCM VERIFICATION TEST.

C143D-STABILIZER SELECT SWITCH PERFORMANCE (CONTINUED)

3. (T531) STABILIZER BAR SWITCH SENSE CIRCUIT OPEN

Disconnect the FDCM harness connector.

Measure the resistance of the (T531) Stabilizer Bar Switch Sense circuit between the Disconnecting Stabilizer Bar Switch and the FDCM harness connectors.

Is the resistance below 5.0 ohms?

Yes >> Go To 4

No >> Repair the open or high resistance in the (T531) Stabilizer Bar Switch Sense circuit.
Perform FDCM VERIFICATION TEST.

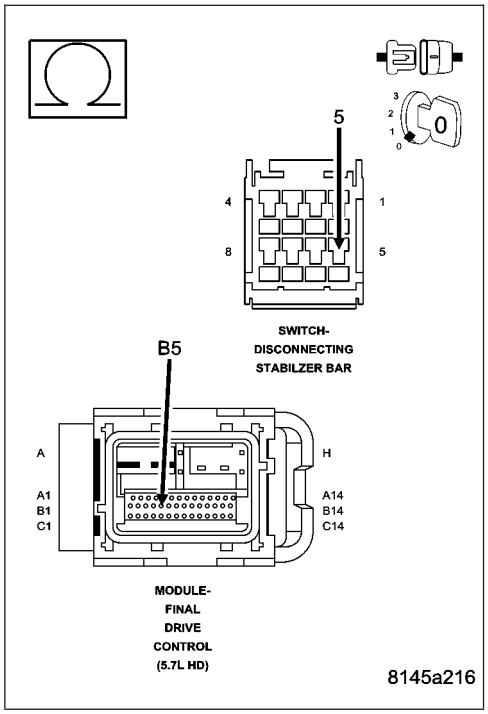

4. (T536) SWITCH SUPPLY CIRCUIT OPEN

Measure the resistance of the (T536) Switch Supply circuit between the Disconnecting Stabilizer Bar Switch and the FDCM harness connectors.

Is the resistance below 5.0 ohms?

Yes >> Replace the FDCM in accordance with the Service Information
Perform FDCM VERIFICATION TEST.

No >> Repair the open or high resistance in the (T536) Switch Supply circuit.
Perform FDCM VERIFICATION TEST.

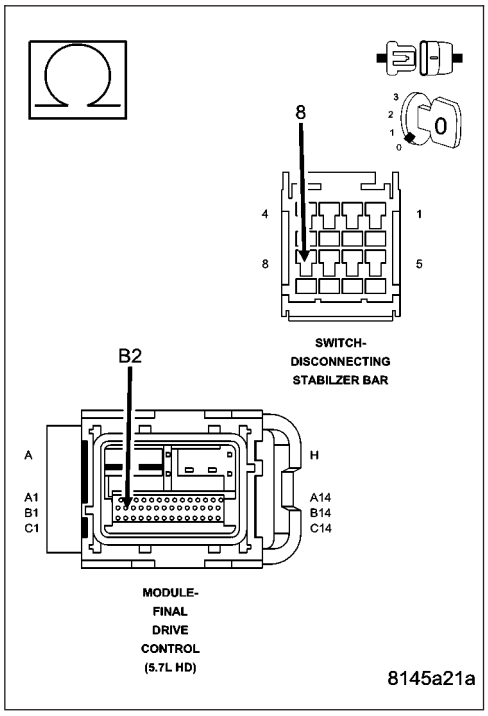

C143D-STABILIZER SELECT SWITCH PERFORMANCE (CONTINUED)

5. INTERMITTENT WIRING AND CONNECTORS

The conditions necessary to set this DTC are not present at this time.

Using the schematics as a guide, inspect the wiring and connectors specific to this circuit.

Wiggle test the wiring harness and connectors while checking for shorted and open circuits.

Using the DRBIII®, monitor the data related to this circuit while performing the wiggle test. Look for the data to change or for the DTC to reset.

While monitoring the Stabilizer Bar State on the DRBIII®, move the switch to each position. The DRBIII® display must match the position on the actual switch.

Were there any problems found?

Yes >> Repair as necessary.
Perform FDCM VERIFICATION TEST.

No >> Test Complete.

C143E - STABILIZER BAR SWITCH CIRCUIT LOW

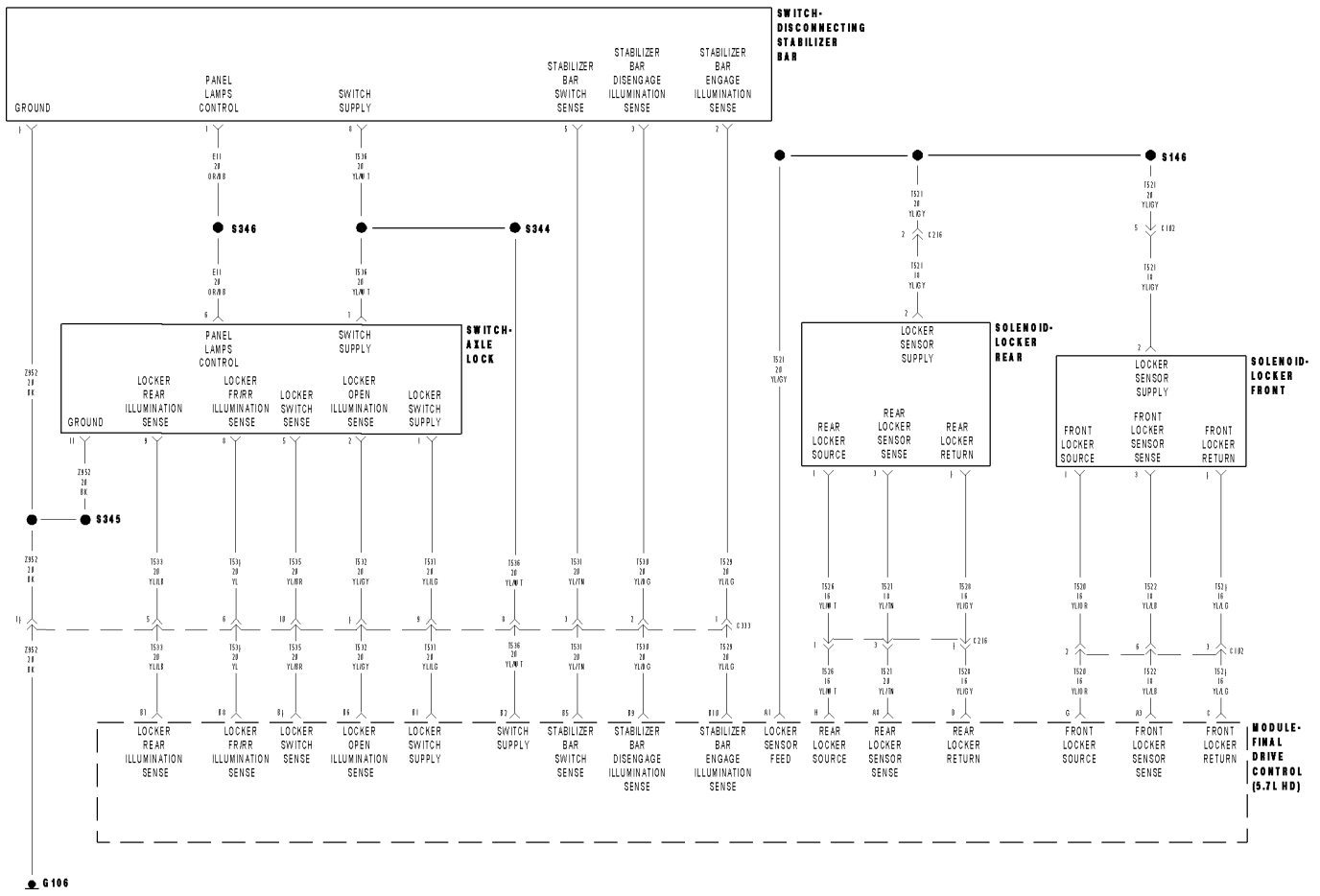

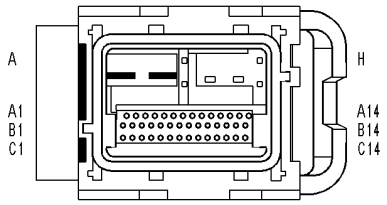

MODULE-FINAL DRIVE CONTROL (5.7L HD)

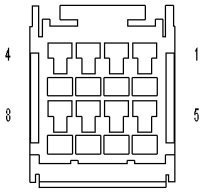

SWITCH-DISCONNECTING STABILZER BAR

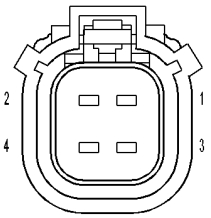

SOLENOID-LOCKER REAR

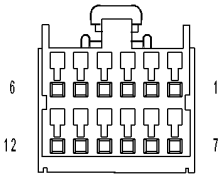

SWITCH-AXLE LOCK

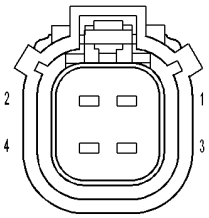

SOLENIOD-LOCKER FRONT

81459daf

C143E - STABILIZER BAR SWITCH CIRCUIT LOW (CONTINUED)

For a complete wiring diagram **Refer to Section 8W**.

- **When Monitored:**
  Ignition on.
- **Set Condition:**
  During switch operation, the FDCM senses the Disconnecting Stabilizer Bar Switch sense is below 0.25 volt.

Possible Causes
SWITCH INTERMITTENT
DISCONNECTING STABILILZER BAR SWITCH
(T536) SWITCH SUPPLY CIRCUIT SHORTED TO GROUND
(T531) STABILIZER BAR SWITCH SENSE CIRCUIT SHORT TO GROUND
FDCM

1. DTC ACTIVE

CAUTION: Before removing the FDCM harness connector, clean the connector and locking cam area of dirt and debris. Failure to do so can result in the connector being jammed or damage to the locking cams on the harness connector or module. Do not force the assist arm when releasing or installing the harness connector.

Turn the ignition on, engine not running

With the DRBIII®, read FDCM DTC(s).

Is the DTC active at this time?

Yes >> Go To 2

No >> Go To 5

---

2. DISCONNECTING STABILIZER BAR SWITCH OPERATION

NOTE: Before continuing with the below diagnostic test, ensure the FDCM harness connector seal is installed correctly. Inspect the terminals on both harness connector and the module for damage. Failure to do so can result in misdiagnoses of the system.

Turn the ignition off.

Disconnect the Disconnecting Stabilizer Switch harness connector.

Remove the Disconnecting Stabilizer Switch.

Measure the resistance on the Disconnecting Stabilizer Switch between the Switch Supply terminal and the Stabilizer Switch Sense terminal.

The resistance must read as follows for each position of the switch.

- **Off Road: 33 ohms +/- 5%**
- **On Road: 420 ohms +/- 5%**
- **Switch Not Applied: 2.2k ohms +/- 5%**

Does the ohmmeter read correctly for each position of the Stabilizer Bar Switch

Yes >> Go To 3

No >> Replace the Disconnecting Stabilizer Switch.
Perform FDCM VERIFICATION TEST.

C143E - STABILIZER BAR SWITCH CIRCUIT LOW (CONTINUED)

3. (T531) STABILIZER BAR SWITCH SENSE CIRCUIT SHORTED TO GROUND

Disconnect the FDCM harness connector.

Measure the resistance of the (T531) Stabilizer Bar Switch Sense circuit in the Disconnecting Stabilizer Switch harness connector to ground.

Is the resistance below 5.0 ohms?

Yes >> Repair the short to ground in the (T531) Disconnecting Stabilizer Switch Sense circuit.
Perform FDCM VERIFICATION TEST.

No >> Go To 4

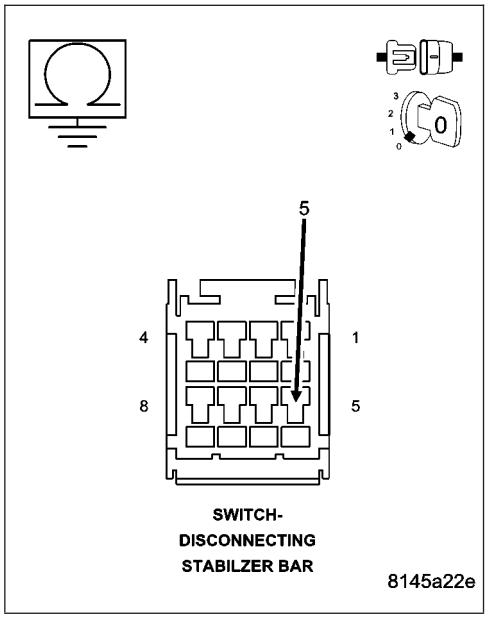

4. (T536) SWITCH SUPPLY CIRCUIT SHORT TO GROUND

Measure the resistance of the (T536) Switch Supply circuit in the Disconnecting Stabilizer Switch harness connector to ground.

Is the resistance below 5.0 ohms?

Yes >> Repair the short to ground in the (T536) Switch Supply circuit.
Perform FDCM VERIFICATION TEST.

No >> Replace the FDCM in accordance with the Service Information
Perform FDCM VERIFICATION TEST.

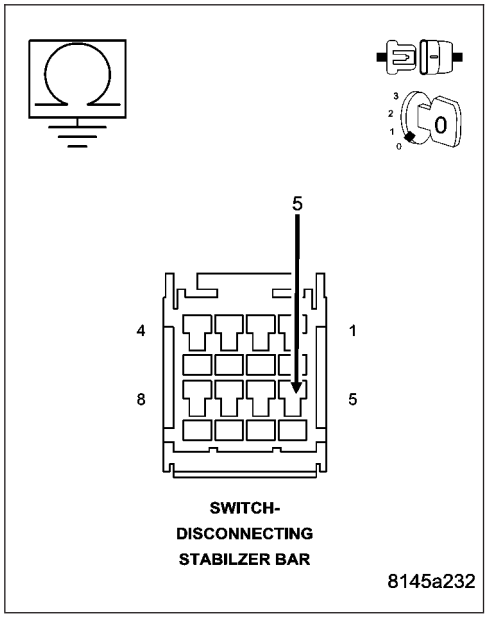

C143E - STABILIZER BAR SWITCH CIRCUIT LOW (CONTINUED)

5. INTERMITTENT WIRING AND CONNECTORS

The conditions necessary to set this DTC are not present at this time.

Using the schematics as a guide, inspect the wiring and connectors specific to this circuit.

Wiggle test the wiring harness and connectors while checking for shorted and open circuits.

Using the DRBIII®, monitor the data related to this circuit while performing the wiggle test. Look for the data to change or for the DTC to reset.

While monitoring the Stabilizer Bar State on the DRBIII®, move the switch to each position. The DRBIII® display must match the position on the actual switch.

Were there any problems found?

Yes >> Repair as necessary.
Perform TRANSFER CASE VERIFICATION TEST.

No >> Test Complete.

C143F-STABILIZER SELECT SWITCH CIRCUIT HIGH

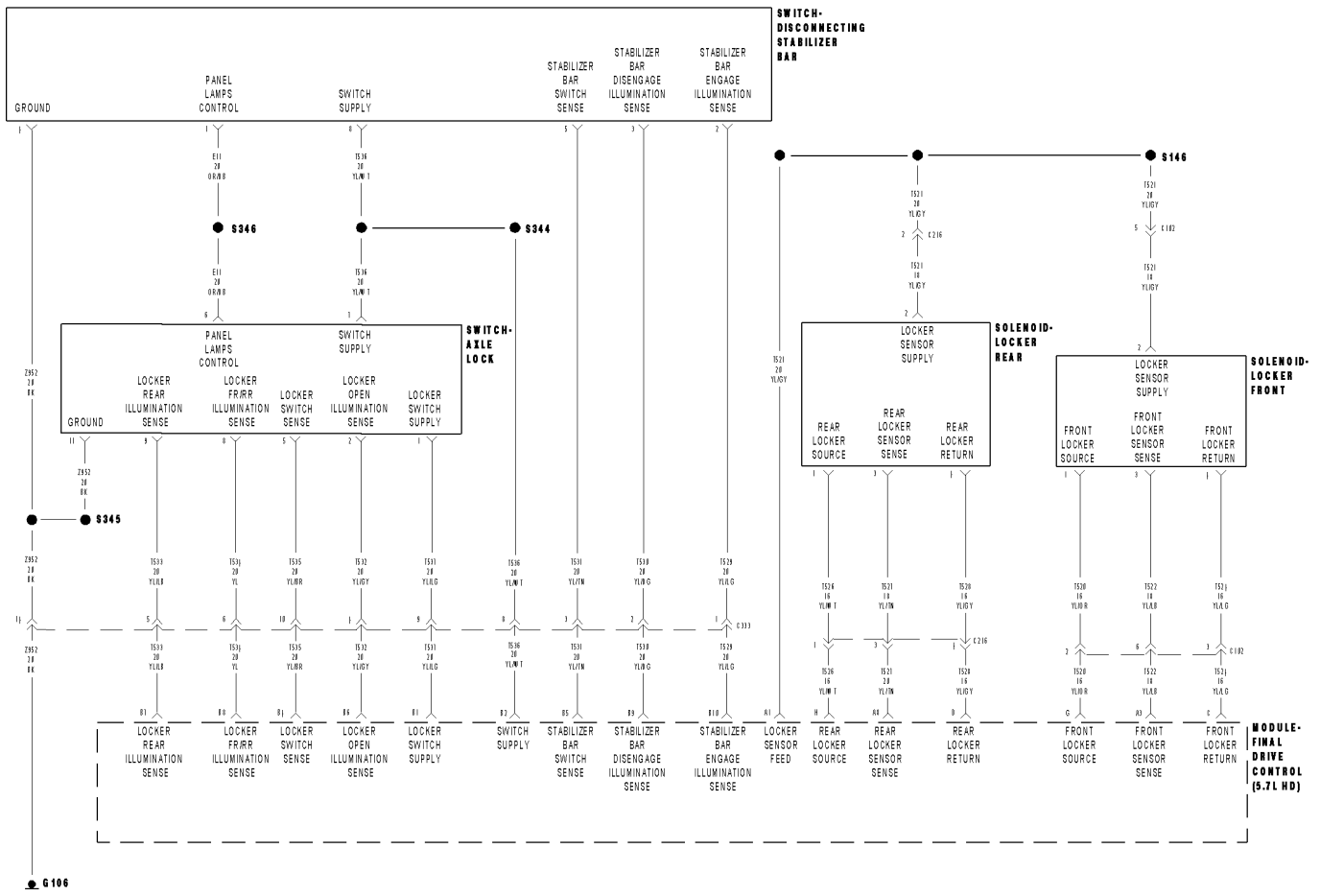

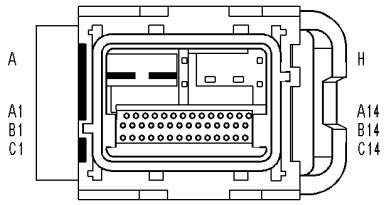

MODULE-FINAL DRIVE CONTROL (5.7L HD)

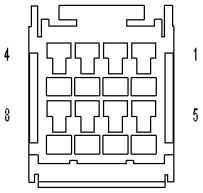

SWITCH-DISCONNECTING STABILZER BAR

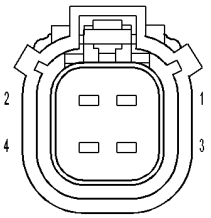

SOLENOID-LOCKER REAR

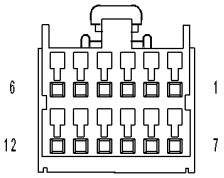

SWITCH-AXLE LOCK

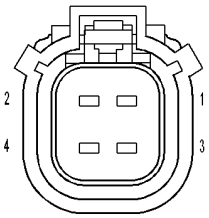

SOLENIOD-LOCKER FRONT

81459daf

C143F-STABILIZER SELECT SWITCH CIRCUIT HIGH (CONTINUED)

For a complete wiring diagram **Refer to Section 8W**.

- **When Monitored:**
  Ignition on.
- **Set Condition:**
  During switch operation, the FDCM senses the Stabilizer Bar Switch Sense circuit is above 4.0 volts.

Possible Causes
SWITCH INTERMITTENT
STABILIZER BAR SWITCH
(T531) STABILIZER BAR SWITCH SENSE CIRCUIT SHORT TO VOLTAGE
(T536) SWITCH SUPPLY CIRCUIT SHORTED TO (T531) STABILIZER BAR SWITCH SENSE CIRCUIT
(T536) STABILIZER BAR SWITCH SENSE CIRCUIT OPEN
FDCM

1. DTC ACTIVE

CAUTION: Before removing the FDCM harness connector, clean the connector and locking cam area of dirt and debris. Failure to do so can result in the connector being jammed or damage to the locking cams on the harness connector or module. Do not force the assist arm when releasing or installing the harness connector.

Turn the ignition on, engine not running

With the DRBIII®, read FDCM DTC(s).

Is the DTC active at this time?

Yes >> Go To 2

No >> Go To 6

---

2. DISCONNECTING STABILIZER BAR SWITCH OPERATION

NOTE: Before continuing with the below diagnostic test, ensure the FDCM harness connector seal is installed correctly. Inspect the terminals on both harness connector and the module for damage. Failure to do so can result in misdiagnoses of the system.

Turn the ignition off.

Disconnect the Disconnecting Stabilizer Bar Switch harness connector.

Remove the Disconnecting Stabilizer Bar Switch.

Measure the resistance on the Disconnecting Stabilizer Bar Switch between the Switch Supply terminal and the Stabilizer Bar Switch Sense terminal.

The resistance must read as follows for each position of the switch.

- **Off Road: 33 ohms +/- 5%**
- **On Road: 420 ohms +/- 5%**
- **Switch Not Applied: 420 ohms +/- 5%**

Does the ohmmeter read correctly for each position of the Disconnecting Stabilizer Bar Switch

Yes >> Go To 5

No >> Replace the Disconnecting Stabilizer Bar Switch.
Perform FDCM VERIFICATION TEST.

C143F-STABILIZER SELECT SWITCH CIRCUIT HIGH (CONTINUED)

3. (T531) STABILIZER BAR SWITCH SENSE CIRCUIT SHORTED TO VOLTAGE

Disconnect the FDCM harness connector.

Turn the ignition on.

Measure the voltage of the (T531) Stabilizer Bar Switch Sense circuit in the Disconnecting Stabilizer Bar Switch harness connector.

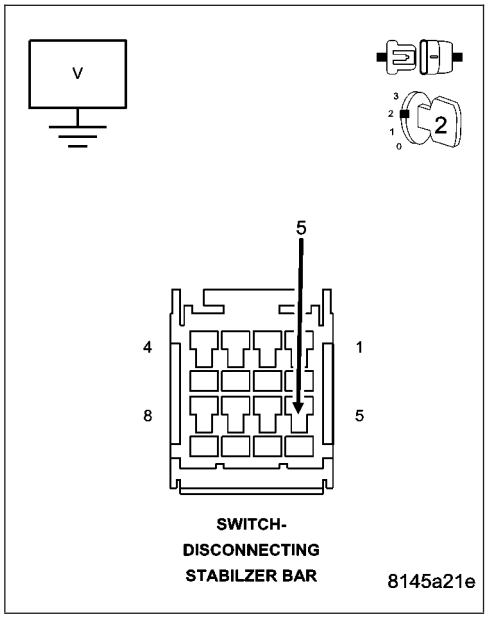

Does the voltmeter indicate voltage present?

Yes >> Repair the short to voltage in the (T531) Stabilizer Bar Switch Sense circuit.
Perform FDCM VERIFICATION TEST.

No >> Go To 4

4. (T536) SWITCH SUPPLY CIRCUIT SHORTED TO (T351) STABILIZER BAR SWITCH SENSE CIRCUIT

Measure the resistance between (T536) Switch Supply circuit and the (T531) Stabilizer Bar Switch Sense circuit in the Disconnecting Stabilizer Bar Switch harness connector.

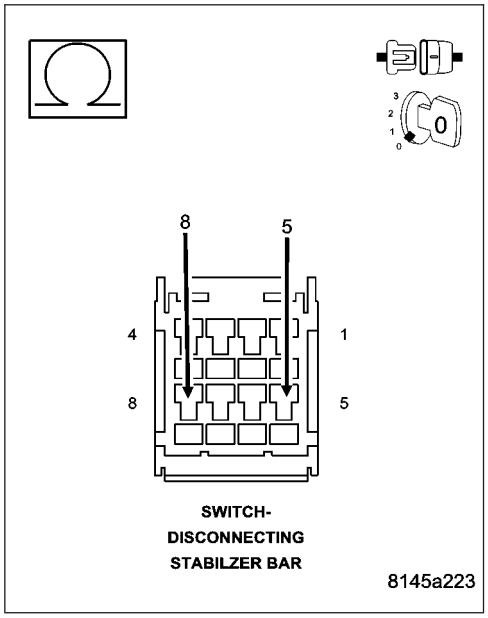

Is the resistance below 5.0 ohms?

Yes >> Repair the short between (T536) Switch Supply circuit and the (T531) Stabilizer Bar Switch Sense circuit.
Perform FDCM VERIFICATION TEST.

No >> Go To 5

C143F-STABILIZER SELECT SWITCH CIRCUIT HIGH (CONTINUED)

5. (T531) STABILIZER BAR SWITCH SENSE CIRCUIT OPEN

Measure the resistance of the (T531) Stabilizer Bar Switch Sense circuit between the Disconnecting Stabilizer Bar Switch and the FDCM harness connectors.

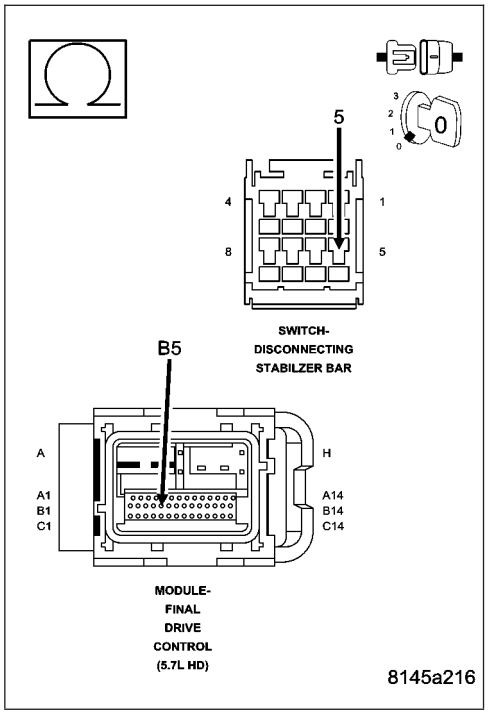

Is the resistance below 5.0 ohms?

Yes >> Replace the FDCM in accordance with the Service Information.
Perform FDCM VERIFICATION TEST.

No >> Repair the open in the (T531) Stabilizer Bar Switch Sense circuit.
Perform FDCM VERIFICATION TEST.

6. INTERMITTENT WIRING AND CONNECTORS

The conditions necessary to set this DTC are not present at this time.

Using the schematics as a guide, inspect the wiring and connectors specific to this circuit.

Wiggle test the wiring harness and connectors while checking for shorted and open circuits.

Using the DRBIII®, monitor the data related to this circuit while performing the wiggle test. Look for the data to change or for the DTC to reset.

While monitoring the Stabilizer Bar State on the DRBIII®, move the switch to each position. The DRBIII® display must match the position on the actual switch.

Were there any problems found?

Yes >> Repair as necessary.
Perform FDCM VERIFICATION TEST.

No >> Test Complete.

C2124-STABILIZER BAR INDICATOR CONTROL CIRCUIT

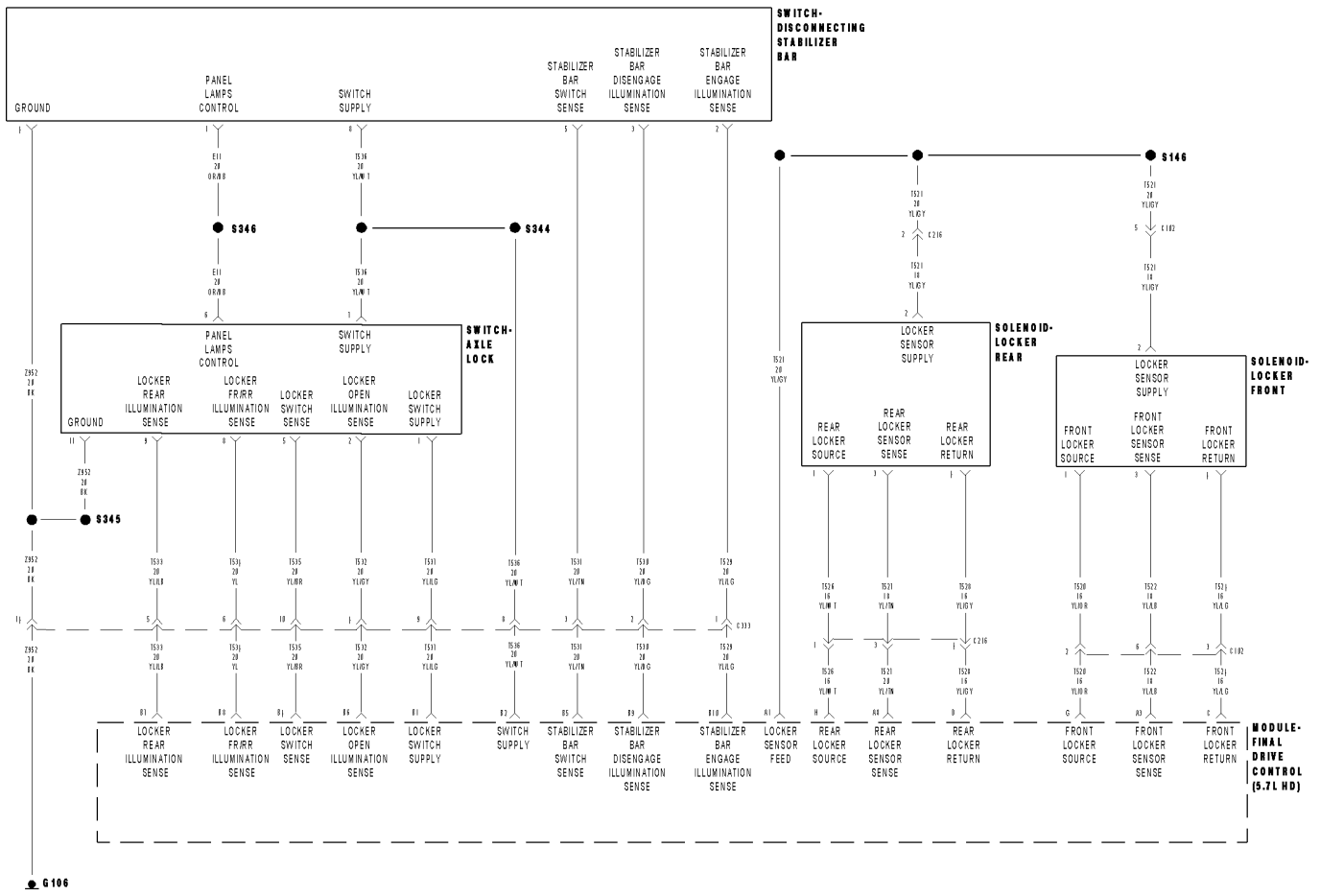

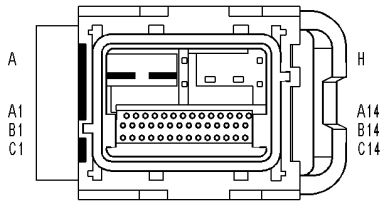

MODULE-FINAL DRIVE CONTROL (5.7L HD)

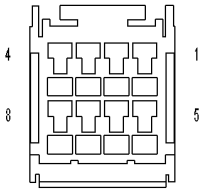

SWITCH-DISCONNECTING STABILZER BAR

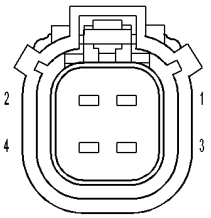

SOLENOID-LOCKER REAR

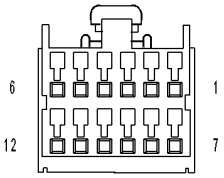

SWITCH-AXLE LOCK

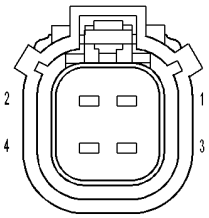

SOLENIOD-LOCKER FRONT

81459daf

C2124-STABILIZER BAR INDICATOR CONTROL CIRCUIT (CONTINUED)

For a complete wiring diagram **Refer to Section 8W**.

- **When Monitored:**
  Ignition on.
- **Set Condition:**
  The FDCM has detected a short to voltage, ground or an open in the Stabilizer Bar Disengage or Engage Illumination Sense circuits.

Possible Causes
DISCONNECTING STABILIZER SWITCH
(T539) STABILIZER BAR DISENGAGE ILLUMINATION SENSE SHORT TO VOLTAGE
(T539) STABILIZER BAR DISENGAGE ILLUMINATION SENSE SHORT TO GROUND
(T539) STABILIZER BAR DISENGAGE ILLUMINATION SENSE OPEN
(T529) STABILIZER BAR ENGAGE ILLUMINATION SENSE SHRORT VOLTAGE
(T529) STABILIZER BAR ENGAGE ILLUMINATION SENSE SHRORT GROUND
(T529) STABILIZER BAR ENGAGE ILLUMINATION SENSE OPEN
FDCM

1. DTC ACTIVE

CAUTION: Before removing the FDCM harness connector, clean the connector and locking cam area of dirt and debris. Failure to do so can result in the connector being jammed or damage to the locking cams on the harness connector or module. Do not force the assist arm when releasing or installing the harness connector.

NOTE: If set along with this DTC, diagnostic any Locker/Differential Indicator Control Circuit DTC(s) first before continuing.

Turn the ignition on, engine not running

With the DRBIII®, read FDCM DTC(s).

Is the DTC active at this time?

Yes >> Go To 2

No >> Go To 11

C2124-STABILIZER BAR INDICATOR CONTROL CIRCUIT (CONTINUED)

2. (T530) STABILIZER BAR DISENGAGE ILLUMINATION SENSE OPERATION

NOTE: Before continuing with the below diagnostic test, ensure the FDCM harness connector seal is installed correctly. Inspect the terminals on both harness connector and the module for damage. Failure to do so can result in misdiagnoses of the system.

Turn the ignition off.

Disconnect the Disconnecting Stabilizer Bar Switch harness connector.

Using a 12–volt test light connected to battery voltage, probe the (T530) Stabilizer Bar Disengage Illumination Sense circuit.

Turn the ignition on.

With the DRBIII®, actuate the Stabilizer Bar Disengage Illumination Sense circuit.

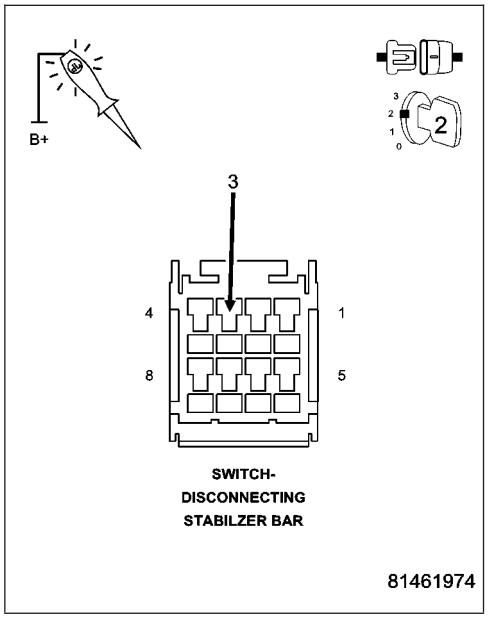

Does the test light illuminate and flash on and off?

Yes >> Go to 3

No >> Go To 4
Perform FDCM VERIFICATION TEST.

3. (T529) STABILIZER BAR ENGAGE ILLUMINATION SENSE OPERATION

Probe the Stabilizer Bar Disengage Illumination Sense circuit with the test light.

With the DRBIII®, actuate the (T529) Stabilizer Bar Engage Illumination Sense circuit.

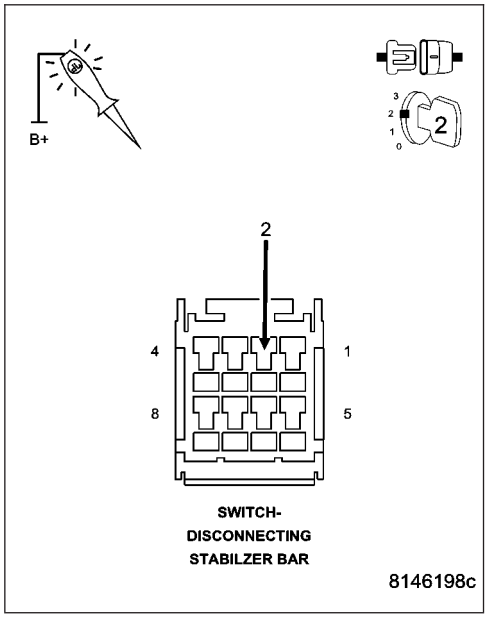

Does the test light illuminate and flash on and off?

Yes >> Replace the Disconnecting Stabilizer Bar Switch.
Perform FDCM VERIFICATION TEST.

No >> Go to 7

C2124-STABILIZER BAR INDICATOR CONTROL CIRCUIT (CONTINUED)

4. (T530) STABILIZER BAR DISENGAGE ILLUMINATION SENSE CIRCUIT SHORTED TO VOLTAGE

Turn the ignition off.

Disconnect the FDCM harness connector.

Turn the ignition on.

Measure the voltage on the (T530) Stabilizer Bar Disengage Illumination Sense circuit in the FDCM harness connector.

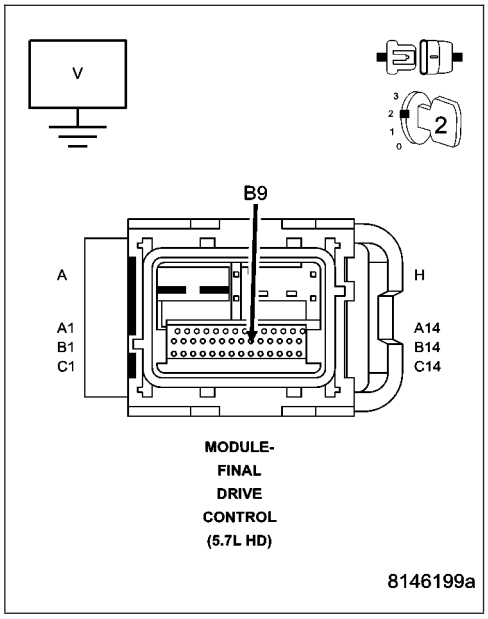

Does the voltmeter indicate voltage present?

Yes >> Repair the short to voltage in the (T530) Stabilizer Bar Disengage Illumination Sense circuit.
Perform FDCM VERIFICATION TEST.

No >> Go To 5

5. (T530) STABILIZER BAR DISENGAGE ILLUMINATION SENSE CIRCUIT SHORTED TO GROUND

Turn the ignition off.

Measure the resistance of the (T530) Stabilizer Bar Disengage Illumination Sense circuit between ground and the FDCM harness connector.

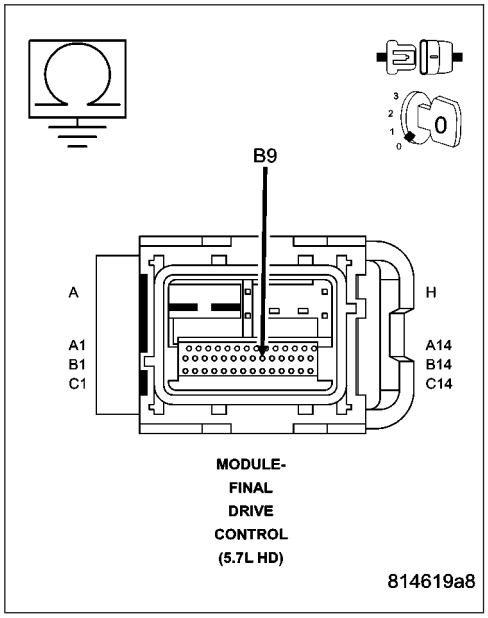

Is the resistance below 100 ohms?

Yes >> Repair the short to ground in the (T530) Stabilizer Bar Disengage Illumination Sense circuit.
Perform FDCM VERIFICATION TEST.

No >> Go To 6

C2124-STABILIZER BAR INDICATOR CONTROL CIRCUIT (CONTINUED)

6. (T530) STABILIZER BAR DISENGAGE ILLUMINATION SENSE CIRCUIT OPEN

Measure the resistance of the (T530) Stabilizer Bar Disengage Illumination Sense circuit between the Disconnecting Stabilizer Bar Switch harness connector and the FDCM harness connector.

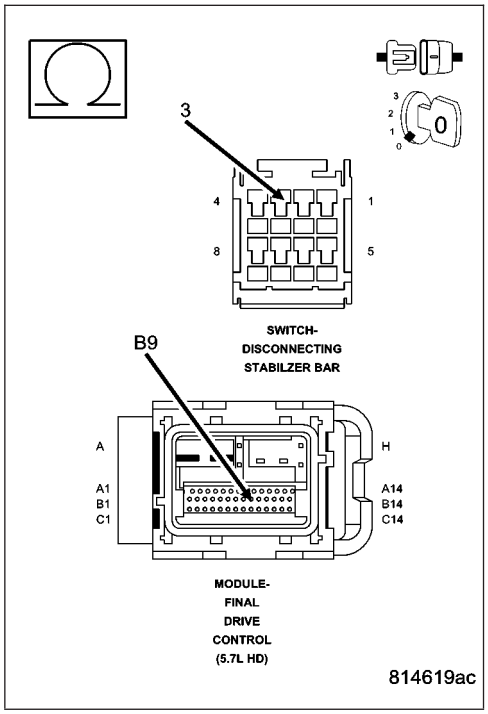

Is the resistance below 5.0 ohms?

Yes >> Go To 10

No >> Repair the open in the (T530) Stabilizer Bar Disengage Illumination Sense circuit.
Perform FDCM VERIFICATION TEST.

7. (T529) STABILIZER BAR ENGAGE ILLUMINATION SENSE CIRCUIT SHORTED TO VOLTAGE

Turn the ignition off.

Disconnect the FDCM harness connector.

Turn the ignition on.

Measure the voltage on the (T529) Stabilizer Bar Engage Illumination Sense circuit in the FDCM harness connector.

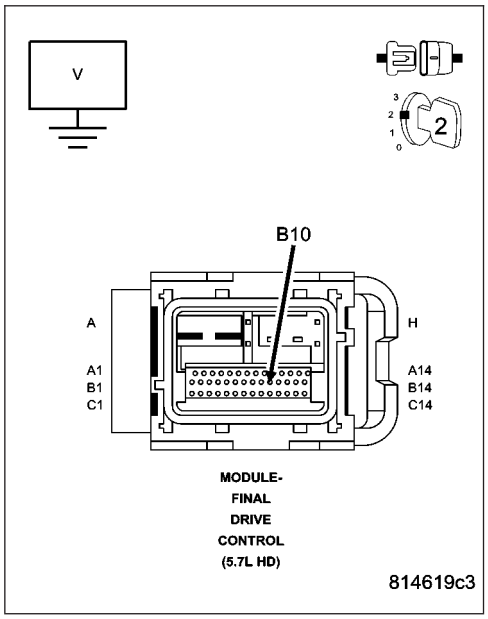

Does the voltmeter indicate voltage present?

Yes >> Repair the short to voltage in the (T529) Stabilizer Bar Engage Illumination Sense circuit.
Perform FDCM VERIFICATION TEST.

No >> Go To 8

C2124-STABILIZER BAR INDICATOR CONTROL CIRCUIT (CONTINUED)

8. (T529) STABILIZER BAR ENGAGE ILLUMINATION SENSE CIRCUIT SHORTED TO GROUND

Turn the ignition off.

Measure the resistance of the (T529) Stabilizer Bar Engage Illumination Sense circuit between ground and the FDCM harness connector.

Is the resistance below 100 ohms?

Yes >> Repair the short to ground in the (T529) Stabilizer Bar Engage Illumination Sense circuit.
Perform FDCM VERIFICATION TEST.

No >> Go To 9

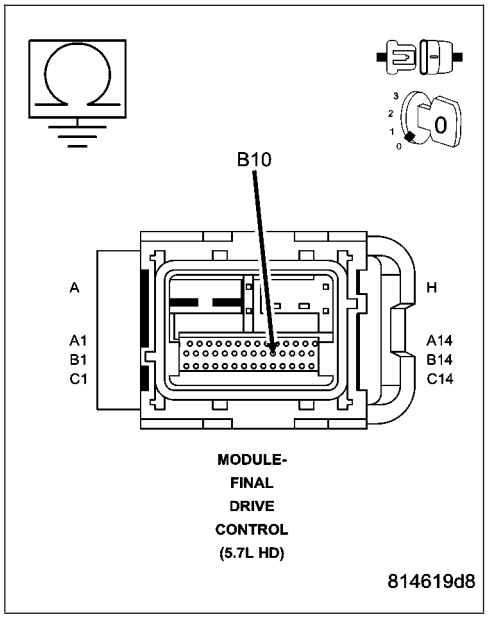

9. (T529) STABILIZER BAR ENGAGE ILLUMINATION SENSE CIRCUIT OPEN

Measure the resistance of the (T529) Stabilizer Bar Engage Illumination Sense circuit between the Disconnecting Stabilizer Bar Switch harness connector and the FDCM harness connector.

Is the resistance below 5.0 ohms?

Yes >> Go To 10

No >> Repair the open in the (T529) Stabilizer Bar Engage Illumination Sense circuit.
Perform FDCM VERIFICATION TEST.

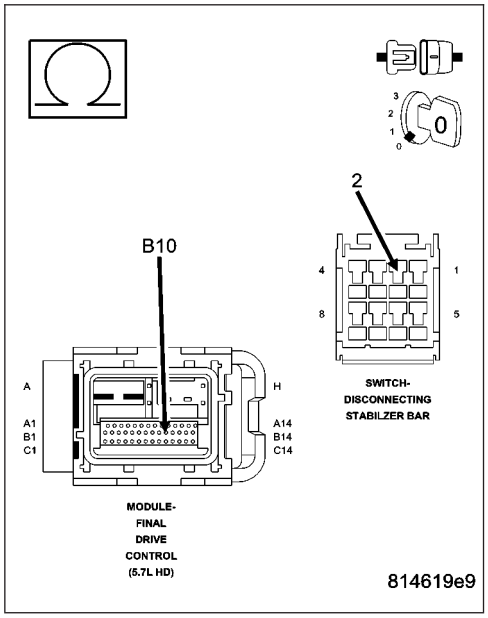

C2124-STABILIZER BAR INDICATOR CONTROL CIRCUIT (CONTINUED)

10. FDCM

NOTE: Before continuing, check the FDCM harness connector terminals for corrosion, damage, or terminal push out. Repair as necessary.

Using the schematics as a guide, inspect the wire harness and connectors. Pay particular attention to all Power and Ground circuits.

Were there any problems found?

Yes >> Repair as necessary.
Perform FDCM VERIFICATION TEST

No >> Replace and program the Final Drive Control Module in accordance with Service Information.
Perform FDCM VERIFICATION TEST.

---

11. INTERMITTENT WIRING AND CONNECTORS

The conditions necessary to set this DTC are not present at this time.

Using the schematics as a guide, inspect the wiring and connectors specific to this circuit.

Wiggle test the wiring harness and connectors while checking for shorted and open circuits.

Using the DRBIII®, monitor the data related to this circuit while performing the wiggle test. Look for the data to change or for the DTC to reset.

Were there any problems found?

Yes >> Repair as necessary.
Perform FDCM VERIFICATION TEST.

No >> Test Complete.

CHECKING STABILIZER SELECT SWITCH OPERATION

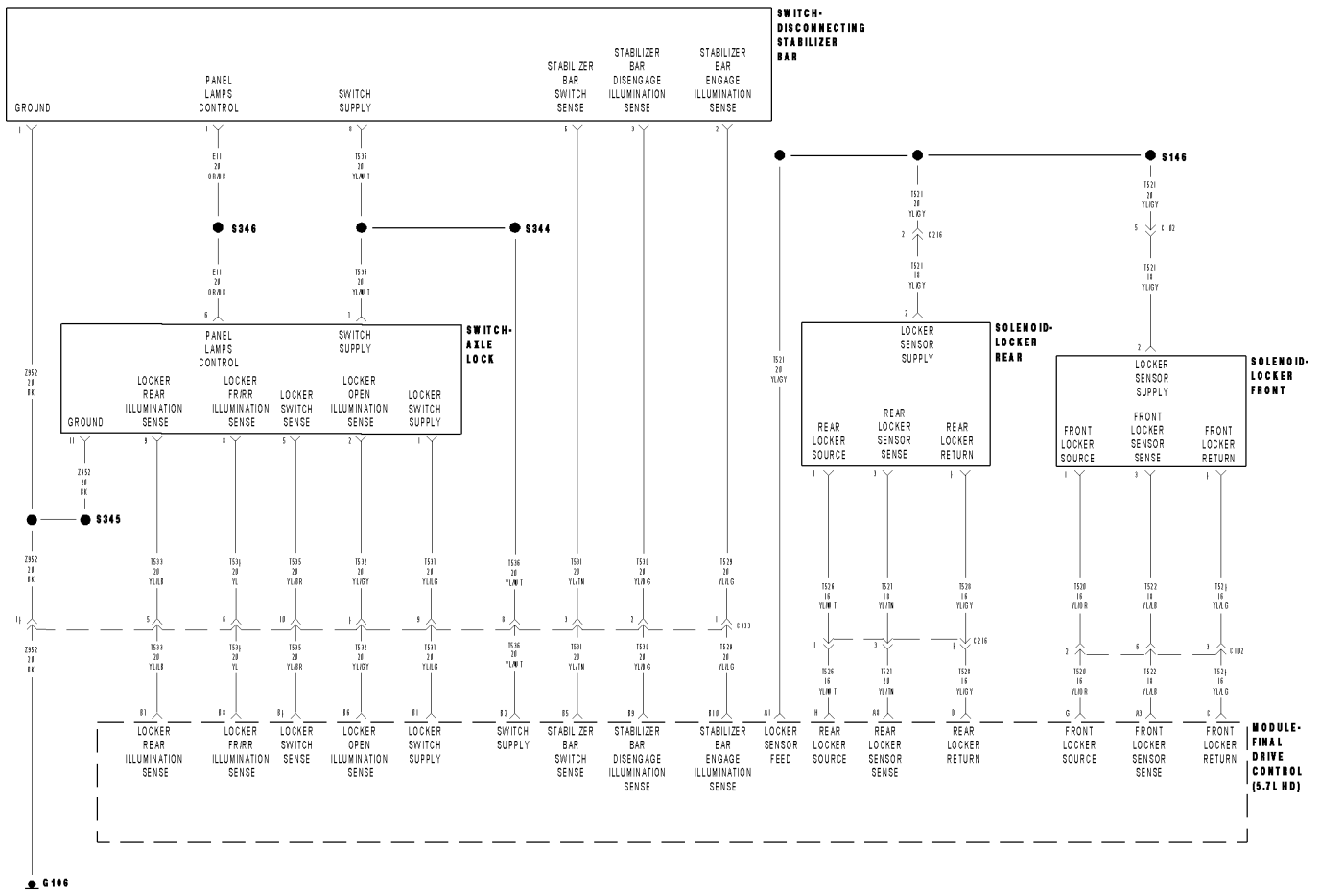

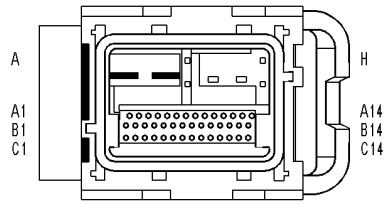

MODULE-FINAL DRIVE CONTROL (5.7L HD)

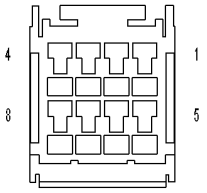

SWITCH-DISCONNECTING STABILZER BAR

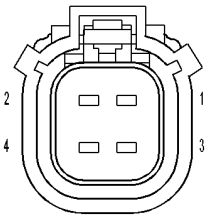

SOLENOID-LOCKER REAR

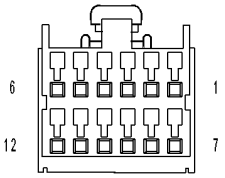

SWITCH-AXLE LOCK

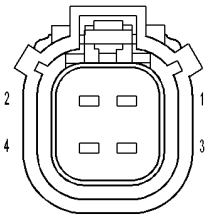

SOLENIOD-LOCKER FRONT

81459daf

CHECKING STABILIZER SELECT SWITCH OPERATION (CONTINUED)

For a complete wiring diagram **Refer to Section 8W**.

Possible Causes
STABILIZER BAR SWITCH
(T531) STABILIZER BAR SWITCH SENSE CIRCUIT SHORT TO VOLTAGE
(T536) SWITCH SUPPLY CIRCUIT SHORTED TO (T531) STABILIZER BAR SWITCH SENSE CIRCUIT
(T536) STABILIZER BAR SWITCH SENSE CIRCUIT OPEN
FDCM

Diagnostic Test

1. STABILIZER SELECT SWITCH OPERATION

CAUTION: Before removing the FDCM harness connector, clean the connector and locking cam area of dirt and debris. Failure to do so can result in the connector being jammed or damage to the locking cams on the harness connector or module. Do not force the assist arm when releasing or installing the harness connector.

Turn the ignition off.

Secure the vehicle by blocking the rear wheels from the front and back.

Disconnect the Stabilizer Bar Link on the passenger side.

Turn the ignition on, Stabilizer Select Switch in the ON ROAD position.

The Stabilizer Bar should not move up and down.

Using the Stabilizer Select Switch, select OFF ROAD.

Attempt to move the Stabilizer Bar up and down.

Does the Stabilizer Bar operate as described above?

Yes >> Stabilizer Select Switch is operating normally. Test complete.

No >> Go To 2

CHECKING STABILIZER SELECT SWITCH OPERATION (CONTINUED)

2. DISCONNECTING STABILIZER BAR SWITCH OPERATION

NOTE: Before continuing with the below diagnostic test, ensure the FDCM harness connector seal is installed correctly. Inspect the terminals on both harness connector and the module for damage. Failure to do so can result in misdiagnoses of the system.

Turn the ignition off.

Disconnect the Disconnecting Stabilizer Bar Switch harness connector.

Remove the Disconnecting Stabilizer Bar Switch.

Measure the resistance on the Disconnecting Stabilizer Bar Switch between the Switch Supply terminal and the Stabilizer Bar Switch Sense terminal.

The resistance must read as follows for each position of the switch.

- **Off Road: 33 ohms +/- 5%**
- **On Road: 420 ohms +/- 5%**
- **Switch Not Applied: 2.2k ohms +/- 5%**

Does the ohmmeter read correctly for each position of the Disconnecting Stabilizer Bar Switch

Yes >> Go To 3

No >> Replace the Disconnecting Stabilizer Bar Switch.
Perform FDCM VERIFICATION TEST.

---

3. (T531) STABILIZER BAR SWITCH SENSE CIRCUIT SHORTED TO VOLTAGE

Disconnect the FDCM harness connector.

Turn the ignition on.

Measure the voltage of the (T531) Stabilizer Bar Switch Sense circuit in the Disconnecting Stabilizer Bar Switch harness connector.

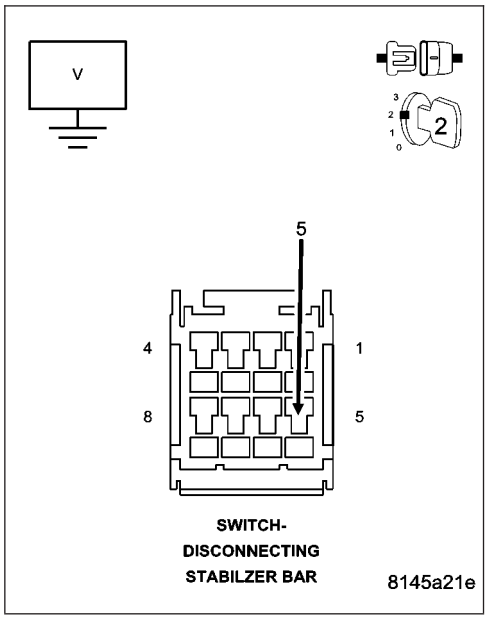

Does the voltmeter indicate voltage present?

Yes >> Repair the short to voltage in the (T531) Stabilizer Bar Switch Sense circuit.
Perform FDCM VERIFICATION TEST.

No >> Go To 4

CHECKING STABILIZER SELECT SWITCH OPERATION (CONTINUED)

4. (T536) SWITCH SUPPLY CIRCUIT SHORTED TO (T351) STABILIZER BAR SWITCH SENSE CIRCUIT

Measure the resistance between (T536) Switch Supply circuit and the (T531) Stabilizer Bar Switch Sense circuit in the Disconnecting Stabilizer Bar Switch harness connector.

Is the resistance below 5.0 ohms?

Yes >> Repair the short between (T536) Switch Supply circuit and the (T531) Stabilizer Bar Switch Sense circuit.
Perform FDCM VERIFICATION TEST.

No >> Go To 5

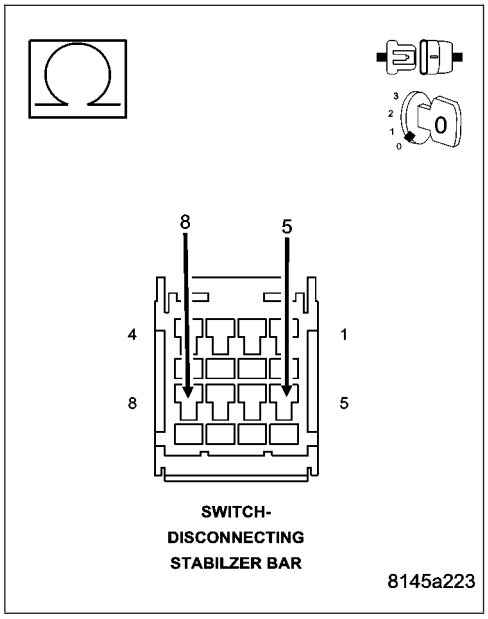

5. (T531) STABILIZER BAR SWITCH SENSE CIRCUIT OPEN

Measure the resistance of the (T531) Stabilizer Bar Switch Sense circuit between the Disconnecting Stabilizer Bar Switch and the FDCM harness connectors.

Is the resistance below 5.0 ohms?

Yes >> Replace the FDCM in accordance with the Service Information.
Perform FDCM VERIFICATION TEST.

No >> Repair the open in the (T531) Stabilizer Bar Switch Sense circuit.
Perform FDCM VERIFICATION TEST.

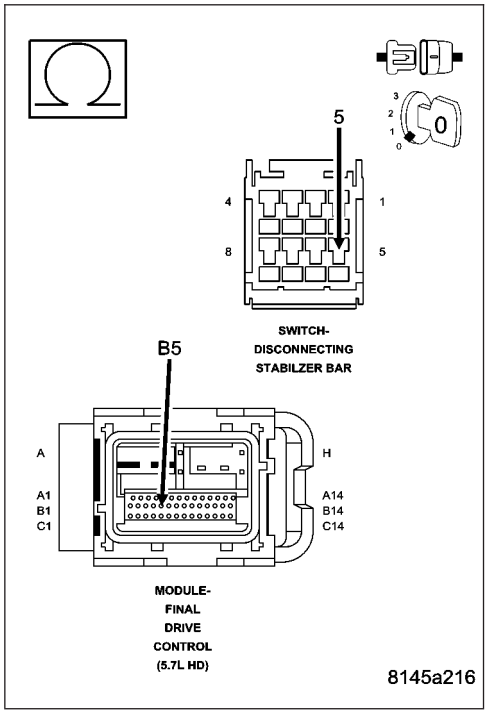

FDCM VERIFICATION TEST

Diagnostic Test

1. PERFORM FDCM VERIFICATION TEST

CAUTION: Before removing the FDCM harness connector, clean the connector and locking cam area of dirt and debris. Failure to do so can result in the connector being jammed or damage to the locking cams on the harness connector or module. Do not force the assist arm when releasing or installing the harness connector.

NOTE: If the SKIM, PCM or FCM was replaced, refer to the service information for proper programming procedures.

1. Disconnect all jumper wires and reconnect all previously disconnected components and connectors.
2. Ensure that all accessories are turned off.
3. Ensure that the battery is fully charged.
4. With the DRBIII®, record and erase all DTC(s) from the FDCM
5. Start and run the engine for 2 minutes while operating all functions of the system that caused the original concern.
6.

NOTE: When a Stabilizer System DTC diagnostic is complete and all repairs have been made, running the Stabilizer Motor System Test and/or LED System Test can also provide verification that the DTC has been repaired and the system is operating normally.

7. Turn the ignition off, wait 5 seconds, then turn the ignition on. Using the DRBIII®, read DTC(s) from the FDCM.

Are any FDCM DTC(s) present or is the original condition still present?

Yes >> The repair is not complete. Refer to the related category for the DTC or symptom that is still present.

No >> The repair is complete.

SUSPENSION - SERVICE INFORMATION

TABLE OF CONTENTS

	page
WHEEL ALIGNMENT	28
FRONT - INDEPENDENT FRONT SUSPENSION	37
FRONT - LINK/COIL	68
REAR	95

WHEEL ALIGNMENT

TABLE OF CONTENTS

	page
WHEEL ALIGNMENT	
DESCRIPTION	28
OPERATION	28
DIAGNOSIS AND TESTING	
PRE-ALIGNMENT INSPECTION	29
STANDARD PROCEDURE	
HEIGHT MEASUREMENT - 4WD (LD)	30
HEIGHT ADJUSTMENT - 4WD (LD)	30
CAMBER AND CASTER ADJUSTMENT	31
TOE ADJUSTMENT	31
CAMBER, CASTER AND TOE ADJUSTMENT	32
ALIGNMENT LINK/COIL SUSPENSION	34
SPECIFICATIONS	
ALIGNMENT	34
SPECIAL TOOLS	
WHEEL ALIGNMENT	36

WHEEL ALIGNMENT

DESCRIPTION

NOTE: Suspension components with rubber/urethane bushings should be tightened with the vehicle at normal ride height. It is important to have the springs supporting the weight of the vehicle when the fasteners are torqued. If springs are not at their normal ride position, vehicle ride comfort could be affected and premature bushing wear may occur.

Wheel alignment involves the correct positioning of the wheels in relation to the vehicle. The positioning is accomplished through suspension and steering linkage adjustments. An alignment is considered essential for efficient steering, good directional stability and to minimize tire wear. The most important measurements of an alignment are caster, camber and toe.

CAUTION: Never attempt to modify suspension or steering components by heating or bending.

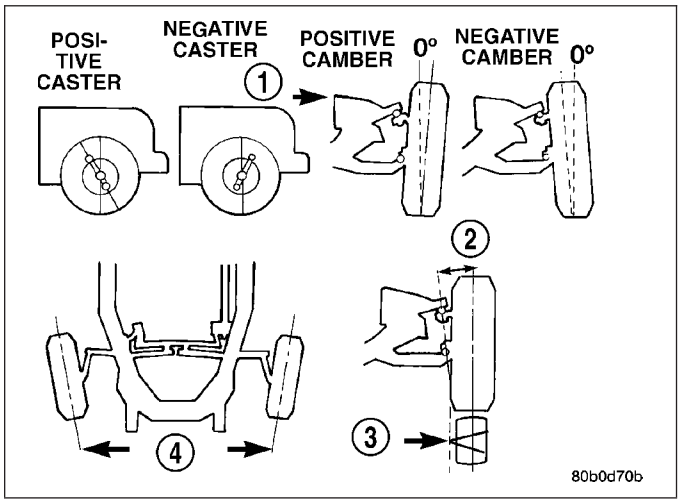

OPERATION

- **CASTER** is the forward or rearward tilt of the steering knuckle from vertical. Tilting the top of the knuckle forward provides less positive caster. Tilting the top of the knuckle rearward provides more positive caster. Positive caster promotes directional stability. This angle enables the front wheels to return to a straight ahead position after turns
- **CAMBER** is the inward or outward tilt of the wheel relative to the center of the vehicle. Tilting the top of the wheel inward provides negative camber. Tilting the top of the wheel outward provides positive camber. Incorrect camber will cause wear on the inside or outside edge of the tire
- **TOE** is the difference between the leading inside edges and trailing inside edges of the front tires. Wheel toe position out of specification cause's unstable steering, uneven tire wear and steering wheel off- center. The wheel toe position is the **final** front wheel alignment adjustment
- **THRUST ANGLE** is the angle of the rear axle relative to the centerline of the vehicle. Incorrect thrust angle can cause off-center steering and excessive tire wear. This angle is not adjustable, damaged component(s) must be replaced to correct the thrust angle

DIAGNOSIS AND TESTING

PRE-ALIGNMENT INSPECTION

Before starting wheel alignment, the following inspection and necessary corrections must be completed. Refer to Suspension and Steering System Diagnosis Chart below for additional information.

1. Inspect tires for size, air pressure and tread wear.
2. Inspect front wheel bearings for wear.
3. Inspect front wheels for excessive radial or lateral runout and balance.
4. Inspect ball studs, linkage pivot points and steering gear for looseness, roughness or binding.
5. Inspect suspension components for wear and noise.
6. On 4x4 vehicles check suspension height (LD only).
7. Road test the vehicle.

SUSPENSION AND STEERING SYSTEM DIAGNOSIS

CONDITION	POSSIBLE CAUSES	CORRECTION
FRONT END NOISE	1. Loose or worn wheel bearing.	1. Replace wheel bearing.
	2. Loose or worn steering or suspension components.	2. Tighten or replace components as necessary.
	3. Loose or worn steering or suspension components.	3. Tighten or replace components as necessary.
EXCESSIVE PLAY IN STEERING	1. Loose or worn wheel bearing.	1. Replace wheel bearing.
	2. Loose or worn steering or suspension components.	2. Tighten or replace components as necessary.
	3. Loose or worn steering gear.	3. Replace steering gear.
FRONT WHEELS SHIMMY	1. Loose or worn wheel bearing.	1. Replace wheel bearing.
	2. Loose or worn steering or suspension components.	2. Tighten or replace components as necessary.
	3. Tires worn or out of balance.	3. Replace or balance tires.
	4. Alignment.	4. Align vehicle to specifications.
VEHICLE INSTABILITY	1. Loose or worn wheel bearing.	1. Replace wheel bearing.
	2. Loose or worn steering or suspension components.	2. Tighten or replace components as necessary.
	3. Tire pressure.	3. Adjust tire pressure.
	4. Alignment.	4. Align vehicle to specifications.
EXCESSIVE STEERING EFFORT	1. Loose or worn steering gear.	1. Replace steering gear.
	2. Column coupler binding.	2. Replace coupler.
	3. Tire pressure.	3. Adjust tire pressure.
	4. Alignment.	4. Align vehicle to specifications.

CONDITION	POSSIBLE CAUSES	CORRECTION
VEHICLE PULLS TO ONE SIDE	1. Tire pressure.	1. Adjust tire pressure.
	2. Tire.	2. Criss-Cross Front Tires.
	3. Alignment.	3. Align vehicle to specifications.
	4. Loose or worn steering or suspension components.	4. Tighten or replace components as necessary.
	5. Radial tire lead.	5. Rotate or replace tire as necessary.
	6. Brake pull.	6. Repair brake as necessary.
	7. Weak or broken spring.	7. Replace spring.
	8. Ride height (LD) 4WD only.	8. Measure and adjust ride height. (LD only)

STANDARD PROCEDURE

HEIGHT MEASUREMENT - 4WD (LD)

The vehicle suspension height MUST be measured and adjusted before performing wheel alignment procedure. Also when front suspension components have been replaced. This measure must be performed with the vehicle supporting it's own weight and taken on both sides of the vehicle.

1. Inspect tires and set to correct pressure.
2. Jounce the front of the vehicle.
3. Measure and record the height from the ground at the centerline of the rear lower control arm bolt front tip (2).
4. Measure and record the height from the ground at the front spindle centerline (Static Load Radius) (1).

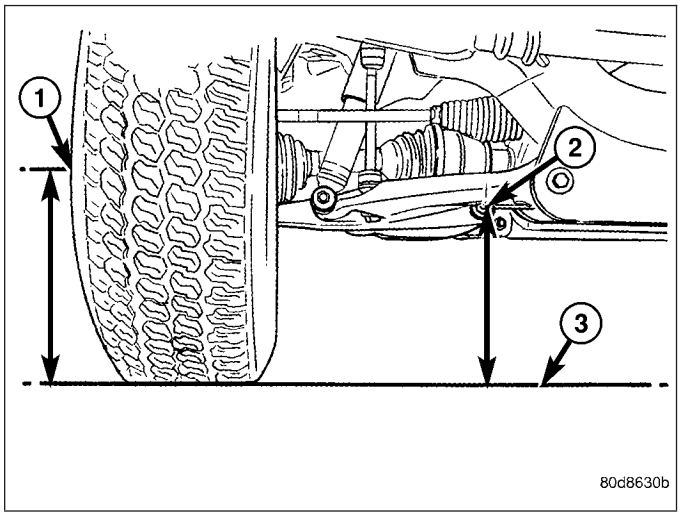

5. Subtract the first measurement from the second measurement. The difference between the two measurement should be 58 mm (2.3 inches) ± 3 mm (0.12 inches).
6. If value is greater than 61 mm (2.4 inches), tighten the torsion bar bolt until the specification is achieved (Refer to 2 - SUSPENSION/WHEEL ALIGNMENT - STANDARD PROCEDURE).
7. If value is less than 55 mm (2.1 inches), loosen the torsion bar bolt until the specification is achieved, (Refer to 2 - SUSPENSION/WHEEL ALIGNMENT - STANDARD PROCEDURE).
8. Repeat the previous steps until the ride height is within specifications.

HEIGHT ADJUSTMENT - 4WD (LD)

The vehicle suspension height MUST be measured and adjusted before performing wheel alignment procedure (Refer to 2 - SUSPENSION/WHEEL ALIGNMENT - STANDARD PROCEDURE). Also when front suspension components have been replaced. This measurement must be performed with the vehicle supporting it's own weight and taken on both sides of the vehicle.

To adjust the vehicle height turn the torsion bar adjustment bolt CLOCKWISE to raise the vehicle and COUNTER CLOCKWISE to lower the vehicle.

CAUTION: ALWAYS raise the vehicle to the correct suspension height, NEVER lower the vehicle to obtain the correct suspension height. If the vehicle suspension height is too high, lower the vehicle below the height specification. Then raise the vehicle to the correct suspension height specification. This will insure the vehicle maintains the proper suspension height.

NOTE: If a height adjustment has been made, perform height measurement again on both sides of the vehicle.

CAMBER AND CASTER ADJUSTMENT

NOTE: 4X4 (LD) SUSPENSION HEIGHT MEASUREMENT MUST BE PERFORMED BEFORE AN ALIGNMENT.

NOTE: When the upper control arm pivot bolts are loosened the upper control arm will normally go inwards toward the frame automatically with the weight of the vehicle.

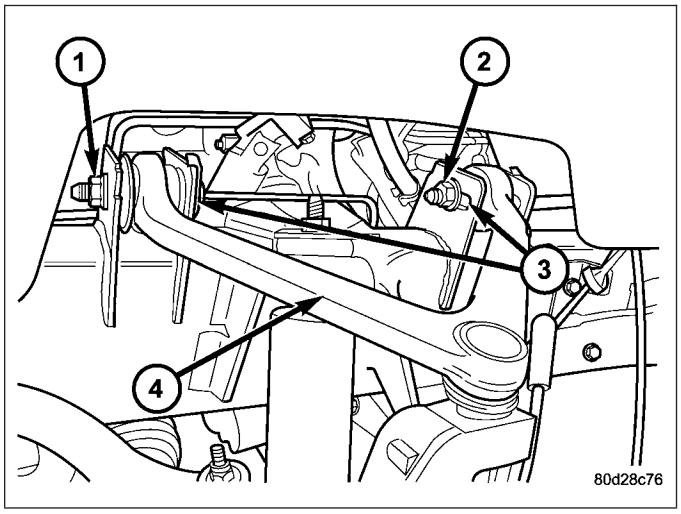

Camber and caster angle adjustments involve changing the position of the upper control arm (4) inconjunction with the slotted holes in the frame brackets, Install special tool 8876 between the top of the upper control arm bracket and the upper control arm (on 1500 series 4X2 & 4X4). Install special tool 8876 between the bottom of the upper control arm bracket pressing the tool against the frame and the upper control arm (on 2500/3500 series 4X2) in order to move the upper control arm outwards for proper adjustment with the vehicle at normal ride height.

TOE ADJUSTMENT

4X4 SUSPENSION HEIGHT MESUREMENT MUST BE PERFORMED BEFORE AN ALIGNMENT.

The wheel toe position adjustment is the final adjustment.

1. Start the engine and turn wheels both ways before straightening the wheels. Secure the steering wheel with the front wheels in the straight-ahead position.

2. Loosen the tie rod jam nuts (1).

NOTE: Each front wheel should be adjusted for one-half of the total toe position specification. This will ensure the steering wheel will be centered when the wheels are positioned straight-ahead.

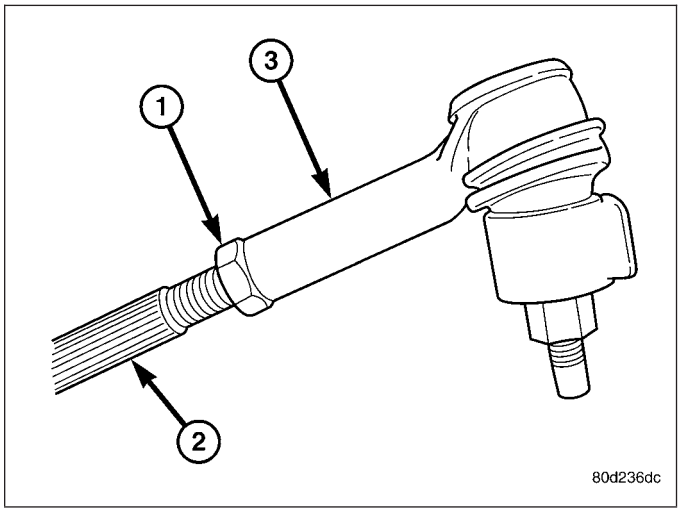

3. Adjust the wheel toe position by turning the inner tie rod (2) as necessary.
4. Tighten the tie rod jam nut (1) to 75 N·m (55 ft. lbs.).
5. Verify the specifications
6. Turn off engine.

CAMBER, CASTER AND TOE ADJUSTMENT

NOTE: 4X4 (LD) SUSPENSION HEIGHT MEASUREMENT MUST BE PERFORMED BEFORE AN ALIGNMENT.

Camber and caster angle adjustments involve changing the position of the upper control arm (4) with the slots in the frame brackets using special tool 8876 to move the upper control arm outwards for proper adjustment.

NOTE: When the upper control arm pivot bolts are loosened the upper control arm will normally go inwards toward the frame automatically with the weight of the vehicle.

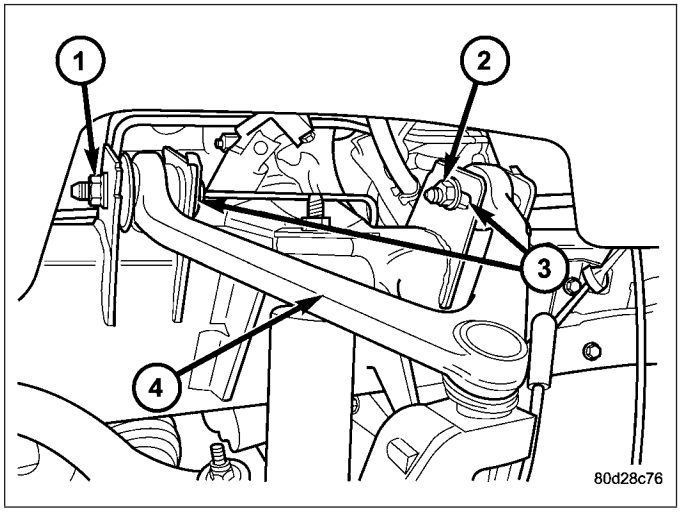

CASTER

Moving the front or rear position of the upper control arm (4) in or out, will change the caster angle and camber angle significantly. To maintain the camber angle while adjusting caster, move one pivot bolt of the upper control arm in or out. Then move the other pivot bolt of the upper control arm in the opposite direction. Install special tool 8876 between the top of the upper control arm bracket and the upper control arm (on 1500 series 4X2 & 4X4). Install special tool 8876 between the bottom of the upper control arm bracket pressing the tool against the frame and the upper control arm (on 2500/3500 series 4X2) in order to move the upper control arm outwards for proper adjustment with the vehicle at normal ride height.

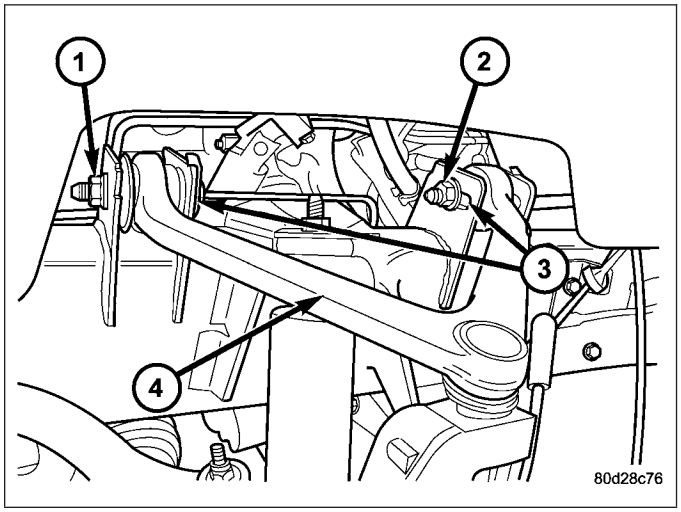

To increase positive caster angle, move the rear position (2) of the upper control arm inward (toward the engine). Move the front (1) of the upper control arm outward (away from the engine) slightly until the original camber angle is obtained using special tool 8876 to move the upper control arm for proper adjustment.

CAMBER

Move both pivot bolts of the upper control arm together in or out. This will change the camber angle significantly and little effect on the caster angle using special tool 8876 to move the upper control arm (4) for proper adjustment.

After adjustment is made tighten the upper control arm nuts to proper torque specification.

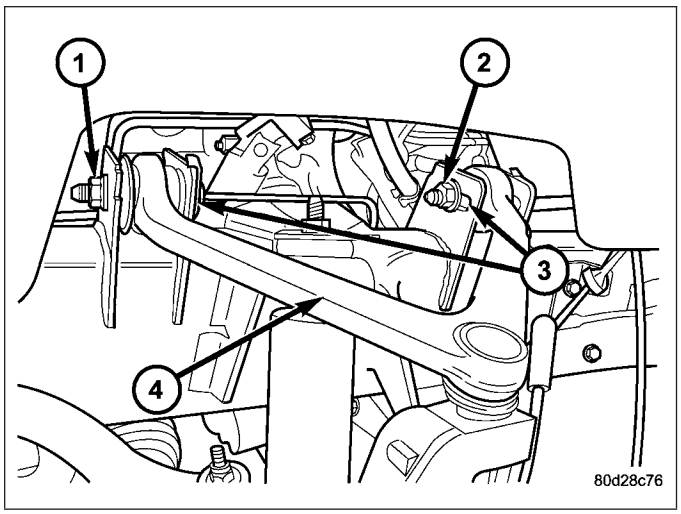

TOE ADJUSTMENT

The wheel toe position adjustment is the final adjustment.

1. Start the engine and turn wheels both ways before straightening the wheels. Secure the steering wheel with the front wheels in the straight-ahead position.
2. Loosen the tie rod jam nuts (1).

NOTE: Each front wheel should be adjusted for one-half of the total toe position specification. This will ensure the steering wheel will be centered when the wheels are positioned straight-ahead.

3. Adjust the wheel toe position by turning the inner tie rod (2) as necessary.
4. Tighten the tie rod jam nut (1) to 75 N·m (55 ft. lbs.).
5. Verify the specifications
6. Turn off engine.

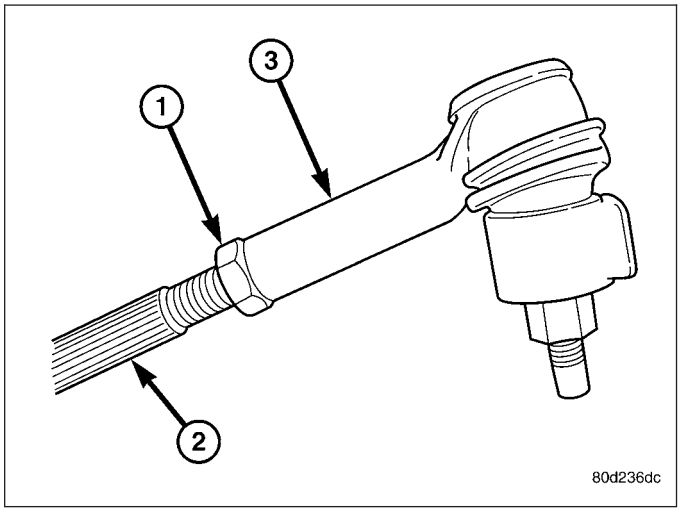

ALIGNMENT LINK/COIL SUSPENSION

Before each alignment reading the vehicle should be jounced (rear first, then front). Grasp each bumper at the center and jounce the vehicle up and down several times. Always release the bumper in the down position. **Set the front end alignment to specifications while the vehicle is in its NORMALLY LOADED CONDITION.**

CAMBER: The wheel camber angle is preset and is not adjustable.

CASTER: Check the caster of the front axle for correct angle. Be sure the axle is not bent or twisted. Road test the vehicle and make left and right turn. Observe the steering wheel return-to-center position. Low caster will cause poor steering wheel returnability.

Caster can be adjusted by rotating the cams (3) on the lower suspension arm.

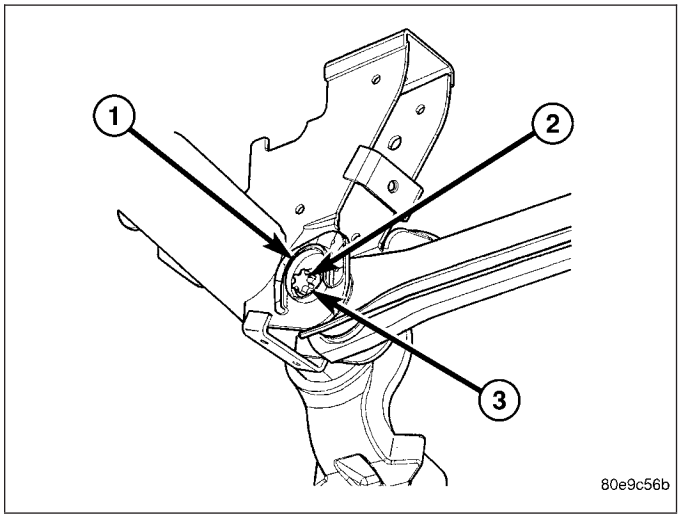

TOE POSITION: The wheel toe position adjustment should be the final adjustment.

1. Start the engine and turn wheels both ways before straightening the wheels. Center and Secure the steering wheel and turn off engine.
2. Loosen the adjustment sleeve clamp bolts.
3. Adjust the right wheel toe position with the drag link. Turn the sleeve until the right wheel is at the correct TOE-IN position. Position clamp bolts to their original position and tighten to specifications. **Make sure the toe setting does not change during clamp tightening.**
4. Adjust left wheel toe position with tie rod at left knuckle. Turn the sleeve until the left wheel is at the correct TOE-IN position. Position clamp bolts to their original position and tighten to specifications. **Make sure the toe setting does not change during clamp tightening.**

NOTE: Toe setting will change during tightening, Make sure to verify reading after tightening.

5. Verify the right toe setting and a straight steering wheel.
6. Road test the vehicle.

SPECIFICATIONS

ALIGNMENT

NOTE: All alignment specifications are in degrees.

SPECIFICATIONS

DESCRIPTION	SPECIFICATION			
VEHICLE 1500	WHEEL BASE	CASTER (4.0° Min, +.75° Max)	CAMBER (± .50°)	TOTAL TOE-IN (± .10°)
4X2	120.5 in	4.0°	.0°	.10°
4X2	140.5 in	4.2°	.0°	.10°
4X2	160.5 in	4.4°	.0°	.10°
VEHICLE	WHEELBASE	CASTER (±0.5°)	CAMBER (0.30°)	TOTAL TOE-IN (±0.16°)
SRT-10	120.5	5.75	.0°	0.24°

DESCRIPTION	SPECIFICATION			
VEHICLE 1500	WHEEL BASE	CASTER (4.0° Min, +.75° Max)	CAMBER (±.50°)	TOTAL TOE-IN (±.10°)
4X4	120.5 in	4.2°	.0°	.10°
4X4	140.5 in	4.4°	.0°	.10°
4X4	160.5 in	4.6°	.0°	.10°
MAX RT/LT DIFFERENCE 4X2 1500	—	.40°	.50°	0.06°
MAX RT/LT DIFFERENCE 4X4 1500	—	.40°	.60°	0.06°
VEHICLE 4X2 2500 & 3500	WHEEL BASE	CASTER (3.55° Min, +.75° Max)	CAMBER (±.50°)	TOTAL TOE-IN (0.20° ±.10°)
4X2 2500&3500	140	4.0°	0.0°	.10° ± .05°
4X2 2500&3500	160	4.3°	0.0°	.10° ± .05°
MAX RT/LT DIFFERENCE 4X2 2500&3500	—	±0.4°	±0.6°	0.1°
VEHICLE 4X4 2500&3500	WHEEL BASE	CASTER (4.0° Min, +.75° Max)	CAMBER (.25° ±.5°)	TOTAL TOE-IN (0.20° ±.10°)
4X4 2500&3500	140	4.5°	.25°	.10° ± .05°
4X4 2500&3500	160	4.7°	.25°	.10° ± .05°
MAX RT/LT DIFFERENCE 4X4 2500&3500	—	±.5°	±.5°	0.1°

DESCRIPTION	REAR SPECIFICATION
CAMBER (-.10° ± 0.35°)	TOTAL TOE-IN (0.30° ± 0.35°)
CAMBER SRT-10 (0.00° ± -0.25°	TOTAL TOE-IN SRT-10 (0.30° ± 0.16°)
THRUST ANGLE 0° ± 0.4° 4X2 4X4 1500	
THRUST ANGLE -0.2° ± 0.2° 4X2 4X4 2500&3500	
THRUST ANGLE 0° ± 0.17° SRT-10	

SPECIAL TOOLS

WHEEL ALIGNMENT

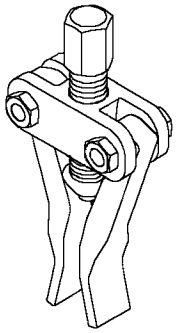

FRONT - INDEPENDENT FRONT SUSPENSION

TABLE OF CONTENTS

page

FRONT - INDEPENDENT FRONT SUSPENSION
DESCRIPTION
SUSPENSION 37
CONTROL ARMS 38
SPECIFICATIONS
TORQUE CHART 39
SPECIAL TOOLS
FRONT SUSPENSION 40
BUSHINGS
REMOVAL
LOWER CONTROL ARM BUSHINGS - 4WD (LD) 41
TORSION BAR CROSSMEMBER BUSHING . 42
LOWER CONTROL ARM BUSHINGS - 2WD (LD) 42
INSTALLATION
LOWER CONTROL ARM BUSHINGS - 4WD (LD) 43
TORSION BAR CROSS MEMBER BUSHING . 45
LOWER CONTROL ARM BUSHINGS - 2WD (LD) 46
HUB / BEARING
REMOVAL
HUB/BEARING - 4X4 47
HUB/BEARING - 4X2 47
INSTALLATION
HUB/BEARING - 4X4 48
HUB/BEARING - 4X2 49
KNUCKLE
DESCRIPTION 49
OPERATION 49
REMOVAL 49
INSTALLATION 50
LOWER BALL JOINT
DIAGNOSIS AND TESTING
LOWER BALL JOINT 51
REMOVAL 51
INSTALLATION 52
LOWER CONTROL ARM
REMOVAL
LOWER CONTROL ARM - 4X4 (LD) 53
LOWER CONTROL ARM - 4X2 53
INSTALLATION
LOWER CONTROL ARM - 4X4 (LD) 55
LOWER CONTROL ARM - 4X2 55
SPRING
REMOVAL 56
INSTALLATION 57
SHOCK
DIAGNOSIS AND TESTING
SHOCK 58
REMOVAL
SHOCK - 4X2 58
SHOCK - 4X4 59
INSTALLATION
SHOCK - 4X2 59
SHOCK - 4X4 60
STABILIZER BAR
DESCRIPTION 60
OPERATION 60
REMOVAL 61
INSTALLATION 61
STABILIZER LINK
REMOVAL
STABILIZER LINK - 4X4 62
STABILIZER LINK - 4X2 62
INSTALLATION
STABILIZER LINK - 4X4 62
STABILIZER LINK - 4X2 63
TORSION BAR
DESCRIPTION 63
OPERATION 63
REMOVAL 63
INSTALLATION 64
UPPER BALL JOINT
DIAGNOSIS AND TESTING
UPPER BALL JOINT 65
UPPER CONTROL ARM
REMOVAL 66
INSTALLATION 67

FRONT - INDEPENDENT FRONT SUSPENSION

DESCRIPTION

SUSPENSION

The front suspension is designed to allow each wheel to adapt to different road surfaces independently. The wheels are mounted to hub/bearings units bolted to the steering knuckle. The double-row hub bearings are sealed and lubricated for life. The steering knuckles turn (pivot) on ball joints.

The front suspension is comprised of :

- Shock absorbers (6&11)
- Torsion bar - 4X4 (LD only)
- Coil Spring - 4X2 (10)
- Control arms (2&8)
- Steering knuckles (3)
- Stabilizer bar (1)
- Stabilizer link (7)
- Tie Rod Ends (5,6&9)
- Hub/Bearing
- Rack & Pinion (9&10)
- Ball Joints

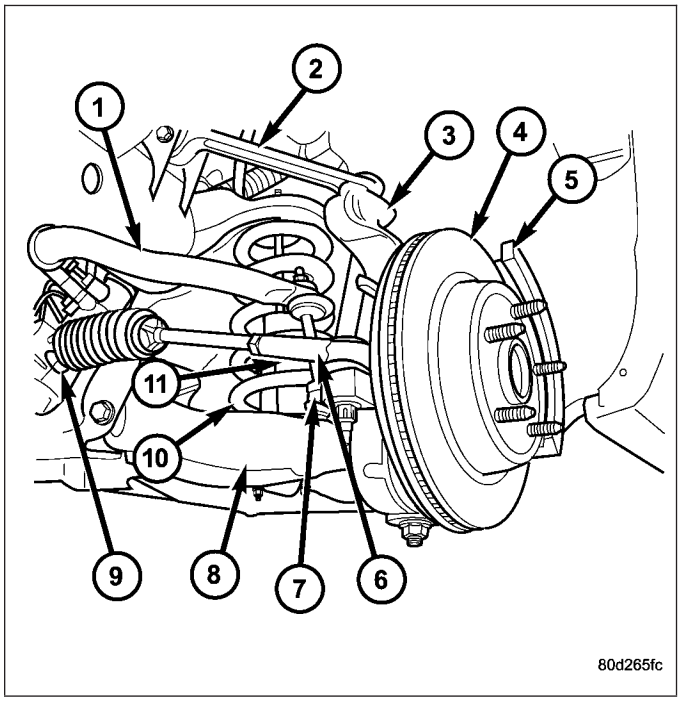

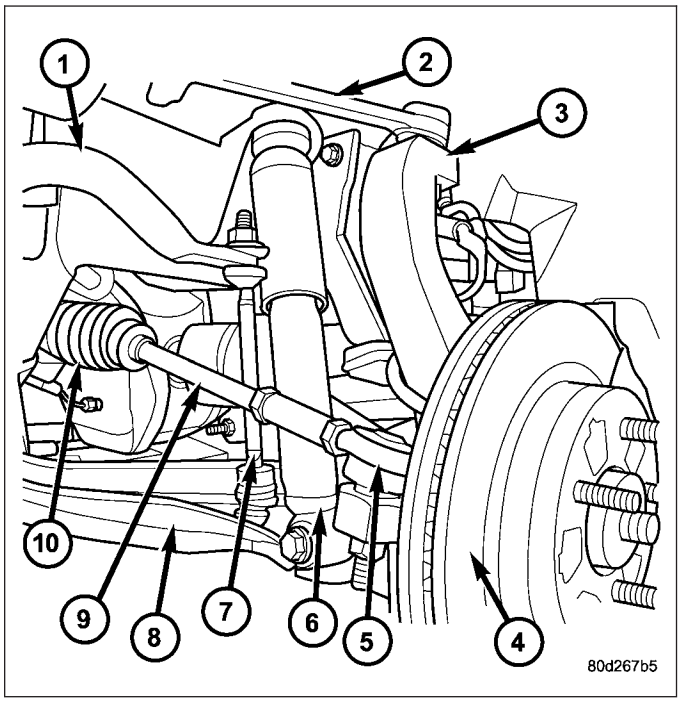

NOTE: The SRT-10 vehicle is not equipped with front brake dust shields.

NOTE: Components attached with a nut must be torqued to specification.

NOTE: Suspension components with rubber/urethane bushings should be tightened with the vehicle at normal ride height. It is important to have the springs supporting the weight of the vehicle when the fasteners are torqued. If springs are not at their normal ride position, vehicle ride comfort could be affected and premature bushing wear may occur.

CONTROL ARMS

The upper control arm bolts on frame brackets. The frame brackets have slotted holes which allow the arms to be adjusted for caster and camber.

The lower control arms bolt to the lower frame brackets and pivots through bushings.

The control arms have lube for life ball studs. The control arm travel (jounce) is limited through the use of rubber/urethane bumpers. Rebound travel is limited by the shock absorber.

Having the suspension at curb ride height when torquing bolts ensures good ride characteristics and longer bushing life by preventing excessive ″wind-up″ of the bushing.

SPECIFICATIONS

TORQUE CHART

TORQUE SPECIFICATIONS

DESCRIPTION	N·m	Ft. Lbs.	In. Lbs.
Shock Absorber Upper Nut 4X4	54	40	—
Shock Absorber Lower Bolt 4X4	135	100	—
Shock Absorber Upper Nut 4X2	54	40	—
Shock Absorber Lower Bolt 4X2	35	25	—
Lower Suspension Arm Frame Nuts LD 4X2 & 4X4	204	150	—
Lower Suspension Arm Frame Nuts HD 4X2	285	210	—
Lower Suspension Arm Ball Joint Nut 1500 series only	52 Then an additional 90°	38 Then an additional 90°	—
Lower Suspension Arm Ball Joint Nut (HD 4X2 only	135	100	—
Upper Suspension Arm Frame Nuts (LD)	132	97	—
Upper Suspension Arm Frame Nuts (HD 4X2 only)	170	125	—
Upper Suspension Arm Ball Joint Nut 1500 series only	54 Then an additional 90°	40 Then an additional 90°	—
Stabilizer Bar Frame Bolt	61	45	—
Stabilizer Link Lower Control Arm Nut	102	75	—
Stabilizer Link Stabilizer Bar Nut	27	20	—
Hub/Bearing Bolts (LD)	163	120	—
Hub/Bearing Bolts (HD 4X2)	176	130	—
Tie Rod End Nut	61 Then an additional 90°	45 Then an additional 90°	—

SPECIAL TOOLS

FRONT SUSPENSION

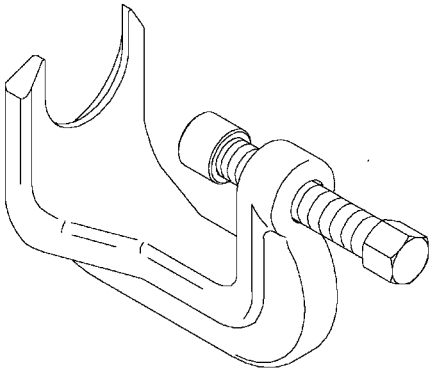

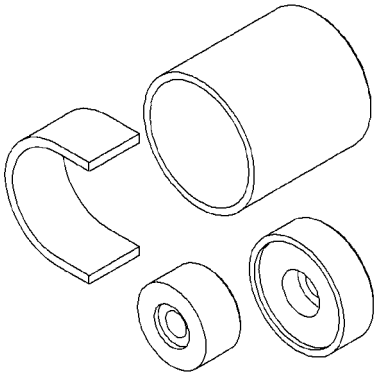

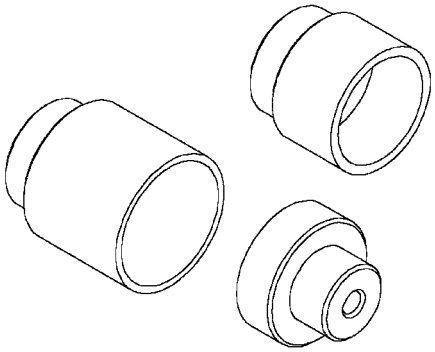

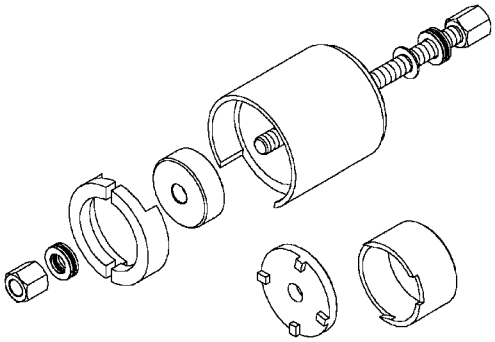

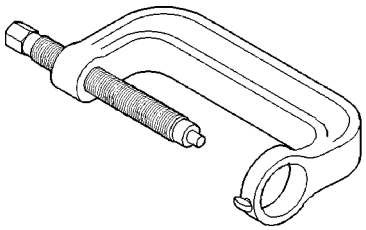

c-4212f-8011d4af

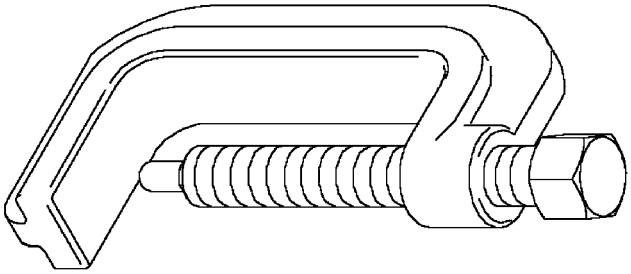

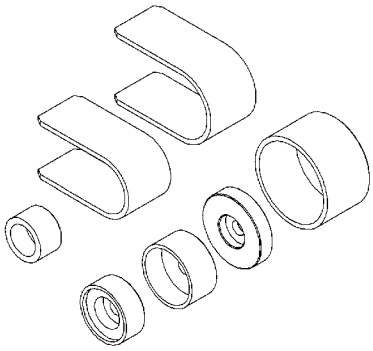

BUSHINGS

REMOVAL

LOWER CONTROL ARM BUSHINGS - 4WD (LD)

1. Remove the lower control arm (Refer to 2 - SUSPENSION/FRONT/LOWER CONTROL ARM - REMOVAL).
2. Secure the control arm in a vise.

NOTE: Extreme pressure lubrication must be used on the threaded portions of the tool. This will increase the longevity of the tool and insure proper operation during the removal and installation process.

FRAME MOUNTED BUSHING

1. Install the bushing tool 8682-3 (receiver) (3) and 8682-4 (driver) (5) with the threaded rod (1) and the two bearings (2) as shown for the replacement of the frame bushing (7)

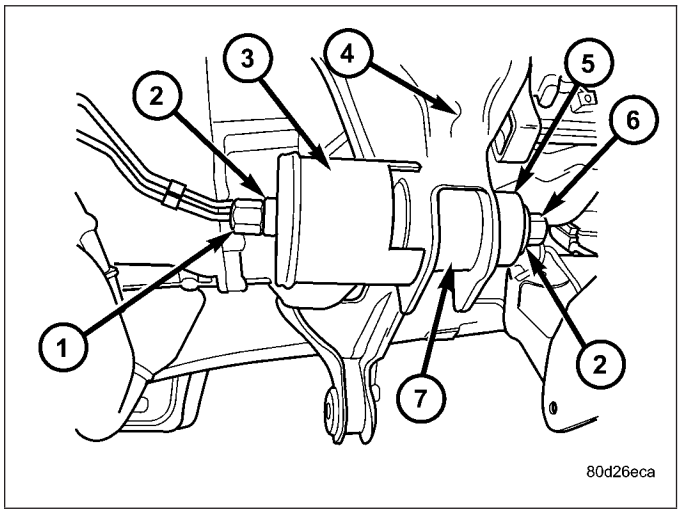

CONTROL ARM BUSHING

1. Install bushing remover tools 8682-2 (adapter) (4), 8682-3 (receiver) (5) and 8682-4 (driver) (1) with the threaded rod (7) and the two bearings (6) as shown

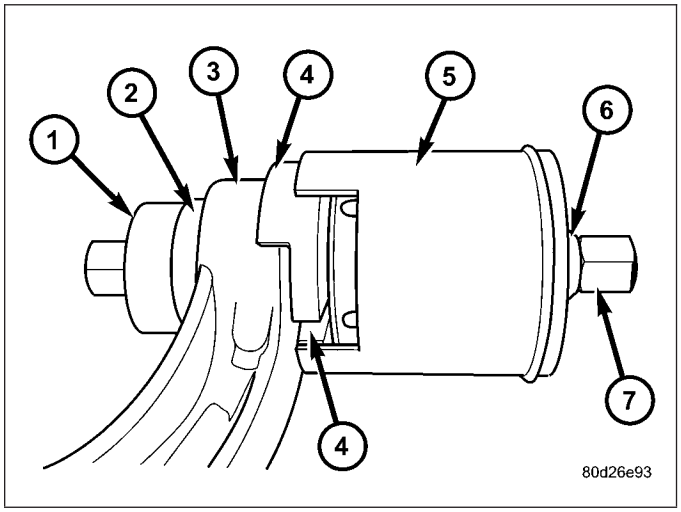

TORSION BAR CROSSMEMBER BUSHING

1. Remove the torsion bar cross member (Refer to 13 - FRAME & BUMPERS/FRAME/REAR CROSS-MEMBER - REMOVAL).
2. Secure the cross member in a vise.

NOTE: Extreme pressure lubrication must be used on the threaded portions of the tool. This will increase the longevity of the tool and insure proper operation during the removal and installation process.

3. Install special tools 8838 threaded rod, 8835-1(2), 8835-4(3) and 8835-3(4) as shown in the graphic below.
4. Press out the bushing.

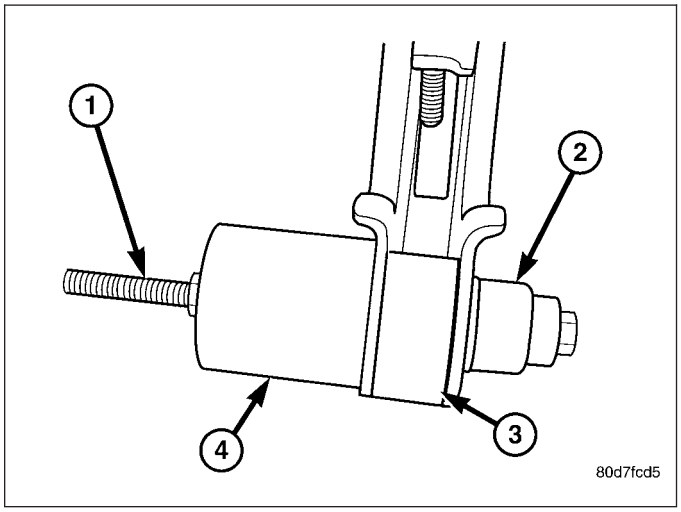

LOWER CONTROL ARM BUSHINGS - 2WD (LD)

NOTE: HD 4X2 bushings are not servicable.

1. Remove the lower control arm (Refer to 2 - SUSPENSION/FRONT/LOWER CONTROL ARM - REMOVAL).
2. Secure the control arm in a vise.

NOTE: Extreme pressure lubrication must be used on the threaded portions of the tool. This will increase the longevity of the tool and insure proper operation during the removal and installation process.

LARGE BUSHING

1. Install bushing remover tools 8836-2 (receiver) (4), 8836-4 (spacer) (1) and 8836-5 (driver) (2) with the threaded rod 8839 (3) and the bearing as shown for replacement of the large bushing.

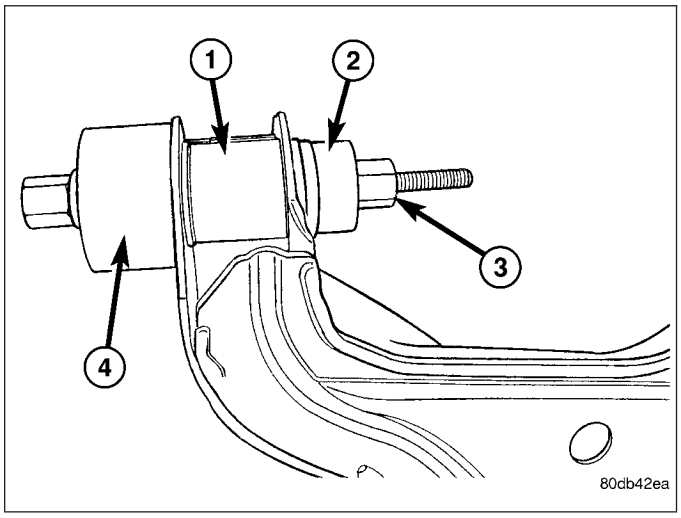

SMALL BUSHING

1. Install the bushing tool 8836-6 (driver) (2), 8836-3 (spacer) (3) and 8836-2 (receiver) (4) with the threaded rod 8839 (1) and the bearing as shown for the replacement of the small bushing

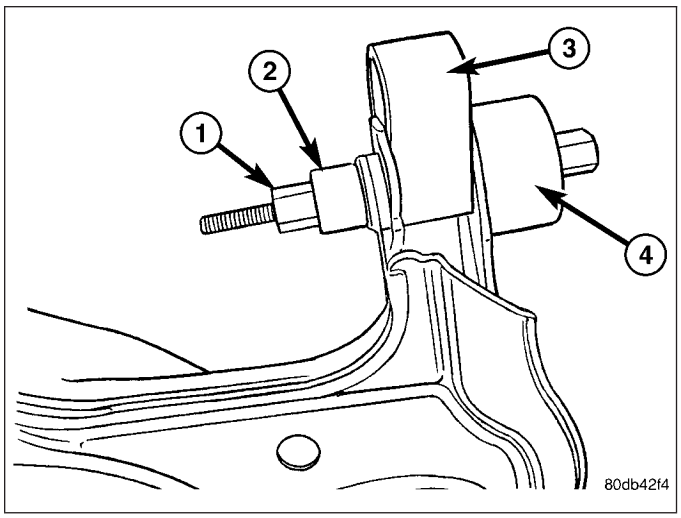

INSTALLATION

LOWER CONTROL ARM BUSHINGS - 4WD (LD)

NOTE: Be careful to properly orient the bushing voids in the correct position to within ± 10°. The correct position places the long narrow void outboard (3) of the bushing and the short wide void inboard (1) of the bushing.

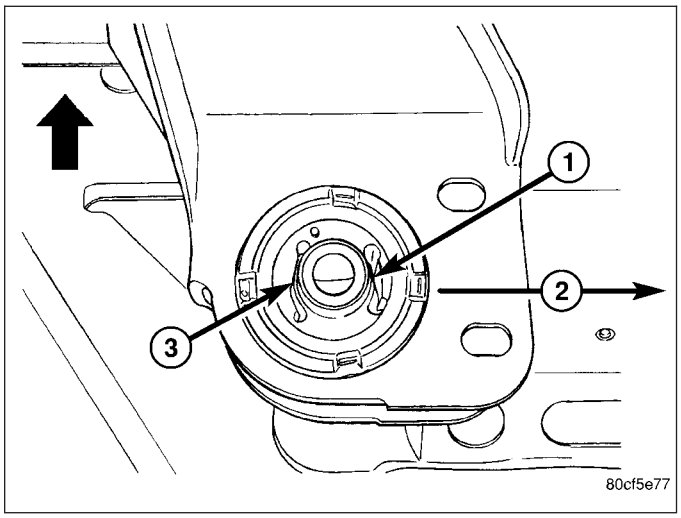

FRAME MOUNTED BUSHING

NOTE: Extreme pressure lubrication must be used on the threaded portions of the tool. This will increase the longevity of the tool and insure proper operation during the removal and installation process.

1. Install the new bushing into the frame using special tools 8682-3 (receiver) (3), 8682-1 (driver) (5) with the two bearings (2) and the threaded rod (1).

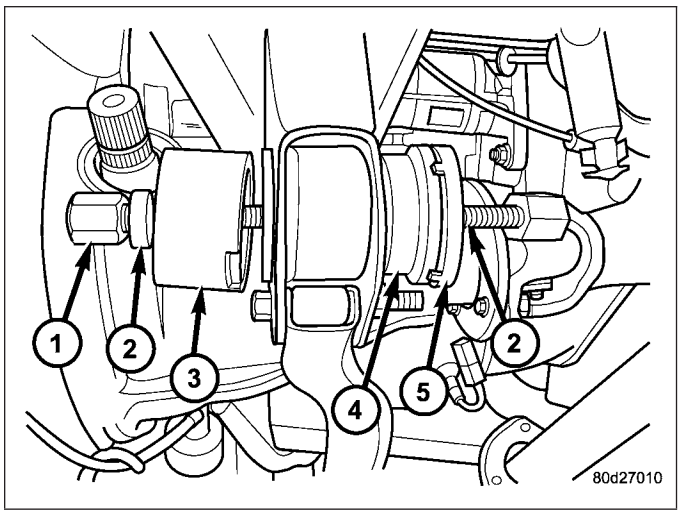

2. Make sure to properly orient the bushing with the voids (1&2) in the proper direction.

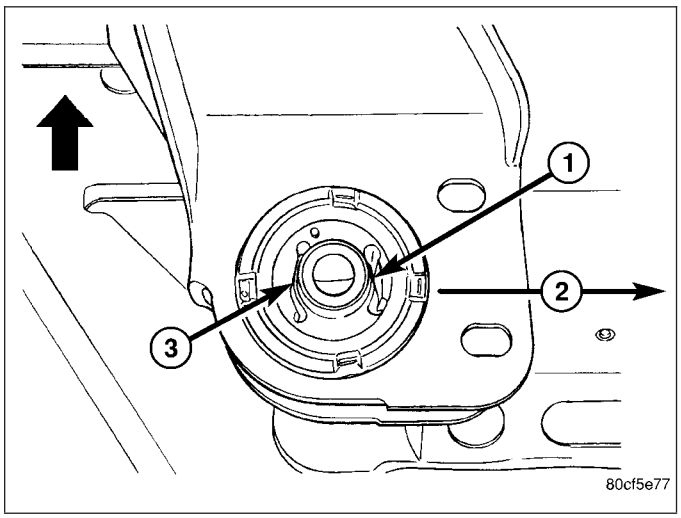

CONTROL ARM BUSHING

1. Install the new lower control arm bushings (4) into the lower control arm using tools 8682-1 (driver) (3), 8682-5 (receiver) (6) and the two bearings (2) with the threaded rod (1).

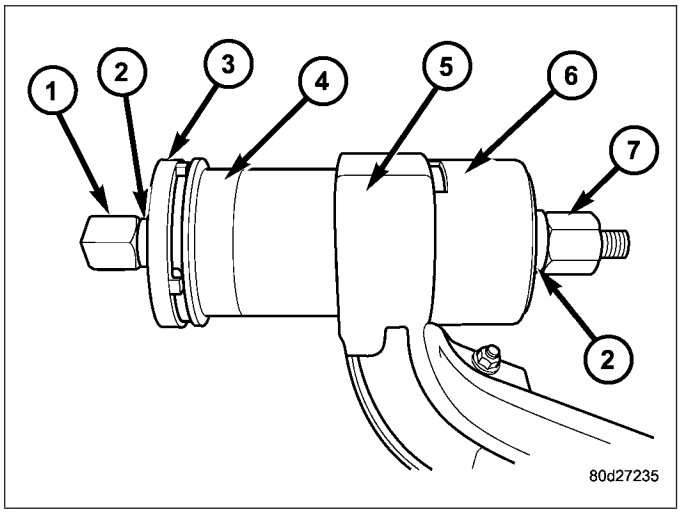

2. Make sure to properly orient the bushing with the voids (1&2) in the proper direction.

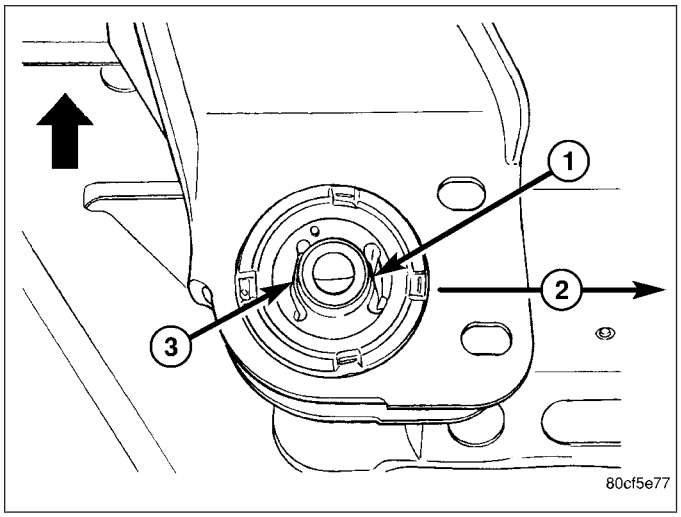

1. Remove the control arm from the vise.
2. Install the lower control arm (Refer to 2 - SUSPENSION/FRONT/LOWER CONTROL ARM - INSTALLATION).
3. Reset the vehicle ride height (Refer to 2 - SUSPENSION/WHEEL ALIGNMENT - STANDARD PROCEDURE).
4. Perform a wheel alignment (Refer to 2 - SUSPENSION/WHEEL ALIGNMENT - STANDARD PROCEDURE).

TORSION BAR CROSS MEMBER BUSHING

NOTE: Extreme pressure lubrication must be used on the threaded portions of the tool. This will increase the longevity of the tool and insure proper operation during the removal and installation process.

1. Install the new bushing into the cross member using special tools 8835-2(1), 8835-4(2) and 8835-3(3) with the bearing and the threaded rod 8838 (4).

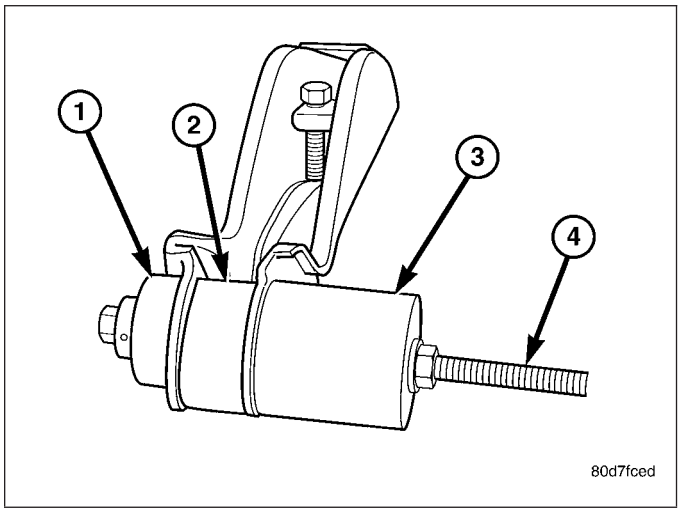

2. Remove the cross member from the vise.
3. Install the torsion bar cross member (Refer to 13 - FRAME & BUMPERS/FRAME/REAR CROSSMEMBER - INSTALLATION).
4. Reset the vehicle ride height (Refer to 2 - SUSPENSION/WHEEL ALIGNMENT - STANDARD PROCEDURE).
5. Perform a wheel alignment (Refer to 2 - SUSPENSION/WHEEL ALIGNMENT - STANDARD PROCEDURE).

LOWER CONTROL ARM BUSHINGS - 2WD (LD)

NOTE: HD 4X2 bushings are not servicable.

LARGE BUSHING

NOTE: Extreme pressure lubrication must be used on the threaded portions of the tool. This will increase the longevity of the tool and insure proper operation during the removal and installation process.

1. Install the new bushing into the lower control arm using special tools 8836-2 (receiver) (3) , 8836-1 (driver) (1) , 8836-4 (spacer) (4) with the bearing and the threaded rod (8839) (2).

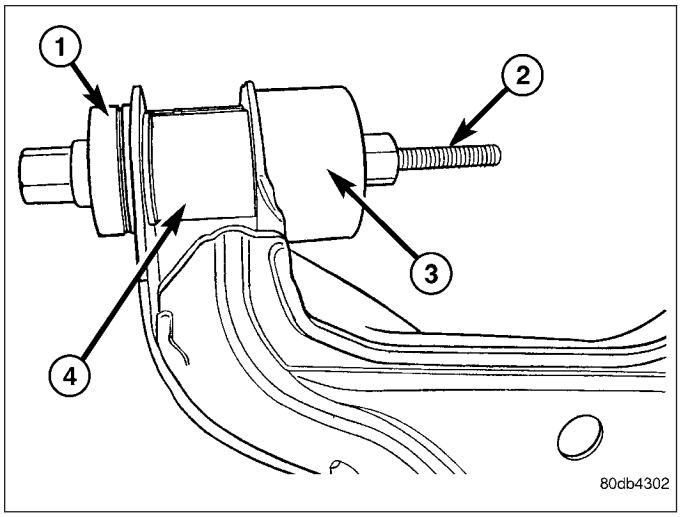

SMALL BUSHING

1. Install the small bushings into the lower control arm using tools 8836-7 (driver) (4), 8836-2 (receiver) (1), 8836–3 (spacer) (3) and the bearing with the threaded rod (8839) (2).

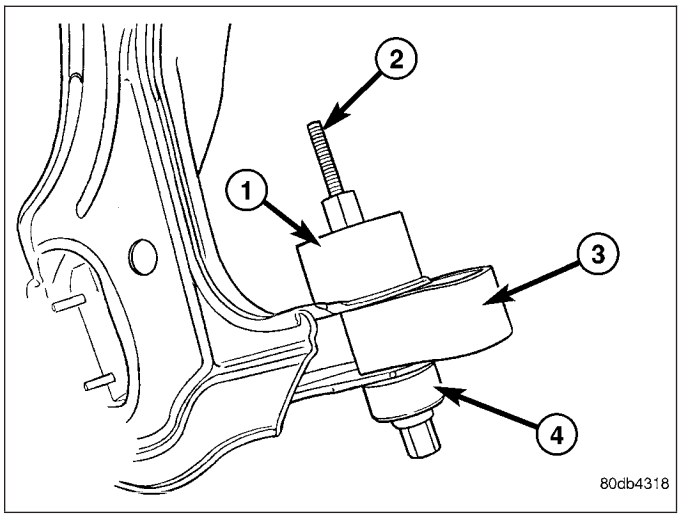

1. Remove the control arm from the vise.
2. Install the lower control arm (Refer to 2 - SUSPENSION/FRONT/LOWER CONTROL ARM - INSTALLATION).
3. Reset the vehicle ride height (Refer to 2 - SUSPENSION/WHEEL ALIGNMENT - STANDARD PROCEDURE).
4. Perform a wheel alignment (Refer to 2 - SUSPENSION/WHEEL ALIGNMENT - STANDARD PROCEDURE).

HUB / BEARING

REMOVAL

HUB/BEARING - 4X4

1. Raise and support the vehicle.
2. Remove the wheel and tire assembly.
3. Remove the brake caliper and rotor (Refer to 5 - BRAKES/HYDRAULIC/MECHANICAL/ROTORS - REMOVAL).
4. Remove the ABS wheel speed sensor if equipped, (Refer to 5 - BRAKES/ELECTRICAL/FRONT WHEEL SPEED SENSOR - REMOVAL).
5. Remove the halfshaft nut.

NOTE: Do not strike the knuckle with a hammer to remove the tie rod end or the ball joint. Damage to the steering knuckle will occur.

6. Remove the tie rod end nut and separate the tie rod from the knuckle using special tool 8677.
7. Remove the upper ball joint nut and separate the upper ball joint from the knuckle using special tool 8677.
8. Pull down on the steering knuckle to separate the halfshaft (2) from the hub/bearing.
9. Remove the three hub/bearing mounting bolts (1) from the steering knuckle.
10. Slide the hub/bearing out of the steering knuckle.
11. Remove the brake dust shield.

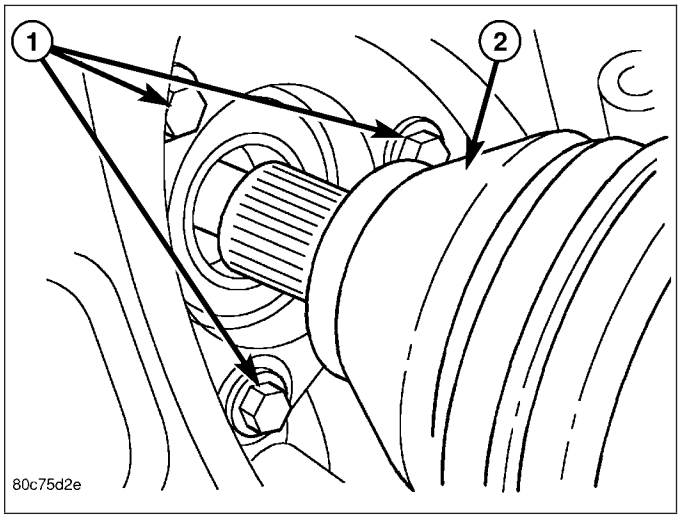

HUB/BEARING - 4X2

1. Raise and support the vehicle.
2. Remove the wheel and tire assembly.
3. Remove the brake caliper and rotor (Refer to 5 - BRAKES/HYDRAULIC/MECHANICAL/ROTORS - REMOVAL).

4. Remove the ABS wheel speed sensor if equipped (4), (Refer to 5 - BRAKES/ELECTRICAL/FRONT WHEEL SPEED SENSOR - REMOVAL)
5. Remove the three hub/bearing mounting bolts (5) from the steering knuckle (3).
6. Slide the hub/bearing (1) out of the steering knuckle (3).

NOTE: The next step excludes SRT-10. (SRT-10 does not have a dust shield)

7. Remove the brake dust shield (2).

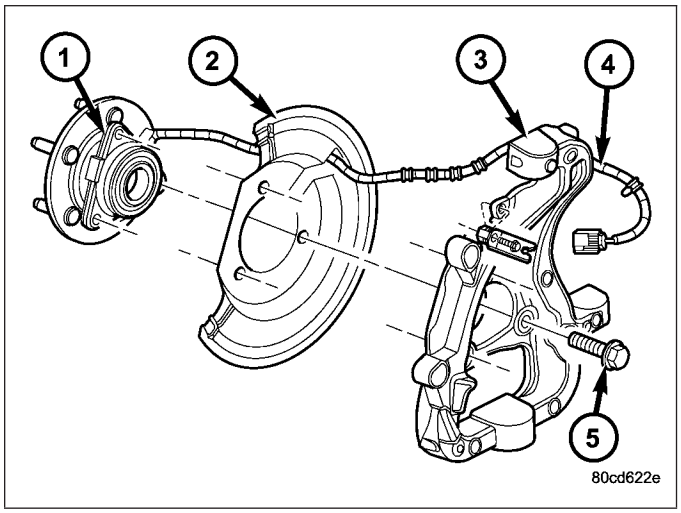

INSTALLATION

HUB/BEARING - 4X4

1. Install the brake dust shield (2).
2. Install the hub/bearing (1) into the steering knuckle (3) and tighten the bolts to 163 N·m (120 ft. lbs.).

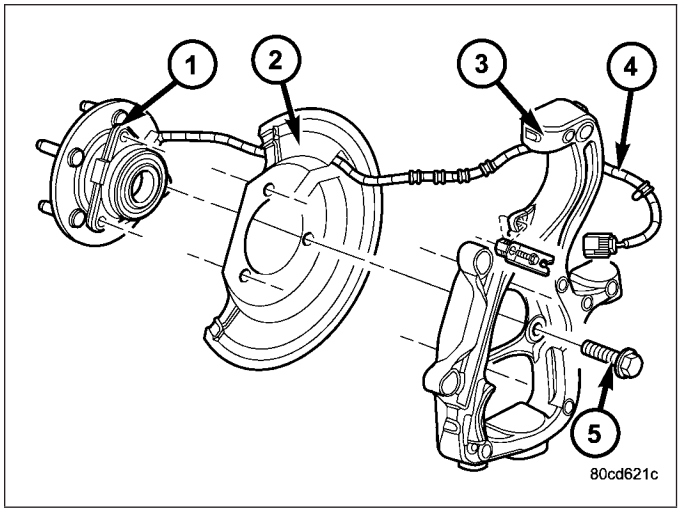

3. Install the brake rotor and caliper (Refer to 5 - BRAKES/HYDRAULIC/MECHANICAL/ROTORS - INSTALLATION).
4. Install the ABS wheel speed sensor if equipped (Refer to 5 - BRAKES/ELECTRICAL/FRONT WHEEL SPEED SENSOR - INSTALLATION).
5. Install the upper ball joint nut to the steering knuckle and tighten to 54 N·m (40 ft. lbs.) (on 1500 series only an additional 90° turn).
6. Install the tie rod end nut to the steering knuckle and tighten to 61 N·m (45 ft. lbs.) then an additional 90°.
7. Install the halfshaft nut and tighten to 251 N·m (185 ft. lbs.).
8. Install the wheel and tire assembly (Refer to 22 - TIRES/WHEELS/WHEELS - STANDARD PROCEDURE).
9. Remove the support and lower vehicle.

HUB/BEARING - 4X2

1. Install the brake dust shield (2).**SRT-10 Excluded in this step.**
2. Install the hub/bearing (1) into the steering knuckle (3) and tighten the bolts (5) to 163 N·m (120 ft. lbs.) **4X2 LD.** Or tighten the bolts (5) to 176 N·m (130 ft. lbs.) **4X2 HD.**.
3. Install the brake rotor and caliper (Refer to 5 - BRAKES/HYDRAULIC/MECHANICAL/ROTORS - INSTALLATION).
4. Install the ABS wheel speed sensor if equipped (4) (Refer to 5 - BRAKES/ELECTRICAL/FRONT WHEEL SPEED SENSOR - INSTALLATION).

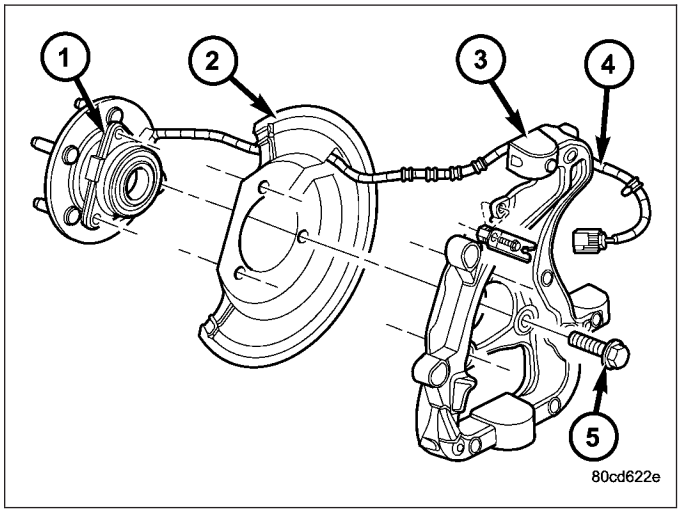

5. Install the wheel and tire assembly (Refer to 22 - TIRES/WHEELS/WHEELS - STANDARD PROCEDURE).
6. Remove the support and lower vehicle.

KNUCKLE

DESCRIPTION

The knuckle (1) is a single casting with legs machined for the upper and lower ball joints. The knuckle also has machined mounting locations for the front brake calipers (4) and hub bearing (5).

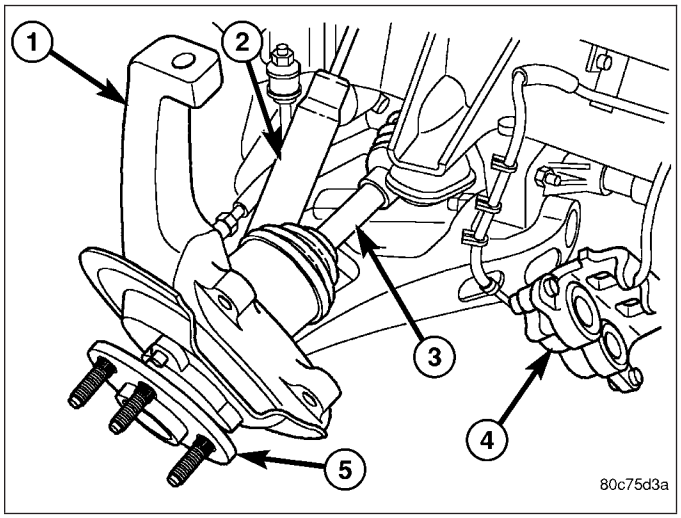

OPERATION

The steering knuckle pivot between the upper and lower ball joint. Steering linkage attached to the knuckle allows the vehicle to be steered.

REMOVAL

1. Raise and support the vehicle.
2. Remove the wheel and tire assembly.
3. Remove the brake caliper, rotor (Refer to 5 - BRAKES/HYDRAULIC/MECHANICAL/ROTORS - REMOVAL), shield and ABS wheel speed sensor if equipped (Refer to 5 - BRAKES/ELECTRICAL/FRONT WHEEL SPEED SENSOR - REMOVAL).
4. Remove the front halfshaft nut (if equipped).

5. Remove the tie rod end nut. Separate the tie rod from the knuckle with Remover 8677.

CAUTION: When installing Remover 8677 to separate the ball joint, be careful not to damage the ball joint seal.

6. Remove the lower ball joint nut. Separate the ball joint from the knuckle with Remover 8677 and remove the knuckle.

7. Remove the upper ball joint nut. Separate the ball joint from the knuckle (1) with Remover 8677 (2)

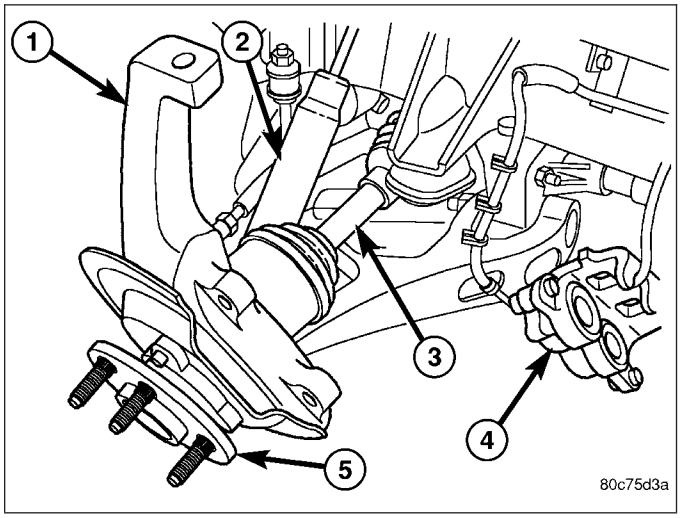

8. Remove the hub/bearing from the steering knuckle (Refer to 2 - SUSPENSION/FRONT/HUB / BEARING - REMOVAL).

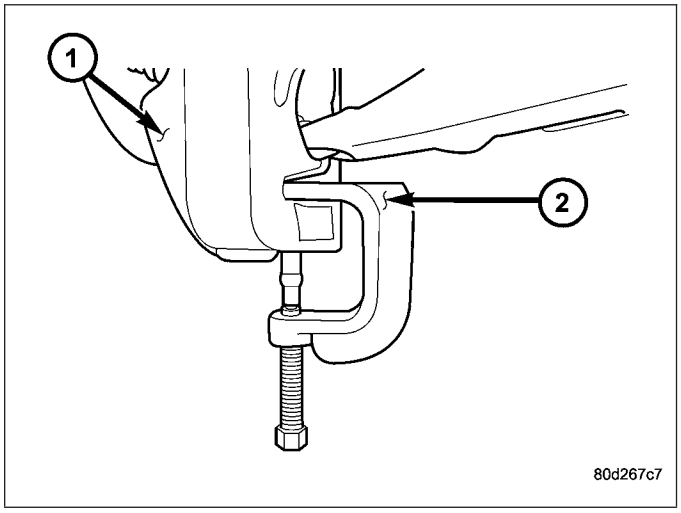

INSTALLATION

CAUTION: The ball joint stud tapers must be CLEAN and DRY before installing the knuckle. Clean the stud tapers with mineral spirits to remove dirt and grease.

NOTE: When installing hub/bearing with ABS brakes, position the speed sensor opening towards the front of the vehicle.

1. Install the hub/bearing to the steering knuckle (1) and tighten the bolts to 163 N·m (120 ft. lbs.)(LD) or 176 N·m (130 ft. lbs.)(HD 4X2).
2. Install the knuckle (1) onto the upper and lower ball joints.

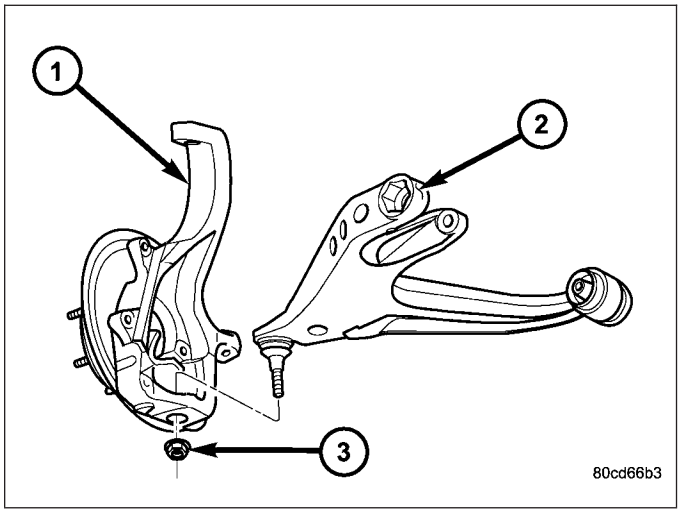

3. Install the upper and lower ball joint nuts (3). Tighten the upper ball joint nut to 54 N·m (40 ft. lbs.) (on 1500 series only an additional 90° turn is required) and the lower ball joint nut (3) to 52 N·m (38 ft. lbs.)(on 1500 series only an additional 90° turn is required)(LD) or 135 N·m (100 ft. lbs.)(HD 4X2).
4. Remove the hydraulic jack from the lower suspension arm.
5. Install the tie rod end and tighten the nut to 61 N·m (45 ft. lbs.).
6. Install the front halfshaft into the hub/bearing (if equipped).
7. Install the the halfshaft nut and tighten to 251 N·m (185 ft. lbs.) (if equipped).
8. Install the ABS wheel speed sensor if equipped (Refer to 5 - BRAKES/ELECTRICAL/FRONT WHEEL SPEED SENSOR - INSTALLATION) and brake shield, rotor and caliper (Refer to 5 - BRAKES/HYDRAULIC/MECHANICAL/ROTORS - INSTALLATION).
9. Install the wheel and tire assembly (Refer to 22 - TIRES/WHEELS/WHEELS - STANDARD PROCEDURE).
10. Remove the support and lower the vehicle.
11. Perform a wheel alignment (Refer to 2 - SUSPENSION/WHEEL ALIGNMENT - STANDARD PROCEDURE).

LOWER BALL JOINT

DIAGNOSIS AND TESTING

LOWER BALL JOINT

1. Raise the front of the vehicle. Place safety floor stands under both lower control arms as far outboard as possible. Lower the vehicle to allow the stands to support some or all of the vehicle weight.
2. Mount a dial indicator solidly to the topside of the lower control arm and then zero the dial indicator.
3. Position the indicator plunger against the bottom surface of the steering knuckle.

NOTE: The dial indicator plunger must be perpendicular to the machined surface of the steering knuckle.

4. Position a pry bar under the tire assembly. Pry upwards on the tire assembly.
5. If the travel exceeds 0.5 mm (0.020 in.), replace the lower ball joint (Refer to 2 - SUSPENSION/FRONT/LOWER BALL JOINT - REMOVAL).

REMOVAL

1. Remove the tire and wheel assembly.
2. Remove the brake caliper and rotor (Refer to 5 - BRAKES/HYDRAULIC/MECHANICAL/ROTORS - REMOVAL).
3. Disconnect the tie rod from the steering knuckle (Refer to 19 - STEERING/LINKAGE/TIE ROD END - REMOVAL).
4. Remove the lower ball joint nut and seperate the lower ball joint from the steering knuckle (1) using special tool 8677 (2) (Refer to 2 - SUSPENSION/FRONT/KNUCKLE - REMOVAL).

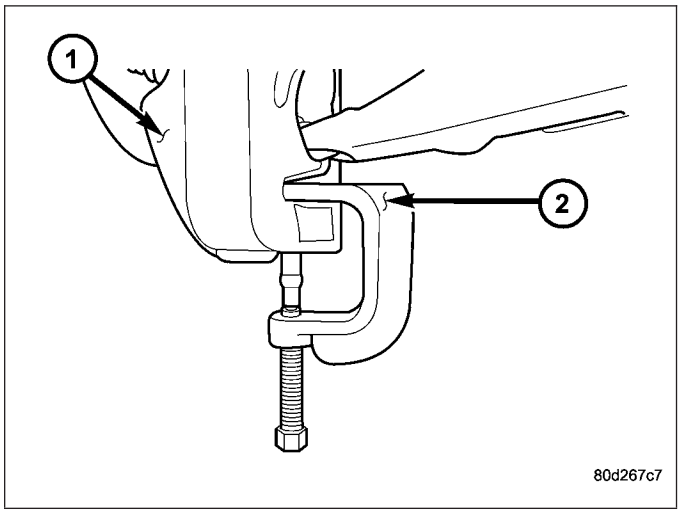

5. Move the halfshaft to the side and support the halfshaft out of the way (If Equipped).
6. Remove the snap ring, from the lower control arm (HD 4X2 only)

NOTE: Extreme pressure lubrication must be used on the threaded portions of the tool. This will increase the longevity of the tool and insure proper operation during the removal and installation process.

7. Press the ball joint (3) from the lower control arm using special tools C-4212–F (PRESS) (1), 8698-2 (RECEIVER) (4) and 8698-3 (DRIVER) (2).

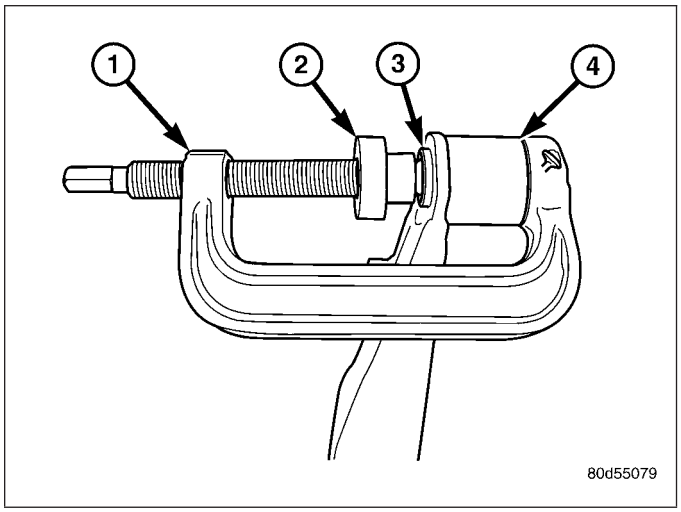

INSTALLATION

NOTE: Extreme pressure lubrication must be used on the threaded portions of the tool. This will increase the longevity of the tool and insure proper operation during the removal and installation process.

1. Install the ball joint (3) into the control arm (4) and press in using special tools C-4212–F (press) (1), 8698-1 (driver) (2) and 8698-3 (receiver) (5).
2. Install the ball joint boot.
3. Stake the ball joint flange in four evenly spaced places around the ball joint flange, using a chisel and hammer (LD only).
4. Replace the snap ring (HD 4X2 only)

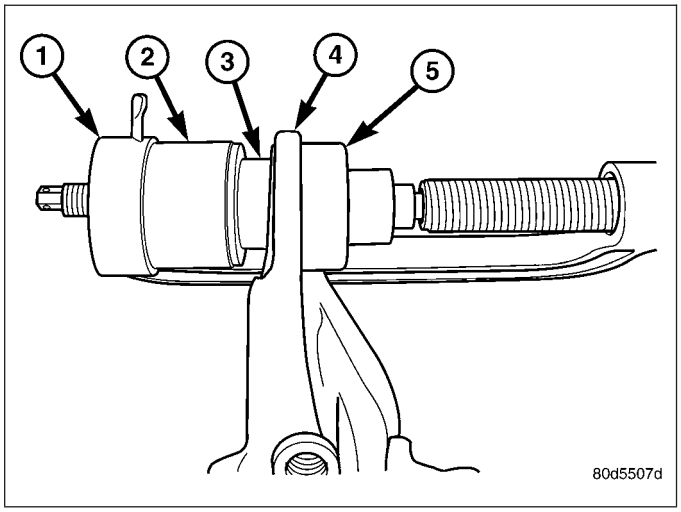

5. Remove the support for the halfshaft and install into position (If Equipped).
6. Install the steering knuckle (Refer to 2 - SUSPENSION/FRONT/KNUCKLE - INSTALLATION).
7. Install the tie rod end into the steering knuckle (Refer to 19 - STEERING/LINKAGE/TIE ROD END - INSTALLATION).
8. Install and tighten the halfshaft nut to 251 N·m (185 ft. lbs.). (If Equipped).
9. Install the brake caliper and rotor (Refer to 5 - BRAKES/HYDRAULIC/MECHANICAL/ROTORS - INSTALLATION).
10. Install the tire and wheel assembly (Refer to 22 - TIRES/WHEELS/WHEELS - STANDARD PROCEDURE).
11. Check the vehicle ride height (Refer to 2 - SUSPENSION/WHEEL ALIGNMENT - STANDARD PROCEDURE).
12. Perform a wheel alignment (Refer to 2 - SUSPENSION/WHEEL ALIGNMENT - STANDARD PROCEDURE).

LOWER CONTROL ARM

REMOVAL

LOWER CONTROL ARM - 4X4 (LD)

1. Raise and support the vehicle.
2. Remove the wheel and tire assembly.
3. Remove the upper ball joint nut. Separate ball joint from the steering knuckle with Remover 8677.
4. Remove the front halfshaft, (Refer to 3 - DIFFERENTIAL & DRIVELINE/HALF SHAFT - REMOVAL).
5. Remove the torsion bar, (Refer to 2 - SUSPENSION/FRONT/TRACK BAR - REMOVAL).
6. Remove the shock absorber lower bolt.
7. Remove the stabilizer bar link (Refer to 2 - SUSPENSION/FRONT/STABILIZER LINK - REMOVAL).
8. Remove the lower ball joint nut. Separate ball joint from the steering knuckle with Remover 8677 (2).

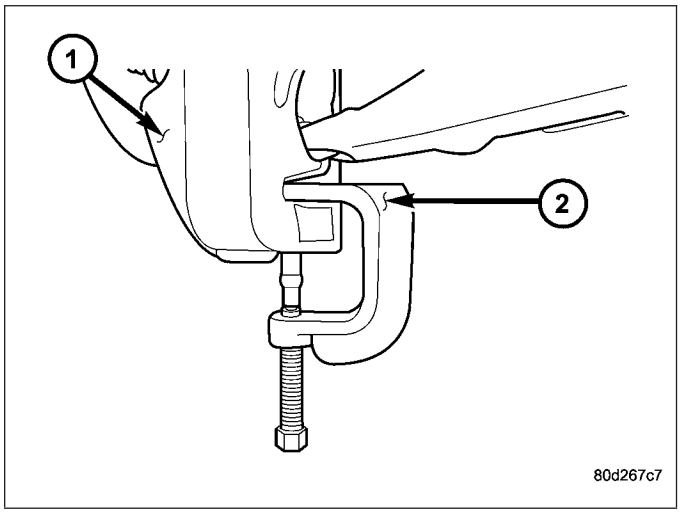

9. Remove the control arm pivot bolts (3&5) and suspension arm (1) from frame rail brackets.

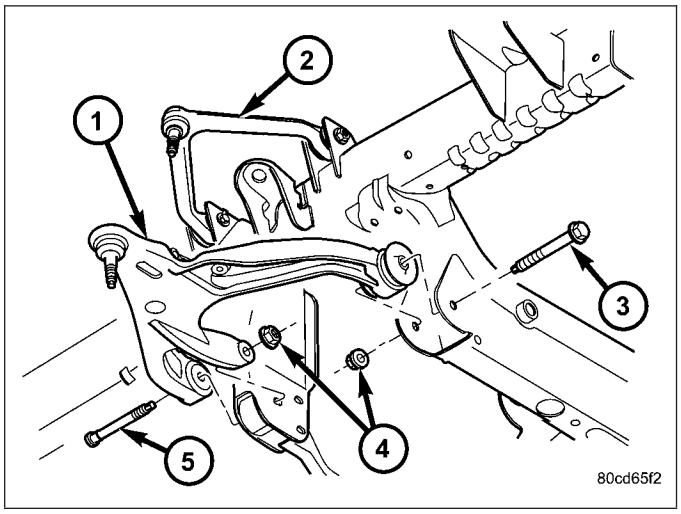

LOWER CONTROL ARM - 4X2

1. Raise and support the vehicle.
2. Remove the tire and wheel assembly.
3. Support the lower control arm at the outboard side of the lower control arm to support vehicle weight.

4. Remove the shock (Refer to 2 - SUSPENSION/FRONT/SHOCK - REMOVAL).
5. Install Spring Compressor DD-1278 up through the lower suspension arm, coil spring and shock hole in the frame. The bell-shaped adapter goes against the lower suspension arm. Install the nut on top of the tool at the shock hole.
6. Tighten the spring compressor nut against bell-shaped adapter finger tight then loosen 1/2 turn.

NOTE: This will hold the spring in place until the lower suspension arm is separated from the steering knuckle.

7. Remove the stabilizer link (Refer to 2 - SUSPENSION/FRONT/STABILIZER LINK - REMOVAL).

8. Remove the lower ball joint nut at the steering knuckle (1).
9. Install Ball Joint Remover tool 8677 (2)on the lower ball joint and separate the ball joint from the knuckle.

NOTE: Do not allow the upper control arm and steering knuckle to rebound downwards they must be supported.

10. Support the upper control arm and steering knuckle out of the way.
11. Remove the lower control arm support.
12. Tighten the spring compressor tool to allow clearance for the lower ball joint to be removed out of the knuckle.

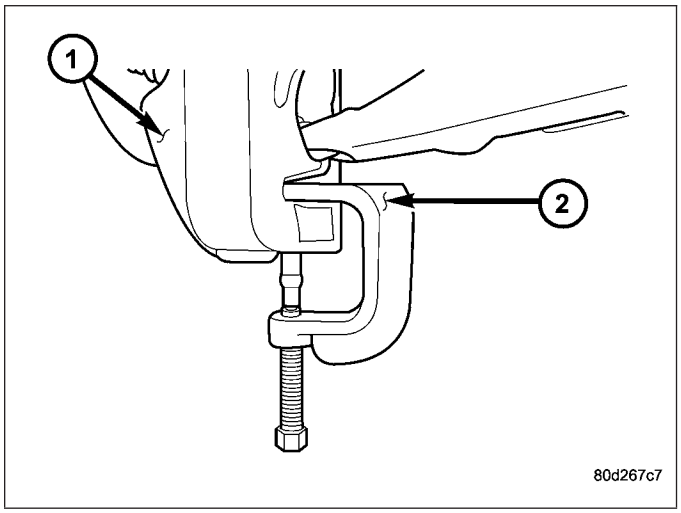

13. Loosen the tension on the spring compressor tool slowly allowing the lower suspension arm to pivot downward.
14. Remove the spring compressor tool.
15. Remove coil spring and isolator pad from the vehicle.

16. Remove the front and rear pivot bolts (1&2).
17. Remove the lower control arm (3).

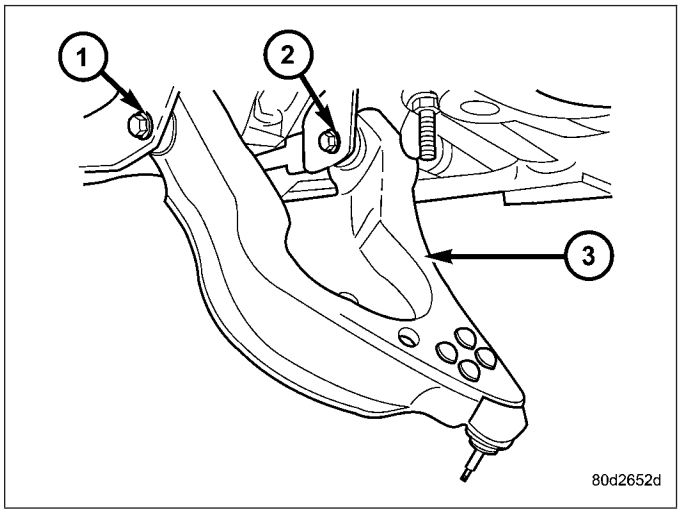

INSTALLATION

LOWER CONTROL ARM - 4X4 (LD)

1. Position the lower control arm (1) at the frame rail brackets. Install the pivot bolts (3&5) and nuts (4). Tighten the nuts finger-tight.

CAUTION: The ball joint stud taper must be CLEAN and DRY before installing the knuckle. Clean the stud taper with mineral spirits to remove dirt and grease.

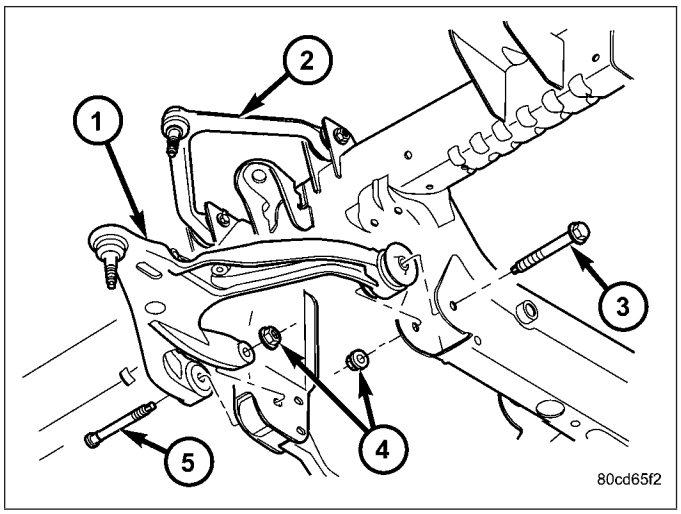

2. Insert the lower ball joint stud into the steering knuckle. Install and tighten the retaining nut to 52 N·m (38 ft. lbs.) (on 1500 series only an additional 90° turn is required).
3. Install the torsion bar, (Refer to 2 - SUSPENSION/FRONT/TRACK BAR - INSTALLATION).
4. Install shock absorber lower bolt and tighten to 135 N·m (100 ft. lbs.).
5. Install the front halfshaft, (Refer to 3 - DIFFERENTIAL & DRIVELINE/HALF SHAFT - INSTALLATION).
6. Insert the upper ball joint into the steering knuckle. Install and tighten the retaining nut to 54 N·m (40 ft. lbs.)(on 1500 series only an additional 90° turn is required).
7. Install the stabilizer bar link (Refer to 2 - SUSPENSION/FRONT/STABILIZER LINK - INSTALLATION).
8. Tighten the lower control arm front pivot nut to 204 N·m (150 ft. lbs.). Tighten rear pivot bolt to 204 N·m (150 ft. lbs.).
9. Install the wheel and tire assembly, (Refer to 22 - TIRES/WHEELS/WHEELS - STANDARD PROCEDURE).
10. Remove the support and lower the vehicle.
11. Adjust the front suspension height and perform a wheel alignment (Refer to 2 - SUSPENSION/WHEEL ALIGNMENT - STANDARD PROCEDURE).

LOWER CONTROL ARM - 4X2

1. Install the lower control arm (3) into place on the vehicle.
2. Install the front and rear control arm pivot bolts (1&2) finger tight.

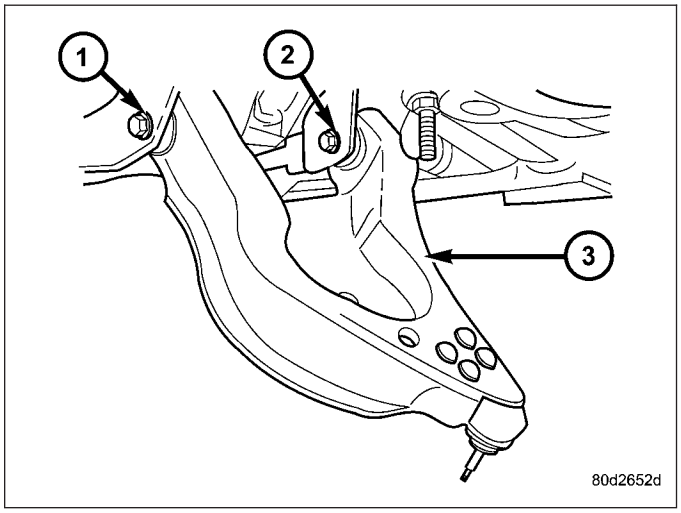

3. Install the coil spring into the frame pocket (Refer to 2 - SUSPENSION/FRONT/SPRING - INSTALLATION).
4. Install the Spring Compressor DD-1278 up through the lower suspension arm, coil spring and shock hole in the frame.
5. Tighten the tool nut to compress the coil spring.
6. Remove the support from the upper control arm and steering knuckle.
7. Position the lower ball joint into the steering knuckle.
8. Install the retaining nut on the lower ball joint and tighten to 52 N·m (38 ft. lbs.)(on 1500 series only an additional 90° turn is required) or 135 N·m (100 ft. lbs.)(HD 4X2 only).
9. Support the lower control arm at the outboard side of the lower control arm to support vehicle weight.
10. Remove the spring compressor tool.
11. Install the shock absorber. (Refer to 2 - SUSPENSION/FRONT/SHOCK - INSTALLATION).
12. Install the stabilizer link (Refer to 2 - SUSPENSION/FRONT/STABILIZER LINK - INSTALLATION).
13. Remove the lower control arm support.
14. Install the wheel and tire assembly and lower the vehicle. (Refer to 22 - TIRES/WHEELS/WHEELS - STANDARD PROCEDURE).
15. Lower the vehicle to the floor with vehicle weight and Tighten the front and rear control arm pivot bolts to 204 N·m (150 ft. lbs.)(LD) or 285 N·m (210 ft. lbs.)(HD 4X2 only).
16. Perform a wheel alignment (Refer to 2 - SUSPENSION/WHEEL ALIGNMENT - STANDARD PROCEDURE).

SPRING

REMOVAL

1. Raise and support vehicle.
2. Remove the front wheel and tire assembly.
3. Support the lower control arm at the outboard side of the lower control arm to support vehicle weight.
4. Remove the shock absorber (Refer to 2 - SUSPENSION/FRONT/SHOCK - REMOVAL).

5. Install Spring Compressor DD-1278 (1) up through the lower suspension arm, coil spring and shock hole in the frame. The bell-shaped adapter (2) goes against the lower suspension arm. Install the nut on top of the tool at the shock hole.
6. Tighten the spring compressor nut against bell-shaped adapter finger tight then loosen 1/2 turn.

NOTE: This will hold the spring in place until the lower suspension arm is separated from the steering knuckle.

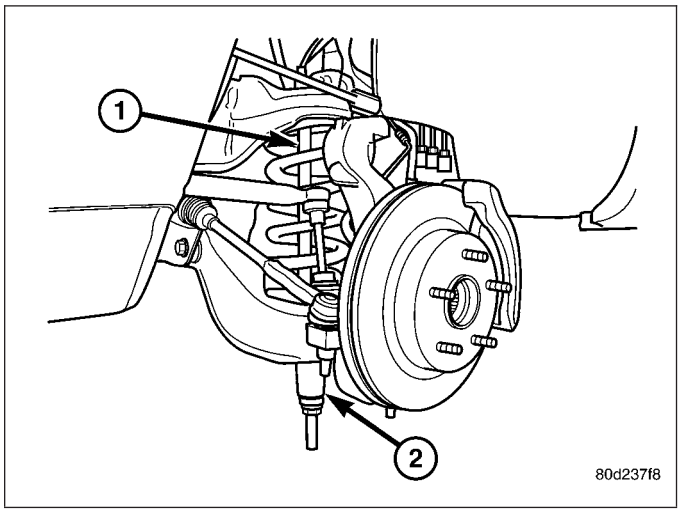

7. Remove the stabilizer link (Refer to 2 - SUSPENSION/FRONT/STABILIZER LINK - REMOVAL).
8. Remove the lower ball joint nut at the steering knuckle.
9. Install Ball Joint Remover tool 8677 on the lower ball joint and separate the ball joint from the knuckle.

NOTE: Do not allow the upper control arm and steering knuckle to rebound downwards they must be supported.

10. Support the upper control arm and steering knuckle out of the way.

11. Remove the lower control arm support.
12. Tighten the spring compressor tool to allow clearance for the lower ball joint to be removed out of the knuckle.

NOTE: It may necessary to loosen the control arm pivot bolt to allow downward swing.

13. Loosen the tension on the spring compressor tool slowly allowing the lower suspension arm to pivot downward.
14. Remove the spring compressor tool.
15. Remove coil spring and isolator pad from the vehicle.

INSTALLATION

1. Tape the isolator pad to the top of the coil spring. Position the spring in the lower suspension arm well. Be sure that the coil spring is seated in the well.

2. Install Spring Compressor DD-1278 (1) up through the lower suspension arm, coil spring and shock hole in the frame.

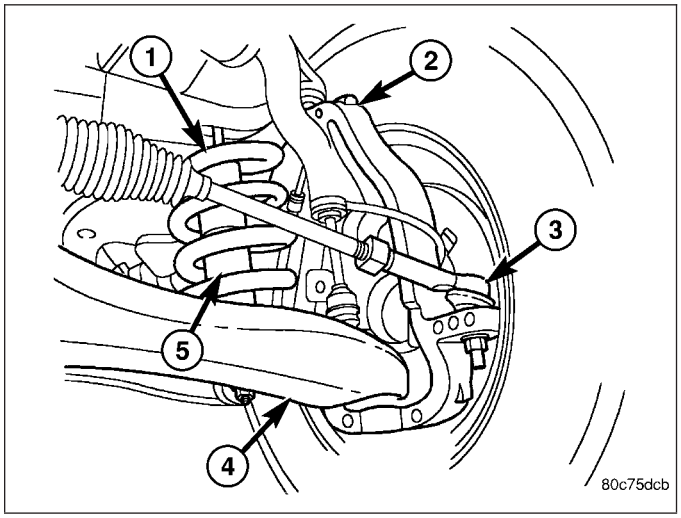

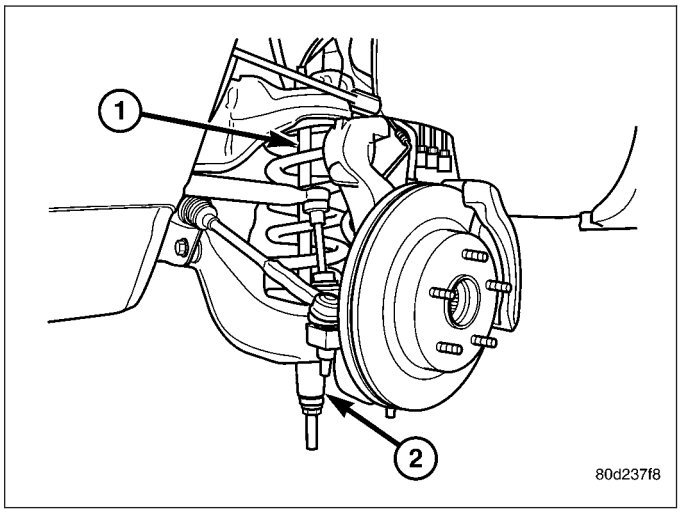

3. Tighten the tool nut to compress the coil spring.
4. Remove the support from the upper control arm and steering knuckle.
5. Position the lower ball joint into the steering knuckle.
6. Install the retaining nut on the lower ball joint and tighten to 52 N·m (38 ft. lbs.)(on 1500 series only an additional 90° turn is required) or 135 N·m (100 ft. lbs.)(HD 4X2 only).
7. Remove the spring compressor tool.
8. Support the lower control arm at the outboard side of the lower control arm to support vehicle weight.
9. Install the shock absorber. (Refer to 2 - SUSPENSION/FRONT/SHOCK - INSTALLATION).
10. Install the stabilizer link (Refer to 2 - SUSPENSION/FRONT/STABILIZER LINK - INSTALLATION).
11. Remove the lower control arm support.
12. Install the wheel and tire assembly and lower the vehicle. (Refer to 22 - TIRES/WHEELS/WHEELS - STANDARD PROCEDURE).
13. Lower the vehicle to the floor with vehicle weight and Tighten the front and rear control arm pivot bolts if loosened to 204 N·m (150 ft. lbs.)(LD) or 285 N·m (210 ft. lbs.)(HD 4X2 only).
14. Perform a wheel alignment (Refer to 2 - SUSPENSION/WHEEL ALIGNMENT - STANDARD PROCEDURE).

SHOCK

DIAGNOSIS AND TESTING

SHOCK

A knocking or rattling noise from a shock absorber may be caused by movement between mounting bushings and metal brackets or attaching components. These noises can usually be stopped by tightening the attaching nuts. If the noise persists, inspect for damaged and worn bushings, and attaching components. Repair as necessary if any of these conditions exist.

A squeaking noise from the shock absorber may be caused by the hydraulic valving and may be intermittent. This condition is not repairable and the shock absorber must be replaced.

The shock absorbers are not refillable or adjustable. If a malfunction occurs, the shock absorber must be replaced. To test a shock absorber, hold it in an upright position and force the piston in and out of the cylinder four or five times. The action throughout each stroke should be smooth and even.

The shock absorber bushings do not require any type of lubrication. Do not attempt to stop bushing noise by lubricating them. Grease and mineral oil-base lubricants will deteriorate the bushing.

REMOVAL

SHOCK - 4X2

1. Raise and support vehicle.
2. Support the lower control arm outboard end.
3. Remove the upper shock absorber nut (1), retainer (2) and grommet (3).
4. Remove the lower nuts and remove the shock absorber.

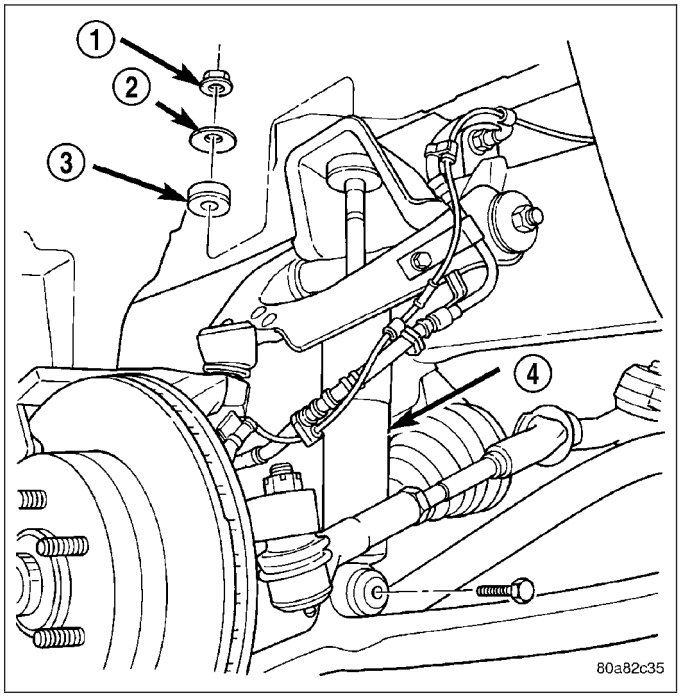

SHOCK - 4X4

1. Raise and support the vehicle.
2. Remove the tire and wheel assembly.
3. Support the lower control arm outboard end.
4. Remove the upper shock nut (2) and with the insulator and retainer (1).
5. Remove the lower shock bolt (4).
6. Remove the shock (3).

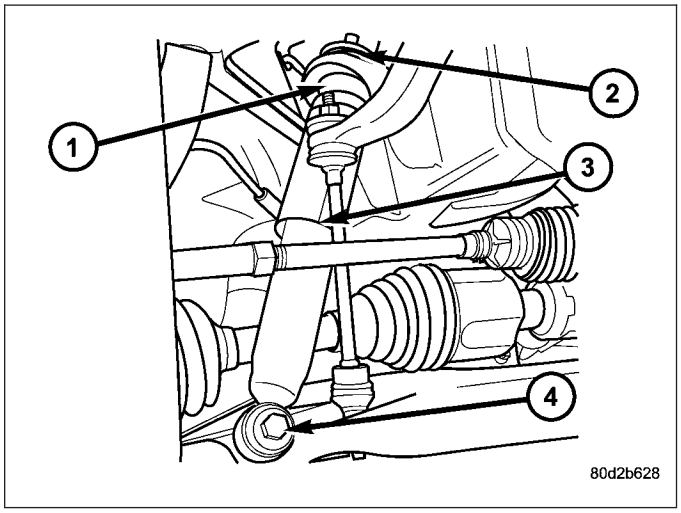

INSTALLATION

SHOCK - 4X2

NOTE: Upper shock nut must be replaced or use Mopar Lock 'N Seal or Loctite® 242 on existing nut.

1. Install the lower retainer and grommet on the shock absorber stud. Insert the shock absorber (4) through the frame bracket hole.
2. Install the lower nuts and tighten the nuts to 35 N·m (25 ft. lbs.).
3. Install the upper grommet (3), retainer (2) and new nut (1) or use Mopar Lock 'N Seal or Loctite® 242 on existing nut, on the shock absorber stud. Tighten nut to 54 N·m (40 ft. lbs.).
4. Remove the support from the lower control arm outboard end.
5. Lower the vehicle.

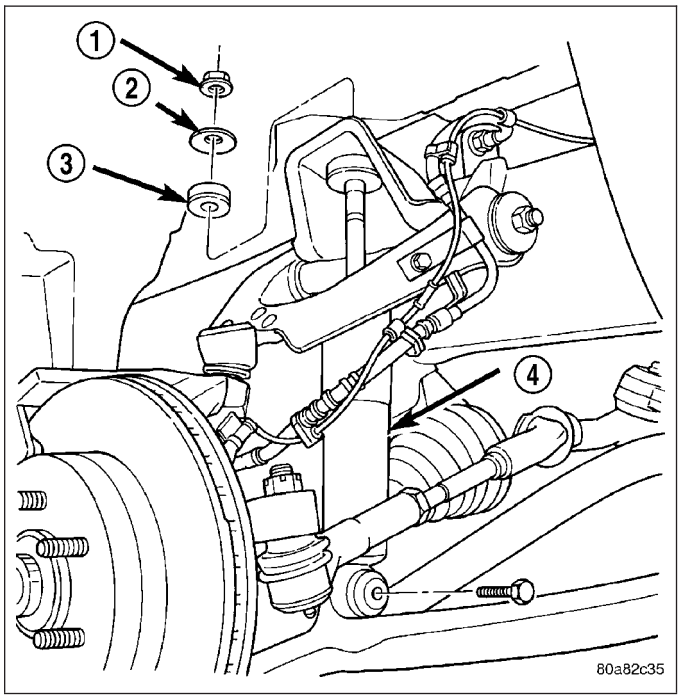

SHOCK - 4X4

1. Install the upper part of the shock (3) into the frame bracket with the insulators and retainers (1).
2. Install the nut (2) and Tighten to 54 N·m (40 ft. lbs.).
3. Install the lower part of the shock into the lower control arm and Tighten the bolt (4) to 135 N·m (100 ft. lbs.).
4. Remove the support from the lower control arm outboard end.
5. Install the tire and wheel assembly (Refer to 22 - TIRES/WHEELS/WHEELS - STANDARD PROCEDURE).

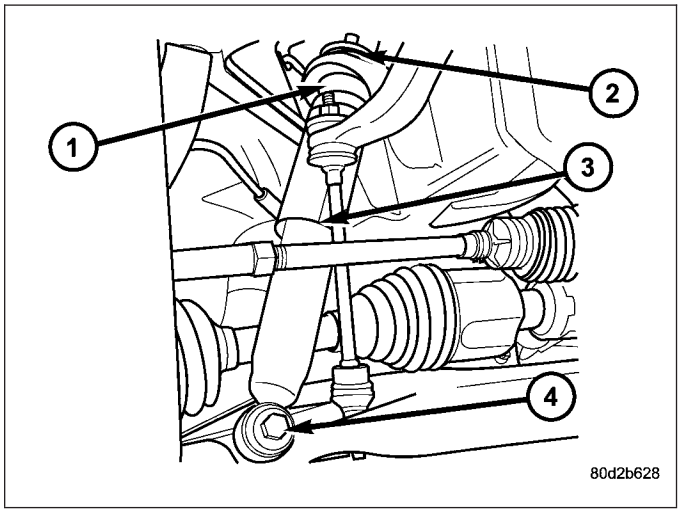

6. Remove the support and lower the vehicle.

STABILIZER BAR

DESCRIPTION

The bar extends across the front underside of the chassis and connects to the frame crossmember. The ends of the bar mount to the lower suspension arm. All mounting points of the stabilizer bar are isolated by bushings.

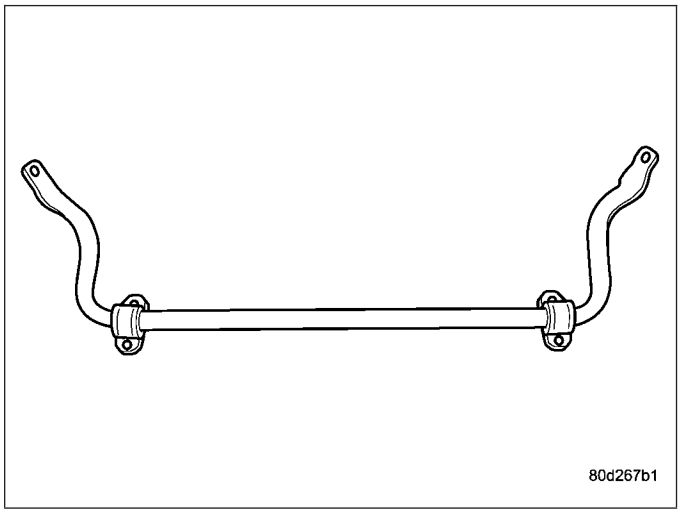

OPERATION

The stabilizer bar is used to minimize vehicle front sway during turns. The bar helps to maintain a flat attitude to the road surface.

REMOVAL

NOTE: To service the stabilizer bar the vehicle should be on a drive on hoist. The vehicle suspension must be at curb height for stabilizer bar installation.

1. Remove the stabilizer bar link (1) upper nuts and remove the retainers and grommets.
2. Remove the stabilizer bar retainer, bolts(2) and retainers from the frame crossmember and remove the bar.

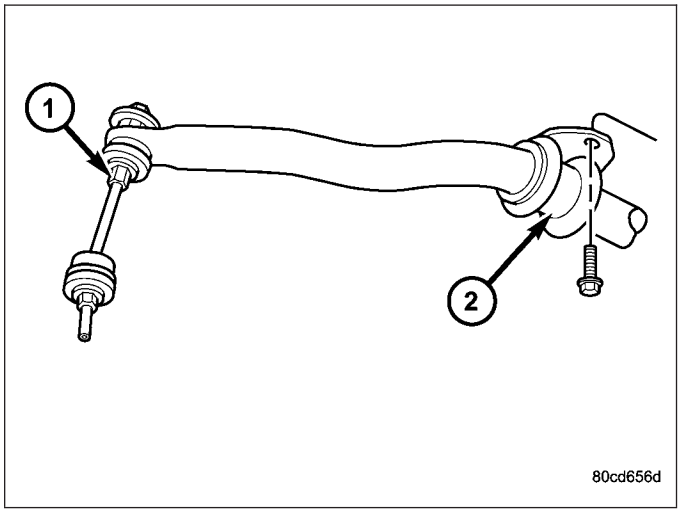

3. If necessary, remove the bushings from the stabilizer bar **Do not cut the old bushings off the stabilizer bar use a mixture of soapy water in order to aid in sliding the bushing off**.

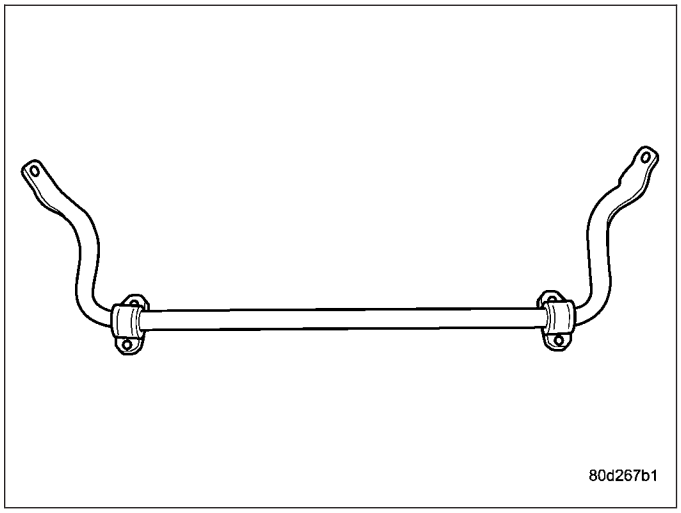

INSTALLATION

NOTE: To service the stabilizer bar the vehicle must be on a drive on hoist. The vehicle suspension must be at curb height for stabilizer bar installation.

1. If removed, Install the bushings on the stabilizer bar using a mixture of soapy water or equivalent in order to slide the bushing over the bar with ease

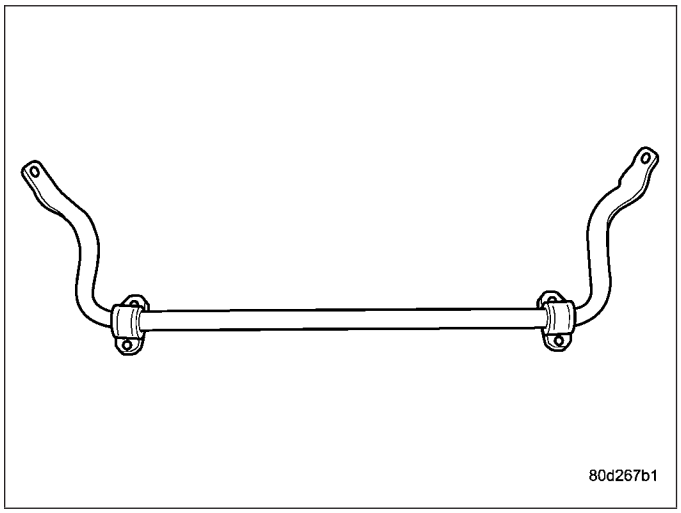

Do not cut the new bushing for installation .

2. Position the stabilizer bar on the frame crossmember brackets and install the bracket and bolts finger-tight (2).

NOTE: Check the alignment of the bar to ensure there is no interference with the either frame rail or chassis component. Spacing should be equal on both sides.

3. Install the stabilizer bar to the stabilizer link (1) and install the grommets and retainers.
4. Install the nuts to the stabilizer link and tighten to 27 N·m (20 ft. lbs.).
5. Tighten the brackets to the frame to 61 N·m (45 ft. lbs.).

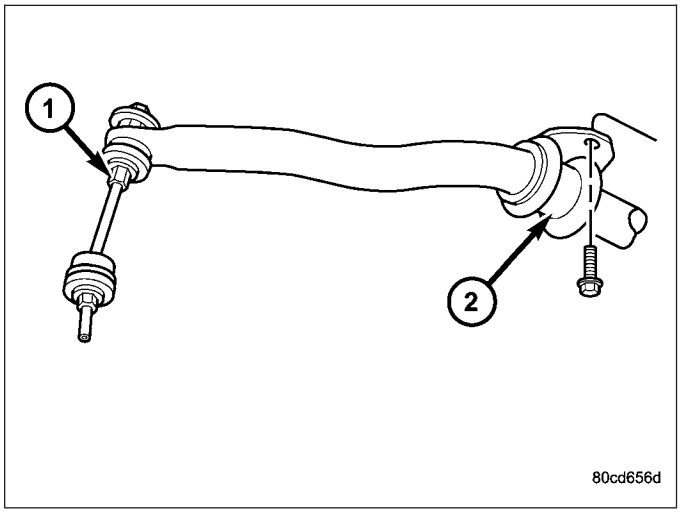

STABILIZER LINK

REMOVAL

STABILIZER LINK - 4X4

1. Raise and support the vehicle.
2. Remove the lower nut.
3. Remove the upper nut, retainers and grommets.
4. Remove the stabilizer link from the vehicle.

STABILIZER LINK - 4X2

1. Raise and support the vehicle.
2. Remove the lower nut.
3. Remove the upper nut, retainer and grommets.
4. Remove the stabilizer link (1) from the vehicle.

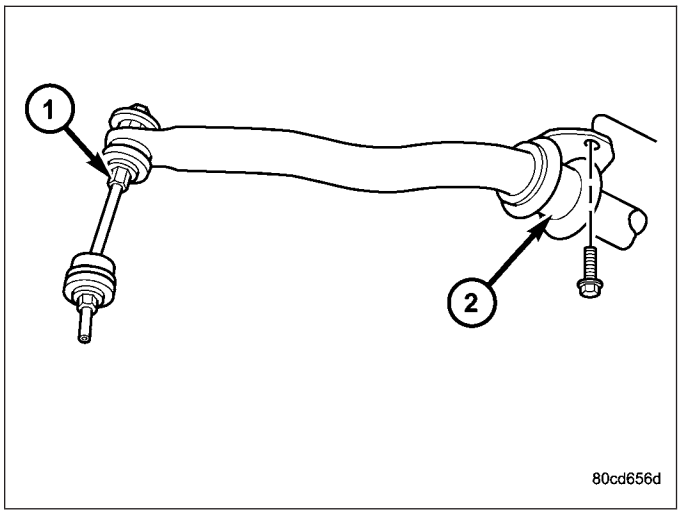

INSTALLATION

STABILIZER LINK - 4X4

1. Install the stabilizer link to the vehicle.
2. Install the lower nut and Tighten to 102 N·m (75 ft. lbs.).
3. Install the retainers, grommets and upper nut and Tighten to 27 N·m (20 ft. lbs.).

4. Remove the support and lower the vehicle.

STABILIZER LINK - 4X2

1. Install the stabilizer link (1) to the vehicle.
2. Install the lower nut and Tighten to 102 N·m (75 ft. lbs.).
3. Install the retainers, grommets and upper nut and Tighten to 27 N·m (20 ft. lbs.).
4. Remove the support and lower the vehicle.

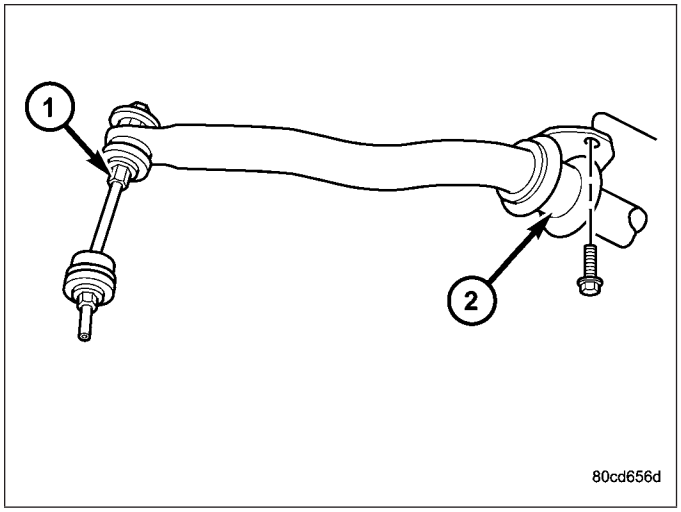

TORSION BAR

DESCRIPTION

The front of the bar (3) connects to the back side of the lower suspension arm (4). The rear end of the bar is mounted in a anchor (1) that rests in the frame crossmember.

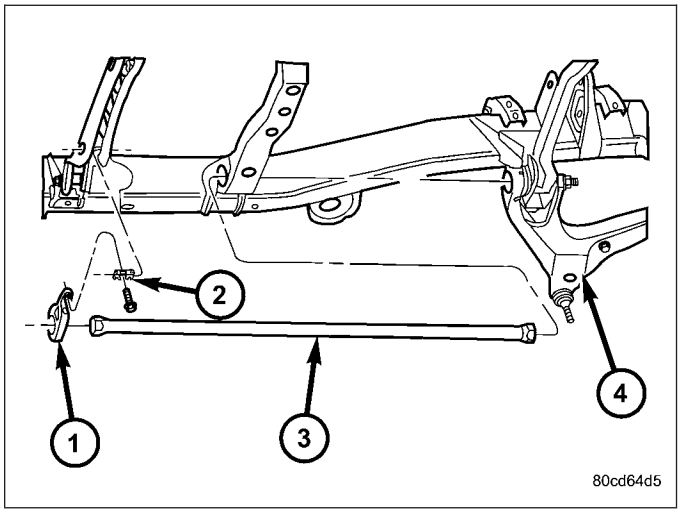

OPERATION

The torsion bars are used to control ride height and ride quality. The vehicle height is adjusted through an anchor adjustment bolt that increases or decreases the wind up of the torsion bar. Increasing or decreasing the bar angle changes the wind up of the suspension arms.

REMOVAL

CAUTION: The left and right side torsion bars are NOT interchangeable. The bars are identified and stamped R or L, for right or left. The bars do not have a front or rear end and can be installed with either end facing forward.

1. Raise and support the vehicle with the front suspension hanging.
2. Remove the transfer case skid plate (Refer to 13 - FRAME & BUMPERS/FRAME/TRANSFER CASE SKID PLATE - REMOVAL).

NOTE: Count and record the number of turns for installation reference.

3. Mark the adjustment bolt setting.
4. Install Special Tool - 8686 (1) to the anchor arm and the cross member (2).
5. Increase the tension on the anchor arm tool until the load is removed from the adjustment bolt and the adjuster nut.
6. Turn the adjustment bolt counterclockwise to remove the bolt and the adjuster nut..
7. Remove the Special Tool - 8686 (1), allowing the torsion bar to unload.

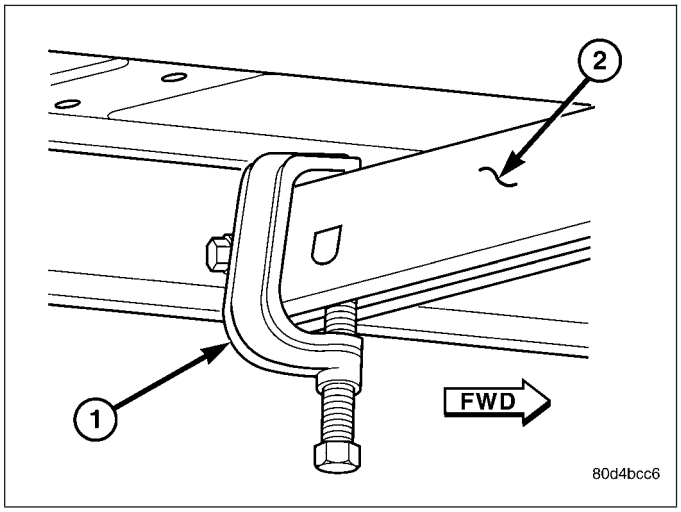

8. Remove torsion bar (3) and anchor (1). Remove anchor (1) from torsion bar (3).
9. Remove all foreign material from torsion bar mounting in anchor and suspension arm.
10. Inspect adjustment bolt, bearing and swivel for damage.

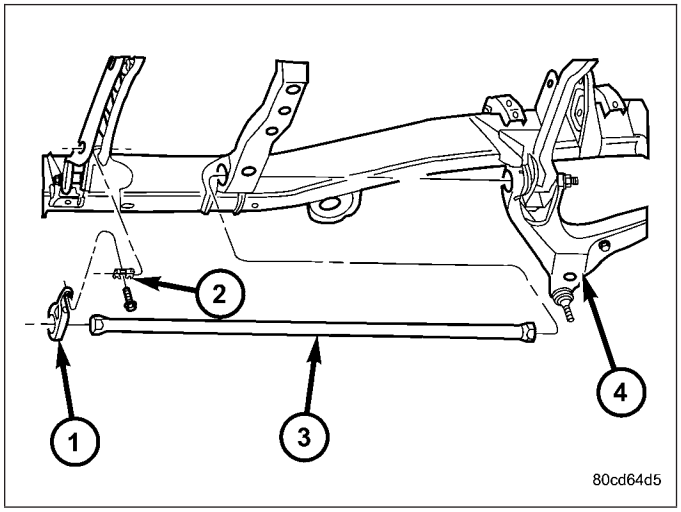

INSTALLATION

CAUTION: The left and right side torsion bars are NOT interchangeable. The bars are identified and stamped R or L, for right or left. The bars do not have a front or rear end and can be installed with either end facing forward.

1. Insert torsion bar ends (3) into anchor (1) and suspension arm (4).
2. Position the anchor (1) in the frame crossmember.

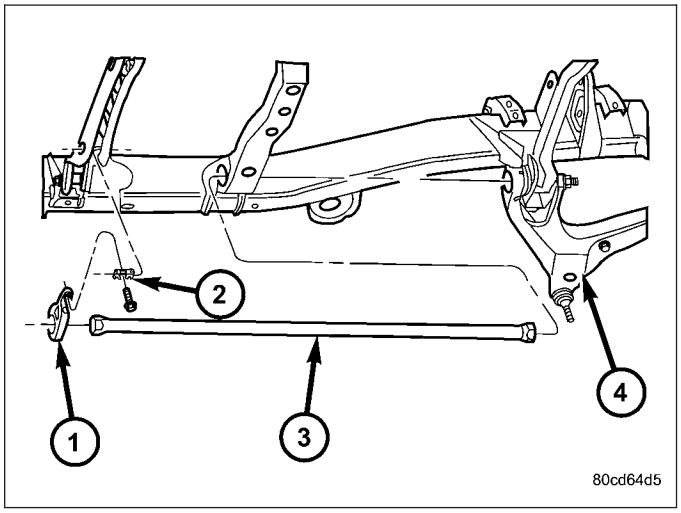

3. Install Special Tool - 8686 (1) to the anchor and the crossmember (2).
4. Increase the tension on the anchor in order to load the torsion bar.
5. Install the adjustment bolt and the adjuster nut.
6. Turn adjustment bolt clockwise the recorded amount of turns.
7. Remove tool - 8686 (1) from the torsion bar crossmember (2).

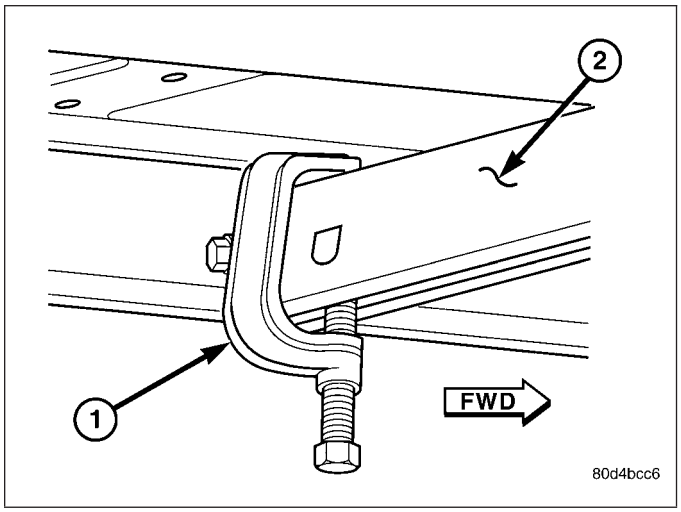

8. Install the transfer case skid plate (Refer to 13 - FRAME & BUMPERS/FRAME/TRANSFER CASE SKID PLATE - INSTALLATION).
9. Lower vehicle and adjust the front suspension height (Refer to 2 - SUSPENSION/WHEEL ALIGNMENT - STANDARD PROCEDURE).
10. Perform a wheel alignment (Refer to 2 - SUSPENSION/WHEEL ALIGNMENT - STANDARD PROCEDURE).

UPPER BALL JOINT

DIAGNOSIS AND TESTING

UPPER BALL JOINT

1. Raise the front of the vehicle. Place safety floor stands under both lower control arms as far outboard as possible. Lower the vehicle to allow the stands to support some or all of the vehicle weight.
2. Remove the front tires.

3. Mount a dial indicator (1) solidly to the frame and then zero the dial indicator (1).
4. Position dial indicator plunger (1) on the topside of the upper ball joint.

NOTE: The dial indicator plunger must be perpendicular to the machined surface of the ball joint.

NOTE: Use care not to pry or tear the ball joint boot (5), when checking the free play.

5. Position a pry bar (3) between the steering knuckle (4) and the upper control arm (2). Pry upwards on the upper control arm.
6. If the travel exceeds 0.5 mm (0.020 in.), replace the upper control arm since the upper ball joint is integral to the arm (Refer to 2 - SUSPENSION/FRONT/UPPER CONTROL ARM - REMOVAL).

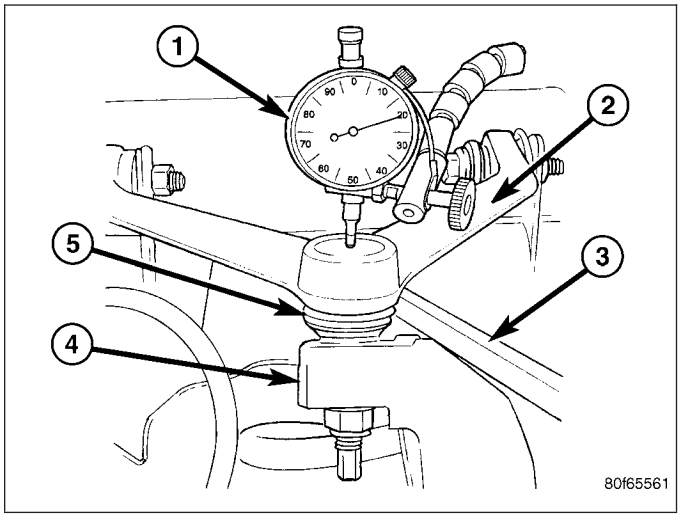

7. If the upper ball joint is within specs reinstall the front tires (Refer to 22 - TIRES/WHEELS/WHEELS - STANDARD PROCEDURE).

UPPER CONTROL ARM

REMOVAL

1. Raise and support vehicle.
2. Remove wheel and tire assembly.
3. Remove the nut from upper ball joint.

4. Separate upper ball joint (1) from the steering knuckle (3) with Remover 8677 (2)

CAUTION: When installing Remover 8677 (2) to separate the ball joint, be careful not to damage the ball joint seal.

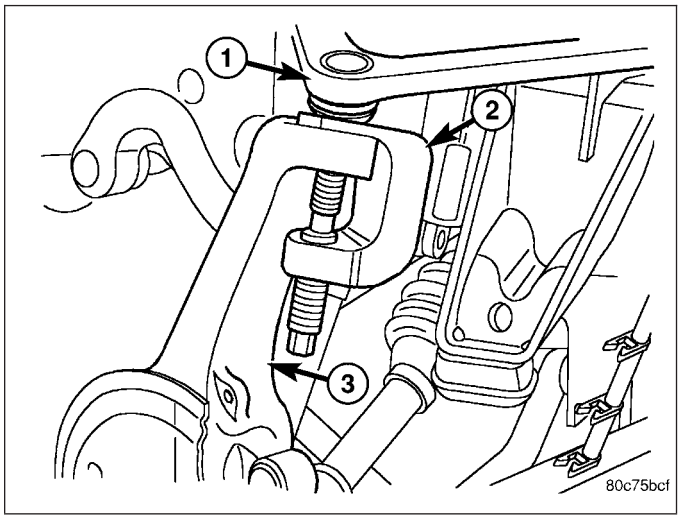

5. Remove the control arm pivot bolts (1&2) and remove control arm (3).

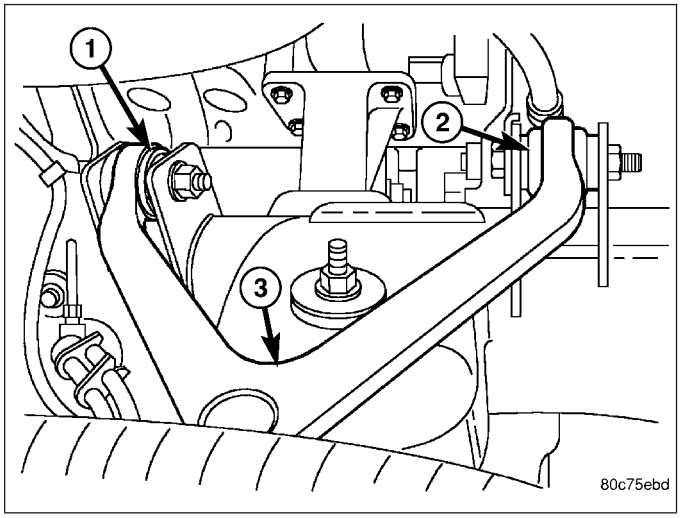

INSTALLATION

1. Position the control arm (3) into the frame brackets. Install bolts (1&2) and tighten to 132 N·m (97 ft. lbs.)(LD) or 170 N·m (125 ft. lbs.)(HD 4X2 only).
2. Insert the ball joint in steering knuckle and tighten the upper ball joint nut to 54 N·m (40 ft. lbs.)(on 1500 series only an additional 90° turn is required).
3. Install the wheel and tire assembly, (Refer to 22 - TIRES/WHEELS/WHEELS - STANDARD PROCEDURE).
4. Remove the support and lower vehicle.
5. Perform a wheel alignment, (Refer to 2 - SUSPENSION/WHEEL ALIGNMENT - STANDARD PROCEDURE).

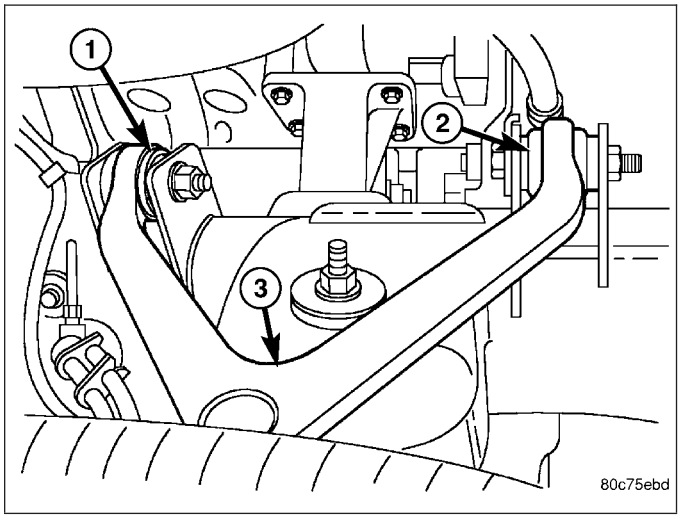

FRONT - LINK/COIL

TABLE OF CONTENTS

page

FRONT - LINK/COIL
SPECIFICATIONS
TORQUE CHART 68
SPECIAL TOOLS
9 1/4 AA 70
HUB / BEARING
REMOVAL 71
INSTALLATION 73
LOWER BALL JOINT
DIAGNOSIS AND TESTING
LOWER BALL JOINT 75
REMOVAL 76
INSTALLATION 77
UPPER BALL JOINT
DIAGNOSIS AND TESTING
UPPER BALL JOINT 77
REMOVAL 78
INSTALLATION 78
KNUCKLE
REMOVAL 79
INSTALLATION 79
UPPER SUSPENSION ARM
REMOVAL
LEFT 79
RIGHT 79
INSTALLATION
LEFT 80
RIGHT 81
LOWER SUSPENSION ARM
REMOVAL 81
INSTALLATION 82
SHOCK
DIAGNOSIS AND TESTING
SHOCK 82
REMOVAL 83
INSTALLATION 84
SPRING
REMOVAL 85
INSTALLATION 85
STABILIZER BAR
DESCRIPTION
STABILIZER BAR 86
DISCONNECTING STABILIZER BAR 86
OPERATION
STABILIZER BAR 86
OPERATION - DISCONNECTING
STABILIZER BAR 87
REMOVAL
STABILIZER BAR 87
DISCONNECTING STABILIZER BAR 88
INSTALLATION
STABILIZER BAR 90
DISCONNECTING STABILIZER BAR 90
STABILIZER LINK
REMOVAL
STABILIZER LINK 92
WITH DISCONNECTING STABILIZER BAR . . 93
INSTALLATION
STABILIZER LINK 94
INSTALLATION 94

FRONT - LINK/COIL

SPECIFICATIONS

TORQUE CHART

TORQUE SPECIFICATIONS

DESCRIPTION	N·m	Ft. Lbs.	In. Lbs.
Shock Absorber Upper Nut	54	40	—
Shock Absorber Lower Bolt	136	100	—
Lower Suspension Arm Frame Nuts	217	160	—
Lower Suspension Arm Axle Nut	217	160	—

DESCRIPTION	N·m	Ft. Lbs.	In. Lbs.
Upper Suspension Arm Frame Nuts	149	110	—
Upper Suspension Arm Axle Nut	149	110	—
Stabilizer Bar Frame Bolt	61	45	—
Stabilizer Link Lower Control Arm Nut	102	75	—
Stabilizer Link Axle Bracket	71	52	—
Stabilizer Link Stabilizer Bar Nut	38	27	—
Stabilizer Link Axle Bracket Power Wagon	71	52	—
Stabilizer Link Stabilizer Bar Nut Power Wagon	149	110	—
Hub/Bearing Bolts	202	149	—
Axle Nut	179 Beginning Torque, Then Rotate 5 to 10 Times With a Final Torque of 356	132 Beginning Torque, Then Rotate 5 to 10 Times With a Final Torque of 263	—
Tie Rod End Nut	75	55	—

NOTE: Suspension components with rubber/urethane bushings should be tightened with the vehicle at normal ride height. It is important to have the springs supporting the weight of the vehicle when the fasteners are torqued. If springs are not at their normal ride position, vehicle ride comfort could be affected and premature bushing wear may occur.

SPECIAL TOOLS

9 1/4 AA

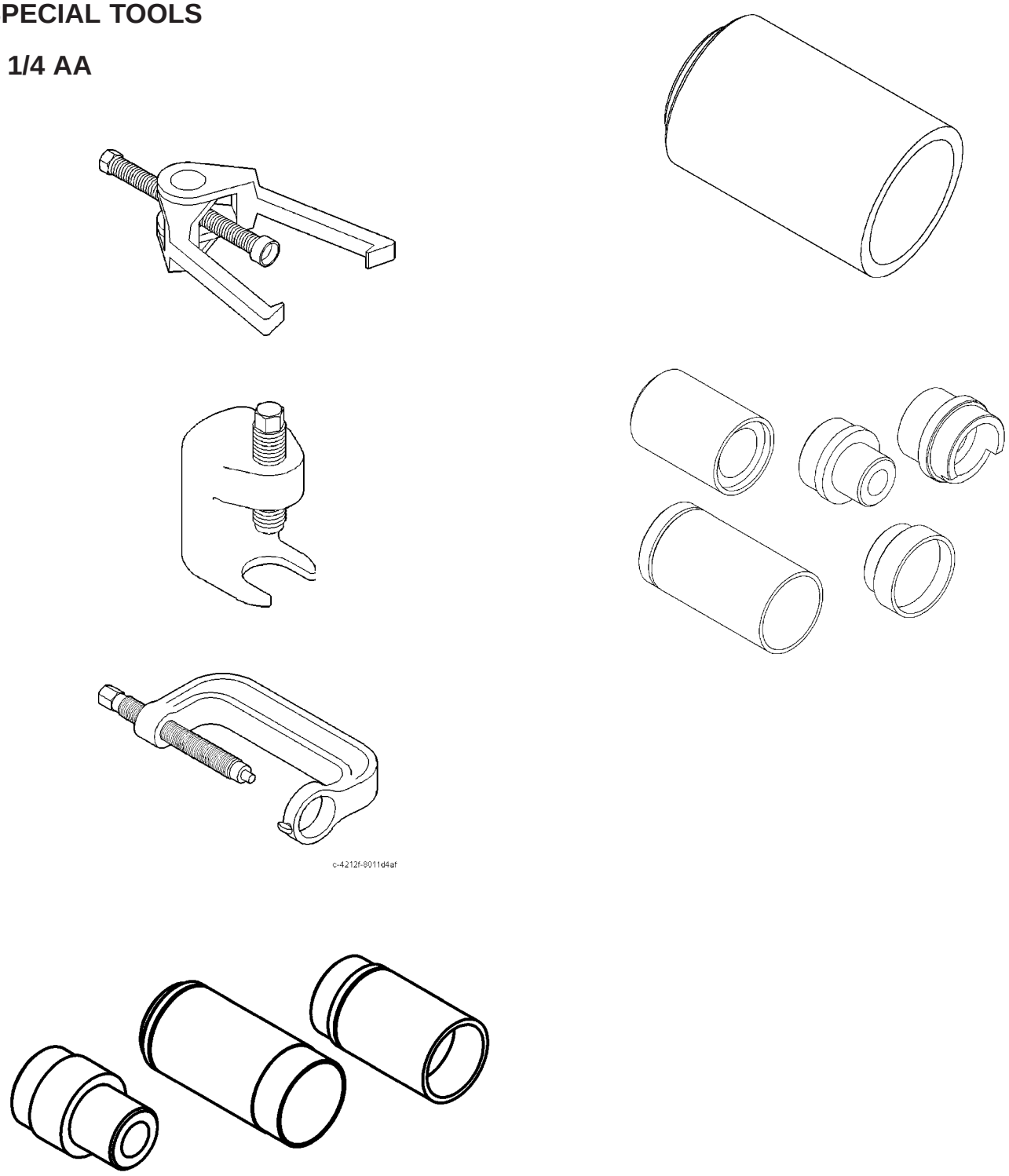

HUB / BEARING

REMOVAL

1. Raise and support the vehicle.
2. Remove the wheel and tire assembly.
3. Remove the hub extension (1) mounting nuts and remove the extension from the rotor if equipped.

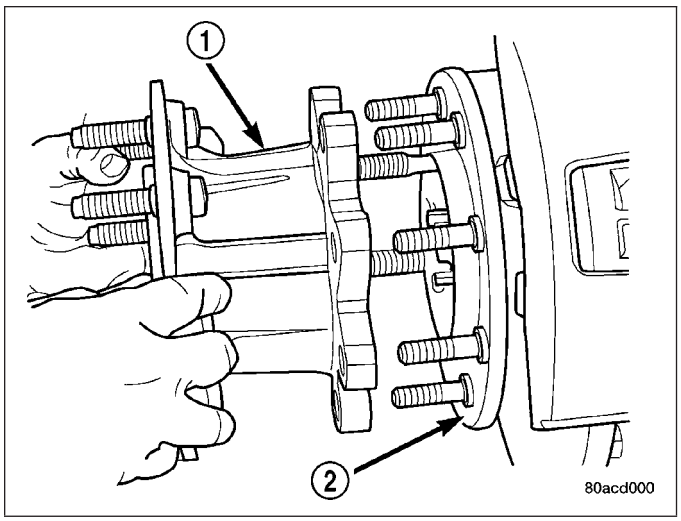

4. Remove the brake caliper, (Refer to 5 - BRAKES/ HYDRAULIC/MECHANICAL/DISC BRAKE CALIPERS - REMOVAL).
5. Remove the cotter pin (2) and the hub nut (1) from the axle shaft.

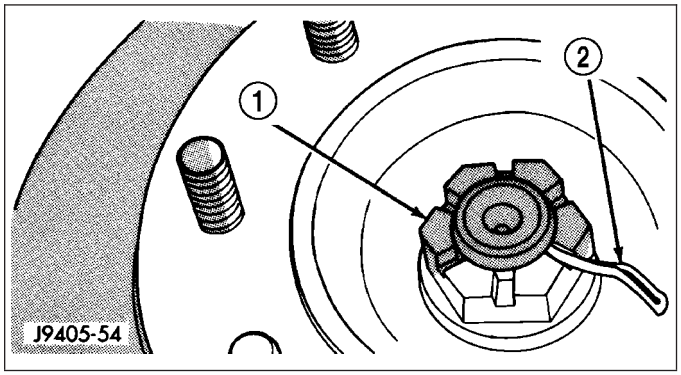

6. Disconnect the ABS wheel speed sensor wire from under the hood. Remove the sensor wire from the frame and steering knuckle if equipped.
7. Back off the hub/bearing mounting bolts (1) 1/4 inch each. Then tap the bolts with a hammer to loosen the hub/bearing from the steering knuckle (3).

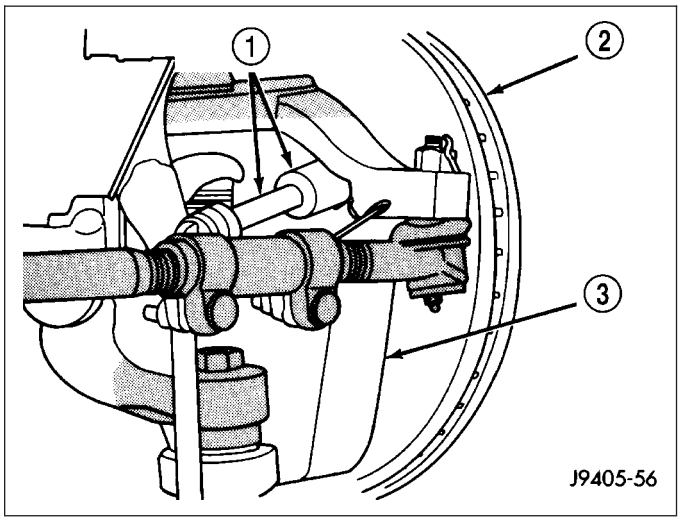

8. Remove the hub/bearing mounting bolts and remove the hub/bearing (2).

9. Remove the rotor assembly (1) , brake shield and spacer from the steering knuckle.

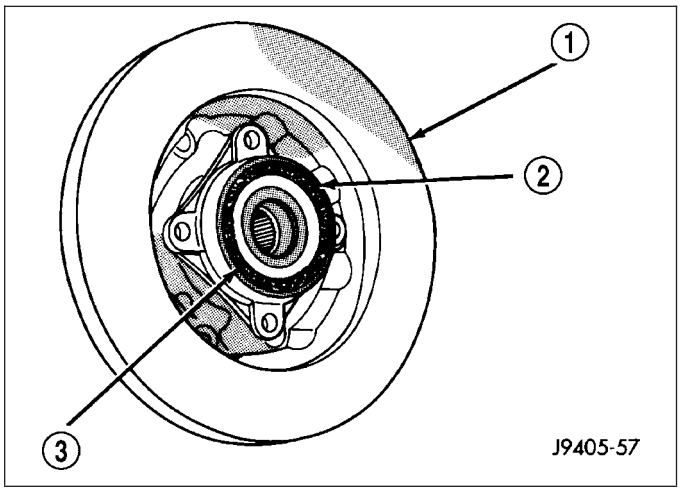

10. Remove the wheel speed sensor from the hub bearing if equipped.

11. Press out the wheel studs/hub extension studs and separate the rotor from the hub/bearing (1).

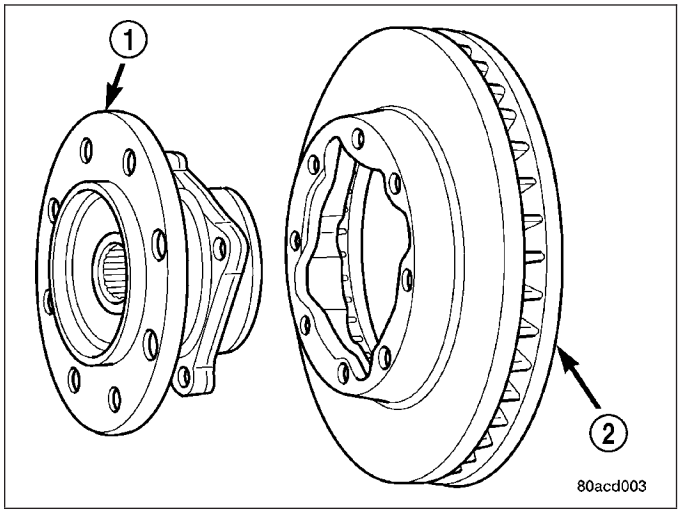

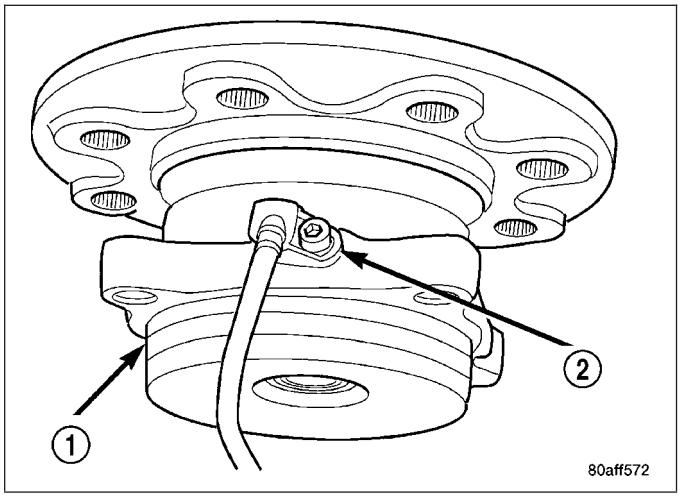

INSTALLATION

1. Install the wheel speed sensor in the hub bearing (1) if equipped.
2. Position the rotor (2) on the hub/bearing (1).
3. Press the wheel studs/hub extension studs (3) through the back side of the rotor (2) and through the hub bearing flange (1).

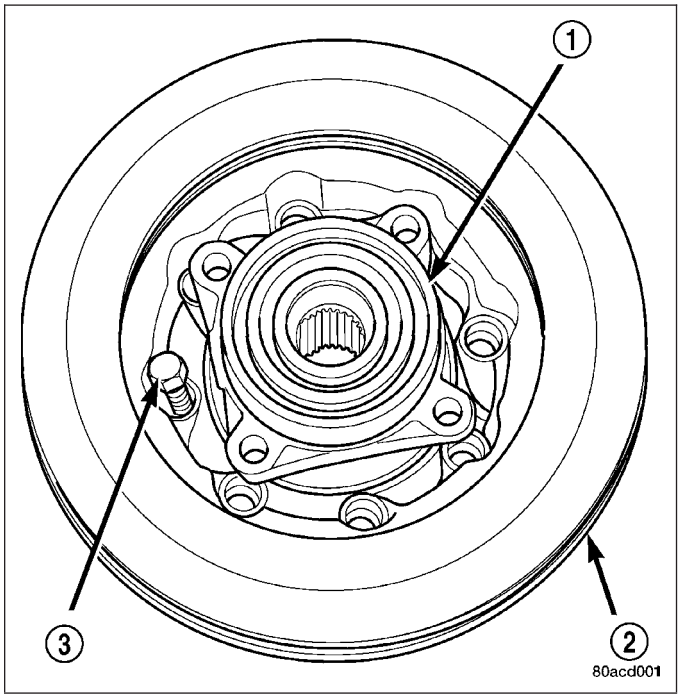

4. Apply a liberal quantity of anti-seize compound to the splines (3) of the front drive shaft.
5. Insert the two rearmost, top and bottom rotor hub bolts (1) in the steering knuckle. Insert the bolts through the back side of the knuckle so they extend out the front face as shown.
6. Position the hub spacer (2).

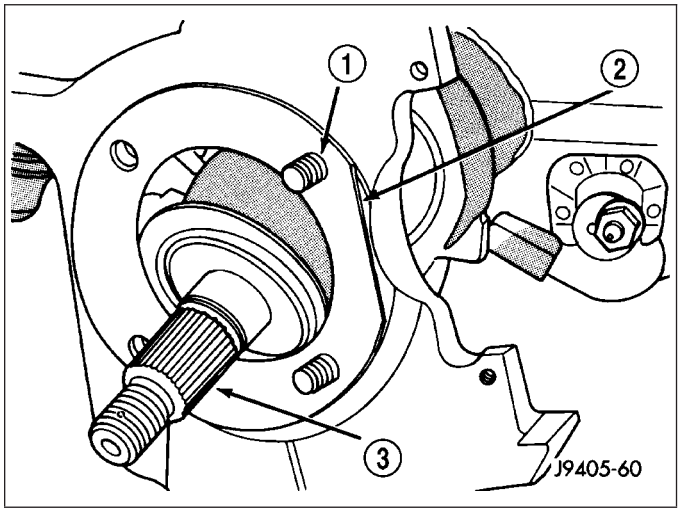

7. Position the brake shield (1) on bolts just installed in knuckle (2).

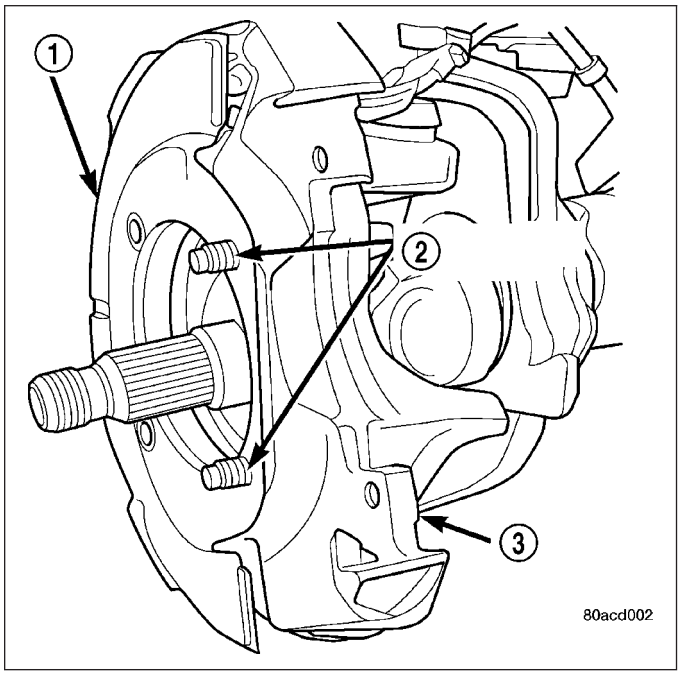

NOTE: If the vehicle is equipped with a wheel speed sensor (1) the brake shield must be positioned on the hub bearing (2).

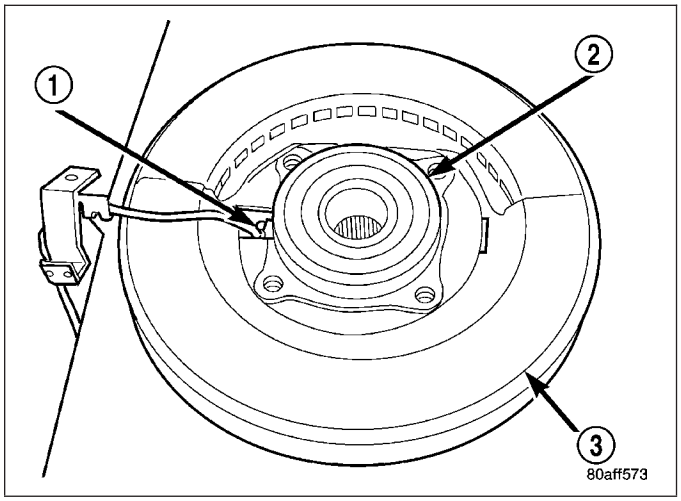

8. Align the rotor hub with the drive shaft and start the shaft into the rotor hub splines.

NOTE: Position wheel speed sensor wire at the top of the knuckle if equipped.

9. Align the bolt holes in the hub bearing flange with the bolts installed in the knuckle. Then thread the bolts into the bearing flange far enough to hold the assembly in place.
10. Install the remaining bolts. Tighten the hub/bearing bolts to 202 N·m (149 ft. lbs.
11. Install the washer and axle nut and tighten a beginning torque of 179 N·m (132 ft. lbs.).
12. Rotate the axle 5 to 10 times to seat the hub bearing.
13. Tighten to a final torque of 356 N·m (263 ft. lbs.).
14. Align the axle nut to the next forward cotter pin hole and install a new cotter pin in the axle nut.
15. Install the brake caliper, (Refer to 5 - BRAKES/HYDRAULIC/MECHANICAL/DISC BRAKE CALIPERS - INSTALLATION).
16. Install the sensor wire to the steering knuckle and frame and if equipped. Connect the wheel speed sensor wire under the hood.
17. Install the wheel and tire assemblies, (Refer to 22 - TIRES/WHEELS/WHEELS - STANDARD PROCEDURE).

18. Remove the support and lower the vehicle.
19. Apply the brakes several times to seat the brake shoes and caliper piston. Do not move the vehicle until a firm brake pedal is obtained.

LOWER BALL JOINT

DIAGNOSIS AND TESTING

LOWER BALL JOINT

To properly diagnose the lower ball joint two readings from the dial indicator are necessary, The two readings must be added together to find a total ball joint movement as identified in the steps below.

1. Raise and support the vehicle.
2. Attach a dial indicator (2) with the indicator resting on the flat part of the steering knuckle (1) by the lower ball stud.
3. Set the dial indicator (2) to zero.

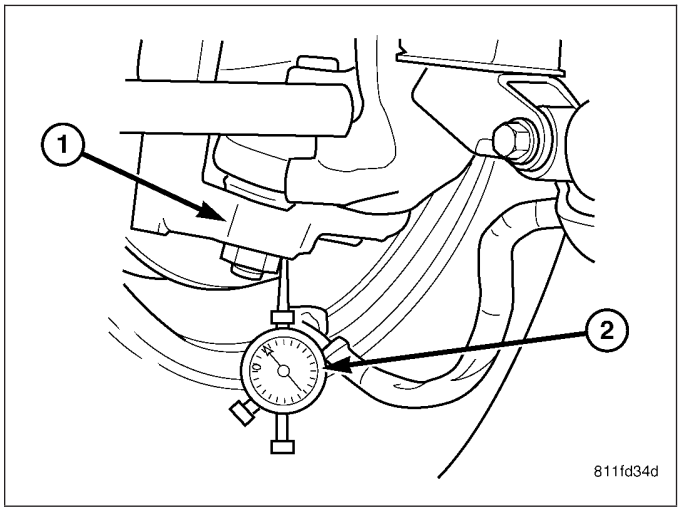

NOTE: Use care not to damage the upper ball joint grease seal (3).

4. Pry between the knuckle (4) and the axle tube yoke next to the upper ball joint (2), Record the reading on the dial indicator **This will be the first reading**.

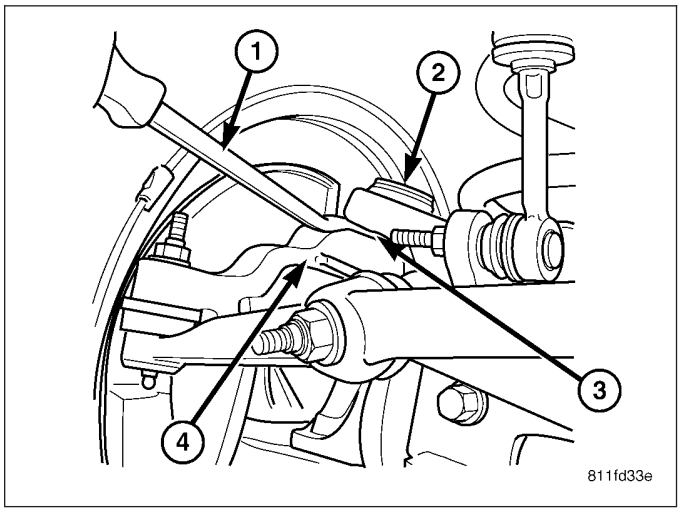

5. Set the dial indicator (2) back to zero.
6. Set up a jackstand (3) and use a long prybar (1) to lift the knuckle assembly

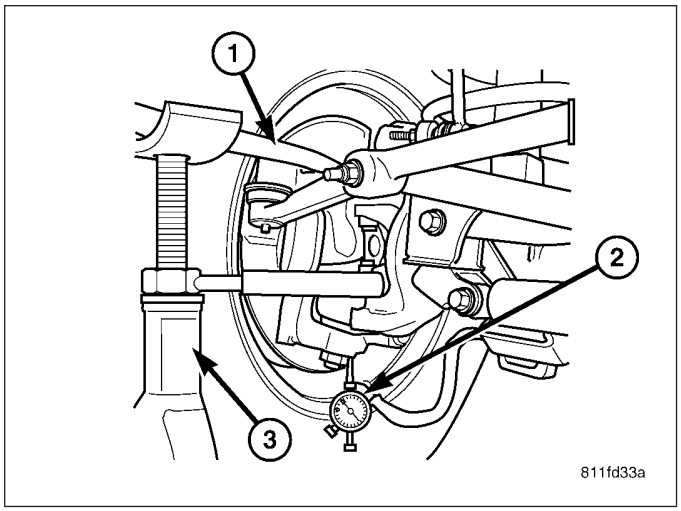

7. Pry upwards on the flat part of the steering knuckle (5) next to the ball joint stud and nut (2) using the jackstand as leverage. Record the reading on the dial indicator **This will be the second reading**.
8. Add the two reading together for a total lower ball joint movement, If this reading is above 2.29 mm (0.090 in) then replacement of the lower ball joint is necessary (Refer to 2 - SUSPENSION/FRONT/ LOWER BALL JOINT - REMOVAL).

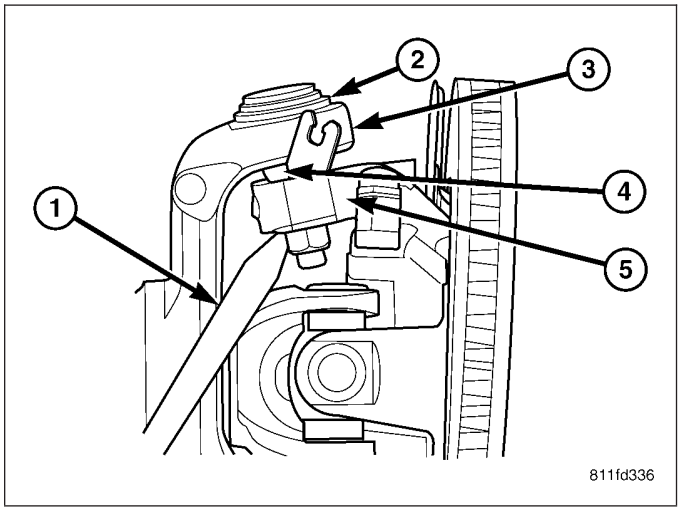

REMOVAL

1. Remove lower snap ring from the lower ball joint.

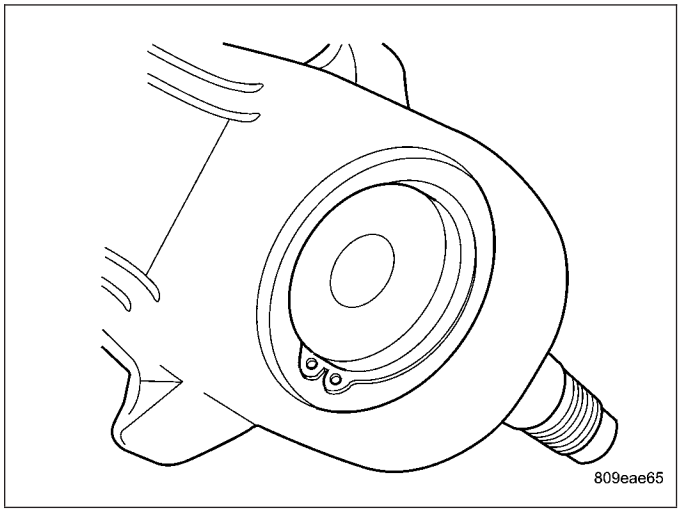

2. Position special tool 8975–2 (RECEIVER) (2) and 8975–4 (DRIVER) (4) with tool C4212–F (1) as shown to remove lower ball stud.

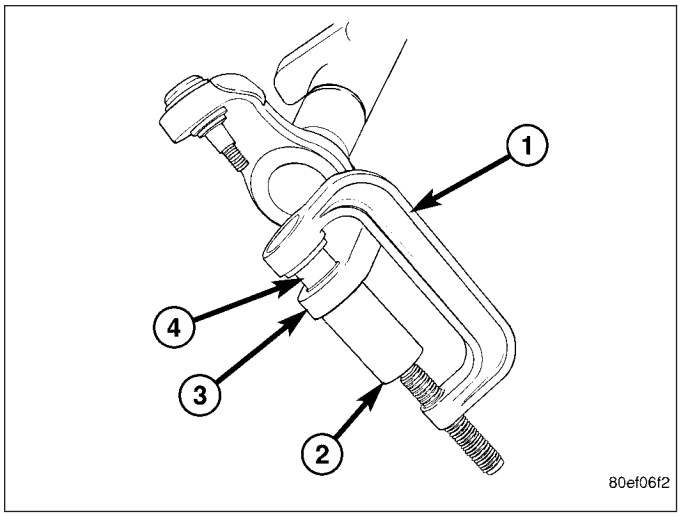

INSTALLATION

1. Position special tool 8975–1 (DRIVER) (2) and 8975–3 (RECEIVER) (5) with C4212–F (1) as shown to install lower ball stud (3).

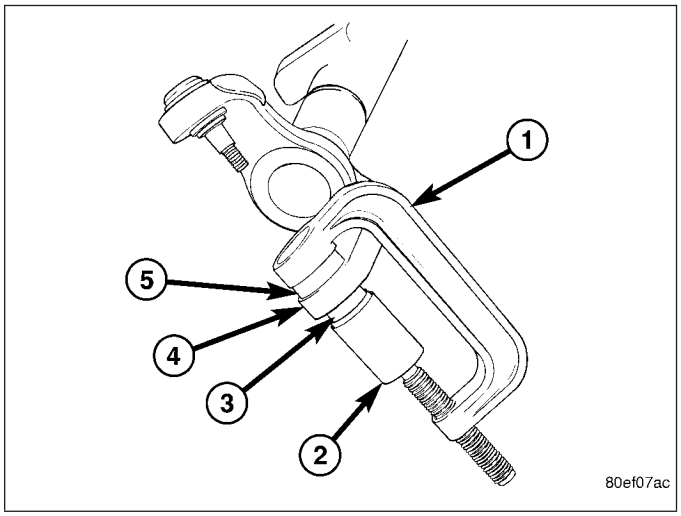

UPPER BALL JOINT

DIAGNOSIS AND TESTING

UPPER BALL JOINT

To properly diagnose the upper ball joint two readings from the dial indicator are necessary, The two readings must be added together to find a total ball joint movement as identified in the steps below.

1. Raise and support the vehicle.

2. Attach a dial indicator (3) with the indicator resting on either the front or back sides of the steering knuckle (4) as close to the upper ball joint (1) as possible.
3. Set the dial indicator(3) to zero.
4. Grab the tire by pushing in on the top of the tire and pulling out on the bottom of the tire. Record the reading on the dial indicator (3) **This will be the first reading**.
5. Set the dial indicator (3) back to zero.
6. Grab the tire by pulling in on the top of the tire and pushing out on the bottom of the tire. Record the reading on the dial indicator (3) **This will be the second reading**.
7. Add the two reading together for a total upper ball joint movement, If this reading is above 1.52 mm (0.060 in) then replacement of the upper ball joint is necessary (Refer to 2 - SUSPENSION/FRONT/UPPER BALL JOINT - REMOVAL).

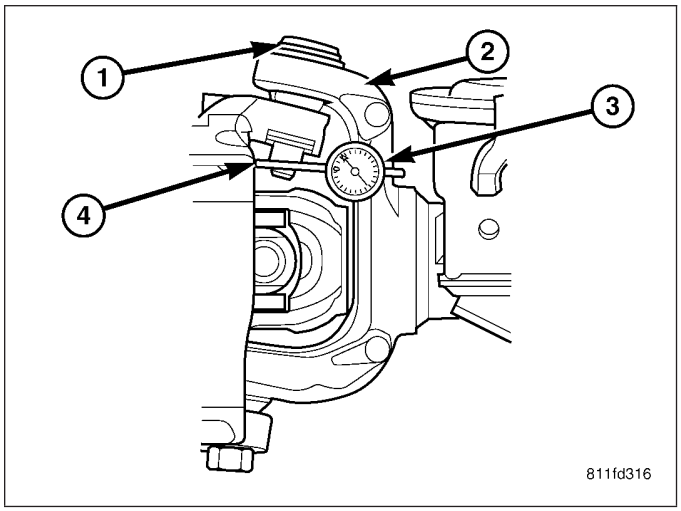

REMOVAL

1. Position special tool 6761 (RECEIVER) (2) and 8445–3 (DRIVER) (4) with C-4212–F (1) as shown to remove upper ball stud.

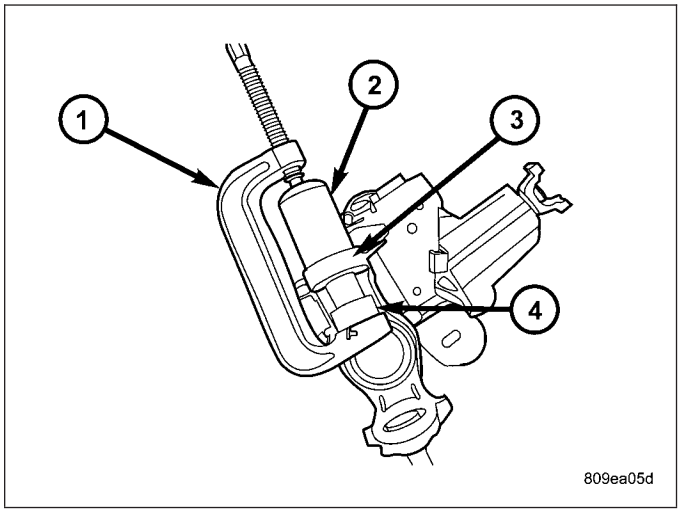

INSTALLATION

1. Position special tool 8445–2 (DRIVER) (2) and 8975–5 (RECEIVER) (5) with C-42121–F (1) as shown to install upper ball stud (3).

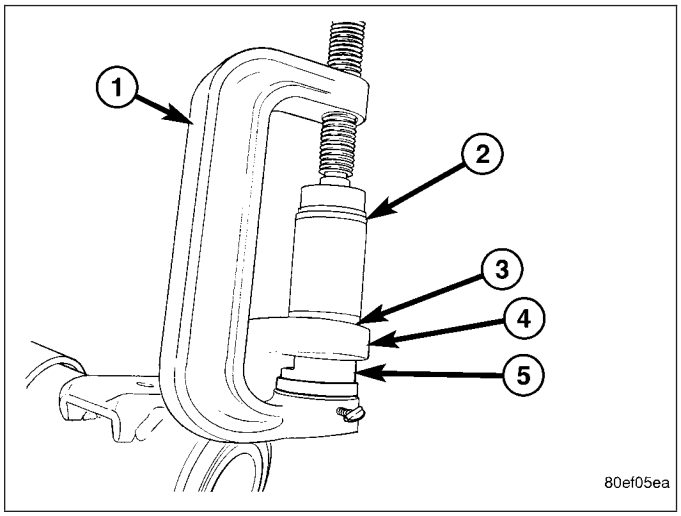

KNUCKLE

REMOVAL

1. Remove the hub bearing (Refer to 2 - SUSPENSION/FRONT/HUB / BEARING - REMOVAL).
2. Remove tie-rod or drag link end from the steering knuckle arm.
3. Remove the ABS sensor wire and bracket from knuckle. Refer to Brakes, for proper procedures.
4. Remove the cotter pin from the upper ball stud nut. Remove the upper and lower ball stud nuts.
5. Strike the steering knuckle with a brass hammer to loosen.
6. Remove knuckle from axle tube yokes.

INSTALLATION

1. Position the steering knuckle on the ball studs.
2. Install and tighten lower ball stud nut to 47 N·m (35 ft. lbs.) torque. Do not install cotter pin at this time.
3. Install and tighten upper ball stud nut to 94 N·m (70 ft. lbs.) torque. Advance nut to next slot to line up hole and install new cotter pin.
4. Retorque lower ball stud nut to 190–217 N·m (140–160 ft. lbs.) torque. Advance nut to next slot to line up hole and install new cotter pin.
5. Install the hub bearing (Refer to 2 - SUSPENSION/FRONT/HUB / BEARING - INSTALLATION).
6. Install tie-rod or drag link end onto the steering knuckle arm.
7. Install the ABS sensor wire and bracket to the knuckle. Refer to Brakes, for proper procedure.

UPPER SUSPENSION ARM

REMOVAL

LEFT

1. Raise and support the vehicle.

NOTE: Discard the nuts and bolts and do not reuse, New nuts and bolts should be used when replacing or servicing the suspension arms.

2. Remove the upper suspension arm (4) nut and bolt at the axle bracket.
3. Remove the nut and bolt at the frame rail and remove the upper suspension arm (4).

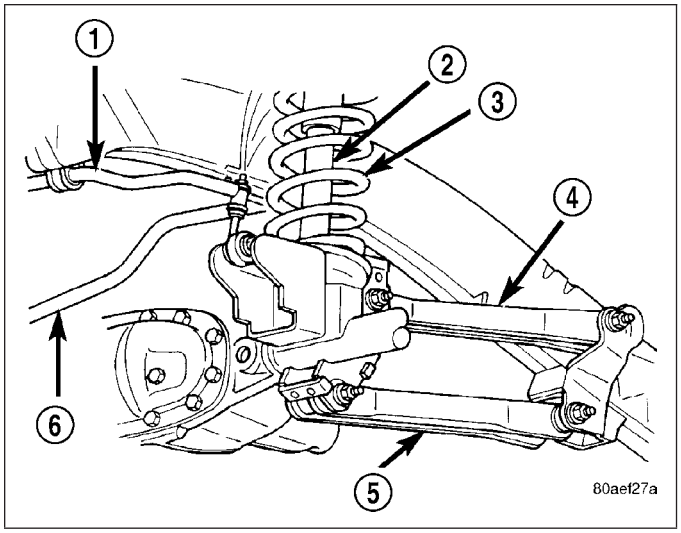

RIGHT

1. Raise and support the vehicle.
2. Disconnect the exhaust system at the manifolds.
3. Disconnect the rubber exhaust mounts at the muffler.
4. Support the transmission.
5. Remove the transmission cross member.

6. Lower the exhaust system down in order to gain access to the removal of the upper bolt.

NOTE: Discard the nuts and bolts and do not reuse, New nuts and bolts should be used when replacing or servicing the suspension arms.

7. Remove the nut and bolt at the frame rail and remove the upper suspension arm (4).
8. Remove the upper suspension arm nut and bolt at the axle bracket.
9. Remove the suspension arm (4) from the vehicle.

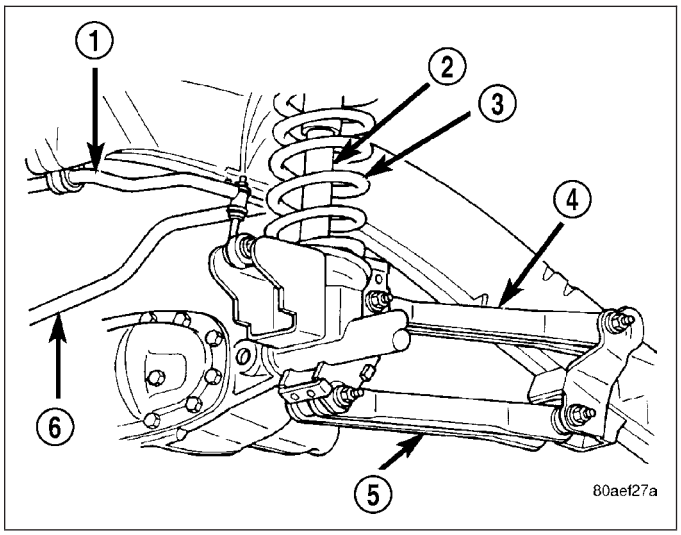

INSTALLATION

LEFT

NOTE: Discard the nuts and bolts and do not reuse, New nuts and bolts should be used when replacing or servicing the suspension arms.

1. Position the upper suspension arm (4) at the axle and frame rail.
2. Install the bolts and finger tighten the nuts.
3. Remove the supports and lower the vehicle.
4. Tighten nut at the axle bracket to 163 N·m (120 ft. lbs.). Tighten nut at frame bracket to 163 N·m (120 ft. lbs.).

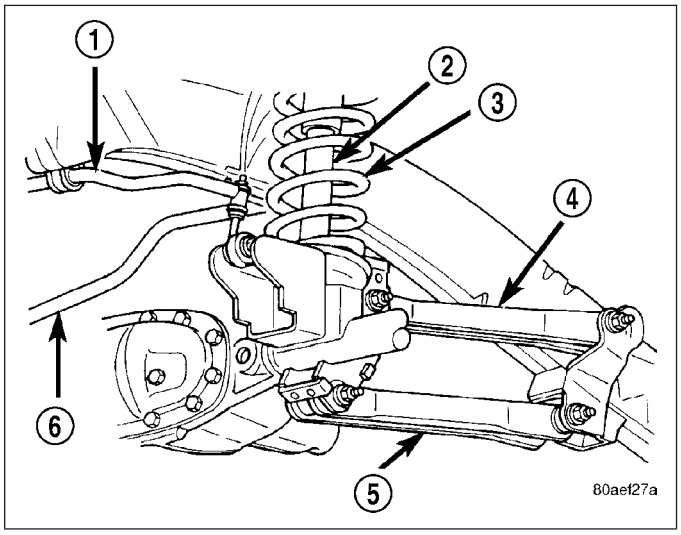

RIGHT

NOTE: Discard the nuts and bolts and do not reuse, New nuts and bolts should be used when replacing or servicing the suspension arms.

1. Position the upper suspension arm (4) at the axle and frame rail.
2. Install the bolts, then finger tighten the nuts.

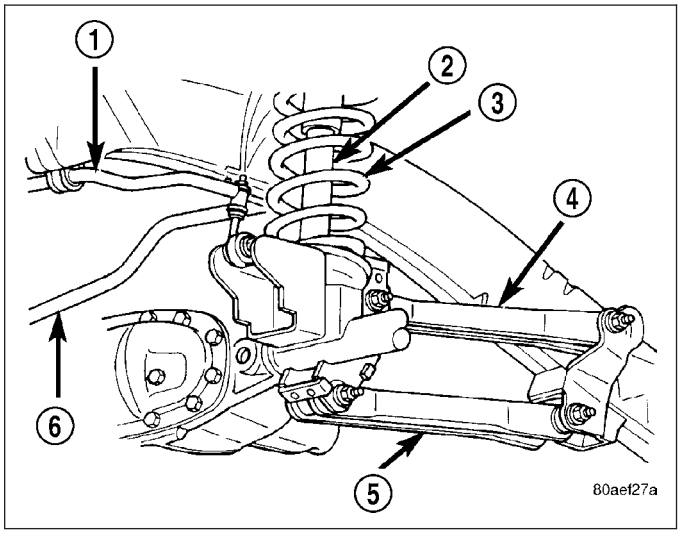

3. Reconnect the rubber exhaust mounts at the muffler.
4. Reconnect the exhaust at the manifolds.
5. Install the transmission crossmember.
6. Remove the supports and lower the vehicle.
7. Tighten nut at the axle bracket to 163 N·m (120 ft. lbs.). Tighten nut at frame bracket to 163 N·m (120 ft. lbs.).

LOWER SUSPENSION ARM

REMOVAL

1. Raise and support the vehicle.
2. Paint or scribe alignment marks on the cam adjusters (1) and suspension arm (4) for installation reference.

NOTE: Discard the nuts and bolts and do not reuse, New nuts and bolts should be used when replacing or servicing the suspension arms.

3. Remove the lower suspension arm nut, cam and cam bolt from the axle (2).
4. Remove the nut and bolt from the frame rail bracket (3) and remove the lower suspension arm (4).

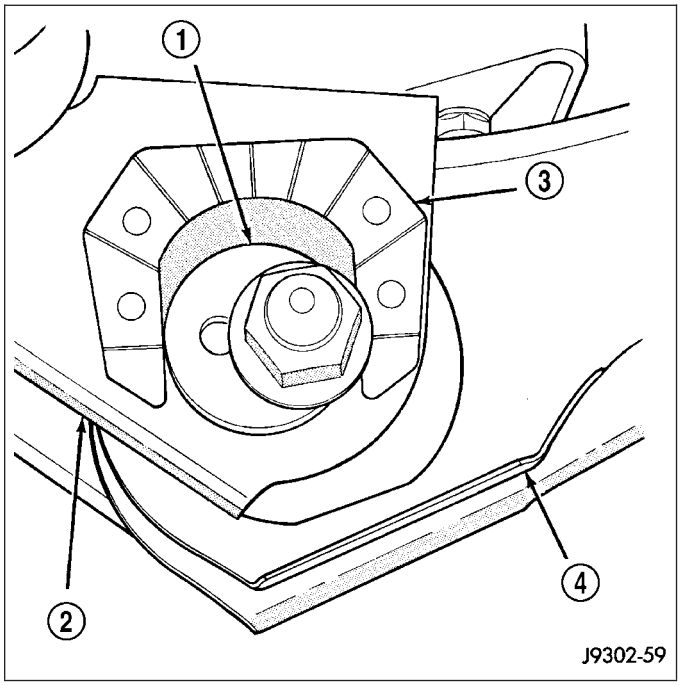

INSTALLATION

NOTE: Discard the nuts and bolts and do not reuse, New nuts and bolts should be used when replacing or servicing the suspension arms.

1. Position the lower suspension arm (4) at the axle bracket (2) and frame rail bracket.
2. Install the rear bolt and finger tighten the nut.
3. Install the cam bolt (1), cam and nut in the axle and align the reference marks.
4. Remove support and lower the vehicle.
5. Tighten cam nut at the axle bracket to 217 N·m (160 ft. lbs.). Tighten rear nut at the frame bracket to 217 N·m (160 ft. lbs.).

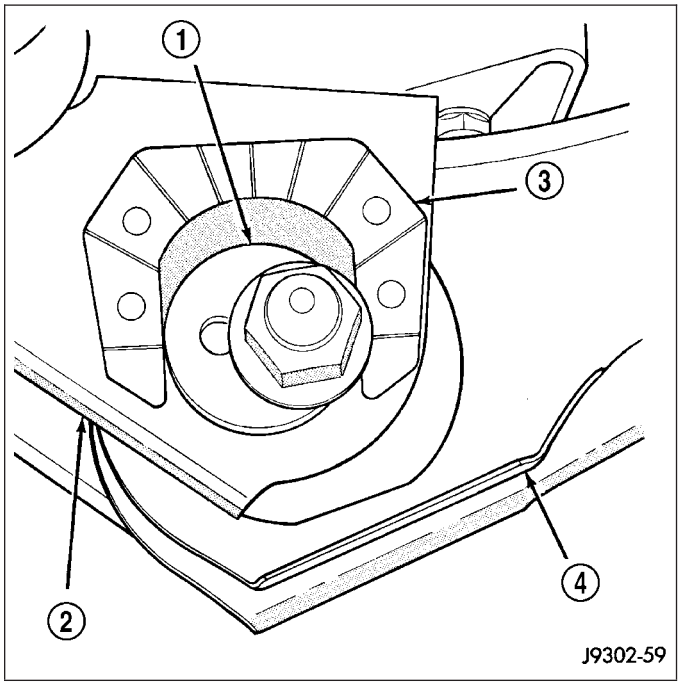

SHOCK

DIAGNOSIS AND TESTING

SHOCK

A knocking or rattling noise from a shock absorber (5) may be caused by movement between mounting grommets (1&6) and metal brackets (3) or attaching components. These noises can usually be stopped by tightening the attaching nuts. If the noise persists, inspect for damaged and worn bushings, and attaching components. Repair as necessary if any of these conditions exist.

A squeaking noise from the shock absorber may be caused by the hydraulic valving and may be intermittent. This condition is not repairable and the shock absorber must be replaced.

The shock absorbers are not refillable or adjustable. If a malfunction occurs, the shock absorber must be replaced. To test a shock absorber, hold it in an upright position and force the piston in and out of the cylinder four or five times. The action throughout each stroke should be smooth and even.

The shock absorber bushings do not require any type of lubrication. Do not attempt to stop bushing noise by lubricating them. Grease and mineral oil-base lubricants will deteriorate the bushing.

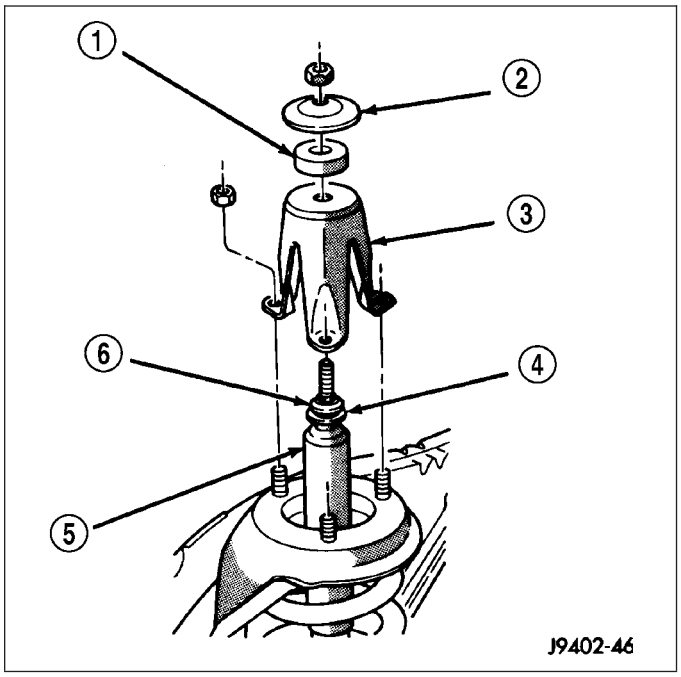

REMOVAL

1. Remove the nut, retainer (4) and grommet f(1) rom the upper stud in the engine compartment.
2. Remove three nuts from the upper shock bracket (3).

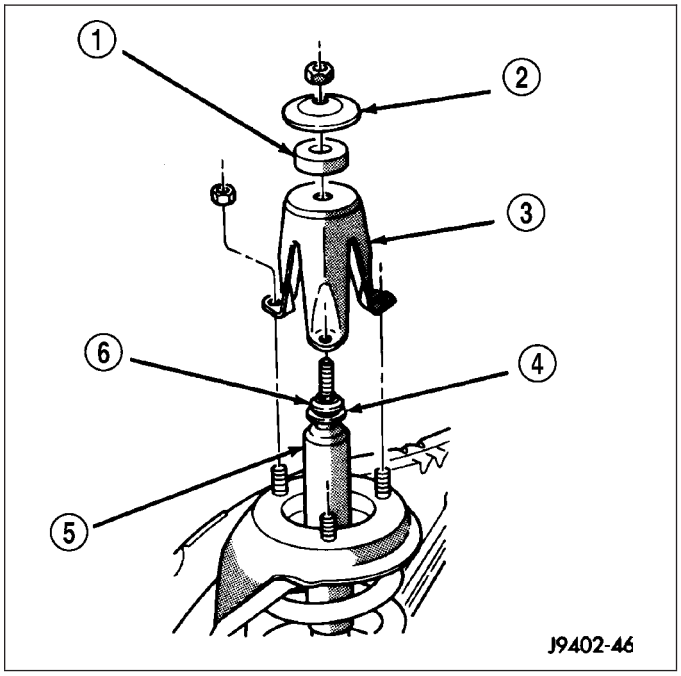

3. Remove the lower bolt (4) from the axle bracket. Remove the shock absorber (1) from engine compartment.

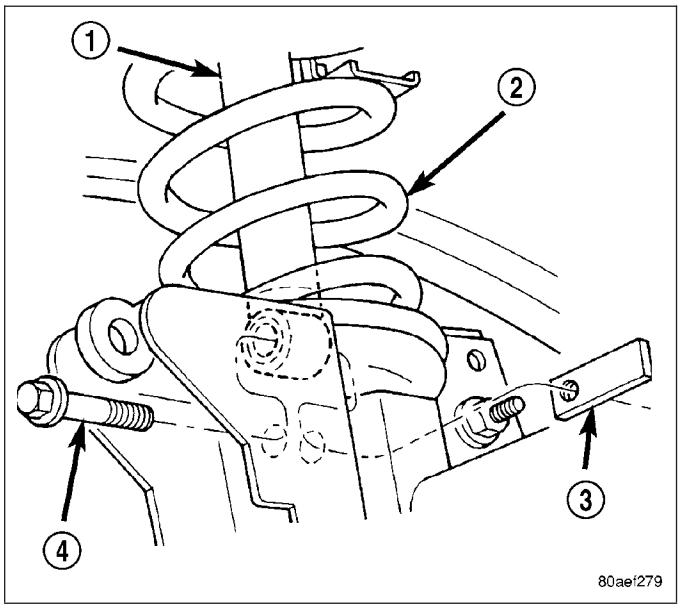

INSTALLATION

1. Position the lower retainer (4) and grommet (6) on the upper stud. Insert the shock absorber (5) through the spring from engine compartment.

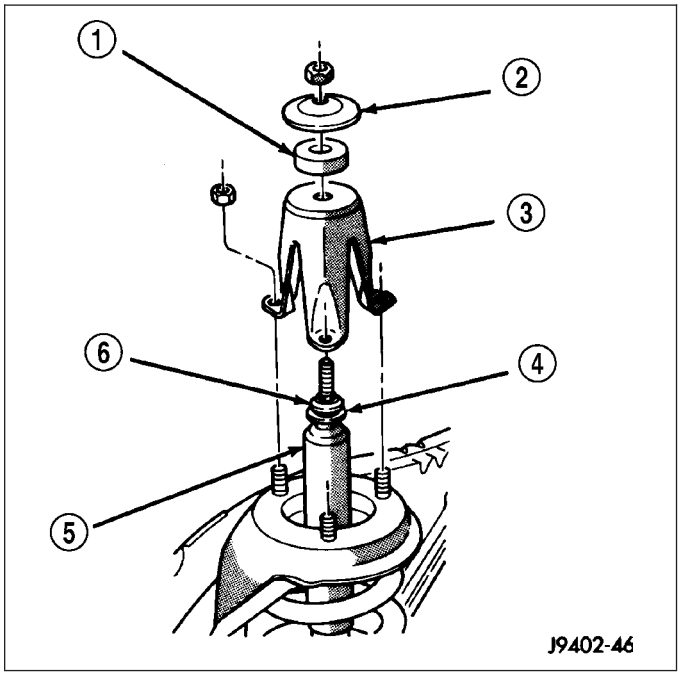

2. Install the lower bolt (4) and tighten to 135 N·m (100 ft. lbs.).

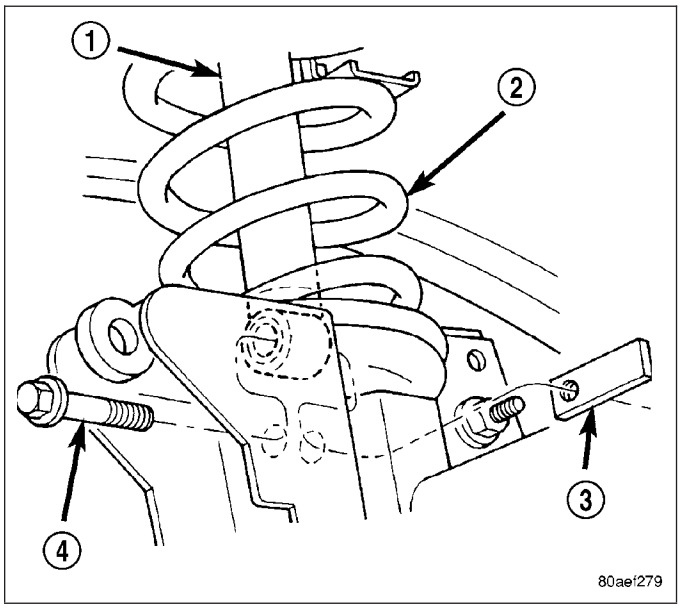

3. Install the upper shock bracket (3) and three nuts. Tighten nuts to 75 N·m (55 ft. lbs.).
4. Install upper grommet (1) and retainer (2). Install upper shock nut and tighten to 54 N·m (40 ft. lbs).

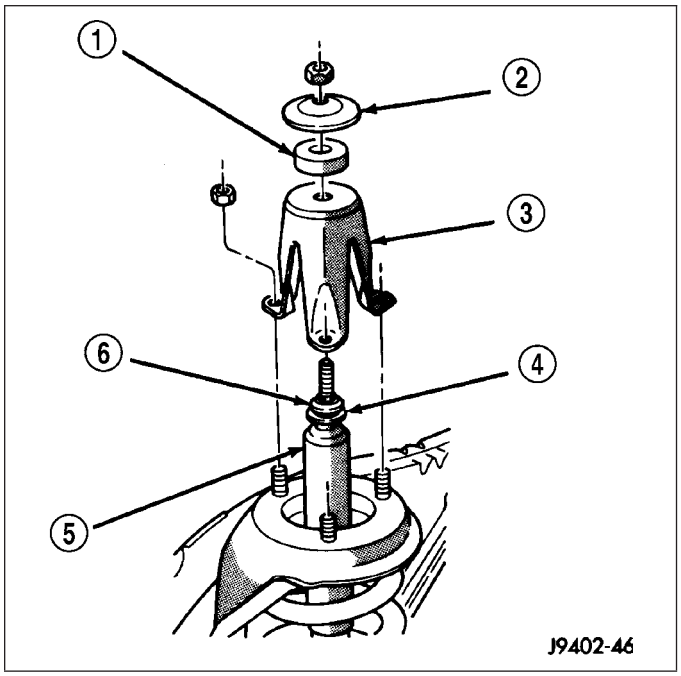

SPRING

REMOVAL

1. Raise and support the vehicle. Position a hydraulic jack under the axle to support it.
2. Paint or scribe alignment marks on lower suspension arm cam adjusters and axle bracket for installation reference.
3. Remove the upper suspension arm and loosen lower suspension arm bolts.
4. Mark and disconnect the front propeller shaft from the axle 4x4 models.
5. Disconnect the track bar from the frame rail bracket.
6. Disconnect the drag link from pitman arm.
7. Disconnect the stabilizer bar link and shock absorber from the axle.
8. Lower the axle until the spring is free from the upper mount. Remove the coil spring.

INSTALLATION

1. Position the coil spring on the axle pad.
2. Raise the axle into position until the spring seats in the upper mount.
3. Connect the stabilizer bar links and shock absorbers to the axle bracket. Connect the track bar to the frame rail bracket.
4. Install the upper suspension arm.
5. Install the front propeller shaft to the axle 4x4 model.
6. Install drag link to pitman arm and tighten nut to specifications. Install new cotter pin.
7. Remove the supports and lower the vehicle.
8. Tighten the following suspension components to specifications:
   - Link to stabilizer bar nut.
   - Lower shock bolt.
   - Track bar bolt at axle shaft tube bracket.
   - Upper suspension arm nut at axle bracket.
   - Upper suspension nut at frame bracket.
   - Align lower suspension arm reference marks and tighten cam nut.
   - Lower suspension nut at frame bracket.

STABILIZER BAR

DESCRIPTION

STABILIZER BAR

The bar extends across the front underside of the chassis and connects to the frame crossmember. The ends of the bar mount to the lower suspension arm. All mounting points of the stabilizer bar are isolated by bushings.

DISCONNECTING STABILIZER BAR

WARNING: The disconnecting stabilizer bar unit (2) is not serviced separately from the bar (4). Do not disassemble this unit (2) from the stabilizer bar (4).

NOTE: The stabilizer links (5), stabilizer bar retainers/ bushings (3) and the stabilizer bar as a complete unit (4) only are serviceable. The new bar (4) consists of the disconnecting unit (2) and electronic actuator (1) attached as an assembly to the bar (4).

This system allows greater front suspension travel in off-road situations. It consists of a disconnecting unit (2), electronic actuator (1), stabilizer bar (4), stabilizer bar mounting retainers (3), stabilizer links (5) and a anti-rotational bracket (6) connected to the stabilizer bar retainer (3).

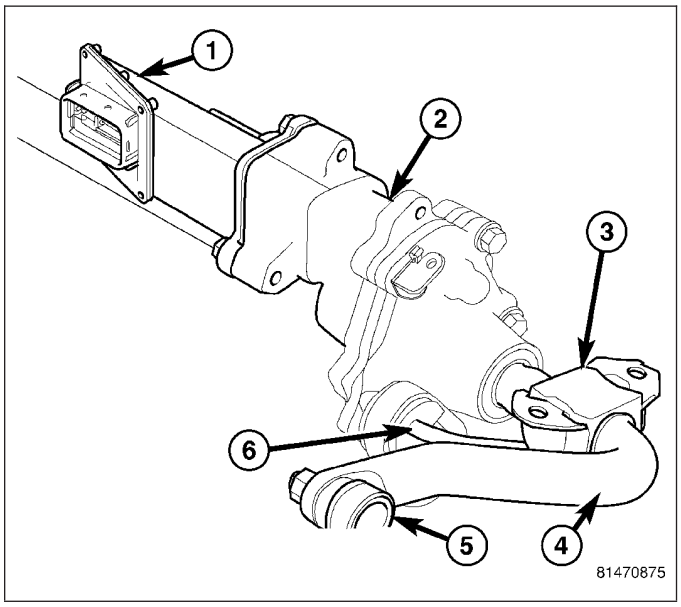

The electronic disconnecting stabilizer bar provides 2 mode positions operated by a switch on the dash: On-Road mode, and Off-Road mode. The electronic disconnecting stabilizer bar is designed to be driven in On-Road mode (indicated by a solid on-road mode light) for normal street and highway conditions (dry hard surfaced roads).

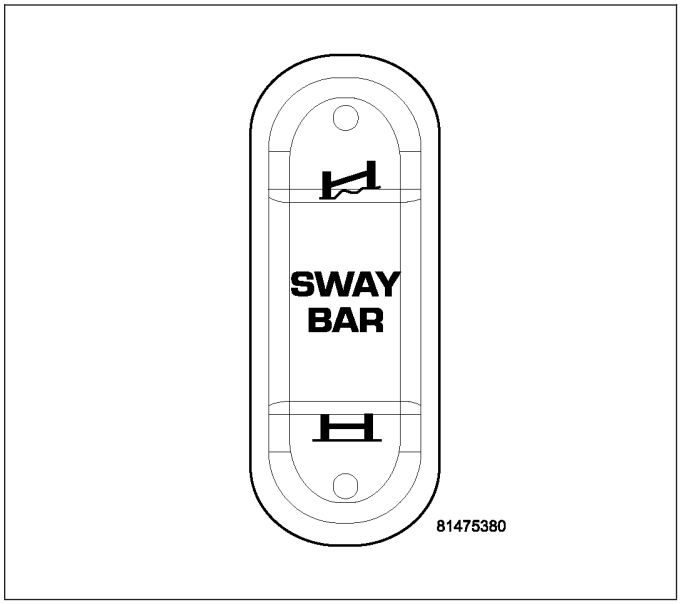

OPERATION

STABILIZER BAR

The stabilizer bar is used to minimize vehicle front sway during turns. The bar helps to maintain a flat attitude to the road surface.

OPERATION - DISCONNECTING STABILIZER BAR

NOTE: The off-road mode is intended for use at low speed only and is equipped with a vehicle speed sensor. When in off-road mode, if the vehicle speed exceeds 18 MPH, the system will return to on-road mode (indicated by a flashing off-road mode light). If vehicle speed is reduced to 14 MPH, the system will once again return to off-road mode (indicated by a solid off-road mode light).

When in a severe off-road situation, the stabilizer bar may be placed into off-road mode to increase maneuverability. To engage the off-road mode, place the vehicle in 4WD HI or LO, and depress the Stabilizer Bar Control Switch for off-road mode. The off-road mode indicator light will flash until mode has been fully engaged, indicated by a solid light.

To disengage off-road mode, depress the Stabilizer Bar Control Switch for on-road mode. The on-road mode indicator light will flash until mode has been fully engaged, indicated by a solid light.

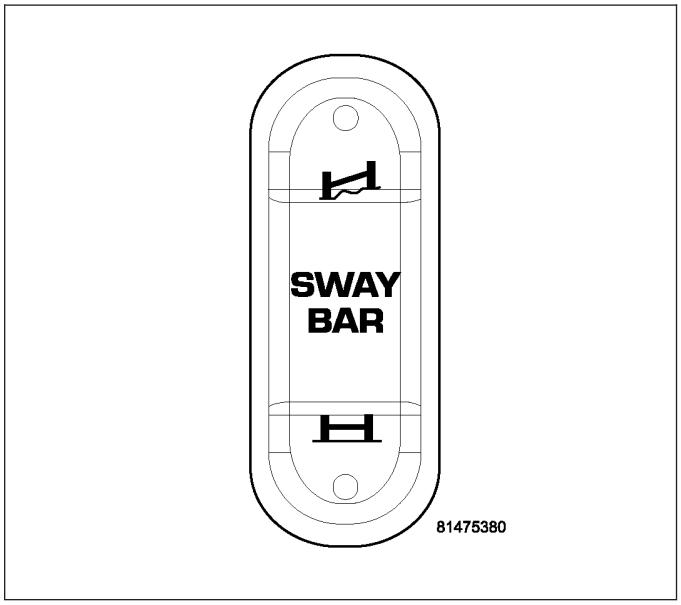

REMOVAL

STABILIZER BAR

1. Raise and support the vehicle.
2. Hold the stabilizer link (5) shafts with a wrench and remove the link nuts at the stabilizer bar (3).
3. Remove the retainers (1) and grommets (2) from the stabilizer bar links (5).
4. Remove the stabilizer bar clamps from the frame rails and remove the stabilizer bar.

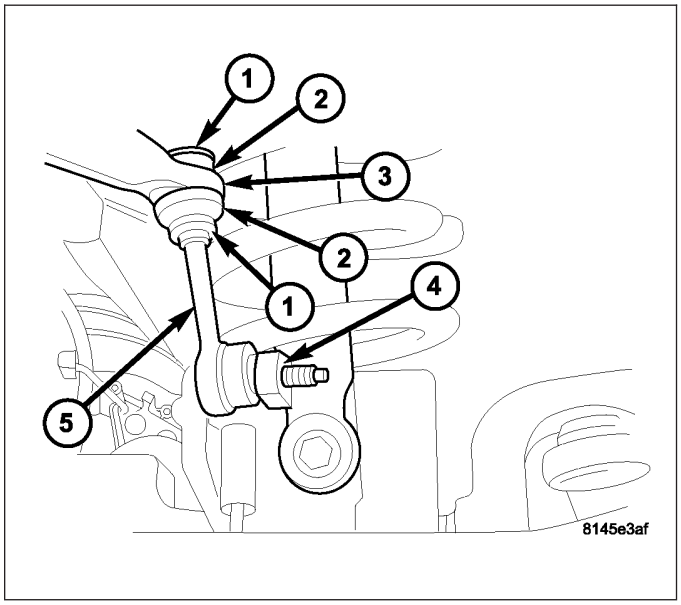

DISCONNECTING STABILIZER BAR

WARNING: The disconnecting stabilizer bar unit (2) is not serviced separately from the bar (4). Do not disassemble this unit (2) from the stabilizer bar (4).

NOTE: The stabilizer links (5), stabilizer bar retainers/ bushings (3) and the stabilizer bar as a complete unit (4) only are serviceable. The new bar (4) consists of the disconnecting unit (2) and electronic actuator (1) attached as an assembly to the bar (4).

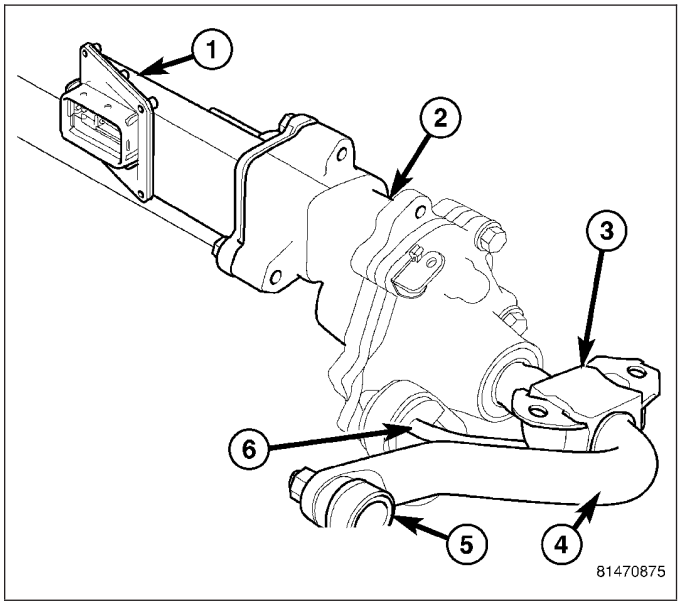

1. Raise and support the vehicle.
2. Hold the stabilizer link (1) shafts with a wrench and remove the link nuts (3) at the stabilizer bar (2).

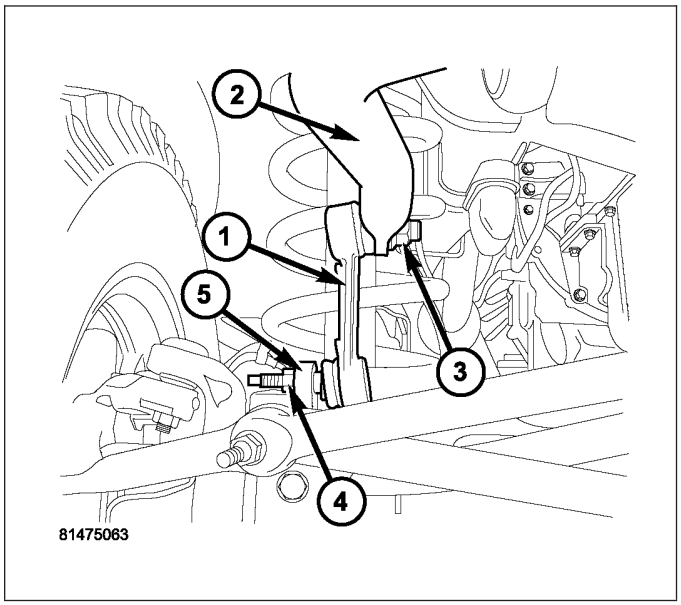

NOTE: Before removing the connector (4) from the actuator clean the outside of the connector with a cleaner and compressed air, to remove any dirt or debris.

3. Disconnect the electronic actuator electrical connector (4) for the disconnecting stabilizer bar (5).

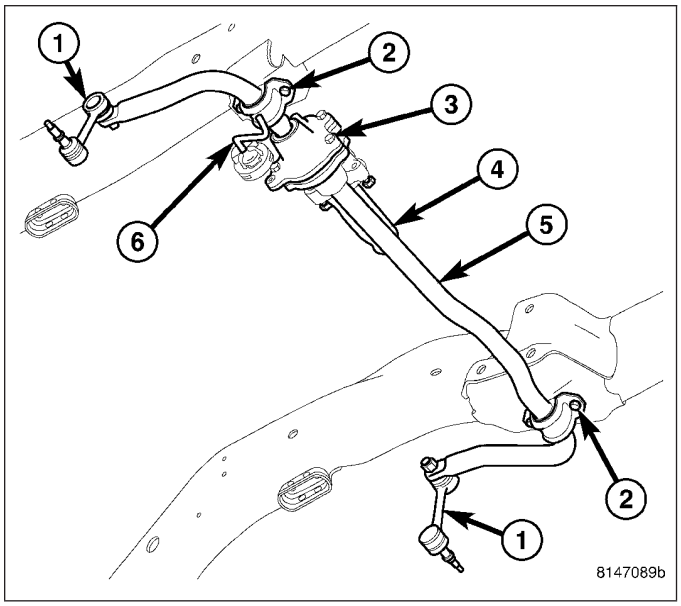

4. Remove the stabilizer bar retainers (1) from the frame rails and remove the stabilizer bar (4).

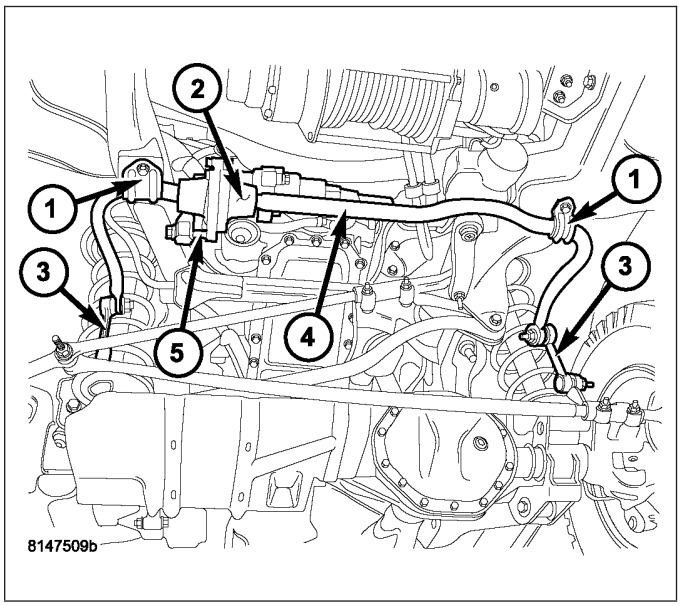

INSTALLATION

STABILIZER BAR

1. Position the stabilizer bar on the frame rail and install the clamps and bolts. Ensure the bar is centered with equal spacing on both sides.
2. Tighten the clamp bolts to 61 N·m (45 ft. lbs.).
3. Install links (5), retainers (1), grommets (2) and nuts to the stabilizer bar (3). Hold the link shaft with a wrench and tighten the nuts to 37 N·m (27 ft. lbs.).
4. Remove the supports and lower the vehicle.

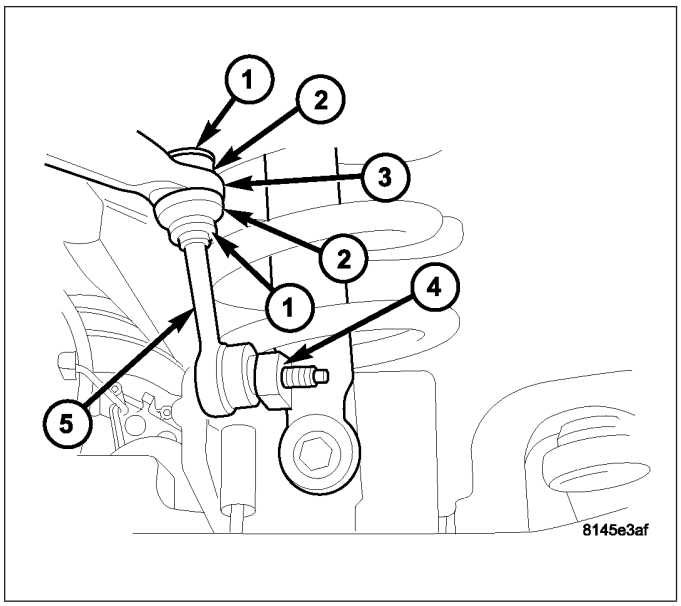

DISCONNECTING STABILIZER BAR

WARNING: The disconnecting stabilizer bar unit (2) is not serviced separately from the bar (4). Do not disassemble this unit (2) from the stabilizer bar (4).

NOTE: The stabilizer links (3), stabilizer bar retainers/ bushings (1) and the stabilizer bar as a complete unit only are serviceable. The new bar consists of the disconnecting unit (2) and electronic actuator attached as an assembly to the bar.

1. Position the stabilizer bar (4) on the frame rail and install the retainers with bushings and bolts (1). Ensure the bar is centered with equal spacing on both sides.
2. Tighten the retainer bolts (1) to 61 N·m (45 ft. lbs.).

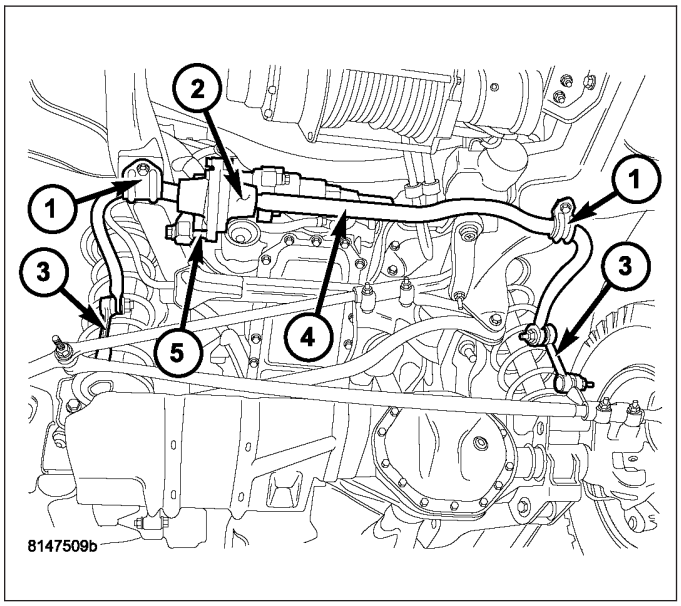

NOTE: The seal must be clean and intact in the electrical connector when reconnecting to the actuator.

3. Reconnect the electronic actuator electrical connector (4) for the disconnecting stabilizer bar (5).

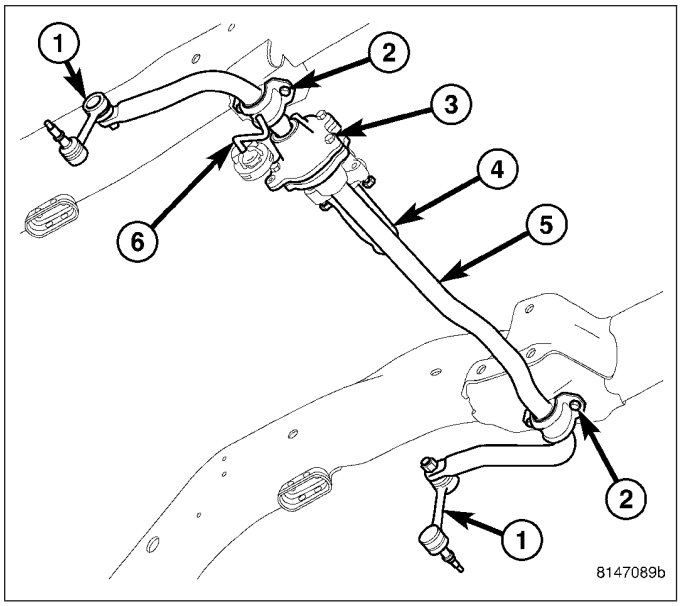

4. Install links (1) and nuts (3) to the stabilizer bar (2). Hold the link shaft with a wrench and tighten the nuts to 149 N·m (110 ft. lbs.).
5. Remove the supports and lower the vehicle.
6. Using a scan tool program the new stabilizer bar to the vechicle.

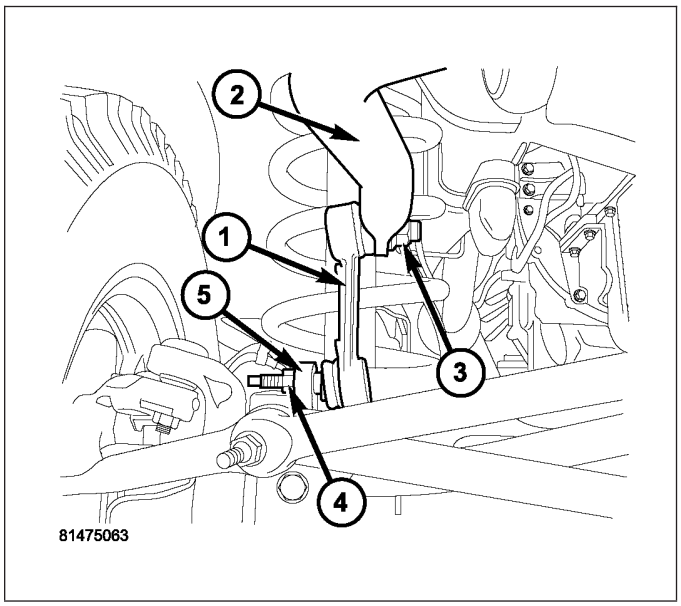

STABILIZER LINK

REMOVAL

STABILIZER LINK

1. Raise and support the vehicle.
2. Hold the stabilizer link (5) shafts with a wrench and remove the link nuts at the stabilizer bar (3).
3. Remove the retainers (1) and grommets (2) from the stabilizer bar links (5).

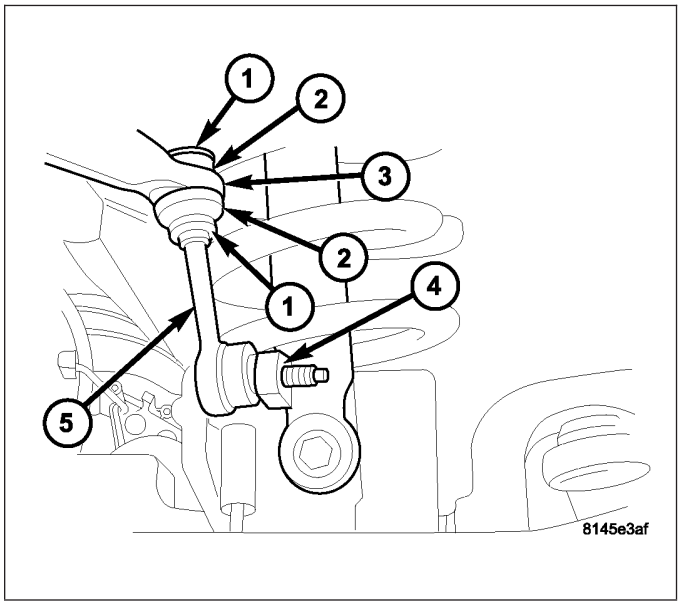

4. Remove the stabilizer bar link nuts from the axle brackets.
5. Remove the links (2) from the axle brackets with Puller C-3894-A (1).

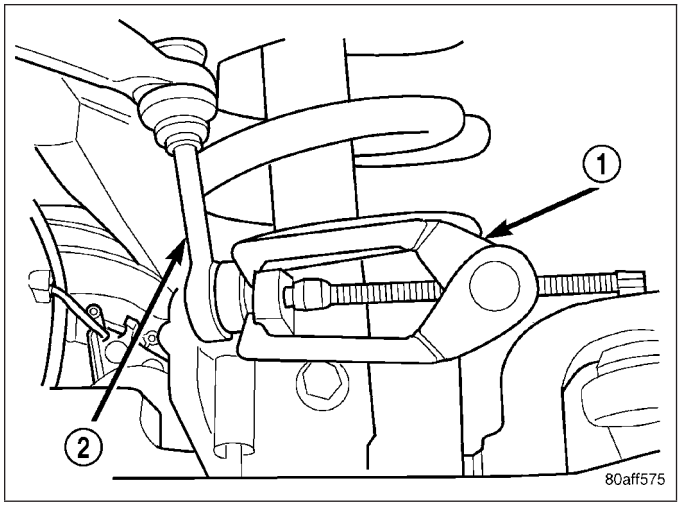

WITH DISCONNECTING STABILIZER BAR

1. Raise and support the vehicle.
2. Hold the stabilizer link (1) shafts with a wrench and remove the link nuts (3) at the stabilizer bar (2).

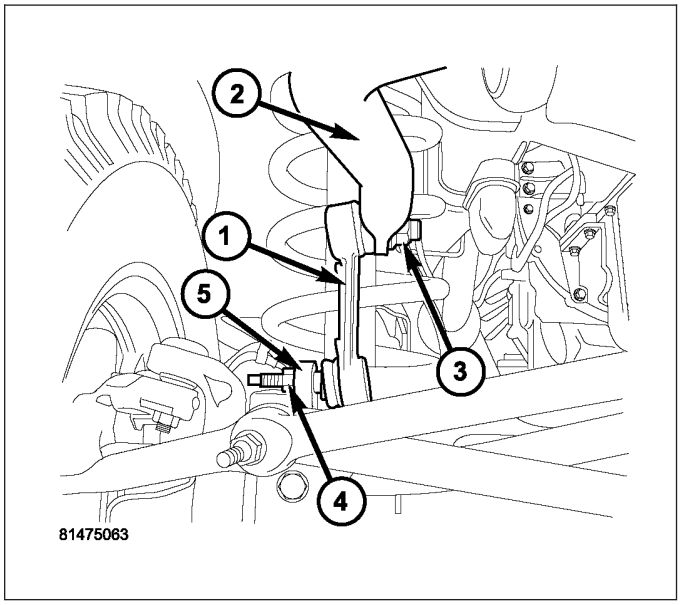

3. Remove the stabilizer bar link nuts from the axle brackets (3).
4. Remove the links (1) from the axle brackets (3) with Puller C-3894-A (2).

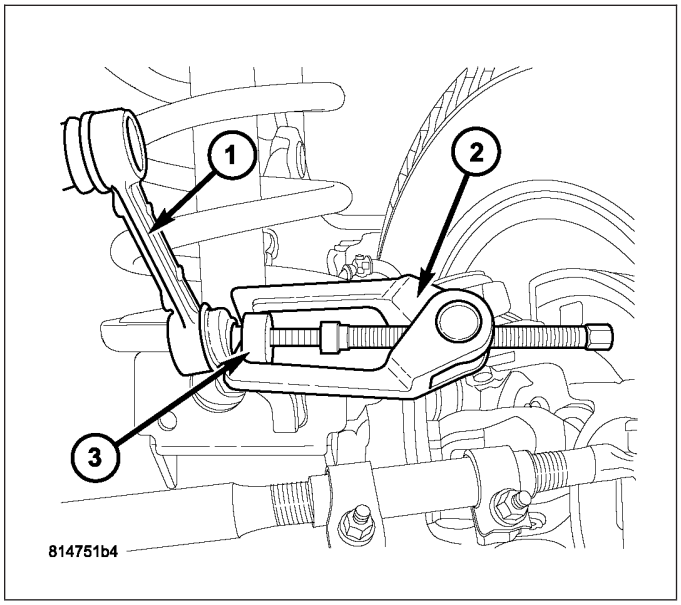

INSTALLATION

STABILIZER LINK

1. Install links (5) to the axle bracket (4) and tighten nut to 71 N·m (52 ft. lbs.).
2. Install links (5), retainers (1), grommets (2) and nuts to the stabilizer bar. Hold the link shaft with a wrench and tighten the nuts to 37 N·m (27 ft. lbs.).
3. Remove the supports and lower the vehicle.

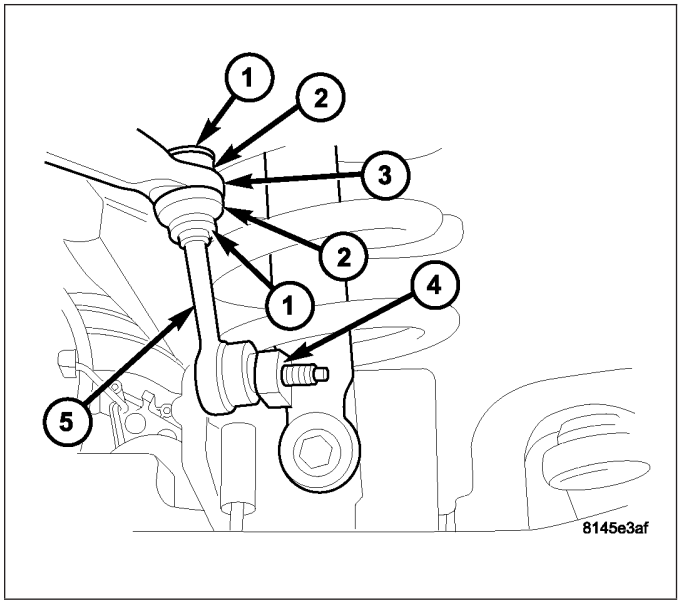

INSTALLATION

1. Install links (1) to the axle bracket (5) and tighten nut (4) to 71 N·m (52 ft. lbs.).
2. Install links (1) and nuts (3) to the stabilizer bar (2). Hold the link shaft with a wrench and tighten the nuts to 149 N·m (110 ft. lbs.).
3. Remove the supports and lower the vehicle.

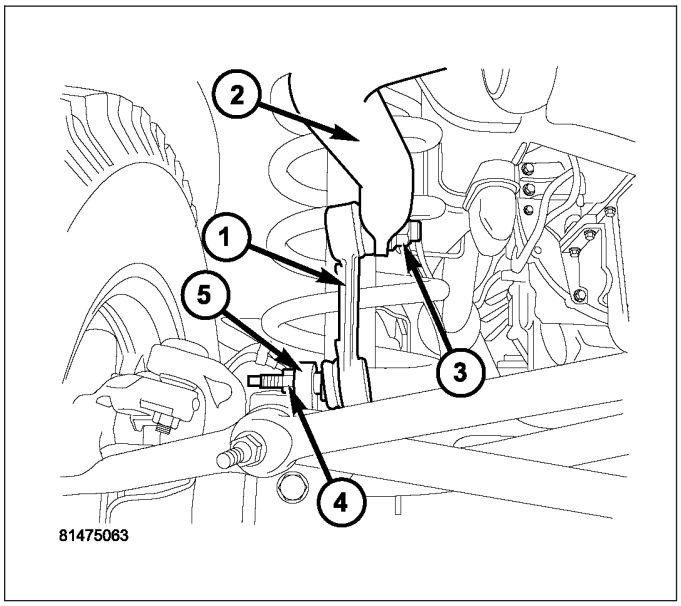

REAR

TABLE OF CONTENTS

page

REAR
DESCRIPTION 95
DIAGNOSIS AND TESTING
SPRING AND SHOCK 96
SPECIFICATIONS
TORQUE CHART 96
BUSHINGS
REMOVAL 97
INSTALLATION 97
JOUNCE BUMPER
REMOVAL 98
INSTALLATION 98
POWER HOP DAMPER - SRT-10 - STANDARD CAB
REMOVAL 99
INSTALLATION 100
STABILIZER BAR - SRT-10 - STANDARD CAB
DESCRIPTION 101
OPERATION 101
REMOVAL 102
INSTALLATION 103
STABILIZER LINK - SRT-10 - STANDARD CAB
REMOVAL 104
INSTALLATION 104
SHOCK
REMOVAL 105
INSTALLATION 105
SPRING
DESCRIPTION
LEAF SPRING 105
LEAF SPRING - SRT-10 106
OPERATION 106
REMOVAL
LEAF SPRING 106
LEAF SPRING - SRT-10 107
INSTALLATION
LEAF SPRING 108
LEAF SPRING - SRT-10 109
AUXILIARY SPRING BUMPERS (3500)
REMOVAL 111
INSTALLATION 111
SPRING TIP INSERTS
REMOVAL 112
INSTALLATION 113

REAR

DESCRIPTION

The rear suspension is comprised of:

- Shock Absorbers
- Jounce Bumpers
- Leaf Springs
- Auxiliary Leaf Spring (3500 series)
- Auxiliary Spring Bumpers (3500 series)
- Drive Axle

CAUTION: A vehicle should always be loaded so the vehicle weight center-line is located immediately forward of the rear axle. Correct vehicle loading provides proper front tire-to-road contact. This results in maximum vehicle handling stability and safety. Incorrect vehicle weight distribution can cause excessive tire tread wear, spring fatigue or failure, and erratic steering.

CAUTION: Suspension components with rubber/urethane bushings (except stabilizer bar) should be tightened with the vehicle at normal ride height. It is important to have the springs supporting the weight of the vehicle when the fasteners are torqued. If springs are not at their normal ride position, vehicle ride comfort could be affected and premature bushing wear may occur.

DIAGNOSIS AND TESTING

SPRING AND SHOCK

A knocking or rattling noise from a shock absorber may be caused by movement between mounting bushings and metal brackets or attaching components. These noises can usually be stopped by tightening the attaching nuts. If the noise persists, inspect for damaged and worn bushings, and attaching components. Repair as necessary if any of these conditions exist.

A squeaking noise from the shock absorber may be caused by the hydraulic valving and may be intermittent. This condition is not repairable and the shock absorber must be replaced.

The shock absorbers are not refillable or adjustable. If a malfunction occurs, the shock absorber must be replaced. To test a shock absorber, hold it in an upright position and force the piston in and out of the cylinder four or five times. The action throughout each stroke should be smooth and even.

The spring eye and shock absorber bushings do not require any type of lubrication. Do not attempt to stop spring bushing noise by lubricating them. Grease and mineral oil-base lubricants will deteriorate the bushing rubber.

If the vehicle is used for severe, off-road operation, the springs should be examined periodically. Check for broken and shifted leafs, loose and missing clips, and broken center bolts. Refer to Spring and Shock Absorber Diagnosis chart for additional information.

SPRING AND SHOCK ABSORBER

CONDITION	POSSIBLE CAUSES	CORRECTION
SPRING SAGS	1. Broken leaf. 2. Spring fatigue.	1. Replace spring. 2. Replace spring.
SPRING NOISE	1. Loose spring clamp bolts. 2. Worn bushings. 3. Worn or missing spring tip inserts.	1. Tighten to specification. 2. Replace bushings. 3. Replace spring tip inserts.
SHOCK NOISE	1. Loose mounting fastener. 2. Worn bushings. 3. Leaking shock.	1. Tighten to specification. 2. Replace shock. 3. Replace shock.

SPECIFICATIONS

TORQUE CHART

TORQUE SPECIFICATIONS

DESCRIPTION	N·m	Ft. Lbs.	In. Lbs.
Shock Absorber Lower Nut	135	100	—
Shock Absorber Upper Nut	135	100	—
Power Hop Damper	102	75	—
Spring Clamp U-Bolts Nuts	149	110	—

DESCRIPTION	N·m	Ft. Lbs.	In. Lbs.
Spring Front & Rear Bolt & Nut LD & SRT-10	163	120	—
Spring Front & Rear Bolt & Nut HD	230	170	—
Spring Spring Rear Shackle Nuts LD & SRT-10	163	120	—
Spring Spring Rear Shackle Nuts HD	230	170	—
Stabilizer Bar Retainer to Axle SRT-10	75	55	—
Stabilizer Link to Frame SRT-10	102	75	—
Stabilizer Link to Stabilizer Bar SRT-10	111	82	—
Jounce Bumper Bolts LD & SRT-10	40	30	—
Jounce Bumper Bolts HD	61	45	—
Auxialiary Spring Bumpers	34	25	—

BUSHINGS

REMOVAL

NOTE: When removing the LD front eye bushing be sure to note the orientation of the ″voids″ or holes. The voids need to be in line with the main leaf when installing the new bushing or vehicle ride will degrade.

1. Remove the spring from the vehicle.
2. Make small relief cuts in the flared up end of the bushing metal being careful not to cut the spring. Use a punch to bend the flared bushing metal down for push out.
3. Position the spring eye in a press.
4. Press the bushing out with an appropriate size driver.

INSTALLATION

NOTE: When installing the LD front eye bushing be sure to note the orientation of the ″voids″ or holes. The voids need to be in line with the main leaf when installing the new bushing or vehicle ride will degrade.

1. Press new bushing into the spring eye with an appropriate size driver. The bushing should be centered in the spring eye.
2. Stake the outermetal of the bushing in a minimum of six points to retain the bushing.
3. Install the spring on the vehicle.

JOUNCE BUMPER

REMOVAL

1. Remove the two bolts (1) securing the jounce bumper (2) to the bracket.
2. Remove the jounce bumper (2).

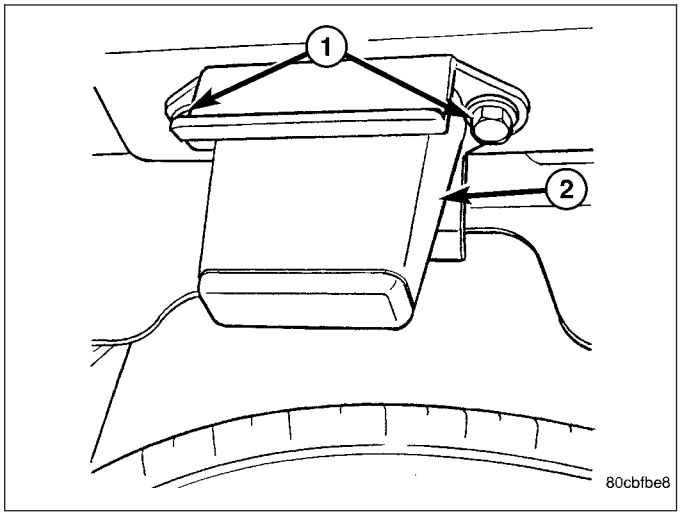

INSTALLATION

1. Install the jounce bumper (2).
2. Install the two bolts (1) securing the jounce bumper (2) to the bracket. Tighten the bolts to 40 N·m (30 ft. lbs.)(LD) or Tighten the bolts to 61 N·m (45 ft. lbs.)(HD).

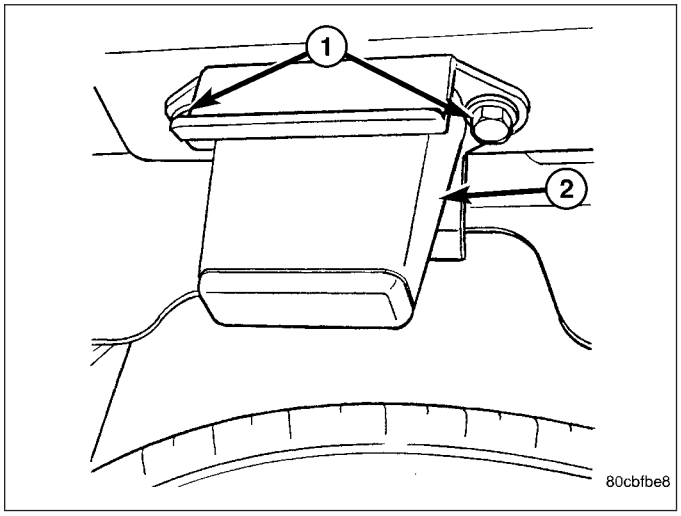

POWER HOP DAMPER - SRT-10 - STANDARD CAB

REMOVAL

1. Raise and support the vehicle.
2. Remove the damper nut and bolt (3) at the axle.

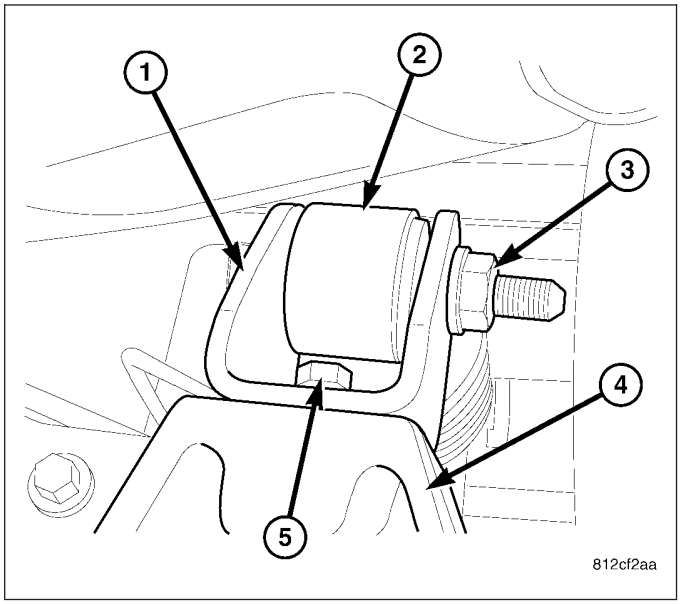

3. Remove the damper nut and bolt (2) at the axle.

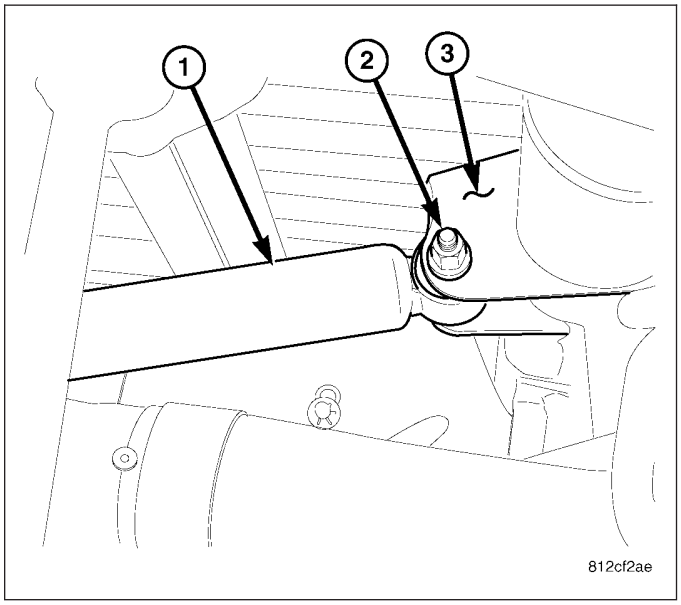

4. Remove the damper bracket (1) from the differential cover (4) if necessary.
5. Remove the from the vehicle.

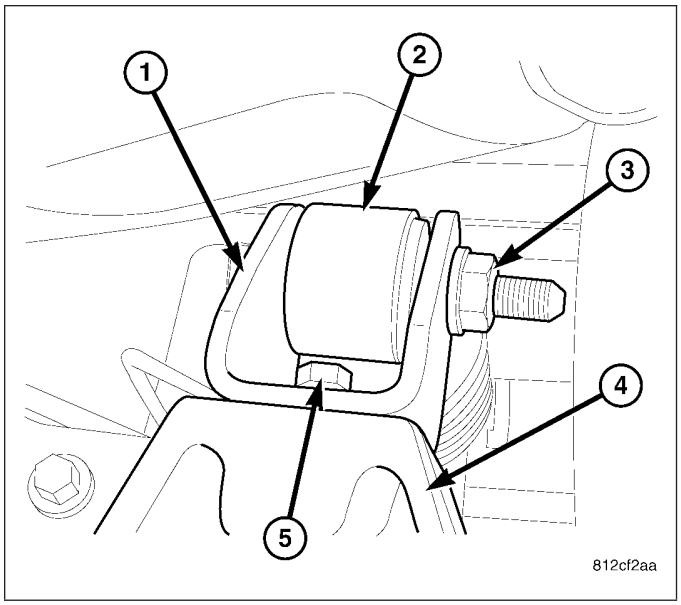

INSTALLATION

1. Install the damper bracket (1) to the rear differential cover (4) if removed. Tighten the bolts (5) to 41N·m (30 ft. lbs.).
2. Compress the damper for easier installation.
3. Install the damper to the mounting brackets (1).
4. Install the damper nut and bolt to the axle.Tighten the bolts to 102N·m (75 ft. lbs.).

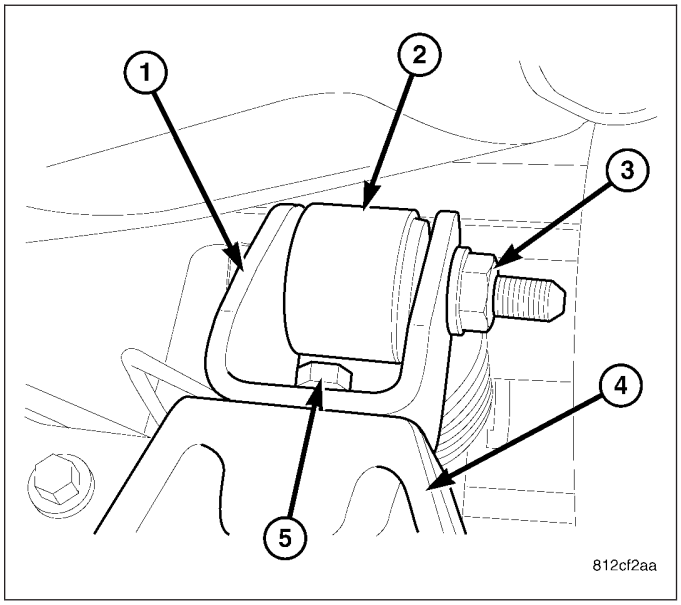

5. Decompress the damper (1).
6. Install the damper nut and bolt (2) to the frame (3). Tighten the bolts to 102N·m (75 ft. lbs.).
7. Lower the vehicle.

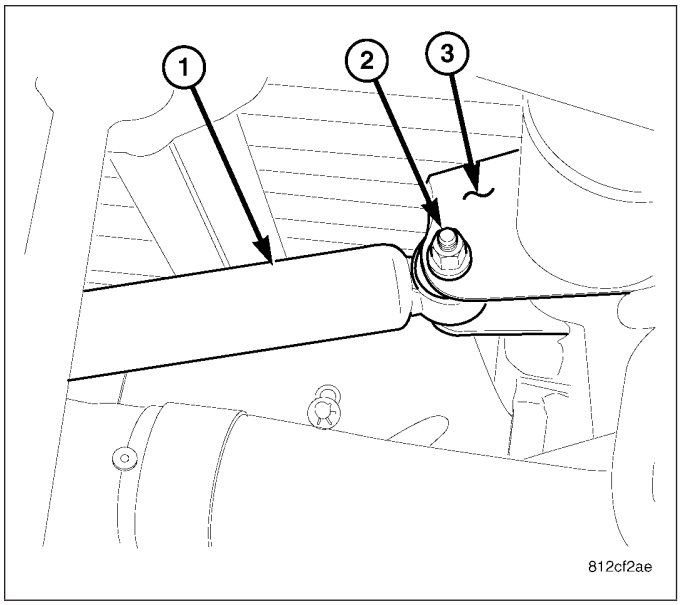

STABILIZER BAR - SRT-10 - STANDARD CAB

DESCRIPTION

The stabilizer bar (3) extends across the underside of the vehicle and is bolted to the top of the axle (2). Links (1) at the end of the bar are bolted to the frame.

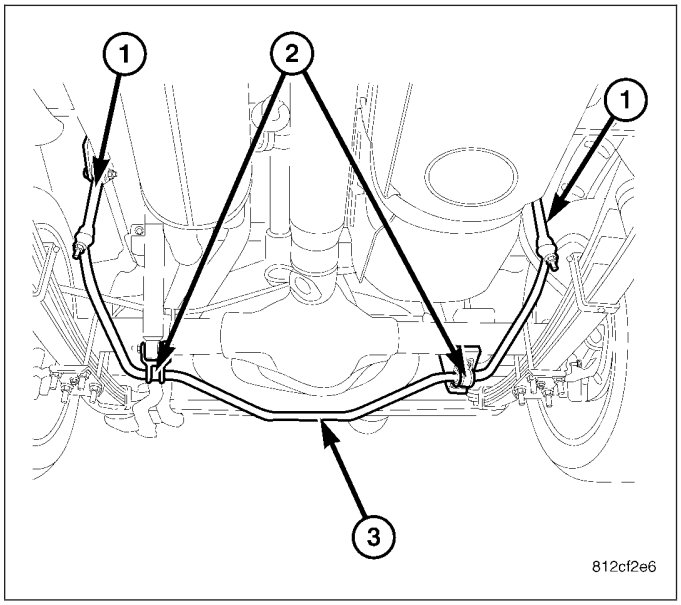

OPERATION

The stabilizer bar is used to minimize vehicle body roll. The spring steel bar helps to control the vehicle body in relationship to the suspension.

REMOVAL

1. Raise and support vehicle.
2. Remove lower links mounting nuts (4).

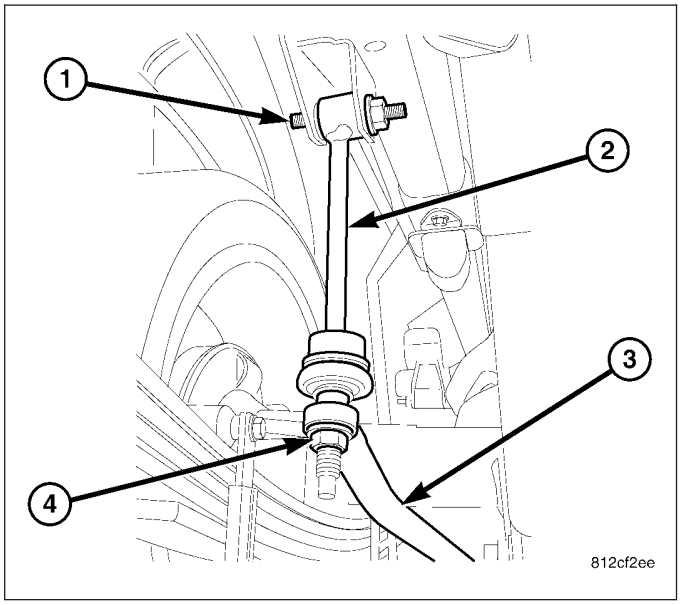

3. Remove stabilizer bar retainer bolts (2) and retainers (3) at the axle.
4. Remove stabilizer bar and remove bushings.

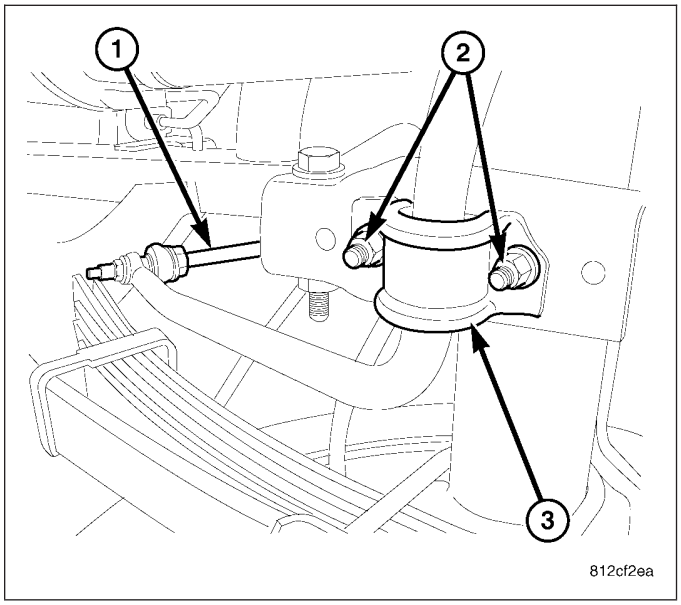

INSTALLATION

1. Install stabilizer bar bushings.
2. Install the stabilizer bar and center it with equal spacing on both sides.
3. Install stabilizer bar retainers (3). Tighten the bolts (2) to 75 N·m (55 ft. lbs.).
4. Install the park brake cable bracket to the retainers (3).

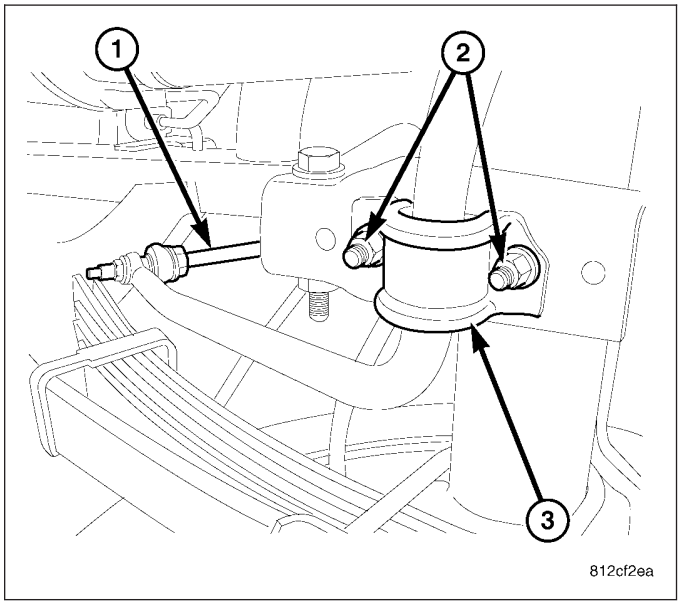

5. Install the links (2) on the stabilizer bar (3). Install mounting bolts and nuts (1&4).
6. Remove support and lower vehicle.
7. Tighten stabilizer link lower nuts (4) to 111 N·m (82 ft. lbs.).

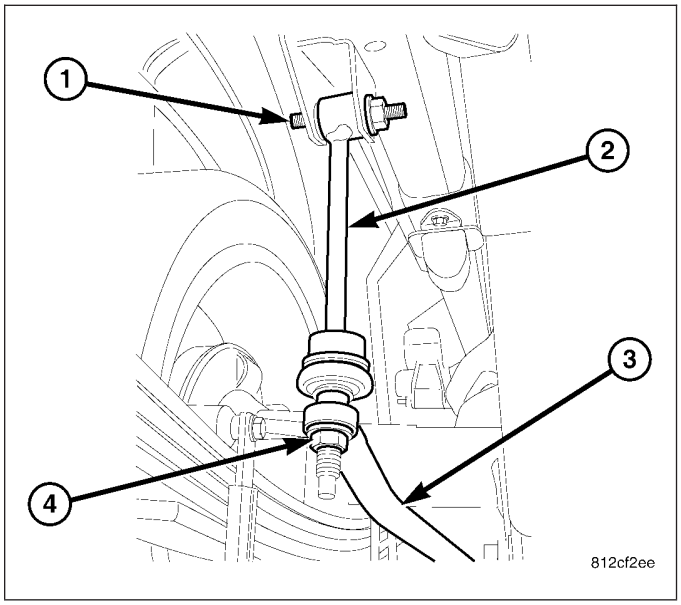

STABILIZER LINK - SRT-10 - STANDARD CAB

REMOVAL

1. Raise and support the vehicle.
2. Remove the rear tire.
3. Support the rear axle with a jack.
4. Remove the upper link nut and bolt (1) at the frame.
5. Remove the lower link nut (4) at the stabilizer bar (3).
6. Remove stabilizer link (2).

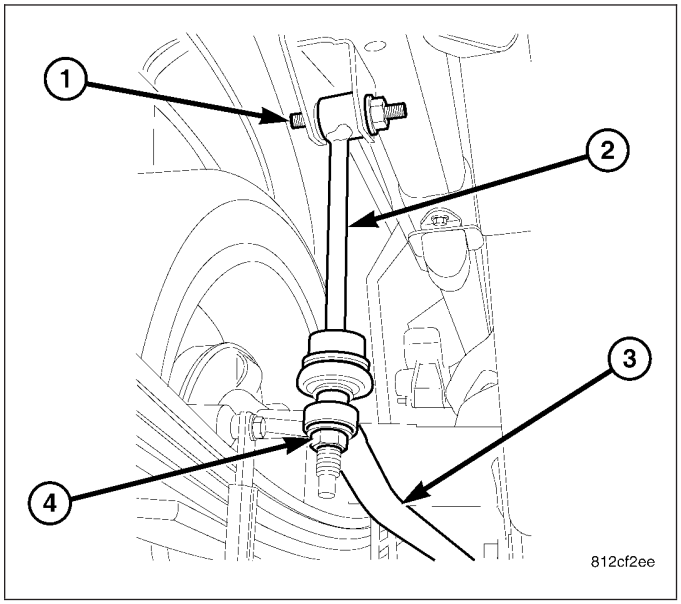

INSTALLATION

1. Install the upper bolt and nut (1) for the stabilizer link (2) to the frame.Tighten to 1021 N·m (75 ft. lbs.).
2. Install the stabilizer link (2) to the stabilizer bar (3).
3. Install the nut and tighten to 111 N·m (82 ft. lbs.).
4. Remove the jack and lower the vehicle.

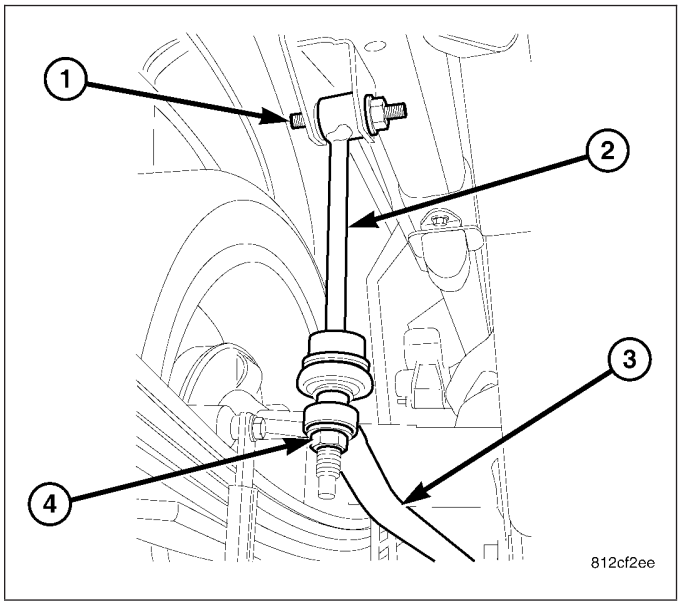

SHOCK

REMOVAL

1. Raise vehicle and support the axle.

NOTE: The rear upper shock attachment uses a flag nut. Do not use an air tool to remove the bolt, the flag may rotate into the bottom of the bed and cause damage. Use a wrench to hold the nut when loosening.

2. Remove the upper shock bolt and nut (1).
3. Remove the lower shock bolt and nut.
4. Remove the rear shock absorber (3) from the vehicle.

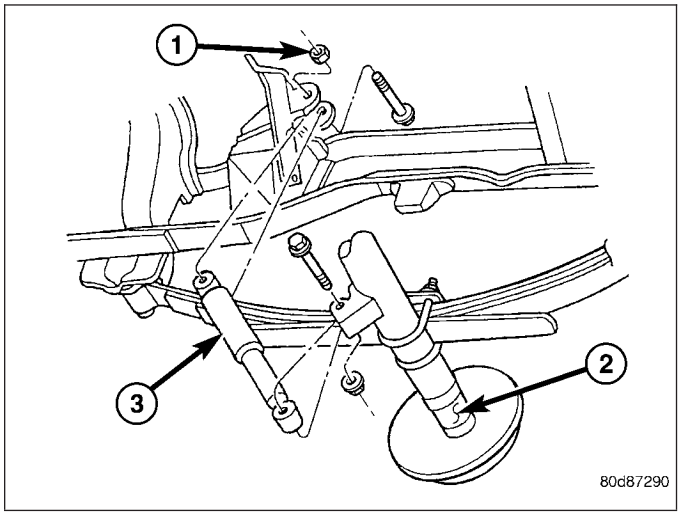

INSTALLATION

1. Position the shock absorber (3) in the brackets.
2. Install the bolts through the brackets and the shock. Install the flag nut (1) on the top bolt and nut on lower bolt.
3. Tighten the upper and lower bolt/nuts Tighten to 135 N.m (100 ft. lbs.)
4. Remove the support and lower the vehicle.

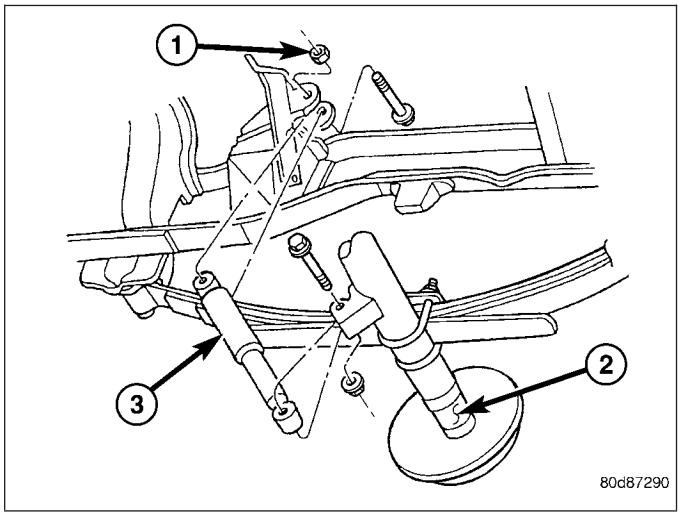

SPRING

DESCRIPTION

LEAF SPRING

The rear suspension system uses a multi-leaf springs and a solid drive axle. The forward end of the springs are mounted to the body rail hangers through rubber bushings. The rearward end of the springs are attached to the body by the use of shackles. The spring and shackles use rubber bushings.

LEAF SPRING - SRT-10

The rear suspension system uses multi-leaf springs with an added leaf spring (limiter Spring)(3) to act as a traction bar designed into the spring to limit the amount of travel in the spring on hard accelerations. The forward end of the springs are mounted to the body rail hangers through rubber bushings (2). The rearward end of the springs are attached to the body by the use of shackles. The spring and shackles use rubber bushings (1).

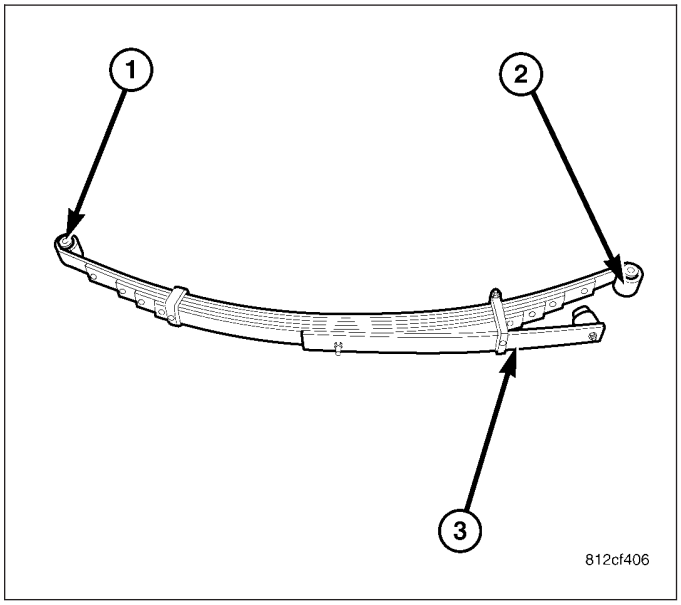

OPERATION

The springs control ride quality and maintain vehicle ride height. The shackles allow the springs to change their length as the vehicle moves over various road conditions.

REMOVAL

LEAF SPRING

1. Raise and support the vehicle.
2. Support the axle with a suitable holding fixture.
3. Remove the nuts, spring clamp bolts (5) and the plate that attach the spring (1) to the axle.
4. Remove the nuts and bolts from the spring front and rear shackle (6).
5. Remove the spring (1) from the vehicle.

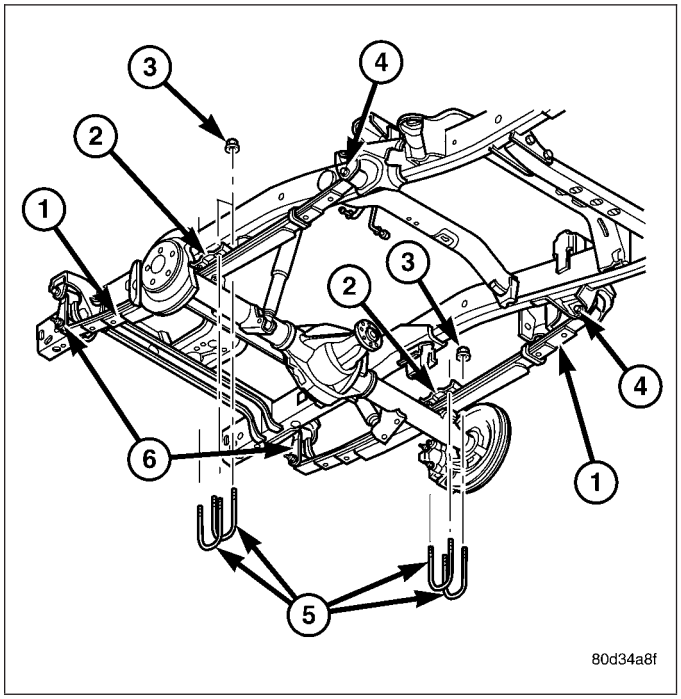

LEAF SPRING - SRT-10

1. Raise and support the vehicle.
2. Support the axle with a suitable holding fixture.
3. Remove the nuts (2), spring clamp bolts (1) and the plate that attach the spring to the axle.

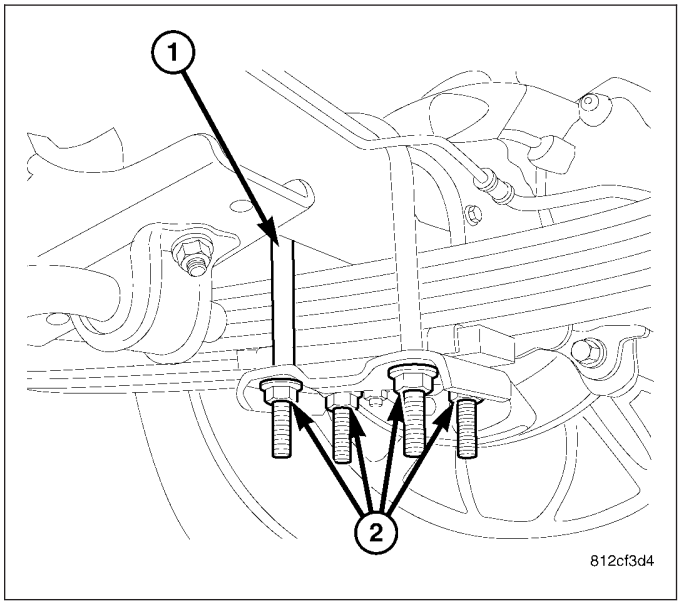

4. Remove the nuts and bolts from the spring front and rear shackle (1).
5. Remove the spring (2) from the vehicle.

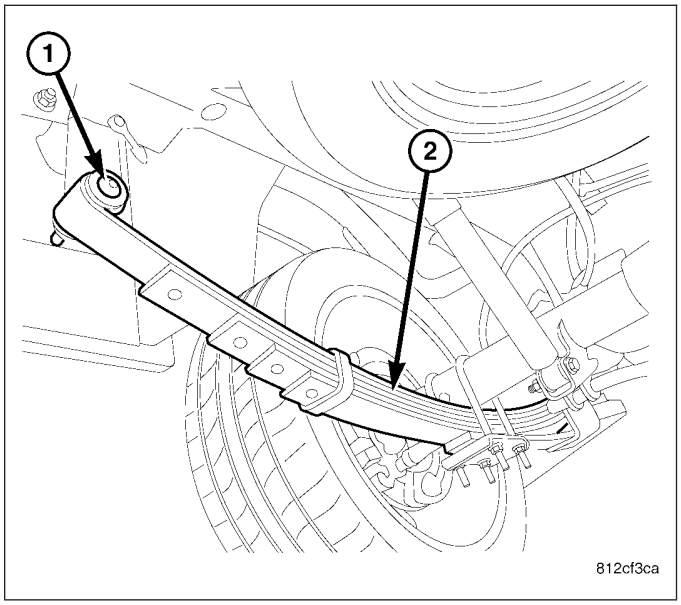

INSTALLATION

LEAF SPRING

1. Position spring (1) on axle shaft tube so spring center bolt is inserted into the locating hole in the axle tube.
2. Align the front of the spring with the bolt hole in the front bracket. Install the eye pivot bolt and nut (4).
3. Align the rear of the spring into the shackle (6) and install the bolt and nut.
4. Tighten the spring front and rear eye pivot bolt snug do not torque.

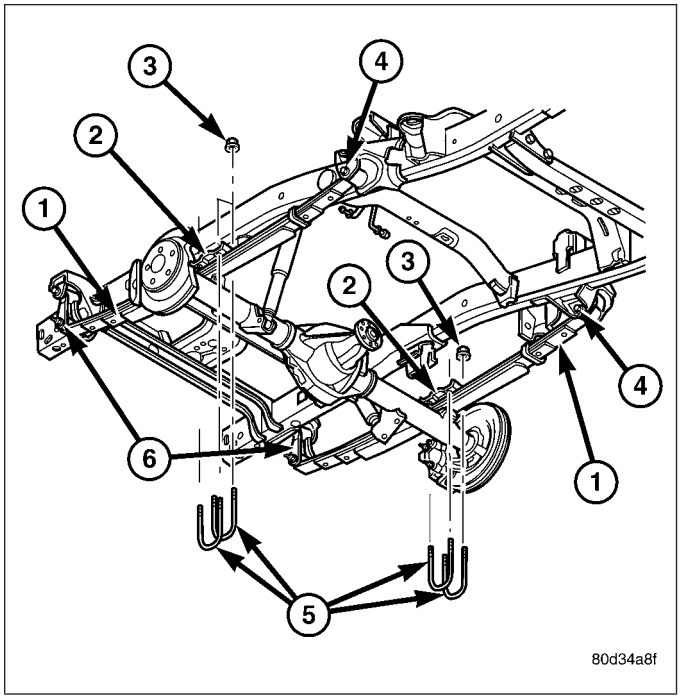

5. Install the spring clamp bolts (5), plate (2) and the retaining nuts (3).
6. Remove the holding fixture for the rear axle.
7. Remove the supports and lower the vehicle so that the weight is being supported by the tires.
8. Tighten the spring clamp retaining nuts (3) to 149 N·m (110 ft. lbs.).
9. Tighten the spring front and rear pivot bolt nuts to 163 N·m (120 ft. lbs.)(LD) or 230 N·m (170 ft. lbs.)(HD).

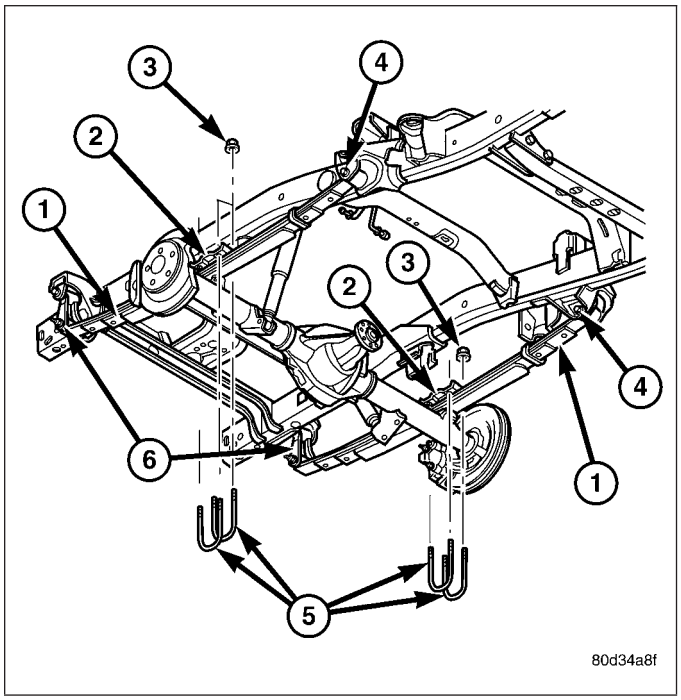

LEAF SPRING - SRT-10

1. Position spring on axle shaft tube so spring center bolt is inserted into the locating hole in the axle tube (2).

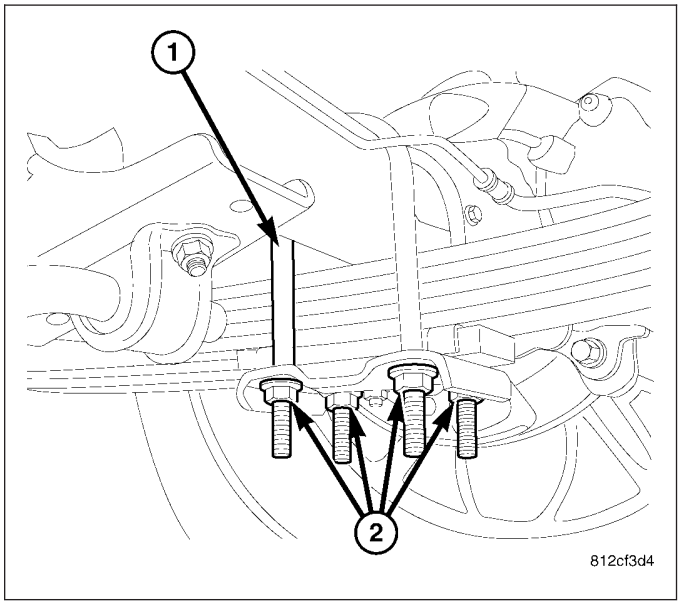

2. Align the front of the spring with the bolt hole in the front bracket. Install the eye pivot bolt and nut.
3. Align the rear of the spring into the shackle and install the bolt and nut (1).
4. Tighten the spring front and rear eye pivot bolt snug do not torque.

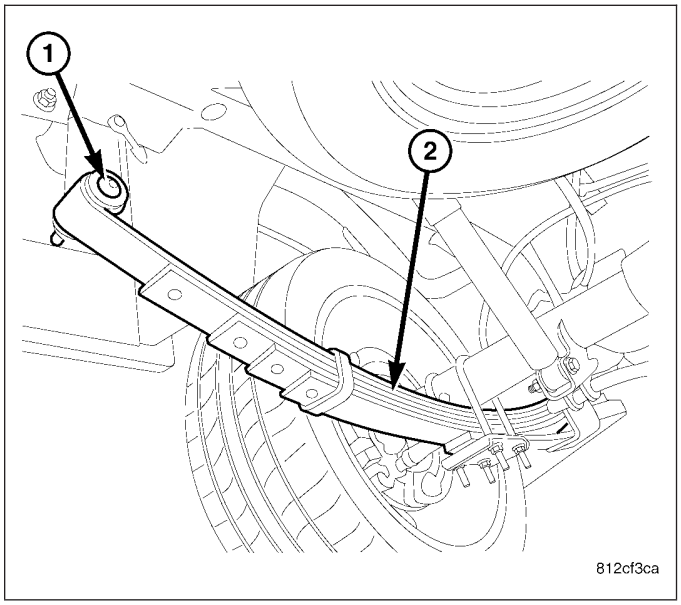

5. Install the spring clamp bolts (1), plate and the retaining nuts (2).
6. Remove the holding fixture for the rear axle.
7. Remove the supports and lower the vehicle so that the weight is being supported by the tires.
8. Tighten the spring clamp retaining nuts (2) to 149 N·m (110 ft. lbs.).

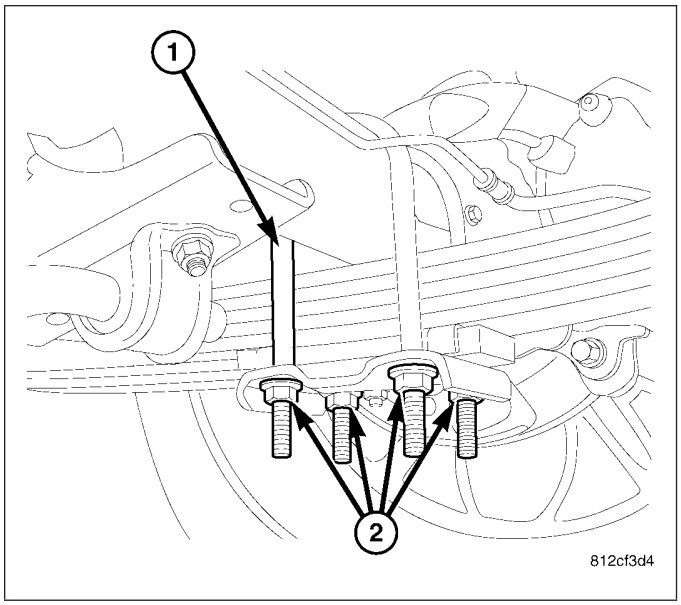

9. Tighten the spring front and rear pivot bolt nuts to 163 N·m (120 ft. lbs.) (1).

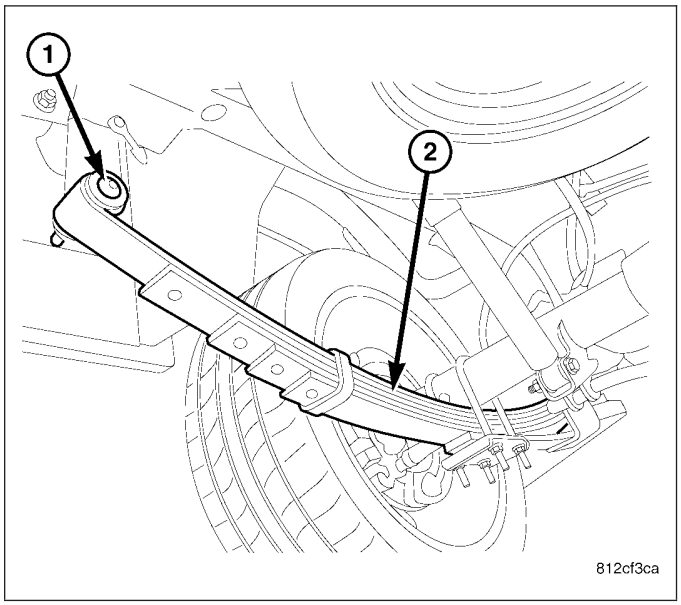

AUXILIARY SPRING BUMPERS (3500)

REMOVAL

1. Remove the nut (1) securing the auxiliary spring bumper (2) to the bracket.
2. Remove the auxiliary spring bumper (2).

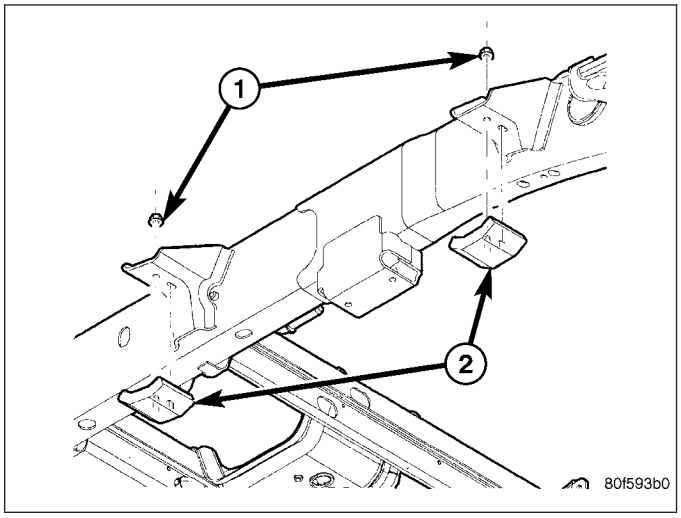

INSTALLATION

1. Install the auxiliary spring bumper (2).
2. Install the nut (1) securing the auxiliary spring bumper (2) to the bracket. Tighten the nut to 25 N·m (34 ft. lbs.).

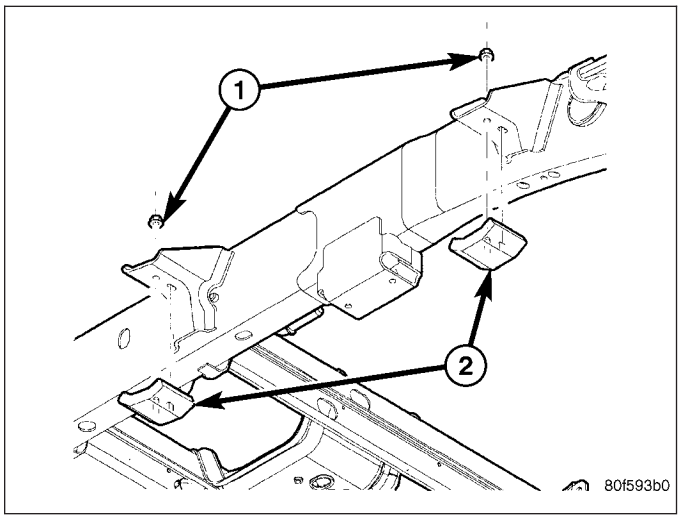

SPRING TIP INSERTS

REMOVAL

1. Raise and support the vehicle.
2. Remove both rear tireand wheel assemblies
3. Position a large C-Clamp (3) adjacent to the spring clinch clip (1) and clamp the leaves of the spring together

CAUTION: When working on the front leaf spring clinch clamps finish the front before starting on the rear to prevent personal injury.

4. Use an appropriate pry bar (2) to bend open the spring clinch clip (1). If necessary, remove the existing spring clinch clip isolators.

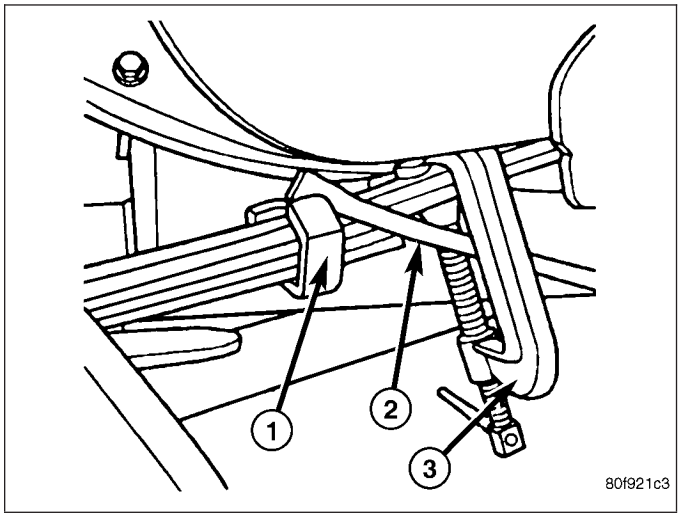

5. Use the pry bar (2) to spread apart the leaf (1). The clearance between the leaves should be enough to remove the old liner (if necessary) and install the replacement liner.

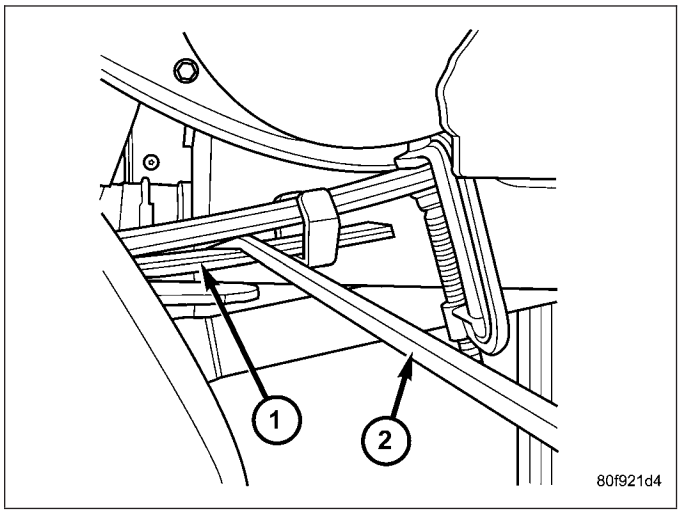

6. If necessary, remove the old spring tip liner (1).

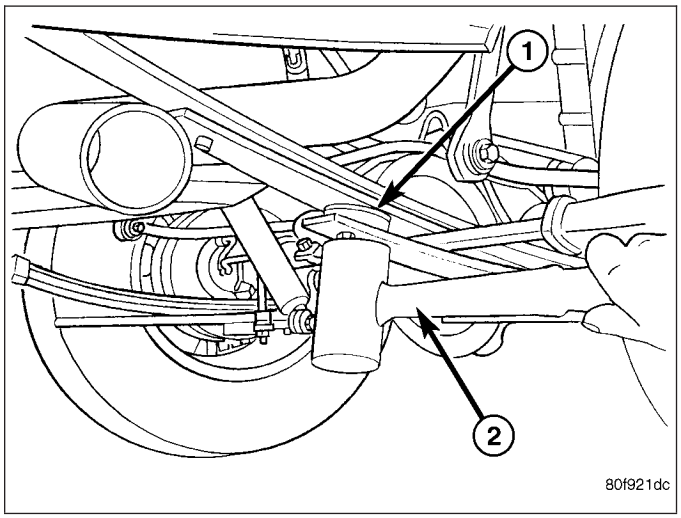

INSTALLATION

1. With the prybar still inserted between the leaves, install a new spring tip liner onto the leaf.
2. Firmly seat the spring tip liner onto the leaf. A C-Clamp (1) can be used to compress the adjacent leaves together which will seat the liner retaining pin into the hole.

NOTE: THE SPRING TIP LINER IS PROPERLY INSTALLED WHEN THE RETAINING PIN IS POINTING TOWARD THE PAVEMENT AND THE WEAR PAD IS CONTACTING THE LEAF SPRING.

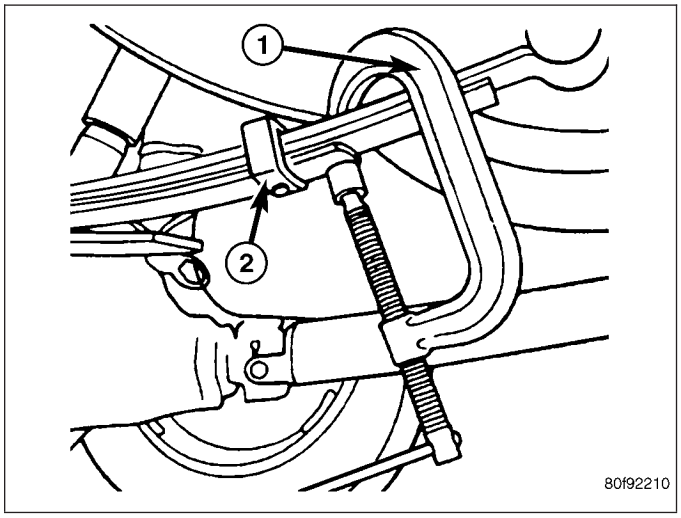

3. Apply a small amount of lubricant oil onto the tip liner wear pad.
4. Install all the spring tip liners.
5. Place one spring clinch clip isolator (1) onto the outboard side of the spring clinch clip and one isolator on the inboard side of the spring clinch clip.

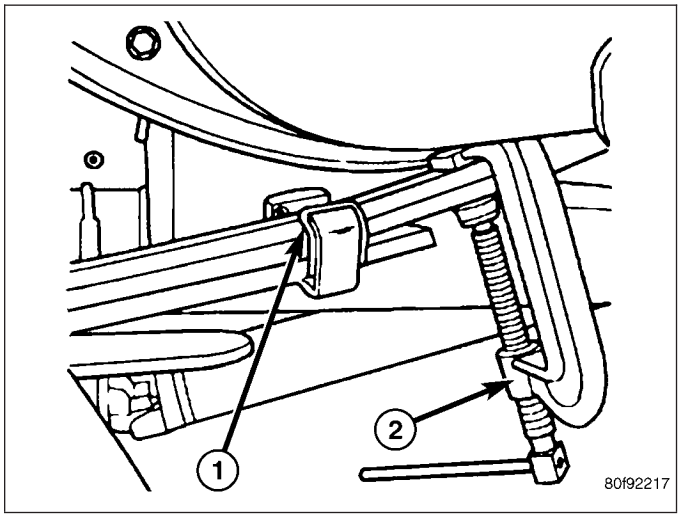

6. Using large adjustable pliers (2) , close the spring clinch clip (1) until the isolator contacts the leaf spring.

CAUTION: DO NOT USE A HAMMER TO CLOSE THE SPRING CLINCH CLIP. DAMAGE TO THE ISOLATOR MAY RESULT.
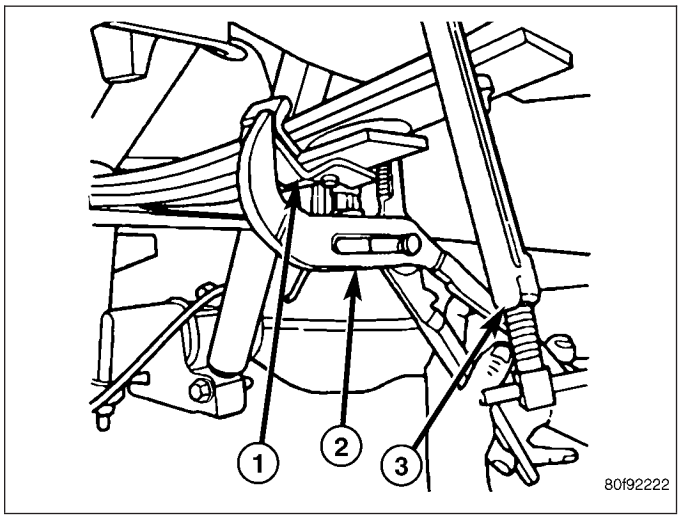
7. Use an appropriate pry bar to bend open the spring clinch clip. If necessary, remove the existing spring clinch clip isolators.
8. Repeat procedure for the other side of the vehicle.
9. Iinstall the tire wheel assemblies.
10. Lower the vehicle.