Bobcat® AL275 AL350 AL440

	AL275	AL350	AL440
Operating Weight	3900 kg	4800 kg	5700 kg
Engine Output	35.9 kW (48.1 HP)	45.1 kW (60.5 HP)	61.2 kW (82.1 HP)
Bucket Capacities	0.65 - 1.00 m^3	0.80 - 1.20 m^3	1.00 - 1.55 m^3

ARTICULATED LOADERS

Loaded with power

Bobcat® Articulated Loaders

- Powerful
- Easy to operate
- State-of-the-art safety and comfort

Bobcat articulated loaders incorporate the features of larger machines into a compact package that gets more work done in less time.

High performance, rugged durability, unsurpassed operator comfort, safety and product support make Bobcat compact equipment the right choice.

Versatility and productivity

Standard auxiliary hydraulics increase the versatility and productivity of the articulated loader by allowing the use of multi-function attachments such as side-dump, high-dump and multi-purpose buckets.

The **Kubota engine** provides superior power and torque. This, in combination with the **multi-function loader joystick**, enabling forward-reverse travel, float mode and auxiliary hydraulics, sets new standards for productivity.

A high-speed option allows the articulated loaders to reach 36 km/h for faster mobility and productivity.

Safety is a top priority

The rear cowling design provides maximum visibility to the rear of the machine. Fill spouts for the fuel and hydraulic fluid tanks are incorporated in the lockable rear hood for added security. Front work lights supply ample illumination. Optional equipment, such as rear lights, a roof mounted beacon and back-up alarm, provide added safety. In addition, when equipped with the optional skylight guard, the cab is FOPS certified.

Operator comfort

The cab is mounted on rubber dampeners that smooth out the ride on rough terrain by isolating the operator from the frame. Easy cab access from both sides of the machine, a hydraulically cushioned fully adjustable seat, panoramic visibility, ergonomic controls, a tiltable steering column, a standard radio installation kit and generous storage areas create a comfortable and convenient working environment. Cab heating, air recycling and filtration, with 5 ventilation outlets, ensure an optimal environment for the operator. Air conditioning is available as an option.

Designed for performance

Higher tipping loads

The transverse mounted engine shifts the centre of gravity slightly to the rear of the machine. This strategic weight placement allows greater tipping loads while maintaining a compact design.

Superior lifting strength

Manufactured to tackle tough jobs, the inertia-welded cylinders provide superior lifting strength and an extended service life.

Hydrostatic drive train

Infinitely variable speed can be controlled within two speed ranges. This feature, combined with limited-slip differential axles, enables the loader to deliver maximum traction in any type of ground condition.

Parallel loader linkage

The loader linkage is designed to deliver a high breakout force. In addition, versatility is increased by enabling the loader to function as an efficient tool carrier. The load position remains parallel to the ground throughout the lifting range for simple operation and better load retention.

High ground clearance

Bobcat articulated loaders feature high ground clearance for greater mobility and component protection. High ground clearance and greater angle of departure allow for easy manoeuvrability around the jobsite where obstacles, uneven terrain and debris abound.

Limited-slip differential

The ability to maintain traction in tough conditions, as well as when loading the bucket, allows you to get more work done in less time. The limited-slip differential minimizes wheel spin and transfers power to the wheel with the most traction. This feature maximizes drive power and reduces tyre wear.

Rubber dampeners

Isolating components from shock loads and vibration enhances both machine life and operator comfort. Rubber dampeners are strategically placed between the axles and the mainframe to reduce shock loads on the machine and provide smooth operation.

Shuttle-shift transmission

Smoothly shifting between forward and reverse maximizes productivity and minimizes operator fatigue. The conveniently located joystick enables the operator to change direction without a jerking motion that wears on the operator and also reduces bucket load retention.

Serviceability

Providing easy, ground-level service access facilitates routine maintenance. This extends machine life, improves overall performance and reduces costly downtime. The tilt-up hood opens wide to provide simple access to daily service points, cooling system, fuel filters and battery.

Rear oscillating axle

The maintenance-free rear oscillating axle provides superior ground adherence and excellent levelling characteristics, allowing for safe operation at all times and ensuring that the driver's view always remains parallel to the bucket edge.

Dimensions & Working range

Standard bucket

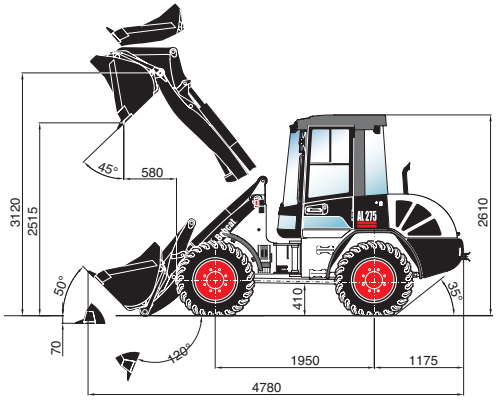

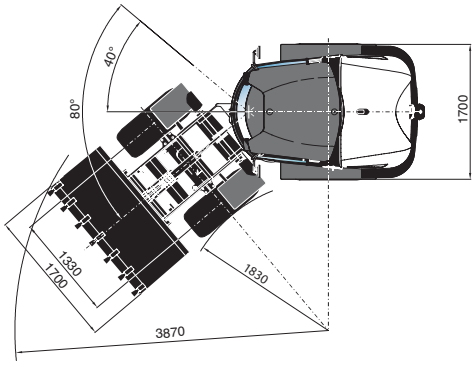

Forks and Multi-purpose bucket

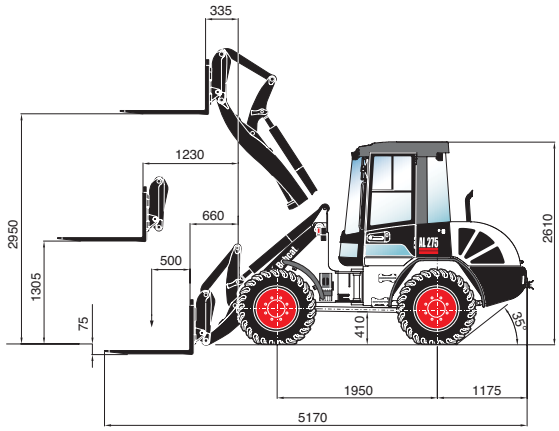

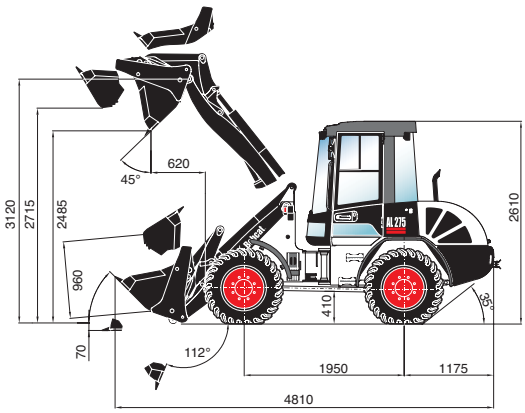

All dimensions in mm.

Buckets and Forks

Bucket type	Width (mm)	Heaped capacity (m^3)	Dump height (mm)	Material density (t/m^3)
Loading	1700	0.65	2515	1.8
Earth	1700	0.72	2455	1.6
Light material	1700	0.80	2420	1.2
Super-light	1850	1.00	2380	0.8
Multi-purpose	1700	0.60	2485	1.6
Side dump	1750	0.50	2480	1.8
High tip	1850	0.65	3390	1.2
Quarry	1850	0.55	2485	1.8

Examples of material density

Material	Material density (t/m^3)
Granite, sand (damp), gravel (damp)	1.8
Earth (damp), sand (dry), gravel (dry)	1.6
Coal, slate	1.2
Coke, wood chips (dry)	0.8

Fork type	Standard	Long
Tine length (mm)	900	1120
Tine cross-section (mm)	100 x 40	100 x 45
Payload over lift range [with rear axle weights] (kg)	1550 [1650]	1520 [1620]
Payload in transport position with rear axle weights (kg)	1900	1870
Lift height (mm)	2950	2950
Overall length on carrier (mm)	5170	5390

Machine Rating

Lift breakout force (ISO 8313)	37000 N	Tipping load, straight (ISO 8313)	2750 kg
Lift capacity (ISO 8313)	33000 N	Tipping load, articulated at 40° (ISO 8313)	2475 kg

Weights

Operating weight, standard	3900 kg

Engine

Make / Model	Kubota V2403-M-DI	Rated speed (EEC 80/1269, ISO 9249)	2600 RPM
Fuel / Cooling	Diesel / Liquid	Torque at 1700 RPM (ISO 9249)	162.0 Nm
Power at 2600 RPM (97/68 EC)	35.9 kW (48.1 HP)	Number of cylinders	4
Power at 2600 RPM (ECE-R24)	35.0 kW (46.9 HP)	Displacement	2.4 l

Hydraulic System

Pump type	Variable displacement drive pump with auxiliary gear pump. Priority supply of flow to the steering controlled by a load-sensing system ensuring all available flow is available if required. Thermostatically controlled oil cooler.
Pump capacity	41.0 l/min
System pressure, drive	250 bar
Control valve	Three control circuits with electro-hydraulically operated float position.

Steering

Articulation angle	±40°
Turning circle	3870 mm

Brakes

Service brake	Hydraulically actuated central drum brake combined with hydrostatic final drive brake.
Parking brake	Mechanically actuated central drum brake on front axle.
Auxiliary brake	The hydrostatic final drive acts as an additional non-wearing brake.

Drive System

Transmission type	Variable displacement hydrostatic pump, flange-mounted onto the engine. Two-stage variable displacement motor with power shift on the rear axle reduction gear. High-speed option adds an additional manual transmission shift that can be operated while stationary.
Final drive	Hydrostatic drive with advanced driving automatics. Automatic adjustment of propulsive force and speed. Continuous speed regulation in both forward and reverse. Four-wheel drive via propeller shaft linking rear and front axles.
Axles	Rigidly mounted planetary-drive front axle with central drum brake and self-locking differential. Trunnion mounted planetary-drive rear axle with ±12° oscillation angle, integrated reduction gear and self-locking differential. High-speed option has an additional integrated two-stage reduction gear.

Traction

Maximum travel speed - Range I:	7 km/h	Maximum travel speed - High-speed option - Range I:	13 km/h
Maximum travel speed - Range II:	20 km/h	Maximum travel speed - High-speed option - Range II:	36 km/h

Fluid Capacities

Engine oil with filter capacity	9.0 l	Hydraulic reservoir capacity	40.0 l
Fuel tank capacity	75.0 l	Hydraulic / Hydrostatic system capacity	49.0 l

Controls

Auxiliary circuit	Switch on multi-function joystick
Loader hydraulics tilt and lift	Multi-function joystick with integrated direction-of-travel switch, float position switch and auxiliary control circuit switch.

Dimensions & Working range

Standard bucket

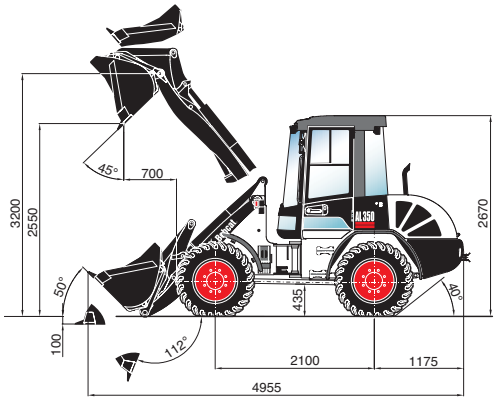

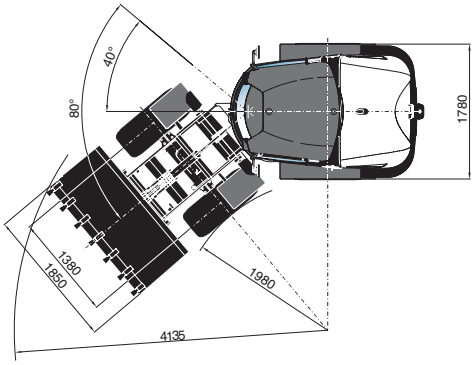

Forks and Multi-purpose bucket

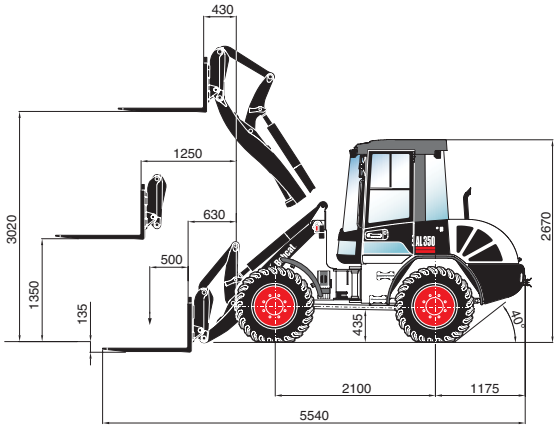

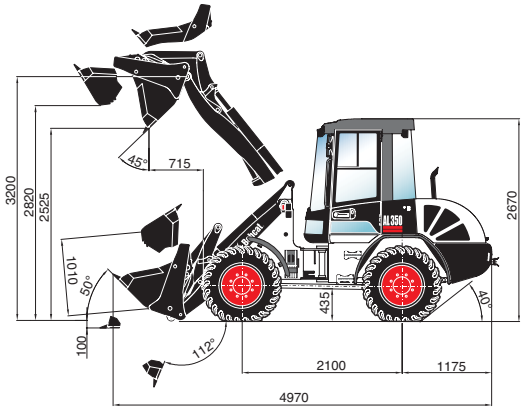

All dimensions in mm.

Buckets and Forks

Bucket type	Width (mm)	Heaped capacity (m³)	Dump height (mm)	Material density (t/m³)
Loading	1850	0.80	2550	1.8
Earth	1850	0.90	2485	1.6
Light material	1850	1.00	2435	1.2
Super-light	1950	1.20	2395	0.8
Multi-purpose	1850	0.75	2525	1.6
Side dump	1850	0.70	2450	1.8
High tip	1850	0.70	3540	1.2
Quarry	1850	0.70	2525	1.8

Examples of material density

Material	Material density (t/m³)
Granite, sand (damp), gravel (damp)	1.8
Earth (damp), sand (dry), gravel (dry)	1.6
Coal, slate	1.2
Coke, wood chips (dry)	0.8

Fork type	Standard
Tine length (mm)	1120
Tine cross-section (mm)	100 x 45
Payload over lift range [with rear axle weights] (kg)	2000 [2200]
Payload in transport position with rear axle weights (kg)	2500
Lift height (mm)	3020
Overall length on carrier (mm)	5540

Machine Rating

Lift breakout force (ISO 8313)	45000 N	Tipping load, straight (ISO 8313)	3500 kg
Lift capacity (ISO 8313)	48000 N	Tipping load, articulated at 40° (ISO 8313)	3150 kg

Weights

Operating weight, standard	4800 kg

Engine

Make / Model	Kubota V3300-DI	Rated speed (EEC 80/1269, ISO 9249)	2200 RPM
Fuel / Cooling	Diesel / Liquid	Torque at 1400 RPM (ISO 9249)	221.0 Nm
Power at 2200 RPM (97/68 EC)	45.1 kW (60.5 HP)	Number of cylinders	4
Power at 2200 RPM (ECE-R24)	44.5 kW (59.7 HP)	Displacement	3.3 l

Hydraulic System

Pump type	Variable displacement drive pump with auxiliary gear pump. Priority supply of flow to the steering controlled by a load-sensing system ensuring all available flow is available if required. Thermostatically controlled oil cooler.
Pump capacity	64.0 l/min
System pressure, drive	250 bar
Control valve	Three control circuits with electro-hydraulically operated float position.

Steering

Articulation angle	±40°
Turning circle	4135 mm

Brakes

Service brake	Hydraulically actuated central drum brake combined with hydrostatic final drive brake.
Parking brake	Mechanically actuated central drum brake on front axle.
Auxiliary brake	The hydrostatic final drive acts as an additional non-wearing brake.

Drive System

Transmission type	Variable displacement hydrostatic pump, flange-mounted onto the engine. Two-stage variable displacement motor with power shift on the rear axle reduction gear. High-speed option adds an additional manual transmission shift that can be operated while stationary.
Final drive	Hydrostatic drive with advanced driving automatics. Automatic adjustment of propulsive force and speed. Continuous speed regulation in both forward and reverse. Four-wheel drive via propeller shaft linking rear and front axles.
Axles	Rigidly mounted planetary-drive front axle with central drum brake and self-locking differential. Trunnion mounted planetary-drive rear axle with ±12° oscillation angle, integrated reduction gear and self-locking differential. High-speed option has an additional integrated two-stage reduction gear.

Traction

Maximum travel speed - Range I:	7 km/h	Maximum travel speed - High-speed option - Range I:	13 km/h
Maximum travel speed - Range II:	20 km/h	Maximum travel speed - High-speed option - Range II:	36 km/h

Fluid Capacities

Engine oil with filter capacity	13.2 l	Hydraulic reservoir capacity	46.0 l
Fuel tank capacity	75.0 l	Hydraulic / Hydrostatic system capacity	55.0 l

Controls

Auxiliary circuit	Switch on multi-function joystick
Loader hydraulics tilt and lift	Multi-function joystick with integrated direction-of-travel switch, float position switch and auxiliary control circuit switch.

Dimensions & Working range

Standard bucket

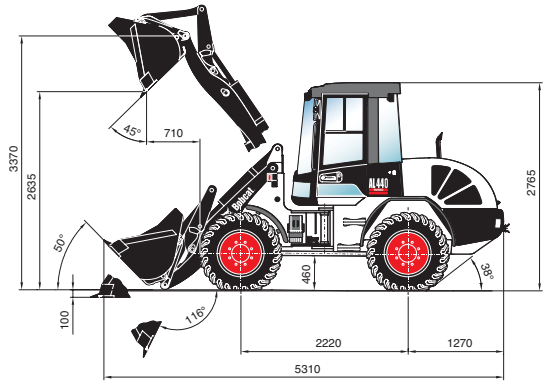

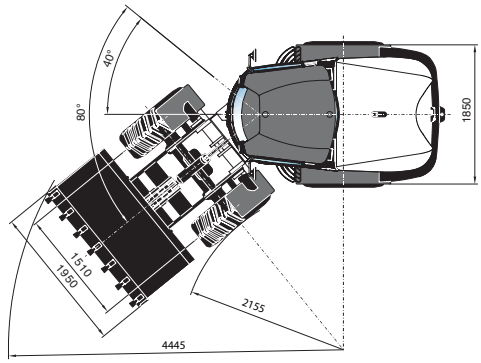

Forks and Multi-purpose bucket

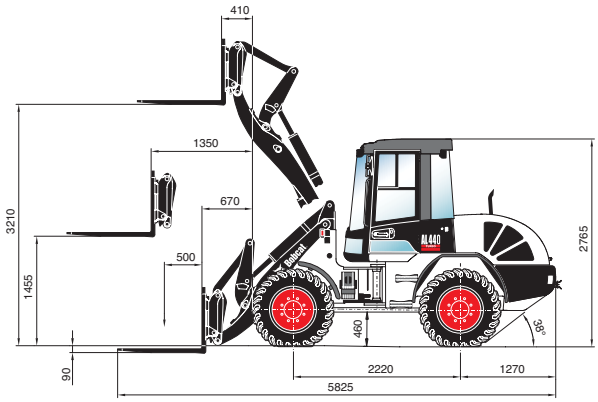

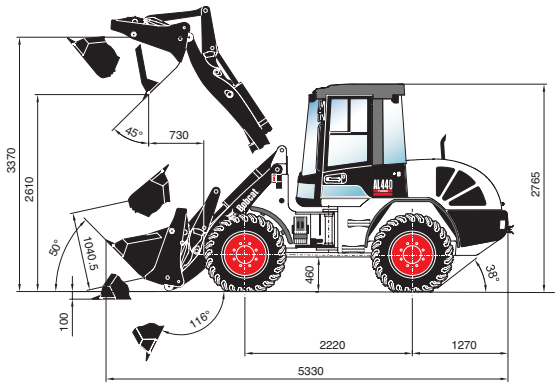

All dimensions in mm.

Buckets and Forks

Bucket type	Width (mm)	Heaped capacity (m^3)	Dump height (mm)	Material density (t/m^3)
Loading	1950	1.00	2635	1.8
Earth	1950	1.10	2585	1.6
Light material	2050	1.35	2510	1.2
Super-light	2200	1.55	2485	0.8
Multi-purpose	1950	0.90	2610	1.6
Side dump	2050	0.85	2515	1.8
High tip	2050	1.00	3835	1.2
Quarry	2050	0.90	2610	1.8

Examples of material density

Material	Material density (t/m^3)
Granite, sand (damp), gravel (damp)	1.8
Earth (damp), sand (dry), gravel (dry)	1.6
Coal, slate	1.2
Coke, wood chips (dry)	0.8

Fork type	Standard
Tine length (mm)	1120
Tine cross-section (mm)	140 x 50
Payload over lift range [with rear axle weights] (kg)	2400 [2600]
Payload in transport position with rear axle weights (kg)	3200
Lift height (mm)	3210
Overall length on carrier (mm)	5825

Machine Rating

Lift breakout force (ISO 8313)	55000 N	Tipping load, straight (ISO 8313)	4400 kg
Lift capacity (ISO 8313)	61000 N	Tipping load, articulated at 40° (ISO 8313)	3900 kg

Weights

Operating weight, standard	5700 kg

Engine

Make / Model	Kubota V3300-DI-T turbo	Rated speed (EEC 80/1269, ISO 9249)	2200 RPM
Fuel / Cooling	Diesel / Liquid	Torque at 1400 RPM (ISO 9249)	296.4 Nm
Power at 2200 RPM (97/68 EC)	61.2 kW (82.1 HP)	Number of cylinders	4
Power at 2200 RPM (ECE-R24)	60.5 kW (81.1 HP)	Displacement	3.3 l

Hydraulic System

Pump type	Variable displacement drive pump with auxiliary gear pump. Priority supply of flow to the steering controlled by a load-sensing system ensuring all available flow is available if required. Thermostatically controlled oil cooler.
Pump capacity	72.0 l/min
System pressure, drive	250 bar
Control valve	Three control circuits with electro-hydraulically operated float position.

Steering

Articulation angle	±40°
Turning circle	4445 mm

Brakes

Service brake	Hydraulically actuated central drum brake combined with hydrostatic final drive brake.
Parking brake	Mechanically actuated central drum brake on front axle.
Auxiliary brake	The hydrostatic final drive acts as an additional non-wearing brake.

Drive System

Transmission type	Variable displacement hydrostatic pump, flange-mounted onto the engine. Two-stage variable displacement motor with power shift on the rear axle reduction gear. High-speed option adds an additional manual transmission shift that can be operated while stationary.
Final drive	Hydrostatic drive with advanced driving automatics. Automatic adjustment of propulsive force and speed. Continuous speed regulation in both forward and reverse. Four-wheel drive via propeller shaft linking rear and front axles.
Axles	Rigidly mounted planetary-drive front axle with central drum brake and self-locking differential. Trunnion mounted planetary-drive rear axle with ±12° oscillation angle, integrated reduction gear and self-locking differential. High-speed option has an additional integrated two-stage reduction gear.

Traction

Maximum travel speed - Range I:	6 km/h	Maximum travel speed - High-speed option - Range I:	18 km/h
Maximum travel speed - Range II:	20 km/h	Maximum travel speed - High-speed option - Range II:	36 km/h

Fluid Capacities

Engine oil with filter capacity	13.2 l	Hydraulic reservoir capacity	62.0 l
Fuel tank capacity	110.0 l	Hydraulic / Hydrostatic system capacity	88.0 l

Controls

Auxiliary circuit	Switch on multi-function joystick
Loader hydraulics tilt and lift	Multi-function joystick with integrated direction-of-travel switch, float position switch and auxiliary control circuit switch.

AL275 AL350 AL440

Standard Features

Rubber-mounted full-vision ROPS* cab with two doors and sliding window on left-hand side
Hydraulically cushioned seat with seat belt
Cab heating and air intake filter
Instrumentation
Parking brake
Windscreen wipers and washer, front and rear
Tilt adjustable steering wheel
Self-locking differentials
Front working lights
Turn direction indicators
Radio pre-installation
Mitas EM01 tyres
Set of maintenance tools
Auxiliary hydraulics
Multi-function joystick
Turbo-charger (only for AL440)

*** Roll Over Protective Structure (ROPS) – meets requirements of SAE-J1040 and ISO 3471**

Options

High-speed travel
FOPS** skylight guard
Mechanical quick-attach system
Hydraulic quick-attach system
Backup alarm, automatic
Backup alarm, deactivatable
Rear working light
Sliding door window on right-hand side
Rotating beacon
Air conditioning
Air-cushioned seat with lumbar support
Height and tilt adjustable steering wheel
Electric refuelling pump
Coupler for hydraulic hand-held breaker
Open hydraulic return
Anti-theft device
Hose-rupture safety valves
Dunlop SPT9 tyres
Michelin XM27TL tyres
Continental MPT E-70 tyres
License plate illumination
Load hook integrated in quick-attach system
Bucket ride control
TÜV-approval for Germany
Biodegradable hydraulic oil (Panolin)

**** Falling Object Protective Structure (FOPS) – meets requirements of SAE-J1043 and ISO 3449, Level I**

Attachments

Crane jib
Earth bucket
Pallet forks
Front ripper
Loading bucket
Loading bucket with grapple
High-tip bucket
Light material bucket
Load hook (attachable on pallet forks)
Multi-purpose bucket
Quarry bucket
Side-dump bucket
Super-light material bucket

Worldwide Support

With the Bobcat AL275, AL350 and AL440, you get more than just exceptional articulated loaders. You also get the support of a worldwide network of Bobcat dealers offering industry-leading attachments, accessories and parts availability. Their factory-trained service technicians are equipped to handle all your parts and service requirements, including engine and hydrostatic/hydraulic components. Get all the details from your Bobcat dealer.

BOBCAT EUROPE
J. Huysmanslaan, 59
B - 1651 LOT Belgium
www.bobcat.com

An Ingersoll-Rand business

Specifications and design are subject to change without notice.

4470370-EN (09-2005)