BEB16E1-01

KOMATSU

SHOP MANUAL

FG10/15/18-20
FG15H/18H-20
FD10/15/18-20
FG20/25/30-16
FG20H/25H/-16
FG20N/25N/30N-16
FG35A-16
FD20/25/30-16
FD20H/25H/30H-16
FD20N/25N/30N-16
FD35A-16

KOMATSU FORKLIFT

PRECAUTIONS WHEN PERFORMING THE SERVICE WORK

Always pay attention to “Safety” before starting any work — this is important.
Never attempt any work where danger to yourself or to other persons.
Whenever work requiring safety precautions are described in this manual, a flag mark ⚠ inserted, always make double sure that safety measures are taken.
Other unmarked work, should always be performed after studying and using your common sense to prevent accidents.

DESCRIPTION OF THE SYMBOLS

The symbols described below are used in this manual for convenience and better understanding.

Symbol	Item	Description
⚠	**Safety**	Special safety precautions are needed to perform the work.
★	**Note**	Special technical precautions are needed to perform the work
kgm	**Tightening torque**	Fastening parts that require specified tightening force when assembling.
k g	**Weight**	Weight of parts or systems
	Coat	Places to be coated with adhesives, etc. when assembling

SECTION INDEX

00. FOREWORD

10. GENERAL AND SPECIFICATIONS

20. INSOECTION AND ADJUSTMENT

30. REMOVAL AND INSTALLATION

40. DISASSEMBLY AND ASSEMBLY

50. MAINTENANCE STANDARD

60. STRUCTURE AND FUNCTION

80. CRITERIA FOR PERIODICAL INSPECTION AND JUDGMENT

90. CONVERSION TABLE

10. GENERAL AND SPECIFICATIONS

SPECIFICATIONS 10-2
PERIODIC REPLACEMENT OF
CONSUMABLE PARTS 10-12
SAFETY ITEMS FOR MAINTENANCE 10-13
STANDARD TIGHTENING TORQUE
FOR BOLTS.....10-21
STANDARD TIGHTENING TORQUE
FOR PIPE JOINTS 10-22

SPECIFICATIONS

AX50 (1.0 - 1.8ton) Series

Characteristics	1.2	Model	Manufacturer's Designation				FG10T-20	FG10C-20	FD10T-20	FD10C-20
	1.3	Power Type	Electric, Diesel, Gasoline, LPG				Gasoline		Diesel	
	1.4	Operation Type					Sitting		Sitting	
	1.5	Rated Capacity	Rated Capacity		kg		1000		1000	
	1.6	Load Center	Rated Load Center		mm		500		500	
	1.6.1	Alternative Capacity	Capacity@600mm Load Center		kg		910		910	
	1.8	Load Distance	Front Axle Center to Fork Face		mm	L2	400		400	
	1.9	Wheelbase			mm	L3	1400		1400	
Weight	2.1	Service Weight			kg		2080	2095	2180	2195
	2.2	Axle Loading	Loaded	Front	kg		2725	2735	2760	2765
	2.2.1			Rear	kg		355	360	420	430
	2.3		Unloaded	Front	kg		1065	1075	1095	1105
	2.3.1			Rear	kg		1015	1020	1085	1090
Tyres	3.1	Tyre Type					Pneumatic		Pneumatic	
	3.2	Tyre Size	Front				6.50-10-10PR(I)		6.50-10-10PR(I)	
	3.3		Rear				5.00- 8- 8PR(I)		5.00-8-8PR(I)	
	3.5	Number of Wheel	Front/Rear (x=driven)				2*/2		2*/2	
	3.6	Tread, Front			mm	b4	890		890	
	3.7	Tread, Rear			mm	b3	895		895	
Dimensions	4.1	Tilting Angle	Forward/Backward		degree		6/10		6/10	
	4.2	Mast Height, Lowered	2-stage Mast		mm	h2	1995		1995	
	4.3	Std. Free Lift	2-stage Std. Mast, from Ground		mm		135		135	
	4.4	Std. Lift Height	2-stage Std. Mast, from Ground		mm	h1	3000		3000	
	4.5	Mast Height, Extended	2-stage Std. Mast		mm	h3	3955		3955	
	4.7	Height, Overhead Guard			mm	h4	2030		2030	
	4.19	Length, with Std. Forks			mm	L1	2965		2965	
	4.20	Length, to Fork Face			mm		2195		2195	
	4.21	Width, at Tyre	Single		mm	b1	1070		1070	
	4.22	Forks	Thickness x Width x Length		mm		31x100x770		31x100x770	
	4.23	Fork Carriage Class	ISO 2328, Type A/B/no				Class 2		Class 2	
	4.24	Width, Fork Carriage			mm		970		970	
	4.31	Ground Clearance	Under Mast		mm		120		120	
	4.32		at Center of Wheelbase		mm		130		130	
	4.33	Right Angle Stacking Aisle	with L1000 x W1200 pallet		mm		3315		3315	
	4.34		with L1200 x W800 pallet		mm		3515		3515	
	4.35	Turning Radius			mm	Wa	1915		1915	
Performance	5.1	Travel Speed (FWD)	Loaded, 1st/2nd		km/h		19.0	9.0/19.0	19.0	8.5/19.0
			Unloaded, 1st/2nd		km/h		19.0	9.0/19.0	19.5	8.5/19.5
	5.2	Lifting Speed	Loaded		mm/s		580		620	
			Unloaded		mm/s		640		670	
	5.3	Lowering Speed	Loaded		mm/s		500		500	
			Unloaded		mm/s		550		550	
	5.6	Max. Drawbar Pull	Loaded		KN		10	11	13	14
	5.8	Max. Gradeability	Loaded		%		34	38	49	41
	5.10	Service Brake	Operation/Control				Foot/Hydraulic		Foot/Hydraulic	
	5.11	Parking Brake	Operation/Control				Hand/Mechanical		Hand/Mechanical	
	5.12	Steering	Type				FHPS		FHPS	
	6.4	Battery	Voltage/ Capacity at 5-hour rating		V/ah		12/33		12/64	
I.C Engine	7.1	Maker Model					NISSAN K15		Komatsu 4D92E	
	7.2	Rated Output, SAE gross			KW		27@2500		35@2450	
	7.3	Rated RPM			min-1		2500		2450	
	7.3.1	Max. Torque, SAE gross			Nm@min-1		113@1600		142@1800	
	7.4	No. of Cylinder/Displacement			cm3		4-1486		4-2659	
Others	7.6	Fuel Tank Capacity			Ltr		40		40	
	8.2	Relief Pressure for Attachment			bar		172		172	
	8.7	Transmission					TORQFLOW	Manual	TORQFLOW	Manual

FG15T-20	FG15C-20	FD15T-20	FD15C-20	FG15HT-20	FG15HC-20	FG18T-20	FG18C-20	FD18T-20	FD18C-20	FG18HT-20	FG18HC-20
Gasoline		Diesel		Gasoline		Gasoline		Diesel		Gasoline	
Sitting		Sitting		Sitting		Sitting		Sitting		Sitting	
1500		1500		1500		1750		1750		1750	
500		500		500		500		500		500	
1360		1360		1360		1590		1590		1590	
405		405		405		405		405		405	
1400		1400		1400		1400		1400		1400	
2450	2465	2550	2565	2450	2465	2645	2660	2745	2760	2645	2660
3500	3510	3530	3540	3500	3510	3870	3880	3900	3910	3870	3880
450	455	520	525	450	455	525	530	595	600	525	530
1005	1015	1035	1045	1005	1015	960	970	990	1000	960	970
1445	1450	1515	1520	1445	1450	1685	1690	1755	1760	1685	1690
Pneumatic		Pneumatic		Pneumatic		Pneumatic		Pneumatic		Pneumatic	
6.50-10-10PR(I)		6.50-10-10PR(I)		6.50-10-10PR(I)		6.50-10-10PR(I)		6.50-10-10PR(I)		6.50-10-10PR(I)	
5.00- 8- 8PR(I)		5.00-8-8PR(I)		5.00- 8- 8PR(I)		5.00- 8- 8PR(I)		5.00-8-8PR(I)		5.00- 8- 8PR(I)	
2*/2		2*/2		2*/2		2*/2		2*/2		2*/2	
890		890		890		890		890		890	
895		895		895		895		895		895	
6/10		6/10		6/10		6/10		6/10		6/10	
1995		1995		1995		1995		1995		1995	
140		140		140		140		140		140	
3000		3000		3000		3000		3000		3000	
3955		3955		3955		3955		3955		3955	
2030		2030		2030		2030		2030		2030	
3160		3160		3160		3200		3200		3200	
2240		2240		2240		2280		2280		2280	
1070		1070		1070		1070		1070		1070	
35x100x920		35x100x920		35x100x920		35x100x920		35x100x920		35x100x920	
Class 2		Class 2		Class 2		Class 2		Class 2		Class 2	
970		970		970		970		970		970	
120		120		120		120		120		120	
130		130		130		130		130		130	
3360		3360		3360		3395		3395		3395	
3560		3560		3560		3595		3595		3595	
1955		1955		1955		1990		1990		1990	
18.5	8.5/18.5	18.5	8.5/19.0	18.5	8.5/18.5	18.5	8.5/18.5	18.5	8.5/18.5	18.5	8.5/18.5
19.0	9.0/19.0	19.0	8.5/19.5	19.0	9.0/19.0	19.0	9.0/19.0	19.0	8.5/19.0	19.0	9.0/19.0
570		620		590		570		620		590	
640		670		640		640		670		640	
500		500		500		500		500		500	
550		550		550		550		550		550	
10	11	13	14	15	14	10	11	13	14	15	14
26	27	33	31	37	35	25	24	29	28	33	32
Foot/Hydraulic		Foot/Hydraulic		Foot/Hydraulic		Foot/Hydraulic		Foot/Hydraulic		Foot/Hydraulic	
Hand/Mechanical		Hand/Mechanical		Hand/Mechanical		Hand/Mechanical		Hand/Mechanical		Hand/Mechanical	
FHPS		FHPS		FHPS		FHPS		FHPS		FHPS	
12/33		12/64		12/33		12/33		12/64		12/33	
NISSAN K15		Komatsu 4D92E		NISSAN K21		NISSAN K15		Komatsu 4D92E		NISSAN K21	
27@2500		35@2450		35@2450		27@2500		35@2450		35@2450	
2500		2450		2450		2500		2450		2450	
113@1600		142@1800		152@1600		113@1600		142@1800		152@1600	
4-1486		4-2659		4-2065		4-1486		4-2659		4-2065	
40		40		40		40		40		40	
172		172		172		172		172		172	
TORQFLOW	Manual	TORQFLOW	Manual	TORQFLOW	Manual	TORQFLOW	Manual	TORQFLOW	Manual	TORQFLOW	Manual

BX50 (2.0 - 2.5ton) Series

Characteristics	1.2	Model	Manufacturer's Designation				FG20T-16	FG20C-16	FD20T-16	FD20C-16
	1.3	Power Type	Electric, Diesel, Gasoline, LPG				Gasoline		Diesel	
	1.4	Operation Type					Sitting		Sitting	
	1.5	Rated Capacity	Rated Capacity		kg		2000		2000	
	1.6	Load Center	Rated Load Center		mm		500		500	
	1.6.1	Alternative Capacity	Capacity@600mm Load Center		kg		1810		1810	
	1.8	Load Distance	Front Axle Center to Fork Face		mm	L2	460		460	
	1.9	Wheelbase			mm	L3	1650		1650	
Weight	2.1	Service Weight			kg		3220	3230	3310	3330
	2.2	Axle Loading	Loaded	Front	kg		4670	4680	4700	4720
	2.2.1			Rear	kg		550	550	610	610
	2.3		Unloaded	Front	kg		1480	1480	1510	1520
	2.3.1			Rear	kg		1740	1750	1800	1810
Tyres	3.1	Tyre Type					Pneumatic		Pneumatic	
	3.2	Tyre Size	Front				7.00-12-12PR(I)		7.00-12-12PR(I)	
	3.3		Rear				6.00-09-10PR(I)		6.00-09-10PR(I)	
	3.5	Number of Wheel	Front/Rear (x=driven)				2*/2		2*/2	
	3.6	Tread, Front			mm	b4	965		965	
	3.7	Tread, Rear			mm	b3	960		960	
Dimensions	4.1	Tilting Angle	Forward/Backward		degree		6/12		6/12	
	4.2	Mast Height, Lowered	2-stage Mast		mm	h2	1995		1995	
	4.3	Std. Free Lift	2-stage Std. Mast, from Ground		mm		150		150	
	4.4	Std. Lift Height	2-stage Std. Mast, from Ground		mm	h1	3000		3000	
	4.5	Mast Height, Extended	2-stage Std. Mast		mm	h3	4050		4050	
	4.7	Height, Overhead Guard			mm	h4	2070		2070	
	4.19	Length, with Std. Forks			mm	L1	3450		3450	
	4.20	Length, to Fork Face			mm		2530		2530	
	4.21	Width, at Tyre	Single		mm	b1	1150		1150	
	4.22	Forks	Thickness x Width x Length		mm		36x122x920		36x122x920	
	4.23	Fork Carriage Class	ISO 2328, Type A/B/no				Class 2		Class 2	
	4.24	Width, Fork Carriage			mm		1020		1020	
	4.31	Ground Clearance	Under Mast		mm		115		115	
	4.32		at Center of Wheelbase		mm		160		160	
	4.33	Right Angle Stacking Aisle	with L1000 x W1200 pallet		mm		3650		3650	
	4.34		with L1200 x W800 pallet		mm		3850		3850	
	4.35	Turning Radius			mm	Wa	2190		2190	
Performance	5.1	Travel Speed (FWD)	Loaded, 1st/2nd		km/h		18.5	8.5/18.5	18.5	8.5/18.5
			Unloaded, 1st/2nd		km/h		19.0	9.0/19.0	19.0	8.5/19.0
	5.2	Lifting Speed	Loaded		mm/s		545		630	
			Unloaded		mm/s		600		685	
	5.3	Lowering Speed	Loaded		mm/s		450		450	
			Unloaded		mm/s		500		500	
	5.6	Max. Drawbar Pull	Loaded		KN		14	14	18	17
	5.8	Max. Gradeability	Loaded		%		28	27	36	34
	5.10	Service Brake	Operation/Control				Foot/Hydraulic		Foot/Hydraulic	
	5.11	Parking Brake	Operation/Control				Hand/Mechanical		Hand/Mechanical	
	5.12	Steering	Type				FHPS		FHPS	
	6.4	Battery	Voltage/ Capacity at 5-hour rating		V/ah		12/33		12/64	
I.C Engine	7.1	Maker Model					NISSAN K21		Komatsu 4D94LE	
	7.2	Rated Output, SAE gross			KW		35@2450		46@2450	
	7.3	Rated RPM			min-1		2450		2450	
	7.3.1	Max. Torque, SAE gross			Nm@min-1		152@1600		186@1800	
	7.4	No. of Cylinder/Displacement			cm3		4-2065		4-3052	
Others	7.6	Fuel Tank Capacity			Ltr		58		58	
	8.2	Relief Pressure for Attachment			bar		181		181	
	8.7	Transmission					TORQFLOW	Manual	TORQFLOW	Manual

FG20HT-16	FD20HT-16	FD20HC-16	FG25T-16	FG25C-16	FD25T-16	FD25C-16	FG25HT-16	FD25HT-16	FD25HC-16
Gasoline	Diesel		Gasoline		Diesel		Gasoline	Diesel	
Sitting	Sitting		Sitting		Sitting		Sitting	Sitting	
2000	2000		2500		2500		2500	2500	
500	500		500		500		500	500	
1810	1810		2270		2270		2270	2270	
460	460		465		465		465	465	
1650	1650		1650		1650		1650	1650	
3220	3310	3330	3590	3600	3680	3700	3590	3680	3700
4670	4700	4720	5420	5430	5460	5470	5420	5460	5470
550	610	610	670	670	720	730	670	720	730
1480	1510	1520	1430	1430	1460	1470	1430	1460	1470
1740	1800	1810	2160	2170	2220	2230	2160	2220	2230
Pneumatic	Pneumatic		Pneumatic		Pneumatic		Pneumatic	Pneumatic	
7.00-12-12PR(I)	7.00-12-12PR(I)		7.00-12-12PR(I)		7.00-12-12PR(I)		7.00-12-12PR(I)	7.00-12-12PR(I)	
6.00-09-10PR(I)	6.00-09-10PR(I)		6.00-09-10PR(I)		6.00-09-10PR(I)		6.00-09-10PR(I)	6.00-09-10PR(I)	
2*/2	2*/2		2*/2		2*/2		2*/2	2*/2	
965	965		965		965		965	965	
960	960		960		960		960	960	
6/12	6/12		6/12		6/12		6/12	6/12	
1995	1995		1995		1995		1995	1995	
150	150		155		155		155	155	
3000	3000		3000		3000		3000	3000	
4050	4050		4050		4050		4050	4050	
2070	2070		2070		2070		2070	2070	
3450	3450		3655		3655		3655	3655	
2530	2530		2585		2585		2585	2585	
1150	1150		1150		1150		1150	1150	
36x122x920	36x122x920		40x122x1070		40x122x1070		40x122x1070	40x122x1070	
Class 2	Class 2		Class 2		Class 2		Class 2	Class 2	
1020	1020		1020		1020		1020	1020	
115	115		115		115		115	115	
160	160		160		160		160	160	
3650	3650		3775		3775		3775	3775	
3850	3850		3905		3905		3905	3905	
2190	2190		2240		2240		2240	2240	
19.0	18.5	8.0/18.5	18.5	8.5/18.5	18.5	8.5/18.5	19.0	18.5	8.0/18.5
19.5	19.0	8.5/19.0	19.0	9.0/19.0	19.0	8.5/19.0	19.5	19.0	8.5/19.0
620	660		545		630		620	660	
670	710		600		685		670	710	
450	450		450		450		450	450	
500	500		500		500		500	500	
19	22	21	14	14	18	17	19	22	21
38	45	44	23	22	31	29	32	37	37
Foot/Hydraulic	Foot/Hydraulic		Foot/Hydraulic		Foot/Hydraulic		Foot/Hydraulic	Foot/Hydraulic	
Hand/Mechanical	Hand/Mechanical		Hand/Mechanical		Hand/Mechanical		Hand/Mechanical	Hand/Mechanical	
FHPS	FHPS		FHPS		FHPS		FHPS	FHPS	
12/33	12/64		12/33		12/64		12/33	12/64	
NISSAN K25	Komatsu 4D98E		NISSAN K21		Komatsu 4D94LE		NISSAN K25	Komatsu 4D98E	
43@2400	53@2400		35@2450		46@2450		43@2400	53@2400	
2400	2400		2450		2450		2400	2400	
186@1600	216@1700		152@1600		186@1800		186@1600	216@1700	
4-2488	4-3318		4-2065		4-3052		4-2488	4-3318	
58	58		58		58		58	58	
181	181		181		181		181	181	
TORQFLOW	TORQFLOW	Manual	TORQFLOW	Manual	TORQFLOW	Manual	TORQFLOW	TORQFLOW	Manual

BX50 (3.0 - 3.5ton) Series

Characteristics	1.2	Model	Manufacturer's Designation				FG30T-16	FG30C-16	FD30T-16	FD30C-16
	1.3	Power Type	Electric, Diesel, Gasoline, LPG				Gasoline		Diesel	
	1.4	Operation Type					Sitting		Sitting	
	1.5	Rated Capacity	Rated Capacity		kg		3000		3000	
	1.6	Load Center	Rated Load Center		mm		500		500	
	1.6.1	Alternative Capacity	Capacity@600mm Load Center		kg		2720		2720	
	1.8	Load Distance	Front Axle Center to Fork Face		mm	L2	490		490	
	1.9	Wheelbase			mm	L3	1700		1700	
Weight	2.1	Service Weight			kg		4210	4230	4310	4320
	2.2	Axle Loading	Loaded	Front	kg		6390	6400	6430	6440
	2.2.1			Rear	kg		820	830	880	880
	2.3		Unloaded	Front	kg		1600	1610	1640	1650
	2.3.1			Rear	kg		2610	2620	2670	2670
Tyres	3.1	Tyre Type					Pneumatic		Pneumatic	
	3.2	Tyre Size	Front				28x9-15-12PR(I)		28x9-15-12PR(I)	
	3.3		Rear				6.50-10-10PR(I)		6.50-10-10PR(I)	
	3.5	Number of Wheel	Front/Rear (x=driven)				2*/2		2*/2	
	3.6	Tread, Front			mm	b4	1005		1005	
	3.7	Tread, Rear			mm	b3	965		965	
Dimensions	4.1	Tilting Angle	Forward/Backward		degree		6/12		6/12	
	4.2	Mast Height, Lowered	2-stage Mast		mm	h2	2070		2070	
	4.3	Std. Free Lift	2-stage Std. Mast, from Ground		mm		160		160	
	4.4	Std. Lift Height	2-stage Std. Mast, from Ground		mm	h1	3000		3000	
	4.5	Mast Height, Extended	2-stage Std. Mast		mm	h3	4275		4275	
	4.7	Height, Overhead Guard			mm	h4	2090		2090	
	4.19	Length, with Std. Forks			mm	L1	3775		3775	
	4.20	Length, to Fork Face			mm		2705		2705	
	4.21	Width, at Tyre	Single		mm	b1	1235		1235	
	4.22	Forks	Thickness x Width x Length		mm		44x122x1070		44x122x1070	
	4.23	Fork Carriage Class	ISO 2328, Type A/B/no				Class 3		Class 3	
	4.24	Width, Fork Carriage			mm		1060		1060	
	4.31	Ground Clearance	Under Mast		mm		135		135	
	4.32		at Center of Wheelbase		mm		185		185	
	4.33	Right Angle Stacking Aisle	with L1000 x W1200 pallet		mm		3930		3930	
	4.34		with L1200 x W800 pallet		mm		4060		4060	
	4.35	Turning Radius			mm	Wa	2370		2370	
Performance	5.1	Travel Speed (FWD)	Loaded, 1st/2nd		km/h		18.5	8.5/18.5	19.0	8.5/18.5
			Unloaded, 1st/2nd		km/h		19.5	9.0/19.5	19.5	9.0/19.0
	5.2	Lifting Speed	Loaded		mm/s		450		520	
			Unloaded		mm/s		500		555	
	5.3	Lowering Speed	Loaded		mm/s		400		420	
			Unloaded		mm/s		500		500	
	5.6	Max. Drawbar Pull	Loaded		KN		18	18	18	17
	5.8	Max. Gradeability	Loaded		%		26	25	25	23
	5.10	Service Brake	Operation/Control				Foot/Hydraulic		Foot/Hydraulic	
	5.11	Parking Brake	Operation/Control				Hand/Mechanical		Hand/Mechanical	
	5.12	Steering	Type				FHPS		FHPS	
	6.4	Battery	Voltage/ Capacity at 5-hour rating		V/ah		12/33		12/64	
I.C Engine	7.1	Maker Model					NISSAN K25		Komatsu 4D94LE	
	7.2	Rated Output, SAE gross			KW		43@2400		46@2450	
	7.3	Rated RPM			min-1		2400		2450	
	7.3.1	Max. Torque, SAE gross			Nm@min-1		186@1600		186@1800	
	7.4	No. of Cylinder/Displacement			cm3		4-2488		4-3052	
Others	7.6	Fuel Tank Capacity			Ltr		58		58	
	8.2	Relief Pressure for Attachment			bar		181		181	
	8.7	Transmission					TORQFLOW	Manual	TORQFLOW	Manual

FD30HT-16	FD30HC-16	FG35A-16	FD35A-16
Diesel		Gasoline	Diesel
Sitting		Sitting	Sitting
3000		3500	3500
500		500	500
2720		3180	3180
490		505	505
1700		1700	1700
4310	4320	4910	5010
6430	6440	7440	7480
880	880	970	1030
1640	1650	1820	1860
2670	2670	3090	3150
Pneumatic		Pneumatic	Pneumatic
28x9-15-12PR(I)		250-15-16PR(I)	250-15-16PR(I)
6.50x10-10PR(I)		6.50x10-12PR(I)	6.50x10-12PR(I)
2*/2		2*/2	2*/2
1005		1060	1060
965		965	965
6/12		6/12	6/12
2070		2100	2100
160		145	145
3000		3000	3000
4275		4280	4280
2090		2105	2105
3775		3865	3865
2705		2795	2795
1235		1290	1290
44x122x1070		50x150x1070	50x150x1070
Class 3		Class 3	Class 3
1060		1060	1060
135		135	135
185		185	185
3930		4055	4055
4060		4185	4185
2370		2480	2480
18.5	8.0/18.5	18.0	18.0
19.0	8.5/19.0	19.0	19.0
550		410	450
595		450	490
420		400	420
500		400	400
21	21	16	20
30	30	20	26
Foot/Hydraulic		Foot/Hydraulic	Foot/Hydraulic
Hand/Mechanical		Hand/Mechanical	Hand/Mechanical
FHPS		FHPS	FHPS
12/64		12/33	12/64
Komatsu 4D98E		NISSAN K25	Komatsu 4D98E
53@2400		43@2400	53@2400
2400		2400	2400
216@1700		186@1600	216@1700
4-3318		4-2488	4-3318
58		58	58
181		181	181
TORQFLOW	Manual	TORQFLOW	TORQFLOW

109 Series

Characteristics	1.2	Model	Manufacturer's Designation				FG20NT-16	FD20NT-16
	1.3	Power Type	Electric, Diesel, Gasoline, LPG				Gasoline	Diesel
	1.4	Operation Type					Sitting	Sitting
	1.5	Rated Capacity	Rated Capacity		kg		2000	2000
	1.6	Load Center	Rated Load Center		mm		500	500
	1.6.1	Alternative Capacity	Capacity@600mm Load Center		kg		1810	1810
	1.8	Load Distance	Front Axle Center to Fork Face		mm	L2	430	430
	1.9	Wheelbase			mm	L3	1400	1400
Weight	2.1	Service Weight			kg		3230	3330
	2.2	Axle Loading	Loaded	Front	kg		4600	4630
	2.2.1			Rear	kg		630	700
	2.3		Unloaded	Front	kg		1250	1280
	2.3.1			Rear	kg		1980	2050
Tyres	3.1	Tyre Type					Pneumatic	Pneumatic
	3.2	Tyre Size	Front				22 1/4x7 1/2-15/5.50	22 1/4x7 1/2-15/5.50
	3.3		Rear				17 3/4x6 1/2 -10/5.00	17 3/4x6 1/2 -10/5.00
	3.5	Number of Wheel	Front/Rear (x=driven)				2*/2	2*/2
	3.6	Tread, Front			mm	b4	900	900
	3.7	Tread, Rear			mm	b3	885	885
Dimensions	4.1	Tilting Angle	Forward/Backward		degree		6/10	6/10
	4.2	Mast Height, Lowered	2-stage Mast		mm	h2	1995	1995
	4.3	Std. Free Lift	2-stage Std. Mast, from Ground		mm		150	150
	4.4	Std. Lift Height	2-stage Std. Mast, from Ground		mm	h1	3000	3000
	4.5	Mast Height, Extended	2-stage Std. Mast		mm	h3	4050	4050
	4.7	Height, Overhead Guard			mm	h4	2025	2025
	4.19	Length, with Std. Forks			mm	L1	3260	3260
	4.20	Length, to Fork Face			mm		2340	2340
	4.21	Width, at Tyre	Single		mm	b1	1090	1090
	4.22	Forks	Thickness x Width x Length		mm		36x122x920	36x122x920
	4.23	Fork Carriage Class	ISO 2328, Type A/B/no				Class 2	Class 2
	4.24	Width, Fork Carriage			mm		960	960
	4.31	Ground Clearance	Under Mast		mm		105	105
	4.32		at Center of Wheelbase		mm		115	115
	4.33	Right Angle Stacking Aisle	with L1000 x W1200 pallet		mm		3410	3410
	4.34		with L1200 x W800 pallet		mm		3610	3610
	4.35	Turning Radius			mm	Wa	1980	1980
Performance	5.1	Travel Speed (FWD)	Loaded, 1st/2nd		km/h		17.0	17.0
			Unloaded, 1st/2nd		km/h		16.5	16.5
	5.2	Lifting Speed	Loaded		mm/s		545	630
			Unloaded		mm/s		600	685
	5.3	Lowering Speed	Loaded		mm/s		450	450
			Unloaded		mm/s		500	500
	5.6	Max. Drawbar Pull	Loaded		KN		14	17
	5.8	Max. Gradeability	Loaded		%		27	34
	5.10	Service Brake	Operation/Control				Foot/Hydraulic	Foot/Hydraulic
	5.11	Parking Brake	Operation/Control				Hand/Mechanical	Hand/Mechanical
	5.12	Steering	Type				FHPS	FHPS
	6.4	Battery	Voltage/ Capacity at 5-hour rating		V/ah		12/33	12/64
I.C Engine	7.1	Maker Model					NISSAN K21	Komatsu 4D94LE
	7.2	Rated Output, SAE gross			KW		35@2450	46@2450
	7.3	Rated RPM			min-1		2450	2450
	7.3.1	Max. Torque, SAE gross			Nm@min-1		152@1600	186@1800
	7.4	No. of Cylinder/Displacement			cm3		4-2065	4-3052
Others	7.6	Fuel Tank Capacity			Ltr		40	40
	8.2	Relief Pressure for Attachment			bar		181	181
	8.7	Transmission					TORQFLOW	TORQFLOW

FG25NT-16	FD25NT-16	FG30NT-16	FD30NT-16
Gasoline	Diesel	Gasoline	Diesel
Sitting	Sitting	Sitting	Sitting
2500	2500	3000	3000
500	500	500	500
2270	2270	2720	2720
435	435	440	440
1400	1400	1450	1450
3630	3730	4070	4170
5350	5380	6250	6240
780	850	820	930
1140	1170	1260	1250
2490	2560	2810	2920
Pneumatic	Pneumatic	Pneumatic	Pneumatic
22 1/4x7 1/2-15/5.50	22 1/4x7 1/2-15/5.50	22 1/4x7 1/2-15/5.50	22 1/4x7 1/2-15/5.50
17 3/4x6 1/2 -10/5.00	17 3/4x6 1/2 -10/5.00	17 3/4x6 1/2 -10/5.00	17 3/4x6 1/2 -10/5.00
2*/2	2*/2	2*/2	2*/2
900	900	900	900
885	885	885	885
6/10	6/10	6/10	6/10
1995	1995	2070	2070
155	155	160	160
3000	3000	3000	3000
4050	4050	4275	4275
2025	2025	2025	2025
3475	3475	3535	3535
2405	2405	2465	2465
1090	1090	1090	1090
40x122x1070	40x122x1070	44x122x1070	44x122x1070
Class 2	Class 2	Class 3	Class 3
960	960	940	940
105	105	105	105
115	115	115	115
3555	3555	3620	3620
3685	3685	3750	3750
2050	2050	2110	2110
16.5	16.5	16.0	16.0
16.5	16.5	16.0	16.0
545	630	515	520
600	685	550	555
450	450	420	420
500	500	500	500
14	17	16	16
23	29	24	24
Foot/Hydraulic	Foot/Hydraulic	Foot/Hydraulic	Foot/Hydraulic
Hand/Mechanical	Hand/Mechanical	Hand/Mechanical	Hand/Mechanical
FHPS	FHPS	FHPS	FHPS
12/33	12/64	12/33	12/64
NISSAN K21	Komatsu 4D94LE	NISSAN K25	Komatsu 4D94LE
35@2450	46@2450	43@2400	46@2450
2450	2450	2400	2450
152@1600	186@1800	186@1600	186@1800
4-2065	4-3052	4-2488	4-3052
40	40	40	40
181	181	181	181
TORQFLOW	TORQFLOW	TORQFLOW	TORQFLOW

Outside view

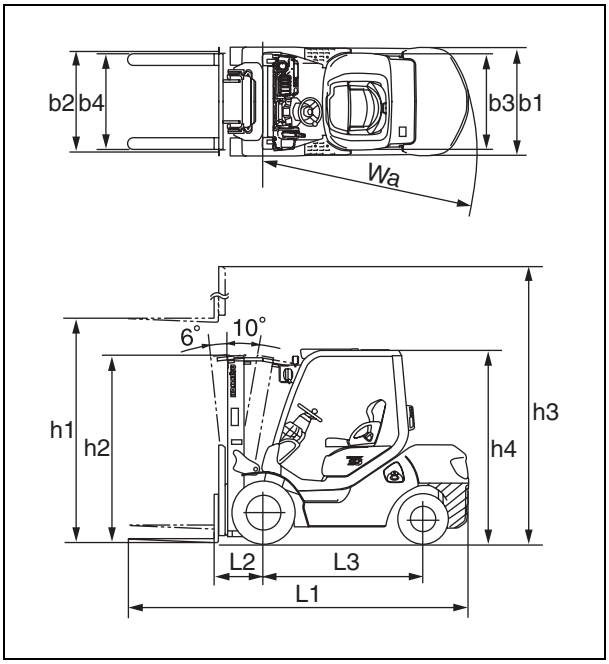

Load Capacity chart

1.0 ton

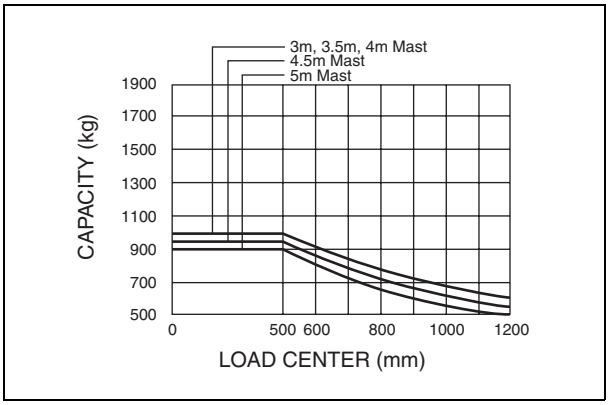

1.5 ton

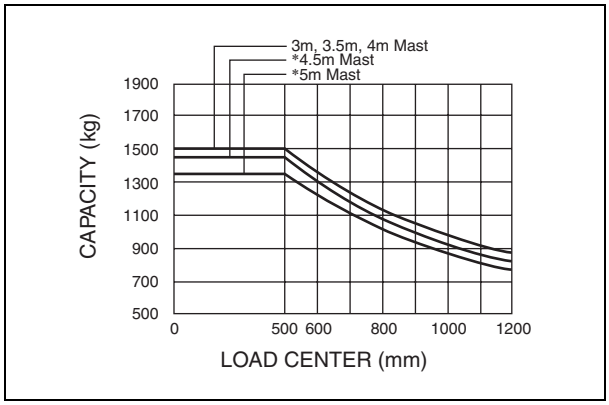

1.8 ton

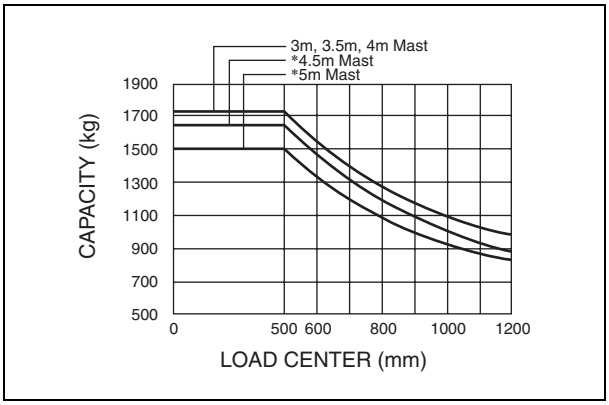

2.0 ton

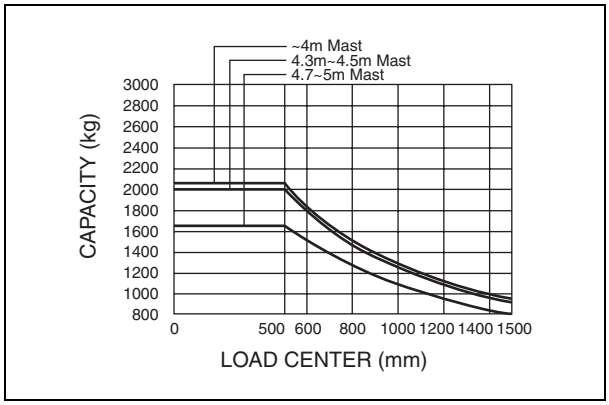

2.5 ton

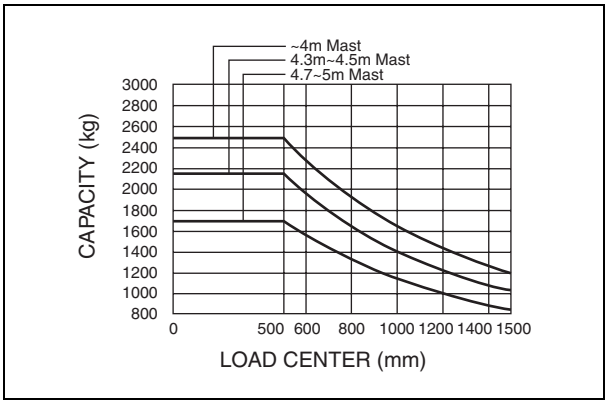

3.0 ton

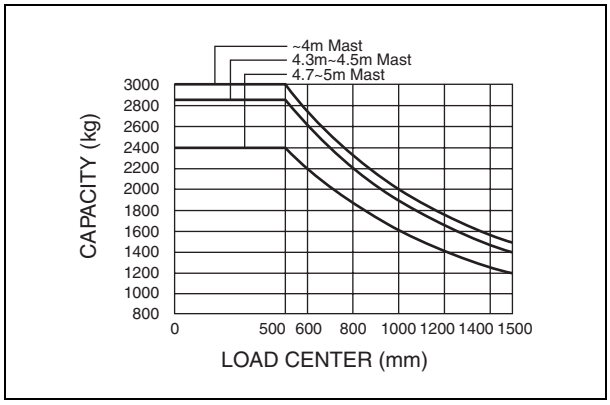

3.5 ton

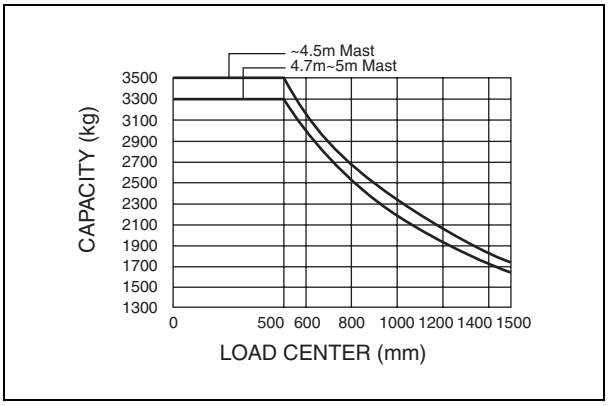

PERIODIC REPLACEMENT OF CONSUMABLE PARTS

For operation safety, never fail to perform periodic maintenance or make periodic replacement of the consumable parts listed in the following.
These parts may deteriorate in time and are susceptible to wear. It is difficult to estimate the degree of wear at time of periodic maintenance; therefore, even if no apparent wear is found, always replace with new parts within the prescribed period of replacement (or earlier if trouble is found).
Note that periodic replacement has nothing to do with guarantee service.

No.	Part name	Period of replacement
1	Master cylinder and wheel cylinder cups, dust seals	Every 1 year
2	Rubber parts of brake booster	Every 1 year
3	Brake hose or tube	Every 2 years
4	Reservior tank and tube	Every 2 years
5	Power steering hose	Every 2 years
6	Stop lamp switch (Oil pressure type)	Every 2 years
7	Fuel hose	Every 2 years
8	Rubber parts of power steering	Every 2 years
9	Lift chain	Every 3 years
10	Hose of load handing	Every 2 years

SAFETY ITEMS FOR MAINTENANCE

FOR SAFETY OPERATION

⚠ USE QUALIFIED PERSONNEL FOR INSPECTION AND MAINTENANCE

- Only persons authorized by the owner or operator of the equipment and having proper certification (local or national) may carry out inspection, maintenance and repairs of the lift truck.
  If inspection, maintenance, or repair work is carried out incorrectly, it is very dangerous.

⚠ MAINTENANCE LOCATION

- When carrying out inspection and maintenance, use a level, dry, dust–free area.
- If the work is carried out inside a building, make sure that there is ample ventilation.

⚠ PRECAUTIONS FOR INSPECTION AND MAINTENANCE

- To be prepared in the event of a fire, have a fire extinguisher nearby and make sure that you know how to use it.
- Before carrying out inspection, lower the forks to the ground and stop the machine.
- Do not run the engine unless it is necessary.
- Place the directional lever, speed lever, and work equipment control levers in neutral.

⚠ PRECAUTIONS WHEN CARRYING OUT INSPECTION AND MAINTENANCE

- Wipe off any oil or grease. Immediately wipe up any oil that has leaked.
  If the lift truck is dirty, it becomes difficult or impossible to find cracks or other problems. Always clean the lift truck before starting inspection.
- Do not smoke or allow any flame to exist under any circumstances.
  Do not use any cloth which is soaked in fuel, oil, or grease. There is danger that it may catch fire.
- Wear suitable clothes for the job.
- Use suitable safety and protective equipment (hard hat, safety boots, safety glasses, gloves) for the job.
- When working on top of the lift truck, be careful not to fall.
- Do not put your feet under the forks.
- When opening or closing the floor plate or engine hood, be careful not to get your hands or body caught.
- When carrying out inspection with the forks raised, insert a stand under the inner mast to prevent the forks and mast from dropping.
- When carrying out job with another worker, decide who is the leader and carry out the job in accordance with instructions from that person.
- After repairing, make sure that the trouble has been corrected by performing a trial run.
- During the trial run, start/operate the lift truck carefully because it is possible that the trouble has not been fully corrected or that defective parts have not been removed.

USE SUITABLE TOOLS

- Always use tools that are suited for inspection and maintenance.
  It is extremely dangerous to use broken tools or tools designed for another purpose.

REPLACE SAFETY CRITICAL PARTS PERIODICALLY

- Even if no abnormality is found, always replace safety critical parts periodically.
  As time passes, these parts deteriorate and may cause fire of failure in the work equipment system.
- However, if these parts show any abnormality before the replacement interval has passed, they should be repaired or replaced immediately.

PRECAUTIONS WITH HIGH TEMPERATURE COOLANT

- Immediately after using the lift truck, the engine coolant is at high temperature and high pressure. Do not remove the radiator cap under these conditions.
  Hot water may spurt out and cause burns.
- When removing the radiator cap, turn it slowly to release the internal pressure.
- When checking the coolant level, stop the engine and wait for the engine and radiator to cool down before checking. For lift trucks equipped with a subtank or reservoir, check the level in the subtank.
- When adding water on lift trucks equipped with a sub-tank, add the water to the subtank.

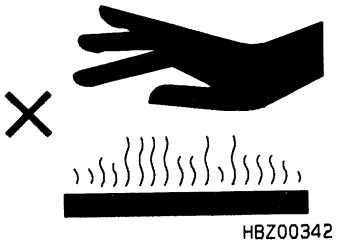

⚠ PRECAUTIONS WITH HIGH PRESSURE, HIGH TEMPERATURE OIL

- Immediately after using the lift truck, the oil is at high temperature. Do not drain the oil or replace the filter when the oil is hot. Hot oil may spurt out and cause burns.
- When carrying out inspection and maintenance, wait for the oil temperature to go down, and carry out the operation in the order given in this manual.
- Do not forget that the work equipment circuits are always under pressure. Do not add oil, drain oil, or carry out maintenance or inspection before completely releasing the internal pressure.
- If oil is leaking under high pressure from small holes, it is dangerous if the jet of high–pressure oil hits your skin or eyes. Always wear safety glasses and thick gloves, and use a piece of cardboard or a sheet of plywood to check for oil leakage.
- Release the internal pressure before checking the accumulator piping.
- If you are hit by a jet of high pressure oil, consult a doctor immediately.

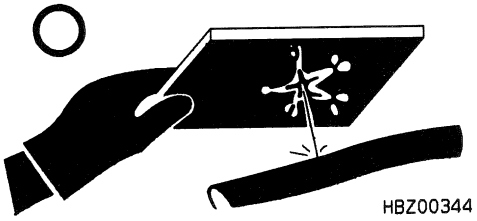

⚠ ROTATING FAN AND BELT

- It is extremely dangerous if you or any tool touches or gets caught in the fan or fan belt when the fan is rotating. Never touch the fan when it is rotating.
- Always stop the engine before inspecting rotating parts.
- When inspecting the areas around rotating parts, do not allow anything to come close which may get caught.

⚠ BE CAREFUL NOT TO GET CAUGHT OR FALL

- Never put your hands or feet into the mast structure. There is danger that you will get caught in moving parts and be serious injured.
- Do not use the mast as a ladder. If you slip, there is danger that you will fall.

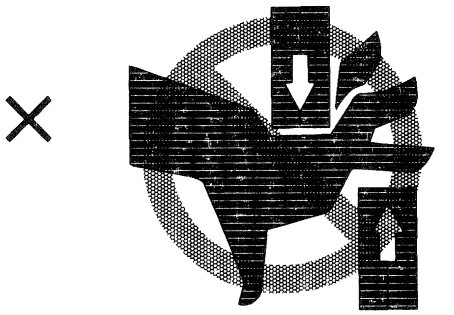

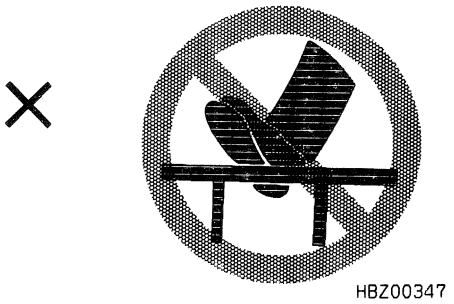

⚠ CHECKING AND INFLATING TIRES

- If the tire inflation pressure is low, it will affect truck stability. However, do not inflate the tires immediately. The inflation pressure may have gone down because of damage to the rim. If the rim is damaged or cracked and the tires are inflated, there is danger that the rim will break when the tire is under high pressure, and this may cause personal injury or death.For safety, when checking tire pressure, place your body in front of the tread face of the tire. Do not check from the side face of the tire.
- Suitable qualifications are needed for tire inflation work. Always have the work carried out by properly qualified personnel.
- The tire inflation pressure on a forklift truck is several times higher than the pressure on an automobile. When the tires are being inflated, there is danger that dirt or dust may be thrown up by the compressed air and enter your eyes, so always wear safety glasses.

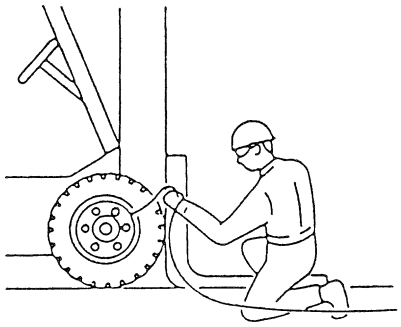

⚠ HANDLING TIRES

Disassembly and assembly of tires should be carried out by tire dealer.
The tire inflation pressure is extremely high, so caution is needed when handling tires.

- The wheel is fitted with mounting nuts. It also has rim nuts and bolts used to join the rim halves. When removing the tire from the lift truck, do not loosen the rim nuts and bolts. The tire is under high pressure, and there is a significant risk that the rim nuts and bolts may fly off. Relief tire inflation pressure before removing.
- When the tires have been replaced, carry out a test drive and check again for any loose mounting nuts. If the tightening torque is low, tighten to the specified torque.

⚠ JACKING UP LIFT TRUCK (when checking or replacing tires)

- Do not go under the forklift truck when it is jacked up.
- Check the following before jacking up the lift truck.
  1) Check that there is no one on the lift truck.
  2) Check that there is no load on the forks.
- When jacking up, stop when the tires come off the ground surface. Put blocks under both sides of the frame to prevent the lift truck from coming down.
- Put blocks under any tires contacting the ground to prevent the lift truck from moving.

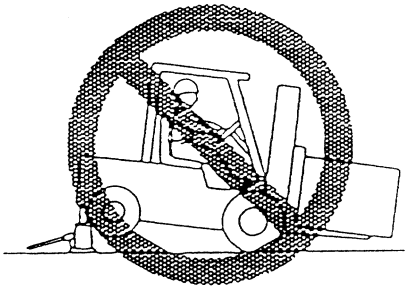

⚠ LIFTING LIFT TRUCK (when checking tires)

- Lift truck slinging work should be carried out by a qualified person who has completed a course in correct lifting methods.
- Fit wire ropes to the specified lifting points.
- When lifting the lift truck, check that the wire ropes have ample strength and are not damaged.
- Block the tires contacting the ground to prevent the lift truck from moving.
- Insert blocks to prevent the truck from coming down.
- Do not go under the lift truck during the lifting operation.
- If the specified lifting point is the counterweight, check that the counterweight mounting bolts are tightened to the specified torque before carrying out the lifting operation. check also that there is no damage to the lifting portion on the counterweight.

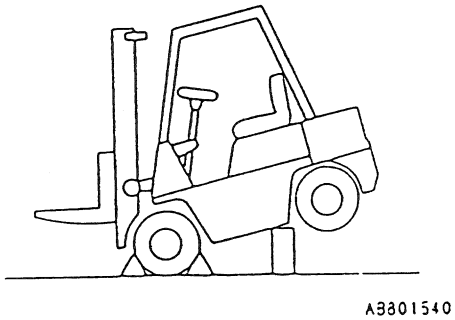

BATTERY HAZARD PREVENTION

- Battery electrolyte contains sulfuric acid and can quickly burn the skin and eat holes in clothing. If you spill electrolyte on yourself, immediately flush the area with a large quantity of water.
- Battery electrolyte can cause blindness if splashed into the eyes. If electrolyte gets into your eyes, flush them immediately with large quantities of water and consult a doctor at once.
- If you accidentally drink electrolyte, drink a large quantity of water, or milk mixed with beaten eggwhite or vegetable oil. Call a doctor or poison prevention center immediately.
- When working with batteries, ALWAYS wear safety glasses or goggles.
- Batteries generate hydrogen gas. Hydrogen gas is highly EXPLOSIVE, and is easily ignited with a small spark or flame. Do not smoke or create any spark near the battery.
- Before working with batteries, stop the engine and turn the starting switch to the OFF position.
- When removing the battery, remove the cable from the negative ⊖ terminal first. When installing the battery, install the cable to the positive ⊕ terminal first.
- Avoid short–circuiting the battery terminals through accidental contact with tools or other metal objects across the terminals.Tighten the battery terminals securely. Loose terminals can generate sparks and lead to an explosion.
- When removing or installing the battery, confirm which is the positive ⊕ terminal and negative ⊖ terminal. Be careful not to connect the cables to the opposite terminals.
- Tighten the battery caps securely.
- When cleaning the battery, leave the battery caps tightened.

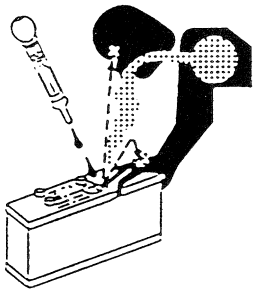

A0055090

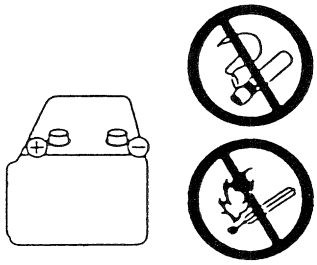

A0055100

DO NOT PUT METAL OBJECTS ON TOP OF BATTERY

- Never place any metal objects on top of the battery. There is danger that they will cause a short circuit and start a fire.

⚠ PRECAUTIONS WHEN CHARGING

When the battery is charged, hydrogen gas is generated and the battery is heated by the chemical change. To prevent the danger of gas explosion, always do as follows.

- Carry out the charging operation in a well–ventilated place.
- Do not smoke or allow any flame.
- Start the charging operation when the temperature of the battery electrolyte is below 35°C (95 °F). (If the temperature goes above 50°C (122°F) during the charging operation, wait for it to go down below 35°C (95°F) before starting charging operation again.)
- When using a battery charger to charge the battery, take the battery caps off.

⚠ STARTING WITH BOOSTER CABLES

- ALWAYS wear safety glasses or goggles when starting the lift truck with booster cables.
- When starting using the battery of another lift truck, do not allow the two lift trucks to touch. For details of the order of operations when using a booster cable.
- Stop the engine before connecting the cables.
- e extremely careful not to let the cables get caught in the fan or fan belt.
- Connect the batteries in parallel: positive to positive and negative to negative. Never connect positive to negative.

⚠ DO NOT PUSH START

- Do not push the lift truck to start the engine. There is danger that the lift truck may suddenly start and operate unexpectedly.

⚠ HANDLING BRAKE FLUID

It is dangerous if the brakes do not work because in this condition, the lift truck cannot be stopped. Always do the following.

- Check the level of the brake fluid periodically.
- Always use the specified brake fluid.
- Check that the breather of the brake fluid reserve tank is not clogged.
- Be careful not to let dirt or dust get into the brake fluid reserve tank.

HANDLING ANTIFREEZE

- Antifreeze can be a flammable. Keep away from flame when handling.
- Antifreeze is poisonous, so do not drink it. If you drink it by mistake, drink large amounts of water, vomit it out, and get medical attention immediately. Follow safety precautions on container.

WASTE MATERIALS

- Obey appropriate laws and regulations when disposing of harmful objects such as oil, fuel, solvent, filters, and batteries.

STANDARD TIGHTENING TORQUE FOR BOLTS

For unspecified bolts and nuts, use the torques specified in this list.
Select a proper torque corresponding to the width across flats (b) of bolts and nuts.
When replacing bolts and nuts, always use genuine Komatsu Forklift parts the same size as the previous ones.

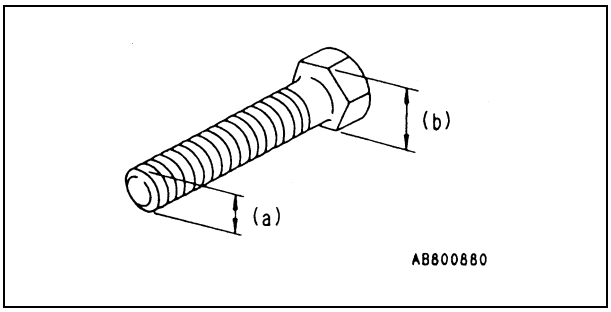

Thread diameter of bolt (mm) (a)	Width across flat (mm) (b)	Tightenng torque		
		Nm	Kgm	lbft
6	10	13.2 ± 1.4	1.35 ± 0.15	9.73 ± 1.03
8	13	31.4 ± 2.9	3.2 ± 0.3	23.2 ± 2.1
10	17	65.7 ± 6.8	6.7 ± 0.7	48.5 ± 5.0
12	19	112 ± 9.8	11.5 ± 1.0	82.6 ± 7.2
14	22	177 ± 19	18.0 ± 2.0	131 ± 14
16	24	279 ± 29	28.5 ± 3	206 ± 21
18	27	383 ± 39	39 ± 3	282 ± 29
20	30	549 ± 58	56 ± 6	405 ± 43
22	32	745 ± 78	76 ± 8	549 ± 58
24	36	927 ± 98	94.5 ± 10	684 ± 72
27	41	1320 ± 140	135 ± 15	973 ± 100
30	46	1720 ± 190	175 ± 20	1270 ± 140
33	50	2210 ± 240	225 ± 25	1630 ± 180
36	55	2750 ± 290	280 ± 30	2030 ± 210
39	60	3280 ± 340	335 ± 35	2420 ± 250

STANDARD TIGHTENING TORQUE FOR PIPE JOINTS

Elbows, nipples and unions

Width across flats B (mm)	22	30	36
Width D (mm)	19	22	30
Tightening torqueNm {kgm}	29.4–39.2 {3–4}	78.5–103 {8–10.5}	117.7–161.8 {12–16.5}
Port size (inch)	3/4–16UNF	7/8–14UNF	–
Tightening torqueNm {kgm}	68.6–73.6 {7–7.5}	78.5–83.3 {8–8.5}	–

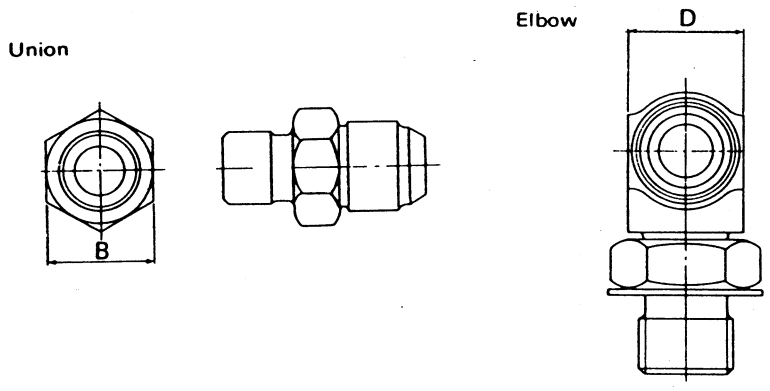

High–pressure rubber hoses, pipes and sleeve nuts

Width across flats B (mm)	19	24	27	32	36
Bore A (mm)	14	18	22	24	30
Tightening torque Nm {kgm}	19.6–29.4 {2–3}	23.5–68.6 {3–7}	58.8–98.1 {6–10}	108–167 {11–17}	147–206 {15–21}

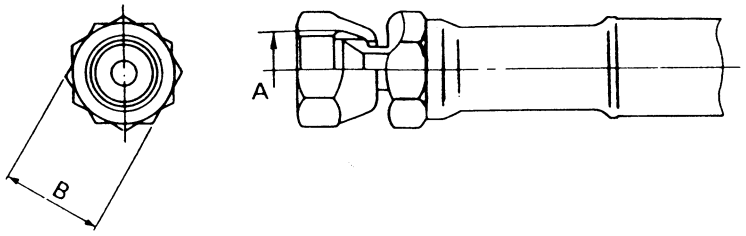

20. TESTING AND ADJUSTING

SERVICE DATA 20-2
GASOLINE ENGINE 20-10
DIESEL ENGINE 20-12
AIR CLEANER 20-14
ADJUSTMENT OF IGNITION TIMING 20-16
ADJUSTMENT OF FUEL INJECTION TIMING 20-17
MEASUREMENT OF COMPRESSION 20-18
ADJUSTMENT OF VALVE CLEARANCE 20-19
TIGHTENING TORQUE OF CYLINDER HEAD MOUNTING BOLTS ..20-20
REPLACEMENT OF CLUTCH DISC 20-21
TORQFLOW TRANSMISSION CASE 20-23
DIFFERENTIAL CASE 20-24
HYDRAULIC TANK 20-25
MEASUREMENT OF HYDRAULIC DRIFT OF
LIFT AND TILT CYLINDERS 20-26
ADJUSTMENT OF CLUTCH AND BRAKE PEDAL 20-27
ADJUSTMENT OF ACCELERATOR PEDAL 20-29
ADJUSTMENT OF PARKING BRAKE LEVER 20-31
WHEEL BRAKE 20-32
BLEEDING AIR 20-33
DESIGNATED FUEL AND LUBRICATING OIL 20-36

SERVICE DATA

Gasoline-Powered Forklift Truck (1.0 to 1.75 ton)

Device		Check Item		Unit	FG10/14/15/18	FG15H/18H
Engine	Engine	Make/Model		–	Nissan K15	Nissan K21
		Idling Speed		rpm	750 – 900	750 – 900
		Max. Speed		rpm	2,840 – 3,040	2,840 – 3,040
		Compression (Engine Speed: 300 rpm)		MPa {kgf/cm^2}	1.28 {13.0}	1.23 {12.5}
	Lubrication and Cooling System	Fan Belt Tension (Finger Pressure: 98 N {10 kgf})		mm	11 – 13	11 – 13
	Intake and Exhaust System	Valve Clearance	Intake	mm	0.38	0.38
			Exhaust	mm	0.38	0.38
	Electrical System	Distributor Point Gap		mm	0.35 – 0.45	0.35 – 0.45
		Spark Plug Gap		mm	0.8 – 0.9	0.8 – 0.9
		Spark Plug Type		–	FR2A-D (NGK)	FR2A-D (NGK)
		Ignition Timing (Engine Speed: 650 rpm)		BTDC degrees	4	4
		Ignition Order			1-3-4-2	1-3-4-2
Drive system	Tire	Air pressure	Front	kPa {kgf/cm^2}	690 {7.0}	690 {7.0}
			Rear	kPa {kgf/cm^2}	790 {8.0}	790 {8.0}
	Hub Nut	Tightening Torque	Front	Nm {kgm}	157 – 245 {16 – 25}	157 – 245 {16 – 25}
			Rear	Nm {kgm}	83 – 147 {8.5 – 15}	83 – 147 {8.5 – 15}
	Rim Bolt	Tightening Torque	Front	Nm {kgm}	88 – 123 {9.0 – 12.5}	88 – 123 {9.0 – 12.5}
			Rear	Nm {kgm}	59 – 74 {6.0 – 7.5}	59 – 74 {6.0 – 7.5}

Device		Check Item	Unit	FG10/14/15/18-18	FG15H/18H-18
Steering and Brake System	Steering Wheel	Play	mm	30 – 60	30 – 60
	Clutch Pedal	Play	mm	0 – 4	0 – 4
	Inching Pedal	Play	mm	0 – 4	0 – 4
		Interconnected Stroke	mm	35 – 41	35 – 41
	Brake Pedal	Play	mm	0 – 4	0 – 4
		Pedal Height When Depressed	mm	76 – 96	76 – 96
	Brake	Parking Brake Operating Force	N {kgf}	More than 147 – 196 {15 – 20}	More than 147 – 196 {15 – 20}
		Back Plate Mounting Bolt Tightening Torque	Nm {kgm}	176 – 196 {18 - 20}	176 – 196 {18 - 20}
Loading System	Fork	Thickness of Fork Base	mm	1-ton truck: more than 26 1.5-ton truck: more than 30 1.75 ton-truck: more than 33	
	Chain	Length of 17 Links	mm	Less than 275.5	Less than 275.5
	Hydraulic System	Relief Pressure	MPa {kgf/cm^2}	17.2 {175}	17.2 {175}

Gasoline-Powered Forklift Truck (2.0 to 3.5 ton)

Device		Check Item		Unit	FG20/25	FG20H/25H	FG20N/25N	FG30/30N/35A
Engine	Engine	Make/Model		–	Nissan K21	Nissan K25	Nissan K21	Nissan K25
		Idling Speed		rpm	750 – 900	750 – 900	750 – 900	750 – 900
		Max. Speed		rpm	2,840 – 3,040	2,720 – 2,920	2,840 – 3,040	2,860 – 3,060
		Compression (Engine Speed: 300 rpm)		MPa {kgf/cm^2}	1.23 {12.5}	1.27 {13.0}	1.23 {12.5}	1.27 {13.0}
	Lubrication and Cooling System	Fan Belt Tension (Finger Pressure: 98 N {10 kgf})		mm	11 – 13	11 – 13	11 – 13	11 – 13
	Intake and Exhaust System	Valve Clearance	Intake	mm	0.38	0.38	0.38	0.38
			Exhaust	mm	0.38	0.38	0.38	0.38
	Electrical System	Distributor Point Gap		mm	0.35 – 0.45	0.35 – 0.45	0.35 – 0.45	0.35 – 0.45
		Spark Plug Gap		mm	0.8 – 0.9	0.8 – 0.9	0.8 – 0.9	0.8 – 0.9
		Spark Plug Type		–	FR2A-D	FR2A-D	FR2A-D	FR2A-D
		Ignition Timing (Engine Speed: 650 rpm)		BTDC degrees	2	0	2	0
		Ignition Order			1-3-4-2	1-3-4-2	1-3-4-2	1-3-4-2
Drive system	Tire	Air pressure	Front	kPa {kgf/cm^2}	690 {7.0}	690 {7.0}	–	3 ton: 690 {7.0} 3.5 ton: 850 {8.5}
			Rear	kPa {kgf/cm^2}	690 {7.0}	690 {7.0}	–	3 ton: 690 {7.0} 3.5 ton: 890 {9.0}
	Hub Nut	Tightening Torque	Front	Nm {kgm}	294 – 490 {30 – 50}	294 – 490 {30 – 50}	294 – 490 {30 – 50}	294 – 490 {30 – 50}
			Rear	Nm {kgm}	157 – 245 {16 – 25}	157 – 245 {16 – 25}	157 – 245 {16 – 25}	157 – 245 {16 – 25}
	Rim Bolt	Tightening Torque	Front	Nm {kgm}	196 – 294 {20 – 130} (Excl. 2.75 ton and 3 ton forklift trucks)			
			Rear	Nm {kgm}	88 – 123 {9 – 12.5}	88 – 123 {9 – 12.5}	–	88 – 123 {9 – 12.5}

Device		Check Item	Unit	FG20/25	FG20H/25H	FG20N/25N	FG30/30N/35A
Steering and Brake System	Steering Wheel	Play	mm	30 – 60	30 – 60	30 – 60	30 – 60
	Clutch Pedal	Play	mm	0 – 4	0 – 4	–	0 – 4
	Inching Pedal	Play	mm	0 – 4	0 – 4	0 – 4	0 – 4
		Interconnected Stroke	mm	35 – 41	35 – 41	35 – 41	3 ton: 35 – 41 3.5 ton: 40 – 46
	Brake Pedal	Play	mm	0 – 4	0 – 4	0 – 4	0 – 4
		Pedal Height When Depressed	mm	62 – 82	62 – 82	62 – 82	62 – 82
	Brake	Parking Brake Operating Force	N {kgf}	147 – 196 {15 – 20} (*1)	147 – 196 {15 – 20} (*1)	147 – 196 {15 – 20} (*1)	147 – 196 {15 – 20} (*1)
		Back Plate Mounting Bolt Tightening Torque	Nm {kgm}	176 – 196 {18 – 20}	176 – 196 {18 – 20}	176 – 196 {18 – 20}	176 – 196 {18 – 20}
Loading System	Fork	Thickness of Fork Base	mm	2 ton truck: more than 32.5 2.5 ton truck: more than 36 3 ton truck: more than 39.5			
	Chain	Length of 17 Links	mm	2 - 2.5 ton truck: less than 330 3 ton truck: less than 550			
	Hydraulic System	Relief Pressure	MPa {kgf/cm^2}	18 {185}	18 {185}	18 {185}	18 {185}

Notes

*1: Apply 245 – 294 N (25 – 30 kgf) for FG35A and forklift trucks equipped with power brake.

Diesel-Powered Forklift Truck (1.0 – 1.75 ton)

Device		Check Items		Unitþ	FD10/15/18
Engine	Engine	Make/Model		–	Komatsu 4D92E
		Idling Speed		rpm	750 – 800
		Max. Speed		rpm	2,650 – 2,700
		Compression		MPa {kgf/cm^2}	2.94 {30}/250
	Lubrication and Cooling System	Tension of Fan Belt (Finger Pressure: 98N {10kgf}		mm	10 – 15
	Fuel System	Ignition Timing		BTDC degrees	ATDC4
		Ignition Order		–	1-3-4-2
		Ignition Pressure		MPa {kgf/cm^2}	12.3 – 13.3 {125 – 135}
	Intake and Exhaust System	Valve Clearance	Intake	mm	0.2
			Exhaust	mm	0.2
Drive system	Tires	Air Pressure	Front	kPa {kgf/cm^2}	690 {7.0}
			Rear	kPa {kgf/cm^2}	790 {8.0}
	Hub Nut	Tightening Torque	Front	Nm {kgm}	157 – 245 {16 – 25}
			Rear	Nm {kgm}	83 – 147 {8.5 – 15}
	Rim Bolt	Tightening Torque	Front	Nm {kgm}	88 – 123 {9.0 – 12.5}
			Rear	Nm {kgm}	59 – 74 {6.0 – 7.5}

Devices		Inspection Items	Unit	FD10/15/18
Steering and Brake System	Steering Wheel	Play	mm	30 – 60
	Clutch Pedal	Play	mm	0 – 4
	Inching Pedal	Play	mm	0 – 4
		Interconnected Stroke	mm	35 – 41
	Brake Pedal	Play	mm	0 – 4
		Depressed Pedal Height	mm	76 – 96
	Brake	Parking Brake Operating Force	N {kgf}	147 – 196 {15 – 20}
		Back Plate Fixing Bolt Tightening Torque	Nm {kgm}	176 – 196 {18 – 20}
Loading System	Fork	Thickness at Fork Base	mm	More than 26 for FD10, more than 30 for FD14 and FD15, more than 33 for FD33
	Chain	Length of 17 Links	mm	Less than 275.5
	Hydraulic System	Relief Pressure	MPa {kgf/cm^2}	17.2 {175}

Diesel-Powered Forklift Truck (2.0 – 3.5 ton)

Device		Check Items		Unitþ	FD20/25/30	FD20H/25H/ 30H/35A	FD20N/25N/ 30N
Engine	Engine	Make/Model		–	Komatsu 4D94LE	Komatsu 4D98E	Komatsu 4D94LE
		Idling Speed		rpm	785 – 835	750 – 800	785 – 835
		Max. Speed		rpm	2,650 – 2,700	2,650 – 2,700	2,650 – 2,700
		Compression		MPa {kgf/cm^2}	2.94 {30}	2.94 {30}	2.94 {30}
	Lubrication and Cooling System	Tension of Fan Belt (Finger Pressure: 98N {10kgf}		mm	10 – 15	10 – 15	10 – 15
	Fuel System	Ignition Timing		ATDC degrees	4	6	4
		Ignition Order		–	1-3-4-2	1-3-4-2	1-3-4-2
		Ignition Pressure		MPa {kgf/cm^2}	11.8 {120}	11.8 {120}	11.8 {120}
	Intake and Exhaust System	Valve Clearance	Intake	mm	0.2	0.2	0.2
			Exhaust	mm	0.2	0.2	0.2
Drive system	Tires	Air Pressure	Front	kPa {kgf/cm^2}	690 {7.0}	2 – 3 ton: 690 {7.0} 3.5 ton: 850 {8.5}	–
			Rear	kPa {kgf/cm^2}	690 {7.0}	2 – 3 ton: 690 {7.0} 3.5 ton: 890 {9.0}	–
	Hub Nut	Tightening Torque	Front	Nm {kgm}	294 – 490 {30 – 50}	294 – 490 {30 – 50}	294 – 490 {30 – 50}
			Rear	Nm {kgm}	196 – 245 {20 – 25}	196 – 245 {20 – 25}	196 – 245 {20 – 25}
	Rim Bolt	Tightening Torque	Front	Nm {kgm}	196 – 294 {20 – 30} (Excluding 3-ton trucks)		–
			Rear	Nm {kgm}	88 – 123 {9 – 12.5}	88 – 123 {9 – 12.5}	–

Devices		Inspection Items	Unit	FD20/25/30	FD20H/25H/ 30H/35A	FD20N/25N/ 30N
Steering and Brake System	Steering Wheel	Play	mm	30 – 60	30 – 60	30 – 60
	Clutch Pedal	Play	mm	0 – 4	0 – 4	–
	Inching Pedal	Play	mm	0 – 4	0 – 4	0 – 4
		Interconnected Stroke	mm	35 – 41	35 – 41	35 – 41
	Brake Pedal	Play	mm	0 – 4	0 – 4	0 – 4
		Depressed Pedal Height	mm	62 – 82	62 – 82	62 – 82
	Brake	Parking Brake Operating Force	N {kgf}	147 – 196 {15 – 20} (*1)	147 – 196 {15 – 20} (*1)	147 – 196 {15 – 20} (*1)
		Back Plate Fixing Bolt Tightening Torque	Nm {kgm}	176 – 196 {18 – 20}	176 – 196 {18 – 20}	176 – 196 {18 – 20}
Loading System	Fork	Thickness at Fork Base	mm	More than 32.5 for 2-ton trucks, more than 36 for 2.5 ton trucks, more than 39.5 for 3-ton trucks		
	Chain	Length of 17 Links	mm	Less than 330 for 2 - 2.5 ton trucks, less than 550 for 3-ton trucks		
	Hydraulic System	Relief Pressure	MPa {kgf/cm^2}	18 {185}	18 {185}	18 {185}

Notes

*1: Apply 245 – 294 N (25 – 30 kgf) for FD35A and forklift trucks equipped with power brake.

GASOLINE ENGINE

WARNING

Before starting maintenance of the engine, stop the engine and wait until cooling down completely.

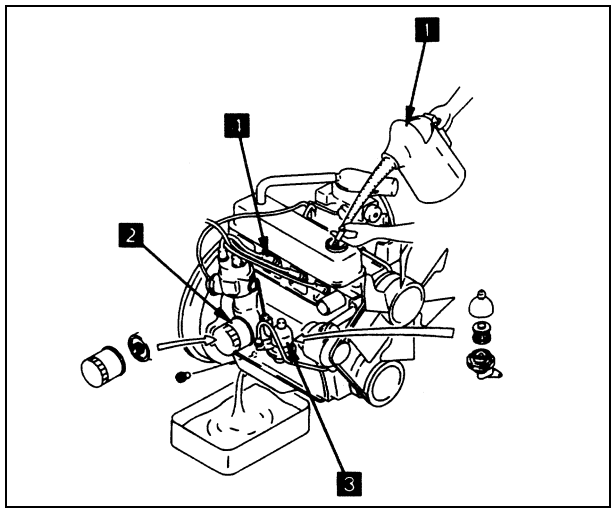

1. CHANGE OF ENGINE OIL

1) Removing the drain plug, drain the oil and tighten the plug again after draining.
2) Fill the engine oil up to the specified level.
3) Check the engine oil level with the oil level gauge.

Refill Engine Oil Level

K15 Engine	3.8 ℓ
K21 Engine	3.8 ℓ
K25 Engine	3.8 ℓ

2. REPLACEMENT OF ENGINE OIL FILTER

1) Remove the cartridge with the filter wrench.
2) Clean the filter mounting up and apply the engine oil to the thread as well as the seal of the new cartridge before installation.

IMPORTANT

After installing the cartridge, start the engine and check to make sure that there is no oil leakage from the filter mounting surface.

3. REPLACEMENT OF FUEL FILTER

1) Loosen the nut to remove the cover and take the filter out.
2) Clean the dirt at the bottom and drain the water.
3) Replace with a new filter.

IMPORTANT

- If any damage is found on the gasket of the cover, replace it with a new one.
- After replacement, check the hose fitting area for no fuel leakage.

4. INSPECTION OF SPAK PLUG

1) Remove the spark plug with the special plug wrench.
2) Clean the carbon up stuck on the plug head and the surroundings.
3) Measure the plug gap **A** as shown on the illustration on the right with the plug gap gauge.
   Plug gap **A**: 0.7 to 0.8 mm
   ① Good
   ② No good
   ③ No good

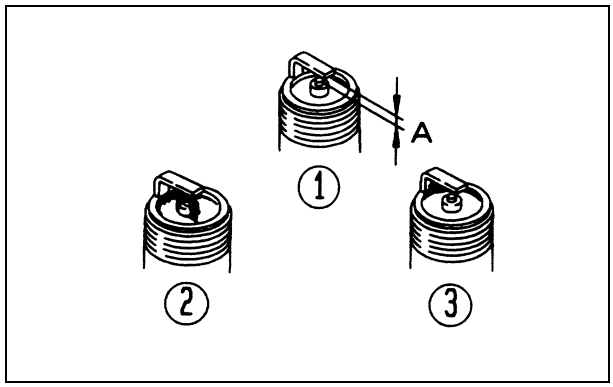

Maker and Model Name of Spark Plug

NGK	FR24-D, BP4ES, BPR4ES

DIESEL ENGINE

4D92E, 4D94E and 4D98E ENGINE

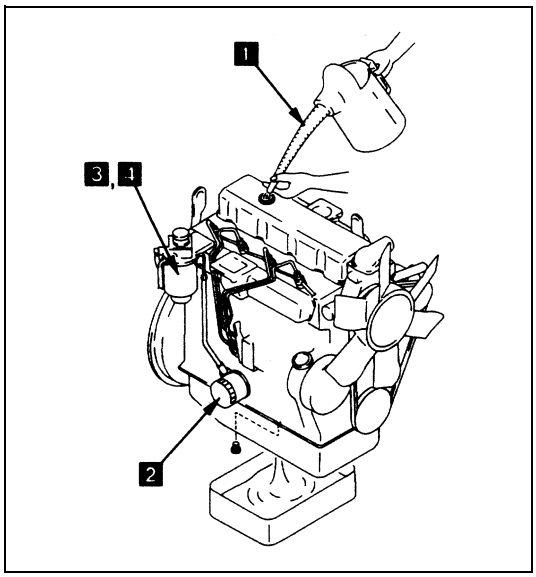

1. CHANGE OF ENGINE OIL

1) Drain the engine oil removing the drain plug and tighten it again.
2) Remove the oil level gauge.
3) Refill the engine oil up to the specified level. Be careful not to let it overflow.
4) Check the oil level with the engine oil level gauge.

Refill Engine Oil Level

4D92E Engine	7.5 ℓ
4D94LE Engine	7.5 ℓ
4D98E Engine	7.5 ℓ

2. REPLACEMENT OF ENGINE OIL FILTER

1) Remove the cartridge with the filter wrench.
2) Clean the filter mounting and apply the engine oil on the thread as well as the seal of the new cartridge before installation.

★ After installation of the cartridge, start the engine and check the filter-mounting surface for no oil leakage.

3. DRAINING OF WATER FROM FUEL FILTER

1) Loosen the combination sensor plug (**1**) and drain the water as well as sediment accumulated at the bottom.

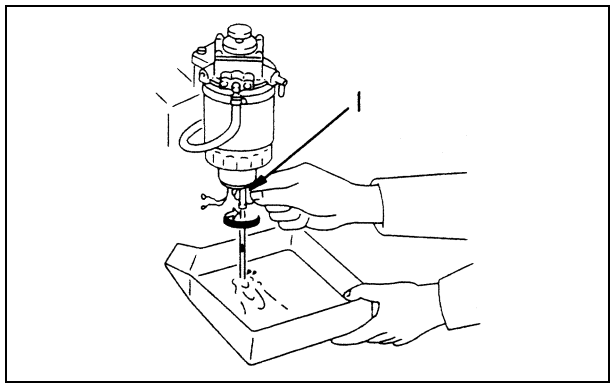

IMPORTANT

- **Prepare a container to catch the drained water possibly mixed with the fuel.**
- **Always make sure to wipe up spilled fuel if any.**

4. REPLACEMENT OF FUEL FILTER

1) Remove the combination sensor plug (**4**) at the bottom of the cartridge.
2) Remove the cartridge (**3**) with the filter wrench.
3) Install the combination sensor plug to the new cartridge (**3**).
4) Fill the new cartridge with the fuel and apply the thin layer of engine oil before installation.
5) Loosen the plug (**2**) and pump the knob (**1**) up and down until no more bubbles come out with the fuel.
6) Tighten the plug (**2**).

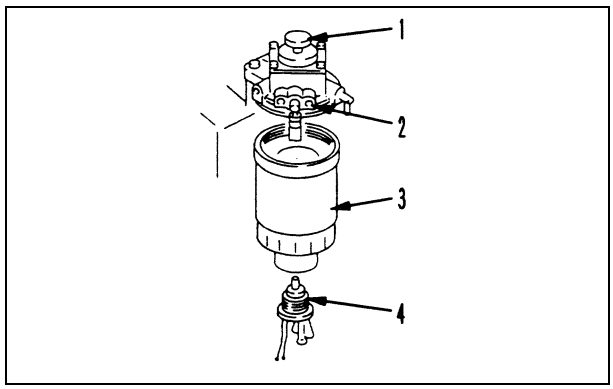

As for draining the water from the fuel filter and bleeding the air after replacement of the cartridge, the fuel may come out mixed with draining water and bleeding air. Always make sure to prepare the container for receiving those matters and wipe up spilled fuel if any, because it may be in danger to cause fire if fuel sticks here and there.

AIR CLEANER (1.0 – 1.75 TON)

WARNING

- Neither cleaning of the air cleaner nor replacement of the element is allowed while the engine is in motion.
- Always put the safety glasses on to protect your eyes when using the compressed air for cleaning the element upÅD

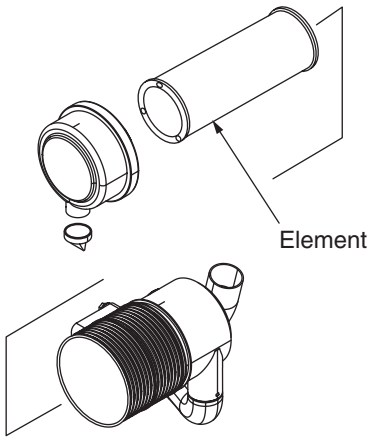

[Single Element Type]

IMPORTANT

- **If any grease or carbon is found stuck on the element, clean it up with a special cleaner according to the instruction for the air cleaner.**
- **In case of sever working conditions or environments, clean or replace the element earlier than regular maintenance.**

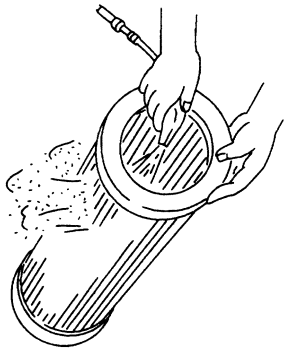

CLEANING OF ELEMENT

1. Remove the element and blow the dry compressed air (0.69 MPa {7 kgf/cm^2}) from inside to outside of the element for cleaning the whole element.

2. Put the cleaned element back to the air cleaner.

INSPECTION

Visually check the element for damage.

REPLACEMENT OF ELEMENT

1. Remove the element from the air cleaner.

2. Cover the air connector with clean cloth or tape.

3. Clean the interior of the air cleaner and remove the cover from the air cleaner.

4. Put a new element into the air cleaner.

AIR CLEANER (2 TON)

WARNING

- Neither cleaning of the air cleaner nor replacement of the element is allowed while the engine is in motion.
- Always put the safety glasses on to protect your eyes when using the compressed air for cleaning the element up.

IMPORTANT

- **If any grease or carbon is found stuck on the element, clean it up with a special cleaner according to the instruction for the air cleaner.**
- **Never remove the inner element. [FD20 (H) – FD30 (H)]**
- **In case of sever working conditions or environments, clean or replace the element earlier than regular maintenance.**

CLEANING OF ELEMENT

1. Remove the element and blow the dry compressed air (0.69 MPa {7 kgf/cm^2}) from inside to outside of the element for cleaning the whole element.
2. Put the cleaned element back to the air cleaner.

INSPECTION

Visually check the element for damage.

REPLACEMENT OF ELEMENT

1. Remove the element from the air cleaner.
2. Remove the inner element.
3. Cover the air connector with clean cloth or tape.
4. Clean the interior of the air cleaner and remove the cover from the air cleaner.
5. Put a new element into the air cleaner.

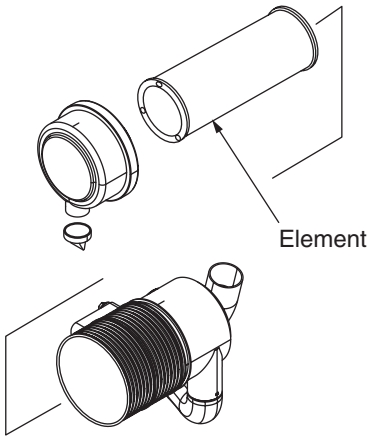

[Single Element Type]

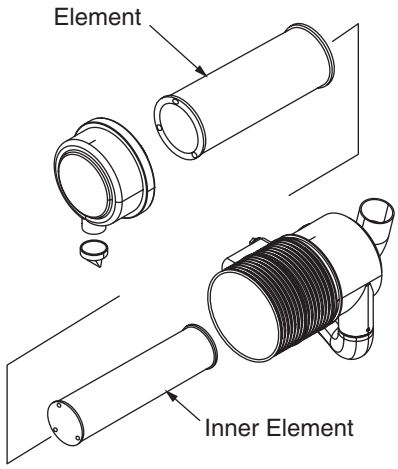

[Double Element Type]

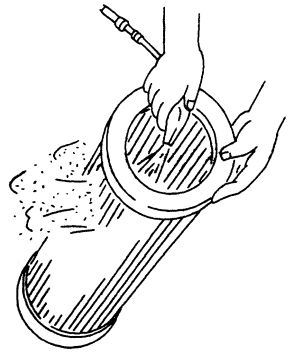

ADJUSTMENT OF IGNITION TIMING

GASOLINE ENGINE

1. Connect the timing advance tester (**1**) as shown in the diagram on the right.

2. Turn the power switch on and adjust the timing position of the advance adjustment knob (**2**).

3. Start the engine and run at the specified idling speed.

4. Glow the timing light (**3**) and check to make sure that the indicator and the timing mark stamped on the crankshaft pulley and flywheel are correctly aligned.

5. If the timing is wrong, turn the distributor (**4**) to the right or the left for further adjustment.

6. Check that ignition timing advances quickly when the engine is revved up.

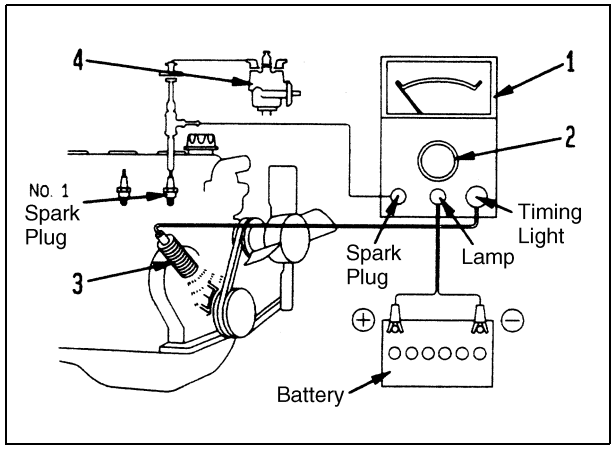

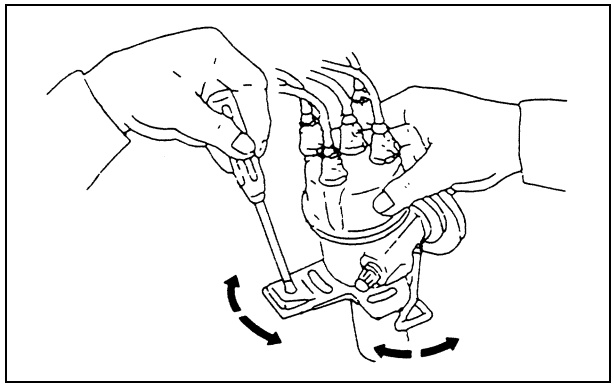

ADJUSTMENT OF FUEL INJECTION TIMING

DIESEL ENGINE (4D92E, 4D94LE and 4D98E)

INSPECTION AND ADJUSTMENT OF FUEL INJECTION TIMING MARK

WHEN DISASSEMBLING AND ASSEMBLING

1. Match the injection pump with the **A** mark.
2. Match the top mark **B** with the ATDC 5 degrees.
3. Make sure that the plunger lift is in 1 mm.
4. If the plunger lift is not in 1 mm, adjust the angle of the injection pump mounting.

INSPECTION

Implement the above mentioned items **2**, **3** and **4** for inspection.

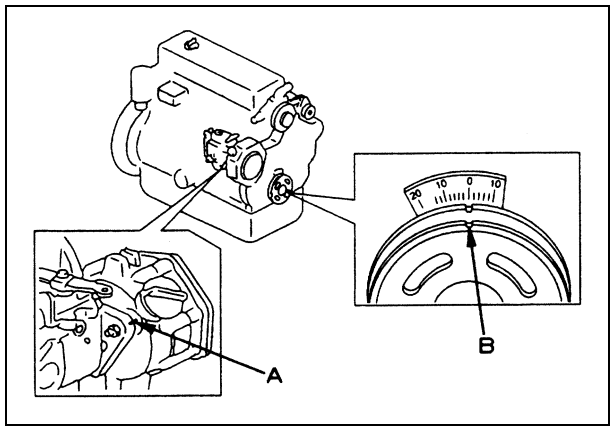

MEASUREMENT OF COMPRESSION

1. Warm up the engine to get the coolant temperature at 75 – 85 °C.

2. Stop the engine and remove all the spark plugs on gasoline engines or the nozzle holders on diesel engines as well as the air cleaner.

3. Disconnect the coil cord from the ignition coil on the gasoline engine. Set the fuel control lever to the non-injection position or disconnect the wiring of the fuel cut solenoid on diesel engines.

4. Fix the adaptor to the nozzle holder mounting of the cylinder that is to be checked and tighten to the specified torque on diesel engines.

5. Install the compression gauge to the cylinder to be checked.

6. For pneumatic governor, floor the accelerator pedal and crank the engine with the starter motor to get the maximum reading of the gauge.
   - ★ Take a measurement more than twice on each engine to avoid measurement errors and average the values.
   - ★ Discharge battery may not give sufficient revolutions. Use fully charged battery.

Gasoline Engine

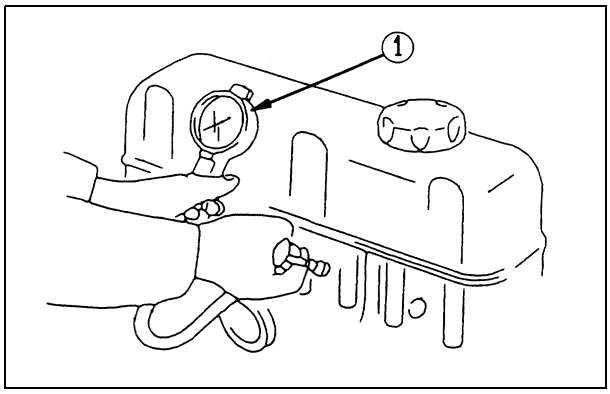

Diesel Engine

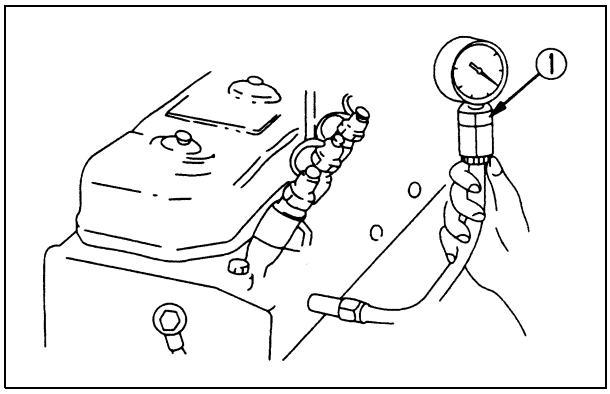

CAUSES FOR INSUFFICIENT COMPRESSION

1. Poor adjustment of valve clearance
2. Pressure leakage from valve seat
3. Seize of valve stems
4. Defective or broken valve spring
5. Pressure leakage from cylinder head gasket
6. Sticking or breakage of piston rings
7. Wear of piston rings or cylinders

ADJUSTMENT OF VALVE CLEARANCE

1. Remove the cylinder head cover.

2. Turn the crankshaft to match the top mark **A** of the crank pulley (**1**) and the pointer (**2**). Check to make sure that the compression upper dead center is attained with the No.1 cylinder and the No.4 cylinder.

★ Upper dead center of the piston can be checked under the state that both of intake and exhaust valves are closed, which means the cylinder that both the locker arms are being in free state is at the compression upper dead center.

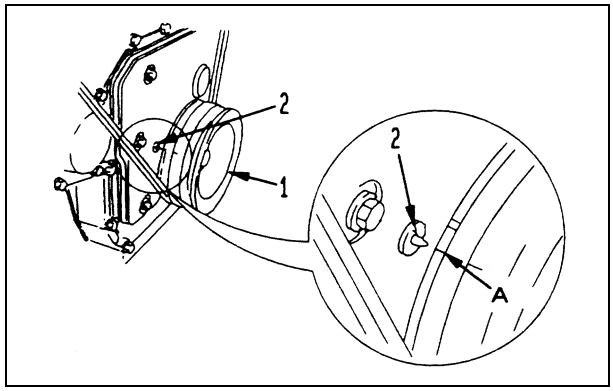

3. Adjust the clearance beginning with the cylinder at the compression upper dead center.

★ When the No.1 cylinder is at the compression top dead center, adjust the valves marked with ● for clearance listed on the table and give a turn to the crankshaft in the positive direction. Then, adjust the remaining valves marked with ○ for clearance.

★ When the No.4 cylinder is at the compression top dead center, adjust the valves marked with ○ for clearance and give a turn to the crankshaft in the positive direction. Then, adjust the remaining valves marked with ● for clearance.

Engine with ignition sequence of 1-2-4-3

Cylinder No.	1		2		3		4	
Exhaust valve	●		○		●		○	
Intake valve		●		●		○		○

Engine with ignition sequence of 1-3-4-2

Cylinder No.	1		2		3		4	
Exhaust valve	●		●		○		○	
Intake valve		●		○		●		○

4. Loosen the locknut (**3**) of the adjusting screw (**4**) and insert the specified thickness gauge ② between the valve stem (**6**) and the locker arm (**5**) to allow the gauge to move smoothly and adjust the gap. Then, tighten the locknut to fix the adjustment screw.

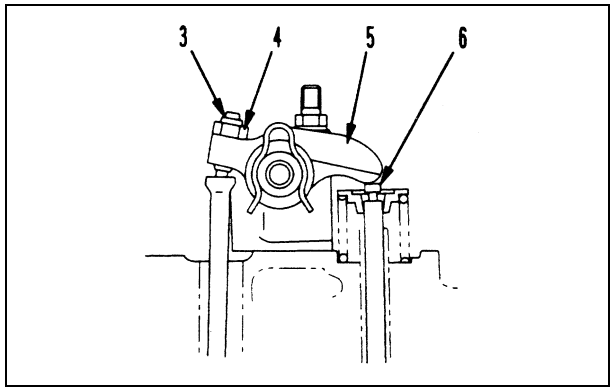

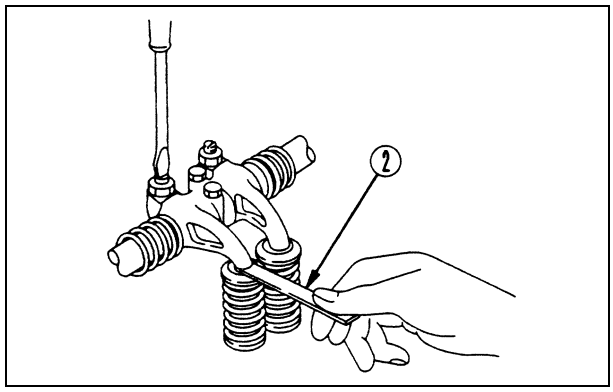

TIGHTENING TORQUE OF CYLINDER HEAD MOUNTING BOLTS

K15/K21/K25 ENGINE

1. Put the steel plate side of the cylinder head gasket on the cylinder block side. Then, set it on top of the cylinder block.

2. Set the cylinder head in position, apply the engine oil to the cylinder bolts. Then, tighten in the order shown in the diagram on the right (① through ⑩) to the specified tightening torque as follows:

kgm Cylinder Head Bolt:

1) 29.4 Nm {3.0 kgm} } Tighten temporarily
2) 78.5 Nm {8.0 kgm} } Tighten temporarily
3) 0 Nm {0 kgm} Loosen
4) 29.4 Nm {3.0 kgm} } Tighten again
5) 73.5 – 83.4 Nm {7.5 – 8.5 kgm} } Tighten again

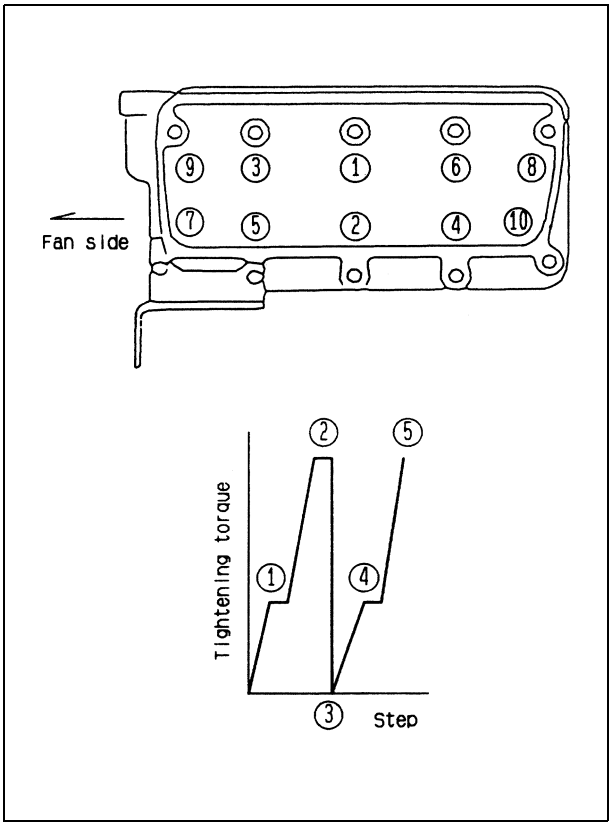

4D92E, 4D94LE and 4D98E ENGINE

1. Apply the engine oil to the cylinder head mounting bolts coating evenly by hand.

2. Tighten twice in the order in the diagram on the right (① through ⑱) as follows:

kgm Cylinder Head Bolt:
Fist Time:58.8 Nm {6 kgm}
Second Time:117.6 Nm {12 kgm}

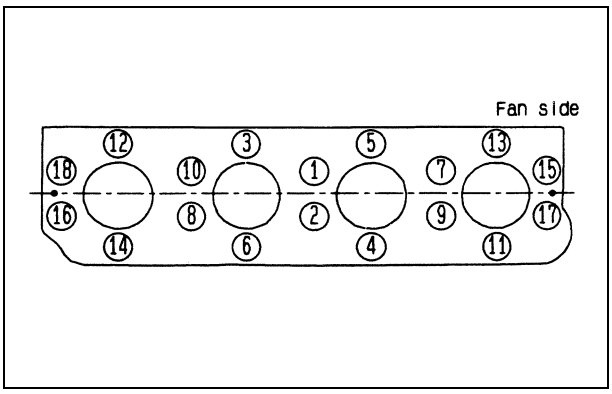

REPLACEMENT OF CLUTCH DISC

REMOVAL OF CLUTCH DISC

1. Open the clutch case cover.

2. Fix the pressure plate with the pressure plate mounting bolt.

Fixing Bolt:

Part Name	01010-51065
Size	M10
Pitch × Length	1.5 × 65

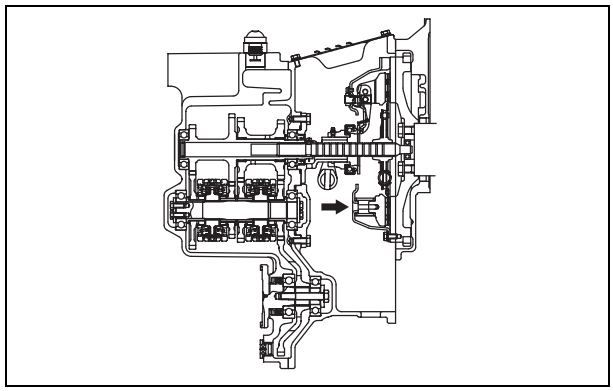

3. Slide the snap ring (**1**) and remove the pin (**2**).

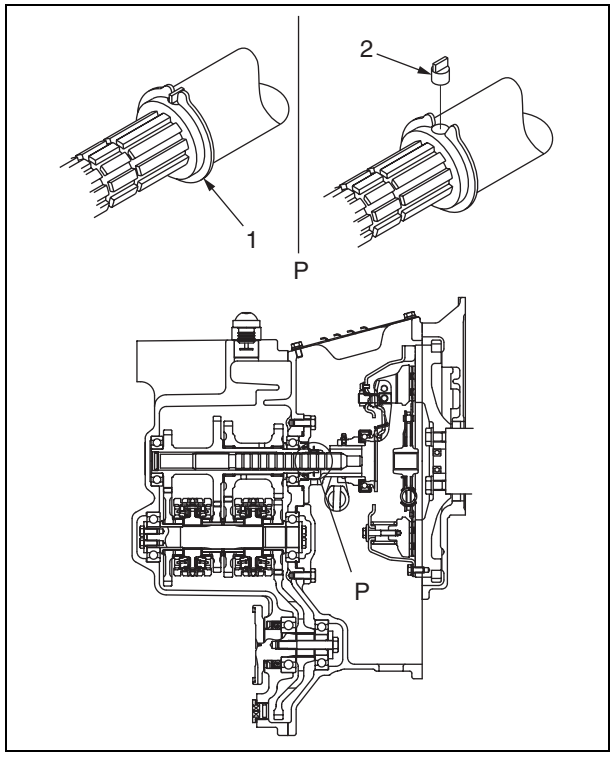

4. Push the shaft toward the transmission.

5. Remove the pressure plate mounting bolt (**3**) and slide the pressure plate. Then, remove the clutch disc.

★ Be careful not to damage the spring when sliding the pressure plate.

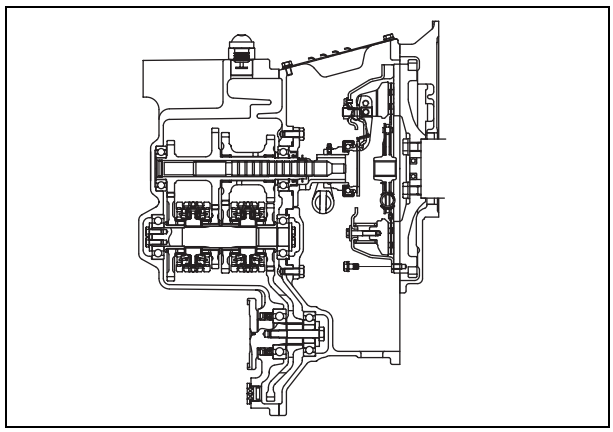

INSTALLATION OF CLUTCH DISC

1. Install the clutch disc.

★ Put the flat side of the clutch disc to face toward the flywheel when assembling.

★ Apply the thin layer of grease paste to the spline (**a**).

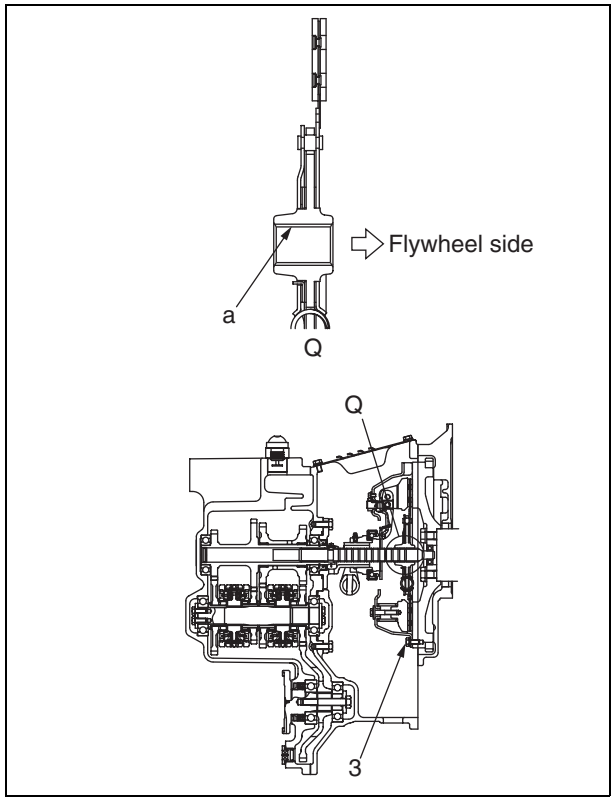

2. Return the shaft to the flywheel side and push it into the flywheel through the spline of the clutch disc.

3. Tighten the pressure plate fixing-bolt (**3**).

kgm	27 – 34 Nm {2.8 – 3.5 kgm}

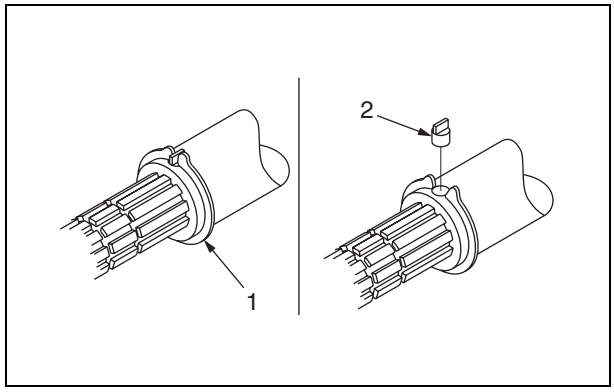

4. Fix the pin (**2**) with the snap ring.

★ If any damage is found at the snap ring, replace it with a new one.

5. Remove the pressure plate fixing-bolt.

6. Install the clutch case cover.

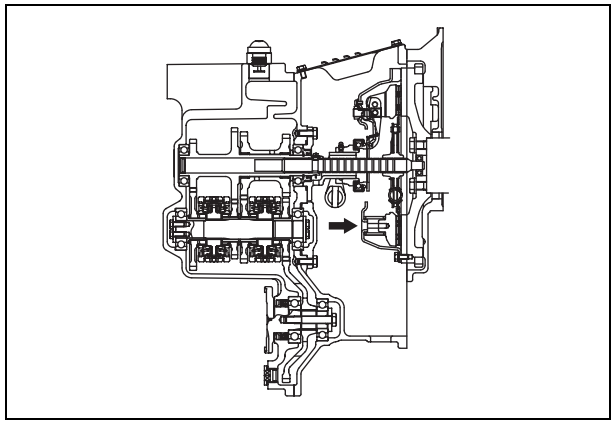

TORQFLOW TRANSMISSION CASE

WARNING

The temperature of the oil is very high immediately after stop operation of the truck. Be sure to start inspection after cooling down completely

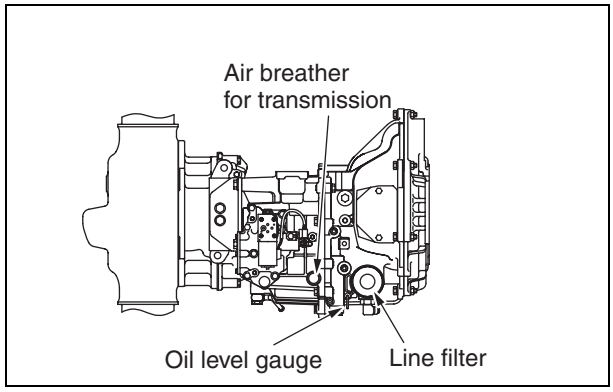

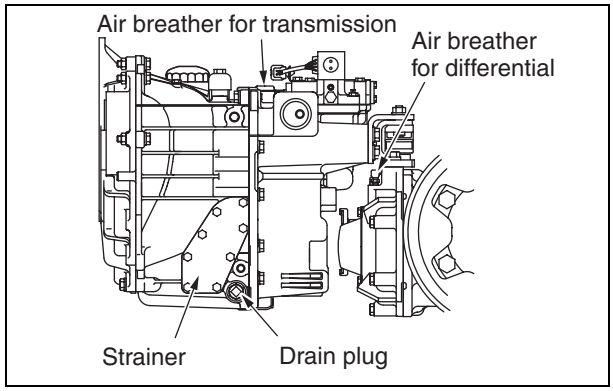

INSPECTION OF OIL LEVEL

1. Open the floor plate to check the oil level with the oil level gauge.
2. Refill the oil if necessary.

REPLACEMENR OF OIL, INSPECTION AND CLEANING OF STRAINER

1. Remove the drain plug to drain the oil. Tighten the drain plug after draining.
2. Remove the mounting bolt to take out the strainer for cleaning with flushing oil.
3. After cleaning, blow dry compressed air from inside to outside of the strainer and install when completely dry.
   ★ If any damage or clogs is found on the strainer, replace it with a new one.
4. Refill the oil as specified.
5. Check the oil level after refilling.
   Replacement Oil Level:

First Speed (F1/R1) Model	9.5 liters including torque converter

IMPORTANT

Be sure to always use the Komatsu genuine oil "FED10-CD" for the engine oil.

REPLACEMENT OF LINE FILTER

1. Turn the line filter counterclockwise for removal.
2. Install a new line filter. When installing, check to make sure that the seal of the line filter touched the case fitting face and then tighten it by another three-quarter turning.

DIFFERENTIAL CASE

WARNING

The temperature of the oil is very high immediately after stop operation of the truck. Be sure to start inspection after it is cooled down completely

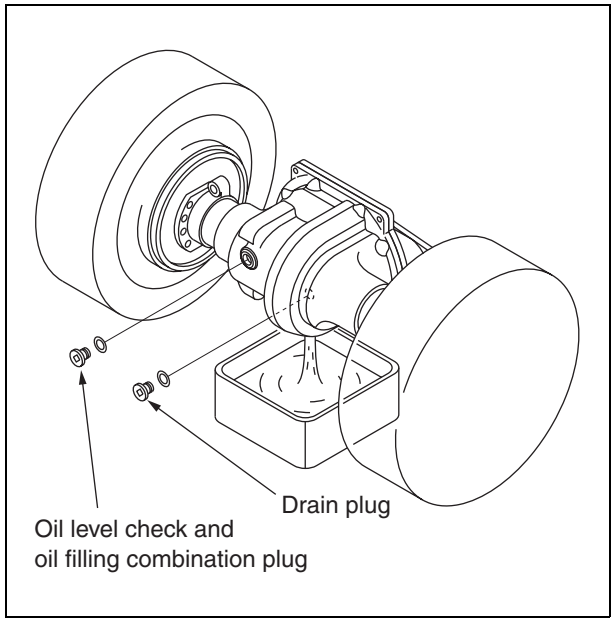

INSPECTION OF OIL LEVEL

1. Remove the oil level check plug to check that the oil is nearly up to the lower level of the plug-hole. Refill the oil, if necessary.

REPLACEMENR OF OIL

1. Remove the oil filler plug and drain the oil through the drain plug.

2. After draining, tighten the drain plug and refill the oil as specified.

3. Check the oil level after refilling.
   Replacement Oil Level:

1.0 – 1.75 ton	10 liters for clutch model and 6 liters for the TORQFLOW type.
2.0 – 3.0 ton	12.5 liters for clutch model and 7 liters for the TORQFLOW type.

IMPORTANT

Be sure to always use the Komatsu genuine oil "FG090" for the gear oil.

IMPORTANT

The same oil is being used at the differential case and the transmission case for the clutch model, while the specifications of the oil being used at those devices differs for the TORQFLOW type.
Therefore, the TORQFLOW type requires inspection and replacement of the TORQFLOW transmission case in addition to those of the differential case.

HYDRAULIC TANK

REPLACEMENT OF HYDRALIC OIL
REPLACEMENT OF LINE FILTER
CLEANING OF STRAINER
CLEANING OF INSIDE HYDRAULIC TANK

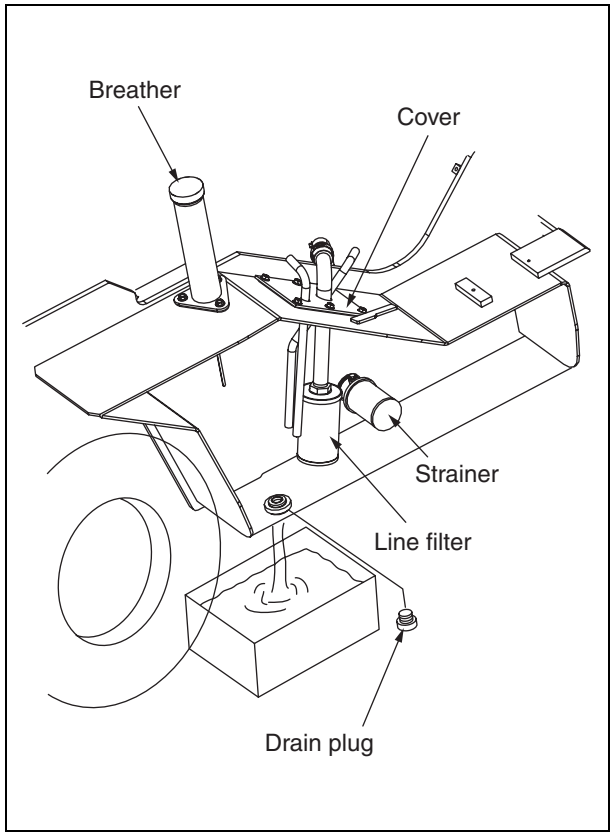

WARNING

The temperature of the oil is very high immediately after stop operation of the truck. Be sure to start inspection after cooling down completely.

1. Remove the drain plug located at the bottom of the hydraulic tank for draining. Then, uncover the hydraulic tank and remove the strainer. Clean the strainer up with flushing oil.

2. After cleaning inside hydraulic tank, install the drain plug.

3. After cleaning the strainer, blow dry compressed air from inside to outside of the strainer until it is completely dry.

4. Remove the line filter and replace it with a new one. Then, install the tank cover.

5. Refill the hydraulic oil through the breather hole. Check the oil level with the oil level gauge.
   Replacement Oil Level:

1.0 – 1.75 ton	34 ℓ
2.0 – 3.0 ton	52 ℓ for the standard models and 34 ℓ for the compact models.

6. Start the engine and operate the mast with lifting and tilting until stroke-end for several times so as to bleed the air.

IMPORTANT
Always be sure to use the Komatsu genuine hydraulic oil.

MEASUREMENT OF HYDRAULIC DRIFT OF LIFT AND TILT CYLINDERS

PRECAUTIONS

1. Never allow anyone to stand or pass under the raised forks or the load.
2. Keep your hands and legs away form the lifting mechanism including the mast stay or the dashboard area, which will keep your hands and legs safe from harm or injury caught in the mast. Always prepare a ladder or a stand that is strong enough to use for your inspection.
3. Check to make sure that the hydraulic oil level is normal, not dirty and not mixed with any other kind of oil.
4. Park the truck on an even surface. The measurement must be carried out in front of a loading platform strong enough to support the truck even if it should tip over to the front.

METHOD OF MEASUREMENT

1. Hold the forklift truck at 500 mm in front of the platform.

2. Repeat lifting and tilting to set the hydraulic oil temperature to 50 °C.

3. Set the rated load on the forks and secure it to the fork carriage with wire.

4. Lift the forks about **1**, 500 mm and keep the mast upright.

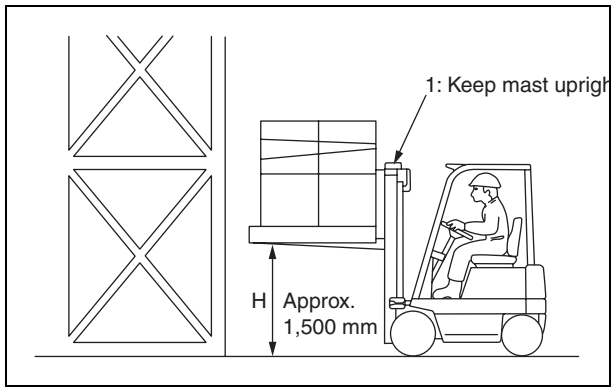

[Hydraulic Drift of Lift Cylinder]

5. Wait for 3 minutes and place a ruler against the piston rod of the lift cylinder. Then, make a mark "**A**" on it.

6. Measure the hydraulic drift over the next 15 minutes.

Hydraulic Drift of Lift Cylinder For 15 Minutes	1.0 – 1.75 ton: within 75 mm
	2.0 – 3.0 ton: within 50 mm

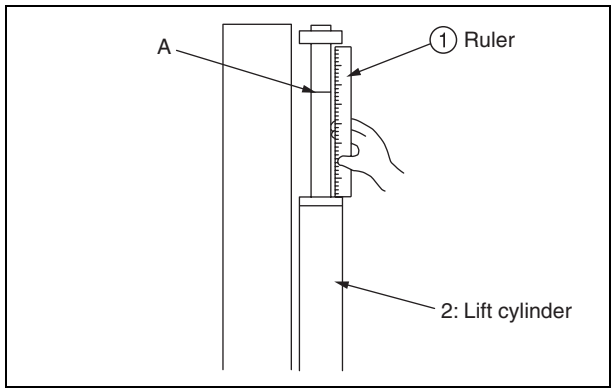

[Hydraulic Drift of Tilt Cylinder]

7. Wait for 3 minutes and place a ruler against the piston rod of the tilt cylinder. Then, make a mark "**B**" on it.
8. Measure the hydraulic drift over the next 15 minutes

Hydraulic Drift of Tilt Cylinder For 15 Minutes	within 45 mm

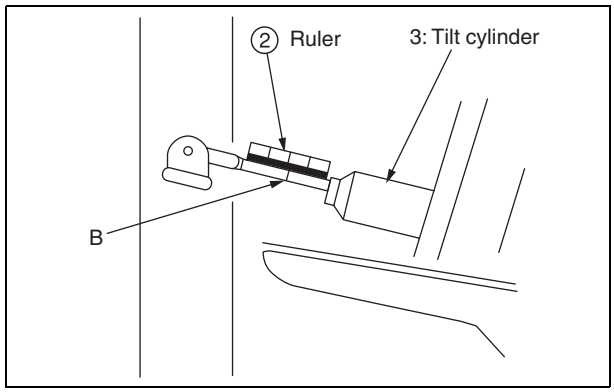

ADJUSTMENT OF CLUTCH AND BRAKE PEDAL (CLUTCH MODEL)

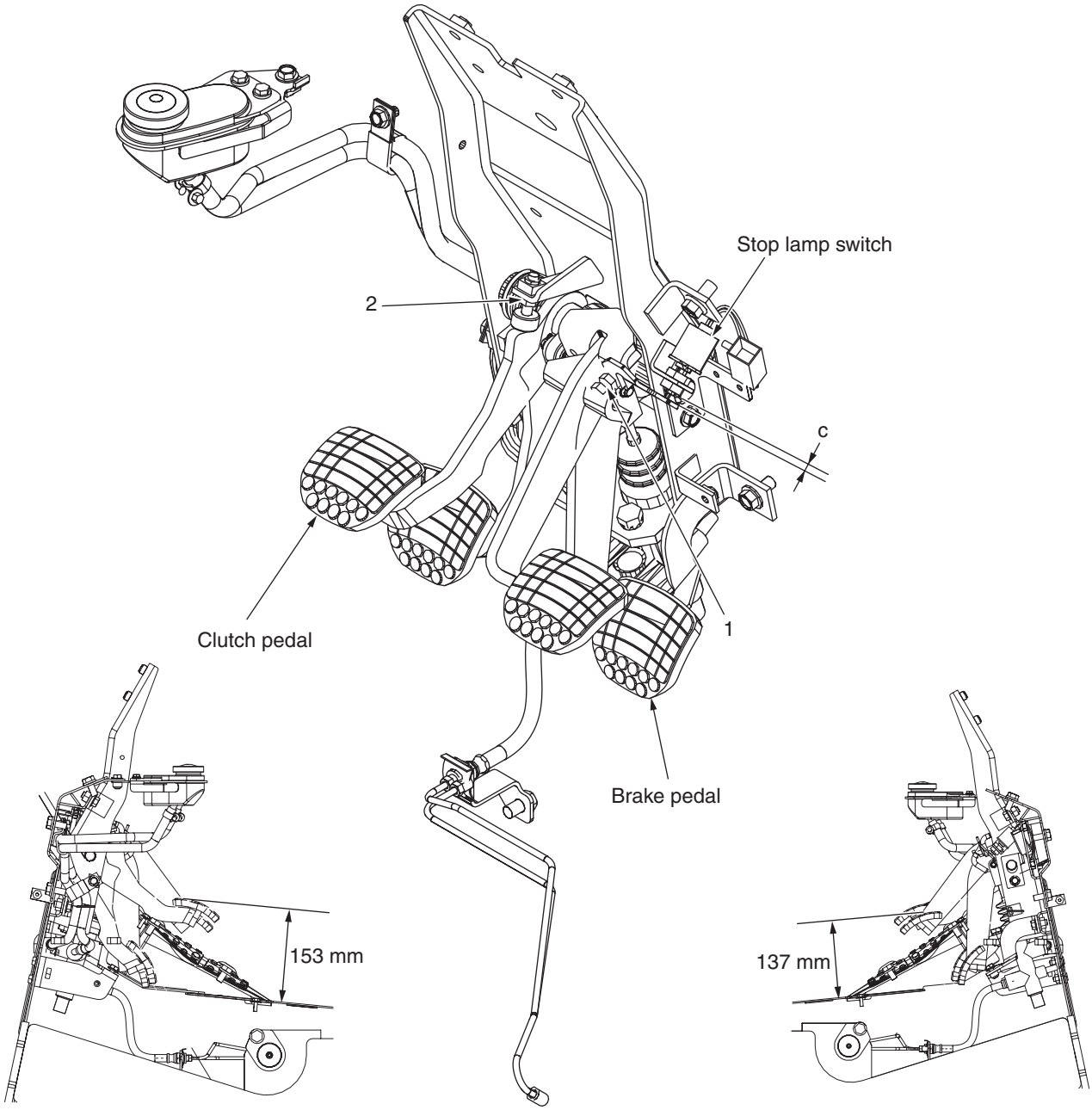

1. PROCEDURE FOR ADJUSTMENT OF CLUTCH AND BRAKE PEDAL (CLUTCH MODEL)

1) Brake pedal stroke

1 – 1.8 ton	51 ±10 mm
2 – 3 ton	65 ±10 mm

★ If the brake pedal stroke is more than the standard, check the brake shoe for wear.

2) Adjust the height of the brake pedal with the stopper bolt (**1**) to make it approximately 137 mm from the floor plate.

3) Adjust the height of the clutch pedal with the stopper bolt (**2**) to make it approximately 153 mm from the floor plate.

2. PROCEDURE FOR ADJUSTMENT OF STOP LAMP SWITCH

Set the measurement "**C**" at the range of 0.5 mm through 1.5 mm after adjustment of the brake pedal height.

ADJUSTMENT OF INCHING AND BRAKE PEDAL (TORQFLOW MODEL)

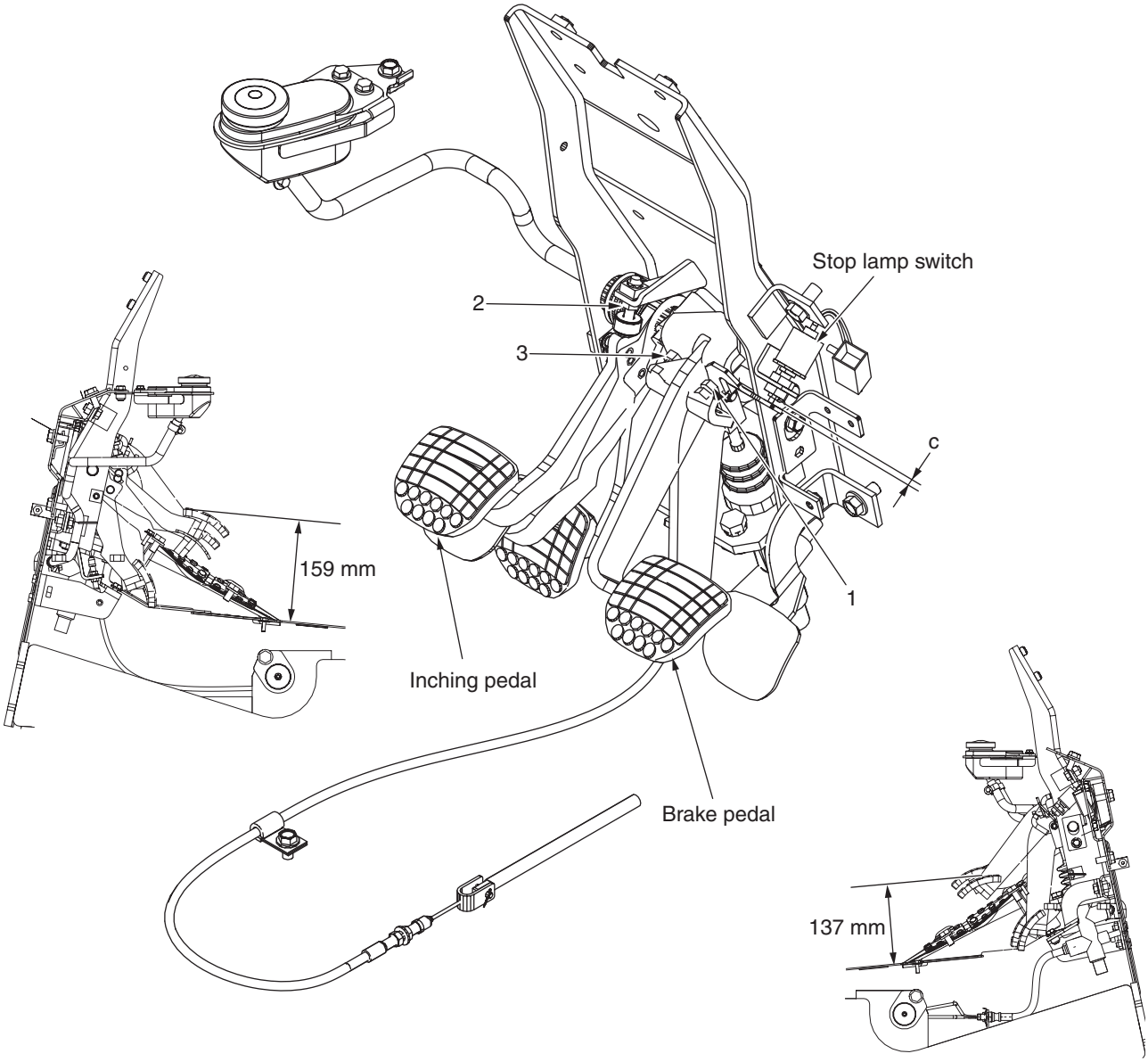

1. PROCEDURE FOR ADJUSTMENT OF INCHING AND BRAKE PEDAL (TORQFLOWMODEL)

1) Brake pedal stroke

1 – 1.8 ton	51 ±10 mm
2 – 3 ton	65 ±10 mm

★ If the brake pedal stroke is more than the standard, check the brake shoe for wear.

2) Adjust the height of the brake pedal with the stopper bolt (**1**) to make it approximately 137 mm from the floor plate.

3) Adjust the height of the inching pedal with the stopper bolt (**2**) to make it approximately 159 mm from the floor plate.

4) Adjust the bolt (**3**) so that it can gear with the brake pedal with the inching pedal stroke in the range of 55 mm through 61 mm accordingly.

2. PROCEDURE FOR ADJUSTNENT OF STOP LAMP AWITCH

Set the measurement "**C**" in the range of 0.5 mm through 1.5 mm after adjustment of the brake pedal height.

ADJUSTMENT OF ACCELERATOR PEDAL

K15/K21/K25 ENGINE MODEL

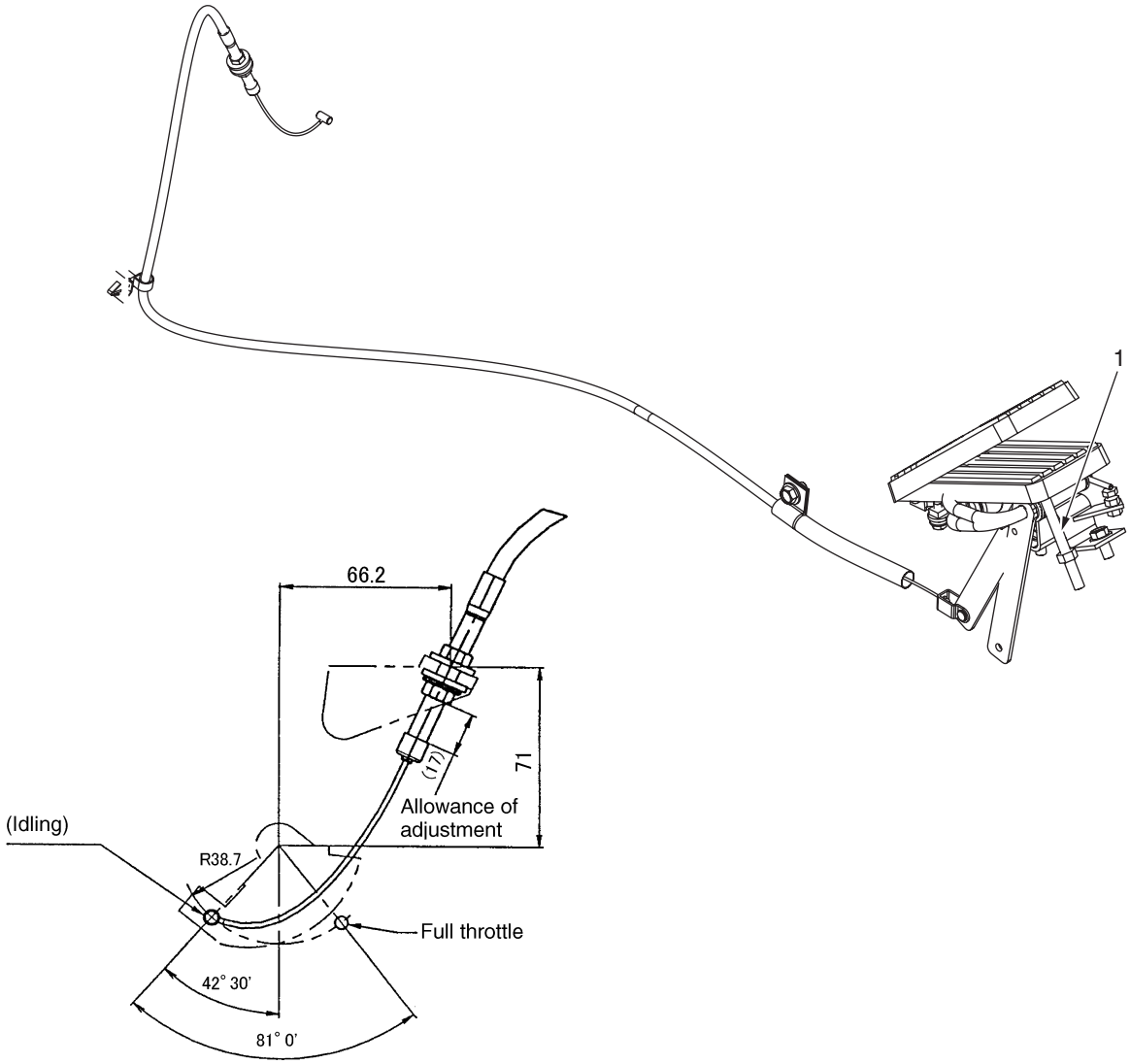

PROCEDURE FOR ADJUSTMENT OF ACCELERATOR PEDAL

1. Set the stopper bolt (**1**) temporarily with the height of 65 mm.
2. After assembling the cable, adjust the outer casing mount of the cable to allow the pedal play of 2 to 3 mm.
3. Adjust the height of stopper bolt (**1**) again to allow the engine full throttle when flooring the accelerator pedal.

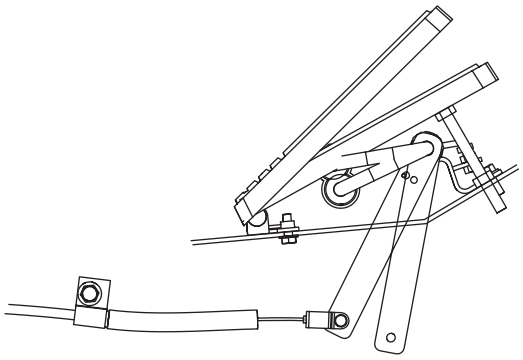

4D92E/4D94LE/4D98E ENGINE MODEL

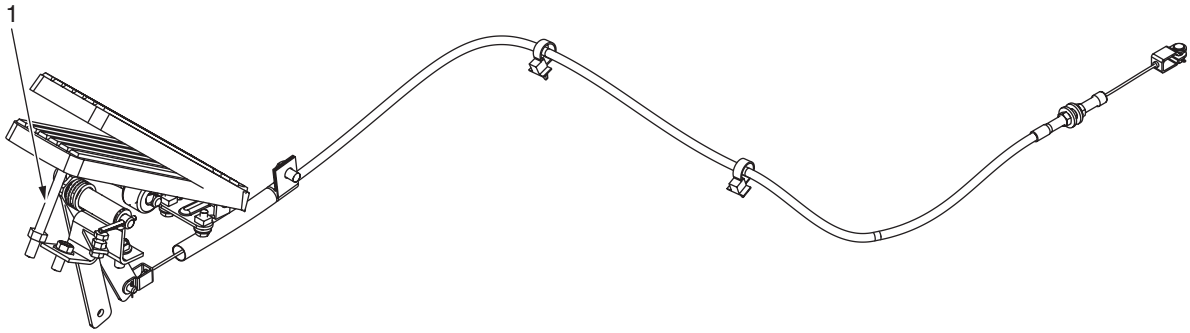

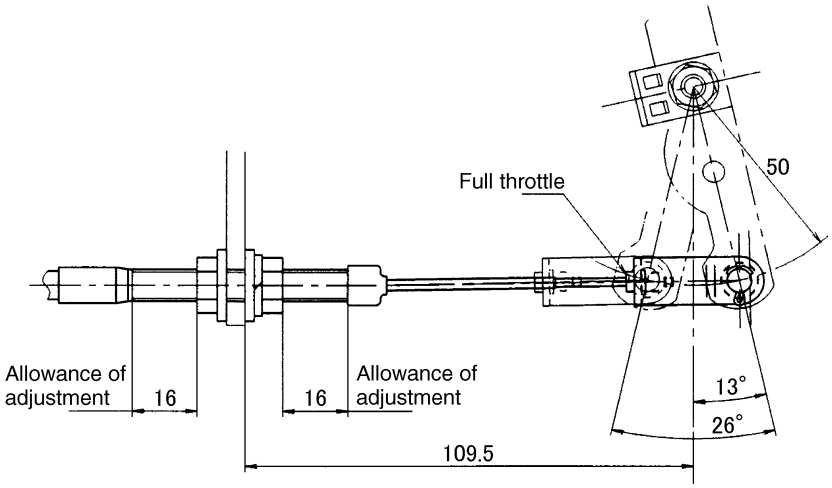

PROCEDURE FOR ADJUSTMENT OF ACCELERATOR PEDAL

1. Set the stopper bolt (**1**) temporarily with the height of 65 mm.
2. After assembling the cable, adjust the outer casing mount of the cable to allow the pedal play between 2 to 3 mm.
3. Adjust the height of stopper bolt (**1**) again to allow the engine full throttle when flooring the accelerator pedal.

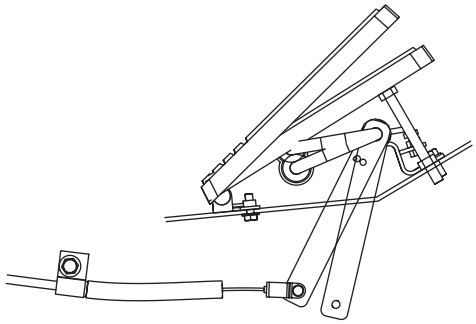

ADJUSTMENT OF PARKING BRAKE LEVER

Before starting adjustment, check to make sure that all of both front and rear wheels of the forklift truck has locked with stoppers respectively

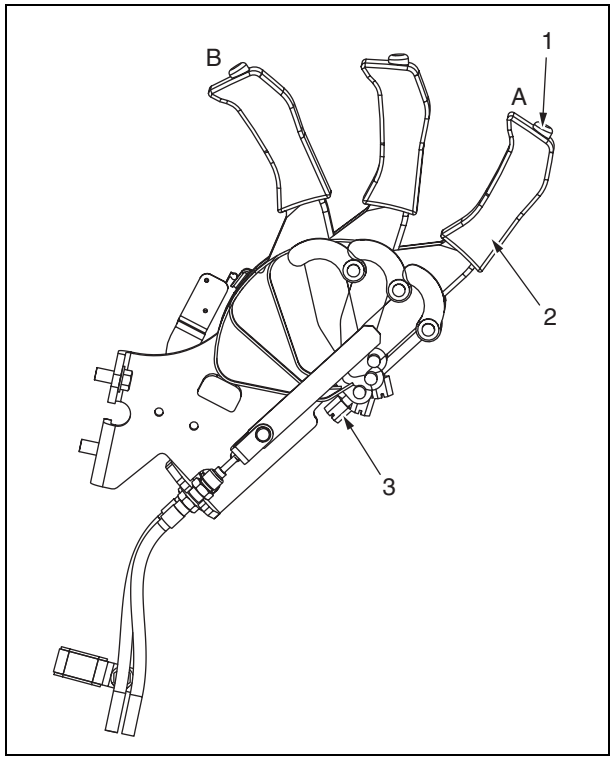

1. Release the parking brake by pushing the parking brake lever (**2**) forward to the release position (**B**) while pressing the push button (**1**).

2. Turn the adjustment bolt (**3**) and adjust the lever control force at the initial extension of the cable to be set as follows:
- For standard brake147 – 196N {15 – 20 kgf}
- For power brake: 245 – 294N {25 – 30 kgf}

WHEEL BRAKE

PROCEDURE FOR ADJUSTMENT OF BRAKE SHOE CLEARANCE

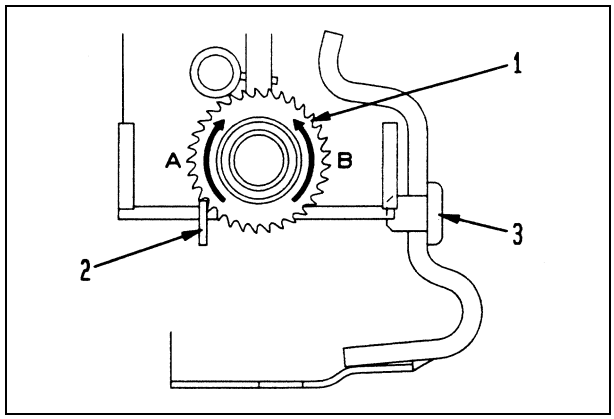

1. Release the parking brake while floating the wheels up above the ground.

2. Remove the rubber cap.

3. Turn the gear (**1**) in the direction (**A**) or toward the brake shoes repeatedly with a screwdriver until the brake shoes should touch the brake drum. Turning of every notch makes sound of clicks.
IMPORTANT:
Turn the wheels by hands to feel braking a little bit.

4. Prepare two screwdrivers. The first screwdriver should be used for mildly pushing the lever (**2**) and have it miss each gear notch. Be careful not to push strongly. The second one should be used for turning the gear (**1**) toward the direction (**B**) counting by twenty-one (**21**) notches while the fist one is still on duty. It counts 30 notches for one turning of the gear.
IMPORTANT:
Since no clicks are made available here, count the number of notches watching through the hole of the rubber cap (**3**) for carrying out the adjustment.

5. Install the rubber cap (**3**).

6. Turn the wheels by hands and check to make sure that there is no brake dragging.
IMPORTANT:
The clearance between the brake shoe and brake drum can be adjusted approximately to 0.55 mm (clearance of diameter) with this adjustment.

BLEEDING AIR

BRAKE PIPING

WARNING

- Before starting bleeding air, adjust the brake shoe clearance to the specified 0.40 to 0.56 mm (diameter of the space).
- From time to time, refill the brake fluid to prevent the brake fluid in the reserve tank from empty for carrying out air bleeding. You should carry out the inspection again just from the beginning because air could be mixed in once the tank becomes empty.

1. Remove the cap from the air bleed plug (**1**) of the brake wheel cylinder. Install one end of a plastic hose ① for air bleeding to the plug and put the other end of the hose in a container of the brake fluid.

★ The color of the plastic hose should be transparent as much as possible.

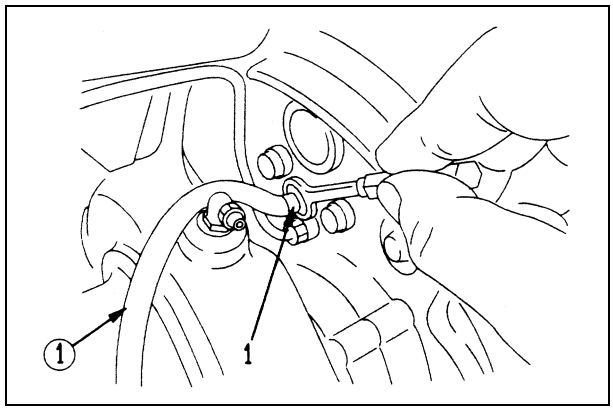

2. If inspector is only one, connect a string or a wire to the upper arm of brake pedal (**2**) and let the other end of string or wire ② loose free in approximately 300 mm through the space between the frame (**3**) and the dashboard (**4**).

3. Slowly pull out the string or the wire ② connected with the brake pedal (**2**) arm from the front of the forklift so as to compress the air inside the brake piping and hold it as is.

★ If inspector is more than two, one inspector should press the brake pedal.

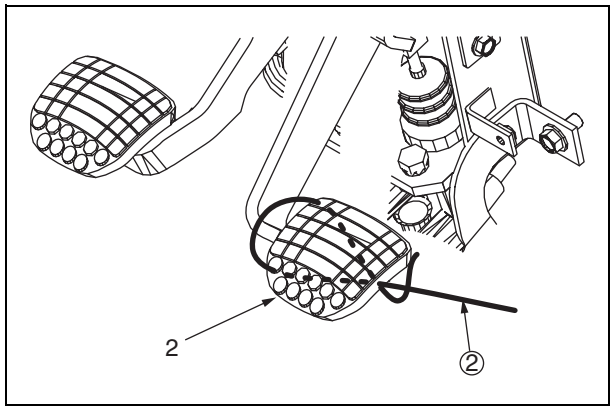

4. Loosen the air bleed plug (**1**) of the brake wheel cylinder approximately 3/4 turns to the left and depress the brake pedal to bleed the air in the piping along with the brake fluid. Then, tighten the bleed plug (**1**) while bleeding the brake fluid.

★ In this stage, keep pulling the string or the wire for a while.

5. After tightening the bleed plug, release the brake pedal.

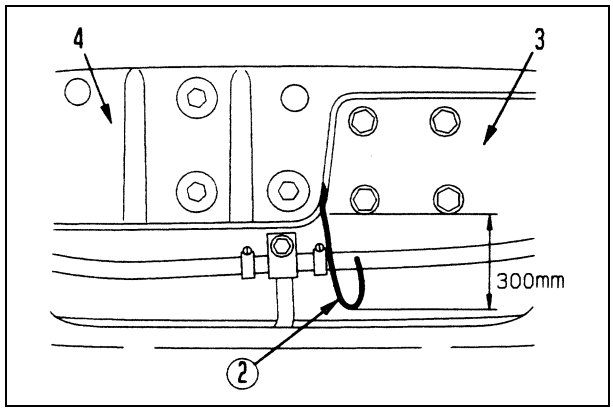

6. Repeat the step **3**, **4**, and **5** of the above until no more bubbles come out from the hose.

7. After completing one side of brake adjustment, carry out the other side of adjustment with the same steps.

8. Then, repeat the air bleeding of the brake and check again to make sure that no more air left in the brake piping.

9. Depress the brake pedal to check it for normal response. Then, depress the brake pedal with depressing force of 196 N or 20 kgf to measure the pedal stroke (**a**). Check to make sure that the pedal stroke (**a**) is within 55 mm to 75 mm when depressing the pedal.
Pedal Stroke:

Pedal stroke (a) when depressed	1 – 1.8 ton	41 – 61 mm
	2 – 3 ton	55 – 75 mm

Play:

Play (b)	0 – 4 mm

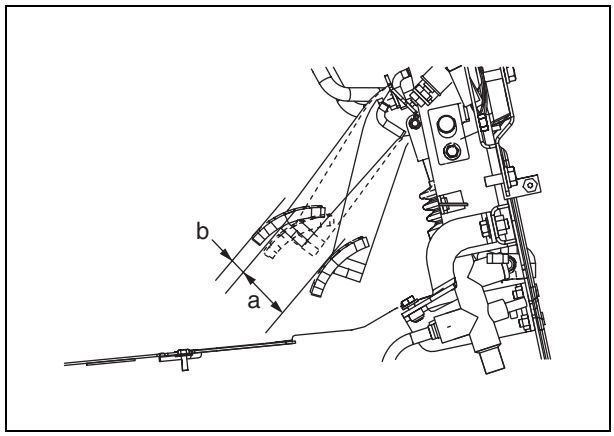

10. Remove the hose ① from the air bleed plug (**1**). Tighten again the both side of the air bleed plug and install the cap.
kgm Air bleed plug: 5.9 – 8.8 Nm {0.6 – 0.9 kgm}

11. Refill the brake fluid up to the MAX line (**C**) on the reserve tank (**5**) of upper master cylinder, which shows the specified fluid level.

12. Remove the string or the wire ② connected with the brake pedal arm.

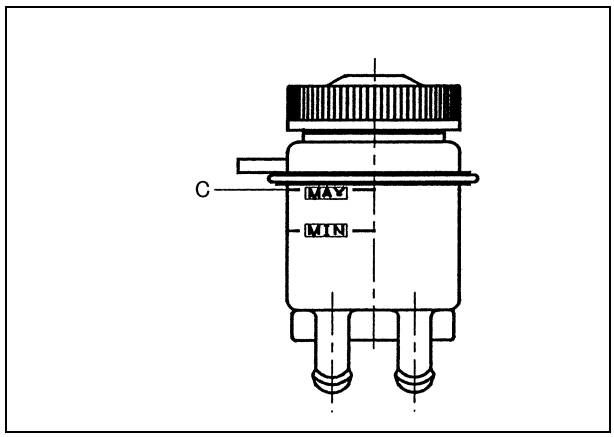

CLUTCH PIPING

1. Remove the cap from the air bleed plug. Then, fit one end of the plastic hose to the plug and put the other end of the hose in a container of the brake fluid.

2. Loosen the air bleed plug approximately 3/4 turns and depress the brake pedal.

3. Tighten the air bleed plug. Then, release the brake pedal.

4. Repeat the step 2 and 3 until no more bubbles come out from the hose.

5. When all the air has been completely removed, tighten the plug and install the cap.

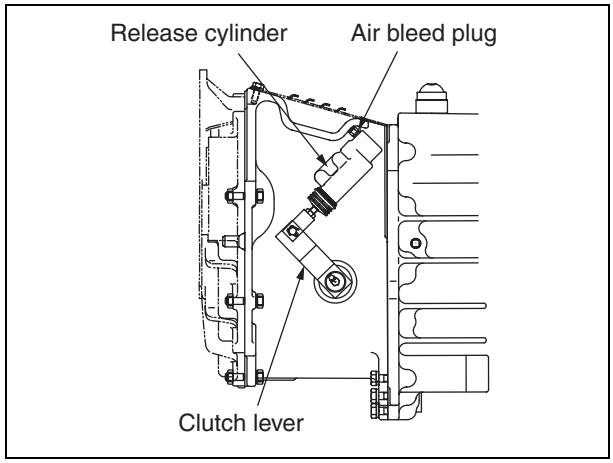

LIFT CYLINDER

1. Start the engine and run it at low idling.

2. Lift up and down the mast.
   ★ Try to stop lifting at about 100 mm before reaching to the maximum lifting and lowering height.

3. Repeat the step **2** of the above four to five times.

4. Lift up and down the mast to the maximum lifting and lowering height.

5. Repeat the step **4** of the above four to five times.

FUEL PIPING (Diesel Engine Forklift Truck)

1. Loosen the plug (**1**) and move the knob (**2**) up and down until no more bubbles come out with the fluid.

2. Tighten the plug (**1**) after completely bleeding the air.

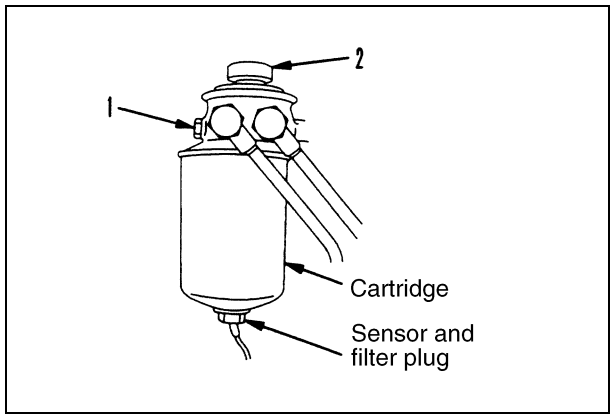

DESIGNATED FUEL AND LUBRICATING OIL

GASOLINE ENGINE FORKLIFT TRUCKS

FG10/14/15/18
FG15H/18H
FG20/25/30
FG20H/25H/30H
FG20N/25N/30N
FG35A

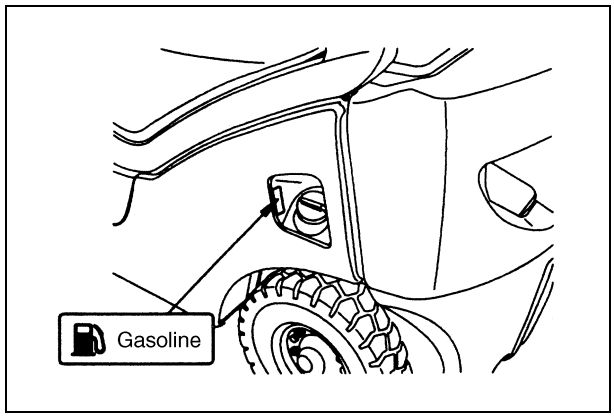

IMPORTANT
Always make sure to use exclusively Komatsu genuine lubricating oil.
(Oil, grease and anti-freeze are available at Komatsu distributors.)

WARNING
Never use the wrong type of brake fluid.

Lubrication Point	Type of Oil/Fluid	Ambient Temperature -22 -30 / -4 -20 / 14 -10 / 32 0 / 50 10 / 68 20 / 86 30 / 104˚F 40˚C
Engine Oil Pan	Engine Oil	SAE10W30SH
TORQFLOW Transmission Case	Engine Oil	SAE10WCD
Differential Case	Gear Oil	SAE90GL4
Hydraulic Tank	Engine Oil	SAE10WCD
Fuel Tank	Gasoline	
Brake Reservoir	Brake Fluid	SAE70R-1, SAE70R-3, DOT3
Clutch Reservoir	Brake Fluid	SAE70R-1, SAE70R-3, DOT3
Greasing Points	Lithium Grease	NLGI No.2
Cooling System	Coolant (FAF-NAC)	AF-NAC

1.0 – 1.75 ton Forklift Trucks

	Engine Oil Pan	TORQFLOW Transmission Case	Differential Case	Hydraulic Tank
Capacity (ℓ)	K15 Engine: 3.8 K21 Engine: 3.8	9.5 (Incl. Torque Converter 3.1)	TORQFLOW Type: 4 Clutch Type: 10 (Incl. Transmission Case 6)	34

	Fuel Tank	Brake Reservoir	Clutch Reservoir	Cooling System
Capacity (ℓ)	42	0.15	0.1	K15 Engine: 9.1 K21 Engine: 9.1

2.0 – 2.5 ton Forklift Truck

	Engine Oil Pan	TORQFLOW Transmission Case	Differential Case	Hydraulic Tank
Capacity (ℓ)	K15 Engine: 3.8 K21 Engine: 3.8 K25 Engine: 3.8	9.5 (Incl. Torque Converter 3.1)	TORQFLOW Type: 7 Clutch Type: 12.5 (Incl. Transmission Case 5.5)	STD Type: 52 Compact Type: 34

	Fuel Tank	Brake Reservoir	Clutch Reservoir	Cooling System
Capacity (ℓ)	STD Type: 63 Compact Type: 42	0.15	0.1	K15 Engine: 9.1 K21 Engine: 9.1 K25 Engine: 9.1

DIESEL ENGINE FORKLIFT TRUCKS

FD10/14/15/18
FD20/25/30
FD20H/25H/30H
FD20N/25N/30N
FD35A

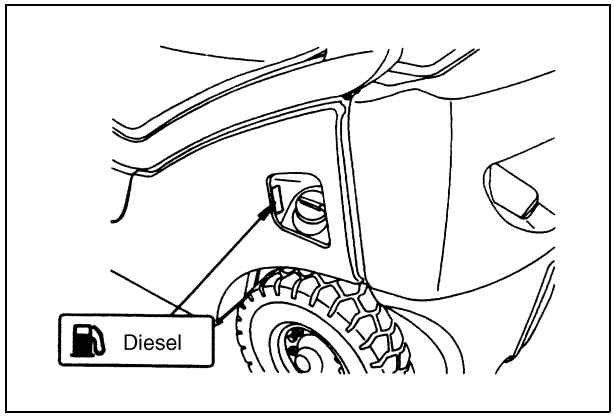

IMPORTANT

- **Never use fuel mixed with kerosene because it may damage fuel injection system.**
- **Always make sure to use exclusively Komatsu genuine lubrication oil. (Oil, grease and anti-freeze are available at Komatsu distributors.)**

WARNING

Never use the wrong type of brake fluid.

Lubrication Point	Type of Oil/Fluid	Ambient Temperature -22 -30	-4 -20	14 -10	32 0	50 10	68 20	86 30	104˚F 40˚C
Engine Oil Pan	Engine Oil		SAE10W30CD						
TORQFLOW Transmission Case	Engine Oil		SAE10WCD						
Differential Case	Gear Oil		SAE90GL4						
Hydraulic Tank	Engine Oil		SAE10WCD						
Fuel Tank	Diesel fuel	ASTM D975 No.1		ASTM D975 No.2					
Brake Reservoir	Brake Fluid		SAE70R-1, SAE70R-3, DOT3						
Clutch Reservoir	Brake Fluid		SAE70R-1, SAE70R-3, DOT3						
Greasing Points	Lithium Grease		NLGI No.2						
Cooling System	Coolant (FAF-NAC)		AF-NAC						

1.0 – 1.75 ton Forklift Trucks

	Engine Oil Pan	TORQFLOW Transmission Case	Differential Case	Hydraulic Tank
Capacity (ℓ)	4D92E Engine: 7.5	9.5 (Incl. Torque Converter 3.1)	TORQFLOW Type: 4 Clutch Type: 10 (Incl. Transmission Case 6)	34

	Fuel Tank	Brake Reservoir	Clutch Reservoir	Cooling System
Capacity (ℓ)	42	0.15	0.1	4D92E Engine: 9.2

2.0 - 3.0 ton Forklift Trucks

	Engine Oil Pan	TORQFLOW Transmission Case	Differential Case	Hydraulic Tank
Capacity (ℓ)	4D94LE Engine: 7.5 4D98E Engine: 7.5	9.5 (Incl. Torque Converter 3.1)	TORQFLOW Type: 7 Clutch Type: 12.5 (Incl. Transmission Case 5.5)	STD Type: 52 Compact Type: 34

	Fuel Tank	Brake Reservoir	Clutch Reservoir	Cooling System
Capacity (ℓ)	STD Type: 63 Compact Type: 42	0.15	0.1	4D94LE Engine: 9.2 4D98E Engine: 9.2

30. REMOVAL AND INSTALLATION

OVERALL DISASSEMBLY AND ASSEMBLY 30-2
WEIGHT TABLE.....30-4
MAST 30-6
LIFT CYLINDER 30-7
ENGINE 30-8
CLUTCH AND TORQUE CONVERTER,
TRANSMISSION AND DRIVE AXLE.....30-13
ALIGNMENT OF POWER TRAIN.....30-23
STEERING AXLE AND POWER STEERING.....30-25
WHEEL BRAKE 30-26

OVERALL DISASSEMBLY AND ASSEMBLY

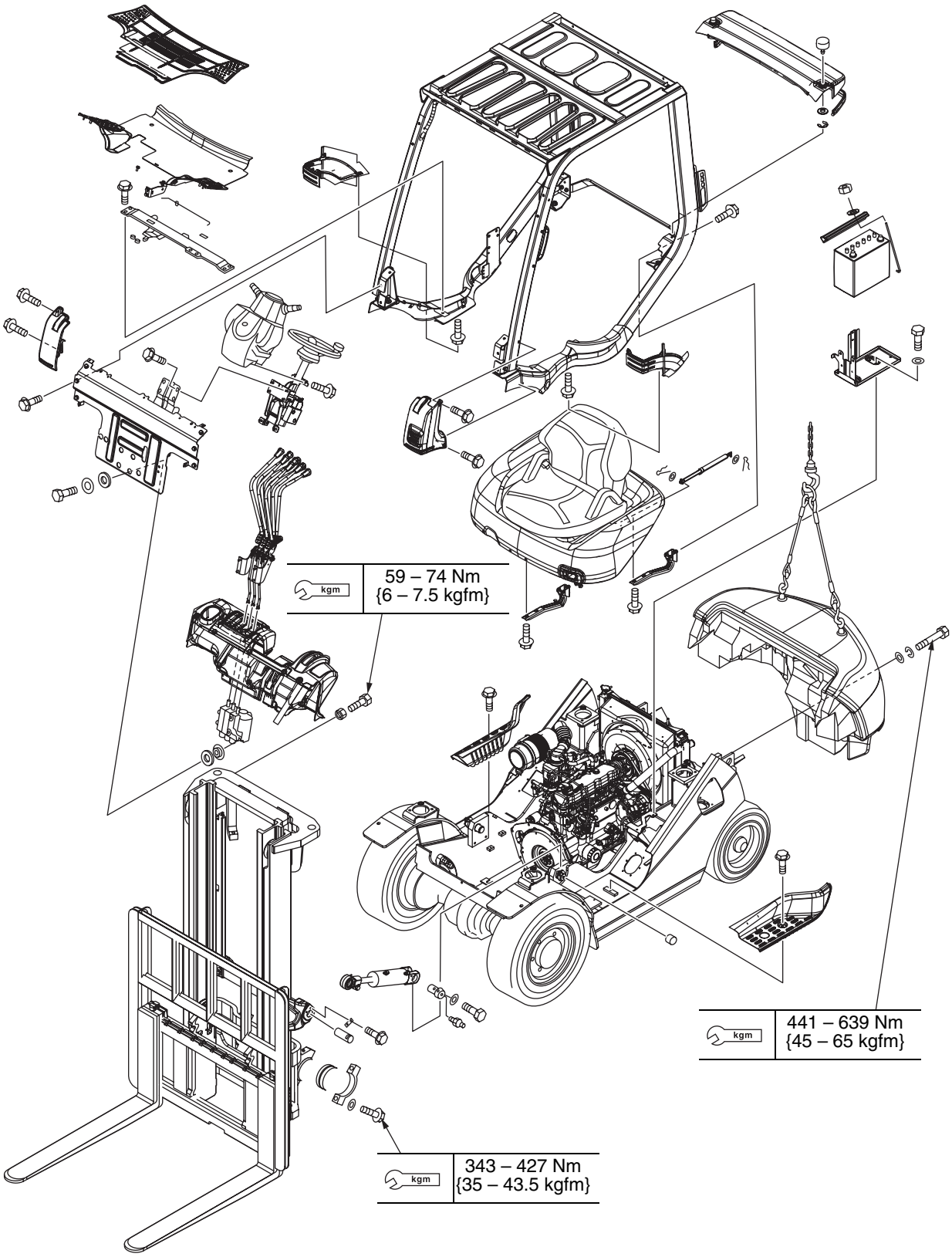

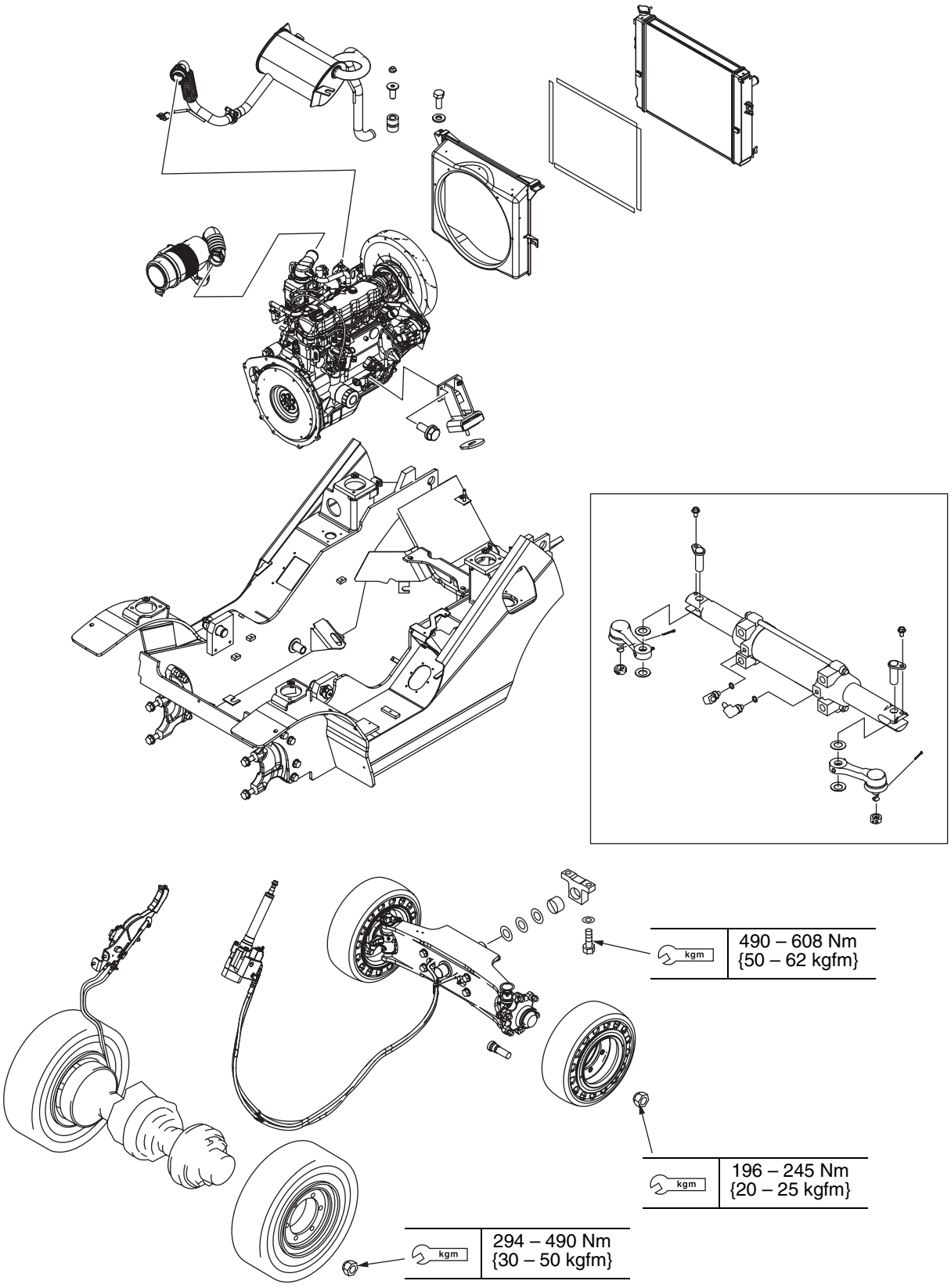
kgm
490 – 608 Nm
{50 – 62 kgfm}
kgm
196 – 245 Nm
{20 – 25 kgfm}
kgm
294 – 490 Nm
{30 – 50 kgfm}

WEIGHT TABLE

1.0 – 1.75 ton Forklift Trucks

Devices		1 ton	1.5 ton	1.75 ton	Remarks
Engine Assembly	K15 Engine	145			
	K21 Engine	145			
	4D92E engine	230			
Clutch Assembly		45			
Torque Converter Assembly		30			
Transmission	Clutch Type	35			
	TORQFLOW Type	43			
Axle	Front	158			
	Rear	70			
Wheel	Front	23			
	Rear	12			
Overhead Guard		100			
Counterweight		430	790	980	
Mast	Standard (3.0 m)	453	464		
Cylinder	Lift	26			For 3 m mast
	Tilt	10			
	Power Steering	12			
Fork Carriage		70		74	
Fork		28	34		
Backrest		21			
Pump		3.5			
Control Valve		10			
Steering system		15			

2.0 - 3.5 ton Forklift Trucks

Name of Devices		2 ton	2.5 ton	3 ton	3.5 ton	Remarks
Engine Assembly	K15 Engine	145			–	
	K21 Engine	145			–	
	K25 Engine	145				
	4D94LE Engine	226			–	
	4D98E Engine	226				
Clutch Assembly		45			–	
Toque Converter Assembly		30				
Transmission Assembly	Clutch Type	35			–	
	TORQFLOW Type	43				
Drive Axle		207		219	261	
Steering Axle		84				
Wheel (Standard type/compact type)	Front	35/45			35/–	
	Rear	15/30			15/–	
Overhead Guard Assembly		111				
Counterweight	Standard Type	1,131	1,480	1,875	2,272	
	Compact Type	1,170	1,557	1,900	–	
Mast Assembly (Incl. Forks)		644	663	773	969	
Cylinder	Lift	25		32	33	
	Tilt	12				
	Power Steering	16				
Fork Carriage		95		120		
Fork		42	50	62	90	
Backrest		20		27		
Pump		10				
Control Valve (2 valves)		8				
Steering system		22				

MAST

REMOVAL

1. Put blocks under the front and the rear wheels

2. Lift the fork carriage with the crane to remove the hydraulic piping.

3. Remove the forks.

4. Put blocks under the fork carriage.

5. Operate the work equipment control levers several times to release remaining pressure in the hydraulic piping. Then, the remove the piping.
   ★ After removing the piping, fit the blind plug immediately to prevent the hydraulic oil from flowing out and to prevent dirt or dust from getting in.

6. Lift up the fork carriage slightly with the crane and remove the blocks.

7. Lift down the fork carriage.

8. Fit the crane to the mast.

9. Remove the tilt pin.

10. Tilt the mast forward slightly and remove the differential mounting cap bolt.
    WARNING:
    If the mast is kept being tilted backward, you are in danger that the mast may fall over.

11. Remove the mast.
    WARNING:
    When carrying the removed mast horizontally, secure the lower stay and the fork carriage by the annealing wire with twisted (A).

⚠ Put blocks under the bottom of the mast and lay the mast assembly horizontally so that the fork carriage is at the top.

★ Carry out installation in the reverse order to removal.

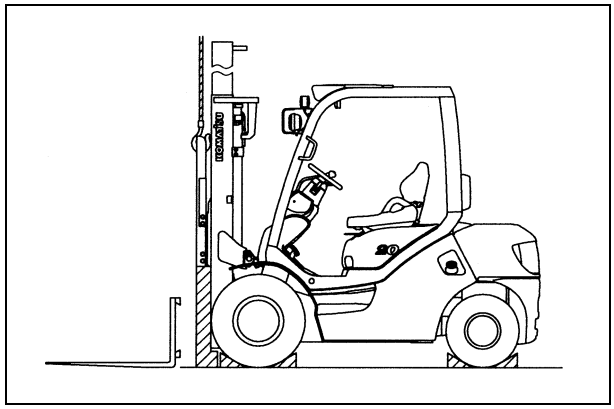

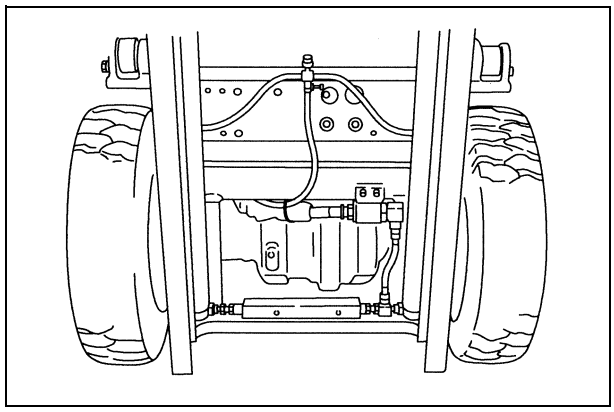

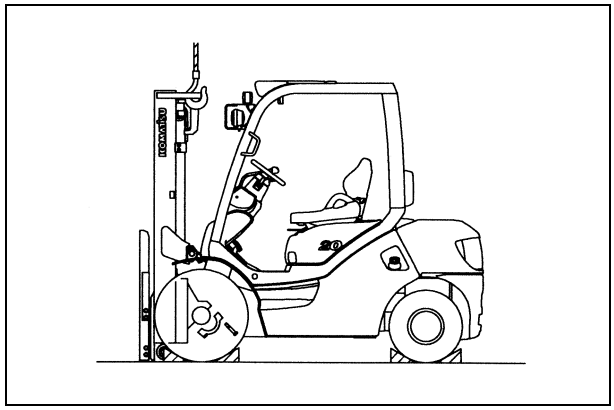

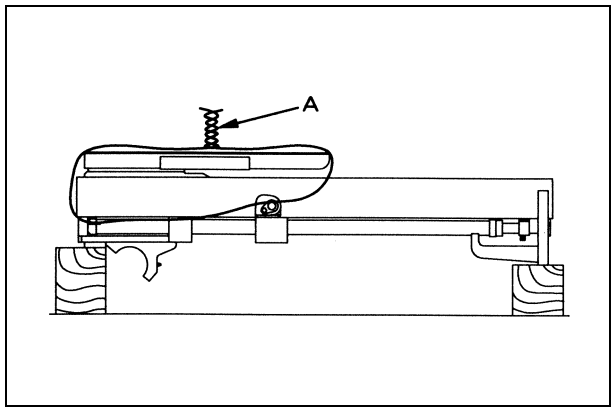

LIFT CYLINDER

REMOVAL

1. Upright the mast.
2. Remove the stopper bolt.
3. Hoist the mast by the crane.
4. Put blocks under the inner mast.
5. Remove the cylinder clamp.
6. Operate the work equipment control levers several times to release remaining pressure in the hydraulic piping. Then, the remove piping.
   ★ After removing the piping, fit the blind plug immediately to prevent the hydraulic oil from flowing out and to prevent dirt or dust from getting in.
7. Crane the cylinder with sling belt to remove it.

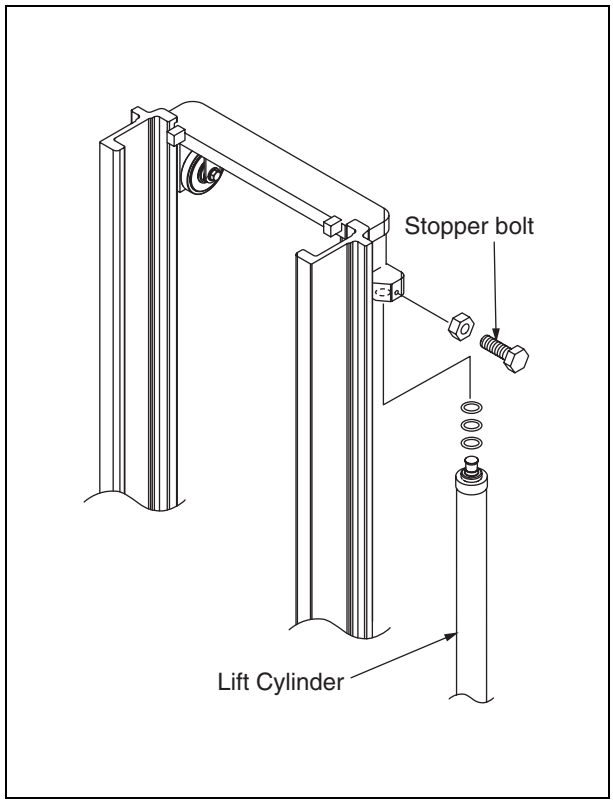

INSTALLATION

1. Lift the mast up to the maximum lifting height.
2. Check the mast for the play on both side.
3. Adjust the shims so that the both side of the cylinders are synchronized with each other at the maximum lifting height.

Angled to left	Insert shims into the left cylinder
Angled to right	Insert shims into the right cylinder

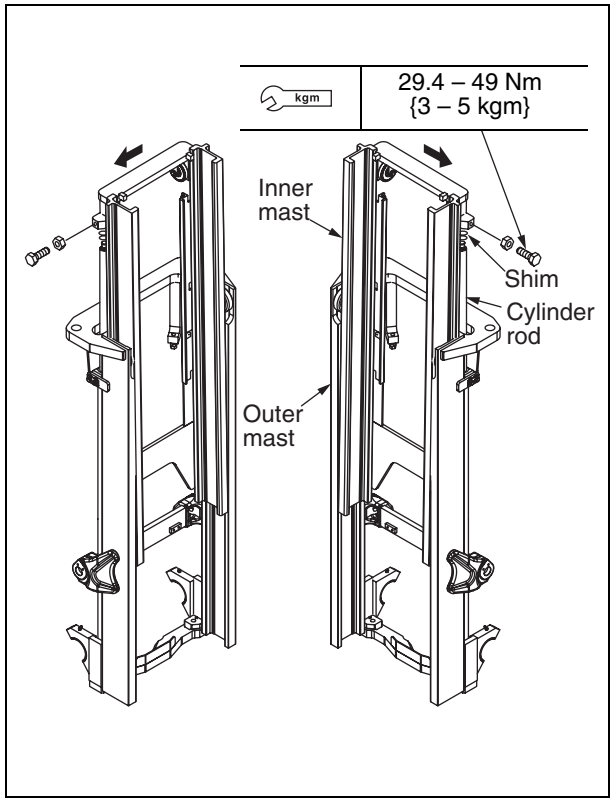

ENGINE

REMOVAL

1. Overhead Guard (Ceiling)
Engine Hood
Counterweight

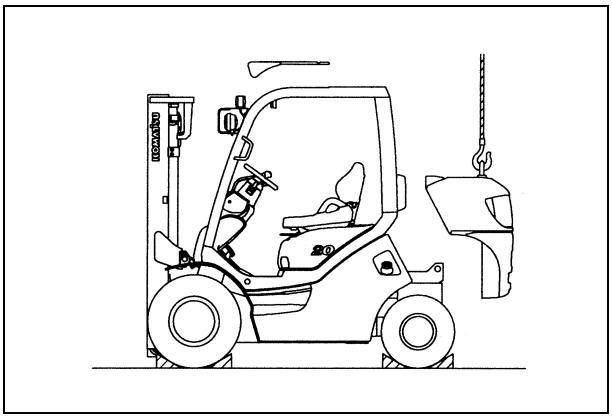

⚠ Check to make sure that the mast including forks and attachment must be lowered or lift down to the ground or removed from the mast.

2. Wiring and Battery
The figure below shows a gasoline model.

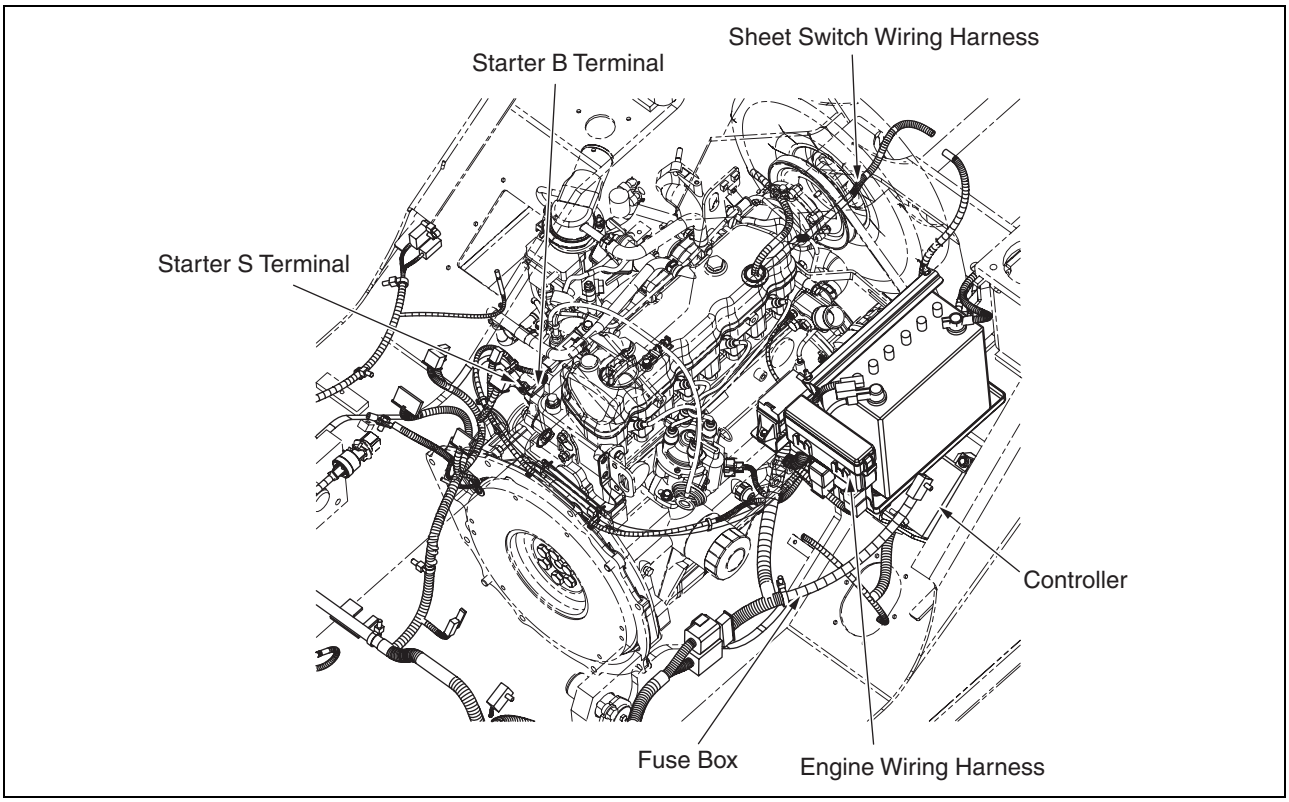

3. Accelerator Wire
Remove the accelerator wire.

4. Piping and Hoses
Hydraulic Pump Piping, Torque Converter Piping, Radiator Hose, Air Cleaner Hose, Fuel Hose

- Diesel Engine Forklift Truck (TORQFLOW type equipped with 4D94LE)

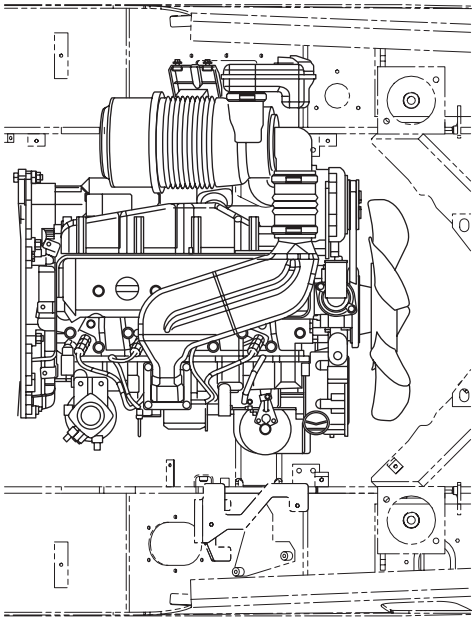

- Gasoline Engine Forklift Truck (TORQFLOW type equipped with K15, K21 and K25)

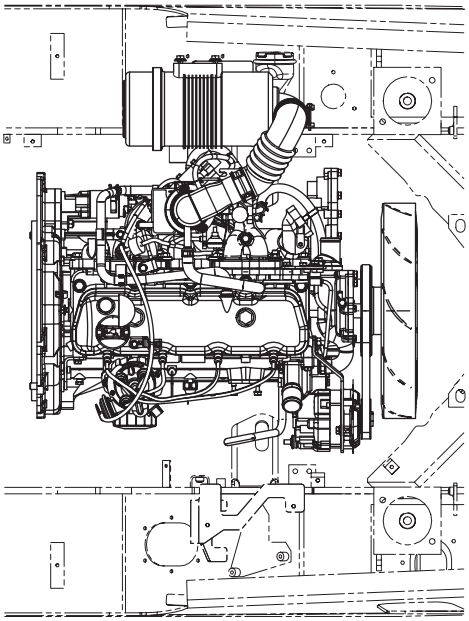

5. Radiator, Shroud and Exhaust Pipe

4D92E, 4D94LE, 4D98E

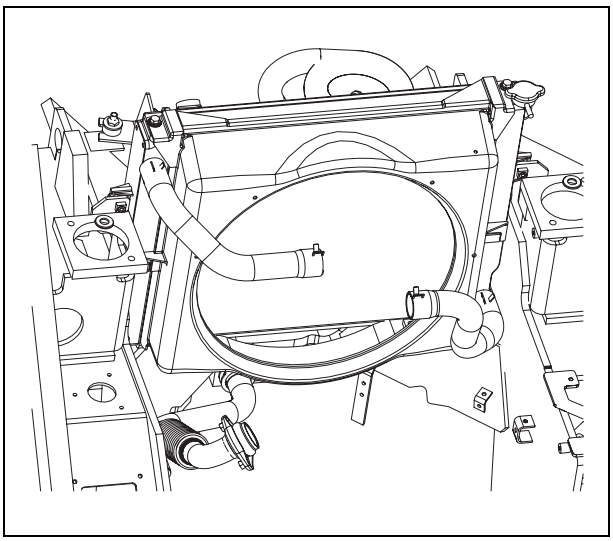

K15, K21, K25

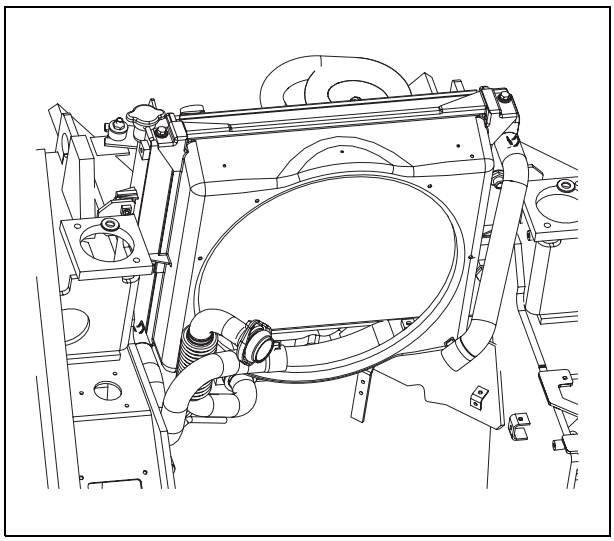

6. Engine

1) Place a wooden block under the transmission case.
2) Crane the engine and hold it.
3) For clutch type trucks, remove the bolts mounting the clutch case.

Clutch Type Forklift Truck

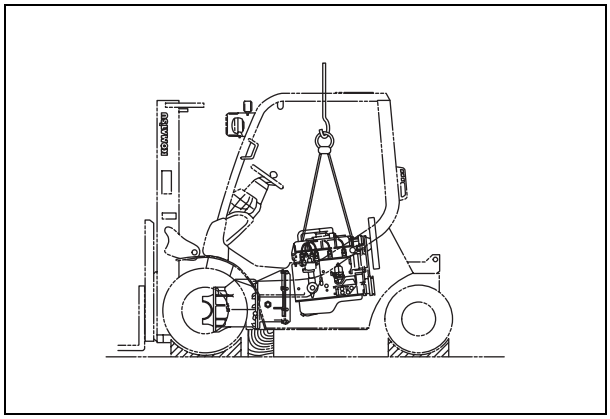

For TORQFLOW type trucks, remove the bolts mounting the torque converter case.

TORQFLOW Type Forklift Truck

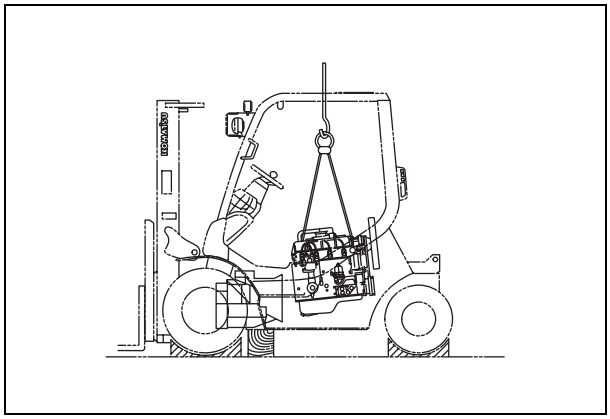

4) Remove the left and right hand bolts mounting the engine.

INSTALLATION

1. Installation of Engine

1) Loosen the bolts mounting the engine located at the transmission side

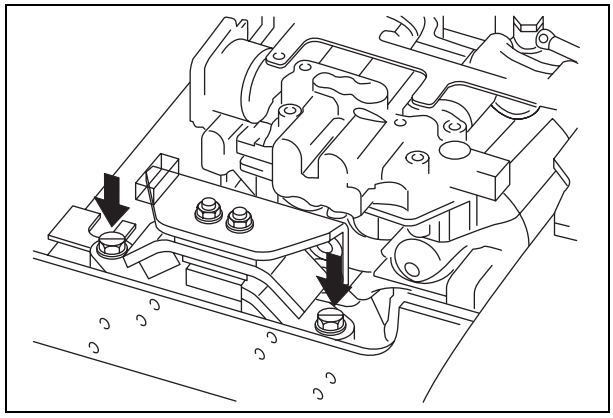

2) Mount the engine slowly to put it on the center of the truck frame.

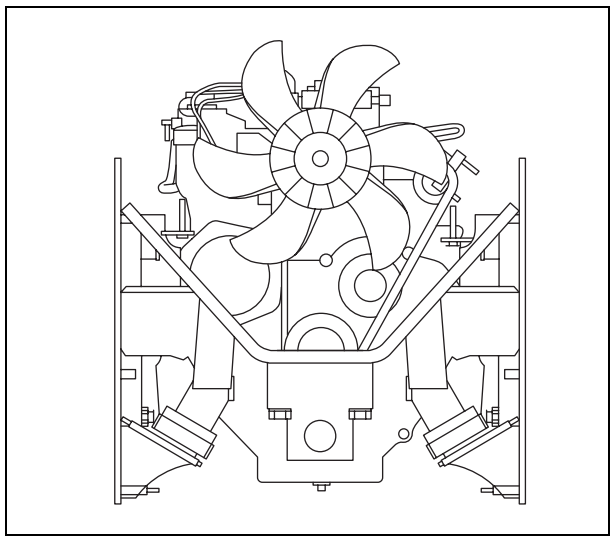

3) Check that the gap **A** between fan and shroud is even.

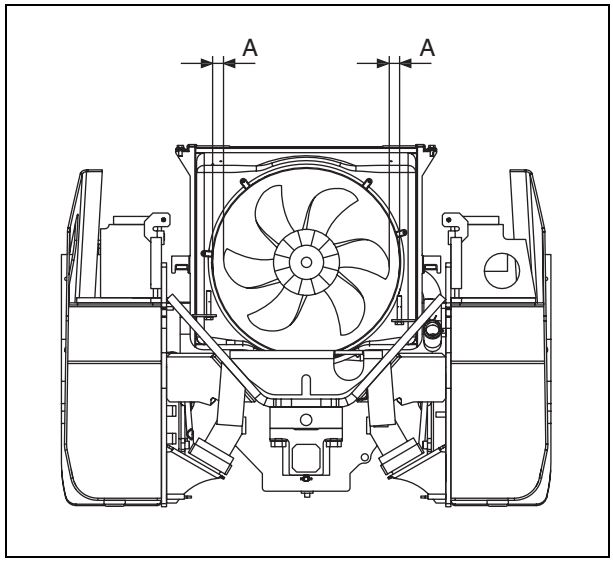

4) For torque converter models, remove the inching valve and check the parallelism with a level. For clutch models, remove the back buzzer and neutral switch, and then check the parallelism of the surfaces with a level.

2. **Tightening Clutch Case Mounting Bolt (Clutch Type)**
   Tightening Torque Converter Case Mounting Bolt (TORQFLOW Type)

kgm	59 – 74 Nm {6 – 7.5 kgm}

Note: The illustration on the right is for clutch type.

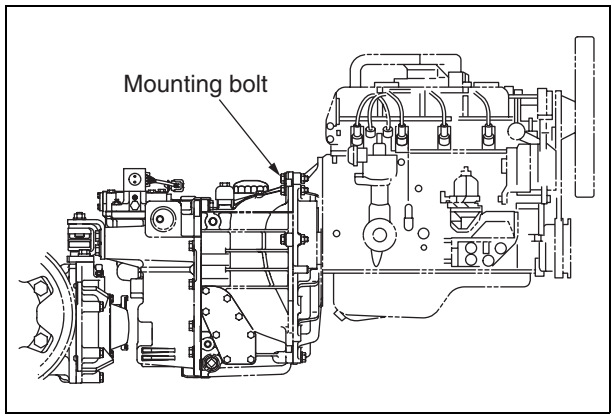

3. **Tightening Torque for Engine Mount Bolt at Transmission Side**

kgm	157 – 196 Nm {16 – 20 kgm}

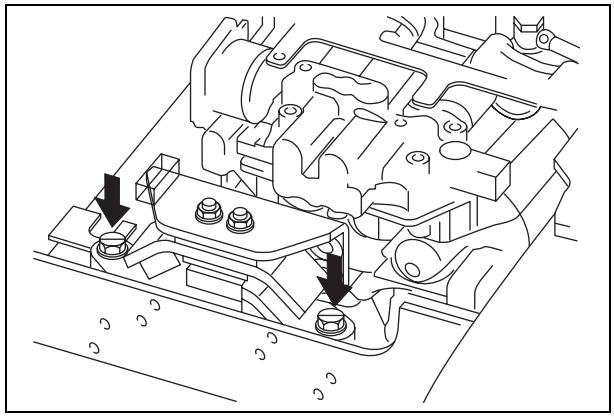

4. **Alignment of Power Train**
   ★ See 30-00: Alignment of Power Train

5. **Tightening Hydraulic Piping**

kgm	See 10-22 STANDARD TIGHTENING TORQUE FOR PIPE JOINTS

6. **Installation of Accelerator Wiring**
   See 20-29 ADJUSTMENT OF ACCELERATOR PEDAL

7. **Tightening Counterweight Mounting Bolts**

kgm	441 – 639 Nm {45 – 65 kgm}

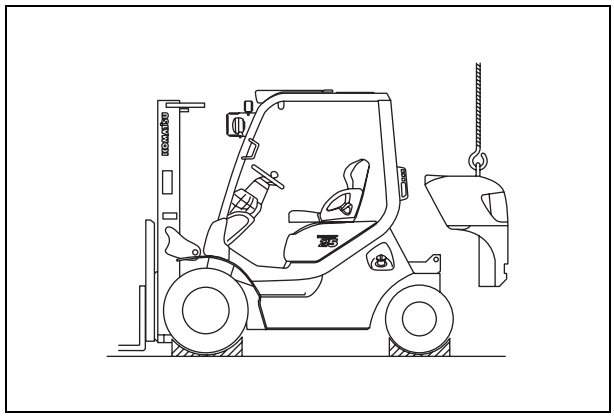

CLUTCH AND TORQUE CONVERTER, TRANSMISSION AND DRIVE AXLE

REMOVAL

1. **Overhead Guard (Ceiling)**
   Engine Hood
   Counterweight

★ When dismantling such devices as the clutch, the toque converter, the transmission and the drive axle, remove the counterweight first to prevent the truck from overturn. Then hoist the truck frame in the front with the crane

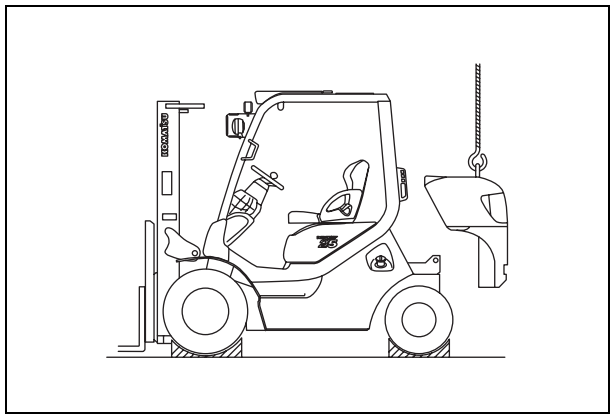

⚠ Check to make sure that the mast including forks and attachment must be lowered or lift down to the ground or removed from the mast.

2. **Mast**

★ See 30-6: Mast

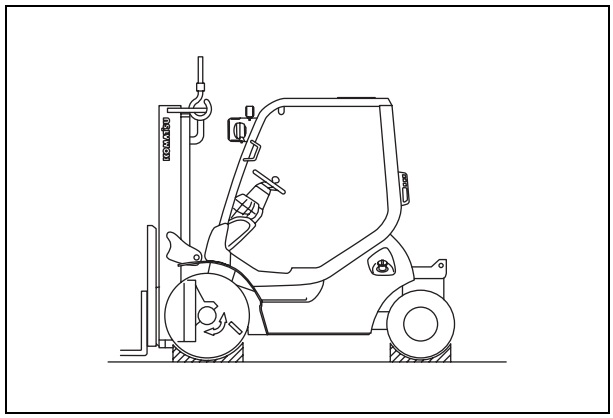

3. Acceleration Cable

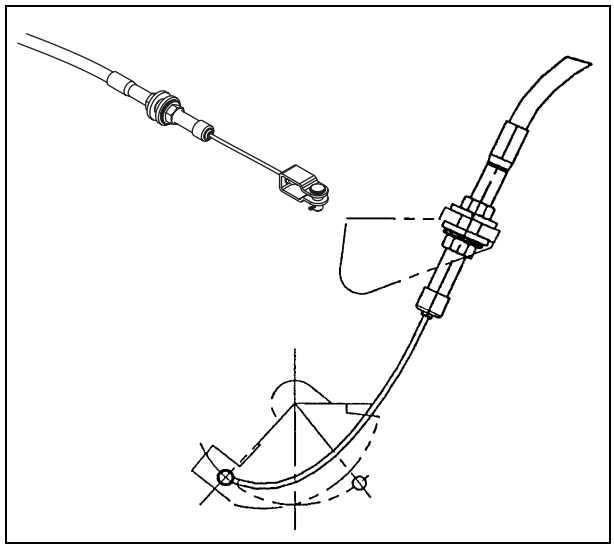

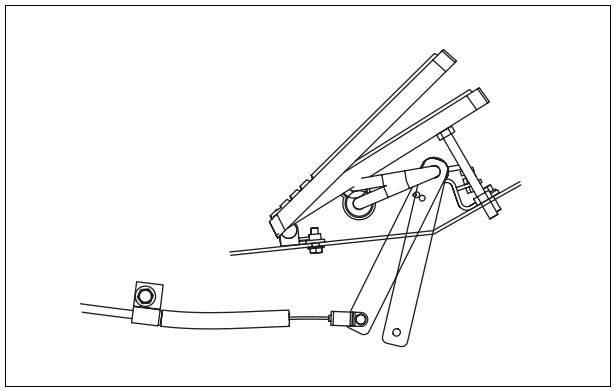

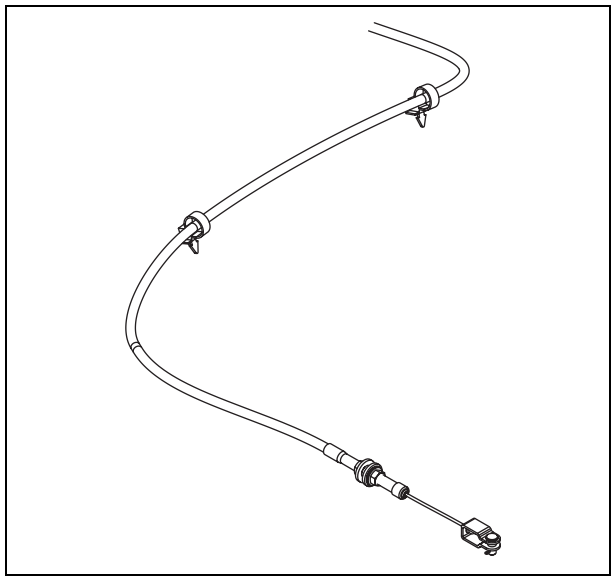

4. Brake Master Cylinder
Brake Piping
Clutch Master Cylinder
Clutch Piping
Parking Brake Lever

	0.30 ℓ (Brake Fluid)

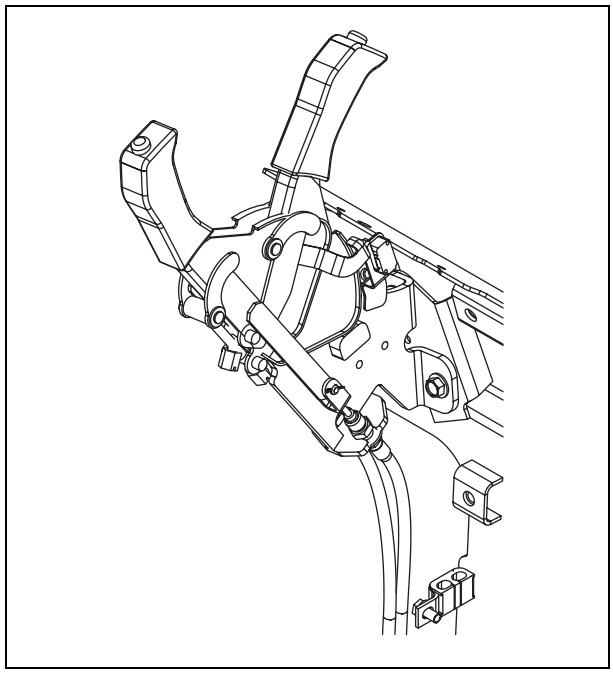

5. Inching Cable (TORQFLOW type)

6. Pedal Assembly

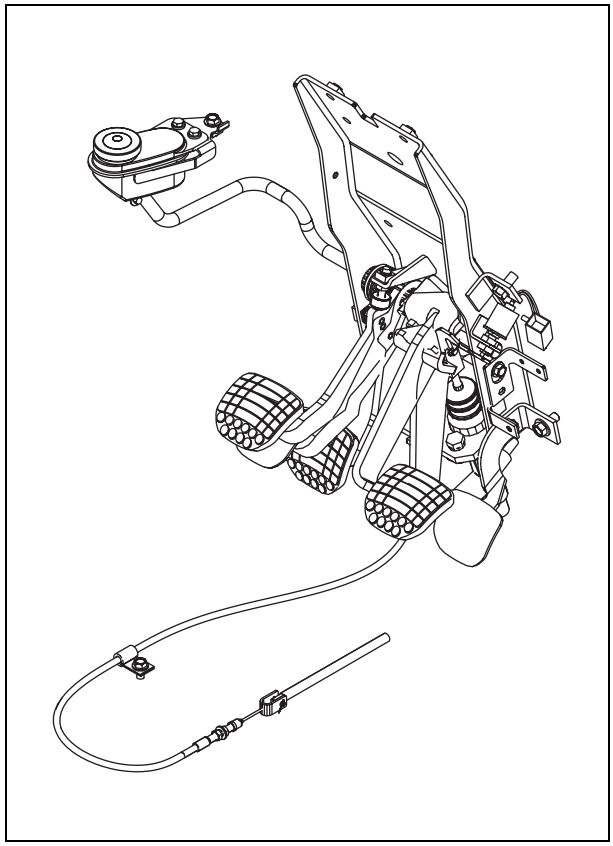

7. Forward/Reverse Control Lever, High/Low Speed Control Lever (Clutch Type)

① High/Low Speed Cable
② Forward/Reverse Cable

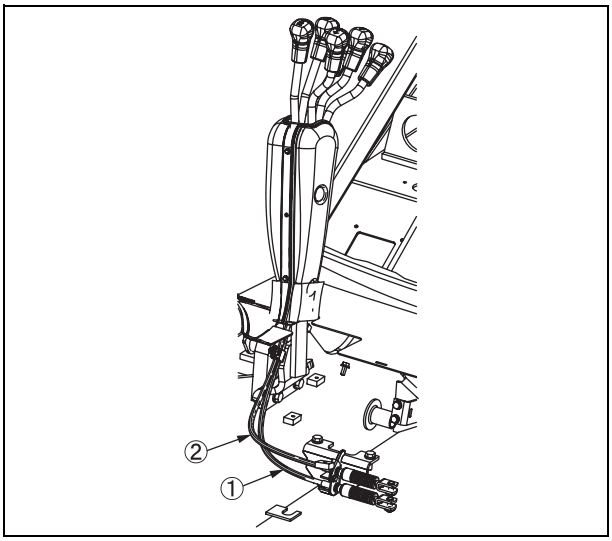

8. Torque Converter Cooler Piping

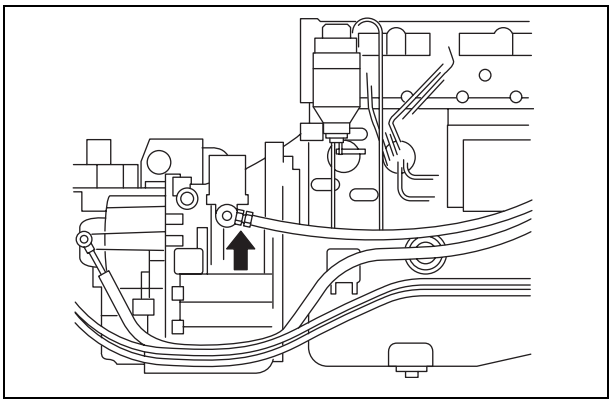

9. Piping

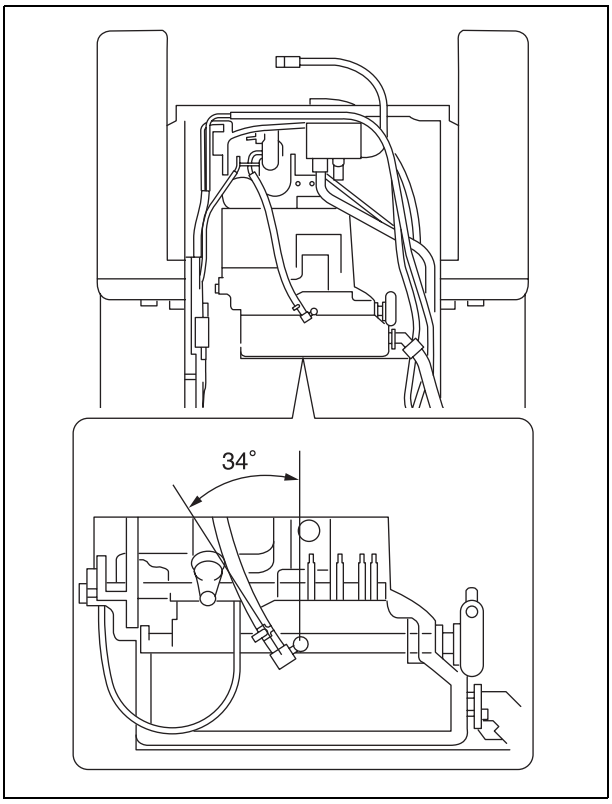

10. Wiring

The figure below shows a gasoline model

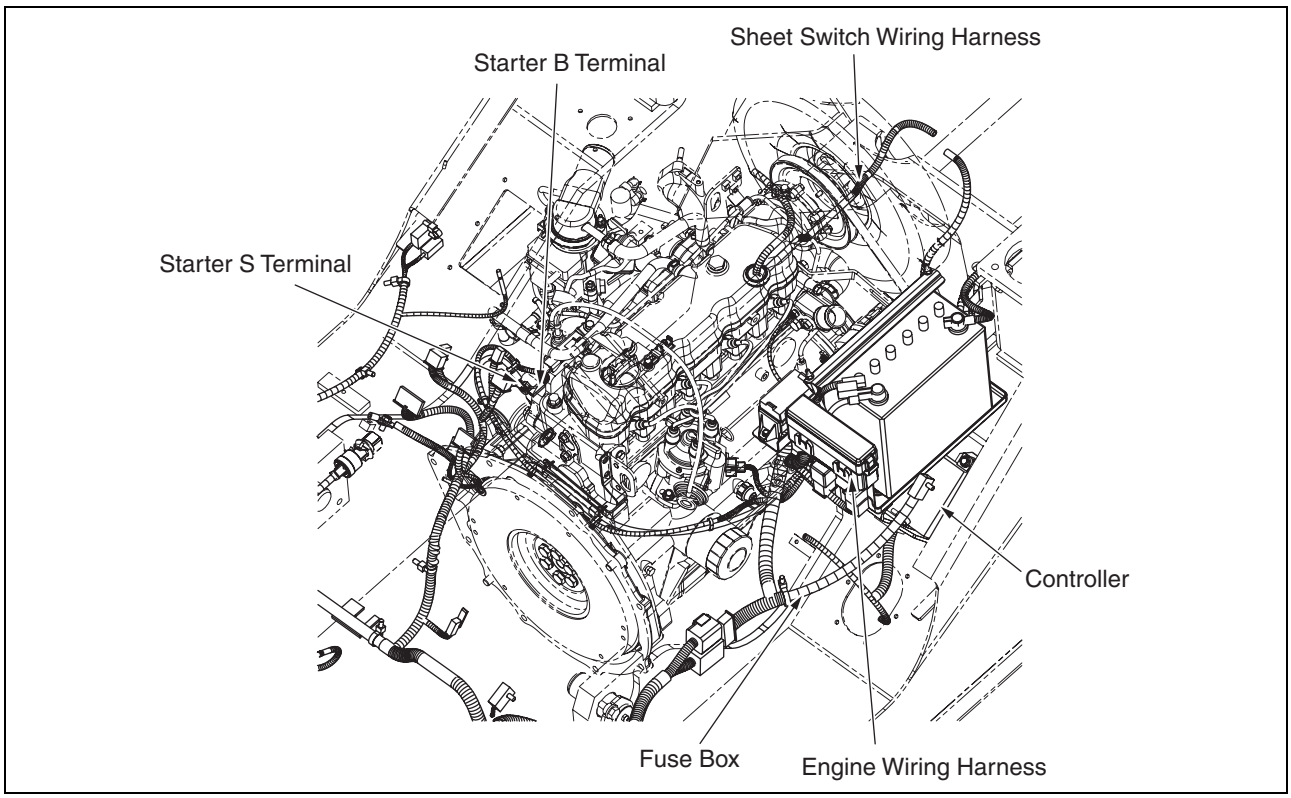

11. Drive Axle

1) Place blocks under the bottom of the truck frame to keep the frame about 10 mm above the ground.
2) Place a carriage as shown in the illustration on the right to support the front axle.

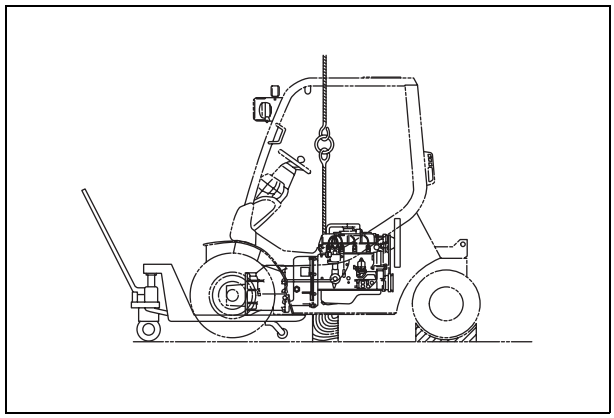

3) Mark (**A**) (**B**) and (**C**) to match the differential and the front axle both on the left and the right.

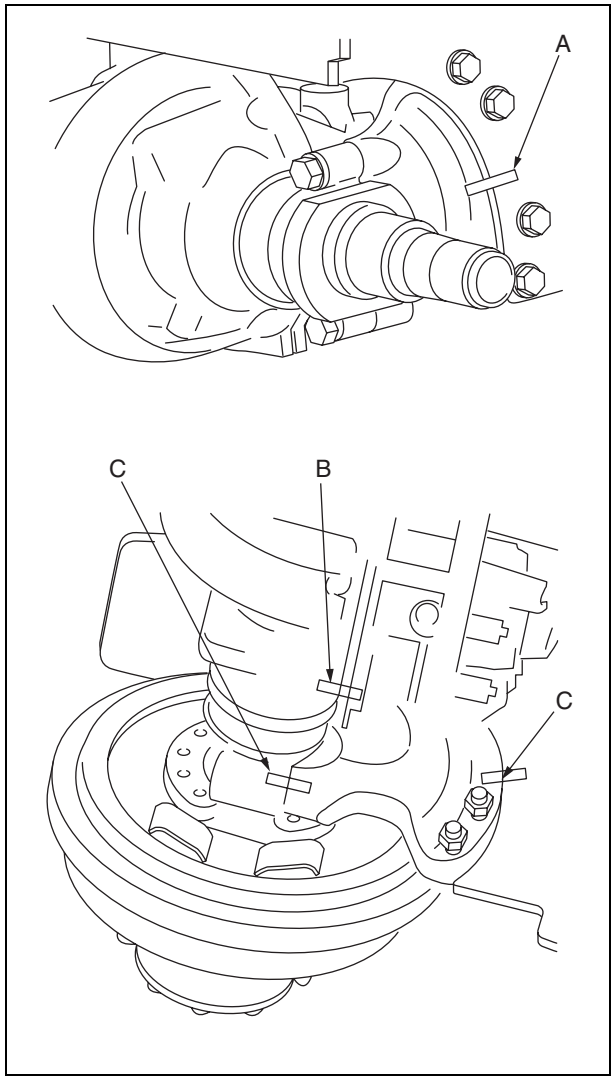

4) Remove the bolts mounting the propeller shaft and remove the propeller shaft.

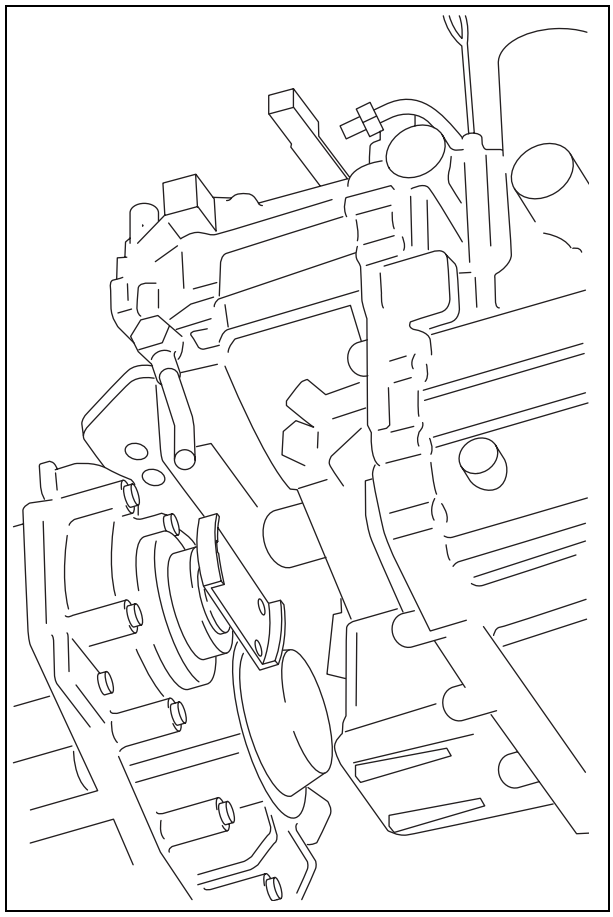

5) Remove the support for the front axle from the frame and pull out the front axle placing on the carriage.

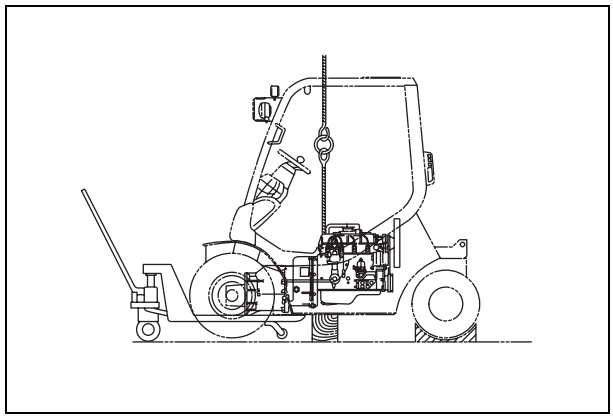

12. Clutch, Torque Converter, Transmission and Drive Axle

1) Hoist the engine with a crane and hold it.
2) Place a carriage as shown in the illustration on the right and support two unit assemblies.
3) Remove the bolts mounting the clutch case. (Clutch Type)
   Remove the bolts mounting the torque converter case. (TORQFLOW Type)

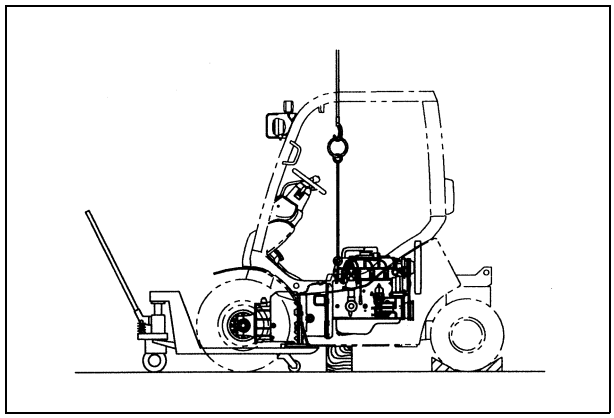

4) Remove the bolts mounting the engine at the transmission side and pull out the two unit assemblies placing on the carriage.

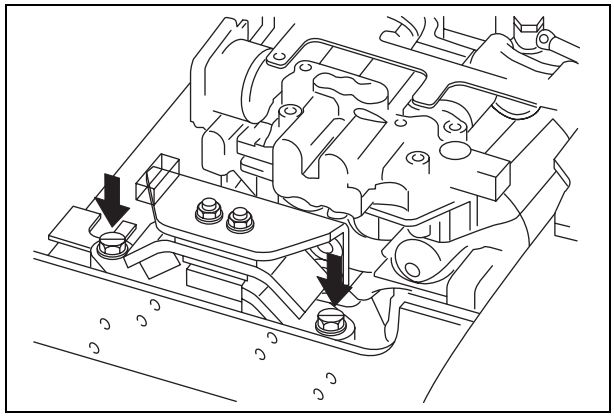

INSTALLATION

Apply the reverse order for removal. Pay attention on the followings:

1. **Tightening Torque for Clutch Case Mounting Bolt (Clutch Type)**
   Tightening Torque for Torque Converter Case Mounting Bolt (TORQFLOW Type)

   Tightening Torque for Mounting Bolt:

kgm	59 – 74 Nm {6 – 7.5 kgm}

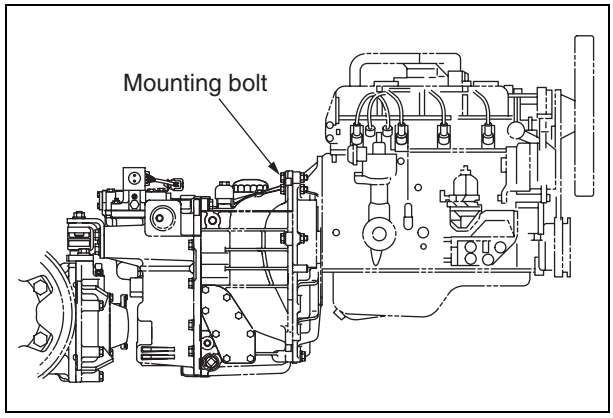

2. **Tightening Torque for Engine Mounting Bolt (Transmission side)**
   Tightening Torque for Mounting Bolt:

kgm	157 – 196 Nm {016 – 20 kgm}

★ Check the engine for placing on the center of engine mounting both left and right at the engine side properly. Then, tighten the bolt mounting the engine at the transmission side.

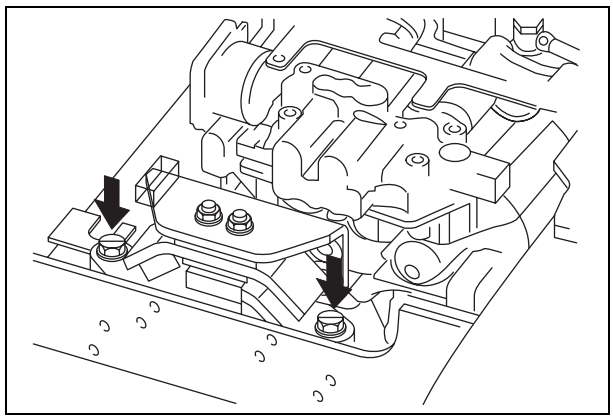

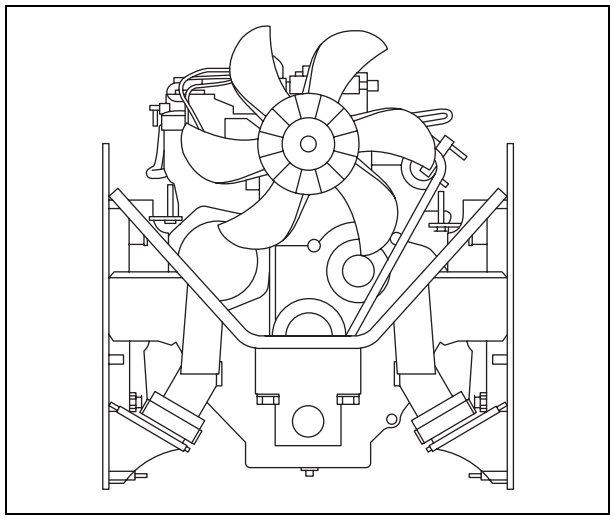

3. Drive Axle

1) Install the drive axle following to the matching marks on the equipment marked at the time of removal.
2) Remove the level plug, and check levelness with a dedicated tool and a level

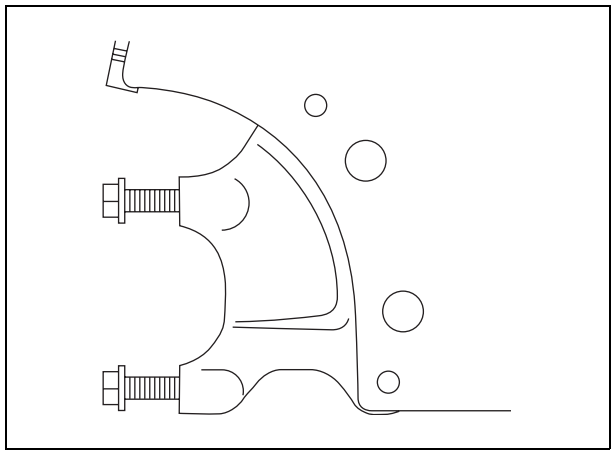

Tightening Torque for Front Axle Support Bolts

kgm	343 – 427 Nm {35 – 43.5 kgm}

★ Alignment of Power Train: See 30-28

★ If no matching marks can be found, tighten temporarily the front fix bolts with the front axle. Then tighten the two mounting bolts on the support side and check the remaining two bolts for the correct positioning toward the center accordingly.

4. Propeller Shaft

Tightening Torque for Propeller Shaft Mounting Bolts

kgm	32.4 – 38.2 Nm {3.3 – 3.6 kgm}

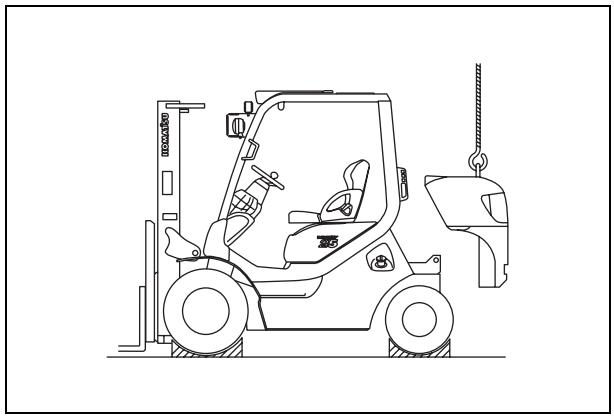

5. Pedal Assembly

Brake Piping

Bleeding Air: See 20-35

Adjustment of Pedal: See 20-26

6. Counterweight

Tightening Torque for Counterweight Mounting Bolts

kgm	441 – 639 Nm {45 – 65 kgm}

7. Mast

Tightening Torque for Mast Cap Mounting Bolts

kgm	1.0 – 1.75 ton	157 – 196 Nm {16 – 20 kgm}
	2.5 ton	245 – 309 Nm {25 – 31.5 kgm}
	2.5 ton (Compact Type) 3.0 ton	343 – 427 Nm {35 – 43.5 kgm}
	3.5 ton	490 – 608 Nm {50 – 62 kgm}

ALIGNMENT OF POWER TRAIN

★ When removing the power train (front axle or Transmission/engine), always be sure to take an alignment between the front axle and the transmission.

Measurement of Alignment

1. Prepare the tools as shown bellows.
- (a) Special tool for remove/install back lamp/Neutral switch for manual transmission.
- (b) Block for Water level meter for manual transmission
- (c) L-Type block for Axle
- (d) Electric Water level Meter

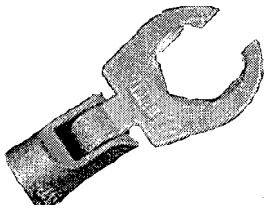

(a) Special tool for Neutral/back lamp switch

(b) Block for Water level meter

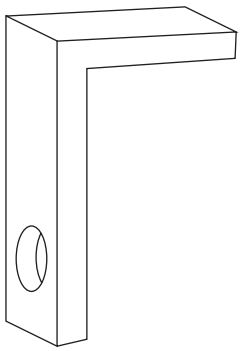

(c) L-Type block for Axle

(d) Electric Water Level Meter

2. Remove Oil Level Plug from Front Axle and install the L type block by Plug.
Then put Electric water level meter and measure leaning angle of front axle.

3. Measure leaning angle of Engine/Transmission.
- Manual Transmission
  Remove the Neutral switch/ Back lamp switch from transmission.
- Automatic Transmission
  Remove transmission control valve.

Then put electric water level meter on the machining surface of transmission as above.
And reading the leaning angle of transmission.

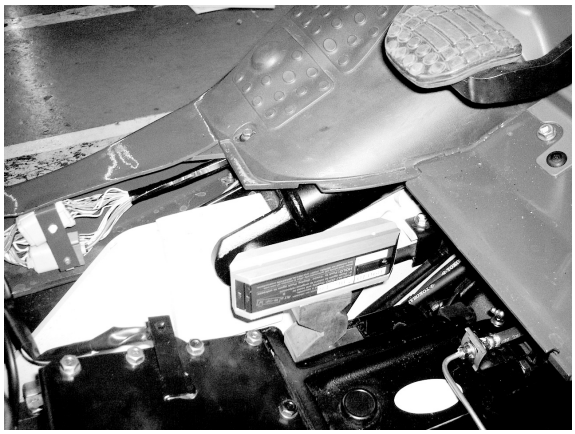

(for Manual transmission)

4. Service limit of leaning angle of Transmission and Front axle.

Maximum 0.5degree between Transmission/Axle leaning.

5. When angle of leaning is more than 0.5 degree, its shows wrong position in either the front axle or engine/transmission.
Check he engine mounting and axle mounting.

STEERING AXLE AND POWER STEERING

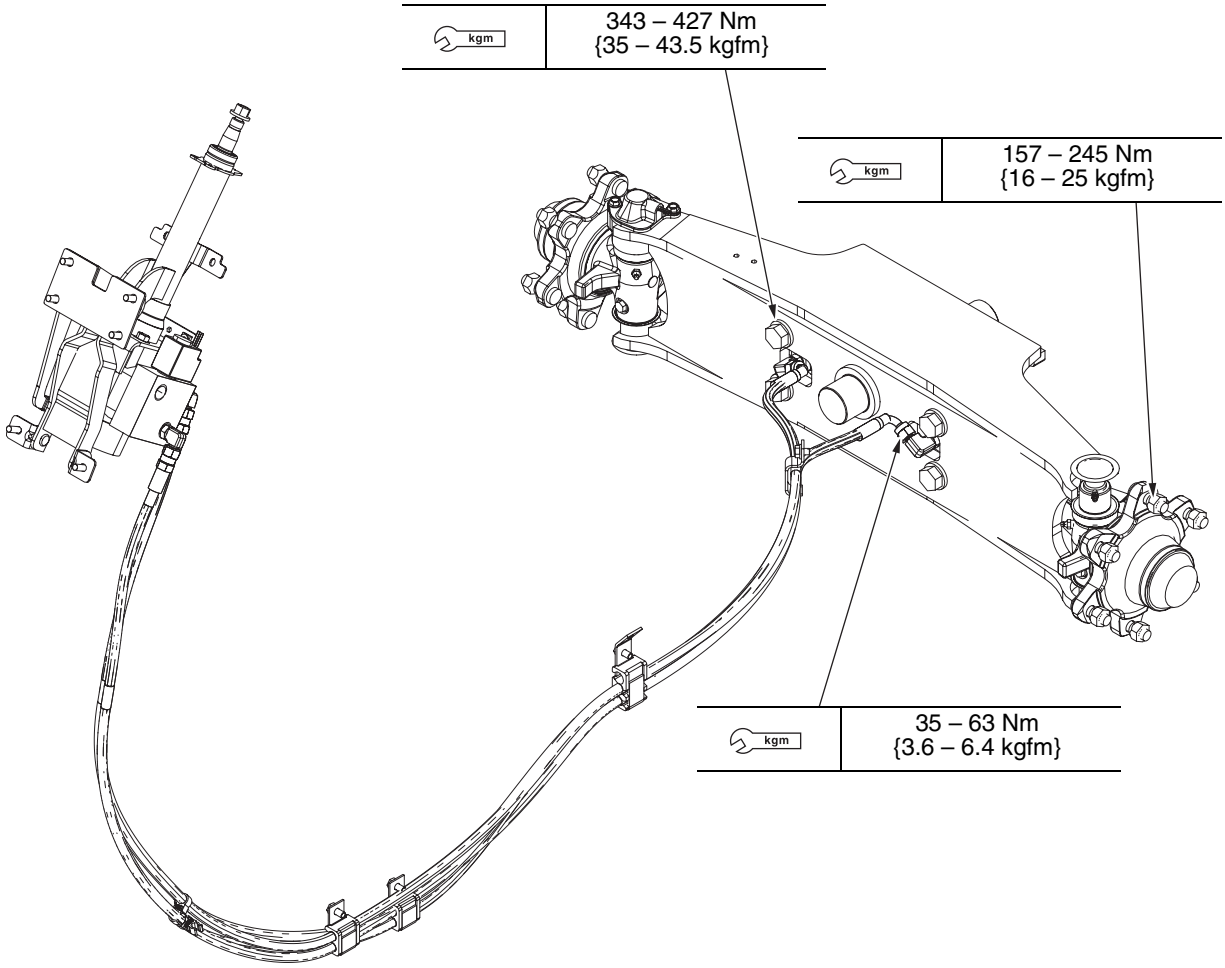

WHEEL BRAKE

REMOVAL

1. Front Axle and Torque Shaft

1) Apply the wheel stopper to the rear wheels.
2) Place the wooden blocks under the bottom of the truck frame to lift the front wheels.
3) Apply the parking brake.

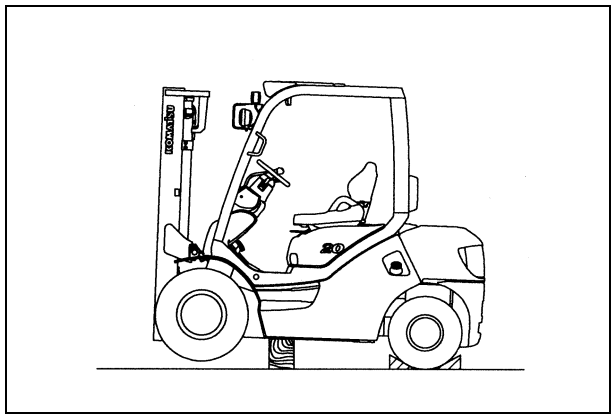

4) Remove the hub nut and then the torque shaft (**3**).
5) Release the parking brake.

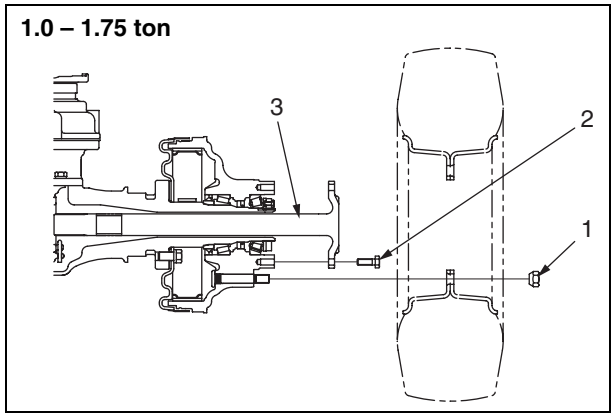

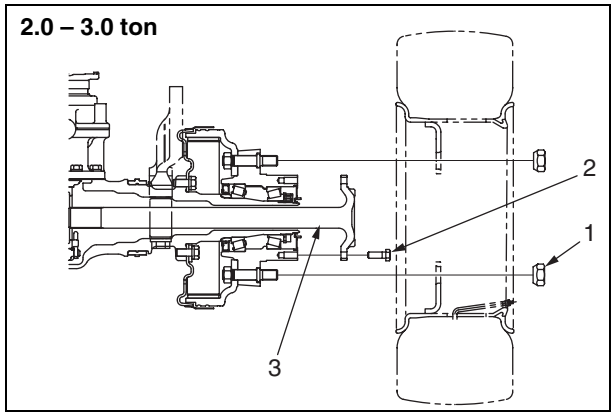

2. Hub

1) Remove the bolt (**4**).
2) Remove the lock nut (**5**) with a special tool (80 mm double face box).
3) Remove the hub not to be twisted upside down.

1.0 – 1.75 ton

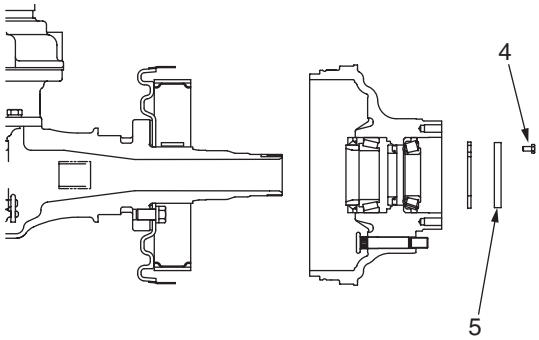

2.0 – 3.0 ton

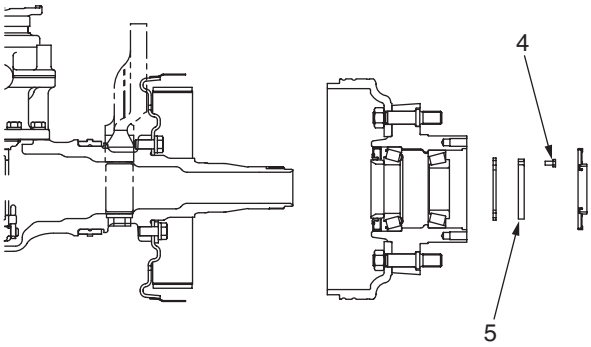

INSTALLATION

1. Back Plate (when removed)

Apply the Loctite to the mounting bolt (**1**) and tighten it with tightening torque specified as follows:

kgm	176 – 196 Nm {18 – 20 kgm}
	LOCTITE #271

1.0 – 1.75 ton

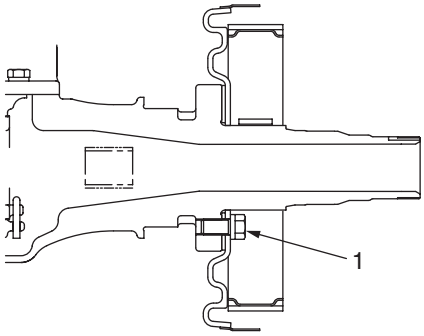

2.0 – 3.0 ton

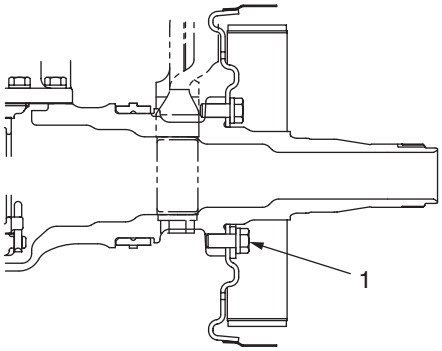

2. Hub

1) Install a new oil seal.

★ Apply the grease G2-L1 on the lip surface of the oil seal.

2) Fill the grease G2-L1 in the bearing (**7**) and install it to the hub (**8**).

3) Remove dirt or fat and oil in the inside face of the brake drum (**9**) completely.

4) Install the hub to the shaft tube.

5) Tighten the locknut (**5**) so that the starting torque of the hub can conform to the following.

Starting Torque	6.1 – 15.7 Nm {62.5 – 160 kgm}

6) Tighten the bolt (**4**) after applying the Loctite.

	Loctite #271

1.0 – 1.75 ton

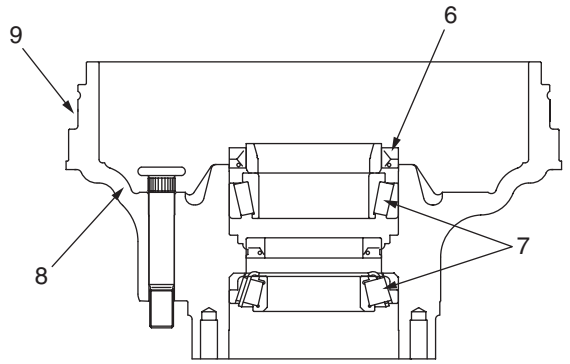

2.0 – 3.0 ton

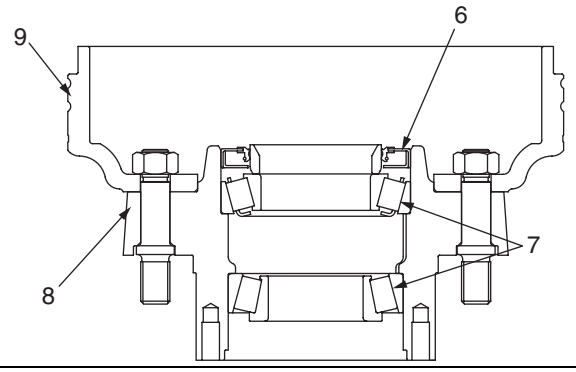

1.0 – 1.75 ton

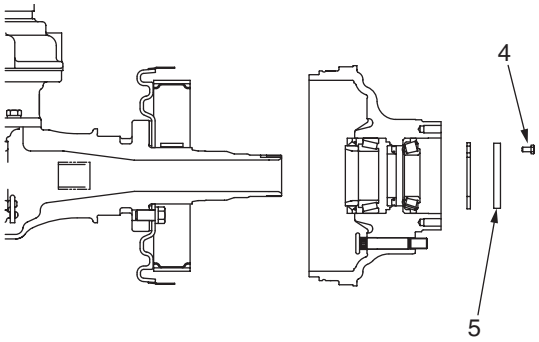

2.0 – 3.0 ton

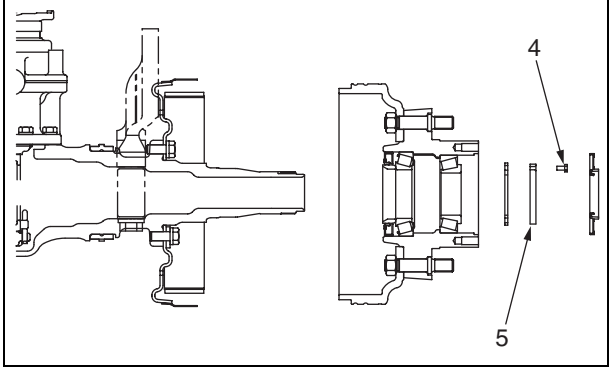

3. Front Axle and Torque Shaft

1) Install the torque shaft (**3**) and tighten the bolt (**2**) with tightening torque specified as follows:

kgm	98 – 127 Nm {10 – 13 kgm}

2) Install the front axle and tighten the hub nut (**1**) with tightening torque specified as follows.

kgm	294 – 490 Nm {30 – 50 kgm}

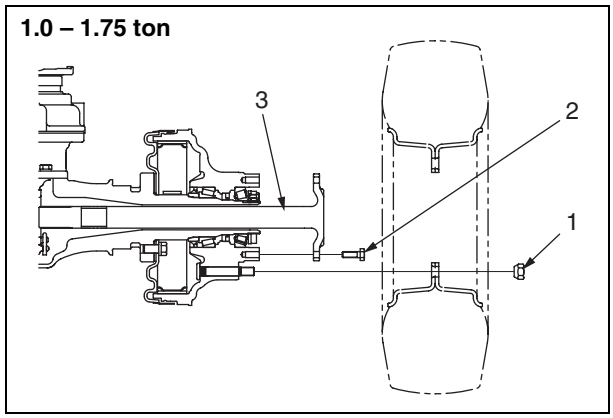

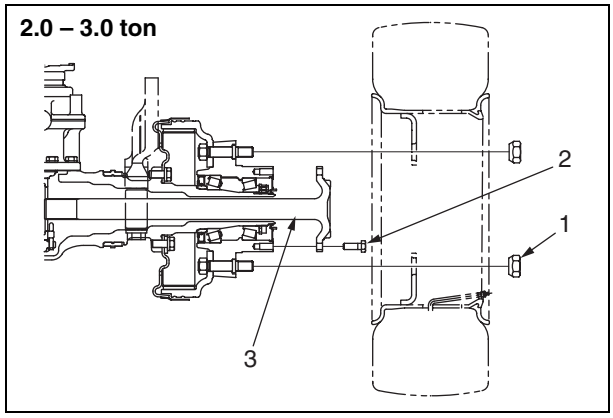

40. DISASSEMBLY AND ASSEMBLY

CLUTCH 40-2
CLUTCH MASTER CYLINDER 40-4
CLUTCH Booster assembly 40-9
CLUTCH TRANSMISSION 40-19
TORQUE CONVERTER 40-26
TORQFLOW TRANSMISSION 40-41
DIFFERENTIAL 40-50
DIFFERENTIAL ASSEMBLY DRAWING 40-58
WHEEL BRAKE 40-64
BRAKE MASTER CYLINDER.....40-67
COMBINATION SWITCH 40-71
SOLENOID VALVE.....40-73
STEERING VALVE.....40-77
STEERING AXLE 40-78
POWER STEERING CYLINDER ASSEMBLY 40-86
LIFT CYLINDER 40-92
TILT CYLINDER.....40-99
CONTROL VALVE.....40-101
MAST 40-112
FORK CARRIAGE 40-118
FLOW DIVIDER 40-122
RESERVOIR AASEMBLY 40-126
HYDRAULIC PUMP 40-127
PROPELER SFAFT 40-133

CLUTCH

DISASSEMBLY AND ASSEMBLY

*1. Apply a thin layer of the MOLY-PASTE when assembling.

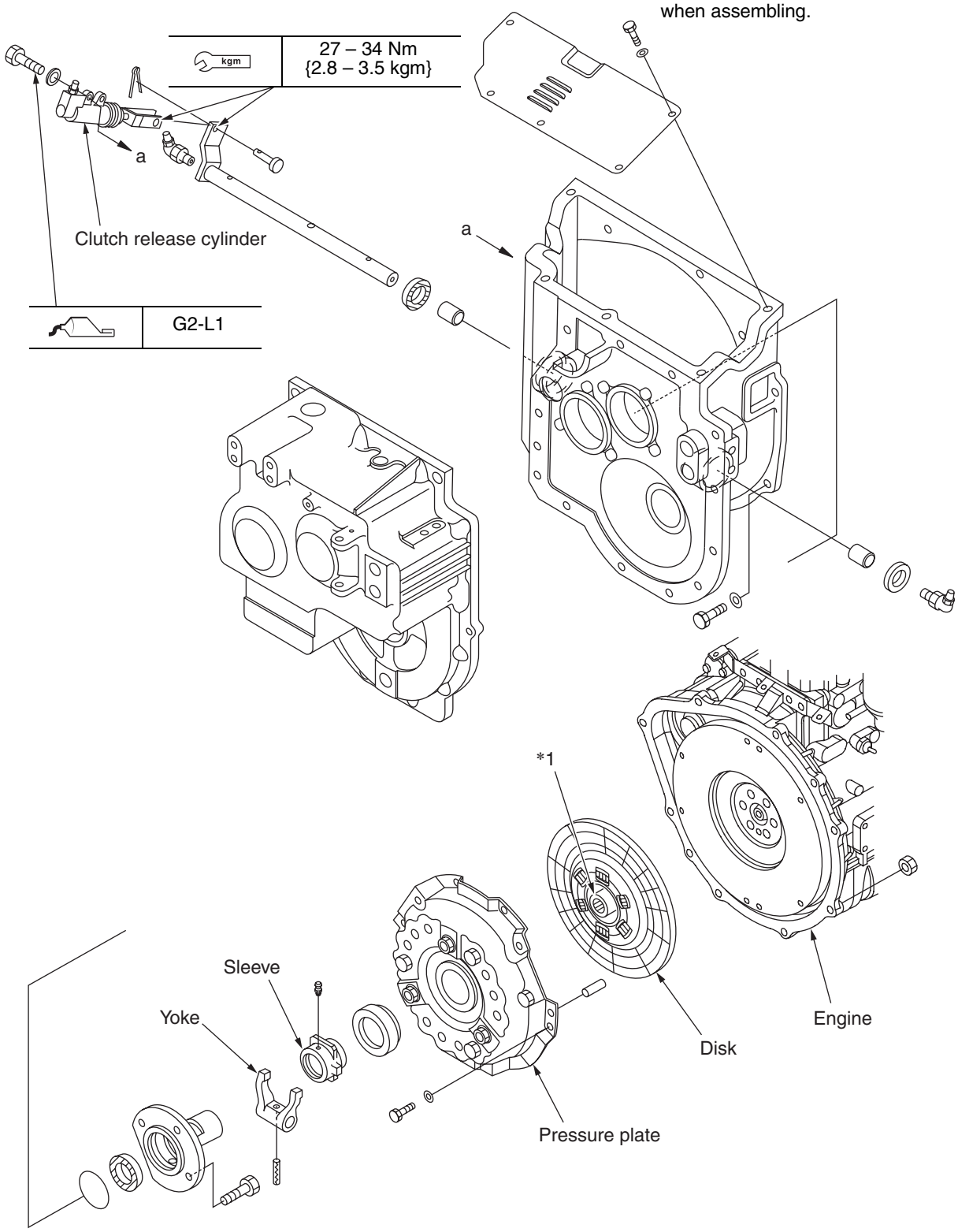

CLUTCH ASSEMBLY DRAWING

*1: Bolt Thread
*2: Remove the bolt after installation.

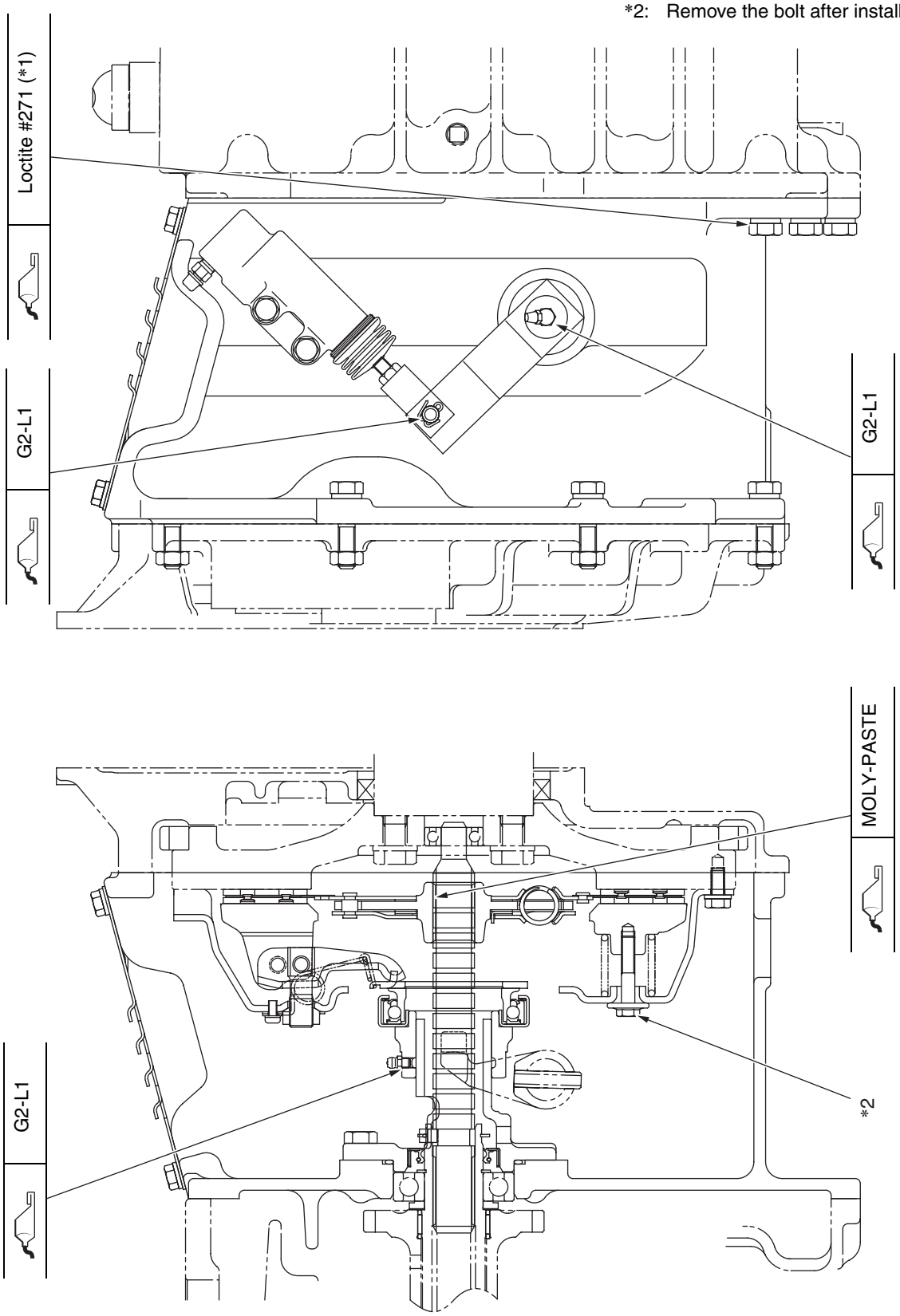

CLUTCH MASTER CYLINDER

COMPONENT PARTS

Ref. No.	Part Name	Q'ty
1	Cylinder	1
2	Piston Assembly	1
3	Stop Plate	1
4	Snap Ring	1
5	Boot	1
6	Push Rod	1
7	Nut	1
8	Yoke	1
9	Bushing	1
10	Filler Union	1

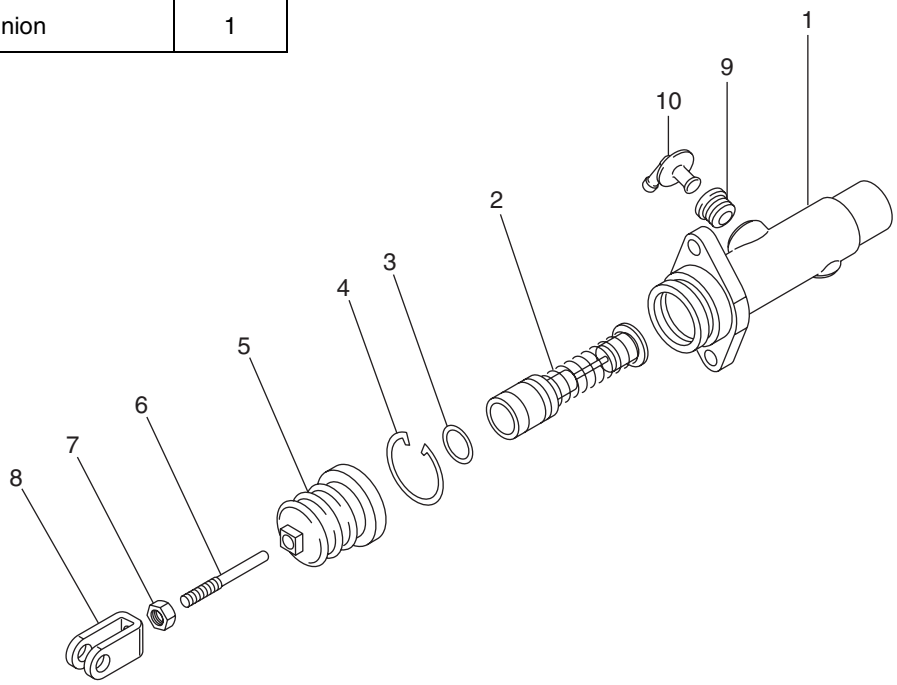

Unit: mm

No.	Check Item	Standard Size	Repair Limit	Remedy	Ref. No.
1	Clearance between Cylinder and Piston	0.016 – 0.086	0.15	Replacement (Cylinder Assembly)	1, 2
2	Tightening Allowance of Cup	Primary side: approx. 0.9 Secondary side: approx. 0.9	0.4	Replacement (Piston Assembly)	2
3	Spring Free Length	75	67.5	Replacement	2

1. DISASSEMBLY

1) Remove the bushing rod and the boot.
2) Remove the snap ring.
3) Remove the stop plate and the piston assembly.

2. Disassembly of Filler Union

1) Lift up the filler union holding the hose connection.
2) Insert the screw driver (negative type) between the bushing (**9**) and the cylinder (**1**) to remover the bushing.

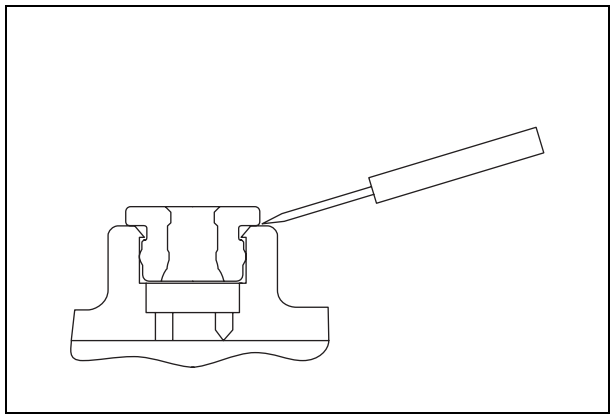

WARNING

- Be careful not to damage the cylinder, the piston or the cup.
- When carrying out disassembly, make sure that you fully understand the structure of the cylinder so that you can lay out the disassembled parts in order.
- Never disassemble the piston assembly.
- Never push the surface of the cylinder with a vise.

INSPECTION AND ADJUSTMENT

Part Name	Check Item	Remedy
Cylinder	Scratches, uneven wear or corrosion of inside surface	• Remove small scratches with sandpaper. • If critical scratches are found to affect adversely the cup, replace it with a new cylinder assembly.
Piston	Scratches, uneven wear or corrosion of sliding section	• Remove small scratches with oilstone. • If critical scratches are found to affect adversely the inner face of cylinder or the cup, replace it with a new piston assembly.
	Clearance between cylinder and piston	• If the clearance is greater than the repair limit, replace it with a new one. Repair Limit: 0.15
Cup	Scratches on lip	• Even if the scratches are very small, replace if with a new piston assembly.
	Pitting of cup base	• If harmful pitting is found, replace it with a new piston assembly.
	Wear or swelling	• If abnormal deterioration, wear or swelling is found, replace it with a new piston assembly.
	Tightening allowance	• If it is below the repair limit, replace it with a new piston assembly. Repair Limit: 0.4 Note: The cup belongs to the parts to be replaced periodically. In general, it is recommended that such parts be replaced whenever disassembled.
Cylinder Assembly	Valve rod Valve cup Spring Deformation, scratches or wear of thimble	• If abnormal deformation, scratches or wear is found, replace it with a new piston assembly.

1. Base
2. Lip
3. Base
4. Lip

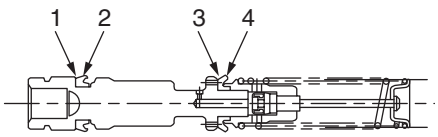

Part Name	Inspection Item	Remedy
Spring	Scratches, wear or fall	• Those of having critical scratches must be replaced with a new one
	Free length	• Those of below the repair limit must be replaced with a new one. Repair Limit: 67.5
Bushing	Cracks or deterioration	• Those of cracks or critical deterioration must be replaced with a new one,
Push Rod	Bend or deformation	• Those of bend or deformation must be replaced with a new one.
Boot	Cracks damage or scratches	• Those of cracks, damage or scratches must be replaced with a new one.
	Tightening allowance between cylinder and rod	• Those of no tightening allowance or an extremely little tightening allowance must be replaced with a new one.
Filler Union	Cracks	• Even if the cracks are extremely small, replace it with a new one.
	Discoloration	• Those of critical discoloration must be replaced with a new one.
	Scratches	• Those of scratches must be replaced with a new one.

MAINTENANCE STANDARD

Unit: mm

No.	Check Item	Standard Size	Repair Limit	Remedy
1	Clearance between cylinder and piston	0.016 – 0.086	0.15	Replacement (Cylinder Assembly)
2	Tightening Clearance of Cup	Primary side: approx. 0.9 Secondary side: approx. 0.9	0.4	Replacement (Piston Assembly)
3	Spring Free Length	75	67.5	Replacement

ASSEMBLY

1. Assembly of Master Cylinder

1) Use alcohol or brake fluid to wash all the parts to be reused.
   Never soak such parts as the cup or other rubber parts for more than 30 seconds when washing in alcohol.
2) Apply rubber grease or brake fluid evenly to the inside face of the cylinder and the outer circumference of the piston.
3) Install the piston assembly and the stopper plate in the cylinder.
4) Install the snap ring while pushing the piston.
5) Assemble the boot and nut in turn to the push rod.
6) Assembly of Filler Union
   - Apply rubber grease or brake fluid to the bushing (**9**) and push it into the fixing position of the cylinder (**1**). Then, push the filler union (10) into the fixing hole of the bushing (**9**).

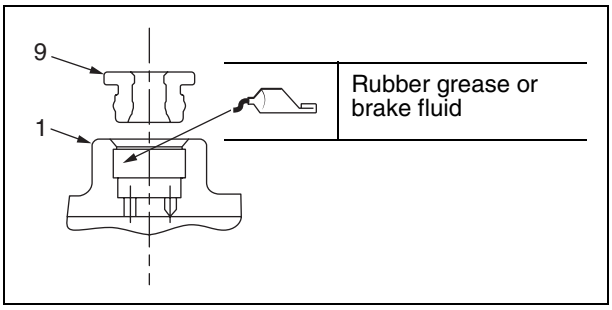

   - Push the filler union (**10**) into mounting hole of the bush (**9**).

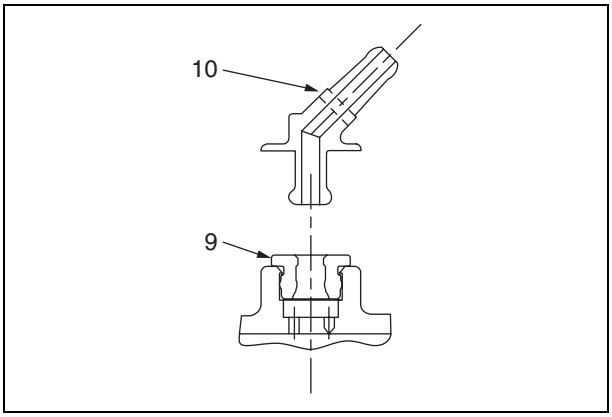

WARNING

- Never use any fluid oil other than alcohol or brake fluid to wash the parts. In particular, never use mineral oil such as petroleum and gasoline. If mineral oil sticks on the rubber parts, they may swell and become unusable.
- Keep the parts in a clean place to prevent the parts from sticking dirt or dust after washing.
- Always keep such parts as the cylinder, the piston or the cup away from any foreign matters that may damage those parts seriously.

CLUTCH BOOSTER ASSEMBLY

COMPONENT PARTS

Ref. No.	Part Name	Q'ty
1	Booster Body	1
2	Piston	1
3	Snap Ring	1
4	Seal	1
5	O-Ring	1
6	Spring	1
7	Piston Guide	1
8	Snap Ring	1
9	Cup	1
10	O-Ring	1
11	Y-Packing	3
12	O-Ring	1
13	Washer	1
14	Pin	1
15	Boot	1
16	Push Rod	1

Ref. No.	Part Name	Q'ty
17	Nut	3
18	Yoke	1
19	Washer	2
20	Backup Ring	1
21	Spring	1
22	Spring	1
23	Cylinder	1
24	Filler Union	1
25	Bushing	1
26	Stud Bolt	2
27	Piston Assembly	1
28	Master Cylinder Assembly	1
29	Valve Assembly	1
30	Booster Piston Assembly	1
31	Ring	1
32	Steal Ball	1

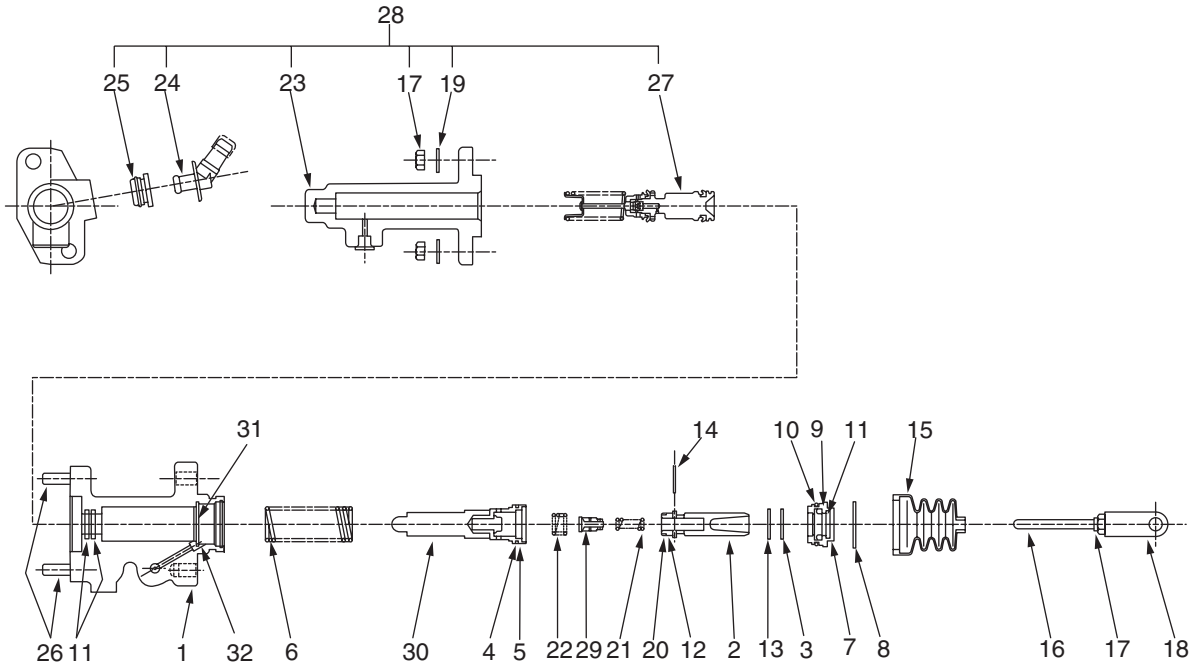

DISASSEMBLY

1. Loosen and remove the bolts mounting the booster and the master cylinder.

★ Be careful not to mix the fluid being used for these parts as the fluid differs each other.

2. Disassembly of Master Cylinder:
1) Remove the piston assembly from the cylinder.
2) If it is hard to remove the piston assembly, apply a sheet of board on the side of cylinder and add low-pressure air from the filler union cup gradually.

WARNING

- Be careful not to damage the cylinder, the piston and the cup with scratches.
- Never disassemble the piston assembly.
- Never soak such parts as the cup or other rubber parts for more than 30 seconds when washing in alcohol.

3. Disassembly of Booster
1) Remove the boot and the push rod.
2) Remove the snap ring.
3) Push the rod from the connection side of the master cylinder and remove the inner part.

WARNING

- Be careful not to damage the cylinder, the piston or the cup with scratches.
- When carrying out disassembly, make sure that you fully understand the structure of the cylinder so that you can lay out the disassembled parts in order.
- Never push the surface of the cylinder with a vise.
- Never remove the seal of the piston or the valves, which must be replaced on assembly basis.

CHECK AND INSPECTION

WARNING

- Never use any oil other than alcohol or brake fluid to wash or clean the parts. In particular, never use mineral oil such as petroleum and gasoline. If mineral oil sticks on the rubber parts, they may swell and become unusable.
- Never soak such parts as the cup or other rubber parts for more than 30 seconds when washing in alcohol.
- Keep the parts in a clean place to prevent the parts from sticking dirt or dust after washing.
- Always keep such parts as the cylinder, the piston or the cup away from any foreign body that may damage those parts seriously.

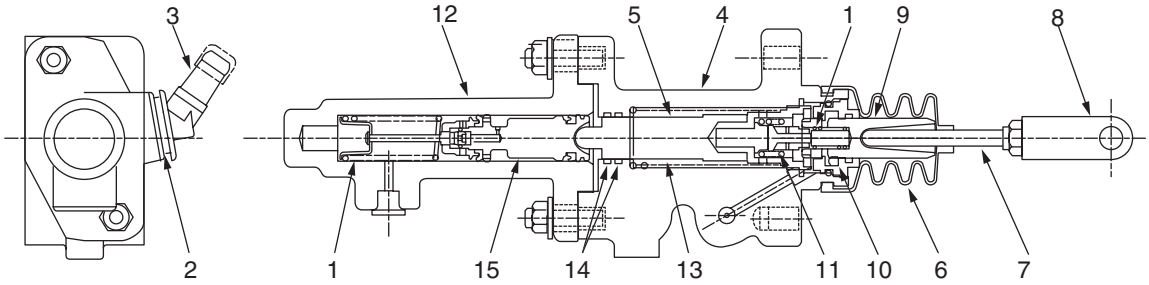

1. Spring
2. Bushing
3. Filler Union
4. Cylinder Body
5. Power Poston
6. Boot
7. Push Rod
8. Yoke
9. Rear Cushion Piston
10. Cup
11. Relief Valve
12. Cylinder
13. Rod
14. Y-Packing
15. Piston Assembly

Booster Side:

No.	Part Name	Check Item	Check Point	Remedy	Ref. No.
1	Cylinder	Scratches on sliding face or wear	Extremely small scratches must be removed with sandpaper. Those of having critical scratches to affect adversely to the seal must be replaced with the cylinder assembly.	Replacement with the booster assembly	12
		Clearance between cylinder and piston	Those of being below the limit must be replaced with a new one.		
2	Power Piston Assembly	Scratches on sliding face or wear	Extremely small scratches must be removed with sandpaper.	Replacement with the booster piston assembly	5
		Damage of seal	Those of having damages or remarkable wear on the seal must be replaced with a new one.		
3	Relief Valve Assembly	Scratches on sliding face or wear	Extremely small scratches must be removed with sandpaper	Replacement with the booster piston assembly	11
		Damage of seal	Those of having damages or remarkable wear on the seal must be replaced with a new one.		
4	Rear Cushion Piston Assembly	Scratches on sliding face or wear	Extremely small scratches must be removed with sandpaper	Replacement with the booster piston assembly	9
		Damage of seal	Those of having damages or remarkable wear on the seal must be replaced with a new one.		
5	Spring	Scratches, wear or fall	Those of having remarkable scratches or wear must be replaced with a new one.	Replacement	1
		Free length	Those of being below the limit must be replaced with a new one.		
6	Rod	Scratches on sliding face or wear	Extremely small scratches must be removed with sandpaper. Those of having critical scratches to affect adversely to the seal must be replaced with the cylinder assembly.	Replacement	13
7	Y-Packing, Cup, O-Ring	Damage of seal	Those of having damages or remarkable wear on the seal must be replaced with a new one.	Replacement	10, 14
8	Push Rod	Deformation and wear	Those of having deformation or remarkable wear must be replaced with a new one.	Replacement	7
9	Boot	Cracks	Those of having cracks must be replaced with a new one.	Replacement	6
		Tightening allowance between boot and cylinder	Those of having any tightening clearance must be replaced with a new one.		

Master Cylinder Side:§

No.	Part Name	Check Item	Check Point	Remedy	Ref. No.
1	Cylinder	Scratches on sliding face or wear	Extremely small scratches must be removed with sandpaper. If having critical scratches to affect adversely to the seal, replace it with the cylinder assembly.	Replacement with the master cylinder assembly	12
		Clearance between cylinder and piston	Those of being below the limit must be replaced with a new one.		
2	Piston Assembly	Scratches on sliding face or wear	Extremely small scratches must be removed with sandpaper.	Replacement with the piston assembly	15
		Scratches on S, P cup and wear	Those of having scratches on the lip must be replaced with a new one.		
		Tightening clearance between piston and cup	Those of being below the limit must be replaced with a new one. (Tightening clearance: 0.4 mm)		
		Scratches on valve cup	Those of having damages or remarkable wear on the seal must be replaced with a new one.		
3	Spring	Scratches, wear or fall	Those of having remarkable scratches or wear must be replaced with a new one.	Replacement	1
		Free length	Those of being below the limit must be replaced with a new one.		
4	Filler Union, Bushing	Scratches, crash or discoloration	Those of having scratches, crash or remarkable discoloration must be replaced with a new one.	Replacement	2, 3

★ the reference numbers in the rightmost column of the table show the part names in the figures on the previous page.

MAINTENANCE STANDARD

Clutch Booster Assembly

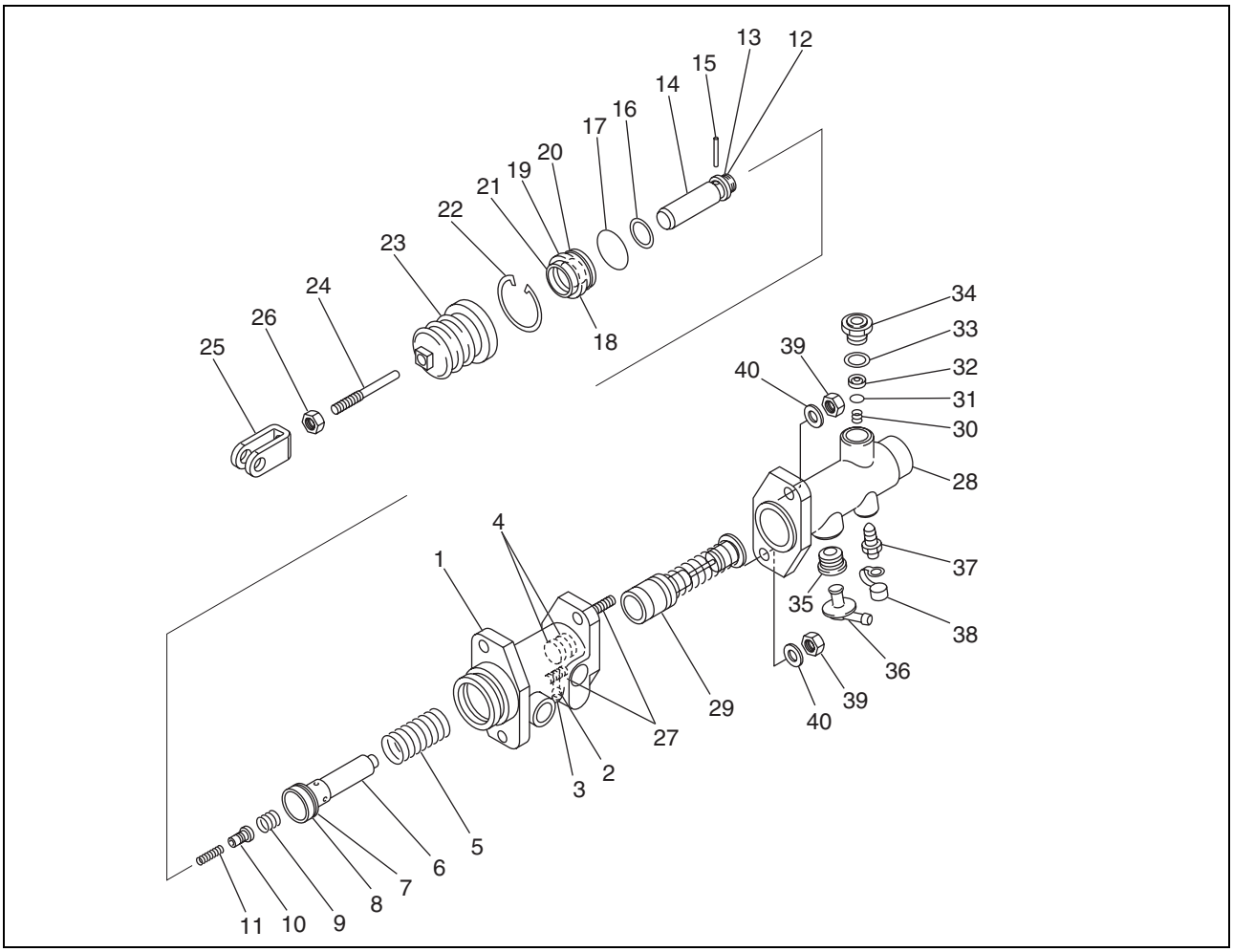

Unit: mm

No	Check Item	Criteria				Repair Limit	Remedy
		Standard Size	Shaft	Hole	Standard Clearance	Repair Clearance	
1	Clearance between cylinder and piston	Ø25.4	-0.020 -0.053	+0.052 0	0.020 – 0.105	0.150	Replacement
2	Clearance between cylinder and piston	Ø22.22	-0.020 -0.053	+0.052 0	0.020 – 0.105	0.150	
3	Deterioration of spring	Free length	Fixing length	Fixing load N (kgf)		Free length	
		25.2	19.5	48.6 (4.9)		22.5	
4	Deterioration of spring	103	63	23.5 (2.4)		92.5	
5	Deterioration of spring	14.8	10	41.1 (4.2)		13	
6	Deterioration of spring	73.6	51.8	41.2 (4.2)		66	
7	Tightening torque	20 – 30Nm (2.1 – 3.1 kgm)					Extra tightening

ASSEMBLY

1. Assembly of Master Cylinder

1) Use alcohol or brake fluid to wash or clean all the parts to be reused.
   Never soak such parts as the cup or other rubber parts for more than 30 seconds when washing in alcohol.
2) Apply rubber grease or brake fluid evenly to the inside surface of the cylinder and the outside circumference of the piston.
3) Assemble the cylinder with the piston assembly, where no snap ring can be used.

WARNING

- Never use any fluid oil other than alcohol or brake fluid to wash or clean the parts. In particular, never use mineral oil such as petroleum and gasoline. If mineral oil sticks on the rubber parts, they may swell and become unusable.
- Keep the parts in a clean place to prevent the parts from sticking dirt or dust after washing.
- Always keep such parts as the cylinder, the piston or the cup away from any foreign body that may damage those parts seriously.

2. Assembly of Booster

1) Use flushing oil or mineral hydraulic oil to wash all the parts to be reused.
   Use mineral hydraulic oil to wash the rubber parts. Never use petroleum or gasoline to wash the rubber parts.
2) Assembling the rear cushion piston:
   - Assemble the O-ring and the backup plate with the rear cushion piston.
   - While matching the relief valve hole with the rear cushion piston hole, push the relief valve into the rear cushion piston. Check to make sure that the both holes are matched. Then, insert the pin.

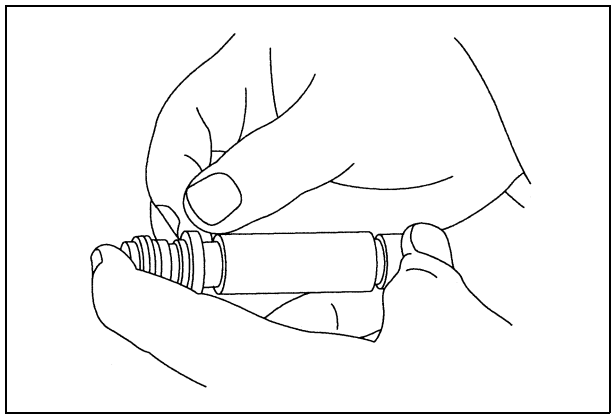

3) Assembling the power piston sub-assembly:
   - Apply the hydraulic oil to the booster piston assembly and the rear cushion piston. Then, install the spring to the booster piston and insert the rear cushion piston into the booster piston.
   - Insert the ring from the side and assemble with the snap ring.

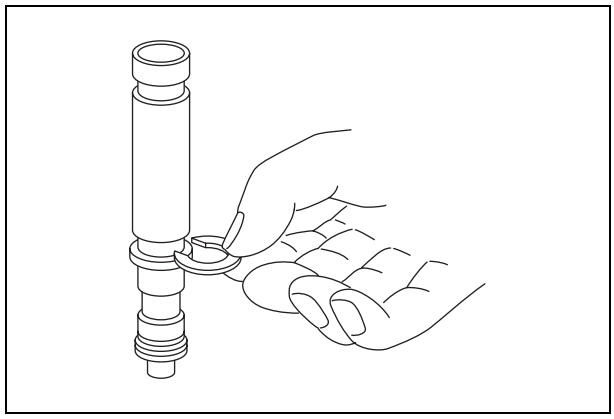

4) Assembling the piston guide:
   - Apply the grease to the cup, the O-ring and the Y-packing. Then, assemble them with the piston guide. Make sure not to make a mistake in assembling direction.

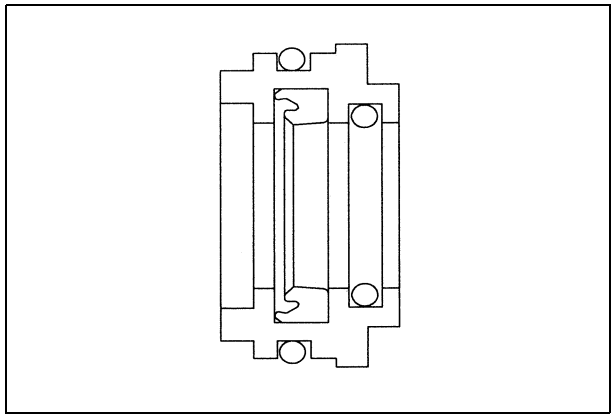

5) Assembling the Y-packing to the piston guide:
   - Apply the grease to the Y-packing. Then, assemble it with the piston guide. Make sure not to make a mistake on its assembling direction.

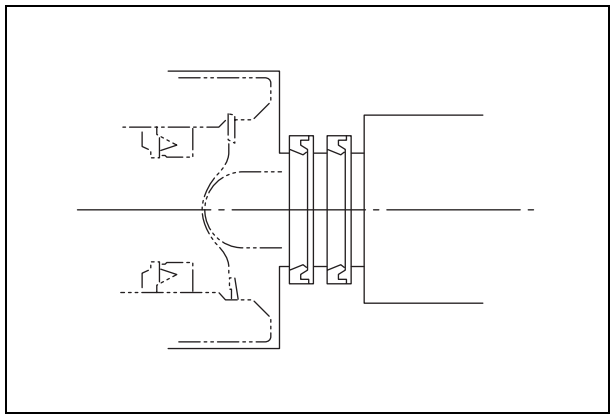

6) Assembling the power piston assembly:
   - Apply the hydraulic oil to the inner face of the body and outer surroundings of the power piston. Insert the spring and the power piston assembly into the cylinder.
   - Pushing the piston guide into the rear cushion piston, check to make sure that the piston is ready for assembling. Then, assemble it with the snap ring.

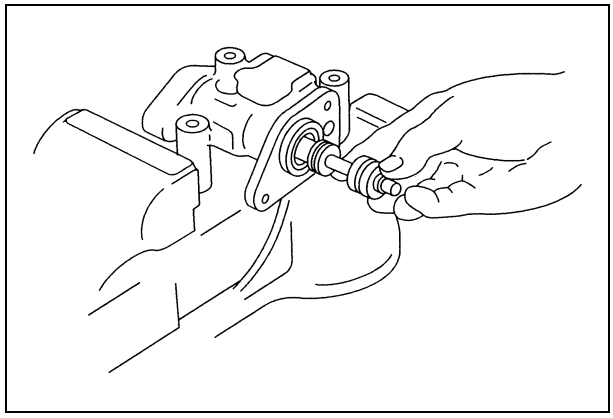

7) Assembling the boot:
   - Pushing the rear cushion piston by hand, check to make sure that it moves smoothly. Then, assemble it with the boot.

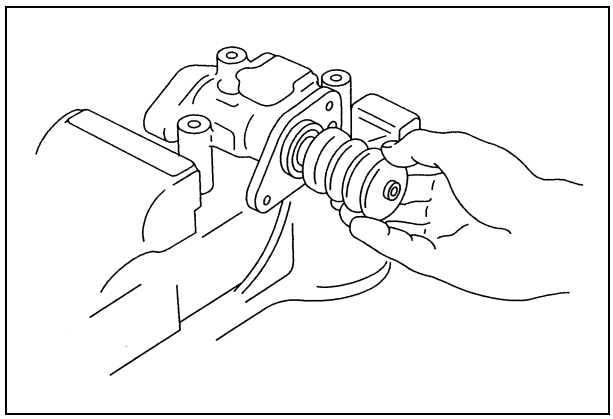

8) Put the push rod and assemble it with the boot, the nut and the yoke in turn.

kgm	8 – 12 Nm {0.8 – 1.2 kgm}

WARNING

- Never use any fluid other than alcohol or brake fluid to wash or clean the parts. In particular, never use mineral oil such as petroleum and gasoline. If mineral oil sticks on the rubber parts, they may swell and become unusable.
- Keep the parts in a clean place to prevent the parts from sticking dirt or dust after washing.
- Always keep such parts as the cylinder, the piston or the cup away from any foreign body that may damage those parts seriously.

3. Assembling the master cylinder:

1) Assemble the booster body with the master cylinder assembly and tighten it with the nut (1) specified as follows:

kgm	20 – 30 Nm {2.1 – 3.1 kgm}

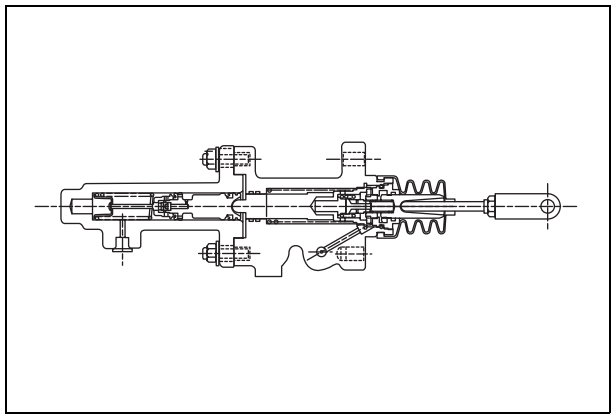

CLUTCH TRANSMISSION

ASSEMBLY

1. Clutch Case

1) Remove the propeller shaft.
2) Remove the F-R and H-L levers (**1**).

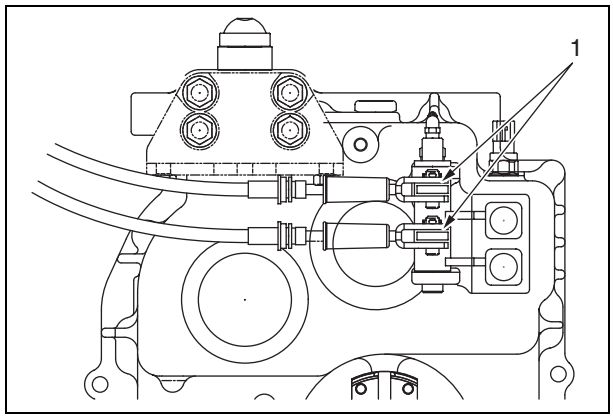

3) Remove the clutch release cylinder (**2**).
4) Remove the bolts (**3**) connecting the clutch case and the transmission case to separate the clutch case.

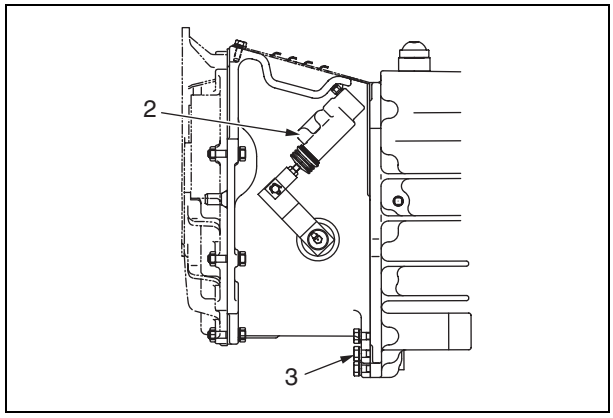

2. Shifter Yoke Lever

1) Remove the bolt to take the shifter yoke shaft out. Then, remove the shifter yoke lever.

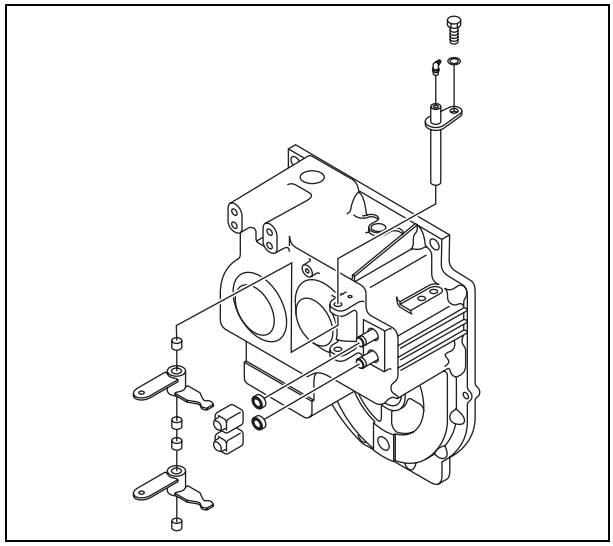

3. Drive Shaft

1) Remove the snap ring (**10**) and pin (**11**) being used to hold the drive shaft at the input shaft.
2) Pull the drive shaft (**12**) out.

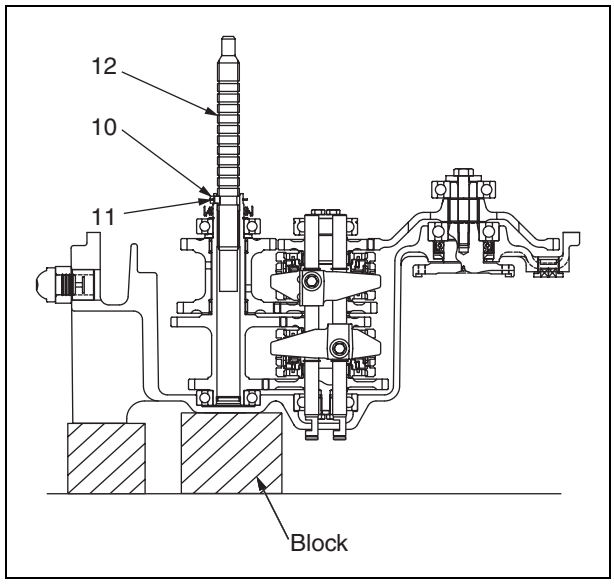

4. Output Shaft

1) Remove the bolt (**1**). Then, remove the bearing (**2**), the gear (**3**), the bearing (**4**), the seal (**5**) and the spacer (**6**) in turn. Finally, remove the output shaft (**7**) from the bottom of the case.

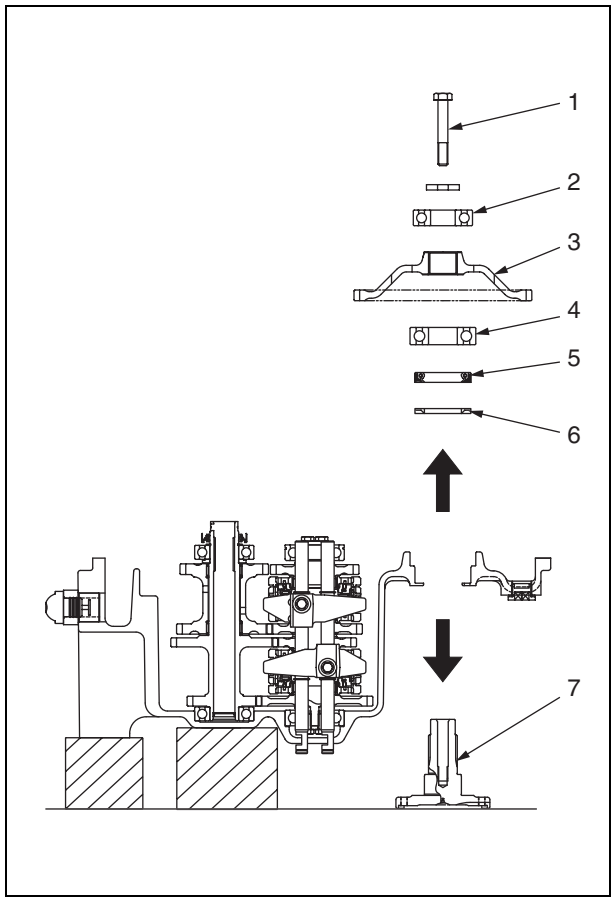

5. Idler Shaft and Shifter Yoke

Pull out the idler shaft assembly (**5**) from the case together with the shifter yoke assembly.

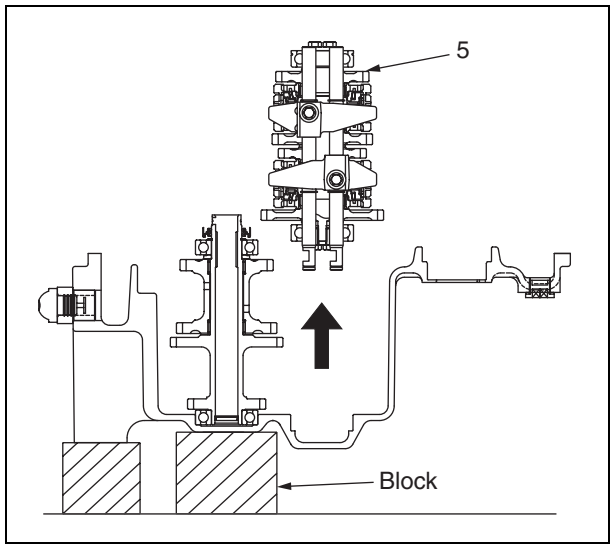

6. Input Shaft and Shifter Yoke

Pull out the input shaft assembly from the case.

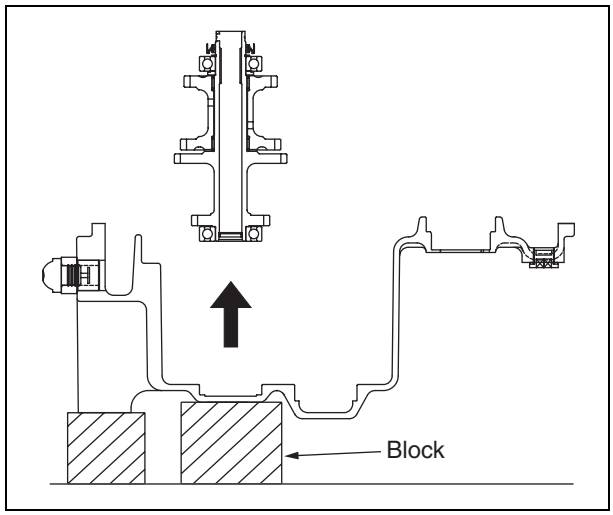

7. Shifter Yoke

Remove the snap ring (**7**) and the bolt (**8**) from the shaft (**6**). Then, remove the yoke (**9**).

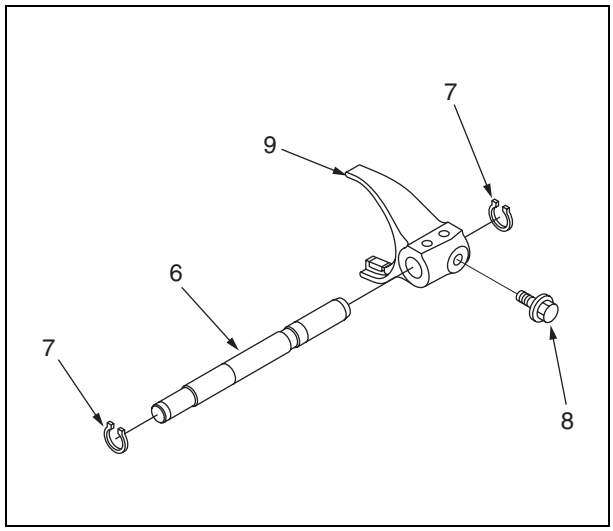

ASSEMBLY

1. Shifter Yoke

Assemble the shifter yoke reversing the steps taken for disassembling.

2. Idler Shaft Assembly

1) Secure the bearing positioning at both ends of the idler shaft with the holder and the bolt.
Tightening Torque for Bolts:

kgm	27 – 34 Nm {2.8 – 3.5 kgm}
	LOCTITE #271 (Thread of Hole)

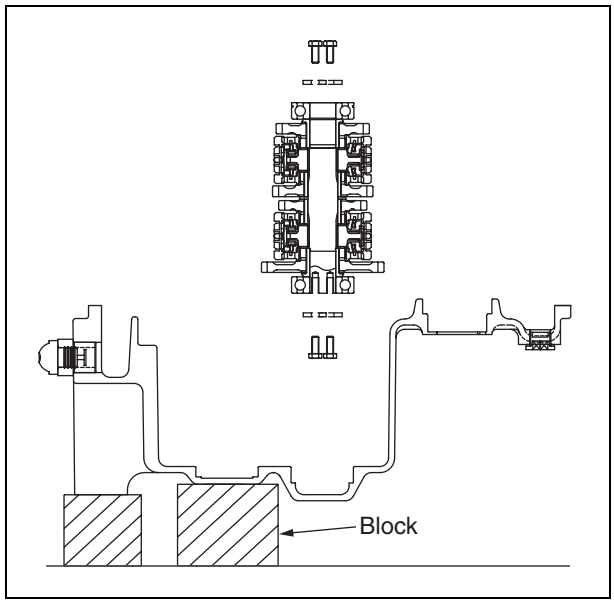

2) Install the idler shaft assembly and the shifter yoke assembly inside the case.

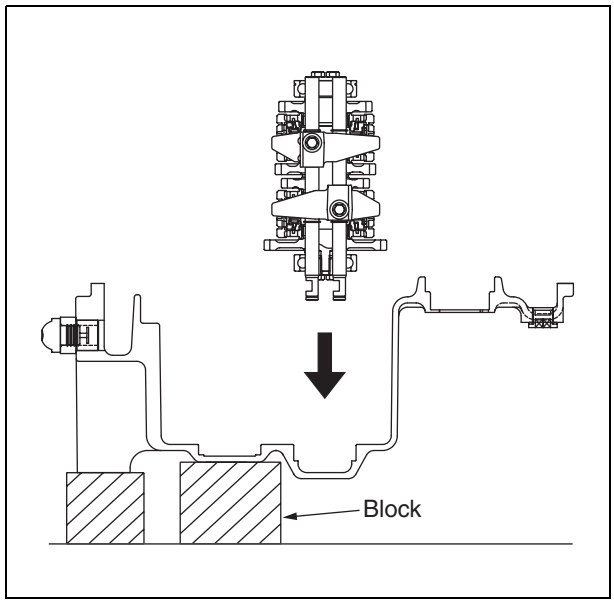

3. Input Shaft

Install the input shaft inside the case.

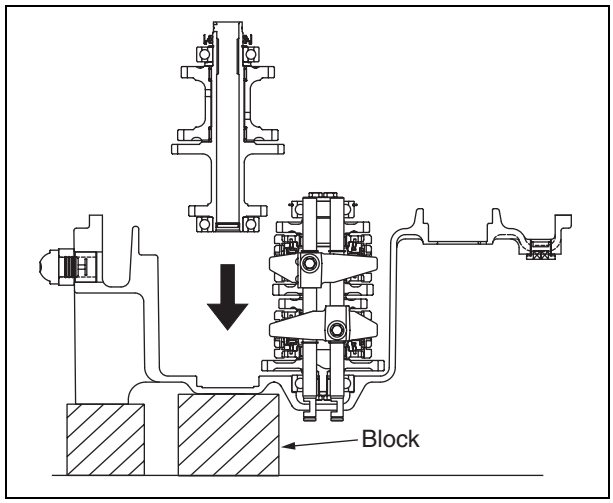

4. Output Shaft

1) Insert the spacer (**6**), the seal (**5**), the bearing (**4**), the gear (**3**) and the bearing (**2**) to the output shaft and secure with the washer and the bolt (**1**).

Tightening Torque for Bolts:

kgm	98 – 123 Nm {10 – 12.5 kgm}
	LOCTITE #271 (Thread of Hole)

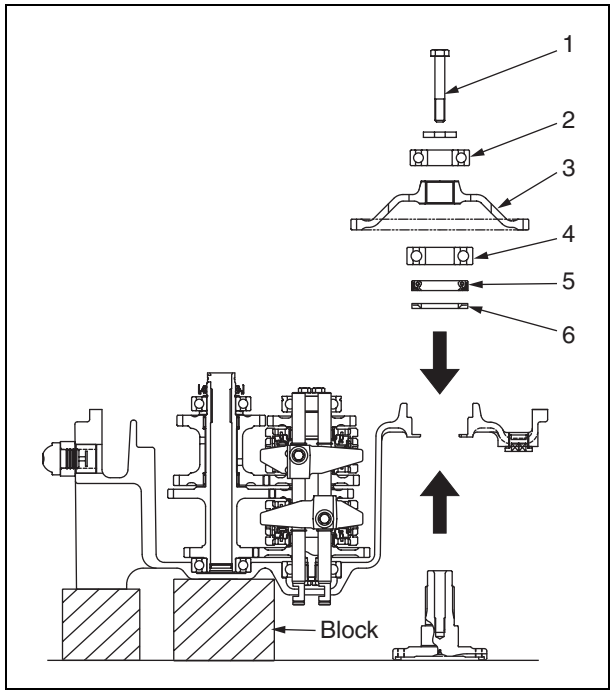

2) Insert the shaft (**7**) and secure with the pin (**8**) and the snap ring (**9**).

★ Apply the shaft with the MOLY PASTE when assembling.

★ After assembling, move the shaft in the axial direction to make sure that it is held in position securely.

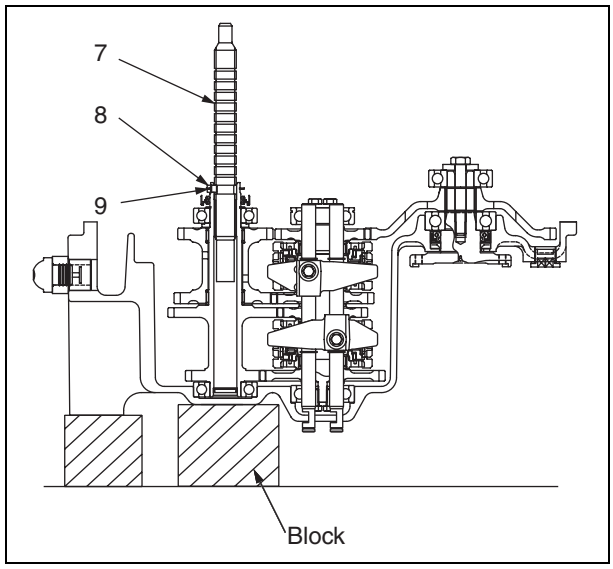

5. Clutch Case

1) Insert the flange (**1**) to the input shaft. Then, secure to the clutch case with the bolts (**2**).
2) Insert the cage (**3**) in the clutch case hole located at the upper idler shaft. Then, secure with the bolt (**4**).
3) Apply the fluid gasket to the contact face with the clutch case of the transmission case and connect the clutch case with the bolts.
4) Install the clutch release cylinder (**5**).

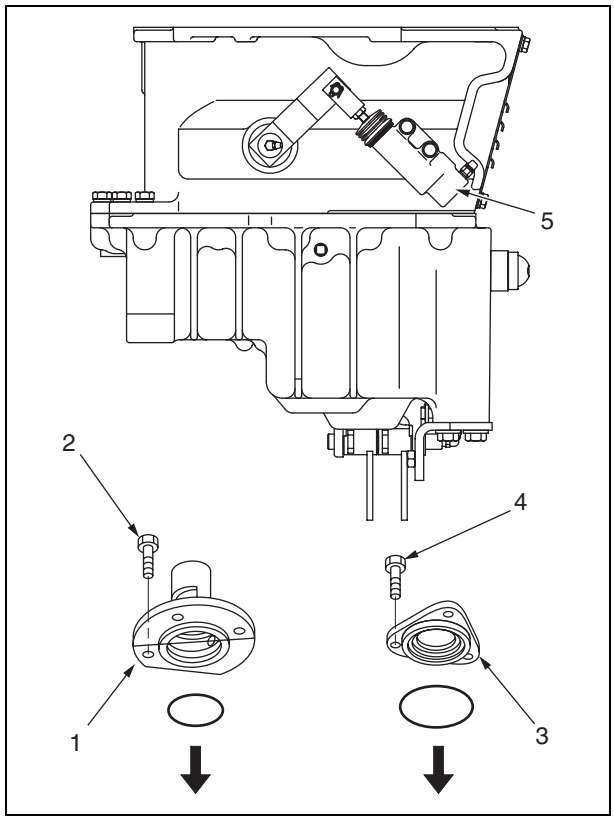

5) Install the clutch yoke and the shifter shaft.

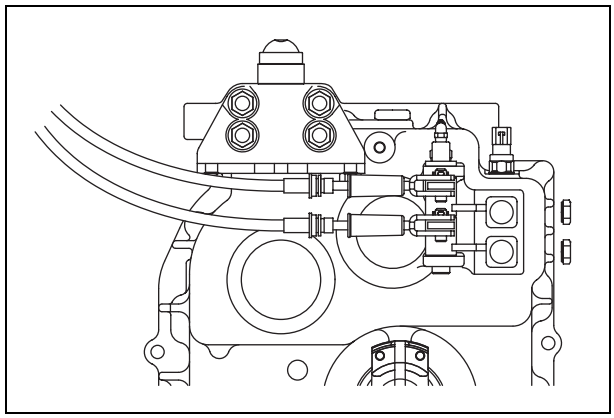

CROSS SECTION DRAWING OF CLUTCH TRANSMISSION

* Move the shaft in the axial direction to make sure that it is held in position securely.

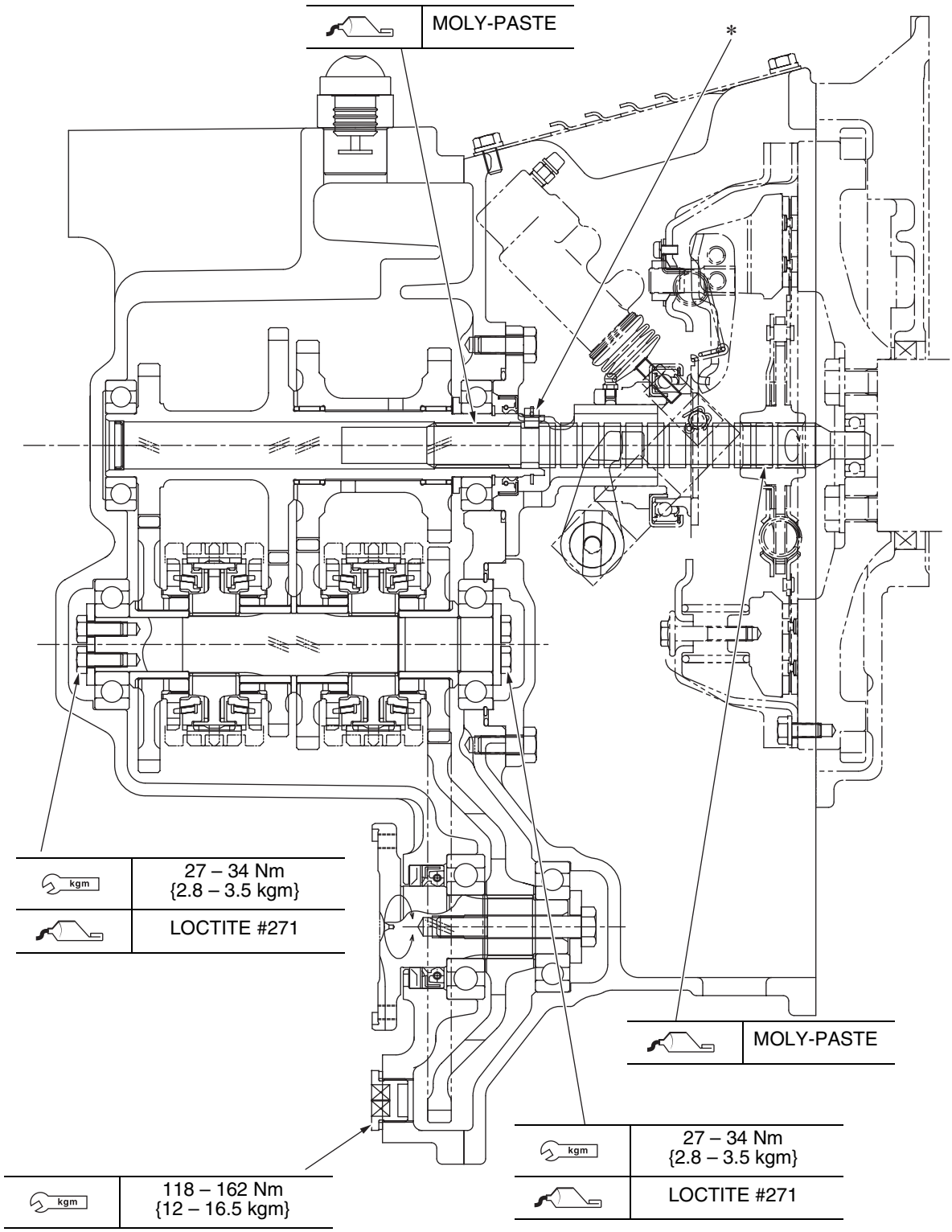

TORQUE CONVERTER

After washing the outside of the torque converter, carry out disassembling in a clean place as follows:

DISASSEMBLY

1. **Removal of Torque Converter Assembly**
   Drain the oil from inside transmission. Then, remove the torque converter assembly from the engine and the transmission.
   (M24 × 1.5 Drain Plug)
   (12 mm Socket Wrench)

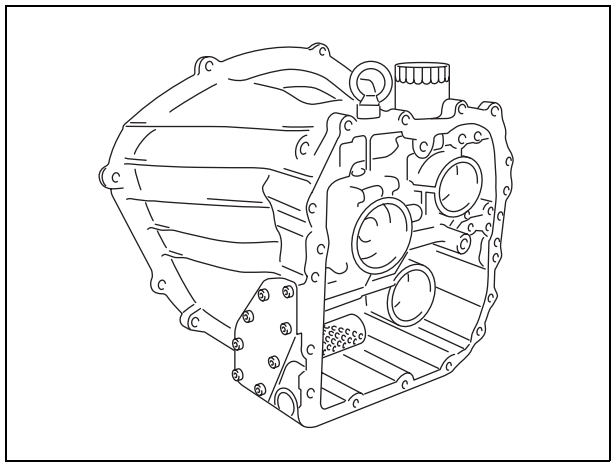

2. **Removal of Oil Filter**
   Remove the oil filter (**20**) from the housing with the special tool.

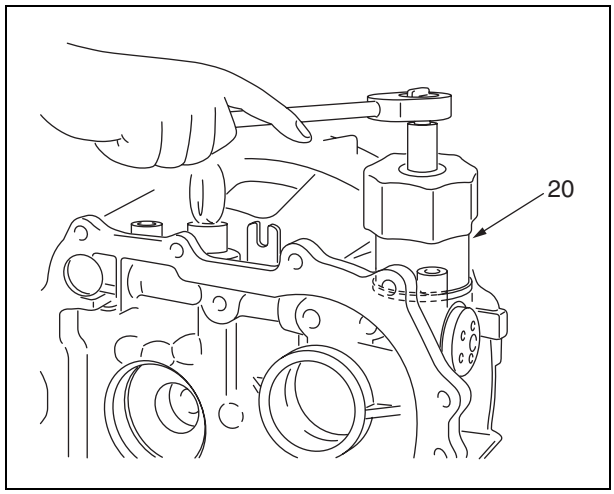

3. **Removal of Torque Converter**
   Remove the torque converter (**1**) slowly from the housing.
   ★ Be careful not to damage the oil seal and the sealing of the gear pump.

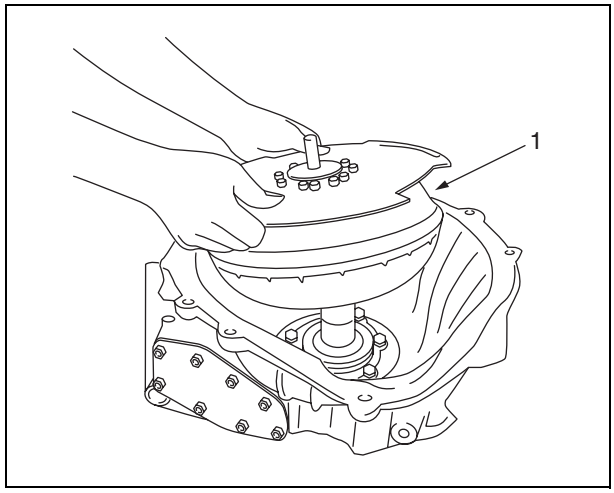

4. Removal of Gear Pump

1) Remove the bolts mounting the gear pump.
(M8 × 1.25 Bolt: 5 pcs.)
(Socket Wrench 12 mm)

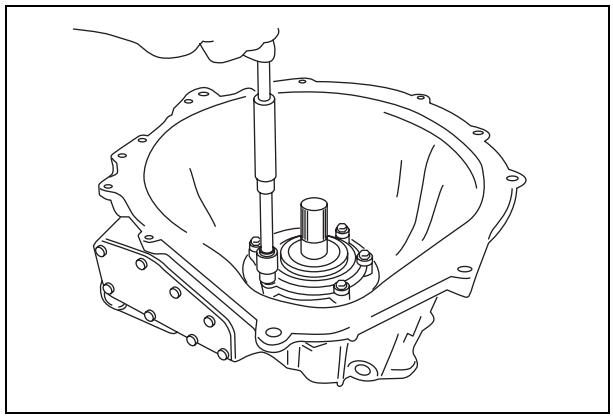

2) Remove the gear pump (**2**). Then, remove the O-ring if it remains inside the housing.

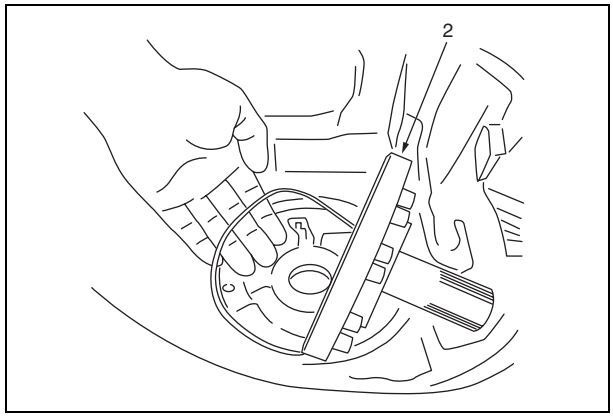

5. Removal of Strainer

1) Remove all the bolts mounting the cover of the strainer. Then, remove the cover (**11**) and the gasket (**12**).
(M8 × 1.25 Hexagon Head Bolt with Flange: 8 pcs.)
(Offset Wrench 13 mm)

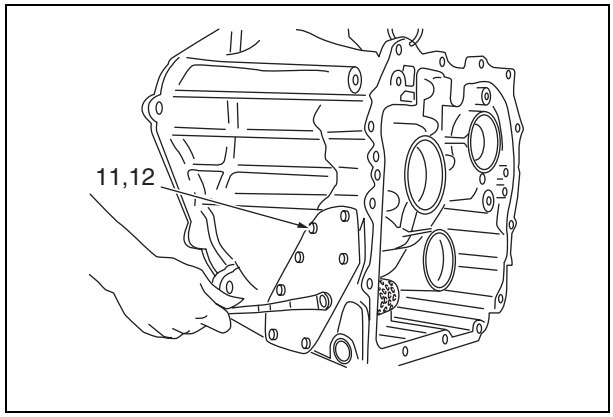

2) Pull out the strainer assembly (**13**) from the housing.
★ Be careful not to damage the O-ring for the strainer assembly.

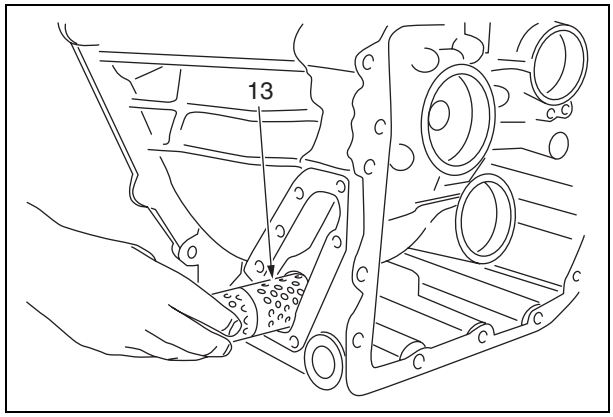

6. Removal of Main Relief Valve

1) Remove the main relief valve plug.
(M24 × 1.5 Plug)
(Socket Wrench12mm)

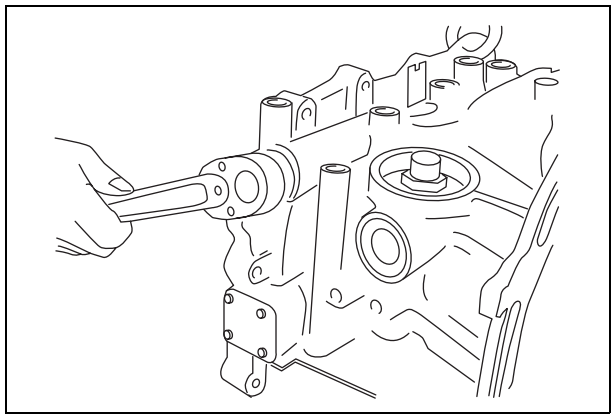

WARNING

Be careful for the plug that may be jumping out forced by the spring from inside the valve.

2) Pull out the piston (**4**) and the spring (**6**) from the valve (**24**).

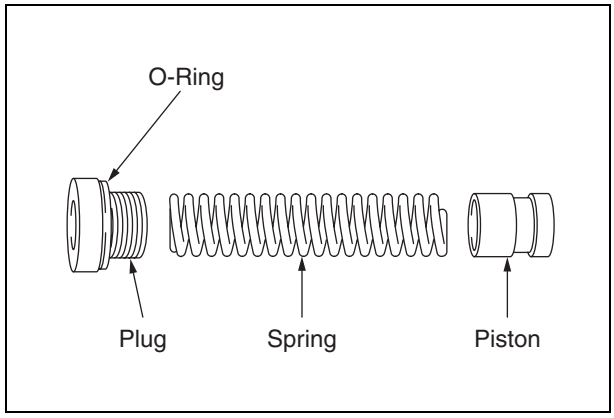

7. Removal of Inlet Port Relief Valve

1) Remove all of the bolts mounting the valve cover. Then, remove the cover (**9**) and the gasket (**10**).
(M6 × 1 Hexagon Head Bolt with Hole: 4 pcs.)
(Hexagon Wrench 5 mm)j

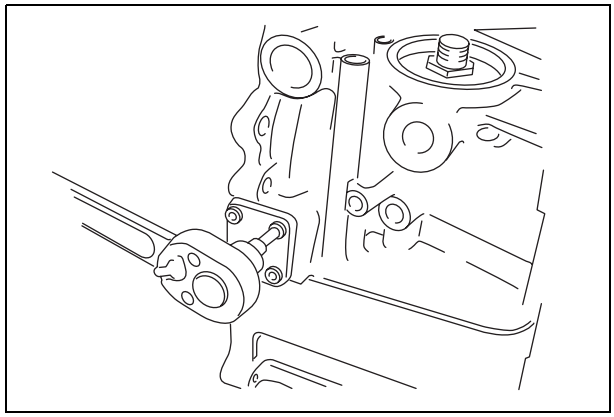

WARNING

Always be sure to press the cover while removing the bolts to prevent the plug from spring out from inside the valve.

2) Pull out the piston (**7**) and the springs (**5**)(**8**) from each valve.

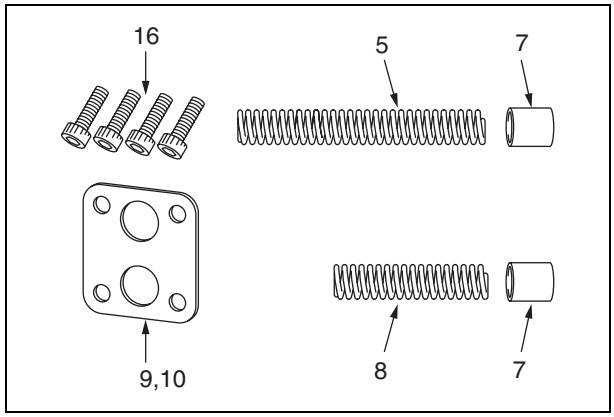

8. Removal of Gear Pump

1) Remove the O-ring and disassemble the gear pump.
2) Remove the screw at one place for disassembly.
   (M5 × 0.8 Screw)

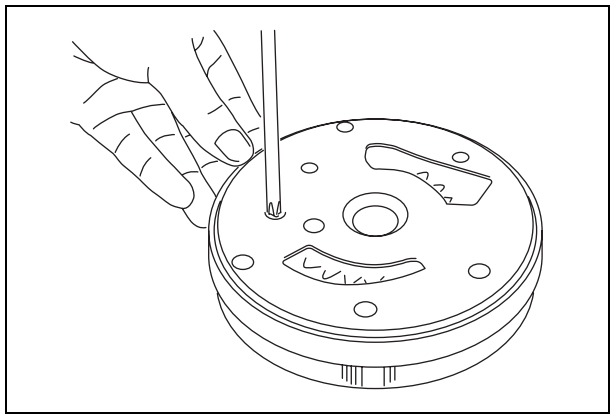

WARNING

Disassembly of the gear pump must be minimized as much as possible.

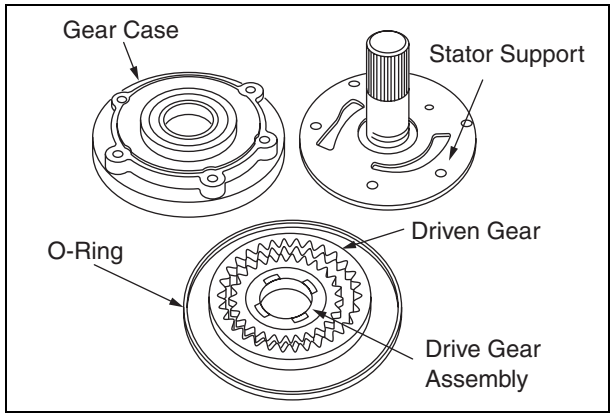

COMPONENT PARTS

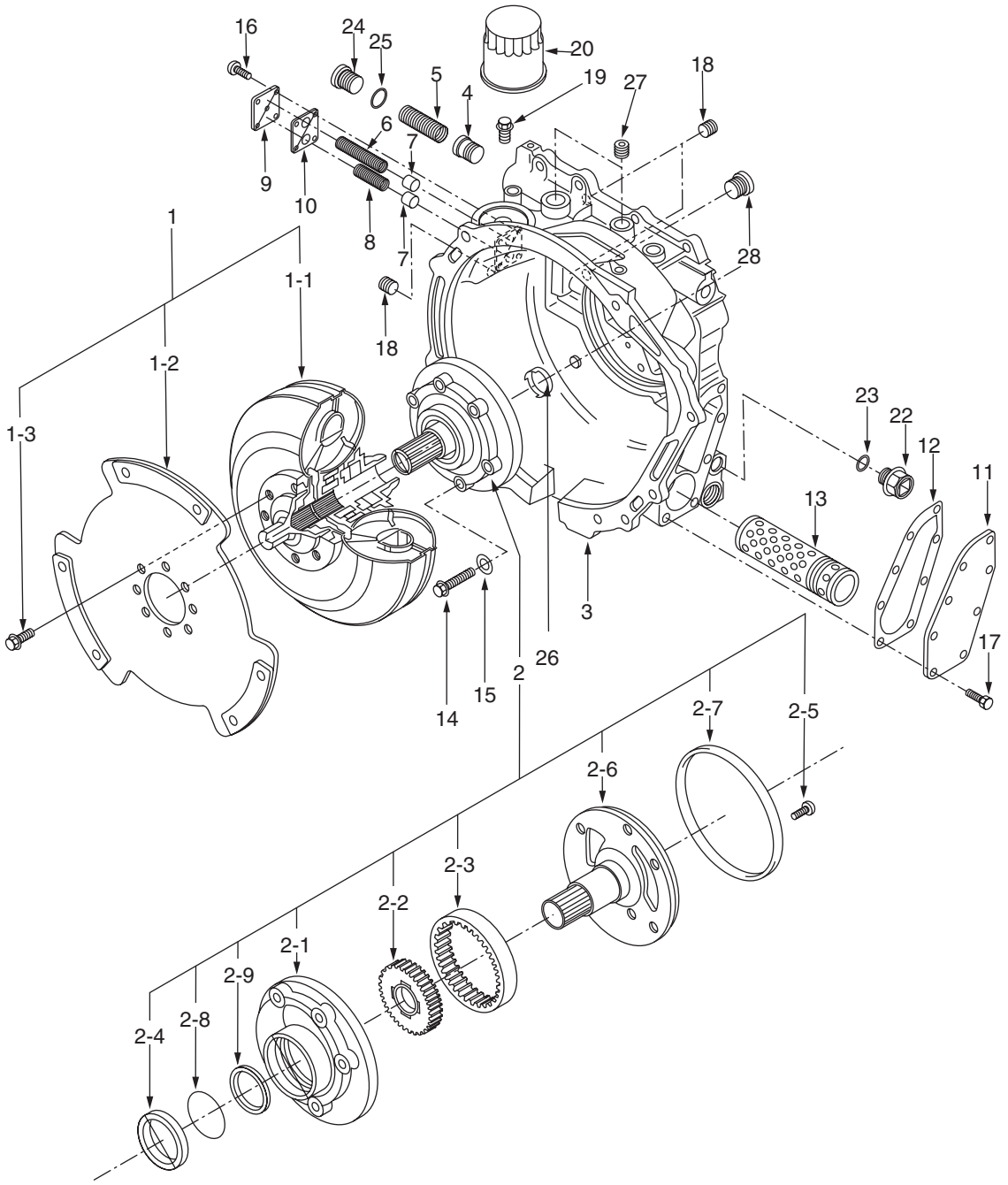

Ref. No.	Part Name	Q'ty
1	Torque Converter Circuit	1
1-1	Torque Converter Sub-Circuit	1
1-2	Input Plate Assembly	1
1-3	Hexagon Head Bolt (M8)	8
2	Gear Pump Assembly	1
2-1	Gear Casing	1
2-2	Drive Gear	1
2-3	Driven Gear	1
2-4	Oil Seal	1
2-5	Countersunk Head Screw	1
2-6	Stator Support	1
2-7	O-Ring	1
2-8	Inner Ring	1
2-9	Seal Ring	1
3	Housing	1
4	Piston	1
5	Pressure Spring	1
6	Pressure Spring	1
7	Piston	2
8	Pressure Spring	1

Ref. No.	Part Name	Q'ty
9	Cover A	1
10	Gasket A	1
11	Cover B	1
12	Gasket B	1
13	Strainer Assembly	1
14	Hexagon Bolt (M8)	5
15	Gasket	5
16	Hexagon Head Bolt (M6)	4
17	Hexagon Head Bolt (M8)	8
18	Hexagon Socket Head Plug (R1/4)	3
19	Nipple	1
20	Oil Filter	1
21	INSULOK-TIE	1
22	Drain Plug (M24)	1
23	O-Ring	1
24	Plug (M24)	1
25	O-Ring	1
26	Collar	1
27	Hexagon Socket Head Plug (R3/4)	2
28	Plug (M22)	1

INSPECTION

Unit: mm

No	Check Item		Criteria		Ref. No.
			Standard Size	Repair Limit	
1	Piston Shaft and Torque Converter Housing Hole 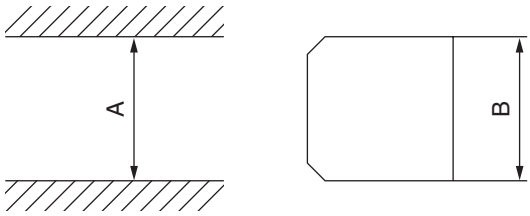				
1-1	Main Relief Valve	A: Piston Outward Form	Ø21.972 – Ø21.985	–	4
		B: Hole Inner Diameter	Ø22.000 – Ø22.021	–	3
		Clearance	0.015 – 0.049	0.080	–
1-2	Torque Converter Inlet Port Relief Valve	A: Piston Outward Form	Ø14.960 – Ø14.970	–	7
		B: Hole Inner Diameter	Ø14.000 – Ø14.018	–	3
		Clearance	0.030 – 0.058	0.080	–
1-3	Lubrication Relief Valve	A: Piston Outward Form	Ø14.960 – Ø14.970	–	7
		B: Hole Inner Diameter	Ø14.000 – Ø14.018	–	3
		Clearance	0.030 – 0.058	0.080	–
2	Pressure Spring 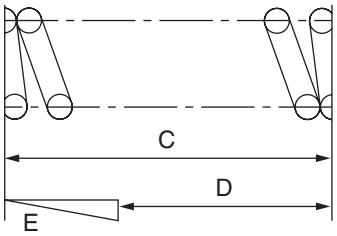				
2-1	Main Relief Valve	C: Free Length	91.8	–	6
		D: Fixing Length	79.1	–	–
		E: Fixing Load N	185.4 ±5 %	166.9 N	–
2-2	Toque Converter Inlet Port Relief Valve	C: Free Length	103.4	–	5
		D: Fixing Length	77.6	–	–
		E: Fixing Load N	47.8 ±5 %	43.0 N	–
2-3	Lubrication Relief Valve	C: Free Length	60.5	–	8
		D: Fixing Length	48.2	–	–
		E: Fixing Load N	58.8 ±5 %	52.9 N	–

Unit: mm

No	Check Item	Criteria		Ref. No.
		Standard Size	Repair Limit	
3	Oil Seal and Torque Converter Impeller Hub 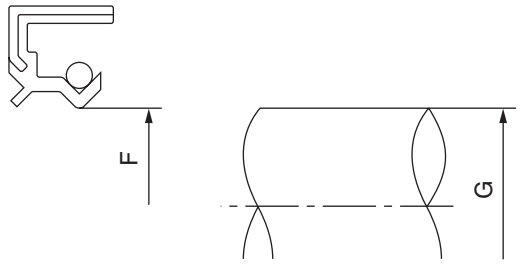	F : – G : 41.915 – 41.965	41.5 41.815	2-4 1-1
5	Seal Ring and Seal Ring Groove 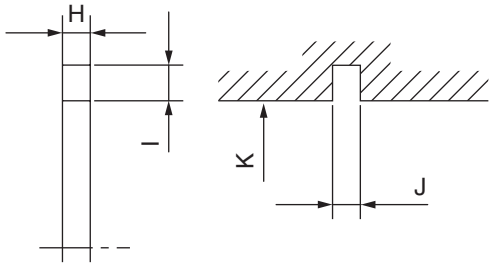	H : 1.895 – 1.900 I : 1.870 – 2.070 J : 2.000 – 2.250 K : 42.10 – 42.13	1.600 1.670 2.350 42.25	2-9 2-1
6	Seal Ring and Seal Ring Groove 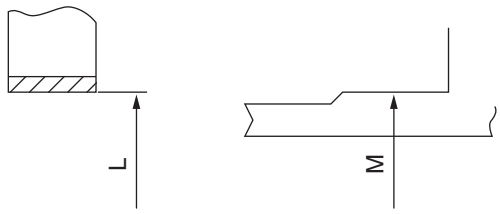	L : 32.500 – 32.525 M : 32.450 – 32.470 Clearance: : 0.030 – 0.075	– – 0.100	2-2 2-6

★ The numbers shown in the column on the left hand of the above table should refer to those on the component parts drawing respectively.

ASSEMBLY

Carry out assembly work in the reverse order to disassembly work.

IMPORTANT:

- Wash all the removed or disassembled parts with clean oil to remove foreign bodies completely. In particular, wash the oil groove and oil circuit with care.
- Replace such parts as the O-ring, the oil seal and the gasket with new ones after disassembly.
- Be careful to assemble correctly. For details, see the check items specified in the maintenance standard.
- When replacing the oil seal with a new one, apply a semi-dry gasket sealant (THREE BOND No.1211 or No.1104 for example) on the outside circumference of the oil seal. However, never apply it to the lip or the sliding surface of the shaft.

1. **Assembly of Gear Pump**

   Insert s pair of the gears (**3**) (**4**) in the gear casing (**2**) and reverse the stator support (**5**) to assemble in the same steps taken for disassembly.

   Tighten the countersunk head screw and check to make sure that the gear rotates smoothly. If it does not rotate, disassemble it and start to assemble again.

kgm (Countersunk Head Screw)	0.98 – 2.94 Nm {0.1 – 0.3 kgm}

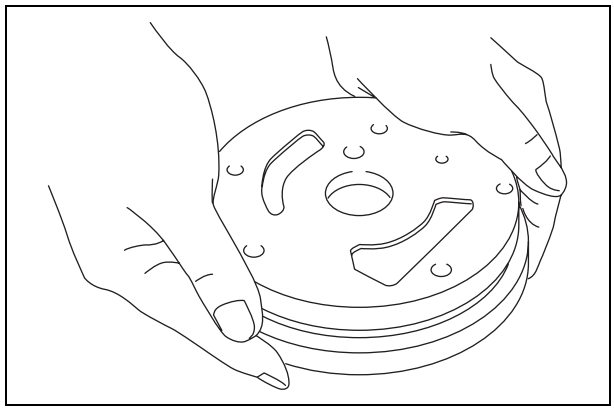

2. **Assembly of Main Relief Valve**

   Insert the spring and the piston to the relief valve and tighten it with the plug. Check the piston for proper positioning when assembling.

kgm (Plug)	60 – 80 Nm {6.1 – 8.2 kgm}

3. **Assembly of Torque Converter Inlet Port Valve and Lubrication Relief Valve**

   Insert the piston and the spring to the valve. Then, insert the gasket and tighten the cover. There are two types of the valve and the spring is different from the torque converter inlet port valve and the lubrication relief valve. Be sure to assemble them correctly to their original position.

kgm (Bolt)	8.5 – 11 Nm {0.9 – 1.1 kgm}

4. Assembly of Gear Pump

Install the O-ring (**1**) to the corner of the housing (**2**) to prevent it from being loosed. Check to make sure that the O-ring is correctly installed without looseness. Then, insert the gear pump (**3**) to the housing slowly and vertically and tighten it with the bolts.D

kgm (Bolt)	20 – 26 Nm {2.0 – 2.7 kgm}

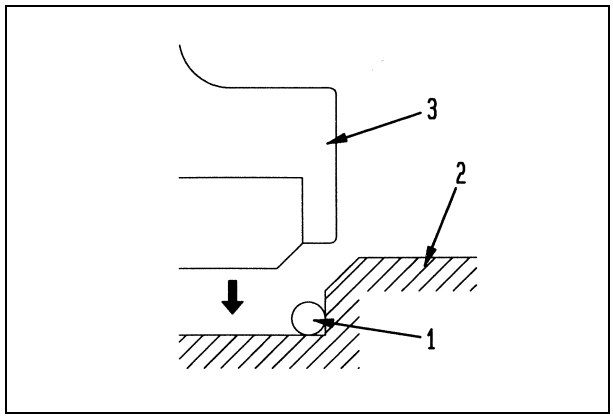

5. Assembly of Torque Converter

Insert the torque converter in the pump inside the housing slowly. Be careful not to damage the oil seal and seal ring. Fill the area between the oil seal lip up to 1/3 to 1/2 level with the lithium grease, or apply the clean hydraulic oil to the oil seal.

6. Assembly of Torque Converter Assembly

Assemble the torque converter assembly with the transmission and the engine.

MAINTENANCE STANDARD

1. Check for Oil Pressure

Input Engine Speed: 2,000 rpm
Oil Temperature: 80°C
Torque Converter Outlet Port Pressure: 0.3 MPa

No.	Check Item	Pressure (MPa)	Hydraulic Port Position
1	Main Pressure	1.1 – 1.4	A
2	Torque Converter Inlet Port Pressure	0.5 – 0.7	B

2. Tightening Torque for Bolts and Plugs

No.	Tightening Location	Screw Specifications		Tightening Torque (Nm)	Ref. No.
1	Input Plate	Hexagon Head Bolt	M8 × 1.25 × 12	30 – 38	1-3
2	Gear Pump Assembly	Hexagon Head Bolt	M8 × 1.25 × 12	20 – 26	14
3	Valve Cover	Hexagon Socket Head Bolt	M6 × 1 × 20	8.5 – 11	16
4	Strainer Cover	Hexagon Bolt	M8 × 1.25 × 12	20 – 26	17
5	Pressure Pick-up Port Blind Plug	Hexagon Socket Head Bolt	R 1/4	13 – 17	18
6	Oil Filter	Oil Filter	3/4-16UNF	10 – 15	20
7	Drain Plug	Drain Plug	M24 × 1.5	60 – 80	22
8	Main Valve	Plug	M24 × 1.5	60 – 80	24
9	Pressure Pick-up Ports	Hexagon Socket Head Plug	R 3/8	20.5 – 28.5	27
10	Blind Plug	Plug	M22 × 1.5	60 – 80	28
11	Gear Pump Stator Support	Countersunk Head Screw	M5 × 0.8 × 16	0.98 – 2.94	2-5

TORQUE CONVERTER ASSEMBLY

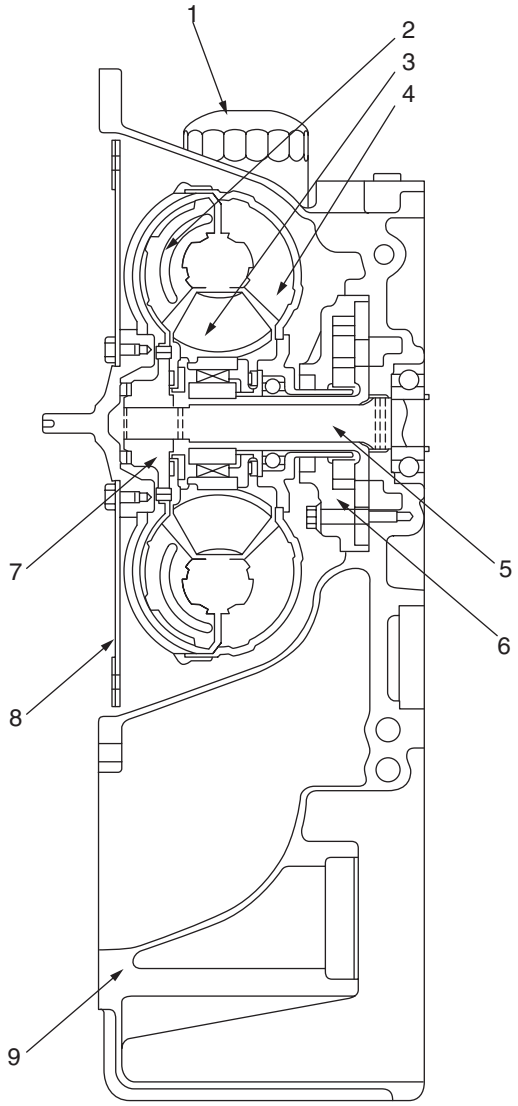

Ref.No.	Part Name	Q'ty	
1	Oil Filter	1	
2	Turbine	1	
3	Stator	1	Torque Converter Circuit
4	Impeller	1	
5	Turbine Shaft	1	
6	Gear Pump	1	
7	Turbine Hub	1	
8	Input Plate	1	
9	Housing	1	

TORQUE CONVERTER ASEMBLY HYDRAULIC PORT POSITION

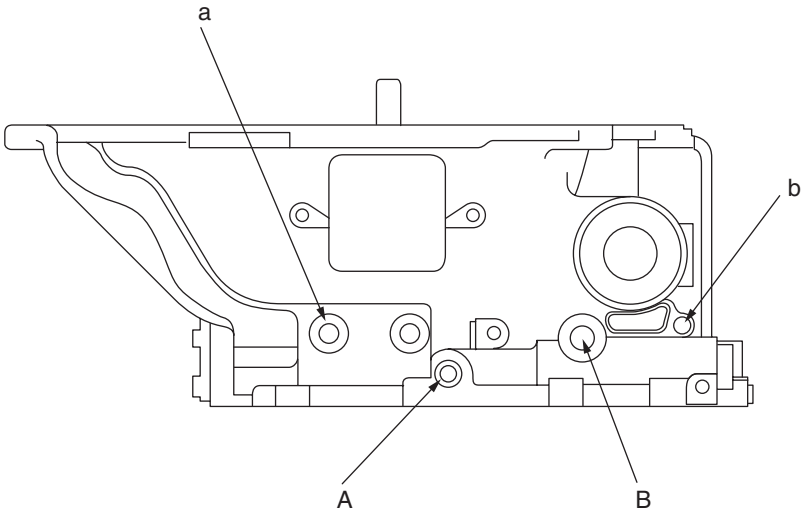

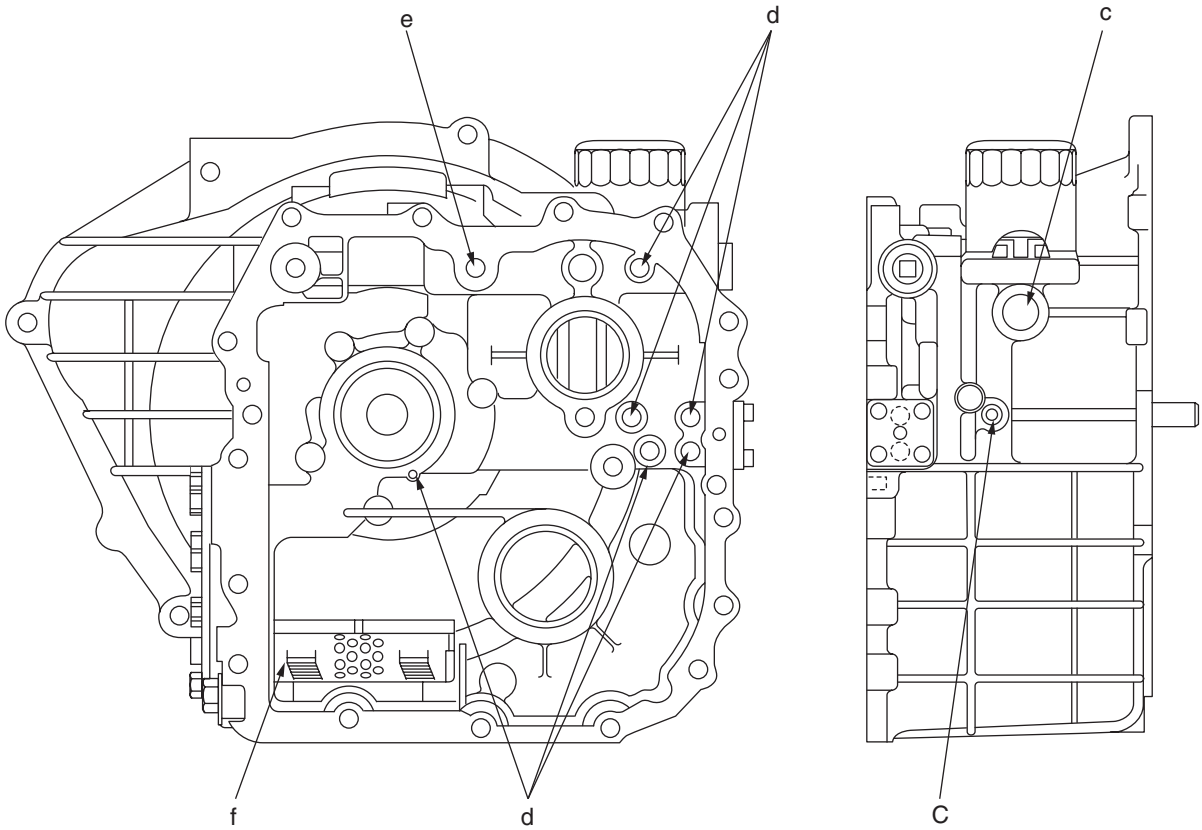

A: Main Pressure Check Port
B: Torque Converter Inlet Port Pressure Check Port
C: Lubrication Pressure Check Port

a: Breather Pick-up Port
b: Level Gauge Pick-up Port
c: to Oil Cooler
d: Drain
e: to Transmission side valve
f: Strainer Assembly

HYDRAULIC CIRCUIT

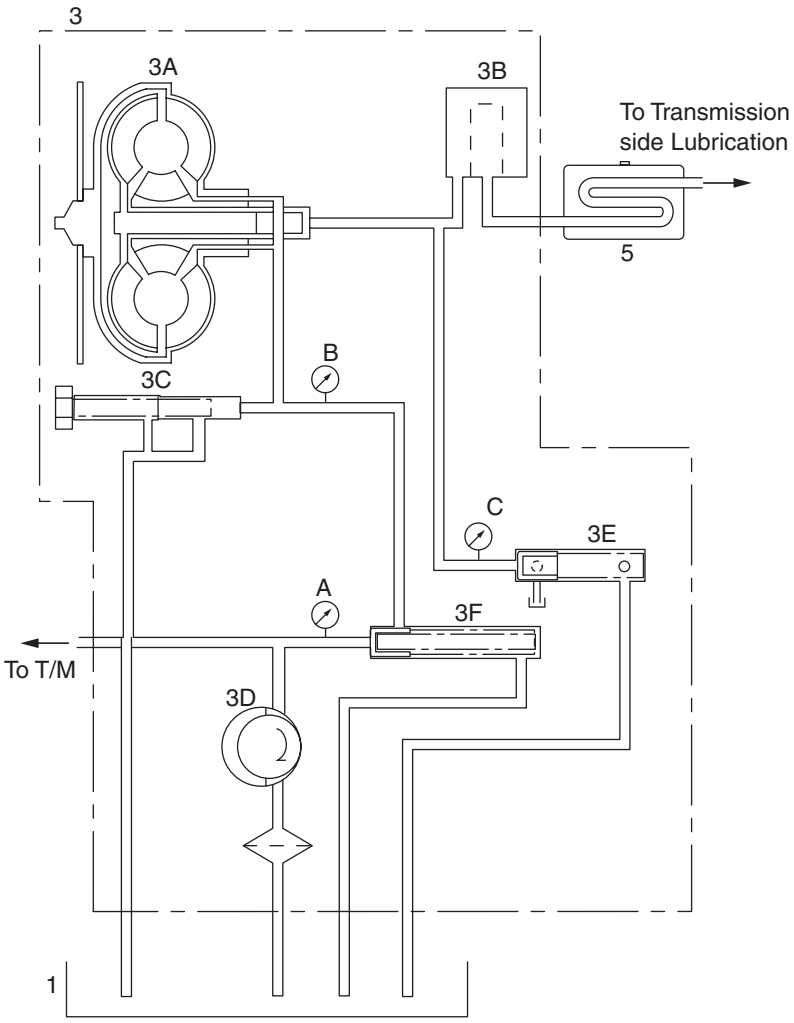

1. **Oil Tank**
2. **Suction Filter (100 mesh)**
3. **Torque Converter Assembly**
   3A.Torque Converter
   3B.Oil Filter
   3C.Torque Converter Port Relief Valve
   3D.Gear Pump Assembly
   3E.Lubrication Relief Valve
   3F.Regulator Valve
4. **Oil cooler**

CAUSE AND REMEDY FOR PROBLEM

No.	Problem	Cause	Remedy
1	No power transmitting	A: No hydraulic pressure 1) Lack of oil 2) Damage of gear pump or drive device 3) Damage of piping or joint 4) Breakage of piston in inlet port relief valve or broken spring B: Mechanical Breakage 1) Damage of input plate 2) Damage of shaft or gear 3) Damage of spline	 1) Add oil 2) Disassemble and check. Replace with new parts or whole assembly if necessary. 3) Disassemble and replace with new parts. 4) Disassemble and replace with new parts. 1) Disassemble and replace with new parts. 2) Disassemble and replace with new parts. 3) Disassemble and replace with new parts.
2	Engine output dropping	A: Hydraulic pressure is too low. 1) Lack of oil 2) Leakage of air from suction piping 3) Drop in efficiency of gear pump 4) Deteriorated spring in inlet port relief valve or faulty movement of piston 5) Wear or damage of seal ring 6) Cloggingof sstrainer B: Mechanical breakage 1) Damage or deformation of impeller 2) Deformation of input plate C: Other Use of wrong oil	 1) Add oil 2) Check joint and gasket. Replace with new parts if necessary. 3) Disassemble and check. Replace with new parts if necessary. 4) Disassemble and check. Replace with new parts if necessary. 5) Disassemble and replace with new parts. 6) Check and wash strainer. Replace with new parts if necessary. 1) Disassemble and replace with new parts. 2) Disassemble and replace with new parts. Disassemble and replace with new parts.
3	Abnormal sound generating	1) Cavitations caused by leakage of air from suction pipe or lack of oil 2) Failure of gear pump 3) Contact caused by deformed impeller 4) Breakage of input plate 5) Breakage of gear 6) Wear or breakage of bearings 7) Wear of spline 8) Looseness of bolts	1) Add oil and check and replace with new parts if necessary. 2) Disassemble and check. Replace with new parts or whole assembly if necessary. 3) Disassemble and check. Replace with new parts if necessary. 4) Disassemble and replace with new parts. 5) Disassemble and replace with new parts. 6) Disassemble and replace with new parts. 7) Disassemble and replace with new parts. 8) Tighten again and replace with new parts if necessary.
4	Oil leaking	A: Oil seal 1) Wear or breakage of lip 2) Intake of foreign body through dust 3) Wear or scratches of bearings 4) Hardening or deterioration of rubber because of abnormal rise in oil temperature B: O-ring 1) Breakage of O-ring 2) Scratches on mating surface 3) Hardening or deterioration of rubber because of abnormal rise in oil temperature 4) Sudden use in extremely cold temperature (below minus 15°C) C: Joint surfaces with gasket 1) Looseness of bolts 2) Damage of gasket 3) Scratches on joint surfaces D: Plug and screw 1) Looseness of screw 2) Damage of screw 3) Cracks on mating hole	 1) Disassemble and replace with new parts. 2) Disassemble and check. Replace with new parts if necessary 3) Repair or replace with new parts. 4) Disassemble and replace with new parts. 1) Disassemble and replace with new parts. 2) Repair or replace with new parts. 3) Disassemble and replace with new parts 4) Warm up engine before operation. 1) Tighten again. 2) Replace with new parts 3) Replace with new parts 1) Tighten again. 2) Replace with new parts 3) Replace with new parts

TORQFLOW TRANSMISSION

DISASSEMBLY

1. Transmission Valve

Remove the bolt (**1**) and disassemble the transmission valve.

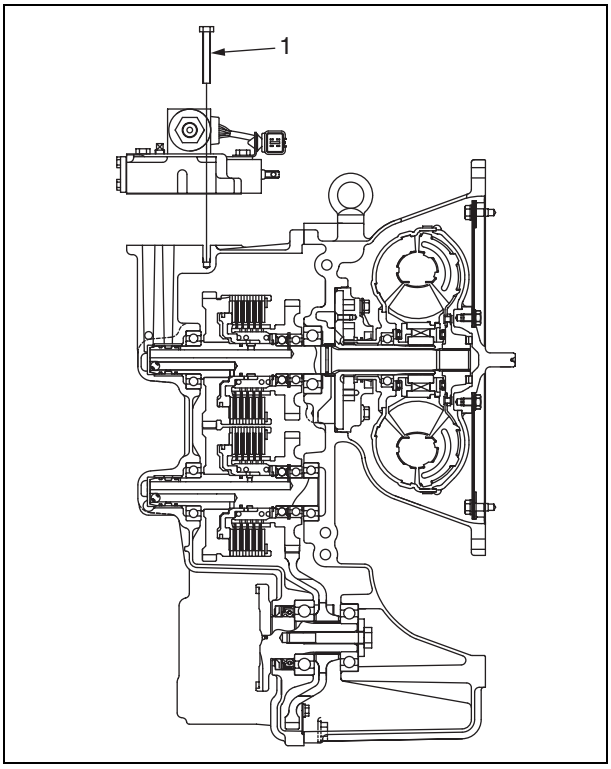

2. Transmission Case

1) Remove the drain plug and drain the oil inside the transmission case.
2) Disassemble the propeller shaft.

3. Torque Converter

1) Place the wooden blocks to support the transmission case assembly and make it set facing in the direction shown in the diagram on the right.
2) Remove the bolt (**1**) connecting the torque converter and the transmission case to separate the torque converter.

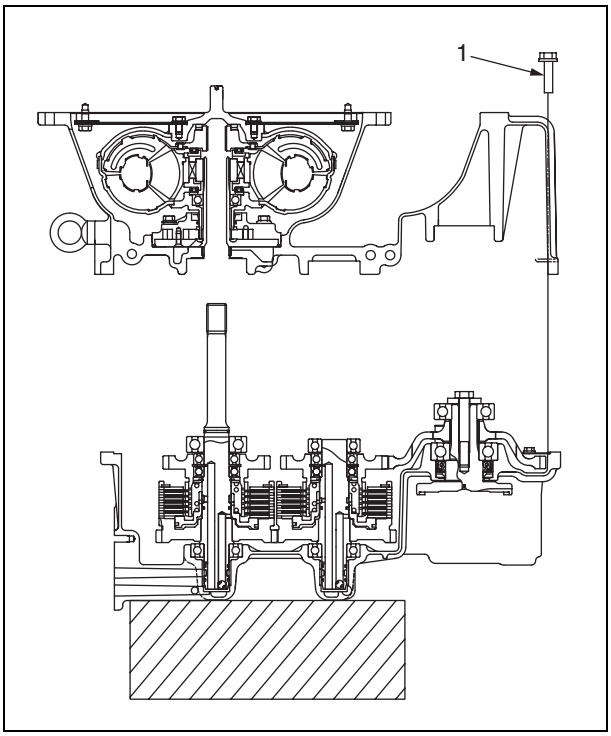

4. Output Shaft

1) Remove the bolt (**1**) first. Then, remove the bearing (**2**), the gear (**3**), the bearing (**4**), the seal (**5**) and the spacer (**6**) in turn. Pull the output shaft (**7**) out from lower side of the transmission case.

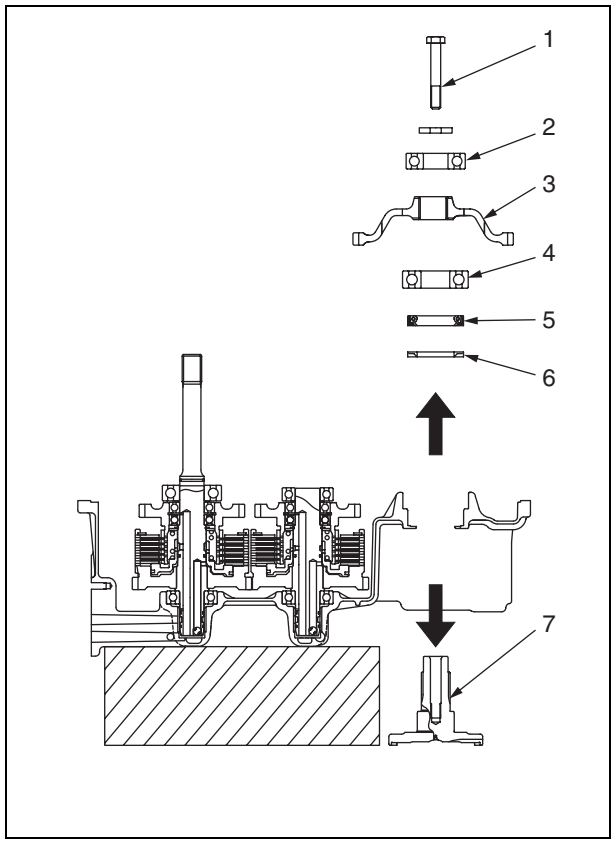

5. Intermediate Shaft Sub-Assembly

1) Pull the intermediate shaft sub-assembly out.

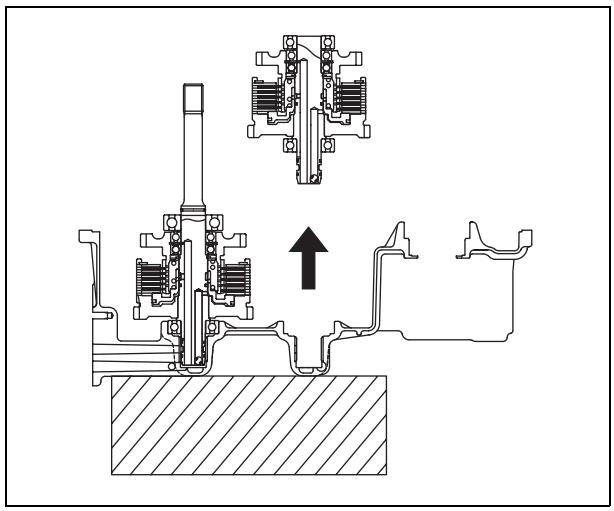

6. Input Shaft Sub-Assembly

Pull the input shaft sub-assembly (with the clutch pack assembly) out from the transmission case.

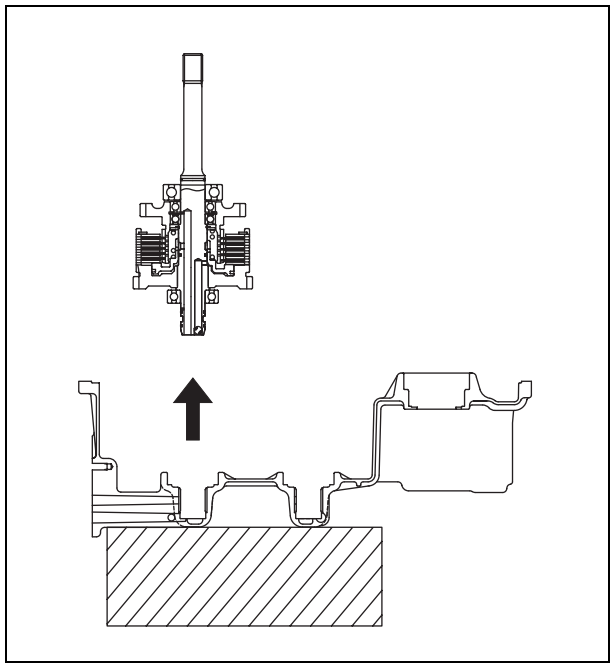

7. Strainer

1) Remove the bolt (**1**) from the transmission case (**7**). Then, remove the plate (**2**).
2) Remove the strainer (**3**).

8. Oil Level Plug

Remove the oil level plug (**4**).

9. Cap and Blind Plug

Remove the cap (**5**) and the blind plug (**6**).

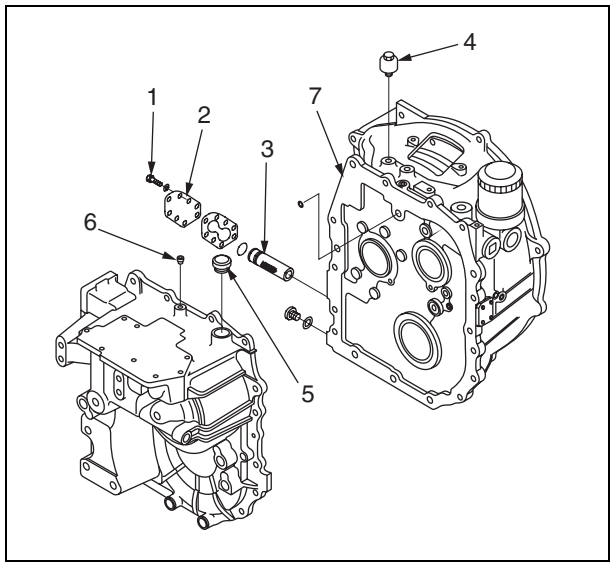

10. Disassembly of Clutch Pack Assembly

★ The numbers put on the diagram show the order for disassembly.

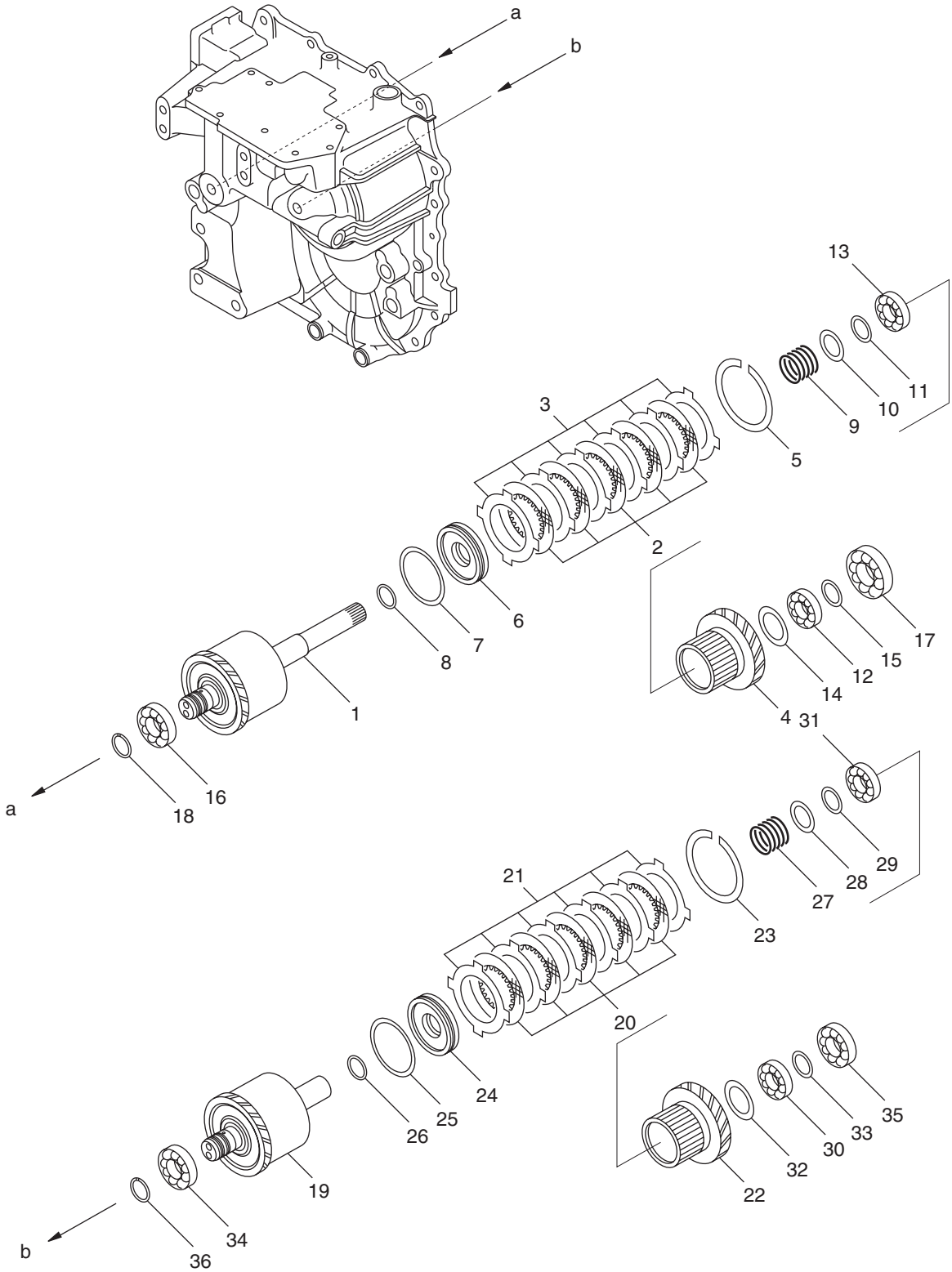

ASSEMBLY

1. Cleaning and Air Blowing of Transmission Case

1) Remove the cap when cleaning the transmission case because the LOCTITE is applied to the cap tightening bolts.
2) Blow the machined hole of the transmission case with air.

2. Installation of Blind Plug to Transmission Case

Install the blind plug (**6**), the cap (**5**) and the breather (**4**) to the transmission case.

3. Installation of Drain Plug

Install the drain plug (**7**).

Tightening Torque for Drain Plug:

kgm	50.8 – 78.4 Nm {6.0 – 8.0 kgm}

4. Installation of Strainer

Fit the O-ring to the strainer (**3**) and insert it in inside the transmission case. Then, install the plate (**2**) with the gasket and tighten it with the bolt (**1**).

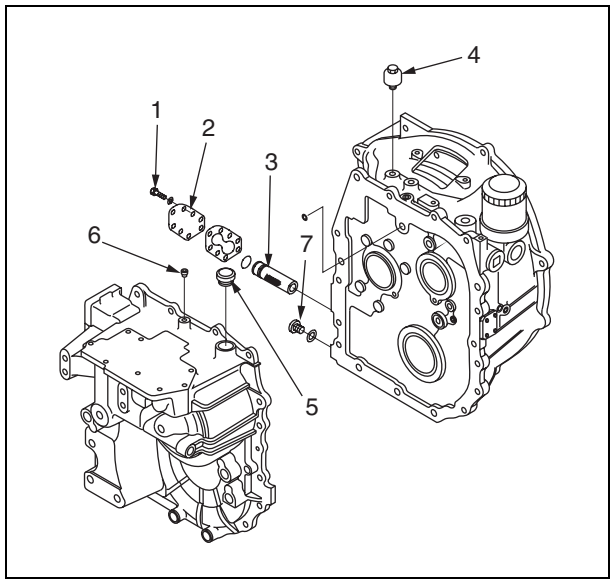

5. Output Shaft

Insert the spacer (**6**), the seal (**5**), the bearing (**4**), the gear (**3**) and the bearing (**2**) in the output shaft and secure it with the washer and the bolt (**1**).

Tightening Torque for Bolt:

kgm	98 – 123 Nm {10 – 12.5 kgm}
	LOCTITE #271 (Hole Thread)

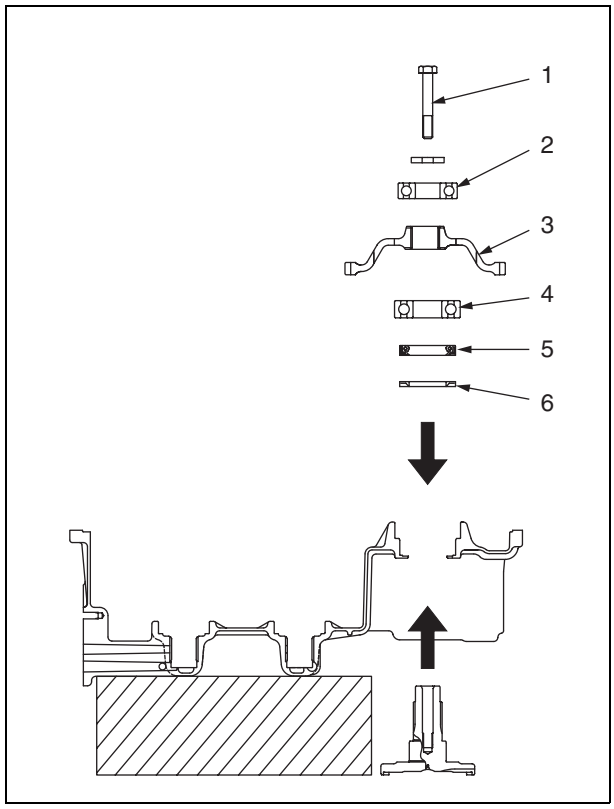

6. Installation of Intermediate Shaft Sub-Assembly

Assemble the intermediate shaft sub-assembly inside the transmission case.

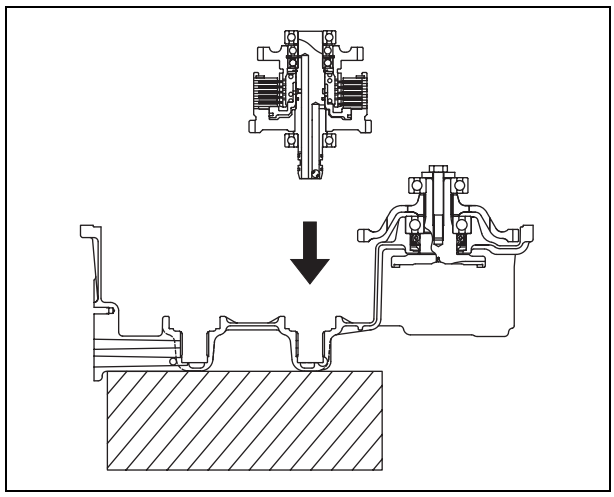

7. Input Shaft Sub-Assembly

1) Fit the seal (**2**) and the seal (**3**) to the piston (**4**). Then, assemble the input shaft assembly (**1**) with the piston.
2) Install the spring (**5**) and the washer (**6**). Then, fix with the snap ring (**7**).

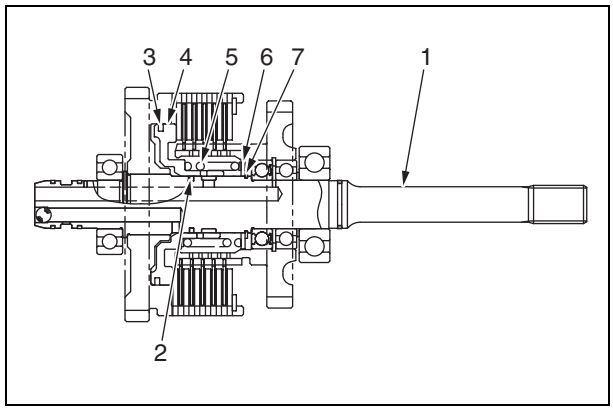

3) Assemble the bearing (**8**) and fix with the snap ring (**8-1**).
4) Assemble the clutch disc (**10**) and the plate (**9**) and fix with the ring (**11**).
5) Installation of Forward Gear
   Insert the bearing in the gear (**14**) and assemble it to the shaft. Assemble the bearing and the spacer. Then, fix with the snap ring.
6) Installation of Reverse Gear
   Assemble the washer, the gear, the bearing and the washer.
   Then, fix with the snap ring.

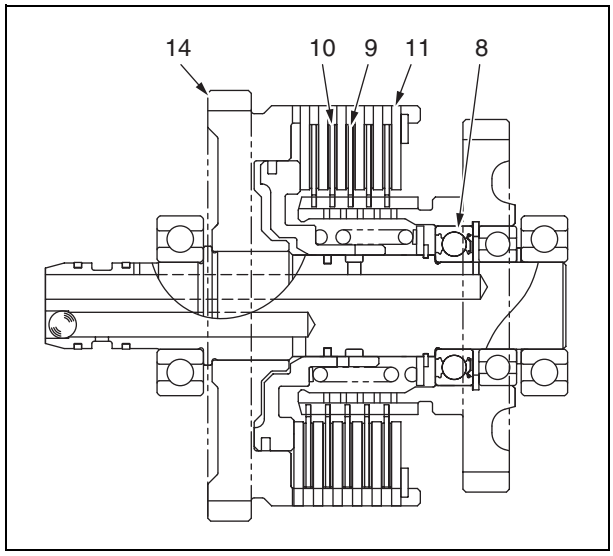

8. Installation of Input Shaft Sub-Assembly

Install the seal ring to the input shaft sub-assembly and assemble inside the transmission.

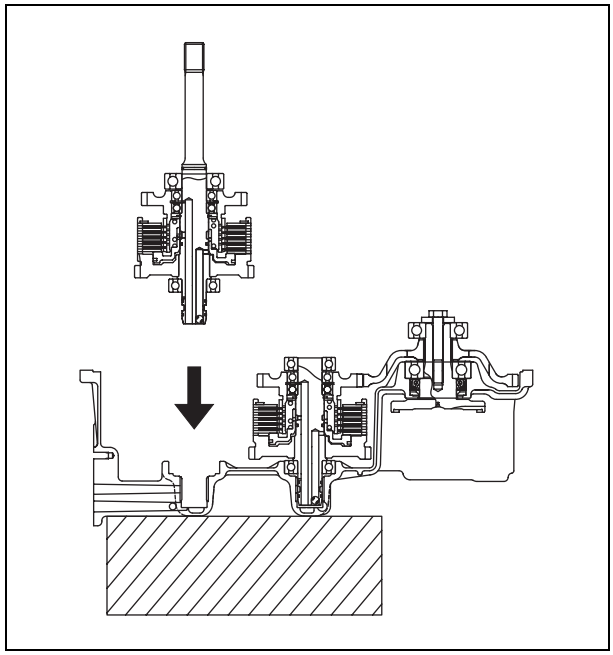

9. Installation of Torque Converter

Apply the Liquefied gasket to the torque converter contact face of the transmission case and assemble the torque converter (**2**) and the transmission case (**3**) with the bolt (**1**).

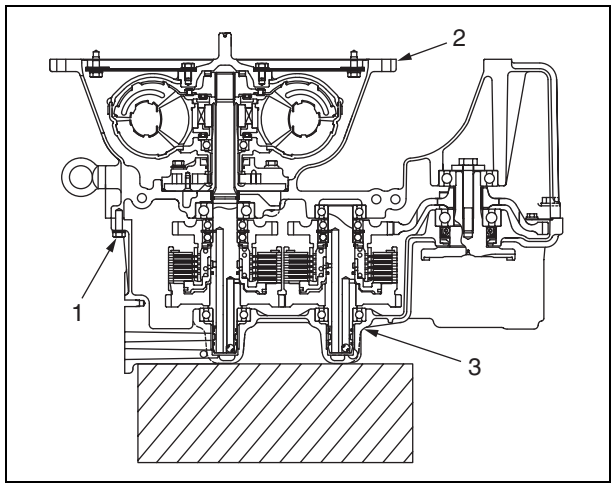

10. Installation of Transmission Valve

Fit the gasket and install with the bolt (**1**).

Tightening Torque for Bolt:

kgm	27 – 34 Nm {2.8 – 3.5 kgm}

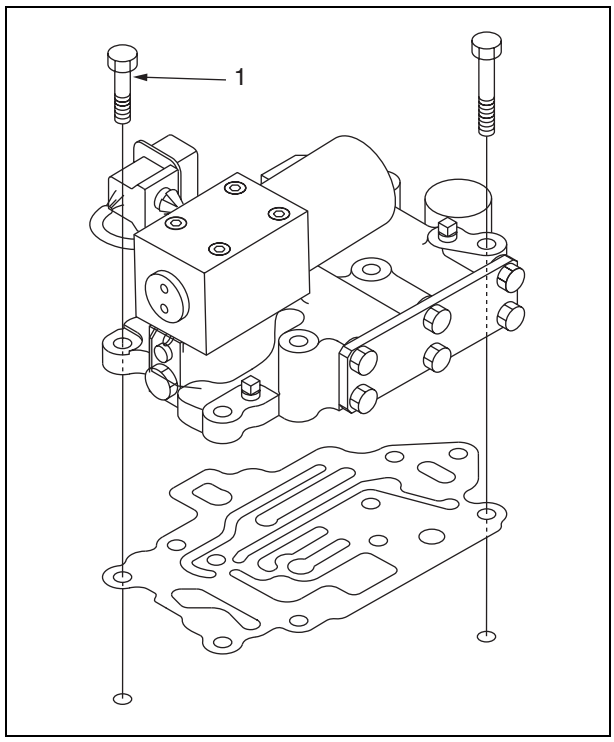

11. Installation of Toque Converter Cooler Filter

Install the oil filter and the piping.

TORQFLOW TRANSMISSION ASSEMBLY DRAWING

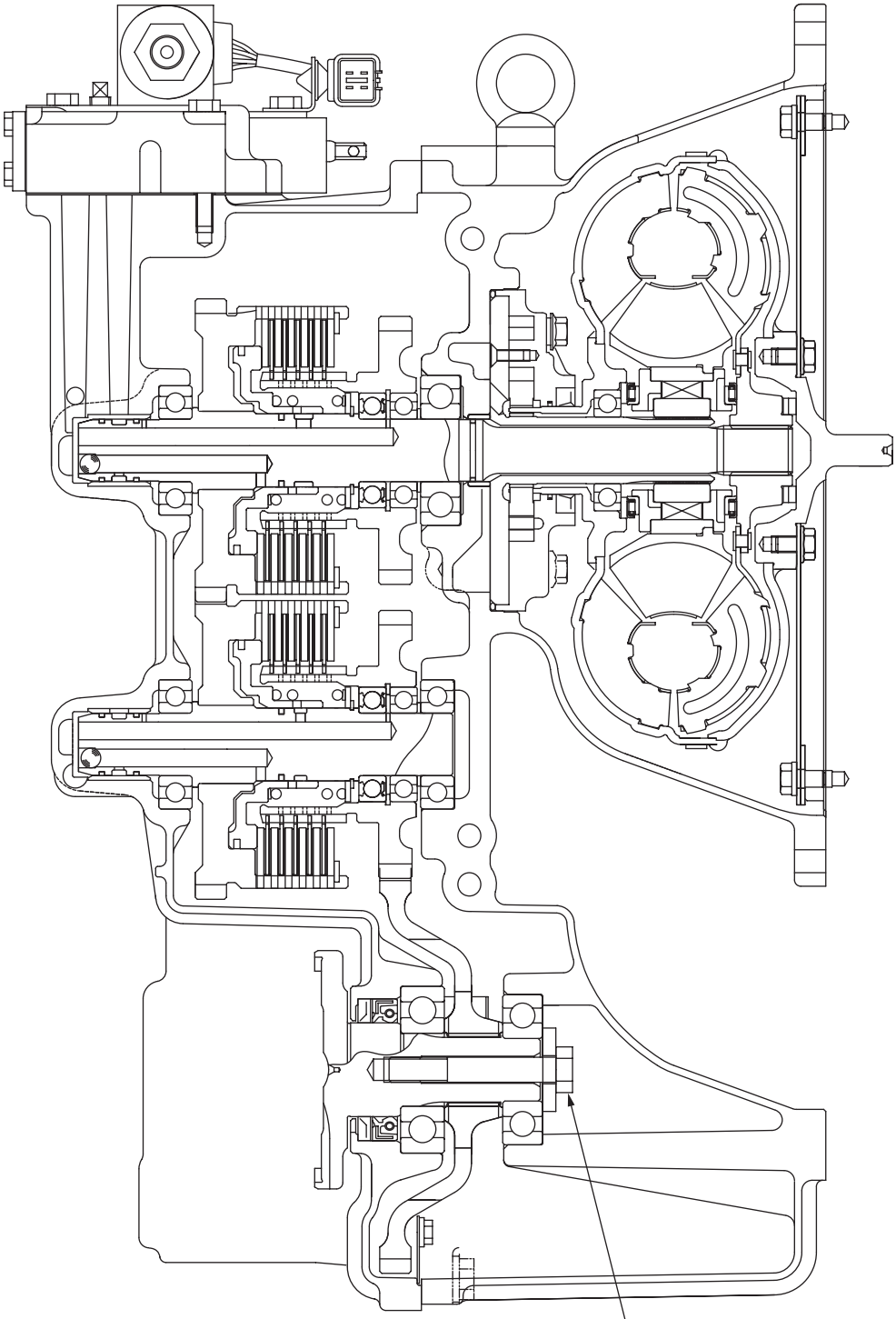

kgm	98 – 123 Nm {10 – 12.5 kgm}
	LOCTITE #271

DIFFERENTIAL

DISASSEMBLY AND ASSEMBLY (1.0 – 1.75 ton Forklift Trucks)

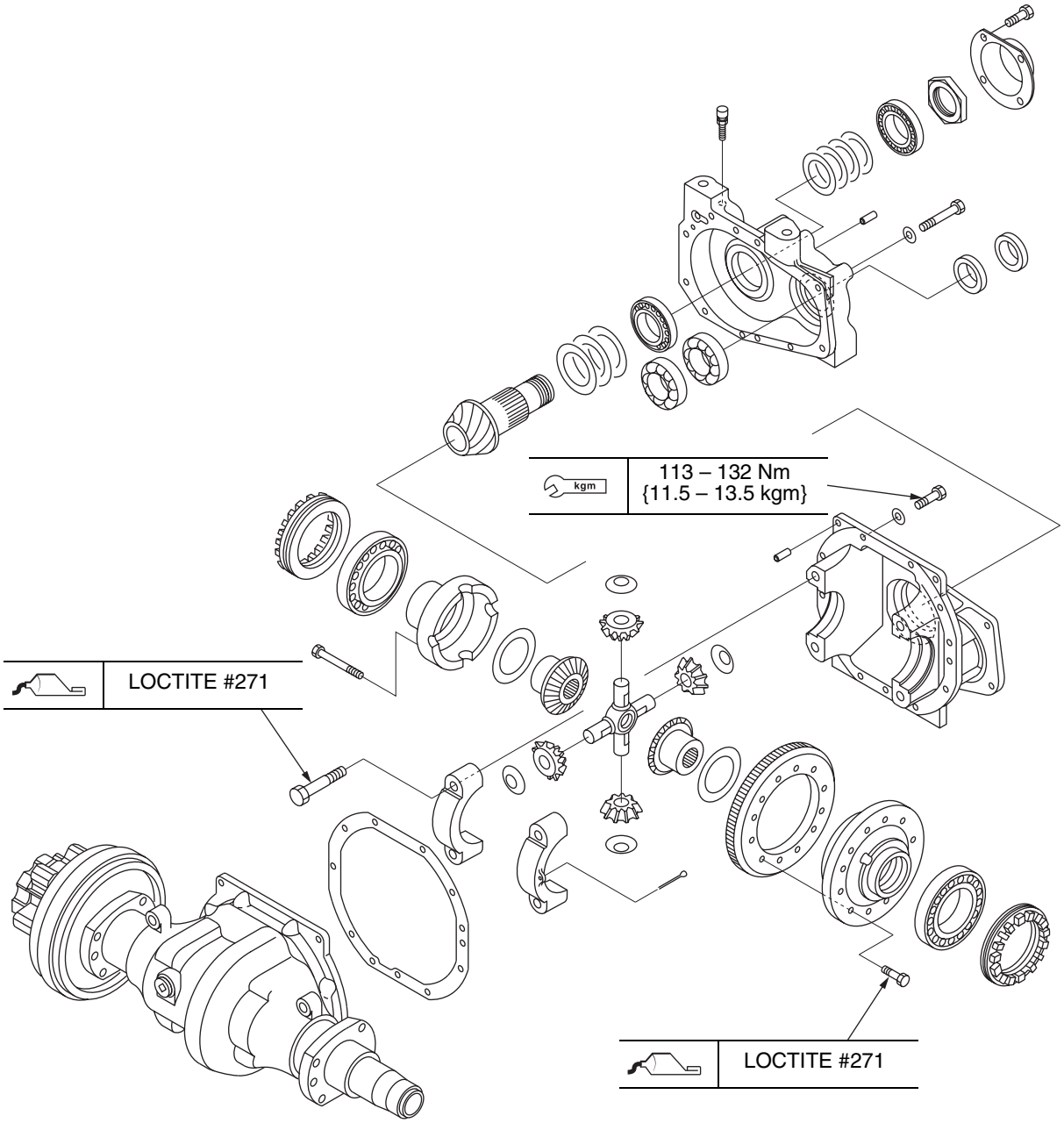

DISASSEMBLY AND ASSEMBLY (2.0 – 3.5 ton Forklift Trucks)

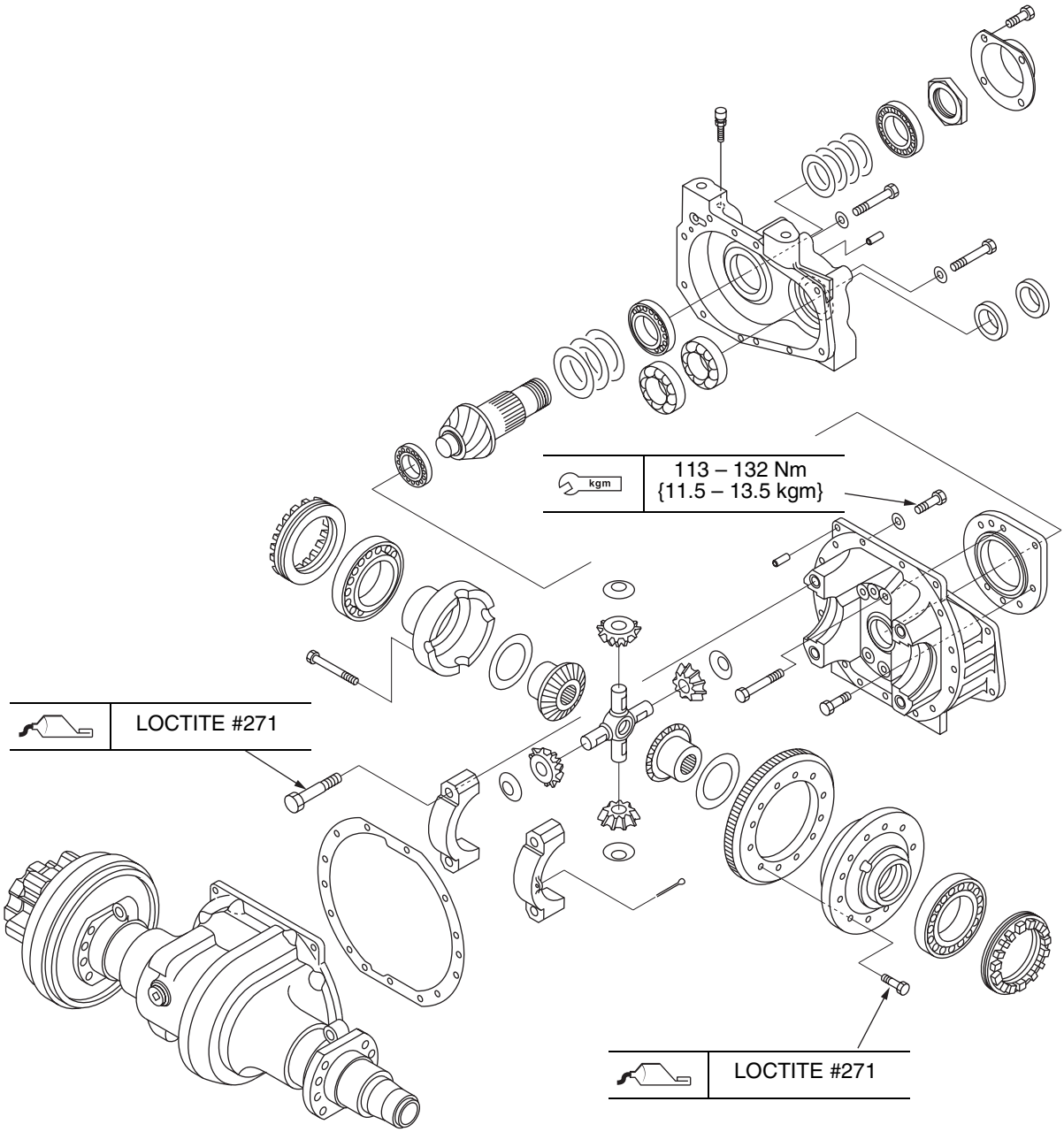

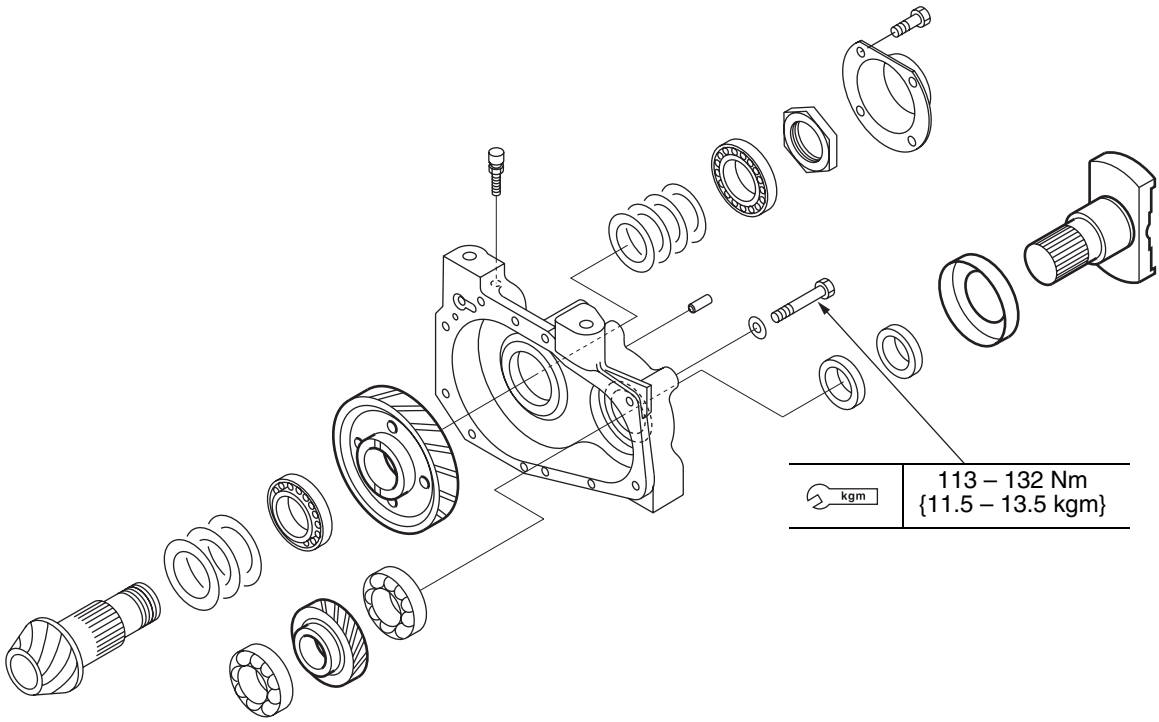
kgm
113 – 132 Nm
{11.5 – 13.5 kgm}

ADJUSTMENT METHOD OF PINION SHAFT ASSEMBLY SHIM

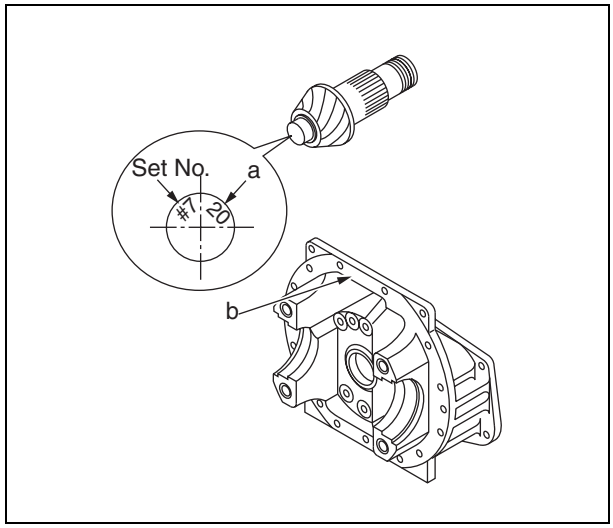

1. **Clearance (a)**
   Read the indication (**a**) at the pinion shaft tip.

2. **Clearance (b)**
   Read the stamp (**b**) on the case.

3. **Clearance (c)**
   Measure the clearance (**c**) and indicate the clearance on 1/100-unit bases against the standard size 29.50 mm.
   ★ The clearance can be fixed for calculation considering from the accuracy of the bearing and following value shall be applicable. If no proper tooth contact is found, assemble it again.
   c = 15 mm

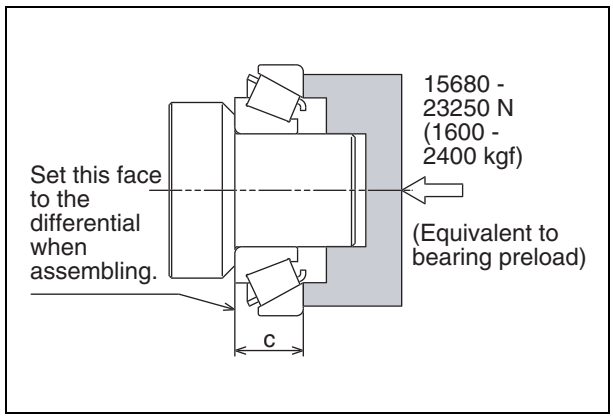

4. **Calculation of Shim Thickness S_1**
   Apply the clearances (**a**), (**b**) and (**c**) obtained from the above to the formula shown below to calculate the thickness of the shim S_1.

$$S_1 = 0.7 + \frac{A+b+c+d}{100}$$

   Round the figure at two places of decimals.

IMPORTANT:
Check to make sure of no clearance between the gear and the shim when pressing the gear for installation.

ADJUSTMENT OF PINION GEAR CLEARANCE

1. **Clearance (b)**
2. **Fix the pinion shaft pushing from the bottom.**
   1) Take an alignment to the shaft with the jig.
   2) Turn the bearing about 10 times each to right and left to check its smooth movement.
   3) Measure the clearance (**d**).

   ★ Check to make sure the step (**1**) of the above for no clearance.

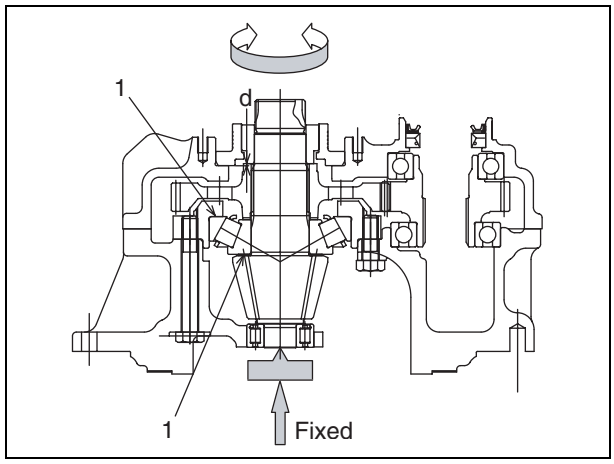

3. **Calculation of Shim Thickness S_2**
   1) Calculate the shim thickness S_2 applying the clearance (**d**) measured by the step **1 – 3** of the above.

      S_2 = 2.354 - d
   2) Select the shim so as to meet the S_2 of the clearance.
   3) Measure the starting torque and adjust the shim thickness S_2.

   Starting Torque for Pinion Bearing

   Starting Torque: 8.8 – 13.2 Nm {90 – 135 kgcm}

   ★ Make sure to measure the starting torque without the coupling shaft.

INSPECTION OF PINION BEARING CLEARANCE

1. Apply the Komatsu genuine oil to the inner race big brim (**1**) when assembling.
2. Check to make sure for no clearance (**2**) when inserting the outer race.
3. Check to make sure the inner race big brim for no clearance (**3**) when pressing the inner race for installation.
4. After tightening the nut with specified torque, turn the bearing about 20 times each to the left and the right to check its smooth movement.
5. If the starting torque cannot get the specified torque as shown below, disassemble and adjust the shim thickness again.

   Starting Torque: 8.8 – 13.2 Nm {90 – 135 kgcm}

   ★ If the starting torque T is greater than 13.2 Nm {135 kgcm}, increase the shim thickness.

   ★ If the starting torque T is less than 8.8 Nm {90 kgcm}, reduce the shim thickness.

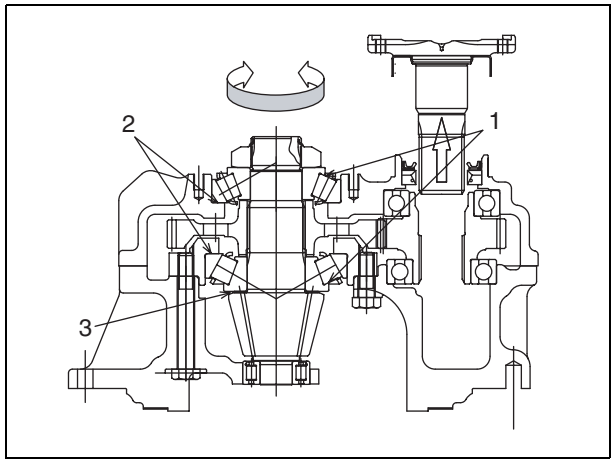

ADJUSTMENT OF DIFFERNTIAL

1. Assembly of Differential Assembly

1) Assemble the differential assembly and install the adjustment screw (**1**).
2) Apply the LOCTITE #271 to the hole of the cap (**2**) and tighten with bolt (**3**) temporarily.

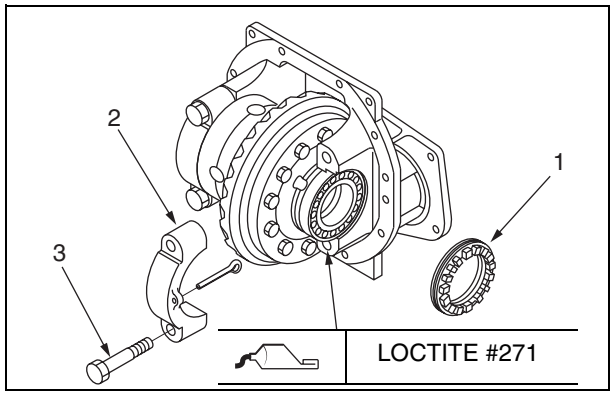

2. Adjustment of Backlash

★ Use the special tool A for tightening the adjustment screw (**1**).

Special Tool **A**	34B-97-99110

1) Set the dial gauge and slightly tighten the adjustment screw at the (**B**) side until the backlash goes to zero.
2) Loosen the adjustment screw at the (**B**) side until backlash goes to 0.15 – 0.23 mm.

Backlash between Ring Gear and Pinion Gear	0.15 – 0.23 mm

★ If the backlash is beyond the criteria of the above, take an adjustment again.

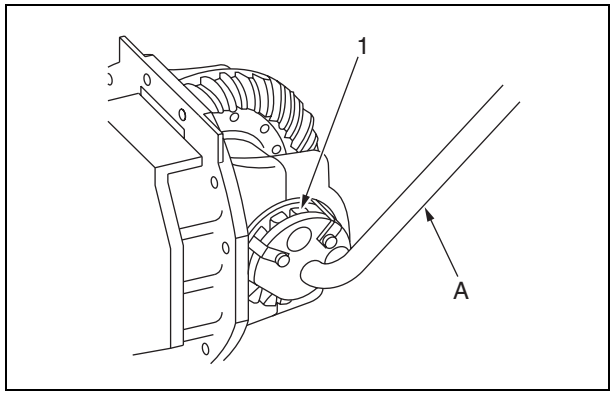

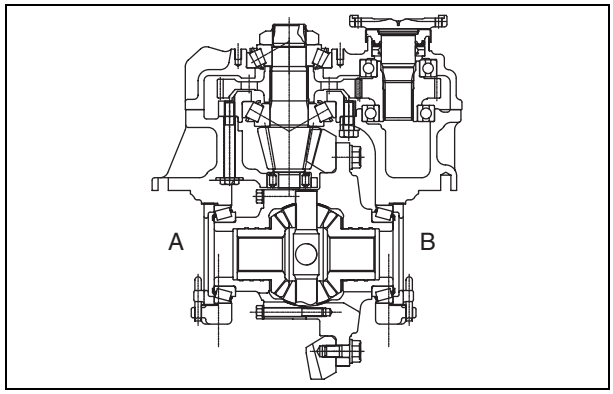

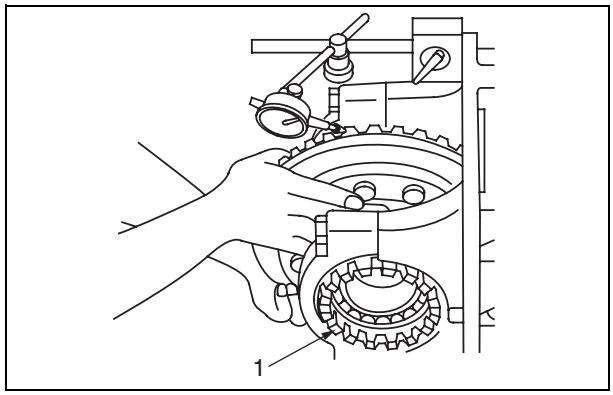

3. 3. Adjustment of Tooth Contact

1) Apply the red lead thinly to the tooth surface of the bevel gear.
2) Turn the bevel gear forward and reverse several times.
3) Check the tooth contact pattern left on the surface for condition of tooth contact.
4) If the tooth contact is not correct, adjust it with the shim thickness **S1**.

- Correct Tooth Contact (No Load)
  The pattern must be located in the center of the tooth contact, which covers 40 to 70 % of the overall length of the tooth being in weak contact at the both ends of the pattern.

Forward

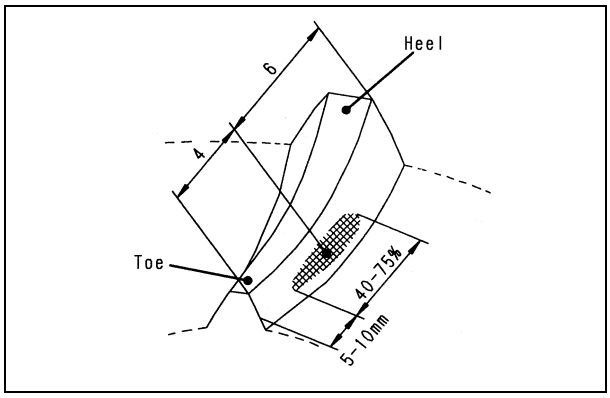

Reverse

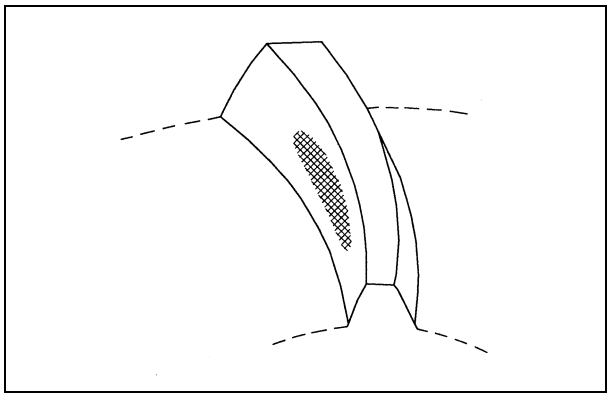

★ In case of strong contact at the tooth top (**1**), increase the shims.
★ In case of strong contact at the tooth top (**2**), reduce the shims.
★ Adjust the tooth contact correctly both forward and reverse.

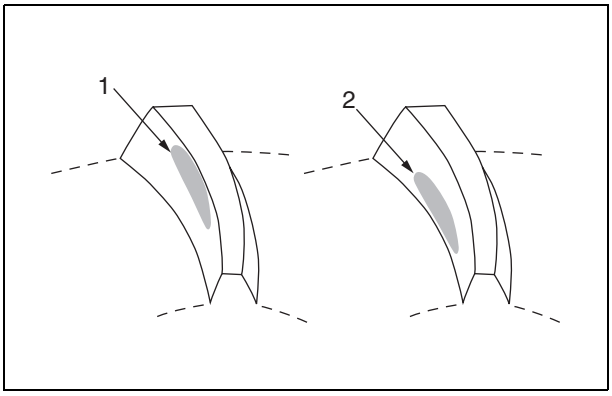

Run-out of Bevel Gear: less than 0.1 mm

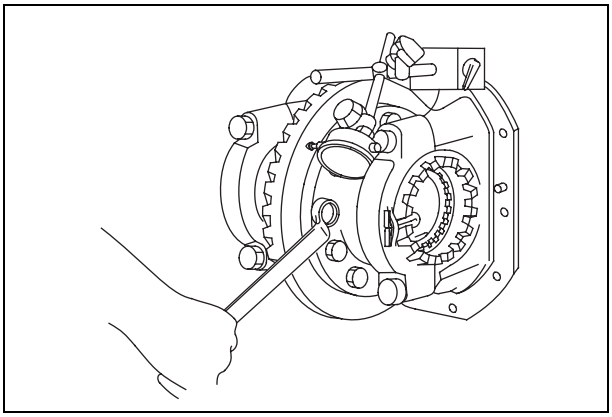

4. Correction of Tooth Contact

- Increase the shims at the pinion shaft to improve the protrusion of the pinion in the direction of the (**A**).
  Next, move the bevel gear away from the pinion in the direction of the (**B**) to adjust the backlash.

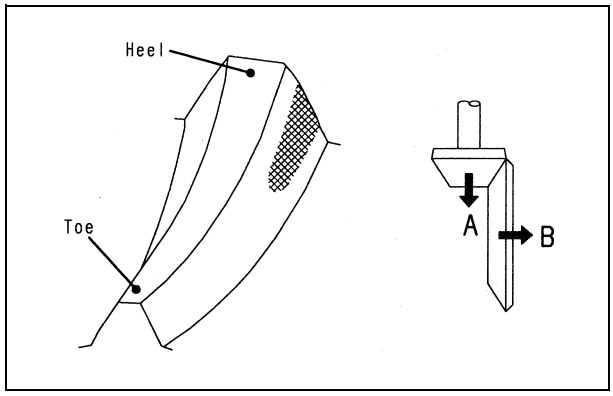

- Reduce the shims at the pinion shaft to decrease the protrusion of the pinion in the direction of the (**A**).
  Next, move the bevel gear closer to the pinion in the direction of the (**B**) to adjust the backlash.

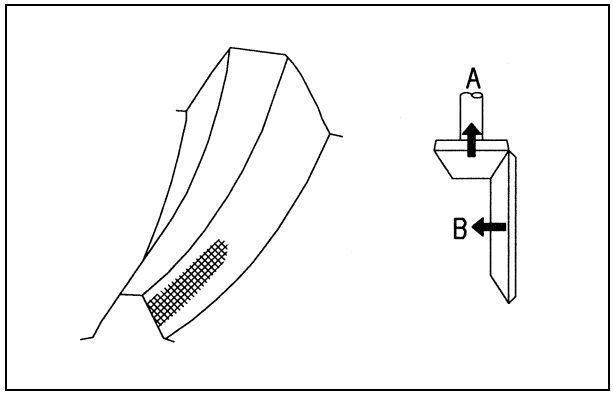

- Reduce the shims at the pinion shaft to decrease the protrusion of the pinion in the direction of the (**A**).
  Next, move the bevel gear closer to the pinion in the direction of the (**B**) to adjust the backlash.

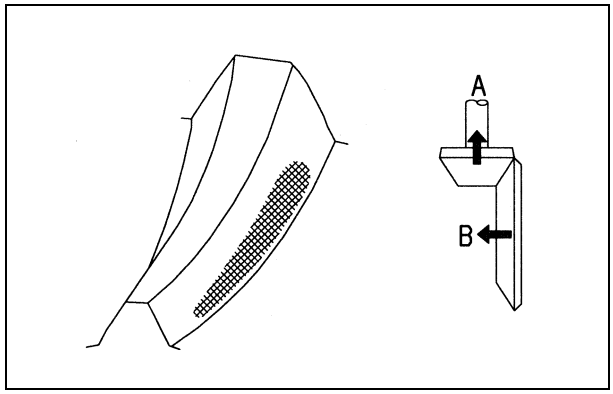

- Increase the shims at the pinion shaft to improve the protrusion of the pinion in the direction of the (**A**).
  Next, move the bevel gear away from the pinion in the direction of the (**B**) to adjust the backlash.

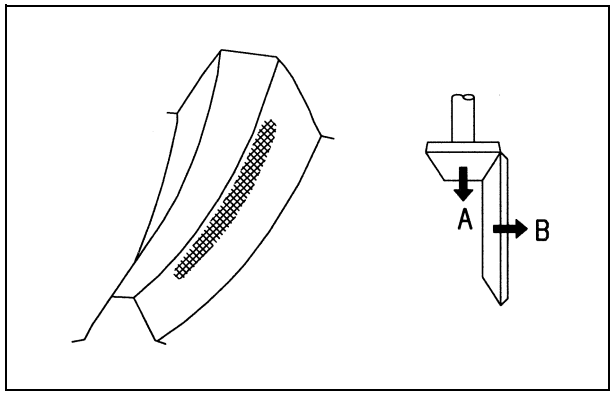

DIFFERENTIAL ASSEMBLY DRAWING

1.0 – 1.75 ton Forklift Trucks

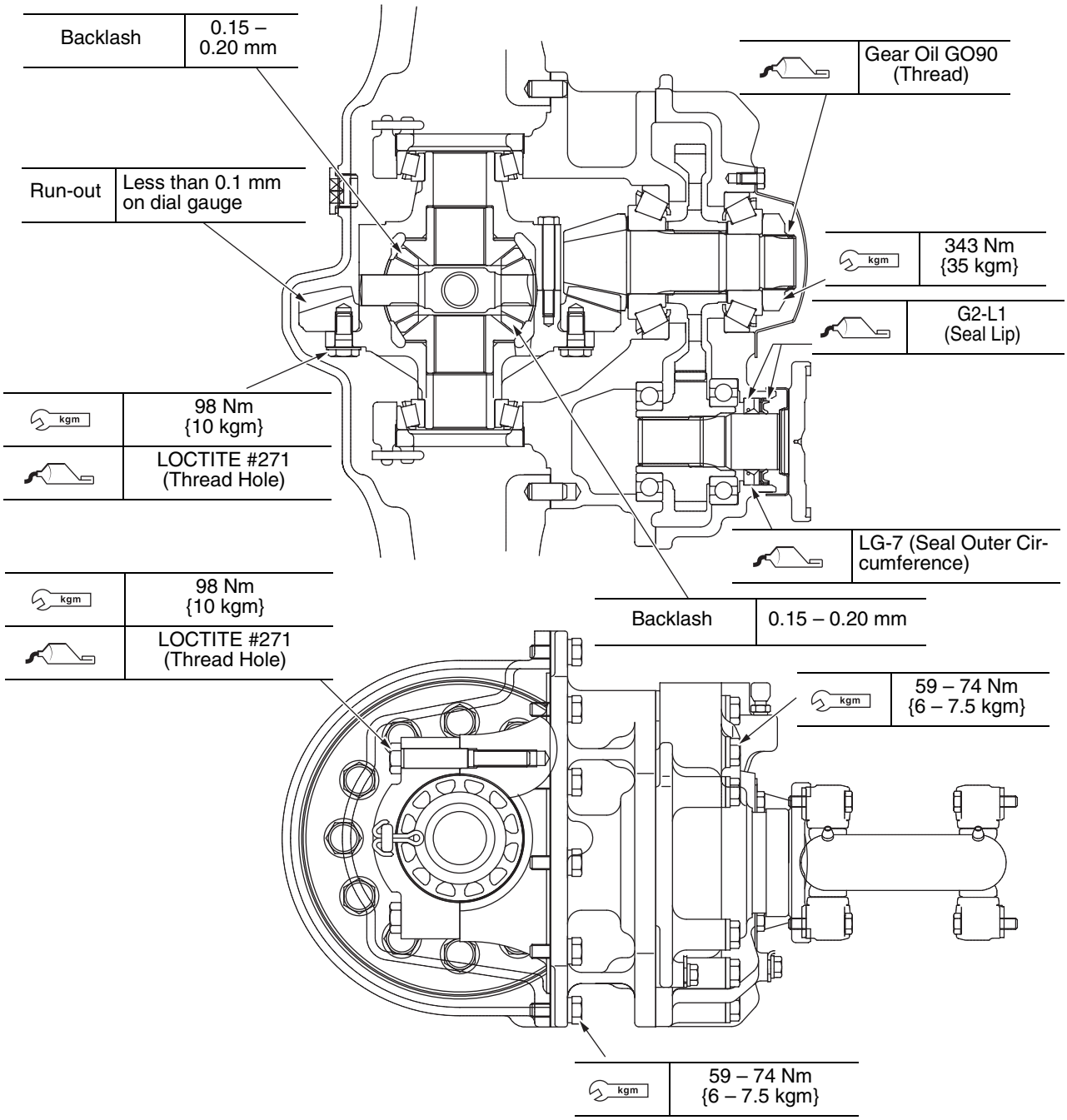

2.0 – 3.0 ton Forklift Trucks

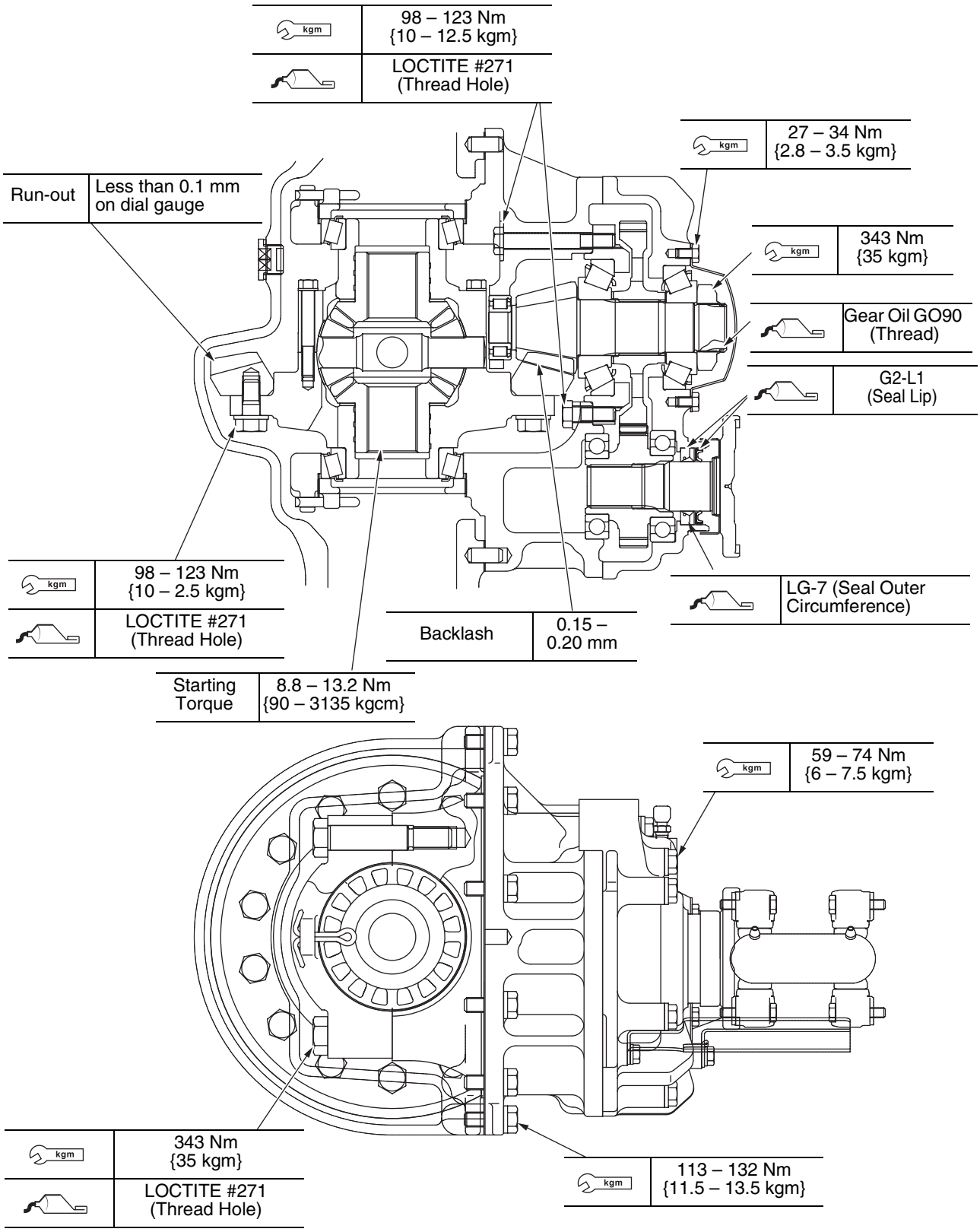

1.0 – 1.75 ton Forklift Truck

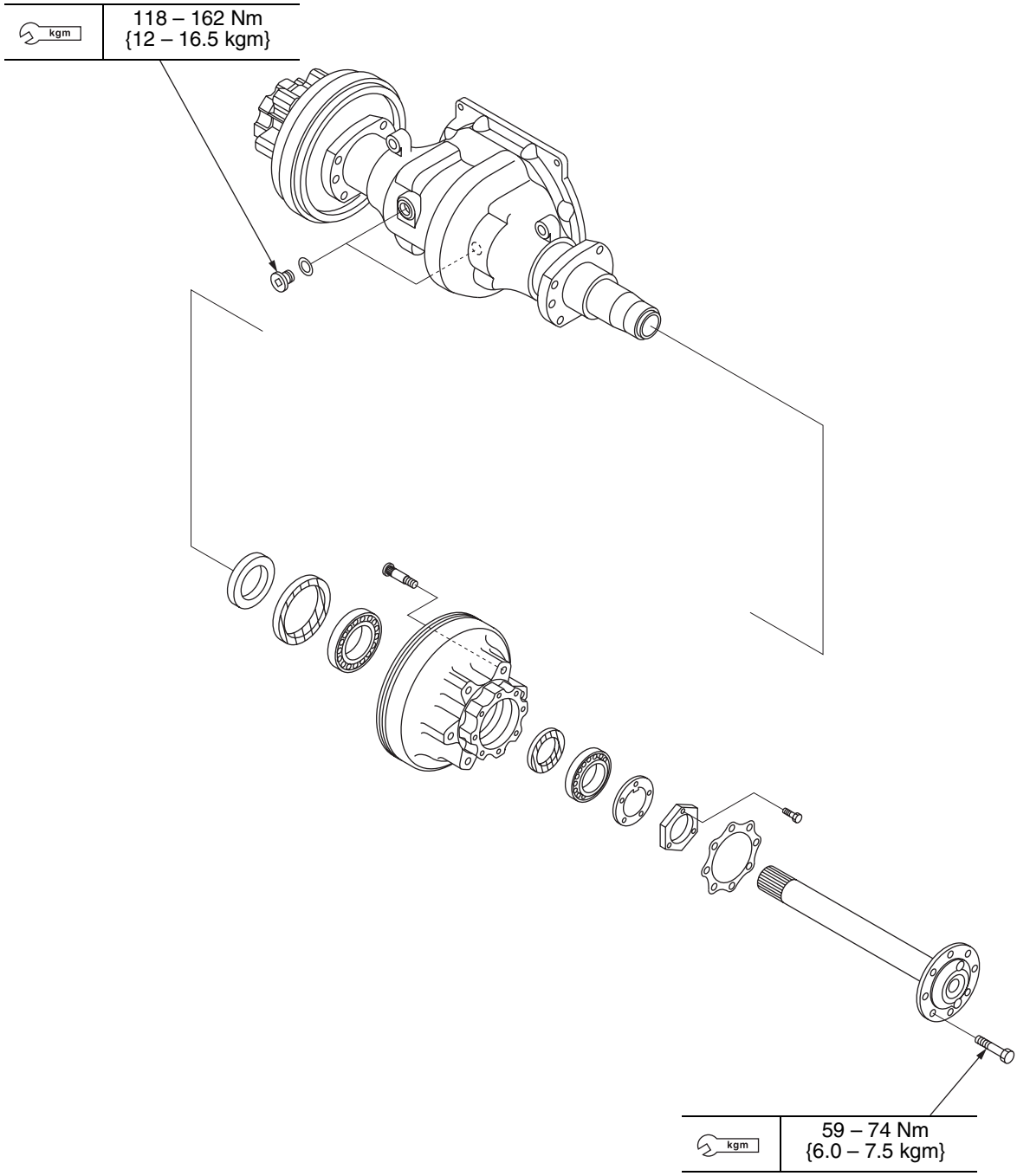

109 Series Forklift Truck

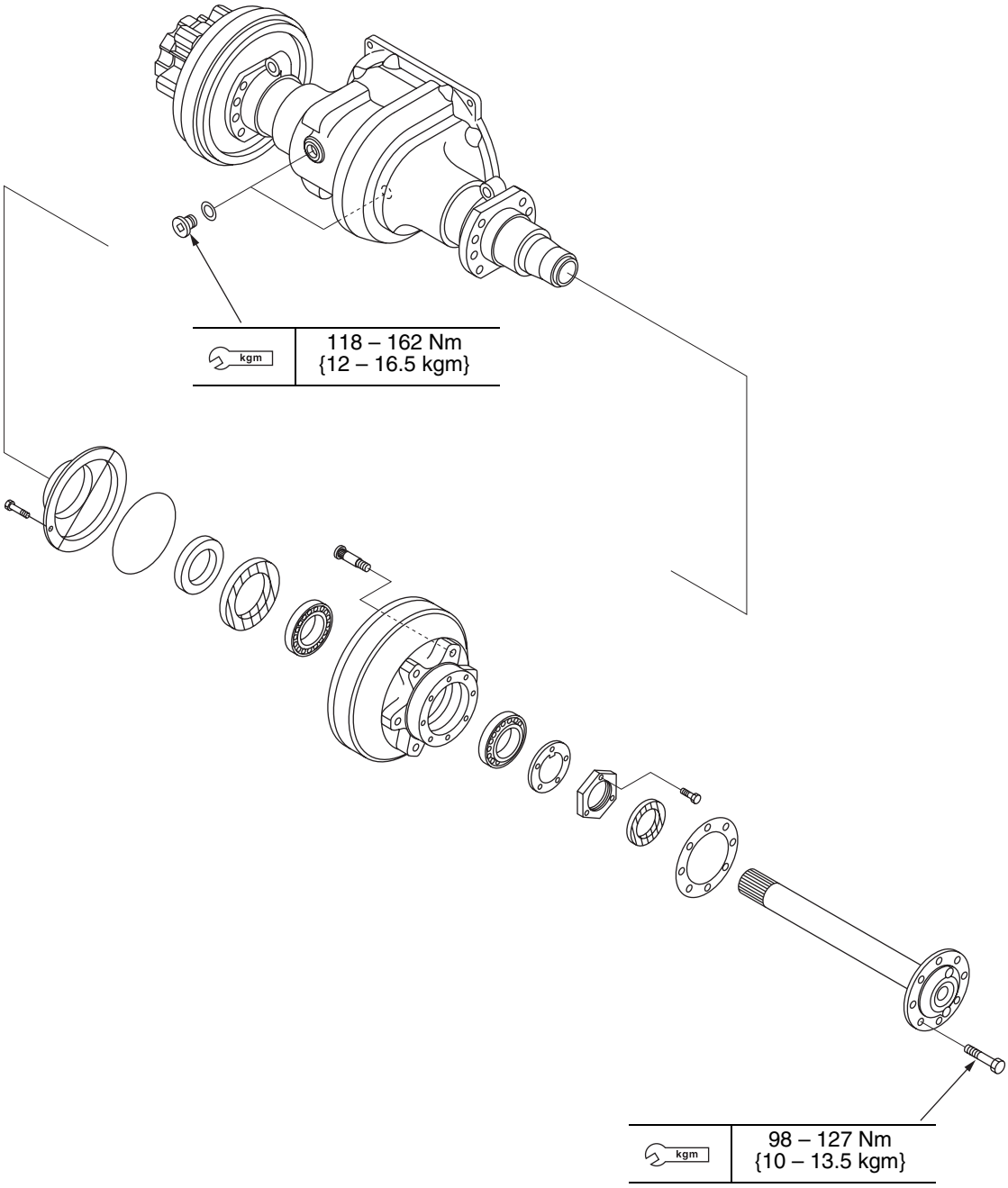

2.0 – 2.5 ton Forklift Truck

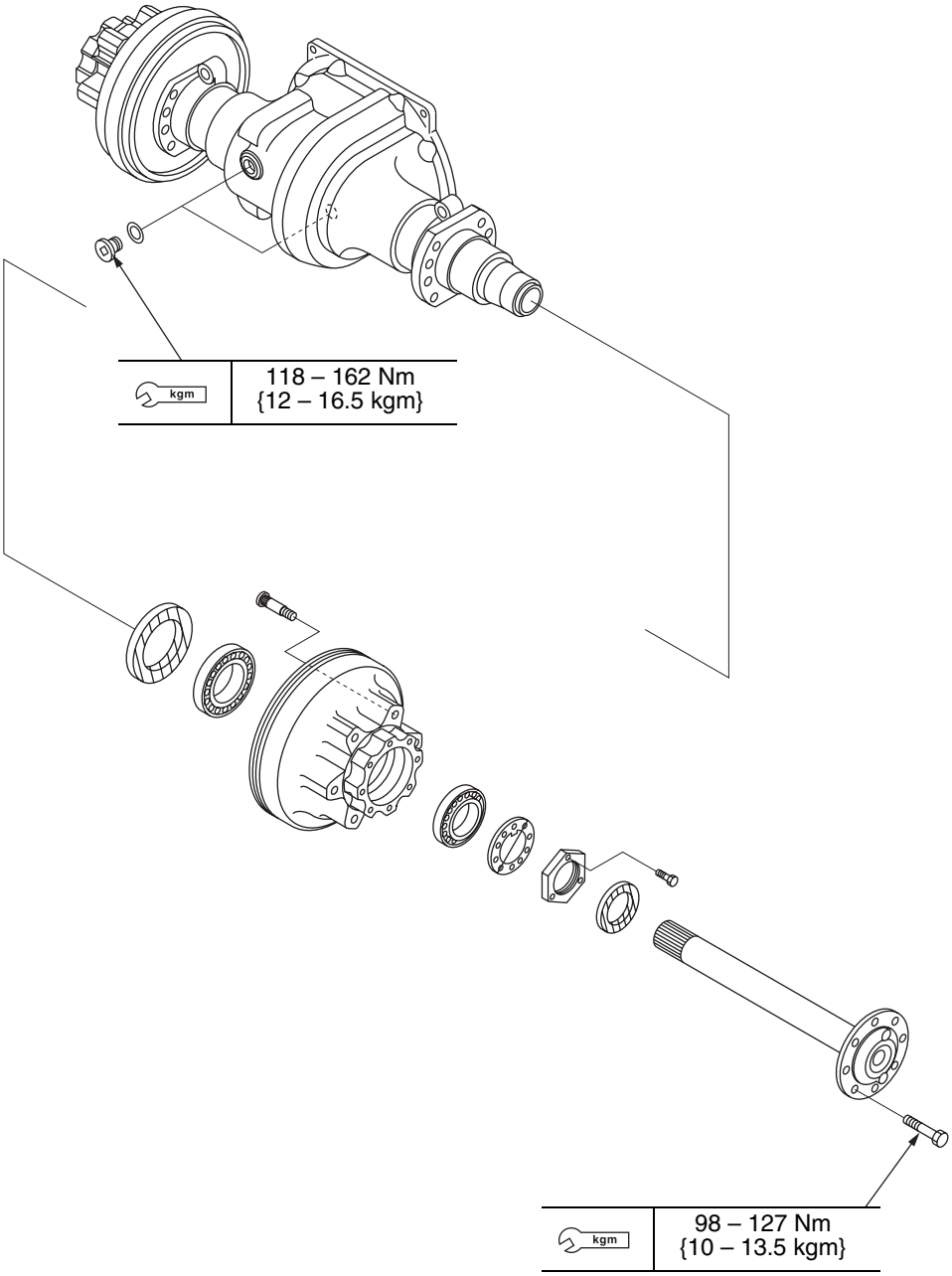

3.0 – 3.5 ton Forklift Truck

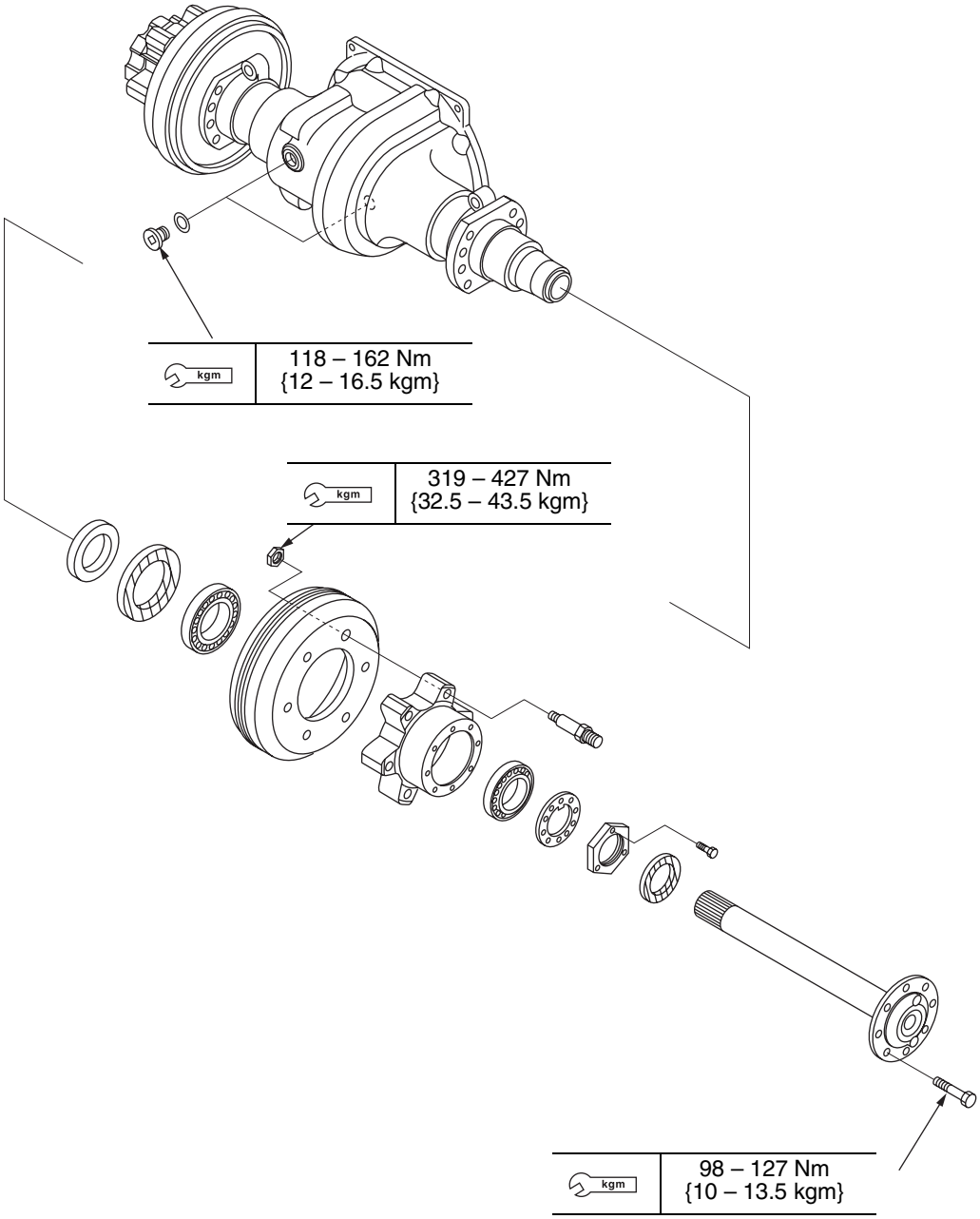

WHEEL BRAKE

1.0 – 1.75 ton Forklift Truck

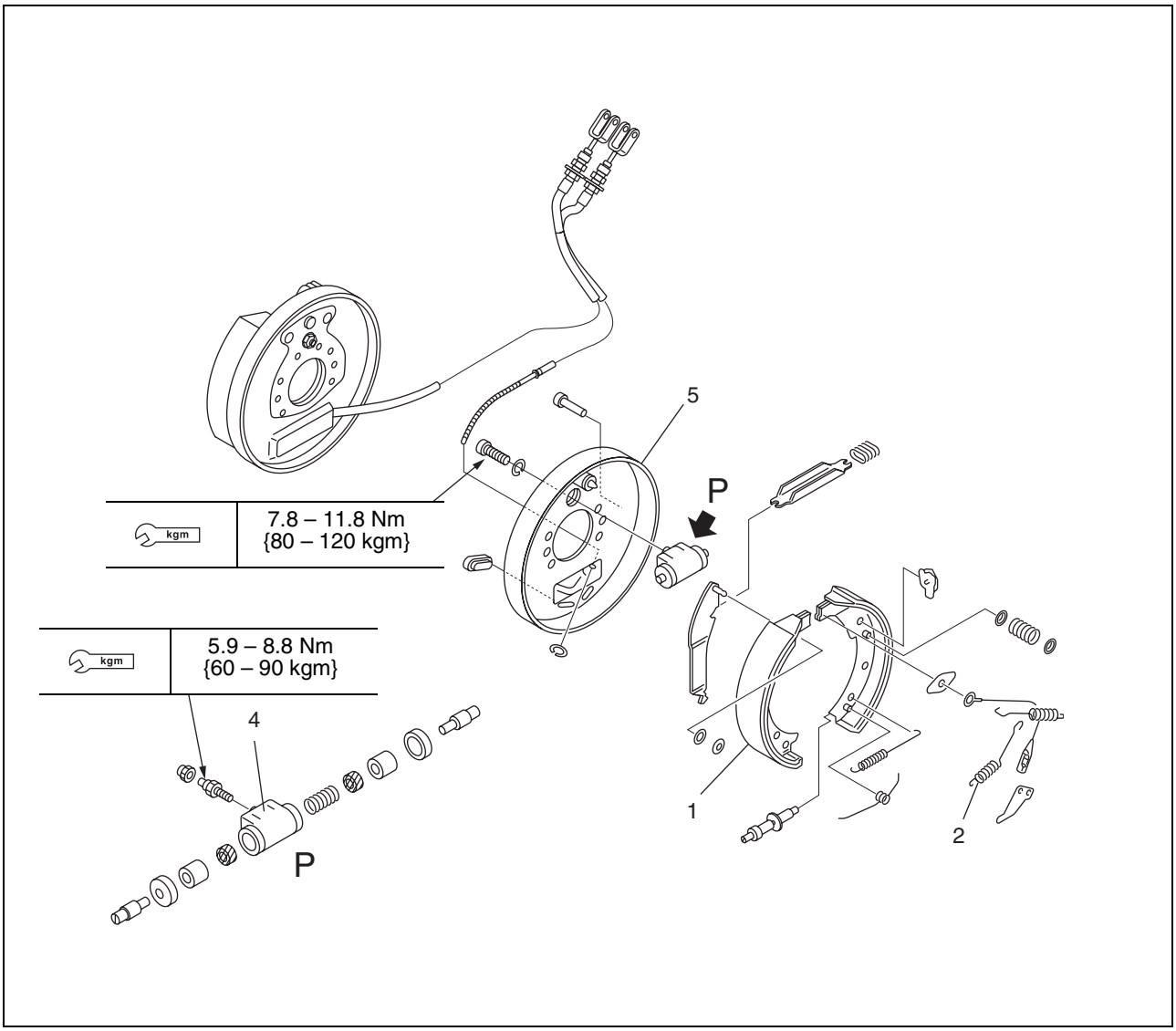

*1. Lubrication for Back Plate Mounting Bolt: LOCTITE #291

Item	Unit	Wheel Brake
Type	–	Front wheel internal expanding hydraulic type
Structure	–	Duo servo
Brake Drum Inner Diameter	mm	254.0
Lining Material	mm	Resin molded (Adhesive type)
Width	mm	48.5
Thickness	mm	4.87
Wheel Cylinder Inner Diameter	mm	28.58 (1/8")

2.0 – 3.0 ton Forklift Truck

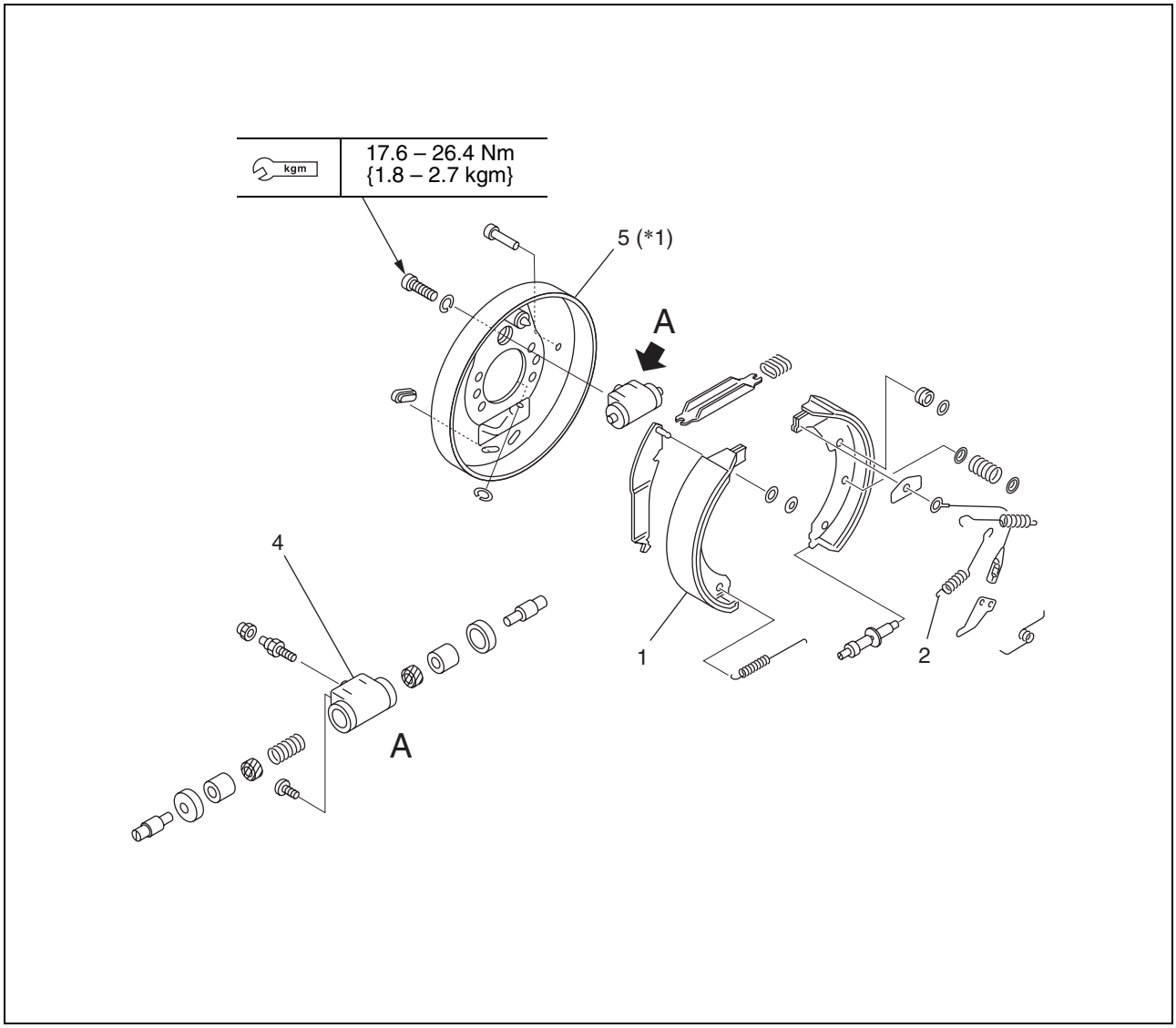

*1. kgm Tightening Torque for Back Plate Mounting Bolt: 176 – 196 Nm (18 – 20 kgfm)

Lubrication for Back Plate Mounting Bolt: LOCTITE #291

Item	Unit	Wheel Brake
Type	–	Front wheel internal expanding hydraulic type
Structure	–	Duo servo
Brake Drum Inner Diameter	mm	310.0
Lining Material	mm	Resin molded (Adhesive type)
Width	mm	60.0
Thickness	mm	5.7
Wheel Cylinder Inner Diameter	mm	28.58 (1/8")

1. Adjustment of Shoe Clearance

See pp. 20-34 Wheel Brake.

2. Test After Adjustment

Pull the cable (**1**) by finger in the direction shown by the arrow in the diagram on the right. Then, the lever engages with the next tooth. Release the cable and the lever returns to the original position after sending one notch.

★ When the lever fails to function properly, check the lever for the position above the adjuster screw.

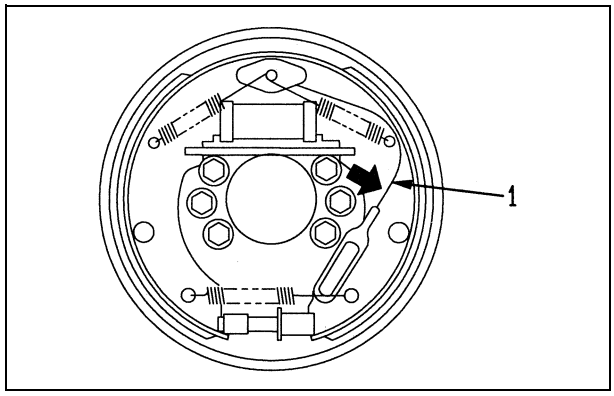

Right Position of Lever

The lever is designed to contact the adjuster wheel in the clearance (**a**) between 5 to 7 mm from the center of the adjuster screw.

★ When the lever position is wrong, the lever cannot gear with the wheel. Moreover, the wheel may fail to function even if the lever works.

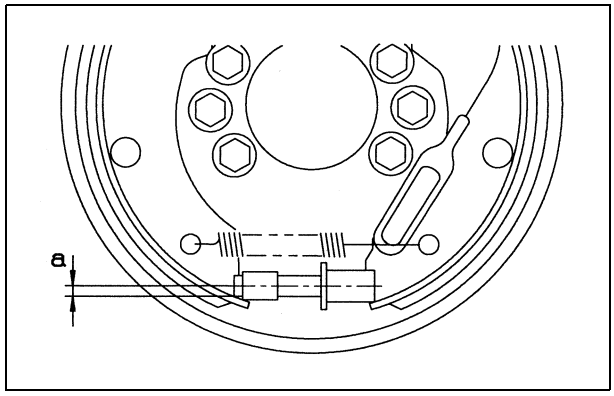

Remedy for Malfunction

1) Check to make sure that the cable guide can properly fit to the specified hole on the secondary shoe.
2) Check to make sure that the adjuster spring can properly place to the specified hole on the primary shoe.
3) Replace the cable with a new one, if necessary.
4) Replace the lever with a new one, if necessary.
5) Replace the adjuster assembly, if necessary.

BRAKE MASTER CYLINDER

COMPONENT PARTS

No.	Part Name	Q'ty
1	Cylinder	1
2	Piston Assembly	1
3	Snap Ring	1
4	Boot	1
5	Push Rod	1
6	Nut	1
7	Yoke	1
8	Bushing	1
9	Filler Union	1

No.	Part Name	Q'ty
10	Bleeder Valve	1
11	Bleeder Cap	1
12	Valve Spring	1
13	Seat	1
14	Valve Rubber	1
15	Gasket	1
16	Bolt	1
17	Valve Assembly	1

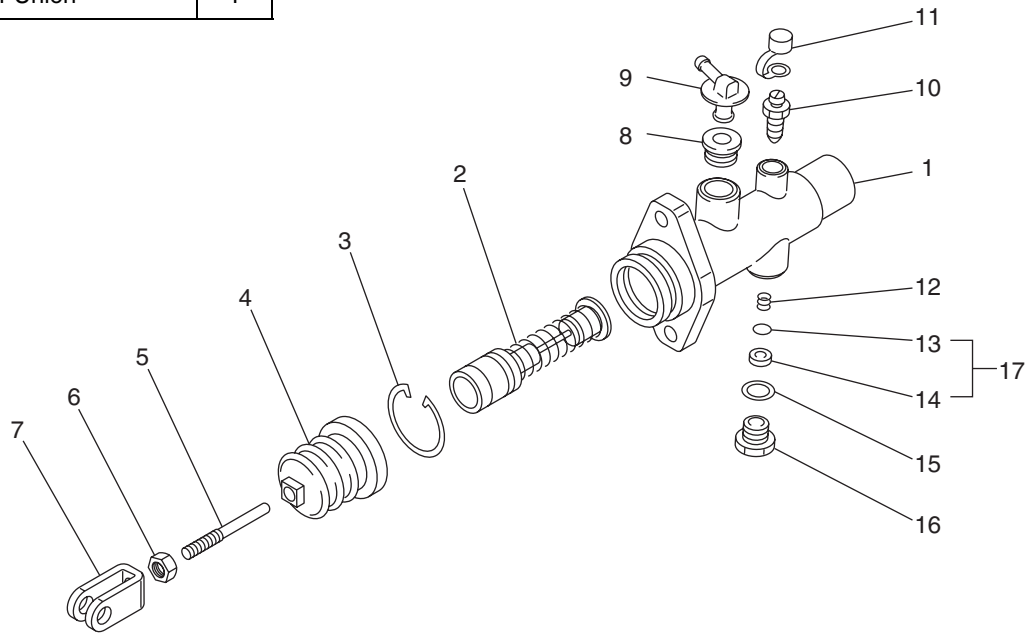

Unit: mm

No.	Check Item	Standard Size	Repair Limit	Remedy	Ref. No.
1	Clearance between Cylinder and Piston	0.020 – 0.105	0.15	Replacement (Cylinder Assembly)	1.2
2	Tightening Clearance of Cup	Primary: approx. 1.0 Secondary: approx. 1.2	0.4	Replacement (Cylinder Assembly)	2
3	Free Length for Spring	78.8	70	Replacement	2

★ The numbers shown in the Ref.No. on the right refer to those of the diagram of the component parts.

DISASSEMBLY

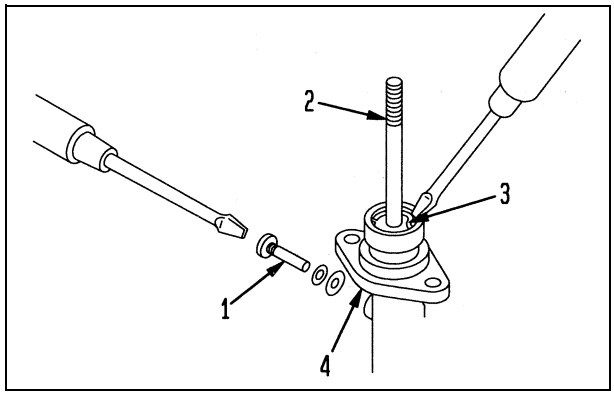

1. Remove the yoke and the boot.

2. Remove the stopper pin (**1**) with a flat-headed screwdriver.
   ★ When it is hard to remove the stopper pin, push the push rod (**2**) a little bit.

3. Remove the stopper wire (**3**) from the cylinder (**4**) with the flat-headed screwdriver.

4. Remove the piston assembly, the spring, the check valve and valve seat.

WARNING

- Be careful not to damage the cylinder, the piston or the cup.
- When carrying out disassembly, make sure that you understand the structure of the cylinder well in advance. Then, it is recommended that all the disassembled parts be put in order according to the disassembly procedures.
- Never disassemble the piston assembly.
- Be careful not to push the outer surface of the cylinder with a vise.

INSPECTION AND ADJUSTMENT

Part Name	Check Item	Remedy
Cylinder	Scratches, uneven wear or corrosion of inner surface	• Remove small scratches with sandpaper. • If critical scratches are found to affect adversely the cup, replace it with a new cylinder assembly.
Piston	Scratches, uneven wear or corrosion	• Remove small scratches with oilstone. • If critical scratches are found to affect adversely the inner face of cylinder or the cup, replace it with a new piston assembly.
	Clearance between cylinder and piston	• If the clearance is greater than the repair limit, replace it with a new one. Repair Limit: 0.15 mm
Cup	Scratches on lip	• Even if the scratches are very small, replace if with a new piston assembly.
	Pitting of base	• If harmful pitting is found, replace it with a new piston assembly.
	Wear or swelling	• If abnormal deterioration, wear or swelling is found, replace it with a new piston assembly.
	Clearance	• If it is below the repair limit, replace it with a new piston assembly. Repair Limit: 0.4 mm Note: The cup belongs to the parts to be replaced periodically. In general, it is recommended that such parts be replaced whenever disassembled.
Piston Assembly	Deformation, scratches or wear of valve rod, valve cup, spring and thimble	• If abnormal deformation, scratches or wear is found, replace it with a new piston assembly.

1. Base
2. Lip
3. Base
4. Lip

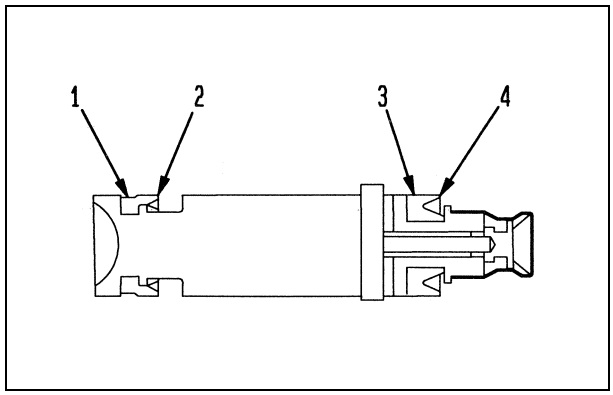

Part Name	Check Item	Remedy
Spring	Scratches, wear or fall	Those of having critical scratches must be replaced with a new one.
	Free length	Those of below the repair limit must be replaced with a new one. Repair Limit: 70 mm
Push Rod	Bend or deformation	Those of bend or deformation must be replaced with a new one.
Boot	Cracks damage or scratches	Those of cracks, damage or scratches must be replaced with a new one.
	Tightening allowance between cylinder and rod	Those of no tightening allowance or an extremely little tightening allowance must be replaced with a new one.
Filler Union	Cracks	Even if the cracks are extremely small, replace it with a new one.
	Discoloration	Those of critical discoloration must be replaced with a new one.
	Scratches	Those of scratches must be replaced with a new one.
Bushing	Cracks or deterioration	Those of cracks or critical deterioration must be replaced with a new one,

MAINTENANCE STANDARD

Unit: mm

No.	Check Item	Standard Size	Repair Limit	Remedy
1	Clearance between cylinder and piston	0.020 – 0.105	0.15	Replacement (Cylinder Assembly)
2	Tightening Clearance of Cup	Primary side: approx. 1.0 Secondary side: approx. 1.2	0.4	Replacement (Cylinder Assembly)
3	Spring Free Length	78.8	70	Replacement

COMBINATION SWITCH

COMPONENT PARTS

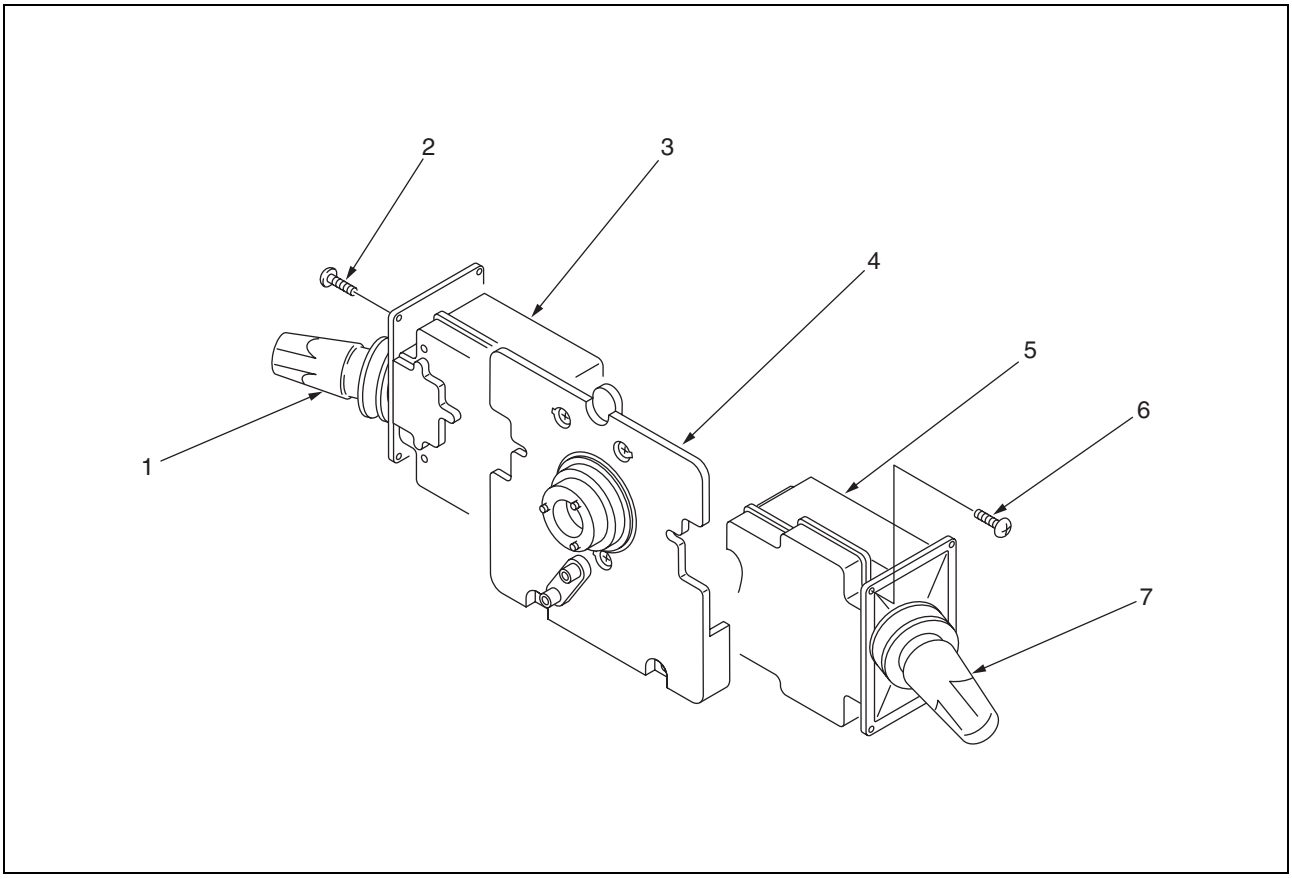

1. F/R Switch
2. Screw
3. Cover
4. Body
5. Cover
6. Screw
7. Turn Signal Switch

Inspection of Switches

1. Remove the connection of the 8-pin coupler between the combination switch cord and the main wiring harness.

2. Check continuity of electric current between the terminals at each position to make sure that there is continuity between the 0 to the 0.

3. Insulating resistance: More than 10 Ω at each terminal with a 500 V megohm meter.
   1) F/R switch connector
   2) Horn contact connector
   3) Protective plate
   4) Lighting connector
   5) Lighting and turn signal switch connector

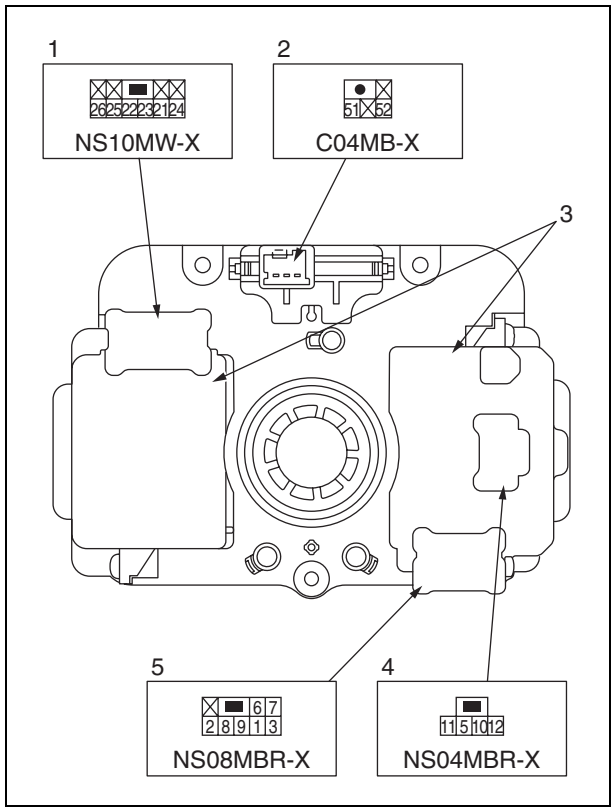

Position of Turn Signal Switch Connection

No.	R	N	L	Connect to
1	○		○	Power Source
2	○			3/1 Lamp
3			○	3/1 Lamp

Position of Lighting Switch Connection

No.	Twist			Connect to
	OFF	1	2	
11	○		○	Power Source
12	○		○	Tail Lamp
			○	
5			○	
			○	
8			○	

No.	Up and Down			Connect to
	A	B	C	
	○	○	○	Power Source
6	○		○	H/Lamp Main
7		○		H/Lamp Main
5			○	Power Source
	○	○	○	Power Source
9	○		○	H/Lamp
10		○		H/Lamp Dimmer
8			○	Power Source

When switching between A←→B ←→C, it overlaps between A←→B and B ←→C each other.
It returns automatically at C→B.

Position of F/R Switch Connection (TORQFLOW Type)

No.	F	N	R	Connect to
21	○		○	Earth
22	○			Relay
23				Relay
24			○	Relay
25		○		Power Source
26		○		Relay

When switching between F ←→N←→R, it does not overlap between F←→N and N←→R.

Horn Switch Circuit

No.		Connect to
51	○	
52	○	

SOLENOID VALVE

DISASSEMBLY DRAWING

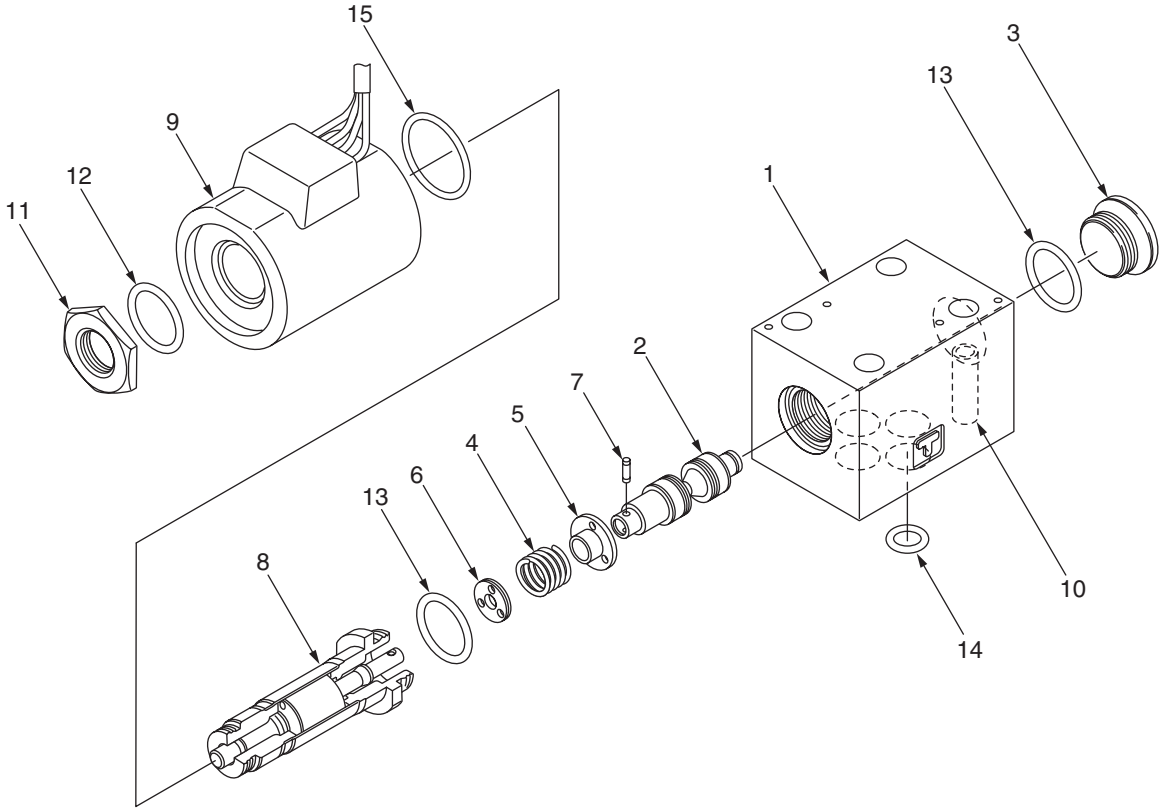

COMPONENT PARTS

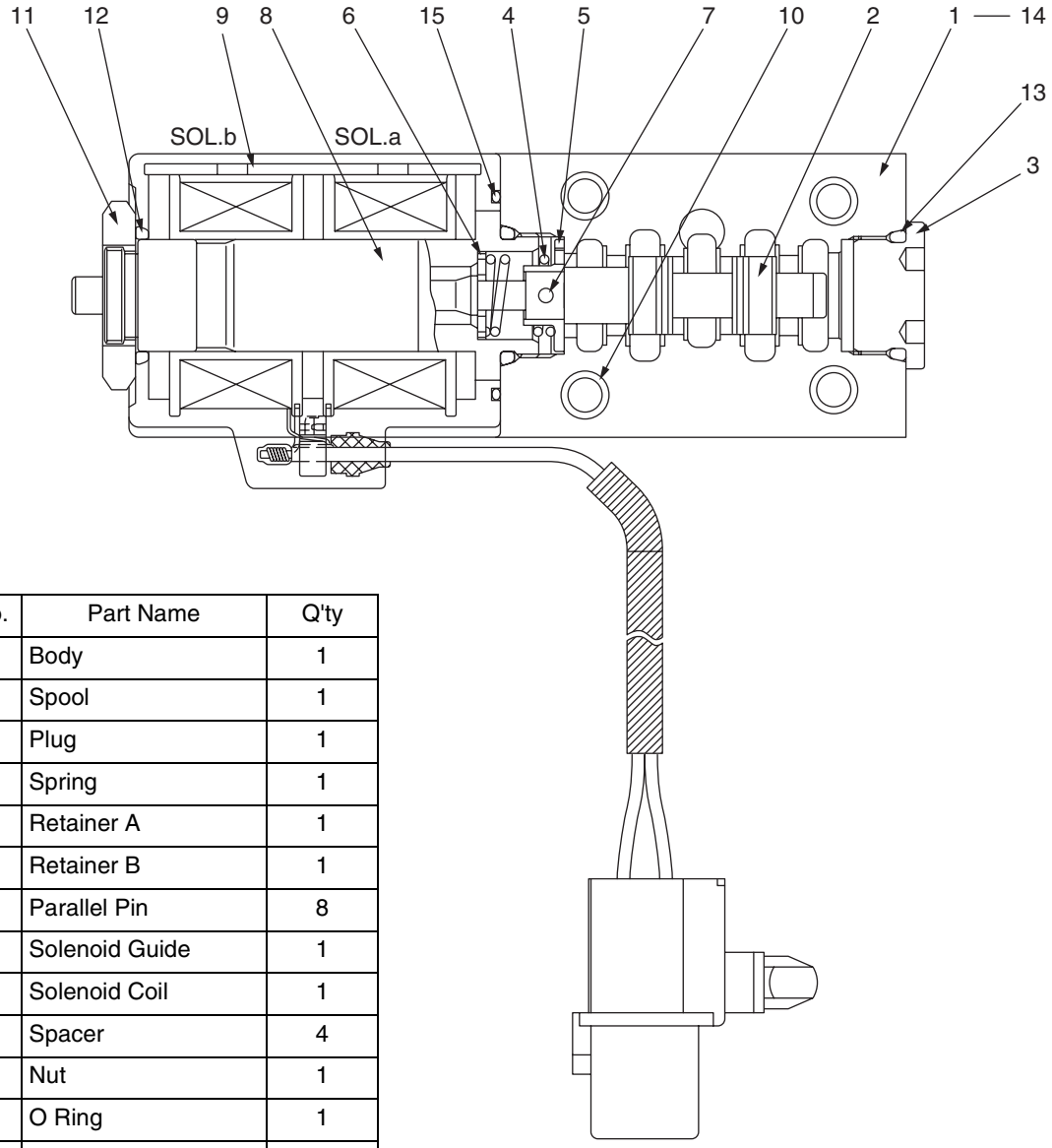

Ref. No.	Part Name	Q'ty
1	Body	1
2	Spool	1
3	Plug	1
4	Spring	1
5	Retainer A	1
6	Retainer B	1
7	Parallel Pin	8
8	Solenoid Guide	1
9	Solenoid Coil	1
10	Spacer	4
11	Nut	1
12	O Ring	1
13	O Ring	1
14	O Ring	1
15	O Ring	1

DISASSEMBLY

1. Remove the nut (**11**) with the spanner (27 mm).
2. Remove the O-ring (**12**). Then, remove the solenoid coil (**9**).
3. Remove the O-ring (**15**) inserted in the solenoid coil (**9**).

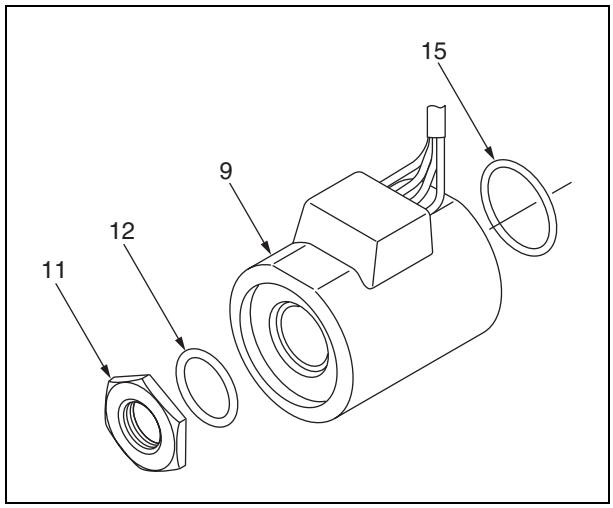

4. Remove the solenoid guide (**8**) with the 27 mm spanner.
   ★ Be careful not to damage the spool hole because the clearance between the body (1) and the spool (2) is extremely small.
5. Remove the O-ring (**13**) from the solenoid guide (**8**).

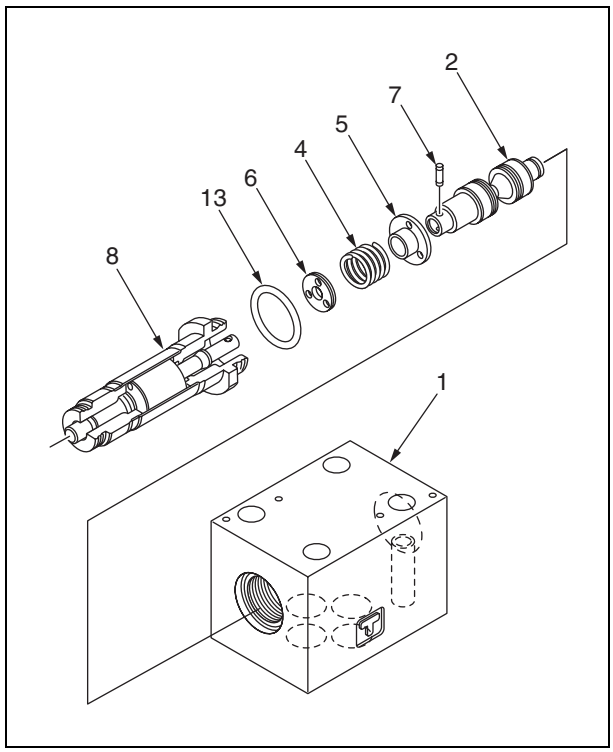

6. Loosen the plug (**3**) with the spanner (3.5 mm pin-spanner with 12.5 mm pitch) and remove it.
7. Remove the O-ring (**13**) from the plug (**3**).
8. Remove the -ring (14) from the body (1).
   ★ Never remove the spacer because it was pressed into the body.

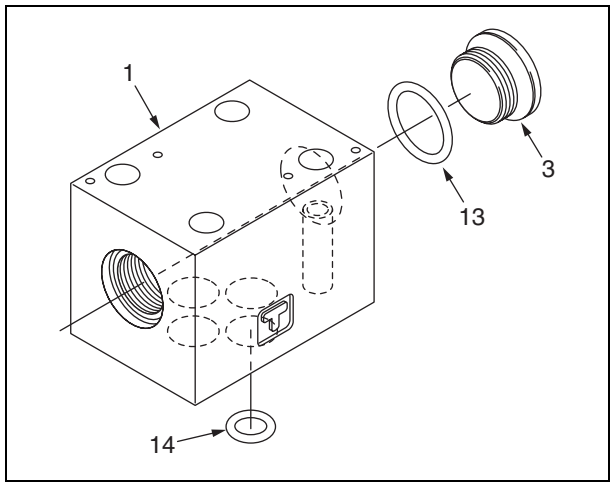

ASSEMBLY

1. Insert the O-ring (**14**) in the body (**1**).
   ★ All of the O-rings shall be replaced with a new one,
2. Insert the O-ring (**13**) in the plug (**3**).
3. Assemble the plug (**3**) to the body (**1**) with the pin spanner (3.5 mm pin-spanner with 12.5 mm pitch).

kgm	20 – 25 Nm {2.0 – 2.6 kgm}

4. Insert the O-ring (**12**) in the solenoid guide (**8**).
5. Assemble the O-ring (**13**), the retainer B (**6**), the spring (**4**), the retainer A (**5**), the spool (**2**) and the parallel pin (**7**) to the solenoid guide (**8**), which insert to the body (**1**) and assemble with the spanner (24 mm spanner).

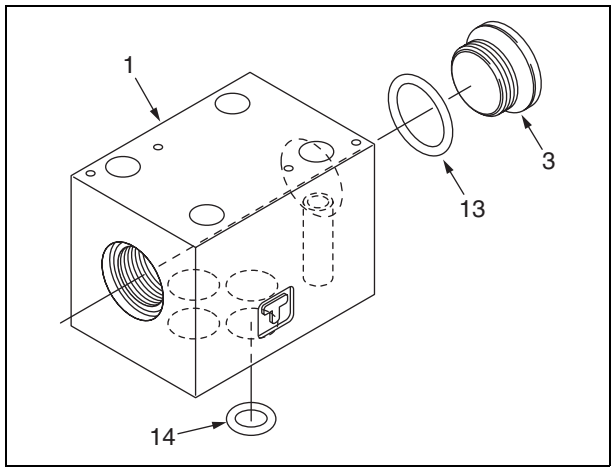

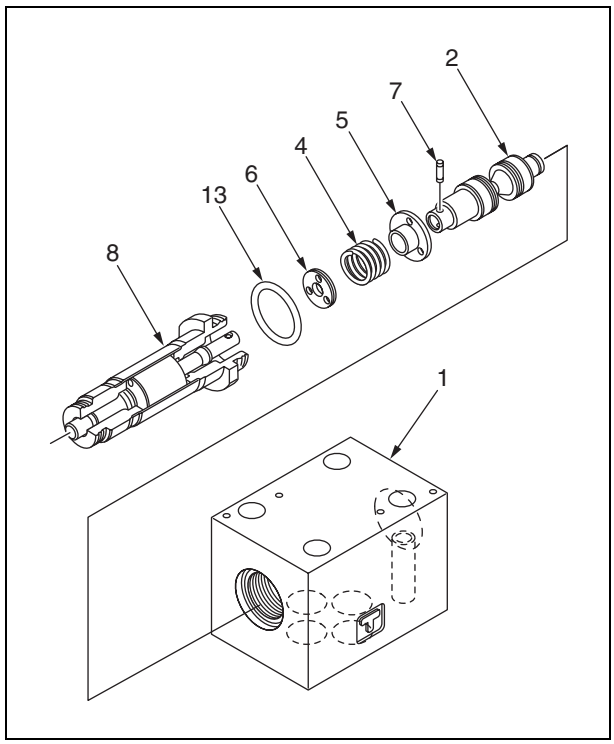

6. Insert the O-ring (**15**) in the solenoid coil (**9**).
7. Insert the solenoid coil (**9**) in the solenoid guide (**8**).
8. Insert the O-ring (**12**) in the solenoid coil (**9**).
9. Install the nut (**11**) with the spanner (27 mm spanner).

kgm	8 – 10 Nm {0.8 – 1.0 kgm}

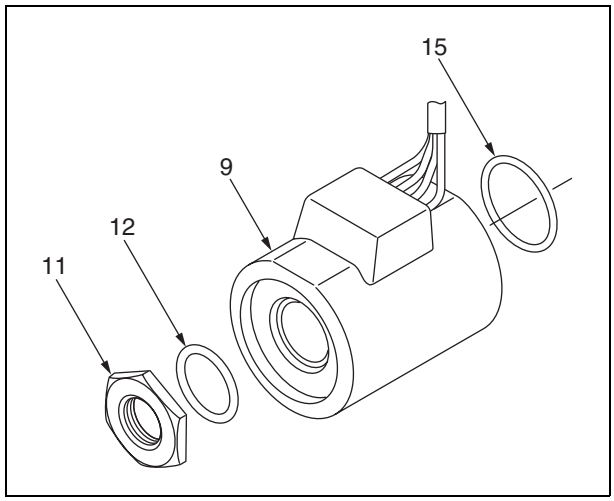

STEERING VALVE

If any seal is replaced at a servise shop, the manufacturer's warranty becomes invalid.
Be sure to send seals to the manufacturer for replacement as an assembly unit.

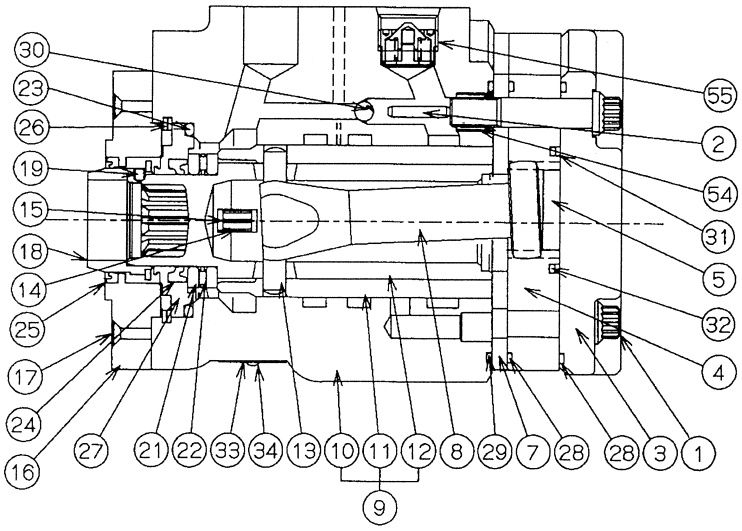

No.	Part name	Q'ty	Remarks
1	Screw	7	Size: 5/16-24UNF
2	Spring pin	1	
3	End cap	1	
4	Gerotor	1	
5	Spacer	1	No spacer or two spacers are used depending on specifications.
6	(Spacer)	(1)	
7	Spacer plate	1	
8	Drive	1	
9	Control parts assembly	1	Including part numbers 10 to 12
10	Housing	(1)	
11	Sleeve	(1)	
12	Spool	(1)	
13	Pin	1	
14	Centering spring	6	For standard input specifications
		4	For standard low input specifications
		4	For standard ultra-low input specifications
15	(Flat spring)	2	For standard ultra-low input specifications only
16	EPACS controller	1	
17	Cross recessed countersunk head screw	2	Size: M3, width across flats: 1.5mm
18	Rotor		
19	Hexagon socket head setscrew	1	Size: M3
21	Race bearing	2	
22	Thrust needle	1	
23	O-ring	1	

No.	Part name	Q'ty	Remarks
24	Oil seal	1	
25	Dust seal	1	
26	Retaining ring	1	
27	Seal ground bushing	1	
28	O-ring	2	
29	O-ring	1	
30	Ball	1	
31	Face seal (or plug)	1	For low slip specifications only
32	O-ring	1	For low slip specifications only
33	Nameplate	1	
34	Rivet	2	
36	Valve block	1	
37	Spool	1	
40	Tube assembly	1	
41	Nut	1	
42	Coil with connector	1	
43	O-ring	4	
44	O-ring	1	
45	Hexagon head bolt	2	M10 x P1.5 x shank: 35mm, width across flats: 8mm
46	Spring	1	
47	Core	1	
48	(Hexagon socket head plug)	1	No plug is used depending on specifications.
50	O-ring	1	
52	(Orifice plug)	1	Check valve is used depending on specifications.
54	Adapter screw	1	
55	(Check valve assembly)	1	No assembly is used depending on specifications.

STEERING AXLE

DISASSEMBLY DRAWING

1.0 – 1.75 ton Forklift Truck

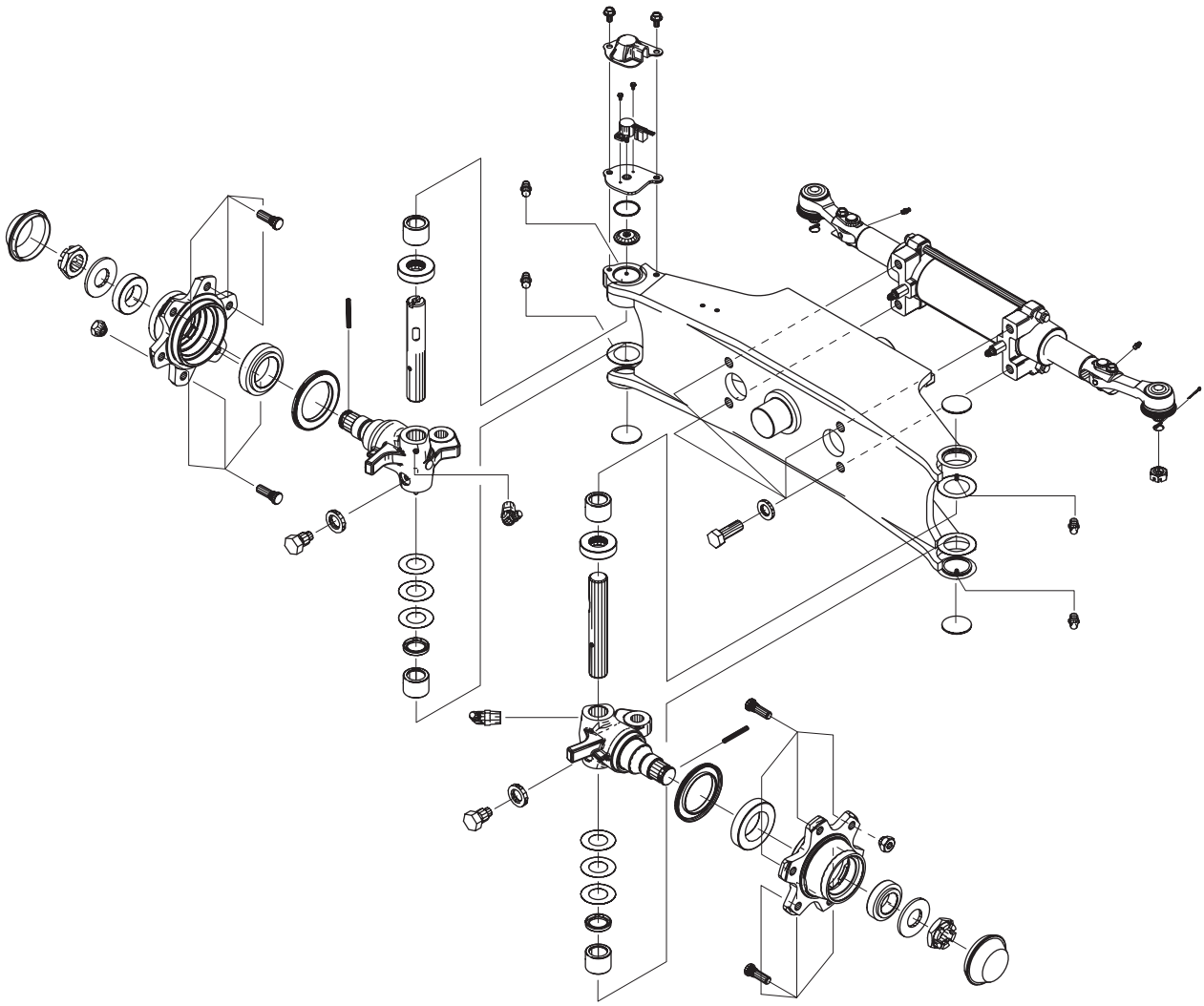

Note: Press in with jigs

2.0 – 3.0 ton Forklift Truck

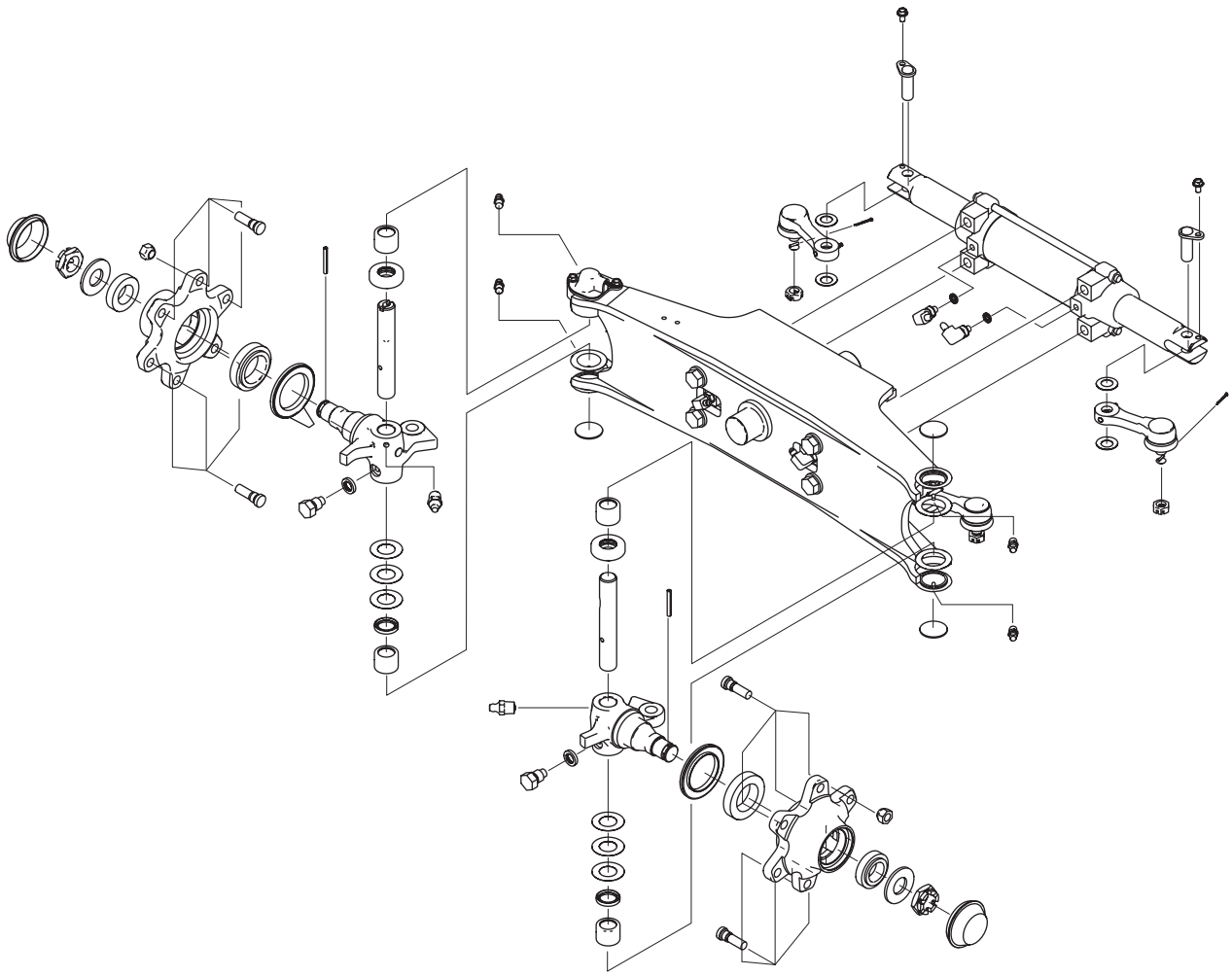

Note: Press in with jigs

ASSEMBLY DRAWING

1. Adjustment of Stopper Bolt

When setting the wheel at the maximum steering angle, adjust the both side of stoppers to contact the wheel simultaneously.

1.0 – 1.75 ton Forklift Truck

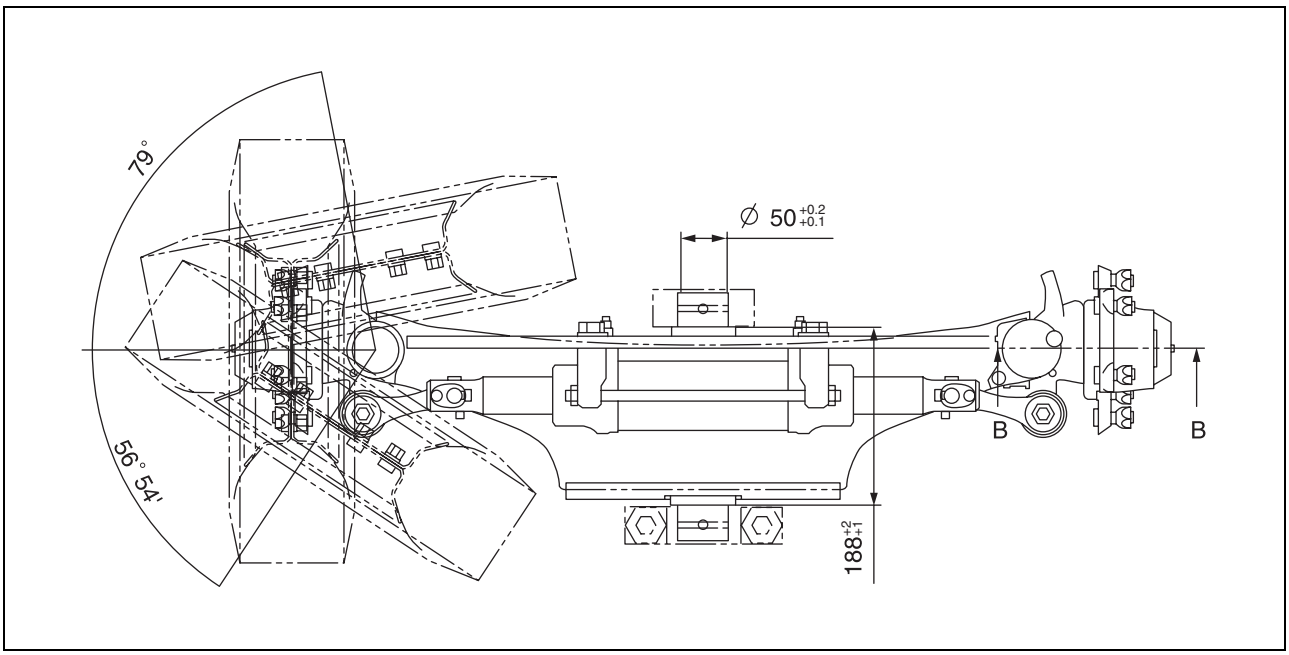

2.0 – 3.0 ton Forklift Truck

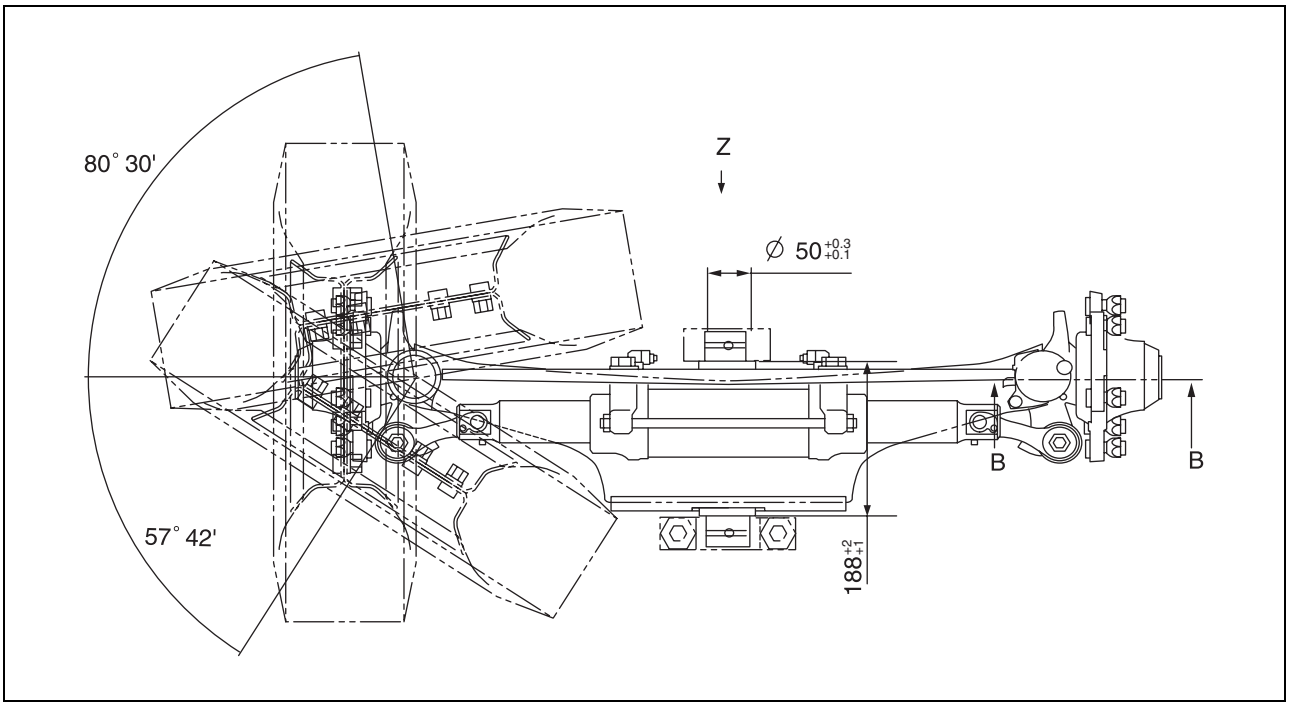

2. Assembly of Ball Socket

When assembling the ball socket to the bell clamp, check to make sure each tapered section is free from sticking oil or paint.

1.0 – 1.75 to Forklift Truck

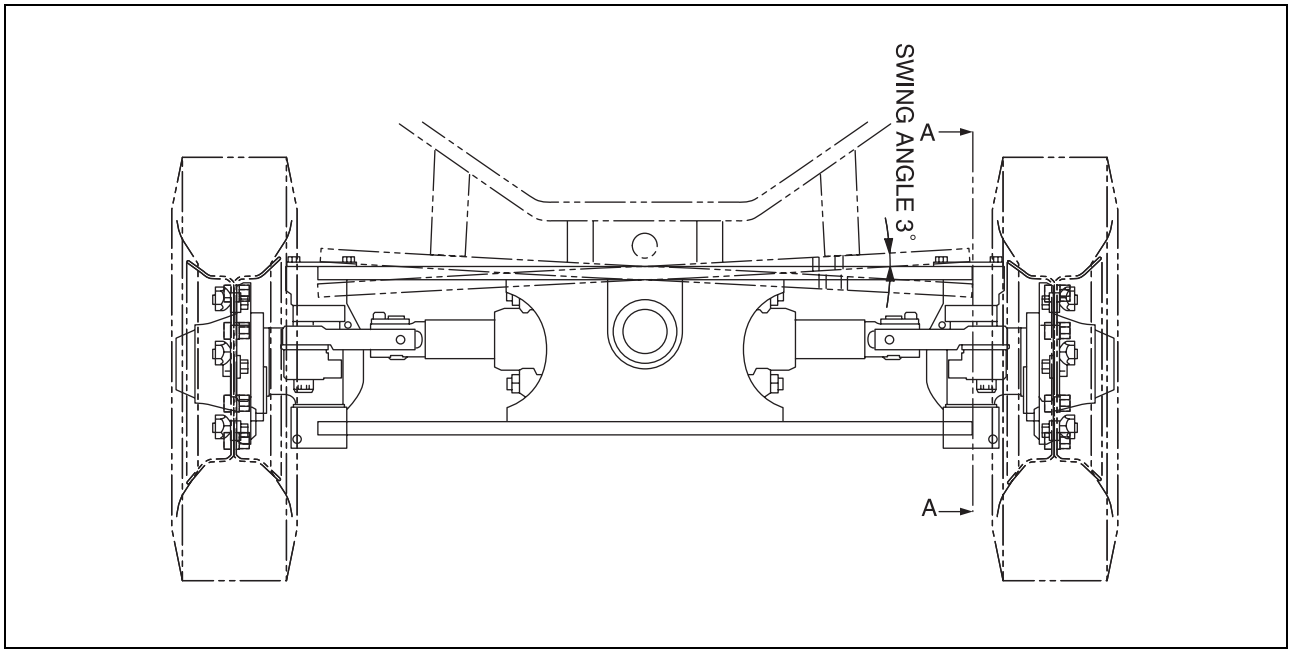

2.0 – 3.0 ton Forklift Truck

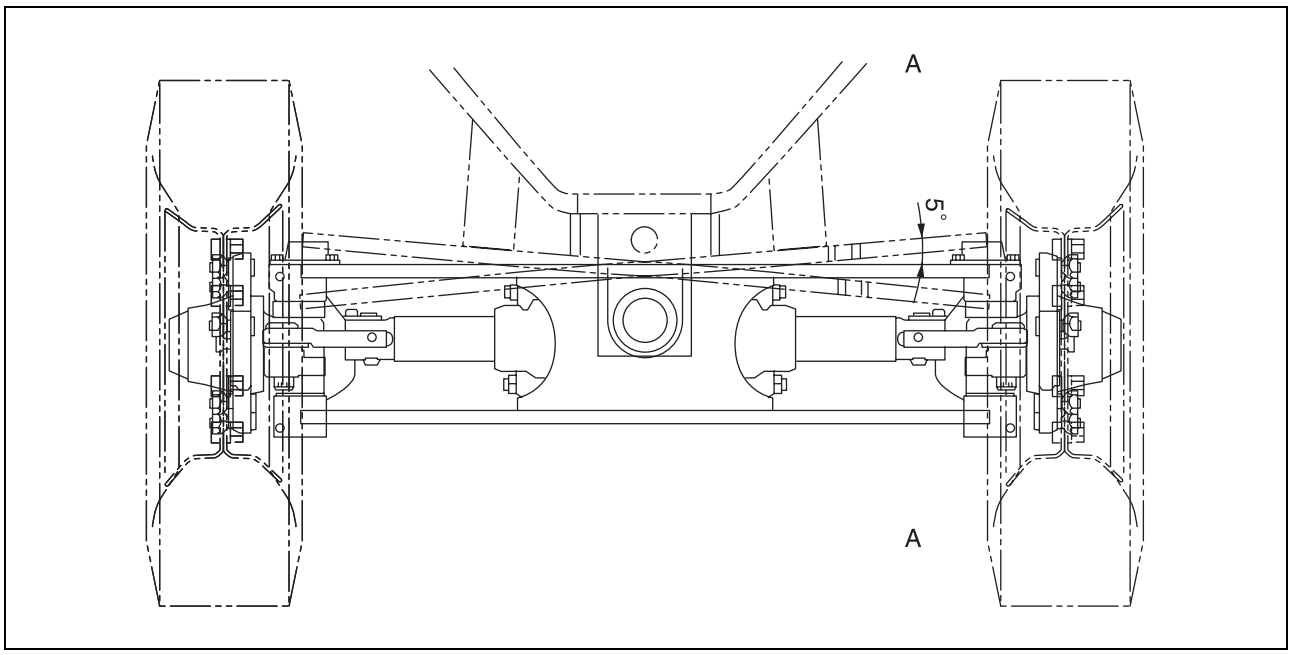

3. Grease

Apply the lithium grease (G2-L1) for the grease nipple and greasing to the hub.

DETAILS OF STEERING AXLE

1. Bell Clamp

1) Lock Plate (**1**)
2) Snap Ring (**2**)

★ Check to make sure the snap ring for being secured in the ring groove.

1.0 – 1.75 ton Forklift Truck

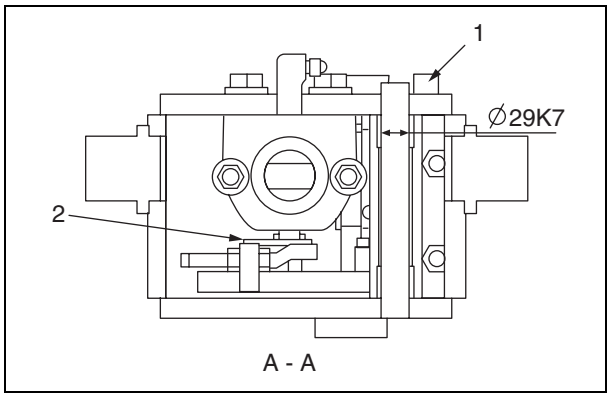

2.0 – 3.0 ton Forklift Truck

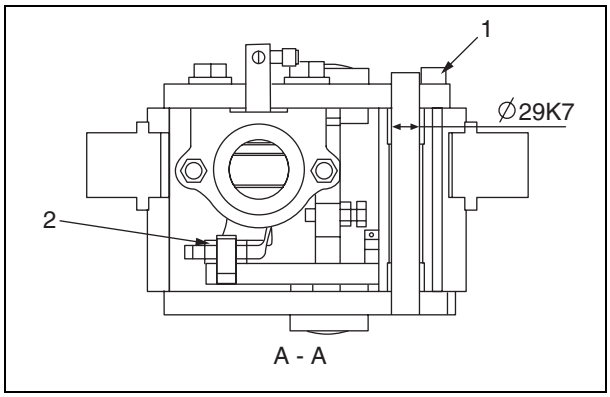

2. King Pin

1) Match the needle bearing (**3**) end face to the boss (**4**) end face in the distance of 6 mm.
2) Match the needle bearing (**5**) end face to the boss (**6**) end face.
3) Adjust the knuckle (**7**) to minimize the space between top and bottom.
   Standard space (**a**) in the diagram on the right:
   0.05 - 0.2 mm

1.0 – 1.75 ton Forklift Truck

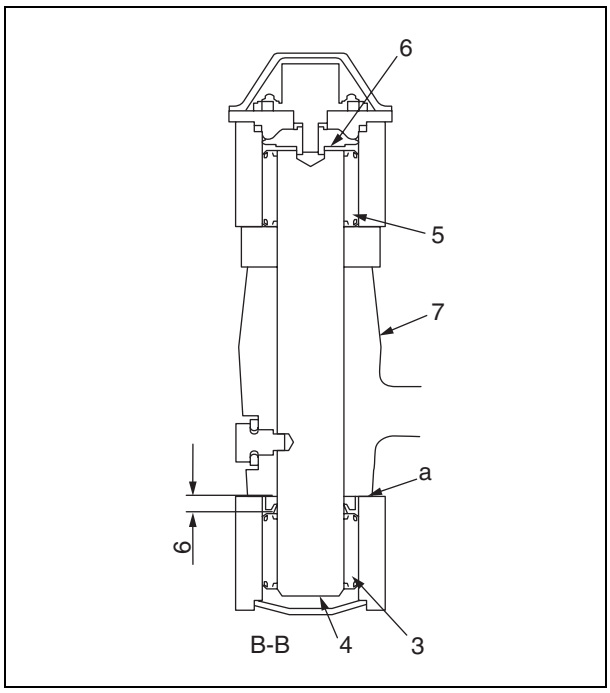

3. Link

1) Make sure to bend the cotter pin (**8**) correctly.

1.0 – 1.75 ton Forklift Truck

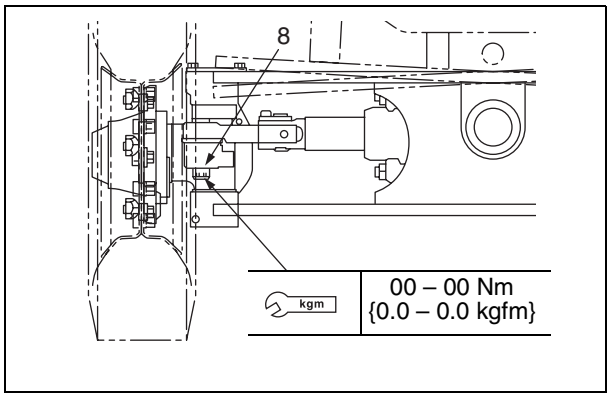

2.0 – 3.0 ton Forklift Truck

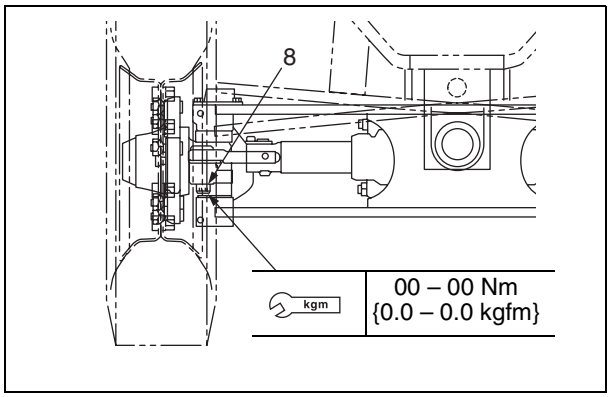

4. Hub

1) Fill enough grease (G2-L1) to the hub bearing (**9**) up to the half to one third of the hub space capacity in the both side.
2) When assembling the hub, apply the grease (G2-L1) to the lip of the seal (**10**).
3) After adjusting starting torque, make sure to bend the cotter pin (**11**) correctly.

1.0 – 1.75 ton Forklift Truck

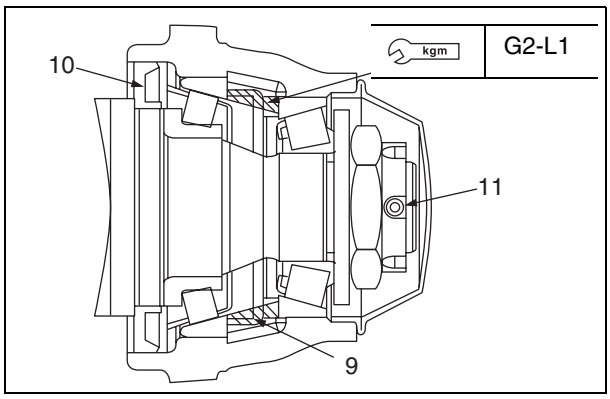

2.0 – 3.0 ton Forklift Truck

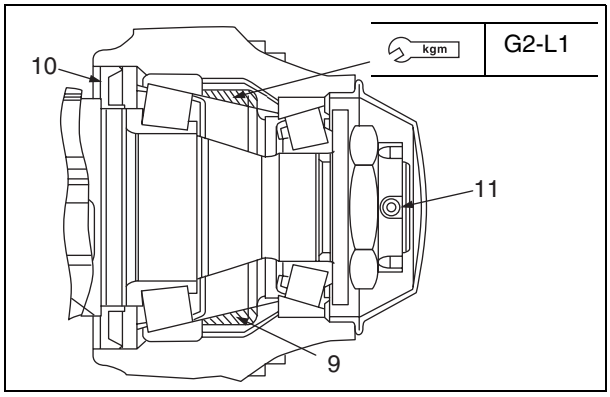

5. Adjustment of Hub Rotating Starting Power

1) Tighten the lock nut until it is getting hard to turn by hand. Then, reverse it turning by one quarter from that position. Apply a spring balance to the hub bolt and give the taper roller bearing pre-pressure while adjusting the nut (**12**) to make rotating starting power reach to the following value.

Starting power	19.6 – 33.3 N {2 – 3.4 kgf}
Starting torque	294 – 490 Nm {35 – 50 kgcm}

2) After completing the adjustment of the above step, insert the cotter pin to stop loosening in the place where the holes of both the nut and the shaft are matched. Then, bend it for sure.

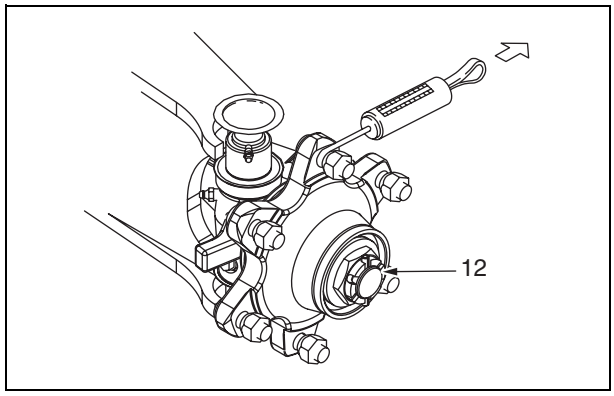

6. Adjustment of Steering Wheel Angle

Adjust the steering wheel angle in the falowing procedure so that the relation between steering knob position and steering angle becomes constant.

INITIAL SETTING WORK PROCEDURES

NO.	Work	Terminal	LED Display	Check Item	Remarks
1	Rest steering for 5 times to bleed air inside circuit	Connect	1 FLASH	After bleeding air, check steering wheel for no play.	Stop engine. No smooth steering is available.
2	Key switch ON: travel straight forward and stop.	Connect	1 FLASH	State of traveling straight forward	Controller: initial setting mode 1.
3	Key switch OFF	Connect	Turn off		
4	In traveling straight forward, set the steering wheel knob at the starting point.	Connect	Turn off	Wheels/steering wheel position: terminals closed	Close terminal, if open.
5	Key switch ON	Connect	1 FLASH	Check LED for 1 FLASH	Under initial set: controller mode 1 3 or 4 FLASH: faulty controller or wheel sensor error
6	Remove the terminals	Open	1 FLASH ↓ 2 FLASH	Check 1 FLASH for change to 2 FLASH	Under reset: controller initial set mode 2
7	When LED changed to 2FLASH, 1) steer to right end, 2) steer to left end, 3) return to neutral and over.	Open	2 FLASH	Steer surely to the end (Steering speed: 60 rpm)	Under initial set: controller to memorize steering speed and steering angle.
8	Check LED for lighting	Open	Turn on	Check LED for turn on	Normal mode: turn on, abnormal: turn off. Stay in 2 FLASH: close terminals and reset from No.1.
9	Finish¼	Open	Turn on	Check to make sure steering knob position corrected	

LED Display

NO.	Content	Terminal	LED ON/OFF
1	Initial set mode 1 (under initial set) or incomplete initial set (*1)	1 FLASH	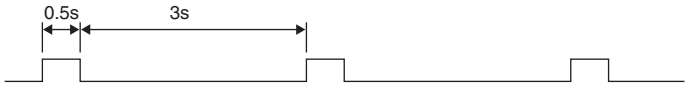
2	Initial set mode 2 (under teaching)	2 FLASH	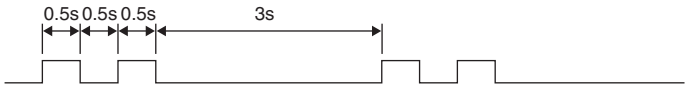
3	Steering wheel sensor error	3 FLASH	
4	Wheel sensor error	4 FLASH	
5	Controller error or controller under initial set	Turn off	
6	Under normal operation (complete initial set)	Turn on	

Note *1: An incomplete initial set means initial set is not correctly completed under normal mode. It needs to operate steering wheel to turn more than one and half times in right and left from the state of traveling straight forward under teaching mode.

POWER STEERING CYLINDER ASSEMBLY

1.0 – 1.75 ton Forklift Truck

COMPONENT PARTS

Ref. No.	Part Name	Q'ty
1	Cylinder Tube	1
2-1	Piston Rod	1
2-2	Piston	1
3	Rod Guide	2
4	Tie Rod	2
5	Dust Seal	2

Ref. No.	Part Name	Q'ty
6	Rod Packing	2
7	Backup Ring	2
8	O-ring	2
9	Piston Packing	2
10	Round Bushing	2
11	Small Flange Nut	4

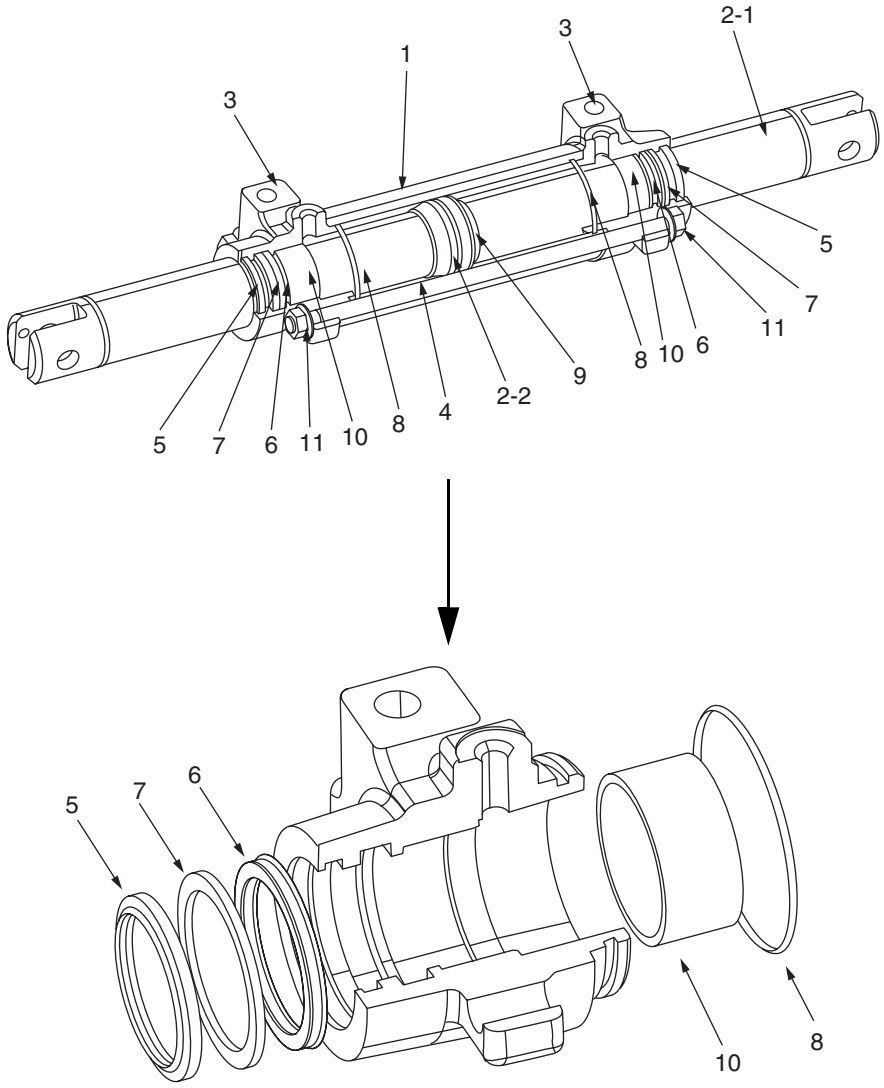

DISASSEMBLY

1. Clamp the outer diameter of the cylinder tube (**1**) and secure it.

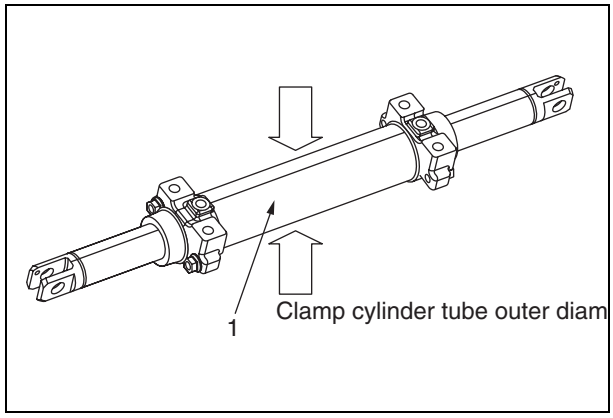

2. Loosen 4 pieces of the nut (**11**) and remove the tie rod (**4**).

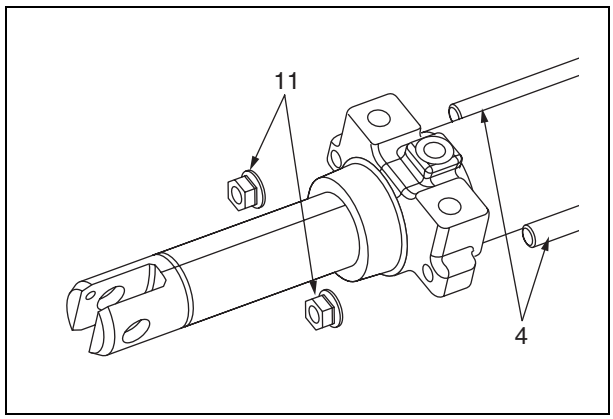

3. Pull the right and left rod guide (**3**) out slowly.

★ Be Careful not to damage the packing when pulling out.

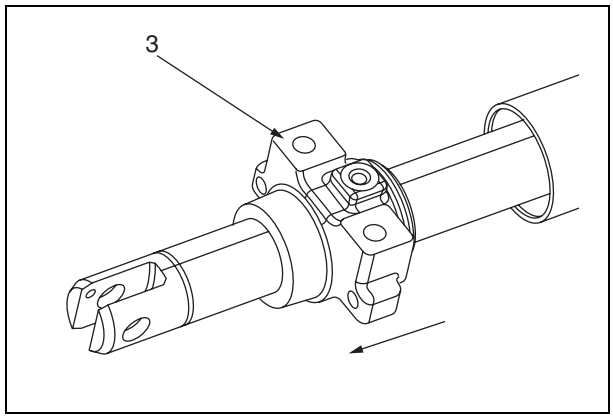

4. Pull the piston rod (**2**) straight

Cylinder Inner Diameter Standard Size:	75 mm
Cylinder inner Diameter Repair Limit:	75.2 mm
Rod Outer Diameter Standard Size:	50 mm
Rod Outer Diameter Repair Limit:	49.92 mm
Rod Outer Diameter Bed Limit:	0.5 mm

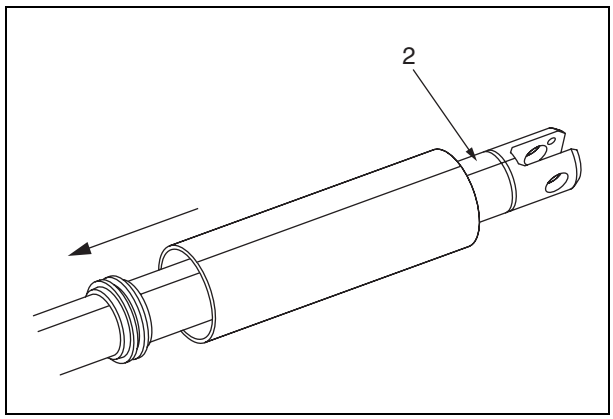

ASSEMBLY

1. Assembly work shall be taken to reverse the procedure of disassembly.

WARNING

- Apply grease or hydraulic oil to the lip surfaces of O-ring, dust seal and packing when assembling these parts.
- Before greasing, make sure to wipe off old grease carefully from thread of bolts or screws.
- Warm up the packing in hot water (below 80°C) prior to installation to the engine.

2.0 – 3.0 ton Forklift Truck

COMPONENT PARTS

Ref. No.	Part Name	Q'ty
1	Cylinder	1
2	Cylinder Rod Sub-Assembly	1
3	Cylinder Head	2
4	Bushing	2
5	Packing	1
6	O-Ring	2

Ref. No.	Part Name	Q'ty
7	Backup Ring	2
8	Packing	2
9	Backup Ring	2
10	Dust Seal	2
11	Tie Rod	2
12	Nut	4

Excl. Compact Model

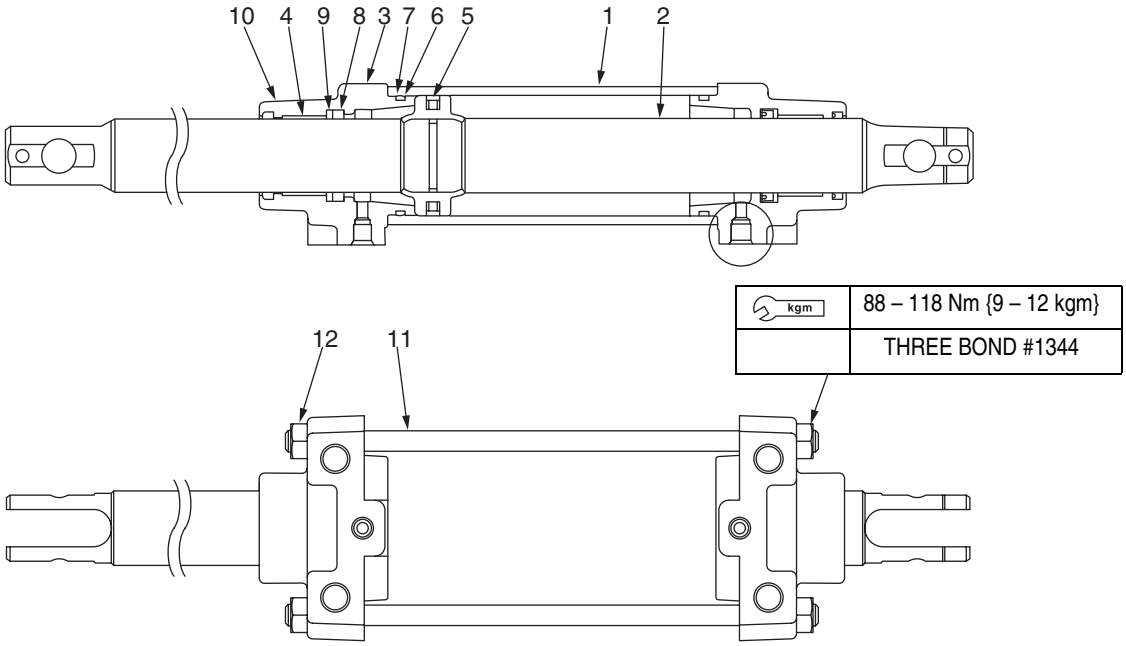

Compact Model

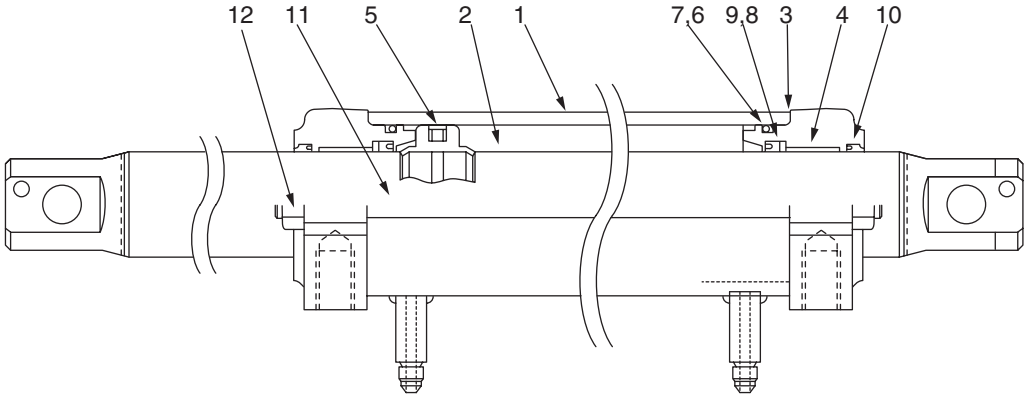

DISASSEMBLY

1. Secure the outer tube of the cylinder (**1**) with clamps.

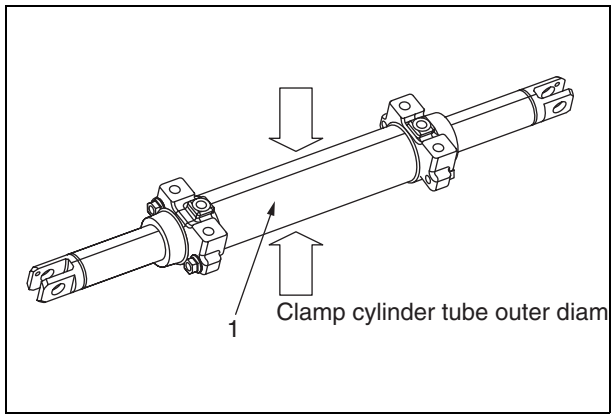

2. Loose the nut (**12**) of 4 pieces and remove the tie-rod (**11**).

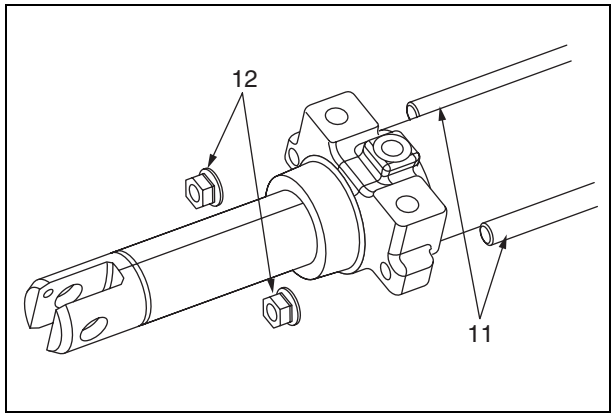

3. Pull the cylinder head (**3**) on the right and left hand out slowly.

★ Be careful not to damage the packing when pulling out the cylinder head.

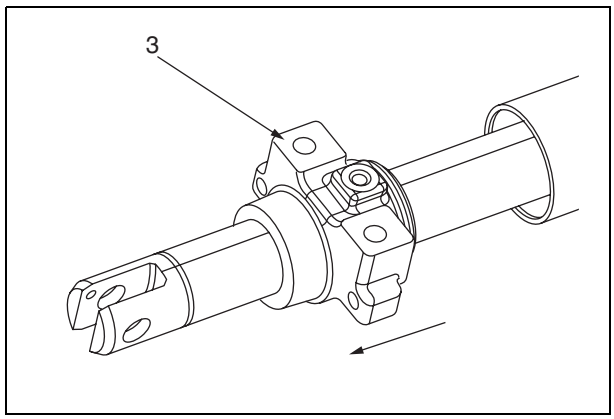

4. Pull the cylinder rod sub-assembly (**2**) out straight.

Cylinder Inner Diameter

Standard Size:	75 mm
Wear Limit:	75.2 mm

Cylinder Rod Outer Diameter

Standard Size:	50 mm
Wear Limit:	49.92 mm
Bend Limit:	0.5 mm

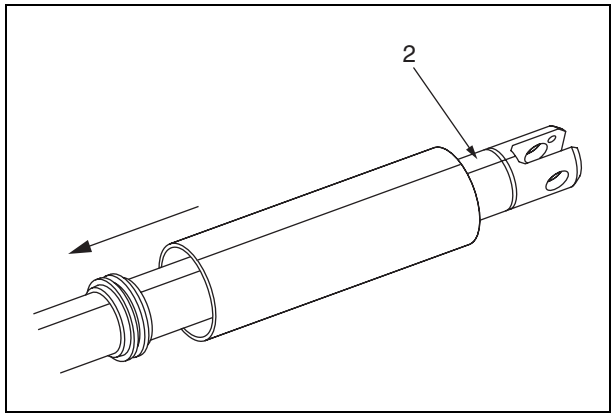

ASSEMBLY

1. Assembly work shall be taken to reverse the procedure of disassembly.

WARNING

- Apply grease or hydraulic oil to the lip surfaces of O-ring, dust seal and packing when assembling these parts.
- Before applying the THREE BOND #1344, make sure to wipe off old grease carefully from thread of bolts or screws.
- Warm up the packing in hot water (below 80°C) prior to installation to the engine.

LIFT CYLINDER

COMPONENT PARTS

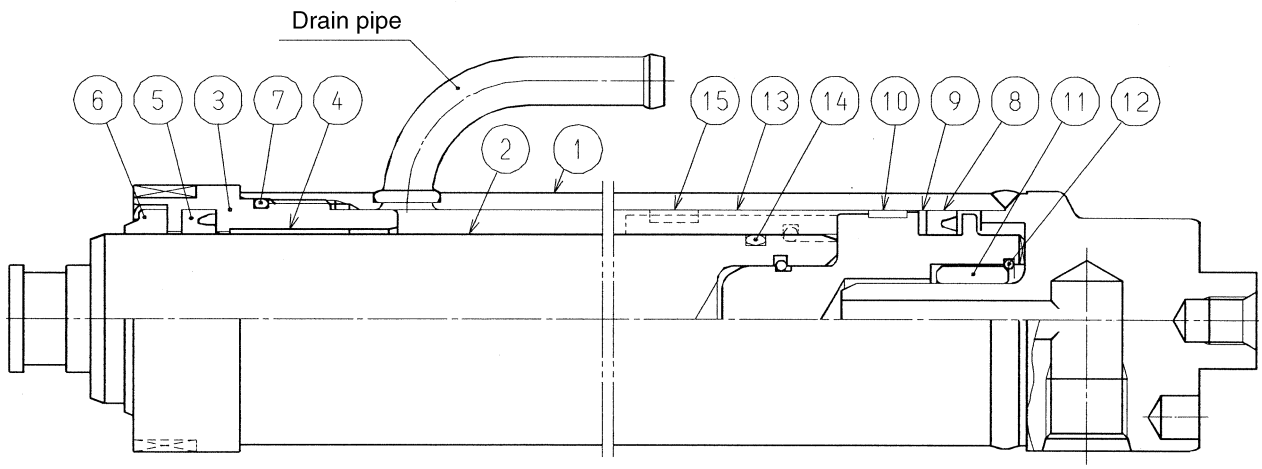

1. Cylinder
2. Piston rod assembly
3. Cylinder head
4. Bush
5. U-ring
6. Wiper ring
7. O-ring
8. U-ring
9. Backup ring
10. Bush
11. Cushion bearing
12. Snap ring
13. Spacer
14. O-ring
15. Wear ring

Disassembly

Preparation

Prepare the following before stating disassembly.

1. **Workbench**
   Prepare a solid, stable workbench that is large enough to put parts and prevents them from moving or falling during work.

2. **Tools and materials**
   Prepare tools and materials shown on the following page.

General Precautions

1. Clean the cylinder beforehand to remove soil, dirt and dust.

2. Since the cylinder is composed of precision parts, handle it very carefully. Do not bump or drop parts during work.

3. Do not hit or tamper parts forcibly. This may cause burrs or damage, which may disable reassembling or cause oil leakage or deterioration. Perform disassembling/reassembling carefully and patiently.

4. If the cylinder is left alone disassembled or in the middle of disassembly, parts may rust due to humid or dirt/dust. When disassembling is unavoidably suspended, be careful to guard the cylinder against rust and dust.

Maintenance Standard

Replace sliding parts and seal parts according to the following.

Bushes	Replace when 1/4 circumference for total length of the bush is worn in bronze color.
Seal parts	Replace seal parts with new ones whenever the cylinder is disassembled.
Piston rod	Replace when a bend of 0.5 mm per meter is found.

Note: The bush on the cylinder head is press-fit with the cylinder head.
Use "Cylinder head Kit" for parts replacement to replace the bush.
(Cylinder head Kit: A parts replacement kit where a bush is press-fit with cylinder head.

Inspection after Reassembly

No-load operation check	Check for smooth movement with no abnormality through full stroke without load five times.
Dimension check	Check the most contracted length and stroke specified in the drawing.
	Check for no looseness, permanent distortion, or external leakage when the test pressure (specified in the drawing) is applied to the stroke end for 3 minutes or more. **WARNING:** Be sure to immobilize the lift cylinder during checking.
External leakage check	Check the volume of oil leakage from the rod. (Refer to the following page.)
Internal leakage check	Oil leakage volume shall be 3 ml or less for 10 minutes.

Criteria for oil leakage from rod

Determine by the oil ring condition after reciprocating 20 times with an oil temperature of 20 to 40°C.
Oil ring A that is out of order means abnormal state. Take proper action referring to Section 6 Troubleshooting.

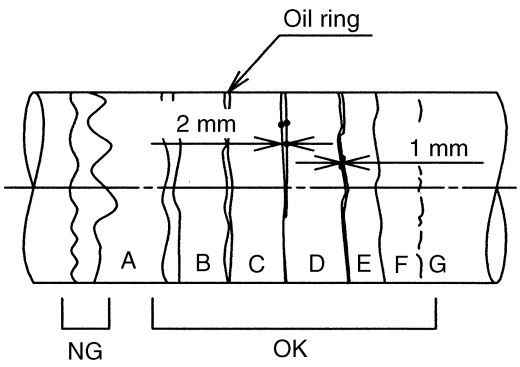

Tools

1. General tools

No.	Tool	Quantity
1	Flat-blade screwdriver 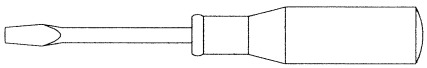	1
2	Hexagon wrench	1 set
3	Vise 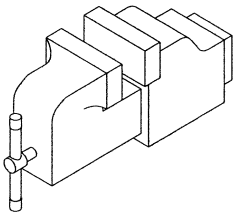	1
4	Torque wrench 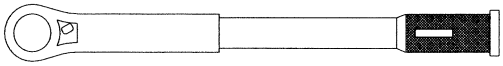	1 set
5	Plastic hammer 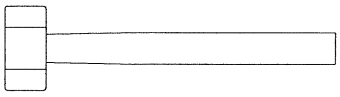	1
6	Monkey wrench 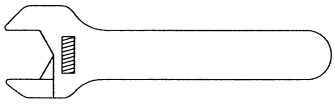	1
7	Spatula 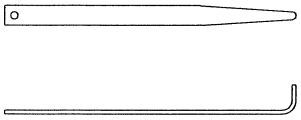	1 set
8	Hook wrench 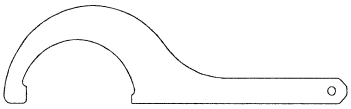	1

2. Special tools

The following tools are helpful for disassembling/reassembling the cylinder.

Tool	Simplified figure
Wiper ring press-fit tool	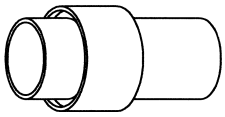
Piston seal press tool	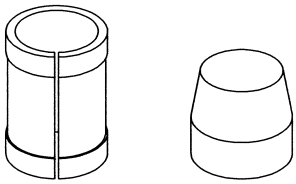

Disassembling Procedure

1. **Bleed oil.**

2. **Loosen cylinder head (3).**
   Loosen cylinder head (**3**) with a hook wrench, and remove it from cylinder tube assembly (**1**).
   Put an oil pan under the cylinder tube assembly as the remaining oil may leak

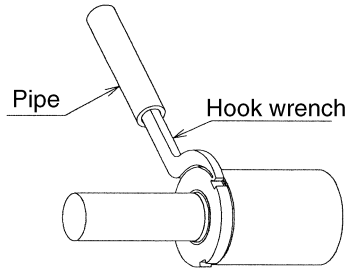

3. **Pull out cylinder head (3).**
   Carefully pull out the cylinder head straight.

> **WARNING**
> The piston ring may touch other parts right after it is pulled out from the rod depending on the shape of the end of piston rod assembly (**2**). Be very careful when pulling the cylinder head.

4. **Pull out piston rod assembly (2).**
   Carefully pull out the piston rod assembly horizontally, and put it on a crosstie.

> **WARNING**
> The piston rod assembly may touch the thread portion of cylinder tube assembly (**1**) right after it is pulled out or may fall and damage other parts. This is more risky for lift cylinders with long contracted length. Be very careful to avoid damage.

5. **Pull out spacer (13).**
   Pull out the spacer from piston rod assembly (**2**).
   However, spacer with wear ring (**15**) cannot be removed, as it is non-disassembly part.
   The wear ring can be removed easily by hand.

6. **Disassembling piston assembly**
   Remove U-ring (**8**), backup ring (**9**), bush (**10**), and cushion bearing (**11**).
   Note: The piston rod and piston cannot be disassembled.
   1) Use a spatula or screwdriver to pull out the U-ring and backup ring.
   2) Remove bush (**10**) while widening the mating face using a screwdriver.
      The removed seal parts cannot be reused.
   3) Remove snap ring (**12**) from the groove with a sharp-tip tool, and then pull out the cushion bearing (**11**).

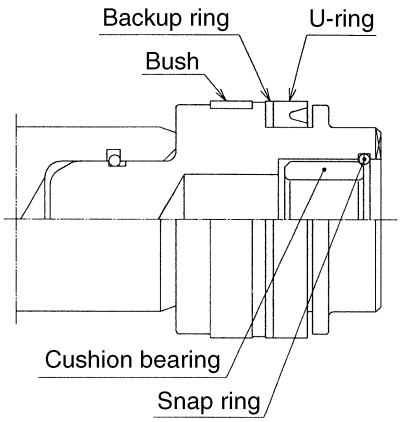

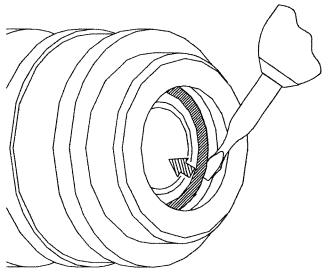

7. Disassembling seal parts in cylinder head (3)

Remove U-ring (**5**), wiper ring (**6**), and O-ring (**7**).

1) Use a spatula or screwdriver to remove the U-ring.
2) Since the wiper ring is press-fit, pull it out by hitting the rubber from the bush side with a screwdriver or a similar tool.
3) (Remove the O-ring using a spatula or screwdriver in the same way as the U-ring.
   The removed seal parts cannot be reused.

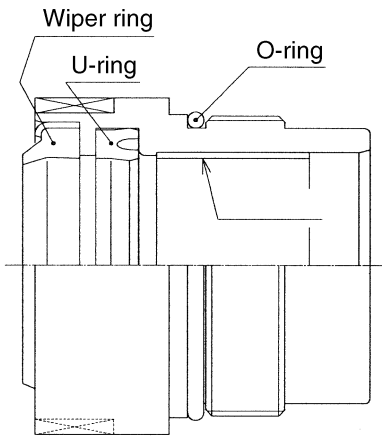

8. Cleaning and storage

1) Clean the removed parts with white kerosene, apply hydraulic oil to them, and then store them with a cover.
2) If the removed parts are left, the cylinder cannot exhibit its performance well after reassembling due to rust or dust.

Reassembling Procedure

> ⚠ WARNING
>
> Coating of parts may peel off and fall inside when reassembling them. Be very careful so that coating materials may not fall into the cylinder. This may cause oil leakage.

1. Reassembling cylinder head (3)

Prepare the disassembled cylinder head or "cylinder head kit".

Clean them well before reassembling.

1) (1) Installing U-ring (**5**)
   Press-fit the U-ring into the U-ring groove of cylinder head (**3**). Use a spatula to avoid damage to the U-ring. If the U-ring is heated at approx. 70°C, it can be installed easily. Be careful not to get burned.
   Check that there is no permanent deformation such as wrinkles after installation.

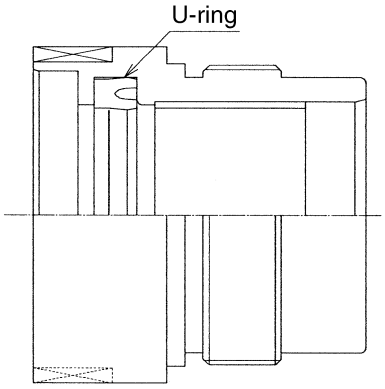

2) Installing wiper ring (**6**)
   Installing the wiper ring using a tool.
   Push the wiper ring with a press machine or the like.

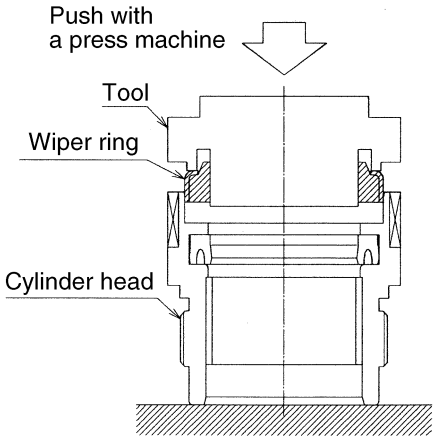

3) Installing O-ring (**7**)
Install the O-ring paying attention not to damage or cut it.
Check that there is no distortion after installation.

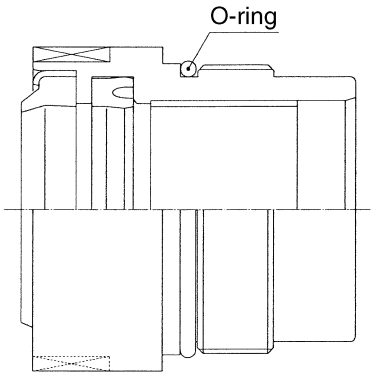

2. Reassembling piston assembly

Clean the piston and the peripherals well before reassembling.

1) Installing U-ring (**8**)
Install the U-ring to the U-ring groove of the piston while expanding it. Pay attention to its orientation. If hydraulic oil is applied to the U-ring, it can be installed easily. An insertion tool as shown in the figure will make the installation safe.

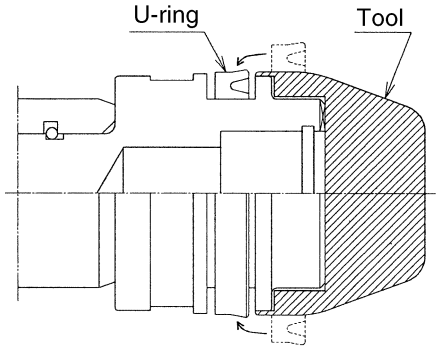

2) Installing backup ring (**9**)
Install backup ring (**9**) to the back of U-ring (**8**) (see the figure).
If installed wrongly, the backup ring will not function normally and damage U-ring (**8**), which may inhibit normal cylinder operation.

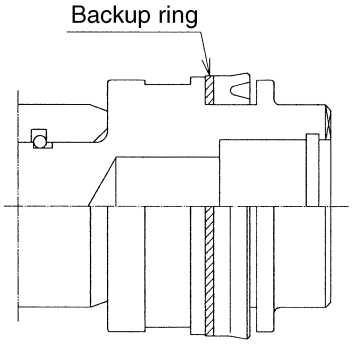

3) Installing bush (**10**)
Install the bush to the bush groove of the piston while widening its mating face (see the figure).

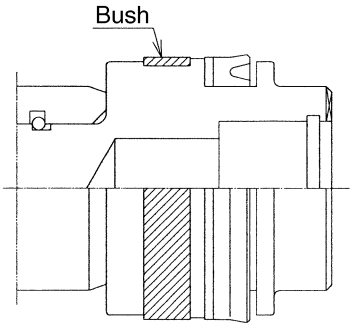

4) Installing cushion bearing (**11**)
Insert the cushion bearing into the piston irrespective of its orientation. Then fit snap ring (**12**) into the snap ring groove of the piston to secure the cushion bearing.

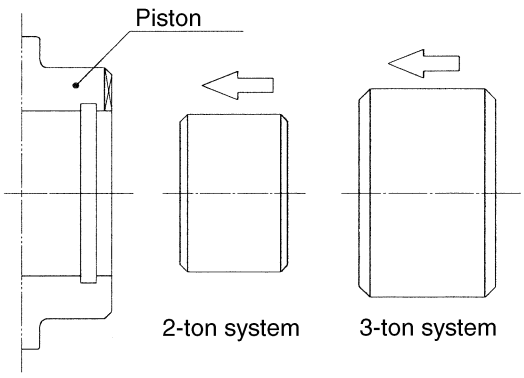

Insert cushion bearing (non-directional)

3. Reassembling cylinder tube assembly (1), piston rod assembly (2), and cylinder head (3)

1) Fixing cylinder tube assembly (**1**)
Fix the cylinder tube assembly horizontally.
2) Inserting spacer (**13**) (installing wear ring (**18**))
Insert the spacer into piston rod assembly (**2**). Press-fit O-ring (**14**) into the O-ring groove around the piston rod, and then insert the spacer from the end of the piston rod until the spacer touches the piston. If the fitting is not smooth, apply hydraulic oil to the O-ring.
When non-disassembly type spacer with a wear ring is used, install the wear ring into the wear ring groove of the spacer.
3) Inserting piston rod assembly (**2**)
Insert the piston rod assembly into cylinder tube assembly 1 to the full.

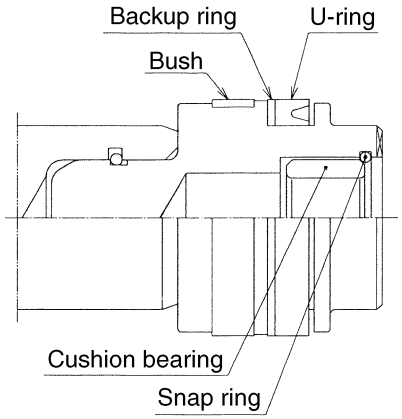

WARNING

When inserting piston rod assembly 2, it may touch the thread portion of cylinder tube assembly, causing damage to the piston seal or other parts. Carefully insert the piston rod assembly while holding it horizontally.

4) Installing cylinder head (**3**)
Press and insert cylinder head (**3**) into the piston rod assembly from the end of the piston rod assembly. Then insert the cylinder head into the thread portion of the cylinder tube assembly, and tighten the cylinder head with a hook wrench to the torque specified in the assembly drawing

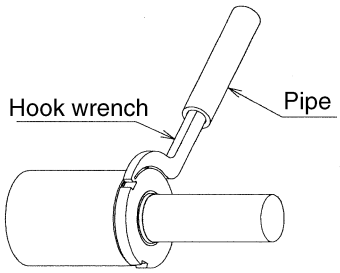

Test run

Mount the cylinder to the main body, actuate the switch valve, and then perform full-stroke operation 8 times. The cylinder is filled with oil.
Do not start the cylinder suddenly. Doing so may cause airation of the hydraulic oil.

TILT CYLINDER

1.0 – 1.75 ton Forklift Truck

*1: Apply the THREE BOND #1901 to the thread when tightening the cylinder head.

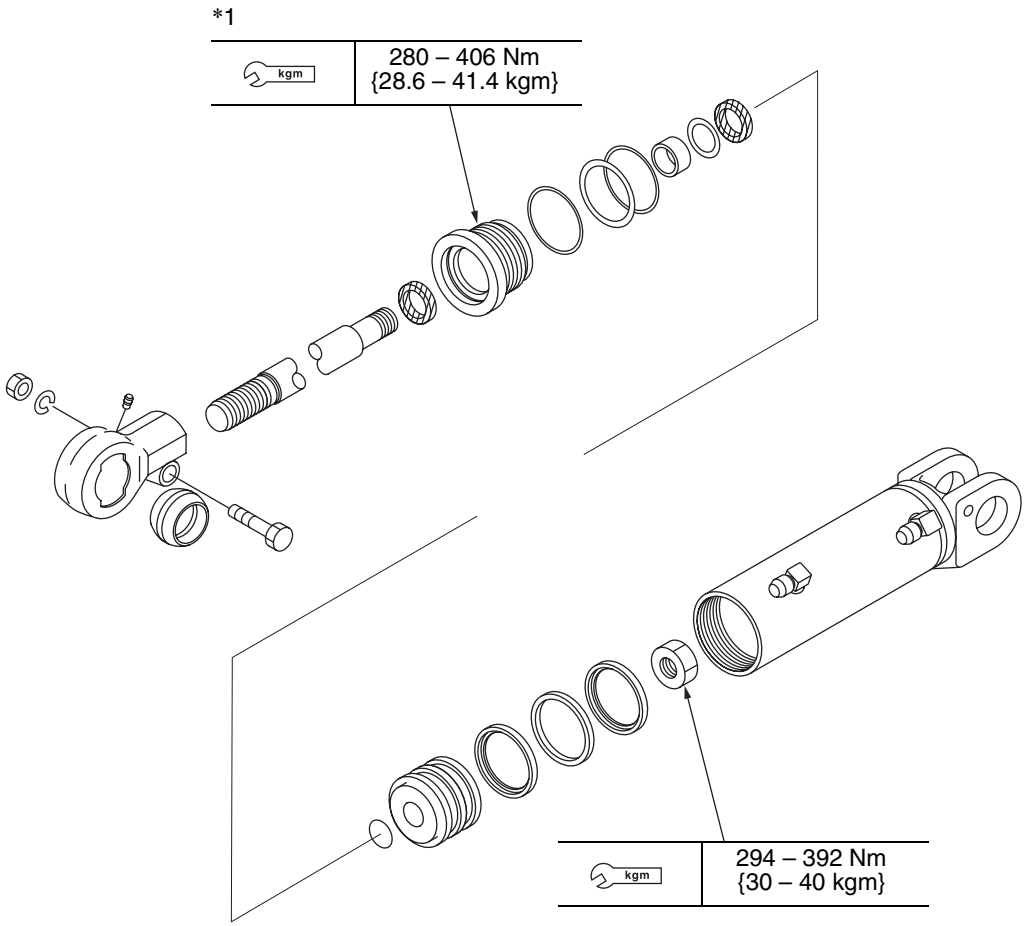

2.0 – 3.5 ton Forklift Truck

*1: Apply the THREE BOND #1901 to the thread when tightening the cylinder head.

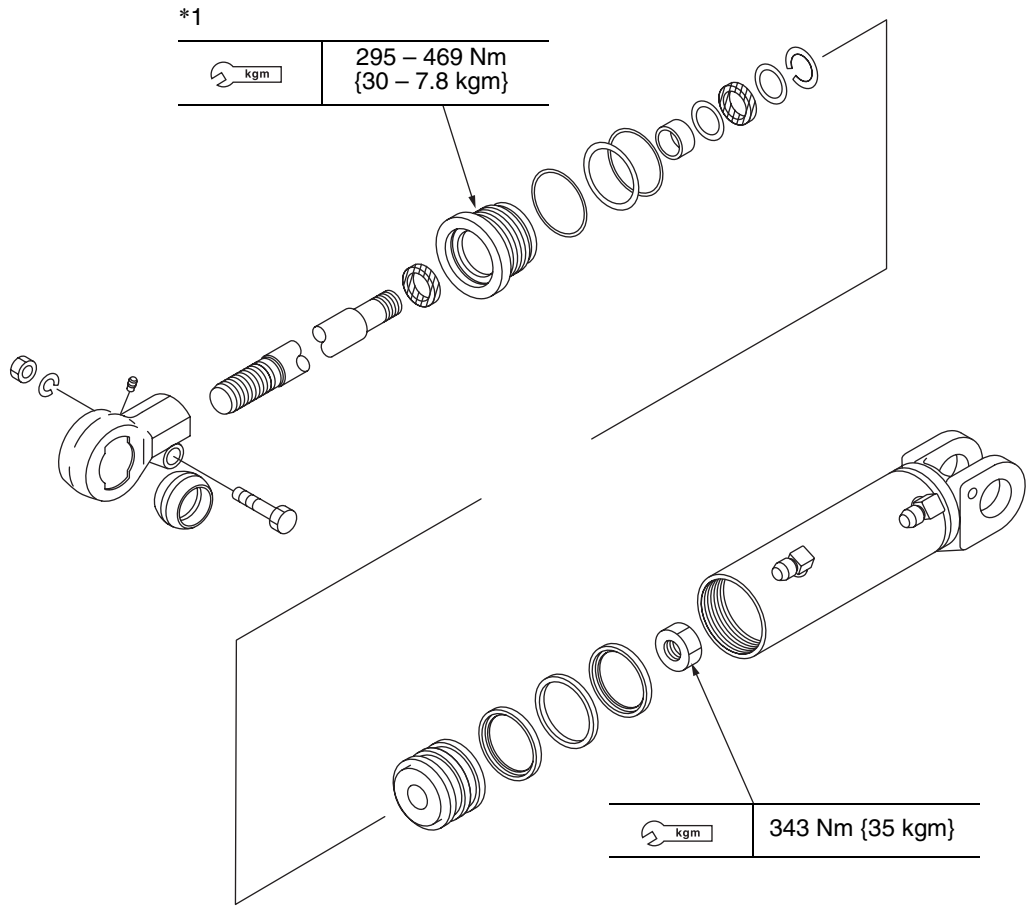

★ Before disassembling, protect threaded portion of the cylinder rod with a tape to an effect neither the dist seal nor the packing will be damaged.

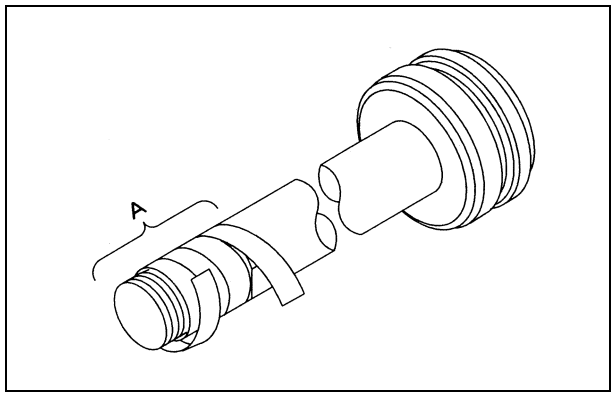

CONTROL VALVE

DISASSEMBLY

Disassembling valve assembly

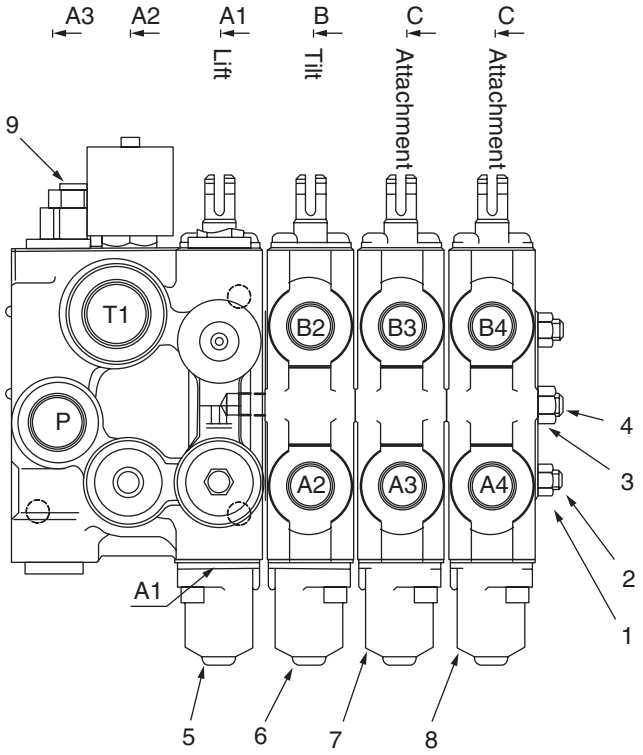

Fig. 40-1

Repair category	Meaning
A	Parts supplied as repair kit, which must be replaced when disassembling/ reassembling.
B	Parts supplied as composite part for reasons of quality assurance or assembling.
C	Parts supplied as single part.
D	Parts that cannot be supplied.

Category	Ref. No.	Part name	Q'ty
C	1	Nut	2
C	2	Tie rod	2
C	3	Nut	1
C	4	Tie rod	1
B	5	Spool selection assembly	1
B	6	Spool selection assembly	1
B	7	Spool selection assembly	1
B	8	Spool selection assembly	1
B	9	Relief valve kit	1

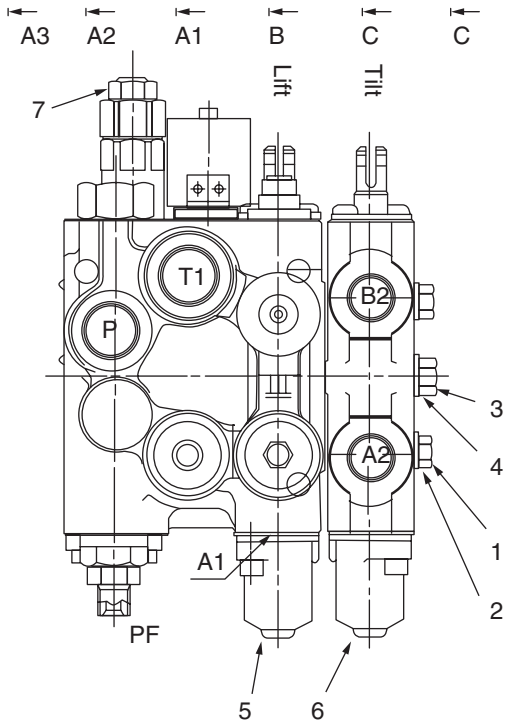

Fig. 40-2

Category	Ref. No.	Part name	Q'ty
C	1	Bolt	2
C	2	Washer	2
C	3	Bolt	1
C	4	Washer	1
B	5	Spool selection assembly	1
B	6	Spool selection assembly	1
B	7	Relief valve kit	1

Pay attention to the following when disassembling parts.

- Place the target forklift horizontally with all forks grounded. Stop the engine and release the pressure of the actuator. If disassembling is performed with pressure confined, high-pressure oil may spout or parts may jump off suddenly.
- Bleed air from the pressure tank.
- Clean the target parts and the surroundings to prevent foreign matters from entering the valve when disassembling.
- Distinguish each disassembled part by tag or the like for correct reassembling.
- Replace all the removed seal parts (O-rings, backup rings, etc.) with new ones.
- Since spools are engaged in accordance with the management of clearance with the valve housing, they cannot be replaced for quality reasons. Do not bump or drop any spool.
- Since the mating face of sections is a sealed surface, do not bump or scratch it.
- Clearance of spools is precisely managed to minimize internal oil leakage. Replace spools as a spool section assembly in principle, as they may be deformed during disassembling or reassembling.

1. Remove main relief valve (**9**) from the valve housing.
Precautions when disassembling relief
The relief valve should be replaced as an assembly in principle. Therefore do not disassemble the relief valve unless a defect is found. Refer to the relief valve maintenance manual when disassembling it. Distinguish each disassembled part for correct assembling.

2. Remove tie rod nuts (**1**), (**3**) at the end, and disassemble the spool assemblies of each section one by one. Loosen and remove tie rods (**2**), (**4**) from the lift spool section.
★ The double-valve model enables to disassemble the relief by removing bolts (**1**), (**3**).

Be careful not to lose the poppets, springs, and O-rings inserted in the mating faces of sections.

Disassembling lift spool assembly

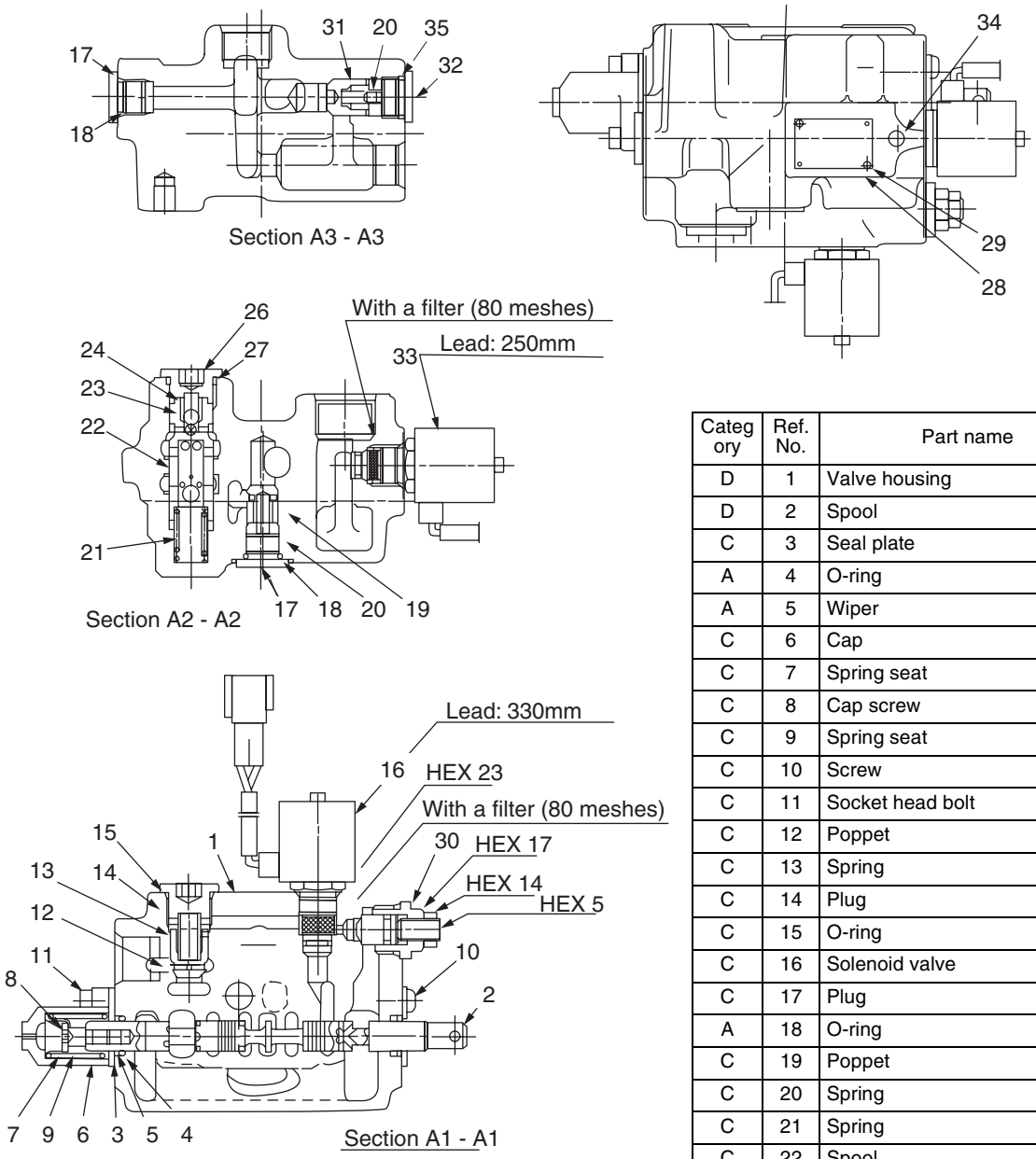

Repair category	Meaning
A	Parts supplied as repair kit, which must be replaced when disassembling/ reassembling.
B	Parts supplied as composite part for reasons of quality assurance or assembling.
C	Parts supplied as single part.
D	Parts that cannot be supplied.

Category	Ref. No.	Part name	Q'ty
D	1	Valve housing	1
D	2	Spool	1
C	3	Seal plate	2
A	4	O-ring	2
A	5	Wiper	2
C	6	Cap	1
C	7	Spring seat	2
C	8	Cap screw	1
C	9	Spring seat	1
C	10	Screw	2
C	11	Socket head bolt	2
C	12	Poppet	1
C	13	Spring	1
C	14	Plug	1
C	15	O-ring	1
C	16	Solenoid valve	1
C	17	Plug	2
A	18	O-ring	2
C	19	Poppet	1
C	20	Spring	2
C	21	Spring	1
C	22	Spool	1
C	23	Steel ball	1
C	24	Spring	1
	25		
C	26	Plug	1
A	27	O-ring	1
D	28	Nameplate	1
C	29	Drive screw	2
B	30	Shutoff valve	1
C	31	Poppet	1
C	32	Plug	1
C	33	Solenoid	1
C	34	Plug	1
A	35	O-ring	1

Fig. 40-3

1. Loosen socket head bolt (**11**) to remove cap (**6**), and pull spool (**2**) out of valve housing (**1**) as a subassembly. Remove the spool together with seal plate (**3**), O-ring (**4**), and wiper (**5**) on the cap side.

2. Remove screw (**10**) on the opposite side, and remove seal plate (**3**), O-ring (**4**), and wiper (**5**).

3. Remove the hexagon socket head bolt of solenoid valve (**16**), and pull off the coil. Then remove the iron core. Remove solenoid valve (**33**) in the same way. Be careful so that the wave washers do not fall.

4. Remove plugs (**26**), (**27**), and take out spring (**24**), steel ball (**23**), spool (**22**), and spring (**21**).

5. Remove plugs (**32**), (**35**), and take out spring (**20**) and poppet (**31**).

6. Loosen the nuts and setscrews of shutoff valve (**30**), and loosen the plug to remove it.

7. Remove plugs (**14**), (**15**) on top of the housing, and take out spring (**13**) and poppet (**12**).

8. Remove plugs (**17**), (**18**) on the side of the housing.

9. Loosen and remove plugs (**17**), (**18**) on the bottom of the housing, and take out spring (**20**) and poppet (**19**).

10. Grip spool (**2**) in a vise with hard wood blocks on both sides to protect the spool from damage. Loosen cap screw (**8**), disassemble spring seat (**7**) and spring (**9**) to remove O-ring (**4**) and wiper (**5**). Be careful so that any part does not jump due to repulsion force of the spring.

Precautions when pulling out spool

Pull out each spool straight to avoid bumping or scratches. If bumped or scratched, the spool may damage the holes of the main unit or it may not be fitted properly when it is reassembled. Even if the spool is fitted, a malfunction may be caused. Distinguish each spool by tag or the like for correct reassembling. If reassembled wrongly, the actuator may malfunction. This is very dangerous.

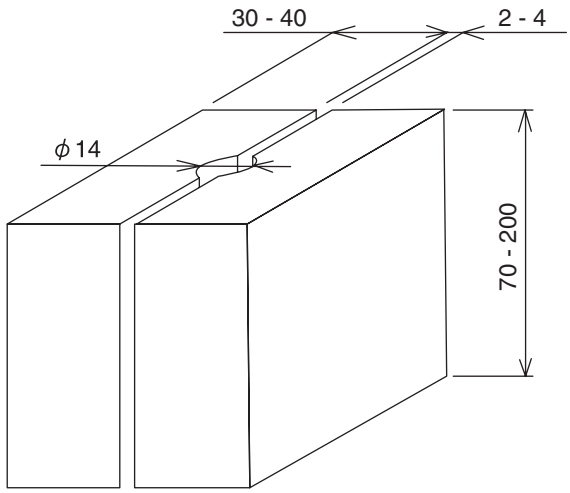

Disassembling tilt spool section assembly

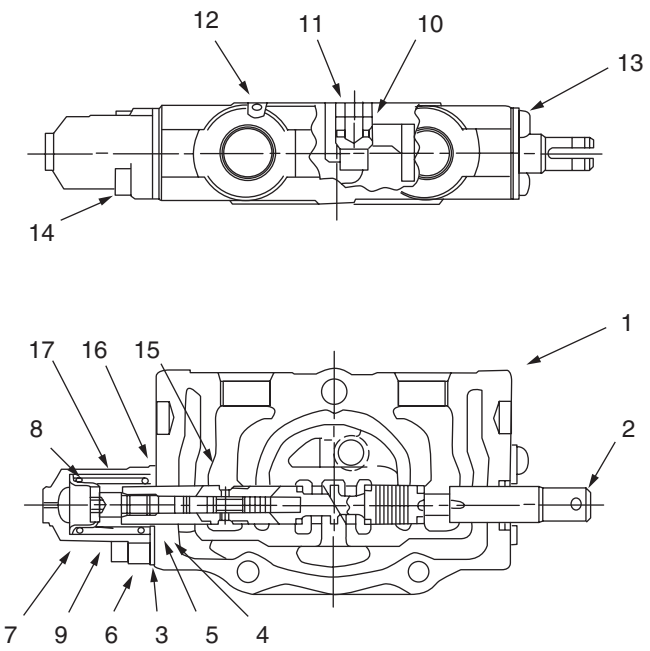

Fig. 40-4

Repair category	Meaning
A	Parts supplied as repair kit, which must be replaced when disassembling/ reassembling.
B	Parts supplied as composite part for reasons of quality assurance or assembling.
C	Parts supplied as single part.
D	Parts that cannot be supplied.

Category	Ref. No.	Part name	Q'ty
D	1	Valve housing	1
D	2	Spool	1
C	3	Seal plate	2
A	4	O-ring	2
A	5	Wiper	2
C	6	Cap (spool)	1
C	7	Spring seat	2
C	8	Cap screw	1
C	9	Spring (spool)	1
C	10	Poppet (check valve)	1
C	11	Spring (check valve)	1
A	12	O-ring	1
C	13	Screw	2
C	14	Socket head bolt	2
D	15	Valve	1
C	16	Spring	1
A	17	O-ring	1

1. Remove O-ring (**12**), poppet (**10**), and spring (**11**) from the mating face.

2. Detach cap (**6**) by loosening socket head bolt (**14**), and pull spool (**2**) out of valve housing (**1**) as a sub-assembly. Remove the spool together with seal plate (**3**), O-ring (**4**), and wiper (**5**) on the cap side.

3. Remove screw (**13**) on the opposite side, and remove seal plate (**3**), O-ring (**4**), and wiper (**5**).

4. Grip spool (**2**) in a vise with hard wood blocks on both sides to protect the spool from damage. Loosen cap screw (**8**), disassemble spring seat (**7**) and spring (**9**) to remove O-ring (**4**) and wiper (**5**). Be careful so that any part does not jump due to repulsion force of the spring.

5. Remove spring (**16**) from inside the spool, and pull valve (**15**) out of the spool using the M4 screw at the end.

Disassembling attachment spool section assembly

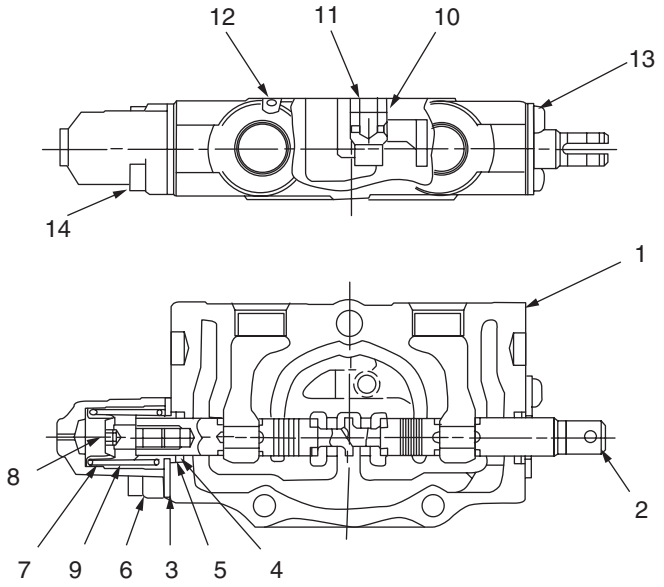

Fig. 40-5

Repair category	Meaning
A	Parts supplied as repair kit, which must be replaced when disassembling/ reassembling.
B	Parts supplied as composite part for reasons of quality assurance or assembling.
C	Parts supplied as single part.
D	Parts that cannot be supplied.

Category	Ref. No.	Part name	Q'ty
D	1	Valve housing	1
D	2	Spool	1
C	3	Seal plate	2
A	4	O-ring	2
A	5	Wiper	2
C	6	Cap (spool)	1
C	7	Spring seat	2
C	8	Cap screw	1
C	9	Spring (spool)	1
C	10	Poppet (check valve)	1
C	11	Spring (check valve)	1
A	12	O-ring	1
C	13	Screw	2
C	14	Socket head bolt	2

1. Remove O-ring (**12**), poppet (**10**), and spring (**11**) from the mating face.

2. Detach cap (**6**) by loosening socket head bolt (**14**), and pull spool (**2**) out of valve housing (**1**) as a sub-assembly. Remove the spool together with seal plate (**3**), O-ring (**4**), and wiper (**5**) on the cap side.

3. Remove screw (**13**) on the opposite side, and remove seal plate (**3**), O-ring (**4**), and wiper (**5**).

4. Grip spool (**2**) in a vise with hard wood blocks on both sides to protect the spool from damage. Loosen cap screw (**8**), disassemble spring seat (**7**) and spring (**9**) to remove O-ring (**4**) and wiper (**5**). Be careful so that any part does not jump due to repulsion force of the spring.

Distinguish and manage the parts disassembled in the above procedures for each section using tags or the like so that you can quickly understand where to reassemble them.

Cleaning

Wash all the disassembled parts completely with clean mineral oil.

Then dry them with compressed air and put them on clean paper or cloth for inspection.

Inspection

Check all disassembled parts for burrs, scratches, flaws or any other defects on any surface.

1. Check that no scratch or dent is present on the outer surfaces of spools. If slight scratches are found, remove them with an oilstone or cloth dampened with lapping agent.

2. Check that all sliding parts move smoothly, and that no foreign matter is left in any groove or path.

3. Replace spring if it is damaged, deformed or worn.

4. Check that seal grooves of the valve housing are smooth with no dirt/dust, dent or rust.

5. If any dent and/or scratches are found on the check seat surfaces of the valve housing, remove them by lapping while paying attention not to leave lapping agent in the valve.

6. When the relief valve doe not work normally, check it according to the relief valve maintenance manual.

7. When replacing O-rings or backup rings, always replace them with new ones.

8. When any cap or plug is detached, check that no paint scrap is left near the plug seats or holes of the machine body. If paint scraps enter the valve, they may cause catching or clogging, which may result in a malfunction or oil leakage.

ASSEMBY

1. Pay attention to the following when handling O-rings.
   1) Do not use O-rings with a molding defect or scratches.
   2) Apply grease or hydraulic oil to O-rings and their installation places for adequate lubrication.
   3) Do not expand any O-ring to an extent where it is permanently deformed.
   4) When installing an O-ring, do not roll it. Once it is distorted, the distortion cannot be corrected naturally. This may cause oil leakage after installation of the O-ring.

2. Pay attention to the following when handling spools.
   1) Always observe the specified torques. Over-torque for tightening screws may cause spool malfunction.
   2) Put spools, springs, and spool ends in the same combinations as those before disassembling.

3. Pay attention to the following when reassembling section assemblies and valve assemblies.
   1) Check that the O-ring at the mating face is fitted within the O-ring groove.
   2) Check that no washing oil or hydraulic oil is remaining at the following places before reassembling.
      - Outer surface of the O-ring groove at the mating face of each section
      - Outer surface of the O-ring groove at the cap installation face

      If reassembling is performed with oil remaining at these places, the oil may be misunderstood as oil leakage during operation.

Valve housing

1. Assemble poppet (**10**), spring (**11**), and O-ring (**12**) to be inserted into the mating face of sections.

2. **[Fig. 40-1]** Screw tie rods (**2**), (**4**) fully into the lift section, and then install the valve housings of each section one by one. Then tighten the tie rods with nuts (**1**), (**3**) to the specified torque. Be careful so that spring (**11**) at the mating face is not caught.

   ★ For double-valve models, tighten the tilt housing to the lift housing with bolts (**1**), (**3**) and washers (**2**), (**4**).

3. In the attached parts lists **Fig. 40-3**, **Fig. 40-4** and **Fig. 40-5**, insert O-ring (**4**) and wiper (**5**) into the seal groove on the spool head side, and then tighten seal plate (**3**) with screw (**10**) or (**13**).

Lift spool section assembly

Reference number is described in the parts list **Fig. 40-3**.

1. Install O-rings to each plug.

2. Insert poppet (**19**) and spring (**20**) into the bottom plate, and then tighten plug (**17**).

3. Tighten plug (**17**) on the side panel.

4. Insert poppet (**31**) and spring (**20**) into the side panel, and then tighten plug (**32**).

5. Insert poppet (**12**) and spring (**13**) into the top plate, and then tighten plug (**14**).

6. Insert spring (**21**), spool (**22**), steel ball (**23**), and spring (**24**) sequentially into the top plate, and then tighten plug (**26**). Grease these parts so that the spring can be securely installed together with the plug (**26**).

7. Tighten and install the plug to valve housing (**1**) with the poppet of shutoff valve (**30**) press-fitted, and then push the setscrew so that the poppet is seated at the valve edge. Then tighten the nut.

Spool subassembly

In **Fig. 40-3**, **Fig. 40-4** and **Fig. 40-5**, insert O-ring (4), wiper (5), and seal plate (3) sequentially into spool (2), put spring (9) between spring seats (7), and secure it onto spool (2) with cap screw (8). Grip spool (2) in a vise with hard wood blocks (Fig. 2-1) on both sides to protect the spool from damage. Grease the outer surface of spring (9). Be careful of the orientation of the wiper.

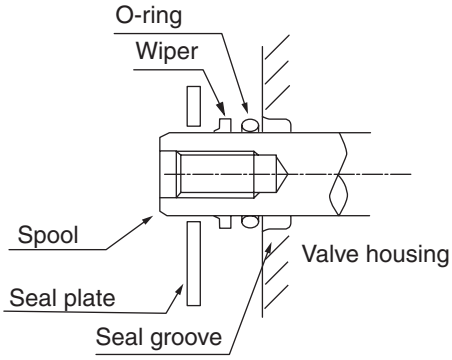

[Fig. 40-4] Insert valve (**15**) and spring (**16**) into spool (**2**) of tilt section only, and then install O-ring (**12**) to cap screw (**8**) to assemble the spool.

Insert check valve (**29**) into spool (**28**) and tighten plug (**30**). Grip spool (**28**) in a vise with hard wood blocks on both sides to protect the spool from damage. Be careful of the orientation of the check valve.

Final reassembling and checking

1. Mount the spool subassembly onto the valve housing at the same position and in the same orientation as before disassembly, and then attach cap (**6**) with socket head bolt (**14**) or (**11**).

2. Mount connector assembly (**30**) onto the lift section.

3. Tighten the iron cores of solenoid valves (**16**), (**30**) to the lift section, install the coil, and then tighten the hexagon socket head bolts, while paying attention to the internal wave washers.

4. Mount the port relief valve and main relief valve.

Precautions when inserting spool

Slowly insert the spool straight to the hole. If the spool does not move smoothly by hand after it is inserted, it may malfunction.

Precautions when assembling

When reassembling is completed, recheck that al the disassembled parts are securely installed. Loose installation of parts may cause oil leakage.

MAIN RELIEF

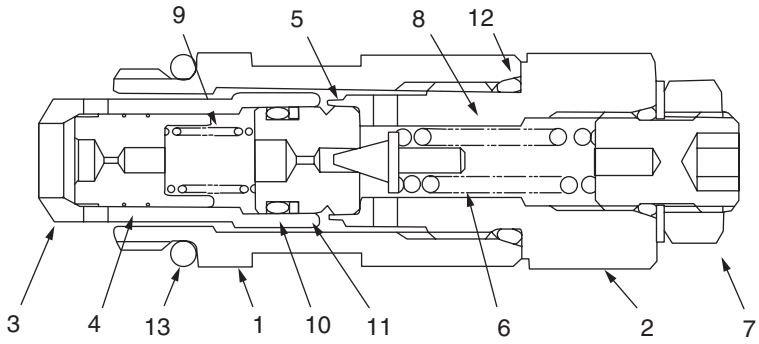

1. Disassembling

Remove plug (**2**), sleeve (**3**), main poppet (**4**), and spring (**9**).

Loosen adjuster kit (**7**) and take out pilot poppet (**6**) and spring (**8**).

Do not disassemble pilot seat (**5**) as it is crimped at the plug end.

★ **Relief valve should be replaced as an assembly in principle. Therefore do not disassemble it unless a defect is found.**

2. Cleaning and inspection

Wash all the disassembled parts completely with clean mineral oil.

Dry them with compressed air and then perform the following.

1) Check that seat surfaces of each poppet and plug are even with no defect.
2) Check that main poppet (**4**) and sleeve (**3**) move lightly and smoothly, and that no scratch or damage is present on the main poppet outer surface and the sleeve inner surface.
3) Check that spring (**8**) is not damaged, deformed or worn.
4) Check that the holes of the main poppet and pilot seat are not clogged with foreign matters.
5) O-rings and backup rings shall not be reused and be replaced with new ones.
   When slight scratches or flaws are found during this inspection, remove them by lapping.
   If there is any defective part, replace it as relief valve assembly.

3. Assembling

1) Insert main poppet (**4**) and spring (**9**) into sleeve (**3**), and put them over pilot seat (**5**) that is assembled with O-ring (**10**) and backup ring (**11**).
2) Attach O-rings to cap (**1**) and plug (**2**).
3) Insert pilot poppet (**6**) and spring (**8**) into plug (**2**), and temporarily assemble adjuster kit (**7**) with an O-ring attached. Then install the assembly to the cap.
4) Assemble the cap assembly to the valve housing, and then perform pressure adjustment.

★ O-rings and backup rings shall not be reused and be replaced with new ones.

4. Pressure adjustment procedure

1) Attach an accurate pressure gauge to the entrance of the circuit.
2) Run the pump at the rated speed.
3) Switch the control valve spool, and read the pressure gauge at the time of cylinder stroke end.
4) Turn the adjuster clockwise until necessary pressure is obtained.
   The pressure increases 17.7 MPa by one turn of the adjuster (reference value).
5) When pressure reached the specified value, hold the adjuster to prevent it from turning and tighten the lock nut.

kgm	27 – 31 Nm {2.8 – 3.2 kgfm}

6) Increase the pressure again and check that the pressure is the specified value.

PORT RELIEF

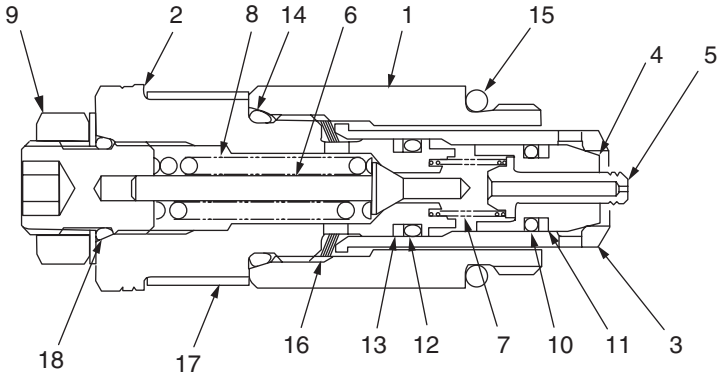

★ **If the set pressure is higher than the main relief valve pressure, do not adjust the port relief but replace the installed relief valve assembly.**

1. Disassembling

Remove plug (**2**), and disassemble wave washer (**16**), sleeve (**3**), poppet (**4**), piston (**5**), and spring (**7**).

Remove adjuster kit (**9**) by loosening the nuts, and take out pilot poppet (**6**) and spring (**8**).

★ **Relief valve should be replaced as an assembly in principle. Therefore do not disassemble it unless a defect is found.**

2. Cleaning and inspection

Wash all the disassembled parts completely with clean mineral oil.

Dry them with compressed air and then perform the following.

1) Check that seat surfaces of each poppet and plug are even with no defect.
2) Check that poppet (**4**) and sleeve (**3**) move lightly and smoothly, and that no scratch or damage is present on the main poppet outer surface and the sleeve inner surface.
3) Check that springs (**7**), (**8**) are not damaged, deformed or worn.
4) Check that the orifice of piston (**5**) is not clogged with foreign matters.
5) O-rings and backup rings shall not be reused and be replaced with new ones.

★ When slight scratches or flaws are found during this inspection, remove them by lapping.
If there is any defective part, replace it as relief valve assembly.

3. Assembling

1) Fit poppet (**4**) that is assembled with O-ring (**10**) and backup ring (**11**) into sleeve (**3**).
Insert piston (**5**) and spring (**7**) into poppet (**4**). (Assembly **A**)
2) Insert pilot poppet (**6**) and spring (**8**) into plug (**2**), and temporarily assemble adjuster kit (**9**) with an O-ring attached.
3) Fit O-ring (**14**) and wave washer (**16**) into plug (**2**), and then install O-ring (**12**) and backup ring (**13**). (Assembly **B**)
4) Install O-ring (**15**) to plug (**1**), insert assembly **A** into plug (**1**), and then install assembly **B**.

kgm	69 – 78 Nm {7.0 – 8.0 kgfm}

★ O-rings and backup rings shall not be reused and be replaced with new ones.

4. Operation check after assembling

Push sleeve (**3**) inside after assembling, and check that piston (**5**) can be rotated lightly with a finger. If it does not rotate, replace it as relief valve assembly.

5. Pressure adjustment procedure

1) Attach an accurate pressure gauge to the entrance of the circuit.
2) Run the pump at the rated speed.
3) Switch the control valve spool, and read the pressure gauge at the time of cylinder stroke end.
4) Turn the adjuster clockwise until necessary pressure is obtained.
   The pressure increases 15.7 MPa by one turn of the adjuster (reference value).
5) When pressure reached the specified value, hold the adjuster to prevent it from turning and tighten the lock nut.

kgm	27 – 31 Nm {2.8 – 3.2 kgfm}

6) Increase the pressure again and check that the pressure is the specified value.

INSTALLATION

Pay attention to the following for installation.

- Be careful so that excessive stress is not applied to the valves through piping.
- Tighten all bolts evenly.
- When performing welding near a valve, be careful not to damage seal parts by excessive heat or spatters.
- To prevent dust or foreign matters from entering, do not detach protective materials of ports until piping.

OPERATION

- Check that the valves are correctly arranged and that hydraulic oil is clean, and then check that no oil is leaking outside while increasing the pressure gradually (by inching operation at low idle).
- Use hydraulic oil with an aniline point of 82 to 113 °
- Use relief valves within the specified set pressure.
- Perform adequate warm-up run before starting work.

When starting the machine with a low hydraulic oil temperature or low valve temperature, be careful of the following to prevent stick due to spool's heat shock.

- Do not operate suddenly the main relief valve or overload relief valve continuously during warm-up run. Operate the machine so that hydraulic oil in each actuator can circulate and that each section warms up evenly.
- Do not perform fine operation or combined operation suddenly under a low temperature. This may cause partial heating due to throttle control in each section.

MAST

1.0 – 1.75 ton Forklift Truck

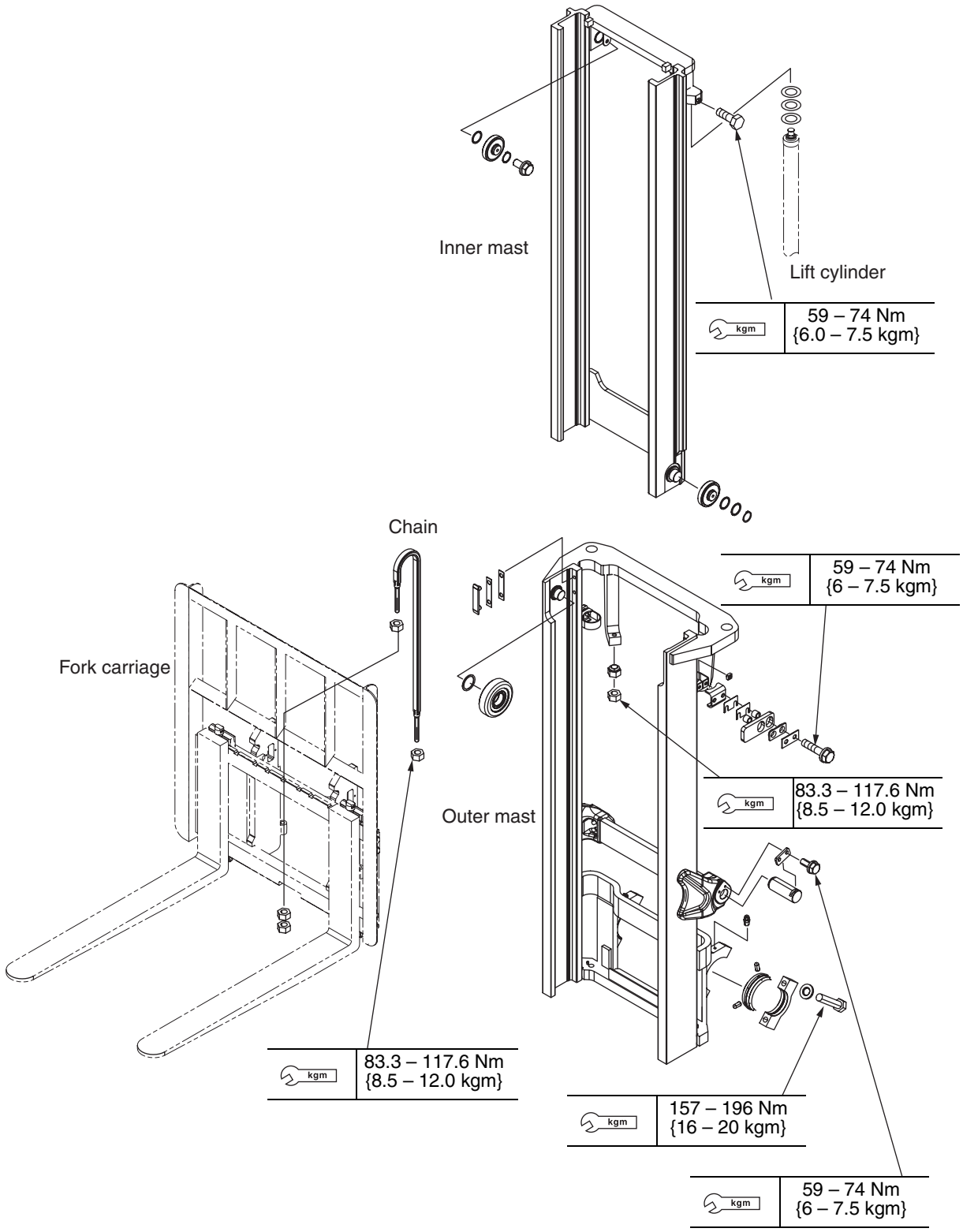

ADJUSTMENT (1.0 – 1.75 ton)

1. Outer Main Roller

1) Selection of Roller Size
Select the rollers (**S**, **M**, **L** and **O**) to make no difference between right and left at the clearance (**a**) of the mast strip.

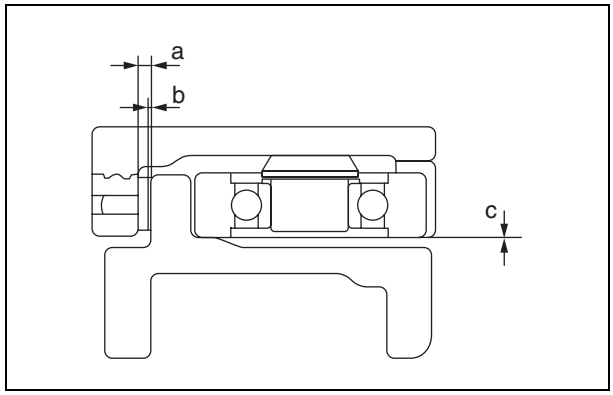

2) Adjustment with Shim
Put the same thickness of the shims (**1**) on right and left to adjust the clearance at (**b**) as follows: 0.1 ≦ **b** ≦ 0.4
Put the same thickness of the shims (**2**) on right and left to adjust the clearance at (**c**) as follows: 0.1 ≦ **c** ≦ 0.5

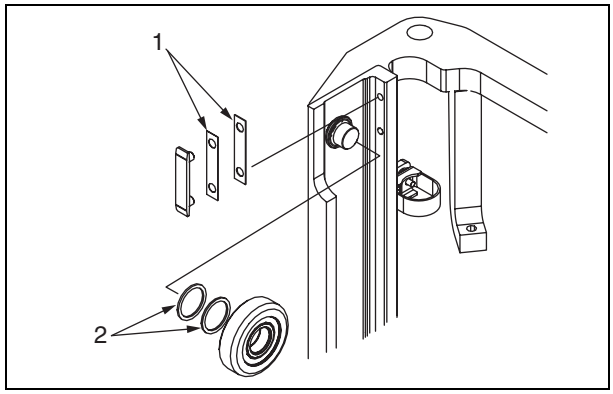

2. Inner Main Roller

1) Selection of Roller Size
Select the rollers (**S**, **M**, **L** and **O**) to make the clearance (**a**) as follows: 0.1 ≦ **a** ≦ 0.7

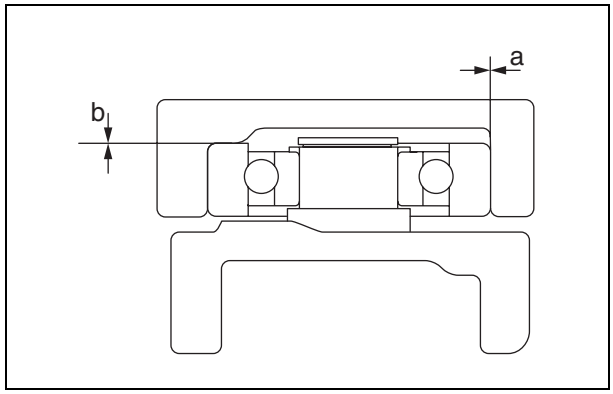

2) Adjustment with Shim
Put the same thickness of the shims (**1**) on right and left to adjust the clearance at (**b**) as follows: 0.1 ≦ **b** ≦ 0.5

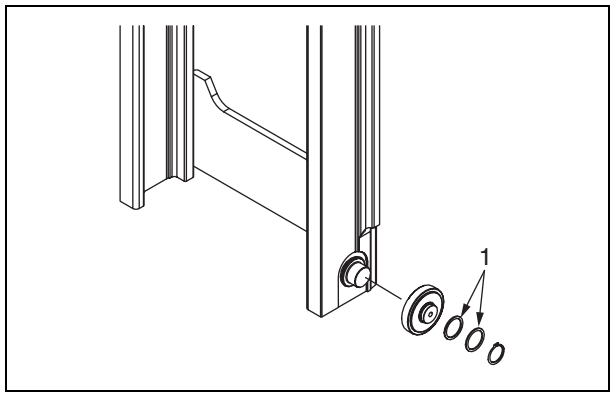

2.0 – 3.0 ton Forklift Truck

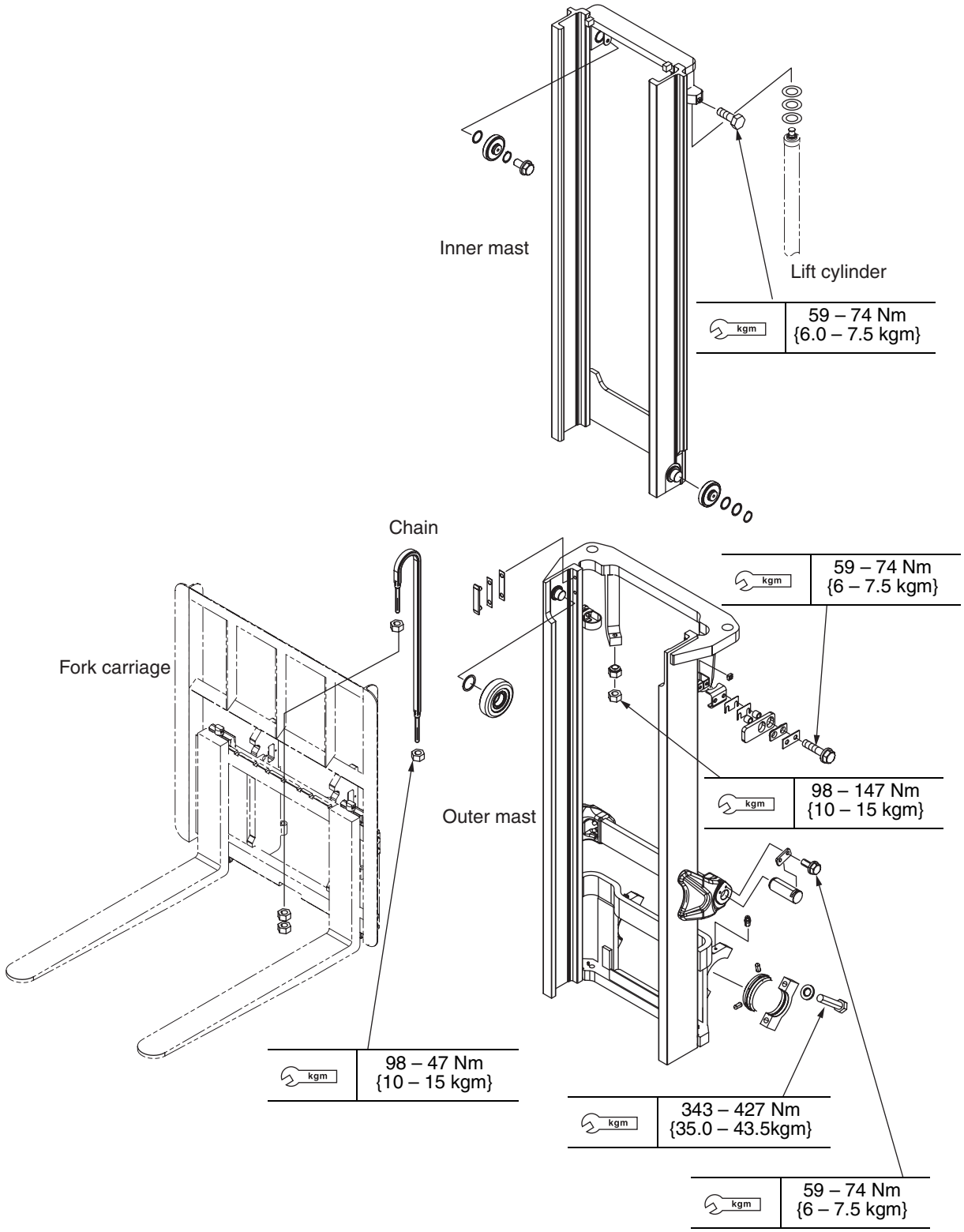

ADJUSTMENT (2.5 – 3.0 ton)

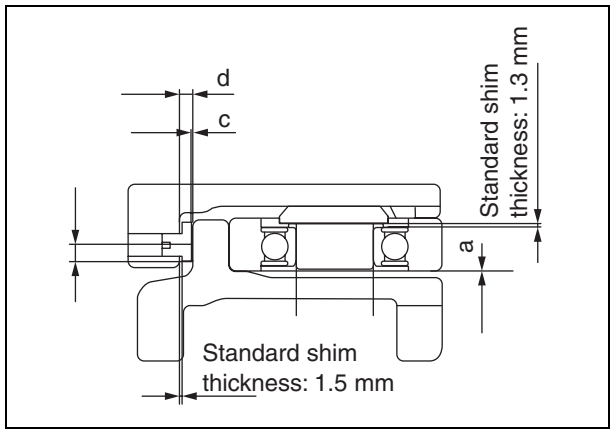

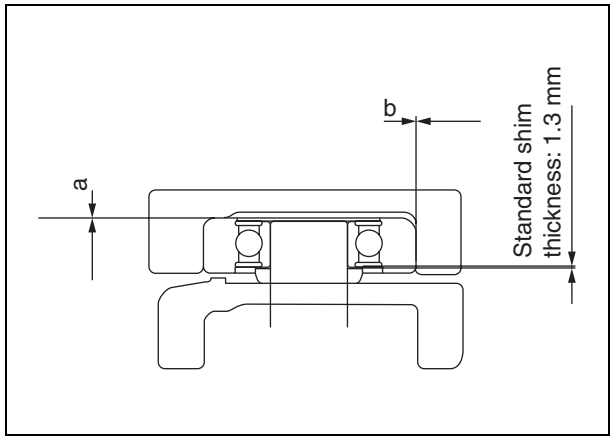

1. **Selection of Main Roller**
   1) Section A-A
      Select the rollers (**S**, **M** and **L**) to make no difference between right and left at the clearance (**b**) of the mast strip.
   2) Section B-B
      Select the rollers to make the clearance between the mast rail and the roller as follows:
      $0.2 \leqq \mathbf{b} \leqq 0.7$ mm

2. **Adjustment with Shim (Sections A-A and B-B)**
   Put the same thickness of the shims on right and left to adjust the clearance at (**a**) as follows: $0 \leqq \mathbf{a} \leqq 0.5$ mm, which makes such a state that the R section of the mast rail and roller may contact each other slightly when the roller is pushed toward the mast rail.

3. **Strip Shim (Section A-A)**
   Put the same thickness of the shims on right and left to adjust the clearance between the mast strip and the mast rail evenly over the inner mast rail when the main roller is pushed toward the mast rail. The clearance should be adjusted to $0.1 \leqq \mathbf{c} \leqq 0.4$mm.

ADJUSTMENT (2.5 – 3.5 ton Triple Mast)

1. Selection of Main Roller

1) Sections A-A and C-C
Select the rollers (**S**, **M** and **L**) to make no difference between right and left at the clearance (**b**) of the mast strip.

2) Sections B-B and D-D
Select the rollers to make the clearance between the mast rail and the roller as follows:
$0.2 \leqq \mathbf{b} \leqq 0.7$ mm

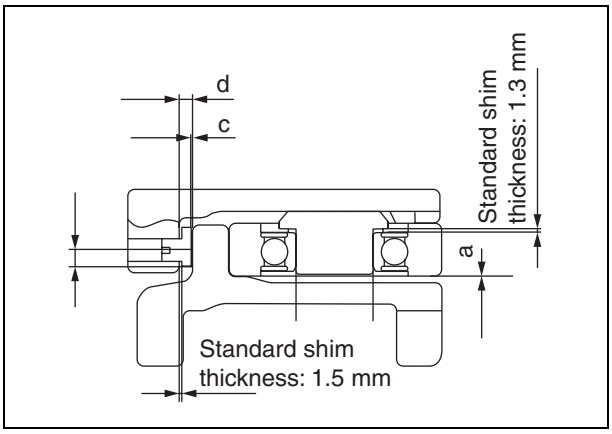

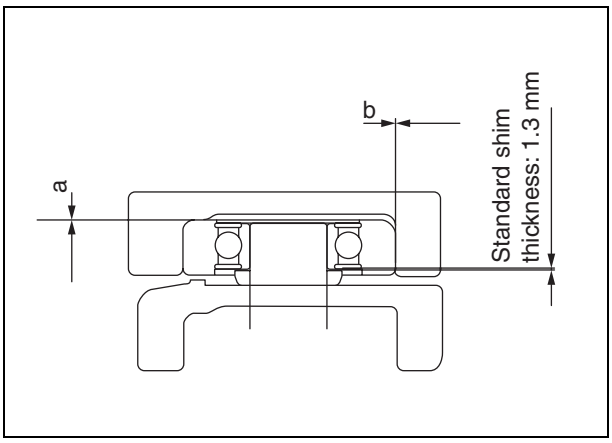

2. Adjustment with Shim (Sections A-A, B-B, C-C and D-D)

Put the same thickness of the shims on right and left to adjust the clearance at (**a**) as follows: $0 \leqq \mathbf{a} \leqq 0.5$ mm, which makes such a state that the R section of the mast rail and roller may contact each other slightly when the roller is pushed toward the mast rail.

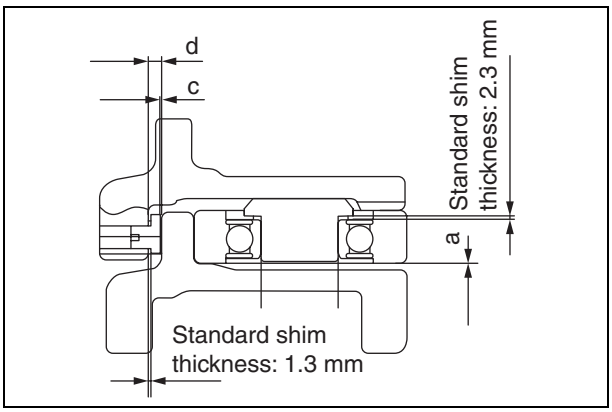

3. Strip Shim (Sections A-A and C-C)

Put the same thickness of the shims on right and left to adjust the clearance between the mast strip and the mast rail evenly over the inner mast rail when the main roller is pushed toward the mast rail. The clearance should be adjusted to $0.1 \leqq \mathbf{c} \leqq 0.4$mm.

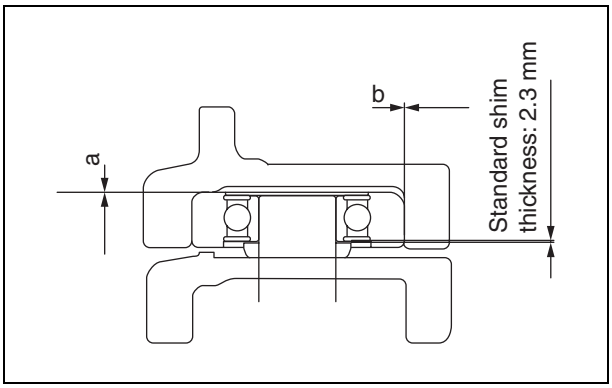

1. Section E-E (Cylinder Clamp)

1) Insert the top of the lift cylinder in the inner cylinder so as to adjust it with shim (**a**).

Standard Thickness of Shim

2.5t	5 mm
3.0t	1.5 mm
3.5t	8.7 mm

Standard Thickness of Shim (Triple Mast)

2.5t	8.5 mm
3.0t	5.5 mm

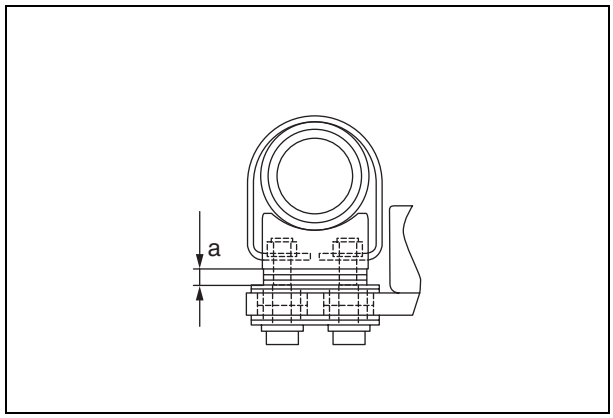

2. Adjustment of Lift Cylinder Stroke End "Q"

Put the shim (**1**) to adjust the clearance of the lift cylinder stroke end so as to synchronize right and left lift cylinders when extending the lift cylinders to the maximum fork height.

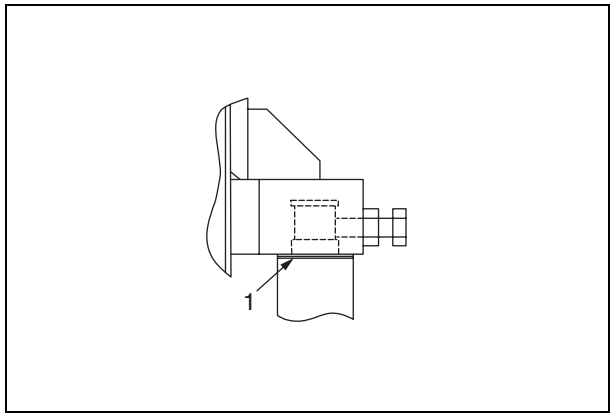

WARNING

Check to make sure that the lift cylinders are being secured firmly with stopper pins.

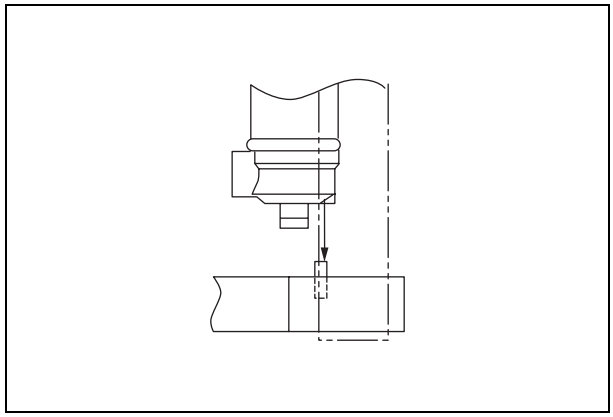

FORK CARRIAGE

1.0 – 1.75 ton Forklift Truck

★ Tighten the bolt pushing toward the backrest board "**A**".

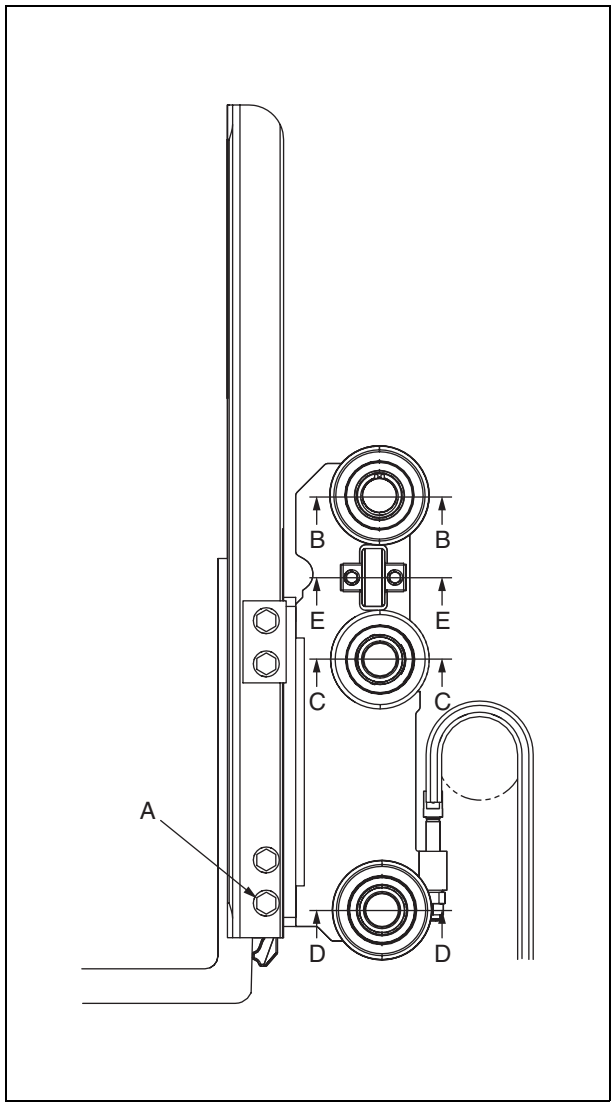

1. **Section B-B (Exclusively for 3-Roller Type)**
   1) Select such shims as to make the clearance "**a1**" to be 0.3 to 1.1 mm
   2) Use the shims of the same thickness to make the clearance "**b1**" to be 0.4 to 0.7 mm in the right and left at the top of the fork carriage.

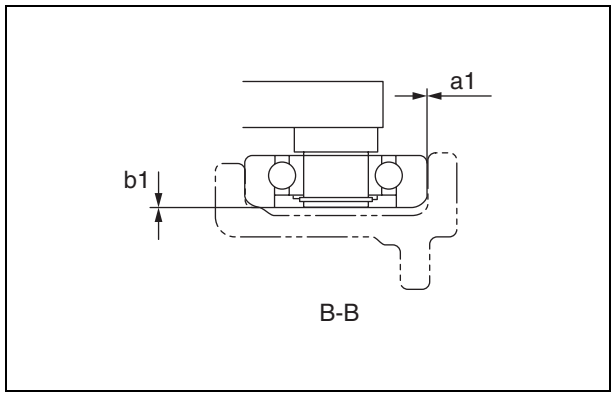

2. Section C-C

1) Select such shims as to make the clearance "**a2**" to be 0.3 to 1.1 mm.
2) Use the shims of the same thickness to make the clearance "**b2**" to be 0.4 to 0.7 mm for 2-roller type and 0.1 to 0.4 mm for 3-roller type in the right and left at the top of the fork carriage.

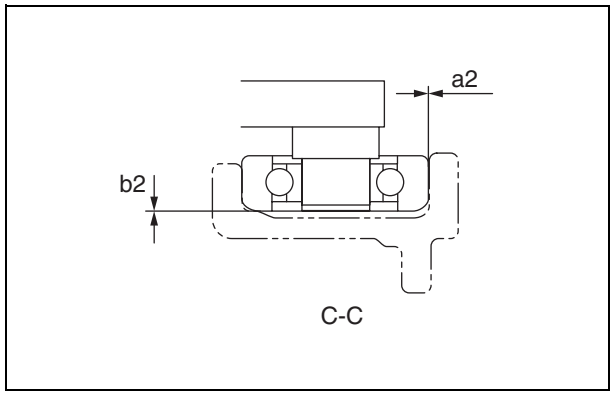

3. Section D-D

1) Select such shims as to make the clearance "**a3**" to be 0.3 to 1.1 mm.
2) Use the shims of the same thickness to make the clearance "**b3**" to be 0 to 0.2 mm in the right and left at the top of the fork carriage.

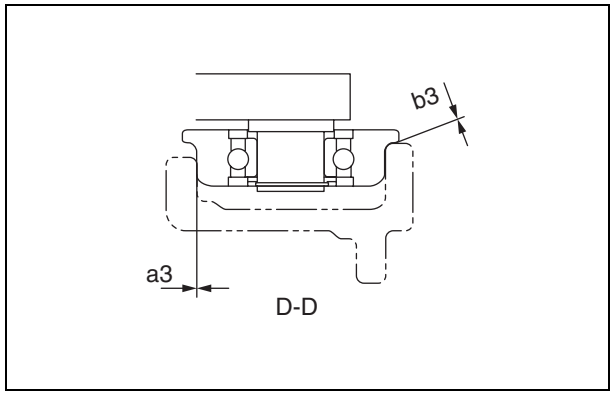

4. Protrusion "A" (Lowered Height)

1) Measure the distance "**A**" between the bottoms of the inner mast (1) and the center of the lower roller of the fork carriage (**2**).

Distance "A"

Model	Standard Tires		Double Tires
	J-lug	U-lug	
1 – 1.75 ton	27 mm	30 mm	45 mm

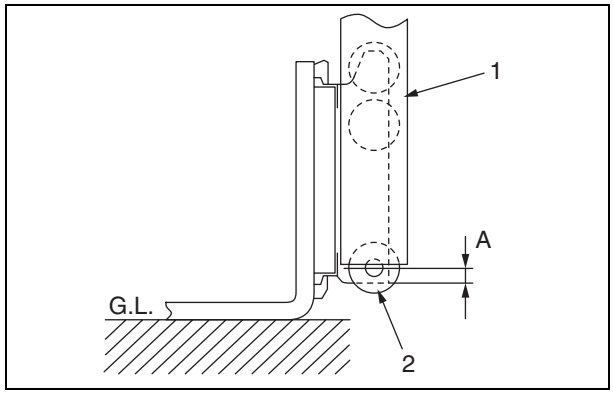

2.0 – 3.0 ton Forklift Truck

★ Tighten the bolt pushing toward the backrest board "**A**".
Always make sure to use the jig the roller to prevent the seal from getting any damage when assembling.

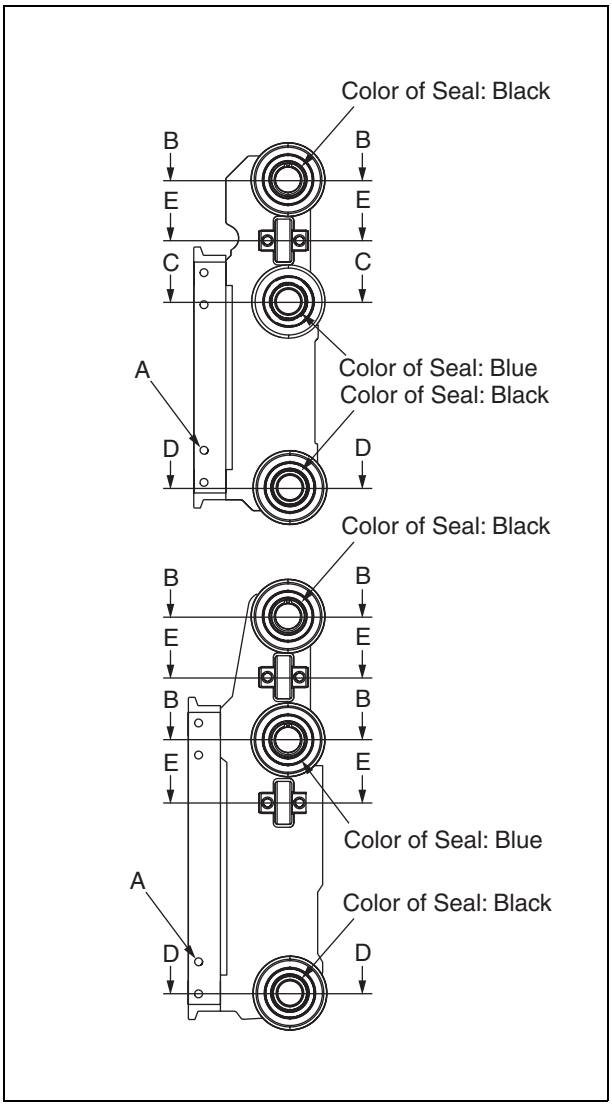

1. Section B-B

1) Select such shims as to make the clearance "**a**" to be 0.2 to 0.7 mm.
2) The standard thickness of the clearance "**b**" should be 0.5 mm.
3) The standard thickness of the clearance "**c**" should be 1.5 mm.

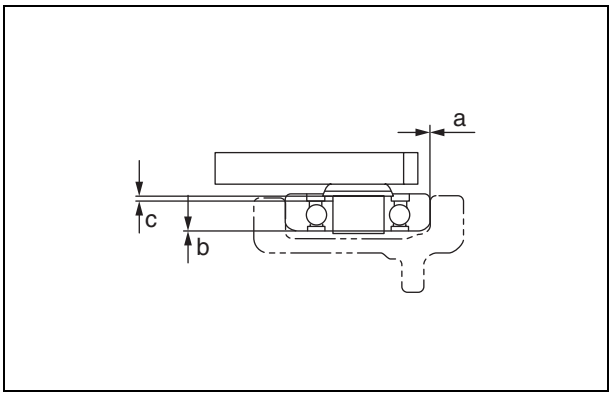

2. Section C-C

1) Select such shims as to make the clearance "**a**" to be 0.2 to 0.7 mm.
2) Use the shims of the same thickness to make the clearance "**e**" to be 0 to 0.2 mm in the right and left at the top of the fork carriage.
3) The standard thickness of the clearance "**b**" should be 3.8 mm.

★ Use the same size of rollers as used in upper and lower ones.

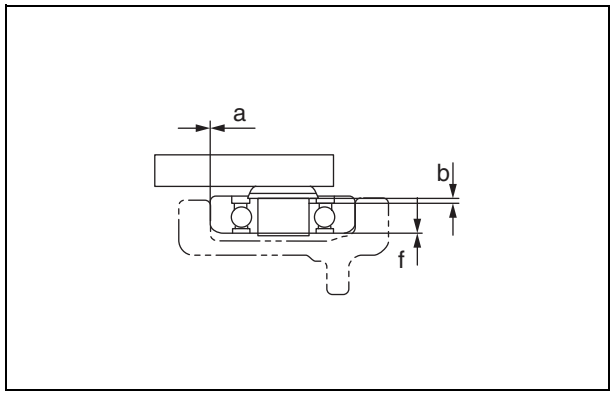

3. Section D-D

1) Select such shims as to make the clearance "**a**" to be 0.2 to 0.7 mm.
2) Use the shims of the same thickness to make the clearance "**f**" to be 0 to 0.1 mm in the right and left at the top of the fork carriage.
3) The standard thickness of the clearance "**b**" should be 5.1 mm.

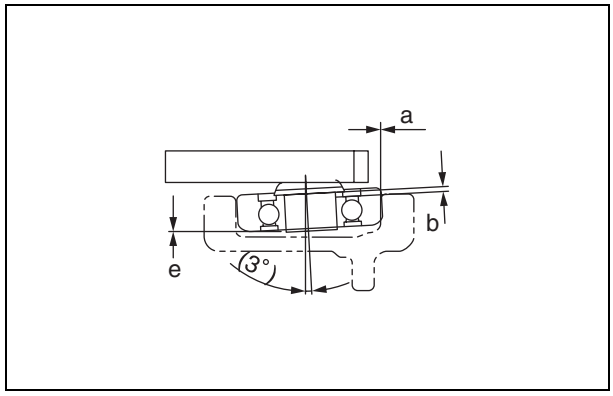

4. Section E-E

1) Use the shims of the same thickness to make the clearance "**g**" to be 0 to 0.2mm in the right and left at the top of the fork carriage.
2) The standard thickness of the clearance "**a**" should be 2.0 mm.

★ Never use more than 2 pieces of the shims of t0.5 and t1.0 (thickness of 0.5 mm and 1.0 mm) Always make sure to use the spacer of t3.2 (thickness of 3.2 mm)

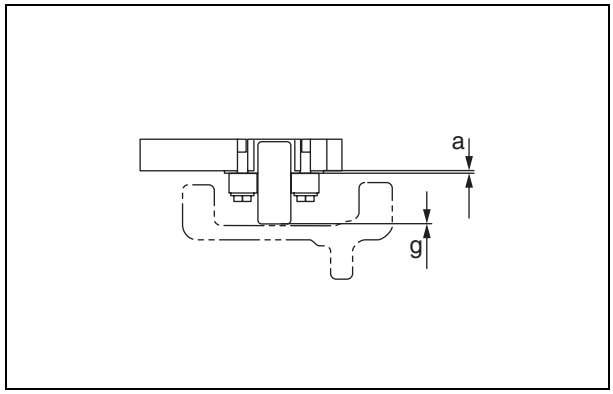

5. Protrusion "A" (Lowered Height)

Lift down the forks (**2**) to the ground and measure the distance between the lower roller (**4**) of the inner mast (**1**) and the fork carriage (**3**).

Protrusion "A" (At Lowered Height)

2 – 2.5 ton	40 mm
3 ton	42 mm
3.5 ton	41 mm

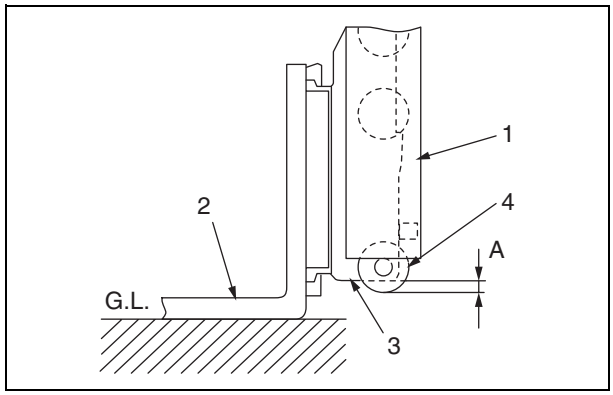

FLOW DIVIDER

COMPONENT PARTS

Ref. No.	Part Name	Q'ty
1	Body	1
2	Spool	1
3	Bolt	1
4	Spring	1
5	O-Ring	1

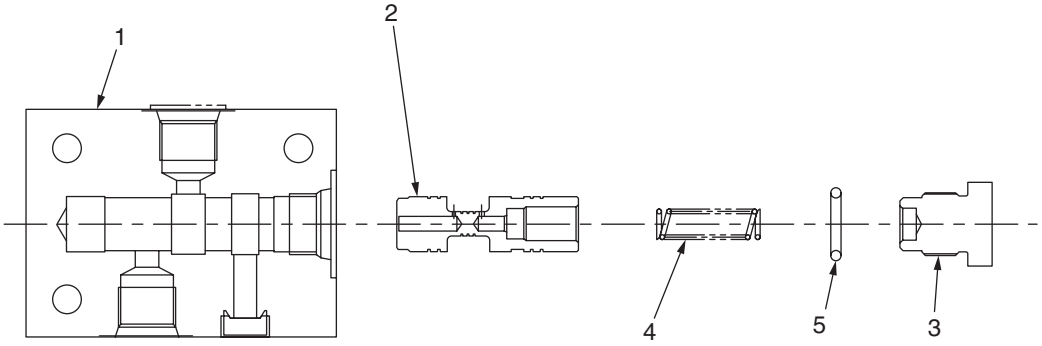

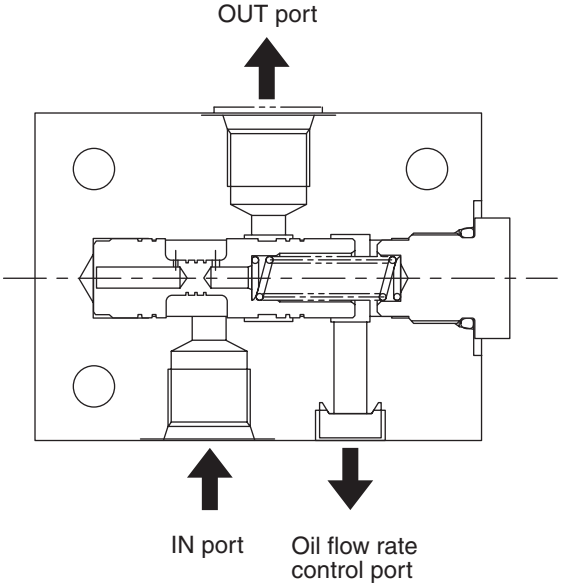

DISASSEMBLY

1. **Loosen the bolt (3) to remove.**
2. **Remove the spring (4).**
3. **Remove the spool (2).**

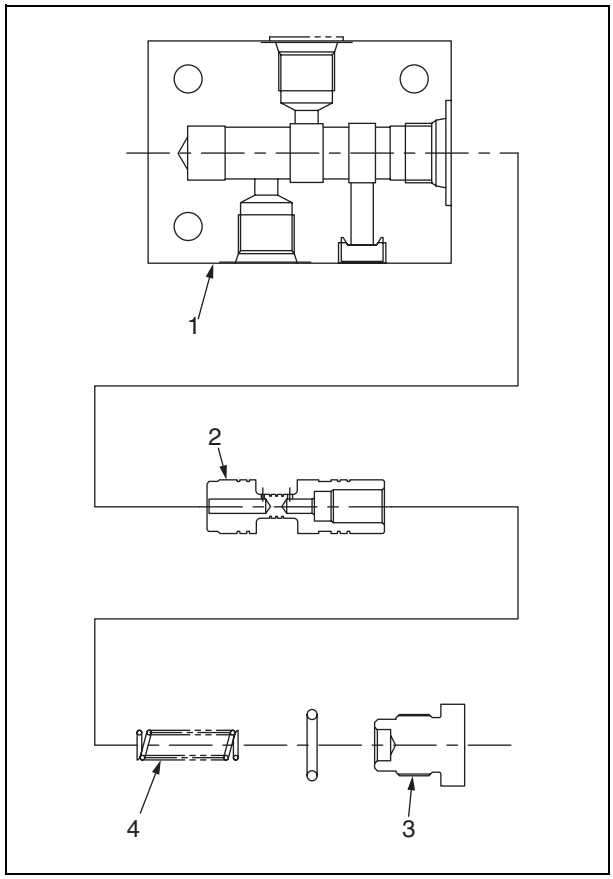

WARNING

- Be careful not to damage the circumference of the spool.
- Before carrying out disassembly, make sure that you understand the structure of the flow divider and lay the disassembled parts out in order.

CHECK AND INSPECTION

WARNING

- Never use any fluid oil other than alcohol or brake fluid to wash or clean the parts. In particular, never use mineral oil such as petroleum and gasoline. If mineral oil sticks on the rubber parts, they may swell and become unusable.
- Keep the parts in a clean place to prevent the parts from sticking dirt or dust after washing.
- Always keep such parts as the cylinder, the piston or the cup away from any foreign body that may damage those parts seriously.

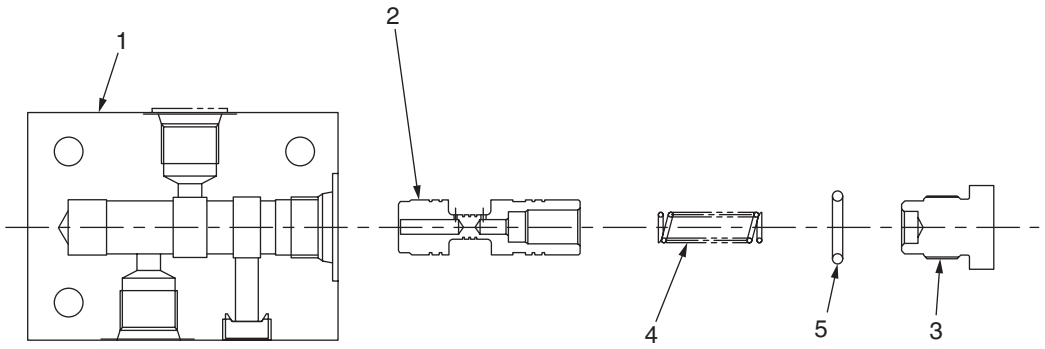

COMPONENT PARTS

1. 1. Body
2. 2. Spool
3. 3. Bolt
4. 4. Spring
5. 5. O-ring

No.	Part Name	Check Item	Check Point	Remedy	Ref. No.
1	Cylinder	Scratches or wear on sliding surface	Extremely small scratches must be removed with sandpaper. Those of having critical scratches to affect adversely to the seal must be replaced with the cylinder assembly.	Replacement in assembly	1
2	Spring	Scratched, wear or fall	Those of having critical scratches or wear and those of below the repair limit must be replaced with a new one.	Replacement	4
3	Flow divider spool	Scratches or wear on sliding surface	Extremely small scratches must be removed with sandpaper. Those of having critical scratches or wear must be replaced with a new one.	Replacement	2
4	O-ring		Those of having scratches on the seal or having critical wear must be replaced with a new one.	Replacement	5

★ The number shown in the Ref. No. on the right hand in the above table refers to those shown with the arrow in the diagram of the component parts respectively.

ASSEMBLY

1. Assembly of Spool

1) Those parts to be reused must be washed or cleaned with the flushing oil or brake fluid.

★ Always use mineral hydraulic oil to wash or clean rubber parts. Never use flushing oil and petroleum or gasoline for rubber parts.

2) Make sure to keep the spool (**2**) circumference away from getting scratches or sticking dirt.

3) Check to make sure the spool for smooth function after assembly.

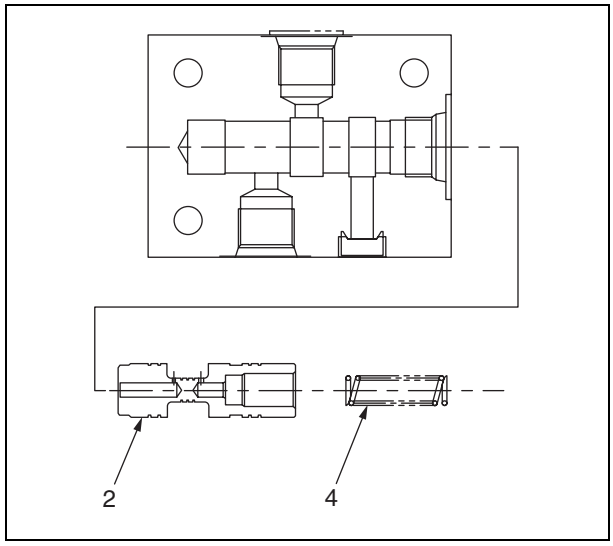

2. Assembly of Spring

1) Assemble the spring (**4**) as shown in the diagram on the right.

3. Tightening of Bolt

1) Assemble the bolt (**3**) to the O-ring (**5**).

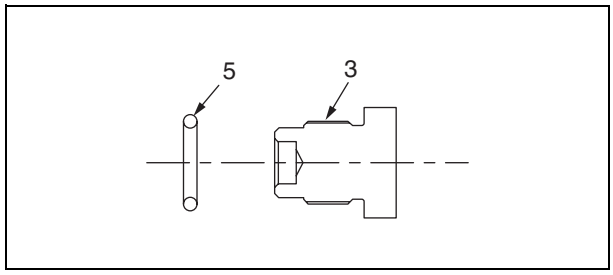

2) Tighten the bolt (**3**) with the following torque.

kgm (Bolt)	98 – 107 Nm {10 – 11 kgm}

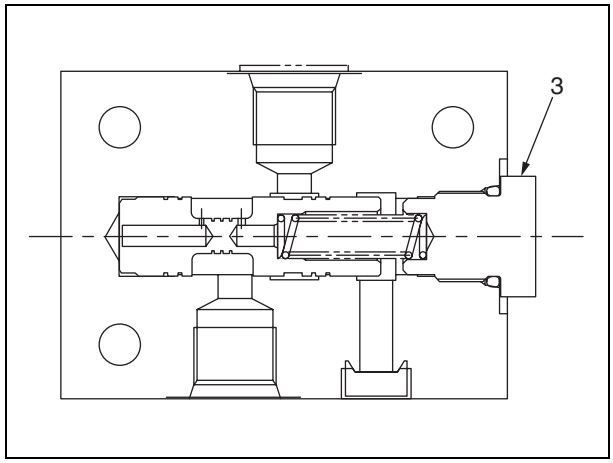

WARNING

- Be careful not to damage the circumference of the spool.
- Before carrying out disassembly, make sure that you understand the structure of the flow divider and lay the disassembled parts out in order.

RESERVOIR AASEMBLY

COMPONENT PARTS

Ref No.	Part Name	Q'ty
1	Reservoir	1
2	Baffle Plate	1
3	Reservoir Cap	1

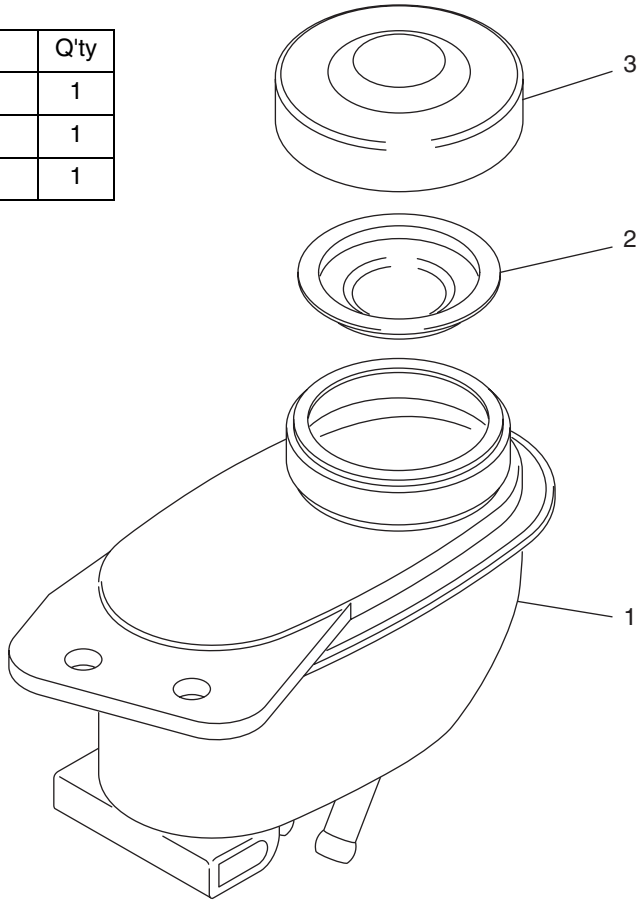

DISASSEMBLY AND ASSEMBLY

Carry out disassembly and assembly following to the diagram shown in the above.

WARNING

Make sure to assemble the baffle plate to the cap beforehand. Then, install it to the reservoir.

HYDRAULIC PUMP

DISASSEMBLY AND ASSEMBLY

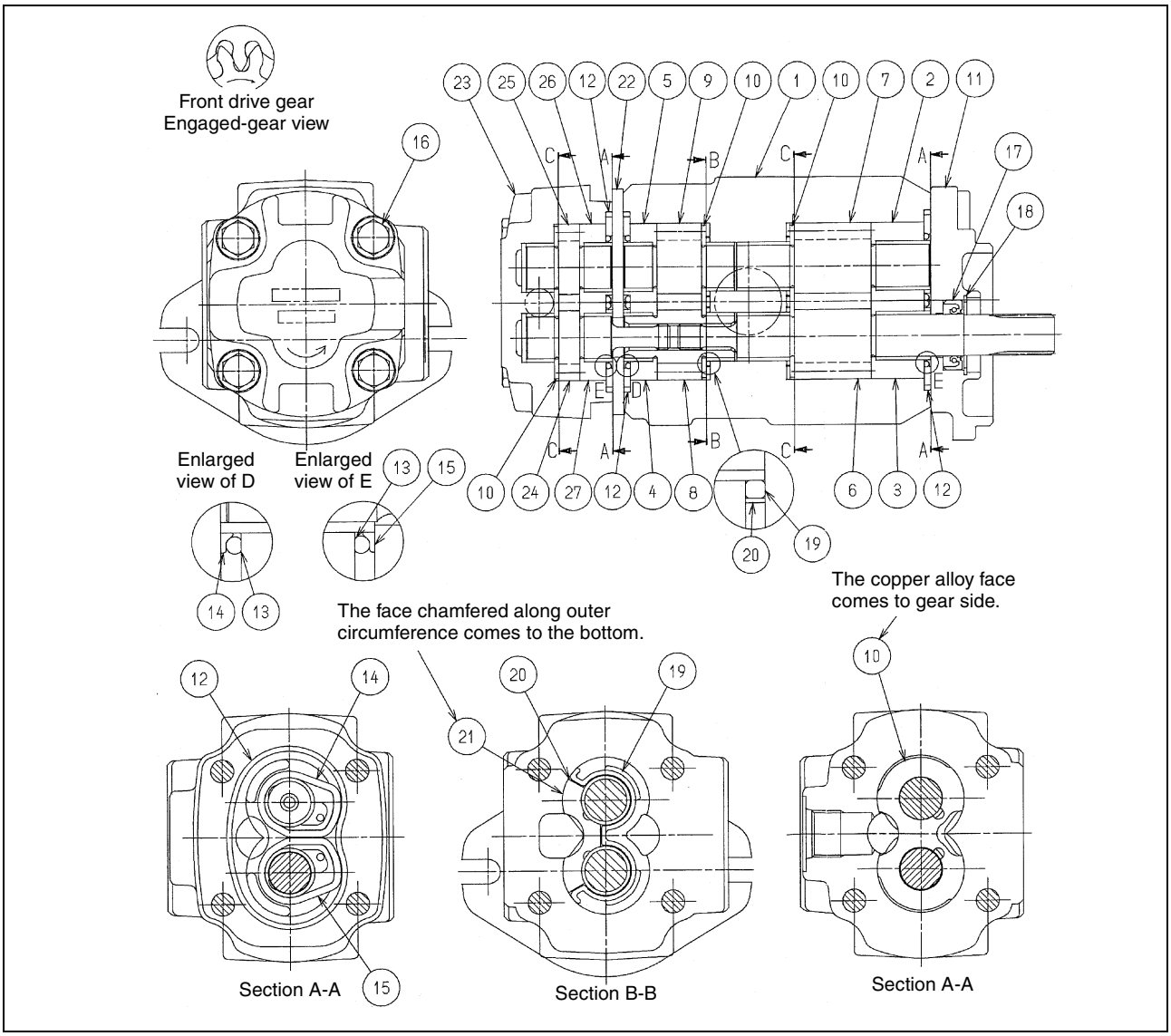

1 Front body assembly
2 Bush BR assembly (for front pump)
3 Bush BL assembly (for front pump)
4 Bush ER assembly (for center pump)
5 Bush EL assembly (for center pump)
6 Front drive gear (for front pump)
7 Driven gear (for front pump)
8 Rear drive gear (for center pump)
9 Driven gear (for center pump)
10 Side plate
11 Flange
12 Body seal
13 Bush seal
14 Packing ring R
15 Packing ring L
16 Bolt with hexagon flange
17 Oil seal
18 Snap ring
19 Plate seal
20 Backup
21 Isolation plate
22 Center plate
23 Rear body assembly
24 Rear drive gear
25 Driven gear
26 Bush ER assembly (for rear pump)
27 Bush ER assembly (for rear pump)

DISASSEMBLY

WARNING

- Clean the dirt being stuck on the surface of the pump and the driving shaft, when carrying out disassembly.
- Put the disassembled parts on the clean paper or cloth so as to prevent such parts from getting any damage.
- Lay all of the disassembled part out in order so as to identify each location of such parts before disassembly

1. Making the flange side of the hydraulic pump face downward, clamp the flange (**11**) with a vise and secure it for sure.

★ Apply any soft material such as wooden piece, aluminum or copper to protect the vise.

2. Remove the flange bolt (**16**).

WARNING

- When loosening the bolt, be careful not to fall the hydraulic pump from the vise. Always make sure to loosen the bolt gradually.
- Always use the proper tool (wrench) without wear.

3. Remove the hydraulic pump together with the center plate (**22**) straight in the direction toward the shaft.

★ If it is hard to remove, hit the side of rear body (**23**) slightly with a plastic hammer.

4. Remove the center plate (**22**) from the rear pump. Then, remove the seal of (**12**), (**13**), (**14**) and (**15**) in return.

5. Pull the spline of the rear drive gear (**24**) out. Then, remove the bushing of (**26**) (**27**) and the gear of (**24**) (**25**) from the rear body.

6. Remove the side plate (**10**) located at the bottom of the rear body hole.

7. Remove the hydraulic pump from the vise. Hold it by hand not to fall and place it on the work stand facing the front pump side on the top.

8. Pull the flange (**11**) out straight in the direction toward the shaft. Then, remove the seal of (**12**), (**13**). (**14**) and (**15**) in return.

9. Pull the spline of the front drive gear (**6**) up slightly. Then, remove the flange side bushings of (**2**) (**3**) and gears of (**6**) (**7**) from the front body (**1**).

10. Remove the parts located at the bottom of the front body such as the side plate (**10**), the plate seat (**19**), the backup seal (**20**) and the isolation plate (**21**).

11. Turn the front body and apply the same procedures of the steps **9** and 10 of the above to remove the gear of (**8**) (**9**), the bushing of (**4**) (**5**), the side plate (**10**), the plate seal (**19**), the backup seal (**20**) and the isolation plate (**21**) in return.

★ If it is hard to remove them, push out the gear end of the rear pump from the bearing hole of the front pump side.

12. Remove the snap ring (**18**) from the flange (**11**). Then remove the oil seal (**17**), which can be removed with the flat-headed screwdriver "**A**" in the direction toward the arrow mark shown in the diagram.

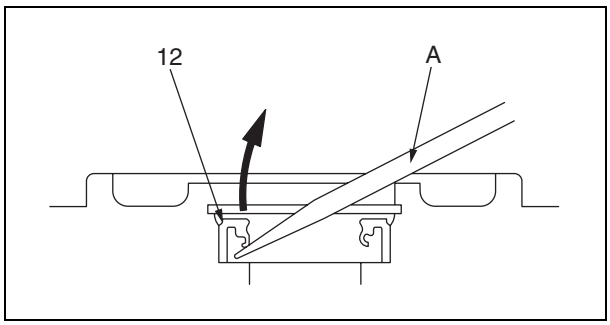

13. Make sure to lay all the disassembled parts out in order making them clear of each location in the assembly.

JUDGMENT OF PARTS

See 50. MAINENANCE STANDARD

ASSEMBLY

WARNING

Check to make sure that all the disassembled parts have been cleaned up and dried with compressed air before starting assembly.

1. Put the front body (**1**) on the work stand facing the front pump side or the flange side on the top.

2. Install the isolation plate (**21**) at the body bottom hole. Then, insert the plate seal (**19**) and backup seal (**20**).

★ Pay attention carefully to the direction of the suction side (**A**) and the discharge side (**B**).
As for the isolation plate, set the face (**C**) on the outside circumference to place downward or face it to the bottom hole side,

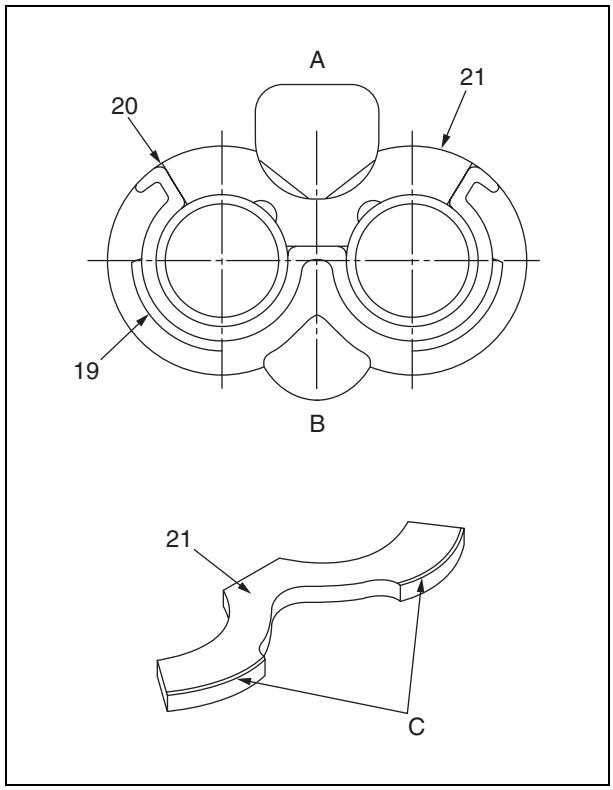

3. Set the copper alloy surface of the side plate (**10**) to the top (the gear side). Then, insert the side plate (**10**) to the body bottom hole.

★ Pay attention carefully to the direction of the suction side (**A**) and the discharge side (**B**).

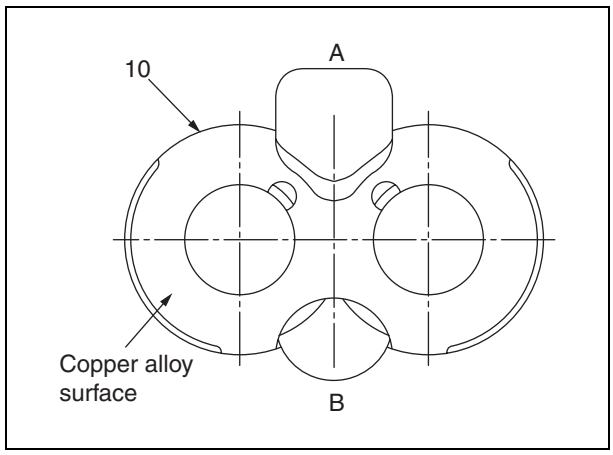

4. Insert the front drive gear (**6**) and the driven gear (**7**).
- ★ Match the gear tooth each other properly.
- ★ Be careful that the front pump has the reversed tooth face.

5. Assemble the bushing (**2**) and (**3**). Then, insert it to the body (**1**) paying attention to the direction.

6. Assemble the body seal (**12**), the bushing seal (**13**) and the packing of (**14**) (**15**) respectively.

7. Assemble the flange (**11**) on top of the front body (**1**).
- ★ The alignment has been made on the shaft when assembled at the factory. Be careful not to damage the hole for the shaft.

8. Hold the flange to prevent the assembled parts from coming out. Then, reverse the body and secure with the vise.

9. Assemble the parts with the center pump with the same procedures taken in the steps 2 and 3 of the above. Then, insert the rear drive gear (**8**) and the driven gear (**9**).
- ★ Check to make sure both splines of the rear drive gear (**8**) and the front drive gear (**6**) for proper matching.

10. Insert the bushing (**4**) and (**5**) with the same procedure taken in the step 5 of the above.

11. Assemble the body seal (**12**), bushing seal (**13**) and the packing of (**14**) and (**15**).

12. Put the rear body (**23**) on the work stand setting the gear hole side to the top and insert the side plate (**10**) in the hole bottom.

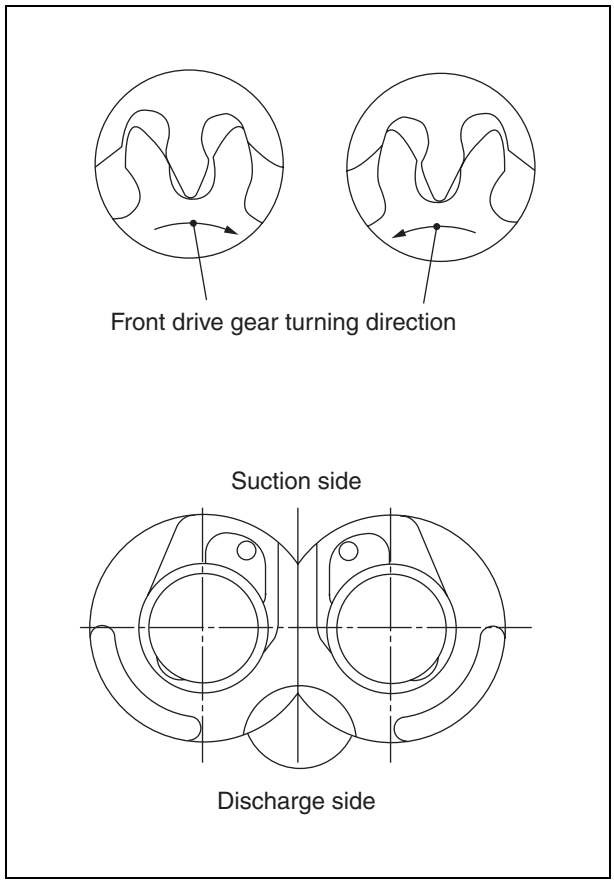

13. Pay attention to the turning direction of the gear. Then, insert the rear drive gear (**24**) and the driven gear (**25**).

14. Insert the bushing of (**26**) and (**27**) with the same procedure taken in the step **5** of the above.

15. Insert the seal of the (**12**), (**13**), (**14**) and (**15**) in return with the same procedure taken in the step 6 of the above.

16. Install the center plate (**22**) on the top of the rear body.

17. Install the rear pump assembled with the procedures taken in the steps **12** through 16 of the above on the top of the front body (**19**).

★ Check to make sure both splines of the rear drive gear (**8**) and the front drive gear (**6**) for proper matching.

18. Tighten the bolt with the flange.

kgm	46.1 – 48.6 Nm {4.7 – 75.0 kgm}

WARNING

- Always tighten the bolt with the specified torque.
- If tightening torque is greater or smaller than the specified torque, it may result in damage to the bolt or cause trouble or accident of blowing the hydraulic oil out from the matching face of the hydraulic pump.

19. Remove the pump from the vise and assemble the flange (**11**) with the oil seal (**17**) and the snap ring (**18**).

★ Apply a thin layer of clean lithium grease to the oil seal.

★ As to the direction for installing the oil seal (**17**), see the diagram on the right.

★ When installing the oil seal with compressor, make sure to install it straight so as not to damage the lip. Protect the front drive gear end with a tape to prevent the lip from getting damage and remove the tape after installation.

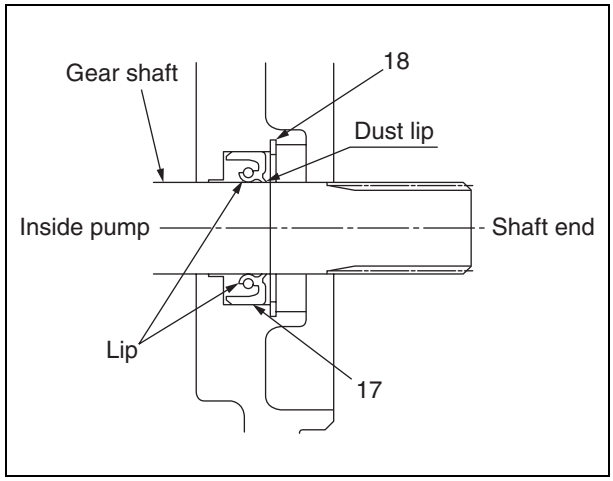

20. Turn the drive shaft end with a tool. If it turns lightly by hand, neither foreign body nor bite of seal could be found in it. In case of turning not smoothly, carry out disassembly and assembly again because either foreign body or bite of seal could be found.

21. Check again the assembled pump for correct assembling method and turning direction for sure. Then, assemble it with the truck. Need attention on the following points.

1) Check to make sure that no scratches can be found at the in-law boss part, which is a standard for alignment.
2) Check to make sure that neither scratches nor dirt can be found in sticking around on the fitting surface of the flange (**11**). In particular, carefully check after tightening too strong with the vise.
3) Check to make sure that neither scratches nor dirt can be found on the flange face of the piping.
   ★ Remove scratches or dirt with fine oilstones.

WARNING

- As for such component parts as body, gear and bushing, make sure to assemble them in the same position and direction as they were, when carrying out assembly again after disassembly.

PROPELER SFAFT

The propeller shaft can be supplied as a drive shaft assemble.
Typical lubrication cycle: 1200 hours

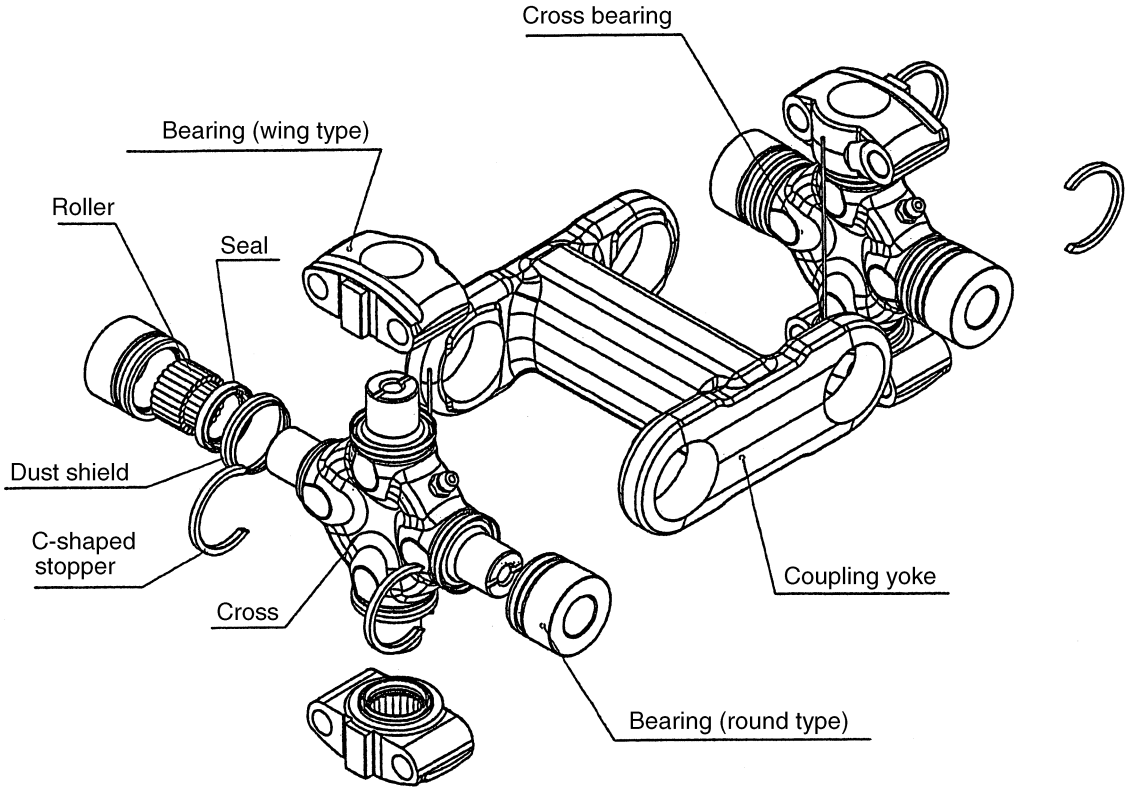

50. MAINTENANCE STANDARD

CLUTCH RELIESE CYLINDER 50-2
CLUTCH 50-3
CLUTCH TRANSMISSION 50-5
TORQUE CONVERTER 50-7
TORQFLOW TRANSMISSION 50-10
TRANSMISSION CONTROL VALVE 50-12
DIFERENTIAL.....50-14
WHEEL BRAKE 50-16
BRAKE MASTER CYLINDER.....50-18
CLUTCH MASTER CYLINDER 50-19
BRAKE BOOSTER 50-20
CLUTCH BOOSTER.....50-22
STEERING AXLE 50-23
POWER STEERING VALVE 50-25
POWER STEERING CYLINDER.....50-27
LIFT CYLINDER 50-28
TILT CYLINDER.....50-31
CONTROL VALVE.....50-33
MAST, FORK CARRIAGE AND FORK 50-35
HYDRAULIC PUMP 50-37
PROPELER SFAFT 50-41

CLUTCH RELIESE CYLINDER

COMPONENT PARTS

Ref. No.	Part Name	Q'ty
1	Cylinder	1
2	Piston Assembly	1
3	Piston	1
4	S-cup	1
5	R-cup	1
6	Spring	1
7	Boot	1
8	Push Rod	1
9	Nut	1
10	Yoke	1
11	Bleeder Valve	1
12	Bleeder Cap	1

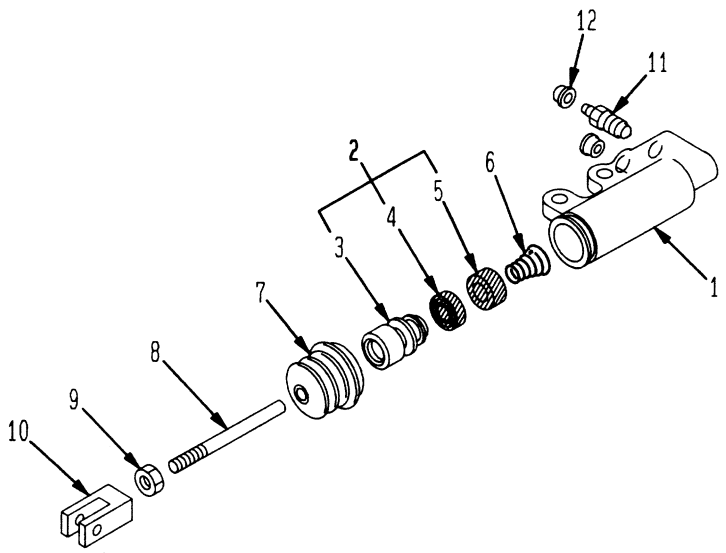

Unit: mm

No.	Check Item	Standard	Limit	Remedy
1, 2	Clearance between Cylinder and Piston	0.020 – 0.105	0.15	Replacement (Cylinder Assembly)
4, 5	Allowance of Cup	S-cup (4): approx. 0.6 R-cup (5): approx. 2	0.4	Replacement (Piston Assembly)
6	Free Length of Spring	48.6	43	Replacement
9. 10	Tightening Torque for Yoke and Locknut	7.8 – 11.8 Nm {0.8 – 1.2 kgm}	–	–
11	Tightening Torque for Bleeder Valve	6.86 – 8.83 Nm {0.7 – 0.9 kgm}	–	–

CLUTCH

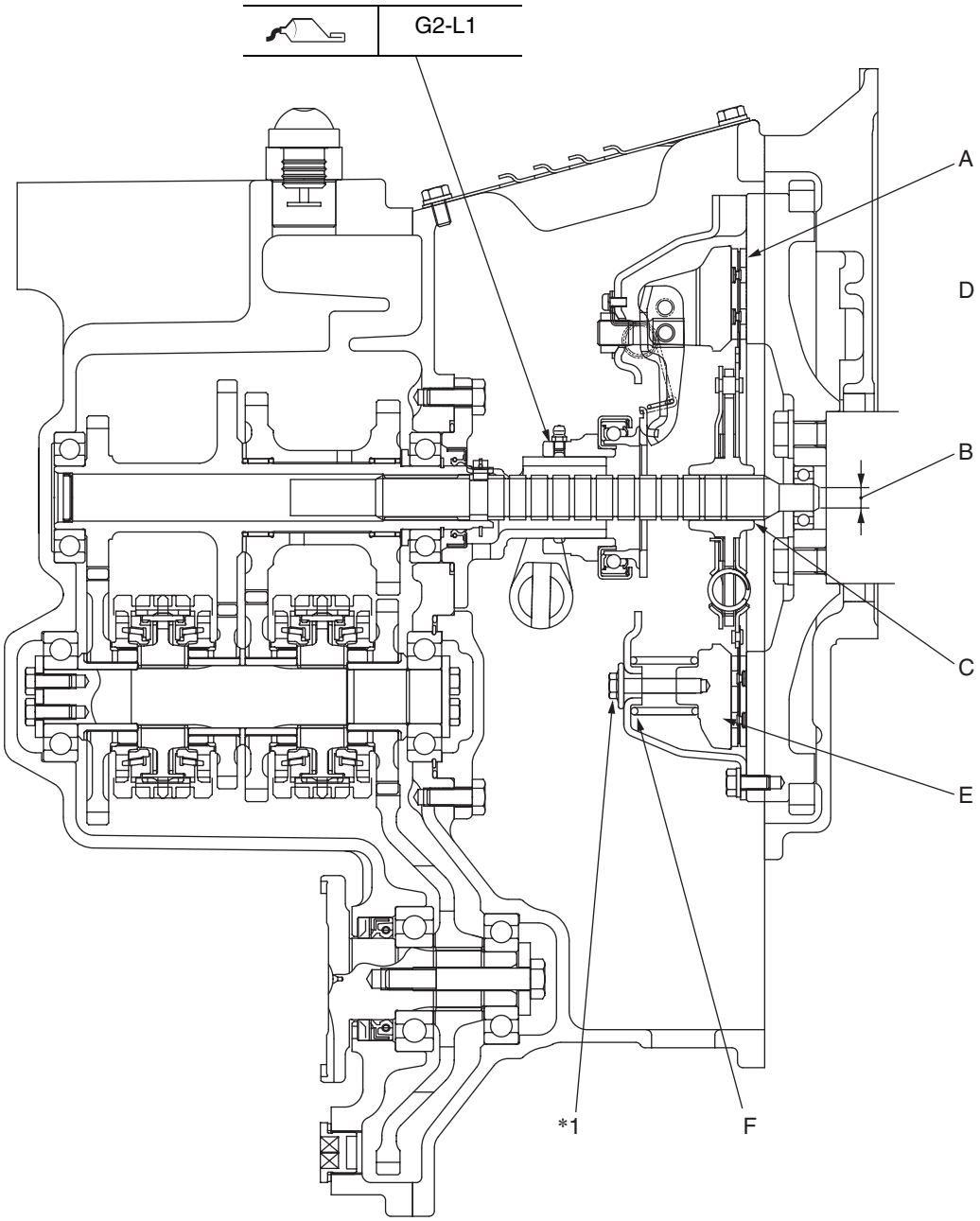

Note *1: Remove the bolt at 3 locations after installation.

Unit: mm

Mark	Check Item	Criteria		Remedy
		Standard	Limit	
A	Thickness of Clutch Disc (both faces)	8.95	0.3 (Depth to rivet head)	Replace
B	Diameter of Drive Shaft Tip	Ø15	Ø14.85	Correct hard chrome plating
C	Play of Spline in Rotating Direction	–	0.5	Replace
	Vibration of outer circumference	–	1	
D	Height of Release Lever	56	–	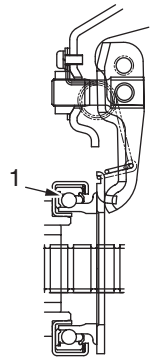 Replace release bearing (1), if any seizure, damage or wear can be found.
	Stroke of Release Lever	Max.12	–	
	Wear-in Amount of Release Lever	14	–	
E	Pressure Plate	Damage or stepped wear of friction surface		Replace
F	Coil Spring	Deformation or deterioration		Replace

How to measure remaining thickness of clutch disc

★ Measure with calipers at both ends of the engine and the pressure plate. See the diagram on the right

★ Take the smallest depth to the rivet head as the standard for your judgment.

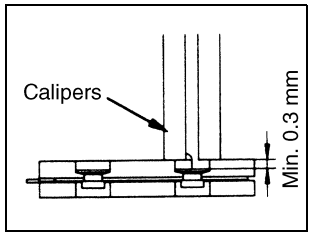

CLUTCH TRANSMISSION

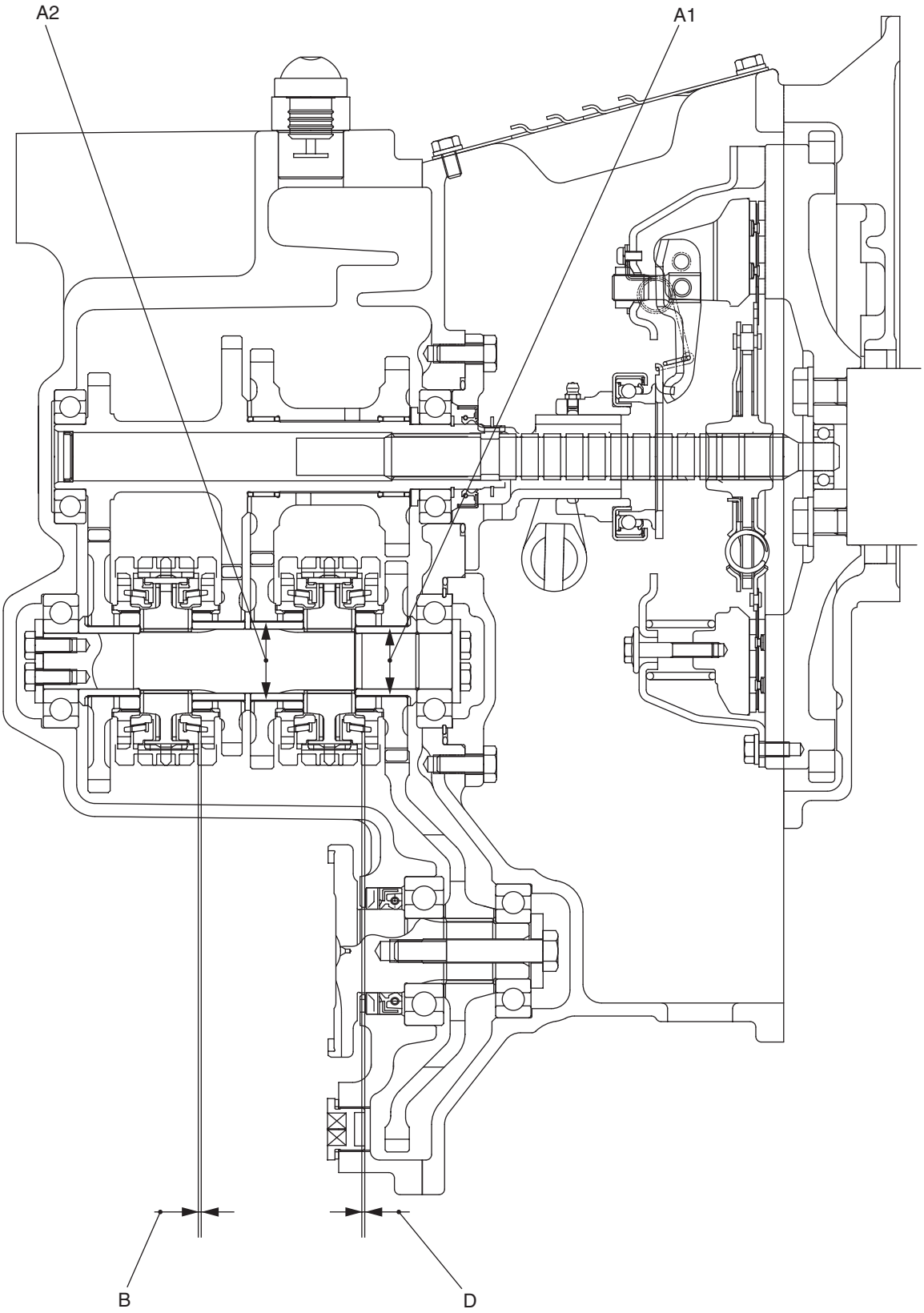

Unit: mm

Mark	Check Item			Criteria		Remedy
				Standard	Limit	
A	Outside Diameter of Bushing		A1	38	37.8	Replace
			A2	43	42.8	
B	Clearance between Balk Ring and H/L Gear (*1)			1.3 – 1.7	0.8	Replace with assembly
C	Clearance between Shifter Yoke and Sleeve Gear (*2)			0.04 – 0.39	1.0	Replace
D	Clearance between Balk Ring and F/R gear			1.3 – 1.7	0.8	Replace
E	Deterioration of Spring (Free Length)			32	28	
F	Outside Diameter of Shift Lever Tip			13	12.5	
G	Inside Diameter of Shifter Yoke Mount			22	22.1	
–	Gears	Backlash		0.08 – 0.28	–	
		Clearance in Thrust Direction		0.15 – 0.35	–	
–	Tooth Surface			• Damage • Excessive wear or defective tooth contact		
–	Bearing			• Seizure or wear • Abnormal noise or defective rotation		
–	Gasket, O-ring and Seals			–		Replace with new parts when disassembly or assembly.

*1: Clearance when the balk ring is moved outside.

*2: Clearance when the shifter yoke is fully pushed in either direction.

TORQUE CONVERTER

COMPONENT PARTS

Mark	Part Name	Q'ty	
1	Oil Filter	1	
2	Turbine	1	Torque Converter Circuit
3	Stator	1	
4	Impeller	1	
5	Turbine Shaft	1	
6	Gear Pump	1	
7	Turbine Hub	1	
8	Input Plate	1	
9	HousingHousing	1	

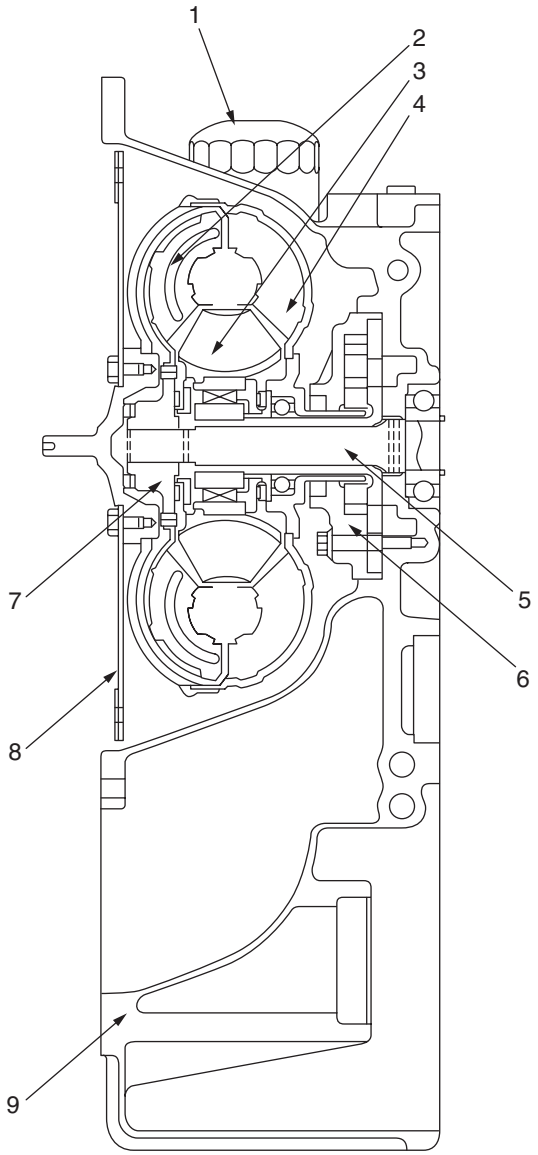

Unit: mm

NO.	Check Item		Criteria		Mark
			Standard	Limit	
1	Piston (Shaft) and Toque Converter Housing (Hole) 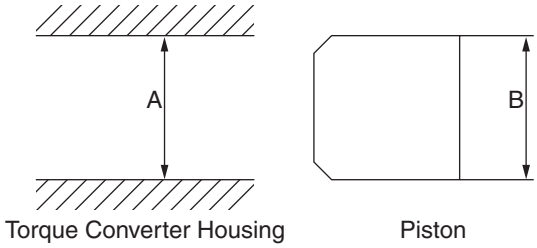				
1-1	Main Relief Valve	A: Piston Outside Diameter	Ø21.972 – Ø21.985	–	4
		B: Hole inside Diameter	Ø22.000 – Ø22.021	–	3
		Clearance: mm	0.015 – 0.049	0.080	–
1-2	Torque Converter inlet Port Valve	A: Piston Outside Diameter	Ø14.960 – Ø14.970	–	7
		B: Hole inside Diameter	Ø14.000 – Ø14.018	–	3
		Clearance: mm	0.030 – 0.058	0.080	–
1-3	Lubrication Relief Valve	A: Piston Outside Diameter	Ø14.960 – Ø14.970	–	7
		B: Hole inside Diameter	Ø14.000 – Ø14.018	–	3
		Clearance: mm	0.030 – 0.058	0.080	–
2	Pressure Spring 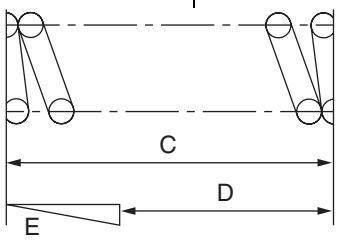				
2-1	Main Relief Valve	C: Free Length	91.8	–	6
		D: Mount Length	79.1	–	–
		E: Mount Load N	185.4 ±5 %	166.9 N	–
2-2	Torque Converter inlet Port Valve	C: Free Length	103.4	–	5
		D: éÊïtí² mm	77.6	–	–
		E: Mount Load N	47.8 ±5 %	43.0 N	–
2-3	Lubrication Relief Valve	C: Free Length	60.5	–	8
		D: Mount Length	48.2	–	–
		E: Mount Load N	58.8 ±5 %	52.9 N	–

★ The numbers shown in the mark column of the table refer to the location of the component parts shown in the diagram.

Unit: mm

NO.	Check Item	Criteria		Mark
		Standard	Limit	
3	Oil Seal and Torque Converter Impeller 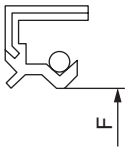 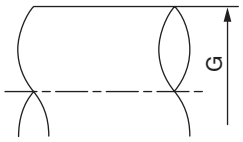 Oil Seal Impeller	F: – G: 41.915 – 41.965	41.5 41.815	
5	Seal Ring and Seal Ring Groove 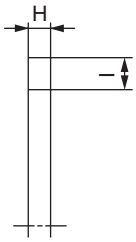 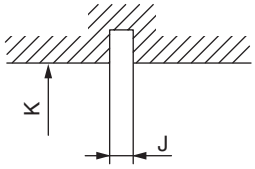 Seal Ring Seal Ring Groove	H: 1.895 – 1.900 I: 1.870 – 2.070 J: 2.000 – 2.250 K: 42.10 – 42.13	1.600 1.670 2.30 42.25	
6	Bushing and Stator Support 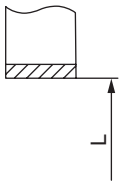 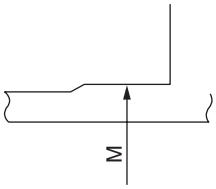 Bushing Stator Support	L: 32.500 – 32.525 M: 32.450 – 32.470 Clearance: 0.030 – 0.075	– – 0.100	

★ The numbers shown in the mark column of the table refer to the location of the component parts shown in the diagram.

TORQFLOW TRANSMISSION

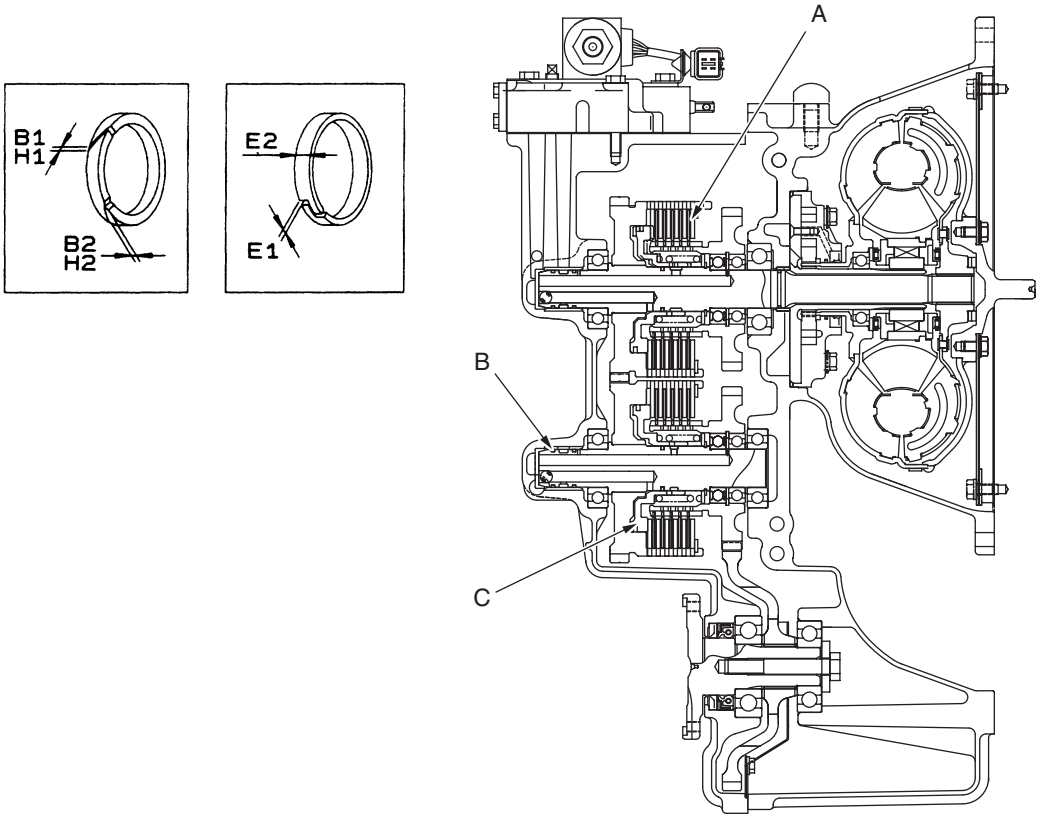

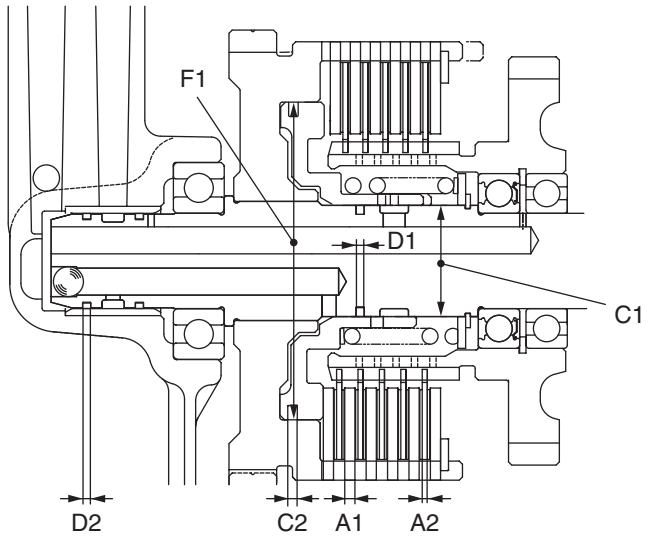

Unit: mm

Mark	Check Item			Criteria		Remedy
				Standard	Limit	
A	Plate	A1	Thickness of Drive Plate	3.13 – 3.27	2.9	Replace
		A2	Thickness of Driven Plate	2.50 – 2.65	2.35 (Oil groove width: min. 0.15)	
B	Seal Ring	B1	Clearance at End Gap when inserting piston	0.36 – 0.56	–	Replace in every disassembly
		B2	Depth of Oil Groove in side face	0.15 – 0.35	Oil groove must be there.	
		(D1)	Width of Insertion Groove	2.60 – 2.65	2.8	
C	Piston	C1	Inside Diameter of Seal Ring Contact Face	35.025 – 35.050	35.2	Replace
		C2	Width of Seal Ring Insertion Groove	3.1 – 3.2	3.4	
D	Drive Shaft	D1	Width of Seal Ring Insertion Groove	2.60 – 2.65	2.8	
		D2	Width of Seal Ring Insertion Groove	2.60 – 2.65	2.8	
E	Seal Ring	E1	Clearance at End Gap when inserting clutch case	0.2 – 0.4	1.0	
		E2	Width	2.97 – 3.01	2.77	
		(C2)	Width of Insertion Groove	3.1 – 3.2	3.4	
F	Clutch Case	F1	Inside Diameter of Seal Ring Contact Face	100 – 100.054	100.3	
H	Seal Ring	H1	Clearance at End Gap when inserting cap	0.36 – 0.56	–	
		H2	Depth of Oil Groove in side face	0.15 – 0.35	Oil groove must be there.	
		(D2)	Width of Insertion Groove	2.60 – 2.65	2.8	
–	Gears	–	Backlash	0.08 – 0.28	–	
–	Gasket, O-ring and Seals			–	–	Replace with new parts when disassembly and assembly

TRANSMISSION CONTROL VALVE

COMPONENT PARTS

Mark	Part Name	Q'ty
1	Valve Body	1
2	Spool	1
3	Valve Body	1
4	Spring	1
5	Spacer	1
6	Spring Pin	1
7	Spring	1
8	Piston	1
9	Spring	1
10	Spring	1
11	Pin	1
12	Plate	1

Mark	Part Name	Q'ty
13	Gasket	1
14	Bolt	1
15	Piston	1
16	Plug	1
17	Gasket	1
18	Plug	1
19	Plug	1
20	Orifice	1
21	Oil Seal	1
22	Plate	1
23	Bolt	1

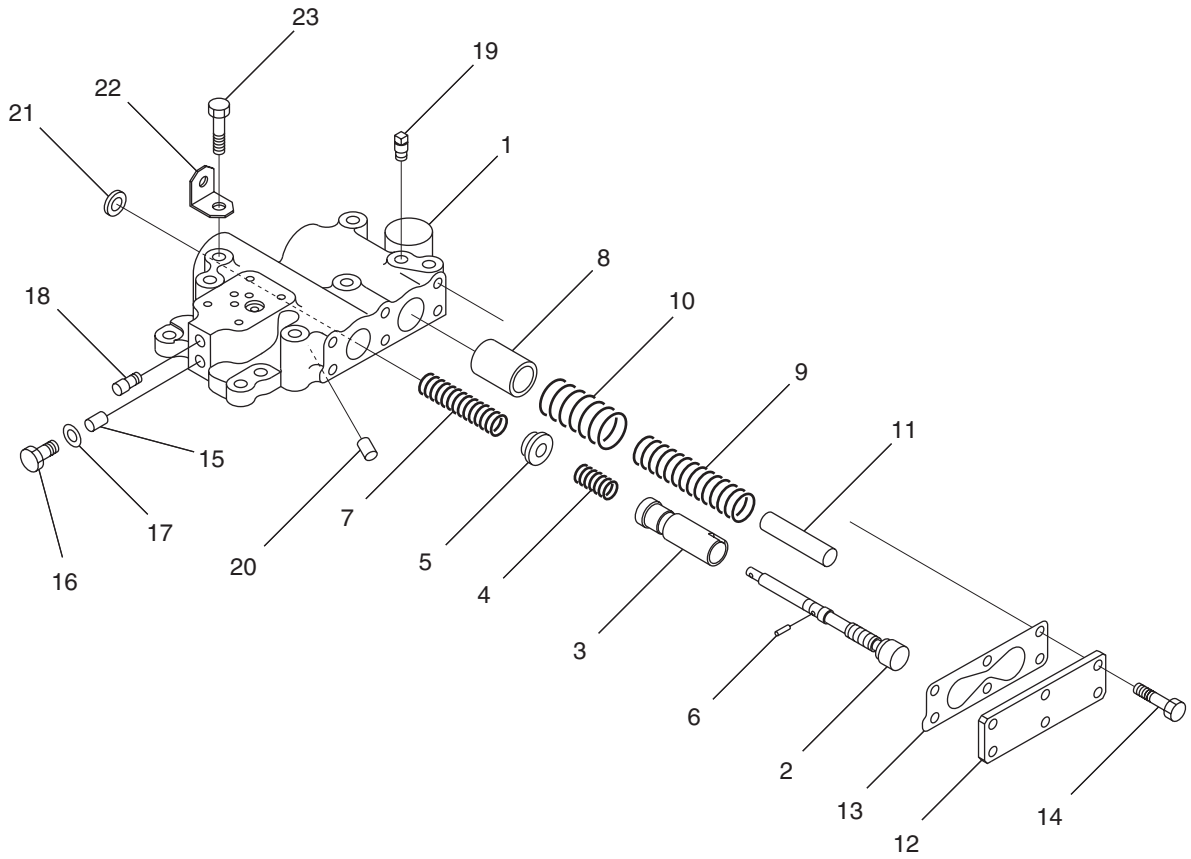

Unit: mm

Mark	Check Item		Criteria		Remedy	Mark
			Standard	Limit		
–	Piston or Spool and Body Hole A: Valve Body Inside Diameter B: Piston Spool Outside Diameter 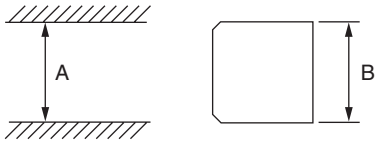 		–	–		–
1	Accumulator	Piston Outside Diameter Body Inside Diameter Clearance	27.97 – 27.98 28 – 28.021 0.020 – 0.051	0.080	Replace	14 1
2	Regulator	Piston Outside Diameter Body Inside Diameter Clearance	19.96 – 19.98 20 – 20.021 0.020 – 0.061	0.080		15 1
3	Lubrication Relief	Piston Outside Diameter Body Inside Diameter Clearance	19.96 – 19.98 20 – 20.021 0.020 – 0.061	0.080		15 1
4	Inching Spool	Spool Outside Diameter Body Inside Diameter Clearance	19.97 – 19.98 20 – 20.021 0.020 – 0.051	0.070		2 1
	Small Piston	Piston Outside Diameter Clearance	19.97 – 19.98 0.020 – 0.051	0.070		3
–	Spring 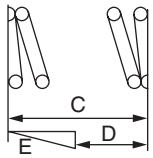 C: Free Length D: Mount Length E: Mount Load		–	–		
5	Accumulator Large Spring	Free Length Mount Length Mount Load	44.18 28.70 287.3 N {29.3 kgf} ± 5 %	258.6 N {26.4 kgf}	Replace	11
	Accumulator Small Spring	Free Length Mount Length Mount Load	98.14 83.7 84.1 N {8.6 kgf} ± 5 %	75.7 N {7.7 kgf}		12
6	Regulator Large Spring	Free Length Mount Length Mount Load	111.07 74.7 163.8 N {16.7 kgf} ± 5 %	147.1 N {15.0 kgf}		16
	Regulator Small Spring	Free Length Mount Length Mount Load	123.43 96.7 206 N {21.0 kgf} ± 5 %	185.4 N {18.9 kgf}		17
7	Lubrication Relief	Free Length Mount Length Mount Load	64.65 47.9 138 N {14.1 kgf} ± 5 %	124.5 {12.7 kgf}		19
8	Inching Spool	Free Length Mount Length Mount Load	73.97 48.0 34.3 N {3.5 kgf} ± 5 %	31.4 N {3.2 kgf}		7
	Small Piston	Free Length Mount Length Mount Load	30.79 22.0 69.6 N {7.1 kgf} ± 5 %	62.6 N {6.4 kgf}		4

★ The numbers shown in the mark column of the table refer to the location of the component parts shown in the diagram.

DIFERENTIAL

1.0 – 1.75 ton Forklift Truck

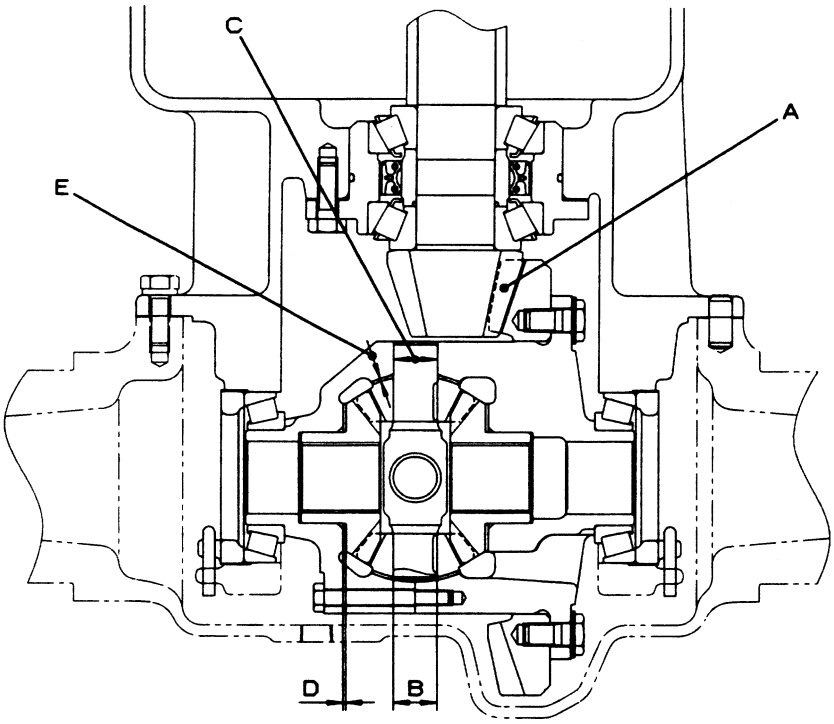

Unit: mm

Mark	Check Item	Criteria		Remedy
		Standard	Limit	
A	Differential Pinion Gear and Differential Side Gear	–	In case of damaged tooth face	Replace (Excl. Bevel Gear and Pinion be replaced in a set.)
B	Outside Diameter of Spider	21.959 – 21.980	21.75	Replace
C	Inside Diameter of Differential Pinion Gear	22.0 – 22.025	22.12	
D	Thickness of Bushing	1.54 – 1.66	1.3	
E	Thickness of Bushing	1.54 – 1.66	1.3	
–	Inside Diameter of Brake Drum	254.0 – 254.2	256	
–	Gasket O-ring Seals	–	–	Replace with new parts when disassembly and assembly

2.0 – 3.5 ton Forklift Truck

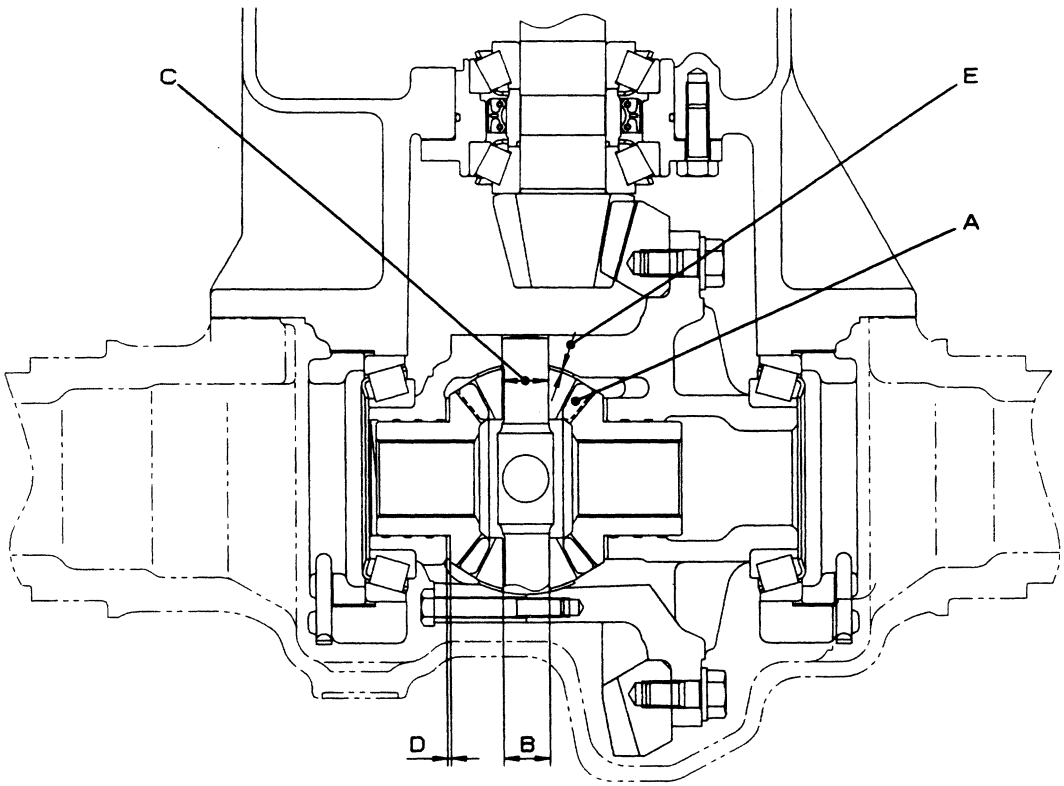

Unit: mm

Mark	Check Item	Criteria		Remedy
		Standard	Limit	
A	Differential Pinion Gear and Differential Side Gear	–	In case of damaged tooth face	Replace (Excl. Bevel Gear and Pinion be replaced in a set.)
B	Outside Diameter of Spider	24.959 – 24.980	24.75	Replace
C	Inside Diameter of Differential Pinion Gear	25.0 – 25.1	25.2	
D	Thickness of Bushing	1.94 – 2.06	1.7	
E	Thickness of Bushing	1.52 – 1.68	1.3	
–	Inside Diameter of Brake Drum	310.0 – 310.2	312	
–	Gasket O-ring Seals	–	–	Replace with new parts when disassembly and assembly

WHEEL BRAKE

1.0 – 1.75 ton Forklift Truck

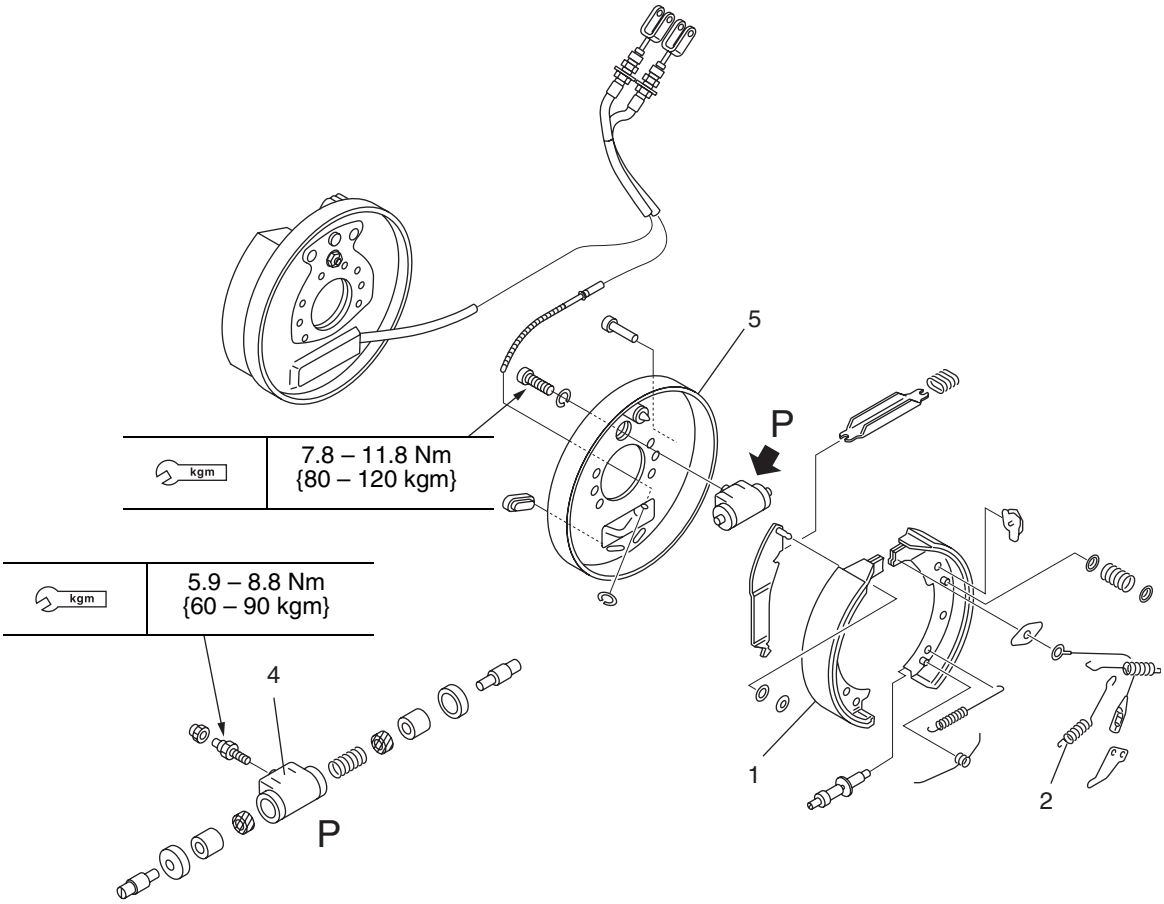

*1

Back Plate Mounting Bolt: LOCTITE #271

Unit: mm

No.	Check Item		Criteria		Remedy
			Standard	Limit	
1	Thickness of Lining		4.5	2.0	Replace
2	Deterioration of Return Spring	Primary side	Free Length: 97	105	
3		Secondary side	Free Length: 97	105	
4	Clearance between Piston and Cylinder		0 – 0.05	0.2	
			No damage including scratches, deterioration or rust		
5	Back Plate		No deformation or cracks		
–	Inside Diameter of Brake Drum		310	312	
			No scratches or uneven wear		

2.0 – 3.5 ton Forklift Truck

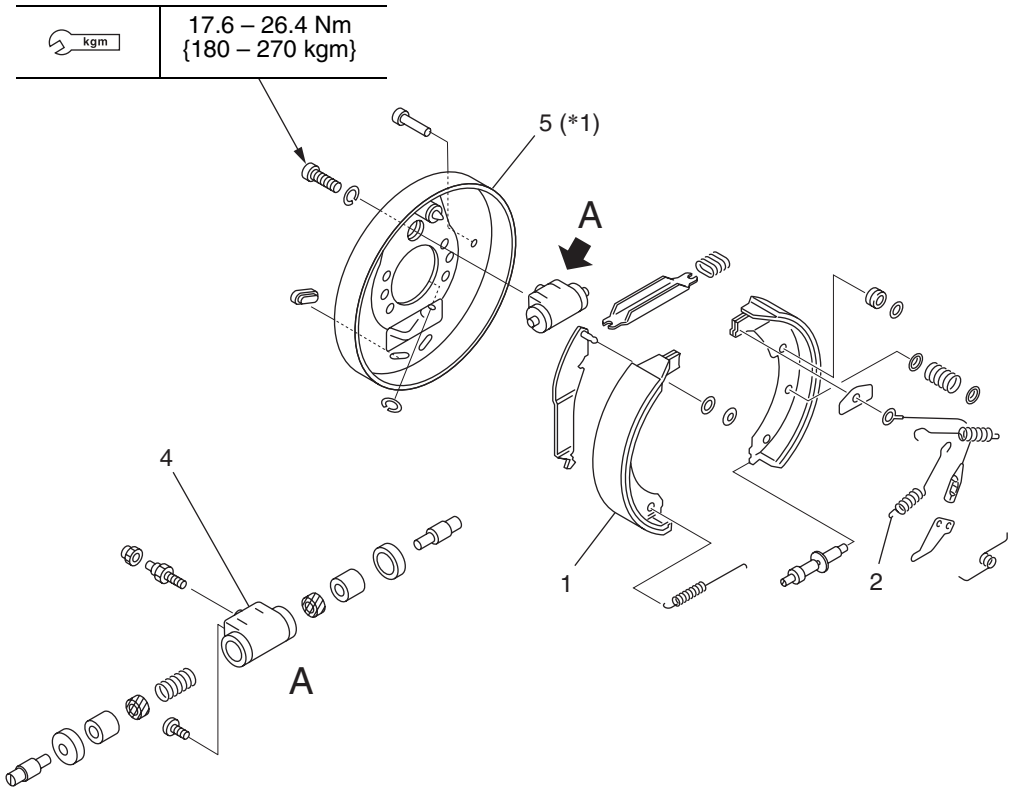

*1.

kgm Back Plate Mounting Bolt: 176 -– 196 Nm (18 – 20 kgm)

Back Plate Mounting Bolt: LOCTITE #271

Unit: mm

No.	Check Item		Criteria		Remedy
			Standard	Limit	
1	Thickness of Lining		5.7	1.0	Replace
2	Deterioration of Return Spring	Primary side	Free Length: 120	134	
3		Secondary side	Free Length: 120	145.4	
4	Clearance between Piston and Cylinder		0.065 – 0.150		
			No damage including scratches, deterioration or rust		
5	Back Plate		No deformation or cracks		
–	Inside Diameter of Brake Drum		310	312	
			No scratches or uneven wear		

BRAKE MASTER CYLINDER

COMPONENT PARTS

Mark	Part Name	Q'ty
1	Cylinder	1
2	Piston Assembly	1
3	Snap Ring	1
4	Boot	1
5	Push Rod	1
6	Nut	1
7	Yoke	1
8	Bushing	1
9	Filler Union	1

Mark	Part Name	Q'ty
10	Bleeder Valve	1
11	Bleeder Cap	1
12	Valve Spring	1
13	Valve Seat	1
14	Valve Rubber	1
15	Gasket	1
16	Bolt	1
17	Valve Assembly	1

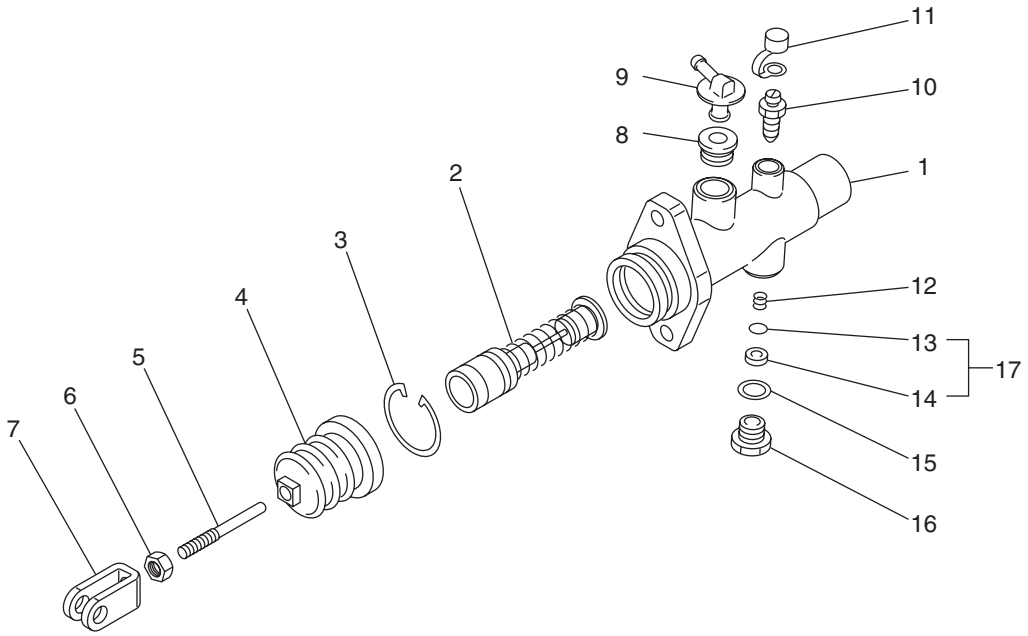

Unit: mm

No.	Check Item	Standard	Limit	Remedy	Mark
1	Clearance between Cylinder and Piston	0.020 – 0.105	0.15	Replace (Cylinder Assembly)	1, 2
2	Allowance of Cup	Primary side: approx. 1.0 Secondary side: approx. 1.2	0.4	Replace (Piston Assembly)	2
3	Free Length of Spring	78.8	70	Replace	2

★ The numbers shown in the mark column of the table refer to the location of the component parts shown in the diagram.

CLUTCH MASTER CYLINDER

COMPONENT PARTS

Mark	Part Name	Q'ty
1	Cylinder	1
2	Piston Assembly	1
3	Stop Plate	1
4	Snap Ring	1
5	Boot	1
6	Push Rod	1
7	Nut	1
8	Yoke	1
9	Bushing	1
10	Filler Union	1

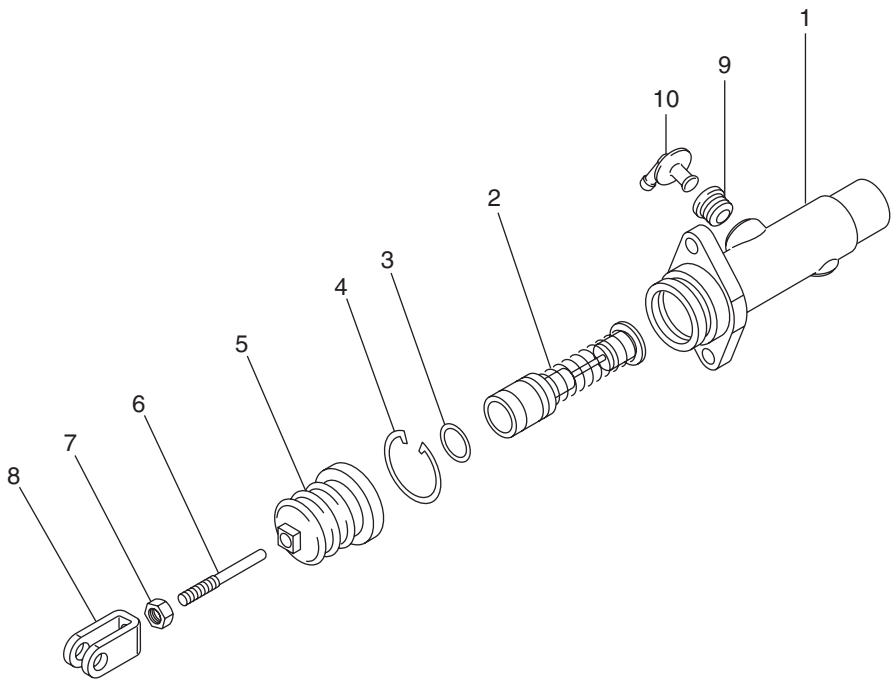

Unit: mm

No.	Check Item	Standard	Limit	Remedy	Mark
1	Clearance between Cylinder and Piston	0.016 – 0.086	0.15	Replace (Cylinder Assembly)	1,2
2	Allowance of Cup	Primary side: approx. 0.9 Secondary side: approx. 0.9	0.4	Replace (Piston Assembly)	2
3	Free Length of Spring	75	67.5	Replace	2

★ The numbers shown in the mark column of the table refer to the location of the component parts shown in the diagram.

BRAKE BOOSTER

COMPONENT PARTS

Mark	Part Name	Q'ty
1	Booster Body	1
2	Piston	1
3	Snap Ring	1
4	Seal	1
5	O-ring	1
6	Spring	1
7	Piston Guide	1
8	Snap Ring	1
9	Cup	1
10	O-ring	1
11	Y-packing	3
12	O-ring	1
13	Washer	1
14	Pin	1
15	Boot	1
16	Push Rod	1
17	Nut	3
18	Yoke	1
19	Washer	2
20	Backup Ring	1

Mark	Part Name	Q'ty
21	Spring	1
22	Spring	1
23	Cylinder	1
24	Bushing	1
25	Filler Union	1
26	Stud Bolt	1
27	Piston Assembly	1
28	Cylinder Assembly	1
29	Valve Assembly	1
30	Booster Piston Assembly	1
31	Stop Pin	1
32	Steal Ball	1
33	Bolt	1
34	Gasket	
35	Valve Rubber	
36	Seat	1
37	Valve Spring	
38	Bleeder Valve	1
39	Bleeder Cap	1

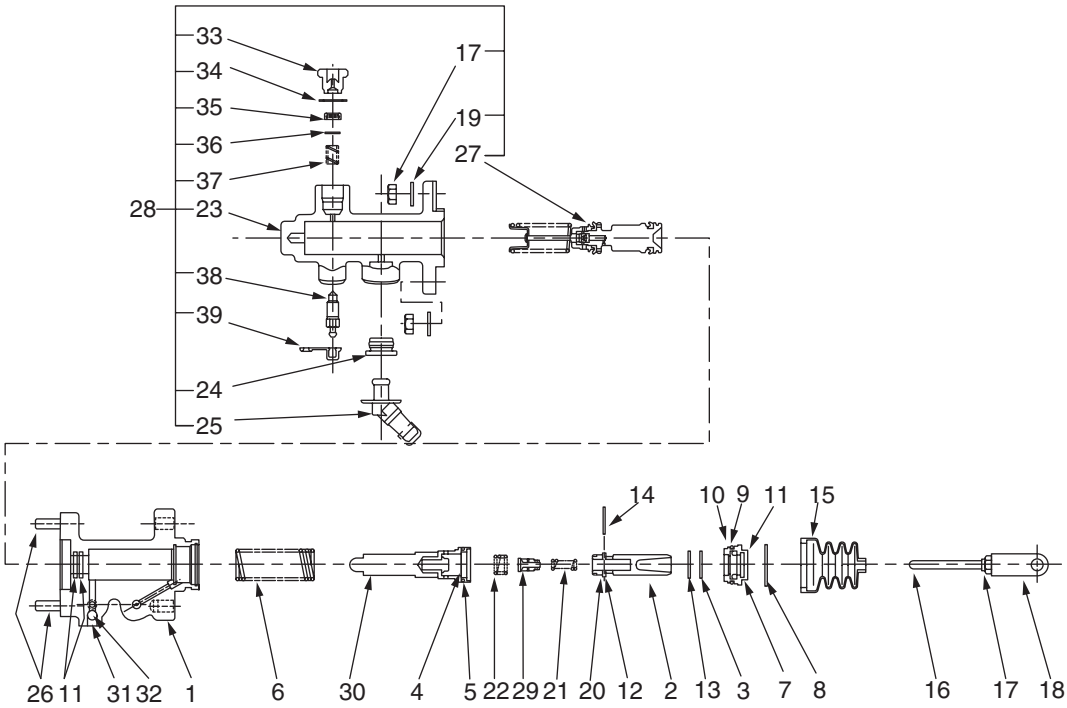

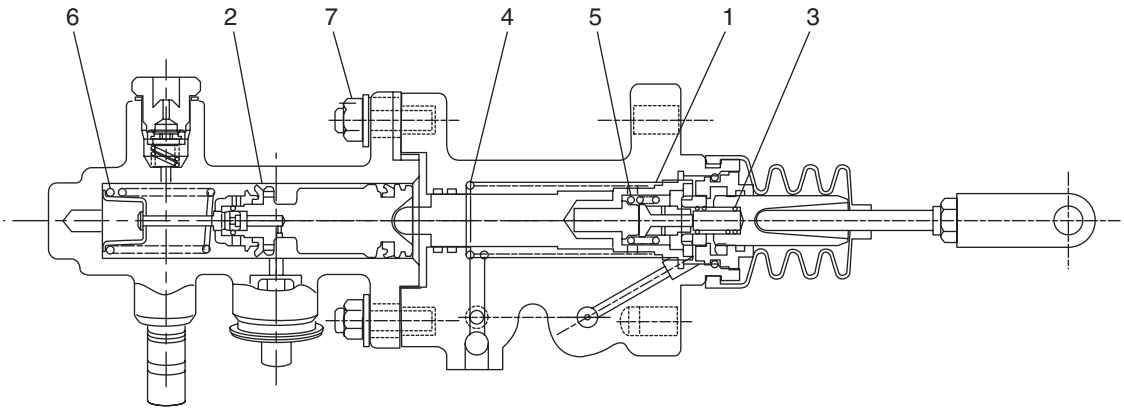

Unit: mm

No.	Check Item	Standard				Allowance	Remedy
		STD Size	Shaft	Hole	STD Clearance	Repair Limit	
1	Clearance between Cylinder and Piston	Ø25.4	-0.020 -0.053	+0.052 0	0.020 – 0.105	0.150	Replace
2	Clearance between Cylinder and Piston	Ø25.4	-0.020 -0.053	+0.052 0	0.020 – 0.105	0.150	
3	Deterioration of Spring	Free Length	Mount Length	Mount Load N (kgf)		Free Length	
		23.2	19.5	65 {6.6}		22.0	
4	Deterioration of Spring	73.6	63	23.5 {2.4}		66.0	
5	Deterioration of Spring	14.8	10	41.1 {4.2}		13.0	
6	Deterioration of Spring	64.1	45.4	49 {5.0}		57.5	
7	Tightening Torque	20 – 30 Nm {2.1 – 3.1 kgm}					Extra Tightening

CLUTCH BOOSTER

CLUTCH BOOSTER ASSEMBLY

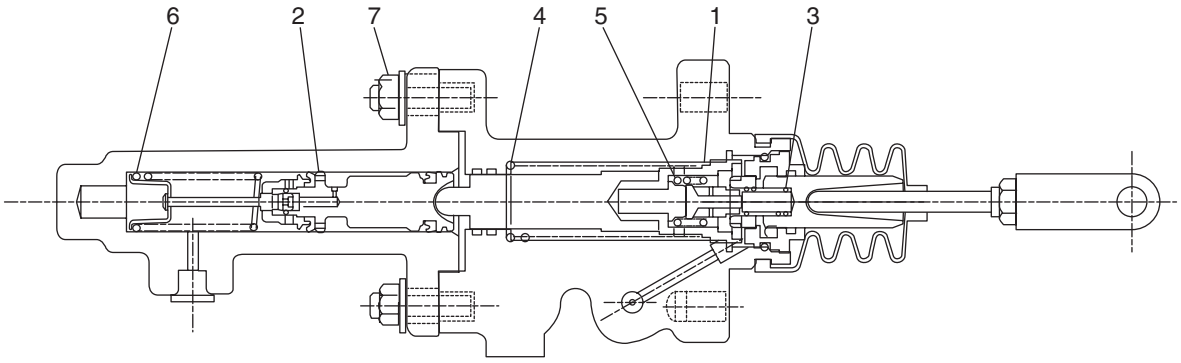

Unit: mm

No.	Check Item	Standard				Allowance	Remedy
		STD Size	Shaft	Hole	STD Clearance	Repair Limit	
1	Clearance between Cylinder and Piston	Ø25.4	-0.020 -0.053	+0.052 0	0.020 – 0.105	0.150	Replace
2	Clearance between Cylinder and Piston	Ø22.22	-0.020 -0.053	+0.052 0	0.020 – 0.105	0.150	
3	Deterioration of Spring	Free Length	Mount Length	Mount Load N (kgf)		Free Length	
		25.2	19.5	48.6 {4.96}		22.5	
4	Deterioration of Spring	103	63	23.5 {2.4}		92.5	
5	Deterioration of Spring	14.8	10	41.1 {4.2}		13.0	
6	Deterioration of Spring	73.6	51.8	41.2 {4.2}		66	
7	Tightening Torque	20 – 30 Nm {2.1 – 3.1 kgm}					Extra Tightening

STEERING AXLE

1.0 Ton Forklift Truck

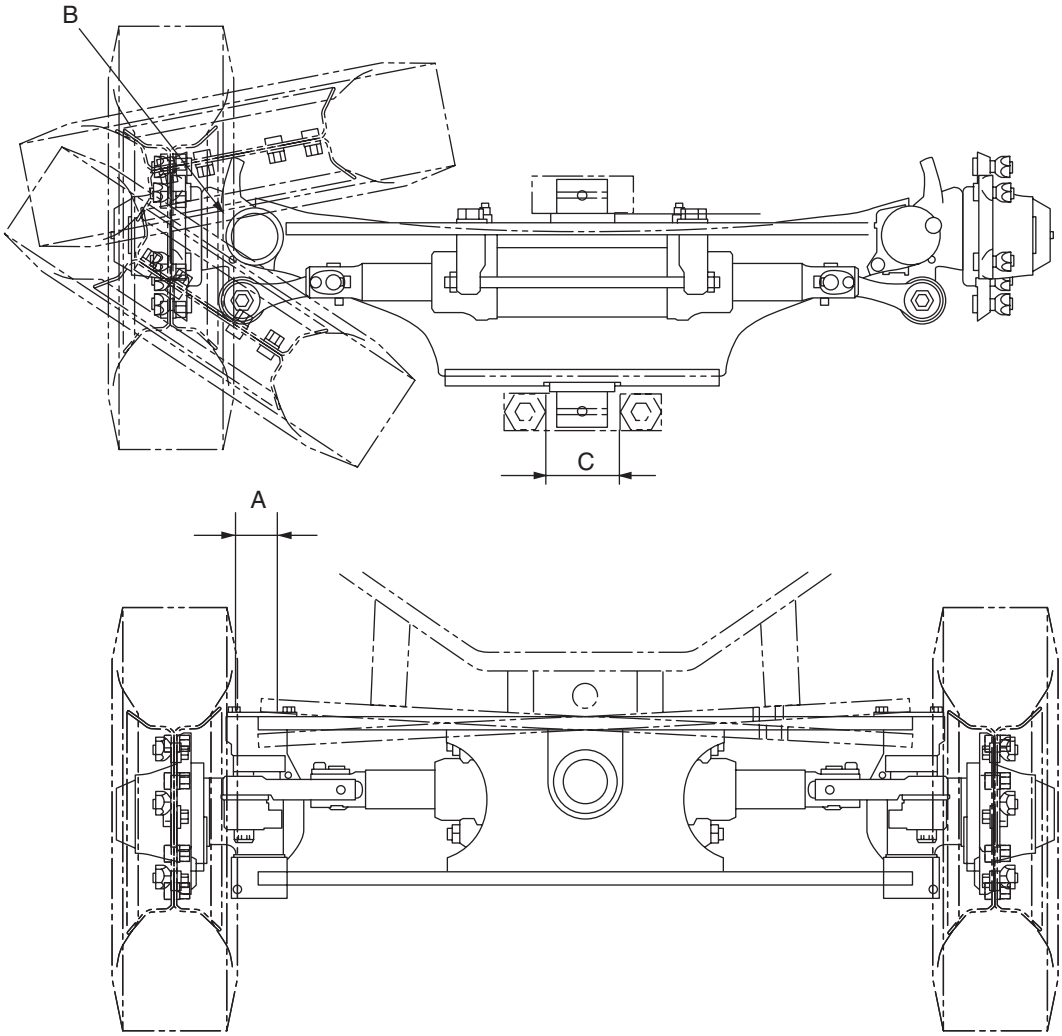

Unit: mm

Mark	Check Item	Criteria		Remedy
		Standard Size	Repair Limit	
A	Diameter of King Pin	28	27.8	Replace
B	Deterioration of Knuckle Up/Down	–	0.2	Shim Adjustment
C	Diameter of Bell Clamp Pin	22	21.8	Replace
D	Diameter of Center Pin	50	49.5	
–	Steering Axle, Hub, Knuckle, Bearing	• Cracks • Scratches or Pealing-off • Seizure, Faulty Revolving or Abnormal Noize		

2.o ton Forklift Truck

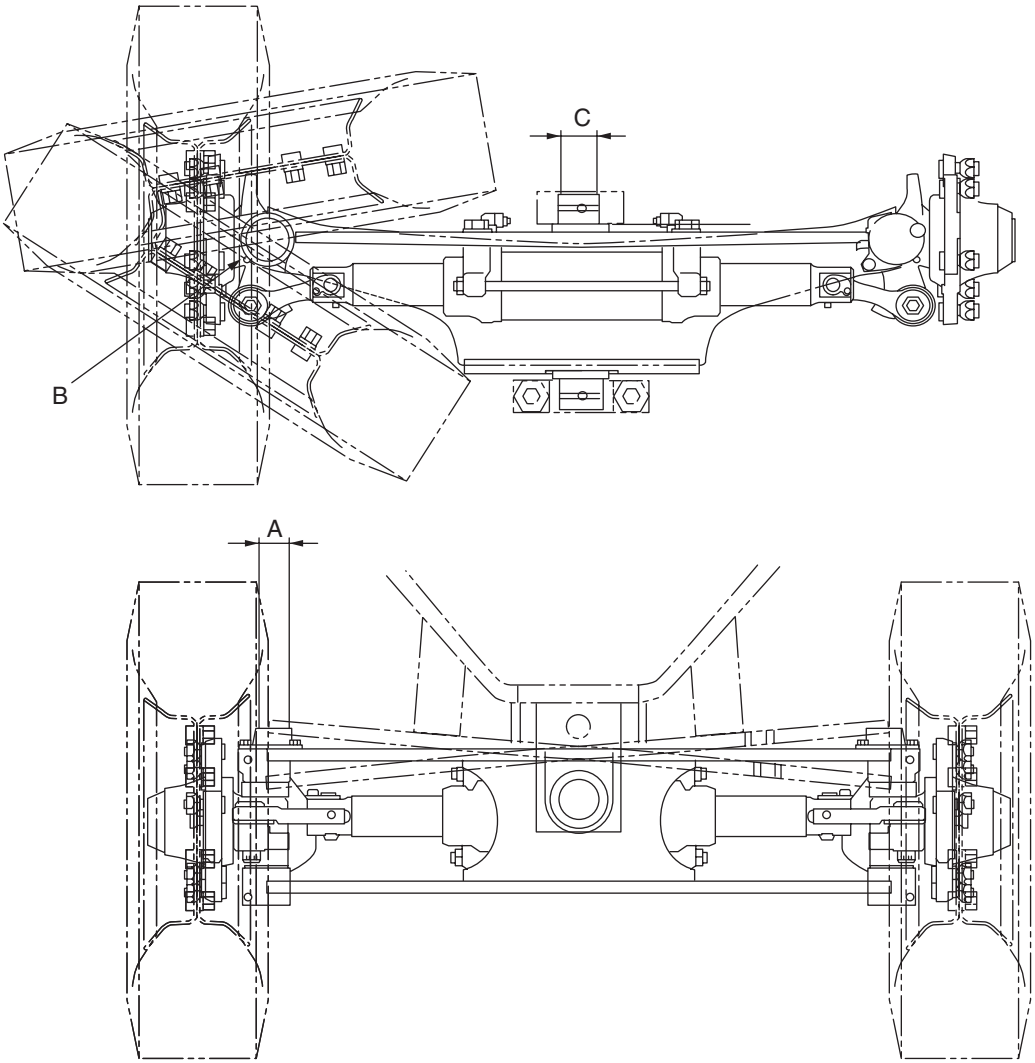

Unit: mm

Mark	Check Item	Criteria		Remedy
		Standard Size	Repair Limit	
A	Diameter of King Pin	28	27.8	Replace
B	Deterioration of Knuckle Up/Down	–	0.2	Shim Adjustment
C	Diameter of Bell Clamp Pin	22	21.8	Replace
D	Diameter of Center Pin	50	49.5	
–	Steering Axle, Hub, Knuckle, Bearing	• Cracks • Scratches or Pealing-off • Seizure, Faulty Revolving or Abnormal Noize		

POWER STEERING VALVE

INITIAL SETTING WORK PROCEDURES

NO.	Work	Terminal	LED Display	Check Item	Remarks
1	Rest steering for 5 times to bleed air inside circuit	Connect	1 FLASH	After bleeding air, check steering wheel for no play.	Stop engine. No smooth steering is available.
2	Key switch ON: travel straight forward and stop.	Connect	1 FLASH	State of traveling straight forward	Controller: initial setting mode 1.
3	Key switch OFF	Connect	Turn off		
4	In traveling straight forward, set the steering wheel knob at the starting point.	Connect	Turn off	Wheels/steering wheel position: terminals closed	Close terminal, if open.
5	Key switch ON	Connect	1 FLASH	Check LED for 1 FLASH	Under initial set: controller mode 1 3 or 4 FLASH: faulty controller or wheel sensor error
6	Remove the terminals	Open	1 FLASH ↓ 2 FLASH	Check 1 FLASH for change to 2 FLASH	Under reset: controller initial set mode 2
7	When LED changed to 2FLASH, 1) steer to right end, 2) steer to left end, 3) return to neutral and over.	Open	2 FLASH	Steer surely to the end (Steering speed: 60 rpm)	Under initial set: controller to memorize steering speed and steering angle.
8	Check LED for lighting	Open	Turn on	Check LED for turn on	Normal mode: turn on, abnormal: turn off. Stay in 2 FLASH: close terminals and reset from No.1.
9	Finish	Open	Turn on	Check to make sure steering knob position corrected	

LED Display

NO.	Content	Terminal	LED ON/OFF
1	Initial set mode 1 (under initial set) or incomplete initial set (*1)	1 FLASH	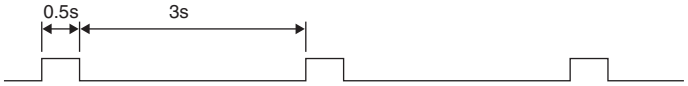
2	Initial set mode 2 (under teaching)	2 FLASH	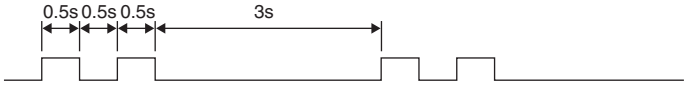
3	Steering wheel sensor error	3 FLASH	
4	Wheel sensor error	4 FLASH	
5	Controller error or controller under initial set	Turn off	
6	Under normal operation (complete initial set)	Turn on	

Note *1: An incomplete initial set means initial set is not correctly completed under normal mode. It needs to operate steering wheel to turn more than one and half times in right and left from the state of traveling straight forward under teaching mode.

POWER STEERING CYLINDER

COMPONENT PARTS

Ref. No.	Part Name	Q'ty
1	Cylinder Sub Assembly	1
2	Rod Assembly	1
3	Head	2
4	Bush	2
5	Packing	1
6	O-ring	2
7	Back up Ring	2
8	Packing	2
9	Back up Ring	2
10	Dust Seal	2
11	Tie Rod	2
12	Nut	4

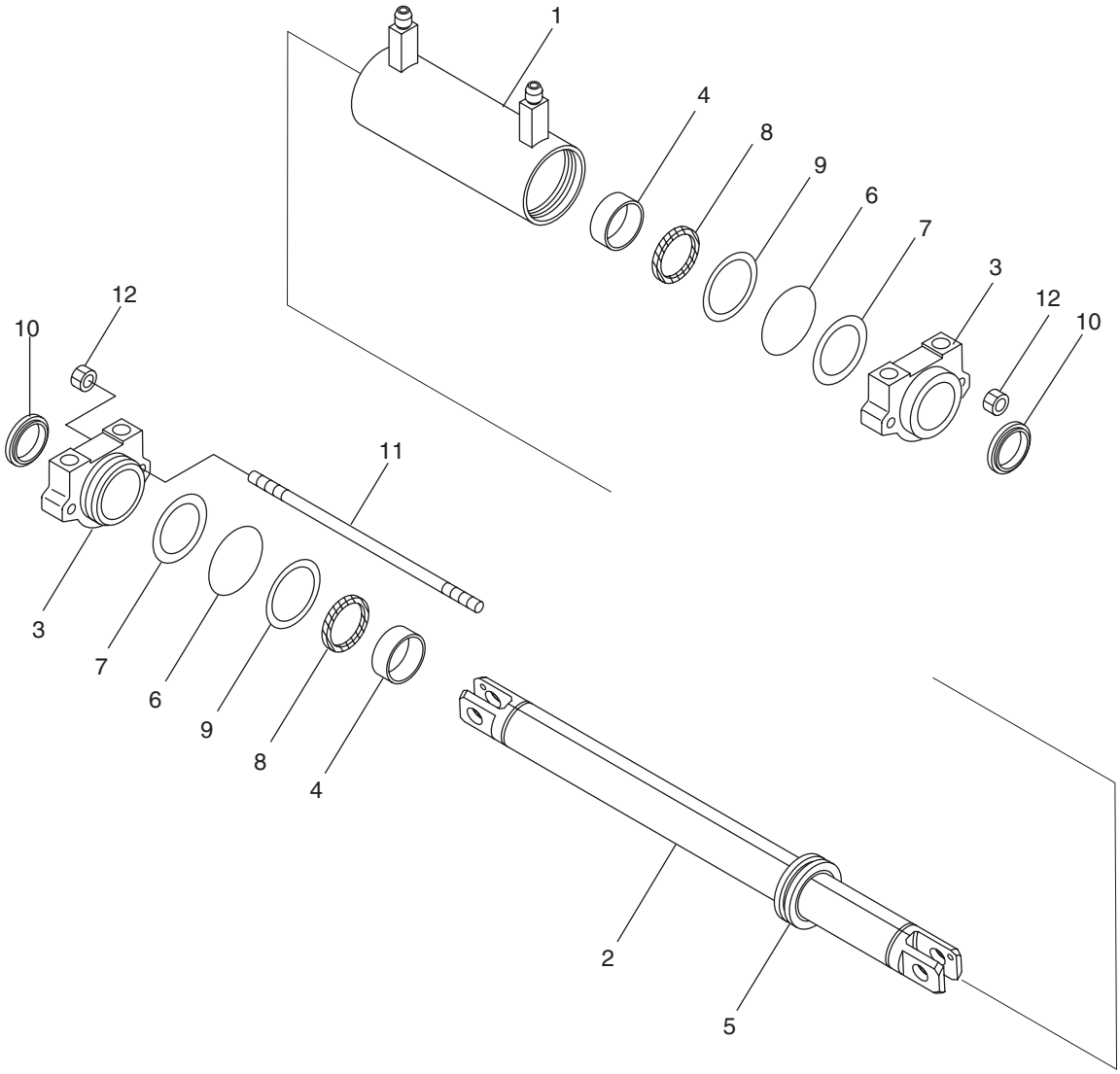

LIFT CYLINDER

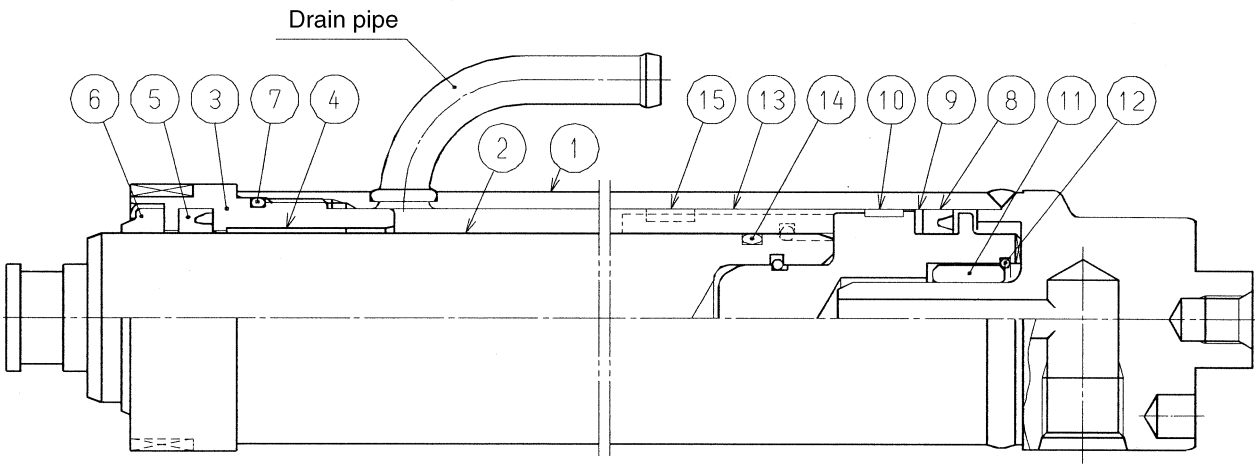

Item	Symptom	Related parts	Possible causes	Remedy
1	Oil contamination at the piston rod sliding portion	Piston rod	Scratches/rust are present on the sliding surface.	• Remove the scratches with an oilstone to smooth the surface (0.4a or less). If oil leakage still occurs, the scratches may damage the seal of U-ring. In that case, disassemble and check the part. • If the scratch or rust cannot be removed with an oilstone, replace the piston rod, seals of U-ring/wiper ring, and shaft support material of piston rod.
			Plating is separated.	• Apply re-plating or replace the piston rod. • If seals and/or shaft support material of piston rod are damaged, replace the defective parts.
		Rod packing (U-ring)	Foreign matter is clogged in the gap between piston and cylinder.	• Remove the foreign matter. • Replace the packing if damaged.
			Scratches on sliding surfaces	• Replace the scratched part.
			Packing is worn out due to loss of rubber elasticity of packing. The lip is entirely lost.	• Replace the packing. Before replacing the packing, check whether it reaches the end of life or overheats partially.
			Remarkable protrusion of packing heel	• Replace the packing. • Check the piston seal as excessive pressure may be affecting the packing.
		Wiper ring	Foreign matter is clogged in the lip.	• Remove the foreign matter.
			The lip is damaged. Other remarkable damage is present.	• Replace the defective part.

Item	Symptom	Related parts	Possible causes	•Remedy
1	Oil contamination at the piston rod sliding portion	Shaft support material	The gap from the piston rod is out of the allowable range.	• Replace the shaft support material.
			Remarkable scratches/ damage are present on the sliding surface.	• Replace the shaft support material. • Check the piston rod when replacing.
		Cylinder head	Cylinder head with scratches/rust at its seal position is directly used as piston rod sliding part.	• Remove the scratches/rust with an oilstone. • If the scratches/rust still remain, replace the cylinder head.
2	Oil leakage from the cylinder head mating portion	O-ring	Foreign matter is clogged in the gap between piston and cylinder. O-ring is damaged.	• Remove the foreign matter. • Replace the O-ring if damaged. • Check the inner surface of tube. Smooth the surface with an oilstone if scratches/rust are present. • Check the cylinder head O-ring groove. Replace the O-ring if damaged.
		Cylinder head	Loose portion is present.	• Disassemble the cylinder head to check the O-ring. Replace the O-ring if damaged. • Then tighten the loose part to the specified tightening torque. Refer to the tightening torque specified in the assembly drawings.
		Cylinder tube	Abnormal swelling	• Replace the cylinder tube with a new one. Oil leakage from the mating portion may be caused by excessive pressure. Check the cylinder tube for swelling, deformation, and for circuit pressure.
3	Abnormal operation Mechanical parts do not move smoothly.	Piston rod Cylinder tube	Remarkable bend exceeding specified bend distortion	• Replace the piston rod with a new one. Check the seals and sliding materials for damage. Replace them if damaged.
		Cylinder tube	A bend is present.	• Replace the cylinder tube with a new one. Check the seals and sliding materials for damage.
		Piston rod Cylinder tube Sliding materials	Remarkable wear/damage to sliding surfaces, foreign matter clogged in the piston, cylinder head sliding portion	• Replace the defective part with a new one. Check the seals and sliding materials for damage. • Remove the foreign matter. Check the seals and sliding materials for damage
	Internal oil leakage Expansion or contraction while piston rod is working Specified speed is not obtained during operation.	Piston seal	Damage such as scratch and wear is present.	• Replace the piston seal with a new one. Check the cylinder tube inner surface for damage.
		Cylinder tube	Scratches or rust on the inner surface.	• Remove scratched/rust with a horning or oilstone to smooth the surface. If scratched/rust cannot be removed, replace the cylinder tube with a new one. • Replace the piston seal with a new one.

Item	Symptom	Related parts	Possible causes	•Remedy
3	Operation is not stable.	Air	Air is remaining in the cylinder.	• Bleed the air. a. Cylinder with no air bleeder Bleed the air by reciprocation several times with low pressure and low speed. b. Cylinder with an air bleeder Remove the load to prevent inner pressure from high temperature, and then loosen the air bleeder to bleed air. (Reference) The cylinder expands or contracts in some cases when it stops suddenly. This is due to compression characteristics of hydraulic oil. This phenomenon is likely to occur with long-stroke cylinders.

WARNING

Hydraulic oil expands or contracts with the change of temperature and pressure.
This causes the cylinder to expand or contract. Be careful that this is not internal oil leakage.
Be sure to check internal oil leakage under constant temperature and pressure.

TILT CYLINDER

1 ton Forklift Truck

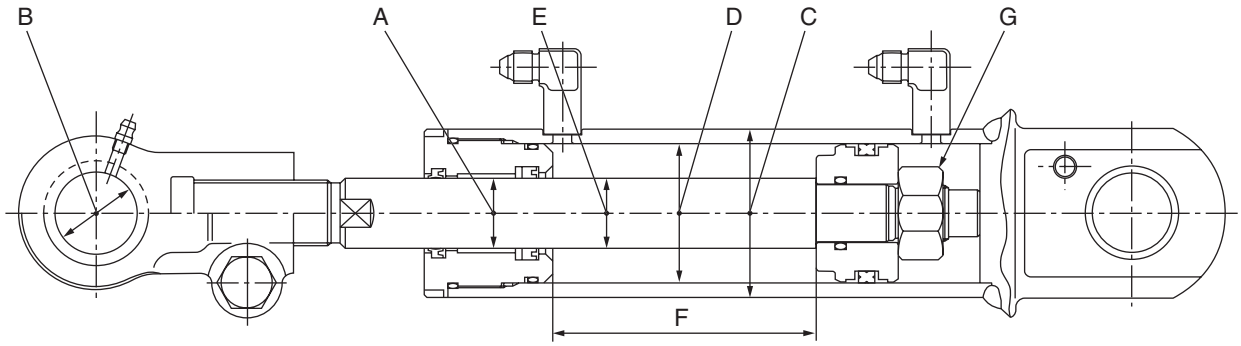

Unit: mm

Mark	Check Item		Criteria		Remedy
			Standard Size	Repair Limit	
A	Clearance between Piston Rod and Bushing		0.04 – 0.167	0.3	Replace bushing
B	Clearance between Piston Rod Head and Pin				
C	Outside Diameter of Piston Cylinder		72		–
D	Inside Diameter of Piston Cylinder		60		
E	Diameter of Piston Rod		30		
F	Stroke	6/6°	84		
		6/10°	113		
G	Tightening Torque for Cylinder Head		279.3 – 406.7 Nm {28.5 – 41.5 kgm}		
H	Tightening Torque for Cylinder Piston Mounting Nut		294 – 392 Nm {30 – 40 kgm}		

2 ton Forklift Truck

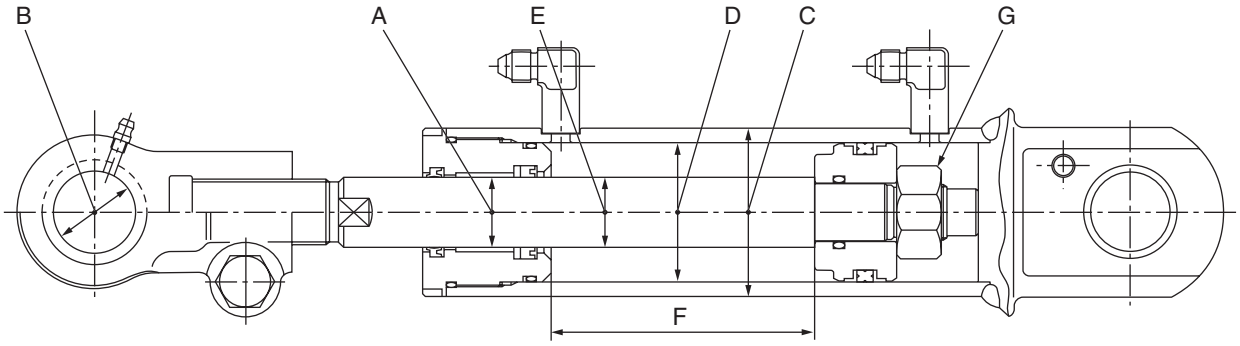

Unit: mm

Mark	Check Item		Criteria		Remedy
			Standard Size	Repair Limit	
A	Clearance between Piston Rod and Bushing		0.05 – 0.187	0.3	Replace bushing
B	Clearance between Piston Rod Head and Pin		0.10 – 0.35	0.6	
C	Outside Diameter of Piston Cylinder		84 (3.0 – 3.5 ton: 96)		–
D	Inside Diameter of Piston Cylinder		70 (3.0 – 3.5 ton: 80)		
E	Diameter of Piston Rod		30 (3.0 – 3.5 ton: 35)		
F	Stroke	6/12° (Compact Model: 6/10°)	127 (Compact Model: 115)		
		6/6° (Compact Model:6/6°)	83 (Compact Model: 85)		
G	Tightening Torque for Cylinder Piston Mounting Nut		2.0 – 2.5 ton: 343 Nm {35 kgm}		
			3.0 – 3.5 ton: 647 Nm {66 kgm}		

CONTROL VALVE

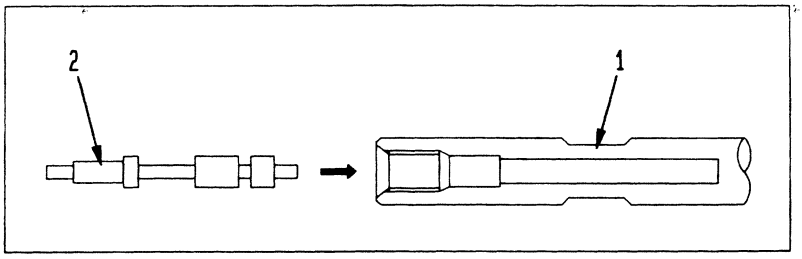

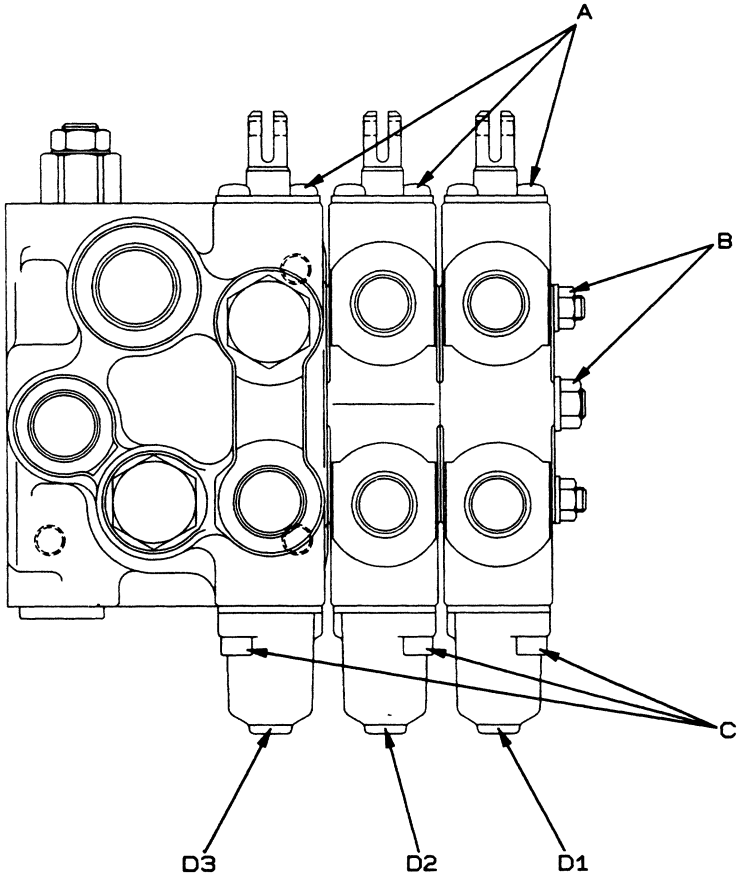

Assembling tilt spool

1. Attach tilt lock spool (**2**) to tilt spool (**1**) in the arrow direction.

★ Be careful of the orientation of the tilt lock spool.

Unit: mm

Mark	Check Item			Criteria		Remedy
				Standard Size	Repair Limit	
–	Free length of spring	Return spring		56.8	51	Replace
		Tilt lock spring		26	23.5	
		Check valve		25.4	23	
		Flow regulator (large)		29.1	26.2	
		Flow regulator (small)		10.4	9.4	
		Load check valve		26.7	24.0	
–	Spools, housings			Burrs, scratches/flaws		
A	Tightening torque for seal plate screws			2.9 Nm {0.3 kgm}		–
B	Tightening torque for valve nuts	M8		19 Nm {1.94 kgm}		
		M10		46 Nm {4.7 kgm}		
C	Tightening torque for socket head bolt screws			9 – 11 Nm {0.9 – 1.11 kgm}		
D	Tightening torque for cap screws	D1	Attachment	18.6 Nm {1.9 kgm}		
		D2	Tilt	14.7 – 15.0 Nm {1.5 – 1.6 kgm}		
		D3	Lift	18.6 Nm {1.9 kgm}		

MAST, FORK CARRIAGE AND FORK

1.0 – 1.75 ton Forklift Truck Unit: mm

Check Item		Criteria		Remedy
		Standard Size	Repair Limit	
Clearance between Outer Mast and Inner Mast Roller	Right and Left	0.1 – 0.3	Min. 2.0	Shim Adjustment
	Front and Rear	0.5 – 1.0	Min. 2.0	Replace with oversized roller
Clearance between Inner Mast and Fork Carriage Roller	Right and Left	0.5 – 2.0	Min. 2.5	Shim Adjustment
	Front and Rear	0.5 – 1.0	Min. 2.0	Replace with oversized roller
Bushing Oil Groove at Mast Support Part		Grooved	Grooved?	Replace bushing
Thickness of Fork A (at the base)	1 ton	31	Max. 26	Replace
	1.5 ton	35	Max. 30	
	1.75 ton	35	Max. 33	

2.0 – 3.0 ton Forklift Truck Unit: mm

Check Item		Criteria		Remedy
		Standard Size	Repair Limit	
Clearance between Outer Mast and Inner Mast Roller	Right and Left	0.5 – 1.0	Min. 2.5	Shim Adjustment
	Front and Rear	0.2 – 0.7	Min. 2.0	Replace with oversized roller
Clearance between Inner Mast and Fork Carriage Roller	Right and Left	0.5 – 1.0	Min. 2.5	Shim Adjustment
	Front and Rear	0.2 – 0.7	Min. 2.0	Replace with oversized roller
Bushing Oil Groove at Mast Support Part		Grooved	Grooved?	Replace bushing
Thickness of Fork A (at the base)	2 ton	36	Max. 32.5	
	2.5 ton	40	Max. 36	
	3 ton	44	Max. 39.5	

3.5 ton Forklift Truck Unit: mm

Check Item		Criteria		Remedy
		Standard Size	Repair Limit	
Clearance between Outer Mast and Inner Mast Roller	Right and Left	0.5 – 1.0	Min. 2.5	Shim Adjustment
	Front and Rear	0.2 – 0.7	Min. 2.0	Replace with oversized roller
Clearance between Inner Mast and Fork Carriage Roller	Right and Left	0.5 – 1.0	Min. 2.5	Shim Adjustment
	Front and Rear	0.2 – 0.7	Min. 2.0	Replace with oversized roller
Bushing Oil Groove at Mast Support Part		Grooved	Grooved?	Replace bushing
Thickness of Fork A (at the base)		45	–	Replace

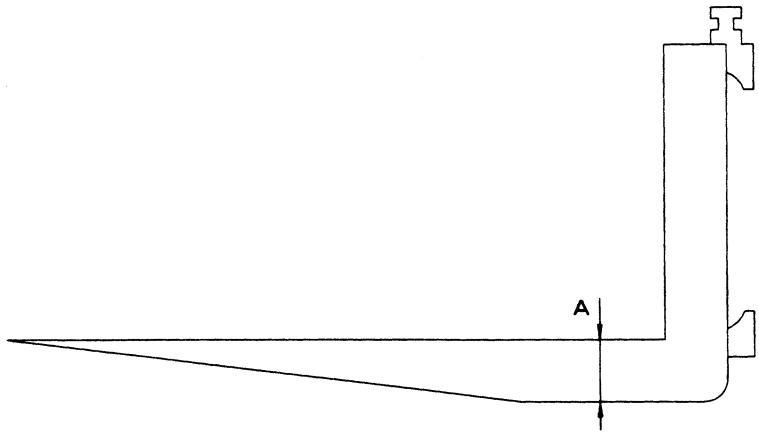

HYDRAULIC PUMP

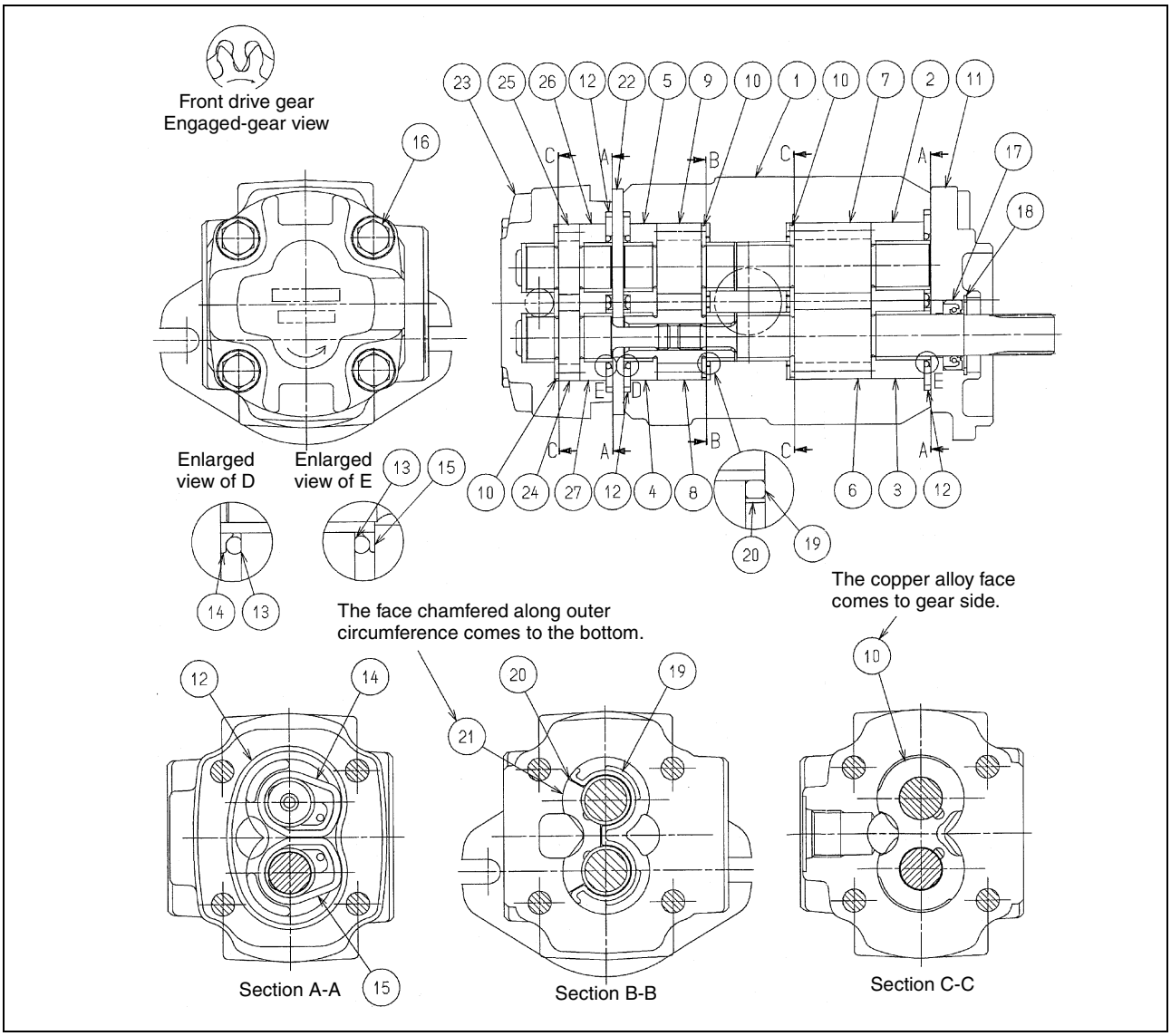

TROUBLESHOOTING

Problem	Cause	Remedy
No oil available from gear pump	Low oil level	Add hydraulic oil to the specified level of amount.
	Blocked or clogged suction piping or strainer	Clean up immediately. In case of dirty oil, replace with new oil or filter it.
No pressure available from gear pump	• Excessive wear of bushing at (3), (4), (5) and (6) • Defective bushing seal (14), packing (15) and (16), plate seal (20) and backup (21)	Replace with a new part.
	Relief valve with faulty adjustment	Add pressure to the specified level with pressure gauge.
	Sucking air	• Repair loosened suction piping. • Add oil to the specified level of amount. • Check oil seal of gear pump. • Stop operation until bubble goes out from tank.
Noise from gear pump	Cavitations caused with damaged suction piping or clogged strainer	Remove dirt from piping or strainer.
	Sucking air because of loosened joint of suction piping	Tightening again each joint.
	Cavitations due to high viscosity of oil	• Replace with new oil with proper viscosity. • Operate forklift truck with proper oil temperature.
	No alignment available between gear pump and shaft from engine	Take an alignment again.
	Bubble in hydraulic oil	Investigate the cause of bubble and improve it.
Oil leakage from gear pump	Defective oil seal (18) of gear pump Defective body seal (13)	Replace with a new part.
	Oil being stuck with dirt	Check gear pump again.

CHECK AND REPAIR

Check disassembled parts for damage or discoloration. Wash and clean those parts with light-oil. However, never soak rubber parts in light-oil. Check all the parts again. Repair or replace them with a new one if necessary.

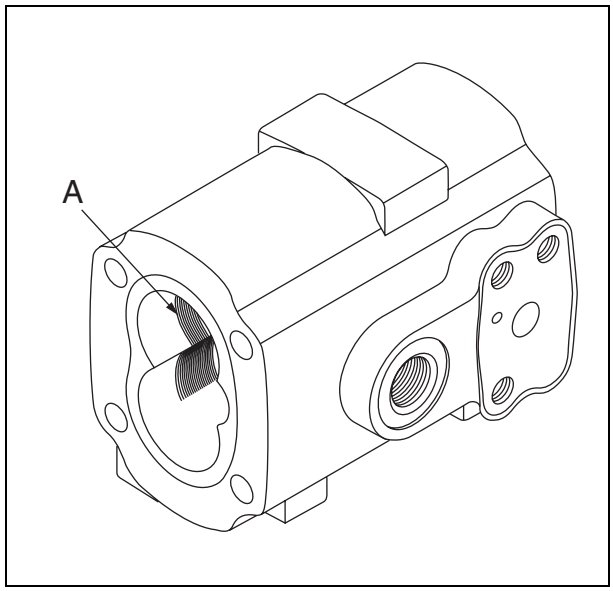

1. **Front Body and Rear Body**

   Gear pump is designed to have gear tooth tip contact the inner wall of gear hole when rotating aiming to improvement in pump efficiency. Therefore, the contact mark of the tooth tip (**A**) can be seen around the suction port of the pump, if was operated once. In case the contact mark (**A**) covers less than half of the inner wall of gear hole, then it is normal. It is also normal that the depth (**a**) of contact mark (**A**) is approximately 0.05 mm. When such depth (**a**) is more than 0.15 mm, replace with a new gear pump assembly.

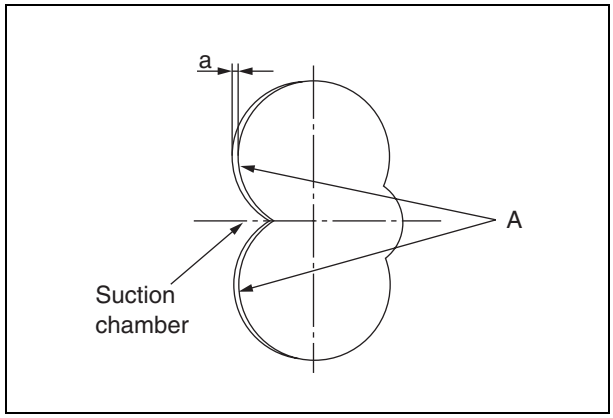

2. **Drive Gear and Driven Gear**

   The gear shaft and gear side face should have a smooth surface if hydraulic oil is clean. However, if your fingernail can catch any rough surface either on the gear shaft or the gear side face, and also if abnormal wear of the tooth face can be seen, replace with a new one.

   When diameter of the shaft (**b**) is less than 18.035 mm, replace with a new gear assembly.

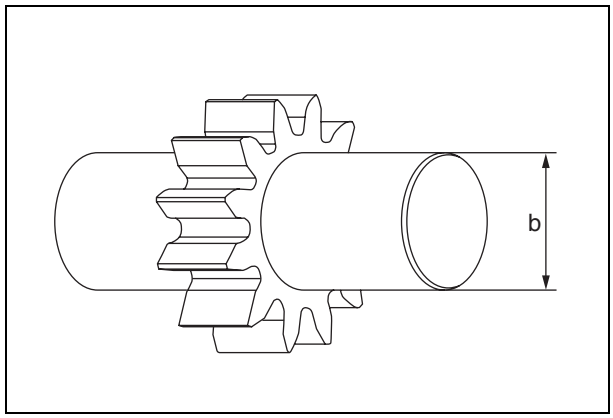

3. Bushing

It is an ideal condition of the bushing that inside diameter sliding section of the bushing has no rough surface and shining contact can be seen in half of suction side. It is normal if the side face contact (**D**) is strong at suction side showing dark gray color while contact at high pressure side is weak and quite a little.

Replace with a new one in case of conditions described as follows:

1) The contact can be seen all over the inside diameter sliding surface of the bushing and your fingernail can catch rough surface on it.
2) Many scratches can be seen toward circumference at the bushing side face and your fingernail can catch rough surface on it.
3) The mark of catching foreign body can be seen at the inside diameter sliding surface and side surface of the bushing.

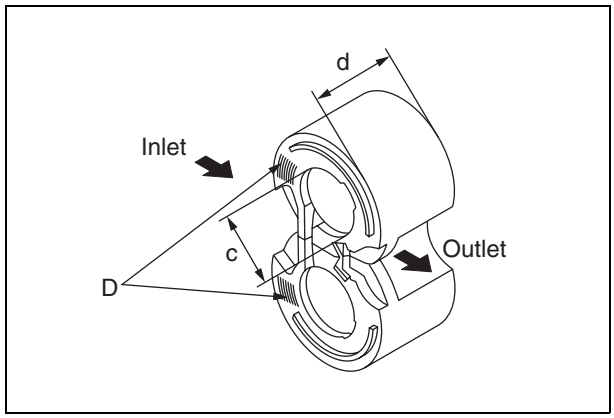

Each size of repair limit for bushing is as follows:

In case the size (**c**) and (**d**) comes to the following repair limit, replace it with a new bushing assembly together with the gear.

Unit: mm

Type	Inside diameter (**a**)	Overall length (**b**)
For center pump and rear pump (**4**), (**5**), (**26**) and (**27**)	**c** > 19.123	**d** < 14.768
For front pump (**2**) and (**3**)	**c** > 19.123	**d** < 26.411

4. Side Plate

It is normal if the sliding surface (copper alloy) contact (**D**) of the side plate is strong at suction side while such contact is weak at high-pressure side.

- If many scratches can be seen toward circumference and your fingernail can catch them, replace it with a new one,
- In case the thickness of the side plate is less than 1.95 mm, replace it with a new one.

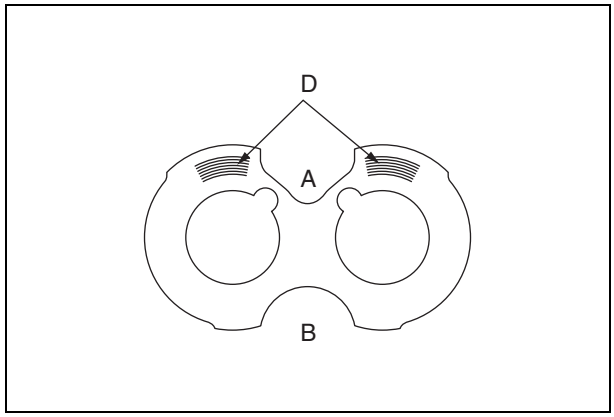

CAUTION

Make sure to replace that such parts as push seal, body seal, packing ring, plate seal, backup, oil seal and snap ring must be replaced with a new one after disassembling.

PROPELER SFAFT

Typical lubrication cycle: 1200 hours

Greasing cross bearing

Supply grease to the grease nipple attached to the cross bearing. Set a grease gun to the end of the nipple, and supply grease until it comes out of all four shafts. Wipe overflowing grease completely to prevent adhesion of scraps and dust.

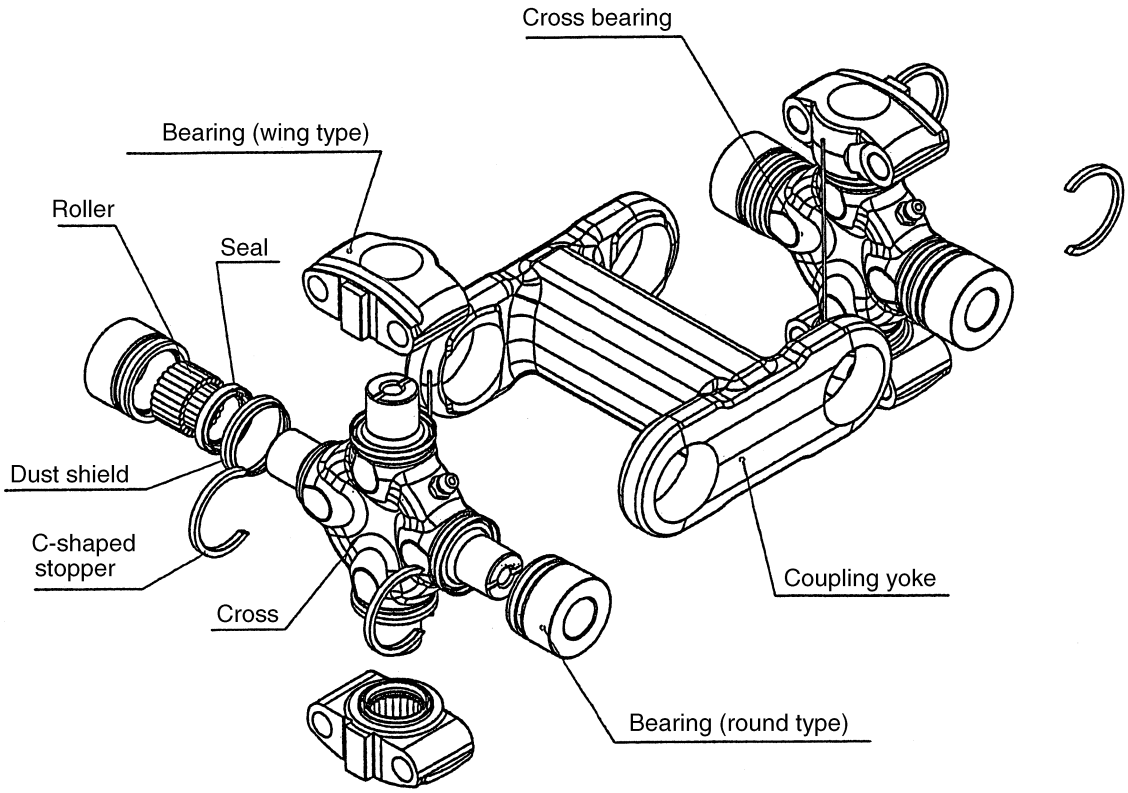

60. STRUCTURE AND FUNCTION

TORQUE CONVERTER, GEAR PUMP
AND CONTROL VALVE 60-2
BRAKE BOOSTER 60-12
FLOW DIVIDER 60-13
CLUTCH BOOSTER.....60-14
TILT CYLINDER.....60-16
WORK EQUIPMENT CONTROL VALVE 60-18
VEHICLE CONTROLLER 60-21
HYDRAULIC CIRCUIT DRAWING.....60-26
ELECTRICAL CIRCUIT DRAWING 60-30

TORQUE CONVERTER, GEAR PUMP AND CONTROL VALVE

OUTLINE

1. Torque Converter

Size: 265 mm (10.5 ")

Type: 3-Element 1-Stage 2-Phase Type (equipped with one-way clutch)

2. Gear pump

Capacity

Theoretical Output: 15.93 cc/rev

Actual Output:

Speed (rpm)	Output (ℓ /min)
600	More than 5
2,000	More than 32

Output Pressure: 1.5 MPa {15 kgf/cm^2}

Oil Temperature: 65 ± 5°C

Type: Inner contact type gear pump

CAUSION

- Make sure to prevent hydraulic circuit hole of transmission mounting side from getting in any dirt and so forth.
- Check to make sure each mounting bolt and plug for proper tightening prior to assembly.
- Make sure to insert torque converter tip boss slowly along flywheel center, when assembling with engine.
- After completing assembly with engine, check to make sure gear pump for oil level with oil level gauge of transmission side after rotating torque converter for about one minute at the time of initial filling of oil.

STRUCTURE

1. Torque Converter Assembly

See page 60-4 Torque Converter Assembly drawing for structure, which consist of following elements.

1) Torque Converter Circuit
2) Gear Pump
3) Housing
4) Power Joint (Input Plate, Turbine Hub)
5) Oil Filter
6) Relief Valve
   (Main, Torque Converter Inlet Port, Lubrication)
7) Strainer Assembly

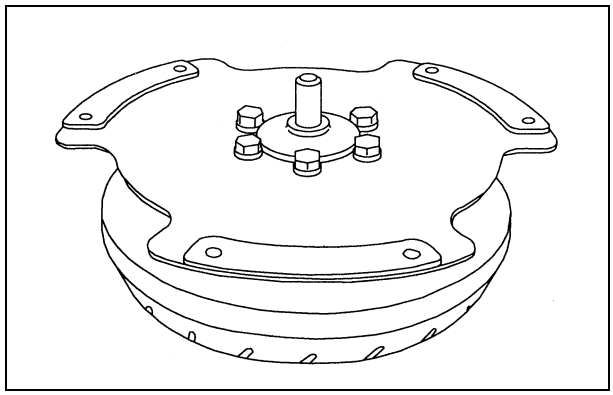

1) Torque Converter Circuit

Torque converter circuit is 3-element 1-stage 2-phase type consisting of following parts.

a. Impeller
   To be connected with input plate through front cover.
b. Stator
   To be secured with housing through one-way clutch.
c. Turbine
   To be connected with turbine shaft through turbine hub.

TORQUE CONVERTER ASSEMBLY DRAWING

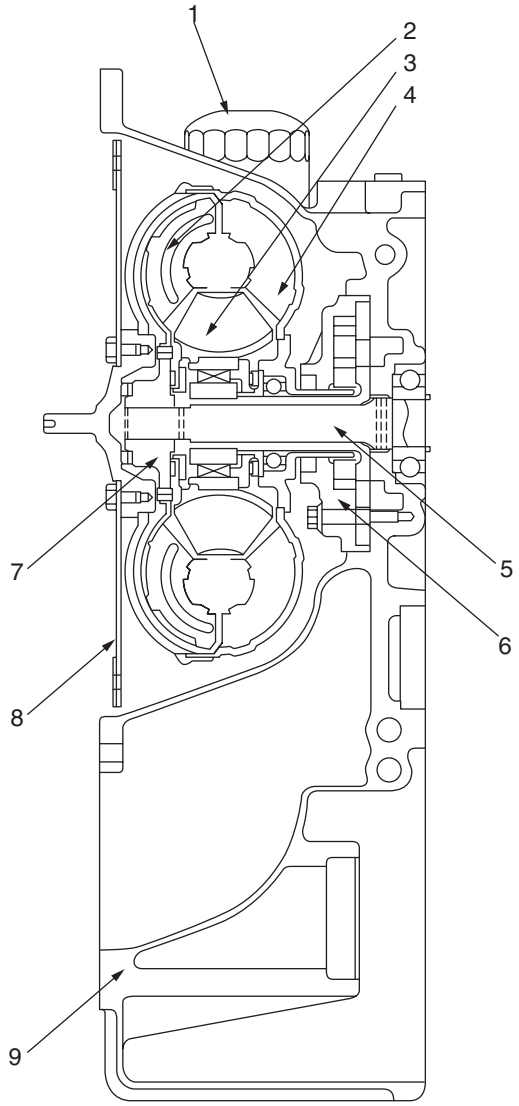

COMPONENT PARTS

Mark	Part Name	Q'ty	
1	Oil Filter	1	Torque Converter Circuit
2	Turbine	1	
3	Stator	1	
4	Impeller	1	
5	Turbine Shaft	5	
6	Gear Pump	5	
7	Turbine Hub	1	
8	Input Plate	1	
9	Housing	1	

2) Gear Pump
It is an inner contact gear type pump driven with the impeller tip fin, which supplies the oil to the transmission and the torque converter.

3) Housing
Inside housing, it contains such valves as described below:
- Torque converter inlet port relief valve to control or prevent torque converter inner pressure from rising.
- Main relief valve to adjust clutch pressure
- Lubrication relief valve to control or prevent lubrication pressure from rising.

4) Power Joint
a. Input Plate
The outside circumference is connected to the engine side flywheel and the inside circumference is connected to the front cover of the torque converter, which transmits engine torque to the torque converter.
b. Turbine Hub
It combines the turbine shaft and the spline at transmission side and transmits the torque converter output to the transmission.

5) Oil Filter
It is located on the hydraulic circuit at the torque converter inlet port and filters oil to prevent foreign body to flow toward the transmission side.

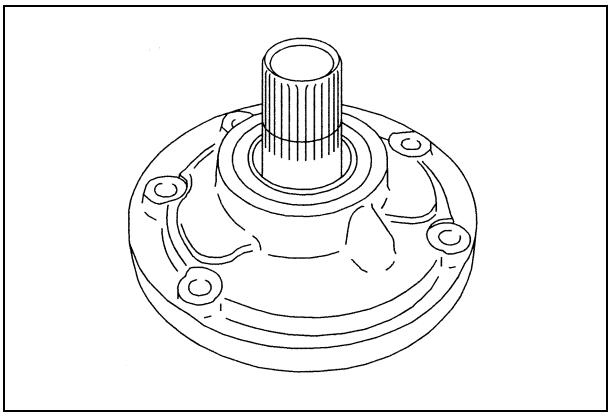

6) Relief Valve
a. Main Relief Valve
Being contained inside the housing, it adjusts the oil coming from the pump so as to supply it to the control valve of the transmission. Thus, it also supplies the relieved oil here to the torque converter.
b. Torque Converter Inlet Port Relief Valve
Being contained inside the housing, it relieves or drains the oil for the torque converter inner pressure not to exceed specified level so as to control or prevent the torque converter from rising inner pressure.
c. Lubrication Relief Valve
Being contained inside the housing, it relieves or drains the oil for hydraulic pressure of truck side lubrication circuit not to exceed the specified level so as to control or prevent inside the lubrication circuit from rising hydraulic pressure.

7) Strainer Assembly
Being located at the pump suction circuit, the strainer stops foreign body with mesh not to flow to the inside of the oil circuit.

2. Control Valve Assembly

The solenoid valve provides speed selection of one each forward and reverse. It also provides with the inching mechanism to release the hydraulic clutch when stopping the engine and the modulation mechanism (accumulator) to relieve shocks occurring at the time of stating truck and shifting speed.

1. Valve Body
2. Solenoid Valve
3. Inching Spool
4. Accumulator (Modulation Valve)

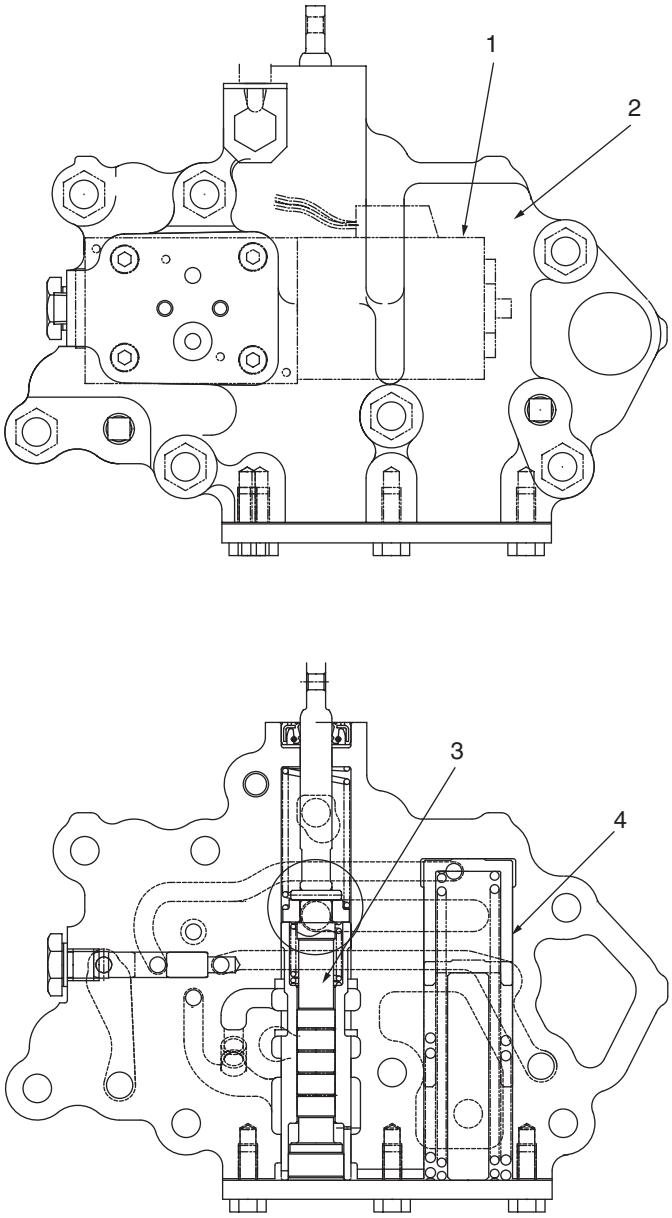

3. Power Transmitting Route

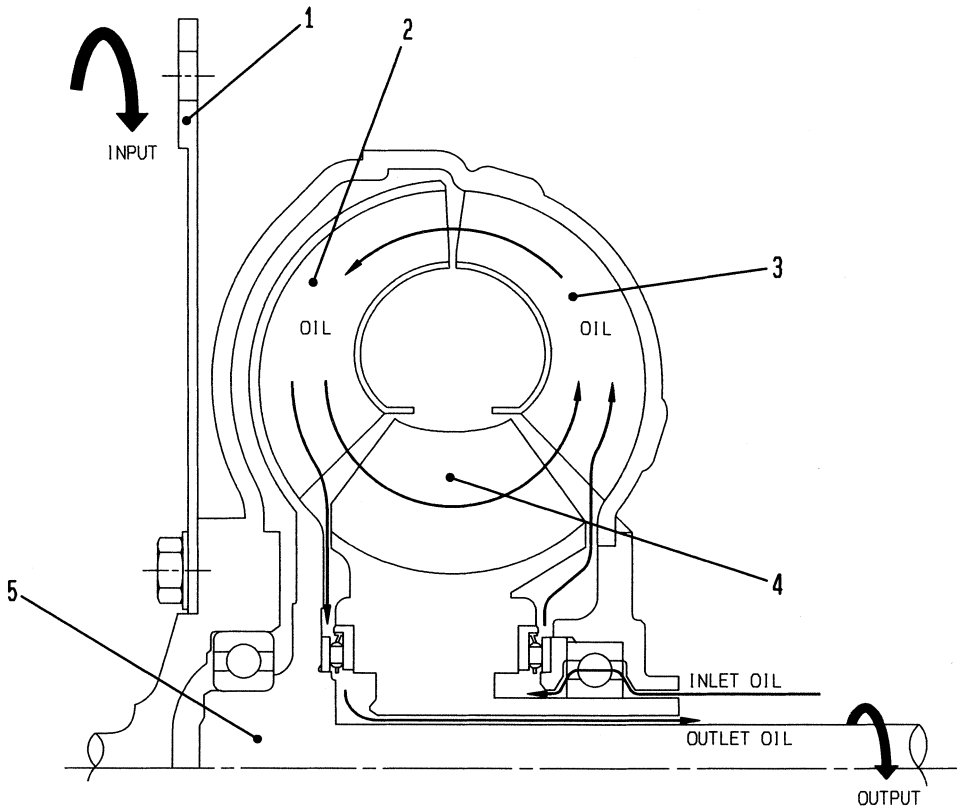

1) Engine rotation is transmitted to the impeller (**3**) through the input plate (**1**). Receiving centrifugal force, the oil inside of the impeller flows out along the impeller fins.

2) Being pushed out from the impeller, the oil hits the turbine (**2**) by the blade and outputs its generated force through the turbine shaft (**5**).

3) Coming through the turbine (**2**), the oil changes the direction of flow with assistance of the stator (**4**), which meets to flowing angle suitable to the blade lines of the impeller.

Repeating such steps 1) through 3) of the above, engine power is transmitted to transmission side.

Driven by the fins of the impeller hub tip, the gear pump is always rotating synchronized with the engine.

4. Hydraulic Circulating Route

1) When starting the engine, the fins of the impeller hub tip of the torque converter drives the gear pump. Then, the oil inside the transmission flows to the gear pump through the strainer installed with torque converter assembly, which is impressed to deliver to the inner contact gear inside the gear pump.

2) Flowing out of the gear pump, the oil is adjusted clutch pressure 1.1 to 1.5 MPa (11.2 to 15.5 kgf/cm^2) by the main relief valve. The adjusted oil is supplied to the hydraulic clutch of transmission side.

3) On the other hand, the oil removed from the main relief valve is supplied to the torque converter.

4) At the torque converter port, the torque converter inlet port relief valve is provided to control an increase in pressure inside the torque converter to maximum 0.7 MPa (7 kgf/cm^2)

5) Flowing out of the toque converter outlet port, the oil is filtered with the oil filter and supplied to the oil cooler. The lubrication relied valve is provided at the torque converter outlet port so as to control an increase in pressure inside the cooling and lubrication circuit to maximum 0.58 MPa (6.0 kgf/cm^2).

6) Cooling down in the oil cooler, the oil is supplied inside the transmission for lubricating and cooling each section as required and then returns to inside the transmission case.

See the hydraulic circuit diagram and each port location on and after next pages.

HYDRAULIC PRESSURE CIRCUIT DRAWING

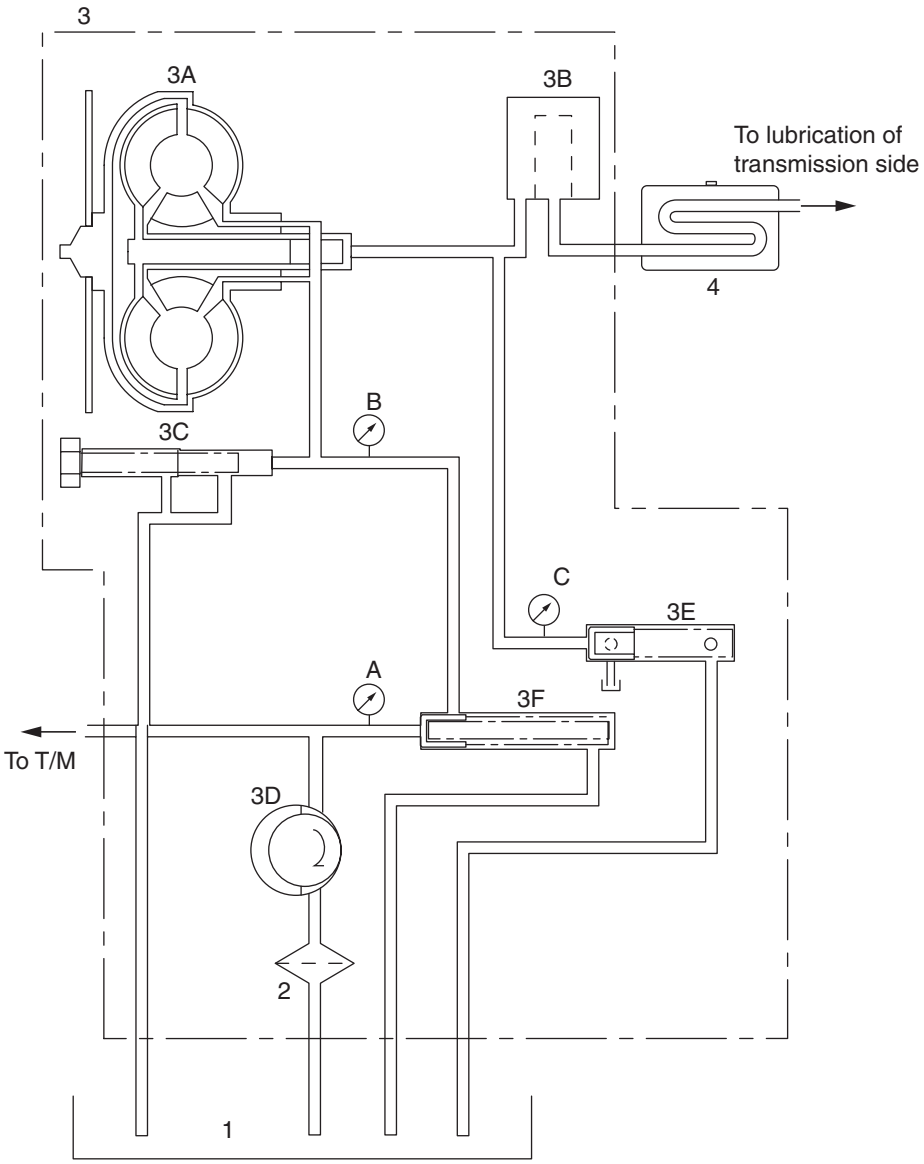

1. Oil Tank
2. Suction Filter (100 mesh)
3. Torque Converter Assembly
   - 3A. Torque Converter
   - 3B. Oil Filter
   - 3C. Torque Converter Inlet Port Relief Valve
   - 3D. Gear Pump Assembly
   - 3E. Lubrication Relief Valve
   - 3F. Regulator Valve
4. Oil Cooler

TORQUE CONVERTER ASSEMBLY HYDRAULIC PRESSURE PORT LOCATION

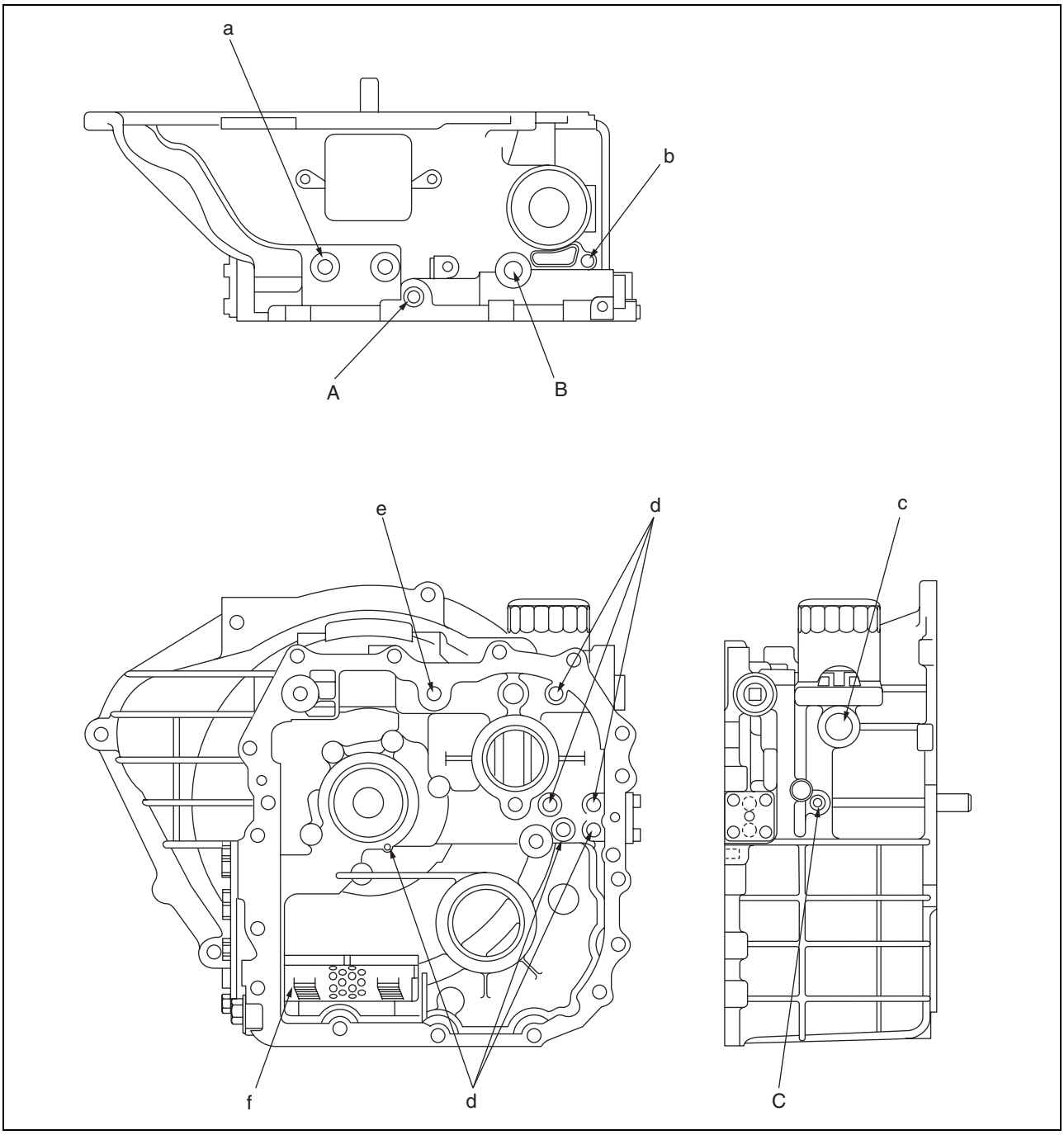

A: Main Pressure Check Port
B: Torque Converter Inlet Port Pressure Gauge Port
C: Lubrication Pressure Check Port

a: Breather Mounting Port
b: Level Gauge Mounting Port
c: To Oil Cooler
d: Drain
e: To Valve of Transmission side
f: Strainer Assembly

CONTROL VALVE ASSEMBLY HYDRAULIC PRESSURE PORT LOCATION

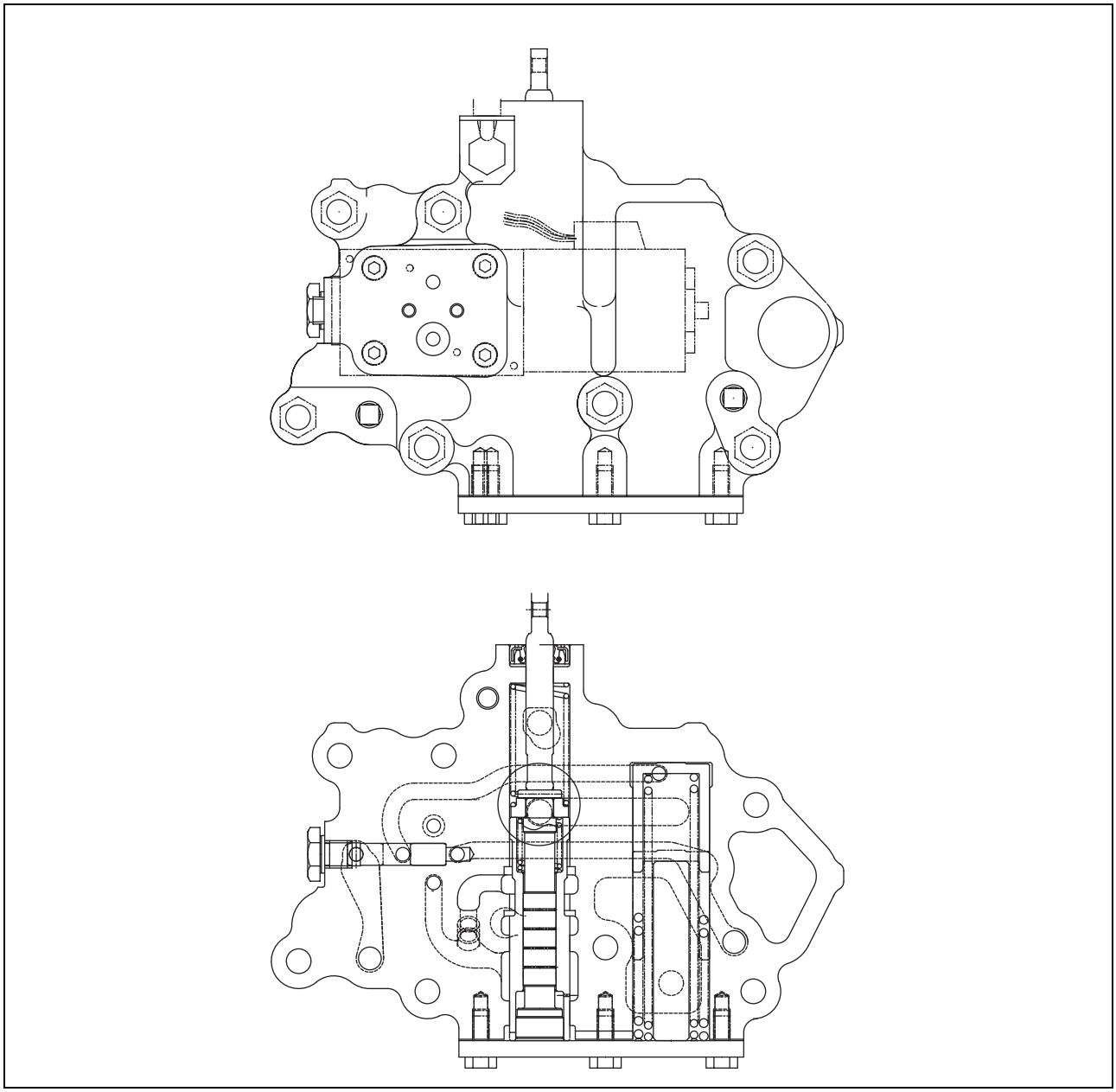

a: P1 (Pump Output Pressure) Hydraulic Pressure Check Gauge Port
b: P4 (Lubrication Relief Pressure) Hydraulic Pressure Check Gauge Port
c: P3 (Inching) Hydraulic Pressure Check Gauge Port
d: C1 (F Clutch) Hydraulic Pressure Check Gauge Port
e: C2 (R Clutch) Hydraulic Pressure Check Gauge Port
f: P2 (Accumulator) Hydraulic Pressure Check Gauge Port
g: To R Clutch
h: To F Clutch
j: Drain
k: Drain
l: Drain
m: Drain
n: Drain
p: from Lubrication
q: from Hydraulic Pump
r: to Torque Converter
s: Drain
t: Drain

BRAKE BOOSTER

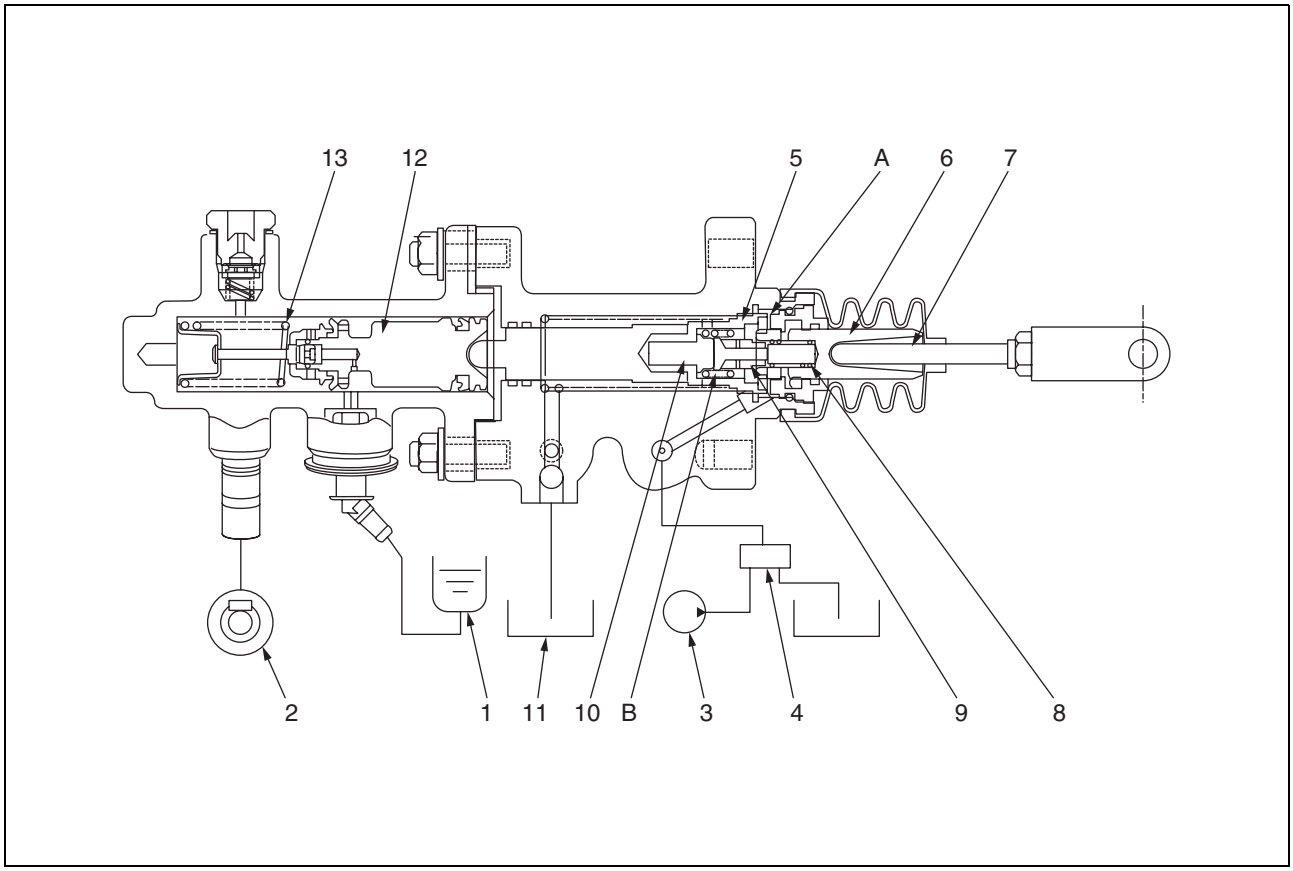

1. Reservoir
2. Wheel Cylinder
3. Pump
4. Flow Divider
5. Booster Piston
6. Reaction Piston
7. Push Rod
8. Spring
9. Control Valve
10. Valve sear
11. Hydraulic Tank
12. Piston
13. Return Spring

1. A certain amount of the oil is supplied to the brake booster from the pump (**3**) through the flow divider (**4**). The oil enters to the power chamber (**A**) inside the brake booster and flows to the hydraulic tank (**11**) via the isle hole of the booster piston (**5**) after passing through the space (**B**) being formed between the control valve (**9**) and valve (**10**) respectively.

2. When the brake booster is off, the oil has no resistance in passing through inside the booster including large space (**B**), which makes no hydraulic pressure available inside the booster.

3. When brake pedal is pressed down, the reaction piston (**6**) is pushed out to the left by the push rod so as to squeeze the space (**B**).

4. With squeezed space (**B**), the oil has resistance when passing through the space (**B**), which should increase the hydraulic pressure in the power chamber (**A**).

5. With such an increase in hydraulic pressure in the power chamber (**A**), the hydraulic pressure affects to the right side of the booster piston (**5**) so as to push the return spring (**13**) away and move the piston (**12**) to the left.

6. Also, the hydraulic pressure in the power chamber (**A**) should push the rear piston (**6**) back to the right (generating an anti-hydraulic force), which could balance with brake pedal control force.

7. Therefore, it becomes the receiving pressure area ratio or servo of the booster piston (**5**) and the reaction piston (**6**). However, when the force to push the valve seat (**10**) back to the right due to the increased hydraulic pressure in the power chamber (**A**) is stronger than the spring (**8**), the space (**B**) cannot be squeezed and the increase in pressure in the power chamber (**A**) should stop.

8. In case of problem of the pump or engine stall, the reaction piston (**6**), the booster piston (**5**) and the piston (**12**) should mechanically engaged, which could enable you to operate manually.

FLOW DIVIDER

Fig. 1. Pump OFF

Fig. 2. Pump ON

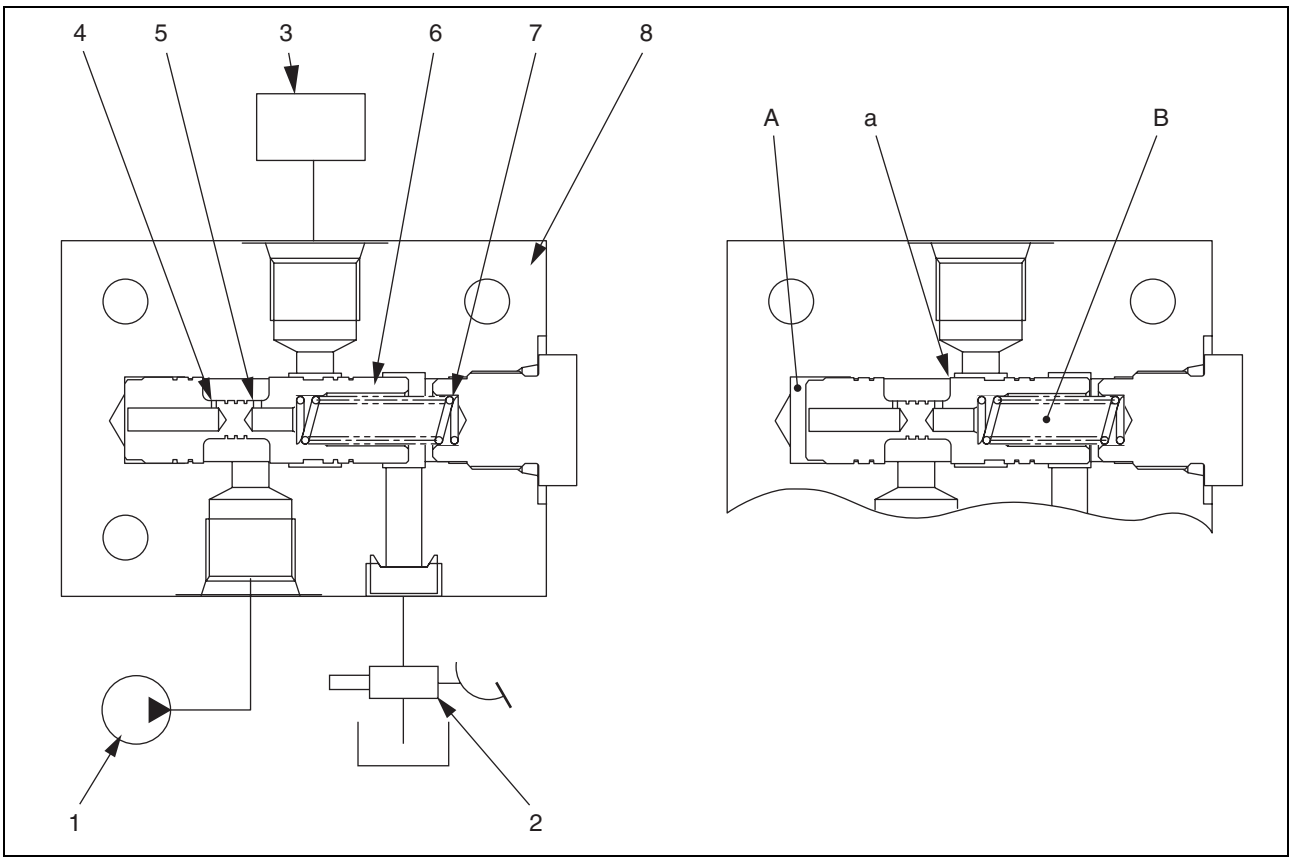

1.	Pump	**4.**	Damper Orifice	**7.**	Spring
2.	Brake Booster	**5.**	Orifice	**8.**	Body
3.	Brake Booster or Hydraulic Tank	**6.**	Spool		

As to the control type of flow amount dividing, the flow divider is so-called a "certain amount control type" or a "preference distribution type", which keeps constant control over the flow amount almost against the fluctuation of flow amount at the inlet port.

1. The Fig. 1.shows non-operation state with the pump OFF. The spool (**6**) moves to the left in maximum from the spring (**7**).

2. When the oil is supplied to the port from the pump (**1**), the oil at the port is supplied from the damper orifice (**4**) of the spool (**6**) to the first chamber (**A**), then passing through the orifice (**5**) and the second chamber (**B**) flows to the brake booster (**2**). However, the oil pressure in the first chamber (**A**) should increase due to flow resistance caused by orifice (**5**).

3. Since the hydraulic pressure in the first chamber (**A**) should affect to the left side of the spool (**6**) to overcome the spring (**7**), it moves the spool (**6**) to the right, which turns to the sate of the Fig.2. of the pump ON and the space (**a**) and (**b**) is made available between the body (**8**) groove and the spool (**6**) accordingly.

4. Then, the oil at the inlet port should flow to the hydraulic tank (**3**) from the first chamber (**A**) in passing through the space (**a**). (The shift from pump ON to the state of the Fig. 2 should be made instantaneously.)

5. At the state of the Fig. 2, the spool (**6**) with the force pushing to the right due to the difference of the pressure in the first chamber and the second chamber should balance with the force pushing to the left due to the spring (**7**), which should result in almost constant control over the difference in pressure between the first chamber (**A**) and the second chamber (**B**).

6. This pressure difference is the same as the case of the orifice (**5**). The amount of oil to flow to the brake booster (**2**) passing through the orifice (**5**) should be controlled almost constantly. (The space (**a**) and (**b**) should keep constant control over the difference in pressure between the spool as described above despite the changes of hydraulic pressure at the each outlet port.)

CLUTCH BOOSTER

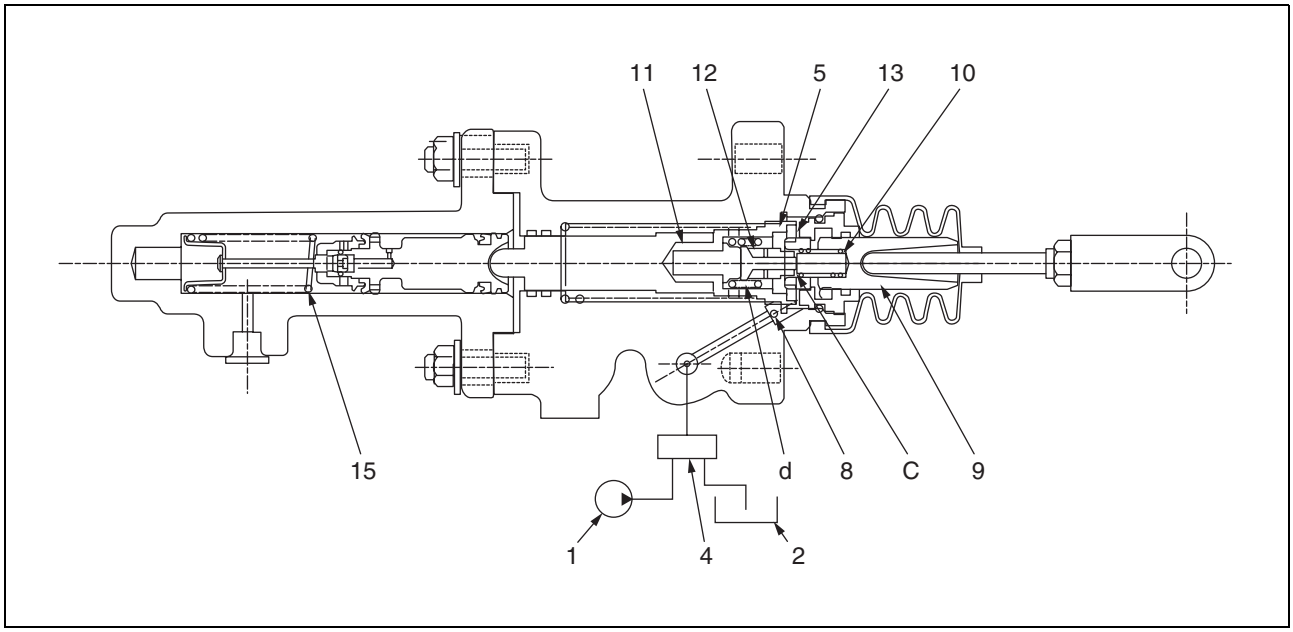

1.	Pump	**6.**	Orifice	**11.**	Valve Seat
2.	Hydraulic Tank	**7.**	Flow Divider Spring	**12.**	Control Valve
3.	Body	**8.**	Check Valve Ball	**13.**	Booster Piston
4.	Flow Divider Spool	**9.**	Reaction Spring	**14.**	Piston
5.	Damper Orifice	**10.**	Spring	**15.**	Return Spring

FUNCTION OF HYDRAULIC BOOSTER

1. The oil that supplied from the flow divider flows to the power chamber (**C**) inside the clutch booster in passing through the check valve ball (**8**). Then, it flows to the hydraulic tank through the space (**d**), being formed between the control valve (12) and the valve seat (**11)**, in passing through the isle hole of the booster piston (**13**).

2. When the brake booster is off, the oil has no resistance in passing through inside the booster including large space (**d**), which makes no hydraulic pressure available inside the booster.

3. When brake pedal is pressed down, the reaction piston (**9**) is pushed out to the left by the push rod so as to squeeze the space (**d**).

4. With squeezed space (**d**), the oil has resistance when passing through the space (**d**), which should increase the hydraulic pressure in the power chamber (**C**).

5. With such an increase in hydraulic pressure in the power chamber (**C**), the hydraulic pressure affects to the right side of the booster piston (**13**) so as to push the return spring (**15**) away and move the piston (**14**) to the left.

6. Also, the hydraulic pressure in the power chamber (**C**) should push the rear piston (**9**) back to the right (generating an anti-hydraulic force), which could balance with brake pedal control force.

7. Therefore, it becomes the receiving pressure area ratio or servo of the booster piston (**13**) and the reaction piston (**9**). However, when the force to push the valve seat (**11**) back to the right due to the increased hydraulic pressure in the power chamber (**C**) is stronger than the spring (**10**), the space (**d**) cannot be squeezed and the increase in pressure in the power chamber (**C**) should stop.

8. In case of quick pedal pressing, the valve seat (**11**) pushes the control valve (**12**) to the left direct and pushes to open the space (e) being formed between the booster piston (**13**) and the control valve (**12**). Since the upper stream of the space (**e**) and the pump (**1**) is connected, the big amount of flow flows to the chamber (**C**) and makes no more late response there.

9. The check valve ball (**8**) prevents the oil in the power chamber (**C**) from retuning oil and quick pedal return even if pump output is stopped due to engine stall when pressing the clutch pedal.

10. In case of problem of the pump or engine stall, the reaction piston (**9**), the booster piston (**13**) and the piston (**14**) should mechanically engaged, which could enable you to operate manually.

TILT CYLINDER

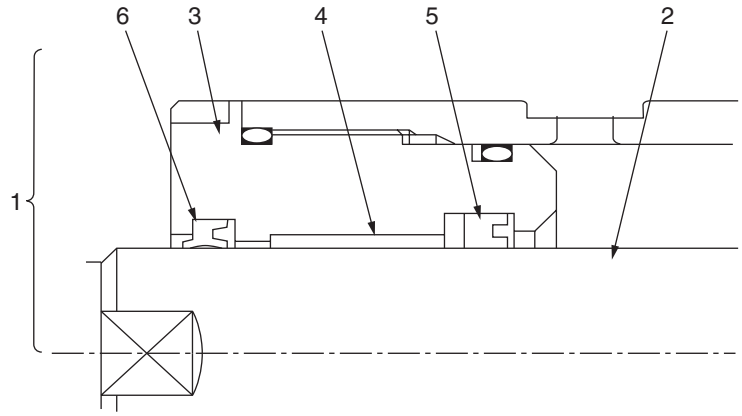

1. Cylinder Head Assembly
2. Piston Rod
3. Cylinder Head
4. Bushing
5. U-ring
6. Wiper Ring

1. BASIC FUNCTION

The tilt cylinder is a kind of hydraulic actuator, which changes the energy being supplied from the hydraulic pump to the big power of a straight line movement through the piston and then switches the direction of hydraulic pressure to the movement of pulling out and pulling back by way of operating the lever of the control valve. Thus, such three functions as generating a big power, a straight line movement and switching an operating direction is the basic function of the tilt cylinder.

2. FUNCTION OF EACH SECTION

1) The cylinder head assembly (**1**) functions a sort of bearing of the piston rod (**2**) by way of inserting the bushing (**4**) with press to the inside diameter of the cylinder head (**3**). Also, inserting the U-ring (**5**) to the inside diameter of the cylinder head, it prevents oil leakage to the outside. Additionally, it functions to supply and exhaust high pressure oil from inside of the cylinder tube to the port.
2) The U-ring (**5**) is located between the bushing (**4**) and hydraulic pressure to seal the hydraulic pressure of inside cylinder. Moreover, it forms a moderate oil membrane on the surface of the piston rod, which sure to prevent the piston rod from getting rust.
3) Being inserted to the inner face of the cylinder head with press, the bushing (**4**) contacts the piston rod. Sharing a horizontal load given to the piston rod with the piston, it functions a straight-line movement on the high-pressure surface against the piston rod. Moreover, it supports the one end of the piston rod to reduce an eccentricity affecting to the sealing function adversely.
4) The wiper ring (**6**) is located at the mouth of inlet and outlet for the piston rod from the cylinder, which prevents the U-ring rod seal of the inside cylinder from getting dust or leaking water from the outside. Moreover, it functions to remove the mud stuck on the rod surface with the movement of the piston rod.

3. PISTON SECTION

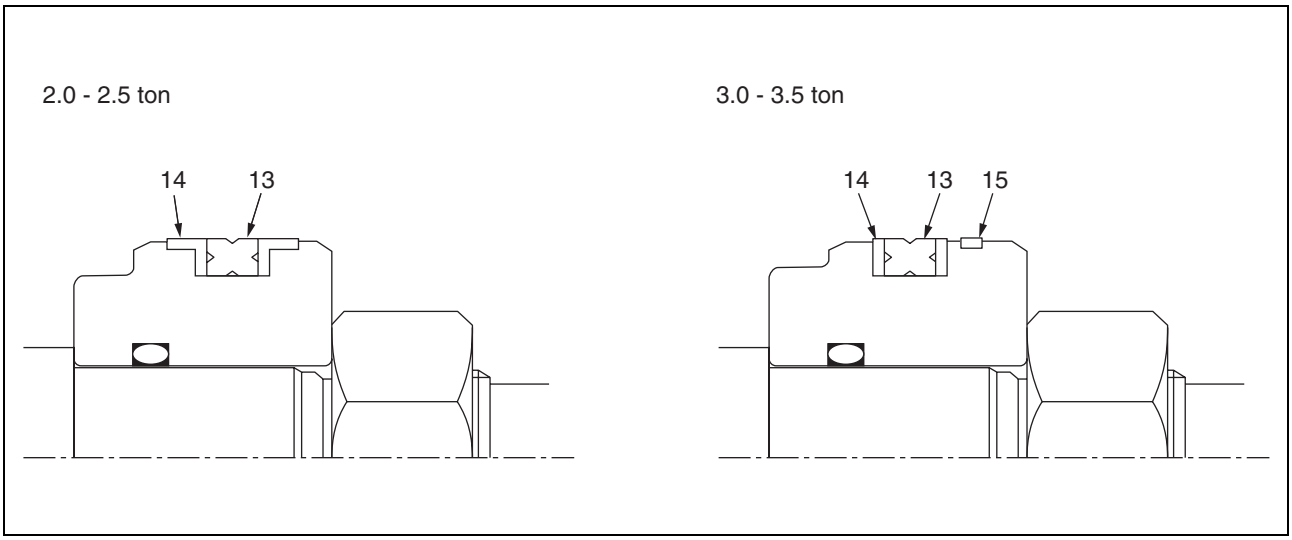

The piston section is provided with the packing (**13**) for the center of the piston and prevents the hydraulic pressure from flowing from right of left either side of the piston chamber to the other side of the chamber.

1) Packing (**13**)
   Being located in the center of the piston, the packing has an equivalent sealing function with the U-packing because of its special one-ring seal lip for both face pressure use, which seals the clearance between the piston and the cylinder tube utilizing its tensity and forms the chambers of high-pressure side and constant pressure side bounded by the piston.
2) Backup Ring (**14**) in Fig.1
   It is a combination bearing with backup ring of insertion type, which prevents the piston from deterioration and makes an improvement in durability and resistance to the oil pressure of the packing (**13**).
3) Backup Ring (**14**) in Fig.2
   It prevents the packing (**13**) from protrusion and makes an improvement in durability and resistance to the oil pressure. The bearing (**15**) prevents the piston from seizure or deterioration.

WORK EQUIPMENT CONTROL VALVE

DESCRIPTION OF OPERATION

1. Neutral lever

The oil supplied from port **P** flows through the neutral path to the spools of lift, tilt, and attachment, and is then drained from tank port **T.**

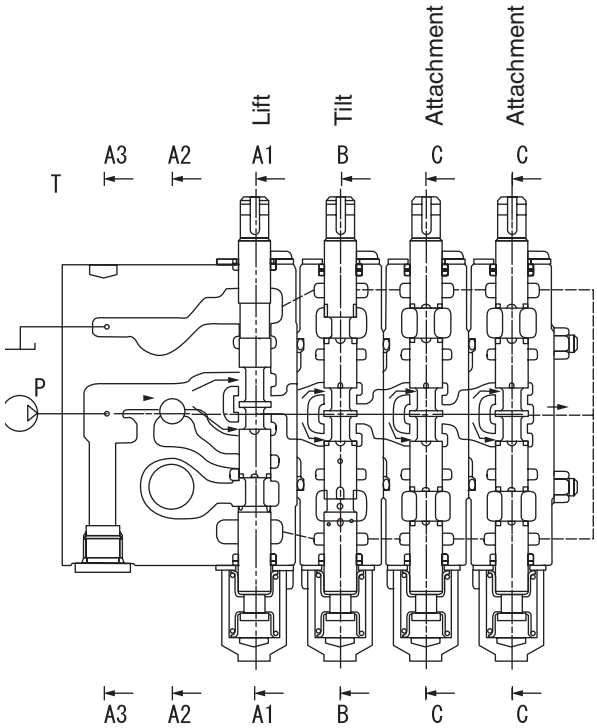

1) Main relief valve

The main relief valve connected to port **P** prevents the pump maximum pressure that is increased by operating the lift/tilt/attachment spools from exceeding the set value.

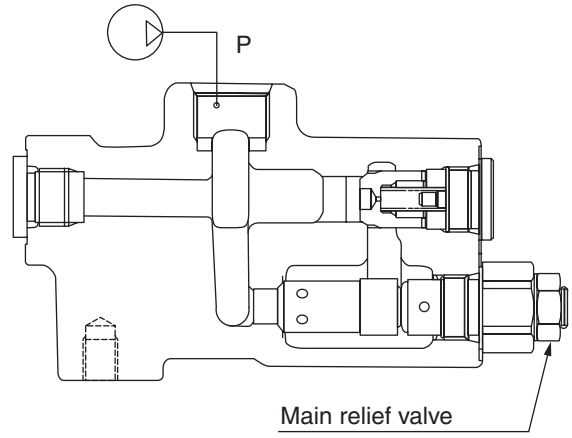

Section A3 - A3

2. Lift spool changeover

1) Lift up operation

Pull operation of lift spool (**2**) shuts off the neutral path **C**, which increases the pump pressure. The oil supplied from port P opens load check valve (**19**), flows from the lift spool to flow regulator spool (**22**) as illustrated below, and is supplied from port **A1** in the direction to expand the lift cylinder (raise the lift).

At this time, the flow regulator spool is fixed at the position shown below due to pressure difference between spring (**21**) and the flow regulator spool.

(Free flow)

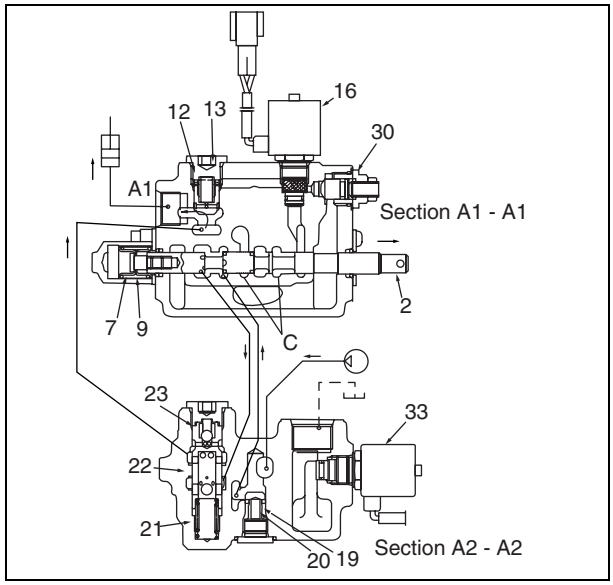

2) Lift down operation

Lift lock

The lift lock function is added to comply with ISO3691 (with respect to restrictions for lift down operation).

When lift lock solenoid valve is ON

Pressing lift spool (**2**) causes the oil in the lift cylinder to push up lift lock poppet (**12**). The oil passes through flow regulator spool (**22**) and lift spool (**2**), and is then drained to the tank port while contracting the lift cylinder (lowering the lift).

When lift lock solenoid valve (**16**) opens, the tank path is connected to the lift lock poppet spring chamber, which opens lift lock poppet (**12**) due to pressure difference.

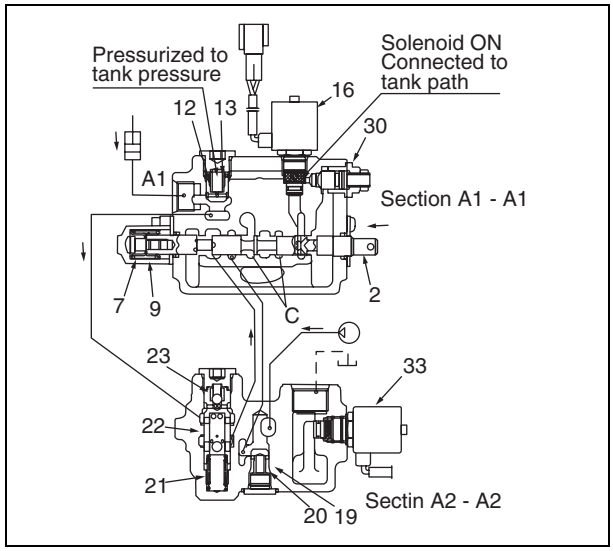

When lift lock solenoid valve is OFF

Since the tank path is disconnected from the lift lock poppet spring chamber by the lift lock solenoid valve(**16**), a high pressure is applied to the chamber and the lift lock poppet (**12**) is seated due to the difference in poppet area. Therefore the lift does not descend even if the lift spool (**2**) is operated to the press side.

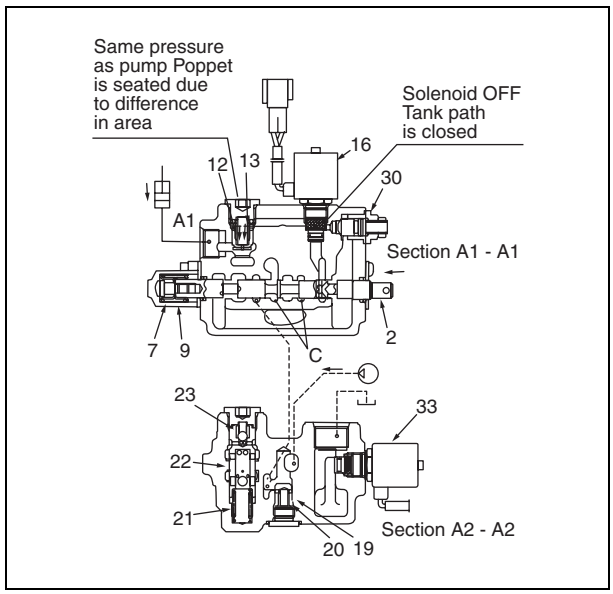

3. Tilt spool changeover

1) Forward tilting of tilt

Pressing tilt spool (**2**) shuts off the neutral path **C**, which increases the pressure. The oil supplied from port **P** opens the load check valve, and flows from the tilt spool through port **B2** to the tilt cylinder bottom side as illustrated. The tilt lock valve is stroked by pump pressure to open the path. The oil on the tilt cylinder rod side flows from port **A2** through the tilt spool, and is then drained to tank port **T**.

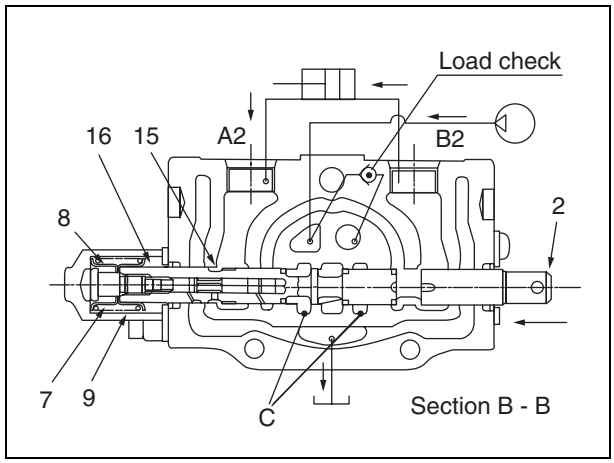

2) Backward tilting of tilt

Pulling tilt spool (**2**) shuts off the neutral path **C**, which increases the pressure. The oil supplied from port **P** opens the load check valve, and flows from the tilt spool through port **A2** to the tilt cylinder rod side as illustrated. The oil on the tilt cylinder bottom side flows from port **B2** through the tilt spool, and is then drained to tank port **T**.

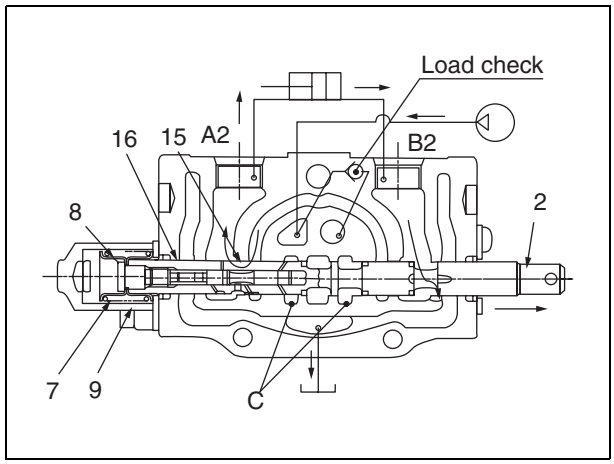

4. Attachment spool changeover

Pulling attachment spool (**2**) shuts off the neutral path **C**, which increases the pressure. The oil supplied from port **P** opens the load check valve, and flows from the attachment spool to port **A** as illustrated. Oil also flows from port **B** through the attachment spool, and is then drained to tank port **T**.

When the attachment spool is pressed, the operation will be opposite.

1) Port relief valve

Port relief valve, when installed to the attachment, prevents the cylinder port pressure from exceeding the set value. The port relief valve is also equipped with a function to suck oil from the tank and to include cavitations.

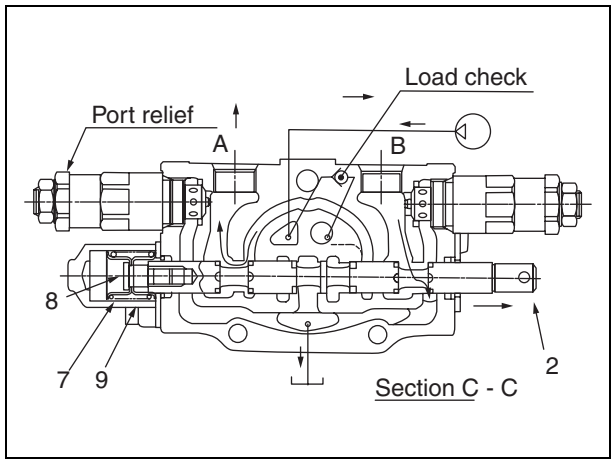

VEHICLE CONTROLLER

The AX50/BX0 Series is equipped with a vehicle controller (interlock box) conforming to ISO3691 Standard, which has functions to enhance safety of the vehicle.

1. Travel interlock function
(torque converter vehicles only)

When an operator leaves operator's seat, the switch under the seat is activated to disable travel of the vehicle. To restart travel, it is necessary to reset the forward/reverse lever. This prevents malfunction of the vehicle.

Users can check operation status by the travel lock lamp on the meter panel.

If an operator leaves operator's seat with the forward/reverse lever set to F or R, the lamp blinks showing that travel is disabled.

When the operator takes seat again and returns the lever to N (resets), the lamp turns off and travel of the vehicle can be restarted.

The travel lock lamp is also used as neutral lamp.

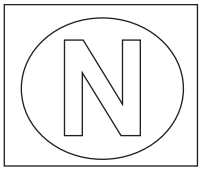

Travel lock lamp

2. Load handling interlock function

When an operator leaves operator's seat, the switch under the seat is activated to disable load handling with work equipment.

Users can check operation status by the load handling lock lamp on the meter panel.

If an operator is not seated properly, the lamp blinks showing that load handling is disabled.

When the operator is seated properly, the lamp turns off and load handling can be restarted.

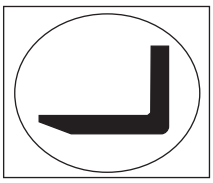

Load handling lock lamp

3. Parking brake warning

When an operator leaves operator's seat without applying the parking brake, the buzzer sounds to warn the operator to apply the parking brake.

4. Failure detection

1) Sear switch failure detection
2) Relay output transistor failure detection
3) Forward/reverse lever failure detection
4) CPU failure detection

When any of these failures is detected, the alarm lamp on the meter panel blinks to warn users.

(Gasoline vehicle)

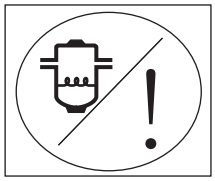

(Diesel vehicle: Together with sedimenta alarm lamp)

Alarm lamp

SYSTEM OVERVIEW

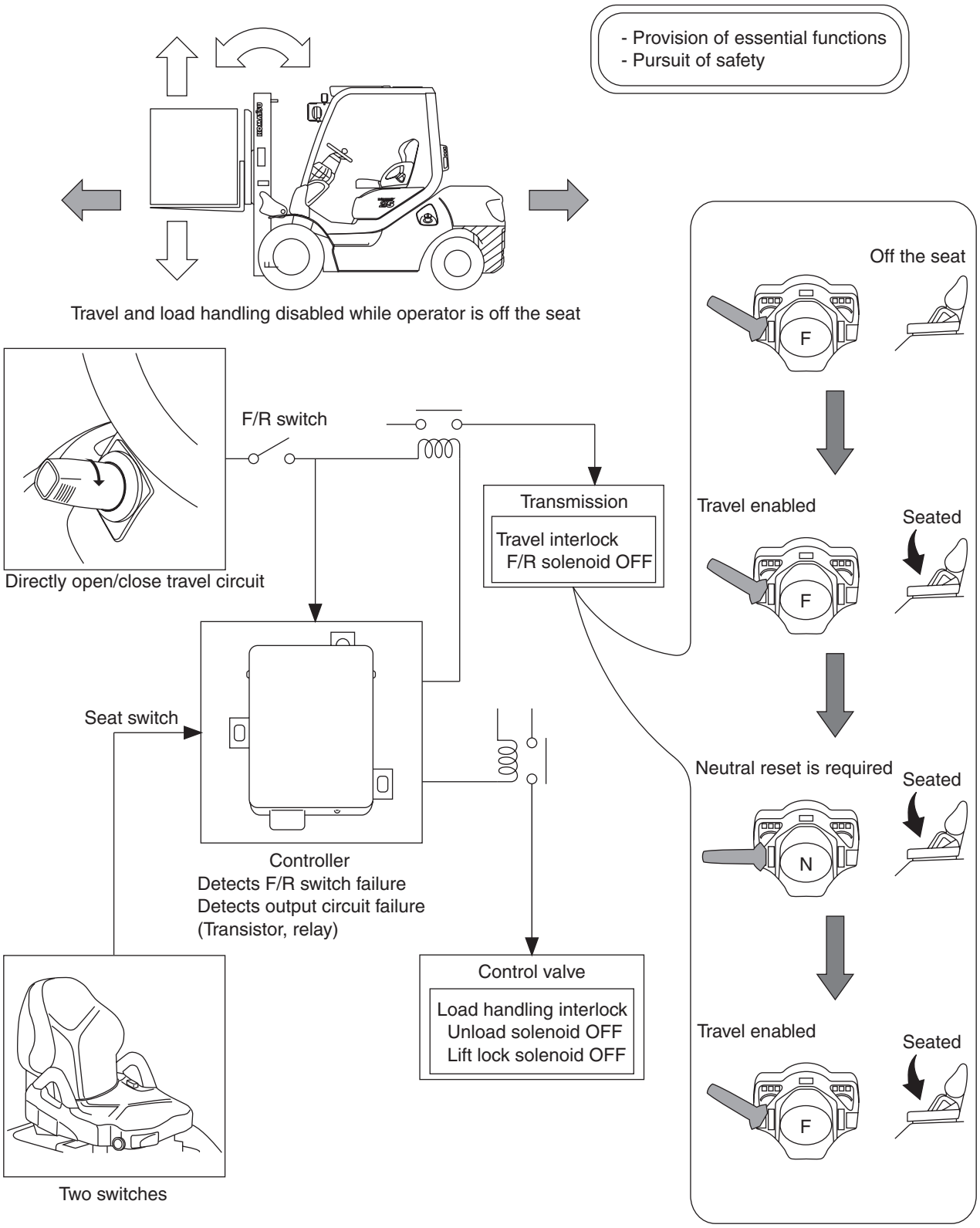

CONTROLLER SYSTEM CONFIGURATION

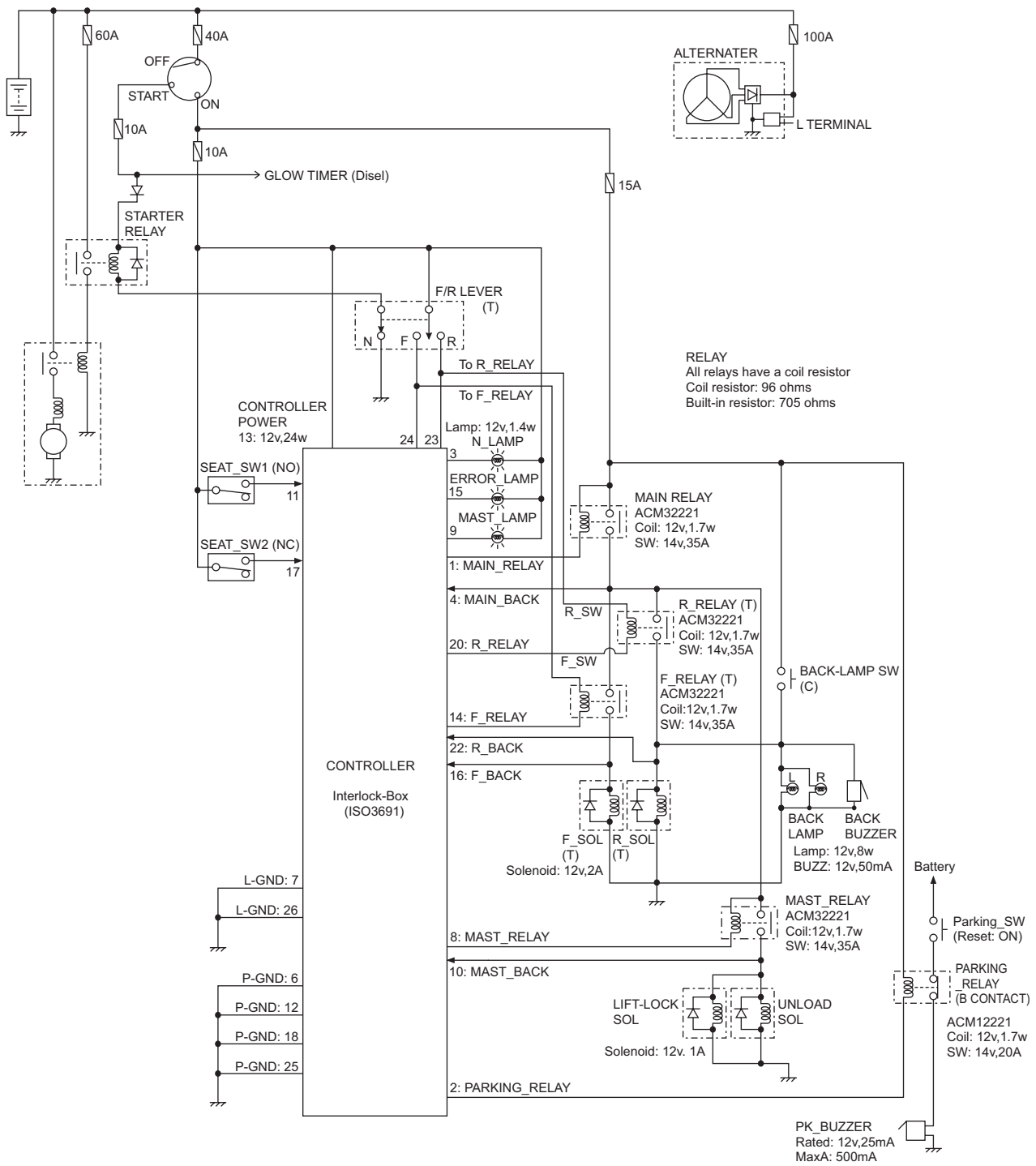

Troubleshooting

1. ISO Controller

No.	Symptom	ERROR_LAMP blinking times "1"	N_LAMP status "N"	MAST_LAMP status "L"	Failure	Remedy	Reset	Remarks
1	Travel operation and work equipment do not work.	1	Blinking *1	Blinking	SEAT_SW failure (disconnection or short-circuit)	1) Examine SEAT_SW circuit, and repair it if necessary.	Normal return	Refer to Remark Table 1
2	Travel operation does not work.	2	Blinking *1	– –	F/R lever failure (short-circuit)	1) Examine F/R lever circuit, and repair it if necessary.	Normal return	Refer to Remark Table 2
3	1) Parking brake warning buzzer 1-1) Buzzer doe not stop even when parking brake is activated. 1-2) Buzzer doe not stop even when operator left the seat with parking brake released. 2) N_LAMP, MAST_LAMP 2-1) N_LAMP does not light even when F/R lever is set to neutral. 2-2) N_LAMP does not turn OFF even when F/R lever is set to F or R position. 2-3) MAST_LAMP does not light for a certain time when the key is turned ON. 2-4) MAST_LAMP does not turn OFF after the key is turned ON.	3	– –	– –	1) Abnormal output of parking brake warning buzzer (disconnection or short-circuit) 2) Abnormal output of N_LAMP or MAST_LAMP (disconnection or short-circuit)	1) Parking brake warning buzzer Examine PARKING_RELAY and buzzer circuits, and repair them if necessary. 2) Lamps Examine lamps and lamp circuit, and repair them if necessary.	1) Parking brake warning buzzer: Normal return 2) Lamp: Key/OFF	
4	1) Only work equipment does not work. 2) Travel operation and work equipment do not work.	4	1) – – 2) Blinking *1	Blinking	Abnormal output of work equipment interlock relay (disconnection or short-circuit) 1) Controller output Tr open or relay disconnection 2) Controller output Tr short-circuit or any of MAST_RELAY, F_RELAY, R_RELAY short-circuit	1) Work equipment only Examine MAST_RELAY and relay circuit, and repair them if necessary. 2) Travel/work equipment Examine MAST_RELAY, F_RELAY, R_RELAY, and relay circuit, and repair them if necessary.	1) Normal return or key/OFF 2) Key/OFF	
5	1) Only travel operation does not work. 2) Travel operation and work equipment do not work.	5	Blinking *1	1) – – 2) Blinking *1	Abnormal output of work equipment interlock relay (disconnection or short-circuit) 1) Controller output Tr open or relay disconnection 2) Controller output Tr short-circuit or any of MAST_RELAY, F_RELAY, R_RELAY short-circuit	1) Travel only Examine F_RELAY, R_RELAY and relay circuit, and repair them if necessary. 2) Travel/work equipment Examine MAST_RELAY, F_RELAY, R_RELAY, and relay circuit, and repair them if necessary.	1) Normal return or key/OFF 2) Key/OFF	
6	Travel operation and work equipment do not work.	6	Blinking *1	Blinking	Abnormal output of MAIN_RELAY (disconnection, short-circuit)	Examine MAIN_RELAY and relay circuit, and repair them if necessary.	Key/OFF	
7	Travel operation and work equipment do not work.	7	Blinking *1	Blinking	Controller failure	1) Examine power circuit, and repair it if necessary. 2) Replace controller.	Key/OFF	Return the controller and examine it.

*1: N_LAMP lights when F/R lever is set to neutral.

2. Knob Displacement Correction System

No.	Symptom	Controller LED status	Failure	Remedy	Remarks
1	Knob position deviates.	OFF	Controller failure	1) Examine controller power circuit, and repair it if necessary. 2) Replace controller.	
2	↑	Repeats blinking 3 times.	Steering wheel sensor failure	Replace controller.	
3	↑	Repeats blinking 4 times.	Tire sensor failure • Disconnection or short-circuit (signal line - GND) • Improper installation (orientation) of tire angle sensor	1) Examine tire sensor (including installation), and repair it if necessary. 2) Examine tire sensor circuit, and repair it if necessary.	
4	↑	Repeats blinking twice.	Initial setting in progress (Not always a failure)	1) Perform initial setting from the beginning. 2) Examine tire sensor installation, and repair it if necessary. 3) Check whether orbit roll rotor is loose, and repair it if necessary. Secure it by tightening screws or locking.	
5	↑	Repeats blinking once.	Initial setting not completed	1) Check terminals of the controller. (Open (disconnected) normally) 2) Perform initial setting	
6	↑	OFF	(1) Tire sensor short-circuit (power line - signal line)	1) Examine tire sensor (including installation), and repair it if necessary. 2) Examine tire sensor circuit, and repair it if necessary.	
			(2) Electromagnetic valve (for correction) failure	1) Check whether valve turns ON/OFF during steering. 2) Examine valve harness, and repair it if necessary.	
			(3) Orbit roll rotor idle rotation	1) Check whether rotor is loose, and repair it if necessary. Secure it by tightening screws or locking.	
			(4) Failure of controller valve drive circuit	1) Perform remedy for (2). 2) Replace controller.	
			(5) Steering wheel sensor short-circuit	1) Examine whether initial setting is available. 2) Perform remedy for (1). 3) Replace controller.	

Remark Table 1

Input		Output	Remarks
SEAT_SW1	SEAT_SW2	ERROR-LAMP	
OFF	OFF	Error No.1	Open
OFF	ON	OFF	Normal
ON	OFF	OFF	Normal
ON	ON	Error No.1	Short

Remark Table 2

Input		Output	Remarks
F_SW1	R_SW2	ERROR-LAMP	
OFF	OFF	OFF	Normal (Neutral)
ON	OFF	OFF	Normal (F)
OFF	ON	OFF	Normal (R)
ON	ON	Error No.2	Abnormal

HYDRAULIC CIRCUIT DRAWING

Standard model

Std. Lift height 3.7 m or less

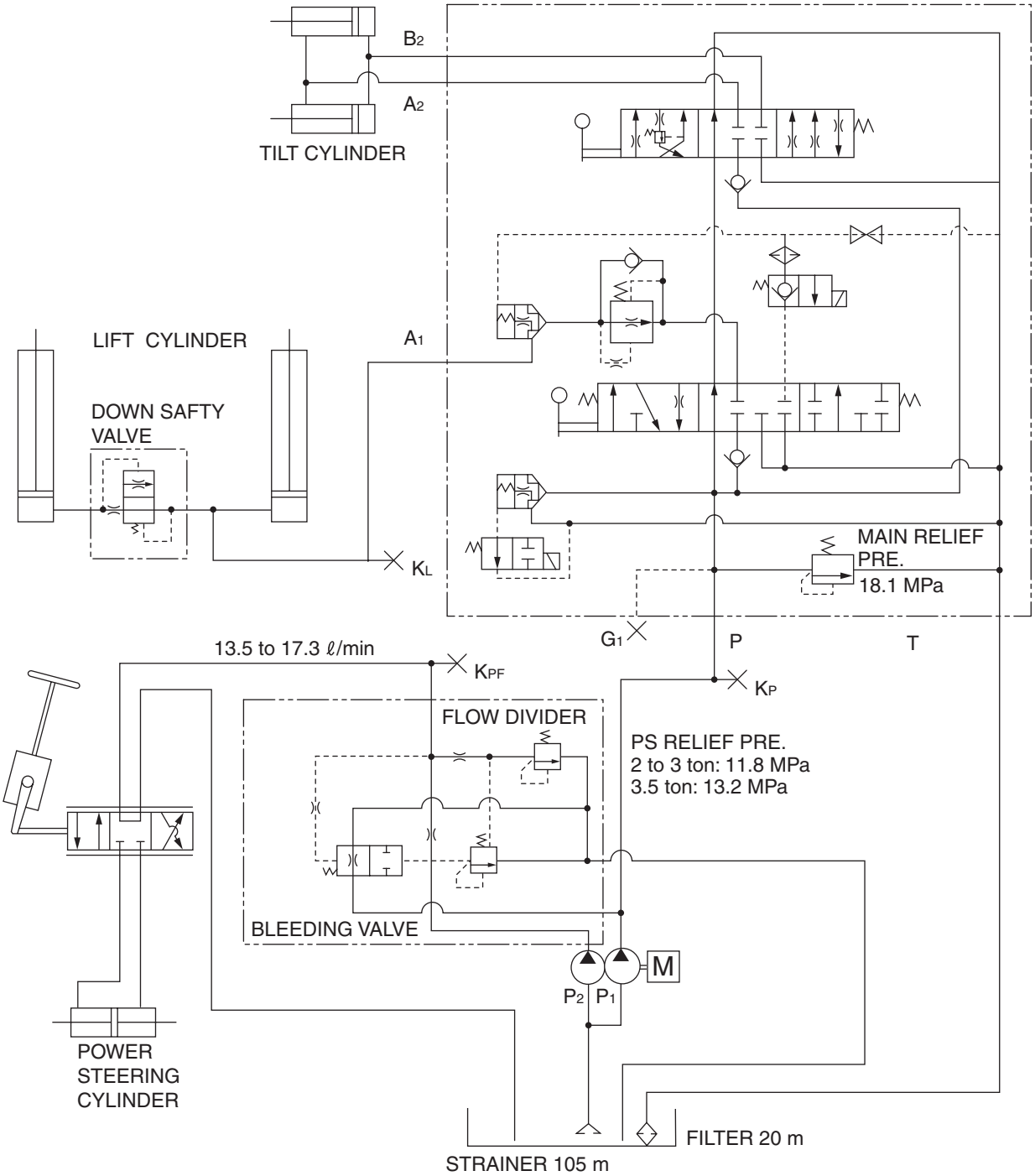

Standard model

Std. Lift height 4.0 m or more

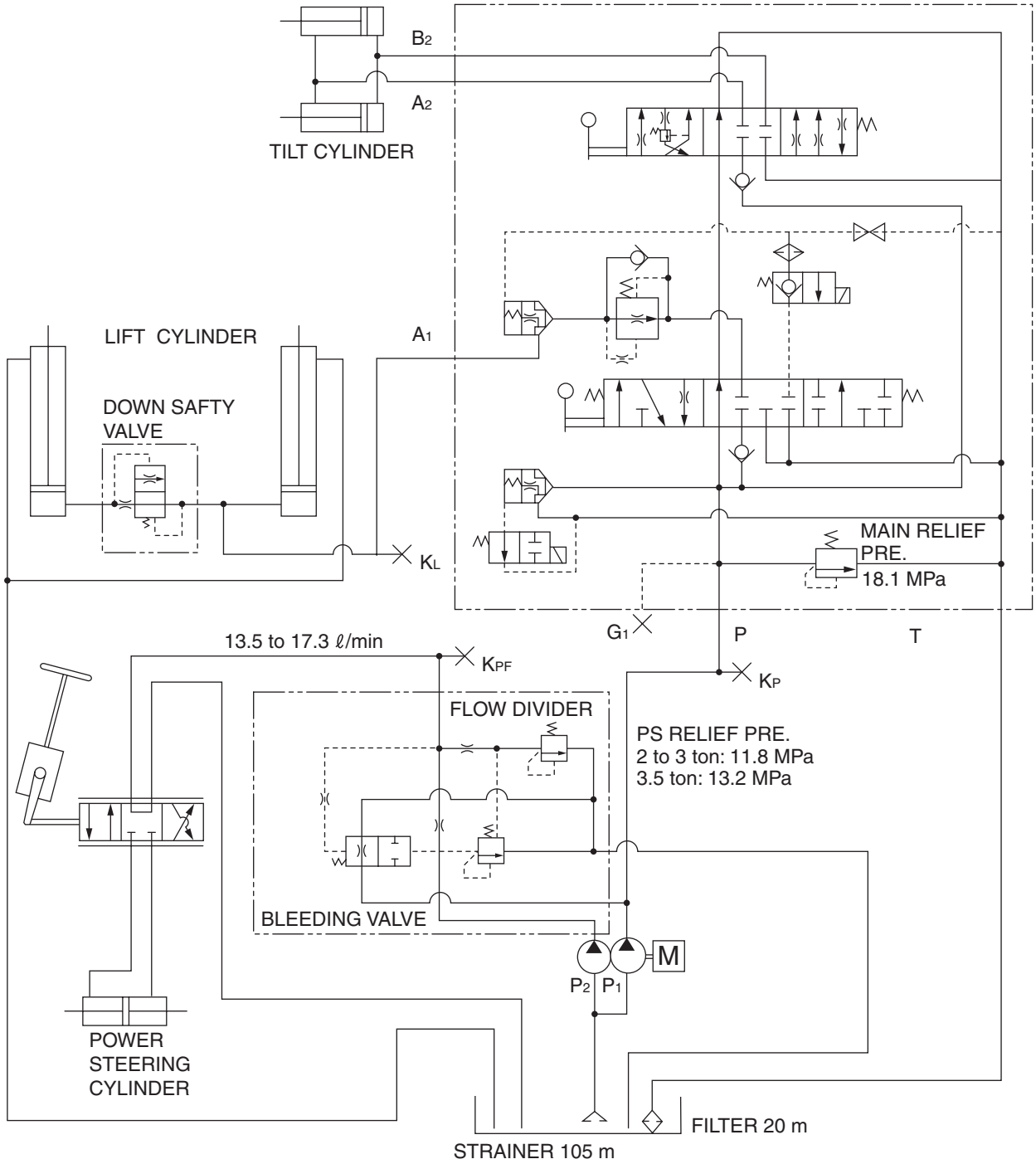

Power Brake Truck

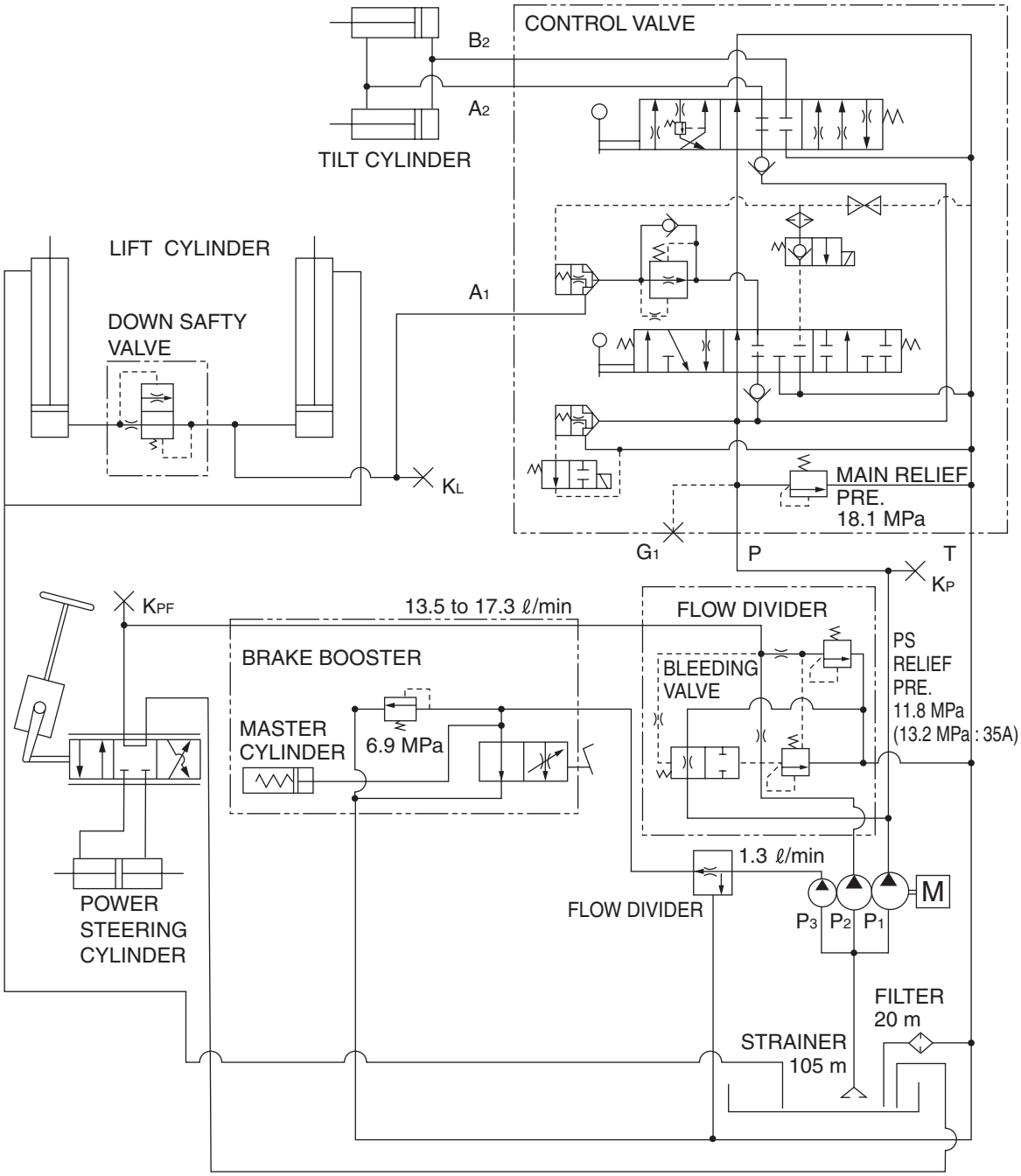

ELECTRICAL CIRCUIT DRAWING

1. GASOLINE POWERED FORKLIFT TRUCK

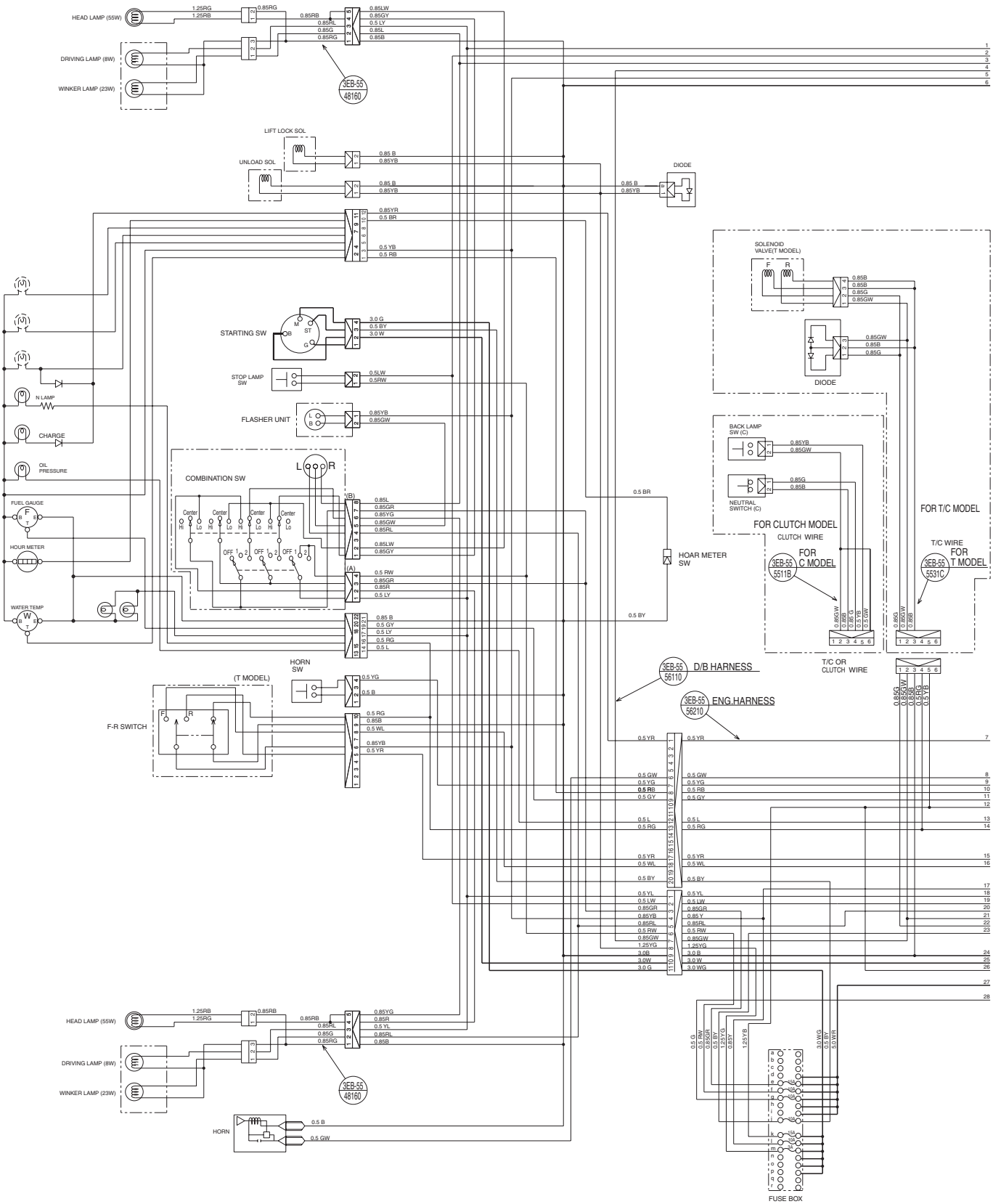

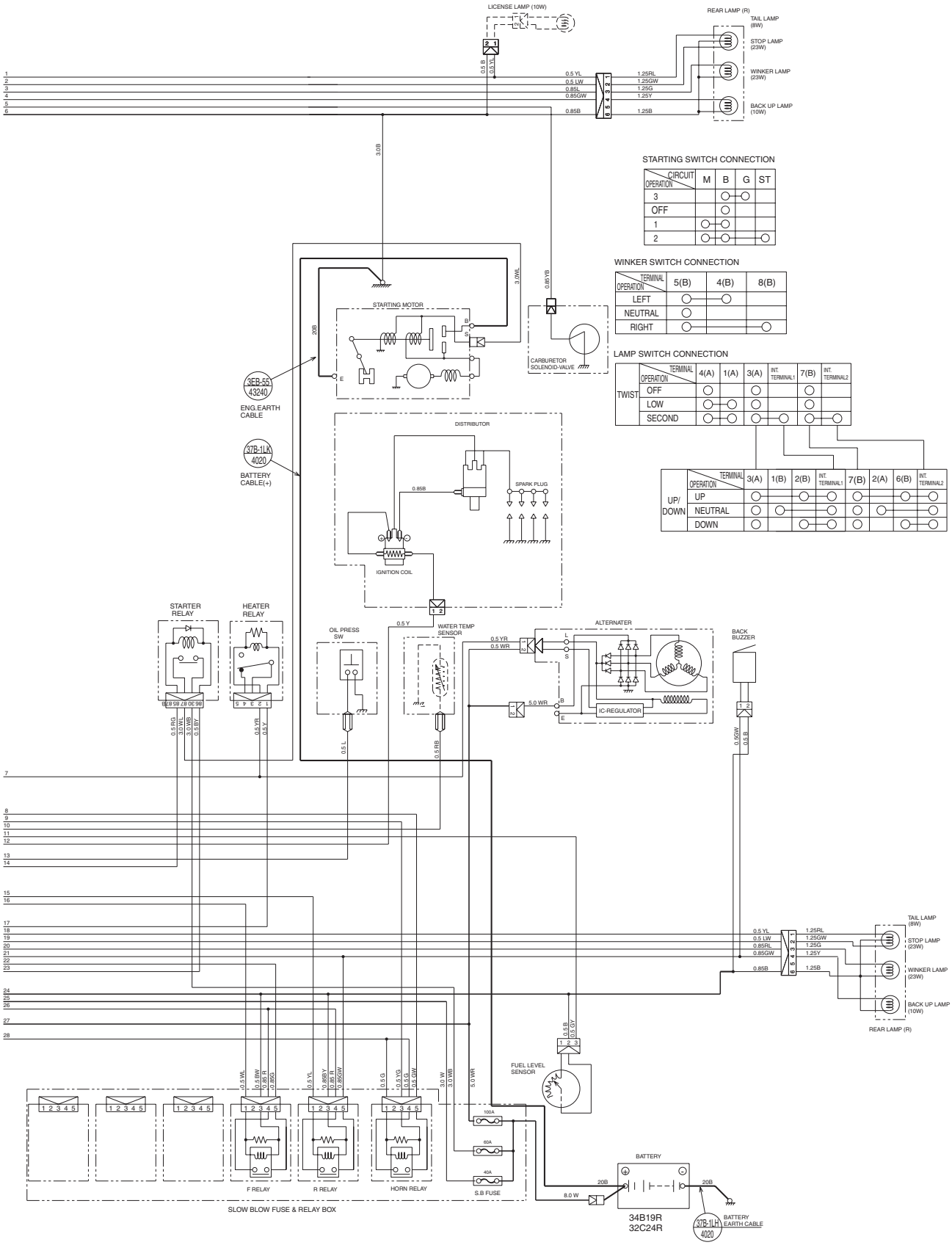

STARTING SWITCH CONNECTION

OPERATION \ CIRCUIT	M	B	G	ST
3		○	○	
OFF		○		
1	○	○		
2	○	○		○

WINKER SWITCH CONNECTION

OPERATION \ TERMINAL	5(B)	4(B)	8(B)
LEFT	○	○	
NEUTRAL	○		
RIGHT	○		○

LAMP SWITCH CONNECTION

	OPERATION \ TERMINAL	4(A)	1(A)	3(A)	INT. TERMINAL1	7(B)	INT. TERMINAL2
TWIST	OFF	○		○		○	
	LOW	○	○	○		○	
	SECOND	○	○	○	○	○	○

	OPERATION \ TERMINAL	3(A)	1(B)	2(B)	INT. TERMINAL1	7(B)	2(A)	6(B)	INT. TERMINAL2
UP/DOWN	UP	○		○	○			○	○
	NEUTRAL	○	○		○	○	○		○
	DOWN	○		○	○	○		○	○

2. DIESEL POWERED FORKLIFT TRUCK

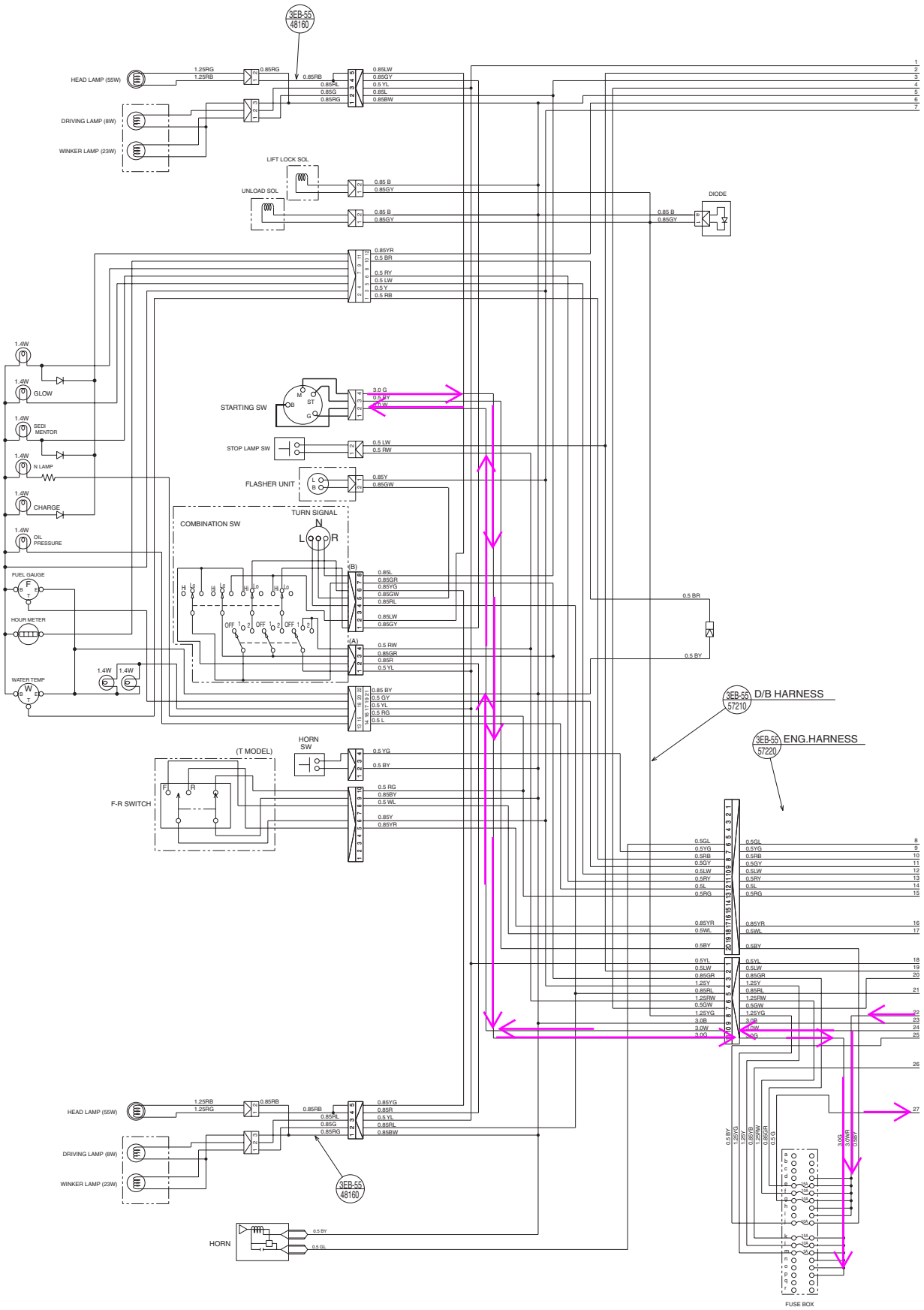

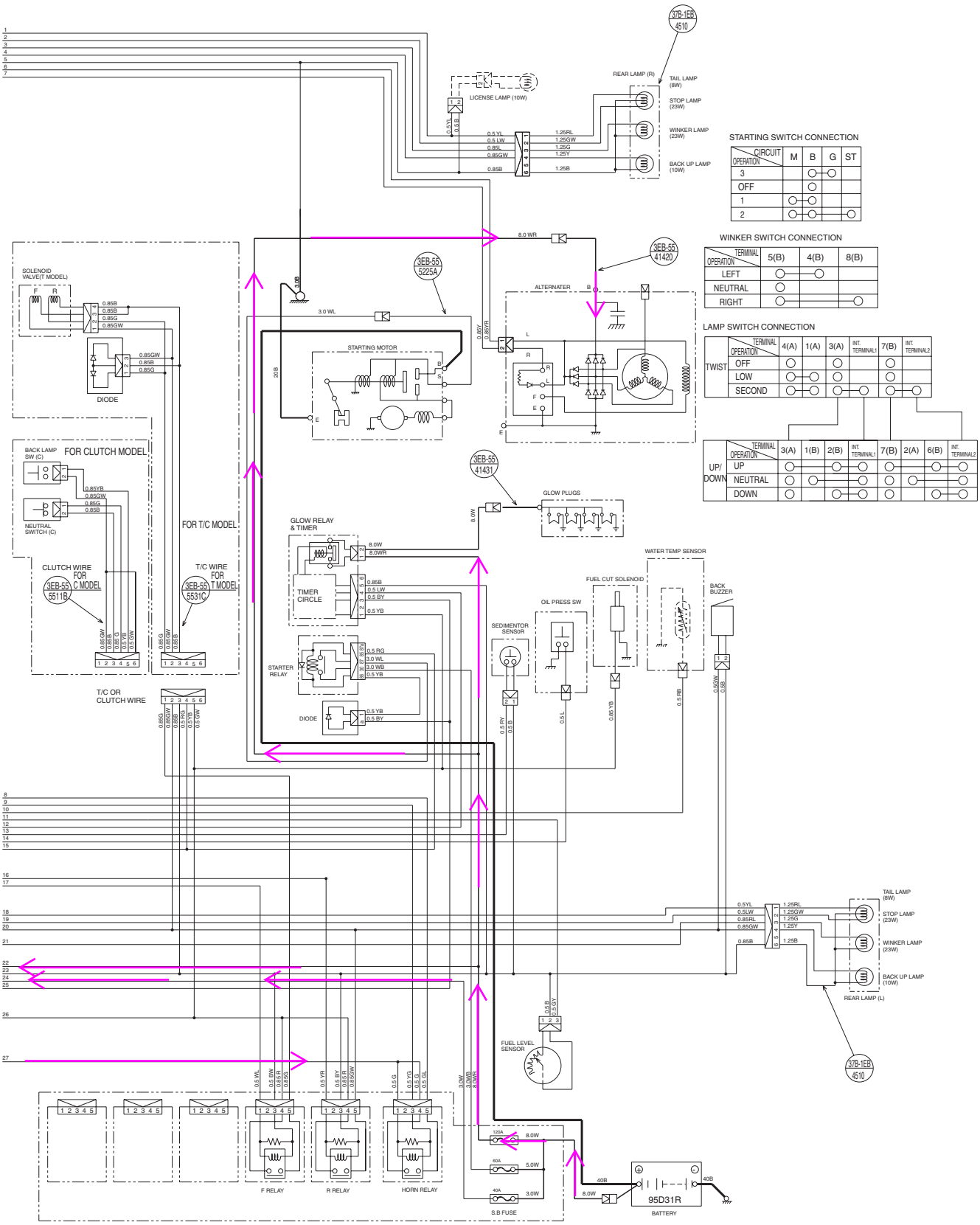

STARTING SWITCH CONNECTION

OPERATION \ CIRCUIT	M	B	G	ST
3		○	○	
OFF		○		
1	○	○		
2	○	○		○

WINKER SWITCH CONNECTION

OPERATION \ TERMINAL	5(B)	4(B)	8(B)
LEFT	○	○	
NEUTRAL	○		
RIGHT	○		○

LAMP SWITCH CONNECTION

	OPERATION \ TERMINAL	4(A)	1(A)	3(A)	INT. TERMINAL1	7(B)	INT. TERMINAL2
TWIST	OFF	○		○		○	
	LOW	○	○	○		○	
	SECOND	○	○	○	○	○	○

	OPERATION \ TERMINAL	3(A)	1(B)	2(B)	INT. TERMINAL1	7(B)	2(A)	6(B)	INT. TERMINAL2
UP/DOWN	UP	○		○	○	○		○	○
	NEUTRAL	○	○		○	○	○		○
	DOWN	○		○	○	○		○	○

80. CRITERIA FOR PERIODICAL INSPECTION AND JUDGMENT

ENGINE 80-2
POWER TRAIN.....80-8
TRAVERING SYSTEM.....80-12
SREERING SYSTEM 80-14
BRAKING SYSTEM 80-16
WORK EQUIPMENT.....80-19
HYDRAULIC SYSTEM.....80-21
CHASSIS AND SAFETY SYSTEM.....80-24
OVERALL TEST.....80-24

Device	Check Item	Check Point
Engine	**1. Engine Start, Noise**	• Position F/R lever in the neutral, pull the parking brake lever down, and start the engine to check the followings **1. Check engine for smooth starting** **2. Check engine for abnormal noise** **3. Check pre-heating valve for proper functioning** **4. Check acceleration pedal and control levers for smooth functioning**
	2. Engine Revolution, Exhaust Emission Color	• Press acceleration pedal to check the followings Press acceleration pedal to check the followings Press acceleration pedal to check the followings **1. Check engine for combustion instability** **2. Check engine for abnormal noise** **3. Check engine for abnormal explosion** **4. Check engine for irregular engine vibratio** **5. Check engine revolution for smooth speed up** **6. Check engine for leakage of exhaust emission**Check engine for leakage of **exhaust emission** **7. Check engine for exhaust emission color** When idling: no color When pressed pedal: faint black color
	3. Idling Speed	• Warm up the engine and stay in idling to check the followings. **1. Idling speed** FG10 – 18: 750 – 900 rpm FG15, 18H: 750 – 900 rpm FG20 – 30: 750 – 900 rpm FG20H – 30H: 750 – 900 rpm FD35A: 750 – 900 rpm FD20 – 30: 820 – 870 rpm FD20H – 30H: 785 – 835 rpm FD35A: 785 – 835 rpm **2. Maximum speed** FG10 – 18: 2,840 – 3,040 rpm FG15, 18H: 2,840 – 3,040 rpm FD10 – 18: 2,650 – 2,700 rpm FG20 – 30: 2,840 – 3,050 rpm FG20H – 30H: 2,700 – 2,900 rpm FD20 – 30: 2,700 – 2,750 rpm FD20H – 30H: 2,700 – 2,750 rpm
	4. Air Cleaner	• Check the air cleaner and element for the following **1. Check air cleaner for cracks or scratches** **2. Check air cleaner for looseness of air cleaner mounting** **3. Check element for dirt or scratches** ★ See the INSPECTION AND ADJUSTMENT for cleaning and replacement of element.
	5. Cylinder Head	**Check cylinder head for looseness of mounting bolt** ★ **See the INSPECTION AND ADJUSTMENT for tightening torque for cylinder head mounting bolt.**

Device	Check Item	Check Point
Engine	**6. Valve Clearance**	**Valve Clearance**
		Unit: mm

Model	Engine	cIntake Valv	Exhaust Valv
FG09L – 18L FG10 – 18	K15	0.38 (Warm)	0.38 (Warm)
FG15H, 18H	K21	0.38 (Warm)	0.38 (Warm)
FD10L – 18L	4LB1	0.25 (Cool)	0.25 (Cool)
FD10 – 18	4D92E	0.2 (Cool)	0.2 (Cool)
FG20 – 30	K21	0.38 (Warm)	0.38 (Warm)
FG20H – 25H	K25	0.38 (Warm)	0.38 (Warm)
FG30, 30N, 35A	K25		
FG20N – 25N	K21	0.38 (Warm)	0.38 (Warm)
FD20 – 30	4D94LE	0.2 (Cool)	0.2 (Cool)v
FD20H – 30H, 35A	4D98E	0.2 (Cool)	0.2 (Cool)
FD20N – 30N	4D94LE	0.2 (Cool)	0.2 (Cool)

★ See the INSPECTION AND ADJUSTMENT for adjusting method

Device	Check Item	Check Point
Engine	**7. Compression**	**Compression**
		Unit : MPa (kgcm^2)/rpm

Model	Engine	Standard	Limit
FG09L – 18L FG10 – 18	K15	1.28 {13.0}/300	1.09 {11.0}/300
FG15H, 18H	K21	1.23 {12.5}/300	1.03 {10.5}/300
FD10L – 18L	4LB1	2.7 {28}/250	2.54 {26}/250
FD10 – 18	4D92E	2.94 {30}/250	2.35 {24}/200
FG20 – 30	K21	1.23 {12.5}/300	1.03 {10.5}/300
FG20H – 25H	K25	1.28 {13.0}/300	1.09 {11.0}/300
FG30, 30N, 35A	K25		
FG20N – 25N	K21	1.28 {13.0}/300	1.09 {11.0}/300
FD20 – 30	4D94LE	2.94 {30}/250	2.35 {24}/200
FD20H – 20H, 35A	4D98E	2.94 {30}/250	2.35 {24}/200
FD20N – 30N	4D94LE	2.94 {30}/250	2.35 {24}/200

★ See the INSPECTION AND ADJUSTMENT for measuring method

Device	Check Item	Check Point
Engine	**8. Fuel Injection Pressure (Diesel Engine Model)**	**Fuel Injection Starting Pressure** Set nozzle tester to check the followings Unit: MPa (kgcm^2) Injection Pressure: 4D92E 11.3 – 12.3 {115 – 125}; 4D94LE, 4D98E 11.8 {120} **Adjustment:** Apply adjusting screw.
	9. Fuel Injection State(Diesel Engine Model)	Check injection nozzle for proper injection Faulty nozzle: Remove the nozzle from the holderRemove carbon stuck to the nozzle and wash in diesel oil. 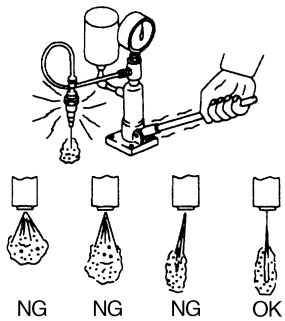
	10. Turbocharger	Not applicable to this model Exclusively for 2 - 3.5 ton models **1. Check turbocharger for abnormal vibration** **2. Check turbocharger for abnormal noise** **3. Check turbocharger for gas leakage**
	11. Engine Mount	**1. Check bracket for cracks or deformation** **2. Check mounting bolt and nut for looseness or coming off** **3. Check anti-vibration rubber for scratches or deterioration**
	12. Lubrication System	**1. Engine Oil** **1) Capacity** Check with oil level gauge and add oil if necessary. K15 Engine 3.8 ℓ K21 Engine 3.8 ℓ K25 Engine 3.8 ℓ H25 Engine 3.8 ℓ 4D92E Engine 7.5 ℓ 4D94LE Engine 7.5 ℓ 4D98E Engine 7.5 ℓ **2) Deterioration** No judgment can be available with visual check. Need periodic replacement. **3) Oil Leakage** **2.** Engine Oil Filte No judgment can be available with visual check. Need periodic replacement.

Device	Check Item	Check Point
Engine	**13. Fuel System**	**1. Check fuel leakage** **2. Csheck scratches or deterioration of hose and pipes** **3. Check fuel filter for proper functioning** No judgment can be available with visual check. Need periodic replacement
	14. High-Pressure Gas Fuel System	**1. Gas leakage** **2. Cracks/damage ot conduit** **3. Looseness/damage ot gas cylinder tixture**
	15. Blow-byGas Return System	**1. Check valve for proper functioning** **2. Check piping for clogging or scratches**
	16. Coolant, Radiaztor	**1. Check coolant for proper level amount** **2. Check hose for water leakage** **3. Check hose for cracks or heat hardening** **4. Check radiator cap for damage** 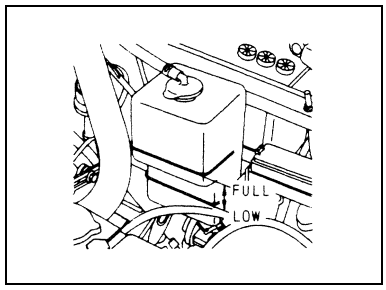 ⚠ **Never remove the radiator cap when the engine coolant is still at high temperature. Extremely hot water may spurt out and cause you hurt.** ⚠ **Wait for engine and coolant to cool down before checking. When removing the radiator cap, turn it slowly to release the internal pressure.** **1) Pressure Adjusting Valve** Check the cap spring for proper tension when pushing it down with your finger. **2) Negative Pressure Valve** Check the valve for proper functioning ★ In case of damaged packing, replace it with radiator cap assembly. 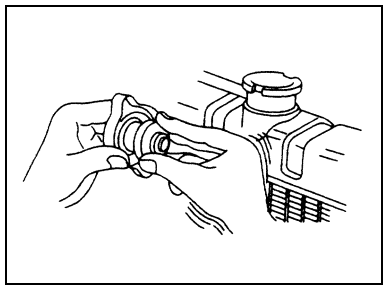 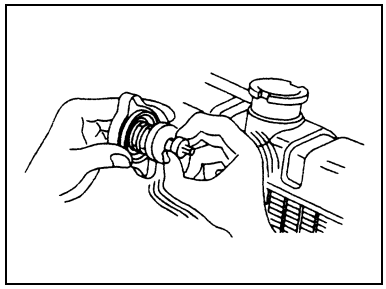

Device	Check Item	Check Point
Engine	**17. Fan, Fan Belt**	**1. Fan Belt** **1) Fan Belt** • Check inside of fan belt for damage • In case of shining pulley at the bottom, replace with a new one to avoid slips. **2) Deflection** Check belt for proper deflection pressing at a point midway between the fan pulley and the alternator with your finger. Hydraulic Pressure: 98 Nm (10 kgf) K15 engine, K21 engine, K25 engine: 11 – 13 mm 4D92E engine, 4D94LE engine, 4D98E engine: 10 – 15 mm 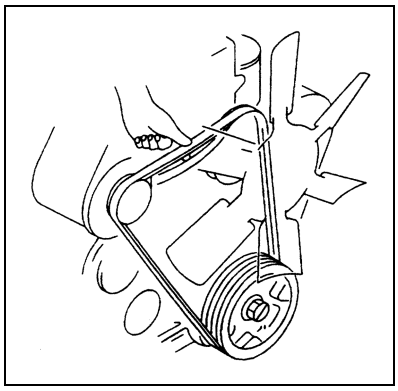 **Adjustment:** Loosen the alternator mounting nut and adjust bar bolt to slide the position of the alternator for your adjustment. **2. Fan, Fan Cover (Shroud)** **1) Check fan for cracks or deformation** **2) Check fan mounting bolt for loosening** **3) Check shroud for cracks or deformation** **4) Check shroud mounting bolt for loosening**
	18. Distributor (Gasoline Model)	**1. Check cap for cracks** **2. Check cable for scratches** **3. Check air gap for proper functioning or damage** **Air gap** (Full-transistor ignition): 0.35 – 0.45 mm

Device	Check Item	Check Point
Engine	**19. Spark Plug, Ignition Timing Gasoline Model)**	

1. Spark Plug

1) Gapv

Remove the plug with the plug wrench and measure the gap with the gauge.

Plug Gap A: 0.7 - 0.8 mm

① Normal
② Badly burn
③ Sooty

★ Replace the ignition plug if it dees not meet the specitication avobe or is burned

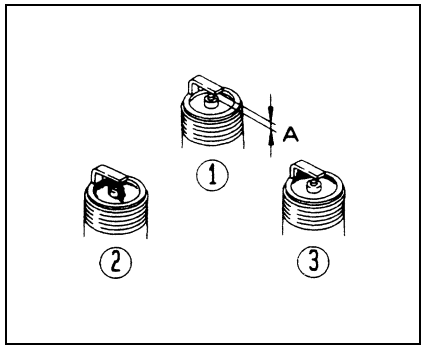

2) Cleaning

Remove the carbon stuck around the plug tip and its surroundings

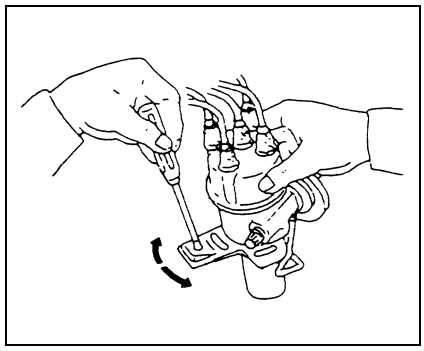

2. Ignition Timing

1) Start the engine and stay in idling

2) Check the injection timing applying the timing light at the timing mark of front cover and crank pulley.

Adjustment:Turn the distributor to adjust ment.

Ignition Timing: (BTDC degrees/rpm)	K15	6/650
	K21	4/650
	K25	

20. Battery Charging System, Wiring

1. Check battery gravity for proper charging

Battery Electrolyte Gravity	Charge Condition	Need for Charging
1.280 1.240	Fully charged 1/4 discharged	No
1.210 1.130	1/2 discharged Fully discharged	Yes

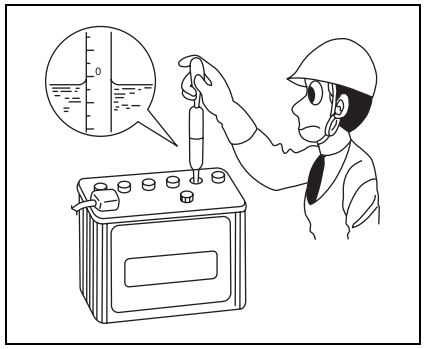

★ In case of insufficient charging, check the alternator.

2. Check battery electrolyte for proper amount level
3. Check battery terminals for loosening or corrosion
4. Check wiring connection for loosening
5. Check wiring for damage

Device	Check Item	Check Point
Power Train	**21. Clutch**	**1. Abnormal sound** Check clutch for abnormal noise when floored the pedal **2. Check pedal height for standard size** Height from floor to pedal: 153 mm **3. Check clutch for smooth engaging and disengagin** Clutch must disengage completely when the clutch pedal is fully depressed. The clutch must engage before the clutch pedal is fully released **4. Check clutch for play** Play: 0 – 4 standard model; 0 – 4 wet-clutch model **5. Check clutch cylinder and piping for oil leakage**
	22. Transmissio	**Check shift lever for clutch model** **1.** **1)** No clutter at neutral position **2)** Smooth shifting **3)** No clutter at each speed position **2. Check F/R Lever for:** Check the tollowing by operating the lever **1)** No clutter at each position **2)** Smooth shifting **3. Check transmission for nois** **1)** Abnormal sound

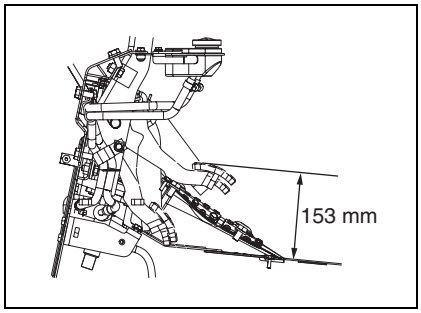

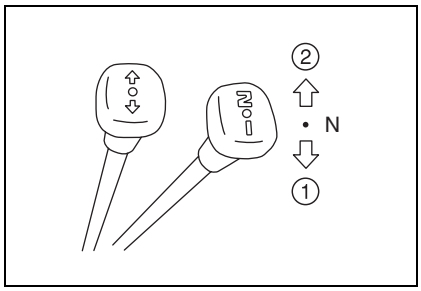

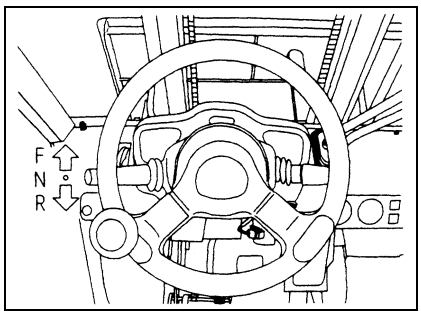

Device	Check Item	Check Point
Power Train	**22. Transmission (To be continued)**	

2) Check transmission for oil leakage

Replace the packing if stained oil becomes oil droplets.

3) Check transmission oil for proper amount level

Park the truck on flat and even surface ground and check with oil lever gauge.

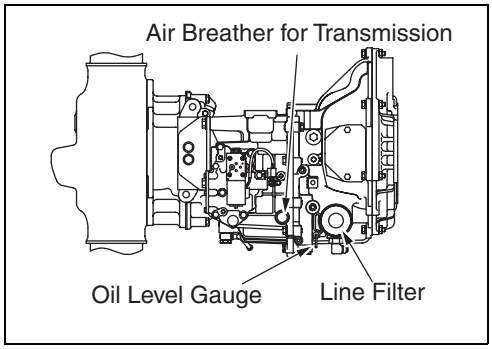

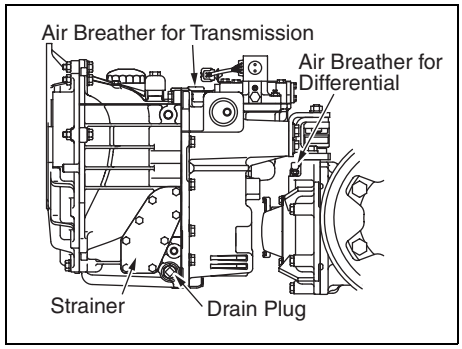

4. Inching Pedal (TORQFLOW type)l

1) Inching spool travelj

Travel (a)	24.5

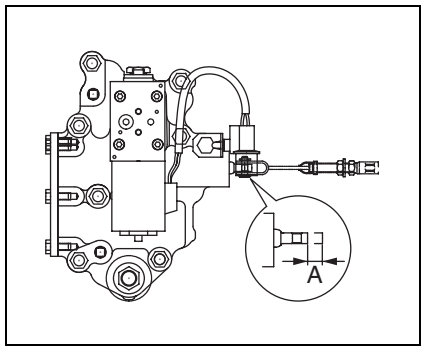

★ Be very careful so that the cable do not press the inching pedal when it is released

2) Interconnected Strok

Adjust the stroke with the adjustment bolt so as to interlock with the brake pedal with the inching pedal being specitied value

1.0 – 1.75 ton forklift trucks	55 – 61 mm
2 .0 – 3.5 ton forklift trucks	35 – 41 mm

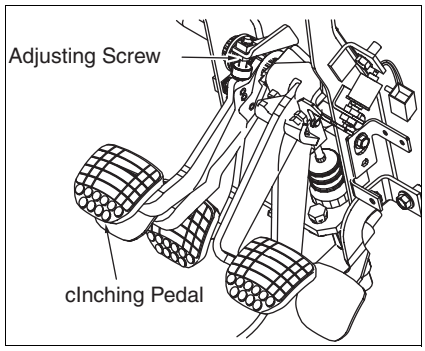

3) Pedal Strokej

1.0 – 1.75 ton forklift trucks	76 – 102 mm
2 .0 – 3.0 ton forklift trucks‘	90 – 116 mm
3.5 ton forklift trucks	80 – 106 mm

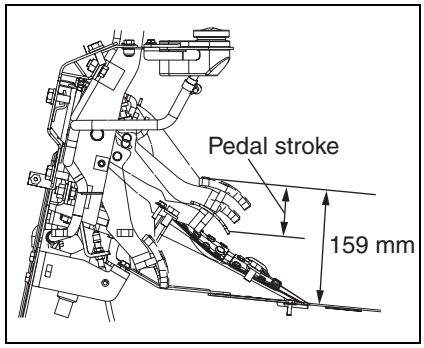

4) Play

Play	0 – 4 mm

Device	Check Item	Check Point
Power Train	**23. Torque Converte**	⚠ **Make sure to place the wheel stoppers at each wheel and apply the parking brake for sure prior to following inspection**

1. Clutch Oil Pressure

Select F/R lever from either direction of forward or reverse and press the pedal for measuring the oil pressure

Clutch Oil Pressure	0.19 – 1.13 Nm (9.3 – 13.4 kgf/cm^2)

2. Stall Speed

Select F/R lever from either direction of forward or reverse and floored the pedal to the maximum speed for measuring the engine speed.

K15 engine	0000 ± 000 prm
K21 engine	0000 ± 000 prm
K25 engine	0000 ± 000 prm
4D92E engine	0000 ± 000 prm
4D94LE engine	0000 ± 000 prm
4D98E engine	0000 ± 000 prm

★ Be careful not to operate too long for the inspection as it may increase in temperature of the oil in the torque converter

3. Torque Converter Inlet Port Pressure: 0.5 – 0.7 MPa (5 – 7 kgf/cm^2)

4. Torque Converter Outlet Port Pressur
Torque Converter Assembly Oil Pressure Port Location

A. Torque Converter Inlet Oil Pressure Measuring Port
B. Main Oil Pressure Measuring Port
C. Lubrication Oil Pressure Measuring Port

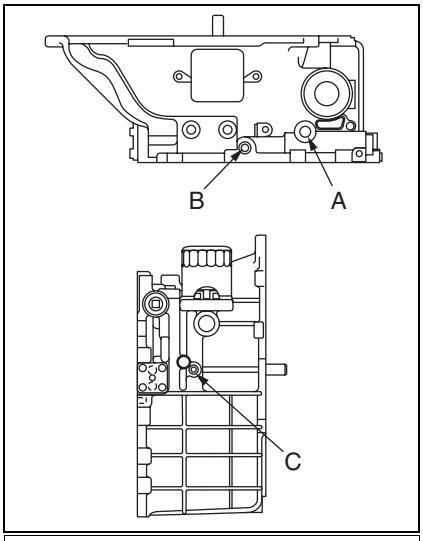

Control Valve Assembly Oil Pressure Port Location

C1. Forward Clutch Oil Pressure Measuring Port (PT1/8z)
C2. Reverse Clutch Oil Pressure Measuring Port
P1. Main Oil Pressure Measuring Port

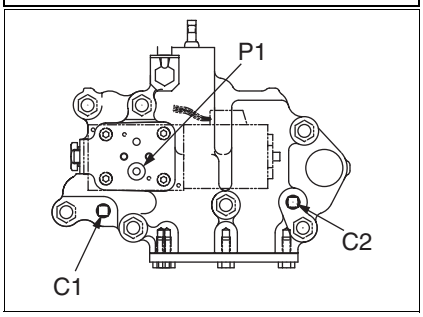

Device	Check Item	Check Point
Power Train	**24. Propeller Shaft**	**Play, Scratches, Looseness of mounting bolt, Damage, Coming off.**
	25. Differential	**1. Abnormal noise when traveling** **2. Oil level in differential casing** Clutch models include trancemission cace **3. Dirt or stain with oil** ★ See “TETING AND ADJUTING” for checking oil level and replacing **4. Oil leakage from differential casing** 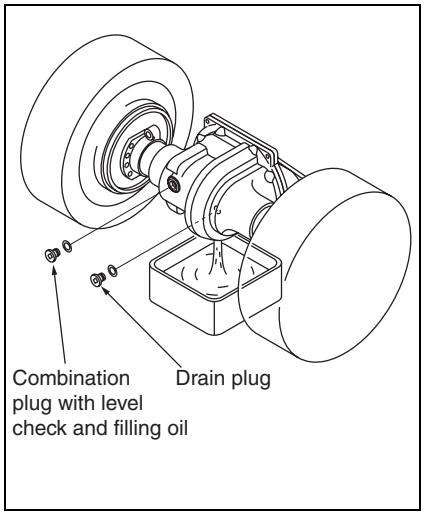

Device	Check Item	Check Point
Traveling System	**27. Front Axle**	**1. Deformation, cracks or scratches** Visual check on and around the main frame and mounting bolt or welded area **2. Looseness of mounting bolt** Tightening torque for mounting bolt

kgm	1.0 - 1.75 ton forklift trucks	343 - 427 Nm (35.0 - 43.5 kgm)
	2.0 - 3.0 ton forklift trucks	490 - 608 Nm (50.0 - 62.0 kgm)
	3.5 ton forklift trucks	662 - 829 Nm (67.5 - 84.5 kgm)

28. Rear Axle

1. Deformation, cracks or scratches
Check visually

2. Play of center pin

3. Clearance of thrust

Clearance (a)	less than 0.5 mm

Adjustment: In case of 2.0 mm and over, adjust with shims to less than 0.5 mm.

Tightening torque for mounting bolt (1)

kgm	490 – 608 Nm (50 – 62.9 kgm)

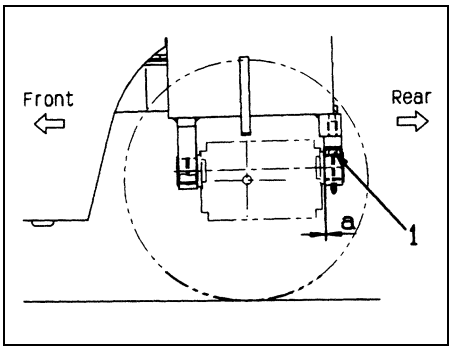

4. Looseness of cap mounting bolt

29. Tires

1. Air pressure

1.0 - 1.75 ton forklift trucks	Front	690 kPa {7.0 kgf/cm^2}
	Rear	790 kPa {8.0 kgf/cm^2}
2.0 - 3.0 ton forklift trucks	Front	690 kPa {7.0 kgf/cm^2}
	Rear	690 kPa {7.0 kgf/cm^2}
3.5 ton forklift trucks	Front	850 kPa {8.5 kgf/cm^2}
	Rear	890 kPa {9.0 kgf/cm^2}

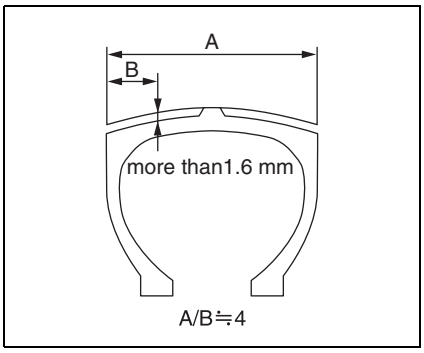

2. Cracks in tread or side wall
Replace with a new one if necessary

3. Depth of tread
Measure the groove depth at point ot a quarter ot the t read width, and check that the depth is at least 1.6 mm .

4. Abnormal wear
Under wear or stepped wear

5. Metal pieces stuck in tire

Device	Check Item	Check Point
Traveling System	**30. Wheel**	**1. Tightening torque for hub nut**

1.0 – 1.75 ton	Front	157 – 245 Nm {16 – 25 kgm}
	Rear	83 –147 Nm {8.5 – 15 kgm}
2.0 – 3.5 ton	Front	294 – 490 Nm {30 – 50 kgm}
	Rear	157 – 245 Nm {16 – 25 kgm}

2. Deformation or cracks of side link

Check visually or by the crack detection method.

3. Tightening torque for rim mating hu

1.0 – 1.75 ton	Front	88 –1 23 Nm {9.0 – 1 2.5 kgm}
	Rear	59 –7 4 Nm {6.0 – 7.5 kgm}
2.0 – 3.5 ton	Front	196 – 294 Nm {20 – 30 kgm} excluding 3 ton forklift truck
	Rear	88 – 123 Nm {9 – 12.5 kgm}

Device	Check Item	Check Point
Steering System	**31. Steering Wheel**	**1. Shaking, pulling or dragging** **2. Steering force (Control force)** **3. Play** Play L: 30 – 60 mm (at engine idling) **Adjustment:** Adjust at gearbox. **4. Looseness or play** 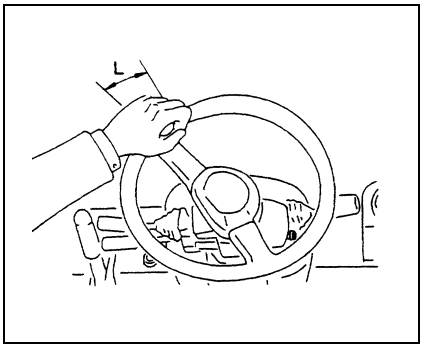
	32. Steering Valve	**1. Oil leakage** **2. Looseness of mounting bolt**
	34. Knuckle	**1. Wheel bearing** Jacking up the truck for inspection **1) Play** Check the play by holding the tire by hand at its top and bottom **2) Noise** Check abnormal sound by turning the tire by hand. **3. King pin** **1) Play** **2) Noise** **4. Knuckle** Damage Check visually or check with the crack detection method

Device	Check Item	Check Point
Steering System	**35. Right and left turning radius**	**Measuring minimum turning radius** **1) Drive the truck by an assistant to make turning radius minimum** **2) Draw a circle with a chalk affixed to outside end of the counterweight** **3) Measure the circle drawn on the ground.** **4) Make both turning to right and left.**
	36. Steering wheel	**1. Loosening or coming off of stopper bolt** **2. Interference between wheel and other part of section**
	37. Power steering	**1. Power steering cylinder and hose oil leakage** **2. Scratches or deterioration of hose** **3. Loosening or coming off of mounting bolt** **4. Interference with truck body**

0.9, 1,0 ton	1,915 mm ± less than 5%
1.5 ton	1,955 mm ± less than 5%
1.75 ton	1,990 mm ± less than 5%
2.0 ton	2,190 mm ± less than 5%
2.5 ton	2,240 mm ± less than 5%

3.0 ton	2,370mm ± less than 5%
3.5ton	2,480 mm ± less than 5%
2.0 ton Compact	1,980mm ± less than 5%
2.5 ton Compact	2,050 mm ± less than 5%
3.0 ton Compact	2,110 mm ± less than 5%

Difference R/L	±100 mm less than

Adjustment: Adjust with the stopper bolt.

Device	Check Item	Check Point
Braking System	**39. Traveling Brake**	**1. Brake pedal** **1) Pedal heigh** Pedal stroke: 1.0 – 1.75 ton: 41 – 61 mm; 2.0 – 3.0 ton: 55 – 75 mm; 3.5 ton: 45 – 65 mm 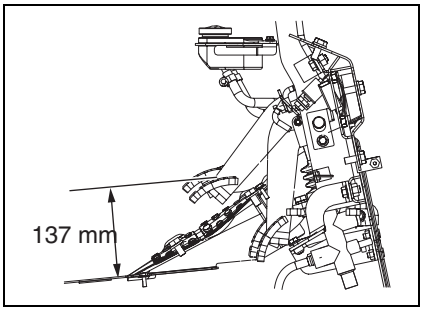 **2) Play** Play: standard model: 0 – 4 mm; oil clutch model: 8 – 12 mm **2. Braking efficiency** Select dry and even surface road, drive in full speed and stop abruptly to check the following. **1) Pulling of steering wheel** **2) Dragging of brakes** **3) Abnormal noise** **4) Stopping distance** Unloaded: within 4.5 m (at max. speed) Loaded: within 2.0 m (at 10 km/h)
	40. Parking Brakes	**1. Parking brake lever** **1) Lever control forcr** Standard brake : 147 - 196 Nm (15 - 20 kgm) Power brake : 245 - 294 Nm (25 - 30 kgm) 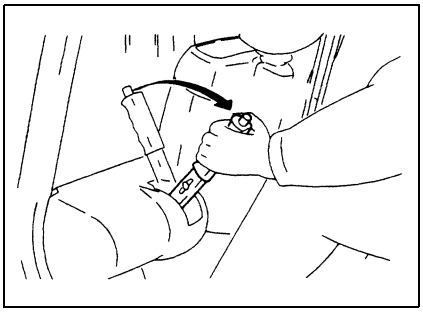 **2) Braking force** Check if the truck can keep stopping on the following slope. Unloaded: slope of 11.2 degrees and over Loaded: slope of 8.5 degrees and over
	41. Rod link, cabl	**1. Scratches, looseness or play** **2. Breakage of cotter pi**
	42. Brake piping	Visual check on pipe, hose and joint **1. Scratches** **2. Oil leakage** **3. Fear of interference or contact** **4. Deterioration of hose** **5. Loosening of mounting bolt**

Device	Check Item	Check Point
Braking System	**43. Oil Brake**	**1. Master cylinder and wheel cylinder** Check the following by operating the brake pedal **1) Weight when pressed the pedal down** **2) Fluctuation of weight** **3) Fluctuation of pedal position when keep pressing the peda** **4) Return of the pedal when putting the pedal off** ★ If you feel a change while pressing the padal with no oil leakage, the brake valve is defective **2. Brake reservoir** **1) oil level amount** **Applicable limit A: 18 mm** **2) Dirt or stain with oil and oil leakage** 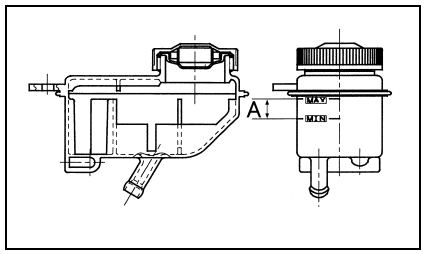 **3. Deterioration of wheel cylinder** Clearance between cylinder and piston: less than 0.15 mm 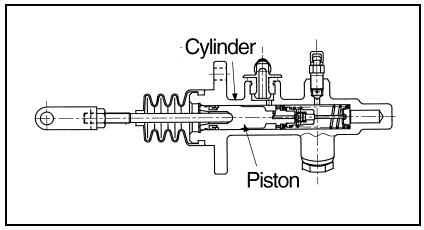
	44. Air Brake	Not applicable to this model.
	45. Brake Booster	**Oil leakage**
	46. Brake Shoe Lining	**1. Brake shoe** Check proper functioning, rust or wea **2. Peeling off, scratches or wear of brake lining** Thickness of lining: more than 1 mm **3. Corrosion of anchor pin** **4. Deterioration of return spring** Free length: Less than 105 mm Thickness of hock: more than 2.0 mm

Device	Check Item	Check Point
Braking System	**47. Brake Drum**	**Cracks scratches or wear of brake drum** Measure the following dimensions, and check whether they are allowable values. Inside diameter of drum: 1.0 – 1.75 ton: less than256 mm Inside diameter of drum: 2.0 – 3.0 ton: less than312 mm
	48. Back Plate	**1.** Deformation, cracks or scratches **2.** Tightening torque for mounting bolt LOCTITE #271 (thread hole) kgm: 176 – 196 Nm {18.0 – 20.0 kgm} 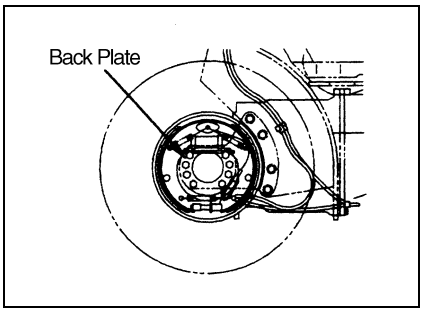
	49. 50. Brake Disc, Pad	Not applicable to this model
	51. 52. Parking Brake Drum, Lining	Common with the travel brake drum, lining. See Nos. 46 and 47.

Device	Check Item	Check Point
Work Equipment	**53. Fork (1)**	**1. Deformation, cracks or wear of fork stopper pin** **2. Opening or difference in height of fork tips** **Opening (a): within 35 mm** 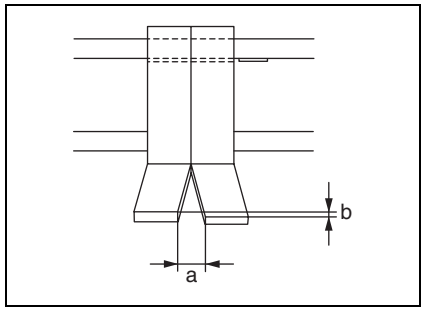 Opening (a): within 35 mm Difference in height (b): within 15 mm
	54. Fork (2)	**1. Cracks or wear of upper and lower hooks** **2. Cracks or wear of fork base/root** Check fork base thickness **(C)** for specified size 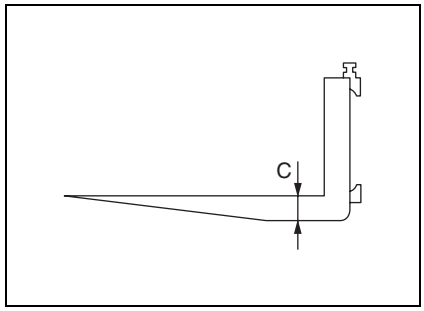 0.9,1.0 ton: more than 26 mm 1.5 ton: more than 30 mm 1.75 ton: more than 33 mm 2 ton: more than 32.5 mm 2.5 ton: more than 36.0 mm 3.0 ton: more than 39.5 mm 3.5 ton: more than 45.0 mm ★ **Check the fork base/root and the hooks where stress is concentrated by the crack detection method**
	55. Mast (1)	**1. Deformation, cracks or wear of mast** Check the following visually or by the crack detection method • mast stay • tilt cylinder bracket • roller shaft weld **2. Wear or play in mast roller and cracks in roller shaft** Upright the mast and lift about 10 cm from the ground to check following clearance. Clearance between outer mast and inner mast: Right and left: within 2.0 mm; Front and rear: within 2.5 mm Clearance between inner mast and fork carriage: Right and left: within 2.0 mm; Front and rear: within 2.5 mm
	56. Mast (2)	**1. Play in mast support** Check mast support for oil groove of bushing **2. Loosening of mast cap mounting bolt** **Loosening of mast cap mounting bolt** kgm: 1.0 – 1.75 ton: 157 – 196 Nm {16.0 – 20.0 kgm} 2.5 ton: 245 – 309 Nm {25.0 – 31.5 kgm} 2.5 ton (Compact), 3.0 ton: 343 – 427 Nm {35.0 – 43.5 kgm} 3.5 ton: 490 – 608 Nm {50.0 – 62.0 kgm}

Device	Check Item	Check Point
Work Equipment	**57. Fork Carriage**	**1. Deterioration, cracks or scratches of fork carriage** **2. Wear or play in roller** **3. Play in roller shaft**
	58. Lift Chain	**1. Chain tension** Put the mast straight horizontally and lift the forks about 10 cm from the ground to check lift chain for proper tension by your finger. Adjustment should be made with chain stopper. **2. Elongation** Check link for specified length (L) 17link for specified length (L) 1 ton: within 275.5 mm 2 – 2.5 ton: within 330 mm 2.75 – 3 ton: within 550 mm 3.5 ton: within 440 mm 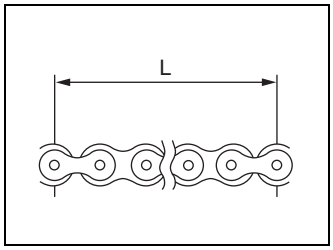 **3. Thread of anchor bolt** Make visual check
	59. Chain Whee	**Deformation, scratches or play in wheel** • Check visually chain and its contact surface • Turn by hand and check wheel for play in bearing
	60. Work Equipment System (1)	**1. Check work equipment for proper installation to the truck** **2. Check each bolt and nut for proper tightening**
	61. Work Equipment System (2)	**1. Check work equipment for cracks, scratches or wear of each section** **2. Check work equipment for proper functioning and abnormal noise of each section**

Device	Check Item	Check Point
Hydraulic System	**62. Hydraulic Tank**	**1. Oil leakage** **2. Oil level amoun** Check with oil level gauge and add oil if necessary. (Also check oil contamination) **3. Cleaning of strainer** **4. Replacement of line filter** 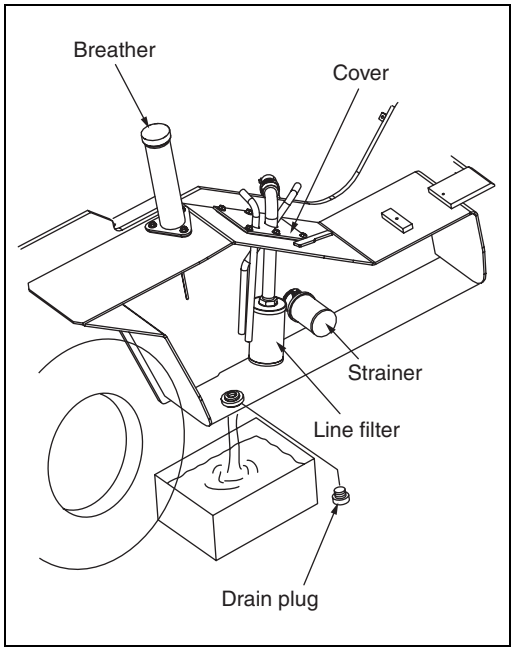 ★ **see "TETING AND ADJUTING" for checking oil level and replacing**
	63. Piping of Truck	**1. Cracks, scratches, deterioration or twist of piping** **2. Oil leakage** **3. Loosening of mounting bolt and nut**
	64. Piping of Work Equipment	**1. Cracks, scratches, deterioration or twist of piping** **2. Oil leakage** **3. Loosening of mounting bolt and nut**
	65-1. Hydraulic Pump	**1. Oil leakage** **2. Abnormal vibration** **3. Noise** **4. Abnormal wear of spline** **5. Loosening of mounting bolt**
	65-2. Flow Divider (For Power Steering)	**1. Oil leakage** **2. Noise** **3. Looseness of mounting bolt**
	66. Oil Motor	**1. Oil leakage** **2. Noise** **3. Looseness of mounting bolt**
	67. Lift Cylinder	**1. Actuation, oil leakage** **2. Dents, cracks, curvature or scratches** **3. Looseness of mounting bolt**

Device	Check Item	Check Point
Hydraulic System	**68. Tilt Cylinder**	**1. Actuation, oil leakage** **2. Dents, cracks, curvature or scratches** **3. Looseness of mounting bolt**
	69. Reach Cylinder	Not applicable for this model
	70. Work Equipment Cylinde	**1. Actuation, oil leakage** **2. Dents, cracks, curvature or scratches** **3. Looseness of mounting bolt**
	71. Hydraulic drift of lift cylinder and tilt cylinder	**1) Load the forks with maximum payload and set the mast (1) upright, lift the forks approx. 1,500 mm from the ground.** **2) Match the straight measure (1) on the piston rod of the tilt cylinder (2) and put the mark (A) for measurement,** **3) Match the straight measure (2) on the piston rod of the tilt cylinder (3) and put the mark (B) for measurement,**

Hydraulic drift of lift cylinder	When measured at fork	100 mm/ within 15 min
	When measured at cylinder	50 mm/ within 15 min
Hydraulic drift of tilt cylinder	30 mm/15 min	

Adjustment:
Replace control valve and cylinder packing

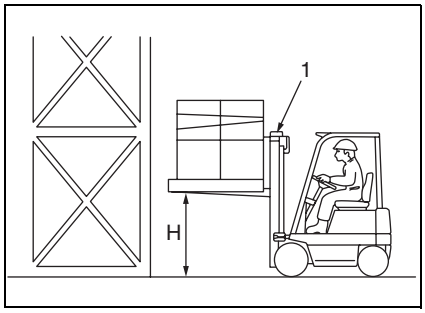

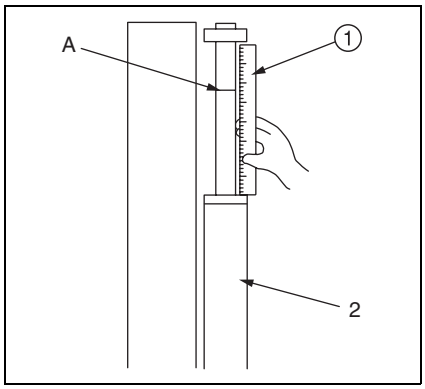

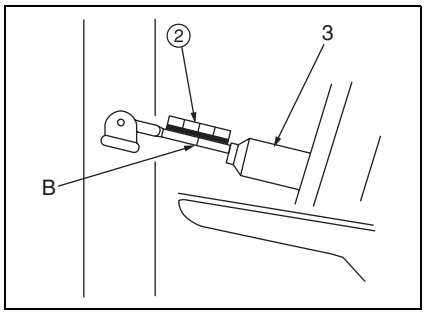

<table>
<tr><th>Device</th><th>Check Item</th><th>Check Point</th></tr>
<tr><td rowspan="3">Hydraulic System</td><td>72. Directional Control Valve (1)</td><td>1. Actuation and oil leakage

2. Looseness of mounting bolt</td></tr>
<tr><td>73. Directional Control Valve (2)</td><td>Measure relief pressure
1) Install an oil pressure gauge to port (A).
2) Lift the forks to the maximum lifting height, measure the oil pressure when the oil is relieved, and check it for specified level

Relief set pressure
<table><tr><td>1.0 – 1.75 ton</td><td>17.2 MPa
{175 kgf/cm^2}</td></tr><tr><td>2.0 – 3.0 ton</td><td>17.7 – 18.6 MPa
{180 – 190 kgf/cm^2}</td></tr></table>
 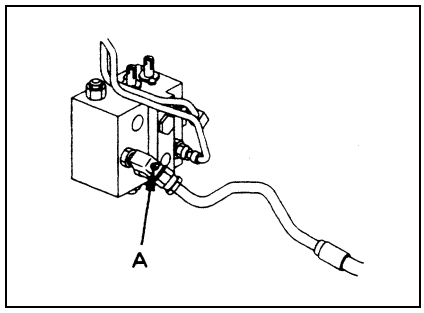

A: Control valve relief pressure measurement port</td></tr>
<tr><td>74. Solenoid Valve</td><td>1. Actuation, abnormal noise

2. Abnormal generation of heat

3. Oil leakage</td></tr>
</table>

Device	Check Item	Check Point
Chassis and Safety System	**75. Chassis frame, chassis**	**1. Cracks or deformation** **2. Looseness or coming off of mounting bolt**
	76. Cab	**1. Cracks or deformation** **2. Corrosion or leakage of rain** **3. Opening/closing of door, lock play or breakage**
	77. Seat	**1. Actuation** **2. Looseness of mounting bolt**
	78. Devices for getting on/off forklift truck, anti-slip	**1. Cracks, damage or deformation** **2. Looseness of mounting bolt**
	79. Display panel	**1. Damage** **2. Mounting condition**
	80. Overhead Guard	**1. Looseness of mounting** **2. Deformation, cracks or damage**
	81. Backlest	**1. Looseness of mounting bolt** **2. Deformation, cracks or damage**
	82. Lights, gauges. Warning devices	**1. Lighting up of lamps** **2. Mounting condition, breakage or leakage of water** **3. Actuation of gauges**
	83. Rear view mirror, reflector	**1. Dirt or damage** **2. Reflectio**
	84. Lubrications	**1. Oil, greasing condition** **Actuation of auto-greasing system**
Overall Test	**85. Function of each system**	Carry out travel, operation test to check.

90. CONVERSION TABLE

MILLIMENTERS TO INCHES.....80-2
INCHES TO MILLIMETERS 80-2
CUBIC METERS TO CUBIC YARDS 80-3
CUBIC YARDS TO CUBIC METERS 80-3
LITER TO U.S. GALLON 80-4
U.S. GALLON TO LITER 80-4
LITER TO U.K. GALLON 80-5
U.K. GALLON TO LITER 80-5
KIKOGRAM TO POUND.....80-6
POUND TO KILOGRAM 80-6
KG/CM^2 TO IB/IN^2 80-7
KGM TO FT IB.....80-8
TEMPERATURE 80-9

CONVERSION TABLE

Millimeters to Inches **1mm=0.03937 in**

	0	1	2	3	4	5	6	7	8	9
0		0.039	0.079	0.118	0.157	0.197	0.236	0.276	0.315	0.354
10	0.394	0.433	0.472	0.512	0.551	0.591	0.630	0.669	0.709	0.748
20	0.787	0.827	0.866	0.906	0.945	0.984	1.024	1.063	1.102	1.142
30	1.181	1.220	1.260	1.299	1.339	1.378	1.417	1.457	1.496	1.536
40	1.575	1.614	1.654	1.693	1.732	1.772	1.881	1.850	1.890	1.929
50	1.969	2.008	2.047	2.087	2.126	2.165	2.205	2.244	2.283	2.323
60	2.362	2.402	2.441	2.480	2.520	2.559	2.598	2.638	2.677	2.717
70	2.756	2.795	2.835	2.874	2.913	2.953	2.992	3.032	3.071	3.110
80	3.150	3.189	3.228	3.268	3.307	3.346	3.386	3.425	3.465	3.504
90	3.543	2.583	3.622	3.661	3.701	3.740	3.780	3.819	3.858	3.898

Inches to Millimeters

	0.1	0.01	0.02	0.03	0.04	0.05	0.06	0.07	0.08	0.09
0		0.254	0.508	0.762	1.016	1.270	1.524	1.778	2.032	2.286
0.1	2.540	2.794	3.048	3.302	3.556	3.810	4.064	4.318	4.572	4.826
0.2	5.080	5.334	5.588	5.842	6.096	6.350	6.604	6.858	7.112	7.366
0.3	7.620	7.874	8.128	8.382	8.636	8.890	9.144	9.398	9.652	9.906
0.4	10.160	10.414	10.668	10.922	11.176	11.430	11.684	11.938	12.192	12.446
0.5	12.700	12.954	13.208	13.462	13.716	13.970	14.224	14.478	14.732	14.986
0.6	15.240	15.494	15.748	16.002	16.256	16.510	16.764	17.018	17.272	17.526
0.7	17.780	18.034	18.288	18.542	18.796	19.050	19.304	19.558	19.812	20.066
0.8	20.320	20.574	20.828	21.082	21.336	21.590	21.844	22.098	22.352	22.606
0.9	22.860	23.114	23.368	23.622	23.876	24.130	24.384	24.638	24.892	25.146

Cubic meters to Cubic yards **$1m^3$= 1.308 cu.yd**

	0	1	2	3	4	5	6	7	8	9
		1.31	2.62	3.92	5.23	6.54	7.85	9.16	10.46	11.77
10	13.08	14.39	15.70	17.00	18.31	19.62	20.93	22.24	36.62	24.85
20	26.16	27.47	28.78	30.08	31.39	32.70	34.01	35.32	36.62	27.93
30	39.24	40.55	41.86	43.16	44.47	45.78	47.09	48.40	49.70	51.01
40	52.32	53.63	54.94	56.24	57.55	58.86	60.17	61.48	62.78	64.09
50	65.40	66.71	68.02	69.32	70.63	71.94	73.24	74.56	75.86	77.17
60	78.48	79.79	81.10	82.40	83.71	85.02	86.33	87.64	88.94	90.25
70	91.56	92.87	94.18	95.48	96.79	98.10	99.41	100.72	102.02	103.33
80	104.64	105.95	107.26	108.56	109.87	111.18	112.49	113.80	115.10	116.41
90	117.72	119.03	120.34	121.64	122.95	124.26	125.57	126.88	128.18	129.49

Cubic yards to Cubic meters

	0	1	2	3	4	5	6	7	8	9
		0.76	1.53	2.29	3.06	3.82	4.59	5.35	6.12	6.88
10	7.65	8.41	9.18	9.94	10.70	11.47	12.23	13.00	13.76	14.53
20	15.29	16.06	16.82	17.59	18.35	19.12	19.88	20.64	21.41	22.17
30	22.94	23.70	24.47	25.23	26.00	26.76	27.53	28.29	29.05	29.82
40	30.58	31.35	32.11	32.88	33.64	34.41	35.17	35.94	36.70	37.47
50	38.23	38.99	39.76	40.52	41.29	42.05	42.82	43.58	44.35	45.11
60	45.88	46.64	47.41	48.17	48.93	49.70	50.46	51.23	51.99	52.76
70	53.52	54.29	55.05	55.82	56.58	57.35	58.11	58.57	59.64	60.40
80	61.17	61.93	62.70	63.46	64.23	64.99	65.76	66.52	67.28	68.05
90	68.81	69.58	70.34	71.11	71.87	72.64	73.40	74.17	74.93	75.70

Liter to U.S. Gallon **1 ℓ = 0.2642 U.S. Gal**

	0	1	2	3	4	5	6	7	8	9
		0.264	0.528	0.793	1.057	1.321	1.585	1.849	2.113	2.378
10	2.642	2.906	3.170	3.434	3.698	3.963	4.227	4.491	4.755	5.019
20	5.283	5.548	5.812	6.076	6.340	6.604	6.869	7.133	7.397	7.661
30	7.925	8.189	8.454	8.718	8.982	9.246	9.510	9.774	10.039	10.303
40	10.567	10.831	11.095	11.359	11.624	11.888	12.152	12.416	12.680	12.944
50	13.209	13.473	13.737	14.001	14.265	14.529	14.795	15.058	15.322	15.586
60	15.850	16.115	16.379	16.643	16.907	17.171	17.435	17.700	17.964	18.228
70	18.492	18.756	19.020	19.285	19.549	19.813	20.077	20.341	20.605	20.870
80	21.134	21.398	21.662	21.926	22.190	22.455	22.719	22.983	23.247	23.511
90	23.775	24.040	24.304	24.568	24.832	25.096	25.361	25.625	25.889	26.153

U. S. Gallon to Liter **1 U.S. Gal = 3.7854 ℓ**

	0	1	2	3	4	5	6	7	8	9
		3.79	7.57	11.36	15.14	18.93	22.71	26.50	30.28	34.07
10	37.85	41.64	45.43	49.21	53.00	56.78	60.57	64.35	68.14	71.92
20	75.71	79.49	83.28	87.06	90.85	94.64	98.42	102.21	105.99	109.78
30	113.56	117.35	121.13	124.92	128.70	132.49	136.27	140.06	143.85	147.63
40	151.42	155.20	158.99	162.77	166.56	170.34	174.13	177.91	181.70	185.49
50	189.27	193.06	196.84	200.63	204.41	208.20	211.98	215.77	219.55	223.34
60	227.12	230.91	234.70	238.48	242.27	246.05	249.84	353.62	257.41	261.19
70	264.98	268.76	272.55	276.33	280.12	283.91	287.69	291.48	295.26	299.05
80	302.83	306.62	310.40	314.19	317.97	321.76	325.55	329.33	333.12	336.90
90	340.69	344.47	348.26	352.04	355.83	359.61	363.40	367.18	370.97	374.76

Liter to U.K. Gallon **1 ℓ = 0.21997 U.K. Gal**

	0	1	2	3	4	5	6	7	8	9
		0.200	0.440	0.660	0.880	1.100	1.320	1.540	1.760	1.980
10	2.200	2.420	2.640	2.860	3.080	3.300	3.520	3.740	3.950	4.179
20	4.399	4.619	4.839	5.059	5.279	5.499	5.719	5.939	6.159	6.379
30	6.599	6.819	7.039	7.259	7.479	7.969	7.919	8.139	8.359	8.579
40	8.799	9.019	9.239	9.459	9.679	9.899	10.119	10.339	10.559	10.778
50	10.998	11.281	11.438	11.658	11.878	12.098	12.318	12.528	12.758	12.978
60	13.198	13.418	13.638	13.858	14.078	14.298	14.518	14.738	14.958	15.178
70	15.398	15.618	15.838	16.058	16.278	16.498	16.718	16.938	17.158	17.378
80	17.598	17.818	18.037	18.257	18.477	18.697	18.917	19.137	19.357	19.577
90	19.797	20.017	20.237	20.457	20.677	20.897	21.117	21.337	21.557	21.777

U. K. Gallon to Liter **1 U.K. Gal = 4.5461 ℓ**

	0	1	2	3	4	5	6	7	8	9
		4.55	90.09	13.64	18.18	22.73	27.28	31.82	36.37	40.92
10	45.64	50.01	54.55	59.10	63.65	68.19	72.74	77.28	81.83	86.38
20	90.92	95.47	100.01	104.56	109.11	113.65	118.20	112.74	127.29	131.84
30	136.38	140.93	145.47	150.02	154.57	159.11	163.66	168.21	172.75	177.30
40	181.84	186.39	190.94	195.48	200.03	204.57	209.12	213.67	218.21	222.76
50	227.30	231.85	236.40	240.94	245.49	250.03	254.18	259.13	263.67	268.22
60	272.77	277.31	281.86	286.40	290.95	295.50	300.04	304.59	309.13	313.68
70	318.23	322.77	327.32	331.86	336.41	340.96	345.50	350.05	354.60	359.14
80	363.69	368.23	372.78	377.33	381.87	386.42	390.96	395.51	400.06	404.60
90	409.15	413.69	418.24	422.79	427.33	431.88	436.42	440.97	445.52	450.06

Kilogram to Pound **1Kg = 2.2046 lb**

	0	1	2	3	4	5	6	7	8	9
		2.20	4.41	6.61	8.82	11.02	13.23	15.43	17.64	19.84
10	22.05	24.25	26.46	28.66	30.86	33.07	35.27	37.48	39.68	41.89
20	44.09	46.30	48.50	50.71	51.91	55.12	57.32	59.53	61.73	63.93
30	66.14	68.34	70.55	72.75	74.96	77.16	79.37	81.57	83.78	85.98
40	88.18	90.39	92.59	94.80	97.00	99.21	101.41	103.62	105.82	108.03
50	110.23	112.44	114.64	116.85	119.05	121.25	123.46	125.66	127.87	130.07
60	132.28	134.48	136.69	138.89	141.10	143.30	145.51	147.71	149.91	152.12
70	154.32	156.53	158.73	160.94	163.14	165.35	167.55	169.76	171.96	174.17
80	176.37	178.57	180.78	182.98	185.19	187.39	189.60	191.80	194.01	196.21
90	198.42	200.62	202.83	205.03	207.24	209.44	211.64	213.85	216.05	218.26

Pround to Kilogram **1 lb = 0.4536Kg**

	0	1	2	3	4	5	6	7	8	9
		0.454	0.907	1.361	1.814	2.268	2.722	3.175	3.629	4.082
10	4.536	4.990	5.443	5.897	6.350	6.804	7.257	7.711	8.165	8.618
20	9.072	9.525	9.979	10.433	10.886	11.340	11.793	12.247	12.701	13.154
30	13.608	14.061	14.515	14.969	15.422	15.876	16.329	16.783	17.237	17.690
40	18.144	18.597	19.051	19.505	19.958	20.412	20.865	21.319	21.772	22.226
50	22.680	23.133	23.587	24.040	24.494	24.948	25.401	25.855	26.308	26.762
60	27.216	27.669	28.123	28.576	29.030	29.484	29.937	30.391	30.844	31.298
70	31.752	32.205	32.659	33.112	33.566	34.019	34.473	34.927	35.380	35.843
80	36.287	36.741	37.195	37.648	38.102	38.555	39.001	39.463	39.916	40.370
90	40.823	41.277	41.731	42.184	42.638	43.091	43.545	43.999	44.452	44.906

Kg/cm^2 to lb/in^2 **1Kg/cm^2 = 14.2233 lb/in^2**

	0	1	2	3	4	5	6	7	8	9
		14.2	28.4	42.7	56.9	71.1	85.3	99.6	113.8	128.0
10	142.2	156.5	170.7	184.9	199.1	213.4	227.6	241.8	256.0	270.2
20	284.5	298.7	312.9	327.1	341.4	355.6	369.8	384.0	398.3	412.5
30	426.7	440.9	455.1	469.4	483.6	497.8	512.0	526.3	540.5	554.7
40	568.9	583.2	597.4	611.6	625.8	640.1	654.3	668.5	682.7	696.9
50	711.2	725.4	739.6	753.8	768.1	782.3	796.5	810.7	825.0	839.2
60	853.4	867.6	881.8	896.1	910.3	924.5	938.7	953.0	967.2	981.4
70	995.6	1010	1024	1038	1053	1067	1081	1095	1109	1124
80	1138	1152	1166	1181	1195	1209	1223	1237	1252	1266
90	1280	1294	1309	1323	1337	1351	1365	1380	1394	1408
100	1422	1437	1451	1465	1479	1493	1508	1522	1536	1550
110	1565	1579	1593	1607	1621	1636	1650	1644	1678	1693
120	1707	1721	1735	1749	1764	1778	1792	1806	1821	1835
130	1849	2863	1877	1892	1906	1920	1934	1946	1963	1977
140	1991	2005	2020	2034	2048	2062	2077	2091	2105	2119
150	2134	2148	2162	2176	2190	2205	2219	223	2247	2262
160	2276	2290	2304	2318	2333	2347	2361	2375	2389	2404
170	2418	2432	2446	2360	2475	2489	2503	2518	2532	2546
180	2560	2574	2589	2603	2617	2631	2646	2660	2674	2688
190	2702	2717	2731	2745	2759	2773	2788	2802	2816	2830
200	2845	2859	2873	2887	2901	2916	2930	2944	2958	2973
210	2987	3001	3015	3030	3044	3058	3072	3086	3101	3115
220	3129	3143	3158	3172	3186	3200	3124	3229	3243	3257
230	3271	3286	3300	3314	3328	3343	3357	3371	3385	3399
240	3414	3428	3442	3456	3470	3485	3499	3513	3527	3542

Kgm to ft. lb **1Kg.m = 7.233 ft. lb**

	0	1	2	3	4	5	6	7	8	9
		7.2	14.5	21.7	28.9	36.2	43.4	50.6	57.9	65.1
10	72.3	79.6	86.8	94.0	101.3	108.5	115.7	123.0	130.2	137.4
20	144.7	151.9	159.1	166.4	173.6	180.8	188.1	195.3	202.5	209.8
30	217.0	224.2	231.5	238.7	245.9	253.2	260.4	267.6	274.9	282.1
40	289.3	396.6	303.8	311.0	318.3	325.5	332.7	340.0	347.2	354.4
50	361.7	368.9	376.1	383.4	390.6	397.8	405.1	412.3	419.5	426.8
60	434.0	441.2	448.5	455.7	462.9	470.2	477.4	484.6	491.8	499.1
70	506.3	513.5	520.8	528.0	535.2	542.5	549.7	556.9	564.2	571.4
80	578.6	585.9	593.1	600.3	607.6	614.8	622.0	629.3	636.5	643.7
90	651.0	658.2	665.4	672.7	679.9	687.1	694.4	701.6	708.8	716.1
100	723.3	730.5	737.8	745.0	752.2	759.5	766.7	773.9	781.2	788.4
110	795.6	802.9	810.1	817.3	824.6	831.8	839.0	846.3	853.5	860.7
120	868.0	875.2	882.4	889.7	896.9	904.1	911.4	918.6	925.8	933.1
130	940.3	947.5	954.8	962.0	969.2	976.5	983.7	990.9	998.2	1005.4
140	1012.6	1019.9	1027.1	1034.3	1041.5	1048.8	1056.0	1063.2	1070.5	1077.7
150	1084.9	1092.2	1099.4	1106.6	1113.9	1121.1	1128.3	1135.6	1142.8	1150.0
160	1157.3	1164.5	1171.7	1179.0	1186.2	1193.4	1220.7	1207.9	1215.1	1222.4
170	1129.6	1236.8	1244.1	1251.3	1258.5	1265.8	1273.0	1280.1	1287.5	1294.7
180	1301.9	1309.2	1316.4	1323.6	1330.9	1338.1	1345.3	1352.6	1359.8	1367.0
190	1374.3	1381.5	1388.7	1396.0	1403.2	1410.4	1417.7	1424.9	1432.1	1439.4

Temperature

Fahrenheit–Centigrade Conversion. –A simple way to convert a Fahrenheit temperture reading into a Centigraqde temperature reading or vice versa is to enter the accompanying table in the center or boldface column of figures.
These figures refer to the temperature in either Fahrenheit or Centigrade degrees.
If it is desired it convert from Fahrenheit to Centigrade degrees, consider the center column as a table of Fahrenheit temperatures abd read the corresponding Centigrade temperature in the column at the left.
If it is desired to convert from Centigrade to Fahrenheit degrees, consider the center column as a table of Centigrade velues, and read the corresponding Fahrenheit temperature on the right.

°C		°F	°C		°F	°C		°F	°C		°F
–40.4	–40	–40.9	–11.7	11	51.8	7.8	46	114.8	27.2	81	117.8
–37.2	–35	–31.0	–11.1	12	53.6	8.3	47	116.6	27.8	82	179.6
–34.4	–30	–22.0	–10.6	13	55.4	8.9	48	118.4	28.3	83	181.4
–31.7	–25	–13.0	–10.0	14	57.2	9.4	49	120.2	28.9	84	183.2
–28.9	–20	–4.0	–9.4	15	59.0	10.0	50	122.0	29.4	85	185.0
–28.3	–19	–2.2	–8.9	16	60.8	10.6	51	123.8	30.0	86	186.8
–27.8	–18	–0.4	–8.6	17	62.6	11.1	52	125.6	30.6	84	188.6
–27.2	–17	1.4	–7.8	18	64.4	11.7	53	127.4	31.1	88	190.4
–26.7	–16	3.2	–7.2	19	66.2	12.2	54	129.2	31.7	89	192.2
–26.1	–15	5.0	–6.7	20	68.0	12.8	55	131.0	32.2	90	194.0
–25.6	–14	6.8	–6.1	21	69.8	13.3	56	132.8	32.8	91	195.8
–25.0	–13	8.6	–5.6	22	71.6	13.9	57	134.6	33.3	92	197.6
–24.4	–12	10.4	–5.0	23	73.4	14.4	58	136.4	33.9	93	199.4
–23.9	–11	12.2	–4.4	24	75.2	15.0	59	138.2	34.4	94	201.2
–23.3	–10	14.0	–3.9	25	77.0	15.6	60	140.0	35.0	95	203.0
–22.8	–9	15.8	–3.3	26	78.8	16.1	61	141.8	35.6	96	204.8
–22.2	–8	17.6	–2.8	27	80.6	16.7	62	143.6	36.1	97	206.6
–21.7	–7	19.4	–2.2	28	82.4	17.2	63	145.4	36.7	98	208.4
–21.1	–6	21.2	–1.7	29	84.2	17.8	64	147.2	37.2	99	210.2
–20.6	–5	23.0	–1.1	30	86.0	18.3	65	149.0	37.8	100	212.0
–20.0	–4	24.8	–0.6	31	87.8	18.9	66	150.8	40.6	105	221.0
–19.4	–3	26.6	0	32	89.6	19.4	67	152.6	43.3	110	230.0
–18.9	–2	28.4	0.6	33	91.4	20.0	68	154.4	46.1	115	239.0
–18.3	–1	30.2	1.1	34	93.2	20.6	69	156.2	48.9	120	248.0
–17.8	0	32.0	1.7	35	95.0	21.1	70	158.0	51.7	125	257.0
–17.2	1	33.8	2.2	36	96.8	21.7	71	159.8	54.4	130	266.0
–16.7	2	35.6	2.8	37	98.6	22.2	72	161.6	57.2	135	275.0
–16.1	3	37.4	3.3	38	100.4	22.8	73	163.4	60.0	140	284.0
–15.8	4	39.2	3.9	39	102.2	23.3	74	165.2	62.7	145	293.0
–15.0	5	41.0	4.4	40	104.0	23.9	75	167.0	65.6	150	302.0
–14.4	6	42.8	5.0	41	105.8	24.4	76	168.8	68.3	155	311.0
–13.9	7	44.6	5.6	42	107.6	25.0	77	170.6	71.1	160	320.0
–13.3	8	46.4	6.1	43	109.4	25.6	78	172.4	73.9	165	329.0
–12.8	9	48.2	6.7	44	112.2	26.1	79	174.2	76.7	170	338.0
–12.2	10	50.0	7.2	45	113.0	26.7	80	176.0	79.4	175	347.0