https://truckmanualshub.com/ 1

HYDREMA US INC.
Call +1 404 614 1747

MORE INFO
www.hydrema.us

HYDREMA

HYDREMA

Hydrema

922D 922HM

DUMP TRUCKS

HYDREMA 922D/922HM SERIES

Versatile 22 T dump truck for terrain and road.

The 922D/922HM Series is the obvious choice for soft, muddy terrain or for areas with sensitive ground conditions where the lowest possible ground pressure is required. The dump truck gets through regardless of terrain and without damaging the surface.

The Hydrema 922D/922HM Series, 22 T Dump Truck, does in many ways break with the usual design principles for dump trucks of this class.

Developed for Sensitive and Difficult Terrain

A low unladen weight, the entirely unique articulated pivot joint, 'genuine' bogie axles with an ample steering angle, as well as the market's best power/weight ratio, gives the 922D/922HM Series unrivalled terrain manoeuvrability. Where others have to give up, this dump truck keeps going. A great advantage when work needs to be done as efficiently as possible!

Stable Driving Performance

The Hydrema 922D/922HM Series has great driving abilities at all speeds and on all surfaces, due to the oscillated and hydraulic stabilized pivot joint. Combined with electronically controlled suspension and level control on the front axle, the result is a very high operator comfort.

The rear axle is a genuine bogie axle, with vertical travel for each individual wheel. This ensures the best possible ground contact regardless of level differences. All six wheels being in constant contact with the surface, and weight therefore being equally distributed, means a very low ground pressure, high stability, safety and comfort for the driver.

Fuel-Saving Power with Low Noise Levels

In difficult terrain, engine power and torque makes all the difference. In the 922D/922HM Series, the torque for the 6 wheels come from a powerful 6-cylinder Cummins QSB-6.7 EPA Tier III engine and an intelligent 6-gear ZF Soft-Shift transmission.

The variable engine fans provide cooling as needed, which makes it both very fuelefficient and quiet. The advanced transmission shifting system guarantees high stability with smooth gear shifts. This prevents wheel slipping and provides the best torque.

Simple and Quick Operation

A dump truck from the 922D/922HM Series is easy to operate and the driver will soon feel at home with the machine's manoeuverability and functions. User-friendly switches and joystick-controlled tipping, automatic or manual gearshift and industry best visibility from the suspended cab, provides the best and most comfortable working conditions.

Efficient Tipping

The 922D/922HM has a very energy-efficient 4-pump hydraulic system, ensuring that control and tipping never feels "sluggish". The separate pumps provide an entirely independent control of steering and tipping functions. The vehicle can be positioned at the same time as tipping is started. The powerful dump truck body has a high tipping angle so the material is unloaded quickly.

The powerful tipping cylinders are protected under the body. The tipping hydraulics will automatically increase the engine speed when the tipping joystick is activated. This provides very fast tipping cycle times. The End Brake and Auto Body Return also increases tipping speed, and makes sure that the body is automatically lowered onto the chassis.

High Quality and Long Life

The 922D/922HM series is a high quality product, has long service intervals and can be used almost everywhere. It has been developed and designed to be used, every day, year after year. Easy use and the many possibilities for individual operator settings in the cab also makes it exceptionally suitable for rental.

ADVANTAGES

- Great driving performance. Keeps going where other vehicles have to give up.
- High quality. Solid design. Built to last. Rental friendly.
- Low unladen weight and genuine bogie axles gives a very low ground pressure.
- High-torque Cummins QSB-6.7 EPA Tier III engine.
- Extremely user-friendly and simple to use. High safety and driver comfort.

COMFORTABLE

Great comfort and easy service access.

Great operator comfort

The cab has two doors, with lighting for safe entry in all light conditions. The cab is spacious, with perfect visibility and an easy-to-clean interior.

All functions have the best ergonomic positions. The joystick is installed as an integrated part of the right armrest. The seat, armrests and steering wheel are multi-adjustable.

A computer-controlled instrument display with data storage, a powerful heating and cooling system, a storage box, and connection for 12 V/24 V plugs are standard.

Easy operation of all functions leaves the driver with the best working conditions.

Vibrations are also reduced through heavy-duty viscous cab mounts.

Easy Service Access

The engine bonnet is electric and engine compartment access is therefore easy with a simple push of a button in the cab.

All service points are placed so that the daily service check can be carried out easily and without complications.

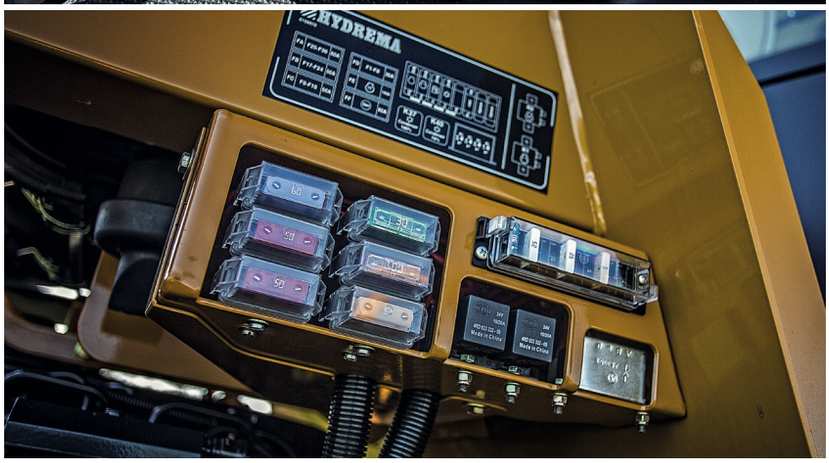

TECHNICAL DATA

Designed and built to last.

Chassis

Articulated chassis with pendulum bar and double hydraulic stabilisers in the pivot joint. The two stabilizers provide great stability during both driving and tipping. The construction is in high tensile steel to have the greatest possible strength with the lowest possible unladen weight.
Oscillation: +/- 12°

Steering

The servo-activated hydrostatic steering results in great comfort, as impacts from the terrain are not transferred through to the steering wheel. Separate variable flow pump for steering.
Steering angle: +/- 38°

Axles

Front: Rigid axle with electronically controlled suspension and level control. The level control ensures that the suspension position remains the same, regardless if the dumper truck drives with or without a load. The front axle has differential locks with 75% locking action.
Rear: Heavy-duty full gear whell bogie axle with planetary hub reduction.

Retarder

Exhaust brake and hydraulic retarder. Automatically controlled exhaust brake via the engine. The hydraulic retarder can be engaged manually as needed.

Transmission

ZF Ergopower 6 WG 210 automatic transmission with 6 speeds forward and 3 reverse. The transmission is equipped with 100% "lock-up" in all gears, which electronically locks the connection between the engine and the transmission and provides direct drive, bypassing the converter. A centre differential is located in the transmission output shaft in order to equalise the speed differential between the front and rear axles. The centre differential has a 100% differential lock. Electronic control of transmission shifting mechanism with a joystick (ZF Ergo 2), fully automatic or manual gearshift. Smooth shifting of gears, which prevents wheel slip in difficult conditions.
Max. speed: Forward: 31 mph - Reverse: 19 mph - Max. tractive effort: 212 KN.

Brakes

Full dual-circuit brake system with oil-immersed disc brakes on all 6 wheels. Fail-Safe parking brake on the front axle. Maintenance-free brakes. The brakes can be activated by a push button before tipping.

Dump truck body

Robot-welded dump truck body in high tensile Hardox steel without side ribs. The double action tipping cylinders are located under the body for maximum protection and a very fast tipping cycle. As an option, the dump truck body can be fitted with exhaust heating and Tail Gate. Tipping angle: 70 °.

Hydraulic System

The hydraulic system consists of 4 independent hydraulic pumps:
Pump 1: 8,5 gpm constant flow pump for brakes, stabilisers, differential locks and suspension.
Pump 2: 43 gpm variable flow pump for pivot steering.
Pump 3: 50 gpm constant flow pump for tipping operations.
Pump 4: 13 gpm variable flow pump for emergency steering.

Engine

Cummins QSB-6.7, 6 cyl. EPA Tier III engine, with turbo and intercooler. The engine is equipped with 24 valves and a fully electronically common rail injection system. The engine fan runs at a variable speed based on the cooling requirements. Max. power: 264 hp at 2200 rpm. 273 hp at 2000 rpm. Max. torque: 730 ft. lb. at 1300-1500 rpm.

Electric System

Standard 24V electric system with 70 Amp. alternator.

Sound level

LpA: 74 dB(A) (in cab)
LwA: 105 dB(A) (outside cab)

Fuel

Diesel. 85 gal. fuel tank integrated in the front chassis.

The golf course designer recommended the Hydrema 922 for construction. We collect sand and soil approx. 2 km from the golf course entry and can drive all the way, exactly to where the material needs to be unloaded, without damaging roads or fragile fairways."

Dimensions.

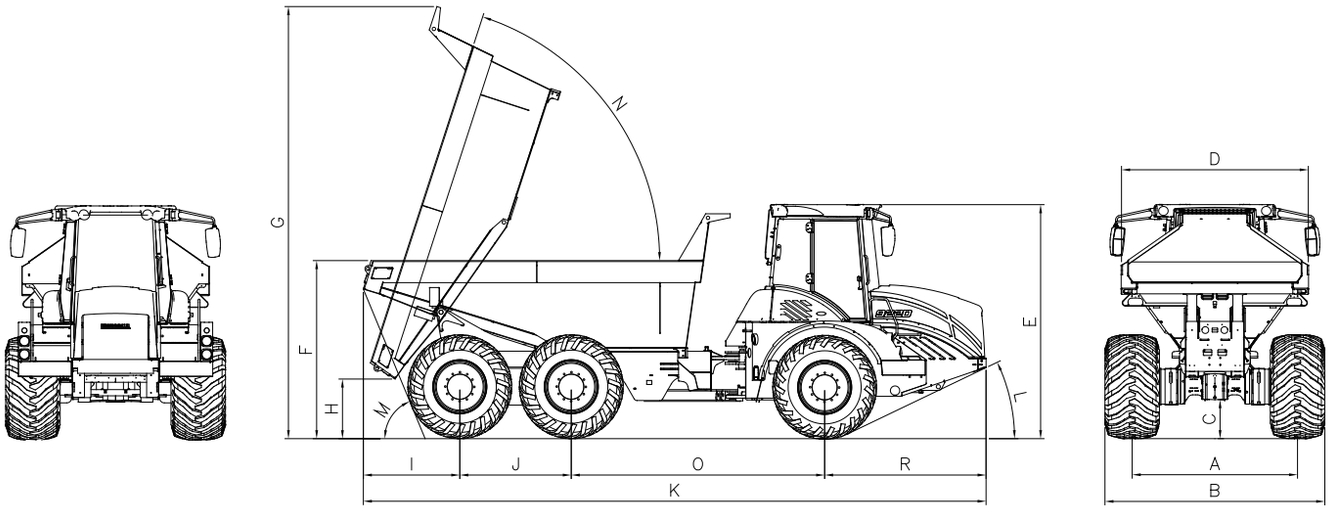

			922D			922HM
	Tires		600/60x30.5	650/65 R25	EM 20.5 R25	800/45-30.5
	Total weight	lb	78,900	80,550	79,700	79,900
	Unladen weight	lb	34,800	36,450	35,600	35,800
	Load capacity	lb	44,100	44,100	44,100	44,100
B.	Total width	ft	9.61	9.78	9.42	10.43
C.	Clearance	ft	1.60	1.60	1.60	1.60
D.	Dump truck body width	ft	9.00	9.00	9.00	9.00
E.	Total height	ft	11.40	11.40	11.40	11.40
	Transport height	ft	11.30	11.30	11.30	11.30
F.	Loading height	ft	8.60	8.60	8.60	8.60
G.	Height with raised body	ft	20.80	20.80	20.80	20.80
H.	Tipping clearance	ft	2.70	2.70	2.70	2.70
I.	Overhang, rear	ft	4.60	4.60	4.60	4.60
J.	Wheel base, bogie	ft	5.40	5.40	5.40	5.40
K.	Length	ft	30.00	30.00	30.00	30.00
L.	Approach angle, front	degrees	25	25	25	25
M.	Approach angle, rear	degrees	67	67	67	67
N.	Tipping angle	degrees	70	70	70	70
O.	Wheel base	ft	12.20	12.20	12.20	12.20
R.	Overhang, front	ft	7.80	7.80	7.80	7.80
	Body capacity, levelled	yd^3	11.6	11.6	11.6	11.6
	Body capacity, heaped	yd^3	15.7	15.7	15.7	15.7
	Tipping time, raise	sec.	7.5	7.5	7.5	7.5
	Tipping time, lower	sec.	5.5	5.5	5.5	5.5
	Turning radius, outer	ft	27.4	27.4	27.4	27.9
	Ground pressure	psi	16.1	16.5	18.8	11,7