https://truckmanualshub.com/
duma rent
www.duma-rent.com

MANITOU
HANDLING YOUR WORLD

649010 EN/US/AU (15/12/2019)

MHT 790 104JD H ST4 S1

OPERATOR'S MANUAL
(ORIGINAL INSTRUCTIONS)

duma rent
https://truckmanualshub.com/
www.duma-rent.com

IMPORTANT

Carefully read and understand this instruction manual before using the lift truck.

It contains all information relating to operation, handling and lift truck equipment, as well as important recommendations to be followed.

This document also contains precautions for use, as well as information on the servicing and routine maintenance required to ensure the lift truck's continued safety of use and reliability.

WHENEVER YOU SEE THIS SYMBOL IT MEANS:

WARNING ! BE CAREFUL ! YOUR SAFETY OR THE SAFETY OF THE LIFT TRUCK IS AT RISK.

- This manual has been produced on the basis of the equipment list and the technical characteristics given at the time of its design.
- The level of equipment of the lift truck depends on the options chosen and the country of sale.
- According to the lift truck options and the date of sale, certain items of equipment/functions described herein may not be available.
- Descriptions and figures are non binding.
- MANITOU reserves the right to change its models and their equipment without being required to update this manual.
- The MANITOU network, consisting exclusively of qualified professionals, is at your disposal to answer all your questions.
- This manual is an integral part of the lift truck.
- It is to be kept in its storage space at all times for ease of reference.
- Hand this manual to the new owner if the lift truck is resold.

CALIFORNIA PROPOSITION 65 WARNINGS

WARNING

This product can expose you to lead which is known to the State of California to cause cancer and birth defects or other reproductive harm.

For more information go to www.P65Warnings.ca.gov

WARNING

Breathing diesel engine exhaust exposes you to chemicals known to the State of California to cause cancer and birth defects or other reproductive harm.

- Always start and operate the engine in a well-ventilated area.
- If in an enclosed area, vent the exhaust to the outside.
- Do not modify or tamper with the exhaust system.
- Do not idle the engine except as necessary.

For more information go to www.P65Warnings.ca.gov/diesel

649010 EN/US/AU (15/12/2019)
MHT 790 104JD H ST4 S1

SILICA DUST HAZARD

Exposure to crystalline silica (found in sand, soil and rocks) has been associated with silicosis, a debilitating and often fatal lung disease. Comply with all applicable rules and regulations for the workplace. Wear approved respiratory protection or use water spray or other means if there is no other way to control the dust.

A Silica rule "29 CFR 1929.1153" by the U.S. Occupational Safety and Health (OSHA) indicates a signicant risk of chronic silicosis for workers exposed to inhaled crystalline silica over a working lifetime. Refer to the rule for more information regarding exposure limits and hazard prevention.

1st ISSUE	25/10/2016	
UPDATED	16/07/2018	Update Prop 65 0-2 @ 0-3
UPDATED	15/12/2019	Update

Manitou BF S.A Limited liability company with a Board of Directors.
Head office: 430, Rue de l'Aubinière - 44150 Ancenis - FRANCE
Share capital: 39,548,949 euros
857 802 508 RCS Nantes.
Tel: +33 (0)2 40 09 10 11
www.manitou.com

This manual is for information purposes only. Any reproduction, copy, representation, recording, transfer, distribution, or other, in part or in whole, in any format is prohibited. The plans, designs, views, commentaries and instructions, even the document organization that are found in this document, are the intellectual property of MANITOU BF. Any violation of the aforementioned may lead to civil and criminal prosecution. The logos as well as the visual identity of the company are the property of MANITOU BF and may not be used without express and formal authorization. All rights are reserved.

649010 EN/US/AU (15/12/2019)
MHT 790 1041D H ST4 S1

https://truckmanualshub.com/

1 - OPERATING AND SAFETY INSTRUCTIONS

2 - DESCRIPTION

3 - MAINTENANCE

4 - ADAPTABLE ATTACHMENTS IN OPTION ON THE RANGE

5 - LOAD CHARTS FOR INTERCHANGEABLE EQUIPMENT

649010 EN/US/AU (15/12/2019)
MHT 790 1041D H ST4 S1

LEGEND OF SIGNS AND SYMBOLS

OVERVIEW:

⚠	Warning ! be careful ! your safety or the safety of the lift truck is at risk.
📷	See image 2-48
📢	For more details: see paragraph “Switches”

ATTACHMENT LOAD TABLE

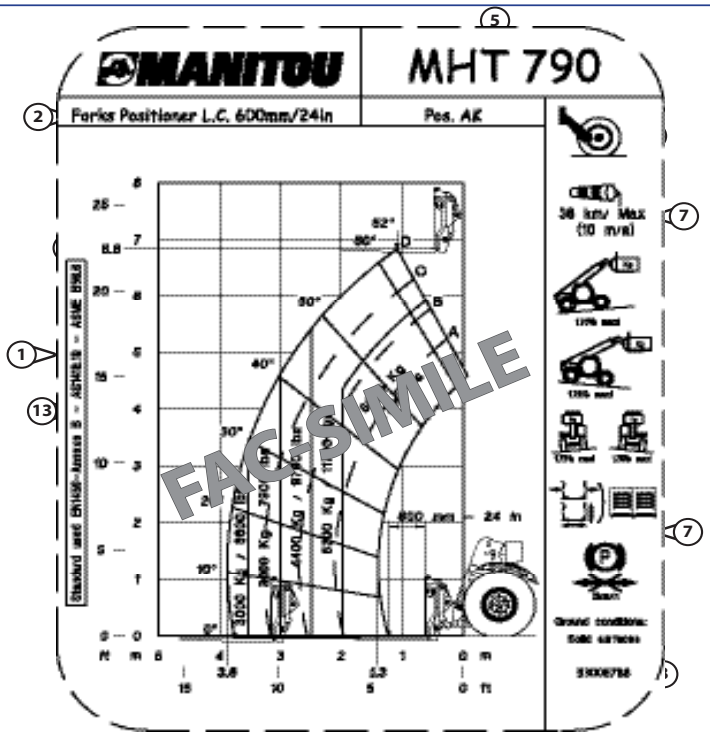

Reference	Indication (example)	Example
1	load table	
2	machine type	Forks Positioner
3	load centre	L.C.600mm/24in
4	alphanumeric code which identifies the type of attachment in use **(Optional)**	Pos. AK
5	machine model	MHT 790
6	machine in working configuration: on front tyres, on tyres and turret rotated, on stabilisers **(Depending on the model machine)**	
7	working conditions	
8	load table code	53008788
9	indicative drawing of the machine	
10	metric system [unit of length (m) and unit of weight (kg)] or imperial system [unit of length (ft) and unit of weight (lb)]	
11	maximum length extension of the telescopic boom	3.8 m
12	load capacity range of the machine	3000kg/6000lbs, 3600kg/7900lbs, 4400kg/9700lbs, 5300kg/11700lbs, 8000kg/17700lbs
13	capacity table according to standards in force in the destination country	EN1459-ANNEXE B - AS1418.19 - ASME B56.6
14	maximum lift height of the telescopic boom	6.8 m
15	angle of the boom	0°, 10°, 20°, 30°, 40°, 50°, 60°, 62°
16	length of the boom **(Optional)**	A, B, C, D
17	load centre	600 mm - 24in

ATTACHMENT PICK AND CARRY TABLE

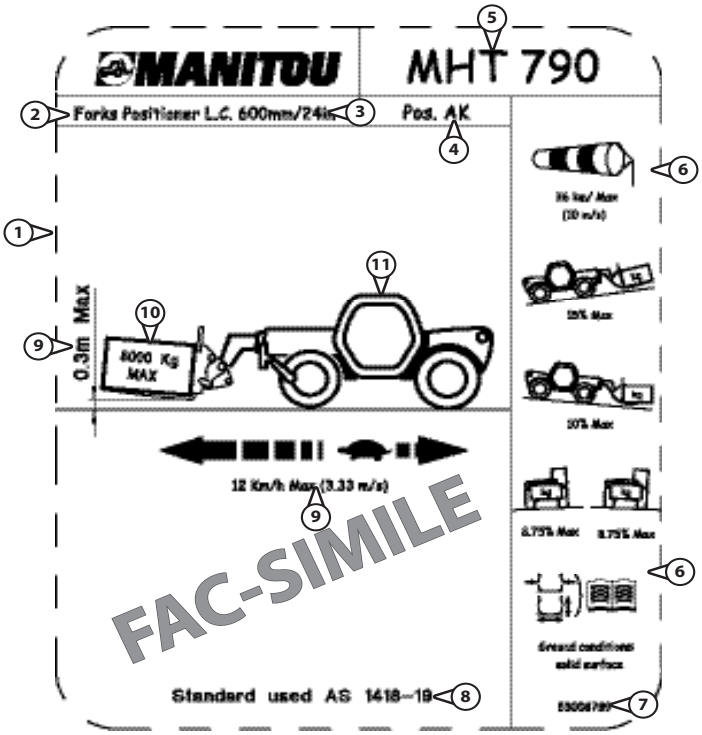

Reference	Indication (example)	Example
1	load chart	Pick and Carry
2	type of attachment	Forks Positioner
3	load center	L.C.600mm/24in
4	alphanumeric code which identifies the type of attachment in use (Optional)	Pos. AK
5	machine model	MHT 790
6	working conditions	
7	load table code	53008789
8	capacity table according to standards in force in the destination country	AS 1418.19
9	metric system [unit of length (m) and unit of weight (kg)] or imperial system [unit of length (ft) and unit of weight (lb)]	
10	maximum load capacity of the attachment in use	8000 kg
11	indicative drawing of the machine	

1 - OPERATING AND SAFETY INSTRUCTIONS

REDUCE 04 MANITOU

ASSISTANCE I 23 SIMPLE TIPS

The Manitou Group wishes to assist you in reducing the consumption of the machines to help you reduce your carbon footprint.

- Chose a machine with an appropriate power rating for your needs.
- Switch off your engine after running at idle for more than 3 minutes.
- Optimum engine efficiency is achieved at the maximum torque engine speed.
- Preferably use a fan control and reversal system.
- Favor "smart" electronically-managed transmissions.
- Use the air-conditioning with windows and doors closed.
- Preferably use LED headlights.
- Adapt the type of tire to your environment.
- Ensure that your tires are inflated to the correct pressure.
- Check the parking brake adjustment.

Preferably use manufacturer-recommended attachments

- Check the general condition of your trailer.
- Adapt your maximum towable load.
- Use the attachments that are suitable for your machine.
- Check the hydraulic adjustment of your attachments.

- Observe the maintenance periods.
- Regularly clean the radiator, the air filter, etc.
- Lubricate regularly.
- Preferably buy through a manufacturer-approved dealer.
- Favor OEM parts.
- Study the manufacturers' maintenance contracts.
- You can follow eco-driving courses.
- Demand to know the consumption and emissions of the machines.
- Calculate your consumption and emissions at reduce.manitou.com

1 - OPERATING AND SAFETY INSTRUCTIONS

INSTRUCTIONS TO THE COMPANY MANAGER 1-6

THE SITE 1-6

THE OPERATOR 1-6

THE TELEHANDLER 1-6
- A - THE TELEHANDLER'S SUITABILITY FOR THE JOB . . . 1-6
- B - ADAPTATION OF THE TELEHANDLER TO STANDARD ENVIRONMENTAL CONDITIONS . . . 1-6
- C - MODIFICATION OF THE TELEHANDLER . . . 1-7
- D - FRENCH ROAD TRAFFIC RULES . . . 1-7
- E - TELEHANDLER CAB PROTECTION . . . 1-7

INSTRUCTIONS 1-8

MAINTENANCE 1-8

INSTRUCTIONS FOR THE OPERATOR 1-9

PREAMBLE 1-9

GENERAL INSTRUCTIONS 1-9
- A - OPERATING MANUAL . . . 1-9
- B - AUTHORISATION FOR USE IN FRANCE . . . 1-9
- C - MAINTENANCE . . . 1-9
- D - MODIFICATION OF THE TELEHANDLER . . . 1-9
- E - LIFTING PEOPLE . . . 1-10

OPERATING INSTRUCTIONS UNLADEN AND LADEN 1-10
- A - BEFORE STARTING THE TELEHANDLER . . . 1-10
- B - DRIVER'S OPERATING INSTRUCTIONS . . . 1-10
- C - ENVIRONMENT . . . 1-10
- D - VISIBILITY . . . 1-11
- E - STARTING THE TELEHANDLER . . . 1-12
- F - DRIVING THE TELEHANDLER . . . 1-12
- G - STOPPING THE TELEHANDLER . . . 1-13
- H - DRIVING THE TELEHANDLER ON THE PUBLIC HIGHWAY . . . 1-14

INSTRUCTIONS FOR HANDLING A LOAD: 1-15
- A - CHOICE OF ATTACHMENTS . . . 1-15
- B - WEIGHT OF LOAD AND CENTRE OF GRAVITY . . . 1-15
- C - LONGITUDINAL STABILITY LIMITER AND WARNING DEVICE . . . 1-15
- D - TRANSVERSE ATTITUDE OF THE TELEHANDLER . . . 1-16
- E - TAKING UP A LOAD ON THE GROUND . . . 1-16
- F - TAKING UP AND SETTING DOWN A HIGH LOAD ON TIRES . . . 1-17
- H - TAKING UP AND LAYING DOWN A SUSPENDED LOAD . . . 1-19
- I - TRAVELLING WITH A SUSPENDED LOAD . . . 1-19

INSTRUCTIONS FOR USING AS A LOADER 1-20
- A - LOADING . . . 1-20
- B - BACKFILLING . . . 1-21

PLATFORM OPERATING INSTRUCTIONS 1-22
- A - AUTHORISATION FOR USE . . . 1-22
- B - TELEHANDLER SUITABILITY FOR USE . . . 1-22
- C - PRECAUTIONS WHEN USING THE PLATFORM . . . 1-22
- D - USING THE PLATFORM . . . 1-22
- E - ENVIRONMENT . . . 1-22
- F - MAINTENANCE . . . 1-23

INSTRUCTIONS FOR USING THE RADIOCONTROL **1-24**
HOW TO USE THE RADIOCONTROL 1-24
PROTECTIVE DEVICES 1-24
GENERAL INSTRUCTIONS **1-25**
PLACING THE BOOM SAFETY WEDGE **1-25**
FITTING THE WEDGE. 1-25
REMOVING THE WEDGE 1-25
MAINTENANCE **1-25**
MAINTENANCE LOG 1-25
LUBRICANT AND FUEL LEVELS **1-26**
HYDRAULICS **1-26**
ELECTRICITY **1-26**
WELDING **1-26**
WASHING THE TELEHANDLER **1-26**
TRANSPORTING THE TELEHANDLER **1-26**
INTRODUCTION **1-26**
PREPARING THE TELEHANDLER **1-27**
ADBLUE TANK **1-27**
PROTECTING THE ENGINE **1-27**
PROTECTING THE TELEHANDLER **1-27**
BRINGING THE TELEHANDLER BACK INTO SERVICE **1-28**
RECYCLING OF MATERIALS **1-28**
METALS. 1-28
PLASTICS. 1-28
RUBBER. 1-28
GLASS. 1-28
ENVIRONMENTAL PROTECTION **1-28**
WORN OR DAMAGED PARTS 1-28
USED OIL. 1-28
USED BATTERIES 1-28

TELEHANDLER DISPOSAL **1-29**

RECYCLING OF MATERIALS **1-29**
METALS. 1-29
PLASTICS. 1-29
RUBBER. 1-29
GLASS. 1-29
ENVIRONMENTAL PROTECTION **1-29**
WORN OR DAMAGED PARTS 1-29
USED OIL. 1-29
USED BATTERIES 1-29

INSTRUCTIONS TO THE COMPANY MANAGER

THE SITE

Proper management of telehandler's area of travel will reduce the risk of accidents:

- ground not unnecessarily uneven or obstructed,
- no excessive slopes,
- pedestrian traffic controlled, etc.

THE OPERATOR

- Only qualified, authorized personnel can use the telehandler. This authorization is given in writing by the appropriate person in the establishment with respect to the use of telehandlers and must be carried permanently by the operator.

Experience has shown that there are a number of inappropriate ways in which the telehandler might be used. Such foreseeable misuse, of which the main examples are listed below, are strictly forbidden.
- The foreseeable abnormal behaviour resulting from ordinary negligence, but which does not result from any wish to put the machinery to any improper use.
- The reflex reactions of a person in the event of a malfunction, incident, fault, etc. during operation of the telehandler.
- Behaviour resulting from application of the "principle of least effort" when performing a task.
- For certain machines, the foreseeable behaviour of such persons as: apprentices, teenagers, handicapped persons, trainees tempted to drive a telehandler, operators tempted to operate the machine to win a bet, in competition or for their own personal experience.
The person in charge of the equipment must take these criteria into account when assessing whether or not a person will make a suitable driver.

THE TELEHANDLER

A - THE TELEHANDLER'S SUITABILITY FOR THE JOB

- MANITOU has ensured that this telehandler is suitable for use under the standard operating conditions defined in this operator's manual, with a **STATIC test coefficient of 1.33** and a **DYNAMIC test coefficient of 1**, as specified in harmonised standard **EN 1459** for variable reach trucks.
- Before commissioning, the company manager must make sure that the telehandler is appropriate for the work to be done, and perform certain tests (in accordance with current legislation).

B - ADAPTATION OF THE TELEHANDLER TO STANDARD ENVIRONMENTAL CONDITIONS

- In addition to series equipment mounted on your telehandler, many options are available, such as: road lighting, stop lights, revolving light, reverse lights, reverse alarm sound, front light, rear light, light at the boom head, etc. (according to the telehandler model).
- The operator must take into account the operating conditions to specify the telehandler's signaling and lighting equipment. Contact your dealer
- Take into account climatic and atmospheric conditions of the site of utilisation.
  - Protection against frost (☞ 3 - MAINTENANCE: LUBRICANTS AND FUEL).
  - Adaptation of lubricants (ask your dealer for information).
  - Engine filtration (e 3 - MAINTENANCE: FILTER CARTRIDGES AND BELTS).

For operation under average climatic conditions, i.e.: between -15 °C and 35 °C, correct levels of lubricants in all the circuits are checked in production. For use in harsher conditions, before setting off, lubricants must be changed and topped up using lubricants appropriate to the ambient temperatures.
The same applies to the cooling liquid.

- Preventing fire risks associated with use in dusty and flammable conditions (e.g. straw, flour, sawdust, organic waste, etc.).
- A telehandler operating in an area without fire extinguishing equipment must be equipped with an individual extinguisher. There are solutions, consult your dealer.

Your telehandler is designed for outdoor use under normal atmospheric conditions and indoor use in suitably aerated and ventilated premises.
It is prohibited to use the telehandler in areas where there is a risk of fire or which are potentially explosive (e.g. refineries, fuel or gas depots, stores of flammable products. etc.).
For use in these areas, specific equipment is available (ask your dealer for information).

- Our telehandlers comply with Directive 2004/108/EC concerning electromagnetic compatibility (EMC), and with the corresponding harmonized standard EN 12895. Their proper operation is no longer guaranteed if they are used within areas in which the electromagnetic fields exceed the limit specified by that standard (10 V/m).
- Directive 2002/44/EC prohibits company managers from exposing their employees to excessive levels of vibration. There is no recognized code of measurement for comparing the machines of different manufacturers. The actual doses received can only therefore be measured under actual operating conditions at the user's premises.

- The following are some tips for minimizing these vibration doses:
  - Select the most suitable telehandler and attachment for the intended use.
  - Adapt the seat adjustment to the operator's weight (according to telehandler model) and maintain it in good condition, as well as the cab suspension. Inflate the tires in accordance with recommendations.
  - Ensure that the operators adapt their operating speed to suit the conditions on site.
  - As far as possible, arrange the site in such a way as to provide a flat running surface and remove obstacles and harmful potholes.

C - MODIFICATION OF THE TELEHANDLER

- For your safety and that of others, you must not change the structure and settings of the various components used in your telehandler (hydraulic pressure, calibrating limiters, engine speed, addition of extra equipment, addition of counterweight, unapproved attachments, alarm sound systems, etc.) yourself. In this event, the manufacturer cannot be held responsible.

D - FRENCH ROAD TRAFFIC RULES

(or see current legislation in other countries)

- Only one EC declaration of conformity is issued. It must be kept in a safe place.
- The road traffic rules of telehandlers are subject to the provisions of the highway code, according to the following categories:
  - Construction-type trucks (MT range): public works vehicle not predominantly for use on roads (point 6.9 of Article R311-1 of the French Highway Code). The telehandler must have a 25 disc displayed on the rear of the vehicle and an operating licence plate.
  - Agricultural-type trucks (MLT range) that are non-EC type approved tractors: (point 6.2 of Article R311/1 of the French Highway Code). The telehandler must be fitted with an operating licence plate.
  - Agricultural-type trucks (MLT range) that are EC type approved tractors: agricultural tractor type T1a (point 5.1.1 of Article R311/1 of the French Highway Code). The telehandler must be registered.

SPECIAL INSTRUCTION APPLYING TO "EC TRACTOR" TYPE-APPROVED TELEHANDLERS

- All EC tractor type-approved telehandlers are supplied with an "EC tractor" certificate complying with directive 2003/37/EC, to be retained by the owner, and a page of administrative details together with a CNIT number (national type approval code) for registration at the prefecture.
- The telehandler owner is responsible for carrying out the necessary procedures for obtaining the vehicle registration document within the time limit defined by the regulations.
- The operator must hold a category B driver's licence, unless granted an exemption.
- The telehandler must be driven on the public highway in accordance with the instructions given in the manual supplied with the telehandler (Gross weight, Gross combination weight, towing load, axle loads, maximum speeds, etc. according to type/version). The operator must be in possession of the telehandler's registration document.

When towing a trailer or agricultural equipment, the travelling speed of the telehandler is limited to 25 km/h (15.5 mph). In this case, a "25" disc must be affixed to the rear of the convoy.

E - TELEHANDLER CAB PROTECTION

- All telehandlers comply with the requirements of ISO 3471 (wheel loader code) regarding cab rollover protection (ROPS) and ISO 3449 (Level II) regarding the protection of the cab against falling objects (FOPS).
- "EC TRACTOR" type-approved telehandlers comply, in addition, with Directive 79/622/EC (OECD Code 4) regarding cab rollover protection (ROPS).

Structural damage or overturning, a modification, changes or a poorly executed repair can reduce the protective efficiency of the cab, cancelling its compliance. Do not perform welding or drilling on the cab structure. Consult your dealer to determine the limits of this structure without cancelling its compliance.

INSTRUCTIONS

- The operator's manual must always be in good condition and kept in the place provided on the telehandler and in the language used by the operator.
- The operator's manual and any plates or stickers which are no longer legible or are damaged, must be replaced immediately.

MAINTENANCE

- Maintenance or repairs other than those detailed in part: 3 - MAINTENANCE must be carried out by qualified personnel (e your dealer) and under the necessary safety conditions to maintain the health of the operator and any third party.

Your telehandler must be inspected periodically to ensure that it remains in compliance.
The frequency of this inspection is defined by current legislation in the country in which the telehandler is used.

- Example for France "The manager in charge of the establishment using a telehandler must open and maintain a maintenance log for each machine (order of 2 March 2004) and undergo a general periodic inspection every 6 months (order of 1 March 2004)".

INSTRUCTIONS FOR THE OPERATOR

PREAMBLE

The risk of accident while using, servicing or repairing your telehandler can be reduced if you follow the safety instructions and preventive measures detailed in these instructions.
Failure to comply with the safety instructions and instructions for the use, repair or maintenance of your telehandler may result in serious or even fatal accidents.

- Only the operations and manoeuvres described in these operator's manual must be performed. The manufacturer cannot predict all possible risky situations. Consequently, the safety instructions given in the operator's manual and on the telehandler itself are not exhaustive.
- As the operator, you must at all times envisage, up to a reasonable limit, the possible risks to yourself, others and to the telehandler when using it.

In order to reduce or avoid any danger with a MANITOU-approved attachment, follow the instructions of paragraph: 4 - OPTIONAL ATTACHMENTS FOR USE WITH THE RANGE: INTRODUCTION.

GENERAL INSTRUCTIONS

A - OPERATING MANUAL

- Read the operator's manual carefully.
- The operator's manual must always be in good condition and in the place provided for it on the telehandler.
- You must report any plates and stickers which are no longer legible or which are damaged.

B - AUTHORISATION FOR USE IN FRANCE

(or see current legislation in other countries).

- Only qualified, authorized personnel can use the telehandler. This authorization is given in writing by the appropriate person in the establishment with respect to the use of telehandlers and must be carried permanently by the operator.
- The operator is not competent to authorise the driving of the telehandler by another person.

C - MAINTENANCE

- The operator must immediately advise his superior if his telehandler is not in good working order or does not comply with the safety notice.
- The operator is prohibited from carrying out any repairs or adjustments himself, unless he has been trained for this purpose. He must keep the telehandler properly cleaned if this is among his responsibilities.
- The operator must carry out daily maintenance (e 3 - MAINTENANCE: 10 HOURS - DAILY MAINTENANCE OR EVERY 10 HOURS OF SERVICE).
- The operator must ensure tires are appropriate for the type of ground (◁ area of the contact surface of the tires in the chapter: 2 - DESCRIPTION: TIRES). There are optional solutions, consult your dealer.
  - SAND tires.
  - AGRICULTURAL tires.
  - Snow chains.

Do not use the telehandler if the tires are incorrectly inflated, damaged or excessively worn, because this could put your own safety or that of others at risk, or cause damage to the telehandler itself.
The fitting of foam inflated tires is prohibited and is not guaranteed by the manufacturer, excepting prior authorisation.

- The operator is responsible for deciding and adjusting the frequency of cleaning needed to prevent the risk of fire ensuing from the build-up of flammable material(s). The operator should pay special attention to all the areas of the telehandler where these risk materials are likely to accumulate.

D - MODIFICATION OF THE TELEHANDLER

- For your safety and that of others, you must not change the structure and settings of the various components used in your telehandler (hydraulic pressure, calibrating limiters, engine speed, addition of extra equipment, addition of counterweight, unapproved attachments, alarm sound systems, etc.) yourself. In this event, the manufacturer cannot be held responsible.

E - LIFTING PEOPLE

- The use of working equipment and load lifting attachments to lift people is:
  - prohibited;
  - or authorised exceptionally and under certain conditions (Current regulations in the country in which the telehandler is used).
- The pictogram posted at the operator station reminds you that:
  Left-hand column
  - It is forbidden to lift people, with any kind of attachment, using a non PLATFORM-fitted telehandler.

  Right-hand column
  - With a PLATFORM-fitted telehandler, people can only be lifted using platforms designed by MANITOU for the purpose.
- MANITOU sells equipment specifically designed for lifting people (OPTION PLATFORM telehandler, contact your dealer).

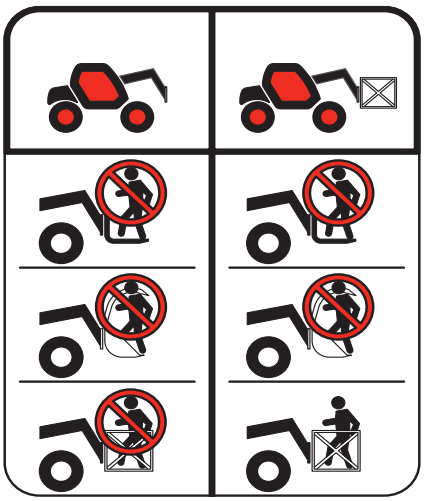

OPERATING INSTRUCTIONS UNLADEN AND LADEN

A - BEFORE STARTING THE TELEHANDLER

- Carry out daily maintenance (e 3 - MAINTENANCE: 10 HOURS - DAILY MAINTENANCE OR EVERY 10 HOURS OF SERVICE).
- Make sure that the driver's cab is clean, particularly the floor and floor mat. Check that no movable object may hinder the operation of the telehandler.
- Make sure the lights, indicators and windscreen wipers are working properly.
- Make sure the rear view mirrors are in good condition, clean and properly adjusted.
- Make sure the alarm sound works.

B - DRIVER'S OPERATING INSTRUCTIONS

- Whatever his experience, the operator is advised to familiarize himself with the position and operation of all the controls and instruments before operating the telehandler.
- Wear clothes suited for driving the telehandler, avoid loose clothes.
- Make sure you have the appropriate protective equipment for the job to be done.
- Prolonged exposure to high noise levels may cause hearing problems. It is recommended to wear ear muffs to protect against excessive noise.
- Always face the telehandler when getting into and leaving the driving seat and use the handle(s) provided for this purpose. Do not jump out of the seat to get down.
- Always pay attention when using the telehandler. Do not listen to the radio or music with headphones or ear buds.
- Never operate the telehandler when hands or feet are wet or soiled with greasy substances.
- For increased comfort, adjust the seat to your requirements and adopt the correct position in the driver's cab.

Under no circumstances must the seat be adjusted while the telehandler is moving.

- The operator must always be in his normal position in the driver's cab. It is prohibited to have arms or legs, or generally any part of the body, protruding from the driver's cab of the telehandler.
- The safety belt must be worn and adjusted to the operator's size.
- The control units must never in any event be used for any other than their intended purposes (e.g. climbing onto or down from the telehandler, portmanteau etc.).
- If the control components are fitted with a forced operation (lever lock) device, it is forbidden to leave the cab without first putting these controls in neutral.
- It is prohibited to carry passengers either on the telehandler or in the driver's cab.

C - ENVIRONMENT

- Ensure compliance with site safety rules.
- If you have to use the telehandler in a dark area or at night, make sure it is equipped with working lights.
- During handling operations, make sure that no one is in the way of the telehandler and its load.
- Do not allow anybody to come near the working area of the telehandler or pass beneath an elevated load.
- When using the telehandler on a transverse slope, before lifting the boom, follow the instructions given in the paragraph: INSTRUCTIONS FOR HANDLING A LOAD: D - TRANSVERSE ATTITUDE OF THE TELEHANDLER.

- Travelling on a longitudinal slope:
  - Drive and brake gently.
  - Moving without load: Forks or attachment facing downhill. 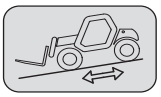
  - Moving with load: Forks or attachment facing uphill. 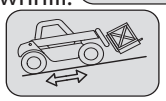
- Take into account the telehandler's dimensions and its load before trying to negotiate a narrow or low passageway.
- Never climb up onto a loading platform without first checking the following:
  - It has been properly installed and secured.
  - The unit to which it is connected (wagon, lorry, etc.) can not shift.
  - This platform is prescribed for the total weight of the telehandler to be loaded.
  - This platform is prescribed for the size of the telehandler.
- Never climb up onto a foot bridge, floor or freight lift, without being certain that they are prescribed for the weight and size of the telehandler to be loaded and without having checked that they are in sound working order.
- Be careful in the area of loading bays, trenches, scaffolding, soft ground and manholes.
- Make sure the ground is stable and firm under the wheels and/or stabilizers before lifting or removing the load. If necessary, add sufficient wedging under the stabilizers.
- Make sure that the scaffolding, loading platform, pilings or ground is capable of bearing the load.
- Never stack loads on uneven ground, they may tip over.

If the load or the attachment must remain above a structure for a long time, there is the risk that it will rest on the structure because of the boom descending owing to the oil in the cylinders cooling down.
To eliminate this risk:
- Regularly check the distance between the load or the attachment and the structure and readjust this if necessary.
- If possible, use the telehandler with the oil temperature as close as possible to ambient temperature.

- When working near aerial lines, ensure that the safety distance is sufficient between the working area of the telehandler and the aerial line.

You must consult your local electrical agency.
You could be electrocuted or seriously injured if you operate or park the telehandler too close to power cables.
In the event of high winds, do not carry out handling work that jeopardises the stability of the telehandler and its load, particularly if the load catches the wind badly.

- Prevent fire risks associated with use in dusty and flammable conditions (e.g. straw, flour, sawdust, organic waste, etc.).

D - VISIBILITY

- The safety of people within the telehandler's working area, as well as that of the telehandler itself and the operator are depend on good operator visibility of the telehandler's immediate vicinity in all situations and at all times.
- This telehandler has been designed to allow good operator visibility (direct or indirect by means of rear-view mirrors) of the immediate vicinity of the telehandler while travelling with no load and with the boom in the transport position.
- Special precautions must be taken if the size of the load restricts visibility towards the front:
  - moving in reverse,
  - site layout,
  - assisted by a person directing the manoeuvre (while standing outside the telehandler's area of travel), making sure to keep this person clearly in view at all times,
  - in any case, avoid reversing over long distances.
- Certain special attachments may require the telehandler to travel with the boom in the raised position. In such cases, visibility on the right hand side is restricted, and special precautions must be taken:
  - site layout,
  - assisted by a person directing the manoeuvre (while standing outside the telehandler's area of travel).
  - replacement of a suspended load by a load on a pallet.
- If visibility of your road is inadequate, ask someone to assist by directing the manoeuvre (while standing outside the telehandler's area of travel), making sure to keep this person clearly in view at all times.
- Keep all components affecting visibility in a clean, properly adjusted state and in good working order (e.g. windscreens, windows, windscreen wipers, windscreen washers, driving and work lights, rear-view mirrors).

E - STARTING THE TELEHANDLER

SAFETY INSTRUCTIONS

The telehandler must only be started up or manoeuvred when the operator is sitting in the driver's cab, with his seat belt adjusted and fastened.

- Never try to start the telehandler by pushing or hauling it. Such an operation may cause severe damage to the transmission. If necessary, towing requires the transmission to be put in neutral (3 - MAINTENANCE: OCCASIONAL OPERATION).
- If using an emergency battery for start-up, use a battery with the same characteristics and respect battery polarity when connecting it. Connect at first the positive terminals before the negative terminals.

Failure to respect polarity between batteries can cause serious damage to the electrical circuit.
The electrolyte in the batteries may produce an explosive gas. Avoid flames and generation of sparks close to the batteries.
Never disconnect a battery while it is charging.

INSTRUCTIONS

- Check the closing and locking of the hood(s).
- Check that the cab door is closed.
- Check that the forward/reverse selector is in neutral, and that the parking brake is engaged.
- Press on the service brake pedal and maintain it down.
- Turn the ignition key to the position I to activate the electrical and pre-heating system.
- Check the fuel level on the indicator.

It is forbidden to press the accelerator pedal when starting the engine

- Turn the ignition key fully, the engine should then start. Release the ignition key and let the engine run at idle.
- Do not engage the starter motor for more than 15 seconds and carry out the preheating between unsuccessful attempts.
- Make sure all the warning lamps on the instruments panel are off.
- Check all control instruments when the engine is warm and at regular intervals during use, so as to quickly detect any faults and to be able to correct them without any delay.
- If an instrument does not show the correct display, stop the engine and immediately carry out the necessary operations.

F - DRIVING THE TELEHANDLER

SAFETY INSTRUCTIONS

Operators' attention is drawn to the risks involved in using the telehandler, in particular:
- Risk of loosing control.
- Risk of losing lateral and frontal stability of the telehandler.
The operator must remain in control of the telehandler. In the event of the telehandler overturning, do not try to leave the cabin during the incident.
YOUR BEST PROTECTION IS TO STAY FASTENED IN THE CABIN.

- Observe the company's traffic regulations or, by default, the public highway code.
- Do not carry out operations which exceed the capacities of your telehandler or attachments.
- Always drive the telehandler with the forks or attachment to the transport position, i.e. at 300 mm (11.8 in) from the ground, the boom retracted and the carriage sloping backwards.
- Only carry loads which are balanced and properly anchored to avoid any risk of a load falling off.
- Ensure that palettes, cases, etc, are in good order and suitable for the load to be lifted.
- Familiarise yourself with the telehandler on the terrain where it will be used.
- Ensure that the service brakes are working properly.
- **The loaded telehandler must not travel at speeds in excess of 5 km/h. (3.1 mph).**
- Drive smoothly at an appropriate speed for the operating conditions (land configuration, load on the telehandler).
- Do not use the hydraulic boom controls when the telehandler is moving.
- Never change the steering mode whilst driving.
- Do not manoeuvre the telehandler with the boom in the raised position unless under exceptional circumstances and then with extreme caution, at very low speed and using gentle braking. Ensure that visibility is adequate.
- Take bends slowly.
- In all circumstances make sure you are in control of your speed.
- On damp, slippery or uneven terrain, drive slowly.
- Brake gently, never abruptly.
- Only use the telehandler's forward/reverse selector from a stationary position and never do so abruptly.
- Do not drive with your foot on the brake pedal. Always remember that hydrostatic type steering is extremely sensitive to movement of the steering wheel, so turn it gently and not jerkily.
- Never leave the engine on when the telehandler is unattended.
- Do not leave the cab when the telehandler has a raised load.

- Look where you are going and always make sure you have good visibility along the route.
- Use the rear-view mirrors frequently.
- Drive round obstacles.
- Never drive on the edge of a ditch or steep slope.
- It is dangerous to use two telehandlers simultaneously to handle heavy or bulky loads, since this operation requires particular precautions to be taken. It must only be used exceptionally and after risk analysis.
- The ignition contactor has an emergency stop mechanism in case of an operating anomaly occurring in the case of telehandlers not fitted with a punch-operated cut-out.

INSTRUCTIONS

- Always drive the telehandler with the forks or attachment to the transport position, i.e. at 300 mm (11.8 in) from the ground, the boom retracted and the carriage sloping backwards.
- For telehandlers with gearboxes, use the recommended gear (2 - DESCRIPTION: INSTRUMENTS AND CONTROLS).
- Select the steering mode appropriate for the use and/or working conditions (2 - DESCRIPTION : CONTROL AND COMMAND INSTRUMENTS) (according to model of telehandler).
- Release the hand brake.
- Shift the forward/reverse selector to the selected direction of travel and accelerate gradually until the telehandler moves off.

Starting and driving a telehandler on a slope can present a very real danger.
The telehandler being parked or stopped, scrupulously follow the following instructions for moving off:
- Press the service brake pedal.
- Engage 1st or 2nd gear and select forward or reverse.
- Check that there is nothing and no-one obstructing the telehandler's path.
- Release the service brake pedal and increase the engine revs.
Using the telehandler when loaded or with a trailer increases the risk. Extreme care is required in this case.

G - STOPPING THE TELEHANDLER

SAFETY INSTRUCTIONS

- Never leave the ignition key in the telehandler during the operator's absence.
- When the telehandler is stationary, or if the operator has to leave his cab (even for a moment), place the forks or attachment on the ground, apply the parking brake and place the forward/reverse selector in neutral.
- Make sure that the telehandler is not stopped in any position that will interfere with the traffic flow and at less than one meter from the track of a railway.
- In the event of prolonged parking on a site, protect the telehandler from bad weather, particularly from frost (check the level of antifreeze), close and lock all the telehandler accesses (doors, windows, cowls, etc.).

INSTRUCTIONS

- Park the telehandler on flat ground or on an incline lower than 15 %.
- Set the forward/reverse selector to neutral.
- Engage the parking brake.
- For telehandlers with gearboxes, place the gear lever in neutral.
- Fully retract the boom.
- Lower the forks or attachment to rest on the ground.
- When using an attachment with a grab or jaws, or a bucket with hydraulic opening, close the attachment fully.
- Before stopping the telehandler after a long working period, leave the engine idling for a few moments, to allow the coolant liquid and oil to lower the temperature of the engine and transmission. Do not forget this precaution, in the event of frequent stops or warm stalling of the engine, or else the temperature of certain parts will rise significantly due to the stopping of the cooling system, with the risk of badly damaging such parts.
- Stop the engine with the ignition contactor.
- Remove the ignition key.
- Lock all access to the telehandler (doors, windows, cowls etc).

H - DRIVING THE TELEHANDLER ON THE PUBLIC HIGHWAY

(or see current legislation in other countries)

FRENCH ROAD TRAFFIC RULES

- The driving of non EC type-approved tractors on the public highway is subject to the provisions of the highway code relating to special machines, defined in article R311-1 of the highway code, in category B of the Equipment Order of 20 November 1969 that determines the procedures applicable to special machines. The telehandler must be fitted with a licence plate.
- The driving of EC type-approved tractors on the public highway is subject to the provisions of the highway code regarding agricultural tractors, defined in article R311-1 of the highway code. The telehandler must be registered.
- The telehandler must be driven on the public highway in accordance with the instructions given in the manual supplied with the telehandler (Gross weight, Gross combination weight, towing load, axle loads, maximum speeds, etc. according to type/version). The operator must be in possession of the telehandler's registration document.
- The operator must hold an HGV licence, unless granted an exemption.
- When towing a trailer or agricultural equipment, the travelling speed of the telehandler is limited to 25 km/h (15.5 mph). In this case, a "25" disc must be affixed to the rear of the convoy. When driving with a trailer, the fact of not engaging 4th gear will ensure compliance with the towing speed limit (max. 25 km/h15.5 mph). On "POWERSHIFT" models, as 3rd gear is slower than on other models, it is preferable to use 5th gear and disable automatic upshifting to 6th gear (e 2 - DESCRIPTION: INSTRUMENTS AND CONTROLS).

SAFETY INSTRUCTIONS

- Operators driving on the public highway must comply with current highway code legislation.
- The telehandler must comply with current road legislation. If necessary, there are optional solutions. Contact your dealer

INSTRUCTIONS

- Make sure the revolving light is in place, switch it on and verify its operation.
- Make sure the lights, indicators and windscreen wipers are working properly.
- Switch off the working headlights if the telehandler is fitted with them.
- Select the steering mode "HIGHWAY TRAFFIC" (according to model of telehandler) (☜ 2 - DESCRIPTION : INSTRUMENTS AND CONTROLS).
- Fully retract the boom and set the attachment approximately 300 mm (11.8 in) off the ground.
- Place the roll corrector in the central position, i.e. the transverse axis of the axles parallel to the chassis (as model of telehandler).
- Fully raise the stabilizers and turn the blocks inwards (according to model of telehandler).

Never move in neutral (forward/reverse selector or gear lever in neutral or transmission cut-off button pressed) to preserve the telehandler engine brake.
Failure to respect this instruction on a slope will lead to excessive speed which may make the telehandler uncontrollable (steering, brakes) and cause serious mechanical damage.

DRIVING THE TELEHANDLER WITH A FRONT-MOUNTED ATTACHMENT

- You must comply with current regulations in your country, covering the possibility of driving on the public highway with a front-mounted attachment on your telehandler.
- If road legislation in your country authorizes circulation with a front-mounted attachment, you must at least:
  - Protect and report any sharp and/or dangerous edges on the attachment (e 4 - OPTIONAL ATTACHMENTS FOR USE WITH THE RANGE: ATTACHMENT SHIELDS).
  - The attachment must not be loaded.
  - Make sure that the attachment does not mask the lighting range of the forward lights.
  - Make sure that current legislation in your country does not require other obligations.

OPERATING THE TELEHANDLER WITH A TRAILER

- For using a trailer, observe the regulations in force in your country (maximum travel speed, braking, maximum weight of trailer, etc.).
- Do not forget to connect the trailer's electrical equipment to that of the telehandler.
- The trailer's braking system must comply with current legislation.
- If pulling a trailer with assisted braking, the tractor telehandler must be equipped with a trailer braking mechanism. In this case, do not forget to connect the trailer braking equipment to the telehandler.
- The vertical force on the towing hook must not exceed the maximum authorised by the manufacturer (consult the manufacturer's plate on your telehandler).
- The authorised gross vehicle weight must not exceed the maximum weight authorised by the manufacturer (☜ 2 - DESCRIPTION : CHARACTERISTICS).

IF NECESSARY, CONSULT YOUR DEALER.

INSTRUCTIONS FOR HANDLING A LOAD:

A - CHOICE OF ATTACHMENTS

- Only attachments approved by MANITOU can be used on its telehandlers.
- Make sure the attachment is appropriate for the work to be done (e 4 - OPTIONAL ATTACHMENTS FOR USE WITH THE RANGE).
- If the telehandler is equipped with the single side-shift carriage OPTION (TSDL), use only the authorised attachments (e 4 - OPTIONAL ATTACHMENTS FOR USE WITH THE RANGE).
- Make sure the attachment is correctly installed and locked onto the telehandler carriage.
- Make sure that your telehandler attachments work properly.
- Comply with the load chart limits for the telehandler for the attachment used.
- Do not exceed the rated capacity of the attachment.
- Never lift a load in a sling without the attachment provided for the purpose, as there is a risk of the sling slipping (e INSTRUCTIONS FOR HANDLING A LOAD: H - TAKING UP AND LAYING A SUSPENDED LOAD).
- Do not handle loads that are hung directly from the forks with straps (e.g.: big bags), as there is a risk that the straps will shear against the sharp edges. Use an attachment designed for this purpose.

B - WEIGHT OF LOAD AND CENTRE OF GRAVITY

- Before taking up a load, you must know its mass and its centre of gravity.
- The load chart for your telehandler is valid for a load in which the longitudinal position of the centre of gravity is 500 mm (19.6 in) from the base of the forks (fig. B1). For a higher centre of gravity, contact your dealer.
- For irregular loads, determine the transverse centre of gravity before any movement (fig. B2) and set it in the longitudinal axis of the telehandler.

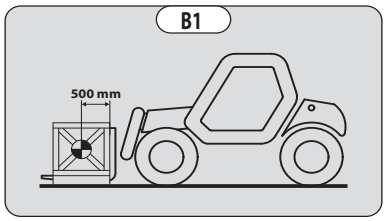

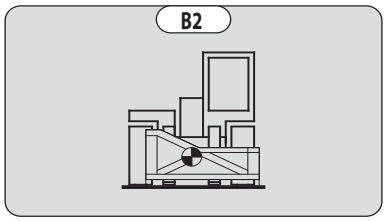

It is forbidden to handle a load heavier than the effective capacity specified on the telehandlerload chart.
For loads with a moving centre of gravity (e.g. liquids), take account of the variations in the centre of gravity in order to determine the load to be handled and be extra vigilant and careful to limit these variations as far as possible.

C - LONGITUDINAL STABILITY LIMITER AND WARNING DEVICE

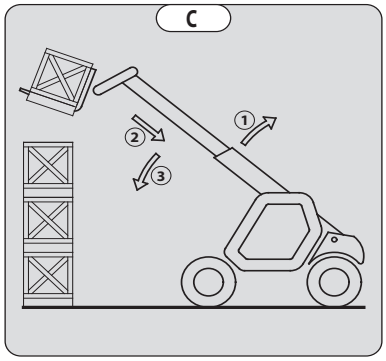

This device gives an indication of the longitudinal stability of the telehandler, and limits hydraulic movements in order to ensure this stability, at least under the following operating conditions:

- when the telehandler is at a standstill,
- when the telehandler is on firm, stable and consolidated ground,
- when the telehandler is performing handling and placing operations.

- Move the boom very carefully when approaching the authorised load limit (◁ 2 - DESCRIPTION: INSTRUMENTS AND CONTROLS).
- Always watch this device during handling operations.
- In the event that "AGGRAVATING" hydraulic movements are cut-off, only perform de-aggravating hydraulic movements in the following order (fig. C): if necessary, raise the boom (1), retract the boom as far as possible (2) and lower the boom (3) to set down the load.

The instrument reading may be erroneous when the steering is at its maximum limit or the rear axle oscillated to its limit.
Before lifting a load, make sure that the telehandler is not in either of these situations.

D - TRANSVERSE ATTITUDE OF THE TELEHANDLER

Depending on the model of telehandler

The transverse attitude is the transverse slope of the chassis with respect to the horizontal. Raising the boom reduces the telehandler's lateral stability. The transverse attitude must be set with the boom in down position as follows:

1 - TELEHANDLER WITHOUT ROLL CORRECTOR USED ON TIRES

- Position the telehandler so that the bubble in the level is between the two lines (◁ 2 - DESCRIPTION : INSTRUMENTS AND CONTROLS).

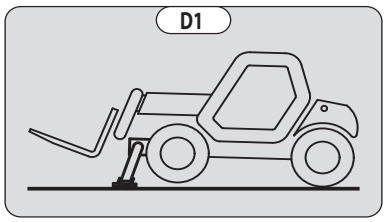

E - TAKING UP A LOAD ON THE GROUND

- Approach the telehandler perpendicular to the load, with the boom retracted and the forks in a horizontal position (fig. E1).
- Adjust the fork spread and centering relative to the load to ensure stability (fig. E2) (optional solutions exist, consult your dealer).
- Never lift a load with a single fork.

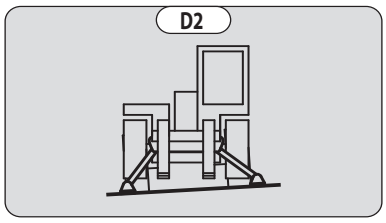

Beware of the risks of trapping or squashing limbs when manually adjusting the forks.

- Move the telehandler forward slowly (1) and insert the forks under the load as far as they will go (fig. E3). If necessary, slightly lift the boom (2) while taking up the load.
- Bring the load into the transport position.
- Tilt the load far enough backwards to ensure stability (loss of load on braking or going downhill).

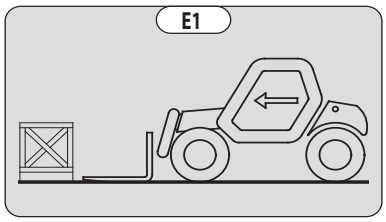

FOR A NON-PALLETISED LOAD

- Tilt the carriage (1) forwards and move the telehandler slowly forwards (2), to insert the fork under the load (fig. E4) (block the load if necessary).
- Continue to move the telehandler forwards (2) tilting the carriage (3) (fig. E4) backwards to position the load on the forks and check the load's longitudinal and lateral stability.

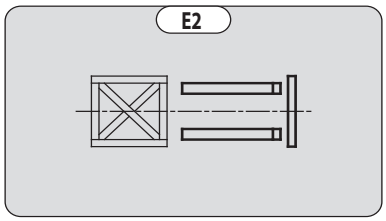

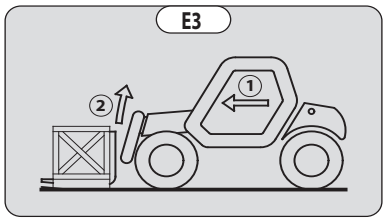

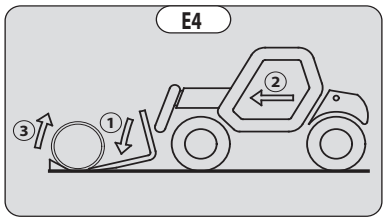

F - TAKING UP AND SETTING DOWN A HIGH LOAD ON TIRES

You must not raise the boom if you have not checked the transverse attitude of the telehandler (e INSTRUCTIONS FOR HANDLING A LOAD: D - TRANSVERSE ATTITUDE OF THE TELEHANDLER.

REMINDER: Make sure that the following operations can be performed with good visibility (e OPERATION INSTRUCTIONS UNLADEN AND LADEN: D - VISIBILITY).

TAKING UP A HIGH LOAD ON TIRES

- Ensure that the forks will easily pass under the load.
- Raise and extend the boom (1) (2) until the forks are at the level of the load. If necessary, move the telehandler (3) forward (fig. F1), driving very slowly and carefully.
- Always remember to keep the distance necessary for inserting the forks under the load, between the stack and the telehandler (fig. F1) and use the shortest possible length of boom.
- Insert the forks under the load as far as they will go by alternately extending and lowering the boom (1) or, if necessary, moving the telehandler forward (2) (fig. F2). Apply the parking brake and place the forward/reverse selector in neutral.
- Lift the load slightly (1) and tilt the carriage (2) backwards to stabilise the load (fig. F3).
- Tilt the load sufficiently backwards to ensure its stability.
- Monitor the longitudinal stability limiter and warning device (INSTRUCTIONS FOR HANDLING A LOAD: C - LONGITUDINAL STABILITY LIMITER AND WARNING DEVICE). If it is overloaded, set the load back down in the place from which it was taken.
- If possible lower the load without shifting the telehandler. Lift the boom (1) to release the load, retract (2) and lower the boom (3) to bring the load into the transport position (fig. F4).
- If this is not possible, back up the telehandler (1), manoeuvring very gently and carefully to release the load. Retract (2) and lower the boom (3) to bring the load into the transport position (fig. F5).

F1

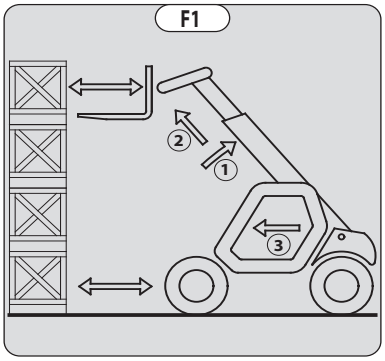

F2

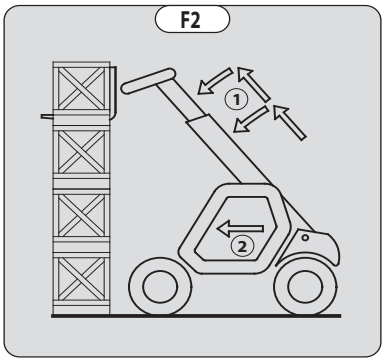

F3

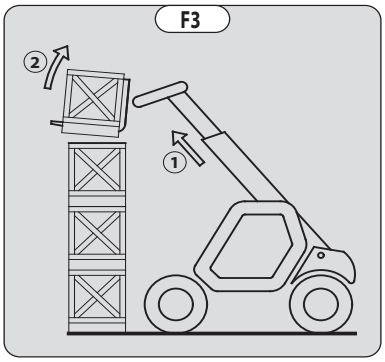

F4

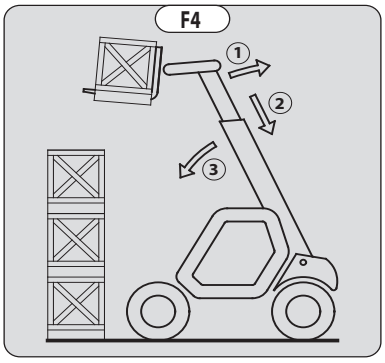

F5

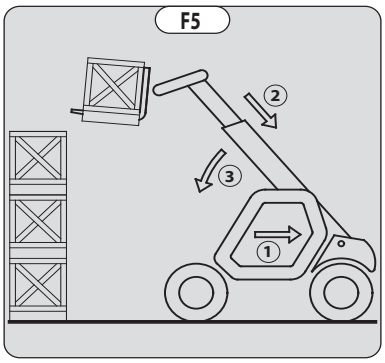

SETTING DOWN A HIGH LOAD ON TIRES

- Approach the load in the transport position in front of the stack (fig. F6).
- Apply the parking brake and place the forward/reverse selector in neutral.
- Raise and extend the boom (1) (2) until the load is above the stack, while monitoring the longitudinal stability limiter and warning device (e IINSTRUCTIONS FOR HANDLING A LOAD: C - LONGITUDINAL STABILITY LIMITER AND WARNING DEVICE). If necessary, move the telehandler (3) forward (fig. F7), driving very slowly and carefully.
- Place the load in a horizontal position and lay it down on the pile by lowering and retracting the boom (1) (2) in order to position the load correctly (fig. F8).
- If possible, release the fork by alternately retracting and raising the boom (1) (fig. F9). Then set the forks into transport position.
- If this is not possible, reverse the telehandler (1), manoeuvring very slowly and carefully to release the forks (fig. F10). Then set them into transport position.

F6

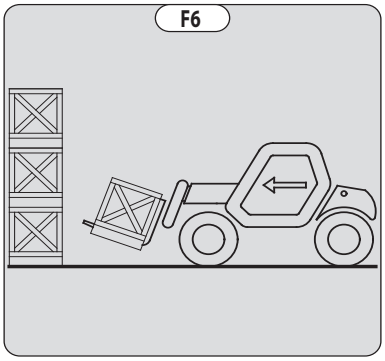

F7

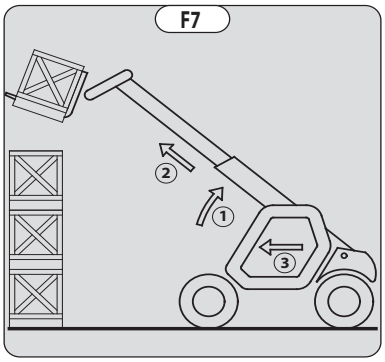

F8

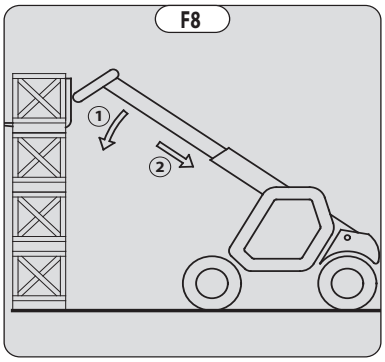

F9

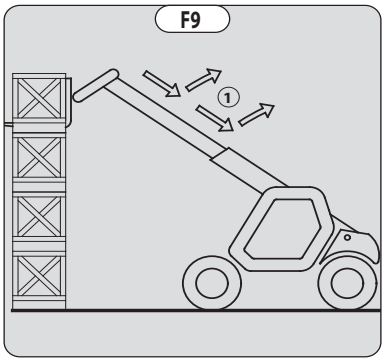

F10

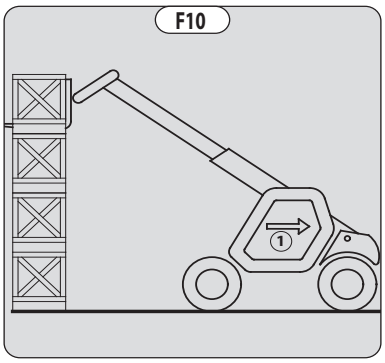

H - TAKING UP AND LAYING DOWN A SUSPENDED LOAD

Failure to follow the above instructions may lead the telehandler to lose stability and overturn.
MUST be used with a telehandler equipped with an operational hydraulic movement cut-out device.

CONDITIONS OF USE

- The length of the sling or the chain shall be as short as possible to limit swinging of the load.
- Lift the load vertically along its axis, never by pulling sideways or lengthways.

HANDLING WITHOUT MOVING THE TELEHANDLER

- Whether on stabilizers or on tires, the lateral attitude must not exceed 1 % and the longitudinal attitude must not exceed 5%, the bubble of the level must be held at "0".
- Ensure that the wind speed is not higher than 10 m/s (32.8 ft/s).
- Ensure that there is no one between the load and the telehandler.

I - TRAVELLING WITH A SUSPENDED LOAD

- Before moving, inspect the terrain in order to avoid excessive slopes and cross-falls, bumps and potholes, or soft ground.
- Ensure that the wind speed is not higher than 36 km/h (22.3 mph).
- The telehandler must not travel at more than 0.4 m/s (1.3 ft/s) (1.5 km/h-0.93 mph, i.e., one quarter walking speed).
- Drive and stop the telehandler gently and smoothly to minimise swinging of the load.
- Carry the load a few centimetres above the ground (max. 30 cm - 11.8 inch) the shortest possible boom length. Do not exceed the offset indicated on the load chart. If the load begins to swing excessively, do not hesitate to stop and lower the boom to set down the load.
- Before moving the telehandler, check the longitudinal stability limiter and warning device (2 - DESCRIPTION : INSTRUMENTS AND CONTROLS), only the green LEDs and possibly the yellow LEDs should be lit.
- During transport, the telehandler operator must be assisted by a person on the ground (standing a minimum of 3 m from the load), who will limit swinging of the load using a bar or a rope. Ensure that this person is always clearly in view.
- The lateral attitude must not exceed 5 %, the bubble in the level must be kept between the two "MAX" marks
- The longitudinal attitude must not exceed 15 %, with the load facing uphill, and 10 %, with the load facing downhill.
- The boom angle must not exceed 45°.
- If the first red LED of the longitudinal stability limiter and warning device (2 - DESCRIPTION : INSTRUMENTS AND CONTROLS) comes on while travelling, gently bring the telehandler to a halt and stabilise the load. Retract the telescopic boom to reduce the offset of the load.

INSTRUCTIONS FOR USING AS A LOADER

A - LOADING

You must not raise the boom if you have not checked the transverse attitude of the telehandler (e INSTRUCTIONS FOR HANDLING A LOAD: D - TRANSVERSE ATTITUDE OF THE TELEHANDLER).

REMINDER: Make sure that the following operations can be performed with good visibility (◁ OPERATION INSTRUCTIONS UNLADEN AND LADEN: D - VISIBILITY).

FILLING THE BUCKET

- Place the bottom of the bucket in a horizontal position, barely touching the ground (1) (fig. A1).
- Move forward gradually (2) while raising the boom and tilting the bucket backwards (3), for better filling and more extraction force (fig. A1).

- Back up the telehandler (1) very carefully and gently to release the bucket. Lower the boom (2) into the transport position (fig. A2).

Tilt the bucket sufficiently back to avoid spilling product and ensure its stability (loss of product under braking).

LOADING A TRAILER

- Approach the side of the trailer in the transport position (fig. A3).

- Raise and extend the boom (1) (2) until the bucket is above the trailer, while monitoring the longitudinal stability limiter and warning device (e INSTRUCTIONS FOR HANDLING A LOAD: C - LONGITUDINAL STABILITY LIMITER AND WARNING DEVICE) (fig. A4).
- Drive the telehandler forward (3) very carefully and gently so that the bucket empties its load at the centre of the trailer (fig. A4).
- Apply the parking brake and place the forward/reverse selector in neutral.
- Slowly discharge the material (4) (fig. A4).

- Tilt back the bucket (1) and reverse the telehandler (2) very carefully and gently (fig. A5).
- Retract (3) and lower the boom (4) into the transport position (fig. A5).

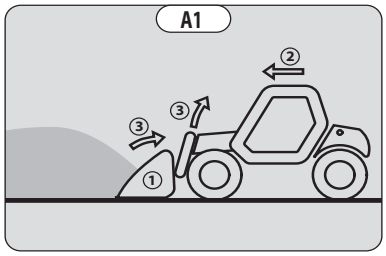

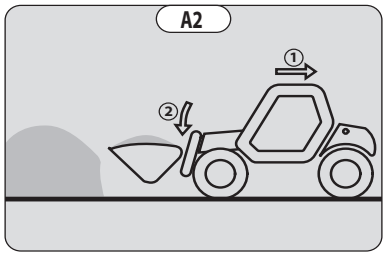

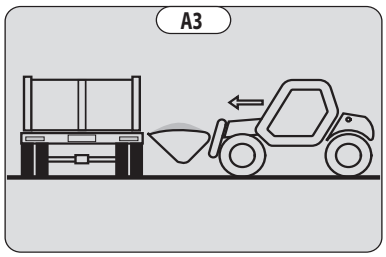

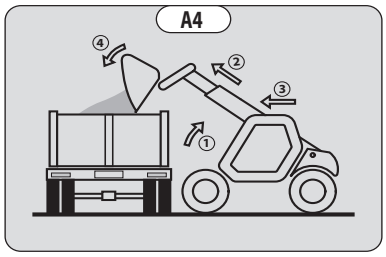

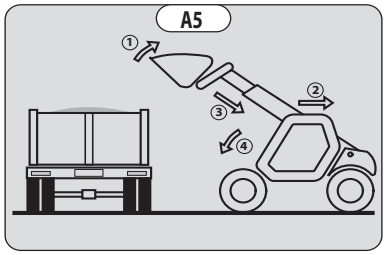

B - BACKFILLING

- Place the bottom of the bucket in a horizontal position, barely touching the ground (1) (fig. B1).
- Drive forward gradually (2). When filled, the bucket will serve as a levelling blade (fig. B1).

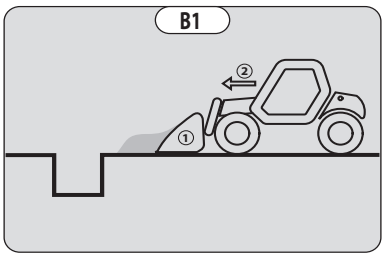

During operation, look out for trench is and ground which has been recently dug and/or backfilled.

PLATFORM OPERATING INSTRUCTIONS

For telehandlers fitted with a PLATFORM

A - AUTHORISATION FOR USE

- Operation of the platform requires further authorisation in addition to that of the telehandler.

B - TELEHANDLER SUITABILITY FOR USE

- MANITOU has ensured that this platform is suitable for use under the normal operating conditions defined in this operator's manual, with a **STATIC test coefficient of 1.25** and a **DYNAMIC test coefficient of 1.1** as specified in harmonised standard **EN 280** for "mobile elevating work platforms".
- Before commissioning, the company manager must make sure that platform is appropriate for the work to be done, and perform certain tests (in accordance with current legislation).

C - PRECAUTIONS WHEN USING THE PLATFORM

- Wear suitable clothing when using the platform, avoid loosely-fitting garments.
- Never operate the platform when hands or feet are wet or soiled with greasy substances.
- Always pay attention when using the platform. Do not listen to the radio or music with headphones or ear buds.
- For increased comfort, adopt the correct position at the platform's operator station.
- The platform's guard rail exempts the operator from wearing a safety harness under normal operating conditions. As a result, you are responsible for deciding whether to wear a safety harness.
- The control units must never in any event be used for any other than their intended purposes (e.g. climbing onto or down from the telehandler, portmanteau etc.).
- Safety helmets must be worn.
- The operator must always be in his normal position in the driver's cab. It is prohibited to have arms or legs, or generally any part of the body, protruding from the platform.
- Ensure that any materials loaded onto the platform (pipes, cables, containers, etc.) cannot fall out. Do not pile these materials to the point where it is necessary to step over them.

D - USING THE PLATFORM

- However experienced they may be, operators must acquaint themselves with the emplacement and operation of all control instruments prior to operating the platform.
- Check before use that the platform has been correctly assembled and locked onto the telehandler.
- Check before operating the platform that the access gate has been properly locked.
- The platform should be operated in an area free of any obstructions or danger when it is lowered to the ground.
- The operator using the platform must be aided on the ground by a person with adequate training.
- You should stay within the limits set out in the platform load chart.
- The lateral constraints are limited (e 2 - DESCRIPTION: CHARACTERISTICS).
- It is strictly forbidden to suspend a load from the platform or the telehandler boom without a specially designed attachment (e INSTRUCTIONS FOR HANDLING A LOAD: H - TAKING UP AND LAYING A SUSPENDED LOAD).
- The platform cannot be used as a crane or a lift for permanently transporting people or materials, nor as jacks or supports.
- The telehandler must not be moved with one (or more) person(s) in the platform.
- It is forbidden to transport people on the platform using the hydraulic controls in the telehandler's driver's cab (except in case of rescue).
- The operator must not climb onto to off the platform when it is not on ground level (boom retracted and in the down position).
- The platform must not be fitted with attachments that increase the unit's wind load.
- Do not use ladders or improvised structures in the platform to gain extra height.
- Do not climb onto the sides of the platform to gain extra height.
- It is forbidden to use the platform on forks. The forks are only to be used for storing the platform and not for lifting people under any circumstances.

E - ENVIRONMENT

It is forbidden to use the platform close to electricity cables. Maintain the specified safe distances.

RATED VOLTAGE	SAFE DISTANCE m (ft)
50 < U < 1000	2.30 (7.54)
1000 < U < 30000	2.50 (8.20)
30000 < U < 45000	2.60 (8.53)
45000 < U < 63000	2.80 (9.18)
63000 < U < 90000	3.00 (9.84)
90000 < U < 150000	3.40 (11.15)
150000 < U < 225000	4.00 (13.12)
225000 < U < 400000	5.30 (17.38)
400000 < U < 750000	7.90 (25.91)

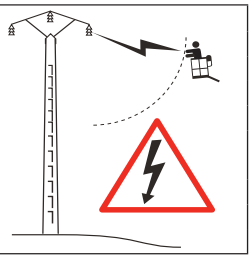

It is strictly forbidden to use the platform when the wind speed exceeds 45 km/h (27.9 mph).

- To visually recognise this wind speed, refer to the empirical wind evaluation scale below:

BEAUFORT scale (wind speed at a height of 10 m on a flat site)						
Force	**Type of wind**	**Speed (knots)**	**Speed (km/h)**	**Speed (m/s)**	**Effects on the ground**	**Sea conditions**
0	Calm	**0 - 1**	**0 - 1**	**< 0,3**	Smoke rises vertically.	Sea is like a mirror.
1	Light air	**1 - 3**	**1 - 5**	**0.3 - 1.5**	Smoke indicates direction of wind.	Ripples with appearance of scale, no foam crests.
2	Light breeze	**4 - 6**	**6 - 11**	**1.6 - 3.3**	Wind felt on face, leaves rustle.	Short wavelets, but pronounced.
3	Gentle breeze	**7 - 10**	**12 - 19**	**3.4 - 5.4**	Leaves and small twigs in constant motion.	Very small waves, crests begin to break.
4	Moderate breeze	**11 - 16**	**20 - 28**	**5.5 - 7.9**	Wind raises dust and loose pieces of paper; small branches are moved.	Small waves, becoming longer, numerous whitecaps.
5	Fresh breeze	**17 - 21**	**29 - 38**	**8 - 10.7**	Small tees in leaf begin to sway.	Wavelets form on inland waters; moderate waves, taking longer form.
6	Strong breeze	**22 - 27**	**39 - 49**	**10.8 - 13.8**	Large branches in motion, whistling heard in overhead wires, umbrella use becomes difficult.	Larger waves forming, whitecaps everywhere, some spray.
7	Near gale	**28 - 33**	**50 - 61**	**13.9 - 17.1**	Whole trees in motion, inconvenience felt when walking against the wind.	Sea heaps up; white foam from breaking waves begins to be blown in streaks along the direction of the wind.
8	Gale	**34 - 40**	**62 - 74**	**17.2 - 20.7**	Wind breaks twigs off trees; impedes progress.	Moderately high waves of greater length; edges of crests begin to break into spindrift.
9	Strong gale	**41 - 47**	**75 - 88**	**20.8 - 24.4**	Wind damages roofs (chimneys, slates, etc.).	Large waves, the crests of the waves start to roll, streaks of foam, reduced visibility.
10	Storm	**48 - 55**	**89 - 102**	**24.5 - 28.4**	Seldom experienced inland; trees uprooted; considerable structural damage occurs.	Very high waves; white streaks of foam; reduced visibility.
11	Violent storm	**56 - 63**	**103 - 117**	**28.5 - 32.6**	Very rare, widespread damage.	Exceptionally high waves able to hide medium sized ships from view, reduced visibility.
12	Hurricane	**64 or more**	**118 or more**	**32.7 or more**	Devastating damage.	Sea completely white; air filled with foam and spray, very reduced visibility.

F - MAINTENANCE

Your platform must be periodically inspected to ensure its continued compliance.
The inspection frequency is defined by the legislation applying in the country in which the equipment is used.
In France, a general periodic inspection every 6 months (order of 1 March 2004).

INSTRUCTIONS FOR USING THE RADIOCONTROL

For telehandlers with RC radiocontrol

HOW TO USE THE RADIOCONTROL

SAFETY INSTRUCTIONS

- This radiocontrol consists of electronic and mechanical safety elements. Commands cannot come from another transmitting unit because each radiocontrol uses unique internal coding.

If it is used improperly or incorrectly, there is a risk of danger to:
- The physical and mental health of the user or others.
- The telehandler and other neighbouring items.
Everyone working with this radiocontrol:
- Must be qualified in line with current regulations and therefore appropriately trained.
- Must follow this operating manual as closely as possible.

- The system is used to control the telehandler remotely via radio waves. Commands are also transmitted if the telehandler is out of sight (behind an obstacle or a building for example), this is why:
  - After stopping the telehandler and removing the key switch (only possible when it is stationary), always place the transmitting unit in a safe, dry place.
  - Before performing any installation, maintenance or repair work, always switch off power sources (in particular, electric welding devices and electric head units on hydraulic distributors must be disconnected at each section).
  - Never remove or alter the safety devices (such as the hand-guard frame, key, emergency stop button, etc.).

Never drive the telehandler if it is not continuously and perfectly within view of the operator!

- Before leaving the transmitting unit, the operator must make sure that it cannot be used by an unauthorized third person: either by removing the key button from the transmitting unit or locking it in an inaccessible place.
- The user must ensure that the instruction manual is accessible at all times and that operators have read and understood it.

INSTRUCTIONS

- Take up position in a stable place with no risk of slipping.
- Before using the transmitting unit, make sure there is nobody within the working area.
- Only use the transmitting unit with its carrying device or installed correctly on the platform.

When you remove the transmitting unit, remove the accumulator and key button so that it cannot be used accidentally or deliberately by anyone else.

PROTECTIVE DEVICES

- The telehandler will be immobilised within a maximum of 450 milliseconds (approx. 0.5 second):
  - If the emergency stop button of the transmitting unit is pressed (50 milliseconds), or that of the telehandler.
  - If the transmission distance of the radio waves is exceeded.
  - If the transmitter is faulty.
  - If an interfering radio signal is received from elsewhere.
  - If the accumulator is removed from its housing in the transmitting unit.
  - If the battery reaches the end of its autonomy.
  - If the transmitting unit is switched off by turning the key switch to the off position.
- These protective devices are provided for the safety of personnel and property and must never be modified, removed or bypassed in any way whatsoever!
- The hand-guard frame prevents external action on a manipulator (e.g. if the transmitting unit is dropped, or if the operator leans on a guard-rail).
- An electronic safety device prevents radio transmission from being initiated if the manipulators are not mechanically and electrically at rest and if the internal combustion engine speed selector is not set to idle.

In an emergency, press the transmitting unit emergency stop button immediately; then follow the manual's instructions (e 2 - DESCRIPTION : INSTRUMENTS AND CONTROLS). TELEHANDLER MAINTENANCE INSTRUCTIONS

GENERAL INSTRUCTIONS

- Ensure the area is sufficiently ventilated before starting the telehandler.
- Wear clothes suitable for the maintenance of the telehandler, avoid wearing jewellery and loose clothes. Tie and protect your hair, if necessary.
- Stop the engine before carrying out any maintenance on the telehandler and remove the ignition key.
- Read the operator's manual carefully.
- Carry out all repairs immediately, even if the repairs concerned are minor.
- Repair all leaks immediately, even if the leak concerned is minor.
- Make sure that the disposal of process materials and of spare parts is carried out in total safety and in a ecological way.
- Be careful of the risk of burning and splashing (exhaust, radiator, engine, etc.).

PLACING THE BOOM SAFETY WEDGE

- The telehandler is equipped with a boom safety wedge (2 - DESCRIPTION : INSTRUMENTS AND CONTROLS) that must be installed on the rod of the lifting cylinder when working beneath the boom.

FITTING THE WEDGE

- Fully raise the boom.
- Place the safety wedge 1 on the rod of the lifting cylinder and secure with the rod 2 and the pin 3.
- Slowly lower the boom then stop the hydraulic movements before it comes into contact with the wedge.

REMOVING THE WEDGE

- Fully raise the boom.
- Remove the pin and the rod.
- Return the safety wedge to the storage location provided on the telehandler.

Only use the wedge supplied with the telehandler.

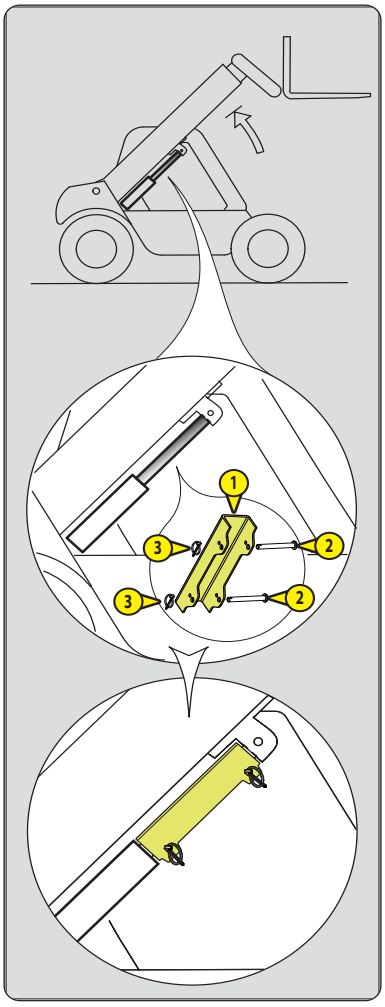

MAINTENANCE

- Perform the periodic service (e 3 - MAINTENANCE) to keep your telehandler in good working condition. Failure to perform the periodic service may cancel the contractual guarantee.

MAINTENANCE LOG

- The maintenance operations carried out in accordance with the recommendations given in part: 3 - MAINTENANCE and the other inspection, maintenance or repair operations or modifications performed on the telehandler or its attachments shall be recorded in a maintenance logbook. The entry for each operation shall include details of the date of the works, the names of the individuals or companies having performed them, the type of operation and its frequency, if applicable. The part numbers of any telehandler items replaced shall also be indicated.

LUBRICANT AND FUEL LEVELS

- Use the recommended lubricants (never use contaminated lubricants).
- Do not fill the fuel tank when the engine is running.
- Only fill up the fuel tank in areas specified for this purpose.
- Do not fill the fuel tank to the maximum level.
- Do not smoke or approach the telehandler with a flame, when the fuel tank is open or is being filled.

HYDRAULICS

- Any work on the load handling hydraulic circuit is forbidden except for the operations described in part: 3 - MAINTENANCE.
- Do not attempt to loosen unions, hoses or any hydraulic component with the circuit under pressure.

COUNTERBALANCE VALVE: It is dangerous to change the setting and remove the balancing valves or safety valves which may be fitted to your telehandler cylinders.
The HYDRAULIC ACCUMULATORS that may be fitted on your telehandler are pressurised units. Dismantling these devices and their piping is dangerous. Removing these accumulators and their pipework is a dangerous operation and must only be performed by approved personnel (consult your dealer).

ELECTRICITY

- Do not short-circuit the starter relay to start the engine. If the forward/reverse selector is not in neutral and the parking brake is not applied, the telehandler may suddenly start to move.
- Do not place metal items on the battery.
- Disconnect the battery before working on the electrical circuit.

WELDING

- Disconnect the battery before any welding operations on the telehandler.
- When carrying out electric welding work on the telehandler, connect the negative cable from the equipment directly to the part being welded, so as to avoid high tension current passing through the alternator.
- Never carry out welding or work which gives off heat on an assembled tire. Heat increases the pressure with a risk of tire explosion.
- If the telehandler is equipped with an electronic control unit, disconnect this before starting to weld, to avoid the risk of causing irreparable damage to electronic components.

WASHING THE TELEHANDLER

- Clean the telehandler or at least the area concerned before any intervention.
- Remember to close and lock all accesses to the telehandler (doors, windows, cowls…).
- During washing, avoid the articulations and electrical components and connections.
- If necessary, protect against penetration of water, steam or cleaning agents, components susceptible of being damaged, particularly electrical components and connections and the injection pump.
- Clean the telehandler of any fuel, oil or grease trace.

TRANSPORTING THE TELEHANDLER

Transporting the telehandler involves real risks for the operator and others involved.
- Towing, slinging or transporting the telehandler (e 3 - MAINTENANCE: OCCASIONAL OPERATION). IF THE TELEHANDLER IS NOT TO BE USED FOR A LONG TIME

INTRODUCTION

The following recommendations are intended to prevent the telehandler from being damaged when it is withdrawn from service for an extended period.

Procedures to follow if the telehandler is not to be used for a long time and for starting it up again afterwards must be performed by your dealership. This long-term storage period must not exceed 12 months.
After 12 months, perform the telehandler return to service and long term shutdown procedures again.

PREPARING THE TELEHANDLER

- Clean the telehandler thoroughly.
- Check and repair any fuel, oil, water or air leaks.
- Replace or repair any worn or damaged parts.
- Wash the painted surfaces of the telehandler in clear and cold water and wipe them.
- Touch up the paintwork if necessary.
- Shut down the telehandler (e OPERATING INSTRUCTIONS UNLADEN AND LADEN).
- Make sure the boom cylinder rods are all in retracted position.
- Release the pressure in the hydraulic circuits.

ADBLUE TANK

Depending on the telehandler model

- Drain and rinse the AdBlue tank.
- Replace the filter on the AdBlue feed pump (3 - MAINTENANCE: 1000 HOUR - PERIODIC MAINTENANCE - EVERY 1000 HOURS OF SERVICE OR EVERY 2 YEARS)
- Slowly fill the tank with new AdBlue up to the bottom of the filler neck.
- Start up the telehandler to pressurise the circuit and bring it up to working temperature, then shut down the engine.
- If necessary, top up the tank.

PROTECTING THE ENGINE

- Contact your dealer to obtain the procedure for protecting the inside of the engine (use of protection product).
- Fill the fuel tank.
- Empty and replace the cooling liquid (e 3 - MAINTENANCE: 2000 HOUR - PERIODIC MAINTENANCE - EVERY 2000 HOURS OF SERVICE OR EVERY 4 YEARS)
- Leave the engine running at idling speed for a few minutes, then switch off.
- Replace the engine oil and oil filter (e 3 - MAINTENANCE: 500 HOUR - PERIODIC MAINTENANCE - EVERY 500 HOURS OF SERVICE OR EVERY 1 YEARS)
- Run the engine for a short time so that the oil and cooling liquid circulate inside.
- Disconnect the battery and store it in a safe place away from the cold, after charging it to a maximum.
- Block the outlet with waterproof sticker tape.
- Remove the drive belts and store them in a safe place.
- Disconnect the engine cut-off solenoid on the injection pump and carefully insulate the connection.

PROTECTING THE TELEHANDLER

- Set the telehandler on axle stands so that the tires are off the ground.
- Release the parking brake (according to model of telehandler).
- Protect cylinder rods which will not be retracted, from corrosion.
- Wrap the tires.

NOTE: If the telehandler is to be stored outdoors, cover it with a waterproof tarpaulin.

BRINGING THE TELEHANDLER BACK INTO SERVICE

- Remove the waterproof sticker tape from all the holes.
- Refit and reconnect the battery.
- Remove the protection from the cylinder rods.
- Carry out daily maintenance (e 3 - MAINTENANCE: 10 HOURS - DAILY MAINTENANCE OR EVERY 10 HOURS OF SERVICE).
- Put the handbrake on and remove the axle stands.
- Empty and clean the fuel tank (e 3 - MAINTENANCE: 1000 HOUR - PERIODIC MAINTENANCE - EVERY 1000 HOURS OF SERVICE OR EVERY 2 YEARS)
- Fill the fuel tank with clean diesel filtered through the filler port.
- Replace the fuel filter (e 3 - MAINTENANCE: 500 HOUR - PERIODIC MAINTENANCE - EVERY 500 HOURS OF SERVICE OR EVERY 1 YEARS)
- Replace the fuel pre-filter (e 3 - MAINTENANCE: 500 HOUR - PERIODIC MAINTENANCE - EVERY 500 HOURS OF SERVICE OR EVERY 1 YEAR) (according to model of telehandler).
- Drain and rinse the AdBlue tank (according to model of telehandler).
- Slowly fill the tank with new AdBlue up to the bottom of the filler neck (according to model of telehandler).
- Refit and set the tension in the drive belts (e 3 - MAINTENANCE: FILTER CARTRIDGES AND BELTS).
- Turn the engine over with the starter, to allow the oil pressure to rise.
- Reconnect the engine cut-off solenoid.
- Fully lubricate the telehandler (◁ 3 - MAINTENANCE: 50 HOUR - WEEKLY MAINTENANCE OR EVERY 50 HOURS OF SERVICE).

Ensure the area is sufficiently ventilated before starting the telehandler.

- Start up the telehandler, following the safety instructions and regulations (e OPERATING INSTRUCTIONS UNLADEN AND LADEN).
- Run all the boom's hydraulic movements, concentrating on the ends of travel for each cylinder. TELEHANDLER DISPOSAL

Please consult your dealer before disposing of your telehandler.

RECYCLING OF MATERIALS

METALS

- Metals are 100 % recoverable and recyclable.

PLASTICS

- Plastic parts are identified with a marking in accordance with current regulations.
- A limited range of materials is used to simplify the recycling process.
- The majority of plastic components are made of "thermoplastic" plastics, that are easily recycled by melting, granulating or grinding.

RUBBER

- Tires and seals can be ground for use in cement manufacture or to obtain reusable granules.

GLASS

- Glass items can be removed and collected for processing by glaziers.

ENVIRONMENTAL PROTECTION

By entrusting the maintenance of your telehandler to the MANITOU network, the risk of pollution is limited and the contribution to environmental protection contribution is made.

WORN OR DAMAGED PARTS

- Do not dump them in the countryside.
- MANITOU and its network have signed-up to a scheme of environmental protection through recycling.

USED OIL

- The MANITOU network organises the collection and processing of used oil products.
- By handing over your waste oil to MANITOU, the risk of pollution is limited.

USED BATTERIES

- Do not throw away batteries, as they contain metals that are harmful for the environment.
- Return them to the MANITOU network or any other approved collection point.

NOTE: MANITOU seeks to manufacture telehandlers that provide the best performance and limit polluting emissions.

TELEHANDLER DISPOSAL

Please consult your dealer before disposing of your telehandler.

RECYCLING OF MATERIALS

METALS

- Metals are 100 % recoverable and recyclable.

PLASTICS

- Plastic parts are identified with a marking in accordance with current regulations.
- A limited range of materials is used to simplify the recycling process.
- The majority of plastic components are made of "thermoplastic" plastics, that are easily recycled by melting, granulating or grinding.

RUBBER

- Tires and seals can be ground for use in cement manufacture or to obtain reusable granules.

GLASS

- Glass items can be removed and collected for processing by glaziers.

ENVIRONMENTAL PROTECTION

By entrusting the maintenance of your telehandler to the MANITOU network, the risk of pollution is limited and the contribution to environmental protection contribution is made.

WORN OR DAMAGED PARTS

- Do not dump them in the countryside.
- MANITOU and its network have signed-up to a scheme of environmental protection through recycling.

USED OIL

- The MANITOU network organises the collection and processing of used oil products.
- By handing over your waste oil to MANITOU, the risk of pollution is limited.

USED BATTERIES

- Do not throw away batteries, as they contain metals that are harmful for the environment.
- Return them to the MANITOU network or any other approved collection point.

NOTE: MANITOU seeks to manufacture telehandlers that provide the best performance and limit polluting emissions.

https://truckmanualshub.com/

2 - DESCRIPTION

https://truckmanualshub.com/
duma rent
www.duma-rent.com

SAFETY PLATES AND STICKERS

⚠ IMPORTANT ⚠

Clean all of the stickers and safety plates to make them legible.
It is essential to replace stickers and safety plates which are illegible or damaged.
Check the presence of stickers and safety plates after replacing any spare parts.

EXTERNAL PLATES AND STICKERS

POINT	REFERENCE	DESCRIPTION
1	52563320	Fixing Point
2	24653C	Lifting Point
3	296733	Set battery switch
4	932095	Safe moving parts
5	296751	Not practicable area
6	250707	Reversible fan
7	716907	Flammable warning
8	296751	Diesel caburante
9	716909	Hydraulic oil tank
10	53017705	Wheel torque
11	296998	Can not be placed under or over the forks
12	234805	Instructions for the hydraulic coupling
		- instruction accumulator

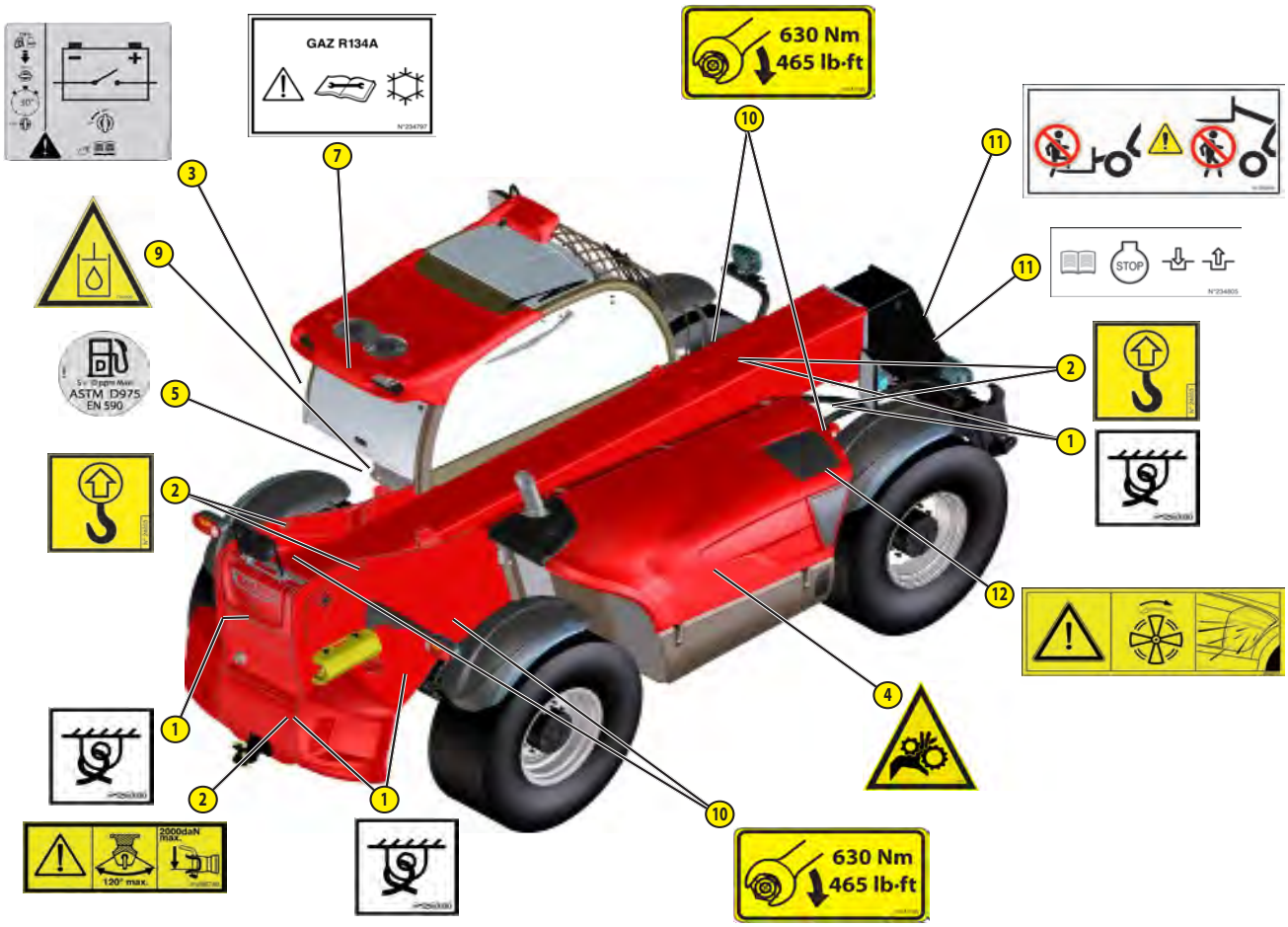

STICKERS AND PLATES UNDER THE ENGINE HOOD

POINT	REFERENCE	DESCRIPTION
1	716905	Danger hot surface
2	716919	Attention to the air inlet
3	293887	Engine coolant
4	716926	Risk of leakage of the coolant
5	716906	Shear hands
6	296741	Walking surface
7	716907	Flammable liquid hazard
8	909050	Risk of electric shock
9	930984	Plate fuses PowerBox
10	288430	Repair tools
11	716925	Fluid pressure hazard

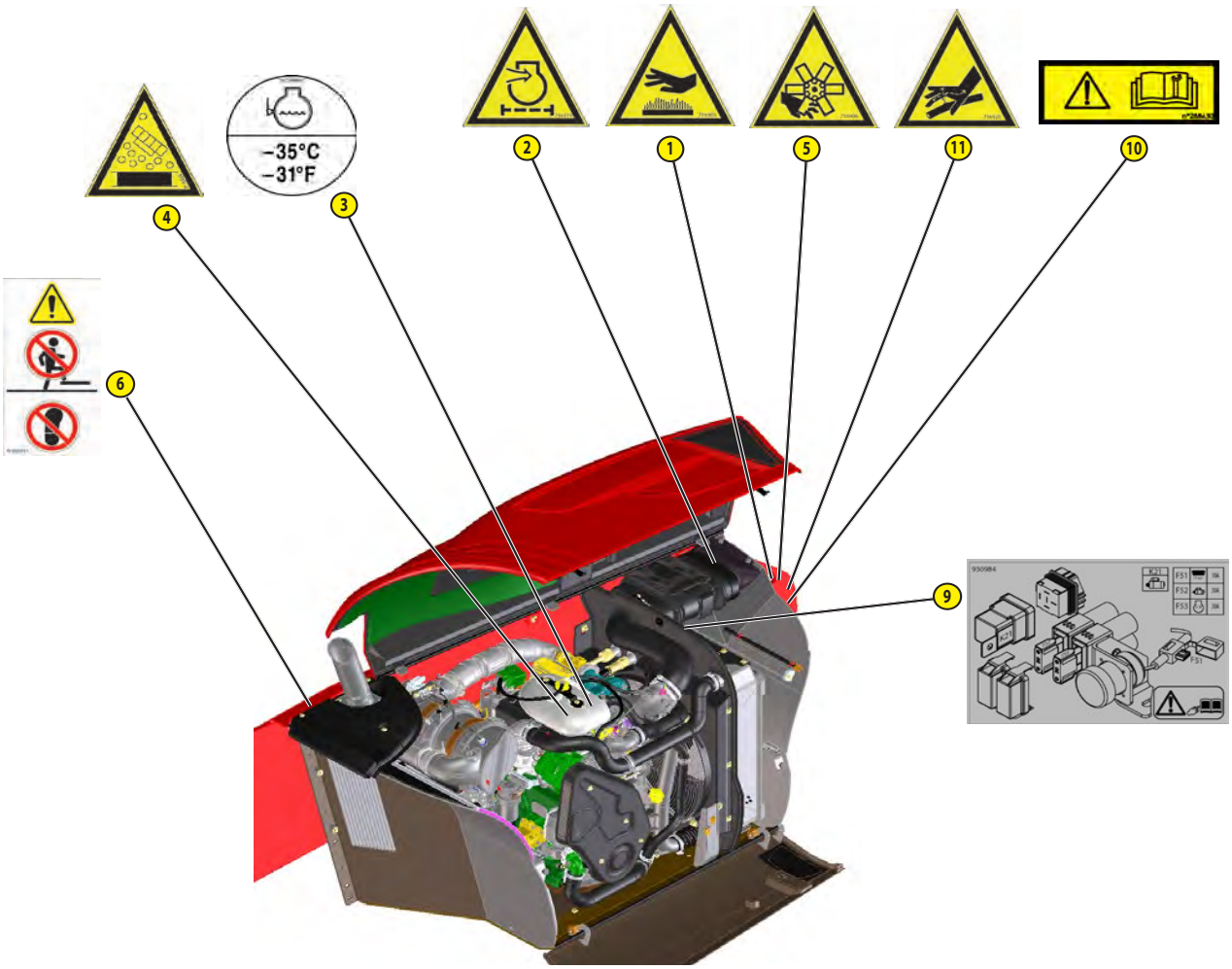

STICKERS AND PLATES IN THE CAB

POINT	REFERENCE	DESCRIPTION
1	268491	- Instructions oil brake
2	239595	- Sound power 105dB
3	302780	- Instructions driver presence / start
4	297735	- Instructions operation mode
5	290183	- Dump set on telescope
6	184276	- Control direction selector
7	193032	- Conformity cab
8	223324	- Patents
9	296739	- Cab approval (depending on model)
10	Consulter votre concessionnaire	- Nameplate
11	930983	- Fuses
12	261307	- Instruction operator schedule
13	53001068	- Load chart + function manipulator
15	933345	- Excluding rollover

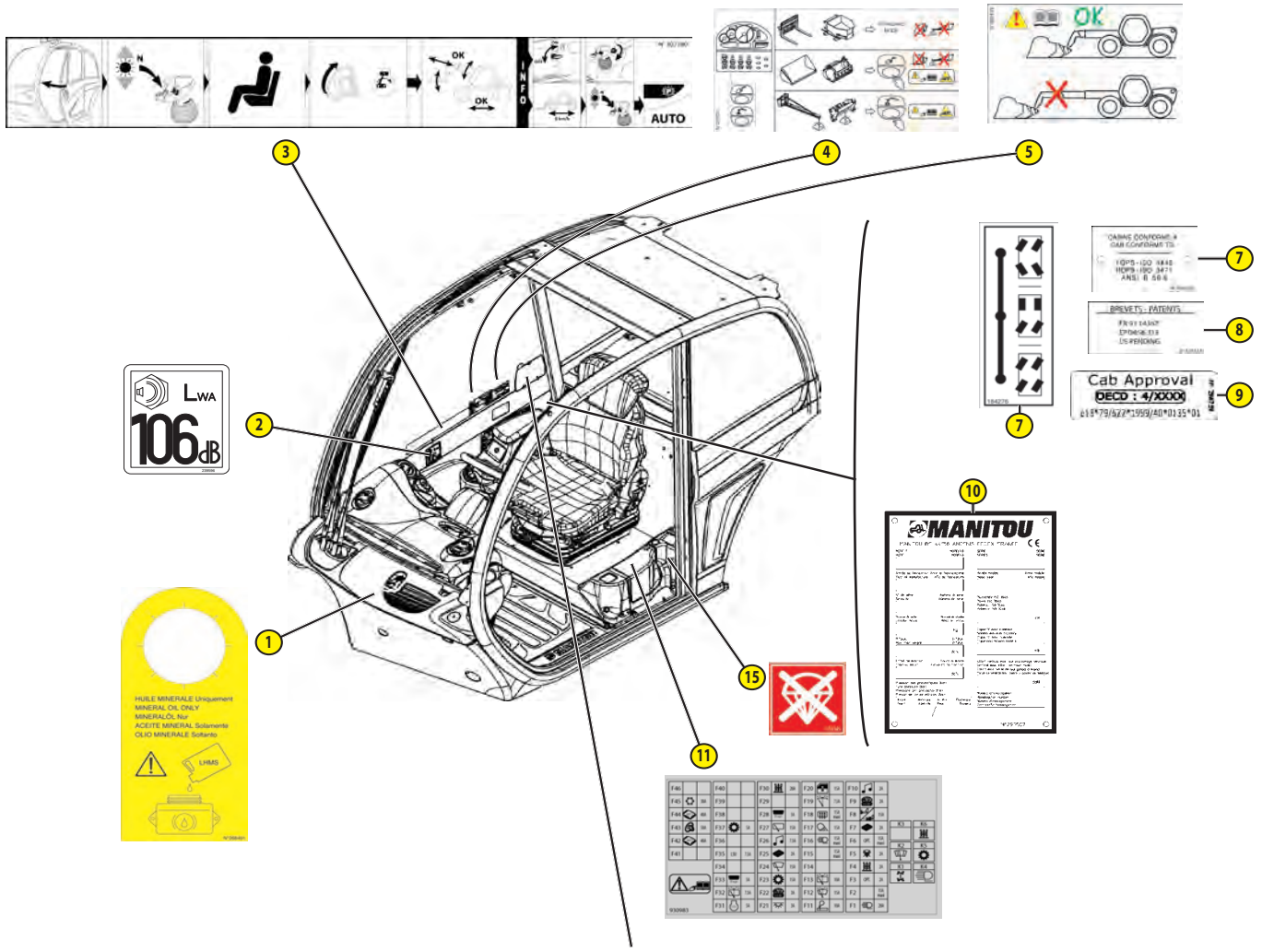
OK
OK
INFO
AUTO
OK
3
4
5
LWA
106dB
2
1
7
7
BREVETS - PATENTS
8
Cab Approval
DECD : 4/XXXX
9
10
MANITOU
15
11
HUILE MINERALE Uniquement
MINERAL OIL ONLY
MINERALÖL Nur
ACEITE MINERAL Solamente
OLIO MINERALE Solterto
LHMS

MANITOU
12

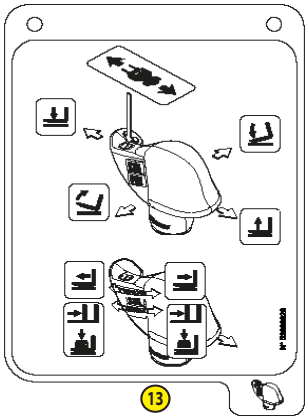
13

ORH
ORH

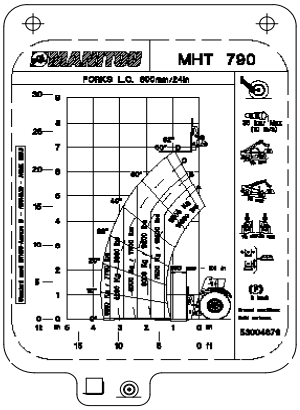
MANITOU
MHT 790

CE DECLARATION OF CONFORMITY

1) **DECLARATION "CE" DE CONFORMITE (originale)**
" EC" DECLARATION OF CONFORMITY (original)

2) La société, *The company* : **MANITOU ITALIA S.r.l.**
3) Adresse, *Address* **: Via Cristoforo Colombo 2, 41013 Cavazzona in Castelfranco Emilia –ITALIE**

4)Dossier technique,*Technical file* : MANITOU ITALIA S.r.l. Via Cristoforo Colombo 2, 41013 Cavazzona in Castelfranco Emilia (MO) , Italie

5) Constructeur de la machine décrite ci-après, *Manufacturer of the machine described below* :

CHARIOT TELESCOPIQUE ROTATIF MRT 2150 PRIVILEGE N° 763407
NACELLE ORH EXTENSIBLE 2,25/4M – Capacité 365 Kg p.n. 711204 (GSS POSITION B)
PFB p.n.709835 + FOURCHES FEM 4999 KG p.n.578097 (GSS POSITION J)
TREUIL 5 TON p.n.711934 (GSS POSITION J)

6) Déclare que cette machine, *Declares that this machine* :

❑ 7)- Est conforme aux directives suivantes et à leurs transpositions en droit national, *Complies with the following directives and their transpositions into national law*

2006/42/CE

8) - Pour les machines de l'annexe IV , *For annex IV machines* :
9) - Numéro d'attestation, *Certificate number*: ME.0017.10 REV.05 du, *of* 05/07/2011
10) - Organisme notifié, *Notified body* : **ECO s.p.a. EUROPEAN CERTIFYNG ORGANIZATION, Via Mengolina 33 48018 Faenza- Ravenna - Italia – Organismo notificato n° 0714**

2000/14/CE + 2005/88/CE

11) -Procédure appliquée, *Applied procedure* : **Annexe VI – 2000 / 14 / CE proc.I**
10) - Organisme notifié, *Notified body* : **ECO s.p.a. EUROPEAN CERTIFYNG ORGANIZATION, Via Mengolina 33 48018 Faenza- Ravenna - Italia – Organismo notificato n° 0714**
12) - Niveau de puissance acoustique, *Sound power level* :
13) Mesuré, *Measured* : 103 dB (A)
14) Garanti, *Guaranteed* : 104 dB (A)

2004/108/CE

❑ 15)-Normes harmonisées utilisées, *Harmonised standards used* : **EN 12895, EN 280 :2001+A2 :2009**

❑ 16)-Normes ou dispositions techniques utilisées, *Standards or technical provisions used* : /

17) - Fait à, *Done at* : CASTELFRANCO EMILIA 18) - Date, *Date* : 04/01/2013
19) - Nom du signataire, *Name of signatory* : IOTTI MARCO
20) - Fonction, *Function* : DIRECTEUR GENERAL
21) - Signature, *Signature* :

MANITOU ITALIA Srl
A Socio Unico - Sede Legale e Amm.va - Via C. Colombo, 2
Località Cavazzona - 41013 CASTELFRANCO E. (MO)
Tel. 059/959811 - Fax 059 / 959850
Cap. Soc. € 5.000.000 I.V.
Reg. Impr. Di Modena e CF. 04173970369
P.IVA IT 02591050360 - N. Mecc. MO 033322 R.E.A. 148776

FAC-SIMILE

649010 EN/US/AU (15/12/2019)
MHT 790 1043D H ST4 S1

bg : 1) удостоверение за « CE » съответствие (оригинална), 2) Фирмата, 3) Адрес, 4) Техническо досие, 5) Фабрикант на описаната по-долу машина, 6) Обявява, че тази машина, 7) Отговаря на следните директиви и на тяхното съответствие национално право, 8) За машините към допълнение IV, 9)Номер на удостоверението, 10) Наименувана фирма, 15) хармонизирани стандарти използвани, 16) стандарти или технически правила, използвани, 17) Изработено в, 18) Дата, 19) Име на разписалия се, 20) Функция, 21) Функция.

cs : 1) ES prohlášení o shodě (původní), 2) Název společnosti, 3) Adresa, 4) Technická dokumentace, 5) Výrobce níže uvedeného stroje, 6) Prohlašuje, že tento stroj, 7) Je v souladu s následujícími směrnicemi a směrnicemi transponovanými do vnitrostátního práva, 8) Pro stroje v příloze IV, 9) Číslo certifikátu, 10) Notifikační orgán, 15) harmonizované normy použity, 16) Norem a technických pravidel používaných, 17) Místo vydání, 18) Datum vydání, 19) Jméno podepsaného, 20) Funkce, 21) Podpis.

da : 1) EF Overensstemmelseserklæring (original), 2) Firmaet, 3) Adresse, 4) tekniske dossier, 5) Konstruktør af nedenfor beskrevne maskine, 6) Erklærer, at denne maskine, 7) Overholder nedennævnte direktiver og disses gennemførelse til national ret, 8) For maskiner under bilag IV, 9) Certifikat nummer, 10) Bemyndigede organ, 15) harmoniserede standarder, der anvendes, 16) standarder eller tekniske regler, 17) Udfærdiget i, 18) Dato, 19) Underskrivers navn, 20) Funktion, 21) Underskrift.

de : 1) EG-Konformitätserklärung (original), 2) Die Firma, 3) Adresse, 4) Technischen Unterlagen, 5) Hersteller der nachfolgend beschriebenen Maschine, 6) Erklärt, dass diese Maschine, 7) den folgenden Richtlinien und deren Umsetzung in die nationale Gesetzgebung entspricht, 8) Für die Maschinen laut Anhang IV, 9) Bescheinigungsnummer, 10) Benannte Stelle, 15) angewandten harmonisierten Normen, 16) angewandten sonstigen technischen Normen und Spezifikationen, 17) Ausgestellt in, 18) Datum, 19) Name des Unterzeichners, 20) Funktion, 21) Unterschrift.

el : 1) Δήλωση συμμόρφωσης CE (πρωτότυπο), 2) Η εταιρεία, 3) Διεύθυνση, 4) τεχνικό φάκελο, 5) Κατασκευάστρια του εξής περιγραφόμενου μηχανήματος, 6) Δηλώνει ότι αυτό το μηχάνημα, 7) Είναι σύμφωνο με τις εξής οδηγίες και τις προσαρμογές τους στο εθνικό δίκαιο, 8) Για τα μηχανήματα παραρτήματος IV, 9) Αριθμός δήλωσης, 10) Κοινοποιημένος φορέας, 15) εναρμονισμένα πρότυπα που χρησιμοποιούνται, 16) Πρότυπα ή τεχνικούς κανόνες που χρησιμοποιούνται, 16) Είναι σύμφωνο με τα εξής πρότυπα και τεχνικές διατάξεις, 17) Εν, 18) Ημερομηνία, 19) Όνομα του υπογράφοντος, 20) Θέση, 21) Υπογραφή.

es : 1)Declaración DE de conformidad (original), 2) La sociedad, 3) Dirección, 4) expediente técnico, 5) Constructor de la máquina descrita a continuación, 6) Declara que esta máquina, 7) Está conforme a las siguientes directivas y a sus transposiciones en derecho nacional, 8) Para las máquinas anexo IV, 9) Número de certificación, 10) Organismo notificado, 15) normas armonizadas utilizadas, 16) Otras normas o especificaciones técnicas utilizadas, 17) Hecho en, 18) Fecha, 19) Nombre del signatario, 20) Función, 21) Firma.

et : 1) EÜ vastavusdeklaratsioon (algupärane), 2) Äriühing, 3) Aadress, 4) Tehniline dokumentatsioon, 5) Seadme tootja, [illegible] et see toode, 7) On vastavuses järgmiste direktiivide ja nende riigisisesesse õigusesse ülevõtmiseks vastuvõetud õigusaktidega, 8) IV lisas loetletud seadmete puh[illegible]mistuse number, 10) Sertifitseerimisasutus, 15) kasutatud ühtlustatud standarditele, 16) Muud standardites või spetsifikatsioonides kasutatakse, 17) [illegible]andmise k[illegible] 18) Väljaandmise aeg, 19) Allkirjastaja nimi, 20) Amet, 21) Allkiri.

fi : 1) EY-vaatimustenmukaisuusvakuutus (alkuperäiset), 2) Yritys, 3) Osoite, 4) teknisen eri[illegible], 5) [illegible]essa [illegible]valmistaja, 6) Vakuuttaa, että tämä kone, 7) Täyttää seuraavien direktiivien sekä niitä vastaavien kansallisten säännösten vaatimukset [illegible]tteen [illegible] kon[illegible]salta, 9) Todistuksen numero, 10) Ilmoitettu laitos, 15) yhdenmukaistettuja standardeja käytetään, 16) muita standardeja tai, 17) Paikka, [illegible]ka, 1[illegible] [illegible]oitta[illegible] nimi, 20) Toimi, 21) Allekirjoitus.

ga : 1) « EC »dearbhú comhréireachta (bunaidh), 2) An comhlacht, 3) Seoladh, 4) [illegible]nhad [illegible] 5) [illegible]éan [illegible]an innill a thuairiscítear thíos, 6) Dearbhaíonn sé go bhfuil an t-inneall, 7) Go gcloíonn sé le na treoracha seo a leanas agus a trasuímh isteach [illegible]í nár[illegible]ta, 8) [illegible]ha[illegible]h innill an aguisín IV, 9) Uimhir teastais, 10) Comhlacht a chuireadh i bhfios, 15) caighdeáin comhchuibhithe a úsáidtear, 16) caighdeáin eile nó so[illegible]ochtaí teic[illegible] a ú[illegible]tear, 17) Déanta ag, 18) Dáta, 19) Ainm an tsínitheora, 20) Feidhm, 21) Síniú.

hu : 1) CE megfelelőségi nyilatkozat (eredeti), 2) A vállalat, 3) Cí[illegible]ki d[illegible]mentáció, 5) Az alábbi gép gyártója, 6) Kijelenti, hogy a gép, 7) Megfelel az alábbi irányelveknek valamint azok honosított előírásain[illegible] A IV. melléklet gé[illegible]ez, 9) Bizonylati szám, 10) Értesített szervezet, 15) felhasznált harmonizált szabványok, 16) egyéb felhasznált műszaki szabványok és elő[illegible]ok hivatkozá[illegible] 17) Ke[illegible]ely), 18) Dátum, 19) Aláíró neve, 20) Funkció, 21) Aláírás.

is : 1) (Samræmisvottorð ESB (upprunalega), 2) [illegible]yrirtækið, 3) Aðsetur, 4) Tæknilegar skrá, 5) Smiður tækisins sem lýst er hér á eftir, 6) Staðfestir að tækið, 7) Samræmist eftirfarandi stöðlum og staðfærslu [illegible]neð hl[illegible]n af þjó[illegible]rrétti, 8) Fyrir tækin í aukakafla IV, 9) Staðfestingarnúmer, 10) Tilkynnt til, 15) samhæfða staðla sem notaðir, 16) önnur staðlar eða forskrift[illegible]notaðir, 17) [illegible]ður, [illegible]ng, 19) Nafn undirritaðs, 20) Staða, 21) Undirskrift.

it : 1) Dichiarazione C[illegible] conformit[illegible]) La società, 3) Indirizzo, 4) fascicolo tecnico, 5) Costruttore della macchina descritta di seguito, 6) Dichiara che questa macchina, 7) È conform[illegible]ll[illegible]ttiv[illegible]eguenti e alle relative trasposizioni nel diritto nazionale, 8) Per le macchine Allegato IV, 9) Numero di Attestazione, 10) Organismo notificato, 15) norme armo[illegible]ate appli[illegible]e, 16) altre norme e specifiche tecniche applicate, 17) Stabilita a, 18) Data, 19) Nome del firmatario, 20) Funzione, 21) Firma.

lt : 1) CE atitikties deklaracija [illegible]iginalas), 2) Bendrovė, 3) Adresas, 4) Techninė byla, 5) Žemiau nurodytas įrenginio gamintojas, 6) Pareiškia, kad šis įrenginys, 7) Atitinka toliau nurodytas direktyvas ir į nacionalinius teisės aktus perkeltas jų nuostatas, 8) IV priedas dėl mašinų, 9) Sertifikato Nr, 10) Paskelbtoji įstaiga, 15) suderintus standartus naudojamus, 16) Kiti standartai ir technines specifikacijas, 17) Pasirašyta, 18) Data, 19) Pasirašiusio asmens vardas ir pavardė, 20) Pareigos, 21) Parašas.

lv : 1) EK atbilstības deklarācija (oriģināls), 2) Uzņēmums, 3) Adrese, 4) tehniskās lietas, 5) Tālāk aprakstītās iekārtas ražotājs, 6) Apliecina, ka šī iekārta, 7) Ir atbilstoša tālāk norādītajām direktīvām un to transpozīcijai nacionālajā likumdošanā, 8) Iekārtām IV pielikumā, 9) Apliecības numurs, 10) Reģistrētā organizācija, 15) lietotajiem saskaņotajiem standartiem, 16) lietotajiem tehniskajiem standartiem un specifikācijām, 17) Sastādīts, 18) Datums, 19) Parakstītāja vārds, 20) Amats, 21) Paraksts.

mt : 1) Dikjarazzjoni ta' Konformità KE (originali), 2) Il-kumpanija, 3) Indirizz, 4) fajl tekniku, 5) Manifattrici tal-magna deskritta hawn isfel, 6) Tiddikjara li din il-magna, 7) Hija konformi hija konformi mad-Direttivi segwenti u l-liġijiet li jimplimentawhom fil-liġi nazzjonali, 8) Għall-magni fl-Anness IV, 9) Numru taċ-ċertifikat, 10) Entità nnotifikata, 15) l-istandards armonizzati użati, 16) standards tekniċi u speċifikazzjonijiet oħra użati, 17) Magħmul f', 18) Data, 19) Isem il-firmatarju, 20) Kariga, 21) Firma.

nl : 1) EG-verklaring van overeenstemming (oorspronkelijke), 2) Het bedrijf, 3) Adres, 4) technisch dossier, 5) Constructeur van de hierna genoemde machine, 6) Verklaart dat deze machine, 7) In overeenstemming is met de volgende richtlijnen en hun omzettingen in het nationale recht, 8) Voor machines van bijlage IV, 9) Goedkeuringsnummer, 10) Aangezegde instelling, 15) gehanteerde geharmoniseerde normen, 16) andere gehanteerde technische normen en specificaties, 17) Opgemaakt te, 18) Datum, 19) Naam van ondergetekende, 20) Functie, 21) Handtekening.

no : 1) CE-samsvarserklæring (original), 2) Selskapet, 3) Adresse, 4) tekniske arkiv, 5) Fabrikant av følgende maskin, 6) Erklærer at denne maskinen, 7) Oppfyller kravene i følgende direktiver, med nasjonale gjennomføringsbestemmelser, 8) For maskinene i tillegg IV, 9) Attestnummer, 10) Notifisert organ, 15) harmoniserte standarder som brukes, 16) Andre standarder og spesifikasjoner brukt, 17) Utstedt i, 18) Dato, 19) Underskriverens navn, 20) Stilling, 21) Underskrift.

pl : 1) Deklaracja zgodności CE (oryginalne), 2) Spółka, 3) Adres, 4) dokumentacji technicznej, 5) Wykonawca maszyny opisanej poniżej, 6) Oświadcza, że ta maszyna, 7) Jest zgodna z następującymi dyrektywami i odpowiadającymi przepisami prawa krajowego, 8) Dla maszyn załącznik IV, 9) Numer certyfikatu, 10) Jednostka certyfikująca, 15) zastosowanych norm zharmonizowanych, 16) innych zastosowanych norm technicznych i specyfikacji, 17) Sporządzono w, 18) Data, 19) Nazwisko podpisującego, 20) Stanowisko, 21) Podpis.

pt : 1) Declaração de conformidade CE (original), 2) A empresa, 3) Morada, 4) processo técnico, 5) Fabricante da máquina descrita abaixo, 6) Declara que esta máquina, 7) Está em conformidade às directivas seguintes e às suas transposições para o direito nacional, 8) Para as máquinas no anexo IV, 9) Número de certificado, 10) Entidade notificada, 15) normas harmonizadas utilizadas, 16) outras normas e especificações técnicas utilizadas, 17) Elaborado em, 18) Data, 19) Nome do signatário, 20) Cargo, 21) Assinatura.

ro : 1) Declaraţie de conformitate CE (originală), 2) Societatea, 3) Adresa, 4) cărtii tehnice, 5) Constructor al maşinii descrise mai jos, 6) Declară că prezenta maşină, 7) Este conformă cu directivele următoare şi cu transpunerea lor în dreptul naţional, 8) Pentru maşinile din anexa IV, 9) Număr de atestare, 10) Organism notificat, 15) standardele armonizate utilizate, 16) alte standarde si specificatii tehnice utilizate, 17) Întocmit la, 18) Data, 19) Numele persoanei care semnează, 20) Funcţia, 21) Semnătura.

sk : 1) ES vyhlásenie o zhode (pôvodný), 2) Názov spoločnosti, 3) Adresa, 4) technickej dokumentácie, 5) Výrobca nižšie opísaného stroja, 6) Vyhlasuje, že tento stroj, 7) Je v súlade s nasledujúcimi smernicami a smernicami transponovanými do vnútroštátneho práva, 8) Pre stroje v prílohe IV, 9) Číslo certifikátu, 10) Notifikačný orgán, 15) použité harmonizované normy, 16) použité iné technické normy a predpisy, 17) Miesto vydania, 18) Dátum vydania, 19) Meno podpisujúceho, 20) Funkcia, 21) Podpis.

sl : 1) ES Izjava o ustreznosti (izvirna), 2) Družba. 3) Naslov. 4) tehnične dokumentacije, 5) Proizvajalac tukaj opisanega stroja, 6) Izjavlja, da je ta stroj, 7) Ustreza naslednjim direktivam in njihovi transpoziciji v državno pravo, 8) Za stroje priloga IV, 9) Številka potrdila, 10) Obvestilo organu, 15) uporabljene harmonizirane standarde, 16) druge uporabljene tehnične standarde in zahteve, 17) V, 18) Datum, 19) Ime podpisnika, 20) Funkcija, 21) Podpis.

sv : 1) CE-försäkran om överensstämmelse (original), 2) Företaget, 3) Adress, 4) tekniska dokumentationen, 5) Konstruktör av nedan beskrivna maskin, 6) Försäkrar att denna maskin, 7) Överensstämmer med nedanstående direktiv och införlivandet av dem i nationell rätt, 8) För maskinerna i bilaga IV, 9) Nummer för godkännande, 10) Organism som underrättats, 15) Harmoniserade standarder som använts, 16) andra tekniska standarder och specifikationer som använts, 17) Upprättat i, 18) Datum, 19) Namn på den som undertecknat, 20) Befattning, 21) Namntecknin.

FAC-SIMILE

CHARACTERISTICS

ENGINE		
Engine		JOHN DEERE St.4 (Tier IV)
Type		4045PWL-104 kW
Fuel		Diesel
No. of cylinders		4 vertical in line
Injection system		Direct
Firing order		1 3 4 2
Displacement	L - cm³	4.5 - 4500
Bore	mm - in	106 - 4.17
Stroke	mm - in	127 - 4.99
Turbocharging System		Turbocharged
Compression ratio		17
Nominal rate	rpm	2200
Idle rate	rpm	850
Max operating speed	rpm	2360
Rated Power	kW - HP	104 -140 @ 2200 rpm
Maximum torque		534 Nm @ 1500 rpm
Additional service PTO (type, max torque)		SAE B 26kW in continuous or 33kW in intermittent
After-treatment type		DOC / SCR
Cooling system		
Coolant circuit		Water cooled
Hydraulic Oil cooling		Hydraulic cooled
Air cooling system (intercooler)		Air admission
Fan drive system		Electrohydraulic
Motor Type		Hydraulic
Blower fan speed	rpm	2550
Number of blades		5
Diameter	mm - in	660 - 25.98
TRANSMISSION		
Main hydraulic pump		
Pump Type		Axial piston variable pump
Displacement	L - cm³	85 - 0.085
Flow rate @ xxxx rpm	L/min	187
Pressure	bar - psi	450 - 6526.69
Transmission unit		
Type		
Gearshift		Mechanical with hydraulic control
Nb of forward gears		2
Nb of reverse gears		2
Brakes		
Type		Oil bathed multidisc
Foot brake		Hydraulic acts on the front and rear wheels
Hand brake		Hydraulic with negative action on the front and rear axle
Front axle		
Type		Steering
Brakes type		6 Wellman Paper N266, gap 1 mm
Limited slip system		45%
Final drives		Epicyclic
Rear axle		
Type		Steering
Brakes type		6 Wellman Paper N266, gap 1mm
Limited slip system		
Final drives		Epicyclic

Standard Front & Rear tyres			
Type		Aeolus	
Dimensions		445/65R22.5 TL AGP23	
Pressure	bar - psi	9.9 -143.58	
Optional Front & Rear tyres			
Type		Michelin	
Dimensions		18R22.5 175A8/182A2 TL XF	
Pressure	bar - psi	7.5 - 108.77	
ELECTRICAL CIRCUIT			
Electrical circuit			
Ground		Negative	
Battery standard		12 V 180Ah 1200 A (EN)	
Battery optional		/	
Voltage regulator		Built into the alternator	
Starting		/	
Engine Starter type		ISKRA 12 V 3.8 Kw	
Engine Alternator data		BOSCH HD8 14 V 120 A	
HYDRAULIC CIRCUIT			
Main hydraulic pump			
Pump Type		Axial piston variable pump (LS)	
Displacement	L - cm³	0.085 - 85	
Flow rate @ xxxx rpm	L/min	180	
Pressure	bar - psi	270 - 3916.01	
Secondary hydraulic pump			
Pump Type		Gear pump	
Displacement	L - cm³	0.0225 - 22.5	
Flow rate @ xxxx rpm	L/min	49,5	
Pressure	bar - psi	210 - 3045.79	
Main electrovalves			
Type		Distributor SX14S	
Lifting circuit	bar - psi	280 - 4061.05	
	L/min	190	190
Extension circuit	bar - psi	280 - 4061.05	
	L/min	190	145
Tilting circuit	bar - psi	190 - 2755.71	280 - 4061.05
	L/min	190	190
Optional circuit	bar - psi	270 - 3916.01	
	L/min	120	120
Steering circuit			
Pump Type		Load sensing	
Displacement	L - cm³	0.2 - 200	
Flow rate @ xxxx rpm	L/min	20 L at 100 rpm	
Pressure	bar - psi	175 - 2538.16	
Type		Load-sensing	
Brake circuit			
Type		Oil bathed multidisc	
NOISE AND VIBRATION			
Acoustic pressure level in the driver's cab LpA (according to NF EN 12053)	dB(A)	79.7 (cab closed)	
Noise pressure level ensured in the LwA environment (according to 2000/14/EC directive modified by 2005/88/EC directive)	dB(A)	102 (measured); 104 (guaranteed)	
Average weighted acceleration on driver's body (according to NF EN 13059)	m/s²	0.786	
The average weighted acceleration transmitted to the driver's hand/arm system (as per ISO 5349-2)	m/s²	< 2,5	

HYDRAULIC MOTIONS SPEEDS		
Unladen lifting	s	9.2
Laden lifting	s	10.2
Unladen lowering	s	7.8
Laden lowering	s	8.5
Unladen extending	s	6.6
Laden extending	s	/
Unladen retracting	s	6.1
Laden retracting	s	/
Reverse tilt time unladen	s	5.1
Forward tilt time unladen	s	5.3

SPECIFICATIONS AND WEIGHT		
Speed of movement for telehandler in standard configuration on flat ground (except special conditions)		
Driving Speed		
Maximum speed	km/h - mph	30 - 18.64
Forward (fast speed)	km/h - mph	30 - 18.64
Forward (slow speed)	km/h - mph	10 - 6.21
Reverse (fast speed)	km/h - mph	29 - 17.39
Reverse (slow speed)	km/h - mph	9 - 18
Lifting Capacity		
Standard lifting height	m - ft	6,84 - 22.44
Lifting height at max capacity	m - ft	6,84 - 22.44
Forward reach at max capacity	m - ft	1,3 - 4.26
Max rated capacity with STD carriage and forks	kg - lb	9000 - 19841.58
Distance from centre of gravity	mm - in	600 - 23.62
Capacity at max height with STD carriage and forks	kg - lb	9000 - 19841.58
Capacity at max reach with STD carriage and forks	kg - lb	3500 - 7716.17
Standard carriage		
Type		PFB FEM 4 L1750
Forks dimension (length x width x thickness)	mm - in	200 X 60 X 1200 - 7.87 x 2.36 x 47.24
Weight distribution with STD carriage and forks		
Truck weight with STD carriage and forks (unloaded)	kg - lb	13020 - 28704.15
Front axle unloaded	kg - lb	4210 - 9281.45
Rear axle unloaded	kg - lb	8810 - 19422.7
Front axle loaded	kg - lb	18700 - 41226.39
Rear axle loaded	kg - lb	3270 - 7209.10
Maximum ground pressure		/
Drawbar pull		
Tractive force (Drawbar pull)	daN - kgf	10905 - 11120
Breakout force with bucket (according to ISO 8313 standard)		/
Gradeability		
Unloaded	%	/
Loaded	%	48

LIQUID CAPACITY		
Tanks capacity		
Hydraulic and Transmission Oil	L - US gal	150 - 39.62
Fuel	L - US gal	150 - 39.62
DEF	L - US gal	8,7 - 2.3

IDENTIFICATION OF THE TELEHANDLER

As our policy is to promote a constant improvement of our products, our range of telehandlers may undergo certain modifications, without obligation for us to advise our customers.
When you order parts, or when you require any technical information, always specify:
NOTE: For the owner's convenience, it is recommended that a note of these numbers is made in the spaces provided at the time of the delivery of the telehandler.

LIFT TRUCK MANUFACTURER'S PLATE

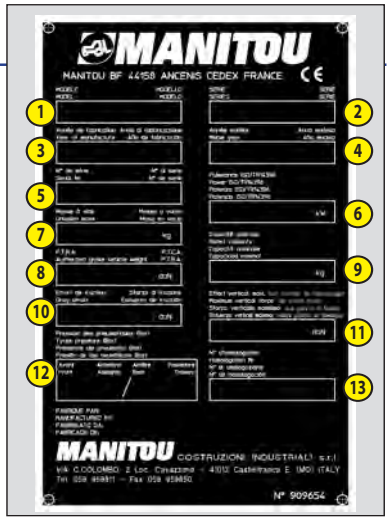

1. MODEL
2. SERIES
3. Year of manufacture
4. Model year
5. Serial No.
6. Power ISO 3046
7. Empty ground
8. Authorised gross vehicle weight
9. Rated capacity
10. Drag strain
11. Maximum vertical force (on trailer hook)
12. Tyre pressure (bar)

Homologation no.
For any further technical information regarding your lift truck refer to chapter: 2 - DESCRIPTION: CHARACTERISTICS.

I.C. ENGINE

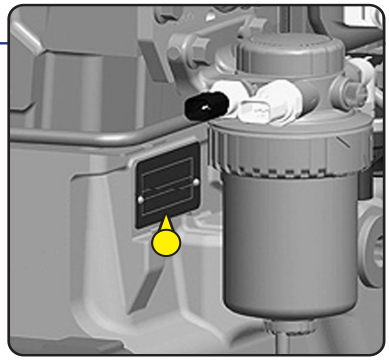

- Model
- Serial No.

GEAR BOX

- Type
- MANITOU reference
- Serial No.

FRONT AXLE

- Type
- Serial No.
- MANITOU reference

REAR AXLE

- Type
- Serial No.
- MANITOU reference

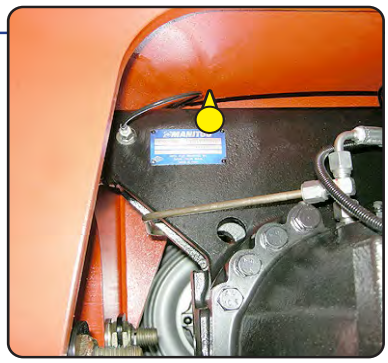

CAB

- Type
- Serial No.

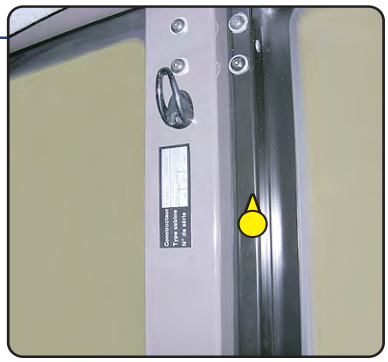

BOOM

- MANITOU reference
- Date of manufacture

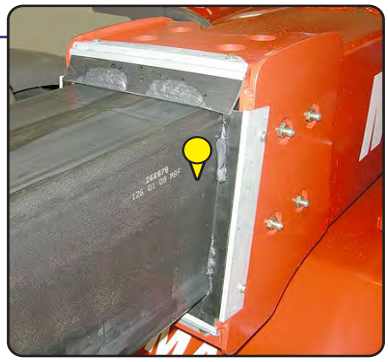

CHASSIS

- Lift truck serial no.

CONNECTION MANFACTURER'S PLATE

1. Model
2. Serial Nr.
3. Year manufacture
4. Unladenweight
5. Centre of gravity
6. Rated capacity
7. Operating presure

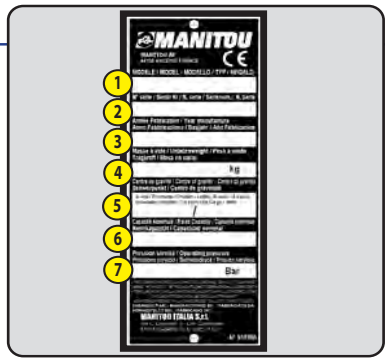

DIMENSIONS

	mm	in
A	1200	47,24
B	2870	112,99
C	1128	44,41
C1	997	39,25
D	5273	207,60
D1	5142	202,44
D2	4739	186,57
E	6473	254,84
F	2020	79,53
F1	2473	97,36
G	382	15,04
G1	409	16,10
G2	435	17,13
I	1275	50,20
J	884	34,80
L	1750	68,90
N	60	2,36
O	1839	72,40
P2	38°	
P3	26°	
R	4801	189,02
S	8647	340,43
T	3481	137,05
U1	2478	97,56
U2	2657	104,61
V	5592	220,16
V1	2110	83,07
V2	4884	192,28
W	2473	97,36
Y	12°	
Z	125°	

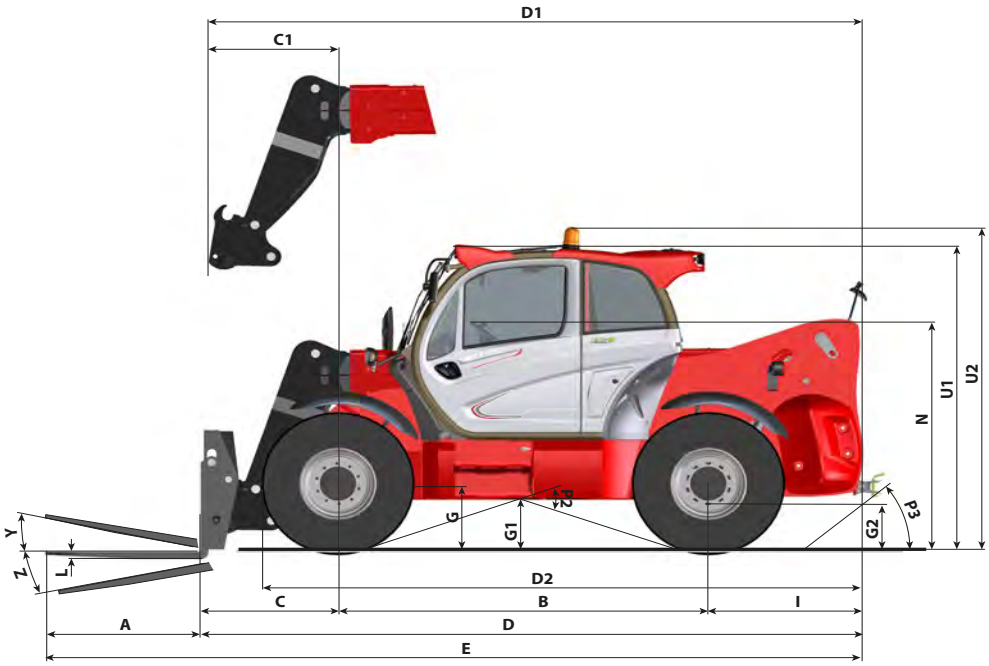

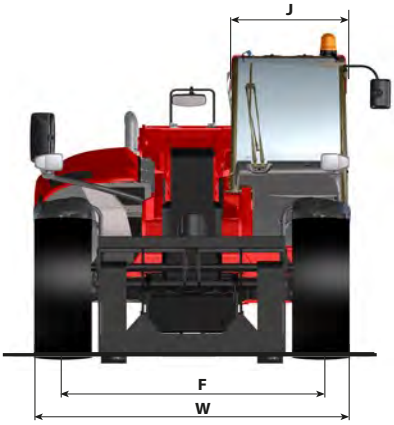

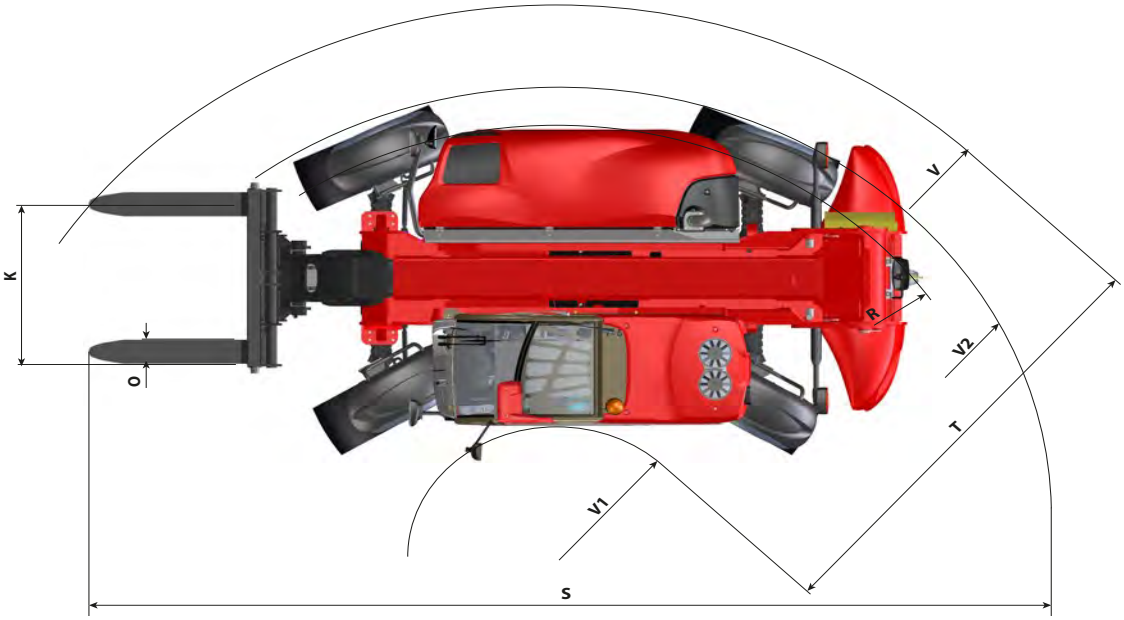

LOAD CHARTS

MACHINE ON WHEELS

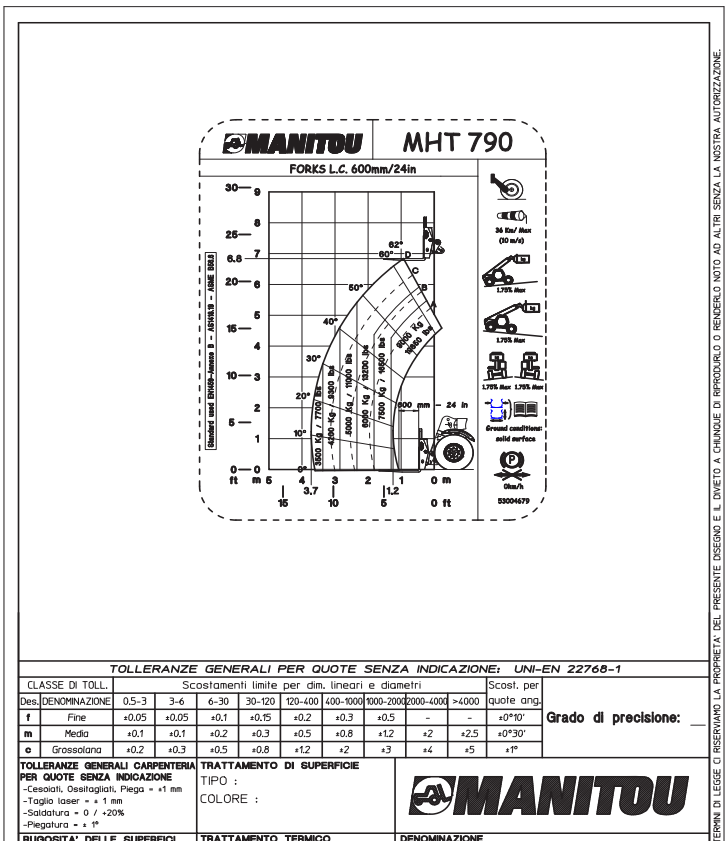

TOLLERANZE GENERALI PER QUOTE SENZA INDICAZIONE: UNI-EN 22768-1

CLASSE DI TOLL.		Scostamenti limite per dim. lineari e diametri									Scost. per quote ang.
Des.	DENOMINAZIONE	0.5-3	3-6	6-30	30-120	120-400	400-1000	1000-2000	2000-4000	>4000	
f	Fine	±0.05	±0.05	±0.1	±0.15	±0.2	±0.3	±0.5	-	-	±0°10'
m	Media	±0.1	±0.1	±0.2	±0.3	±0.5	±0.8	±1.2	±2	±2.5	±0°30'
c	Grossolana	±0.2	±0.3	±0.5	±0.8	±1.2	±2	±3	±4	±5	±1°

Grado di precisione: __

TOLLERANZE GENERALI CARPENTERIA PER QUOTE SENZA INDICAZIONE
-Cesoiati, Ossitagliati, Piega = ±1 mm
-Taglio laser = ± 1 mm
-Saldatura = 0 / +20%
-Piegatura = ± 1°

TRATTAMENTO DI SUPERFICIE
TIPO :
COLORE :

MANITOU

RUGOSITA' DELLE SUPERFICI | TRATTAMENTO TERMICO | DENOMINAZIONE

TERMINI DI LEGGE CI RISERVIAMO LA PROPRIETA' DEL PRESENTE DISEGNO E IL DIVIETO A CHIUNQUE DI RIPRODURLO O RENDERLO NOTO AD ALTRI SENZA LA NOSTRA AUTORIZZAZIONE.

https://truckmanualshub.com/
duma rent
www.duma-rent.com

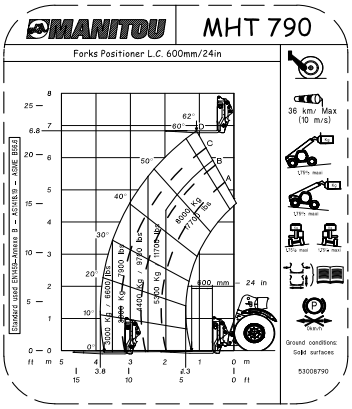

REV	DESCRIZIONE MODIFICA	N°MOD.	DATA	NOME

TOLLERANZE GENERALI PER QUOTE SENZA INDICAZIONE: UNI-EN 22768-1

CLASSE DI TOLL.		Scostamenti limite per dim. lineari e diametri									Scost. per quote ang.
Des.	DENOMINAZIONE	0.5-3	3-6	6-30	30-120	120-400	400-1000	1000-2000	2000-4000	>4000	
f	Fine	±0.05	±0.05	±0.1	±0.15	±0.2	±0.3	±0.5	-	-	±0°10'
m	Media	±0.1	±0.1	±0.2	±0.3	±0.5	±0.8	±1.2	±2	±2.5	±0°30'
c	Grossolana	±0.2	±0.3	±0.5	±0.8	±1.2	±2	±3	±4	±5	±1°

Grado di precisione: __

TOLLERANZE GENERALI CARPENTERIA PER QUOTE SENZA INDICAZIONE
-Cesoiati, Ossitagliati, Piega = ±1 mm
-Taglio laser = ± 1 mm
-Saldatura = 0 / +20%
-Piegatura = ± 1°

TRATTAMENTO DI SUPERFICIE
TIPO :
COLORE :

MANITOU

RUGOSITA' DELLE SUPERFICI | TRATTAMENTO TERMICO | DENOMINAZIONE

TERMINI DI LEGGE CI RISERVIAMO LA PROPRIETA' DEL PRESENTE DISEGNO E IL DIVIETO A CHIUNQUE DI RIPRODURLO O RENDERLO NOTO AD ALTRI SENZA LA NOSTRA AUTORIZZAZIONE.

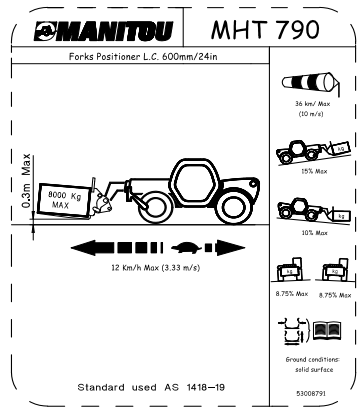

REV	DESCRIZIONE MODIFICA	N°MOD.	DATA	NOME

TOLLERANZE GENERALI PER QUOTE SENZA INDICAZIONE: UNI-EN 22768-1

CLASSE DI TOLL.		Scostamenti limite per dim. lineari e diametri									Scost. per quote ang.
Des.	DENOMINAZIONE	0.5-3	3-6	6-30	30-120	120-400	400-1000	1000-2000	2000-4000	>4000	
f	Fine	±0.05	±0.05	±0.1	±0.15	±0.2	±0.3	±0.5	-	-	±0°10'
m	Media	±0.1	±0.1	±0.2	±0.3	±0.5	±0.8	±1.2	±2	±2.5	±0°30'
c	Grossolana	±0.2	±0.3	±0.5	±0.8	±1.2	±2	±3	±4	±5	±1°

Grado di precisione: __

TOLLERANZE GENERALI CARPENTERIA PER QUOTE SENZA INDICAZIONE
-Cesoiati, Ossitagliati, Piega = ±1 mm
-Taglio laser = ± 1 mm
-Saldatura = 0 / +20%
-Piegatura = ± 1°

TRATTAMENTO DI SUPERFICIE
TIPO :
COLORE :

MANITOU

RUGOSITA' DELLE SUPERFICI | TRATTAMENTO TERMICO | DENOMINAZIONE

TERMINI DI LEGGE CI RISERVIAMO LA PROPRIETA' DEL PRESENTE DISEGNO E IL DIVIETO A CHIUNQUE DI RIPRODURLO O RENDERLO NOTO AD ALTRI SENZA LA NOSTRA AUTORIZZAZIONE.

https://truckmanualshub.com/
duma rent
www.duma-rent.com

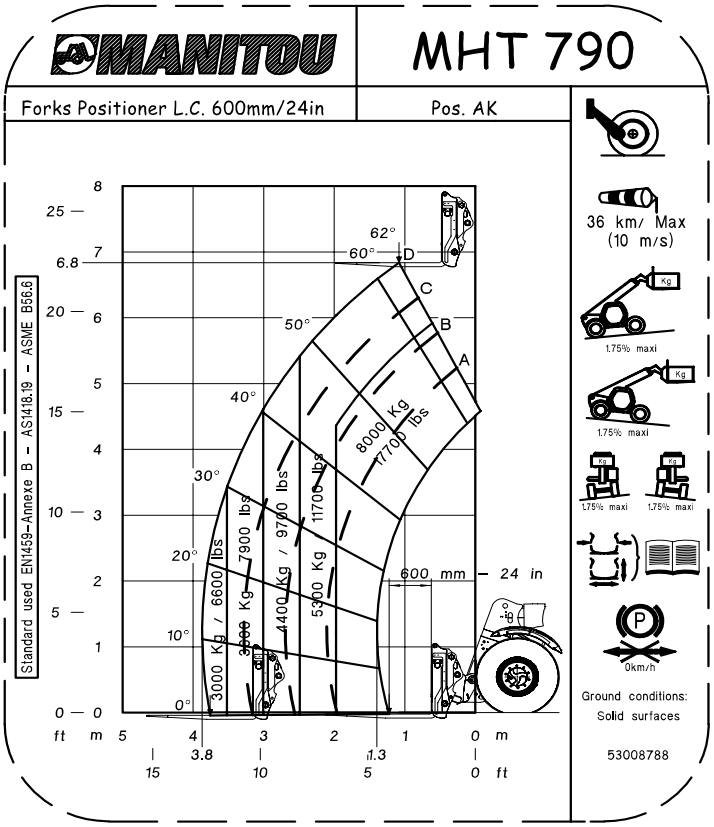

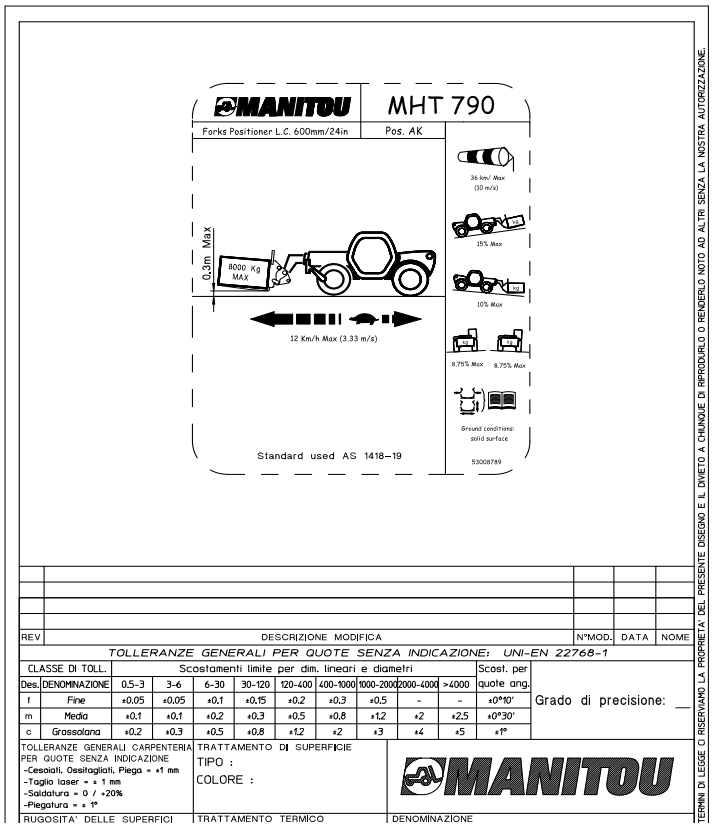

649010 EN/US/AU (15/12/2019)
MHT 790 1041D H ST4 S1

This page intentionally left blank

– – –

LOA D CHART ARE AVAILABLE UPON REQUEST

CONTROLS AND DISPLAYS

(Depending on the model of machine)

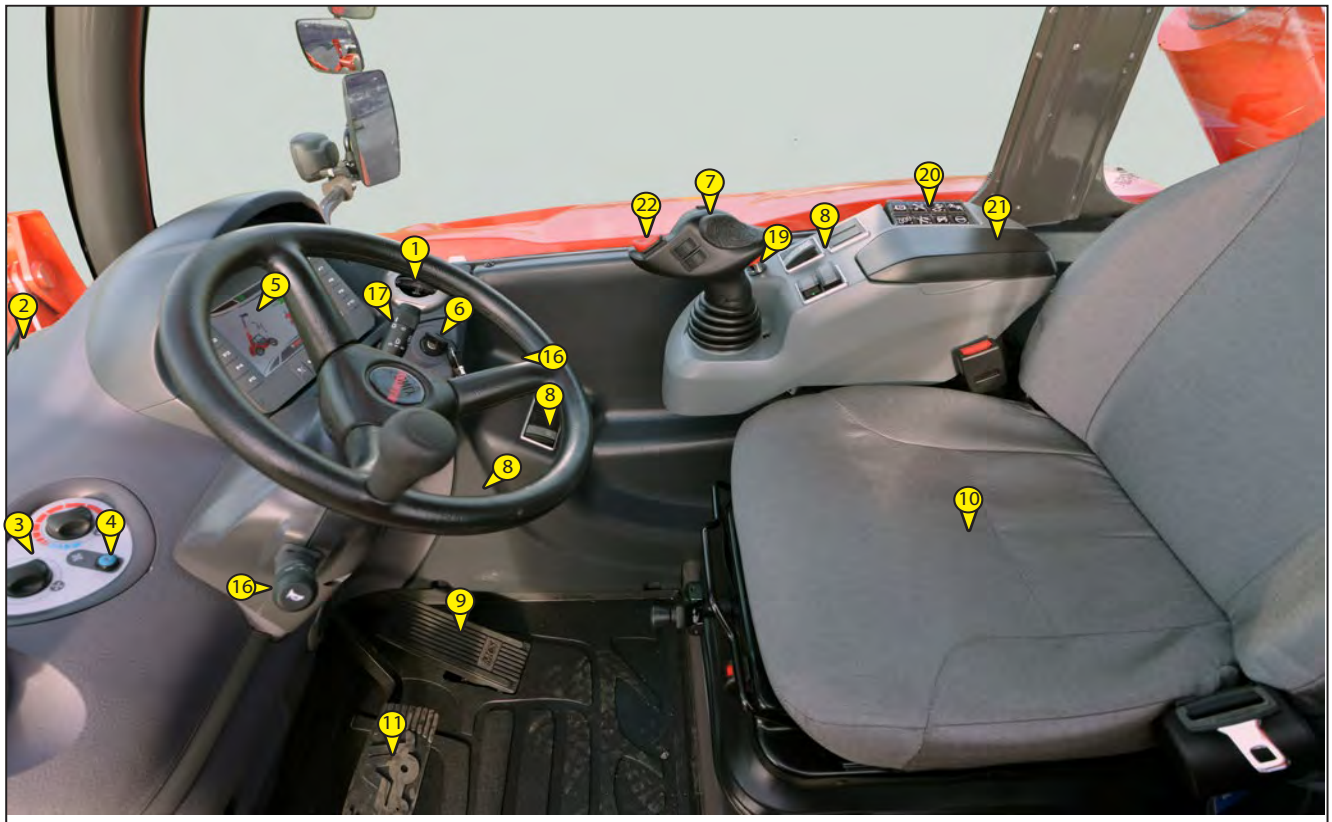

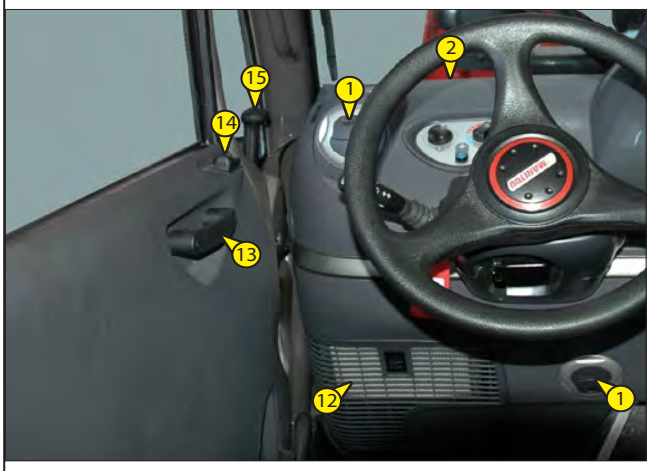

(Depending the equipment)

2 - 1

CONTROLS AND DISPLAYS

OVERVIEW (**2 - 1**):

1. AIR DIFFUSERS FOR HEATING
2. AIR DIFFUSERS FOR DEMISTING
3. HEATER CONTROL AIR
4. CONDITIONING CONTROLS
5. CONTROL PANEL AND LOAD LIMITER
6. START-UP SWITCH
7. PROPORTIONAL ELECTRO-HYDRAULIC JOYSTICK
8. SWITCHES
9. ACCELERATOR PEDAL 2-57
10. DRIVER'S SEAT
11. SERVICE BRAKE PEDAL
12. CAB FILTER VENTILATORS
13. CLOSE DOOR HANDLE
14. ELECTRIC WINDOW SWITCH
15. OPEN DOOR LEVER
16. LIGHTING, HORN AND INDICATOR LIGHTS LEVER
17. FRONT AND REAR WINDSCREEN WIPER LEVER
18. STEERING WHEEL ADJUSTMENT LEVER
19. "EMERGENCY STOP" BUTTON
20. KEYPAD
21. ARMREST AND STORAGE
22. FORWARD/NEUTRAL/REVERSE GEAR SELECTION
23. CEILING LIGHT
24. POWER OUTLET 12V
25. BUBBLE LEVEL
26. LOAD LIMITER EXCLUSION SWITCH

NOTE: All the terms such as: RIGHT, LEFT, FRONT, REAR are meant for an observer seated in the driver's seat and looking out in front.

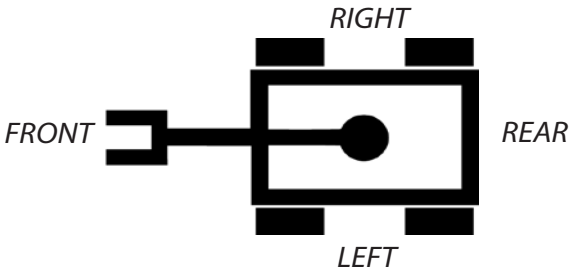

1 - DRIVER'S SEAT

There are three types of driver's seat:
A - Driver's seat (standard) (2 - 2)
B - Low frequency driver's pneumatic seat (optional) (2 - 3)
C - Driver's pneumatic seat (optional) (2 - 4)

DRIVER'S SEAT (STANDARD)
Designed for maximum comfort, this seat can be adjusted as follows.

SEAT HEIGHT ADJUSTMENT
Sit down correctly in the seat.
Turn the knob (1, 2 - 2) according to the desired height, clockwise to lift, anti-clockwise to lower, ensuring that the green indicator lamp (2, 2 - 2) remains visible.
If the indicator lamp (2, 2 - 2) is red, re-adjust the height.
NOTE: The seat is designed so that it does not require adjustment according to the driver's weight.

LONGITUDINAL ADJUSTMENT
Pull the locking lever (3, 2 - 2) upwards.
Slide the seat to the desired position.
Release the lever and ensure that it returns to the lock position.

ANGLE ADJUSTMENT OF THE BACK-REST
Support the back-rest, push the lever (4, 2 - 2) backward and tilt the back-rest to the desired position.

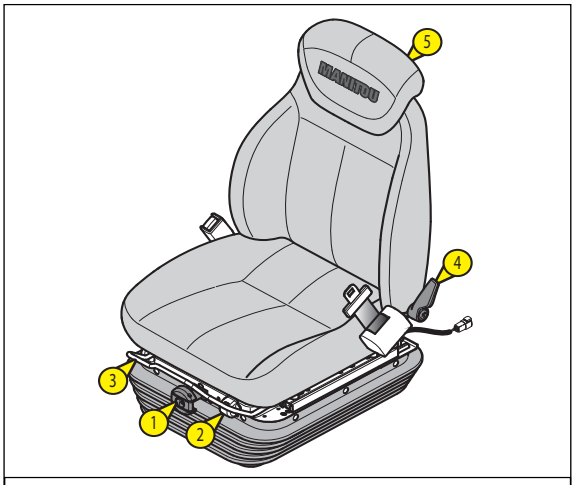

2 - 2

If you do not support the back-rest when making adjustments, it swings forward completely.

EXTENDING THE HEAD-REST
The height of the head-rest (5, 2 - 2) can be adjusted by pulling it upwards (the notches will click) up to the stop.
The head-rest can be removed by applying sufficient pressure to pull it off the stop.

LOW FREQUENCY DRIVER'S PNEUMATIC SEAT (OPTIONAL)

Designed for maximum comfort, this seat can be adjusted as follows.

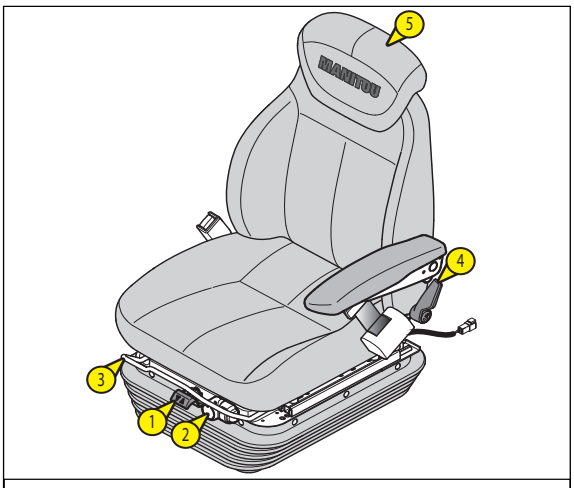

2 - 3

SEAT HEIGHT ADJUSTMENT

Sit down correctly in the seat.
Switch on lift truck ignition.
Pull or push the lever (1, 2 - 3) according to the desired height, ensuring that the green indicator lamp (2, 2 - 3) remains visible.
If the indicator lamp (2, 2 - 3) is red, re-adjust the height.
NOTE: The seat is designed so that it does not require adjustment according to the driver's weight.

LONGITUDINAL ADJUSTMENT

Pull the locking lever (3, 2 - 3) upwards.
Slide the seat to the desired position.
Release the lever and ensure that it returns to the lock position.

ANGLE ADJUSTMENT OF THE BACK-REST

Support the back-rest, push the lever (4, 2 - 3) backward and tilt the back-rest to the desired position.

If you do not support the back-rest when making adjustments, it swings forward completely.

EXTENDING THE HEAD-REST

The height of the head-rest (5, 2 - 3) can be adjusted by pulling it upwards (the notches will click) up to the stop.
The head-rest can be removed by applying sufficient pressure to pull it off the stop.

DRIVER'S PNEUMATIC SEAT (OPTIONAL)

Designed for maximum comfort, this seat can be adjusted as follows.

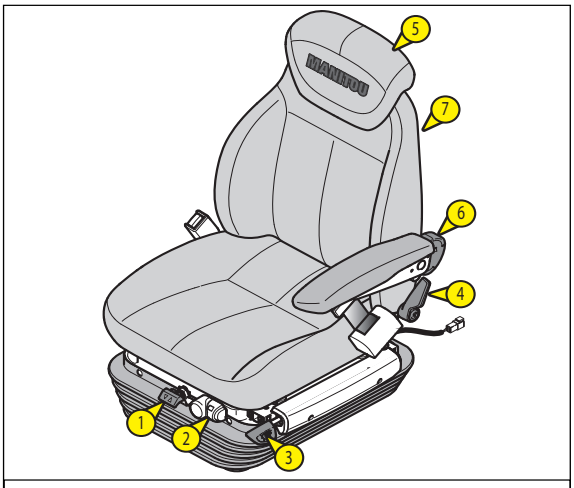

2 - 4

SEAT HEIGHT ADJUSTMENT

Sit down correctly in the seat.
Switch on lift truck ignition.
Pull or push the lever (1, 2 - 4) according to the desired height, ensuring that the green indicator lamp (2, 2 - 4) remains visible.
If the indicator lamp (2, 2 - 4) is red, re-adjust the height.
NOTE: The seat is designed so that it does not require adjustment according to the driver's weight.

LONGITUDINAL ADJUSTMENT

Swing lever (3, 2 - 4) upwards.
Slide the seat to the desired position.
Release the lever and ensure that it returns to the lock position.

HORIZONTAL DAMPER

In certain conditions (e.g. driving with a trailer), using a horizontal shock absorber is recommended. For this reason, the driver's seat is more able to absorb jerks in the direction of travel.
Swing lever (3, 2 - 4) downwards to block the horizontal damper.

ANGLE ADJUSTMENT OF THE BACK-REST

Support the back-rest, push the lever (4, 2 - 4) backward and tilt the back-rest to the desired position.

If you do not support the back-rest when making adjustments, it swings forward completely.

EXTENDING THE HEAD-REST
The height of the head-rest (5, 2 - 4) can be adjusted by pulling it upwards (the notches will click) up to the stop.
The head-rest can be removed by applying sufficient pressure to pull it off the stop.

LUMBAR ADJUSTMENT
Turn knob (6, 2 - 4) anti-clockwise to select one of the (5, 2 - 4) lumbar support settings.

SEAT HEATING
The switch (7, 2 - 4) operates the heating of the seat cushion and the back-rest.

2 - SEAT BELT

A 2-point belt attaches at its two endpoints (4, 2 - 5).

The seat belt is a machine safety device designed to secure the telehandler driver against harmful movement that may result during a collision or a sudden stop.
The seat belt function is to reduce the risk of death or serious injury in a collision. It reduces the force of secondary impacts, by keeping the driver positioned correctly and preventing the driver from being ejected from the telehandler in a crash or if the telehandler rolls over.

- Sit correctly on the seat.
- Check that seat belt is not twisted.
- Place the seat belt at hip level.
- Attach the seat belt and check that it locks.
- Adjust the seat belt to your body shape without it squeezing your hips and without over-slack.

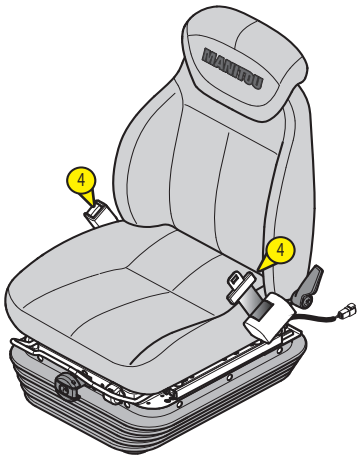

2 - 5

In no event should the lift truck be used if the seat belt is defective (fixing, locking, cuts, tears, etc.).
Repair or replace the seat belt immediately.

3 - DRIVER'S PRESENCE

The driver's presence is a device that defines a specific security appliance, which is designed to monitor the presence and vigilance of the telehandler driver.

The driver's presence is validated when the operator is correctly seated (1, 2 - 6) and the cab door is closed (2, 2 - 6).

This only occurs from that moment that the telehandler is operational; the operator can perform hydraulic movements and move the telehandler.

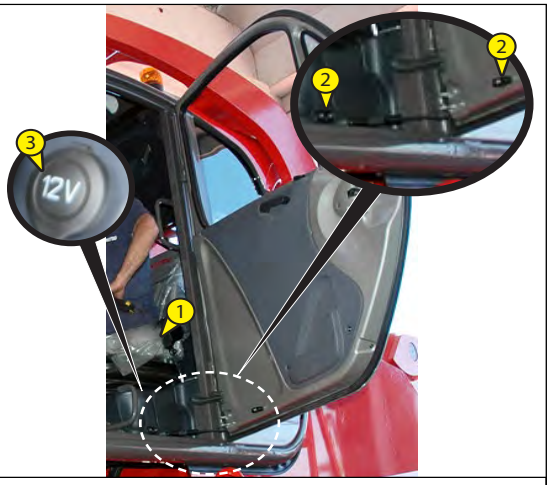

2 - 6

4 - POWER OUTLET 12V

(3, 2 - 6).

5 - CONTROL PANEL AND LOAD LIMITER

(Depending on the telehandler model)

The manitou safety system performs the functions of the telehandler control and load movement limiter for the frontal telehandler.

A - "STRAIN GAUGE" safety system type
B - "LMI" safety system type

A - "STRAIN GAUGE" type

SAFETY SYSTEM LAYOUT

- MC2M control board (1, 2 - 7)
- TERA7 instrument control panel + Slave IO-CORE control board (2, 2 - 7)
- Strain gauge (5, 2 - 7)
- Telescopic boom angle sensor (4, 2 - 7)
- Fully retracted telescopic boom microswitches (3, 2 - 7)

2 - 7

B - "LMI" type

SAFETY SYSTEM LAYOUT

- MC2M control board (1, 2 - 8)
- TERA7 instrument control panel + Slave IO-CORE control board (2, 2 - 8)
- Midac Plus limiter control board (3, 2 - 8)
- CCR2 Angle and lenght telescopic boom (4, 2 - 8) sensor
- Pressure transducers (5, 2 - 8)
- Midac Plus control board (N = basket) (6, 2 - 8)
- Electronic level (7, 2 - 8)
- External light indicator (8, 2 - 8),
  indicating the percentage of load raised compared to the max. permitted load in these working conditions:
  - Green light on: safety zone (8.1, 2 - 8)
  - Yellow light on (external horn activated): alarm zone, load raised higher than 90% of permitted load (8.2, 2 - 8).
  - Red light on (external horn activated): stop zone, load raised higher than 100% of permitted load (8.3, 2 - 8).

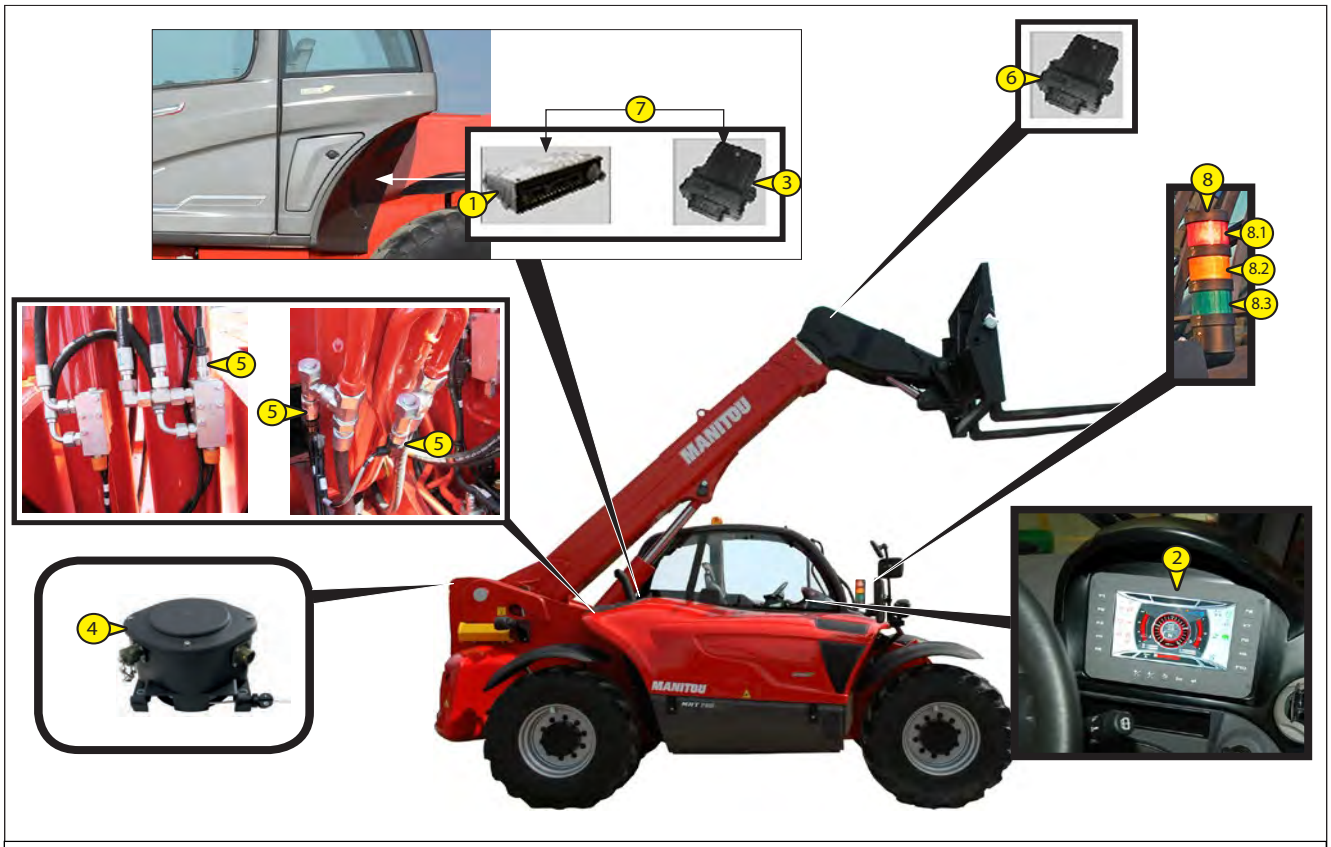

2 - 8

TERA7 INSTRUMENT CONTROL PANEL + SLAVE IO-CORE CONTROL BOARD

The control panel TERA7 (1, 2 - 9) with colour screen display shows and informs the operator of all telehandler's working phases.
Five pages are saved in the panel memory (1, 2 - 9) and these can be selected by keys (F1, F2, F4, F5 , 2 - 9) on the panel (1, 2 - 9).
Push the keys (F1, F2, F4, F5 , 2 - 9) to select the pages.
Push the keys:

- Up/Down, Plus/Minus (2 , 2 - 9)
- Home (3 , 2 - 9)
- Esc (4 , 2 - 9)
- Enter (5 , 2 - 9)
- F3, F6, F7, F8, F9, F10 not used (6 , 2 - 9).

to move into the pages.

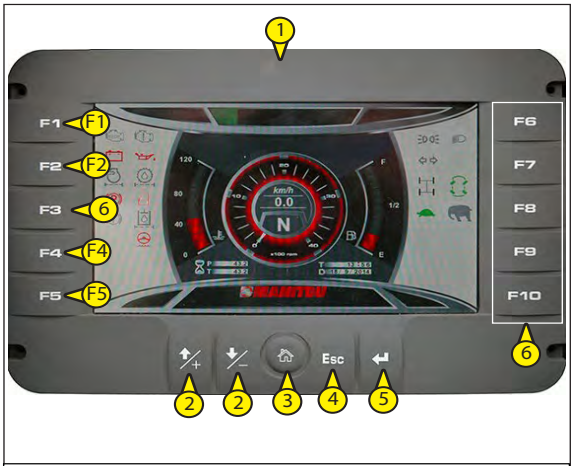

2 - 9

Main pages saved in memory (2 - 10):

- Splash screen (F0)

1. Driving page (F1)
2. Working page (F2)
3. Setting page (F4)
4. Alarm page (F5)

Pages overview:

2 - 10

DRIVING PAGE (F1)

1. engine coolant temperature gauge indicator (1, 2 - 11)
2. warning light for potential engine coolant overheating (2, 2 - 11)
3. fuel level indicator (3, 2 - 11)
4. the indicator lamp light is on (4, 2 - 11) when the fuel level in the tank is lower than 10% of its capacity (about 50 litres)
5. engine rpm indicator (x100 rpm) (5, 2 - 11)
6. partial (P) and total (T) hour-counter (6, 2 - 11)
   Keep the "HOME" key (6, 2 - 11) pressed to reset the partial hour-counter (P)

6a. time (T) and date (D) (6a, 2 - 11)

7. speed indicator (km/h or mph) (7, 2 - 11)
8. direction and gear shift indicator (8, 2 - 11):
   - direction: N= neutral
   F= forwards
   R= reverse
9. warning and indicator lamps (9, 2 - 11)

Symbol overview:

	position lights
	low beams
	blue high beams
	direction lights
	front wheels alignment
	rear wheels alignment
	front wheel steering
	concentric wheel steering
	green crab steering
	telescopic boom hydraulic movements control
	retarder (optional)
	fast gear
	slow gear
	high torque; high force
	telescopic boom suspension (optional)
	remote control (optional)
	reversing radiator fan (optional)
	I.C. engine severe fault
	I.C. engine malfunction
	diesel preheat

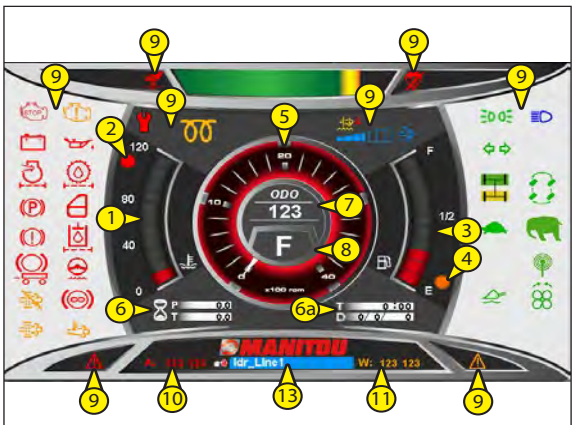

2 - 11

	alternator excitation
	I.C. engine oil pressure
	brake fluid
	engine intake air filter
	transmission oil filter
	parking brake
	telehandler door
	hydraulic oil filter
	steering emergency
	trailer brake anomaly (optional)
	DPF: quantity of soot is high
	DPF: active regeneration
	DPF: regeneration disabled
	Diesel exhaust fluid (DEF) level indicator (◁ next paragraph: SCR SYSTEM DERATES)
	Malfunction related to the emissions from the SCR exhaust gas after-treatment system or DEF supply (◁ next paragraph: SCR SYSTEM DERATES)
	"emergency stop" red button
	safety system exclusion
	warning / alarm
	service

(For more details: ◁ paragraph "warning and indicator lamps").

10. Machine alarm code*
    (1, 2 - 11) is not displayed in normal operating conditions (Show in fault conditionaly).
11. Machine warning code*
    (1, 2 - 11) is not displayed in normal operating conditions (Show in fault conditionaly).
12. Messages area (13, 2 - 11)

*: Check the alarms or warnings types, referring to the display page "F5 ALARM PAGE".

DEF & SCR SYSTEM DERATES (Emissions control system of the exhaust gas)

The DEF and SCR systems on Final Tier 4 engines are required to reduce NOx emissions generated by the engine.
When certain components of these systems malfunction, the NOx emissions increase and the engine is out of emissions compliance.
To keep the engine in compliance with emissions regulations, a separate derate schedule **(Inducements Strategy)** is used for the DEF/SCR system malfunctions.
There are certain faults that can occur where the ECU cannot determine if the system is operating properly and the ECU shuts down the DEF dosing system. When this happens a warning is displayed and an internal counter is started.
The engine will operate normally without the DEF dosing system operating, but the NOx emissions will be out of compliance.
Once the internal counter reaches 4 hours, a derate with a 50% torque decrease and engine speed reduced to low idle will be implemented over a 10 minute time period. This will, in effect, disable the engine from performing as needed.
Once the DTC's** that caused the counter to start are repaired, the counter will stop, and if the derate was implemented, the derate will be removed.
However, if another DTC** is set that shutdowns the DEF dosing system, the counter will restart at the point it was at when the previous DTC** was repaired.
To reset the internal counter, the engine must operator for 40 hours without a DTC** that shuts down the DEF dosing system.
If a DTC** is set during this 40 hours, the counter will start from the previous count.
Listed alongside are the DTC's* that disable the DEF dosing system and start the timer for the derate.

*: DTC = Engine unit error types

**: Check the engine unit error codes (SPN/FMI), referring to the display page "ALARM PAGE (F5)".

Contact your Agent or Dealer.

DTC* LIST
Faults
DEF Tank Fluid Level Signal Out of Range High
DEF Tank Fluid Level Signal Out of Range Low
DEF Tank Fluid Temperature Signal Out of Range High
DEF Tank Fluid Temperature Signal Out of Range Low
Aftertreatment Inlet NOx Sensor Loss of Communication
Aftertreatment Inlet NOx Sensor Fault
Aftertreatment Outlet NOx Sensor Loss of Communication
Aftertreatment Outlet NOx Sensor Fault
DEF Dosing Injector Signal Out of Range High
DEF Dosing Injector Signal Out of Range Low
DEF Dosing Injector Circuit Has High Resistance
DEF Dosing Injector Circuit Has Low Resistance
DEF Dosing Injector Position Invalid
DEF Dosing Unit Pressure Extremely High
DEF Dosing Unit Pressure Extremely Low
DEF Dosing Unit Pressure Signal Out of Range High
DEF Dosing Unit Pressure Signal Out of Range Low
DEF Dosing Unit Pressure Signal Fault
DEF Dosing Unit Pressure Moderately High
DEF Dosing Unit Pressure Moderately Low
DEF Dosing Unit Pressure Fault
DEF Dosing Unit Pressure Line Heater Circuit Has High Resistance
DEF Dosing Unit Pressure Line Heater Circuit Has Low Resistance
DEF Dosing Unit Supply Line Heater Circuit Has High Resistance
DEF Dosing Unit Supply Line Heater Circuit Has Low Resistance
DEF Dosing Unit Return Line Heater Circuit Has High Resistance
DEF Dosing Unit Return Line Heater Circuit Has Low Resistance
SCR Inlet Temperature Error
SCR Conversion Efficiency Extremely Low
DEF Tank Heater Coolant Control Valve Circuit Has High Resistance
DEF Tank Heater Coolant Control Valve Circuit Has Low Resistance
DEF Tank Heater Coolant Control Valve is Stuck Open
DEF Tank Heater Coolant Control Valve is Stuck Closed
DEF Dosing Unit Reversing Valve Circuit Has High Resistance
DEF Dosing Unit Reversing Valve Circuit Has Low Resistance
DEF Dosing Unit Pump Circuit Has Low Resistance
DEF Dosing Unit Pump Circuit Fault
DEF Dosing Unit Pump Motor Error
DEF Dosing Unit Pump Fault
SCR Temperature Module Loss of Communication
DEF Dosing Unit Heater Has High Resistance
DEF Dosing Unit Heater Has Low Resistance
DEF Dosing Unit Heater Temperature Moderately Low

Diesel Exhaust Fluid Level (DEF)

If the diesel exhaust fluid level is less than 10%, a warning is issued and the torque is reduced by 25%.
If there is no diesel exhaust fluid, the power is halved and the engine speed will drop by 100 rpm every minute until it reaches min rpm.

Overview:

DEF LEVEL INDICATORS			
Notifications			**Descriptions**
(Blue light)			Indicates adequate DEF level
(Amber warning light)			Indicates low DEF level
(Red warning light)			Indicates the DEF level is lower than the level indicated by the solid illumination

Indicators and consequences of the Inducement Strategy

Overview:

INDUCEMENT STRATEGY					
Level	**Indicators**				**Consequences**
Warning					
Inducement 1				(*)	Engine power limited (50% Torque) (50% Speed)
Inducement 2			STOP		Engine power & speed limited

(*): with each transition of inducement state the buzzer sounds for 2 seconds.

https://truckmanualshub.com/
duma rent
www.duma-rent.com

WORKING PAGE (F2)
(Depending of the Safety system type: "STRAIN GAUGE" or "LMI")

1. Load conditions
   The coloured bar indicates the percentage of the load lifted in reference to the machine's operating condition:
   - Green reference (1a, 2 - 12): safety area.
   - Yellow reference (1b, 2 - 12): alarm area, load lifted 90% more than permitted load (external warning sound active).
   - Red reference (1c, 2 - 12): Block area, load lifted 100% more than the permitted load (external warning sound active).
2. Messages area (2, 2 - 12)
3. Machine alarm code*
   (3, 2 - 12) is not displayed in normal operating conditions (Show in fault conditionaly).
4. Machine warning code*
   (4, 2 - 12) is not displayed in normal operating conditions (Show in fault conditionaly).
5. Reading main operating data
   - Indicative drawing of the machine (5, 2 - 12)
   - Boom angle
     Reading in "Degrees▪", with a decimal (6.4, 2 - 12)
   - Weight of load lifted "LOAD" (reading in "% or Tons▪" second equipment) (7a, 2 - 12)
   - Operating radius (optional)
     Measurement of the distance from the fifth wheel centre to the projection of the point of application for the load (reading in "Meters▪", with a decimal) (6.1, 2 - 12).
   - Boom length (optional)
     Reading in "Meters▪", with a decimal (6.2, 2 - 12)
   - Height off the ground (optional)
     Reading in "Meters▪", with a decimal (6.3, 2 - 12)
   - Second type of attachment being used:
     - forks (8, 2 - 12)
     - suspended load (9, 2 - 12)
     - bucket (10, 2 - 12)
6. Working configuration (12, 2 - 12)

- The first digit refers to the operating mode (12b, 2 - 12), example:
  - 2 = on wheels
- The second digit (12a, 2 - 12) concerns the equipment being used (PT, forks, etc...).

7. Warning and indicator lamps telehandler status (11, 2 - 12)
   Symbol overview:

	I.C. engine severe fault
	I.C. engine malfunction
	telescopic boom hydraulic movements control
	optional control exclusion
	2nd optional working (optional)
	3rd optional working (optional)
	"emergency stop" red button
	safety system exclusion
	warning / alarm

(For more details: ◁paragraph "warning and indicator lamps").

*: check the alarms or warnings types, referring to the display page "F5 ALARM PAGE".

▪: metric unit [length unit (m) and weight unit (ton)] or imperial unit [length unit (ft) and weight unit (kLb)].

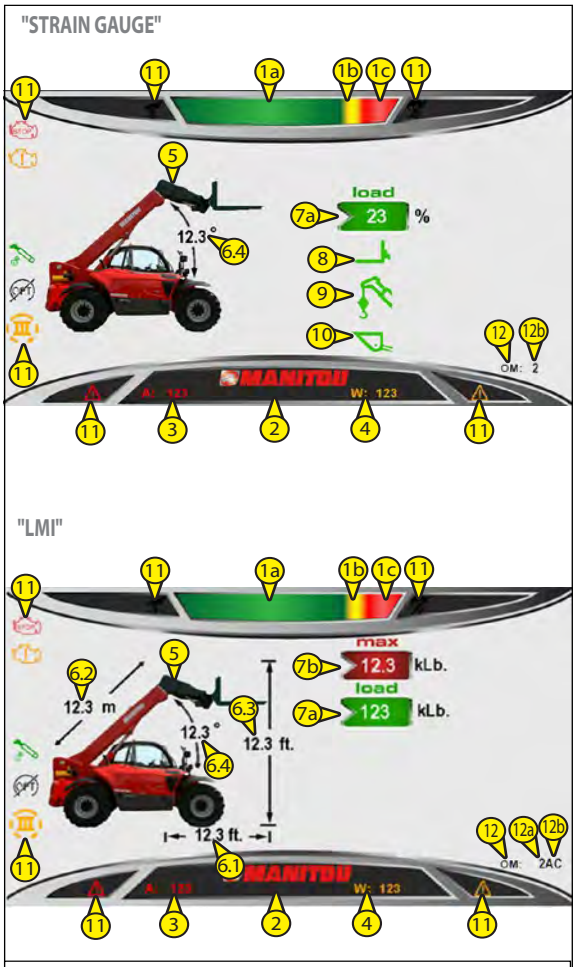

2 - 12

649010 EN/US/AU (15/12/2019)
MHT 790 1041D H ST4 S1

SETTING PAGE (F4)

1. Menu screen (1, 2 - 13):
   - Configurations (1a, 2 - 13)
   - Transducers (1b, 2 - 13)
   - Weight (1c, 2 - 13)
     (Only with password)
   - Service (1d, 2 - 13)
     (Only with password)
   - Options (1e, 2 - 13)
   - Save (1f, 2 - 13)
2. Coloured bar indicates load conditions (2, 2 - 13)
3. Machine alarm code*
   In normal operating conditions are displayed (4, 2 - 13)
4. Machine warning code*
   (5, 2 - 13) are displayed in normal operating conditions.
5. Messages area (6, 2 - 13)
6. Warning and indicator lamps (3, 2 - 13)

Symbol overview:

	"emergency stop" red button
	safety system exclusion
	warning / alarm

(For more details: paragraph "warning and indicator lamps").

*: Check the alarm or warning types, referring to the display page "F5 ALARM PAGE".

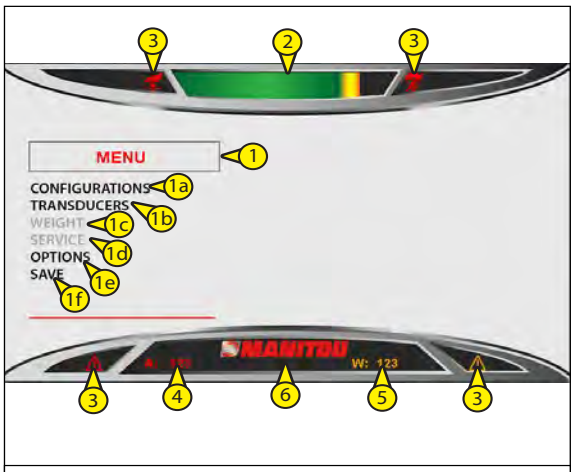

2 - 13

Configurations (1a, 2 - 13)

- Push the "Scroll" keys (1, 2 - 14) to select "CONFIGURATIONS" (1a, 2 - 14) and to access the settings:
  - Config. (2a, 2 - 15)
  - Tools (only with password) (2b, 2 - 15)

- Push the "Enter" key (3, 2 - 14) to select "Config." and to access the functions list:
  - Language (3a, 2 - 15)
  - Brightness (3b, 2 - 15)
  - Speed Unit (3c, 2 - 15)
  - Password 1 (only with password) (3d, 2 - 15)
  - Password 2 (only with password) (3e, 2 - 15)
  - Unit (only with password) (3f, 2 - 15)
- Push the "Enter" key (3, 2 - 14) to select one function (3, 2 - 15) and to access its menu setting (4a, 2 - 15)
- Push the "Scroll" keys (1, 2 - 14) to set the number (4b, 2 - 15) of the function on the setting menu (4a, 2 - 15)
- Push the "Enter" key (3, 2 - 14) to confirm the setting
- Push the "Home" key (4, 2 - 14) to return the "Menu" screen (1, 2 - 13)

2 - 14

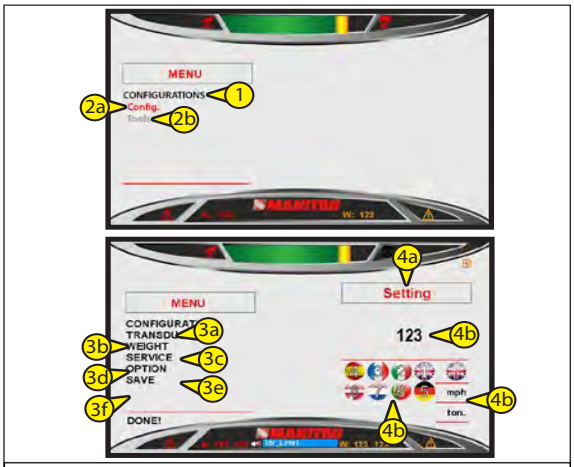

2 - 15

- Transducers (1d, 2 - 13)
- (These settings can be used for the diagnostic machine)

- Push the "Scroll" keys (1, 2 - 14) to select "TRANSDUCERS" (1a, 2 - 14) and to access the functions:
  - Transducers (1a, 2 - 16)
  - Min (only with password) (1b, 2 - 16)
  - Max (only with password) (1c, 2 - 16)
  - Calibration (only with password) (1d, 2 - 16)
  - Calibration Pump (only with password) (1e, 2 - 16)
  - INCHING (only with password) (1f, 2 - 16)
- Transducers and sensors voltage (2a, 2b, 2 - 16)

2 - 16

Options (1e, 2 - 13)
- Push the "Scroll" keys (1, 2 - 14) to select "OPTIONS" (1a, 2 - 14) and to access the function:
  - Time setting (password required) (1a, 2 - 17)
  - Machine settings (password required) (1b, 2 - 17)
  - Tyre Size (password required) (1c, 2 - 17)
  - Hours reset (1d, 2 - 17)

- Push the "Enter" key (3, 2 - 14) to select "Hours reset" (1d, 2 - 17)
- Push the "Home" key (4, 2 - 14) to return the "Menu" screen (1, 2 - 13).

2 - 17

Save (1f, 2 - 13)
- Push the "Scroll" keys (1, 2 - 14) to select "SAVE" (1f, 2 - 13) and push "Enter" key (3, 2 - 14) to confirm the settings saving.

ALARM PAGE (F5)

The indicators with the red light on the central unit or the component indicate an error or an anomaly.

1. Warning list ⊙ (1, 2 - 18)
   Example: 123 [code warning] LMI_TXTAL1 [description warning]
2. Alarm list ⊙ (2, 2 - 18)
   Example: 123 [code alarm] LMI_TXTAL1 [description alarm]
3. Messages area (3, 2 - 18)
   - Attention, alarm telehandler (4, 2 - 18).
   - Telehandler alarm code (5, 2 - 18).
   - Telehandler warning code (6, 2 - 18).
   - Red warning lights (7, 2 - 18)

   Symbol overview:

DISPLAY	DISPLAY, display in cab
IO-CORE	IO-CORE, control unit to control the voltage 12
MASTER	MASTER, control unit frame
MASTER	BASKET control unit (optional)
LMI	LMI load limiter control unit ("LMI" safety system type)
CEL	CEL, strain gauge ("STRAIN GAUGE" safety system type)
	joystick
T	acknowledgement of attachment (optional)
	radio remote controls (optional)
ANGLE	load limiter angle sensor
BOOM	load limiter winder on BOOM ("LMI" safety system type)
	I.C. engine malfunctions
STOP	I.C. engine stop
	service
	"emergency stop" red button
	safety system exclusion
	warning / alarm

(For more details: ◁ paragraph "WARNING AND INDICATOR LAMPS").

4. Coloured bar indicates load conditions (8, 2 - 18)
5. Engine unit error codes (9, 2 - 18)

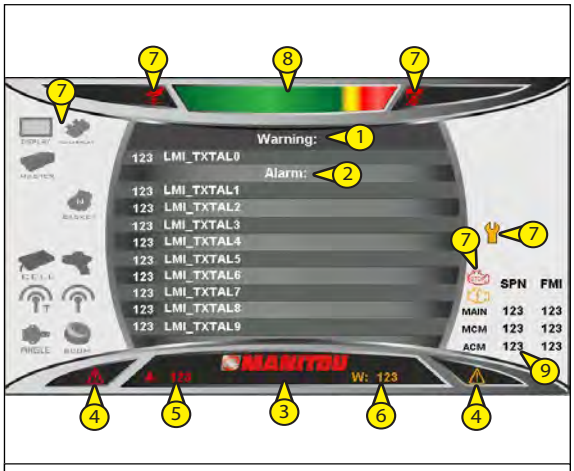

2 - 18

6- SELECTOR TO DISABLE THE LOAD LIMITER

The load limiter can only be deactivated manually in exceptional cases and for reasons of safety.

When the load limiter is deactivated, the operator and the telehandler are exposed to risks and there is nothing to prevent overload and/or the telehandler overturning.

The actuation of the anti-overturning system bypass key or button allows to rearm of movements for 30 seconds.

KEY SELECTOR OR BUTTON SELECTOR

(Second equipment)

To disable the load limiter, the operator must turn a key selector (2, 2 - 19) or keep the button selector pressed (4, 2 - 19) in the cab.

Key (3, 2 - 19) is kept inside a safety box (4, 2 - 19), placed behind the driver's seat.

Key selector (2, 2 - 19) or button selector (4, 2 - 19) has two positions "1" and "0":

- position "1": the load limiter is activated;
- position "0": the load limiter is deactivated.

During normal use, the key selector (2, 2 - 19) or button selector (4, 2 - 19) is in position "1", so the load limiter is activated.

When the safety system is disabled, enable it automatically:

- a red warning light on the control panel display

  (For more details: paragraph: "warning and indicator lamps").
- an alarm sound,

to warn the driver and other persons who may be present outside the vehicle of a potentially dangerous situation.

When the safety system is disable, all the telehandler movements are restricted to 15% of their maximum speed.

2 - 19

7 - KEYPAD

The keypad (11, 2 - 20) is located in the cab on the armrest (10, 2 - 20).

2 - 20

KEY FUNCTIONS

1. Parking brake key (1, 2 - 20)
2. Hydraulic movement stop key (2, 2 - 20)
3. Speed selector (slow-fast gear) (3, 2 - 20)
4. Optional output 2nd and 3rd selector (4, 2 - 20)
5. Steering wheel type key (5, 2 - 20)
6. Working modes key (6, 2 - 20)
7. Attachment control disconnect key (7, 2 - 20)
8. "Optional" key available, not used (8, 2 - 20).

PARKING BRAKE

The parking brake acts on the front and rear axle.
To engage the parking brake, press the key (1, 2 - 20). A red warning light will turn on the display (paragraph: "Instrument control panelpanel") and a red LED switches on in the keyboard.
To disengage the parking brake, press the key (1, 2 - 20). The red warning lamp will switch off on the display (paragraph: "Instrument control panel").

When you start the telehandler, the parking brake is engaged and, to disengage it, press the parking brake key (1, 2 - 20). If the parking brake is disengaged manually, in some conditions, the emergency brake is activated automatically.
The emergency brake insertion conditions are:

- the operator is not present on the driver's seat,
- the gear selector is in neutral position for several seconds,
- the accelerator pedal is released,
- the moving speed of the telehandler is less than 3.6 km/h (2.23 mph).

The automatic emergency brake is disabled if the gear switch is engaged and the rpm are accelerated by pressing on the gas pedal.

TELESCOPIC BOOM HYDRAULIC MOVEMENT STOP KEY

While travelling on roads, it is advisable (compulsory in Italy and Germany) to stop all hydraulic movements of the telescopic boom.
Press key (2, 2 - 20) to stop (a red LED comes on on the keypad) or activate (a green LED comes on on the keypad) the hydraulic movements. On the display, the warning lamp lights up, indicating that the movements are stopped or are available for use (paragraph: 'Instrument control panel, Driving page).

SPEED SELECTOR (SLOW-FAST GEAR)

The machine can run at two speeds (3, 2 - 20):

- Slow (work site speed)
- Fast (for road travel)

To change the speed, follow the instructions given below:

- stop vehicle movement completely
- keep the I.C. engine running at minimum speed
- set the forward or reverse gear in idle
- push the brake pedal down
- pressing "slow-speed" will cause the "tortoise" symbol ("CONTROL PANEL AND LOAD LIMITER "HMI") on the display to light up and the machine will move at a slow speed
- pressing "fast-speed" will cause the "hare" symbol (CONTROL PANEL AND LOAD LIMITER "HMI") on the display to light up and the machine will move at the maximum speed.

2nd AND 3rd LINE SELECTOR OPTION (OPTIONAL)

The selector (◁ 4, 📷 2 - 20) is used for switching the hydraulic control, which carries out two or three hydraulic movements using the accessory.

Depending on the machine setup, select the 2nd and 3rd optional output by pressing the key (◁4, 📷 2 - 20).
Each time the key is pressed, the following is selected:

1. optional output direct line (LEDs off on keypad)
2. 2nd optional output (orange LED lit up on keypad)
3. 3rd optional output (red LED lit up on keypad).

On the display, the indicator light indicates the 2nd and 3rd optional output available for use (◁ paragraph: "Instrument control panel").
When you switch on the telehandler, the instrument control panel recalls the last output option selected.

STEERING WHEEL TYPE KEY

To select from the three different steering options press key (◁ 5, 📷 2 - 20) as follows:

- front and rear steering wheels.
- front steering wheels.
- wheels in oblique position (crab steering).

On the display, the indicator lights indicate the selected steering option (◁ paragraph: "Instrument control panel").
Before selecting a type of steering, check the rear and front wheel alignment (◁ paragraph: "Warning and indicator lamps").

WORKING MODES KEY

Press key (6, 📷 2 - 20) to select the working mode depending on the type of accessory installed:

A - "HANDLING" MODE
B - "BUCKET" MODE
C - "SUSPENDED LOAD" MODE

A - "HANDLING" MODE
Use on forks (TFF, PFB, TDL, etc.)., and adjustable accessories on forks.

- By default, the device is in "HANDLING" MODE when the telehandler is started-up, except if the "SUSPENDED LOAD" MODE has been selected before shutting-down the engine.
- Press the key (6, 📷 2 - 20), the "HANDLING" MODE is confirmed with an audible beep and the lamp on the display switches on (◁ paragraph: "INSTRUMENT CONTROL PANEL").

B - "BUCKET" MODE
Use with a bucket (CB, CBA, CBC, CBG, CBR, etc.).

- Place the telehandler in the transport position.
- Press the key (6, 📷 2 - 20) for 2 seconds, the "BUCKET" MODE is confirmed with an audible beep and the lamp on the display switches on (◁ paragraph: "Instrument control panel").
- The machine returns to "HANDLING" MODE by pressing the key, or in case of loss of driver presence for a few seconds, or shutting down the engine.

C - "SUSPENDED LOAD" MODE
Use with crane jib (P, PC, PT...).

- Place the telehandler in the transport position.
- Press the key (6,2 - 20) for 2 seconds, "SUSPENDED LOAD" MODE is validated with an audible beep and the lamp on the display switches on (◁ paragraph: "Instrument control panel").
- Return to "HANDLING" MODE by pressing the key

Movements permitted depending the working modes
Telehandler controlled from cab (operating modes: on stabilizer and on wheels)

"HANDLING" MODE
- Working condition:

Movement	Status
Lifting telescopic boom	✓
Lowering telescopic boom	✓
Extending telescopic boom	✓
Retracting telescopic boom	✓
Backward tilting accessory	✓
Forward tilting accessory	✓
Optional 1	✓
Optional 2	✓

✓: allowed
✗: not allowed

- Overturning condition:

Movement	Status
Lifting telescopic boom	✗
Lowering telescopic boom	✗
Extending telescopic boom	✗
Retracting telescopic boom	✓
Backward tilting accessory	✗
Forward tilting accessory	✗
Optional 1	✗
Optional 2	✗

✓: allowed
✗: not allowed

- The actuation of the anti-overturning system bypass key allows to rearm of movements for 30 seconds
- The open door does not stop the movements
- Every movement is allowed with the telescopic boom retracted and the overturning system bypassed
- With "STRAIN GUAGE" security system type : when the lifted load exceeds 120%, the safety system cuts the power of the lifting telescopic boom (this action can be performed simultaneously with a movement of telescopic boom retraction)
- With "LMI" security system type: when the lifted load exceeds 100%, the safety system cuts the power of the lifting telescopic boom (this action can be performed simultaneously with a movement of telescopic boom retraction).

"BUCKET" MODE

- Working condition:

Movement	Status
Lifting telescopic boom	✓
Lowering telescopic boom	✓
Extending telescopic boom	✓
Retracting telescopic boom	✓
Backward tilting accessory	✓
Forward tilting accessory	✓
Optional 1	✓
Optional 2	✓

✓: allowed
✗: not allowed

- Overturning condition:

Movement	Status
Lifting telescopic boom	✓
Lowering telescopic boom	✗
Extending telescopic boom	✓
Retracting telescopic boom	✓
Backward tilting accessory	✓
Forward tilting accessory	✓
Optional 1	✓
Optional 2	✓

✓: allowed
✗: not allowed

- The actuation of the anti-overturning system bypass key allows to rearm of movements for 30 seconds
- The open door does not stop the movements
- Every movement is allowed with the telescopic boom retracted and the overturning system bypassed
- With "STRAIN GUAGE" security system type : when the lifted load exceeds 120%, the safety system cuts the power of the lifting telescopic boom (this action can be performed simultaneously with a movement of telescopic boom retraction)
- With "LMI" security system type: when the lifted load exceeds 100%, the safety system cuts the power of the lifting telescopic boom (this action can be performed simultaneously with a movement of telescopic boom retraction).

"SUSPENDED LOAD" MODE

- Working condition:

Movement	Status
Lifting telescopic boom	✓
Lowering telescopic boom	✓
Extending telescopic boom	✓
Retracting telescopic boom	✓
Backward tilting accessory	✗
Forward tilting accessory	✗
Optional 1	✓
Optional 2	✓

✓: allowed
✗: not allowed

- Overturning condition:

Movement	Status
Lifting telescopic boom	✓
Lowering telescopic boom	✗
Extending telescopic boom	✗
Retracting telescopic boom	✓
Backward tilting accessory	✗
Forward tilting accessory	✗
Optional 1	✗
Optional 2	✗

✓: allowed
✗: not allowed

- The actuation of the anti-overturning system bypass key allows to rearm of movements for 30 seconds
- The open door does not stop the movements
- Every movement is allowed with the telescopic boom retracted and the overturning system bypassed
- With "STRAIN GUAGE" security system type : when the lifted load exceeds 120%, the safety system cuts the power of the lifting telescopic boom (this action can be performed simultaneously with a movement of telescopic boom retraction)
- With "LMI" security system type: when the lifted load exceeds 100%, the safety system cuts the power of the lifting telescopic boom (this action can be performed simultaneously with a movement of telescopic boom retraction).

ATTACHMENT CONTROL DISCONNECT KEY

Press key (7, 2 - 20) to activate or deactivate the accessory rocker button (2, 2 - 21) on the joystick in cabin (1, 2 - 21).

On the control panel, the indicator lights indicates that the accessory control is disconnected or activated (paragraph: "Instrument control panel").

2 - 21

'OPTIONAL' KEY FOR EASY HYDRAULIC ATTACHMENT CONNECTION "ECS"

For easy attachment connecting and disconnecting.

Press the 'OPTIONAL' key (8, 2 - 20) to release the hydraulic pressure from the attachment direct line on the telescopic boom (this function is activated only for the attachment hydraulic line on the telescopic boom).

On the key (8, 2 - 20), the green LED comes on to indicate the function is active.

Connect or disconnect the rapid connectors of the hydraulic attachment (: Chapter 4 - OPTIONAL ATTACHMENTS FOR USE WITH THE RANGE: PICKING UP THE ATTACHMENTS).

8 - SWITCHES

The location of the switches may vary depending on the options (1, 2 - 22).

2 - 22

HAZARD WARNING LIGHTS BUTTON

This button (2 - 23) enables the L.H. and R.H. indicators to be switched on simultaneously, with the ignition off.
The red button lights up when pressed.
NOTE: Except in case of emergency, it is advised to disable the hazard warning lights when the ignition is switched off to avoid a flat battery.

2 - 23

REAR FOG LIGHT SWITCH

This switch (1, 2 - 24) activates a special light located in the rear of the telehandler to help identify the machine in foggy conditions.
On the switch, the LED comes on to indicate that the function is active (2, 2 - 24).
On the control panel, the yellow indicator light indicates that the function is active (paragraph: "Instrument control panel").

2 - 24

ROTATING BEACON LIGHT SWITCH

This switch (2, 2 - 25) controls the operation of the rotating beacon light.
On the switch (2, 2 - 25), the LED switches on (1, 2 - 25) to indicate that the function is active.

NOTE: Except in case of emergency, it is advised to disable the rotating beacon light when the ignition is switched off to avoid a flat battery.

2 - 25

CAB ROOF WIPER AND WASHER SWITCH

This switch (2, 2 - 26) sprays a cleaning liquid on the cab roof and uses the wiper to clear the liquid from the cab roof.
The switch (2, 2 - 26) has three positions:

- deactivated (2a, 2 - 26);
- for window wiper (2b, 2 - 26);
- for window washer (2c, 2 - 26). To deactivate the window washer, just release the switch.

On the switch (2, 2 - 26), the LED switches on (1, 2 - 26) to indicate that the function is active.

2 - 26

WINDOW LIFT (POWER-OPERATED) SWITCH

This switch (1, 2 - 27) activates the control that raises or lowers the cab door window, using a powered mechanism.

- Opening the window.
  - Press the switch forward (1a, 2 - 27) and hold it until the window has moved to the desired position.
  - Press the switch forward (1a, 2 - 27) and hold it until the window is fully opened.
- Closing the window
  - Press the switch back (1b, 2 - 27) and hold it until the window has moved to the desired position.
  - Press the switch back (1b, 2 - 27) and hold it until the window will close all the way.

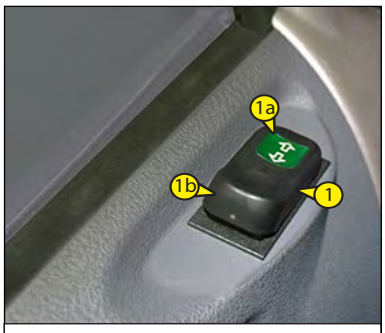

2 - 27

DPF REGENERATION SWITCH

Regeneration is the removal of soot from the Diesel Particulate Filter (DPF).
The regeneration switch has three positions.

1. **Forced regeneration**
   Press the upper part of the switch (1a, 2 - 28) for 2 seconds to start the regeneration.
2. **Regeneration disabled**
   Press the lower part of the switch (1b, 2 - 28) for 2 seconds to deactivate the regeneration.

Note: The INTERMEDIATE position of the regeneration switch is the preset automatic regeneration position.
Note: It is possible to return to normal operation at any point during the regeneration.

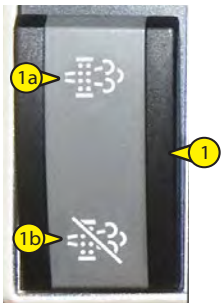

2 - 28

Carrying out the regeneration

To carry out the regeneration, the following conditions must exist:

- **Automatic regeneration**
  The engine must be at the operating temperature to allow automatic regeneration.
  If the engine ignition key is turned to the OFF position during regeneration, the regeneration will stop. When the regeneration is interrupted, the soot is not removed from the DPF and fuel is wasted.
- **DPF Wall Flow filter**
  For regeneration to start, the engine, RPM must be more than 1200. Normal operation can be continued. During automatic regeneration, the minimum speed is controlled at ± 950 rpm.
- **Manual regeneration**
  The DPF must be switched On. Press the forced regeneration switch for 2 seconds. Do not activate the application during manual regeneration. (Chapter 3 MAINTENANCE: "Particulate filter regeneration")

OPTIONAL FUNCTIONS SWITCHES

RADIO REMOTE CONTROL SWITCH

This switch (2, 2 - 29) activates the radio remote control.
On the switch (2, 2 - 29) the LED switches on (1, 2 - 29) to indicate that the function is active.
On the control panel, the green indicator light indicates the active function (paragraph: "Instrument control panel").

2 - 29

EMERGENCY PUMP SWITCH

This switch (1, 2 - 30) activates the emergency pump.
The switch has two positions with safety block:

- press on (1a, 2 - 30) to disable the safety motor,
- press on (1b, 2 - 30) to enable the safety motor pump.

To deactivate the control from press on (1b, 2 - 30) to press on (1a, 2 - 30), release the safety block (2, 2 - 30) and press the switch.

FOR MORE INFORMATION REGARDING THE CONTROL, SEE "PLATFORM USER MANUAL."

2 - 30

ELECTRIC ACCELERATOR SWITCH

The function of the switch (1, 2 - 31) is to increase or decrease the I.C. engine rpm electrically.
The switch has two positions:

- pressing (1a, 2 - 31) will cause the I.C. engine to accelerate gradually,
- deactivated (1c, 2 - 31),
- pressing (1b, 2 - 31) will cause the I.C. engine to decelerate gradually.

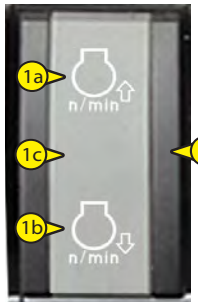

2 - 31

BOOM SUSPENSION SWITCH

The boom is suspended to reduce the f the telehandler vibrations on rough ground (e.g. moving straw in a field).
The switch (2, 2 - 32) has two positions.
On the switch (2, 2 - 34), the LED switches on (1, 2 - 34) to indicate that the function is active.
On the control panel, the green indicator light indicates the active function (paragraph: "Instrument control panel").
Operation:

- set the forks or attachment on the ground and lift the front wheels just a few centimetres.
- press switch set to position (2a, 2 - 32), the visual indicator switches on to indicate that boom suspension is activated.
- press switch set to position (2b, 2 - 32), the visual indicator switches off to indicate that the boom suspension is deactivated.

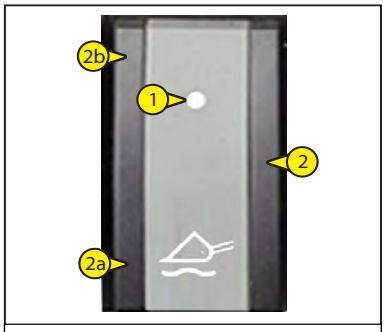

2 - 32

The boom suspension is active to a lifting height of 3 m from the carriage's axis of articulation with respect to the ground, when the boom is retracted. When you move beyond this height or make another hydraulic movement (tilting, telescoping, attachment), the boom suspension is momentarily deactivated and the switch 1 visual indicator switches off.

- When the I.C. engine is off, the boom suspension is automatically deactivated.

FANS ROTATION INVERSION TIMED CONTROL SWITCH

The 3-position switch (2, 2 - 33) can be activated to invert the rotation of the radiator fan for a few seconds.
On the switch (2, 2 - 33) the led comes on (1, 2 - 33) to indicate that the function is active.
On the control panel, the yellow indicator light indicates that the function is active (paragraph: "Instrument control panel").

In this situation, the direction of fan rotation is alternated periodically.
- When the switch is pressed (2a, 2 - 33) the fan rotation inversion function is activated.
- When the switch is pressed (2b, 2 - 33) the fan rotation inversion function is deactivated.
- When the switch is in position (2c, 2 - 33) the fan rotation inversion function is forced.
  When the switch is released, the fan rotation inversion timed control is reset.

The switch can also be activated with the telehandler running.

IMPORTANT
When the telehandler is travelling on roads,
the fan rotation inversion system must be deactivated [switch pressed in position (2c, 2 - 33)] .

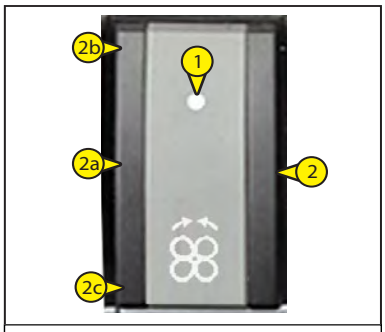

2 - 33

HYDRAULIC ATTACHMENT BLOCK SWITCH
Precautions to be taken if the machine is provided with the "hydraulic accessory block" device.

This electronically controlled hydraulic device allows the operator to block/release an attachment from the driving position.
The device activates two pins (X, Y, 2 - 34) which move horizontally acting on the quick-release coupling from the outside (blocking the accessory) and from the inside (releasing the accessory).
To block the accessory, the two check pins must come completely out of the quick-release coupling (X, Y, 2 - 34)

To select the "hydraulic accessory locking" device, the operator must press the "Optional output 2nd and 3rd selector" on keypad (1, 2 - 35).

The operator can activate two pins (X,Y, 2 - 34) and lock/release the accessory the by pressing the optional rocker button (4, 2 - 35) on the manipulator (3, 2 - 35).

By press the "Optional output 2nd and 3rd selector" 2° and 3° switch again (1, 2 - 35), the operator deactivates the hydraulic locking control and and resets the standard controls of the optionals.

If the installed equipment is fitted with hydraulic connections, connect them to the arm quick-release fitting with the IC engine switched off (Chapter 4 OPTIONAL ATTACHMENTS FOR USE WITH THE RANGE: PICKING UP THE ATTACHMENTS).

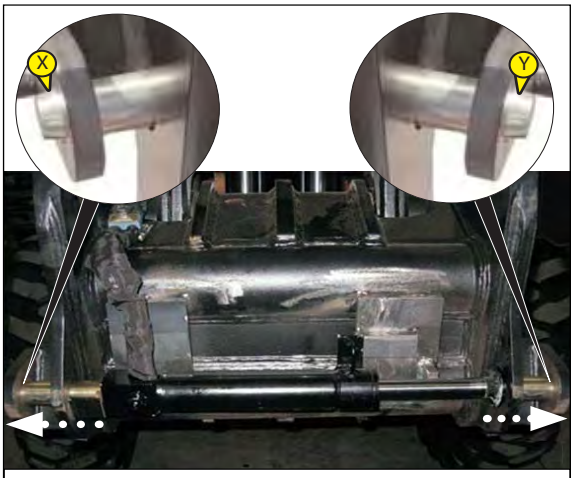

2 - 34

2 - 35

CAB FRONT AND REAR WORK LIGHTS SWITCH

This switch (1, 2 - 36) controls the operation of the front and rear work lights.
The switch (1, 2 - 36) has three positions:

- front work lights (1a, 2 - 36);
- deactivated (1c, 2 - 36);
- front and rear work lights (1b, 2 - 36).

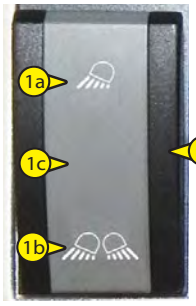

2 - 36

BOOM HEAD WORK LIGHTS SWITCH

This switch (2, 2 - 37) controls the operation of the boom head work lights.
On the switch (2, 2 - 37), the LED switches on (1, 2 - 37) to indicate that the function is active.

2 - 37

REAR WINDOW DEMISTING AND DEFROSTING SWITCH

This switch (2, 2 - 38) activates the control that distributes a low electrical current to the rear window to facilitate frost, fog and mist removal.
On the switch (2, 2 - 38), the LED switches on (1, 2 - 38) to indicate that the function is active.

2 - 38

LATERAL WINDOW WASHER AND WIPER SWITCH

This switch (2, 2 - 39) activates the control, which activates the lateral wiper and dispenses washing fluid, by initiating a sweeping motion and fluid spray to clear the lateral window.
This switch (2, 2 - 39) activates the control that distributes a low electrical current to the rear window to facilitate frost, fog and mist removal.
On the switch (2, 2 - 39), the LED switches on (1, 2 - 39) to indicate that the function is active.

2 - 39

BOOM HEAD ELECTRICAL POWER SWITCH

This switch (2, 2 - 40) controls the operation of the boom head electrical power.
On the switch (2, 2 - 40), the LED switches on (1, 2 - 40) to indicate that the function is active.

2 - 40

OPERATING MODE IN CONTINUOS OF THE HYDRAULIC ATTACHMENTS

This OPTION must only be used with an attachment requiring continuous hydraulic movement, such as a brush, feeder bucket, mixer, spray etc. It is strictly forbidden for use in handling operations and all other applications (winch, crane jib, crane jib with winch, hook, etc.).

Continuous hydraulic movement of the attachment

- Check that potentiometer (C, 2 - 41) is set to 0%.
- Switch button* (A, 2 - 41) to the front or the back (depending on the type of attachment), press button (B, 2 - 41) and release button (A, 2 - 41). The red indicator (1, 2 - 41) flashes to indicate that it is in operation.
- On the control panel in "F2-Working page" a orange indicator light up (B1, 2 - 41) to indicate that function is active.
- Set the required flow rate using potetiometer (C, 2 - 41). On the control panel in "F2-Working page" is displayed the setting (%).
- To stop continuous hydraulic movement of the attachment, move switch (C, 2 - 41) forwards or backwards or press button (B, 2 - 41). Indicator (1, 2 - 41) goes out.
- Set potentiometer (C, 2 - 41) to 0%. Never leave the driver's cab without resetting the potentiometer C to 0%. Before starting the telehandler, make sure the potentiometer is set to 0%.

NOTE: If the operator leaves the driver's cab, the continuous hydraulic movement will automatically stop and must be restarted.

*: Place a hand on the joystick, press the hydraulic movement consent button (OK, 2 - 41) and perform the movement.

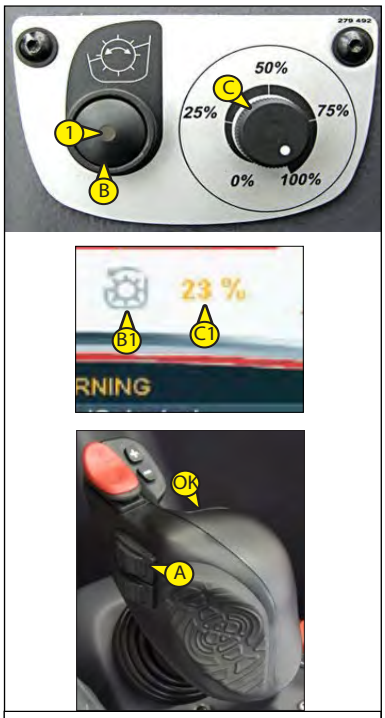

2 - 41

TRUCK/PLATFORM SELECTOR SWITCH KEY (only with platform)

- Handling or platform operation from driver's cab controls (1, 2 - 42).
- Platform operation from control console (2, 2 - 42).

(For more details: Baskets user manual)

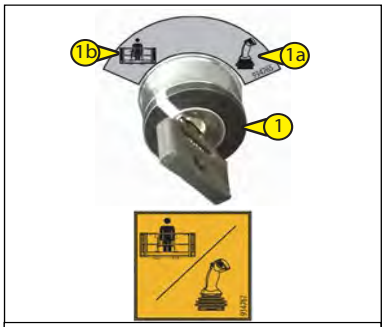

2 - 42

BUTTON FOR RESTORING ELECTRIC POWER SUPPLY (only with platform)

If the "emergency stop" button is pressed from the basket, the supply of electricity from the battery is cut off and the I.C. engine switches off.

Keep button pressed (2, 2 - 43) to restore supply of electric current to the battery and make it possible to restart the i.c. engine

(For more details: Baskets use manual)

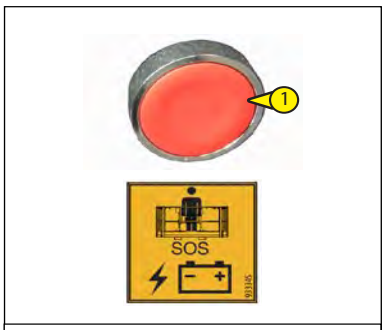

2 - 43

9 - "EMERGENCY STOP" BUTTON

In case of emergency, press the mushroom-shaped red button (1, 2 - 44) to stop the I.C. engine of the telehandler.

On the control panel, the indicator light indicates the active function (paragraph: "Instrument control panel").

Warning, hydraulic movements suddenly stop when using this button. If possible, stop the telehandler before using the emergency stop.

Turn the button (1, 2 - 44) to disable it and to restart the telehandler.

2 - 44

10 - WARNING AND INDICATOR LAMPS

INDICATOR LAMPS

POSITION LIGHTS

(For more details: paragraph "Lighting, horn and indicator lights lever")

	position lights are off
	position lights active green indicator light

LOW BEAMS

(For more details: paragraph "Lighting, horn and indicator lights lever")

	low beams are off
	low beams active green indicator light

HIGH BEAMS

(For more details: paragraph "Lighting, horn and indicator lights lever")

	high beams active blue indicator light

DIRECTION LIGHTS

(For more details: paragraph "Lighting, horn and indicator lights lever")

	direction lights are off
	direction lights active green indicator light

CAB DOOR

(For more details: paragraph "Driver's presence")

	telehandler door is closed
	telehandler door is not closed properly active red indicator light

FRONT WHEELS ALIGNMENT GREEN INDICATOR LIGHT

(For more details: paragraph "Keypad")

	front wheels alignment active green indicator light

Indicates alignment of the front wheels in relation to the telehandler axis (♦).
When the wheels are aligned, the indicator lights up.

REAR WHEELS ALIGNMENT YELLOW INDICATOR LIGHT

(For more details: paragraph "Keypad")

	rear wheels alignment active yellow indicator light

Indicates alignment of the rear wheels in relation to the telehandler axis (♦).
When the wheels are aligned, the indicator lights up.

(♦) **Front and rear wheels alignment procedure:**
Turn the selector for steering type to "concentric steering", turn the wheel so that the yellow rear wheel alignment indicator does not light up; then position the selector on "front steering" and turn the wheel so that the green front wheel alignment indicator does not light up.
When the front and rear wheels are aligned, one of the three aforementioned steering modes can be selected.
The wheels coordination may be lost with use; realign the wheels every 20 hours of service by following the procedure described above.

STEERING WHEEL TYPES

(For more details: paragraph "Keypad")

	front wheel steering active green indicator light
	concentric wheel steering active green indicator light
	crab steering active green indicator light

FAST GEAR

(For more details: paragraph "Keypad")

	gear engaged active green indicator light

SLOW GEAR

(For more details: paragraph "Keypad")

	gear engaged active green indicator light

HIGH TORQUE

(For more details: paragraph "High torque selectors")

	high torque disabled
	high torque active green indicator light

REMOTE CONTROL (OPTIONAL)

(For more details: paragraph "Switches")

	remote control disabled
	remote control active green indicator light

STOPPING TELESCOPIC BOOM HYDRAULIC MOVEMENTS

(For more details: paragraph "Keypad")

	telescopic boom hydraulic movements control stopped
	telescopic boom hydraulic movements control active green indicator light

TELESCOPIC BOOM SUSPENSION

(For more details: paragraph "Switches")

	telescopic boom suspension is disabled
	telescopic boom suspension active green indicator light

REVERSING RADIATOR FAN

(For more details: paragraph "Switches")

	reversing radiator fan is disabled
	reversing radiator fan active yellow indicator light

SERVICE
(For more details: see next paragraph "Warning lamps in alarm page: Service")

	Service orange indicator light

HYDRAULIC CONTROL ATTACHMENT DISCONNECTED
(For more details: paragraph "Keypad")

	black indicator light indicates that the optional hydraulic movement is excluded

2ND OPTIONAL WORKING (OPTIONAL)
(For more details: paragraph "Keypad")

	2nd optional working orange indicator active

3RD OPTIONAL WORKING (OPTIONAL)
(For more details: paragraph "Keypad")

	3rd optional working

DIESEL PARTICULATE FILTER (DPF) INDICATOR LAMPS

DPF: HIGH QUANTITY OF SOOT

(For more details: paragraph "Switches")

	high quantity of soot active orange indicator light

This indicator provides a general indication of the amount of soot. When the quantity of soot is normal, the indicator switches off.

DPF: ACTIVE REGENERATION

	active regeneration active orange indicator light

This indicator lights up during active regeneration.
It indicates the possibility of high discharge temperatures. The indicator switches off once regeneration is completed.

DPF: REGENERATION DISABLED

(For more details: paragraph "Switches")

	regeneration disabled active orange indicator light

This indicator lights up every time the disabling switch is activated.

DIESEL PARTICULATE FILTER (DPF) REGENERATION MODE

- Automatic regeneration
- Manual regeneration

Automatic regeneration

Automatic regeneration takes place when the soot level reaches the point set in the ECM to trigger regeneration. During automatic regeneration, the engine can operate normally.

Manual

Manual regeneration is started by pressing the regeneration switch.
Forced regeneration can only be carried out after the soot load has reached the point that causes the DPF indicator to light up.
Forced regeneration is only necessary if automatic regeneration has not been completed. This situation may be due to activation of the disabling switch or engine work cycle.

Forced regeneration can be carried out only after the soot load has reached the point that causes the DPF indicator to light up.
Forced regeneration is only necessary if automatic regeneration has not been completed. This situation may be due to activation of the disabling switch or engine work cycle.

WARNING LAMPS

I.C. ENGINE SEVERE FAULT

If the indicator lights up or flashes when the telescopic lift is in operation, there is a severe fault. Switch off the I.C. engine immediately and contact your dealer.

STOP	normal functioning of the I.C. engine
STOP	I.C. engine severe fault active red warning light

I.C. ENGINE MALFUNCTIONS

If the indicator lights up or flashes when the forklift truck is in operation, there is a malfunction. The telescopic lift operates in reduced mode.
Impermissible operating state.

	normal functioning of the I.C. engine
	I.C. engine malfunctions active orange warning light

It is important that malfunctions be rectified in good time. You can rectify certain faults yourself.
Malfunctions that you cannot eliminate yourself must be rectified at a qualified specialist workshop.

The operating safety of your vehicle could be affected if maintenance work is carried out incorrectly. You could lose control of the telehandler and cause an accident. Also, the safety systems may no longer be able to protect you or others, in the way in which they were designed. Always have maintenance work carried out at a qualified specialist workshop.

ALTERNATOR EXCITATION

	normal functioning of the alternator excitation
	alternator excitation active red warning light

This indicator lights up when the electric contact on the forklift truck is activated and it switches off once the I.C. engine starts running. If the indicator lights up while the telescopic tractor is in operation, switch the I.C. engine off immediately and check the electric circuit and the alternator belt.

I.C. ENGINE OIL PRESSURE RED INDICATOR LIGHT

	normal functioning of the i.c. engine oil pressure
	i.c. engine oil pressure active red warning light

This indicator lights up when the electric contact on the forklift truck is activated and it switches off once the I.C. engine starts running. If the indicator lights up while the truck is in operation, switch the I.C. engine off immediately and check for the cause (check the oil level in the engine crankcase).

ENGINE AIR FILTER CLOGGING RED INDICATOR LIGHT

	normal functioning of the engine intake air filter
	blocked engine intake air filter active red warning light

This light indicates the status of the filter cartridge: if the cartridge is encrusted or damaged, the indicator lights up (for replacing the cartridge, refer to the "Lubricants" Chapter).

TRANSMISSION FILTER BLOCKING

	normal functioning of the transmission oil filter
	blocked transmission oil filter active red warning light

This light indicates the status of the filter cartridge: if the cartridge is encrusted or damaged, the warning lights up (for replacing the cartridge, refer to the "Lubricants" Chapter).

PARKING BRAKE

(For more details: paragraph "Keypad")

	parking brake disabled
	parking brake engaged active red warning light

LOW BRAKE OIL

	normal functioning of the brake system
	red braking oil level low warning warning light

If the lamp switches on when the lift truck is running, stop the I.C. engine immediately and look for the cause (braking oil level, possible leak, etc.). In the event of an abnormal level drop, consult your dealer.

HYDRAULIC OIL FILTER

	normal functioning of the hydraulic oil filter
	blocked hydraulic oil filter red warning light

This light indicates the status of the filter cartridge: if the cartridge is encrusted or damaged, the warning lights up (for replacing the cartridge, refer to the "Lubricants" Chapter).

STEERING SYSTEM OIL PRESSURE

	normal functioning of the steering system
	"emergency steering" red warning light

If the lamp switches on when the lift truck is running, stop the I.C. engine immediately and look for the cause (possible leak, etc.).

TRAILER BRAKE ANOMALY (OPTIONAL)

	normal functioning of the trailer brake
	trailer brake anomaly red warning light

ENGINE BRAKE (OPTIONAL)

(For more details: paragraph "Switches")

	engine brake disabled
	engine brake active red warning light

"EMERGENCY STOP"

(For more details: paragraph "Emergency stop" button)

	"emergency stop" red button not pressed
	"emergency stop" red button pressed red warning light

LOAD LIMITER DISABLED

(For more details: paragraph "Selector to disable the load limiter")

	normal functioning of the load limiter
	DANGER! Load limiter disabling red warning light

ALARM AND WARNING MACHINE

(For more details: paragraph "Control panel and load limiter")

	ATTENTION! Machine alarm active red warning light

WARNING LAMPS IN ALARM PAGE

(For more details: paragraph "Control panel and load limiter")

DISPLAY IN CAB

DISPLAY	operating normally
DISPLAY	red warning light on indicates an error or an anomaly

CONTROL UNIT ON HEAD BOOM TO CONTROL THE VOLTAGE 12

IO-CORE	operating normally
IO-CORE	red warning light on indicates an error or an anomaly

MASTER CONTROL UNIT FRAME

MASTER	operating normally
MASTER	red warning light on indicates an error or an anomaly

LOAD LIMITER CONTROL UNIT (OPTIONAL)

(Second equipment)

L LMI	operating normally
L LMI	red warning light on indicates an error or an anomaly

BASKET CONTROL UNIT (OPTIONAL)
(Second equipment)

BASKET	operating normally
BASKET	red warning light on indicates an error or an anomaly

ACKNOWLEDGEMENT OF ATTACHMENT (OPTIONAL)

T	operating normally
T	red warning light on indicates an error or an anomaly

JOYSTICK

	operating normally
	red warning light on indicates an error or an anomaly

RADIO REMOTE CONTROLS (OPTIONAL)
(Second equipment)

	operating normally
	red warning light on indicates an error or an anomaly

WINDER ON BOOM
(Second equipment)

BOOM	operating normally
BOOM	red warning light on indicates an error or an anomaly

LOAD LIMITER ANGLE SENSOR)

ANGLE	operating normally
ANGLE	red warning light on indicates an error or an anomaly

I.C. ENGINE ALARM

	I.C. engine malfunctions active orange warning light
STOP	Severe I.C. engine failure active red warning light

SERVICE

	Service red indicator light

To indicate that the telehandler needs servicing or maintenance. Refer to chapter on scheduled maintenance.

11 - START-UP SWITCH

This switch (2 - 45) has five positions, and its functions are:

- **0** : I.C. engine STOP;
- **I** : Main electric contact "+" (it also activates the preheating device, if installed)
- **II** : Not used
- **III** : I.C. engine START-UP and return to position "1" when the key is released (it also deactivates the preheat device, if installed).

Note: The machine turns on also when the forward/reverse direction selector (F-R) is pressed, even if the transmission system remains in neutral (N) until the operator willingly presses the forward/reverse direction selector (F-R) to the neutral position (N) and then select the traveling direction (F-R) again.

2 - 45

12 - GAS PEDAL

Electronic pedal (1, 2 - 46), used for changing the telehandler speed by operating on the rpm of the engine.
Press on the gas pedal (1, 2 - 46) to move the telehandler forward or reverse directions.

13 - SERVICE BRAKE PEDAL AND INCHING CONTROL

The pedal (2, 2 - 46) operates on the front and rear wheels by a power assisted hydraulic brake system, and allows the telehandler to be slowed down and stopped.
Press on the brake pedal (2, 2 - 46) to slow or stop the telehandler forward movement.

INCHING CONTROL
The pedal (2, 2 - 46) operates on the front and rear wheels by a power assisted hydraulic brake system, and allows the telehandler to move slowly, and handle loads accurately.
The inching control cut the power for the telehandler.

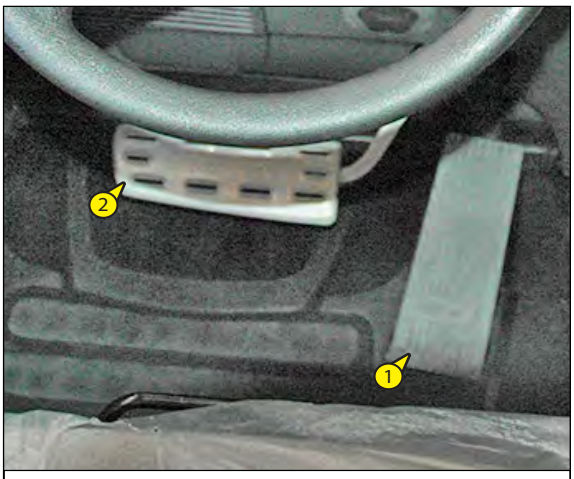

2 - 46

14 - LIGHTING, HORN AND INDICATOR LIGHTS LEVER

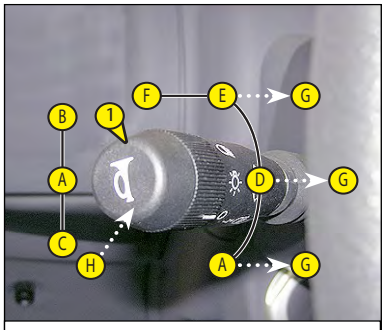

2 - 47

The lever (1, **2 - 47**) controls:

- All lights are off, the direction indicator lights are not flashing (A, 2 - 47).
- The right hand direction indicator lights flash (B, 2 - 47).
- The left hand direction indicator lights flash (C, 2 - 47).
- The sidelights and the rear lights are on (D, 2 - 47).
- The dipped headlights and the rear lights are on (E, 2 - 47).
- The main beam headlights and the rear lights are on (F, 2 - 47).
- Headlight signal (G, 2 - 47).
- Pressing the switch sounds the horn (H, 2 - 47).

NOTE: Positions (D - E - F - G, 2 - 47) can be used without the ignition being on.

On the control panel, the indicator lights indicates the active function (DRIVING PAGE (F1), 2-36).

15 - FRONT AND REAR WINDSCREEN WIPER LEVER

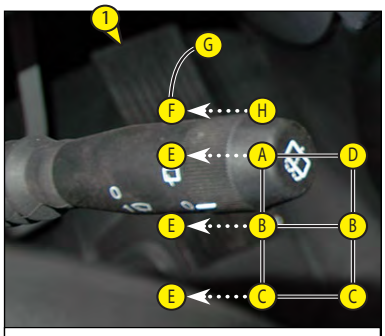

2 - 48

The lever (1, **2 - 48**) controls:

Front windscreen wiper (1, 2 - 48):

- Front windscreen wiper stop (A, 2 - 48).
- Slow speed for front windscreen wiper (B, 2 - 48).
- Fast speed for front windscreen wiper (C, 2 - 48).
- Front windscreen wiper intermittent control (D, 2 - 48).
- Front windscreen washer, pulse-driven (E, 2 - 48).

Rear windscreen wiper (1, 2 - 48):

- Rear windscreen wiper stop (F, 2 - 48).
- Rear windscreen wiper (G, 2 - 48).
- Rear windscreen washer, pulse-driven (H, 2 - 48).

16 - FORWARD/NEUTRAL/REVERSE GEAR SELECTION

TRAVEL INVERTER AND MOVING THE TELEHANDLER

The telehandler travelling inverter selector (1, 2 - 56) is located on the joystick in the cab.
When operating this control, the telehandler should be travelling at slow speed and not accelerating.

- FORWARDS: Move the switch forwards (F, 2 - 56), the selected gear is displayed on the control panel (2 - 56).
  Press on the accelerator pedal to move the telehandler (2 - 56, "Accelerator pedal").
- REVERSE: Move the switch in reverse (R, 2 - 56), the selected gear is displayed on the control panel (2 - 56).
  Press on the accelerator pedal to move the telehandler (2 - 56).
  Reversing lights and an acoustic reversing alarm indicate that the telehandler is running in reverse.
- set the switch (N, 2 - 56) to the centre position, the gear set is displayed on the control panel and the parking brake is applied (by default).

2 - 49

Safety when moving the telehandler

The operator must observe the following sequence to move the truck forwards or backwards:

1. sit down correctly in the driver's seat (3- PRÉSENCE DU CONDUCTEUR)
2. release the hand brake(8- INTERRUPTEURS)
3. the stabilisers are not resting on the ground (8- INTERRUPTEURS) **(if present)**
4. engage forwards or reverse.

*: Forwards or reverse movement is authorised with speeds lower than 20 km/h. In the case of travel inverter at higher speeds, the transmission system goes into neutral position, informing the operator with a flashing letter 'N' on the screen and opposite travel direction is only activated when the transmission system detects a speed lower than 20 km/h.

Telehandler movement

MOVEMENT IS ACTIVATED IF:

1. the operator is sitting on the seat
2. the door is closed
3. the parking brake has been released manually
4. the travel direction selector is in the forwards or reverse position.

MOVEMENT IS DISABLED IF:

1. door opening forces the gearbox into the neutral position
2. you press the travel switch into forwards or reverse before closing the door, you need to return through neutral then select a travel direction
3. you use the forwards or reverse travel selector when the operator is not sitting on the seat, you need to return through neutral then select a forwards or reverse travel direction
4. during forwards or reverse travel, the operator getting up from the seat does not disable travel until the operator releases the accelerator pedal
5. with the machine at a standstill, the travel switch is moved forwards or backwards and the parking brake is engaged, the operator is forced to release the brake to move and they must return through neutral then select a forwards or backwards travel direction.

To stop the telehandler without switching off electric power, they must observe the following sequence:

1. set the travel selector to neutral 'N'
2. apply the parking brake
3. get out of the telehandler.

NOTE: an intermittent alarm sound and a message on the screen inform the driver that they have left the driving position

17 - DRIVING MODE SELECTOR SWITCHES

2 - 50

The driver can select two driving modes for the telehandler, according to the task to be performed:

1. "LOADER" mode
2. "HANDLING" mode

Press the buttons (-, +, 2 - 57) on the joystick (1, 2 - 57) in the cab to select the two driving modes.

"LOADER" mode
Press the button (+ ,2 - 57) to select the "LOADER" driving mode, so that the telehandler accelerates faster and driving is more aggressive. Use this mode to travel on the road or for specific operations such as "loader" or "silage".

When you press the button (+, 2 - 57) a green indicator lights on the control panel in the "HELP PAGE".

"HANDLING" mode:
Press the button (- , 2 - 57) to drive the telehandler gradually and accurately when starting and at low speed. Use it to "handle" a load.

When you press the button (+, 2 - 57) a green indicator lights on the control panel in the "DRIVING PAGE".

When the telehandler starts, the "LOADER" mode is selected by default.

The buttons (-, +, 2 - 57) can also be turned on with the telehandler in motion.

18 - PROPORTIONAL ELECTRO-HYDRAULIC JOYSTICK

(According to the telehandler model)

The joystick (1, 2 - 51) is located in the cab on the armrest (2, 2 - 51).

The hydraulic control use authorisation is given by the validation of the driver's presence (3 - Driver's presence, 2-23) and by following the conditions for hydraulic control use.
To enable and carry out the movements, keep the manoeuvre enabled (OK, 2 - 51) on joystick (1, 2 - 51) pressed (If equipment).

Do not attempt to alter the hydraulic system pressure. In the event of a suspected malfunction, contact your dealer.
ANY ALTERATION MAY RENDER THE WARRANTY NULL AND VOID.
Use the hydraulic controls carefully without sudden movements, to avoid accidents caused by shaking the machine.

NOTE: When driving on the road, it is highly recommended that you cut-off all the hydraulic movements (Stopping the telescopic boom hydraulic movements key, 2-36).

2 - 51

GENERAL MOVEMENT OF THE TELESCOPIC BOOM

- Lifting control lever (A, 2 - 51).
- Tilting control lever (A, 2 - 51).
- Telescoping control button (B, 2 - 51).
- Attachment control button (C, 2 - 51).
- Hydraulic movement consent button (OK, 2 - 51) (If equipment).

Place a hand on the joystick, press the hydraulic movement consent button and perform the movement. A timer will keep the hydraulic movements active during use of the telescopic lift. Pressing the hydraulic movement consent button if necessary to reactivate the hydraulic movements.

Direction of movements

LIFTING THE LOAD

- The lever (A, 2 - 51) backwards when lifting.
- The lever (A, 2 - 51) forwards when lowering.

TILT OF CARRIAGE

- The lever (A, 2 - 51) to the left for reverse tilt.
- The lever (A, 2 - 51) to the right for forward tilt.

TELESCOPING

- Button (B, 2 - 51) forwards for extending.
- Button (B, 2 - 51) backwards for retracting.

ATTACHMENT

- The button (C, 2 - 51) forwards or backwards.

19 - HEATER CONTROL

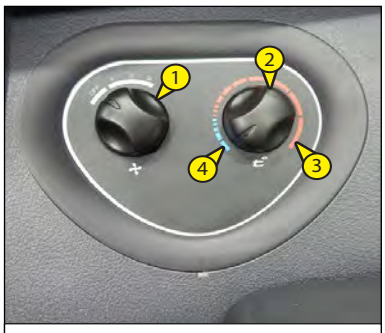

2 - 52

FAN CONTROL (1, 2 - 53)
This 3-speed control allows the air to be ventilated through the air vents.
TEMPERATURE CONTROL (2, 2 - 53)
Allows the temperature inside the cab to be adjusted.
The fan pumps in the air at an ambient temperature (4, 2 - 52).
The fan pumps in warm air (3, 2 - 52).
The intermediate positions allow the temperature to be adjusted.

20 - AIR CONDITIONING CONTROLS (OPTION)

2 - 53

The air conditioning only works if the telehandler has been launched.
When using your air conditioning unit, you must work with the cab closed off.
In winter: In order to ensure correct operation and complete efficiency of the air conditioning unit, switch on the compressor once a week, even for a short time, to lubricate the internal seals.
In cold weather: Warm the I.C. engine before switching on the compressor. This allows the coolant, which was collected in a liquid state at the lowest point of the compressor circuit, to turn into gas. This is due to the effect of the heat given off by the I.C. engine, as the compressor is liable to be damaged by the coolant in a liquid state.
If your air conditioning does not seem to be working correctly, have it examined by your dealer (see 3 - MAINTENANCE: F - EVERY 2000 HOURS OF SERVICE).
Never try to repair any faults yourself.

FAN CONTROL (1, 2 - 53)
This 3-speed control allows the air to be ventilated through the air vents.

TEMPERATURE CONTROL (2, 2 - 53)
Allows the temperature inside the cab to be adjusted.
- The fan pumps in cold air (4, 2 - 53).
- The fan pumps in warm air (3, 2 - 53).

The intermediate positions allow the temperature to be adjusted.

AIR CONDITIONING CONTROL
This control with a pilot light allows the air conditioning unit to be switched on.

Heating mode
The controls must be adjusted in the following way:
- Control with pilot light off (5, 2 - 53).
- At the required temperature (2, 2 - 53).
- At the desired speed: 1, 2 or 3 (1, 2 - 53).

Conditioned air mode
The controls must be adjusted in the following way:
- Control with pilot light on (5, 2 - 53).
- At the required temperature (2, 2 - 53).
- At the desired speed: 1, 2 or 3 (1, 2 - 53).

Demisting mode
The controls must be adjusted in the following way:
- Control with pilot light on (5, 2 - 53).
- At the required temperature (2, 2 - 53).
- At the speed: 1, 2 or 3 (2, 2 - 53).

For optimum effectiveness, close the heating ventilators.

21 - AIR DIFFUSERS FOR DEMISTING

Windscreen (1, 2 - 54).
For optimum performance, close the heating diffusers (2, 2 - 54).

22 - AIR DIFFUSERS OF HEATING

The heating diffusers (2, 2 - 54) make it possible to distribute the ventilated air inside the cab and on the side windows.

23 - STEERING WHEEL ADJUSTMENT LEVER

This lever (3, 2 - 54) enables the angle and height of the steering wheel to be adjusted.
Pull the lever backwards.
Adjust the steering wheel to the desired position.
Push the lever back to lock the steering wheel in position.

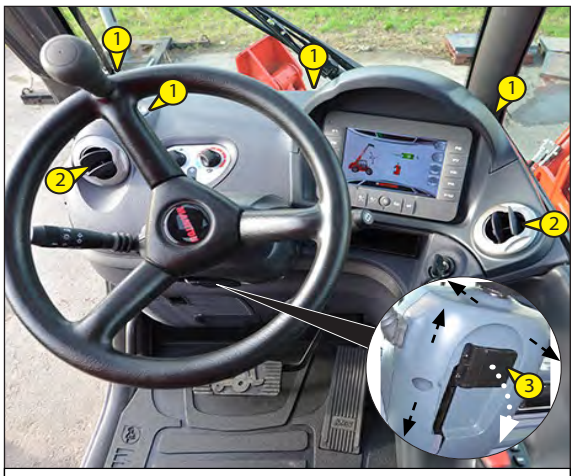

2 - 54

24 - COMMANDS ARMREST ADJUSTMENT CONTROL KNOBS

These control knobs (1, 2, 2 - 55) enable the commands armrest's height and length to be adjusted.
HEIGHT ADJUSTMENT
Turn the locking control knobs (1, 2 - 55) and slide the commands armrest to the desired position.
Release the control knobs and ensure it returns to the lock position.
LONGITUDINAL ADJUSTMENT
Turn the locking control knobs (2, 2 - 55) and slide the commands armrest to the desired position.
Release the control knobs (2, 2 - 55) and ensure it returns to the lock position.

2 - 55

25 - DOOR OPEN LEVER

(1, 2 - 56)

26 - DOOR CLOSE HANDLE

(2, 2 - 56)

27 - HANDLE FOR REAR WINDOW OPENING/CLOSING

The handle (1, 2 - 57) opens and closes the rear window.
The rear window has 3 positions (a, b, c, 2 - 57).
Turn the handle (1, 2 - 57) and push it to open the window.
Block the window at the desired position (a, b, c, 2 - 57).
Close the window, using the knob (2, 2 - 57), and ensure it returns to the lock position.

2 - 56

Emergency exit
Use the rear window as an emergency exit (3, 2 - 57), if it is impossible to leave the cab through the door.

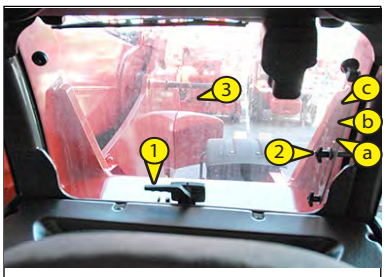

2 - 57

28 - CEILING LIGHT

(1, 2 - 58)

2 - 58

29 - ARMREST AND STORAGE

Lift the armrest (1, 2 - 59) to access the storage (2, 2 - 59).

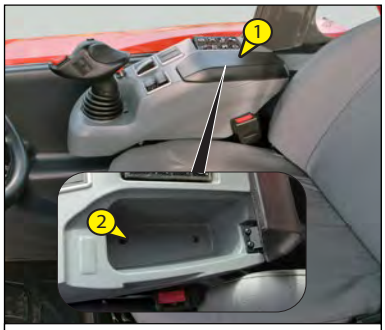

2 - 59

30 - SIDE STORAGE SPACE

(Behind driver seat)
(1, 2 - 60)

31 - DOCUMENT HOLDER NET

Make sure that the operator's manual is in the right place, i.e. in the document holder net (2, 2 - 60).

2 - 60

32 - CAB FILTER VENTILATORS
(Standard)

Cab internal ventilation filter.
Remove the door (1, 2 - 61) that provides access to the filter ventilators (2, 2 - 61).

2 - 61

33 - CAB FILTER VENTILATORS
(Option air conditioning)

Cab external ventilation filter.
Remove the panel (1, 2 - 62) on front cab and that provides access to the filter ventilators (2, 2 - 62).

34 - WINDSCREEN WASHER TANK

Remove the panel (1, 2 - 62) on front cab and that provides access to the windscreen washer tank (3, 2 - 62).

35 - BRAKE FLUID TANK

Remove the panel (1, 2 - 62) on front cab, which provides access to the brake fluid tank (4, 2 - 62).

2 - 62

36 - SUN VISOR
(1, 2 - 63)

2 - 63

37 - FRONT HEADLIGHTS

- Left front indicator (A, 2 - 64).
- Left front dipped headlight (B, 2 - 64).
- Left front main beam (C, 2 - 64).
- Left front sidelight (D, 2 - 64).
- Right front indicator (E, 2 - 64).
- Right front dipped headlight (F, 2 - 64).
- Right front main beam (G, 2 - 64).
- Right front sidelight (H, 2 - 64).

A grid protection is installed on front headlights (I, 2 - 64).

2 - 64

38 - REAR LIGHTS

- Left rear indicator (A, 2 - 65).
- Left rear stoplight (B, 2 - 65).
- Rear left headlight (C, 2 - 65).
- Rear fog light (D, 2 - 65).
- Rear reverse light (E, 2 - 65).
- Right rear headlight (F, 2 - 65).
- Right rear stoplight (G, 2 - 65).
- Right rear indicator (H, 2 - 65).

A grid protection is installed on rear lights (I, 2 - 65).

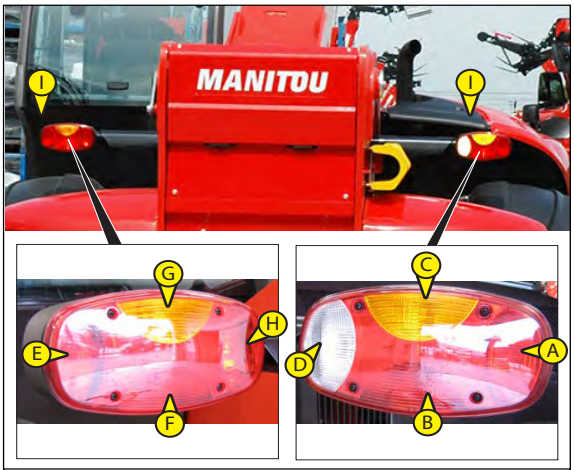

2 - 65

39 - ROTATING BEACON LIGHT

Standard
The rotating beacon light (A, 2 - 66) pivots to save space on the telehandler and can be detached to prevent theft.
- Loosen nut (1, 2 - 66) and remove the revolving light.
- Protect mounting (2, 2 - 66) with cap (3, 2 - 66).

Optional air conditioning
The magnetic rotating beacon light (4, 2 - 66) must be clearly visible on the roof of the cab and plugged-in to socket (4, 2 - 66).

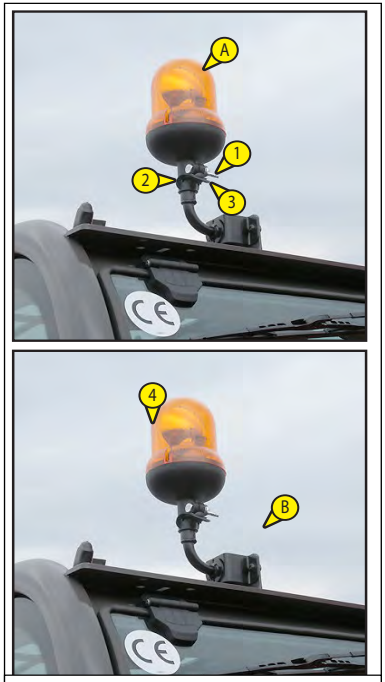

2 - 66

40 - REAR WORK LIGHTS (OPTION)
(1, 2 - 67)

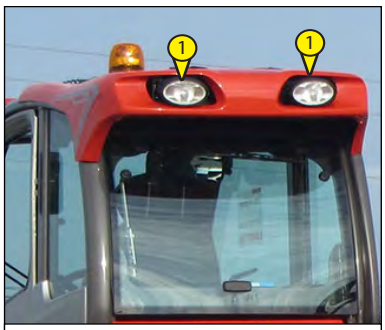

2 - 67

41 - FRONT WORK LIGHTS (OPTION)
(1, 2 - 68)

A - Front work lights
B - Telescope work lights

2 - 68

42 - INSIDE REAR-VIEW MIRROR (OPTION)
(1, 2 - 69)

43 - BUBBLE LEVEL INDICATOR

This indicator (2, 2 - 69) enables the operator to check that the lift truck is in the horizontal position.

2 - 69

44 - VIDEO CAMERA SYSTEM

(1, 2 - 76)

The machine is fitted with a video system.

The video system comprises 2 or 3 cameras (depending on equipment) and a 7" LCD touch screen in the cab.

The cameras are installed on the machine on the following sides:

1. rear of machine (standard) (1, 2 - 77)
2. side of machine engine section (standard) (2, 2 - 77).
3. front of machine on the telescopic jib (option) (3, 2 - 77).

The video system is pre-set and connected to the machine travel and stop movements.

2 - 70

standard.

In fact, when the travel inverter is shifted (forward-reverse) (F-N-R, 2 - 77):

- reverse (R,2 - 77), the rear camera (1,2 - 77) activates automatically (fullscreen) (1a, 2 - 77)
- forwards (F, 2 - 77), the side camera (2, 2 - 77) activates automatically (fullscreen) (2a,2 - 77)
- neutral (N, 2 - 77), the side camera (2, 2 - 77) activates automatically (half screen) (2b, 2 - 77).

option

- neutral (N, 2 - 77), the rear cameras (1, 2 - 77), side (2, 2 - 77) and front of machine (3, 2 - 77) are activated automatically (more visuals on the screen) (3a, 3b, 3c, 2 - 77).

If required, the operator can select one of the 3 cameras by pressing the touch screen for full screen display (e.g. front view of camera on the telescopic jib).

2 - 71

45 - BATTERY CUT-OFF

For quickly disconnecting the battery (1, 2 - 72) when working on the electric circuit or when soldering, for example.

Operate the battery cut-off no less than 30 seconds after having switched off the ignition with the ignition key.

2 - 72

46 - BOOM SAFETY WEDGE

(1, 2 - 73)

Only use the wedge supplied with the lift truck.

The lift truck is equipped with a boom safety wedge that must be installed on the rod of the lifting cylinder when working beneath the boom (see: 1 - OPERATING AND SAFETY INSTRUCTIONS).

2 - 73

47 - PORTABLE POWDER FIRE EXTINGUISHER

Thee portable powder fire extinguisher (1, 2 - 74) is positioned behind the driver seat (2, 2 - 74).
The portable powder fire extinguisher (1, 2 - 74) is suitable for use on live electric appliances.
The fire extinguisher (1, 2 - 74) fits into an extinguisher-holding support (3, 2 - 74) and is secured on the machine (4, 2 - 74).

2 - 74

PORTABLE POWDER FIRE EXTINGUISHER

Model	K2 B
Capacity	kg. 2
Classes	13A - 89 BC

Technical features

Fire classes	13A - 89 BC
Total weight	3,6 Kg. c.a.
Nominal load	2 Kg.
Extinguishing agent	ABC powder
Discharge time	12,6 sec.
Tank diameter	102 mm
Total height	370 mm
Working pressure at 20°	15 bar
Ministerial approval	DCPST / A6 / 557 / 153 According to 128 02/03/2006
Test pressure	26 bar
Bursting pressure	>55 bar
Gauge	ø 23
Working temperature	-30 +60°C

48 - FORWARD/NEUTRAL/REVERSE GEAR SELECTION

TRAVEL INVERTER AND MOVING THE TELEHANDLER

The telehandler travelling inverter selector (1, 2 - 75) is located on the joystick in the cab.
When operating this control, the telehandler should be travelling at slow speed and not accelerating.

- FORWARDS*: Move the switch forwards (F, 2 - 75), the selected gear is displayed on the control panel (2 - 75).
  Press on the accelerator pedal to move the telehandler (2 - 75, "Accelerator pedal").
- REVERSE*: Move the switch in reverse (R, 2 - 75), the selected gear is displayed on the control panel (2 - 75).
  Press on the accelerator pedal to move the telehandler (2 - 75).
  Reversing lights and an acoustic reversing alarm indicate that the telehandler is running in reverse.
- set the switch (N, 2 - 75) to the centre position, the gear set is displayed on the control panel and the parking brake is applied (by default).

2 - 75

Safety when moving the telehandler

The operator must observe the following sequence to move the truck forwards or backwards:

1. sit down correctly in the driver's seat (3- PRÉSENCE DU CONDUCTEUR)
2. release the hand brake(8- INTERRUPTEURS)
3. the stabilisers are not resting on the ground (8- INTERRUPTEURS) **(if present)**
4. engage forwards or reverse.

*: Forwards or reverse movement is authorised with speeds lower than 20 km/h. In the case of travel inverter at higher speeds, the transmission system goes into neutral position, informing the operator with a flashing letter 'N' on the screen and opposite travel direction is only activated when the transmission system detects a speed lower than 20 km/h.

Telehandler movement

MOVEMENT IS ACTIVATED IF:

1. the operator is sitting on the seat
2. the door is closed
3. the parking brake has been released manually
4. the travel direction selector is in the forwards or reverse position.

MOVEMENT IS DISABLED IF:

1. door opening forces the gearbox into the neutral position
2. you press the travel switch into forwards or reverse before closing the door, you need to return through neutral then select a travel direction
3. you use the forwards or reverse travel selector when the operator is not sitting on the seat, you need to return through neutral then select a forwards or reverse travel direction
4. during forwards or reverse travel, the operator getting up from the seat does not disable travel until the operator releases the accelerator pedal
5. with the machine at a standstill, the travel switch is moved forwards or backwards and the parking brake is engaged, the operator is forced to release the brake to move and they must return through neutral then select a forwards or backwards travel direction.

To stop the telehandler without switching off electric power, they must observe the following sequence:

1. set the travel selector to neutral 'N'
2. apply the parking brake
3. get out of the telehandler.

NOTE: an intermittent alarm sound and a message on the screen inform the driver that they have left the driving position

49- RADIO CONTROL (OPTIONAL)

Identification of the radiocontrol.

The serial number (S/N) is the only reference that must be used to identified in a unique way the radiocontrol, both for maintenance that with regards to communication to the pertinent authorities.
The serial number (S/N) and some information about the radiocontrol are present on plates both on the transmitting unit and the receiving unit.

These plates must not be:
- removed from their position (removal immediately waives the warranty)
- altered or ruined (contact MANITOU for replacement).
-

Plates of the transmitting unit

Three plates are located in the transmitting unit.
1. identification plate of the radiocontrol (1, 2 - 76).
   Information contained: the serial number of the radiocontrol (S/N).
2. identification plate of the transmitting unit (2, 2 - 76).
   Information contained: The manufacturing year, bar code and ID number of the transmitting unit (TU ID).
3. Technical data plate (3, 2 - 76).
   Information contained: The MODEL, TYPE and main technical specification of the transmitting unit, the marking and any markings on the radiocontrol.

Plates of the receiving unit

Two plates are present in the receiving unit:
4. identification plate of the radiocontrol (4, 2 - 76).
   Information contained: The serial number of the radiocontrol, a bar code (S/N) and the year of manufacture.
5. Technical data plate (5, 2 - 76).
   Information contained: The MODEL, TYPE and main technical specification of the receiving unit,
   the marking and any markings on the radiocontrol (5, 2 - 76).

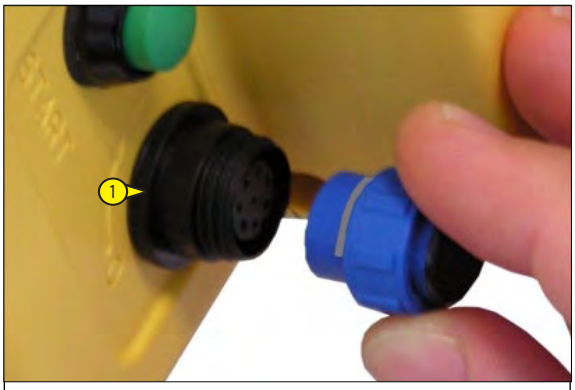

2 - 76

General description of the system

The radiocontrol system includes:

1. **TRANSMITTING UNIT (PUSHBUTTON PANEL)** (1, 2 - 77)
2. **RECEIVING UNIT** (2, 2 - 77)
3. **ANTENNA** (3, 2 - 77)
4. **BATTERY CHARGER** (4, 2 - 77)
   Input 80-250V 7W
   Output 9V 0.45A
   Battery ..... 7.2V NiMH
   Loading time 3h
5. **BATTERY** (2, 2 - 77) ..... 7.2V 750mAh Ni-MH

2 - 77

General operating instructions
(see also CHAPTER 1 - OPERATING AND SAFETY INSTRUCTIONS)

Operation

Battery (2 - 78)
The transmitting unit can be powered only with rechargeable batteries of the manufacturer.
The battery must be entered in the relevant housing of the transmitting unit, with the technical specification plat facing downward and the contacts directed toward the contacts of the transmitting unit.

To insert a battery, perform the following operations:
1. push the battery toward the contacts of the transmitting unit (1, 2 - 78)
2. push the battery downward (2, 2 - 86)
   To pull out a battery, perform the following operations:
3. push the battery toward the contacts of the transmitting unit (3, 2 - 86)
4. lift the battery (4, 2 - 86)

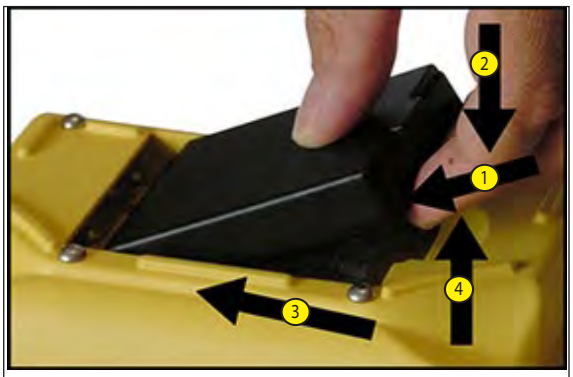

2 - 78

TRANSMITTING UNIT CONTROL FUNCTIONS (RADIO CONTROL) (2 - 79)

1. Machine function and load status display (1,1.1, 2 - 79)
2. Joystick, selector switches, machine function buttons (2, 2 - 79)
3. Emergency stop button (3, 2 - 79)
4. Radiocontrol power on S-KEY (4, 2 - 79)
5. Engine start-up authorisation and horn (5, 2 - 79)
6. Engine start-up (6, 2 - 79)
7. Emergency electric pump button to salvage the basket (7, 2 - 79)
8. Plug for wired control (8, 2 - 79)
9. Accessory movement cards (9, 2 - 79)
10. Button to confirm acknowledgment of the attachment on the display (10, 2 - 79)

1. Machine function LED and load status display

1.1 - Page :0 (2 - 80)

- FUNCTION AND ALARM WARNING LIGHTS:

STOP	I.C. engine stop
	I.C. engine fault
	I.C. engine energised
	DPF regeneration inhibited or DEF check(Depending on the machine model)
MAX	Basket overload
	I.C. engine oil pressure
	Basket door
	Fuel reserve tank

	Engine water temperature boiling
	Telescopic boom chain faults
	Hydraulic oil temperature
	General alarm
	Accessory not recognised
	Stabilizers not on the ground (Depending on the machine model)
	Pivot not engaged (Depending on the machine model)
Example: FORKS	Type of installed attachment

2 - 79

READING MAIN OPERATING DATA (2 - 80)

- Height off the ground (H)*, (reading in "Meters ", with a decimal position)
- Boom angle (A), (reading in "Degrees", with a decimal position)
- Boom length (L)*, (reading in "Meters", with a decimal position)
- Operating radius (R)*, Measurement of the distance from the fifth wheel centre to the projection of the point of application of the load (reading in "Meters", with a decimal position).
- Weight of load lifted (W), (reading in "Tons", with a decimal position).
- Maximum permitted load (M)* in the current configuration of the machine. (reading in "Tons", with a decimal position)
- Working configuration
  - The first digit refers to the operating mode:
    1. On stabilizers **(Depending on the machine model)**
    2. On tyres (front turret) **(Depending on the telehandler model)**
    3. On tyres (turned turret) **(Depending on the machine model)**
    4. On partially withdrawn stabilizers **(Depending on the telehandler model).**
  - The second digit refers to the equipment being used (PT, forks, basket, etc...).
  - Digits pertaining to the equipment being used.

1.a - Charging the radiocontrol battery
1.b - Radio signal
(*): optional

1.2 - page : 1 (2 - 80)
1.c - Alarm/fault
1.d- I.C. engine water temperature
1.e - Fuel level

1.3 - Display button (1.3, 2 - 80)

- Turns on the display lighting if off
- Scroll pages 0,1, in the display

1.4 - Green LED (1.4, 2 - 80)

- Off: the transmitting unit is off
- Flashes rapidly: the transmitting unit is on and the radioelectrical control is off
- Flashes slowly: the radio control is started and the radioelectrical connection is present

1.5 - Red LED (1.5, 2 - 80)

- Off: the transmitting unit works properly
- Flashing: the battery is getting low
- On for 2 seconds: the transmitting unit does not work properly
- Flashes once: when turned on, the transmitting unit detects that the STOP button is active or faulty.
- Flashes 2 times: the transmitting unit detects that a SAFETY control is active or faulty.
- Flashes 3 times: when turned on, the transmitting unit detects that the battery is flat
- Flashes 4 times: the transmitting unit detects that an alarm control is active or faulty.

1.6 - Load conditions, % and alarms (1.6, 2 - 80)
Bar indicating the percentage of lifted load compared with the maximum load that can be lifted in those operating conditions.

- Green reference: Safety area
- Yellow reference: Alarm area
  Load lifted 90% more than permitted load. (external buzzer on)
- Red reference: Block area
- Load lifted 100% more than permitted load. (external buzzer on)

1.7 - Yellow warning light (1.7, 2 - 80)
When on, this light indicates:

- Flashing light on + buzzer indicating that the safety system is blocked.
- The light continuously on indicates that the basket is overloaded.

When the basket is overloaded, all movement controls of the platform are inhibited.

Note: when the light turn on when the basket is lifting, it means there is an overload.You must stop and lighten the basket.

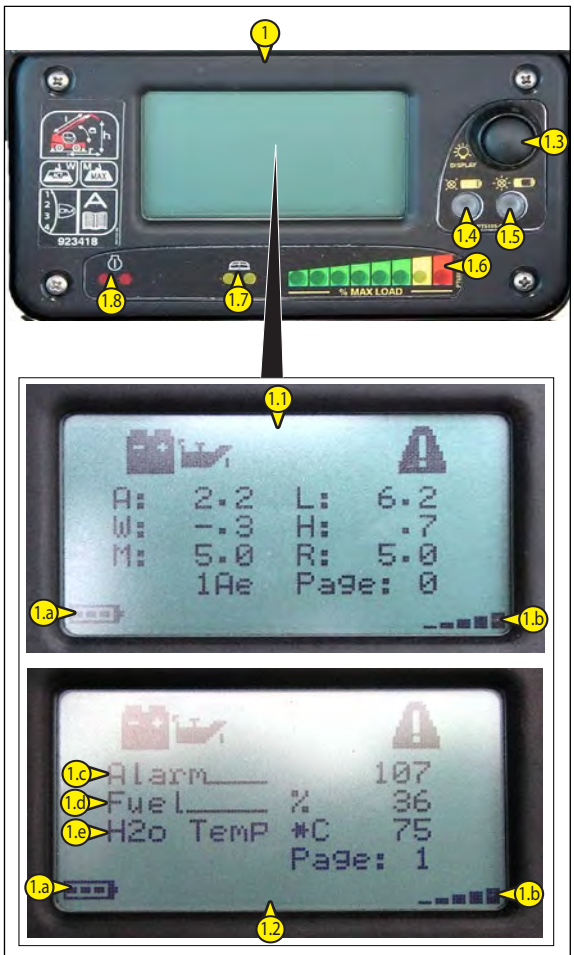

2 - 80

649010 EN/US/AU (15/12/2019)
MHT 790 1041D H ST4 S1

1.8 - Red warning light(1.8, 2 - 80)
When on, this light indicates:

- Stabilizers are not properly positioned
  (Depending on the machine model).
- The basket access door was not properly closed.
- The gear of the truck is engaged.

Note: only for the ORH COUVREUR BASKET: the functions of the red light (1.7, 2 - 80) are included in the yellow light (1.8, 2 - 80).

2 - Joystick, selector switches, machine function buttons (2 - 81)

2.1 - Joystick (2 - 81)

- Operate the joystick (2.1, 2 - 81) to perform the desired movements following the coloured arrows.

-

2.2 - Movement switch (2.2, 2 - 81)
A pair of controls that can be performed at the same time corresponds with each position (A-B-C-D-E-F)

2.3 - Engine RPM accelerator (2.3, 2 - 81)

2.4 - Hydraulic movement speed (2.4, 2 - 81)
(according to the type of accessory installed)

2.5 - T.S. panning movement (T) or basket levelling (O) selector switch
(2.5, 2 - 81)

2.6 - Multiple movements "1-2-3"(2.6, 2 - 81)
(according to the type of accessory installed)

3 - "Emergency stop" red button (3, 2 - 81)
Functions:

- allows accelerating the I.C. engine.
  In case of danger, this allows the basket user to bypass the movements controlled by the truck lift.
  To restore movements, turn the red button clockwise.

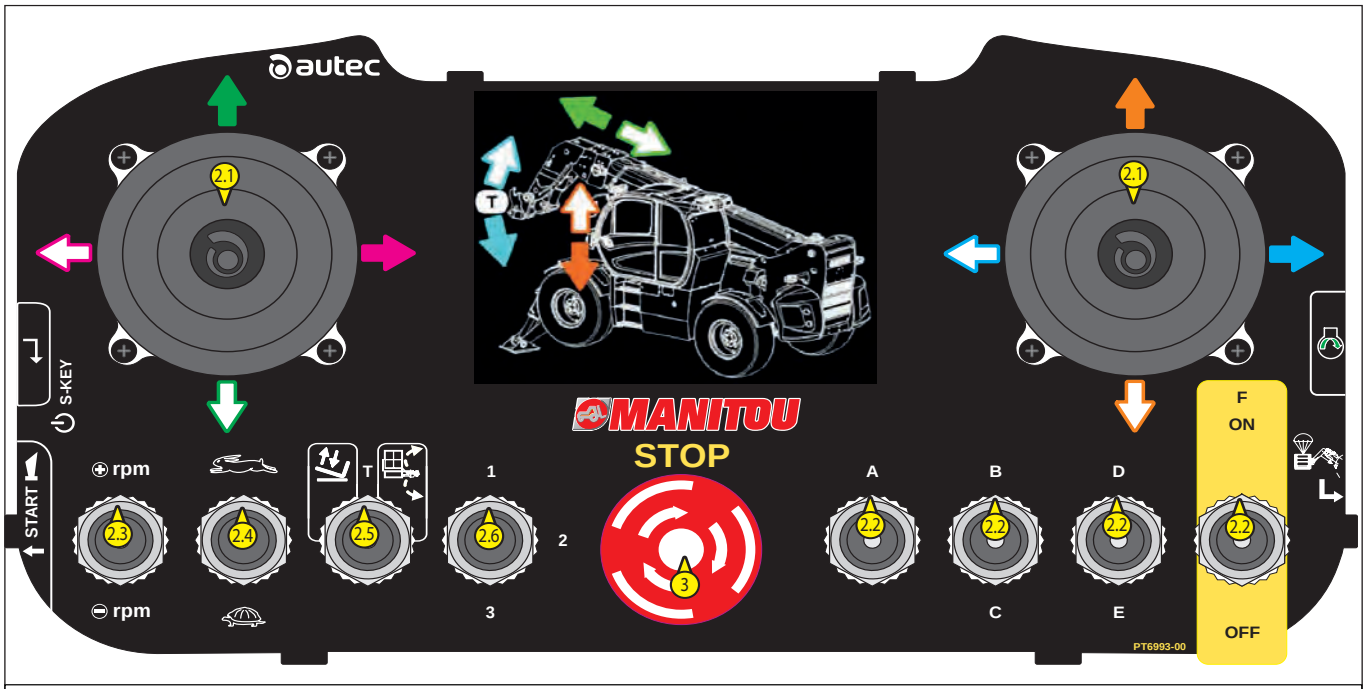

2 - 81

4 - Radiocontrol power on S-KEY (2 - 82)

Turn the key to turn on the radiocontrol (4 , 2 - 82).
When the radiocontrol is not used, pull out the S-KEY for safety

5 - Engine start-up authorisation and horn (5, 2 - 82)

6 - Engine start-up (2 - 82)

Before switching on, the EMERGENCY STOP button must be raised (3, 2 - 82).
Press the button (6, 2 - 82) then press button (5, 2 - 82) to turn on the engine.(6, 2 - 82)

7 - Emergency electric pump button to salvage the load (2 - 82)
To withdraw the extensions.

- Keep button (7, 2 - 82) pressed to operate the salvage pump.
- Only perform operations that are strictly required to return to ground.

8 - Plug for wired control (8, 2 - 82)
(Only if equipped with aerial platform)

9 - Basket movement boards (9, 2 - 82)
Change the movement card according to the installed accessory.

10 - Button to confirm acknowledgment of the attachment on the display (2 - 82)
Press enter to confirm the type of accessory.

2 - 82

EQUIPMENT CAN BE SELECTED MANUALLY, WITHOUT AUTOMATIC RECOGNITION OF THE 'E-RECO' ATTACHMENT

Do not use the attachments in different positions or those not covered by the safety system adjustment.

LIST OF EQUIPMENT WHICH CAN BE SELECTED MANUALLY

(Depending on machine model)

MHT 790 104JD H ST4 S1 MHT 790 104JD H ST3A S1			
#	Equipment	Equipment code	Position in the load charts
1	FORKS TFF CDG 600	939800	AC
2	P9000 9T	930830	N
3	P9000 5T	930830	O
4	P9000 2T	930830	P
5	PC90	939970	S
6	TH33-2000S	939039	TA
7	TH35-2900S	939040	TB
8	TH49	914600	TD

ATTACHMENT AUTOMATIC IDENTIFICATION (OPTIONAL)

The machine is equipped with an electronic system for the recognition at the time of the hook attachment that identifies the type of attachment installed.

- This system facilitates and fast the attachments change.

  The system is characterized by two devices fixed one on the machine boom (1a, 2 - 91) and one on the attachment (1b, 2 - 91).

After identification of the attachment type and its confirm by the operator, the recognition system sets the machine to operate with the attachment hooked. This mode is defined **automatically**.

However the machine can operate with an attachment without identification device but in this case it is the responsibility of the operator identify and confirm the type of attachment hooked.
This mode is defined **manual.**

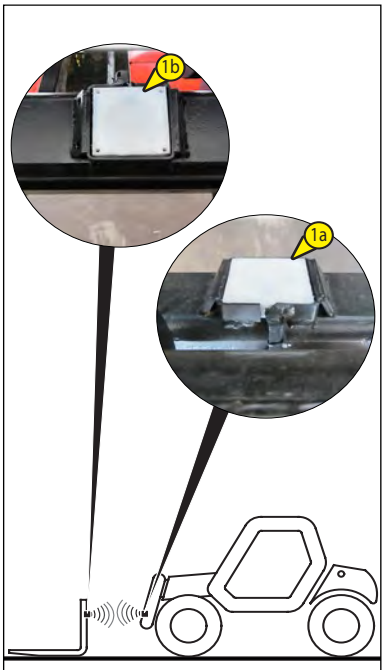

2 - 83

Automatic mode
Immediately after you hooked a attachment recognition system:
- Identifies the type of attachment (2, 2 - 92),
- Requires to the Operator to confirm (1, 2 - 92) that the recognized accessory is the one properly hooked at the machine,
- Press enter (3, 2 - 92) to confirm the attachment type

2 - 84

Manual mode
Immediately after hooking an attachment without the identification device, the recognition system:
does not recognize the attachment hooked,
the Operator must select the attachment type hooked at the machine.
The operator must select manually the installed attachment type, as follows:

Press ESC (1, 2 - 93) to exit from mode"Empty" (2, 2 - 93)
[no attachment hooked]
Press the up / down (3, 2 - 93) to select the attachment that it has hooked (4, 2 - 93), confirm the attachment, press enter (5, 2 - 93).

Note: in "empty" mode, the machine can move the telescopic boom but with a maximum lifting cacity setted at 500kg.

2 - 85

In both modes:

is the responsibility of the operator to ensure that the attachment is hooked and view on the display is that identified from the recognition system or manually selected.

Your safety or the safety of the lift truck is at risk.

Any bending may cause malfunction of your machine and damage to property and people close to the working area of the machine.

Respect the procedures described above.

51 - FUEL TANK

Keep the fuel tank full as far as possible to reduce condensate due to atmospheric conditions to the minimum.

Do not smoke or use a naked flame during refuelling operations or when the tank is open. Never refuel with the engine running.

- If necessary, add diesel (3 - MAINTENANCE: LUBRICANTS AND FUEL).
- Remove the plug 1.
- Fill the tank with clean filtered diesel through the filler hole 2.
- Refit the cap.
- Visually check the tank and pipes for leaks.

NOTE: A lockable tank cap is available as an OPTIONAL.

52 - DEF (Diesel Exhaust Fluid) tank

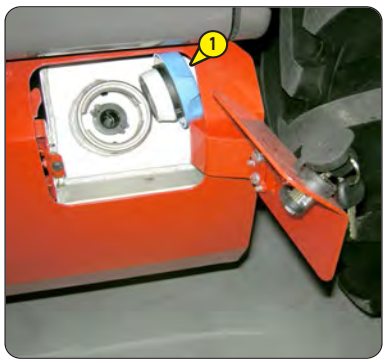

Diesel exhaust fluid is corrosive, protect the bodywork and wear personal protective equipment (gloves and goggles).

The diesel exhaust fluid level is important, operation with a tank containing little or no fluid may have consequences for the I.C. engine performance.

- If necessary, add diesel exhaust fluid (3 - MAINTENANCE: LUBRICANTS AND FUEL).
- Remove the plug 1.
- Slowly fill the tank to the bottom of the filling chute.
- Always keep a proper level to limit the alteration of the product.
- Refit the cap.

DEF (Diesel Exhaust Fluid) QUALITY

The quality of diesel exhaust fluid can be measured with a refractometer, the fluid must be compliant with ISO 22241-1 with a urea solution at 32.5%.

MANITOU refractometer reference 959709

STORING DEF (Diesel Exhaust Fluid)

Up to 4 months of the telehandler not being used: check the quality of the diesel exhaust fluid with a refractometer.

Over 4 months, replace the diesel exhaust fluid. Empty and rinse the DEF tank.

NOTE: For a prolonged stop of the telehandler, 1 - OPERATING AND SAFETY INSTRUCTIONS: PROLONGED STOP OF Telehandler.

TOWING PIN AND HOOK

Located at the rear of the lift truck, this device is used to attach a trailer. Its capacity is limited for each lift truck by the Authorized Gross Vehicle Weight, tractive force and maximum vertical force on the coupling point.

- To use a trailer, see current regulations in your country (maximum running speed, braking, maximum weight of trailer, etc.).
- Verify the trailer's condition before using it (tyre condition and pressures, electrical connection, hydraulic hose, brake system…).

Do not tow a trailer or attachment which is not in perfect working order. Using a trailer in poor condition may affect the lift truck's steering and braking, and hence safety.

If a third party helps in coupling or uncoupling the trailer, this person must be permanently visible to the driver and wait until the lift truck has stopped, the handbrake is on and the I.C. engine is switched off before performing the operation.

NOTE: A rear-view mirror allows the lift truck to approach more closely to the trailer ring.

A - COUPLING FITTING

COUPLING AND UNCOUPLING THE TRAILER

- To couple the trailer, position the lift truck as close as possible to the trailer ring.
- Put the handbrake on and switch off the I.C. engine.
- Remove the clip (1, 2 - 86), lift the trailer pin (2, 2 - 862 - 94), and place or remove the trailer ring.

Be careful not to get your fingers caught or crushed during this operation.
Do not forget to put clip 1 back in place (1, ***2 - 86***).
When uncoupling, make sure that the trailer is supported independently.

2 - 86

GETTING IN AND OUT OF THE VEHICLE

The telehandler is equipped with access steps (1, 2 - 87) on the guide post which is located under the cab.
Four handles (2, 2 - 87) are located inside the cab to facilitate getting in and out of the telehandler.

2 - 87

EMERGENCY EXIT

An emergency hammer (1, 2 - 87) is located inside the cab.
Use the emergency hammer to break one of the windows in the event you can't exit the cab by the door or the rear window opening.

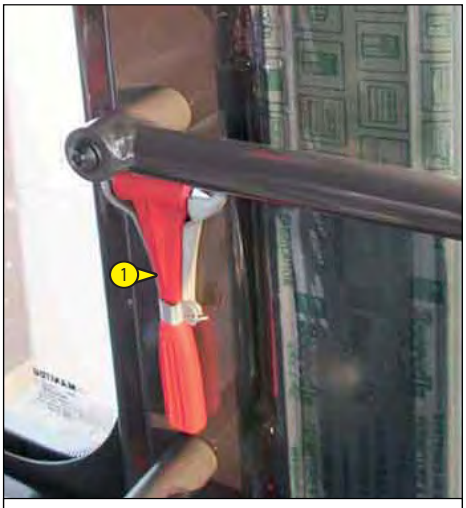

2 - 88

https://truckmanualshub.com/

3 - MAINTENANCE

https://truckmanualshub.com/
duma rent
www.duma-rent.com

TABLE OF CONTENTS

3 - MAINTENANCE

ORIGINAL MANITOU SPARE PARTS AND EQUIPMENT 4

FILTERS CARTRIDGES AND BELTS 5

LUBRICANTS AND FUEL 6

SERVICING SCHEDULE 8

A - DAILY OR EVERY 10 HOURS SERVICE 10

B - EVERY 50 HOURS SERVICE 12

C - EVERY 250 HOURS OF SERVICE 16

D - EVERY 500 HOURS OF SERVICE OR EVERY YEAR 18

E - EVERY 1000 HOURS OF SERVICE 24

F - EVERY 2000 HOURS OF SERVICE 28

G - EVERY 3000 HOURS OF SERVICE 30

H - EVERY 4000 HOURS OF SERVICE 32

I - OCCASIONAL MAINTENANCE 34

649010 EN/US/AU (15/12/2019)
MHT 790 1041D H ST4 S1

ORIGINAL MANITOU SPARE PARTS AND EQUIPMENT

OUR TELEHANDLERS MUST BE SERVICED USING ORIGINAL MANITOU PARTS.

BY ALLOWING THE USE OF NON ORIGINAL MANITOU PARTS, YOU RISK:

- Legally -to be held responsible in the event of an accident.
- Technically - to cause operating malfunctions or shorten the life of the lift truck.

THE USE OF COUNTERFEIT PARTS OR COMPONENTS NOT APPROVED BY THE MANUFACTURER, WILL CAUSE YOU TO LOSE THE BENEFIT OF THE CONTRACTUAL GUARANTEE.

BY USING ORIGINAL MANITOU PARTS FOR MAINTENANCE OPERATIONS, YOU BENEFIT FROM OUR KNOW-HOW

Through its network, MANITOU provides the user with,

- Know-how and competence.
- The guarantee of high-quality work.
- Original replacement parts.
- Help with preventive maintenance.
- Efficient help with diagnosis.
- Improvements due to experience feedback.
- Operator training.
- Only the MANITOU network has detailed knowledge of the design of the lift truck and therefore the best technical ability to provide maintenance.

ORIGINAL REPLACEMENT PARTS ARE DISTRIBUTED EXCLUSIVELY BY MANITOU AND ITS DEALER NETWORK.
The dealer network list is available on the MANITOU web site www.manitou.com

FILTERS CARTRIDGES AND BELTS

I.C. ENGINE

I.C. ENGINE OIL FILTER
Part number: 796241
Change: 500 H

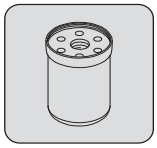

FUEL FILTER
Part number: 52523728
Change: 500 H

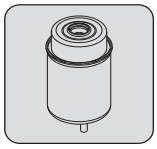

FUEL PRE-FILTER
Part number: 52523727
Change: 500 H

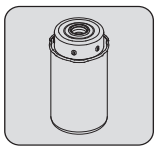

ENGINE CRANKCASE VENTILATION FILTER
Part number: 796022
Change: 1000 H

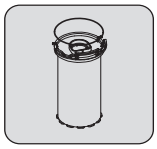

DRY AIR FILTER CARTRIDGE
Part number: 299936
Change: 1000 H

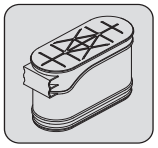

SAFETY DRY AIR FILTER CARTRIDGE
Part number: 299937
Change: 3000 H

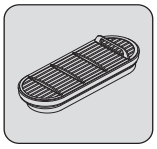

DIESEL EXHAUST FLUID SUPPLY PUMP FILTER
Part number: 941976
Change: 4000 H

ALTERNATOR BELT
Part number: 798258

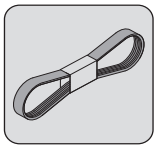

ALTERNATOR BELT
(AIR CONDITIONING OPTION)
Part number: 796760

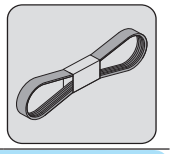

TRANSMISSION

HYDROSTATIC PUMP OIL FILTER
Part number: 737524
Change: 500 H

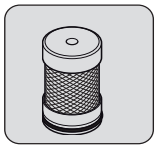

HYDRAULIC

HYDRAULIC RETURN OIL FILTER CARTRIDGE
Part number: 282526
Change: 500 H

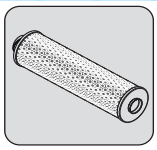

BREATHER FOR THE HYDRAULIC OIL TANK
Part number: 278288
Change: 1000 H

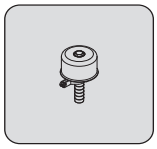

SUCTION STRAINER FOR HYDRAULIC OIL TANK
Part number: 924767
Clean: 1000 H

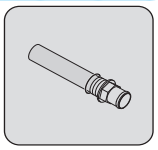

SUCTION STRAINER FOR HYDRAULIC OIL TANK
Part number: 924765
Clean: 1000 H

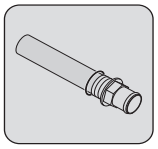

CAB

CAB EXTERNAL VENTILATION FILTER
Part number: 261971
Clean: 50 H
Change: 250 H

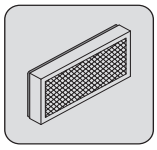

CAB INTERNAL VENTILATION FILTER
Part number: 933871
Clean: 50 H
Change: 250 H

LUBRICANTS AND FUEL

USE THE RECOMMENDED LUBRICANTS AND FUEL:
- For topping up, oils may not be miscible.
- For oil changes, MANITOU oils are perfectly appropriate.

DIAGNOSTIC ANALYSIS OF OILS
If a service or maintenance contract has been organized with the dealer, a diagnostic analysis of engine, transmission and axle oils may be requested depending on the rate of use.

(*) FEATURES OF RECOMMENDED FUEL
Use a high-quality fuel to obtain optimal performance of the engine.
- Type of diesel fuel EN590 (rate of sulfur < 10 ppm)
- Type of diesel fuel ASTM D975 (rate of sulfur < 15 ppm)

(**) FEATURES OF RECOMMENDED "DEF"
- Aqueous urea solution at 32.5 % (ISO22241)
- Solidification at -11°C and 10% expansion
- Non-flammable product
- Thermal degradation (>60°C)
- Storage between -5°C and 30°C

Corrosive to metals, requires wearing personal protection (gloves and goggles).

RECOMMENDATION

ENGINE

ORGANS TO BE LUBRICATED	CAPACITY	RECOMMENDATION
ENGINE	13 L 3.43 U.S. gal	-40°C- 30 -20- 10 0+ 10 +20+ 30 +40+ 50°C SAE 0W40 SAE 5W30 SAE 10W30 SAE 10W40 MANITOU EVOLOGY 10W40 API CJ4
COOLING SYSTEM	23 L 6.07 U.S. gal	-40°C- 30 -20- 10 0+ 10 +20+ 30 +40+ 50°C COOLANT -35°C
FUEL TANK	150 L 39.62 U.S. gal	-40°C- 30 -20- 10 0+ 10 +20+ 30 +40+ 50°C FUEL*
DIESEL EXHAUST FLUID TANK	8,7 L 2.3 U.S. gal	DEF**

TRANSMISSION

ORGANS TO BE LUBRICATED	CAPACITY	RECOMMENDATION
GEAR BOX	1,7 L 0.44 U.S. gal	MANITOU OIL SPECIAL IMMERSED BRAKES
CARDAN SHAFT		-40°C- 30 -20- 10 0+ 10 +20+ 30 +40+ 50°C MANITOU GREASE BLUE MULTI-PURPOSE

TELESCOPIC BOOM

ORGANS TO BE LUBRICATED	CAPACITY	RECOMMENDATION
TELESCOPIC BOOM PADS		-40°C- 30 -20- 10 0+ 10 +20+ 30 +40+ 50°C MANITOU GREASE BLACK MULTI-PURPOSE
GREASING OF THE TELESCOPIC BOOM		-40°C- 30 -20- 10 0+ 10 +20+ 30 +40+ 50°C MANITOU GREASE BLUE MULTI-PURPOSE

HYDRAULIC

ORGANS TO BE LUBRICATED	CAPACITY	RECOMMENDATION
HYDRAULIC OIL TANK	150 L 39.62 U.S. gal	-40°C- 30 -20- 10 0+ 10 +20+ 30 +40+ 50°C ISO VG 100 ISO VG 68 MANITOU OIL HYDRAULIC ISO VG 46 ISO VG 37 ISO VG 32

649010 EN/US/AU (15/12/2019)
MHT 790 104JD H ST4 S1

BRAKES		
ORGANS TO BE LUBRICATED	CAPACITY	RECOMMENDATION
BRAKES SYSTEM	1 L 0.26 U.S. gal	MANITOU OIL MINERAL BRAKE FLUID

CAB		
ORGANS TO BE LUBRICATED	CAPACITY	RECOMMENDATION
WINDSCREEN WASHER TANK		WINDSCREEN WASHER LIQUID

FRONT AXLE		
ORGANS TO BE LUBRICATED	CAPACITY	RECOMMENDATION
FRONT AXLE DIFFERENTIAL	12 L 3.17 U.S. gal	MANITOU OIL SPECIAL IMMERSED BRAKES
		-40°C- 30 -20- 10 0+ 10 +20+ 30 +40+ 50°C
FRONT WHEELS REDUCTION GEARS	2 x 1,7 L 2 x 0.44 U.S. gal	MANITOU OIL SAE80W90 MECHANICAL TRANSMISSION
		-40°C- 30 -20- 10 0+ 10 +20+ 30 +40+ 50°C
FRONT WHEELS REDUCTION GEAR PIVOTS FRONT AXLE OSCILLATION		MANITOU GREASE BLUE MULTI-PURPOSE

REAR AXLE		
ORGANS TO BE LUBRICATED	CAPACITY	RECOMMENDATION
REAR AXLE DIFFERENTIAL	13 L 3.43 U.S. gal	MANITOU OIL SPECIAL IMMERSED BRAKES
		-40°C- 30 -20- 10 0+ 10 +20+ 30 +40+ 50°C
REAR WHEEL REDUCTION GEAR	2 x 1,9 L 2 x 0.50 U.S. gal	MANITOU OIL SAE80W90 MECHANICAL TRANSMISSION
		-40°C- 30 -20- 10 0+ 10 +20+ 30 +40+ 50°C
REAR WHEEL REDUCTION GEAR PIVOTS REAR AXLE OSCILLATION		MANITOU GREASE BLUE MULTI-PURPOSE

PACKAGING

OIL						
PRODUCT	PACKAGE/REFERENCE					
	1 L (0.26 US gal)	2 L (0.52 US gal)	5 L (1.32 US gal)	20 L (5.28 US gal)	55 L (14.5 US gal)	209 L (55.2 US gal)
- MANITOU OIL EVOLOGY 10W40 API CJ4			895837	895838	895839	895840
- MANITOU OIL HYDRAULIC ISO VG 46			545500	582297	546108	546109
- MANITOU OIL DEXROM III AUTOMATIC TRANSMISSION	958186		947972	947973	947974	947975
- MANITOU OIL SPECIAL IMMERSED BRAKES	546034		545976	582391		894257
- MANITOU OIL SAE80W90 MECHANICAL TRANSMISSION		499237	720184	546330	546221	546220
- MANITOU MINERAL BRAKE FLUID	490408					4500078

GREASE						
PRODUCT	PACKAGE/REFERENCE					
	400 ml	400 gr (0.88 lb)	1 kg (2.2 lb)	5 kg (11 lb)	20 kg (44 lb)	50 kg (110.2 lb)
- BLACK MANITOU MULTI-PURPOSE GREASE		947766	161590			499235
- BLACK MANITOU MULTI-PURPOSE GREASE		161589		554974	958177	958176

LIQUID						
PRODUCT	PACKAGE/REFERENCE					
	1 L (0.26 US gal)	2 L (0.52 US gal)	5 L (1.32 US gal)	20 L (5.28 US gal)	55 L (14.5 US gal)	209 L (55.2 US gal)
- COOLING LIQUID -35°C (Concentrated product)	53017514			53017515		53004600
- WINDSCREEN WASHER LIQUID	490402	486424				
- DIESEL EXHAUST FLUID TANK			958575		958576	

649010 EN/US/AU (15/12/2019)
MHT 790 104JD H ST4 S1

SERVICING SCHEDULE

(1): MANDATORY 500 HOUR OR 6 MONTH SERVICE. This service must be carried out after approximately the first 500 hours of operation or within the 6 months following the start-up of the machine (whichever occurs first).
(2): Every 10 hours during the first 50 hours then a final time at 250 hours.
(3): Contact your dealer.

A = ADJUST, C = CHECK, G = GREASE, N = CLEAN, P = BLEED, R = REPLACE, V = DRAIN	PAGE	(1)	DAILY OR EVERY 10 HOURS OF SERVICE	EVERY 50 HOURS OF SERVICE	EVERY 250 HOURS OF SERVICE	EVERY 500 HOURS OF SERVICE OR EVERY YEAR	EVERY 1000 HOURS OF SERVICE OR EVERY TWO YEARS	EVERY 2000 HOURS OF SERVICE OR EVERY TWO YEARS	EVERY 3000 HOURS OF SERVICE	EVERY 4000 HOURS OF SERVICE	OCCASIONALLY
I.C. ENGINE											
- I.C. engine oil level	3-12		C								
- Cooling liquid level	3-12	C	C								
- Fuel level	3-13	C	C								
- Diesel exhaust fluid level	3-11	C	C								
- Fuel pre-filter	3-13		C								
- Radiator core	3-16	C/N		C/N							
- I.C. engine oil (according type of oil)	3-22	V			V	V					
- I.C. engine oil filter	3-22	R				R					
- Engine crankcase ventilation system	3-23	C				C					
- Fuel pre-filter	3-23	R				R					
- Fuel filter	3-23	R				R					
- Automatic alternator belt tensioner	3-24	C				C					
- Fuel tank	3-26						N				
- Dry air filter cartridge	3-26						R				
- Engine crankcase ventilation filter	3-27	R					R				
- I.C. engine silent blocks							C (3)				
- I.C. engine rates							C (3)				
- Cooling liquid	3-30							V			
- Safety dry air filter cartridge	3-32								R		
- Valves clearances									C (3)		
- Thermostat									C (3)		
- Preheating plug test									C (3)		
- Diesel exhaust fluid pump filter	3-34									R	
- Alternator belt	3-34										R
- "Stationary lift truck" exhaust particle filter	3-35										XXX
TRANSMISSION											
- Gear box oil filter	3-27	R					R				
- Silentblocks in the gear box							C (3)				
- Gear box controls							C (3)				
- Transmission pressure								C (3)			
- Gear box calibration								C (3)			
- Wear of the brake pads and the brake disk										C (3)	
TYRES											
- Tyres pressure	3-16	C		C							
- Wheel nuts torque	3-16	C		C							
- Wheel nuts tightening torque	3-31	C						C			
- Wheel	3-36										R
JIB											
- Jib pads	3-13		G (2)								
- Jib	3-17	G		G							
- Jib pads wear							C (3)				
- Condition of jib unit		C						C (3)			
- Bearings and articulation rings								C (3)			
HYDRAULIC											
- Hydraulic oil level	3-18	C		C							
- Hydraulic oil	3-28						V				
- Hydraulic return oil filter cartridge	3-28	R					R				
- Breather for the hydraulic oil tank	3-28						R				
- Suction strainer for hydraulic oil tank	3-28						N				
- Brake accumulator unit filter	3-28						R				
- Condition of hoses and flexible pipes							C (3)				
- Condition of cylinders (leakage, shafts)							C (3)				
- Hydraulic circuit pressures								C (3)			
- Hydraulic oil tank								N (3)			

A = ADJUST, C = CHECK, G = GREASE, N = CLEAN, P = BLEED, R = REPLACE, V = DRAIN	PAGE	(1)	DAILY OR EVERY 10 HOURS OF SERVICE	EVERY 50 HOURS OF SERVICE	EVERY 250 HOURS OF SERVICE	EVERY 500 HOURS OF SERVICE OR EVERY YEAR	EVERY 1000 HOURS OF SERVICE OR EVERY TWO YEARS	EVERY 2000 HOURS OF SERVICE OR EVERY TWO YEARS	EVERY 3000 HOURS OF SERVICE	EVERY 4000 HOURS OF SERVICE	OCCASIONALLY
BRAKE											
- Brake oil level	3-18	C		C							
- Brake oil							V (3)				
- Brake system							P (3)				
- Brake system pressure							C (3)				
- Brake							A (3)				
STEERING											
- Steering								C (3)			
- Steering swivel joints								C (3)			
CAB											
- Windscreen washer liquid level	3-18	C		C							
- Cab ventilation filters	3-19/20	R		N	R						
- Condenser core (OPTION Air conditioning)	3-19	C/N		C/N							
- Seat belt	3-29						C				
- Condition of the rear view mirrors							C (3)				
- Structure							C (3)				
- Air conditioning (OPTION)	3-31							N/C			
ELECTRICITY											
- Longitudinal stability limiter and warning device	3-14/37	C	C								XXX
- Condition of wiring harness and cables							C (3)				
- Lights and signals							C (3)				
- Warning indicators							C (3)				
- Front headlights	3-38										A
- Battery failure	3-38										R
FRONT AXLE											
- Front wheels reducers pivots	3-17	G		G						C (3)	
- Front axle differential oil level	3-20				C						
- Front wheels reducers oil level	3-20				C						
- Front axle differential oil	3-25	V				V					
- Front wheels reducers oil	3-29	V					V				
- Wear of front axle brake discs										C (3)	
- Front wheels reducers universal joint										C (3)	
- Front wheels reducers clearance										C (3)	
REAR AXLE											
- Rear wheels reducers pivots	3-17	G		G						C (3)	
- Rear axle oscillation	3-17	G		G				G/C (3)			
- Rear axle differential oil level	3-20				C						
- Rear wheels reducers oil level	3-20				C						
- Rear axle differential oil	3-25	V				V					
- Rear wheels reducers oil	3-29	V					V				
- Wearing of rear axle brake discs										C (3)	
- Rear wheels reducers universal joint										C (3)	
- Rear wheels reducers clearance										C (3)	
CHASSIS											
- Structure							C (3)				
- Bearings and articulation rings								C (3)			
ATTACHMENTS											
- Forks wear		C (3)				C (3)					
- Attachment carriage							C (3)				
- Condition of attachments							C (3)				
TELEHANDLER											
- Tow the lift truck	3-39										XXX
- Sling the lift truck	3-39										XXX
- Transport the lift truck on a platform	3-40										XXX

A - DAILY OR EVERY 10 HOURS SERVICE

A1 – ENGINE OIL LEVEL

CHECK

Place the lift truck on level ground with the I.C. engine stopped, and let the oil drain into the sump.

- Open the engine bonnet.
- Pull out dipstick 1.
- Clean the dipstick and check the correct level between the two notches.
- If necessary, add oil (see: 3 - MAINTENANCE: LUBRICANTS AND FUEL) through the filler port 2.
- Visually check that there is no leakage or seepage of oil in the engine.

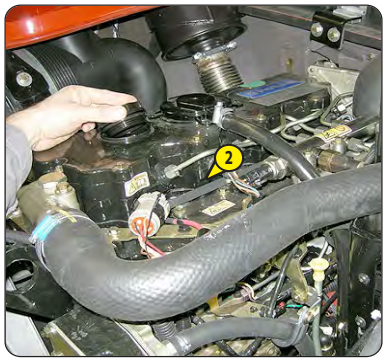

A2 – COOLING LIQUID LEVEL

CHECK

Place the lift truck on level ground with the I.C. engine stopped, and allow the I.C. engine to cool.

To avoid any risk of spraying or burning, wait until the engine has cooled down before removing the cooling circuit filler plug. If the cooling liquid is very hot, add only hot cooling liquid (80°C).
In an emergency, you can use water as a cooling liquid, then change the cooling circuit liquid as soon as possible (see: 3 - MAINTENANCE: F1 - COOLING LIQUID).

- Open the engine bonnet.
- The liquid must be at the MAXIMUM level on the expansion tank 1.
- If necessary, add cooling liquid (see: 3 - MAINTENANCE: LUBRICANTS AND FUEL) through the filler port 2.
- Visually check that there is no leakage in the radiator and pipes.

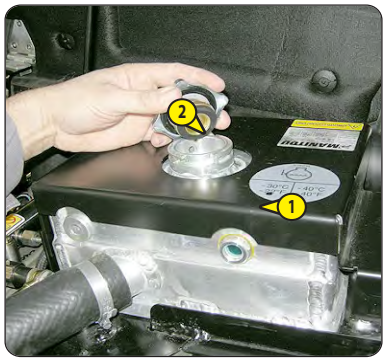

A3 – FUEL LEVEL

CHECK

Keep the fuel tank full, to reduce as much as possible any condensation due to the atmospheric conditions.

Never smoke or approach with a flame during filling operations or when the tank is open.
Never refill while I.C. engine is running.

- Check the fuel gauge on the instrument panel.
- If necessary, add diesel (see: 3 - MAINTENANCE: LUBRICANTS AND FUEL).
- Open the fuel filler access panel with the ignition key.
- Remove cap 1.
- Fill the fuel tank with clean diesel filtered through the filler port 2.
- Refit the cap.
- Visually check that there is no leakage in the tank and pipes.

A4 – DIESEL EXHAUST FLUID LEVEL

CHECK

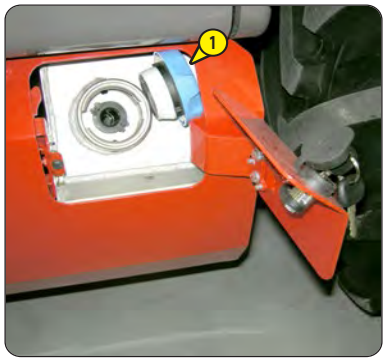

Diesel exhaust fluid is corrosive, protect the bodywork and wear personal protective equipment (gloves and goggles).

- Check the gage on the instrument panel.
- If necessary, add diesel exhaust fluid (see: 3 - MAINTENANCE: LUBRICANTS AND FUEL).
- Remove cap 1.
- Slowly fill the tank to the bottom of the filler neck.
- Always maintain a good level to avoid alternation of the product.
- Refit the cap.

A5 – FUEL PRE-FILTER

CHECK

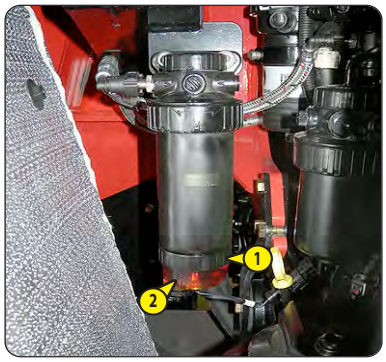

Carefully clean the outside of the pre-filter and its holder, to prevent dust from getting into the system.

- Open the engine bonnet.
- Check for the presence of water in pre-filter tank 1 and drain if necessary.
- Place a receptacle under the drain plug 2 and loosen it in two to three thread turns.
- Allow the diesel fuel to flow out until it is free from impurities and water.
- Tighten the drain plug 2 while the diesel fuel is running out.

A5 - TIRE PRESSURE AND WHEEL NUT TORQUE

CHECK

Check that the air hose is correctly connected to the tire valve before inflating and keep all persons at a distance during inflation. Respect the recommended tire pressures given.

- Check the condition of the tires, to detect cuts, protuberances, wear, etc.
- Check the torque load of the wheel nuts. Non-compliance with this instruction can cause damage and rupture to the wheel bolts and distortion to the wheels.
- Check and, if required, adjust the pressure of the tires.
  Inflation pressure, AEOLUS 445/65R22.5 TL AGP23 (std tires):
  - Front wheels: 9.9 bar -143.58 psi
  - Rear wheels: 9.9 bar -143.58 psi

A6 – TELESCOPIC BOOM PADS

CLEAN - GREASE

To be carried out every 10 hours during the first 50 hours service, then once at 250 hours.

If the lift truck is used in an abrasive environment (dust, sand, and coal.), use lubricating varnish (MANITOU reference: 483536). In this respect, consult your dealer.

- Fully extend the jib.
- Apply the grease with a brush (see: 3 - MAINTENANCE: LUBRICANTS AND FUEL) to the 4 sides of the telescope(s).
- Telescope the jib several times in order to spread the coat of grease evenly.
- Remove the surplus of grease.

A7 – SIGNALLING DEVICE AND LONGITUDINAL STABILITY LIMITER

CHECK

Only with machine equipped with LMI safety system

Use a measuring cord and a level to check the boom angle (A) and length (L) indications.

Then lift a known weight with the fork booms closed and make sure that the load reading in the system is correct.

Lastly, extend the load (keeping it about 0.5 meters from the ground) then make sure that it reaches the limit established by the diagram and that the machine blocks the load bearing movements when the safety system activates.

B - EVERY 50 HOURS SERVICE

Carry out the operations described previously as well as the following operations.

B1 – RADIATOR CORE

CHECK - CLEAN

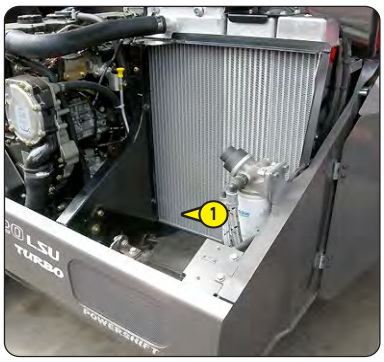

In a polluting atmosphere, clean the radiator core every day.
Do not use a water jet or high-pressure steam as this could damage the radiator fins.

- Open the engine bonnet.
- If necessary, clean the suction grid on the engine hood.
- Clean grid 1.
- Using a soft cloth, clean the radiator in order to remove as much dirt as possible.
- Clean the radiator using a compressed air jet aimed in the opposite direction to the cooling air flow.
- Remove impurities via the panel using handle 2.

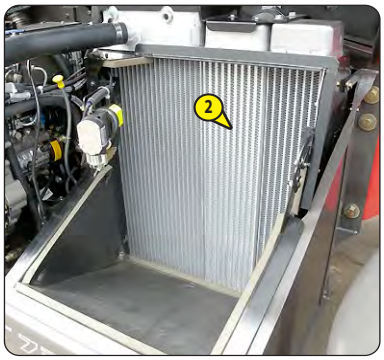

-

B2 – TYRE PRESSURE AND WHEEL NUT TORQUES

CHECK

Check that the air hose is correctly connected to the tyre valve before inflating and keep all persons at a distance during inflation. Respect the recommended tyre pressures given.

- Check the condition of the tyres, to detect cuts, protuberances, wear, etc.
- Check the torque load of the wheel nuts. Non-compliance with this instruction can cause damage and rupture to the wheel bolts and distortion to the wheels.
- Check and restore tyre pressures if necessary (see: 2 - DESCRIPTION: TYRES).

NOTE: There is an OPTIONAL wheel toolkit.

B3 – GENERAL GREASING

GREASE

To be carried out weekly, if the lift truck has been operated for less than 50 hours during the week.

In the event of prolonged use in an extremely dusty or oxidising atmosphere, reduce this interval to 10 working hours or every day.

Clean and lubricate the following points with grease (see: 3 - MAINTENANCE: LUBRICANTS AND FUEL) and remove the surplus of grease.

JIB

1 - Lubricators of the boom axle (2 lubricators).
2 - Lubricators of the carriage axle (1 lubricator).
3 - Lubricator of the tilt cylinder head axle (1 lubricator).
4 - Lubricator of the tilt cylinder foot axle (1 lubricator).
5 - Lubricator of the lifting cylinder foot axle (1 lubricator).
6 - Lubricator of the lifting cylinder head axle (1 lubricator).
7 - Lubricator of the compensation cylinder foot axle (1 lubricator).
8 - Lubricator of the compensation cylinder head axle (1 lubricator).

FRONT AND REAR WHEEL REDUCTION GEAR PIVOTS

9 - Lubricators of the wheel reduction gear pivot pins (8 lubricators).

REAR AXLE OSCILLATION

10 - Rear axle oscillation lubricators (2 lubricators).

Lubrication points ovwerview

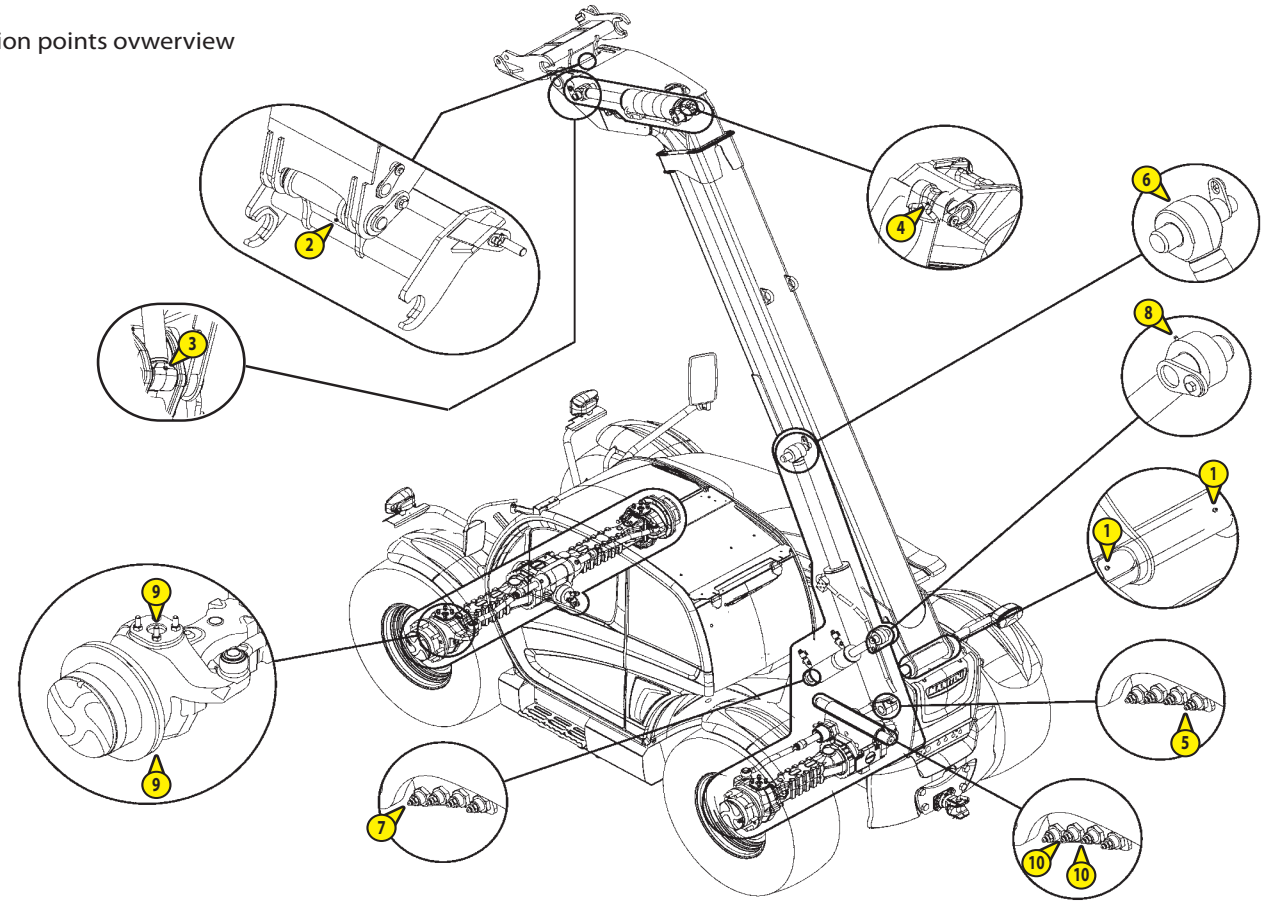

B4 – HYDRAULIC OIL LEVEL

CHECK

Place the lift truck on level ground with the I.C. engine stopped, and the jib retracted and lowered as far as possible.

Use a clean funnel and clean the underside of the oil drum before filling.

- Check the level on the low level gauge 1. The level is correct when it is situated above the level of the red point.
- If necessary, add oil (see: 3 - MAINTENANCE: LUBRICANTS AND FUEL).
- Open the hydraulic oil filler access panel with the ignition key.
- Remove the filler cap lock 2.
- Remove cap 3.
- Add oil through filler port 4 up to the black dot on the high level gauge 5.
- Refit the cap and its lock.
- Visually check that there is no leakage in the tank and pipes.

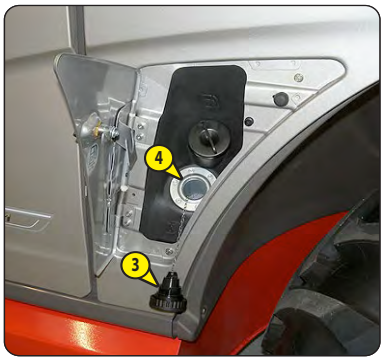

B5 – BRAKE OIL LEVEL

CHECK

Place the lift truck on level ground.

If the braking oil level is abnormally low, consult your dealer.

- Open the protective casing 1 with the ignition key.
- Check tank 2. The level is correct when it is situated at the MAX level on the tank.
- If necessary, add oil (see: 3 - MAINTENANCE: LUBRICANTS AND FUEL).
- Remove cap 3.
- Add oil through filler port 4.
- Refit the cap.
- Visually check that there is no leakage in the tank and pipes.

B6 – WINDSCREEN WASHER LIQUID LEVEL

CHECK

- Visually check the level in tank 1.
- If necessary add windscreen washer liquid (see: 3 - MAINTENANCE: LUBRICANTS AND FUEL).
- Remove cap 2.
- Add windscreen washer liquid through filler port 3.
- Refit the cap.

B7 – CAB VENTILATION FILTERS

CLEAN

EXTERNAL CAB VENTILATION FILTER

- Lift out cab ventilation filter 1.
- Clean the filter with a compressed air jet.
- Check its condition and change if necessary (see: 3 - MAINTENANCE: FILTERS CARTRIDGES AND BELTS).
- Reinstall the filter.
- Refit the protective casing 2.

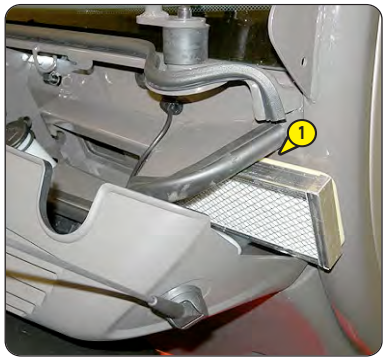

INTERNAL CAB VENTILATION FILTER

- Remove the protective grid 3.
- Lift out cab ventilation filter 4.
- Clean the filter with a compressed air jet.
- Check its condition and change if necessary (see: 3 - MAINTENANCE: FILTERS CARTRIDGES AND BELTS).
- Reinstall the filter.
- Refit the protective grid 3.

B8 – CONDENSER CORE (AIR CONDITIONING OPTION)

CHECK - CLEAN

In a polluting atmosphere, clean the radiator core every day.
Do not use a water jet or high-pressure steam as this could damage the condenser fins.

- Visually check whether the condenser is clean and clean it if necessary.
- Clean the condenser using a compressed air jet aimed in the same direction as the air flow.
- Clean with the fans running for best results.

C - EVERY 250 HOURS OF SERVICE

Carry out the operations described previously as well as the following operations.

C1 – CAB VENTILATION FILTERS

CHANGE

EXTERNAL CAB VENTILATION FILTER

- Remove protective casing 1 using the ignition key.
- Lift out cab ventilation filter 2 and replace it with a new one (see: 3 - MAINTENANCE: FILTERS, CARTRIDGES AND BELTS).
- Refit the protective casing.

INTERNAL CAB VENTILATION FILTER

- Remove the protective grid 3.
- Lift out cab ventilation filter 4 and replace it with a new one (see: 3 - MAINTENANCE: FILTERS, CARTRIDGES AND BELTS).
- Refit the protective grid.

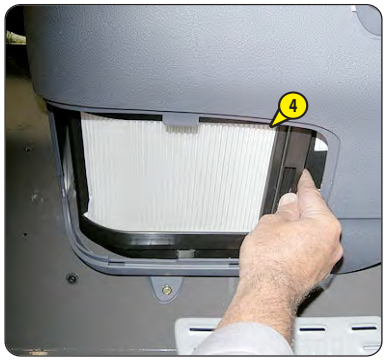

C2 – FRONT AND REAR AXLE DIFFERENTIAL OIL LEVEL

CHECK

Place the lift truck on level ground with the I.C. engine stopped.

- Remove the level plug 1; the oil should be flush with the edge of the hole.
- If necessary, add oil (see: 3 - MAINTENANCE: LUBRICANTS AND FUEL) through the filler port 2.
- Refit and tighten the level plug 1 (tightening torque 34 to 49 N.m).

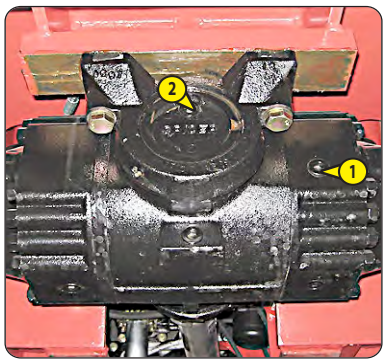

C3 – FRONT AND REAR WHEEL REDUCTION GEAR OIL LEVEL

CHECK

Place the lift truck on level ground with the I.C. engine stopped.

- Check the level on each wheel reduction gear.
- Place level plug 1 in a horizontal position.
- Remove the level plug; the oil should be flush with the edge of the opening.
- If necessary, add oil (see: 3 - MAINTENANCE: LUBRICANTS AND FUEL) by the same hole.
- Refit and tighten the level plug (tightening torque 34 to 49 N.m).

https://truckmanualshub.com/
duma rent
www.duma-rent.com

This page is intentionally blank

D - EVERY 500 HOURS SERVICE OR 6 MONTH

Depending on machine model.

MACHINE INSPECT OPERATION

In order to minimize unexpected downtime or critical fault of the machine, the inspections and checks need to be carried out on a regular basis.

The interval between the inspections or checks depends on some factors:

- Operating conditions of the machine (working place environment conditions),
- Severity of the application (heavy loading and stress work cycles)
- Age of machine;
- Travelling for long distance on roads;

The parts to be inspected or checked are:

- Machine chassis;
- Telescopic boom;
- Cab;
- Axle and axle supports;
- Engine supports;
- Stabilizers.

For each part inspects all welded joints and mounting points

If some damage parts are found, contact your dealer.

In case the machine has been involved in any accident or every 500 working hours, Manitou suggests to inspects the above parts of the machine.

More frequent inspections will be required for older machines and machines that are used in particularly severe applications.

HYDRAULIC OIL LEVEL

MANITOU offers a hydraulic oil analysis kit to delay the recommended due date for periodic maintenance (2000 hours). In this case we recommend an analysis of the hydraulic oil every 500 hours of operation.

The hydraulic oil analysis kit also makes it possible to validate the oil quality so as to obtain a deadline of 2000 hours for specific uses putting demand on the hydraulic circuit: extreme environmental conditions, use of the attachments with a high hydraulic flow rate (such as a sweeper, or a concrete mixer).

- Order the oil analysis kit from your dealer.
- When you receive the kit, take an oil sample and follow the instructions located inside the kit.
- Keep the analysis report and replace the hydraulic oil, depending on the results.

MANITOU oil analysis kit Part No. 958162.

Carry out the operations described previously as well as the following operations.

A maintenance warning is displayed at 500 hours on the help screen . The maintenance then has to be performed.

NOTE: Once this maintenance has been conducted (D – EVERY 500 HOURS OF SERVICE), reset the maintenance counter to zero:

D1 – ENGINE OIL

DRAIN

D2 – I.C. ENGINE OIL FILTER

CHANGE

Place the lift truck on level ground, let the I.C. engine run at idle for a few minutes, then stop the I.C. engine.

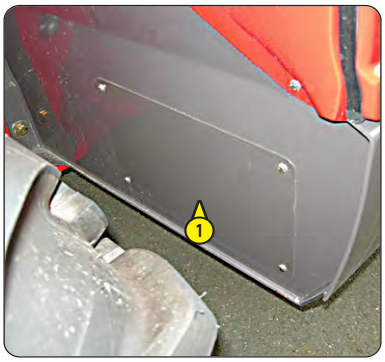

USE THE RECOMMENDED LUBRICANTS:
Oil MANITOU GOLD "API CJ-4 ; ACEA E9" => CHANGE EVERY 250 HOURS
Oil JD Plus-50 II Premium => CHANGE EVERY 500 HOURS

Dispose of the drain oil in an ecological manner.
Tighten the oil filter by hand pressure only and lock the filter in place by a quarter turn.

DRAINING THE OIL

- Open the engine bonnet.
- Remove access panel 1.
- Place a container under drain plug 2 and unscrew the plug.
- Take drain hose 3.
- Place the end of the drain hose in the container and screw the hose fully to the drain connector 2.
- Remove level and filling plug 4 to ensure that the oil is drained properly.

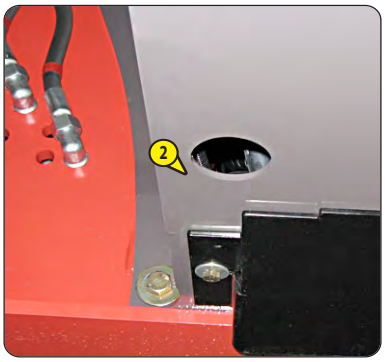

REPLACEMENT OF THE FILTER

- Unscrew and discard the engine oil filter 5, together with its seal.
- Clean the filter bracket with a clean, lint-free cloth.
- Lightly grease the new seal before refitting the new oil filter (see: 3 - MAINTENANCE: FILTERS AND BELTS) on its bracket.

NOTE: Ensure that the notches of the dust seal are correctly fitted in the grooves of the filter holder.

FILLING UP THE OIL

- Remove, clean and refit drain hose 3.
- Replace and tighten the drain plug 2.
- Fill up with oil (see: 3 - MAINTENANCE: LUBRICANTS AND FUEL) through filler port 4.
- Wait a few minutes to allow the oil to flow into the sump.
- Start the engine and let it run for a few minutes.
- Check for possible leaks from the drain plug and the oil filter.
- Stop the engine, wait a few minutes and check the correct level between the two level marks on the dipstick 6.
- Top up the level if necessary.
- Refit access panel 1.
-

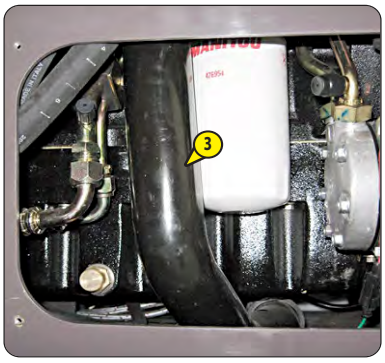

D3 – ENGINE CRANKCASE VENTILATION SYSTEM

CHECK

- Visually check the condition of the ventilation filter hoses 1 (cracks, wear, deformation etc...) and replace if necessary. Also check the tightness of the hose clips.

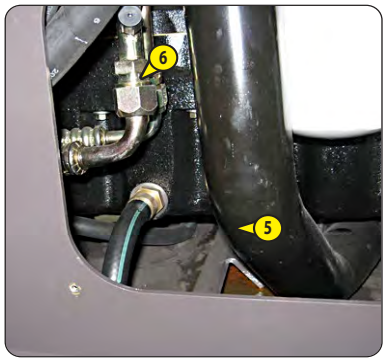

D4 – FUEL PRE-FILTER

CHANGE

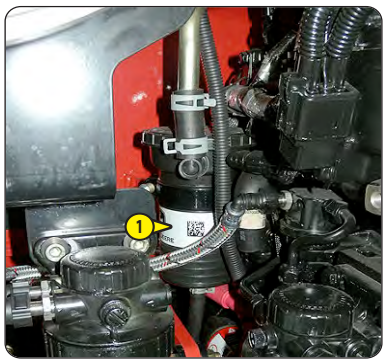

Carefully clean the outside of the pre-filter and its holder, to prevent dust from getting into the system.

Make sure the electrical contact on the lift truck is cut, otherwise fuel will be released if the lift pump is on.

- Open the engine bonnet.
- Carefully clean the outside of the filter and its holder, to prevent dust from getting into the system.
- Place a receptacle under the pre-filter and empty using drain plug 1.

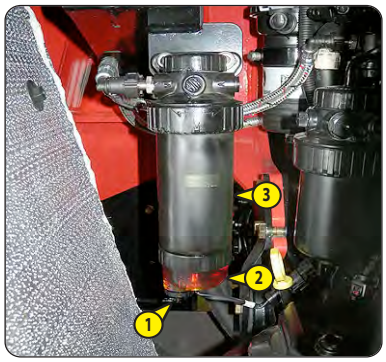

- Remove container 2 and discard cartridge 3 as well as its seals.
- Clean the inside of the filter head and the housing, using a brush immersed in clean diesel oil.
- Lightly lubricate the new seals with clean engine oil and refit the assembly with a new cartridge (see: 3 - MAINTENANCE: FILTERS AND BELTS).
- Retighten tank 2 (tightening torque 14 N.m).
-
-
-
-
-

D5 – FUEL FILTER

CHANGE

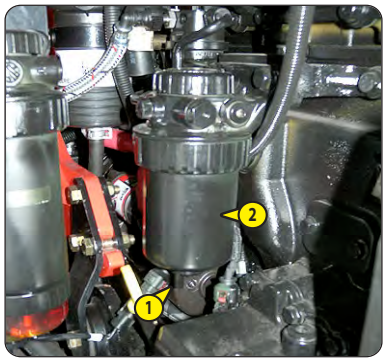

Carefully clean the outside of the pre-filter and its holder, to prevent dust from getting into the system.

- Open the engine bonnet.
- Carefully clean the outside of the filter and its holder, to prevent dust from getting into the system.
- Place a receptacle under the filter and empty using drain plug 1.
- Loosen the filter 2 and discard it as well as its seals.
- Clean the inside of the filter head using a brush immersed in clean diesel oil.
- Lightly lubricate the new seals with clean engine oil and refit the assembly with a new filter (see: 3 - MAINTENANCE: FILTERS AND BELTS).
- Retighten the filter on its support (tightening torque 10 N.m).
- Start up the I.C. engine and make sure there is no leakage.

D6 – AUTOMATIC ALTERNATOR BELT TENSIONER

CHECK

- Open engine bonnet and the lower cover 1.
- Remove the protective casing 2.

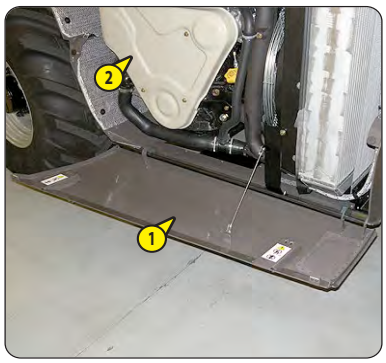

ALTERNATOR BELT TENSION

- The belt tensioner is designed to work within the travel limits of the arm between the two fixed end-stops 3.
- Visually check the travel of the arm. If the pivoting arm stop 4 touches one of the two fixed end-stops 3, check the condition of the alternator bracket, the belt tensioner and the return pulley.
- Check the length of the alternator belt and change if necessary (see: 3 - MAINTENANCE: H - OCCASIONAL MAINTENANCE).
- Do not check the automatic tensioner spring tension if the alternator belt tension is correct. If in doubt, contact your dealer.

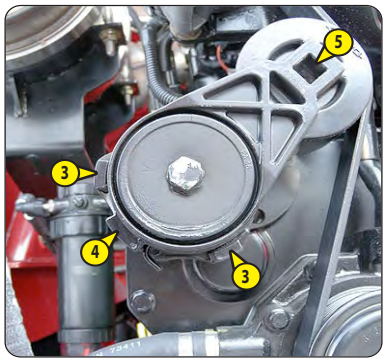

AUTOMATIC TENSIONER SPRING TENSION (IF NECESSARY)

- Place a 1/2 in. socket wrench in the square of the automatic tensioner 5 to slacken the belt and remove it.
- Release the force and remove the socket wrench.
- Make a mark A on the pivoting arm, measure a distance of 21 mm from this point and make another mark B on the fixed part of the tensioner.
- Place a torque wrench, with the centres of the pulley and the tensioner aligned and turn the tensioner until marks A and B are aligned. The torque should be 20 N.m.
- If necessary replace the automatic belt tensioner.
- Refit the alternator belt (see: 3 - MAINTENANCE: H - OCCASSIONAL MAINTENANCE).

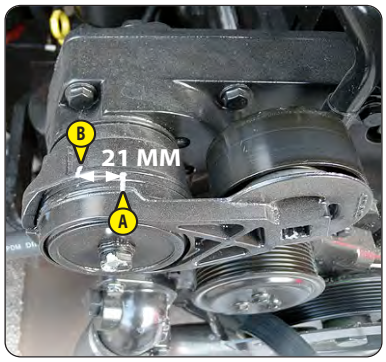

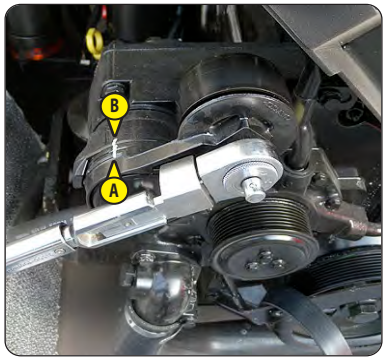

D7 – HYDROSTATIC PUMP OIL FILTER (TRANSMISSION)

REPLACE

Risk of poisoning and injury!
Contact with hydraulic fluid damages your health (e.g. eye injuries, skin and tissue damage, poisoning through inhalation). While working with hazardous materials (for example, hydraulic fluids), always wear safety gloves and safety glasses.

Procedure

To replace the filter cartridge and the filter case seal:

- Loosen and remove the filter housing 4 from the filter head 1
- Remove the used filter cartridge 3 from the filter housing 4
- Check the filter head and filter housing for damage, wear and contaminants.
- Insert the new filter cartridge 3 into the filter housing 4
- Check the O-ring and O-ring groove for damage, wear or contaminants.
- Replace the O-ring 2 with a new one. Lightly grease the O-ring.
- Screw the filter housing 4 onto the filter head 1
- Tighten the filter housing 4 with a torque of 45 Nm.

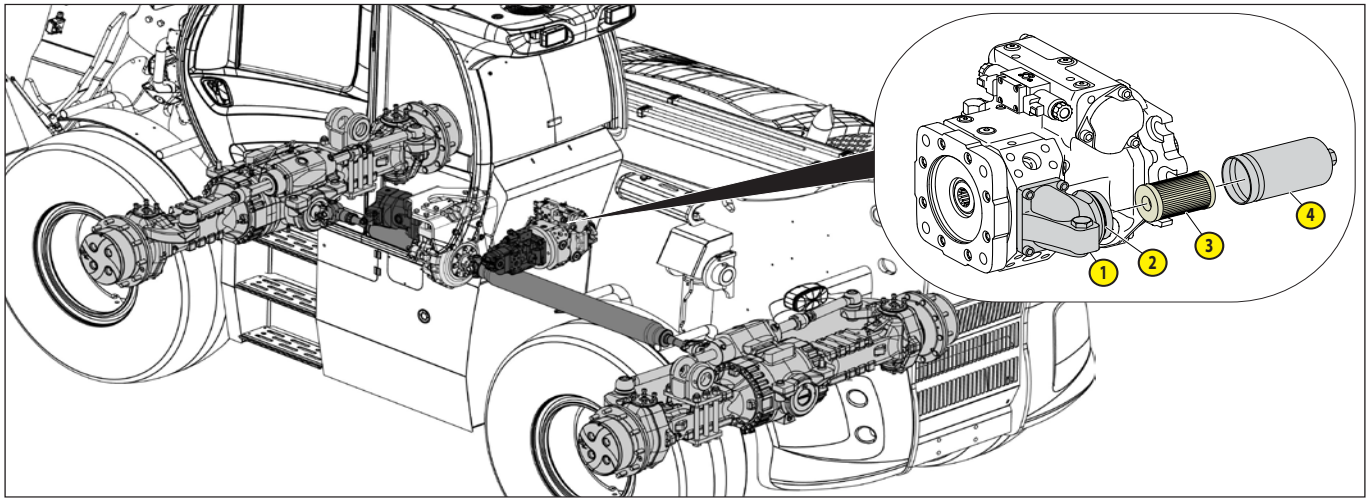

D8 – FORKS WEAR*

CHECK

Contact your dealer.

https://truckmanualshub.com/
duma rent
www.duma-rent.com

E - EVERY 1000 HOURS OF SERVICE

Carry out the operations described previously as well as the following operations.

E1 – FUEL TANK

CLEAN

Place the lift truck on level ground with the I.C. engine stopped.

While carrying out these operations, do not smoke or work near a flame.
Never try to carry out welding or any other operation by yourself, as this could cause an explosion or a fire.

- Inspect the parts susceptible to leaks in the fuel circuit and in the tank both visually and by touch.
- In the event of a leak, contact your dealer.
- Place a container under drain plug 1 and unscrew the plug.
- Open the fuel filler access panel with the ignition key.
- Remove filling plug 2 to ensure that the oil is drained properly.
- Rinse out with ten litres of clean diesel through filler port 3.
- Refit and tighten the drain plug (tightening torque 72 to 88 N.m).
- Fill the fuel tank with clean diesel filtered through the filler port.
- Refit the filler plug.

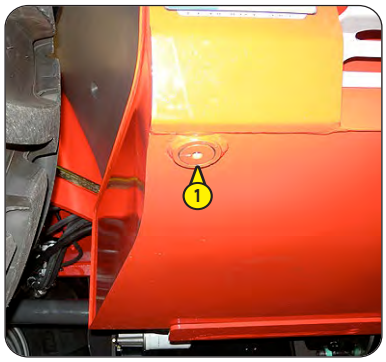

E2 – DRY AIR FILTER CARTRIDGE

CHANGE

In case of use in a heavily dust laden atmosphere, the cartridge replacement interval must be reduced (to 250 hours in a heavily dust laden atmosphere).

Change the cartridge in a clean location, with the engine stopped.
Never operate the lift truck without the air filter or with the air filter damaged.

If the air filter clogging indicator light comes on , replace the cartridge with minimum delay (maximum 1 hour).

- Open the engine bonnet.
- Loosen the bolts and remove cover 1.
- Pivot cartridge 2 towards the front and carefully remove to avoid spilling the dust.
- Leave the safety cartridge in place.
- The following parts must be cleaned with a damp, clean lint-free cloth.
  - The inside of the filter and cover.
  - The inside of the filter inlet hose.
  - The gasket surfaces in the filter and in the cover.
- Check pipes and connections between the air filter and the engine and the connection and state of the clogging indicator on the filter.
- Before mounting, check the state of the new filter cartridge (see: 3 - MAINTENANCE: FILTERS, CARTRIDGES AND BELTS).
- Tilt the cartridge approximately 5° towards the front, insert it into the filter and position it by pressing the edges and not the middle.
- Refit the cover and ensure that the clips are properly secured. The cover should fit on easily, if this is not the case, check the position of the cartridges in the filter.

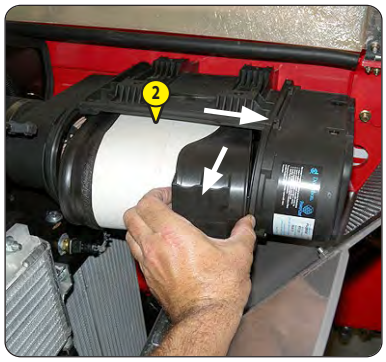

E3 – ENGINE CRANKCASE VENTILATION FILTER

CHANGE

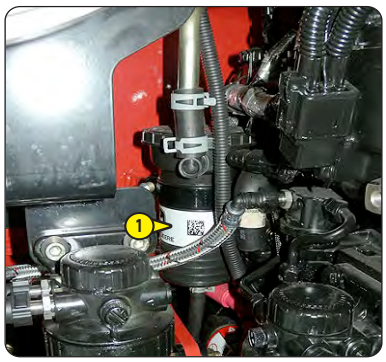

- Open the engine bonnet.
- Carefully clean the outside of the filter and its holder, to prevent dust from getting into the system.
- Loosen filter 1 and discard it as well as its seal.
- Lightly lubricate the new seals with clean engine oil and refit the assembly with a new filter (see: 3 - MAINTENANCE: FILTERS AND BELTS).
- Retighten the filter on its support (tightening torque 10 N.m).

E4 – OIL OF THE FRONT AND REAR AXLE DIFFERENTIAL

EMPTY

Position the telehandler on a horizontal surface with the I.C. engine switched off and the differential oil still hot.

Dispose of the drain oil in an ecological manner.

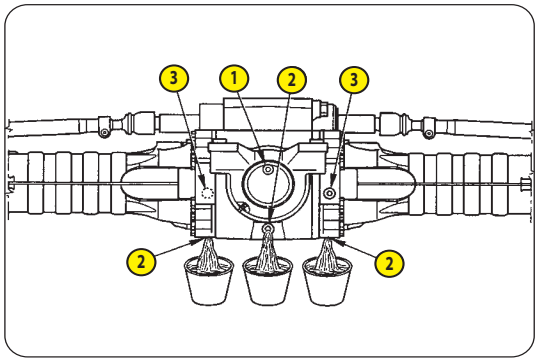

Place a container under the drainage caps 2 and drain out the oil.
Remove the level cap 3 and the filler cap 1 to ensure complete drainage.
Refit and tighten caps 2.
Fill oil (see "LUBRICANTS") through the filler hole 1.
The level is correct when the oil flows out through level hole 3.
Check for leaks from the drainage caps. Refit and tighten the level cap 3 (Fig.E3) and the filler cap 1.
Repeat the operation for the rear axle differential; remove the rear caps.

E5 – FRONT AND REAR WHEELS FINAL DRIVE OIL

EMPTY

Position the telehandler on a horizontal surface with the I.C. engine switched off and the differential oil still hot.

Dispose of the drain oil in an ecological manner.

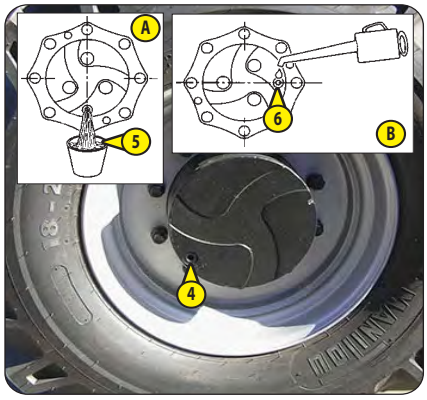

Position the telehandler on a horizontal surface with the I.C. engine switched off and the reduction gears oil still hot.
Make sure the drainage and level cap 4 is oriented downwards "A" to allow the oil to flow down easily.
Place a container 5 under the drain plug and unscrew it. Drain out all the oil.
Bring the drainage hole to the horizontal position "B", to be able to check the oil level successively.
Fill oil 6 (see "LUBRICANTS") through the filler hole 4. The level is correct when the oil flows out through hole 4.
Refit the drainage cap 4 and tighten it. Repeat this operation for each reduction gear.

GEARBOX OIL

EMPTY

Position the telehandler on a horizontal surface with the I.C. engine switched off and the reduction gears oil still hot.

Dispose of the drain oil in an ecological manner.

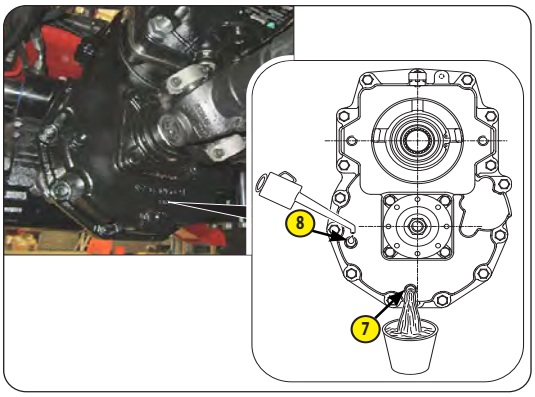

Place a container under the drainage cap 7.
Remove the cap 7 and drain out the oil.
Remove the oil level and filler cap 8 to ensure complete drainage.
Refit and tighten the cap 7.
Fill oil (see "LUBRICANTS") through the level and filler hole 8.
The oil level is correct when it flows out through the opening.
Refit and tighten the level and filler cap 8.
Check for leaks from the drainage cap.

E6 – HYDRAULIC OIL

DRAIN

E7 – HYDRAULIC RETURN OIL FILTER CARTRIDGE

CHANGE

E8 – BREATHER FOR THE HYDRAULIC OIL TANK

CHANGE

E9 – SUCTION STRAINER FOR HYDRAULIC OIL TANK

CLEAN

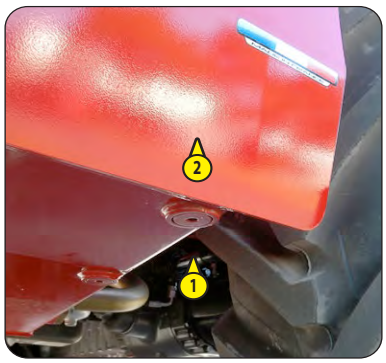

Place the lift truck on level ground with the I.C. engine stopped and telescope jib retracted and lowered as far as possible.

Before any intervention, thoroughly clean the area surrounding the drain plug, the suction strainer and the outside of the filter on the hydraulic tank.
Use a clean container and funnel and clean the top of the oil drum before filling.
Dispose of the drain oil in an ecological manner.

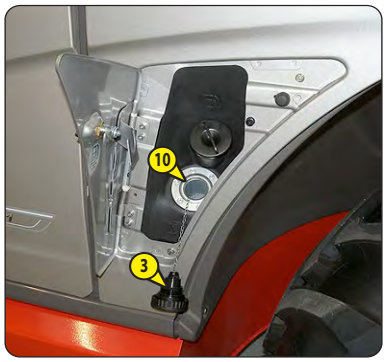

DRAINING THE OIL

- Lift out protective casing 1.
- Place a container under drain plug 2 and unscrew the plug.
- Open the hydraulic oil filler access panel with the ignition key.
- Remove the filler cap lock 12.
- Remove filling plug 3 to ensure that the oil is drained properly.

RELACING THE HYDRAULIC RETURN OIL FILTER CARTRIDGE

- Lift out protective casing 13.
- Unscrew the fastening screws of the cover 14.
- Wait a few moments while the oil flows into the tank.
- Remove the hydraulic return oil filter cartridge 15 and replace with a new one (see: 3 - MAINTENANCE: FILTERS CARTRIDGES AND BELTS).
- Make sure that the cartridge is correctly positioned and refit the cover 14.
- Refit the protective casing 13.

REPLACING THE BREATHER

- Unscrew the breather 4 and replace it with a new one (see: 3 - MAINTENANCE: FILTERS, CARTRIDGES AND BELTS).

CLEANING THE STRAINER

- Disconnect hose 5.
- Remove and clean the suction strainer 6 using a compressed air jet, check its condition and replace if necessary (see: 3 - MAINTENANCE: FILTERS CARTRIDGES AND BELTS).
- Refit the suction strainer making sure the seal is in the correct position.

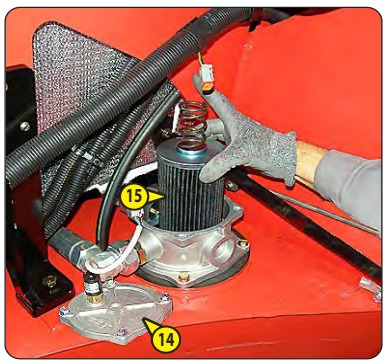

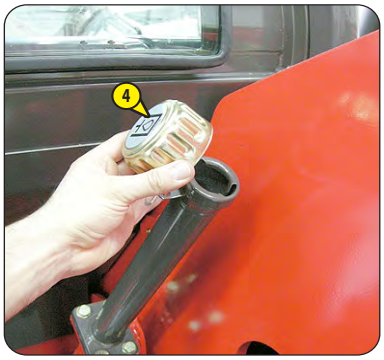

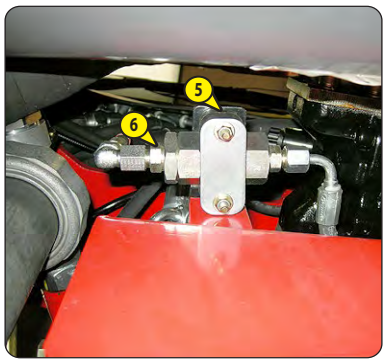

FILLING UP THE OIL

- Refit and tighten the drain plug 2 (tightening torque 29 to 39 N.m).
- Fill up with oil (see: 3 - MAINTENANCE: LUBRICANTS AND FUEL) through filler port 10.
- Observe the oil level on dipstick 11; the oil level should be at the level of the black point.
- Check for any possible leaks at the drain plug.
- Refit the filler plug 3.

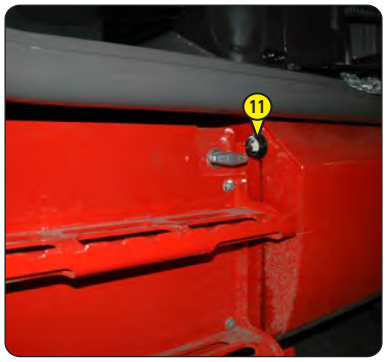

HYDRAULIC CIRCUIT DECONTAMINATION

- Leave the engine running (accelerator pedal at halfway travel) for 5 minutes without using anything on the lift truck, then for 5 more minutes while fully using the hydraulic movements (except the steering system and the service brakes).
- Accelerate the engine at full speed for 1 minute, then activate the steering system and the service brakes.
- This operation makes a pollution abatement of the circuit possible through the hydraulic return oil filter.

E10 – SEAT BELT

CHECK

In no event should the lift truck be used if the seat belt is defective (fixing, locking, cuts, tears, etc.). Repair or replace the seat belt immediately.

SEAT BELT WITH TWO ANCHORING POINTS

- Check the following points:
  - Fixing of the anchoring points on the seat.
  - Cleanness of the strap and the locking mechanism.
  - Triggering of the locking mechanism.
  - Condition of the strap (cuts, curled edges).

REELED SEAT BELT WITH TWO ANCHORING POINTS

- Check the points listed above together with the following points:
  - The correct winding of the belt.
  - Condition of the reel guards.
  - Roller locking mechanism when the strap is given a sharp tug.

NOTE: After an accident, replace the seat belt.

-

CHECK	I.C. engine silentblocs*
CHECK	Gearbox silentblocs*
CHECK	Brake system pressure*
CHECK	Boom pads wear*
CHECK	Condition of wiring harnesses*
CHECK	Lights and signals*
CHECK	Warning indicators*
CHECK	Condition of the rear view mirrors *
CHECK	Structure of the cab*
CHECK	Structure of the chassis*
CHECK	Attachment carriage*
CHECK	Condition of attachments*
PURGE	Brake circuit*
ADJUST	Brake*

*Contact your dealer.

https://truckmanualshub.com/
duma rent
www.duma-rent.com

This page is intentionally blank

F - EVERY 2000 HOURS OF SERVICE

Carry out the operations described previously as well as the following operations.

F1 – COOLING LIQUID

DRAIN

These operations are to be carried out if necessary or every two years at the beginning of winter. Place the lift truck on level ground with the I.C. engine stopped and cold.

The I.C. engine does not contain any corrosion resistor and must be filled during the whole year with a mixture containing 25 % of ethylene glycol-based antifreeze.

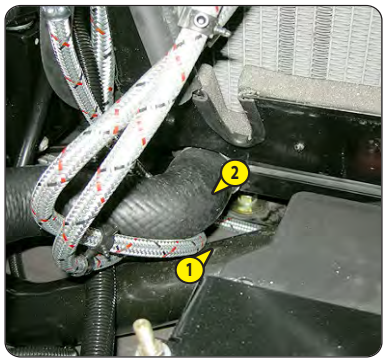

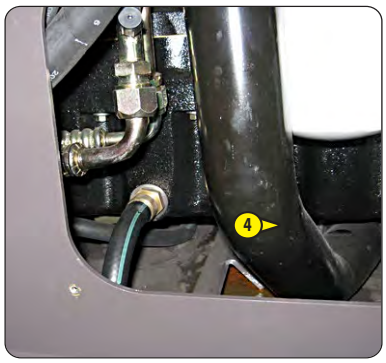

DRAINING THE LIQUID

- Open the engine bonnet.
- Open the panel 1 under the drain plug 2 with the lever 3.
- Set a container under drain plug 2 on the radiator and drain plug 4 of the engine block and loosen them.
- Take drain hose 5.
- Place the end of the drain hose in the container and screw the hose fully to the drain connector 2.
- Remove filler plug 6 from the expansion tank and fully open the heating control to ensure proper emptying.
- Let the cooling circuit drain entirely while ensuring that the ports do not get clogged.
- Check the condition of the hoses as well as the fastening devices and change the hoses if necessary.
- Rinse the circuit with clean water and use a cleaning agent if necessary.

FILLING THE LIQUID

- Remove, clean and refit drain hose 5.
- Refit and tighten drain plug 2 and drain plug 4.
- Open the radiator filler plug 7 and slowly fill the circuit with the cooling liquid (see: 3 - MAINTENANCE: LUBRICANTS AND FUEL) through the filler port.
- Retighten the radiator filler plug 7.
- Top up the cooling circuit level up to the centre of the expansion tank 8 via filler port 9.
- Refit filler plug 6.
- Run the engine at idle for a few minutes.
- Check for any possible leaks.
- Close the panel with the lever 3.
- Check the level and refill if necessary.

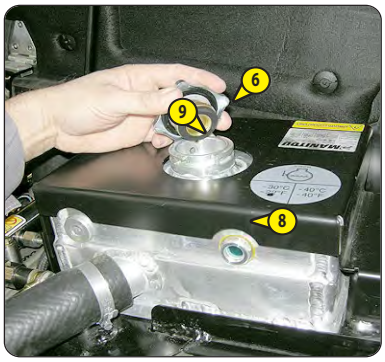

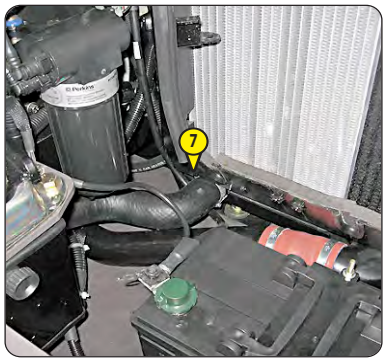

F2 – WHEEL NUTS TIGHTENING TORQUE

CHECK

- Check the condition of the tyres, to detect cuts, protuberances, wear, etc.
- Check the tightening torque of the wheel nuts with a torque wrench.
  - Front wheels: 630 N.m ± 15%
  - Rear wheels: 630 N.m ± 15%

F3 – AIR CONDITIONING (OPTIONAL)

CLEANING - INSPECTION

CLEAN THE COILS OF THE CONDENSER AND EVAPORATOR (*)

CLEAN THE CONTAINER FOR THE CONDENSATE AND THE DRAINAGE VALVE (*)

RECOVERY OF THE COOLANT FOR CHANGING THE DEHYDRATOR FILTER (*)

FILLING WITH COOLANT AND CHECKING THE ADJUSTMENT OF THE THERMOSTAT AND PRESSURE SWITCHES (*)

NOTE: Do not forget to replace the sealing gasket of the cover on opening the evaporator unit.

(*): (CONTACT YOUR DEALER).

NEVER TRY TO CARRY OUT MAKESHIFT REPAIRS IN CASE OF FAULTS. TO RECHARGE A CIRCUIT, ALWAYS CONTACT THE DEALER WHO HAS THE SUITABLE SPARE PARTS, TECHNICAL KNOW-HOW AND THE NECESSARY TOOLS.

In case of inhalation, bring the victim out into the open air, supply oxygen or carry out the necessary artificial respiration and see a doctor.

In case of contact with the skin, rinse immediately with plenty of running water and remove contaminated clothing.

In case of contact with the eyes, flush eyes with plenty of water for 15 minutes and get medical attention.

IMPORTANT INFORMATION ON THE TYPE OF COOLANT USED

- This product contains fluorinated greenhouse gases covered by the Kyoto Protocol.
- Type of coolant: R134A; it is colourless, odourless and heavier than air. Its GWP value (Global Warming Potential) is 1430.
- Do not let the gases be released into the atmosphere. Do not open the circuit under any circumstances as this would cause the coolant to be lost.

- The compressor has a fluid level gauge; never unscrew this gauge because it would depressurise the system. The fluid level should only be checked when draining the system.

CHECK	Radiator*
CHECK	Transmission pressures*
CHECK	Steering*
CHECK	Steering swivel joints*
CHECK	Condition of boom unit*
CHECK	Bearings and articulation rings*
CHECK	Rubber hose pipe and piping conditions*
CHECK	Condition of cylinders (leakage, shafts)*
CHECK	Hydraulic circuit pressures*
CHECK	Bearings and articulation rings*

*Contact your dealer.

G - EVERY 3000 HOURS OF SERVICE

Carry out the operations described previously as well as the following operations.

G1 – SAFETY DRY AIR FILTER CARTRIDGE

CHANGE

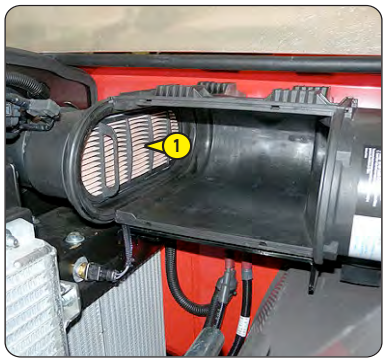

- For the disassembly and reassembly of the dry air filter cartridge, see: 3 - MAINTENANCE: D3 - AIR FILTER CARTRIDGE.
- Gently remove the dry air filter safety cartridge 1, taking care to avoid spilling the dust.
- Clean the gasket surface on the filter with a damp, clean lint-free cloth.
- Check the condition of the new safety cartridge before fitting (see: 3 - MAINTENANCE: FILTERS AND BELTS).
- Place the cartridge into the filter and position it by pressing the edges, not the middle.

NOTE: The periodicity for changing the safety cartridge is given for information only. It must be changed once for every three changes of the dry air filter.

H - EVERY 4000 HOURS OF SERVICE

Carry out the operations described previously as well as the following operations.

H1 – DIESEL EXHAUST FLUID SUPPLY PUMP FILTER

REPLACE

Place the lift truck on level ground with the engine stopped.

Diesel exhaust fluid is corrosive, protect the bodywork and wear personal protective equipment (gloves and goggles).
Clean the outside of the pump, to prevent dust from entering the system.

- Switch off the lift truck's ignition and wait for the pump to stop.
- Lift out protective casing 1.
- Unscrew the pump cover 2, remove the compensation element 3 and discard.
- Insert the extraction tool 4 (provided with the new filter) into the filter 5 until a click is heard or felt.
- Pull the tool to extract and discard the assembly.
- Lightly oil the cover joint with clean engine oil.
- Replace with a new filter and compensation element (see: 3 - MAINTENANCE: FILTER ELEMENTS AND BELTS) in the pump and screw the cover 1 (torque 23 N.m).

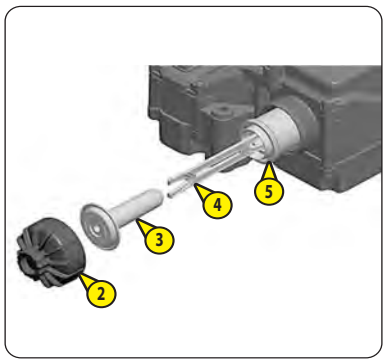

https://truckmanualshub.com/
duma rent
www.duma-rent.com

This page is intentionally blank

I - OCCASIONAL MAINTENANCE

I1 – ALTERNATOR BELT

CHANGE

- Open engine bonnet and the lower cover 1.
- Remove the protective casing 2.
- Place a 1/2 in. socket wrench in the square of the automatic tensioner 3 to slacken the belt and remove it.
- Release the force and remove the socket wrench.
- Refit a new alternator belt (see: 3 - MAINTENANCE: FILTERS AND BELTS) ensuring that it is properly seated in the grooves of each pulley and tighten the belt using the automatic tensioner 3.

NOTE: Take advantage of belt removal to check the correct operation of the pulleys and bearings (noise, rubbing, play, etc...).

- Refit the protective casing 2.

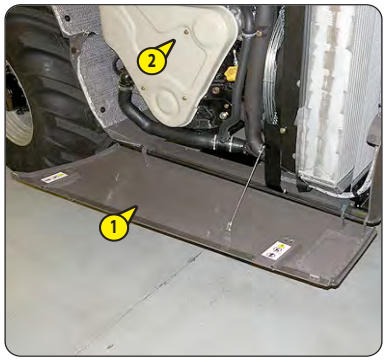

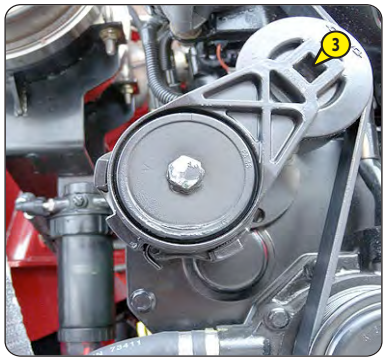

I2 – REGENERATE THE EXHAUST PARTICULATE FILTER

REGENERATION

Manual regeneration is started by pressing the regeneration switch. Forced regeneration can be carried out only after the soot load has reached such a point as to cause the DPF indicator to light up .

Forced regeneration is necessary only if automatic regeneration has not been completed.

This situation may be due to activation of the disabling switch or engine work cycle.

After the exhaust particulate filter regeneration procedure, let the I.C. engine run at low speed for a few minutes to lower the temperature before cutting off the electric contact.

- Park the forklift truck in a safe, sufficiently ventilated place.
- Check the following points:
  - gear in neutral,
  - parking brake applied,
  - telescopic boom angle less than 50°,
  - I.C. engine water temperature more than 60 °C.
- Check to make sure the fuel level is sufficient.
- Start up the forklift truck and run the I.C. engine for a few minutes to bring it to the operating temperature.
- Press on the upper part of the switch "1" (Fig.H2) for more than two seconds to start up the regeneration procedure
  (See: 2 - DESCRIPTION: Particulate filter regeneration).

  The indicator light will come on, then a beep will sound to confirm that "stationary lift truck" the exhaust sublimation is running.

Exhaust particulate filter regeneration procedure.

If the operator uses the hydraulic commands or presses the accelerator pedal during the regeneration, the procedure is stopped automatically.

To stop the procedure correctly, press briefly in the lower part of the switch.

- During the procedure, the engine speed is adjusted by the I.C. engine electronic control unit.
- The duration of the exhaust particulate filter regeneration varies (between 20 and 50 minutes) according to various criteria, such as:
  - the filter clogging level;
  - the room temperature,
  - the quality of the fuel and type of I.C. engine oil,
  - the number of requests for automatic regeneration of the exhaust particulate filter annulled previously.

H3 – WHEEL

CHANGE

For this operation, we advise you to use the hydraulic jack MANITOU reference 505507 and the safety support MANITOU reference 554772.

In the event of a wheel being changed on the public highway, secure the lift truck vicinity:

- Stop the lift truck, if possible on firm, level ground.
- Shut down the lift truck (see: 1 - OPERATING AND SAFETY INSTRUCTIONS: DRIVING INSTRUCTIONS UNLADEN AND LADEN).
- Switch on the warning lights.
- Immobilise the lift truck in both directions on the axle opposite to the wheel to be changed.
- Loosen the nuts of the wheel to be changed.
- Place the jack under the flared axle tube, as near as possible to the wheel and adjust the jack.
- Raise the wheel until it is clear of the ground and place the safety support under the axle.
- Completely unscrew the wheel nuts and remove them.
- Free the wheel by reciprocating movements and roll it to the side.
- Slip the new wheel on the wheel hub.
- Hand-tighten the nuts, grease them if necessary.
- Remove the safety support and lower the lift truck with the jack.
- Tighten the wheel nuts with a torque wrench (see: 3 - MAINTENANCE: A - DAILY OR EVERY 10 HOURS OF SERVICE for tightening torque).

H4 – FRONT HEADLIGHTS

ADJUSTING

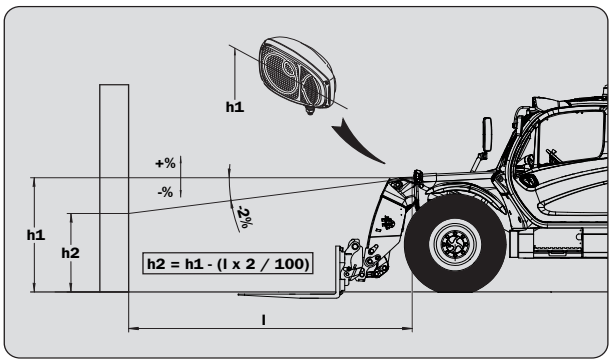

RECOMMENDED SETTING

(as per standard ECE-76/756 76/761 ECE20)

Set to -2 % of the dipped beam in relation to the horizontal axis of the headlamp.

ADJUSTING PROCEDURE

- Place the unladen lift truck in the transport position and perpendicular to a white wall on flat, level ground.
- Check the tyre pressXures (see: 2 - DESCRIPTION: FRONT AND REAR TYRES).
- Place the forward/reverse selector in neutral.

CALCULATING THE HEIGHT OF THE DIPPED BEAM (H2)

- h1 = Height of the dipped beam in relation to the ground.
- h2 = Height of the adjusted beam.
- l = Distance between the dipped beam and the white wall.

H5 – BATTERY FAILURE

CHANGE

Operate the battery cut-out no less than 30 seconds after having switched off the ignition with the ignition key.

Handling and servicing a battery can be dangerous, take the following precautions:
- Wear protective goggles.
- Keep the battery horizontal.
- Never smoke or work near a naked flame.
- Work in a well-ventilated area.
- In the event of electrolyte being spilled onto the skin or splashed in the eyes, rinse thoroughly with cold water for 15 minutes and call a doctor.

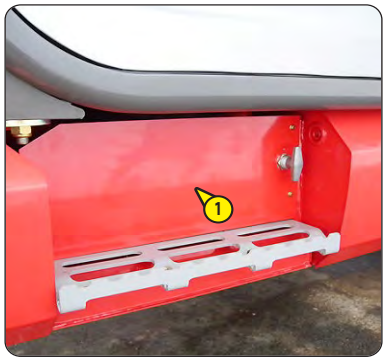

- Lift out protective casing 1.
- Change the battery 2.

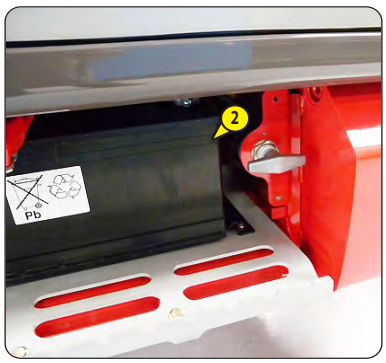

H5 - TOWING/ATTACHING

TELEHANDLER

The telehandler can be towed with a rigid bar hooked on the relevant points of the front or rear.

Do not tow the telehandler at a speed greater than 5 km/h, for a maximum distance of 100 m. This operation is dangerous.

Carefully lock the telehandler before towing it, since the parking brake system is not operating.

To adjust the parking brake, see the dealer.

Towing the telehandler
Follow the instructions:
- lock the wheels of the telehandler during the freewheeling procedure, to prevent it from moving
- manually shift the travel inverter into neutral
- stop the I.C. engine, if required
- mechanically release the negative brake on front axle (*)
- set the gearbox in neutral (**)
- turn on the emergency lights
- tow the telehandler

(*) Release the negative brake on front axle:
a) Loosen nuts (2) of screws (3) provided for the mechanical and manual release of the braking units, then move the nuts backward by approximately 8 mm (0.3 in).
b) Tighten screws (3) to fasten them onto the pressure plate
c) Using a wrench, tighten the screws (3) in an alternate sequence by 1/4 turn at a time so as to compress the belleville washers and disengage the braking disks.

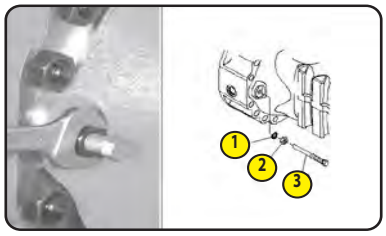

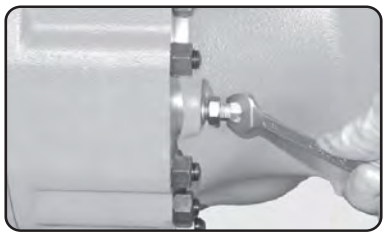

Tighten maximum by one turn.

(**) Set the gearbox in neutral:
- Place a container under the hose pipes (4), slacken these and make sure the oil does not flow out before unscrewing these completely. Protect the orifices of the hose pipes.
- Using a tool, slide the shaft (5) and note down the block of the three positions. Check to make sure the shaft is locked correctly in the intermediate position, i.e. at the dead centre.
- Position the towing device.
- Remove the wedges.
- Switch on the emergency lights.

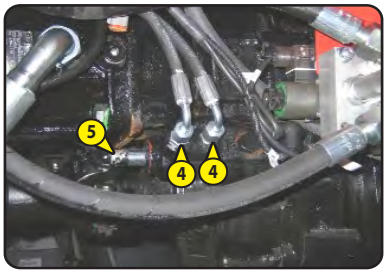

If the steering and brake hydraulic power assist is not operating, operate on these two controls slowly and with force. Avoid sudden movements and jolts.

Adjust the negative brake on front axle
d) Remove screws complete with nuts and seals (6). Replace seals, apply silicone-based Tecno Lube /101 grease to the screws and install all parts into the boom.
e) Adjust screws (3) to obtain a distance of 34mm (1.3 in)
f) Lock into position with nuts (2).

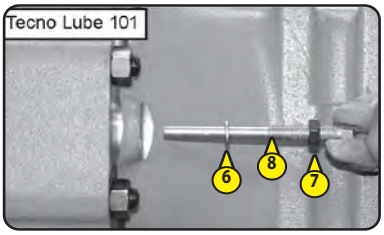

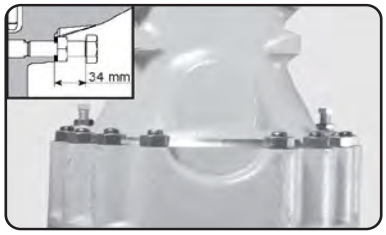

Hold screws (8) into position while locking the nuts (7); after locking, check the distance of screws (8) once more.

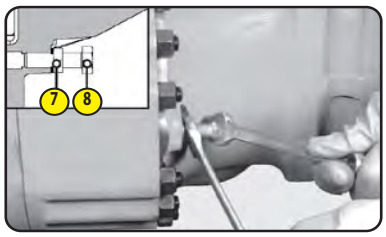

The opposite screws must be tightened to the same extent.

https://truckmanualshub.com/

H6 – TELEHANDLER

- Take into account the position of the lift truck centre of gravity for lifting.
  A = 1942 mm B = 928 mm
- Place the hooks in the fastening points 1 provided.

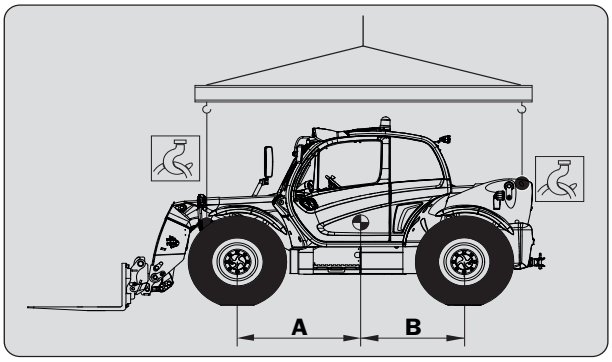

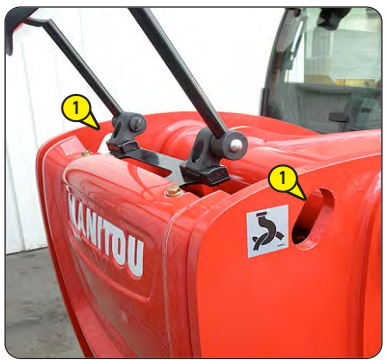

H7 – TELEHANDLER ON A PLATFORM

TRANSPORTING

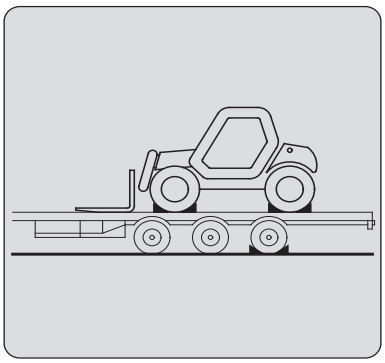

Ensure that the safety instructions connected to the platform are respected before the loading of the lift truck and that the driver of the means of transport is informed about the dimensions and the weight of the lift truck (see: 2 - DESCRIPTION: CHARACTERISTICS).

Ensure that the platform is of sufficient size and load capacity for transporting the lift truck. Check also the allowable ground contact pressure of the platform relative to the lift truck.

For lift trucks equipped with a turbo-charged I.C. engine, block off the exhaust outlet to avoid rotation of the turbo shaft without lubrication when transporting the vehicle.

LOADING THE TELEHANDLER

- Block the wheels of the platform.
- Attach the loading ramps to the platform in such a way as to give the shallowest possible ramp angle for the lift truck.
- Load the lift truck parallel to the platform.
- Stop the lift truck (see: 1 - OPERATING AND SAFETY INSTRUCTIONS: DRIVING INSTRUCTIONS UNLADEN AND LADEN).

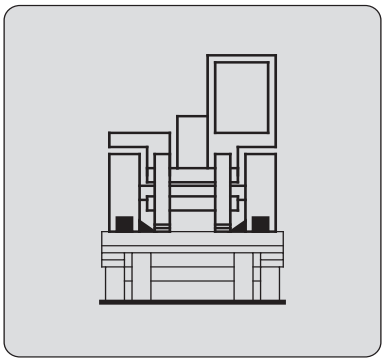

STOWING THE TELEHANDLER

- Fix the chocks to the platform at the front and at the back of each tyre.
- Also fix the chocks to the platform on the inside of each tyre.
- Secure the lift truck to the platform with sufficiently strong ropes to the anchoring points 1 provided.
- Tighten the ropes.

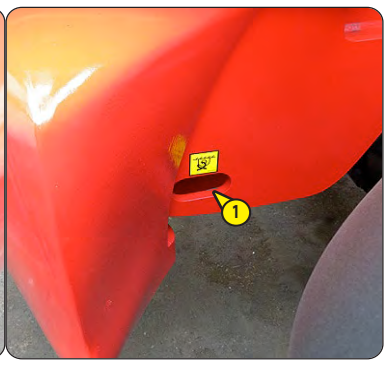

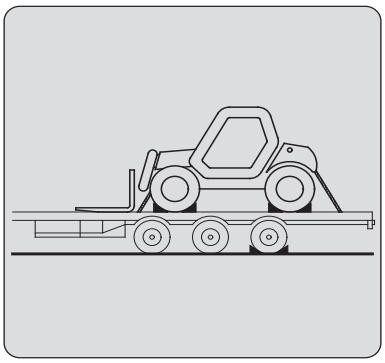

H8 – RADIO REMORE CONTOL MAINTENANCE

Daily routine maintenance

Before starting to work:

- make sure that the battery housing and the battery contacts are always clean
- make sure that the gaskets, bellows and caps of the actuators (joysticks, selectors and pushbuttons) are intact, soft and elastic
- make sure that the transmitting unit panel symbols can be easily recognised and replace the panel if necessary
- check that the three plates on the transmitting unit are readable and intact
- make sure that the mechanical operation of the STOP pushbutton is correct.

During normal operation:

- check structural integrity of the transmitting unit
- make sure that materials that could endanger the transmitting unit usage and safety (such as concrete, sand, lime, dust) do not deposit on it.

After using the radio remote control:

- clean the transmitting unit: never use solvents or flammable/corrosive materials and do not use high-pressure water cleaners or steam cleaners
- store the transmitting unit in clean and dry areas.

Three-month routine maintenance

Every 3 months:

- remove dust or deposit of material from the receiving unit: never use solvents or flammable/corrosive materials to clean it, and do not use high-pressure water cleaners or steam cleaners
- check structural integrity of the receiving unit
- make sure that the wiring of the receiving unit is intact and connected
- make sure that the receiving unit panel symbols can be easily recognised and replace the panel if necessary
- check that the plates on the receiving unit are readable and intact.

Special maintenance

Any fault should be repaired by authorised personnel only (Contact the support service MANITOU).

Troubleshooting

When the radio remote control does not work:

- bring the transmitting unit close to the receiving unit to avoid radio interference and disturbances
- establish whether the problem lies with the radio remote control or with the machine.
  Therefore, before any inspection, try to control the machine from a control unit different from the radio remote control, if present.
  If the problem persists, it lies with the machine.
  If not, the problem may lie with the radio remote control. In such case, please refer to paragraph **"Malfunction signalled by the transmitting unit".**

Malfunction signalled by the transmitting unit (Pushbutton)
Identify the radio remote control malfunction according to the light signals on the units. If the problem persists after the suggested solution has been carried out, contact the support service of MANITOU.

Signals	Possible reason	Solutions
The green LED does not switch on when the START pushbutton is pressed, even though both the battery and the S-KEY are inserted.	The battery is flat.	Replace the battery with a charged one.
The green LED blinks fast.	No radio link.	Bring the transmitting unit close to the receiving unit.
The red LED switches on for 2 seconds and then the unit switches off.	The transmitting unit does not work correctly.	Contact the support service MANITOU.
The red LED blinks once during start up.	The STOP pushbutton is locked or damaged.	Unlock the STOP pushbutton. If this signal persists, contact the support service MANITOU.
The red LED blinks twice during start up.	At least one of the actuators corresponding to commands is activated or damaged.	Bring the actuators to the rest position. If this signal persists, contact the support service MANITOU.
The red LED blinks three times during start up.	The battery is flat.	Replace the battery with a charged one.
The red LED blinks four times during start up.	At least one of the actuators corresponding to commands is activated or damaged.	Bring the actuators to the rest position. If this signal persists, contact the support service MANITOU.

Malfunction signalled by the receiving unit
Identify the radio remote control malfunction according to the light signals on the units. If the problem persists after the suggested solution has been carried out, contact the support service of MANITOU.

Signals	Possible reason	Solutions
The LED POWER is off.	The receiving unit is switched off.	Make sure that fuse F2 is intact. Correctly plug in the connecting plug and power on the receiving unit.
The POWER LED is on.	No radio link.	Bring the transmitting unit close to the receiving unit.
The ALARM LED blinks once.	Error on the STOP outputs.	Make sure that fuses F3 and F4 are intact. Correctly plug in the connecting plug. Make sure that the STOP outputs are wired correctly.
The ALARM LED blinks twice.	Error on the SAFETY outputs.	Make sure that fuses F1 and F5 are intact. Correctly plug in the connecting plug. Make sure that the SAFETY outputs are wired correctly.
The ALARM LED blinks three times.	Error on the outputs corresponding to direction commands.	Contact the support service of the machine manufacturer. Make sure that the outputs of direction commands are wired correctly.
The ALARM LED is on.	The receiving unit does not work correctly.	Contact the support service of the machine manufacturer.
The RUN LED blinks.	The receiving unit does not send commands in the CAN network.	Contact the support service MANITOU.
The ERR LED blinks.	CAN communication error.	Contact the support service MANITOU.

https://truckmanualshub.com/

4 - OPTIONAL ATTACHMENTS FOR USE WITH THE RANGE

649010 EN/US/AU (15/12/2019)
MHT 790 1041D H ST4 S1

https://truckmanualshub.com/
duma rent
www.duma-rent.com

INDEX

4 - OPTIONAL ATTACHMENTS FOR USE WITH THE RANGE

INTRODUCTION 5

ATTACHMENT CONNECTIONS MANOEUVRES 6

ATTACHMENT CHARACTERISTICS 8

PROTECTION DEVICES FOR ATTACHMENTS 8

https://truckmanualshub.com/
duma rent
www.duma-rent.com

INTRODUCTION

- Your lift truck must be provided with an interchangeable equipment. This interchangeable equipment is called ATTACHMENT.
- A wide range of attachments specifically designed to fit your lift truck and guaranteed by MANITOU is available.

Only attachments approved by MANITOU can be used with the lift truck.
The manufacturer will have no liability in case of modifications or adaptations of the attachments without his knowledge.

- The attachments are supplied with a load chart relating to your lift truck. The user manual and the load chart must be kept on the lift truck. The use of standard attachments is subject to the instructions contained in this manual.

The maximum loads are defined by the capacity of the lift truck taking into account the weight and the centre of gravity of the attachment.
If the capacity of the attachment is below the capacity of the lift truck, never exceed this limit.

- Some specific uses require the attachment to be adapted as it may not be included in the optional catalogue. Other solutions are available: for more information, please contact your dealer.

Due to their size, when the boom is lowered and retracted some attachments may interfere with the front tyres and damage them if the carriage is tilted downward.
IN ORDER TO AVOID THIS RISK, EXTEND THE BOOM FAR ENOUGH TO ELIMINATE ANY INTERFERENCE (THE DISTANCE WILL DEPEND ON THE TRUCK AND THE ATTACHMENT).

SUSPENDED LOAD

Suspended loads MUST be handled only with lift trucks designed for such purpose
(see: 1 - OPERATING AND SAFETY OBLIGATIONS: LOAD HANDLING INSTRUCTIONS: H - TAKING UP AND LAYING A SUSPENDED LOAD).

ATTACHMENT CONNECTION MANOEUVRES

1 - ATTACHMENT WITHOUT HYDRAULIC CIRCUIT WITH MANUAL LOCK

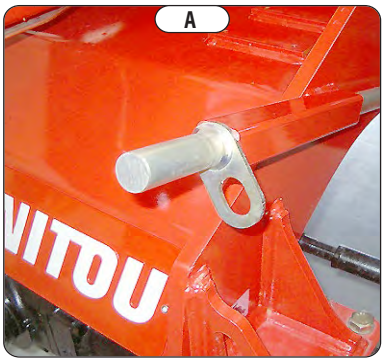

ENGAGING THE ATTACHMENT

- Check that the attachment is in a position which simplifies the connection to the carriage. If it is badly positioned, take all the necessary precautions to move it safely.
- Check that the locking pin is engaged in the support (fig. A).
- Place the lift truck with the boom lowered in front of and parallel to the attachment and tilt the carriage forward (fig. B).
- Take the carriage under the connection pipe of the attachment, slightly raise the boom and tilt the carriage back in order to position the attachment (fig. C).
- Raise the accessory off the ground for easier engagement.

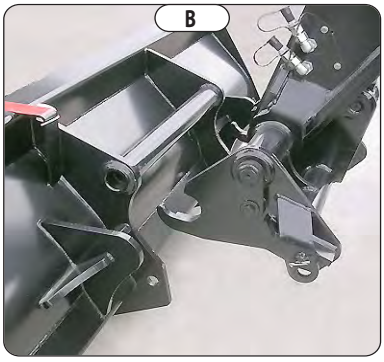

MANUAL LOCKING

- Take the locking pin from the support (fig. A) and lock the attachment in place (fig. D). Do not forget to fit on the split pin.

MANUAL RELEASE

- Follow the MANUAL LOCKING procedure in reverse order, taking care to replace the locking pin in its support (fig. A).

LAYING THE ATTACHMENT

- Follow the ENGAGING THE ATTACHMENT procedure in reverse order, taking care to lay the attachment flat on the ground and in closed position.

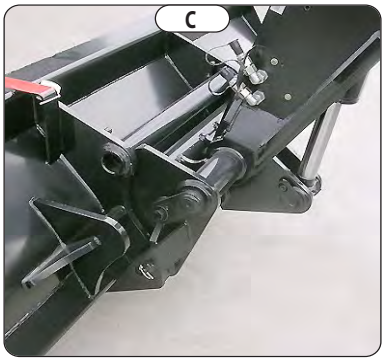

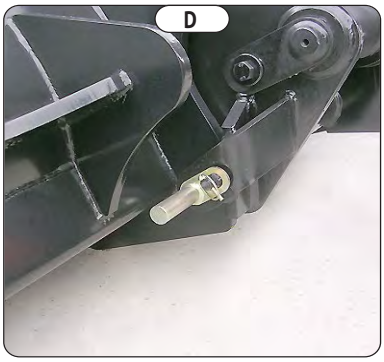

2 - HYDRAULIC ATTACHMENT AND MANUAL LOCK

ENGAGING THE ATTACHMENT

- Check that the attachment is in a position which simplifies the connection to the carriage. If it is badly positioned, take all the necessary precautions to move it safely.
- Check that the locking pin is engaged in the support (fig. A).
- Place the lift truck with the boom lowered in front of and parallel to the attachment and tilt the carriage forward (fig. B).
- Take the carriage under the connection pipe of the attachment, slightly raise the boom and tilt the carriage back in order to position the attachment (fig. C).
- Raise the accessory off the ground for easier engagement.

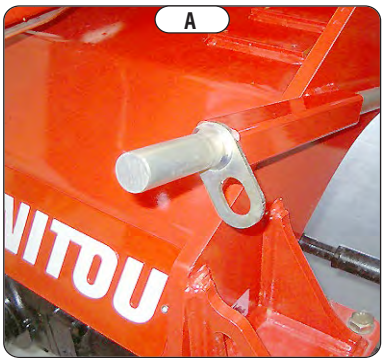

MANUAL LOCKING AND CONNECTION OF THE ATTACHMENT

Check the quick couplings for cleanliness and protect the unused orifices with the caps provided.

- Take the locking pin from the support (fig. A) and lock the attachment in place (fig. D). Do not forget to fit on the split pin.
- Discharge the pressure from the hydraulic circuit of the attachment by giving 4/5 impulses, forwards and backwards, on button 1 (fig. E) of the distributor lever.
- Connect the quick couplings, respecting the logic of the hydraulic movements of the attachment.

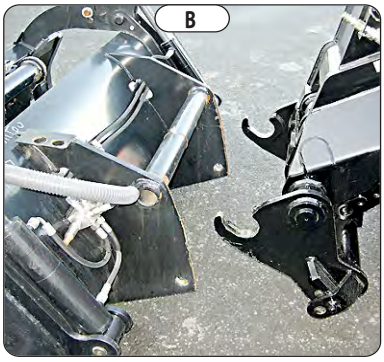

MANUAL RELEASE AND DISCONNECTION OF THE ATTACHMENT

- Follow the MANUAL LOCKING AND CONNECTION OF THE ATTACHMENT procedure in reverse order, taking care to replace the locking pin in its support (fig. A).

LAYING THE ATTACHMENT

- Follow the ENGAGING THE ATTACHMENT procedure in reverse order, taking care to lay the attachment flat on the ground and in closed position.

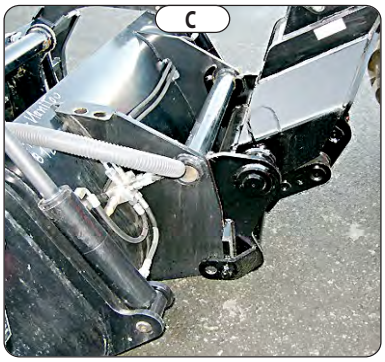

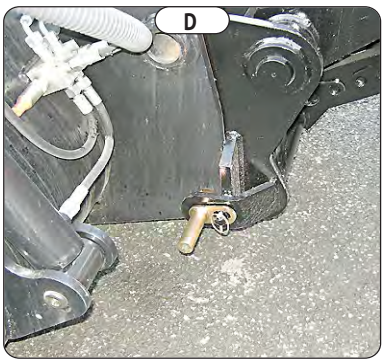

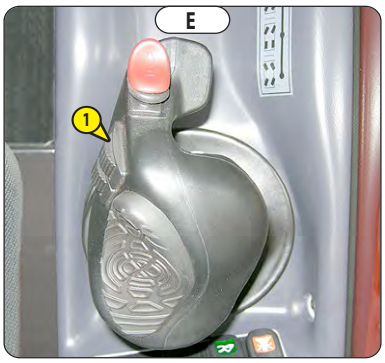

ATTACHMENT CHARACTERISTICS

FORK CARRIAGES

FLOATING FORKS CARRIAGE			
	TFF L1425	TFF L1425	TFF L1425
REFERENCE	**939800**	**939345**	**939346**
Rated capacity	9000 kg @ 600 mm 19841lb @ 23.6 in	9000 kg @ 600 mm 19841lb @ 23.6 in	9000 kg @ 600 mm 19841lb @ 23.6 in
Width	1425 mm - 56.1 in	1425 mm - 56.1 in	1425 mm - 56.1 in
Fork (Section)	200x60x1200 mm 7.8x2.3x47.2 in	200x60x1500 mm 7.8x2.3x59 in	200x60x2000 mm 7.8x2.3x78.7 in
Weight	665 kg - 1466 lb	730 kg - 1609 lb	820 kg - 1807 lb

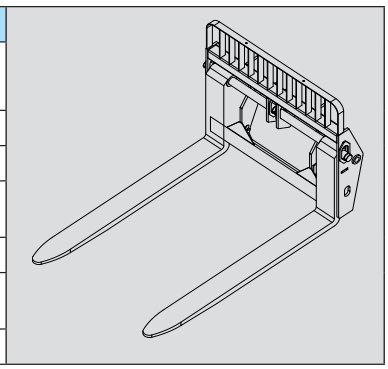

FLOATING FORKS CARRIAGE			
	TFF L2000	TFF L2000	TFF L2000
REFERENCE	**939347**	**939348**	**939349**
Rated capacity	9000 kg @ 600 mm 19841lb @ 23.6 in	9000 kg @ 600 mm 19841lb @ 23.6 in	9000 kg @ 600 mm 19841lb @ 23.6 in
Width	2000 mm - 78.7 in	2000 mm - 78.7 in	2000 mm - 78.7 in
Fork (Section)	200x60x1200 mm 7.8x2.3x47.2 in	200x60x1500 mm 7.8x2.3x59 in	200x60x2000 mm 7.8x2.3x78.7 in
Weight	665 kg - 1466 lb	730 kg - 1609 lb	820 kg - 1807 lb

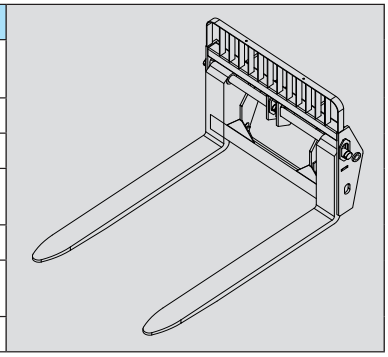

FLOATING FORKS CARRIAGE			
	TFF L1750	TFF L2000	
REFERENCE	**53020639**	**53007230**	
Rated capacity	9000 kg @ 600 mm 19841lb @ 23.6 in	9000 kg @ 600 mm 19841lb @ 23.6 in	
Width	1750 mm - 68.8 in	2000 mm - 78.7 in	
Fork (Section)	200x60x2400 mm 7.8x2.3x94.4 in	200x60x2100 mm 7.8x2.3x82.6 in	
Weight	873 kg - 1924 lb	873 kg - 1924 lb	

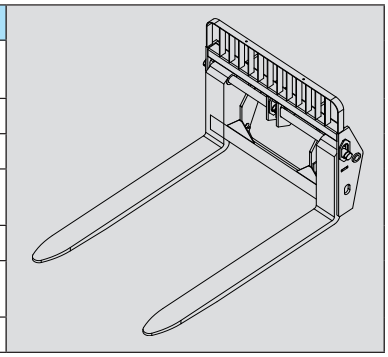

FLOATING FORKS CARRIAGE			
	TFF CN 10		
REFERENCE	**53012760**		
Rated capacity	9000 kg @ 600 mm 19841lb @ 23.6 in		
Side Shift	2x200 mm - 2x7.8 in		
Width	1750 mm - 68.8 in		
Fork (Section)	200x60x2400 mm 7.8x2.3x94.4 in		
Weight	1250 kg - 2755 lb		

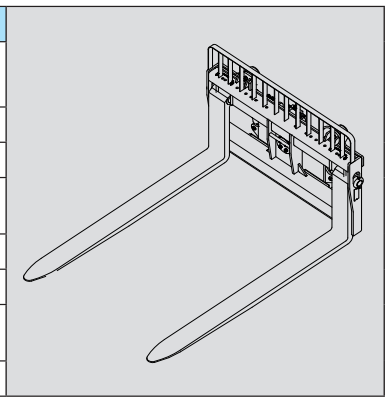

TILTING FORKS CARRIAGE

	PFB L1750	PFB L2000	PFB L1750
REFERENCE	**939056**	**939058**	**53021960**
Rated capacity	9000 kg @ 600 mm 19841lb @ 23.6 in	9000 kg @ 600 mm 19841lb @ 23.6 in	9000 kg @ 600 mm 19841lb @ 23.6 in
Width	1750 mm - 68.8 in	2000 mm - 78.7 in	1750 mm - 68.8 in
Fork (Section)	200x60x1200 mm 7.8x2.3x47.2 in	200x60x1200 mm 7.8x2.3x47.2 in	200x60x1500 mm 7.8x2.3x59 in
Weight	780 kg - 1719 lb	822 kg - 1812 lb	830 kg - 1830 lb

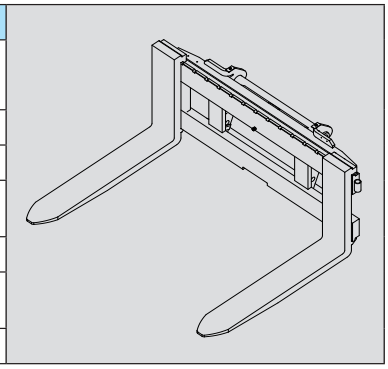

TILTING FORKS CARRIAGE

	PFB L1750	PFB L2000	PFB L2000
REFERENCE	**53025302**	**53022163**	**53025305**
Rated capacity	9000 kg @ 600 mm 19841lb @ 23.6 in	9000 kg @ 600 mm 19841lb @ 23.6 in	9000 kg @ 600 mm 19841lb @ 23.6 in
Width	1750 mm - 68.8 in	1750 mm - 68.8 in	1750 mm - 68.8 in
Fork (Section)	200x60x2000 mm 7.8x2.3x78.7 in	200x60x1500 mm 7.8x2.3x59 in	200x60x2000 mm 7.8x2.3x78.7 in
Weight	898 kg - 1980 lb	878 kg - 1936 lb	898 kg - 1980 lb

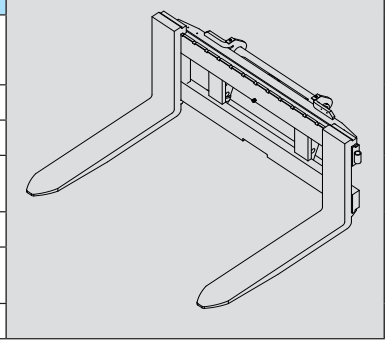

TILTING FORKS CARRIAGE

	PFB L1750 + Side Shift	PFB L2000 + Side Shift	PFB L2000 + Side Shift
REFERENCE	**939057**	**939059**	**53025304**
Rated capacity	9000 kg @ 600 mm 19841lb @ 23.6 in	9000 kg @ 600 mm 19841lb @ 23.6 in	9000 kg @ 600 mm 19841lb @ 23.6 in
Side Shift	2x100 mm - 2x3.9 in	2x100 mm - 2x3.9 in	2x100 mm - 2x3.9 in
Width	1750 mm - 68.8 in	2000 mm - 78.7 in	1750 mm - 68.8 in
Fork (Section)	200x70x1800 mm 7.8x2.7x70.8 in	200x70x1800 mm 7.8x2.7x70.8 in	200x60x1500 mm 7.8x2.3x59 in
Weight	1090 kg - 2403 lb	1100 kg - 2425 lb	1135 kg - 2502 lb

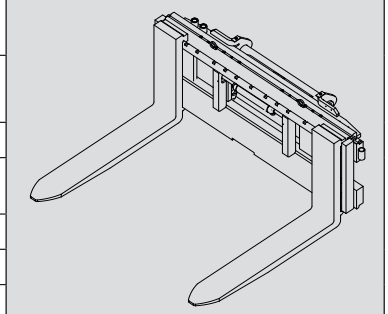

TILTING FORKS CARRIAGE

	PFB L1750 + Side Shift	PFB L1750 + Side Shift	CAT 2500/4000+SS+F3000
REFERENCE	**52576140**	**52578270**	**52674319**
Rated capacity	9000 kg @ 600 mm 19841lb @ 23.6 in	9000 kg @ 600 mm 19841lb @ 23.6 in	4000 kg @ 1500 mm 19841lb @ 23.6 in
Side Shift	2x100 mm - 2x3.9 in	2x100 mm - 2x3.9 in	2x100 mm - 2x3.9 in
Width	1750 mm - 68.8 in	1850 mm - 68.8 in	2500 mm - 68.8 in
Fork (Section)	200x60x2400 mm 7.8x2.3x94.4 in	250x50x1200 mm 9.8x1.9x47.2 in	200x70x3000 mm 7.8x2.7x118 in
Weight	1090 kg - 2403 lb	1128 kg - 2487 lb	1900 kg - 4189 lb

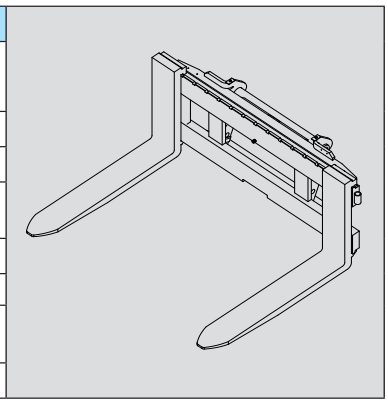

TILTING FORKS CARRIAGE

	PFB L1750 + Side Shift	PFB L1750 + Side Shift	PFB L2000 + Side Shift
REFERENCE	**53025223**	**53025340**	**53025303**
Rated capacity	7000 kg @ 600 mm 15432 lb @ 23.6 in	9000 kg @ 600 mm 19841lb @ 23.6 in	9000 kg @ 600 mm 19841lb @ 23.6 in
Side Shift	2x100 mm - 2x3.9 in	2x100 mm - 2x3.9 in	2x100 mm - 2x3.9 in
Width	1750 mm - 68.8 in	1750 mm - 68.8 in	1750 mm - 68.8 in
Fork (Section)	130x60x1200 mm 5.1x2.3x47.2 in	200x60x1700 mm 7.8x2.3x67 in	200x60x2000 mm 7.8x2.3x78.7 in
Weight	1010 kg - 2227 lb	1200 kg - 2646 lb	1211 kg - 2670 lb

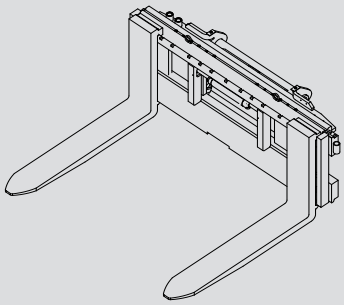

HD FORK POSITIONERS

	TFF + Positioner 9t 2500mm	TFF + Positioner 9t 2000mm	TFF + Positioner 9t 2000mm
REFERENCE	**939355**	**939054**	**53009730**
Rated capacity	9000 kg @ 600 mm 19841lb @ 23.6 in	9000 kg @ 600 mm 19841lb @ 23.6 in	9000 kg @ 600 mm 19841lb @ 23.6 in
Width	2500 mm - 98.4 in	2500 mm - 98.4 in	2500 mm - 98.4 in
Fork (Section)	200x60x1200 mm 7.8x2.3x47.2 in	200x60x1800 mm 7.8x2.3x70.8 in	200x60x2000 mm 7.8x2.3x78.7 in
Weight	925 kg - 2039 lb	920 kg - 2028 lb	980 kg - 2160 lb

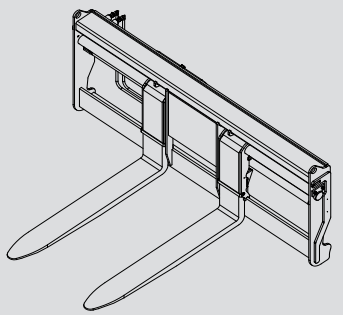

HD FORK POSITIONERS

	TFF + Positioner 9t 2400mm		
REFERENCE	**53018346**		
Rated capacity	9000 kg @ 600 mm 19841lb @ 23.6 in		
Width	2500 mm - 98.4 in		
Fork (Section)	200x60x1800 mm 7.8x2.3x70.8 in		
Weight	1118 kg - 2465 lb		

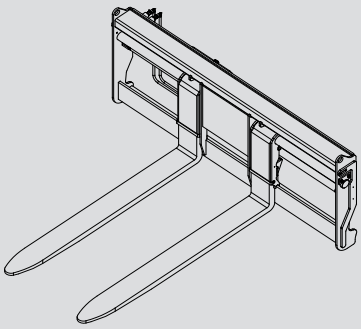

HD FORK POSITIONERS

	TFF + Positioner + Side Shift 9t 2000mm		
REFERENCE	**939055**		
Rated capacity	9000 kg @ 600 mm 19841lb @ 23.6 in		
Side Shift	2x200 mm - 2x7.8 in		
Width	2000 mm - 78.7 in		
Fork (Section)	200x60x1500 mm 7.8x2.3x59 in		
Weight	1120 kg - 2469 lb		

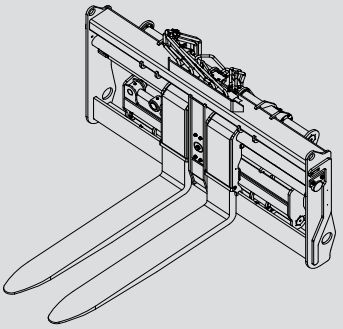

HD FORK POSITIONERS

	TFF + Positioner + Side Shift 9t 2500mm	TFF + Positioner + Side Shift 9t 2500mm	TFF + Positioner + Side Shift 9t 2500mm
REFERENCE	**939357**	**53004234**	**939358**
Rated capacity	9000 kg @ 600 mm 19841lb @ 23.6 in	9000 kg @ 600 mm 19841lb @ 23.6 in	9000 kg @ 600 mm 19841lb @ 23.6 in
Side Shift	2x200 mm - 2x7.8 in	2x200 mm - 2x7.8 in	2x200 mm - 2x7.8 in
Width	2500 mm - 98.4 in	2500 mm - 98.4 in	2500 mm - 98.4 in
Fork (Section)	200x60x1200 mm 7.8x2.3x47.2 in	200x60x1500 mm 7.8x2.3x59 in	200x60x1800 mm 7.8x2.3x70.8 in
Weight	1230 kg - 2711 lb	1255 kg - 2766 lb	1310 kg - 2888 lb

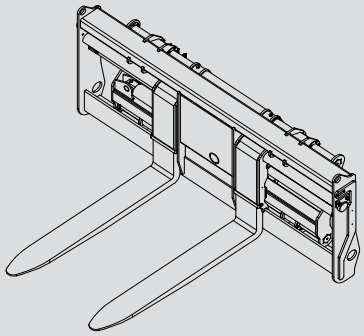

HD FORK POSITIONERS

	TFF + Positioner + Side Shift 9t 2500mm		
REFERENCE	**939359**		
Rated capacity	9000 kg @ 600 mm 19841lb @ 23.6 in		
Side Shift	2x200 mm - 2x7.8 in		
Width	2500 mm - 98.4 in		
Fork (Section)	200x60x2000 mm 7.8x2.3x78.7 in		
Weight	1370 kg - 3020 lb		

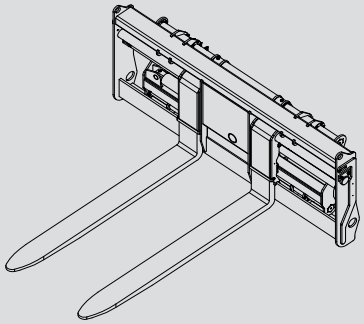

BUCKETS

AGRICULTURAL BUCKET

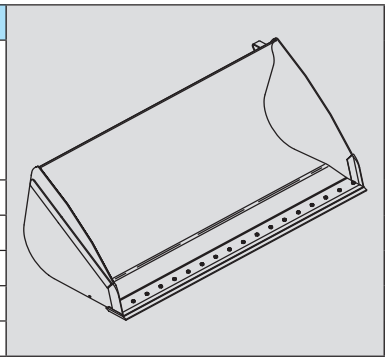

	CBA 2000 L2450	CBA 3000 L2500	CBA 4000 L2500
REFERENCE	**939160**	**939161**	**939162**
Content capacity	2000 L - 528 gal	3000 L - 792 gal	4000 L - 1057 gal
Width	2450 mm - 96.4 in	2500 mm - 98.4 in	2500 mm - 98.4 in
Weight	678 kg - 1494 in	784 kg - 1728 in	1311 kg - 2890 in

CONSTRUCTION BUCKET

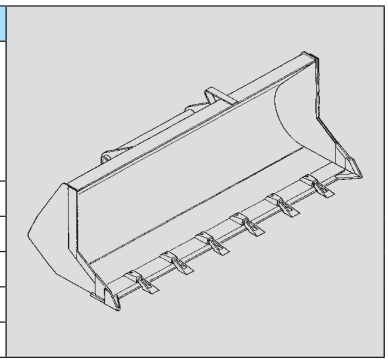

	CBC 1000 L2500	CBC 1500 L2500	
REFERENCE	**939163**	**939164**	
Content capacity	1000 L - 264.1 gal	1500 L - 396.2 gal	
Width	2500 mm - 98.4 in	2500 mm - 98.4 in	
Weight	620 kg - 1366 lb	669 kg - 1474 lb	

GENERAL PURPOSE BUCKET

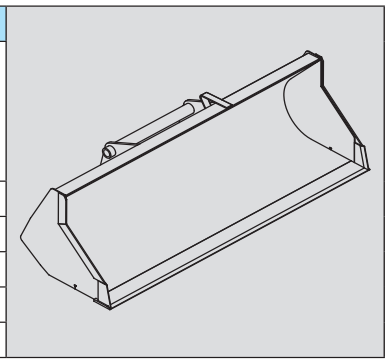

	CBR 1000 L2500	CBR 1500 L2500	
REFERENCE	**939165**	**939166**	
Rated capacity	1000 L - 264.1 gal	1500 L - 396.2 gal	
Width	2500 mm - 98.4 in	2500 mm - 98.4 in	
Weight	664 kg - 1463.8 lb	800 kg - 1763.6 lb	

WINCHES

HEAVY DUTY HYDRAULIC WINCH

MUST be used with a lift truck equipped with an operational hydraulic movement cut-out device.

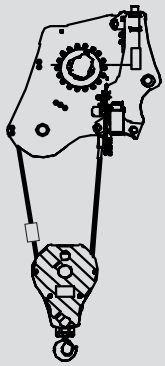

	WINCH 9T		
REFERENCE	**939030**		
Rated capacity	9000 kg - 19841 lb		
Weight	850 kg - 1873 lb		

JIBS & CRANES

CRANE HEAVY DUTY

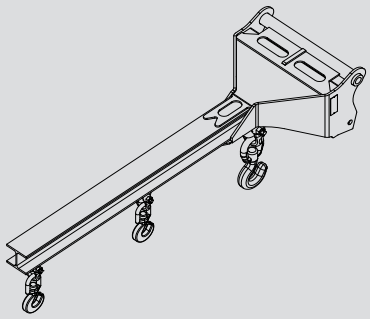

	P 9 T		
REFERENCE	**930830**		
Rated capacity	9000 kg - 19841 lb		
Hook no. 1	9000 kg - 19841 lb		
Hook no. 2	5000 kg - 11023 lb		
Hook no. 3	2000 kg - 4409 lb		
Weight	295 kg - 650 lb		

FRAME MOUNTED HOOK HEAVY DUTY

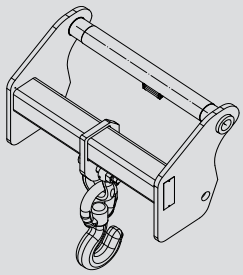

	PC 9 T		
REFERENCE	**939970**		
Rated capacity	9000 kg - 19841 lb		
Weight	129 kg - 284 lb		

CLAMPS

WASTE PAPER BALE CLAMP			
	CLBI 3360/6500+SS		
REFERENCE	**52598408**		
Rated capacity	6500 kg - 22046 lb		
Clamping range	730-3360 mm 28.7- 132 in		
Width	2400 mm - 94.4 in		
Weight	1675 kg - 3693 lb		

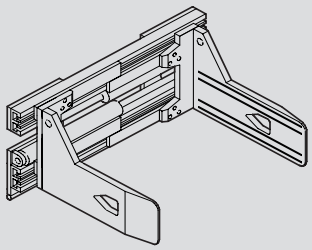

MINING ATTACHMENTS

SLIM TYRE HANDLER			
	TH 33 / 2000 S	TH 35 / 2900 S	
REFERENCE	**939039**	**939040**	
Rated capacity	2000 kg - 4409 lb	2900 kg	
Side Shift	2x100 mm - 2x3.9 in	2x100 mm - 2x3.9 in	
Clamping range	470 mm / 2100 mm 18.5 / 82.6 in	640 mm / 2650 mm 25.1 in / 104.3 lb	
Body rotation	360° continuos	360° continuos	
Weight	1160 kg - 2557 lb	1160 kg - 2557 lb	

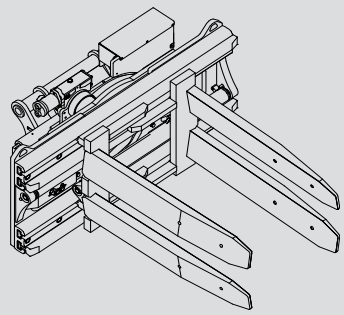

TYRE HANDLER			
	TH 49 / 2500		
REFERENCE	**914600**		
Rated capacity	1500 kg - 3306 lb		
Side Shift	2x150 mm - 2x5.9 in		
Clamping range	1100 mm / 3100 mm 43.3 in / 122 in		
Body rotation	+/- 22,5 °		
Pads Rotation	0°-120°		
Weight	1160 kg - 2557 lb		

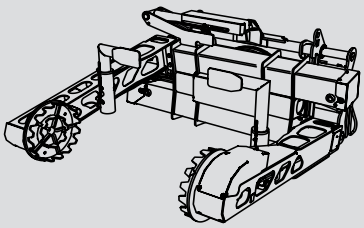

TYRE HANDLER

	TH 51 / 3500		
REFERENCE	**911969**		
Rated capacity	3500 kg - 7716 lb		
Side Shift	2x150 mm - 2x5.9 in		
Clamping range	1130 mm / 3410 mm 44.4 in / 134.2 in		
Body rotation	+/- 22,5 °		
Pads Rotation	0°-120°		
Weight	3200 kg - 7054 lb		

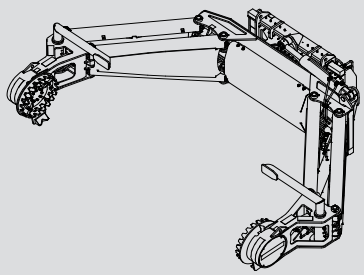

CYLINDER HANDLER

	CH 4		
REFERENCE	**911968**		
Rated capacity	4000 kg - 8818 lb		
Side Shift	2x150 mm - 2x5.9 in		
Clamping range	250 mm / 530 mm 9.8 in / 20.8 in		
Body rotation	+/- 22.5 °		
Head rotation	+/- 35 °		
Jib orientation	+/- 15 °		
Weight	1740 kg - 3836 lb		

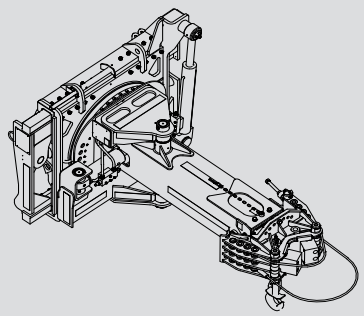

RIB HANDLING CLAMP

	PSC40		
REFERENCE	**923970**		
Rated capacity	4000 kg - 8818 lb		
Width	950 mm - 37.4 in		
Height	950 mm - 37.4 in		
Lenght	2300 mm - 90.5 in		
Weight	450 kg - 992 lb		

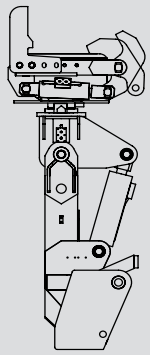

https://truckmanualshub.com/

duma rent

www.duma-rent.com

https://truckmanualshub.com/

5 - LOAD CHARTS FOR INTERCHANGEABLE EQUIPMENT

INTRODUCTION

The load capacity diagrams are only valid with the safety system properly activated.

THE LOAD CHARTS ARE AVAILABLE ON REQUEST

https://truckmanualshub.com/

MHT-X 790 104JD ST3A S1
MHT 790 104JD ST4 S1

649010 EN/US/AU (15/12/2019)
MHT 790 104JD H ST4 S1

https://truckmanualshub.com/

duma rent

www.duma-rent.com

MHT-X 790 104JD ST3A S1 / MHT 790 104JD ST4 S1

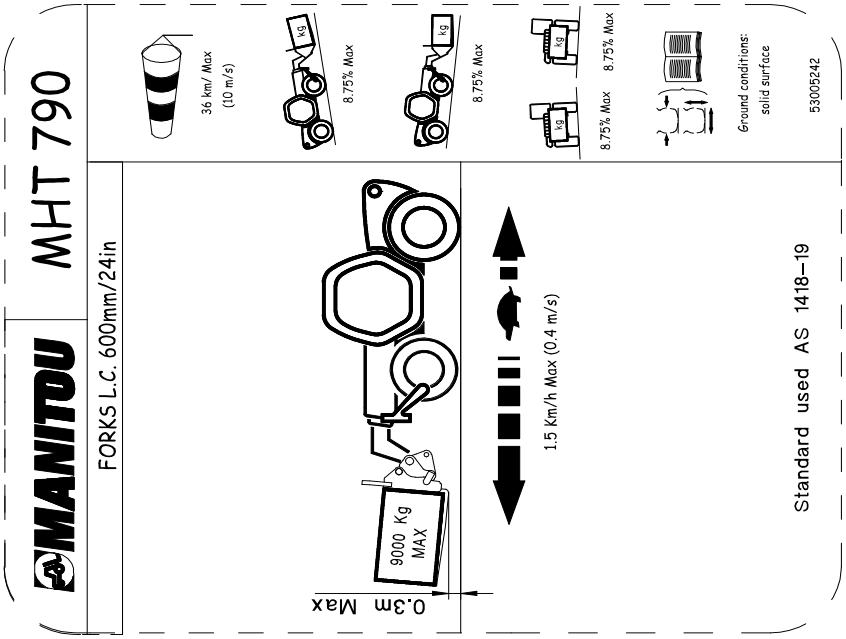

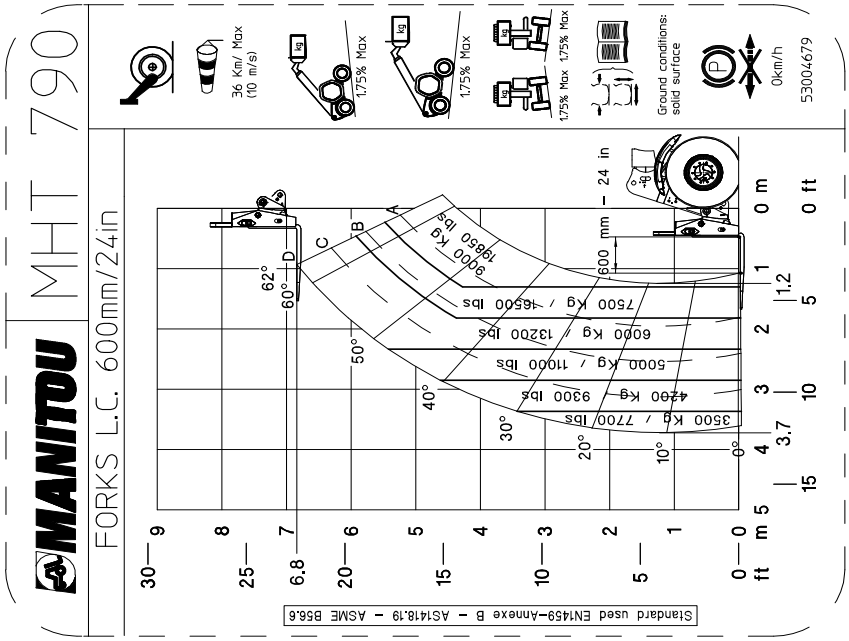

MHT-X 790 104JD ST3A S1 / MHT 790 104JD ST4 S1

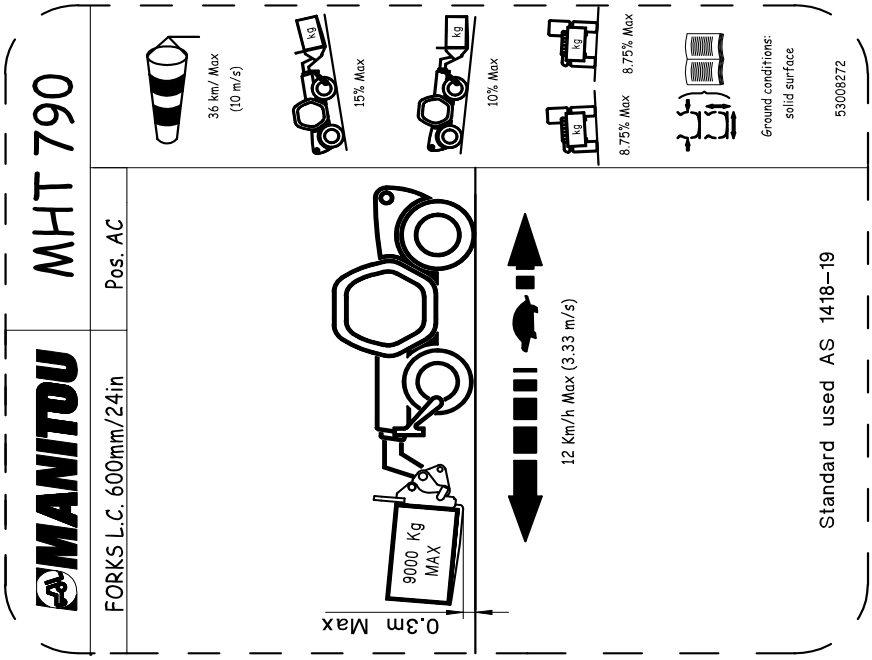

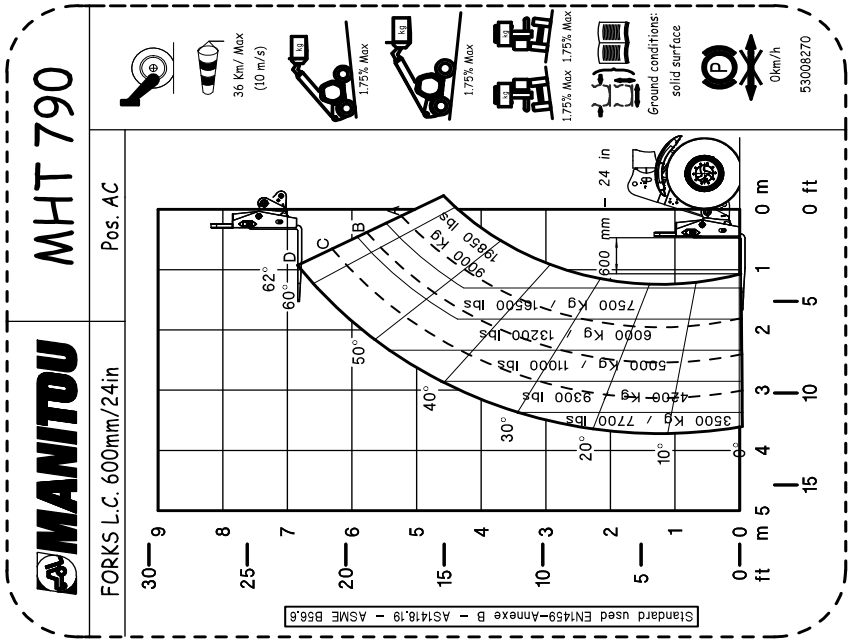

MHT-X 790 104JD ST3A S1 / MHT 790 104JD ST4 S1

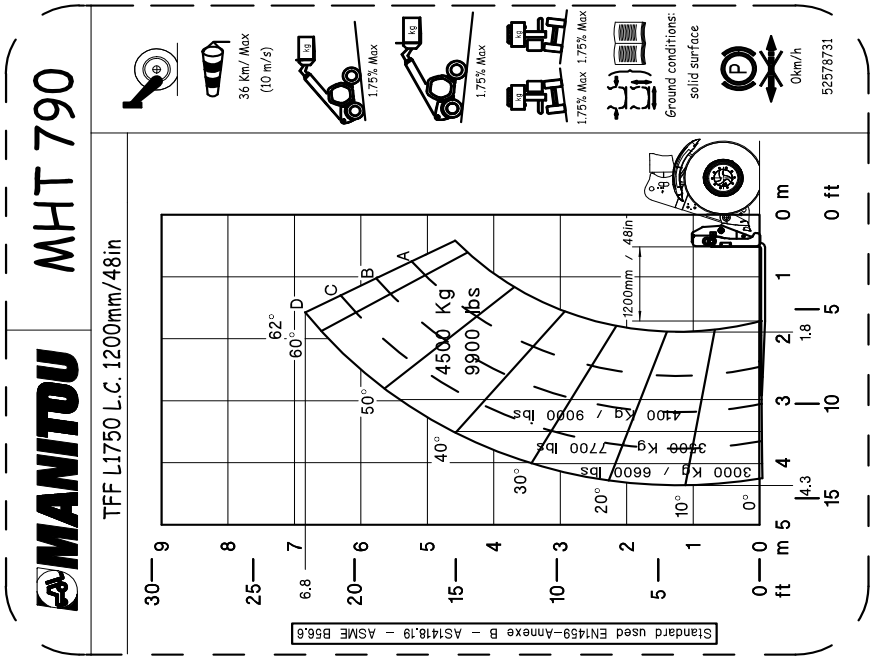

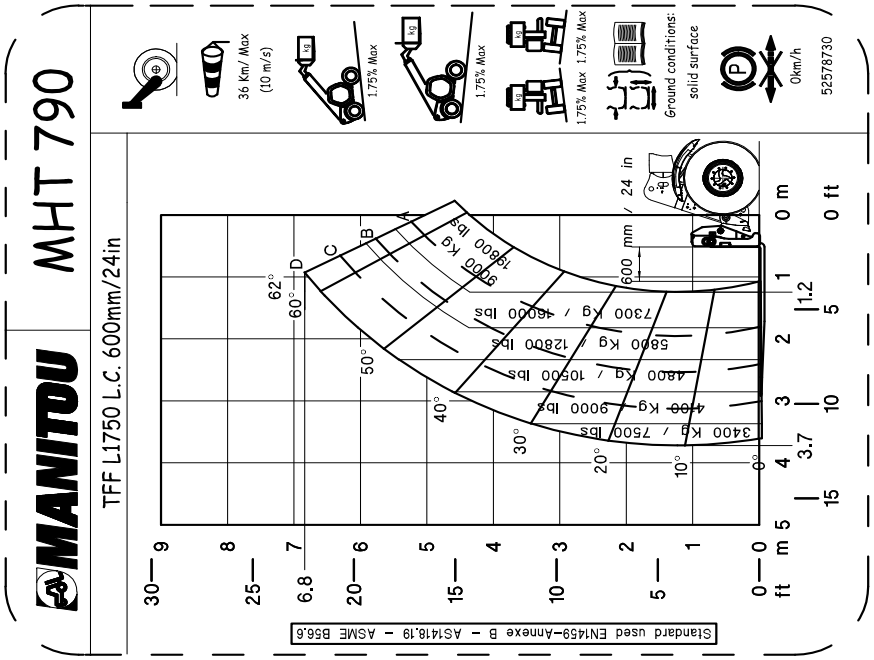

MHT-X 790 104JD ST3A S1 / MHT 790 104JD ST4 S1

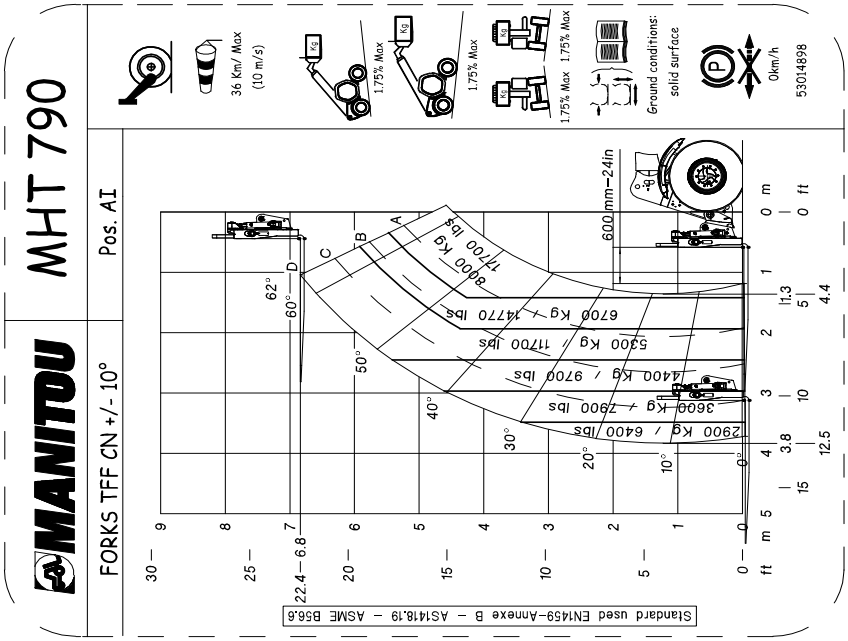

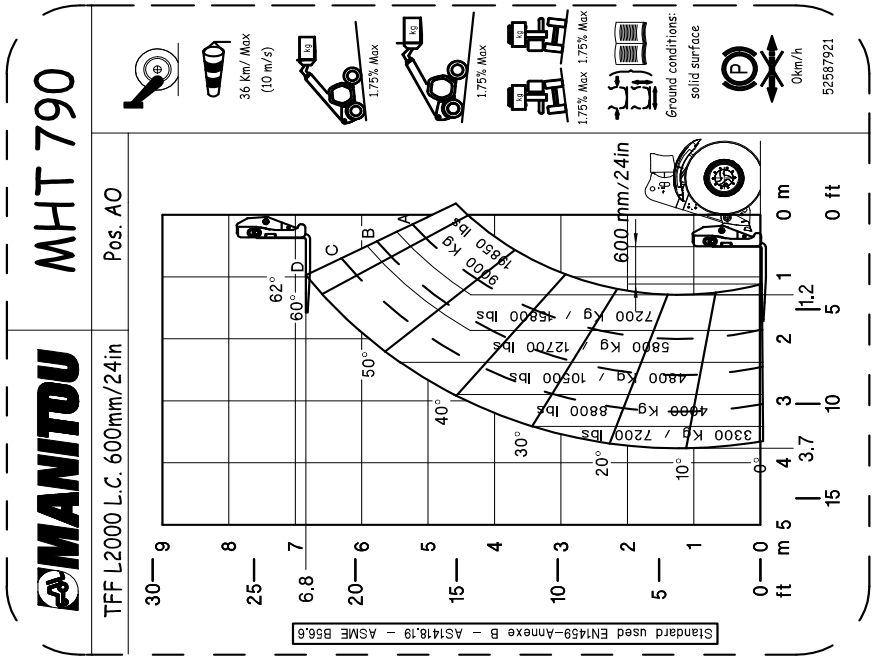

MHT-X 790 104JD ST3A S1 / MHT 790 104JD ST4 S1

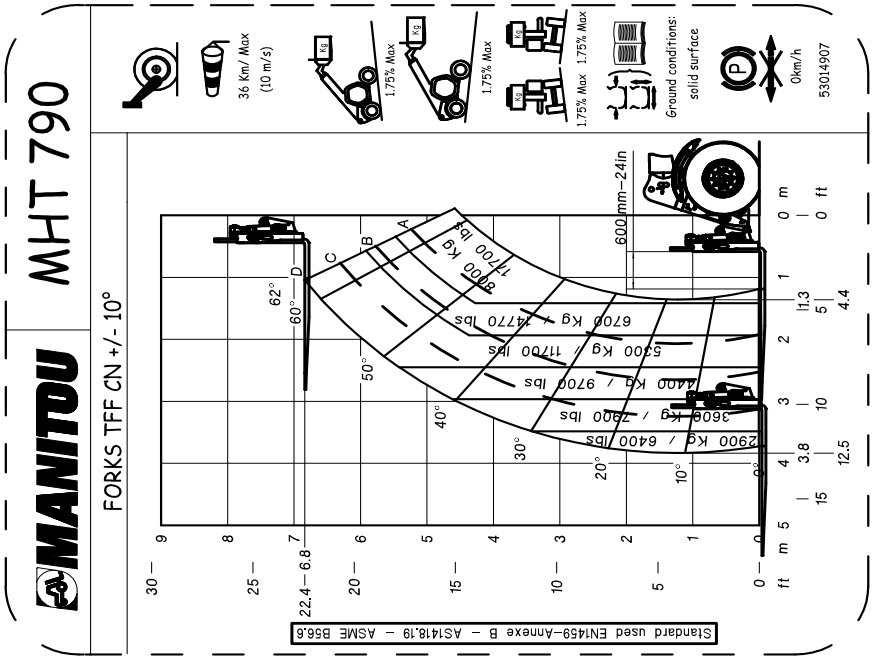

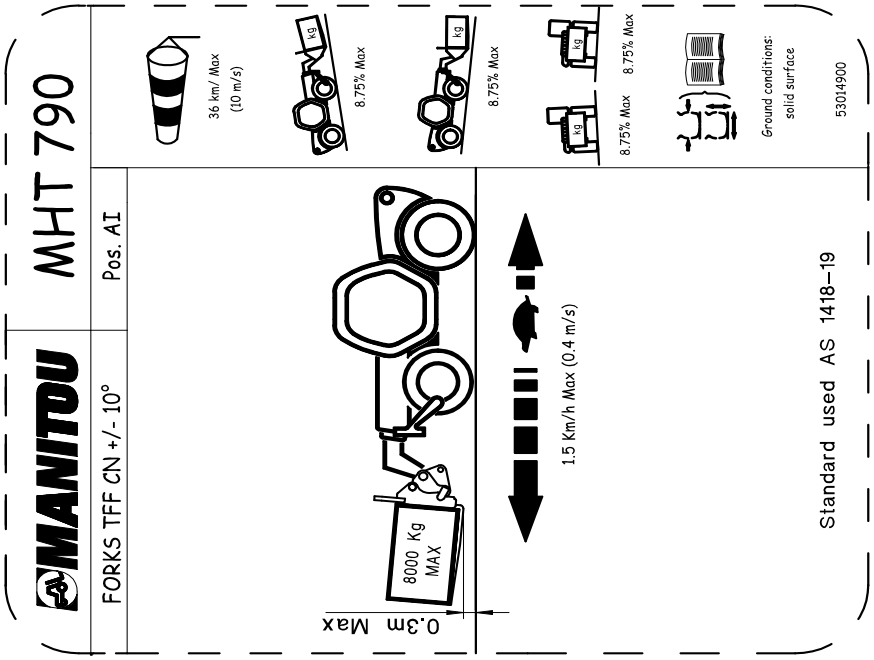

https://truckmanualshub.com/

duma rent

www.duma-rent.com

MHT-X 790 104JD ST3A S1 / MHT 790 104JD ST4 S1

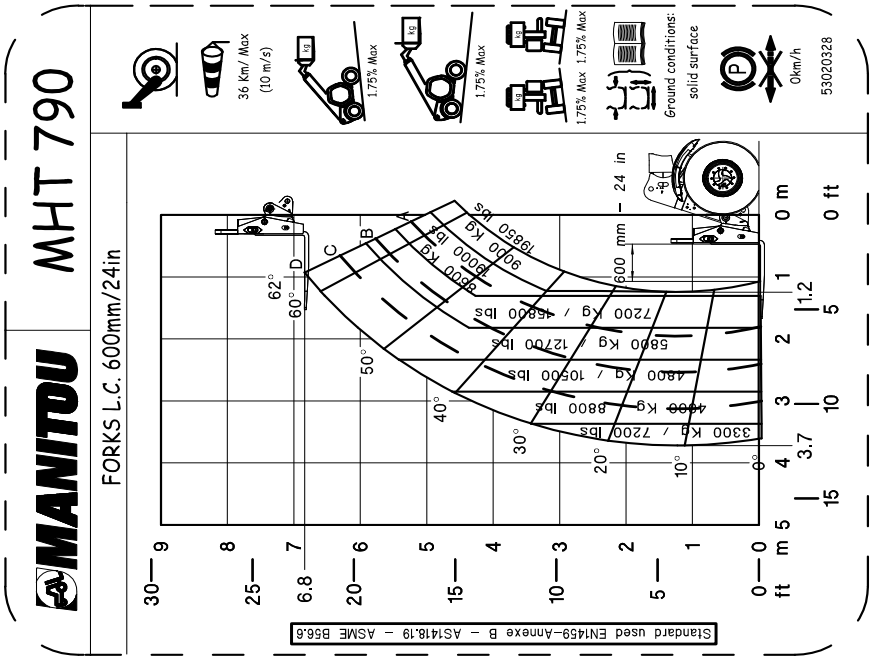

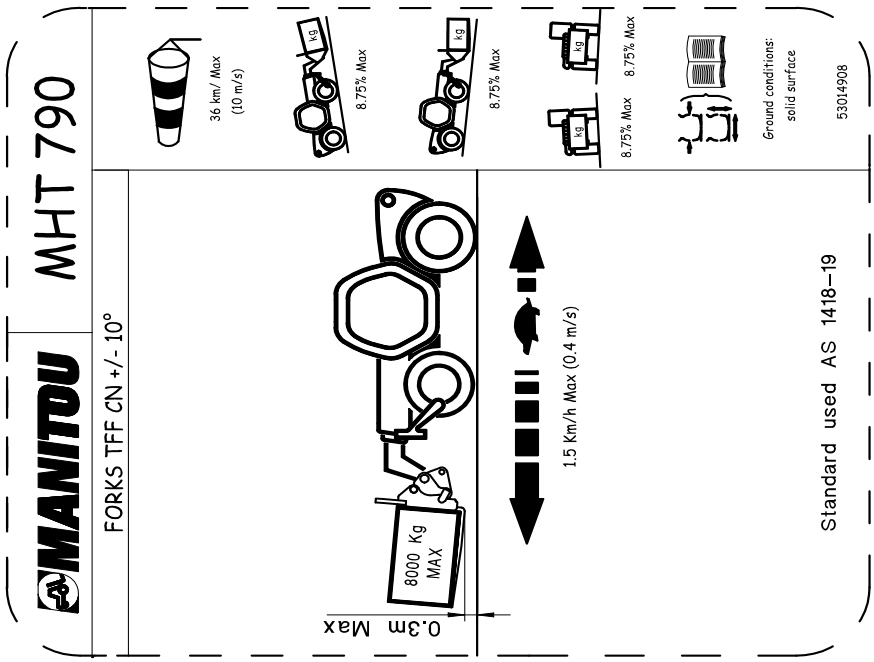

https://truckmanualshub.com/

MHT-X 790 104JD ST3A S1 / MHT 790 104JD ST4 S1

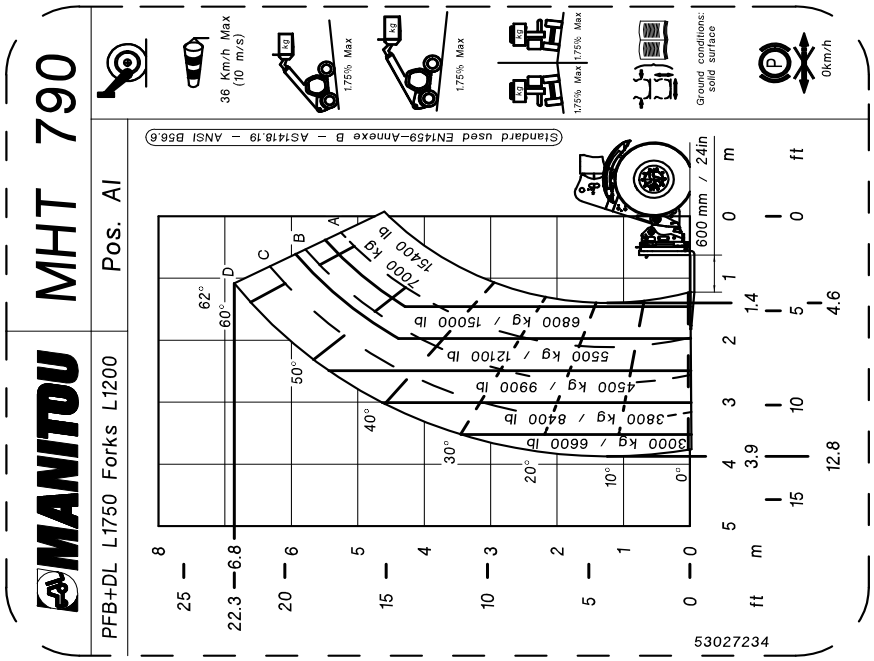

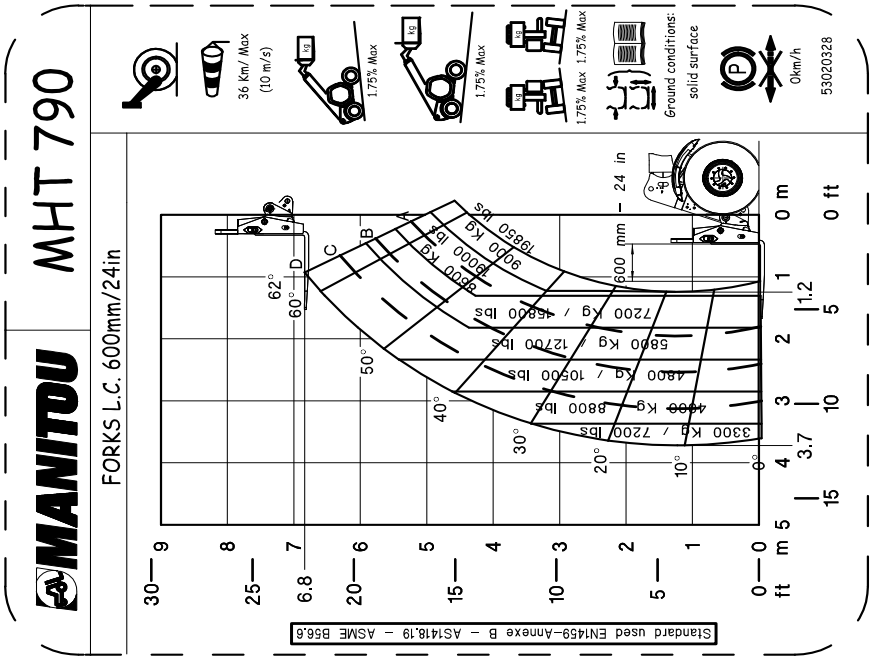

MHT-X 790 104JD ST3A S1 / MHT 790 104JD ST4 S1

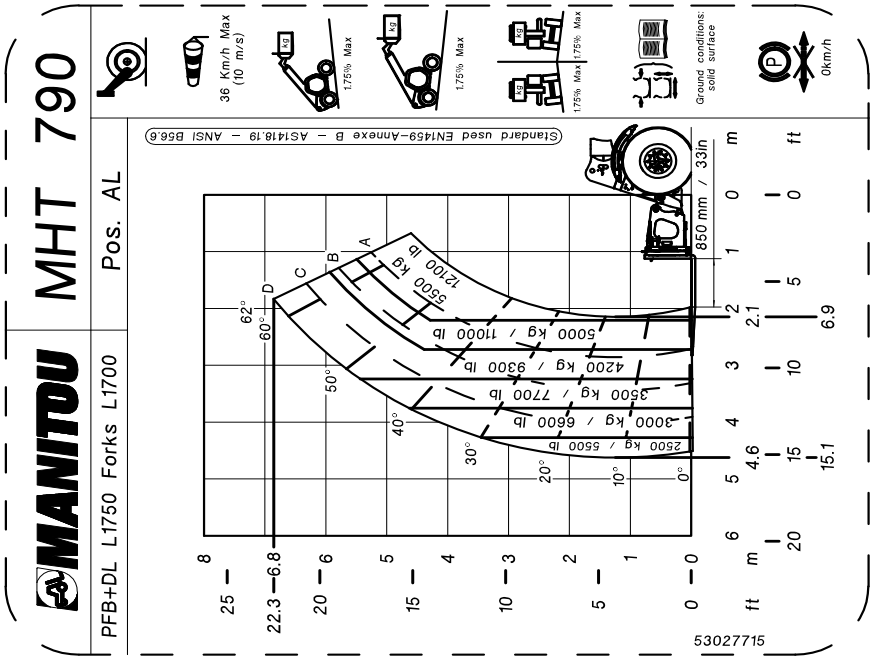

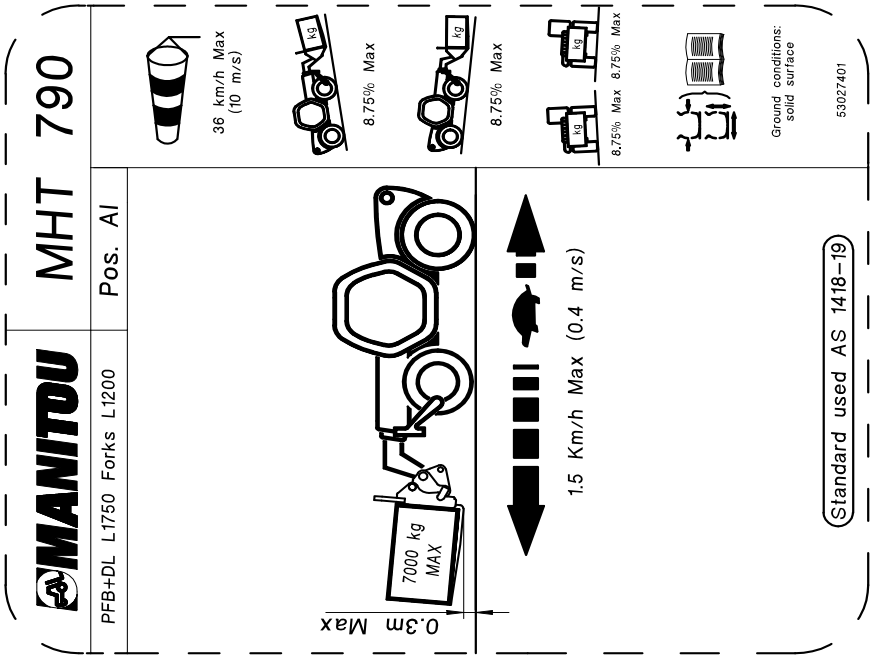

MHT-X 790 104JD ST3A S1 / MHT 790 104JD ST4 S1

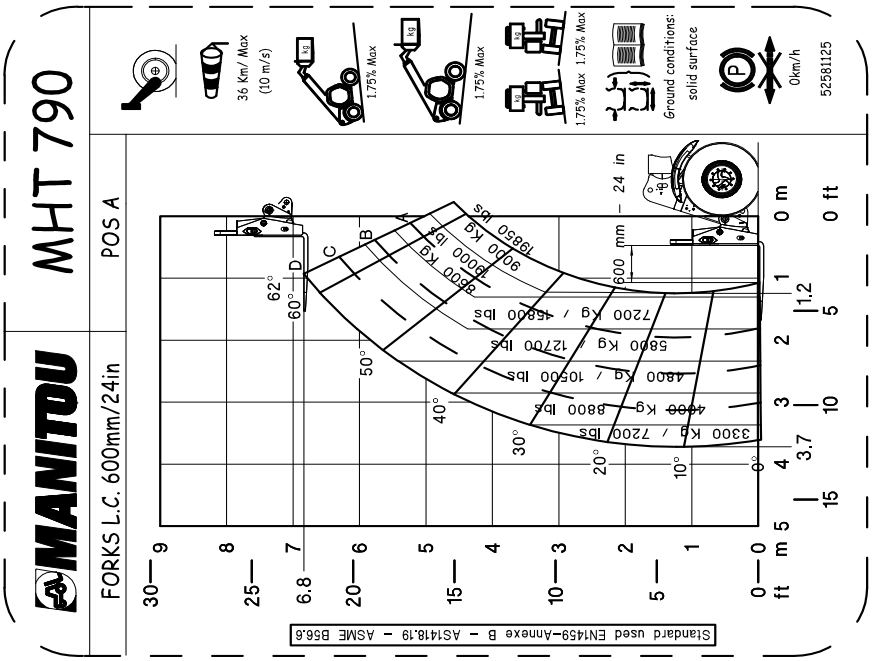

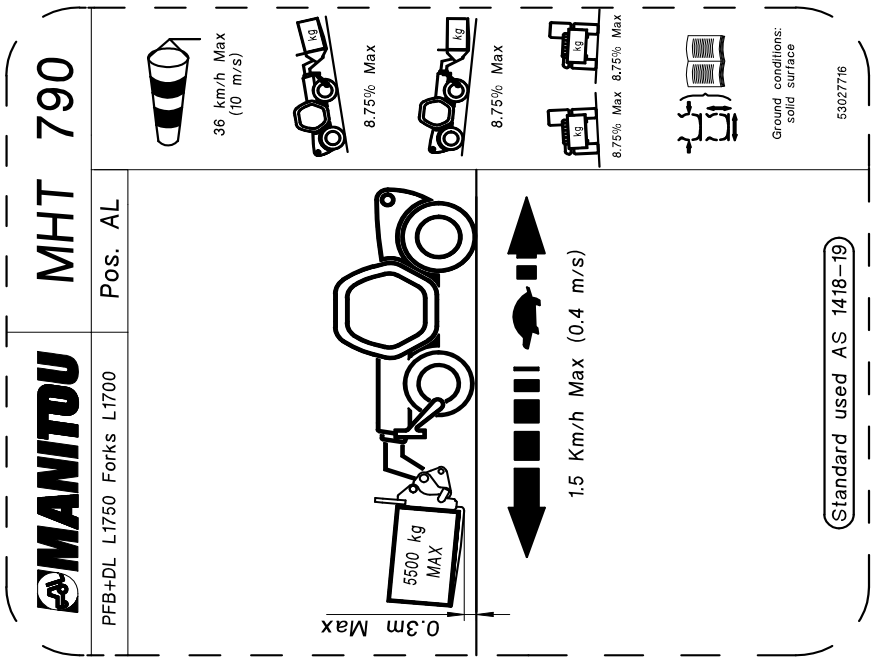

MHT-X 790 104JD ST3A S1 / MHT 790 104JD ST4 S1

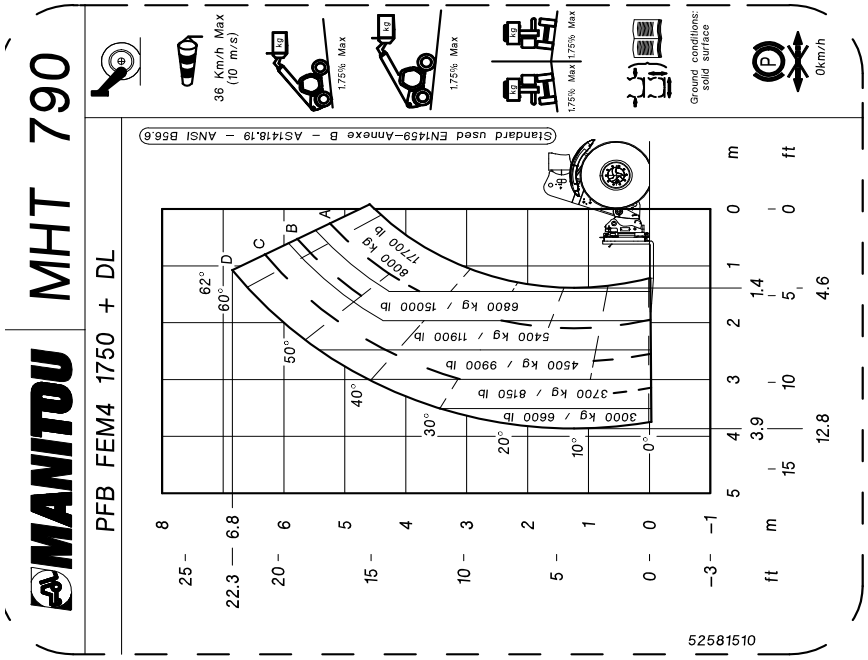

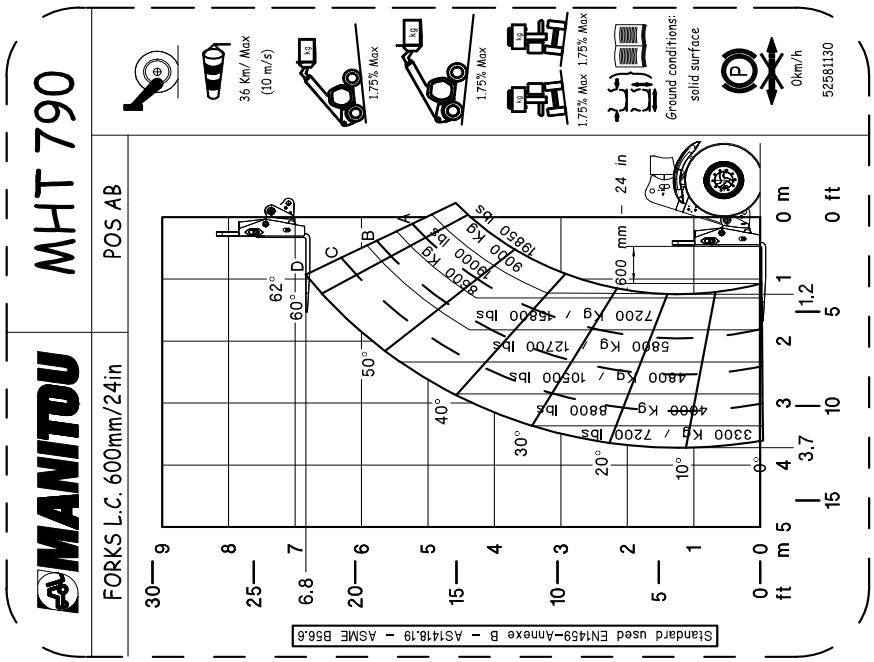

MHT-X 790 104JD ST3A S1 / MHT 790 104JD ST4 S1

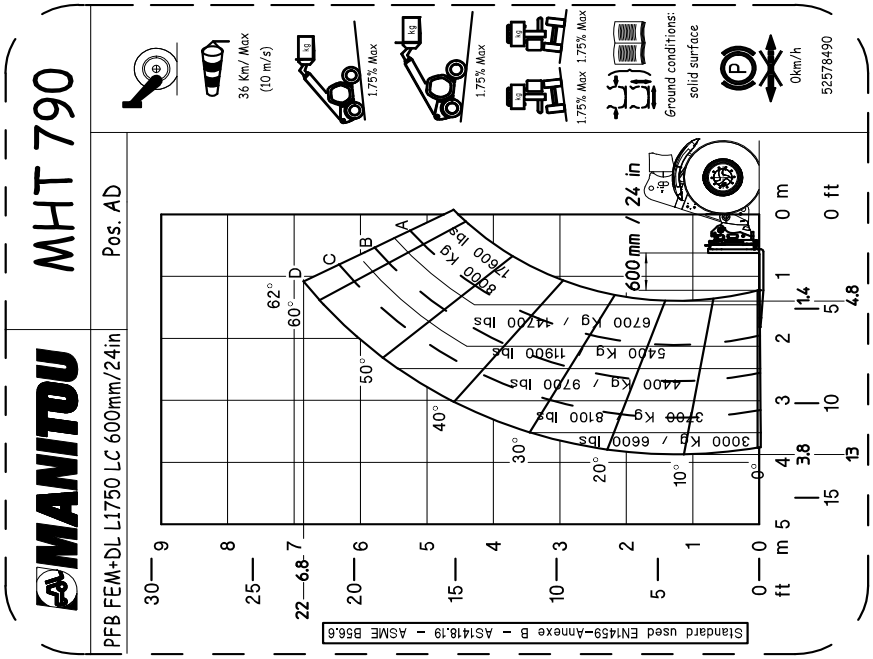

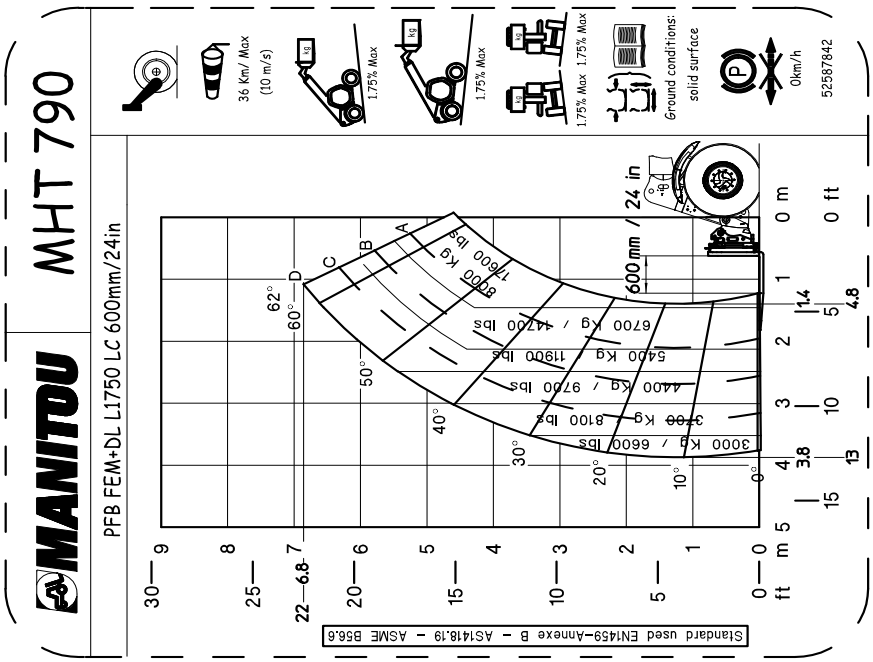

MHT-X 790 104JD ST3A S1 / MHT 790 104JD ST4 S1

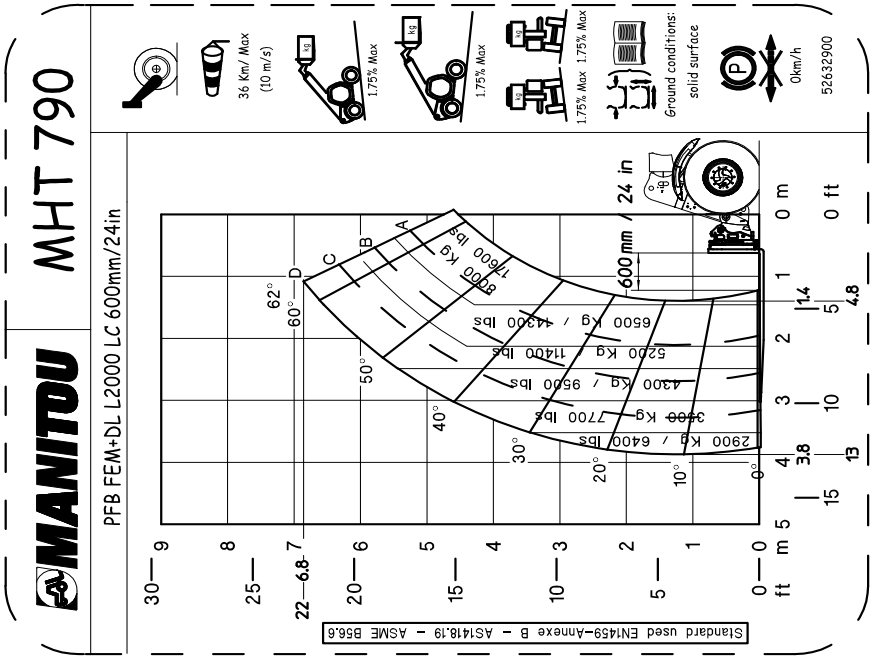

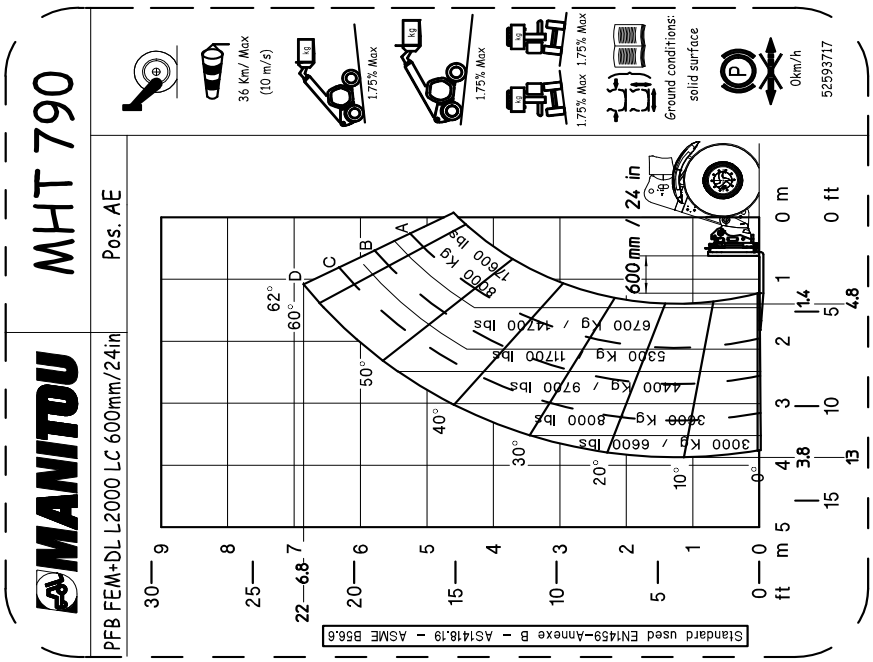

https://truckmanualshub.com/
duma rent
www.duma-rent.com

MHT-X 790 104JD ST3A S1 / MHT 790 104JD ST4 S1

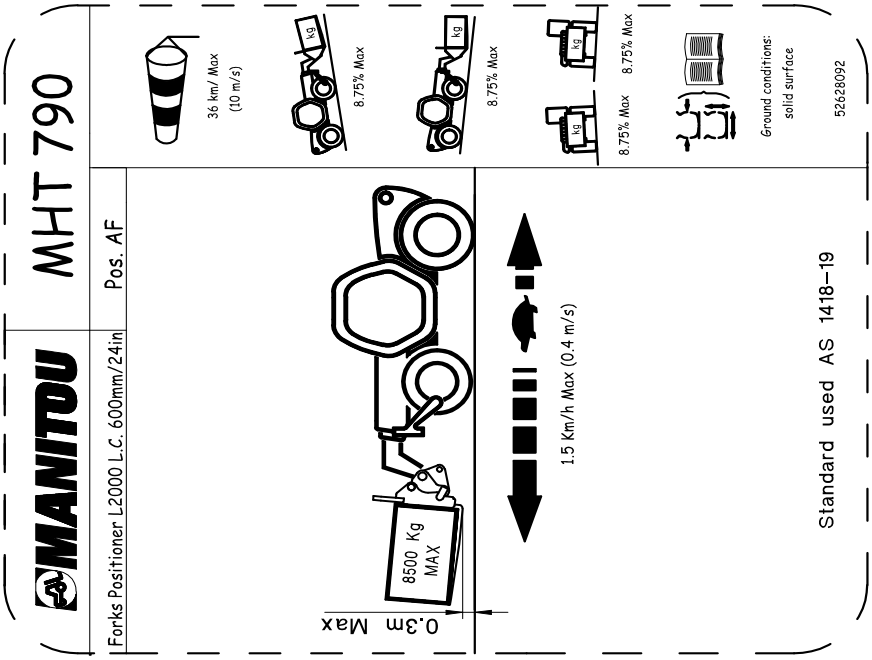

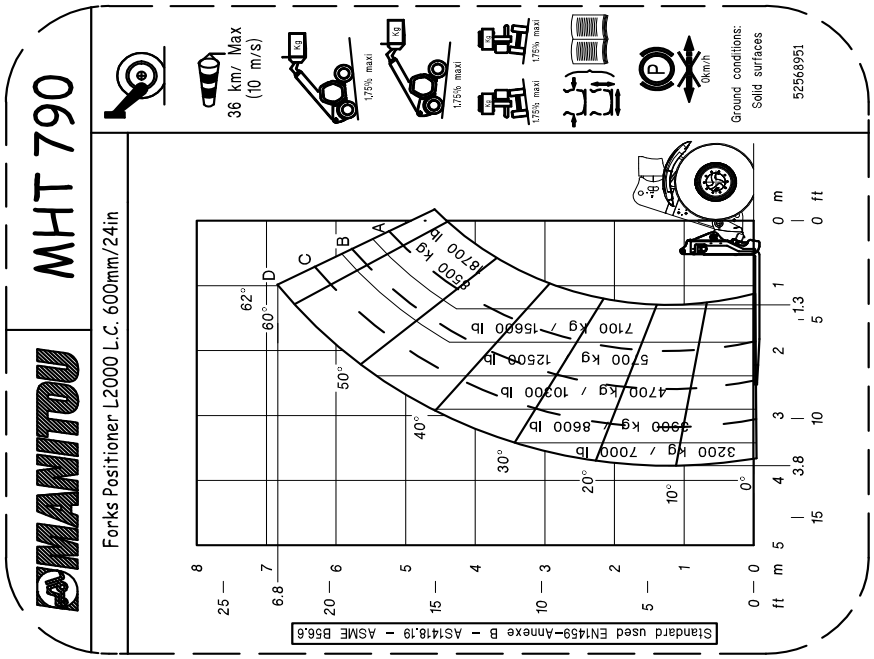

MHT-X 790 104JD ST3A S1 / MHT 790 104JD ST4 S1

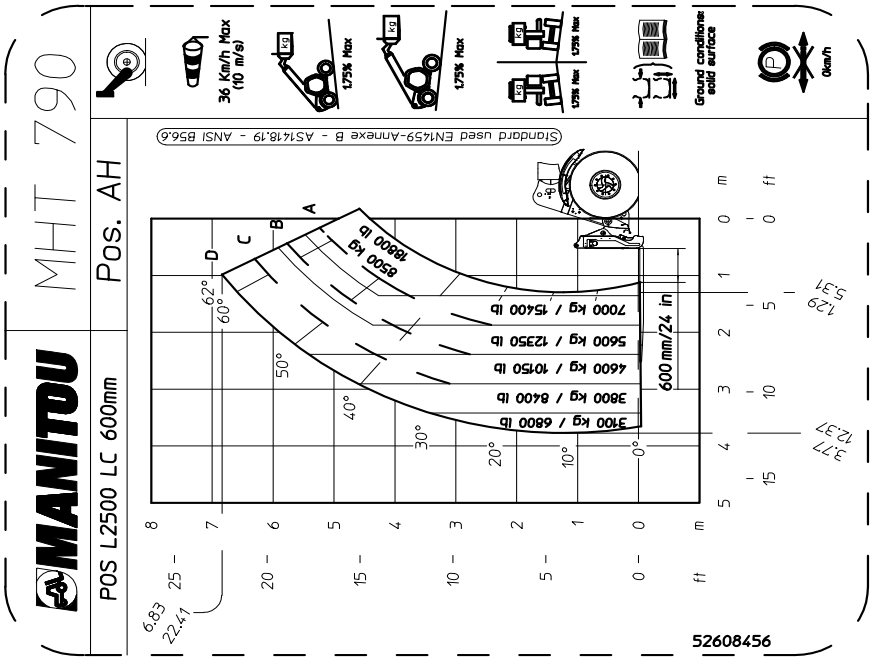

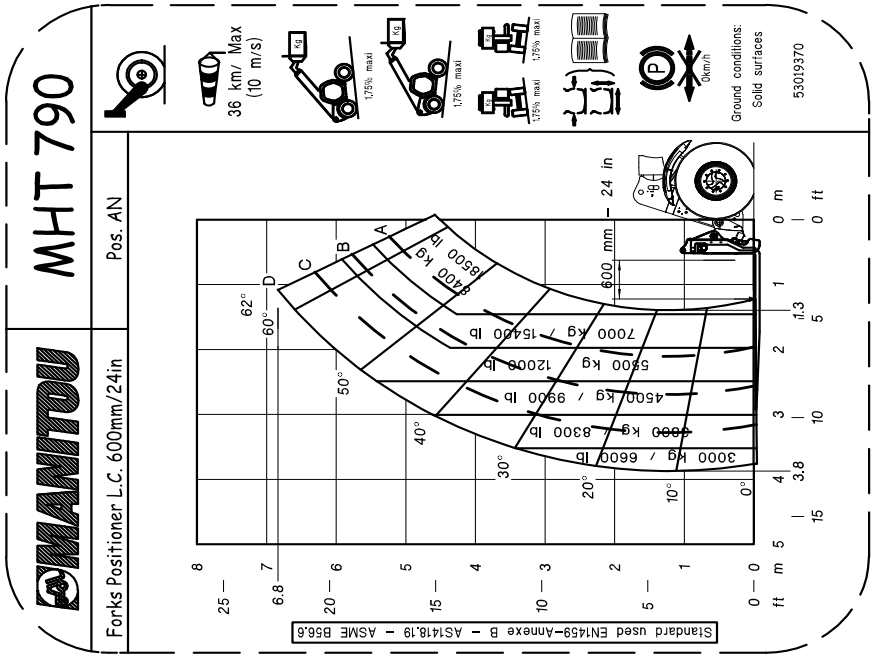

MHT-X 790 104JD ST3A S1 / MHT 790 104JD ST4 S1

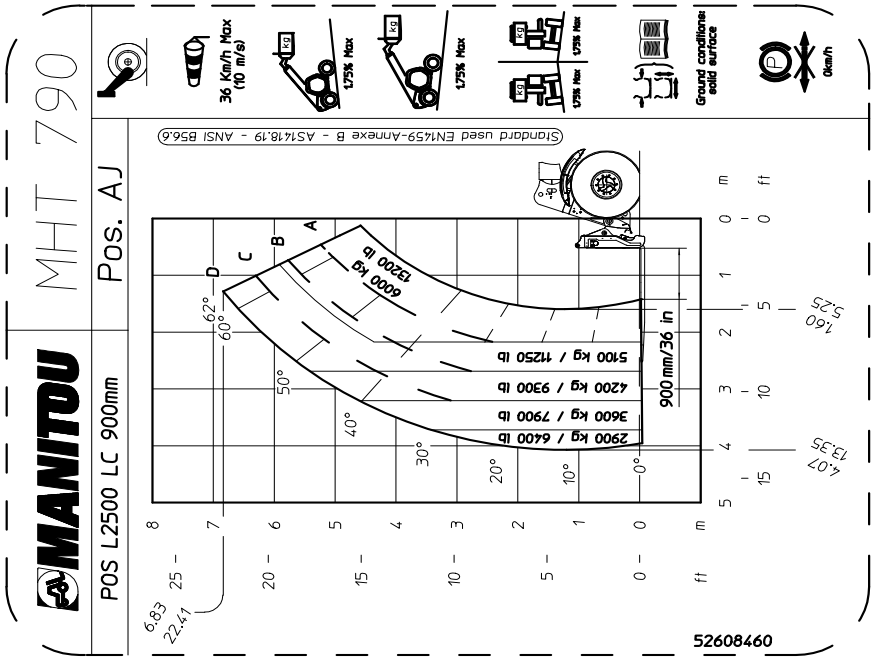

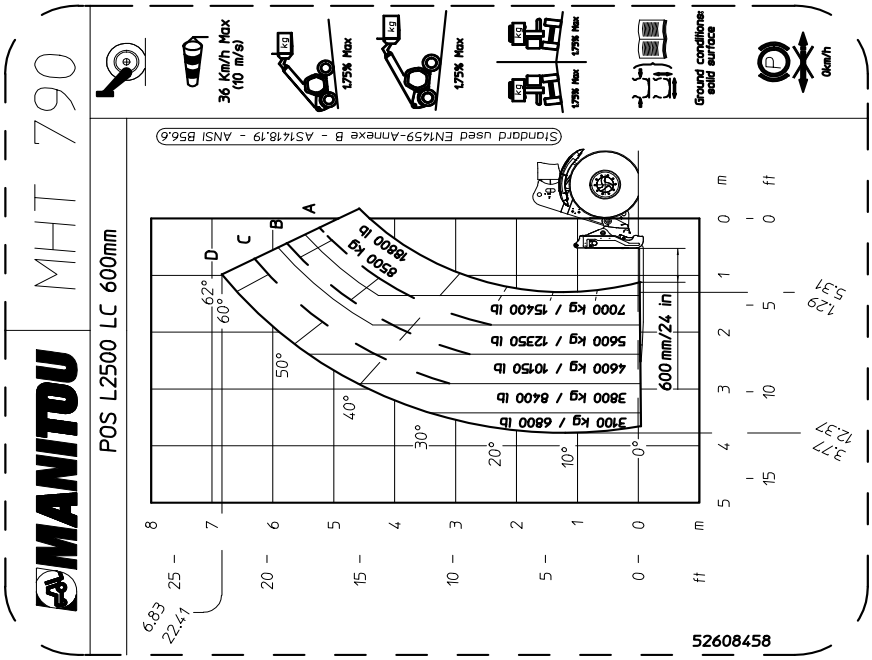

MHT-X 790 104JD ST3A S1 / MHT 790 104JD ST4 S1

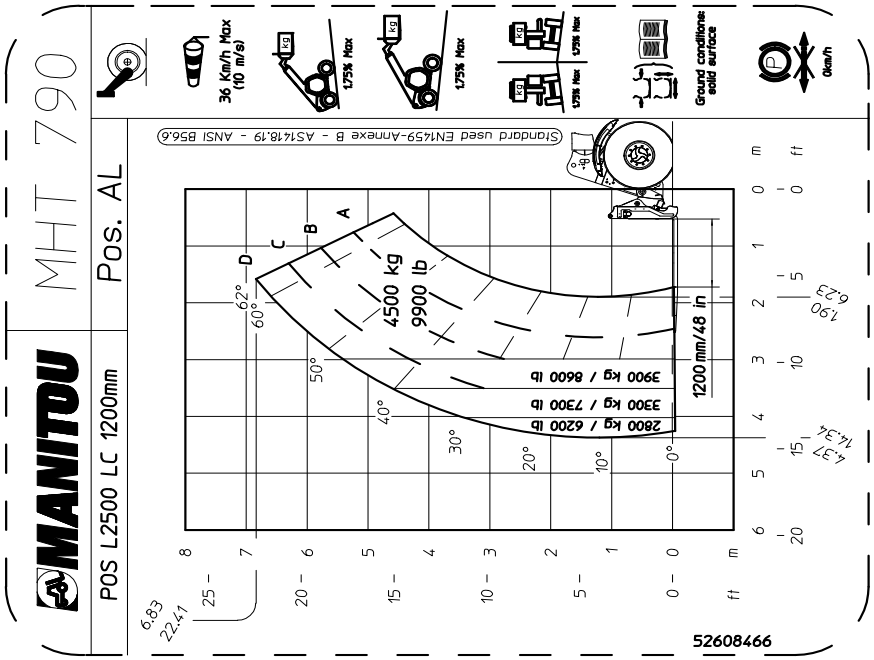

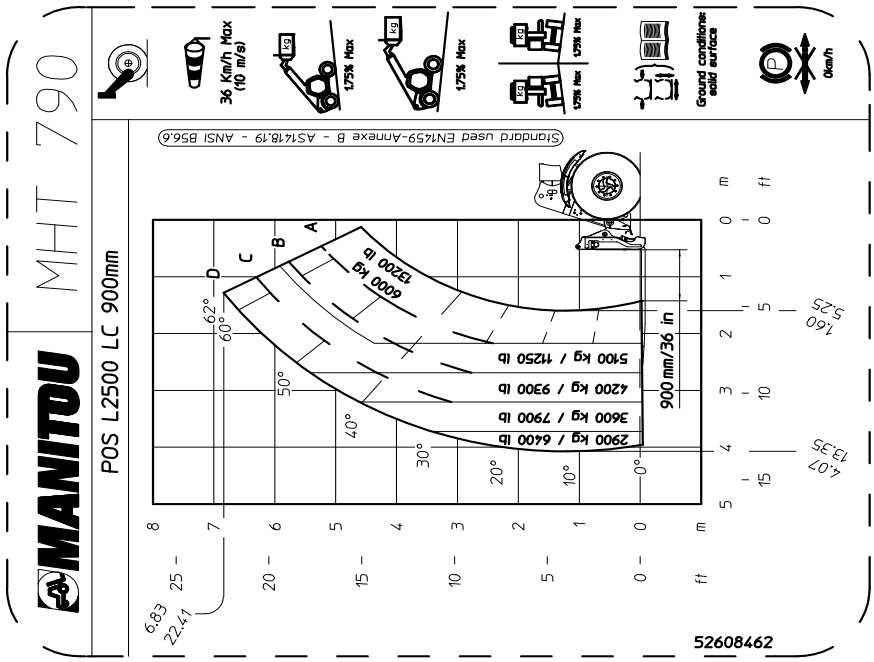

https://truckmanualshub.com/

MHT-X 790 104JD ST3A S1 / MHT 790 104JD ST4 S1

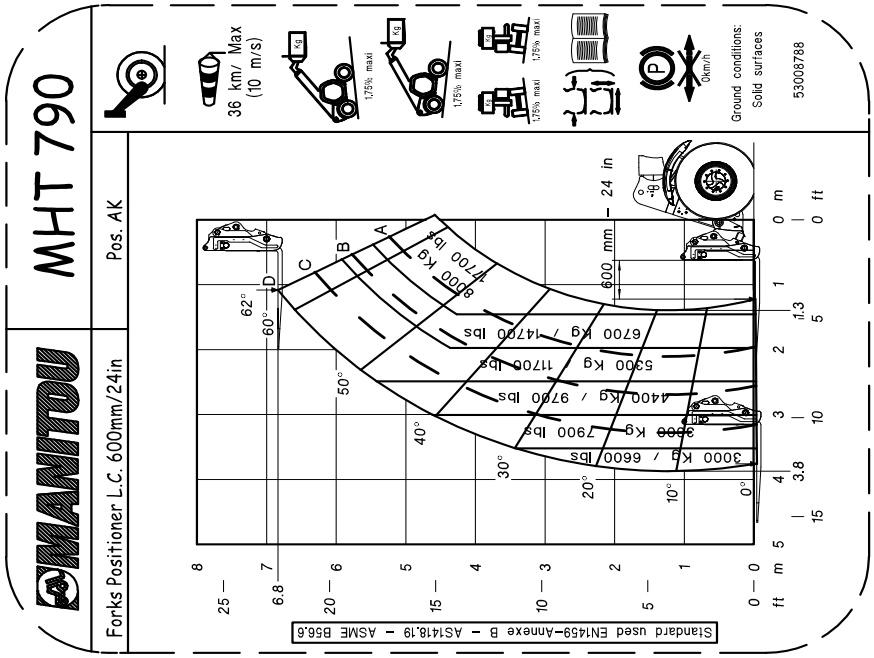

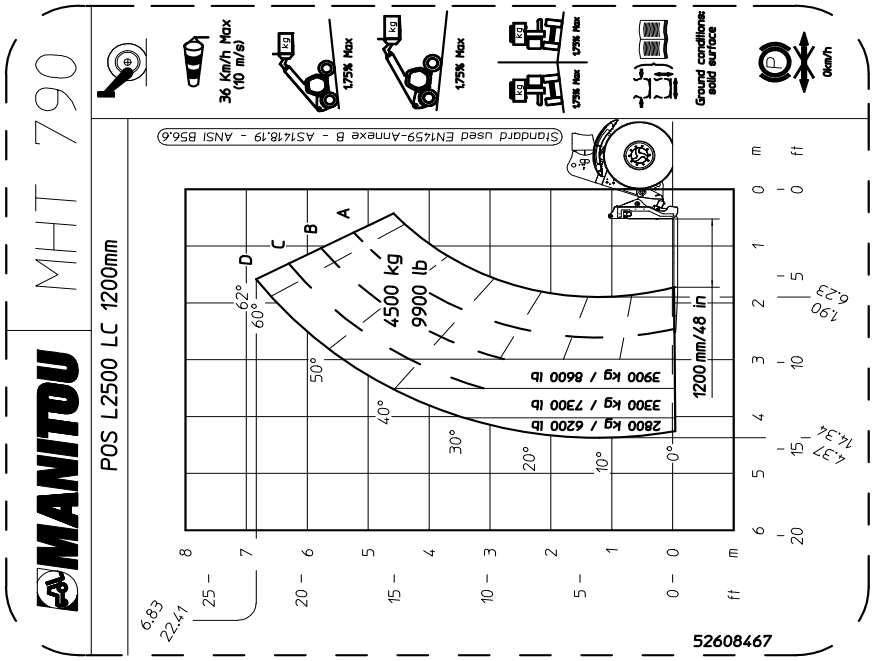

MHT-X 790 104JD ST3A S1 / MHT 790 104JD ST4 S1

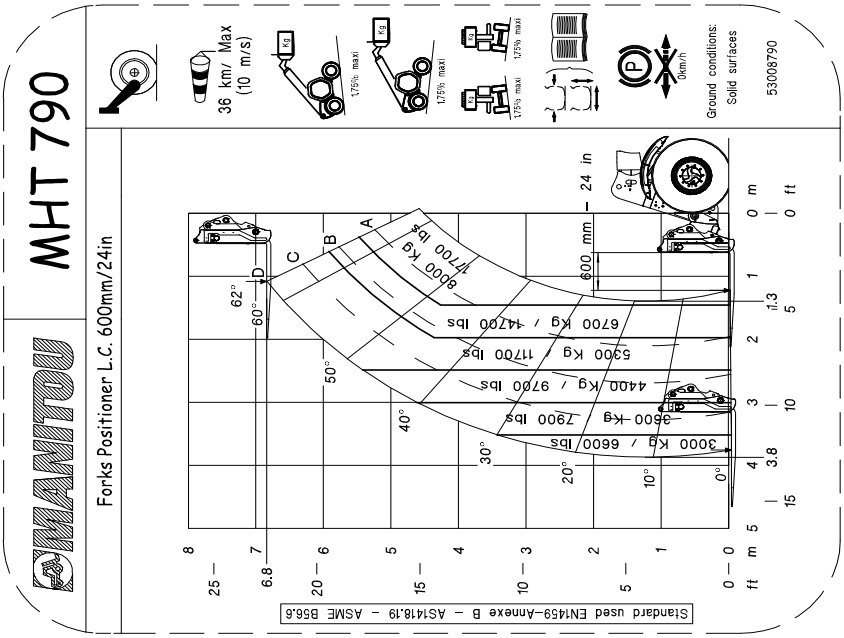

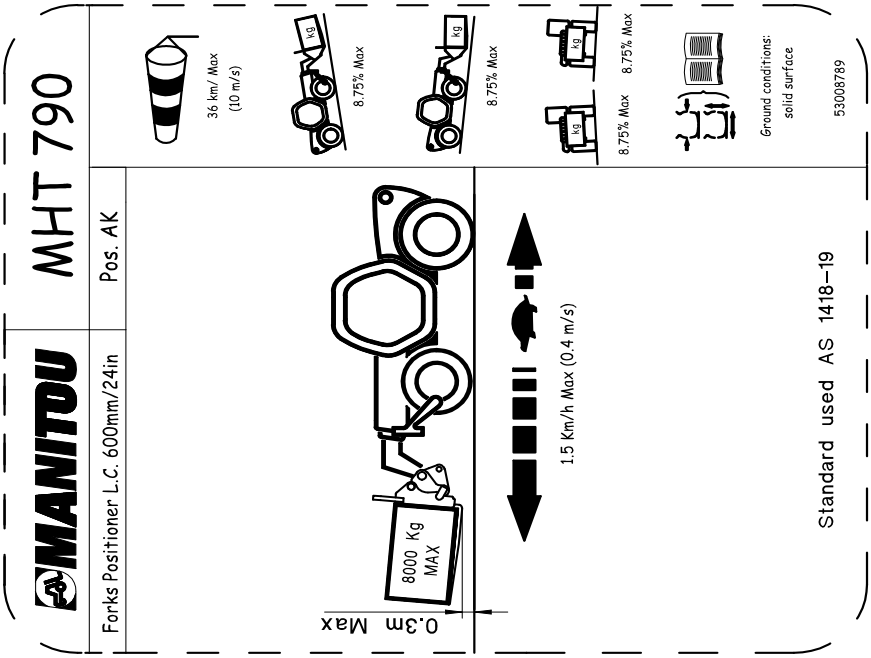

MHT-X 790 104JD ST3A S1 / MHT 790 104JD ST4 S1

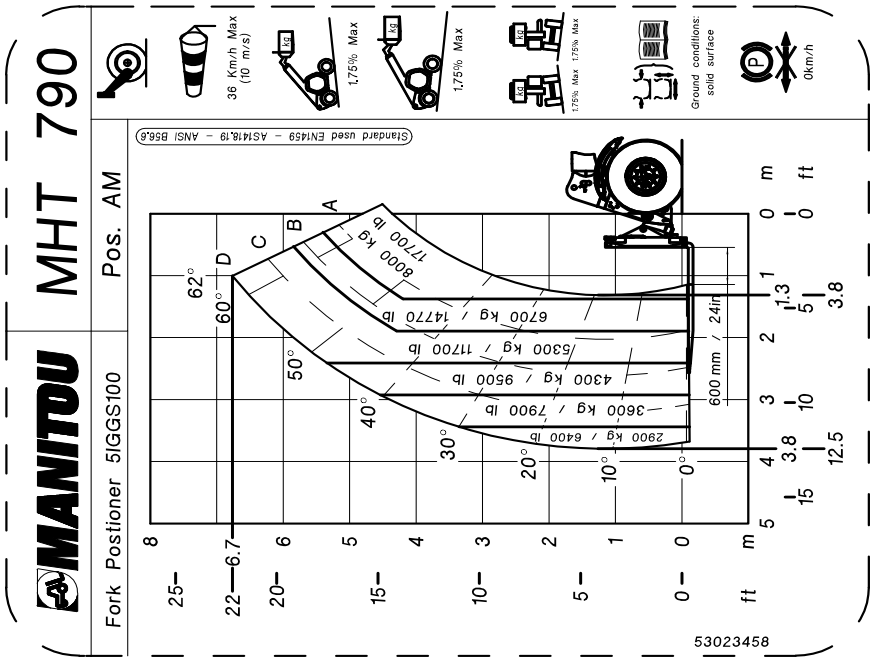

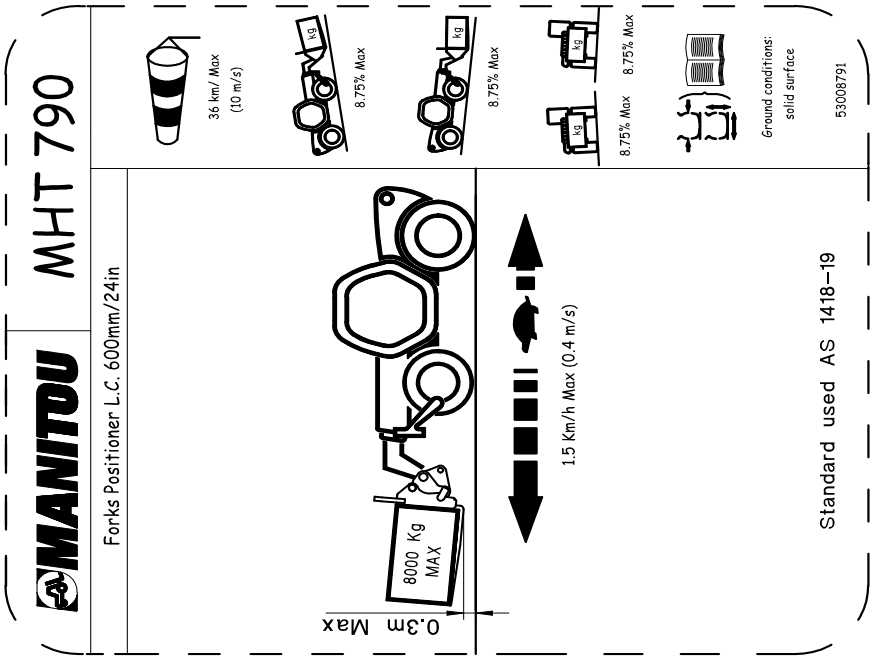

MHT-X 790 104JD ST3A S1 / MHT 790 104JD ST4 S1

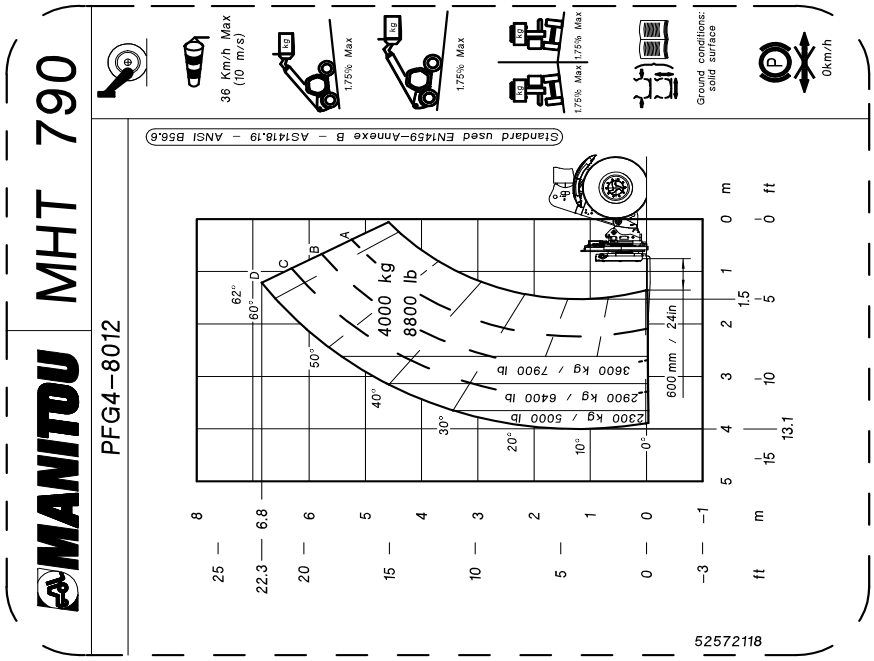

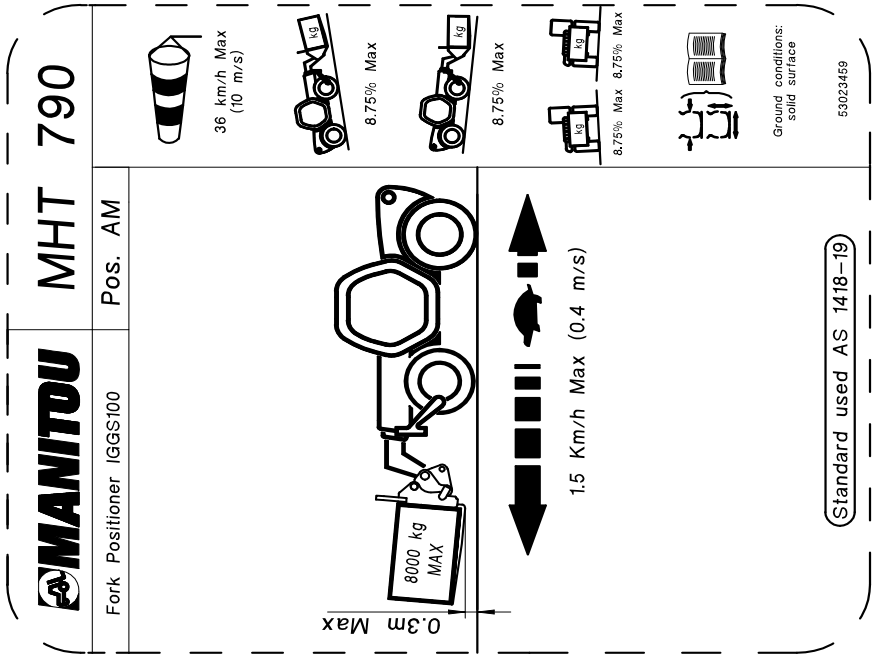

MHT-X 790 104JD ST3A S1 / MHT 790 104JD ST4 S1

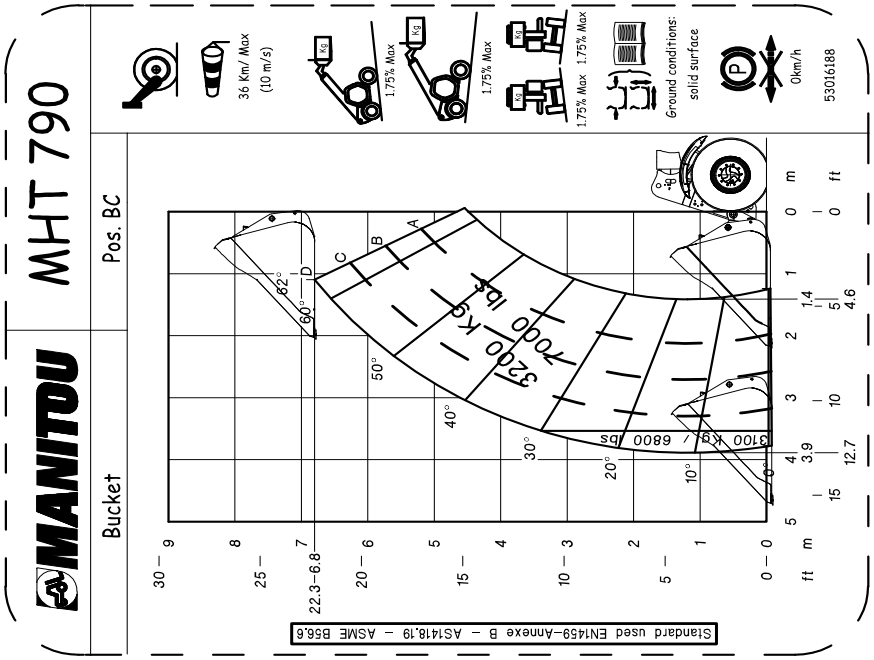

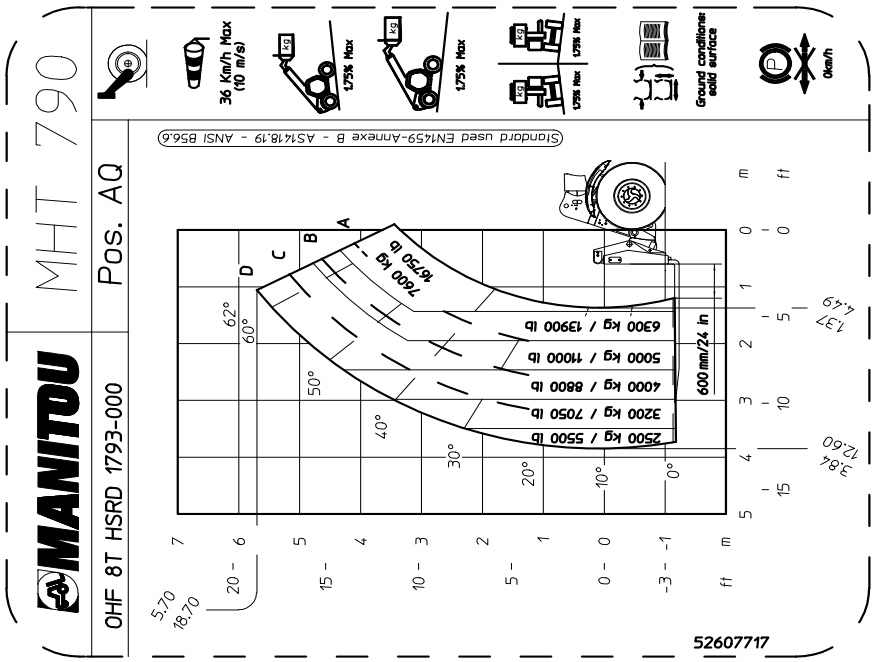

MHT-X 790 104JD ST3A S1 / MHT 790 104JD ST4 S1

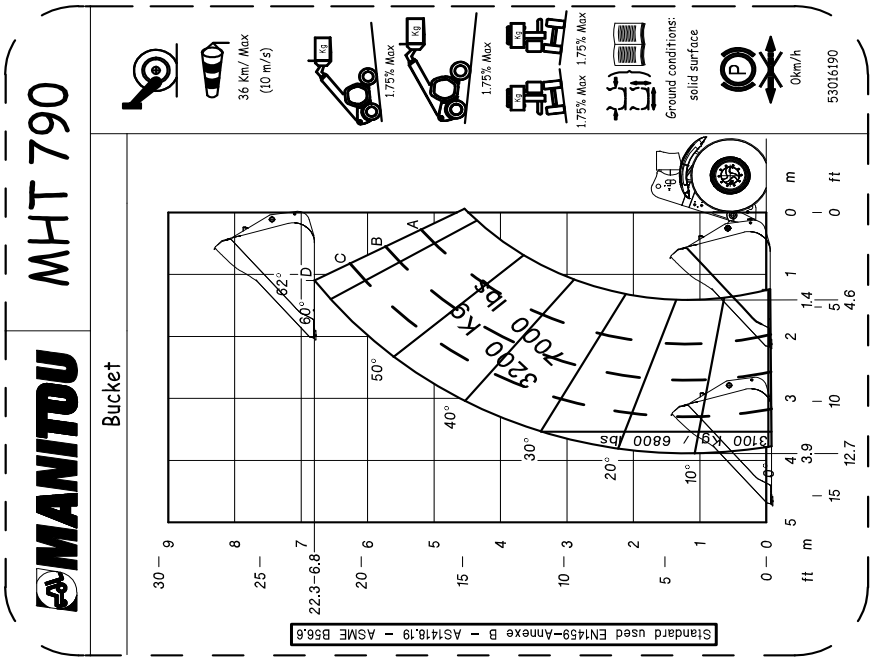

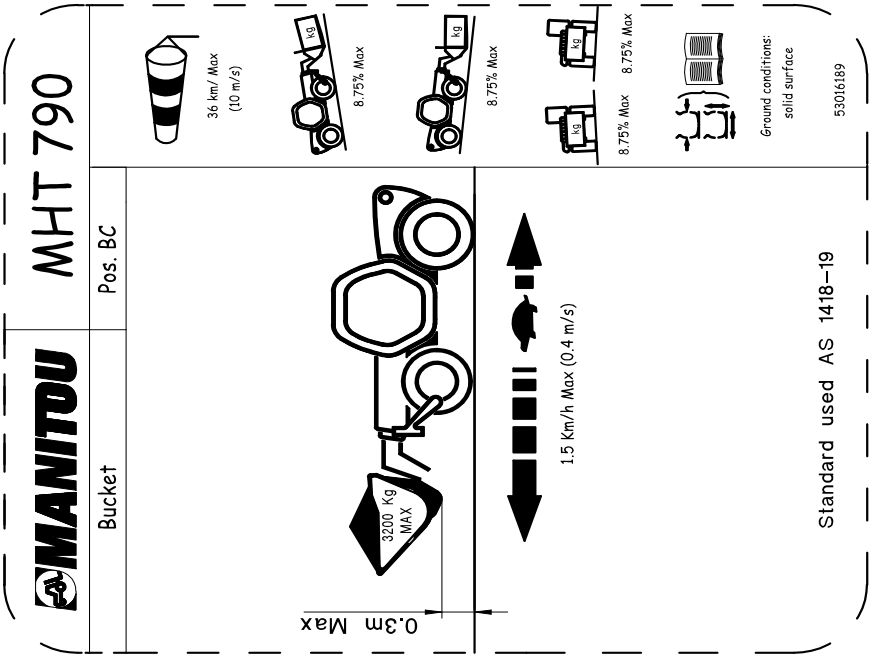

https://truckmanualshub.com/

MHT-X 790 104JD ST3A S1 / MHT 790 104JD ST4 S1

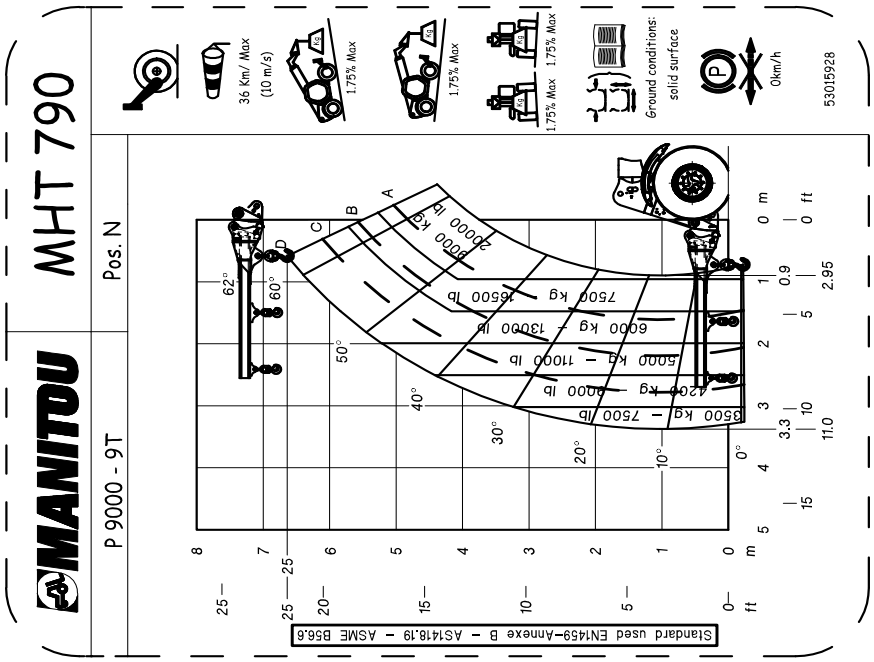

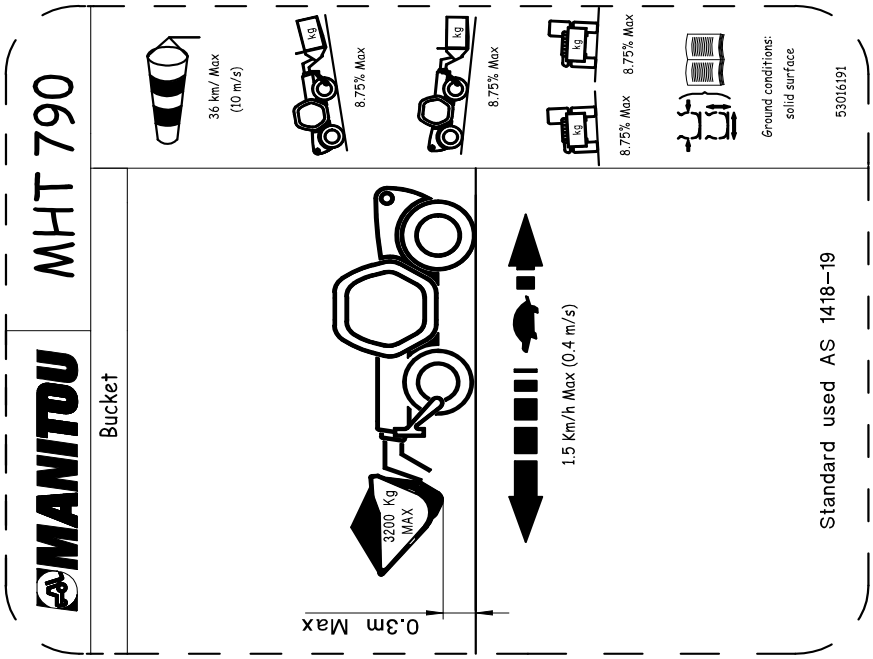

MHT-X 790 104JD ST3A S1 / MHT 790 104JD ST4 S1

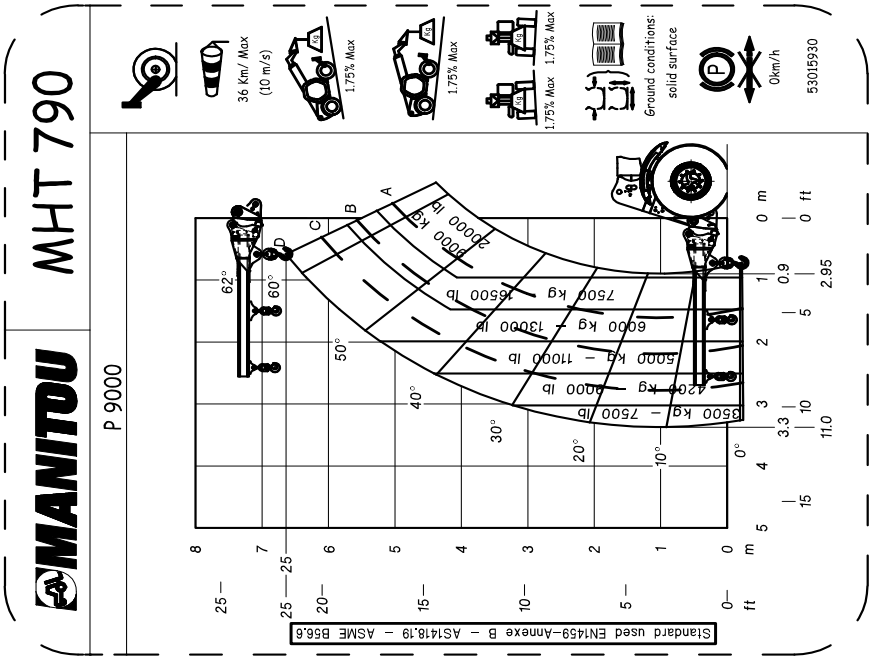

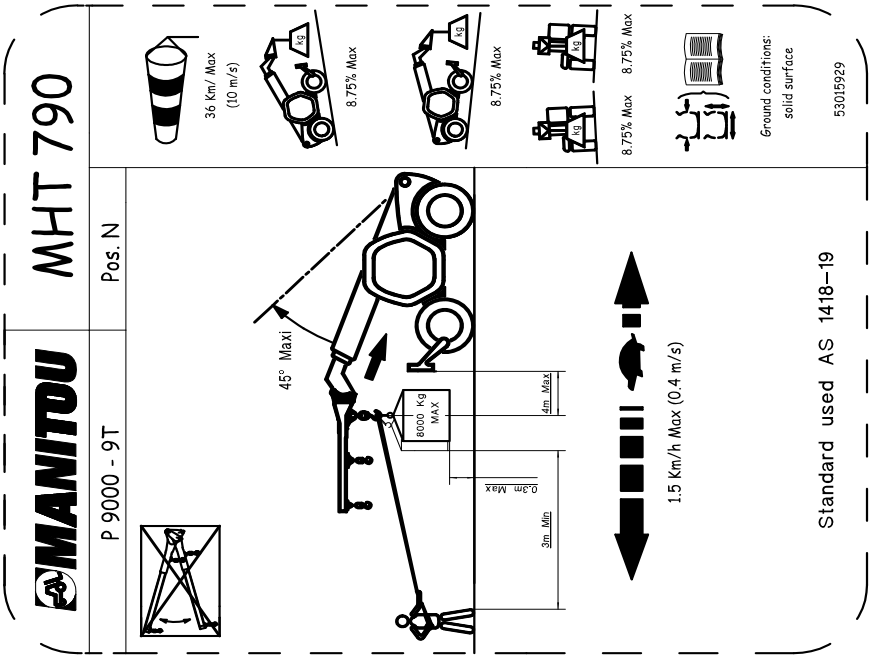

MHT-X 790 104JD ST3A S1 / MHT 790 104JD ST4 S1

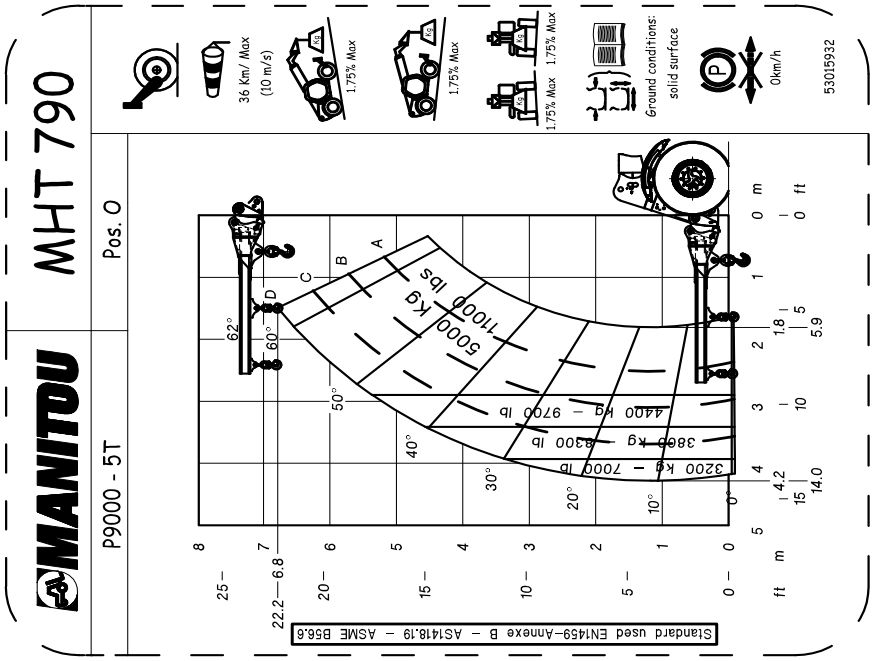

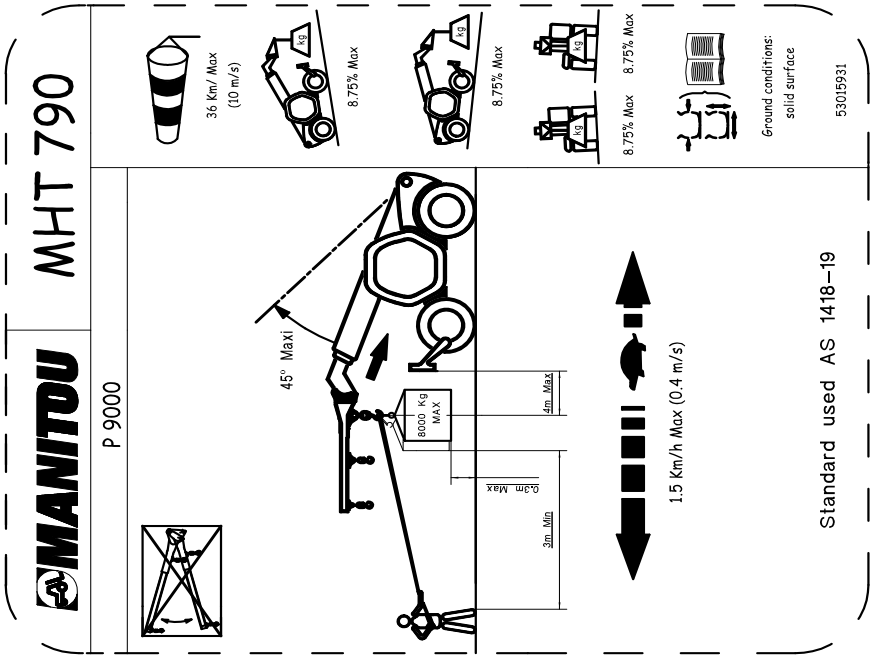

MHT-X 790 104JD ST3A S1 / MHT 790 104JD ST4 S1

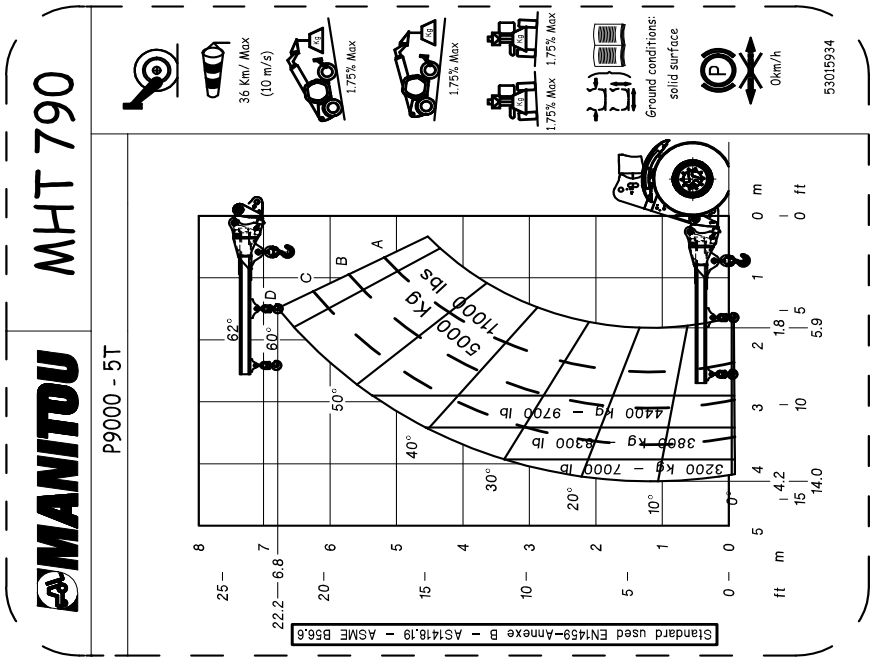

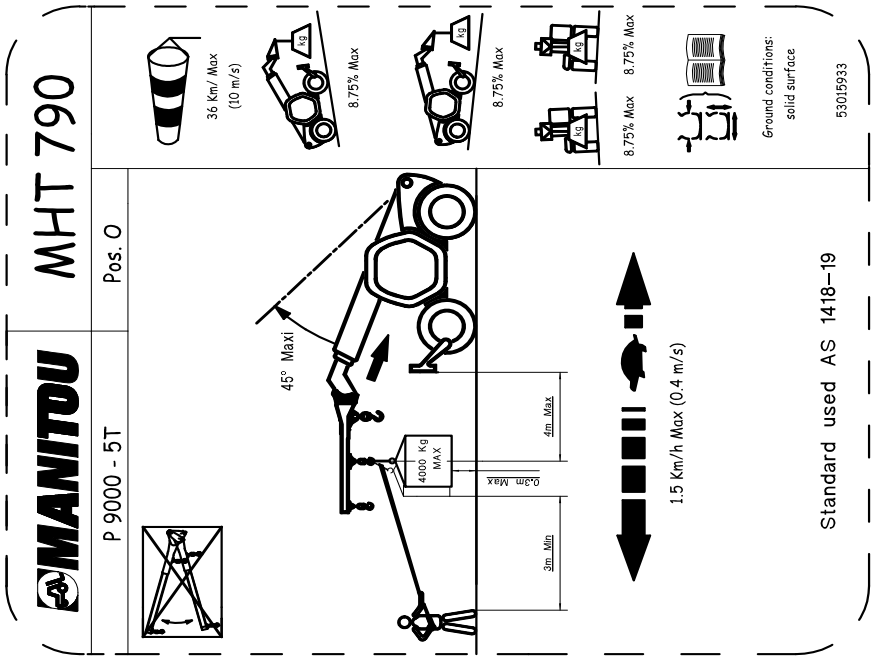

MHT-X 790 104JD ST3A S1 / MHT 790 104JD ST4 S1

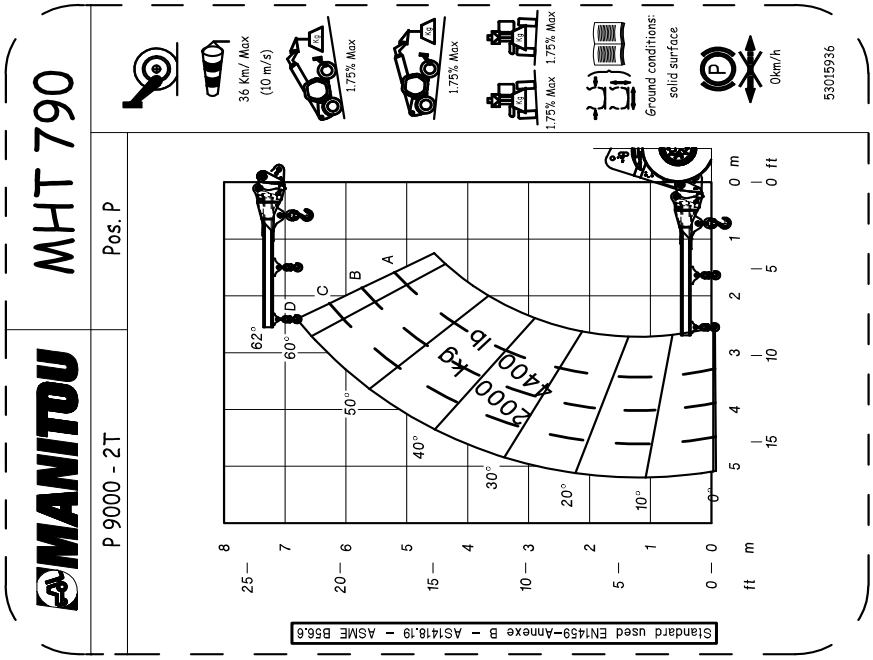

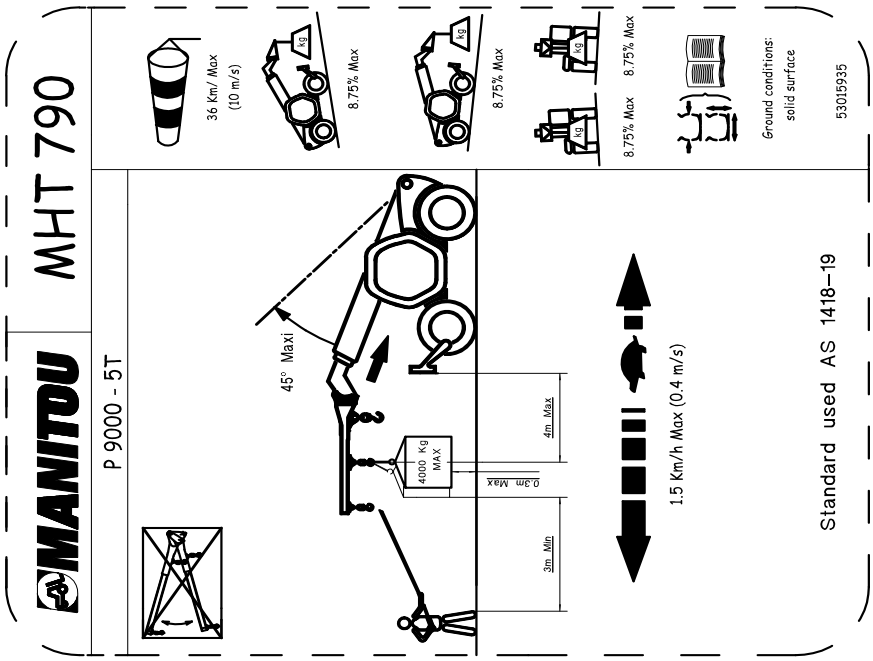

https://truckmanualshub.com/
duma rent
www.duma-rent.com

MHT-X 790 104JD ST3A S1 / MHT 790 104JD ST4 S1

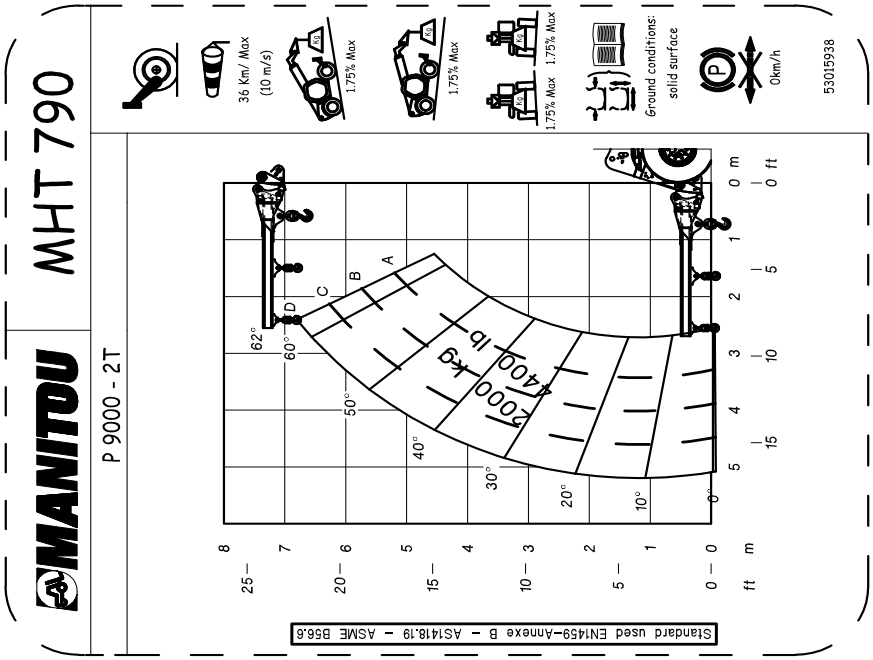

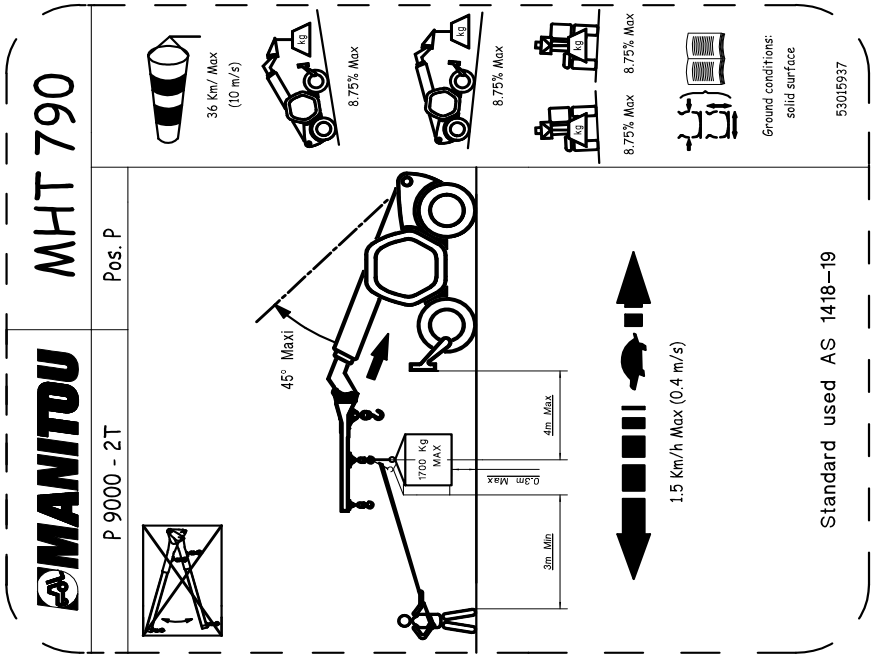

https://truckmanualshub.com/
duma rent
www.duma-rent.com

MHT-X 790 104JD ST3A S1 / MHT 790 104JD ST4 S1

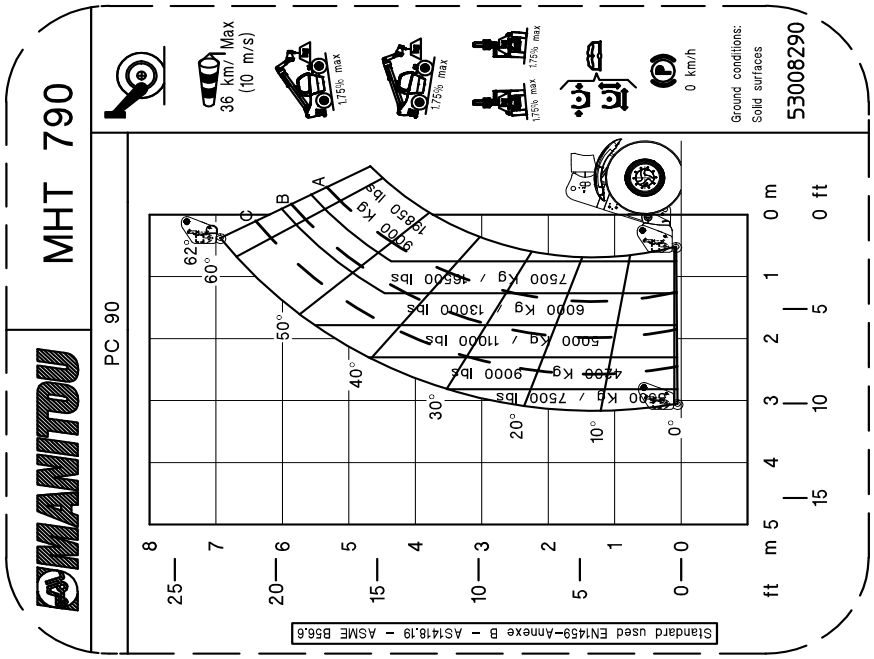

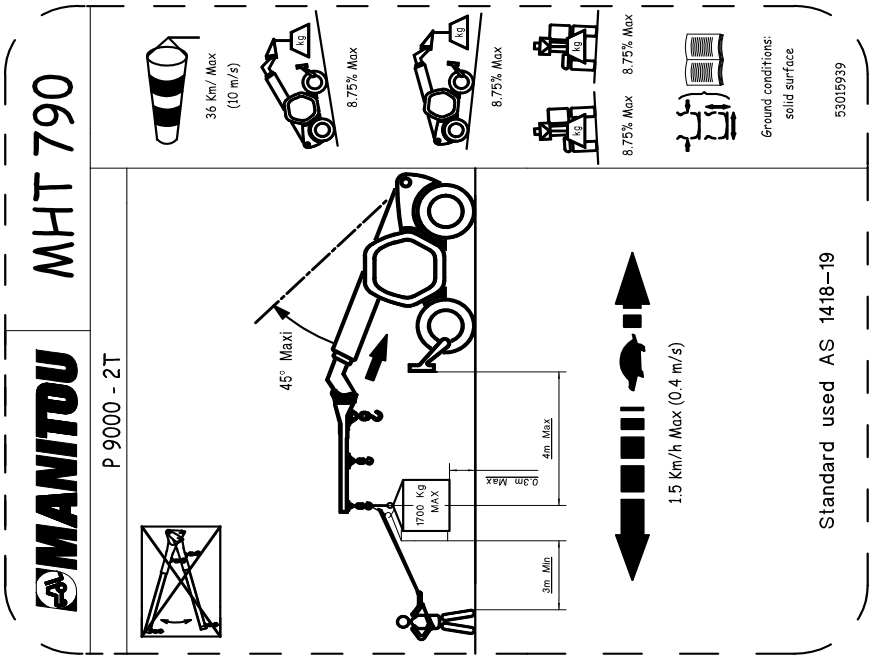

MHT-X 790 104JD ST3A S1 / MHT 790 104JD ST4 S1

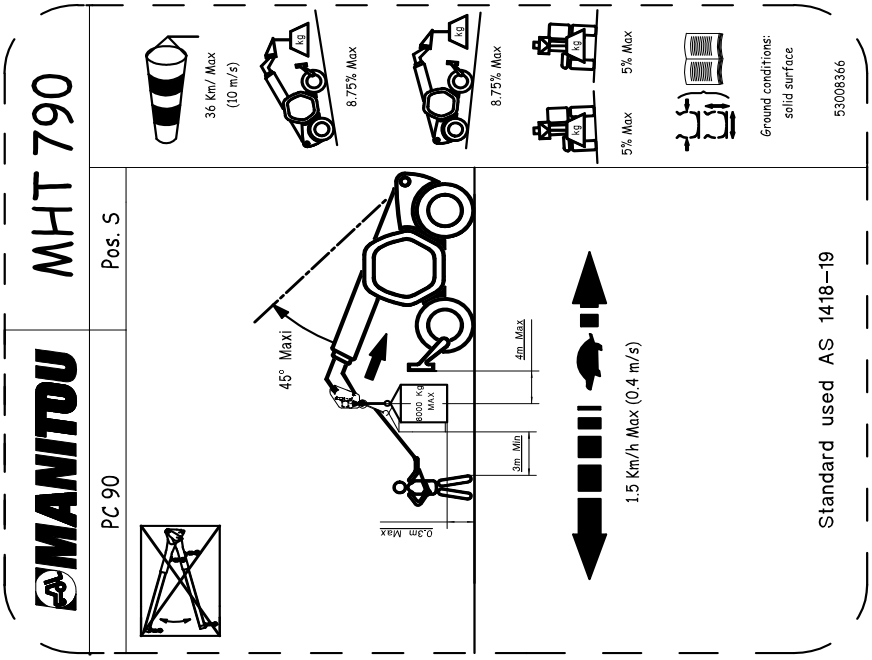

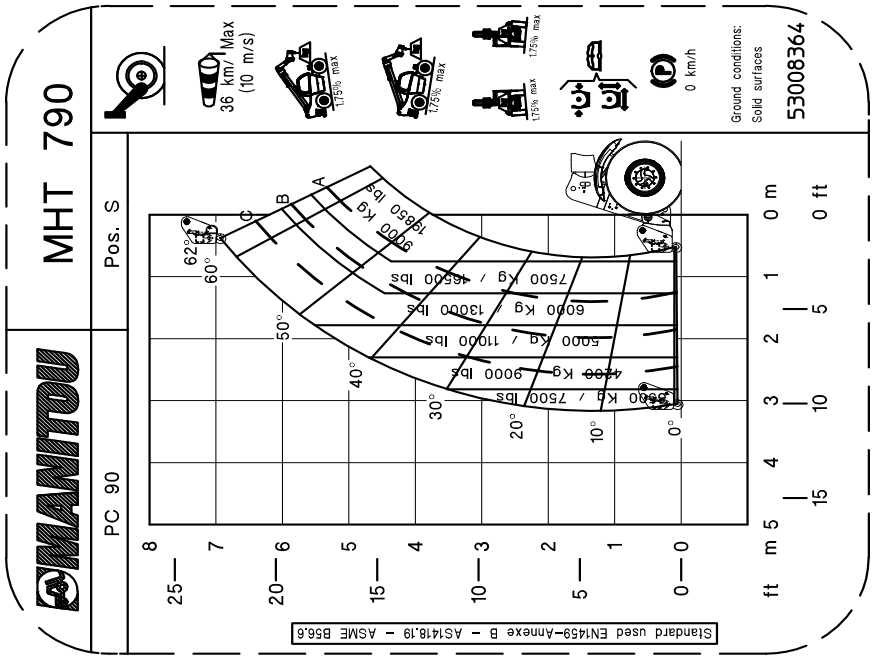

https://truckmanualshub.com/

MHT-X 790 104JD ST3A S1 / MHT 790 104JD ST4 S1

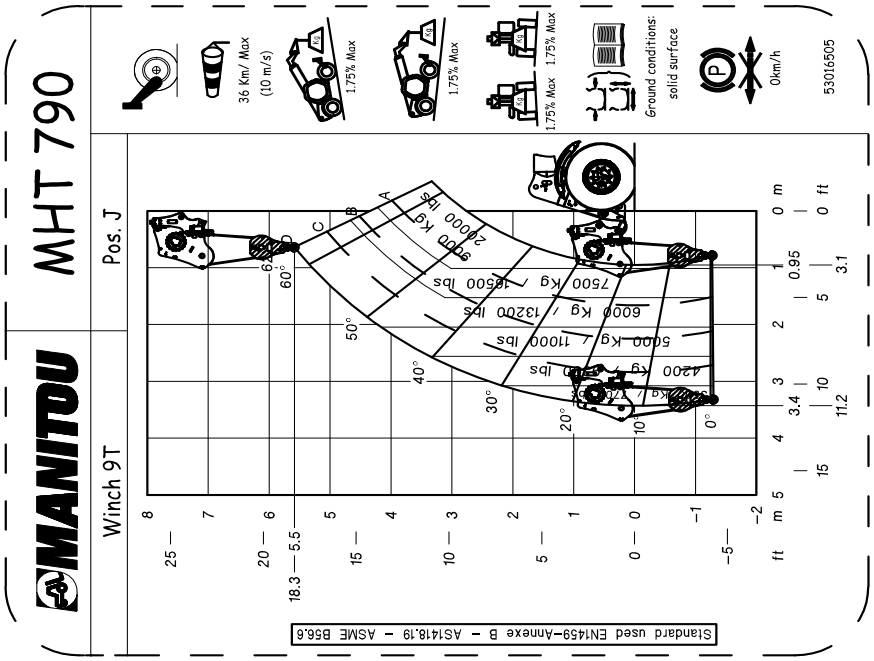

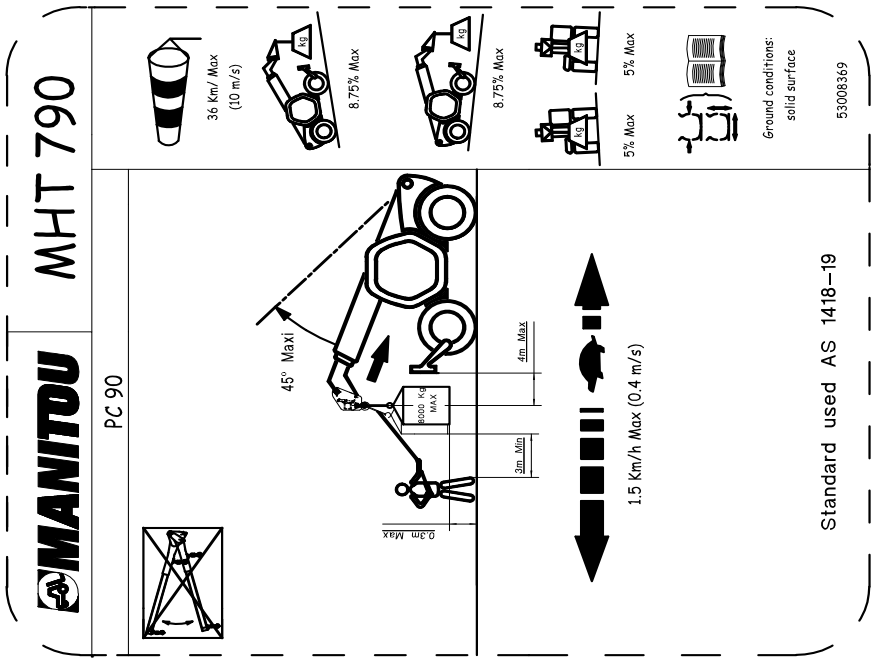

MHT-X 790 104JD ST3A S1 / MHT 790 104JD ST4 S1

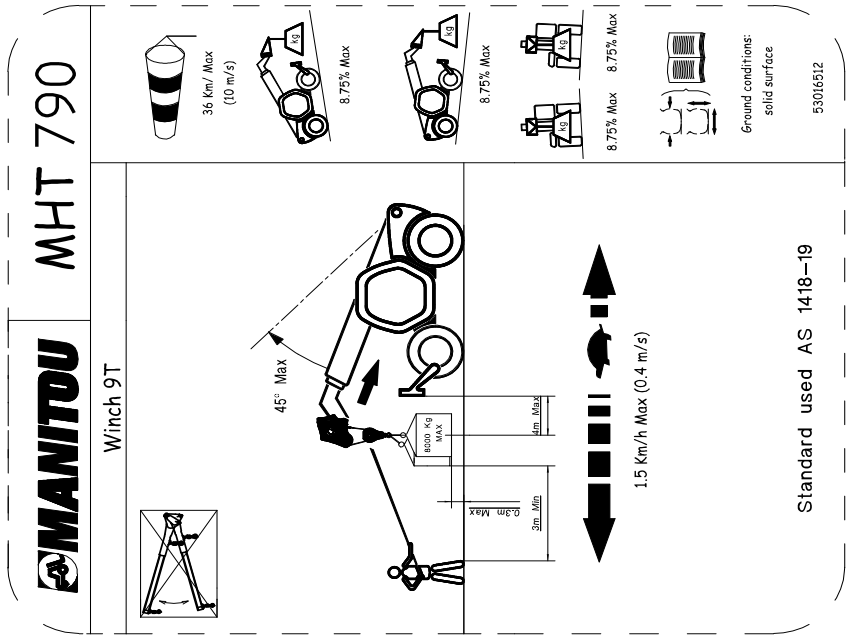

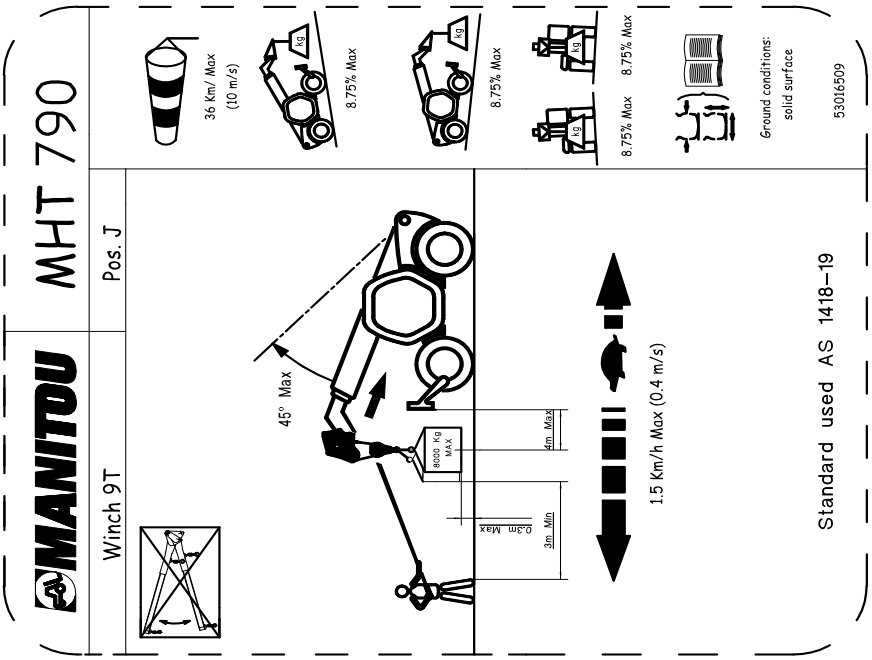

MHT-X 790 104JD ST3A S1 / MHT 790 104JD ST4 S1

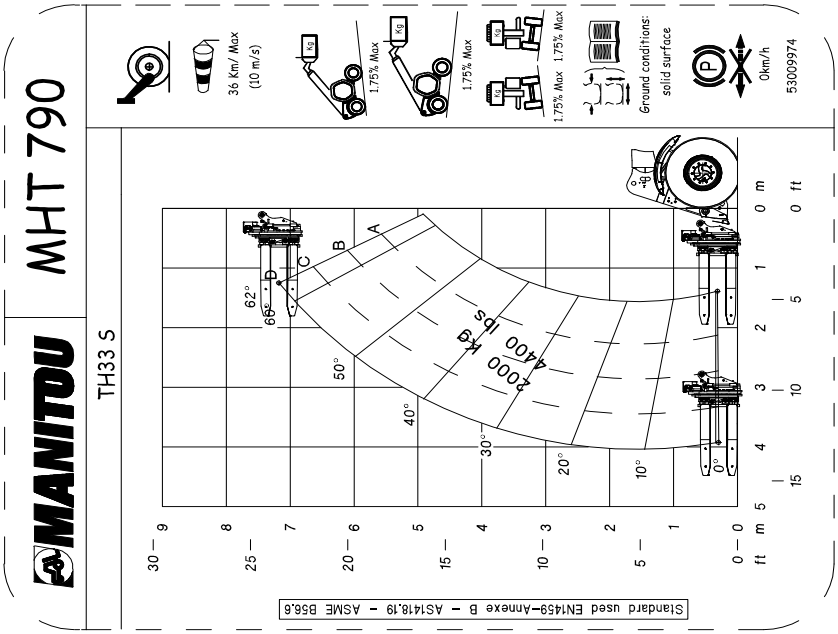

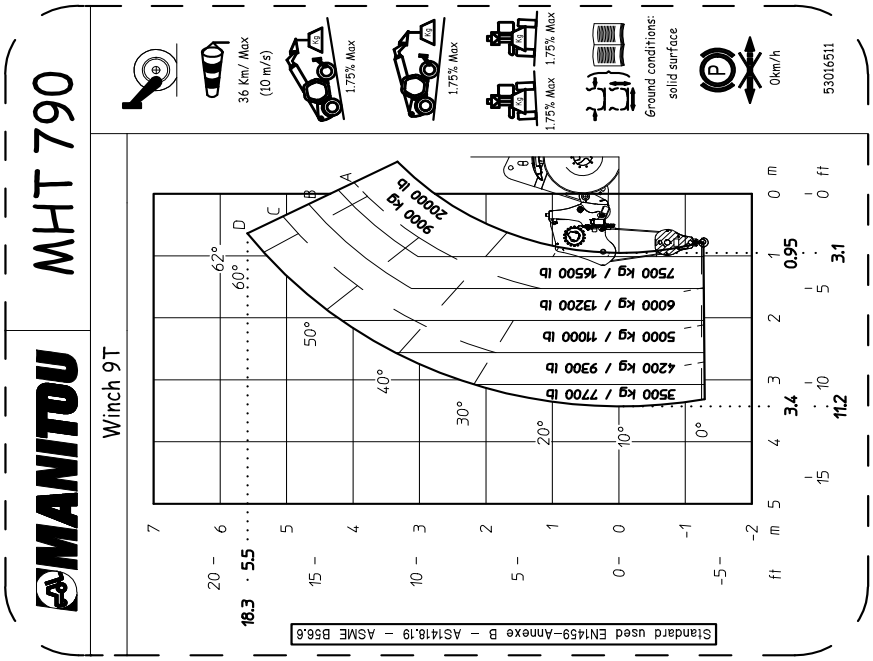

https://truckmanualshub.com/

MHT-X 790 104JD ST3A S1 / MHT 790 104JD ST4 S1

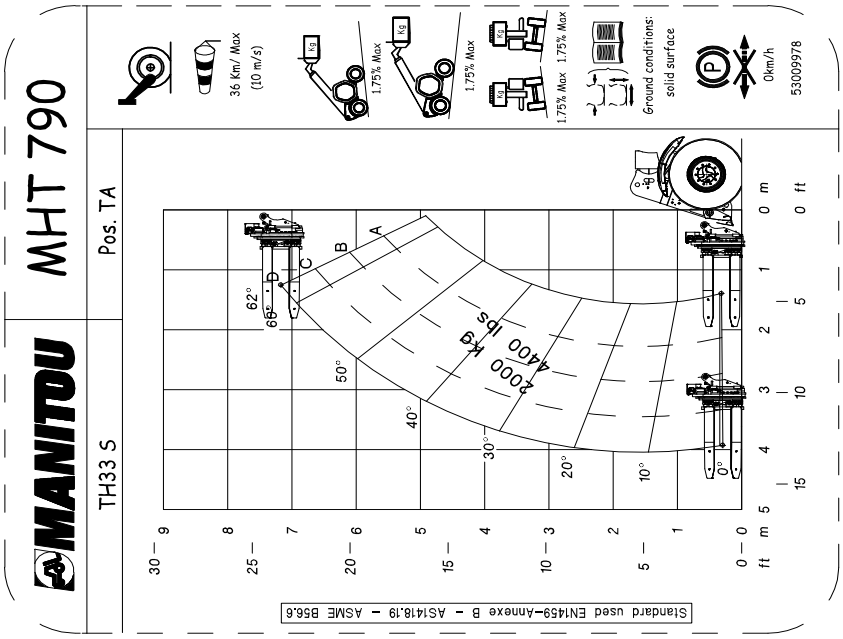

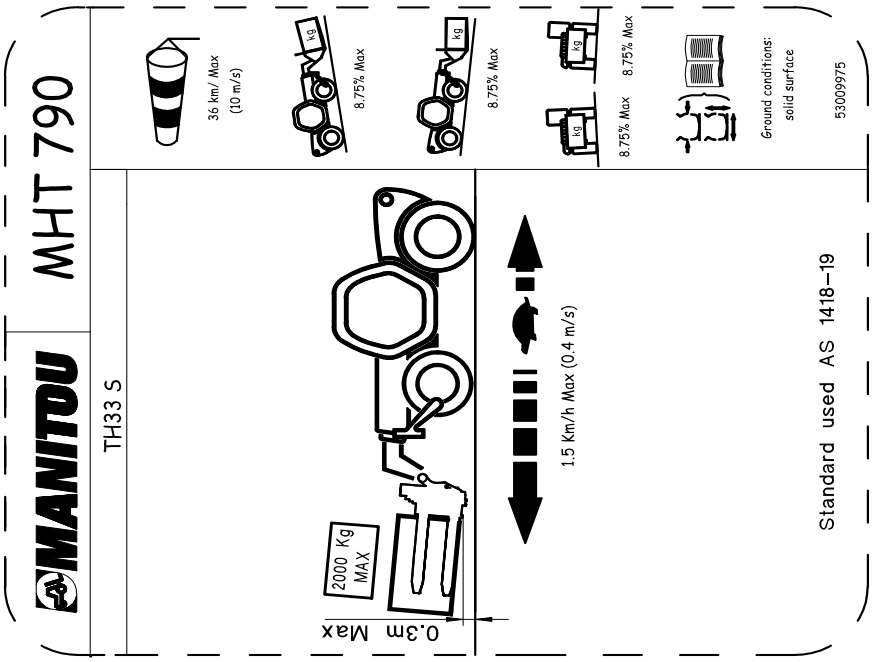

https://truckmanualshub.com/

MHT-X 790 104JD ST3A S1 / MHT 790 104JD ST4 S1

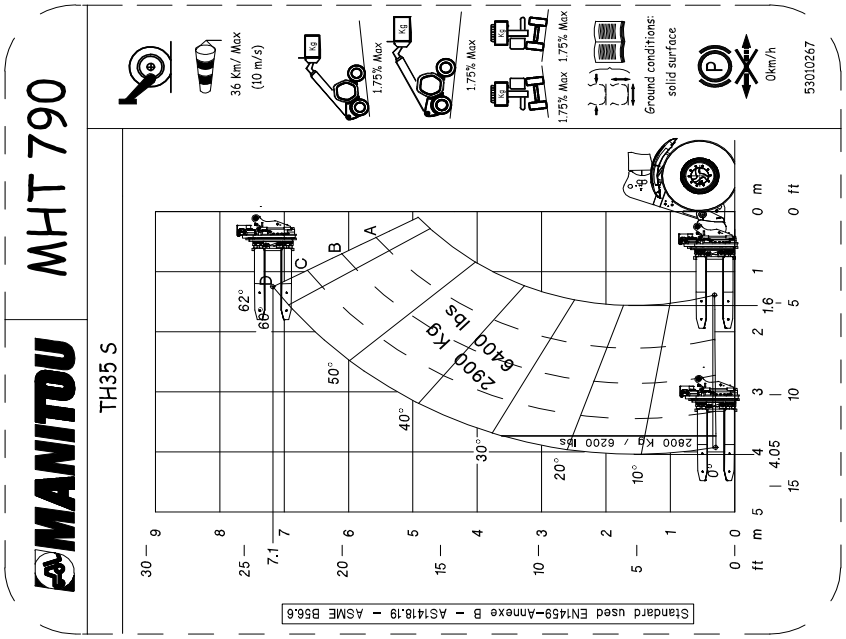

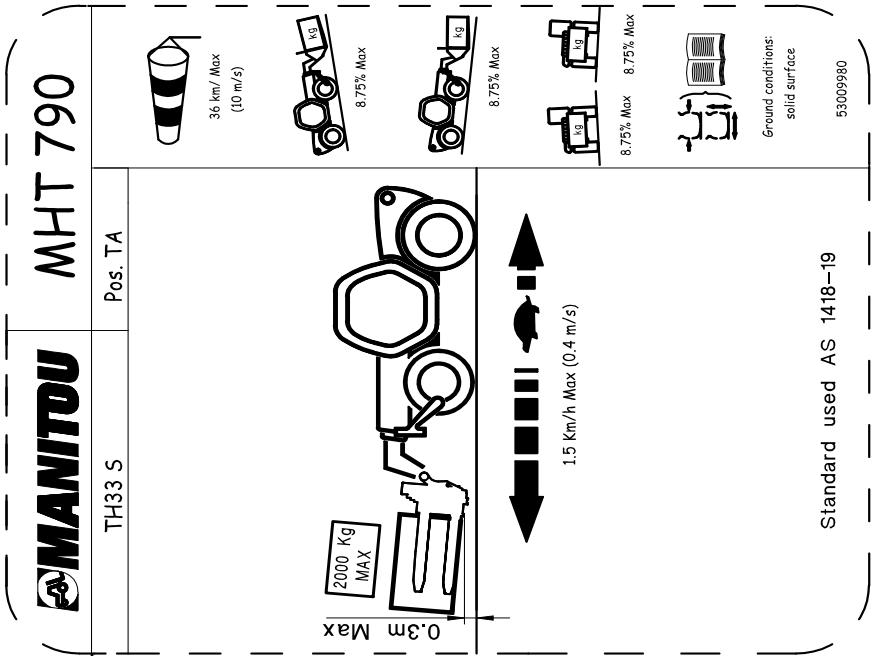

MHT-X 790 104JD ST3A S1 / MHT 790 104JD ST4 S1

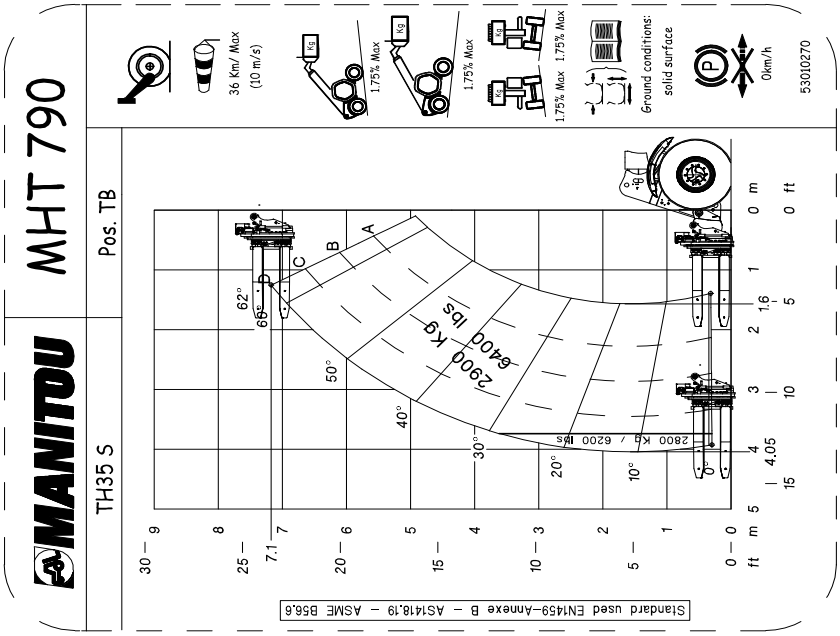

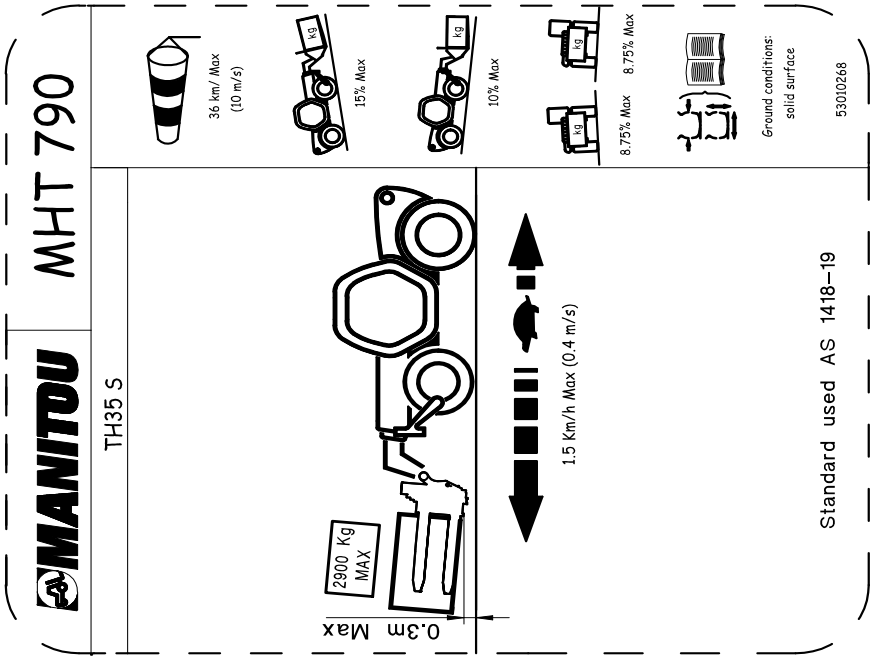

MHT-X 790 104JD ST3A S1 / MHT 790 104JD ST4 S1

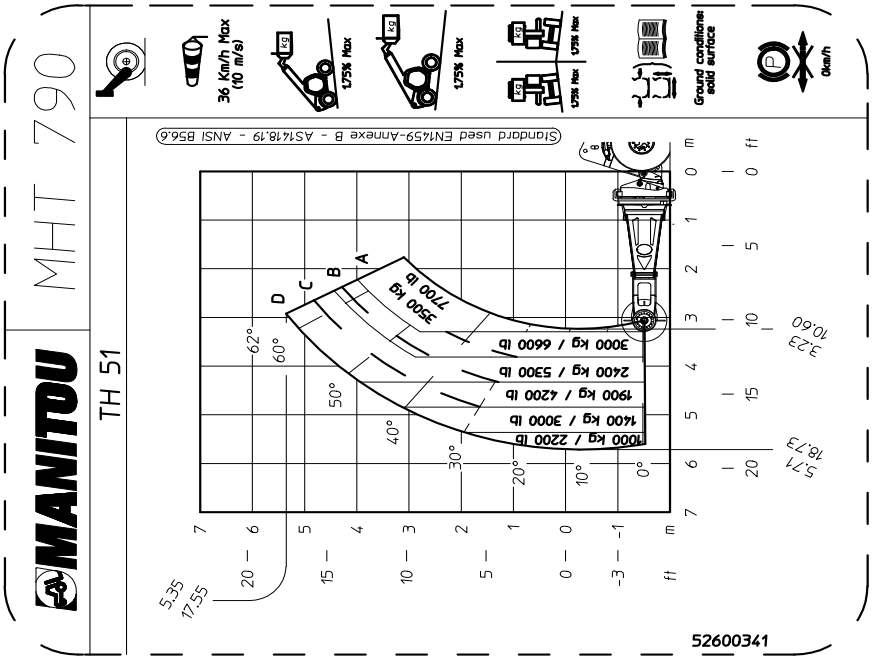

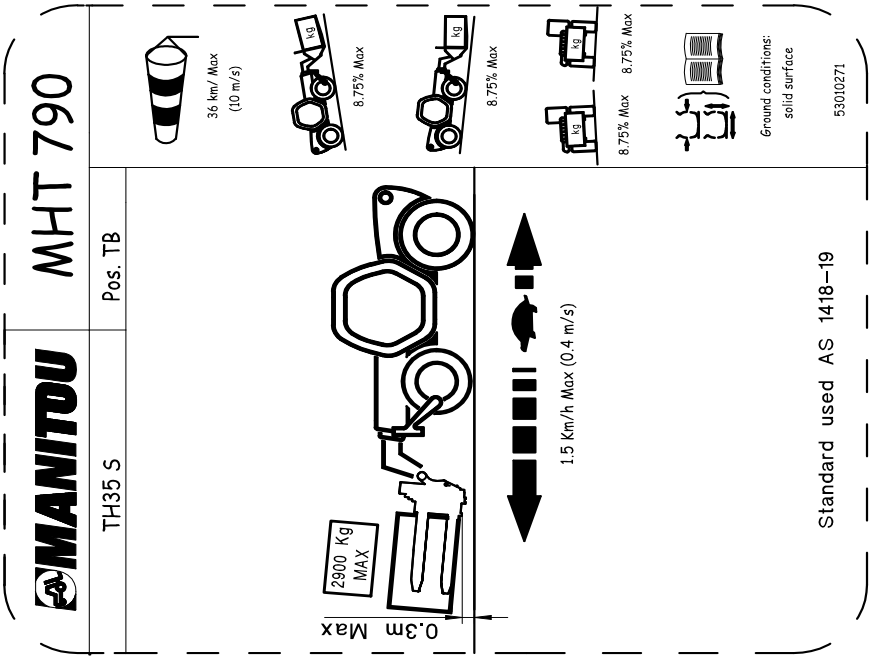

MHT-X 790 104JD ST3A S1 / MHT 790 104JD ST4 S1

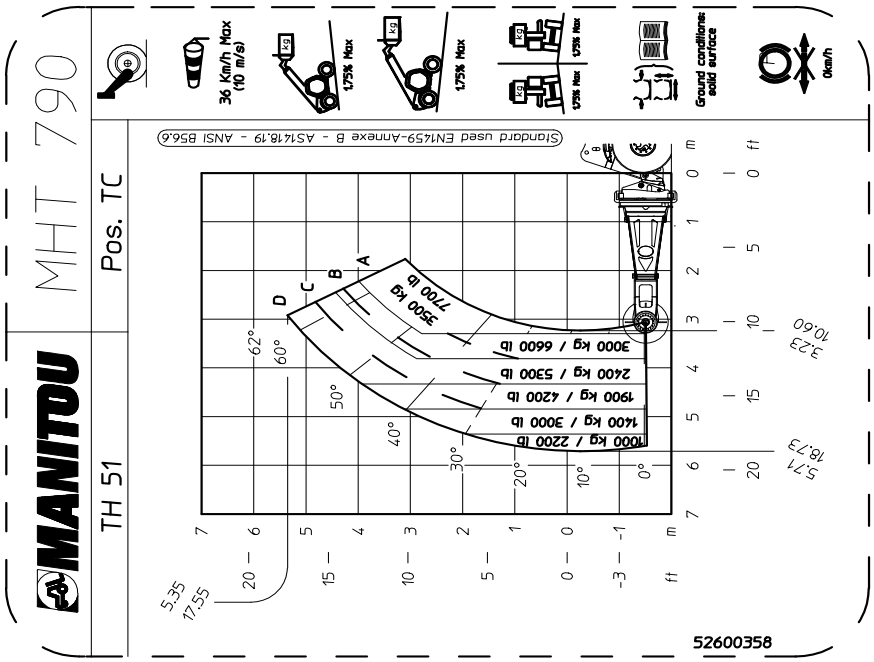

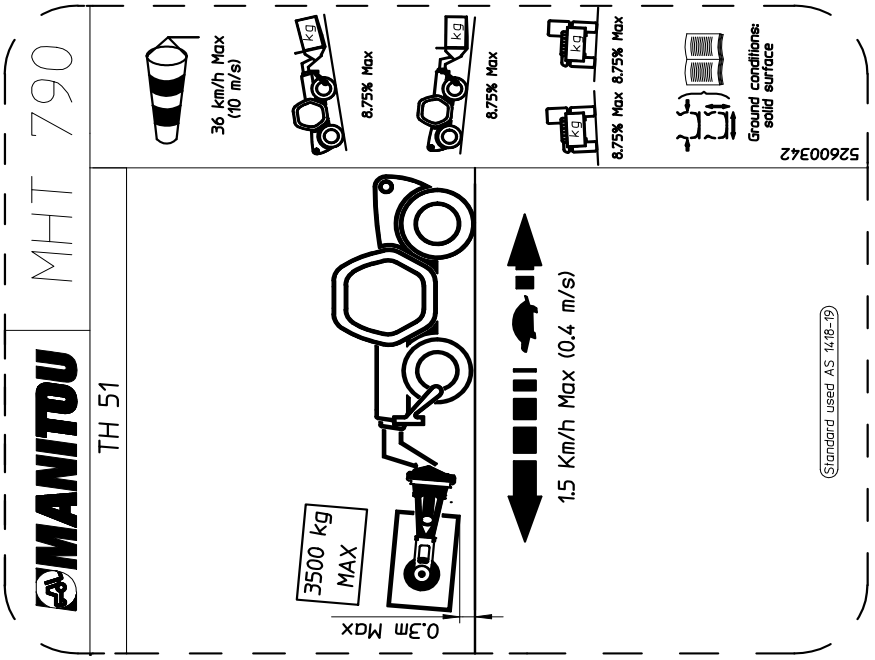

MHT-X 790 104JD ST3A S1 / MHT 790 104JD ST4 S1

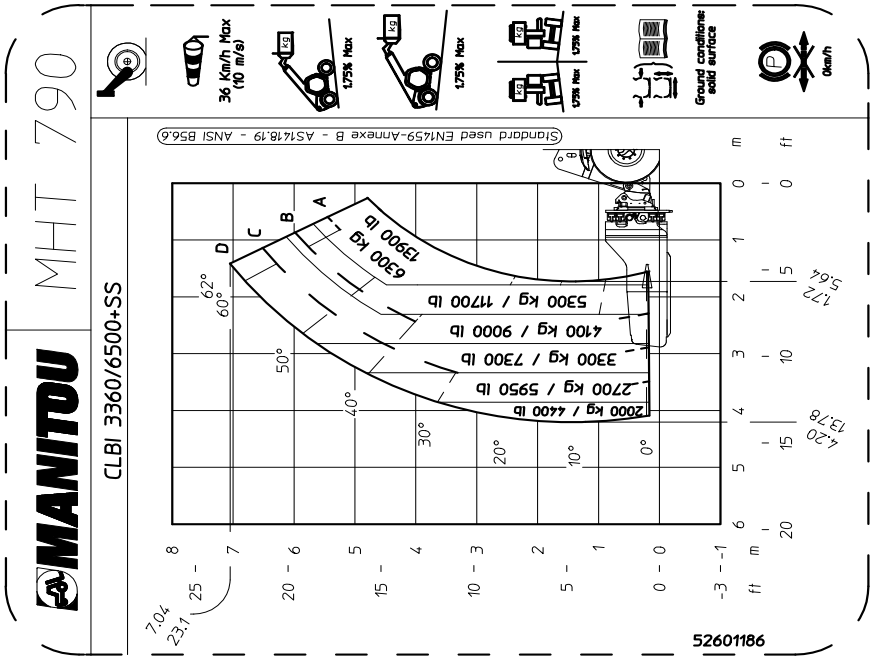

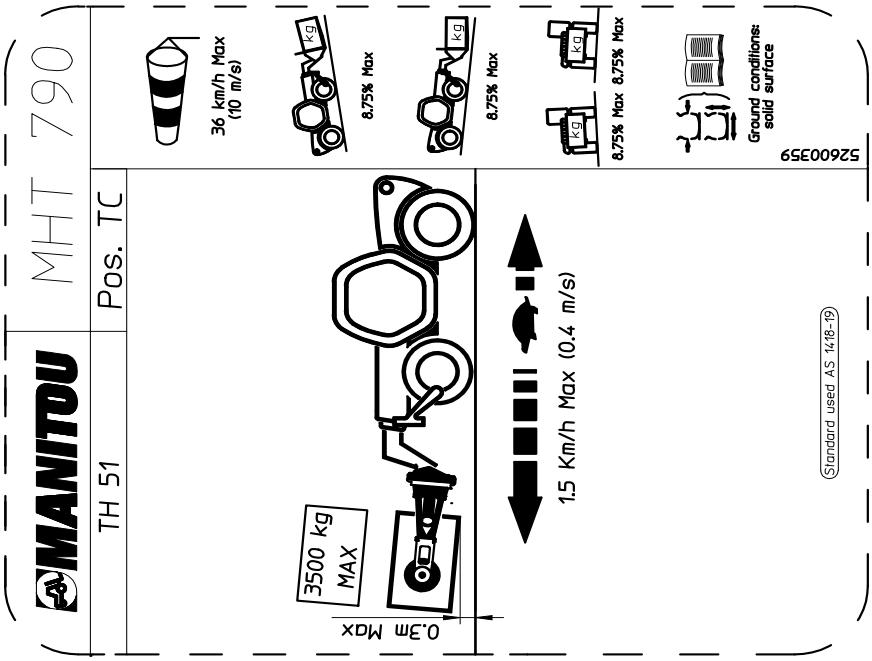

MHT-X 790 104JD ST3A S1 / MHT 790 104JD ST4 S1

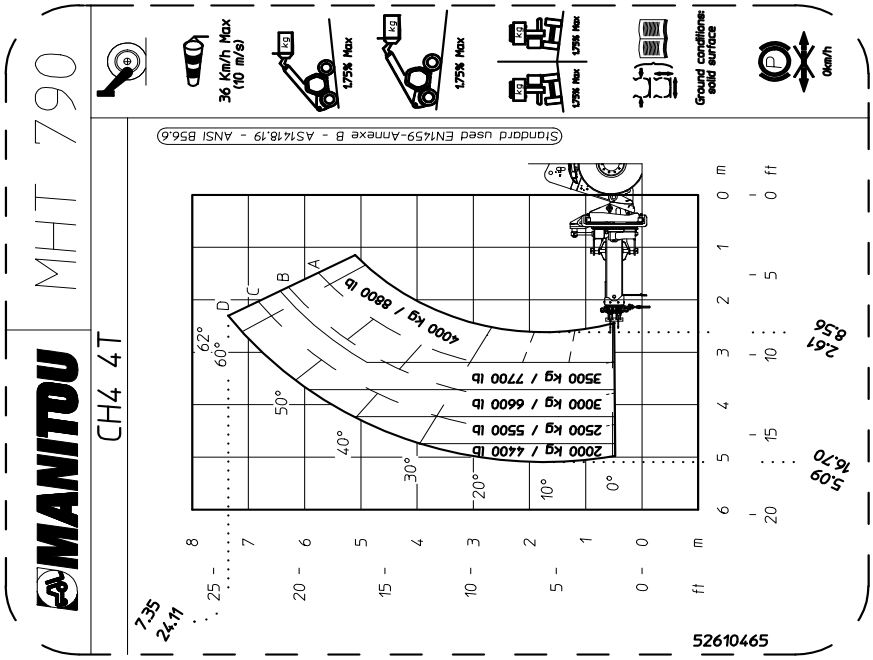

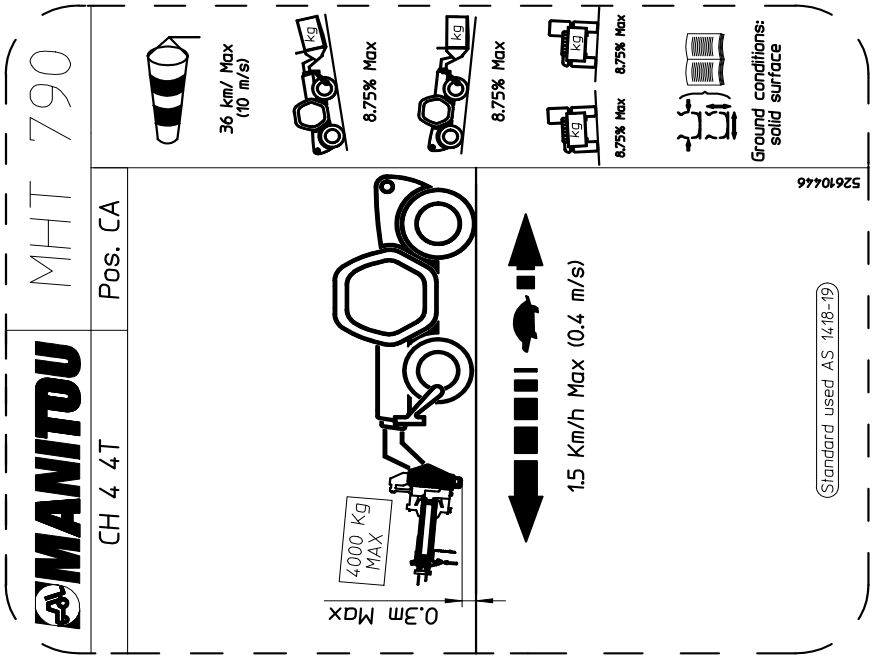

https://truckmanualshub.com/

MHT-X 790 104JD ST3A S1 / MHT 790 104JD ST4 S1

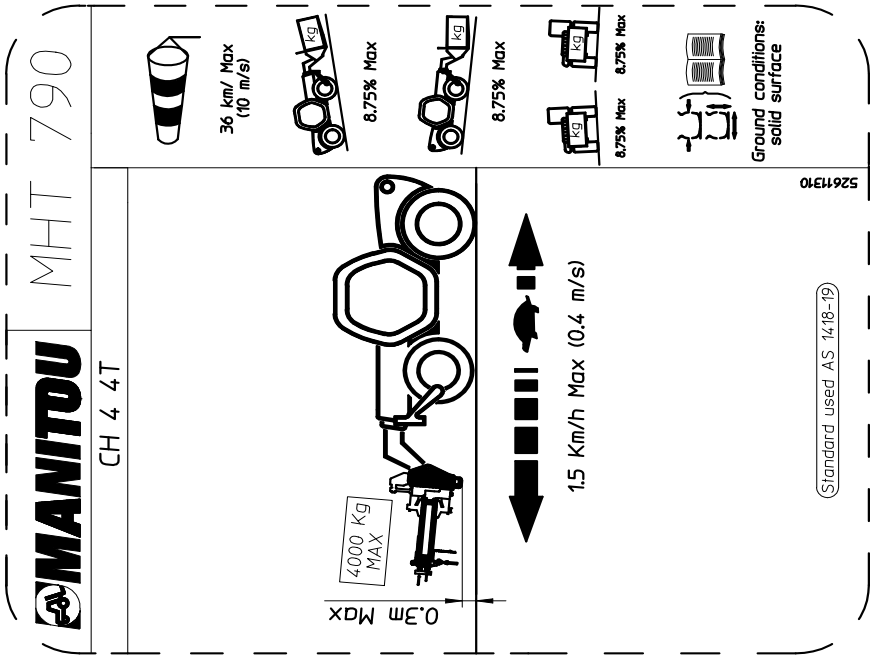

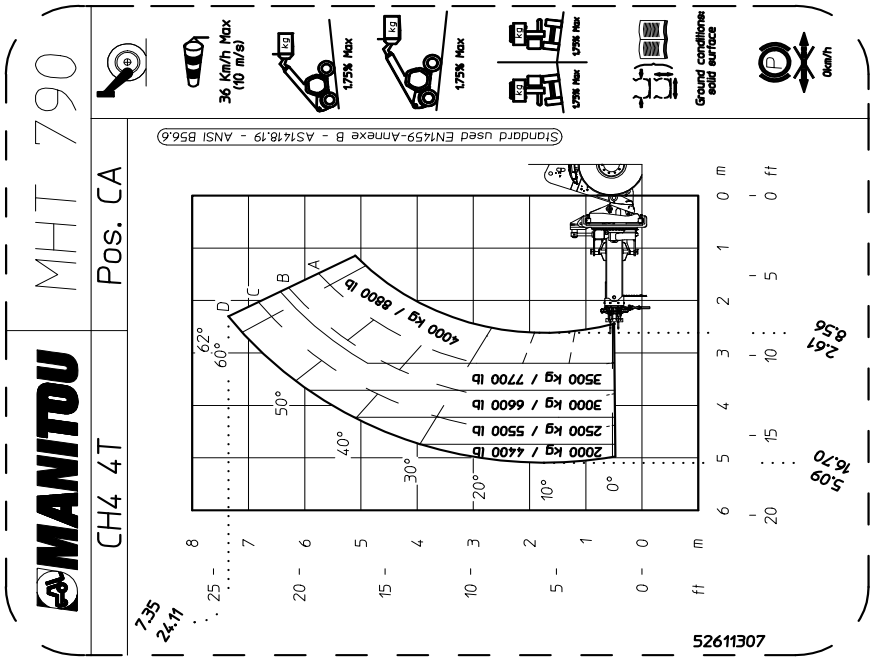

https://truckmanualshub.com/
duma rent
www.duma-rent.com

MHT-X 790 104JD ST3A S1 / MHT 790 104JD ST4 S1

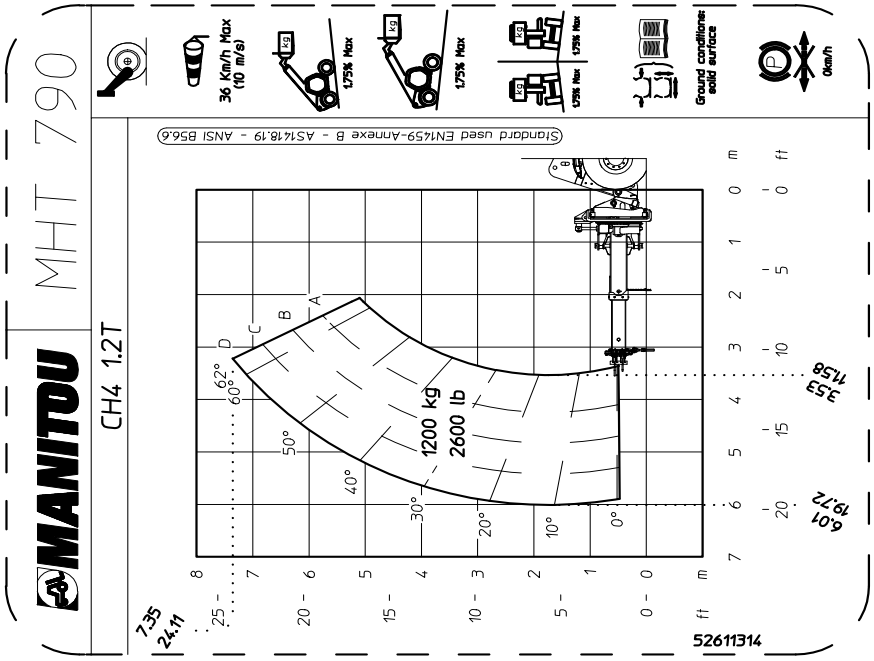

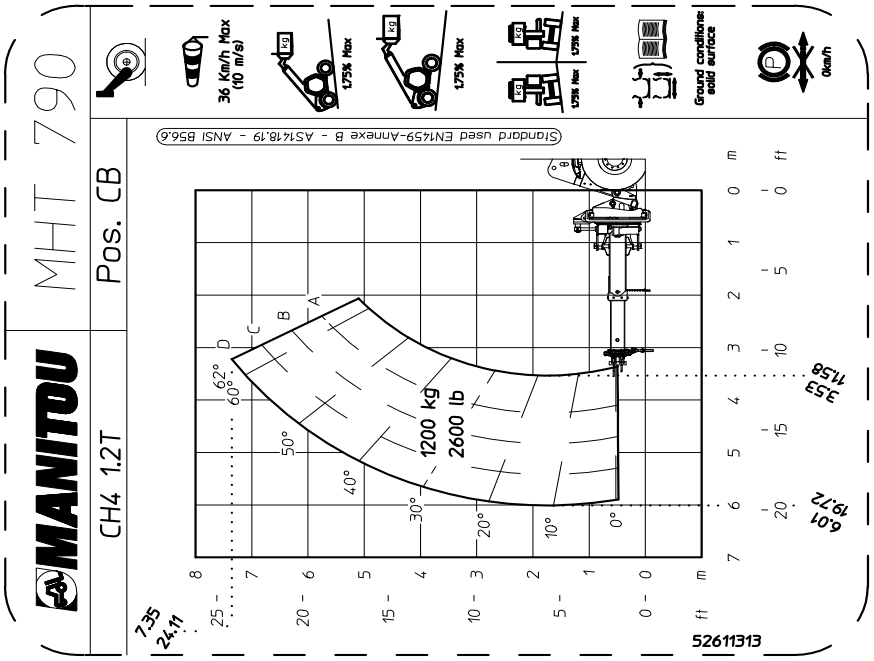

MHT-X 790 104JD ST3A S1 / MHT 790 104JD ST4 S1

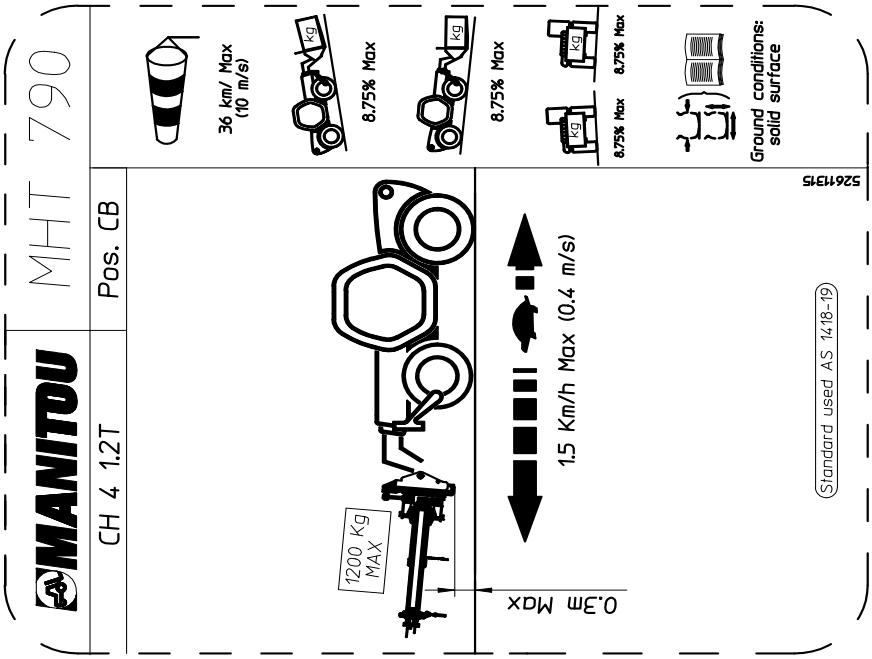

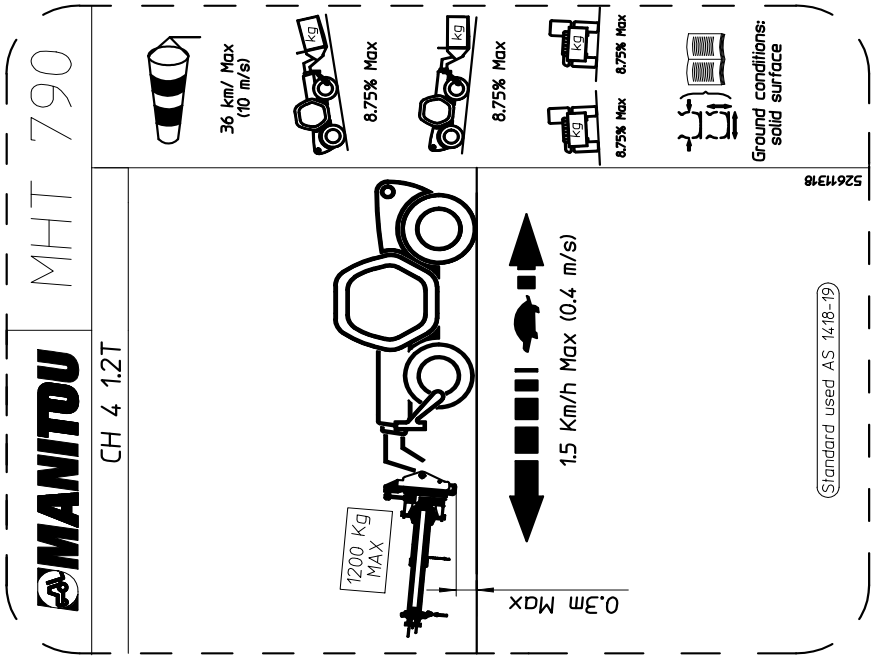

https://truckmanualshub.com/

MHT-X 790 104JD ST3A S1 / MHT 790 104JD ST4 S1

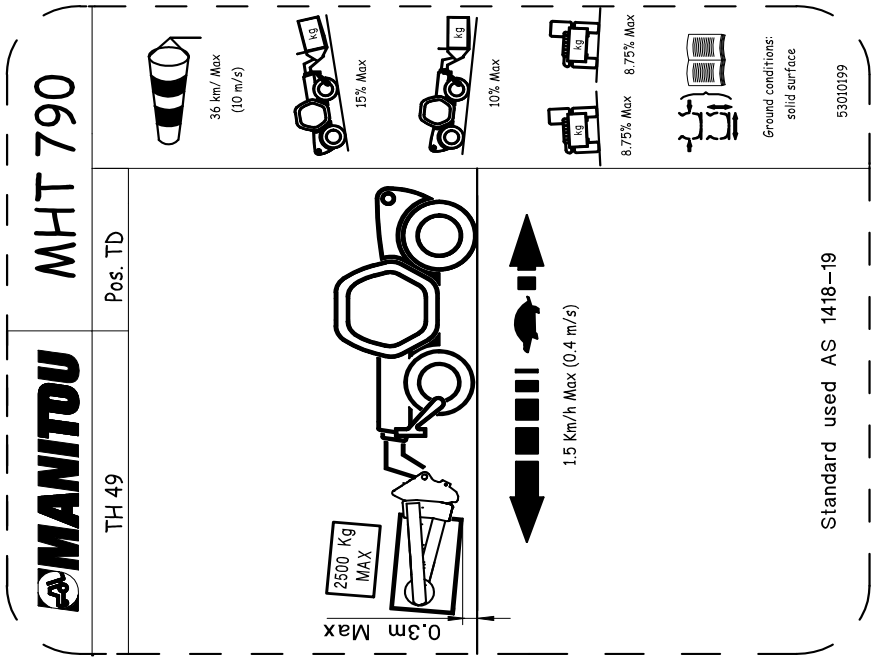

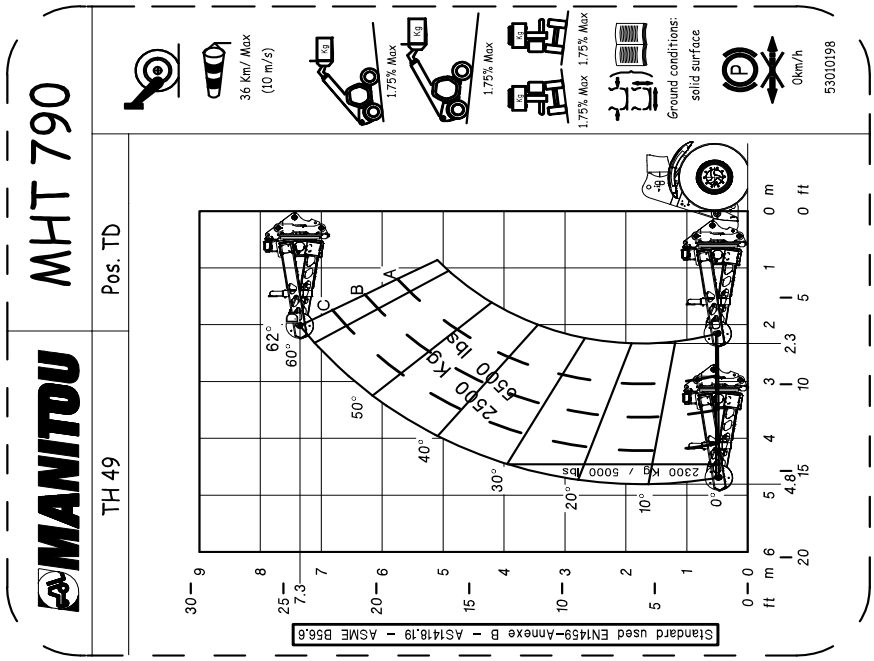

https://truckmanualshub.com/
duma rent
www.duma-rent.com

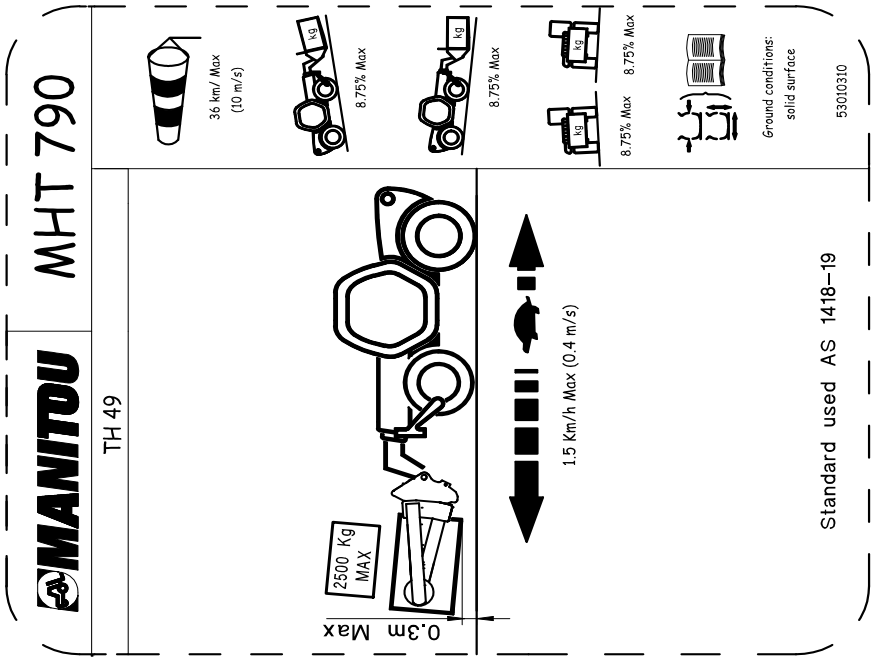

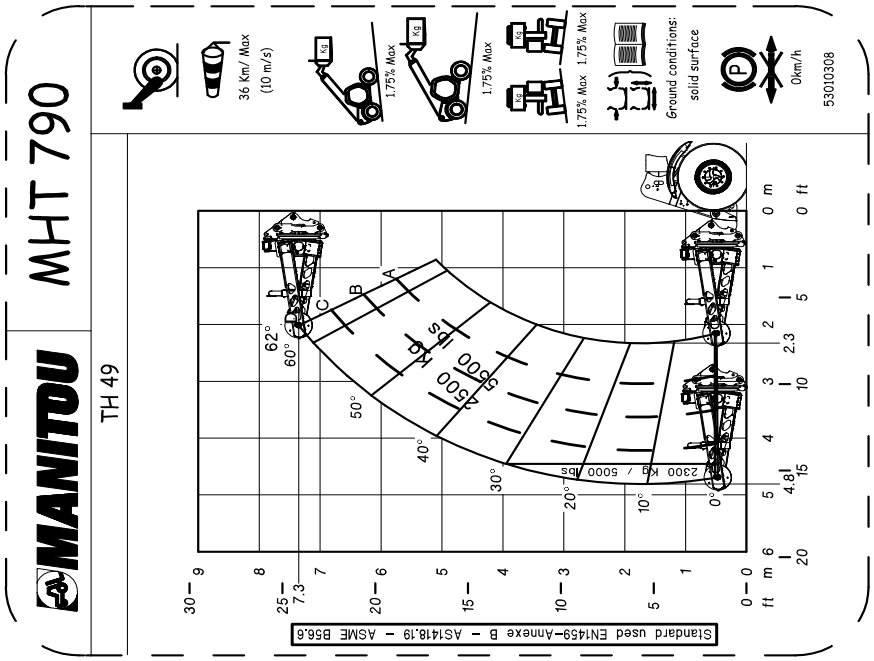

MHT-X 790 104JD ST3A S1 / MHT 790 104JD ST4 S1

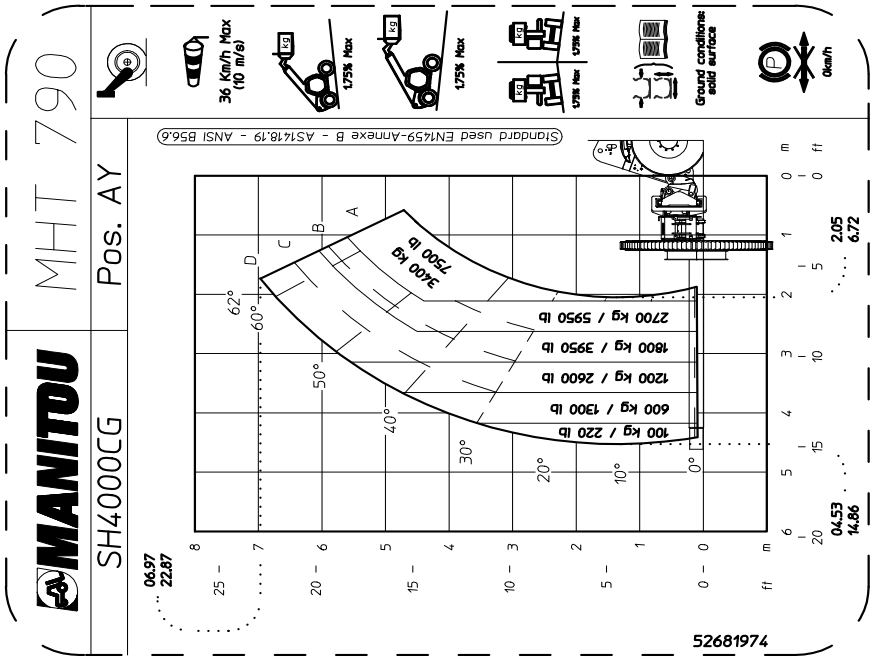

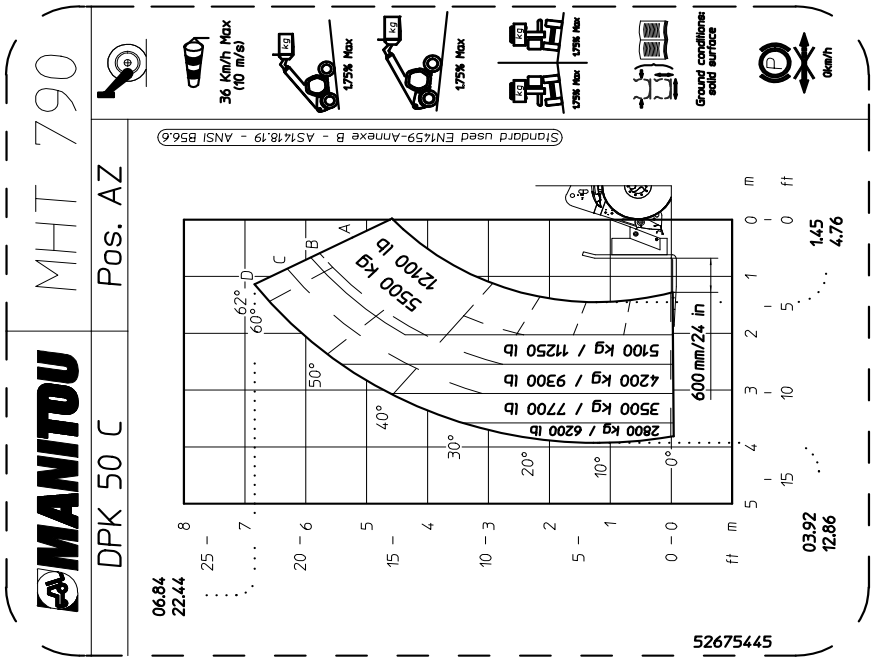

https://truckmanualshub.com/

MHT-X 790 104JD ST3A S1 / MHT 790 104JD ST4 S1

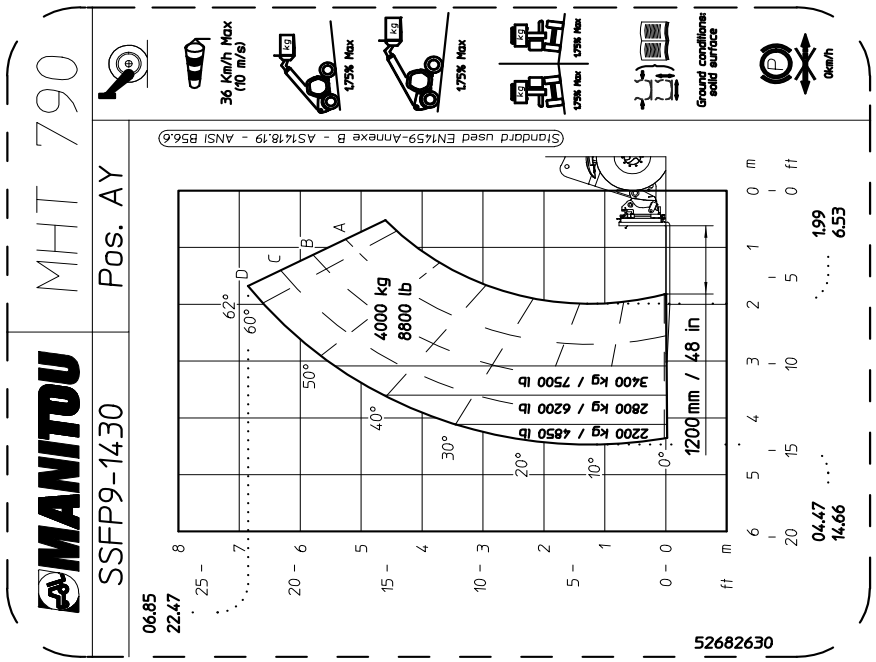

https://truckmanualshub.com/

duma rent

www.duma-rent.com