https://truckmanualshub.com/

UTILEV®
THE UTILITY LIFT TRUCK™

UT13-20PTE

1300 - 2000kg

Technical Specifications

Utility you can trust™

www.utilev.com

https://truckmanualshub.com/

UT13-20PTE Specifications

Characteristics	1.1	Manufacturer		UTILEV	UTILEV	UTILEV	UTILEV	UTILEV
	1.2	Model designation		UT13PTE	UT15PTE	UT16PTE	UT18PTE	UT20PTE
	1.3	Power: battery, diesel, LPG, electric mains		Battery	Battery	Battery	Battery	Battery
	1.4	Operation: manual, pedestrian, stand, seat, orderpicker		Seat	Seat	Seat	Seat	Seat
	1.5	Load capacity	Q (kg)	1300	1500	1600	1800	2000
	1.6	Load centre	c (mm)	500	500	500	500	500
	1.8	Load distance	x (mm)	355	355	355	355	355
	1.9	Wheelbase (with mast vertical)	y (mm)	1250	1250	1358	1358	1465
Weights	2.1	Unladen weight (max. battery)	kg	2760	2950	3020	3080	3370
	2.2	Axle loading with load front/rear (max. battery)	kg	3570/490	3905/545	4110/510	4295/585	4830/540
	2.3	Axle loading without load, front/rear (max. battery)	kg	1325/1435	1353/1597	1540/1480	1663/1417	1628/1742
Wheels and Tyres	3.1	Tyres: L = pneumatic, V = cushion, SE = superelastic		SE	SE	SE	SE	SE
	3.2	Tyre size, front		18x7 - 8	18x7 - 8	18x7 - 8	18x7 - 8	200/50 - 10
	3.3	Tyre size, rear		15x4.5 - 8	15x4.5 - 8	15x4.5 - 8	15x4.5 - 8	15x4.5 - 8
	3.5	Number of wheels, front/rear (X = driven)		2x/2	2x/2	2x /2	2x /2	2x /2
	3.6	Track width, front	b10 (mm)	902	902	902	902	902
	3.7	Track width, rear	b11 (mm)	175	175	175	175	175
Dimensions	4.1	Mast tilt, forward α /back β	degrees	6/6	6/6	6/6	6/6	6/6
	4.2	Height of mast, lowered	h1 (mm)	2145	2145	2145	2145	2205
	4.3	Free lift ▲	h2 (mm)	145	145	145	145	145
	4.4	Lift height ▲	h3 (mm)	3300	3300	3300	3300	3300
	4.5	Height of mast, extended ✚	h4 (mm)	3865	3865	3865	3865	3865
	4.7	Height to top of overhead guard ❍	h6 (mm)	1960/2120	1960/2120	1960/2120	1960/2120	1960 / 2120
	4.8	Seat height ✘	h7 (mm)	930	930	930	930	930
	4.12	Towing coupling height	h10 (mm)	473	473	473	473	473
	4.19	Overall length	l1 (mm)	2712	2712	2820	2820	3082
	4.20	Length to face of forks	l2 (mm)	1792	1792	1900	1900	2012
	4.21	Overall width	b1(mm)	1060	1060	1060	1060	1060
	4.22	Fork dimensions	s/e/l (mm)	35/100/920	35/100/920	35/100/920	35/100/920	40/122/1070
	4.23	Fork carriage to DIN 15173. Class, A/B ISO 2328		IIA	IIA	IIA	IIA	IIA
	4.24	Fork carriage width	b3 (mm)	1000	1000	1000	1000	1000
	4.25	Width over forks	b5 (mm)	200/1000	200/1000	200/1000	200/1000	200/1000
	4.31	Ground clearance under mast, with load	m1 (mm)	85	85	85	85	80
	4.32	Ground clearance at centre of wheelbase	m2 (mm)	90	90	90	90	90
	4.33	Aisle width with pallets 1 000mm long x 1 200mm wide	Ast (mm)	3161	3161	3269	3269	3379
	4.34	Aisle width with pallets 800mm wide x 1 200mm long	Ast (mm)	3260	3260	3370	3370	3480
	4.35	Outer turning radius	Wa (mm)	1440	1440	1548	1548	1658
	4.36	Inner turning radius	b13 (mm)	585	585	585	585	585
Performance	5.1	Travel speed with/without load	km/h	14/14	14/14	14/14	14/14	13/13
	5.2	Lifting speed with/without load	m/sec	0.29/0.44	0.29/0.44	0.29/0.44	0.29/0.44	0.25/0.40
	5.3	Lowering speed with/without load	m/sec	0.43/0.41	0.43/0.42	0.44/0.43	0.46/0.43	0.48/0.46
	5.5	Drawbar pull with/without load, 60 minute rating	N	6000/6200	7000/7250	7500/7720	8000/8300	9000/9300
	5.6	Maximum drawbar pull with/without load, 30 minute rating	N	6500	7000	7500	8000	9000
	5.7	Gradeability with/without load, 30 minute rating	%	14/15	14/15	13/14	13/14	11/12
	5.8	Maximum gradeability with/without load, 5 minute rating	%	20/20	20/20	20/20	20/20	15/18
	5.9	Acceleration time with/without load 10m	sec	5.1/4.6	5.2/4.6	5.2/4.6	5.3/4.7	5.7/4.7
	5.10	Service brake		Hydraulic	Hydraulic	Hydraulic	Hydraulic	Hydraulic
Electric Motor	6.1	Drive Motor, S2, 60min rating	kW	2 x 4.6	2 x 4.6	2 x 4.6	2 x 4.6	2 x 4.6
	6.2	Lifting motor, S3 15% rating	kW	8.6	8.6	8.6	8.6	8.6
	6.3	Battery DIN 43531/35/36 A, B, C, no		no	no	no	no	no
	6.4	Battery voltage/capacity (5hr rate)	V/Ah	48/500	48/500	48/625	48/625	48/750
	6.5	Battery weight (min/max)	kg	610/740	610/740	850/1000	850/1000	900/1100
	6.6	Energy consumption in accordance with VDI cycle	kWh/h	4.3	4.3	4.3	4.3	4.7
	8.1	Drive control		MOSFET/AC	MOSFET/AC	MOSFET/AC	MOSFET/AC	MOSFET/AC
Other	10.1	Operating pressure for attachments	bar	145	145	145	145	145
	10.2	Oil flow for attachments ●	l/min	65	65	65	65	65
	10.7	Average noise level at operator's ear ★	dB(A)	68	68	69	70	70
	10.8	Towing coupling, type DIN		Pin	Pin	Pin	Pin	Pin
		Hydraulic Tank - capacity (drain & refill)	litres	18	18	21	21	24
		Battery dimensions	l/w/h (mm)	522x830x627	522x830x627	630x830x627	630x830x627	738x830x627

★ LPAZ, measured according to the test cycles and based on the weighting values contained in EN12053.
▲ Bottom of forks.
✘ Full suspension seat specified.
✚ Without load backrest.

❍ h6 subject to +/- 5 mm tolerance.
● Variable

Specification data is based on VDI 2198, with the following configuration:
Complete truck with 3300mm 2-stage limited free lift mast, standard carriage and 920mm /1070mm (UT20PTE) forks, overhead guard and standard superelastic drive and steer tyres.

https://truckmanualshub.com/

UT13-20PTE Mast Table

Mast Type	Maximum fork height (mm)	Lowered Height (mm)	Overall Extended Height		Free Lift		Mast Tilt
			Without LBR (mm)	With LBR (mm)	Without LBR (mm)	With LBR (mm)	Forward / Back (deg)
2 stage LFL	3300	2145	3865	4245	145	145	6.0 / 6.0
	3500	2245	4065	4445	145	145	6.0 / 6.0
	4000	2545	4565	4945	145	145	3.5 / 5.0
3 stage FFL	4000	1910	4595	4955	1325	965	3.5 / 5.0
	4500	2075	5075	5455	1510	1165	3.5 / 5.0
	4800	2175	5375	5755	1610	1265	3.5 / 5.0
	5500	2410	6080	6455	1840	1500	3.5 / 5.0
	6000	2625	6625	6955	2010	1715	3.5 / 5.0

UT13-20PTE Capacity Table

Capacity in kg @ 500mm load centre

Mast Type	Maximum fork height (mm)	Single Tyre (mast vertical to ground) Without Integral Sideshift					Single Tyre (mast vertical to ground) With Integral Sideshift				
		UT13PTE	UT15PTE	UT16PTE	UT18PTE	UT20PTE	UT13PTE	UT15PTE	UT16PTE	UT18PTE	UT20PTE
2 stage LFL	3300	1300	1500	1600	1800	2000	1100	1300	1400	1600	1800
	3500	1300	1500	1600	1800	2000	1100	1300	1400	1600	1800
	4000	1300	1500	1600	1800	2000	1100	1300	1400	1600	1800
3 stage FFL	4000	1300	1500	1600	1800	2000	1100	1300	1400	1600	1800
	4500	1100	1300	1400	1600	1800	900	1100	1200	1400	1600
	4800	1000	1200	1300	1500	1550	800	1000	1100	1300	1350
	5500	850	1050	1150	1200	1300	650	850	950	1000	1100
	6000	750	950	1050	1100	1200	550	750	850	900	1000

https://truckmanualshub.com/

Features Overview

Front End

The range of rigid Class II 2-stage LFL and 3-stage FFL masts feature heavy sections and large diameter rollers and are compatible with factory fitted carriages, forks and integral sideshift. The mast design also assists in reducing load damage, as the excellent visibility helps to ensure precise handling.

Masts are mounted on the frame for maximum stability, supported by large tilt cylinders with fine rod threads and spherical bearings. The widely spaced mast channels ensure the operator has an excellent view of both the load and the operating environment.

The carriages are Class IIA and are made from high tensile steel sections. The integral sideshift and sideshift with fork positioner options feature a machined structure of tensile steel bars and a double-ended hydraulic cylinder.

Hydraulics

High quality cylinders and hard chrome burnished and polished rods reduce seal wear, for long life and minimum fluid contamination.

To keep the oil clean, there is a full-flow, low pressure filter on the return line. Oil cleanliness helps to minimise seal and pump wear and keeps the control valve in good condition, keeping service costs low. The hydraulic tank features a dipstick and oil breather.

The hydraulics are operated through levers mounted next to the seat, with a standard arrangement of 2-valve, 2-lever.

Brakes

The standard, fully-enclosed Oil-immersed Brakes require little maintenance and together with regenerative braking, offer excellent stopping capability. The truck also features an automotive style parking brake, located on the cowl.

Frame & Counterweight

Made from steel, the frame is extremely durable for a long life and features an integrated hydraulic oil tank. Both the hydraulic and drive motor components are protected against the ingress of both dirt and water. Service access to the controllers (located in the counterweight) is easy - at waist height - helping to minimise service time.

The compact and robust design of the truck enables the driver to complete handling tasks quickly and efficiently, with a low risk of damage to either the truck or the load.

https://truckmanualshub.com/

Operator Compartment

A wide, low-mounted, non-slip, intermediate step with good grip plus large grab handles allow the driver to get on and off the truck easily. The standard seat offers superior comfort and lumbar support and the excellent view through the mast ensures the operator can work efficiently throughout the day.

The wide mast, low cowl and high seating position give the operator an excellent view of the forks and of the way ahead, reducing the risk of load damage or collisions. Well positioned lights ensure optimum vision to both the front and rear.

The automotive-style controls ensure ease of operation. The dash display includes performance parameter and fault code information, hour meter, battery level indicator and drive wheel alignment indicator.

The small diameter steering wheel features light, precise steering and is tilt adjustable for optimum comfort. The manual hydraulic controls are mounted next to the seat and are within easy reach. Third and fourth function levers are available as options.

The uncluttered floor plate offers excellent foot space with well-placed accelerator and brake pedals and provides plenty of leg room to help the driver work comfortably.

Electronics

AC Technology features brushless motors which are protected against the ingress of dirt and water, to minimise damage and servicing costs. Roll-back is almost eliminated and higher travel speeds are attainable.

Both drive and hoist systems are fully adjustable to suit the load, the working area and the operator - more than 30 performance parameters can be adjusted to suit the type of load, operating environment and skill of the driver. In built diagnostics record intermittent faults and service requirements, reducing expensive service time.

Curtis AC Controllers optimise battery power, particularly helpful on ramps and long runs as well as high lifts. The truck is available with fully accessible 48V batteries with 500-750Ah capacity.

Wheels and Steering

The on-demand hydraulic power steering, combined with twin drive-motor system, delivers superb manoeuvrability and low energy consumption. The low steering force required further enhances operator comfort. The wheels feature a conventional rim assembly with dual superelastic tyres.

Drivetrain

Both axles are designed for durability and longevity. The compact drive axle features twin AC Technology brushless drive motors, readily accessible from either the front or above, minimising servicing time.

https://truckmanualshub.com/

Truck Dimensions

Ast = Wa + x + l6 + a
a = Minimum operating clearance of 200mm
l6 = Load length

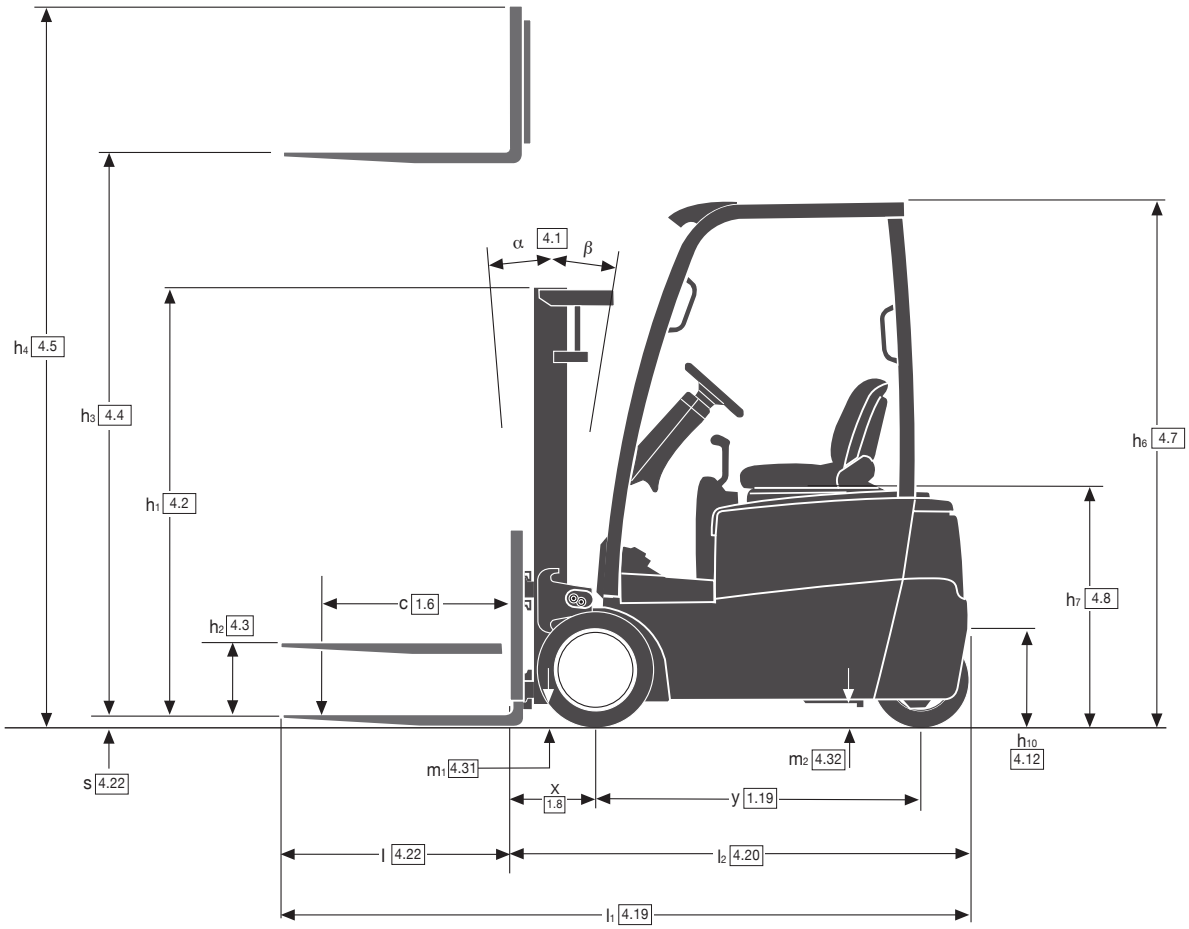

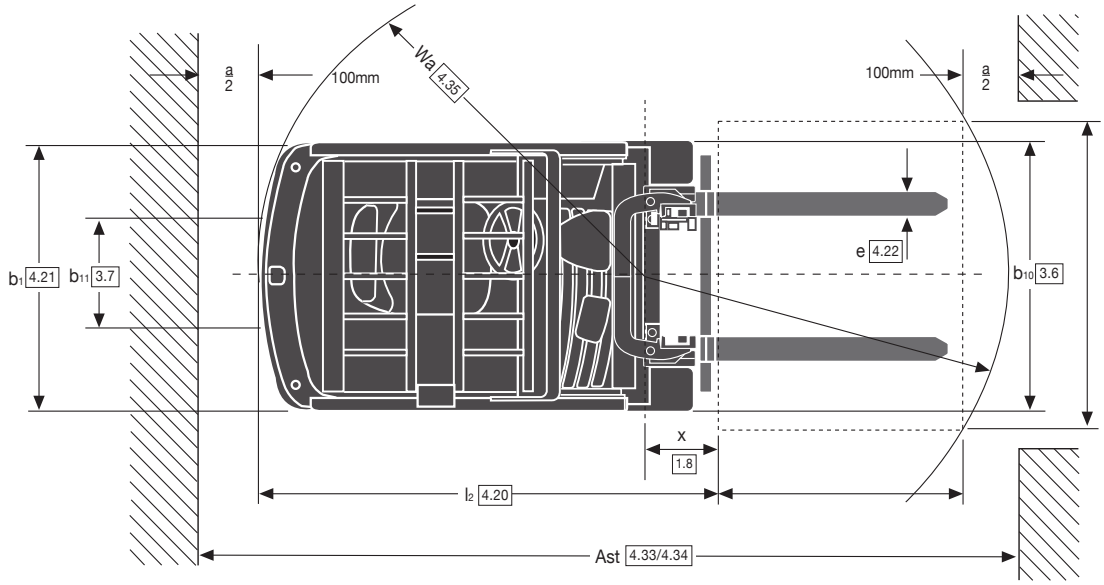

https://truckmanualshub.com/

Features

Standard Features Include:

- 48V AC Technology 2 x 4.6 kW Drive and 8.6 kW Hoist Motors
- Curtis Traction & Pump Controller
- DC-DC converter
- Emergency stop button
- Mast:
  2-stage LFL 3300mm
- Carriage:
  1000mm, Class II, for 2-stage LFL Mast
- Forks:
  920 x 100 x 35mm Class II (1.3-1.8t)

  1070 x 122 x 40mm Class II (2.0t)
- Superelastic Tyres:
  Drive 18x7-8

  Steer 15 x 4.5-8
- Two Function Seat-side Mounted Manual Levers - Lift / Tilt
- Forward / Reverse Directional Lever
- Two Pedal Layout
- Non-Suspension Seat (Vinyl) with Retractable Seat Belt
- Steering Wheel with Spinning Knob
- Tilt Adjustable Steering Column
- Power Steering
- Manual Park Brake
- Key Switch Start
- Entry Grab Handle
- Overhead Guard 2120mm
- LCD Dash Display
- Rear View Mirrors
- Load Backrest
- Mast Tilt - 6.0° Forward / 6.0° Back
- Strobe Light (magnetically mounted)
- Audible Reverse Alarm
- Lights - 2 x Front Work, 2 x Front Turn, Rear Turn / Stop / Brake / Reverse
- Toolbox
- Towing Pin
- Operator Manual
- 12 Months / 2000 Hours Manufacturer's Warranty

Options Include:

- Valve & Hose Groups - 3 way / 4 way
- 2-stage LFL Masts 3500mm - 4000mm MFH (Class II)
- 3-stage FFL Masts 4000mm - 6000mm MFH (Class II)
- 1000mm Integral Sideshift
- Integral Sideshift with Fork Positioner
- 1070mm, 1150mm or 1220mm Forks
- Lowered Overhead Guard - 1960mm
- Non-marking Superelastic Drive and Steer Tyres
- 500-750Ah Batteries
- Full Suspension Seat
- Operator Presence System
- Rear Work Light

Rated Capacities

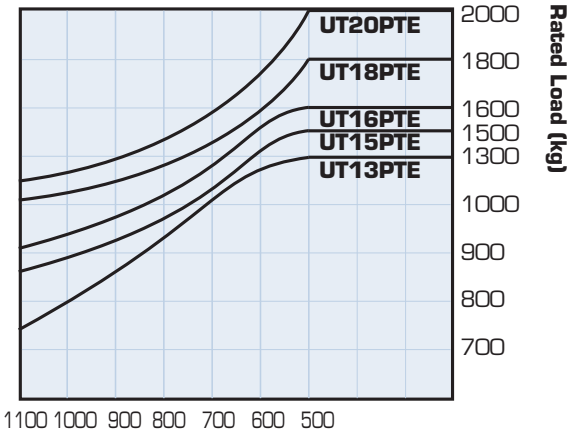

Load Centre
Distance from forks to centre of gravity of load.

Rated Load
Based on vertical masts as shown in VDI table.

https://truckmanualshub.com/

Overview

Utility you can trust™
The UTILEV® range of affordable forklift trucks delivers reliable and cost-effective materials handling solutions for applications across many industries, particularly where users require equipment without advanced functionality or attachments.

The product range has been designed to be easy to operate and maintain, and is backed up by a standard warranty and comprehensive parts availability.

Furthermore, a network of experienced distributors is on-hand to provide maintenance and support, whenever it is required.

The Range
The range consists of 1.3 to 2.0 tonne 3 wheel electric counterbalance forklift trucks, available in five different capacities.

1.3t - UT13PTE

1.5t - UT15PTE

1.6t - UT25PTE

1.8t - UT30PTE

2.0t - UT35PTE

Simple to Use
The ergonomically designed operator compartment, with a familiar automotive layout means that drivers will be able to work comfortably, preventing tiredness during handling operations.

A range of standard features and options help to ensure that the truck is configured to the needs of the application.

Easy to Maintain
Thanks to the simplicity of the components and specification, servicing can be carried out quickly and easily, even when PCs, laptops or diagnostic tools are not available

Affordable to Own
The use of proven, high quality, robust components, efficient filtration and excellent cooling result in reliable operation and lower wear and tear. This - together with the fast availability of cost-effective replacement parts - helps to reduce service and maintenance requirements and costs.

Standard service intervals are 500 hours and the trucks have a standard warranty of 2000hrs / 12 months.

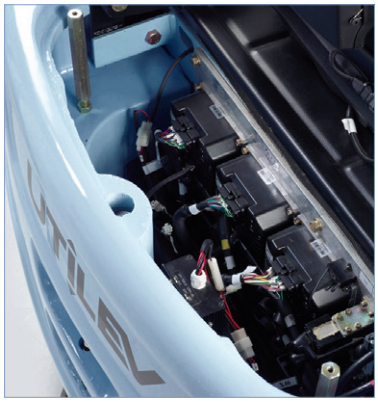

Simple to Use, **Easy** to Maintain and **Affordable** to Own.
UTILEV - Utility you can trust™.

Call: +44 1276 538500

Email: marketing@utilev.com

UTILEV® THE UTILITY LIFT TRUCK™

These trucks conform to current legislative requirements.
Specification is subject to change without notice.
Trucks shown with optional equipment.

Publication part no. 99990032 Rev.03. Designed in The United Kingdom.
© HYSTER-YALE UK LIMITED 2017. All rights reserved.

UTILEV is a registered trademark.
THE UTILITY LIFT TRUCK and UTILITY YOU CAN TRUST are trademarks in the United States and certain other jurisdictions.

HYSTER-YALE UK LIMITED, Centennial House,
Frimley Business Park, Frimley, Surrey, GU16 7SG, United Kingdom.
Tel: + 44 (0) 1276 538500, Fax: + 44 (0) 1276 538559
www.utilev.com