https://truckmanualshub.com/

ISO

MITSUBISHI

MT160,160D
MT180,180D
MT180H,180HD

REPAIR MANUAL

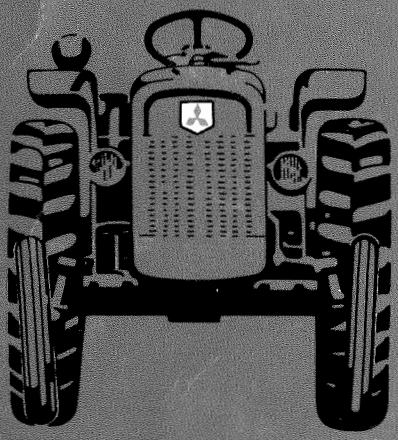

Downloaded from www.Manualslib.com manuals search engine

https://truckmanualshub.com/

Downloaded from www.Manualslib.com manuals search engine

https://truckmanualshub.com/

INDEX

GENERAL DESCRIPTION	1
ENGINE SYSTEM	2
CLUTCH SYSTEM	3
FRONT AXLE AND STEERING LINKAGE SYSTEM	4
TRANSMISSION SYSTEM (Sliding gear type)	5-1
TRANSMISSION SYSTEM (Hydrostatic Transmission)	5-2
BRAKE SYSTEM	6
HYDRAULIC SYSTEM	7-1
HYDRAULIC SYSTEM (Position Control)	7-2
ELECTRICAL SYSTEM	8
OTHERS	9

Downloaded from www.Manualslib.com manuals search engine

https://truckmanualshub.com/

Downloaded from www.Manualslib.com manuals search engine

https://truckmanualshub.com/

CHAPTER 1
GENERAL DESCRIPTION

1

Downloaded from www.Manualslib.com manuals search engine

https://truckmanualshub.com/

Downloaded from www.Manualslib.com manuals search engine

https://truckmanualshub.com/

TABLE OF CONTENTS

	Page
Specifications	1-1
Greasing diagram	1-12
Periodical maintenance services	1-13
Lubrication table	1-14
Wiring diagram	1-15
Antifreeze	1-16
Tightening torque	1-17
Serial number location	1-17
Sealants	1-18

Downloaded from www.Manualslib.com manuals search engine

https://truckmanualshub.com/

Downloaded from www.Manualslib.com manuals search engine

https://truckmanualshub.com/

Tractor model				MT160	MT160D	MT180	MT180D	MT180H	MT180HD
Type				All purpose wheel tractor					
Body structure				Monocoque type					
Dimensions	Overall length	To end of rear tire	mm(in.)	2200 (86-19/32)		2225 (87-19/32)			
		To end of 3-point linkage		2523 (99-11/32)					
	Overall width			975 (38-3/8)		940 (37)	970 (38-3/16)	940 (37)	970 (38-3/16)
	Overall height	To top of steering wheel		1155 (45-15/32)	1165 (45-7/8)	1175 (46-1/4)	1185 (46-21/32)	1175 (46-1/4)	1185 (46-21/32)
	Wheelbase			1300 (51-3/16)					
	Ground clearnce			260 (10-1/4)	215 (8-15/32)	280 (11-1/32)	215 (8-15/32)	280 (11-1/32)	215 (8-15/32)
	Gross weight		kg (lb)	565 (1246)	615 (1356)	575 (1268)	625 (1278)	575 (1268)	625 (1278)
	Load distribution (without load)	Front axle		260 (573)	310 (684)	260 (573)	320 (706)	260 (573)	320 (706)
		Rear axle		305 (673)		315 (695)	305 (673)	315 (695)	305 (673)
	Turning radius (with brakes)		mm (in.)	1850 (72-27/32)					
Engine	Model			MITSUBISHI K3A-13MT		MITSUBISHI K3C-13MT			
	Type			Vertical, 4-stroke cycle, water cooled, overhead valve, in line, diesel					
	Number of cylinders			3					
	Combustion chamber type			Swirl combustion chamber with preheater					
	Cylinder liner			Non liner					
	Bore and stroke		mm (in.)	65 x 78 (2-9/16 x 3)		70 x 78 (2-49/64 x 3)			
	Piston displacement		cc (cu in.)	776 (47.4)		900 (54.9)			
	Compression ratio			23 : 1					
	Firing order			1 - 3 - 2					
	Rated rpm		rpm	2700					
	Max. rpm			2900^{+0}_{-75}					
	Idling rpm			925± 25					
	Max. bare HP (SAE)		HP/rpm	16.5/2700		18.5/2700			
	Max. torque		kg-m/rpm (ft-lb/rpm)	4.5 (32.5)/1900		5.2 (37.6)/1900			

Downloaded from www.Manualslib.com manuals search engine

https://truckmanualshub.com/

Tractor model				MT160	MT160D	MT180	MT180D	MT180H	MT180HD
Engine	Compression pressure		kg/cm² (psi)/rpm	32 (455) /280					
	Number of piston rings			3 compression rings and 1 oil ring					
	Intake valves	Open	deg	At 18° before TDC					
		Close		At 46° after BDC					
	Exhaust valves	Open		At 46° before BDC					
		Close		At 18° after TDC					
	Injection timing			At 21° ± 2° before TDC					
	Valve clearance	Intake valves	mm (in.)	0.25 (0.01) at cold					
		Exhaust valves		0.25 (0.01) at cold					
	Fuel consumption		g/HP/h (oz/HP/h)	220 (7.7)		230 (8.1)			
	Direction of rotation			Clockwise (as viewed from front)					
	Weight, dry		kg (lb)	125 (276)					
Cooling system	Radiator fin			Corrugate type					
	Radiator cap pressure		kg/cm² (psi)	0.9 (12.8)					
	Thermostat	Type		Wax pellet type					
		Begins to open	°C (°F)	82 (180)					
		Full open		95 (203)					
		Lift	mm (in.)	8 (0.3) at 95° C (203 °F)					
	Water pump	Type		Centrifugal impeller type					
		Feeding capacity	ℓ /min (U.S.gal/min.)	52 (13.7) at 2600 engine rpm					
	Cooling fan	Diameter	mm (in.)	290 (11-13/32)					
		Number of blades		4					
		Blade meterial		Plastic					
	Pulley ratio of fan and crankshaft pulley			1.32					
	Drive system			"V" - type belt					

Downloaded from www.Manualslib.com manuals search engine

https://truckmanualshub.com/

Fuel system	Fuel			Bruns grade No. 2-D fuel oil (ASTM specifications)
	Fuel injection pump	Type		Bosch "M" plunger in line
		Model		NIPPON DENSO ND-PFR-3M
		Diameter of plunger	mm (in.)	5.5 (7/32)
		Cam lift		7 (9/32)
	Fuel injection nozzles	Type		Throttle type
		Model		NIPPON DENSO ND-DN4SD24
		Injection pressure	kg/cm^2 (psi)	120^{+10}_{-0} (1706^{+142}_{-0})
	Fuel filter			Paper element type
Lubrication system	Oil pump	Type		Trochoid type
		Feeding capacity	ℓ/min. (U.S. gal/min.)	20 (5.28) at 2600 engine rpm
	Oil filter			Full flow paper element filter cartridge type
	Relief valve setting		kg/cm^2 (psi)	4 (57)
Air cleaner	Type			Cyclone dry air cleaner
	Filter			Dry paper element cartridge type
	Cleaning efficiency			More than 99.9%
	Dust holding		g (oz)	20 (0.7)
Governor system	Type			Mechanical all-speed control
	Speed control		rpm	90～2900
Electrical system	Generator	Type		Alternator
		Model		MITSUBISHI AH2053M4
		Voltage	V	12
		Capacity	A	35
	Starter motor	Type		Magnet type
		Model		MITSUBISHI M002T50381
		Voltage	V	12
		Output	kW	1.6

Downloaded from www.Manualslib.com manuals search engine

https://truckmanualshub.com/

Tractor				MT160	MT160D	MT180	MT180D	MT180H	MT180HD
Electrical system	Regulator	Type		Tirrill type					
		Model		MITSUBISHI RQB2220D1					
		Regulator voltage (no load)	V	14.8					
		Warning lamp lighting on voltage		0.5 ~ 3.0					
		Warning lamp lighting off voltage		4.2 ~ 5.2					
	Glow plugs	Type		Sheathed type					
		Rated voltage	V (A)	10.5					
		Resistance capacity (at normal temperature)	Ω	1 ~ 1.2					
	Glow plug indicator	Type		Red heat type					
		Rated current	A	30					
		Terminal-to-terminal voltage	V	0.9 ~ 1.1 (at 30A)					
Clutch system	Type			Dry single disc plate diaphragm spring type					
	Clutch disc diameter		mm (in.)	184 x 127 (7-5/16 x 5-1/32)					
	Lining thickness			7.8 (5/16)					
	Torque capacity		kg-m (ft-lb)	11.0 (79.6)					
	Spring pressure		kg(lb)	195 (430)					
Transmission	Number of shift levers			2					
	Speeds			6 - forward, 2- reverse				2-forward, 2-reverse	
	Speed change method			Selective sliding gear type				Hydrostatic type	
	Differential			Bevel gear type with differential lock					
	Differential lock			Foot pedal (right side of transmission case)					

Downloaded from www.Manualslib.com manuals search engine

https://truckmanualshub.com/

Travel speeds

MT160 and MT160D.
(2-WD and 4-WD) (at engine speed 2700 rpm)

Speed	Lever position	km/hr	mile/hr	m/sec
F-1	L-1	1.1	0.68	0.31
F-2	L-2	1.7	1.06	0.47
F-3	L-3	2.9	1.80	0.81
F-4	H-1	4.9	3.04	1.36
F-5	H-2	7.4	4.60	2.06
F-6	H-3	13.5 (max)	8.38	3.75
R-1	L-R	1.4	0.87	0.39
R-2	H-R	6.3	3.91	1.75

MT180 and MT180D
(2-WD and 4-WD) (at engine speed 2700 rpm)

Speed	Lever position	km/hr	mile/hr	m/sec
F-1	L-1	1.15	0.71	0.32
F-2	L-2	1.78	1.11	0.49
F-3	L-3	3.04	1.89	0.85
F-4	H-1	5.13	3.18	1.42
F-5	H-2	7.75	4.82	2.16
F-6	H-3	14.14	8.78	3.93
R-1	L-R	1.47	0.91	0.41
R-2	H-R	6.56	4.09	1.83

MT180H and MT180HD
(2-WD and 4-WD) (at engine speed 2700rpm)

Speed	Lever position	km/hr	mile/hr	m/sec.
F-1	L	0 ~ 6.2	0 ~ 3.9	0 ~ 1.7
F-2	H	0 ~ 16.6	0 ~ 10.3	0 ~ 4.6
R-1	L	0 ~ 3.4	0 ~ 2.1	0 ~ 0.9
R-2	H	0 ~ 8.5	0 ~ 5.3	0 ~ 2.4

Tire size: 8–18AG tire

Speed	Lever position	km/hr	mile/hr	m/sec
F-1	L-1	1.2	0.75	0.33
F-2	L-2	1.8	1.12	0.50
F-3	L-3	3.1	1.93	0.86
F-4	H-1	5.3	3.29	1.47
F-5	H-2	7.9	4.91	2.19
F-6	H-3	14.5 (max)	9.00	4.03
R-1	L-R	1.5	0.73	0.42
R-2	H-R	6.7	4.16	1.86

Tire size: 9.5–18ES tire

Speed	Lever position	km/hr	mile/hr	m/sec
F-1	L-1	1.24	0.78	0.34
F-2	L-2	1.86	1.16	0.52
F-3	L-3	3.21	2.00	0.89
F-4	H-1	5.49	3.41	1.52
F-5	H-2	2.18	5.09	2.27
F-6	H-3	15.02	9.32	4.17
R-1	L-R	1.55	0.96	0.43
R-2	H-R	6.94	4.31	1.93

Tire rise: 9.5–18ES tire

Speed	Lever position	Km/hr	mile/hr	m/sec.
F-1	L	0 ~ 6.4	0 ~ 4.0	0 ~ 1.8
F-2	H	0 ~ 17.2	0 ~ 10.7	0 ~ 4.8
R-1	L	0 ~ 3.5	0 ~ 2.2	0 ~ 0.97
R-2	H	0 ~ 8.8	0 ~ 5.5	0 ~ 2.4

Downloaded from www.Manualslib.com manuals search engine

https://truckmanualshub.com/

Tractor model					MT160	MT160D	MT180	MT180D	MT180H	MT180HD
Final reduction	Final reduction gear				Spur gear					
	Reduction ratio				11/72 (0.153)					
	Type of rear axle				1/2 floating type					
Power take-off	Power take-off step				3-step				2-step	
	Power take-off HP			HP/rpm	13.6/2700		15.5/2700			
	Power take-off shaft				1-3/8 in. 6-spline SAE standard					
	Power take-off rpm	First		rpm	623/2700 engine rpm				606/2700 engine rpm	
		Second			919/2700 engine rpm				1,186/2700 engine rpm	
		Third			1,506/2700 engine rpm					
	Standard power take-off	Shift position	First		540/2660 engine rpm				540/2405 engine rpm	
			Third(second)		1,000/1793 engine rpm				1,000/2278 engine rpm	
	Direction of rotation				Clockwise as viewed from the rear					
Steering	Steering system				Ackerman jant method					
	Axle center				Center pivot type					
	Steering knuckle arrangement				Lemoine type	Reverse Elliott type	Lemoine type	Reverse Elliott type	Lemoine type	Reverse Elliott type
	Tread adjustment				Not adjustable					
	Axle center swing angle			deg	8					
	Kingpin angle				8	10	8	10	8	10
	Camber				2.5					
	Caster				3	0	3	0	3	0
	Toe-in			mm(in.)	6.4±1.5(1/4±1/16)	0～6(15/64)	6.4±1.5(1/4±1/16)	0～6(15/64)	6.4±1.5(1/4±1/16)	0～6(15/64)
	Steering angle			deg	55	53	55	53	55	53
	Steering gear box (inside)				Ball screw type					
	Gear ratio				15					
	Steering wheel diameter			mm(in.)	403 (15-29/32)					
Brake system	Type				Foot operating. internal expansion, waterproof dry type					
	Brake pedal				Seperate with interlocking foot operating type					
	Parking brake and operating				Main brake used hand, operating lock, type					

Downloaded from www.Manualslib.com manuals search engine

https://truckmanualshub.com/

Brake system	Lining	Lengh x width x thickness	mm(in.)	119 x 28.5 x 4.0 (4-11/16 x 1-1/8 x 5/32)					
		Number of linings		4					
	Drum diameter		mm(in.)	114 (4-31/64)					
	Brake location			Differential shaft					
	Brake pedal free play		mm(in.)	25 ~ 30 (63/64 ~ 1-3/16)					
Tire	Front AG	Tire size and ply rating		4.00-9-4PR	5-12-4PR	4.50-10-4PR	5-12-4PR	4.50-10-4PR	5-12-4PR
		Tire pattern		Three-rib:F-2	Farm-lug:R-1	Three-rib:F-2	Farm-lug:R-1	Three-rib:F-2	Farm-lug:R-1
		Tire pressure	kg/cm² (psi)	3.25(46.2)	2.2 (31.3)				
		Outside diameter	mm(in.)	457 (18)	550(21-21/32)	488(19-7/32)	550(21-21/32)	488(19-7/32)	550(21-21/32)
		Tire width		113 (4-7/16)	123(4-27/32)	120(4-23/32)	123(4-27/32)	120(4-23/32)	123(4-27/32)
		Maximum load	kg (lb)	200 (441)	210 (463)	205 (452)	210 (463)	205 (452)	210 (463)
		Type of valve		TR - 13					
		Rim size		3.00Dx9DT	4JAx12	3.00Dx10DT	4JAx12	3.00Dx10DT	4JAx12
	Front ES (option)	Tire size and ply rating		18x7.00-8-4PR	6-12-4PR	20x8.00-10-4PR	6-12-4PR	20x8.00-10-4PR	6-12-4PR
		Tire pattern		Pillow-dia:G-2	All-weather:R-3	Pillow-dia:G-2	All-weather:R-3	Pillow-dia:G-2	All-weather:R-3
		Tire pressure	kg/cm² (psi)	2.0 (28.4)	2.2 (31.3)	1.7 (24.2)	2.2 (31.3)	1.7 (24.2)	2.2 (31.3)
		Outside diameter	mm(in.)	457 (18)	564(22-7/32)	495(19-15/32)	564(22-7/32)	495(19-15/32)	564(22-7/32)
		Tire width		170(7-3/32)	155(6-3/32)	193(7-19/32)	155(6-3/32)	193(7-19/32)	155(6-3/32)
		Maximum load	kg(lb)	310 (684)	270 (595)	410 (904)	270 (595)	410 (904)	270 (595)
		Type of vlave		TR - 413	TR - 13	TR - 413	TR - 13	TR - 413	TR - 13
		Rim size		5.50x8DT	5JAx12	6.00Ix10DT	5JAx12	6.00Ix10DT	5JAx12
	Rear AG	Tire size and ply rating		8 - 16 - 4PR		8 - 18 - 4PR			
		Tire pattern		Farm-lug : R-1					
		Tire pressure	kg/cm² (psi)	1.0 (14.2)					
		Outside diameter	mm(in.)	783 (30 - 13/16)		840 (33 - 5/64)			
		Tire width		197 (7 - 3/4)		197 (7 - 3/4)			
		Maximum load	kg/(lb)	475 (1047)		515 (1136)			
		Type of valve		TR - 15		TR - 281A			
		Rim size		W6 x 16		W6 x 18			

Downloaded from www.Manualslib.com manuals search engine

https://truckmanualshub.com/

Tractomr model					MT160	MT160D	MT180	MT180D	MT180H	MT180HD
Tire	(option)	Tire size and ply rating			9.5 - 16 - 4PR		9.5 - 18 - 4PR			
		Tire pattern			All-weather : R-3		All- weather : R-3			
		Tire pressure		kg/cm^2 (psi)	1.0 (14.2)		1.0 (14.2)			
		Outside diameter		mm(in.)	820 (32 - 9/32)		870 (34 - 1/4)			
		Tire width		mm(in.)	242 (9 - 17/32)		242 (9 - 17/32)			
		Maximum load		kg(lb)	555 (1224)		600 (1323)			
		Type of valve			TR - 15		TR - 218A			
		Rim size			W8 x 16		W8 x 18			
Tread adjustment	AG tire	Standard tread	Front		720(28-13/32)	785(30-29/32)	720(28-13/32)	785(30-29/32)	720(28-13/32)	785(30-29/32)
			Rear		740 (29 - 3/32)		740 (29 - 3/32)			
		Max. tread	Front		–	–	–	–	–	–
			Rear		890 (35)		890 (35)			
	ES tire	Standard tread	Front		790(31-3/32)	800 (31-1/2)	795(31-5/16)	800(31-1/2)	795(31-5/16)	800(31-1/2)
			Rear		790 (31 - 3/32)		770 (30 - 5/16)			
		Max. tread	Front		–	–	–	–	–	–
			Rear		840 (33 - 3/32)		865 (34 - 1/16)			

MT160 (2-WD)	MT160D (4-WD)
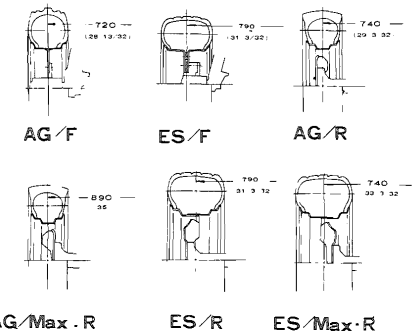	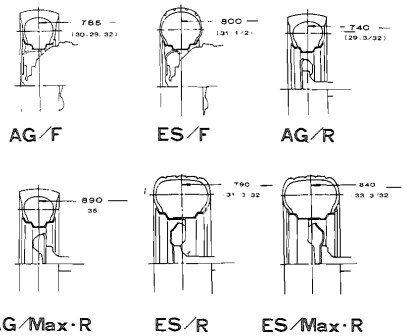

Downloaded from www.Manualslib.com manuals search engine

https://truckmanualshub.com/

	MT180 & MT180H	MT180D & MT180HD
Tread adjustment	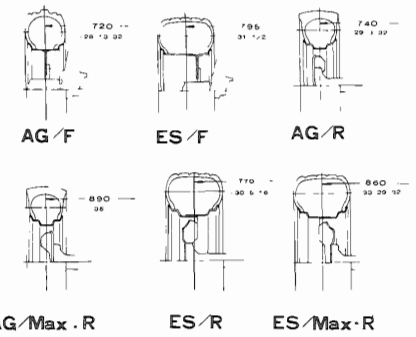	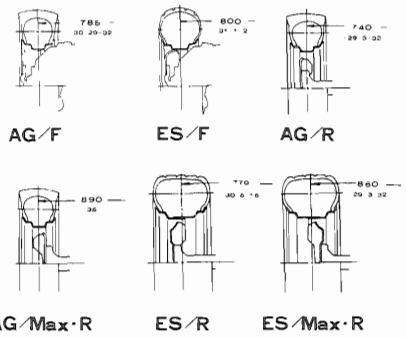

Hydraulic system	Control			Lift,hold,down,flow control	Position control, downspeed control and lock
	Cylinder	Type		Single - acting	
		Diameter of piston	mm(in.)	60 (2 - 3/8)	
		Stroke of piston		71 (2 - 13/16)	
	Maximum lift power at end of lower link		kg(lb)	500 (1103)	
	Pressure for pump relief valve setting		kg/cm^2 (psi)	135 (1920)	
	Hydraulic pump	Type		Pressure loading gear type	
		Name and model		NACHI GP - 3607A	
		Capacity	liter/min (U.S.gal/min)	12.9 (3.4) at 2700 engine rpm	
	Control valve type			Spool valve, 3-port, 3-position	2 spool valve with unload valve
	Oil lock valve			In line, non-return valve, flow control valve type	
	Strainer mesh			# 42 x 100 mesh	
	Hydraulic oil			SAE # 80 gear oil same as transmission oil	
	Hydraulic external adaptor			Optional	
	Lifting speed of 3-point linkage		sec	1	

Downloaded from www.Manualslib.com manuals search engine

https://truckmanualshub.com/

Tractor model				MT160	MT160D	MT180	MT180D	MT180H	MT180HD
3-point linkage	Category			JIS "1"					
	Lifting capacity		kg (lb)	500 (1103)					
	Top hitch pin hole dia		mm (in.)	19 (3/4)					
	Lower link stud hole dia			22 (7/8)					
	Width of cross-shaft			683 (26-29/32)					
Drawbar	Type			Fixed type					
	Max. drawbar pull		kg (lb)	–	–	390 (860)	590 (1300)	390 (860)	590 (1300)
	Max. drawbar HP		HP	–	–	–	–	–	–
Electrical system	Battery	Model		NX100 - S6L (S)					
		Capacity	V-Ah	12 - 45					
		Size (length x width x height)	mm (in.)	238 x 129 x 203 (9-3/8 x 5-5/64 x 8)					
		Weight	kg (lb)	14 (30.9)					
		Specific gravity of electrolyte		1,260[20°C (68° F)]					
		Polarity of ground		Negative					
	Head lamps	Bulbs	V-W	12 - 35, 2 pcs					
		Light switch		Relay type 3 steps, up and down					
	Tractor meter			Engine tachometer					
	Engine lubrication warning lamp	Location		On the instrumental pannel					
		Type		Warning tellite					
		Warning lamp lighting pressure	kg/cm² (psi)	0.2~0.4 (2.8~5.7)					
		Lamp color		Red					
	Water temperature warning lamp	Location		On the instrumental pannel					
		Type		Warning tellite					
		Warning lamp lighting temperature	°C (°F)	105 ~ 111 (221 ~ 232)					
		Lamp color		Red					
	Battery charging warning lamp	Location		On the instrumental pannel					
		Type		Warning tellite					

Downloaded from www.Manualslib.com manuals search engine

https://truckmanualshub.com/

Electrical system	Battery charging warning lamp	Warning lamp lights on	V	0.5 ~ 3.0					
		Warning lamp lights off		4.2 ~ 5.2					
		Lamp color		Red					
	Safety starter switch	Capacity	V-A	12 - 35 (Momentary 70A)					
		Stroke	mm (in.)	3 ± 0.5 (1/8 ± 1/64)					
	Working lamp (optional)	Bulb	V-W	12 - 23					
		Location		At the rear of right hand fender					
	Fuse		A	10					
Capacities (approximate initial fill)	Cooling water		liter (quart)	5 (5)					
	Engine oil		liter(pint)	3 (6)					
	Transmission oil		liter (U.S.gal-pint)	12 (3-1)				14 (3-6)	
	Steering gearbox		CC (oz)	200 (6.8)					
	Hydraulic oil			Same as transmission oil					
	Front differential case oil Incl. kingpin case oil		liter(pint)	–	2.5 (5)	–	2.5 (5)	–	2.5 (5)
	Fuel tank		(U.S.gal-pint)	18 (4 - 6)					

These specifications are subject to change without notice.

Downloaded from www.Manualslib.com manuals search engine

https://truckmanualshub.com/

GREASING DIAGRAM

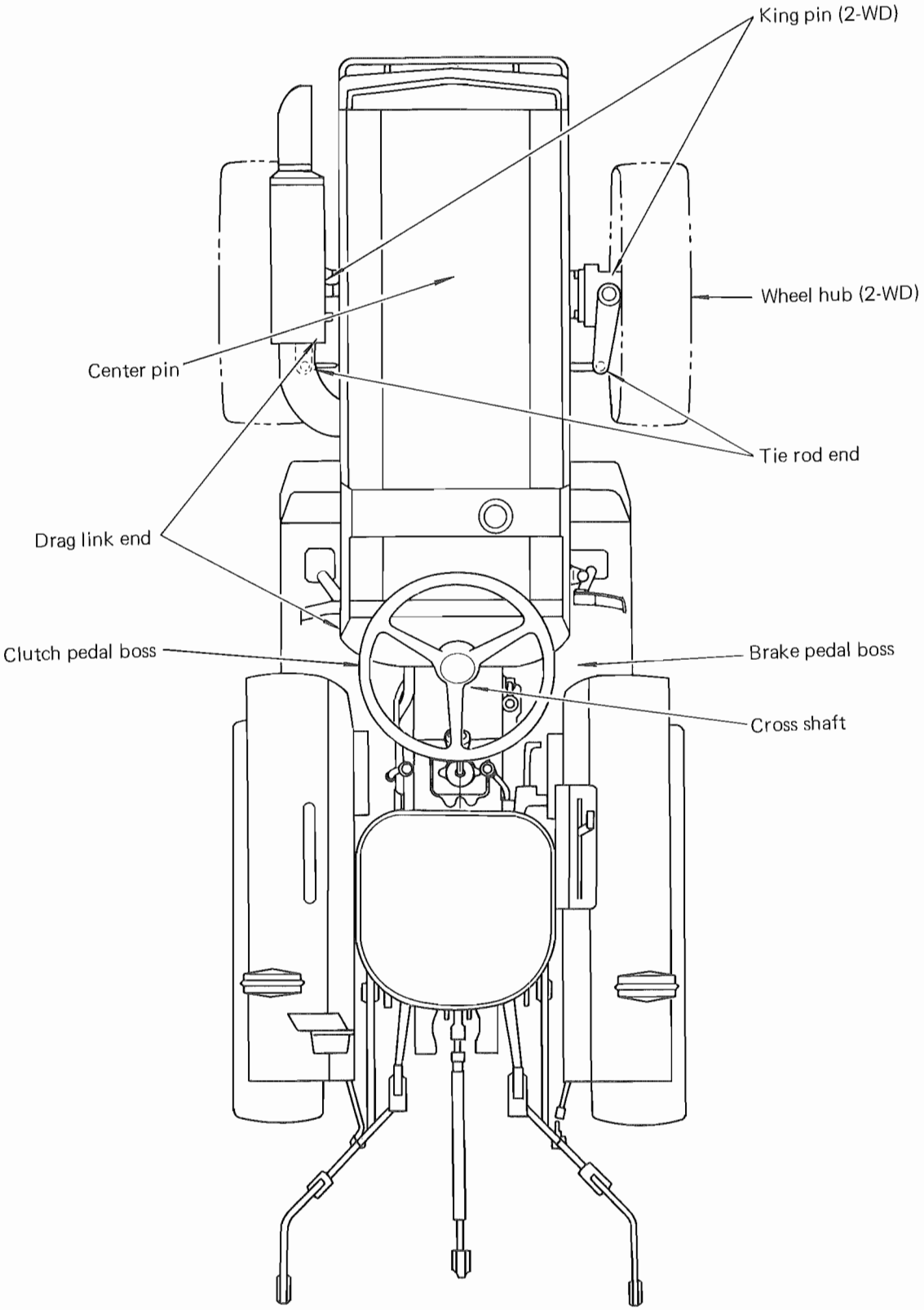

The greasing part of MT160/D and MT180H/HD are same as MT180/D.

This figure shows MT180D.

Downloaded from www.Manualslib.com manuals search engine

https://truckmanualshub.com/

PERIODICAL MAINTENANCE SERVICES

● = replacement ○ = clean-up ⊕ = check

Item	Maintenance interval								Thereafter every
	Initial 50 hrs	100 hrs	150 hrs	200 hrs	250 hrs	300 hrs	350 hrs	400 hrs	
Engine oil	●	●		●		●		●	100
Engine oil filter element	●	●		●		●		●	100
Fuel filter element	○	○		○		○		●	○ 100 ● 400
Air cleaner element	○	○	○	○	○	○	○	●	○ 50 ● 400
Injection nozzle pressure								⊕	400
Transmission oil and HST filter	●	⊕		●		⊕		●	● 200 ⊕ 100
Hydraulic oil filter element	○	○	○	○	○	○	○	○	50
4-WD front axle differential case and front gear case oil	●	⊕		●		⊕		●	● 200 ⊕ 100
Valve clearance	⊕							⊕	400
Cooling water	●	⊕	⊕	⊕	⊕	⊕	⊕	●	⊕ 50 ● 400
Specific gravity of battery electrolyte	⊕	⊕		⊕		⊕		⊕	100

NOTE

It is advised the intervals mentioned in the above list regarding replacing, cleaning-up and checking are for the standard cases and then desired to make each work so as to meet the requirement depending upon the usage condition of the tractors.

Initial 50 hrs services are for a brand new tractor.

Downloaded from www.Manualslib.com manuals search engine

https://truckmanualshub.com/

LUBRICATION TABLE

Application	Kind of Oil	API classification	Ambient Temperature	Grade (SAE No.) Single	Grade (SAE No.) Multi	Description
Engine	Motor oil or Super tractor oil universal (STOU)	CC CD	~ 10°C (14°F)	5W	5W-20	Use High grade oil of famous brand.
			–20 ~ 0°C (–4 ~ 32°F)	10W	10W-30	
			–10 ~ 10°C (14 ~ 50°F)	20W		
			0 ~ 20°C (32 ~ 68°F)	20		
			10 ~ 30°C (50 ~ 86°F)	30		
			30°C (86°F) ~	40	20W-40	
Transmission/ Hydraulic, 4-WD Front Axle.	Gear Oil	GL-3 or better	Below 0°C (32°F)	75W	–	Use good grade oil of famous brand.
			–10 ~ 30°C (14 ~ 86°F)	80W	80W-90	
			0 ~ 35°C (32 ~ 95°F)	85W	85W-140	
			10°C (50°F) & above	90		
	OR * Farm tractor use transmission /hydraulic oil or multi-service fluid.		All seasons			Use good grade oil supplied by famous farm tractor manufacturers or oil companies.
Steering gear oil	Grease	–	NLG1 – No. 1			Not requiring periodical service. Replace only when overhauling.

* **NOTE**

As transmission oil is also used as hydraulic oil, gear oil with higher viscosity will give a very bad influence on starting behaviour of the engine. From this standpoint this kind of oil is recommendable for the areas of very low air temperature in winter season.

For more details, please ask your MITSUBISHI dealer.

Downloaded from www.Manualslib.com manuals search engine

https://truckmanualshub.com/

WIRING DIAGRAM

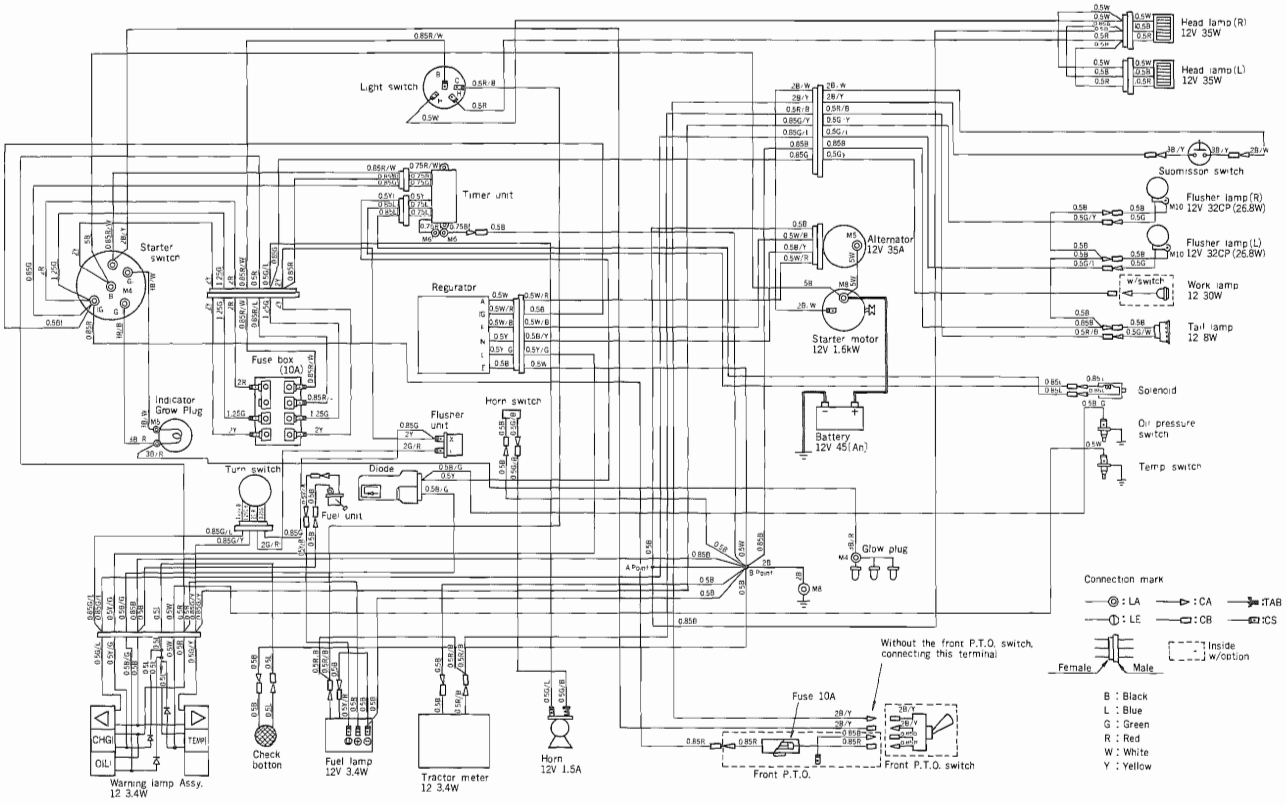

Downloaded from www.Manualslib.com manuals search engine

https://truckmanualshub.com/

ANTIFREEZE

When the atmospheric temperature is lower than 0°C (32°F), cooling water should be drained off completely or antifreeze solution should be added to prevent the breakdown of the cylinder block due to the frozen cooling water. Percentage of the antifreeze to be added should be a little higher than specified for the lowest atmospheric temperature in your area.

When adding antifreeze solution, the following rules should be observed, otherwise, the cylinder block will rust.

(1) This tractor's engine is of a diesel type and its cylinder block is made of cast iron. Therefore antifreeze solution suitable for such a cast engine block must be used.

(2) Before adding mixture of antifreeze and water, completely drain cooling water and clean the radiator using a detergent.

(3) Water to be added to the antifreeze should be a clean soft water.

(4) When the antifreeze is no longer required, drain and wash the cooling system using a detergent and fill it again with clean water. Do not re-use the antifreeze solution after it has been drained from cooling system.

(5) Treat antifreeze carefully as it can remove paint from the cylinder block.

(6) Any antifreeze solution (antifreeze and water), even if it is a permanent antifreeze, should not be used for more than 2 years.

(7) Confirm that there are no leaks from the hose joints or cylinder head gasket.

(8) Antifreeze with correct density to suit the climate in your area should be used.

(9) When antifreeze is used for a long period in winter, measure the specific gravity frequently.

Temperature, mixing ratio and specific gravity of the antifreeze

Freezing point °C (°F)	Percentage of antifreeze %	Specific gravity at 20°C (68°F)
−6.3 (20.7)	15	1.022
−9.3 (15.3)	20	1.029
−12.6 (9.3)	25	1.037
−16.2 (2.8)	30	1.044
−20.5 (−4.9)	35	1.051
−25.2 (−13.0)	40	1.058
−31.2 (−24.2)	45	1.066
−37.6 (−35.7)	50	1.073
−45.2 (−49.4)	55	1.078
	60%	1.088

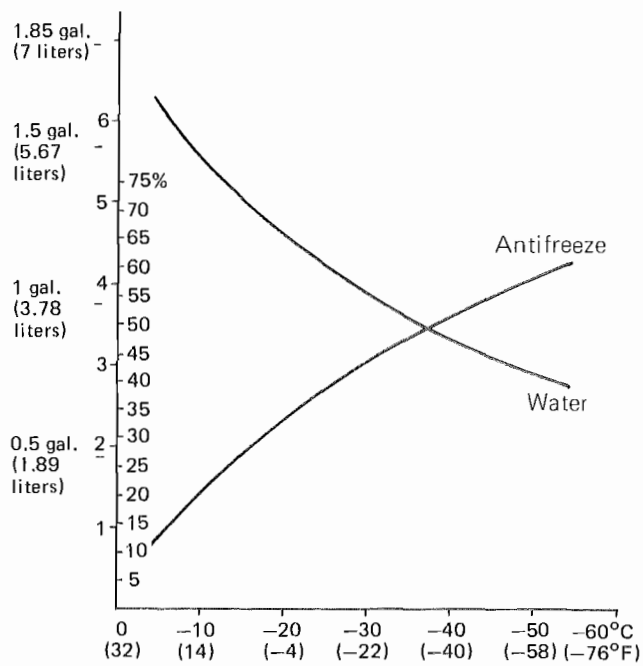

Downloaded from www.Manualslib.com manuals search engine

https://truckmanualshub.com/

TIGHTENING TORQUE

Unit: kg-m (lb-ft)

Bolt size	4T	6T	7T	8T
M5	0.2 ~ 0.35 (1.44 ~ 2.53)	0.45 ~ 0.55 (3.25 ~ 3.97)	0.55 ~ 0.65 (3.97 ~ 4.69)	0.65 ~ 0.75 (4.69 ~ 5.42)
M6	0.5 ~ 0.7 (3.61 ~ 5.06)	0.80 ~ 1.00 (5.78 ~ 7.23)	1.0 ~ 1.2 (7.23 ~ 8.68)	1.2 ~ 1.4 (8.68 ~ 10.1)
M8	1.2 ~ 1.7 (8.67 ~ 12.3)	2.0 ~ 2.5 (14.4 ~ 18.1)	2.5 ~ 3.0 (18.1 ~ 21.7)	3.0 ~ 3.5 (21.7 ~ 25.3)
M10	2.1 ~ 3.0 (15.2 ~ 21.7)	4.0 ~ 5.0 (28.9 ~ 36.1)	5.0 ~ 6.0 (36.1 ~ 43.3)	6.0 ~ 7.0 (43.3 ~ 50.6)
M12	4.5 ~ 5.5 (32.5 ~ 39.7)	7.0 ~ 8.0 (50.6 ~ 57.8)	8.5 ~ 9.5 (61.4 ~ 68.6)	9.5 ~ 11.0 (68.6 ~ 79.5)
M14	6.5 ~ 8.0 (46.9 ~ 57.8)	10.0 ~ 12.0 (72.2 ~ 86.7)	12.0 ~ 13.5 (86.7 ~ 97.5)	13.5 ~ 15.0 (97.5 ~ 108.0)
M16	9.0 ~ 11.0 (65.0 ~ 79.5)	13.0 ~ 15.0 (93.9 ~ 108.0)	15.5 ~ 17.5 (112.0 ~ 126.0)	18.0 ~ 20.0 (130 ~ 144)
M18	12.0 ~ 14.0 (87.7 ~ 101.0)	17.0 ~ 19.0 (123 ~ 137)	21.0 ~ 24.0 (152 ~ 173)	25.0 ~ 28.0 (181 ~ 202)
M20	15.0 ~ 17.0 (108.0 ~ 123.0)	20.0 ~ 22.0 (144 ~ 159)	24.0 ~ 28.0 (173 ~ 202)	32.0 ~ 36.0 (231 ~ 260)

SERIAL NUMBER LOCATION

Tractor serial number

It is located at the left side of the clutch housing, specifically upper side of the step.

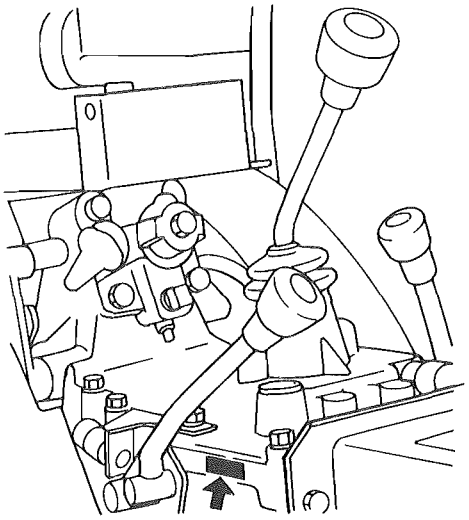

Tractor serial number

It is located at the right side of the transmission case specifically upper side

Engine serial number

It is located at the right hand side of the cylinder block, specifically injection pump side.

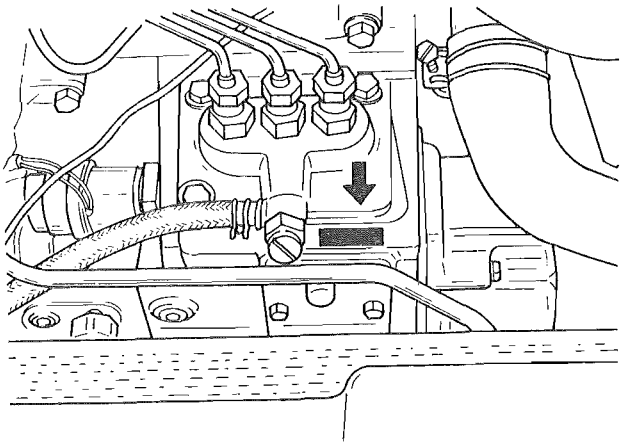

Engine serial number

It is located at the right hand side of the cylinder block, specifically injection pump side.

Downloaded from www.Manualslib.com manuals search engine

https://truckmanualshub.com/

SEALANTS

Sealants are similar in function to gaskets; they are used to keep liquids (such as lubricants and water) in – and dust, dirt, moisture and chemicals ("enemy" of the tractor) out. In this respect, too much emphasis cannot be placed on the importance of selecting sealants of the types called for the MITSUBISHI Tractor. The following chart will serve as a rough guide for selecting sealants:

Sealant Selection Chart

Where to use		Sealant base	Properties (minimum requirements)	Operating temperature
Engine	Threaded parts	Epoxy-modified	• Weather resistance • Oil resistance • Heat resistance	–30°C ~ 200°C (–22°F ~ 392°F)
	Main bearing caps and side seals	Silicone rubber	• Weather resistance • Oil resistance • Heat resistance	–60°C ~ 250°C (–76° F ~ 482°F)
Chassis	Transmission case, hydraulic case, etc.	Heat-resistant synthetic rubber (nonhardening type)	• Weather resistance • Oil resistance • Heat resistance • Tear resistance	–40°C ~ 150°C (–40°F ~ 302°F)
	Brake covers, engine-clutch housing joint, etc.	Special synthetic rubber (hardening type)	• Moisture resistance • Weather resistance • Oil resistance • Heat resistance	–40°C ~ 150°C (–40°F ~ 302°F)

Downloaded from www.Manualslib.com manuals search engine

https://truckmanualshub.com/

CHAPTER 2
ENGINE SYSTEM

2

Downloaded from www.Manualslib.com manuals search engine

https://truckmanualshub.com/

Downloaded from www.Manualslib.com manuals search engine

https://truckmanualshub.com/

TABLE OF CONTENTS

	Page
Description	2-1
Sectional views	2-2
Construction	2-4
Cylinder head assembly	2-4
Cylinder block assembly	2-6
Engine services	2-10
Engine removal	2-10
Engine installation	2-13
Piston removal	2-13
Piston installation	2-14
Water pump removal	2-14
Cylinder head disassembly	2-14
Cylinder block disassembly	2-15
Inspection	2-16
Reassembly	2-22
Lubrication system	2-29
Description	2-29
Removal and disassembly	2-30
Inspection	2-30
Reassembly	2-31
Fuel system	2-32
Description	2-32
Disassembly	2-36
Inspection	2-38
Reassembly	2-39
Governor system	2-43
Description	2-43
Disassembly	2-44
Inspection	2-44
Reassembly	2-44
Cooling system	2-45
Water pump	2-45
Thermo switch	2-46
Thermostat	2-46
Coolant change	2-47
Rust inhibitors and antifreeze additives	2-47

Downloaded from www.Manualslib.com manuals search engine

https://truckmanualshub.com/

Air cleaner 2-49
Description 2-49
Air cleaner services 2-49
Periodical maintenance service chart 2-50
Engine maintenance guide 2-51
When to overhaul 2-51
Compression pressure test – how to measure compression pressure 2-52
Engine diagnosis on the basis of compression pressure readings 2-52
Engine diagnosis on the basis of oil consumption 2-52
General working rules on disassembling and reassembling steps 2-52
Troubleshooting 2-54
Specifications and maintenance standards 2-58
Tightening torque 2-66
Application of sealants 2-66
Special service tools 2-67

Downloaded from www.Manualslib.com manuals search engine

https://truckmanualshub.com/

DESCRIPTION

The engines mounted on MITSUBISHI MT160/D, MT180/D and MT180H/HD water-cooled, 4-stroke cycle, overhead-valve, three cylinders diesel engines.
They are Model K3A for MT160 and MT160D and K3C for MT180, MT180D, MT180H and MT180HD which technology and manufacturing know-how. Their combustion chambers are of swirl type designed to provide inproved combustion efficiency and high fuel economy; their preheating system of glow plug type assures positive cold starting; and their crankshaft, supported at four places, is well balanced to withstand continuous full load without exhibiting any abnormal vibration at all speeds. Each piston is fitted with three compression rings and one oil ring. Full consideration is given to all features of engine construction in order to ensure the reliability of engine performance and to facilitate maintenence services.

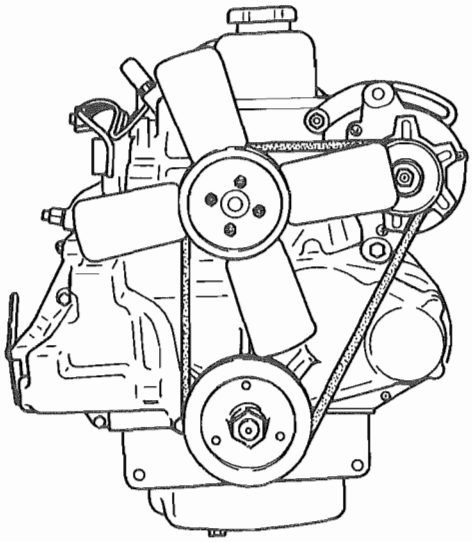

Frontal view

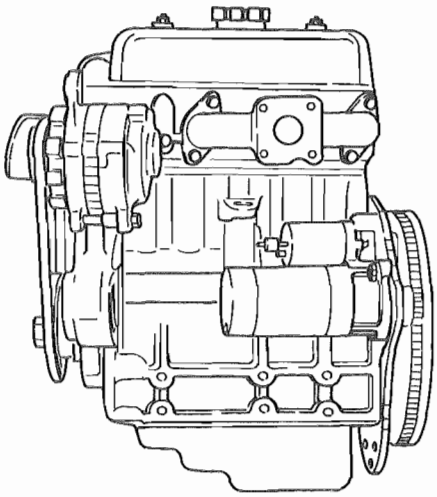

Right-hand side view

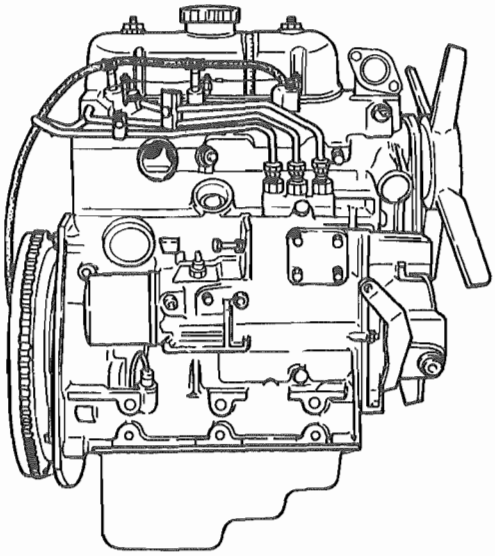

Left-hand side view

Downloaded from www.Manualslib.com manuals search engine

https://truckmanualshub.com/

SECTIONAL VIEWS

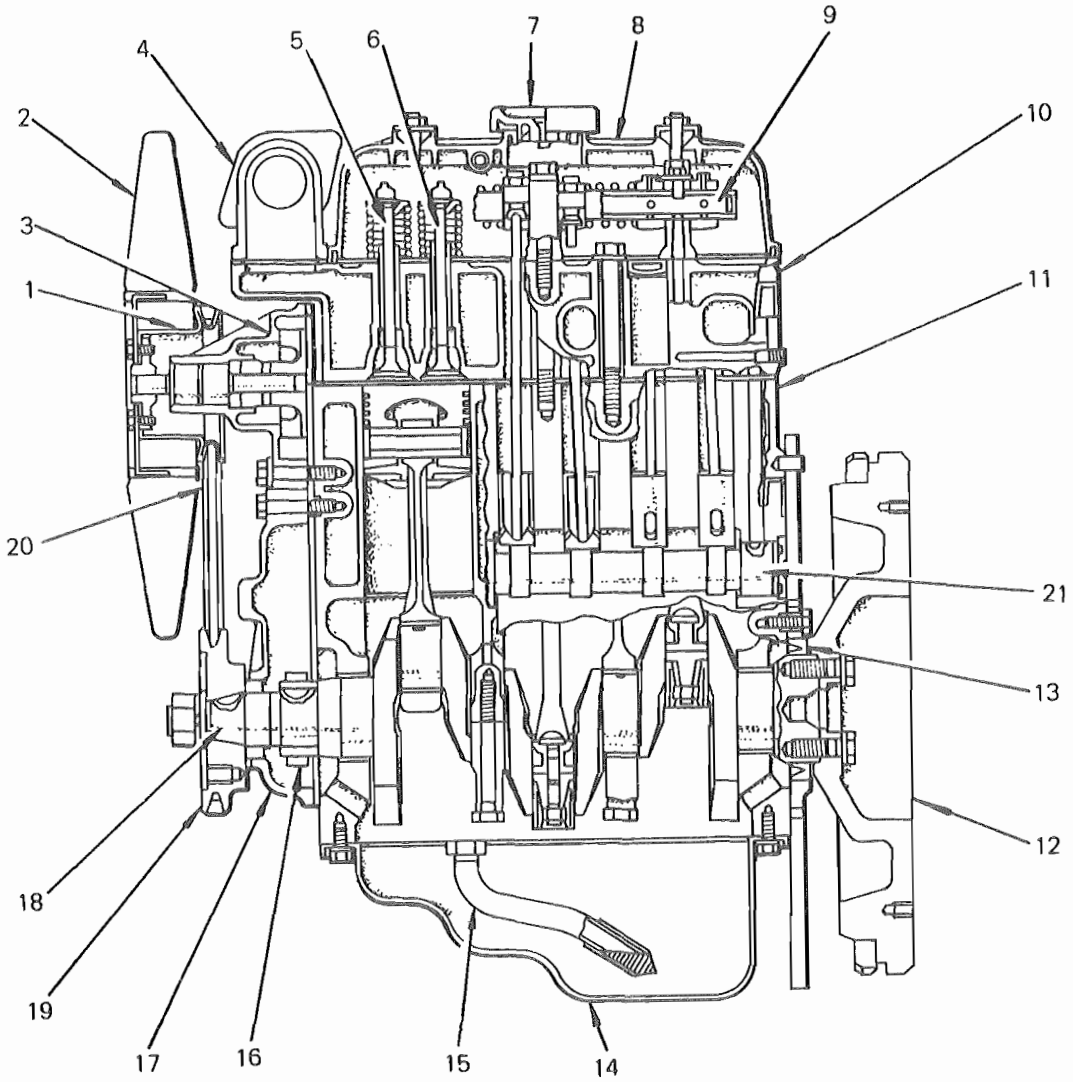

1-Water pump pulley
2-Cooling fan
3-Water pump
4-Water outlet fitting
5-Intake valve
6-Exhaust valve
7-Oil filler cap
8-Rocker cover
9-Rocker shaft
10-Cylinder head
11-Cylinder block
12-Flywheel
13-Rear oil seal case
14-Oil pan
15-Oil screen
16-Crank gear
17-Gear case
18-Crankshaft
19-Crankshaft pulley
20-Fan belt

Longitudinal view

Downloaded from www.Manualslib.com manuals search engine

https://truckmanualshub.com/

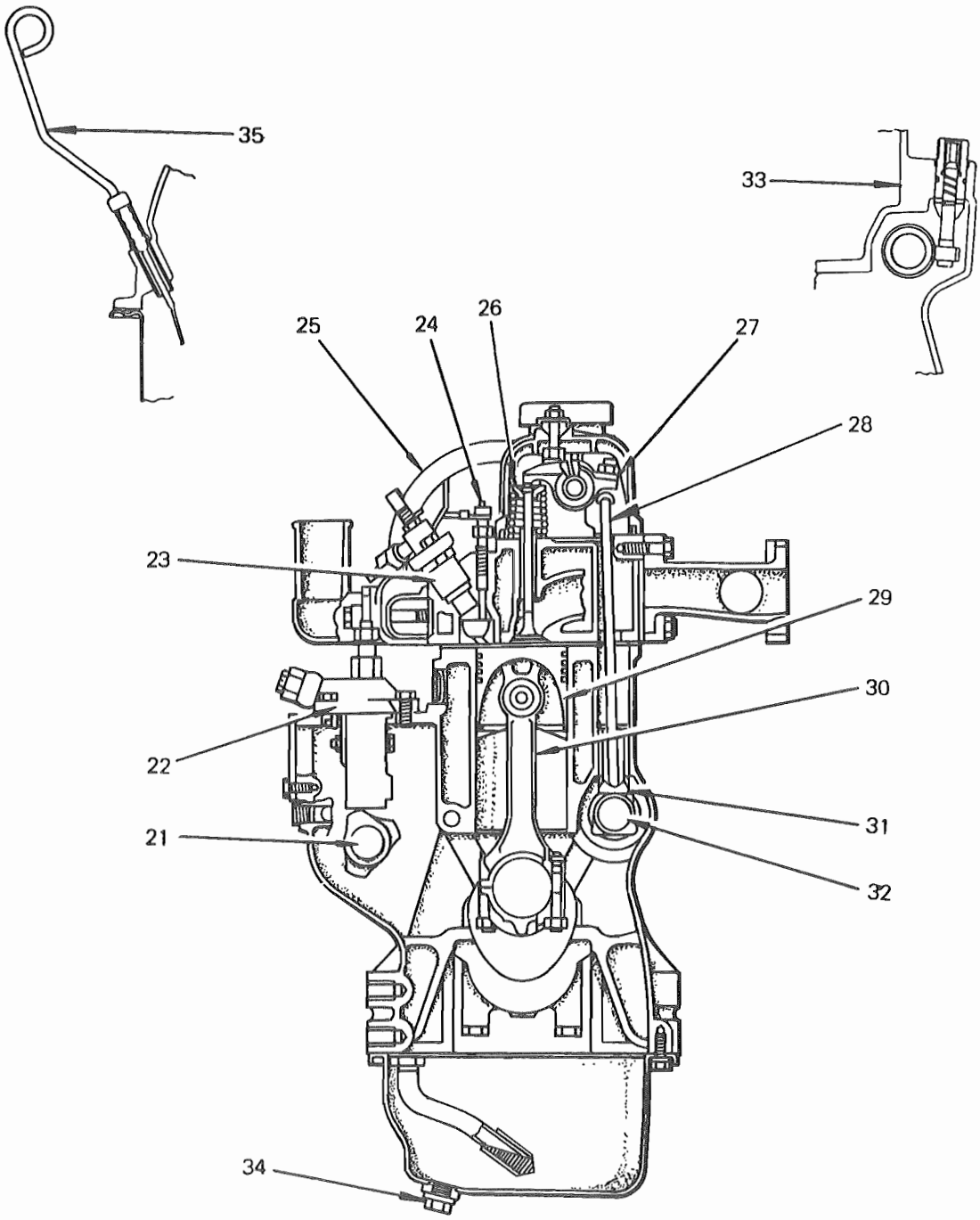

21-Fuel injection pump camshaft
22-Fuel injection pump
23-Injection nozzle holder
24-Glow plug
25-Air breather pipe
26-Valve spring
27-Rocker arm
28-Valve pushrod
29-Piston
30-Connecting rod
31-Tappet
32-Camshaft
33-Speedometer driven gear
34-Drain plug
35-Oil level gauge

Transverse view

Downloaded from www.Manualslib.com manuals search engine

https://truckmanualshub.com/

CONSTRUCTION

CYLINDER HEAD ASSEMBLY

Cylinder head

The head, made of a special cast iron, is shaped to retain greater rigidity and promote the conduction of excess heat to the coolant. As will be noted in the cross section, the head carries overhead valves arranged for cross-flow intake-air admission and scavenging, with intake port located on the right and exhaust port on the left. The high power capability of the Model K3A and K3C is measurably accounted for the improved volumetric efficiency resulting from this valve configuration.

The pre-chamber (pre-combustion chamber), in which the swirl type of pre-combustion takes place, is of insert type in construction, and is press-fitted into the cylinder head to form its integral part. The pre-chamber is not meant to be removed from the head in engine disassembly.

The valve guides for both intake and exhaust valves are common, there being no need to distinguish between the two. They are of a sintered alloy, impregnated with oil for increased resistance to abrasive wear.

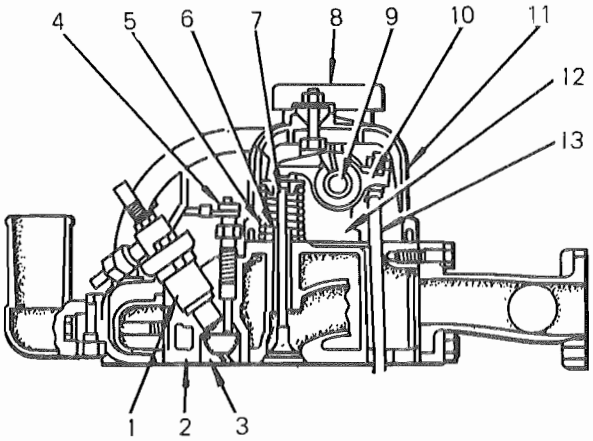

1-Nozzle holder
2-Cylinder head
3-Mouth piece
4-Glow plug
5-Valve spring
6-Valve stem seal
7-Valve
8-Oil filler cap
9-Rocker shaft
10-Rocker arm
11-Rocker cover
12-Rocker shaft stay
13-Push rod

Cylinder head — Cross section

Cylinder head gasket

A steel-and-asbestos gasket is used for the head gasket. Its internal edges for cylinder bores are grommetted with stainless steel sheet to resist the high combustion heat and pressure encountered there. Both faces of the gasket are coated with a sealing compound.

Each replacement gasket comes with its surfaces so treated that no sealing compound is required when installing it during engine reassembly.

The later production of this engine uses gasket whose base material is carbon called "Gra-Foil."

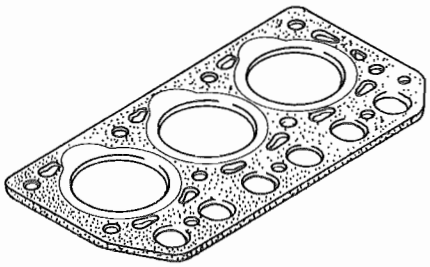

Cylinder head gasket

Valves and valve springs

The material of intake valves is a heat-resistant steel; the head diameter is sized large for increased intake efficiency. The heads of exhaust valves are faced with a special alloy, which is deposited by welding.

Valve springs, made of a high-carbon spring steel, have their bottom ends shaped specially so that they will solidly seat on the cylinder head. Their top ends are identified by red enamel. There are no differences in spring retainers and retainer locks between intake and exhaust valves.

Downloaded from www.Manualslib.com manuals search engine

https://truckmanualshub.com/

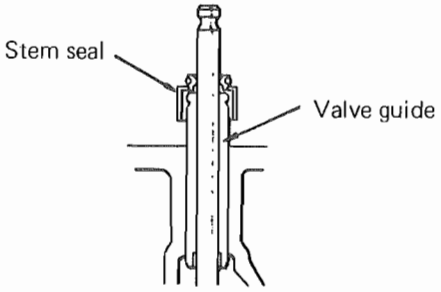

Valve stem seal

So that no lube oil will find its way into the cylinder head through the sliding clearance between valve stem and guide, a valve stem seal is fitted to the guide.

Rocker arms, shaft and stays

The arms are a special cast iron in material; each arm is casehardened by gas carburization. A lube oil hole is drilled in the top part of the arm.

The rocker shaft is fabricated from carbon-steel pipe stock; its hollow serves as oil passage. Those parts of the shaft on which rocker arms are mounted are induction-hardened.

There are three shaft stays made of an aluminum alloy by casting. The stay on the rear side has an internal oilway drilled in such a way as to convey the lube oil coming from the cylinder head. The stay for the rear side is also usable for the front side.

Crankcase ventilation system

This system refers to the arrangement designed to feed back the blowby gas (occurring in the crankcase) to the air breather pipe, so that the gas (which is high in combustible content) will be drawn into the air inlet side and then into the cylinders.

The space inside crankcase is communicated to the space inside the rocker cover through the tappets and the space around the pushrods.

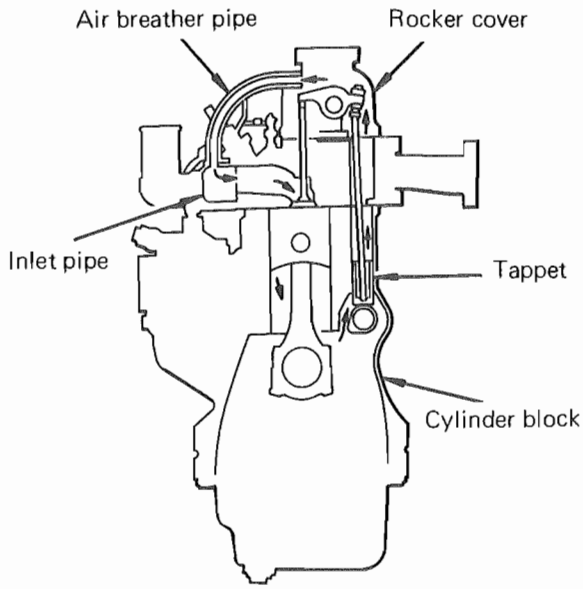

Crankcase ventilation system

Downloaded from www.Manualslib.com manuals search engine

https://truckmanualshub.com/

CYLINDER BLOCK ASSEMBLY

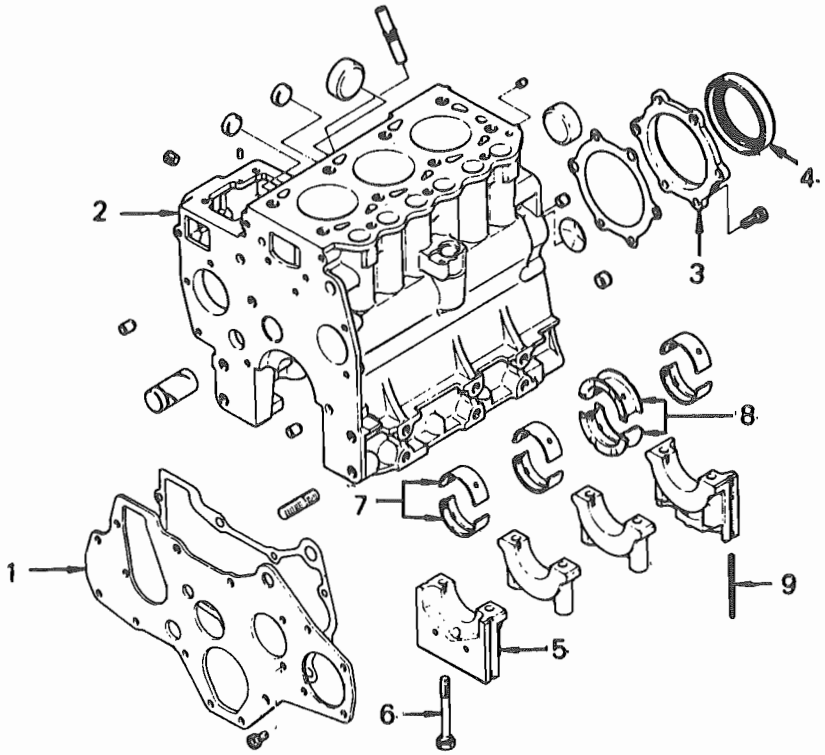

1-Front plate	4-Oil seal	7-Main bearing, No. 1
2-Cylinder block	5-Bearing cap, No. 1	8-Main bearing, flanged, No. 3
3-Oil seal case	6-Cap bolt	9-Cap side seal

Cylinder block assembly — Exploded view

Cylinder block

The material of the block is a special cast iron whose composition is carefully controlled to present surfaces adapted to sliding contact with pistons. In other words, liners are not used in this block. Four ribs are cast out of the block for four main bearings, of which No. 3 bearing is flanged to take up the axial thrust.

These bearings are of shell type constructed according to the tri-metal concept: a sintered copper alloy (Kelmet type) deposited on the steel backing, with an overlay of a tin-lead alloy for improved initial wearing-in action. The whole surface is flash-plated.

The bushing supporting the front journal of camshaft is a special copper alloy deposited on the backing. (The early production of this engine is not equipped with this bushing.)

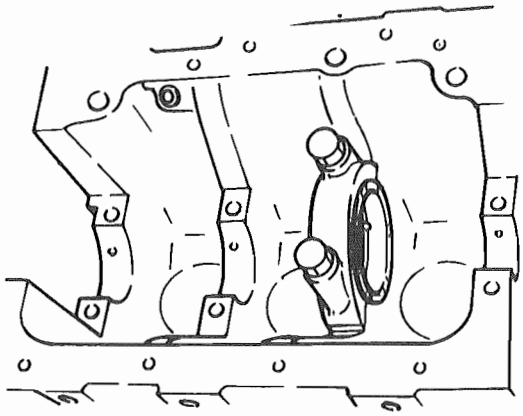

No. 3 bearing as thrust-and-journal bearing

Crankshaft

The crankshaft is a carbon-steel precision forging, whose sliding-contact surfaces at journals, crankpins and sealed portions are induction-hardened. It is an integral piece, well balanced and shaped for high rigidity.

Downloaded from www.Manualslib.com manuals search engine

https://truckmanualshub.com/

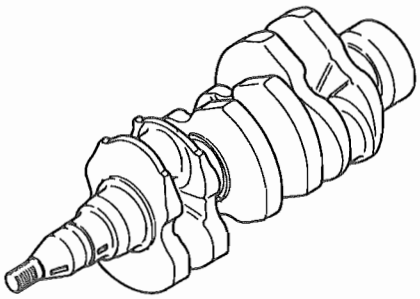

Crankshaft

Flywheel and ring gear

The flywheel is made of a cast iron. The pilot bearing for holding the clutch main shaft end is a ball bearing.

The ring gear is made of a carbon steel and shrink-fitted to the flywheel; its gear teeth are induction-hardened.

Pistons, piston pins and piston rings

The piston is an aluminum-alloy die casting, and possesses a minimized inertial mass so that the high-speed load on the main bearings is greatly reduced. Its diameter is cam-ground and tapered to optimize its fit in the bore when the block comes up to the normal operating temperature.

The piston pin is a hollow forging, whose finished surface is casehardened by carburization; it rotates in the piston but press-fitted into the connecting rod, thereby presenting a semi-floating type of small end connection.

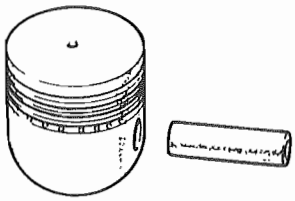

Piston and piston pin

The three compression rings are of a special cast iron. The top ring (compression) and oil ring are plated with hard chromium at their sliding faces.

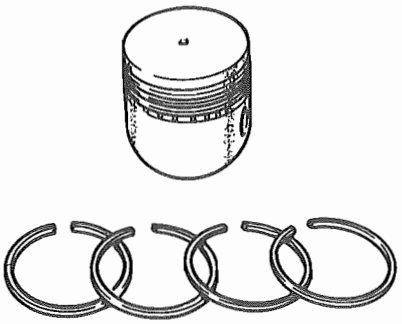

Piston and piston rings

Connecting rods

The connecting rod has its big end split horizontally and its shank forged into "I" shape in cross section for greater rigidity. The bearing in the big end is of the same tri-metal type as the main bearings. The bearing shells are flash-plated.

Connecting rod

Front plate and gear case

The front plate is bolted to the cylinder block; it is a steel plate, located in place by a positioning pin above the camshaft gear and another pin below the injection pump gear. A gasket is used between this plate and the block.

To the left-hand rear face of this plate is secured the hydraulic pump gear bearing housing together with the gear case.

The gear case is an aluminum casting secured to the front plate, and houses the front bearing for the hydraulic pump gear and also other parts associated with the governor. It should be noted that the gear case serves also as stoppers for the camshaft and idle gear.

Downloaded from www.Manualslib.com manuals search engine

https://truckmanualshub.com/

Camshaft and timing gears

The camshaft is a high-carbon steel forging having three journals by which it is fitted into and held by the cylinder block. Its journal and cam faces are induction-hardened for increased resistance to wear. Lube oil is pressure-fed from cylinder block to each camshaft journal. By a recess or notch provided in the rear journal, lube oil is intermittently supplied through the cylinder head in order to lubricate the rocker arms and related parts of the valve mechanism. An oil hole which permits an excess of the oil to return to the oil pan is drilled in the rear end of the shaft.

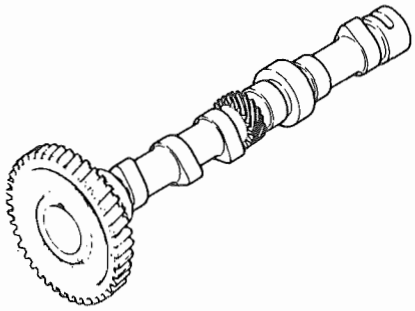

Camshaft

Valve timing

Intake valve opens	18° Before Top Dead Center
Exhaust valve closes	18° After Top Dead Center
Intake valve closes	46° After Bottom Dead Center
Exhaust valve opens	46° Before Bottom Dead Center
Fuel injection lining	21° Before Top Dead Center

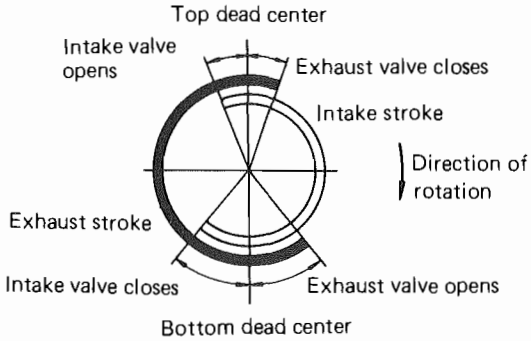

Valve timing diagram

The valve timing data, listed above, presuppose that the valve clearance has been accurately set to meet the specification for each valve.

Helical gears, finished by shaving and crowning for greater durability and quieter running, are used for the timing gears.

Hydraulic pump gear

The gear for driving the hydraulic pump is located at the left-hand end part of the gear case. The rear end face of the shaft of this gear has a groove for Oldham coupling. The pump is connected to the bearing housing directly.

Tappets and pushrods

The tappet, pot-like in shape, is heat-treated in a carburizing gas furnace and has its bottom face hardened by chilling. Thus, it is highly resistant to wear. Relative to the center of its cam, the center of the tappet is slightly offset in order to avoid uneven wear of its bottom face riding on the cam.

The pushrod is a steel bar, whose end portions are flame-hardened.

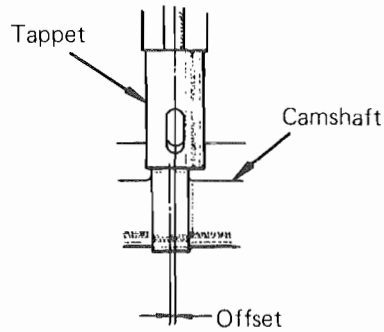

Offset between tappet and cam

Fuel-injection-pump camshaft

This injection pump is of "in-line" type and is driven by the camshaft built in the engine side. Its material is a high-carbon steel, the cam faces being induction-hardened.

A ball bearing is used to support the front part of this camshaft; the tip of the front part is shaped to admit the governor shaft. The rear end face has a groove for Oldham coupling. It is through this coupling that the oil pump is driven.

Downloaded from www.Manualslib.com manuals search engine

https://truckmanualshub.com/

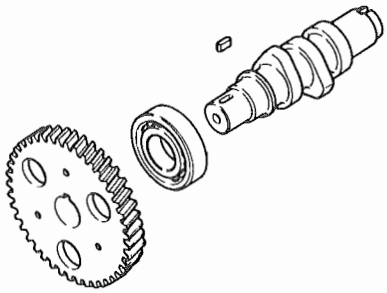

Injection-pump camshaft

Oil pan

The oil pan is a steel-sheet vessel having a drain plug located at the lowest point of its bottom.

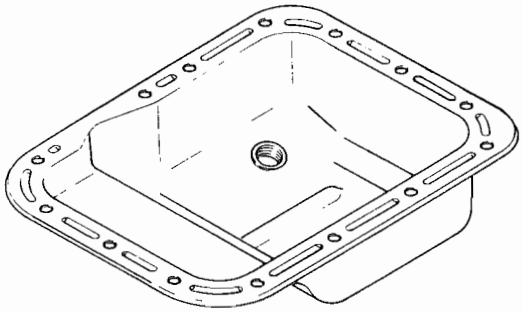

Oil pan

Speedometer driven gear

This driven gear is of high-speed automotive type and provides good durability. It is mounted on the center part of the left side of cylinder block and is driven by the camshaft.

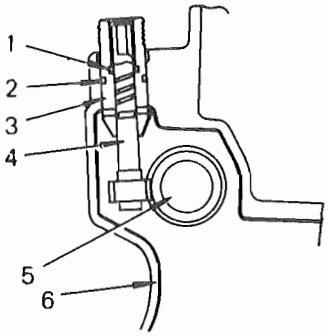

1-"O" ring (small)
2-"O" ring (large)
3-Sleeve
4-Driven gear shaft
5-Camshaft
6-Cylinder block

Speedometer driven gear

Downloaded from www.Manualslib.com manuals search engine

https://truckmanualshub.com/

ENGINE SERVICES

Besides the daily or routine services required on the engine, repair and replacement services have to be carried out at times depending on the internal conditions of the engine. For the latter class of services, the whole engine may have to be dismounted from the tractor or some of its components may have to be dismantled and taken down with the engine remaining in place. In either case, it is essential that the work be performed in a clean place, with a clean floor and a surrounding space large enough to handle the engine or its components freely.

Use of the prescribed tools (special tools) in addition to the common tools is another essential requirement. The standard practices for engine servicing include the following:

(a) Have a hoisting or lifting means ready for use. Some of engine components are too heavy to handle with bare hands.

(b) The exterior surfaces of any part or component must be cleaned before its removal.

(c) Have a full assortment of hand tools (including special tools) ready for use. Make sure they are clean.

(d) There should be an adequate number of trays and pans for holding disassembled parts in an orderly manner, plus plenty of washing fluid and wiping cloths. A supply of clean compressed air is desirable.

A repair or replacement service is usually occasioned by an operating difficulty or failure of one or more components of the engine. If the service involves removal of one or more of the below-named engine parts, it is not necessary to take down the engine from the tractor; the service can be carried out with the engine in place.

(1) Cylinder head. (This includes the valve mechanism.)

(2) Pistons.

(3) Fuel-injection pump or oil pump.

(4) Water pump.

(5) Gear case cover, timing gears or related parts.

ENGINE REMOVAL

In the event of the flywheel or clutch needing a repair service, the engine must be taken down, complete with the radiator, front axle and chassis, by detaching it from the clutch housing. The method of separating the engine from the clutch housing is detailed in the section for CLUTCH.

The engine removal procedure for replacing crankshaft or cylinder block is as follows:

(1) Bring the tractor to the place of work, letting it stand on the level floor, and drain the engine oil pan.

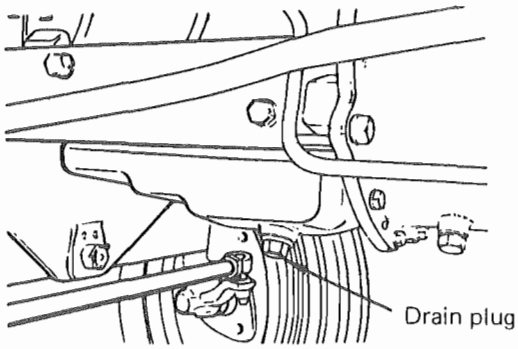

Drain plug on oil pan

(2) Drain the engine cooling system by opening the cock cock on the cylinder block.

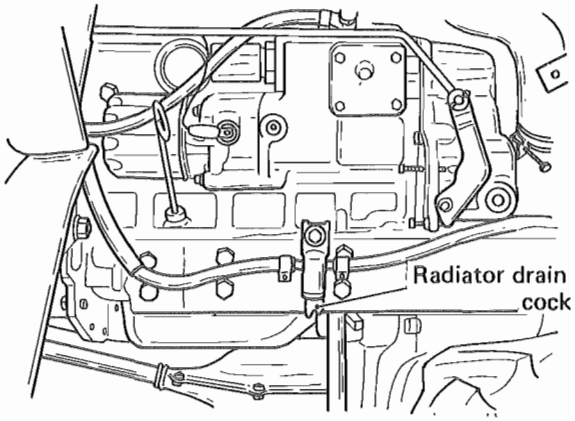

Downloaded from www.Manualslib.com manuals search engine

https://truckmanualshub.com/

(3) Unlatch and open the bonnet, and undo the headlight wire connectors inside. Remove hinge bolts and take down the bonnet.

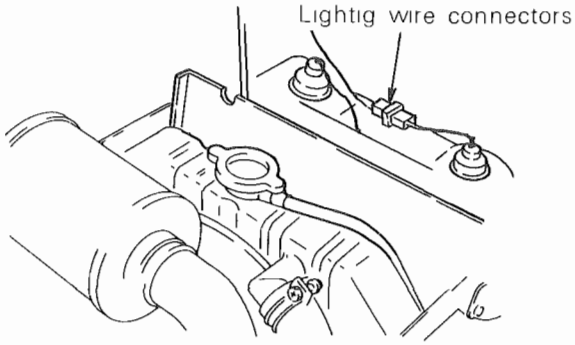

Lighting wire connectors

(4) Disconnect cables from the battery terminals: disconnect the minus (−) cable first and the plus (+) cable next.

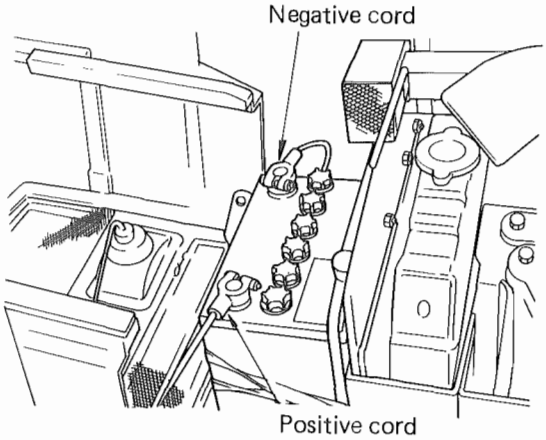

(5) Remove safety covers and engine covers

(6) Undo all electrical connectors and disconnect wires from their terminals.

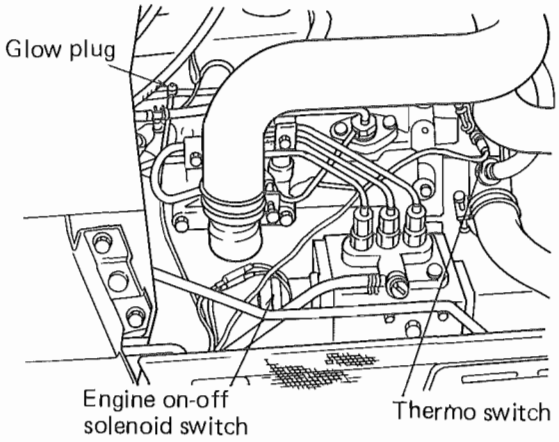

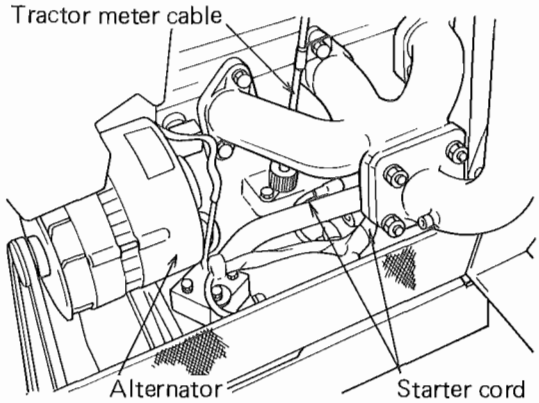

(7) Loosen the clamp on the manifold-side end of air cleaner hose, and pull off this end. Loosen the bolt on air cleaner band, and remove the air cleaner.

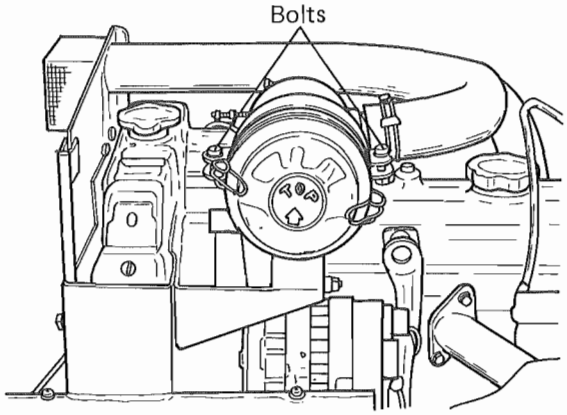

Removing air cleaner

(8) Remove the bolt and unit securing the air cleaner mounting bracket in place, and take off the bracket.

(9) Disconnect upper and lower hoses of the radiator from the engine side, loosening the clamps on hose connections.

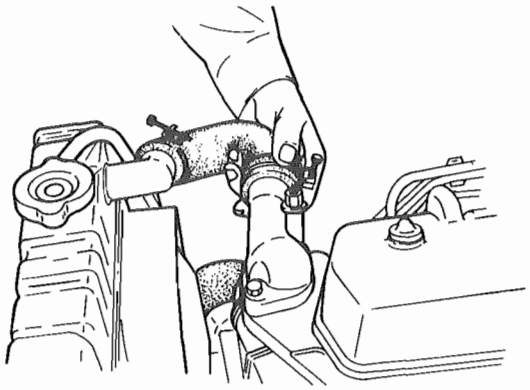

Removing radiator hose

Downloaded from www.Manualslib.com manuals search engine

https://truckmanualshub.com/

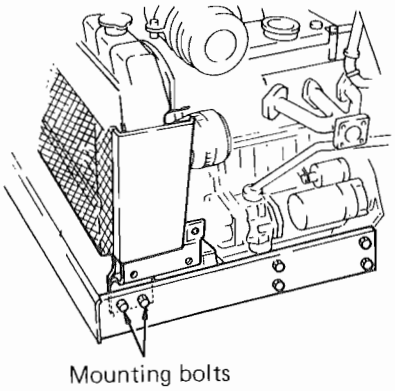

Removing radiator mounting bolt

(10) Loosen radiator mounting bolts, right and left, and take down the radiator from the chassis.

(11) Disconnect fuel return pipe from fuel tank.

(12) Turn off fuel filter cock, and remove the fuel pipe between filter and injection pump.

(13) Disconnect engine control rod from governor lever.

(14) Disconnect drag link from steering lever.

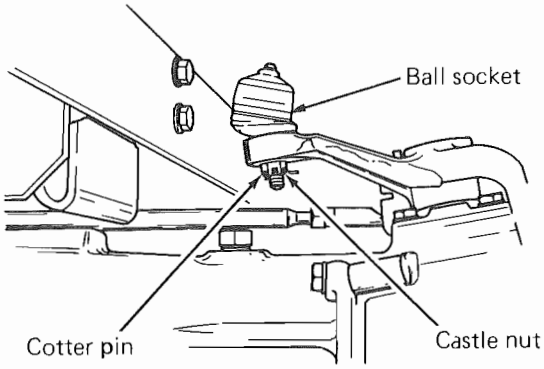

Removing drag link

(15) Disconnect oil pipes from the hydraulic pump, making sure that "O" rings come out of the pipe connections.

In case of MT180H/HD, remove cooler outlet pipe and cooler in let pipe.

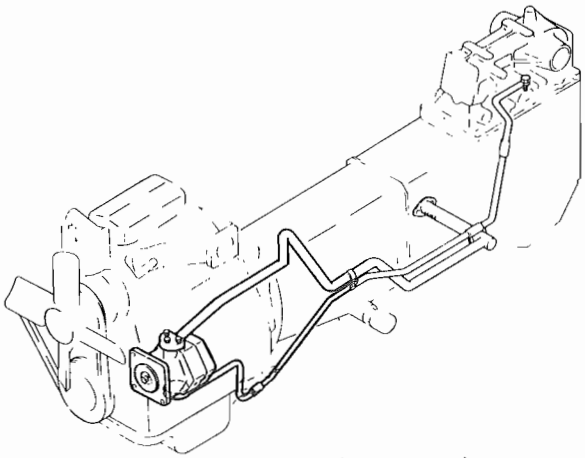

Removing oil pipe (engine side)

(16) Place a jack under the clutch housing, and operate the jack to push up the housing lightly.

(17) Remove the bolts securing the chassis: there are two bolts on front side and a total of eight on right and left sides. Remove the chassis gently.

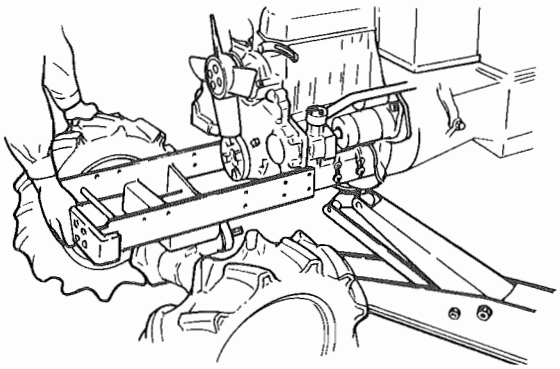

Removing chassis

Downloaded from www.Manualslib.com manuals search engine

https://truckmanualshub.com/

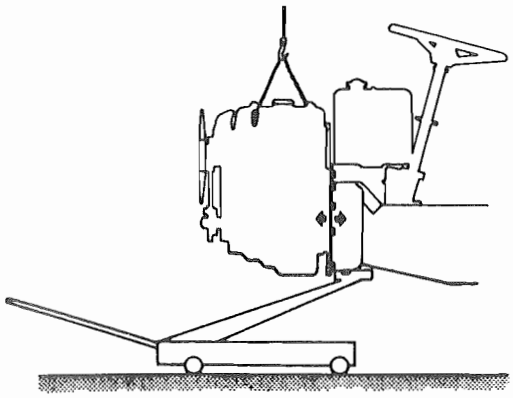

(18) Hitch a wire-rope lifting sling to the engine hanger bolts, and operate the hoist to take up the weight of the engine.

(19) Remove the bolts securing the engine to the clutch housing. As necessary, ply open the joint to sever the engine from the housing by using a flat-tip (plain) screw-driver. Pull the engine (in suspended state) off the housing.

NOTE

The bolts securing the fuel tank bracket need not be removed.

(20) Bring the engine over to and set it on the work stand: the engine is now ready for disassembly.

<4-WD TRACTOR>

If the machine is a 4-WD tractor, two more steps must be carried out just before taking up the weight of the clutch with a jack in Step (17), above. The two additional steps concern the universal joint:

(a) Remove the front and rear universal-joint covers.

(b) Pick out the front universal-joint circlip, pull out the pin, and disconnect the joint.

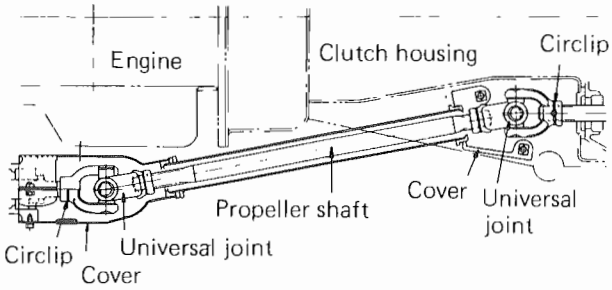

Cover

ENGINE INSTALLATION

The procedure of re-installing the engine is reverse of the foregoing removal procedure.

PISTON REMOVAL

To remove the pistons, proceed as follows (with the engine in place):

(1) Drain oil pan.

(2) Drain the cooling system by opening the cock on the lower part of the radiator.

(3) Remove air cleaner cap. Unlatch and open the bonnet.

(4) Disconnect cables from the battery terminals, undoing the terminal connection of minus (–) cable first and that of plus (+) cable next.

(5) Remove safety guards, right and left.

(6) Loosen the clamp on air cleaner hose at manifold side, and disconnect the hose. Loosen the air cleaner band bolt, and take down the cleaner.

(7) Remove the bolts securing air cleaner bracket in place, and take off the bracket.

(8) Disconnect the radiator upper hose from the engine.

(9) Disconnect the tractor meter wire at engine side.

(10) Disconnect the fuel eturn pipe from the fuel tank.

Downloaded from www.Manualslib.com manuals search engine

https://truckmanualshub.com/

(11) Undo the wire connectors of glow-plug and water-temperature wires.

(12) Remove the bolts securing the alternator brace to cylinder head.

(13) Disconnect the exhaust manifold (complete with muffler) from the cylinder head.

(14) Disconnect and remove fuel injection pipes.

(15) Remove the nuts fastening down the rocker cover, and take off the cover.

(16) Remove the bolts securing the rocker stays, and take off the three stays complete with rocker arms and shaft.

(17) Pull out the pushrods one by one.

(18) Loosen the cylinder head bolts sequentially in the ascending order of numbers as shown below and remove the cylinder head.

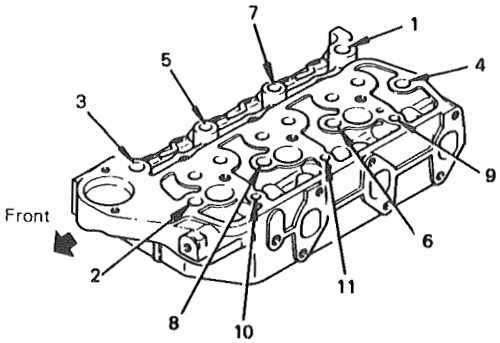

Cylinder head bolt loosening sequence

(19) Remove the cylinder head gasket.

(20) Disconnect tie rod from knuckle arm.

(21) <4-WD TRACTOR>

Remove the front and rear universal-joint covers; pick out the front circlip; pull off the pin; and disconnect the universal joint.

(22) Remove the bolts securing the oil pan to the cylinder block, and take off the oil pan, taking care not to distort it. Remember, the sealing compound used in this joint may not permit the oil pan to separate easily.

(23) Remove the cap nuts on each connecting-rod big end, take off the cap, and push out the piston assembly from block top.

PISTON INSTALLATION

To re-install the pistons, carry out the foregoing procedure in the reverse order. Be sure to clean each part thoroughly before installing it, and to oil it just before it is inserted or fitted if it is a rotary or sliding part.

WATER PUMP REMOVAL

It is necessary to take down the radiator from the chassis in order to remove the water pump.

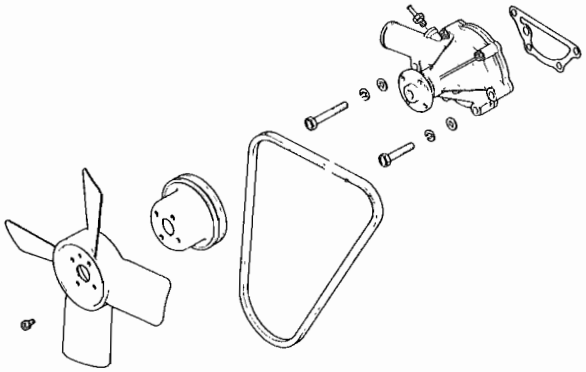

Removing water pump

CYLINDER HEAD DISASSEMBLY

Carry out the Steps (1) through (19) of piston removal procedure, outlined above. Set the removed cylinder head assembly on the bench, and proceed as follows:

(1) Remove nozzle holders.

(2) Disconnect glow-plug lead wires, and remove the plugs.

(3) Using the valve lifter, remove each valve in this manner: Compress the spring with the lifter; take off retainer locks; and pick out retainer, spring and valve in that order. Place the removed parts in trays or pans, separating them into three groups, one group for each cylinder. Be sure to identify each part for the cylinder it has been servicing.

Downloaded from www.Manualslib.com manuals search engine

https://truckmanualshub.com/

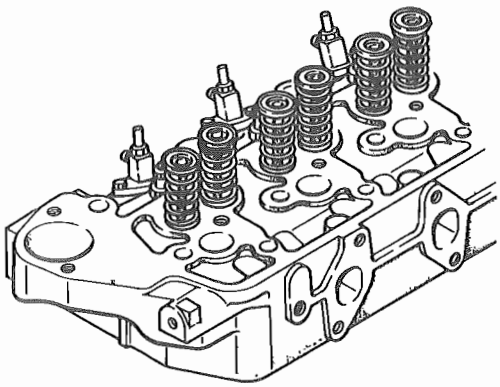

Cylinder head assembly

(4) Disconnect water bypass hose, and remove thermostat fitting.

CYLINDER BLOCK DISASSEMBLY

(1) Take down the engine from the machine.

(2) Remove the cylinder head assembly, as outlined in piston removal procedure, above.

(3) Remove the water pump and electrical parts and components as outlined in respective paragraphs.

(4) After pulling out the pushrods, draw out the tappets, taking them out from the cylinder block top.

(5) Remove the speedometer driven unit.

(6) Loosen the nut securing the crank pulley, and take off the pulley and washer.

(7) Take down the flywheel: loosen the flywheel bolts just a little at a time.

(8) Remove the rear plate and rear oil seal case.

(9) Turn over the cylinder block upside down, and remove the oil pan and oil screen.

(10) Remove the hydraulic-pump gear bearing housing and the gear case. Just before detaching the gear case, be sure to remove the inspection peep hole cover and to disconnect the stopper spring and tie rod from the pump control rack.

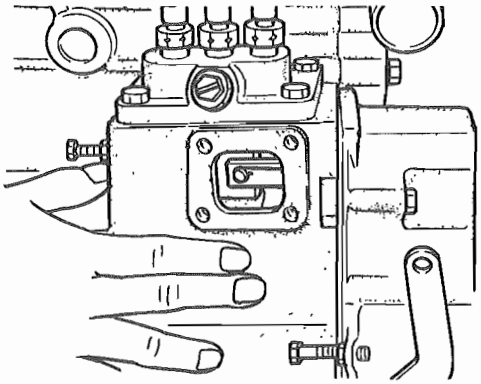

Removing tie rod

NOTE

It is very important that, before the gear case is removed, the injection pump control rack should be disconnected from the tie rod. As mentioned previously, the front plate is bolted to the cylinder block, the bolts being run in from inside the gear case. Be careful not to remove the plate together with the gear case and also not to disturb the dowel pins.

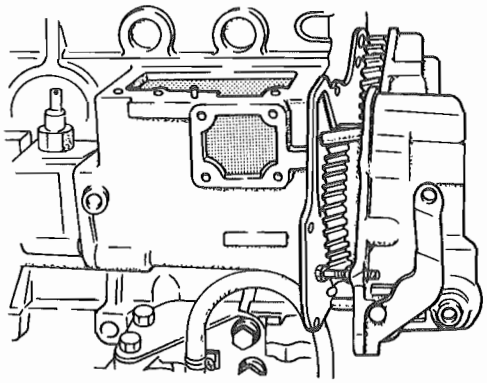

Removing gear case

(11) Remove the fuel injection pump.

(12) Remove the governor weight securing bolt, and take out the weights.

(13) Remove the set screw on pump camshaft.

(14) Remove oil filter and oil pump assembly, and draw out the pump camshaft.

Downloaded from www.Manualslib.com manuals search engine

https://truckmanualshub.com/

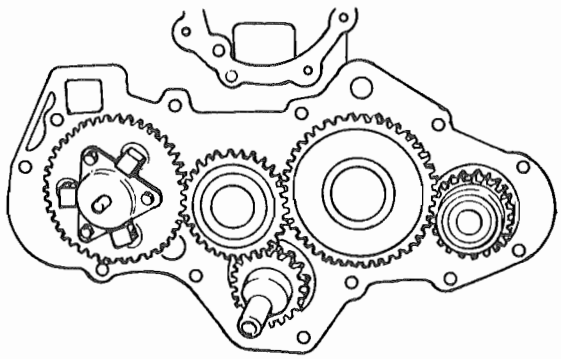

Removing timing gears

(15) Remove timing gears and detach the front plate from cylinder block.

(16) The push rods, tappets and speedometer driven unit having all been removed, draw out the engine camshaft.

(17) Open the big end of each connecting rod by removing the cap. Push out each piston assembly from block top.

NOTE

Have all removed parts laid out in groups, identifying each part for the cylinder from which it was taken. It is a standard practice to assign a reference number to each cylinder and use that number to refer to the group of parts, which of course include bearing shells, piston rings, etc. Never drive out the combination of piston and connecting rod: push on the mating face of big end with a wooden stick, as necessary, not to damage the bearing shell.

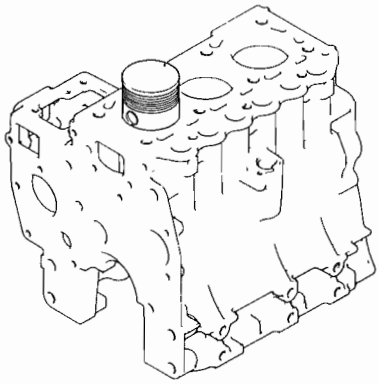

Removing piston complete with connecting rod

(18) Use the piston pin setting tool (special tool) to separate piston pin from piston in the manner illustrated here: lay down the connecting rod on the tool body, fit the pushrod tool to the piston pin in place, and press down the pushrod to force the pin out. Never use a hammer to drive on the pushrod tool.

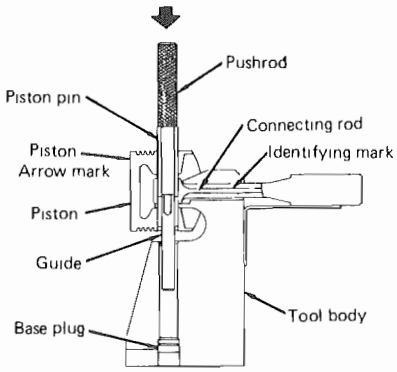

Removing piston pin

NOTE

a) Never drive off the pin. If the pin is seized in the piston, it may be necessary to replace, piston, pin and connecting rod with new ones.

b) Do not apply a press force of more than 3000 kg (6615 lb) to the special tool.

(19) Remove the main bearing caps. Set aside the removed caps and bearings separately in groups, each marked for its journal, so that the same combination as before can be reproduced at the time of reassembling. Before removing caps, read the crankshaft end play and write the reading down for reference.

(20) Take off the crankshaft.

INSPECTION

Cylinder head

(1) Wash the cylinder head clean. Before doing so, visually examine it for evidence of cracking, water leakage or any damage.

Downloaded from www.Manualslib.com manuals search engine

https://truckmanualshub.com/

(2) Check to be sure that the internal oil passages are all clear.

(3) Using a straightedge and feeler gauge, check the gasketed surface for flatness.

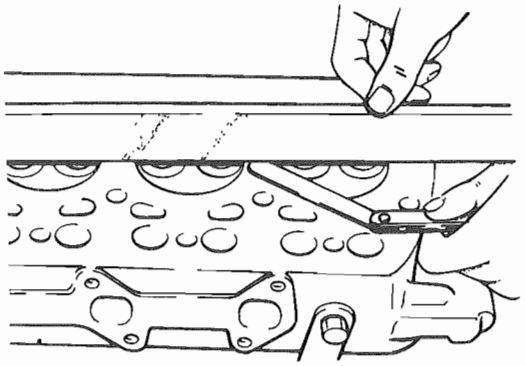

Checking the gasketed surface for flatness

Valve guides

(1) Take diameter measurements on valve guide and stem to find out the radial clearance by subtraction; if the determined clearance exceeds the limit, replace the guide or valve, or both.

(2) To remove the guide for replacement, drive it out of the cylinder head by giving a push to the bottom side of the guide. Use the valve guide remover.

To install the replacement guide, press it into the hole until its trailing portion measures 12 ± 0.5 mm (0.5 ± 0.02 in.) from cylinder head top, as shown below. After pressing the guide in, check the radial clearance by inserting its valve stem just for a trial: if the clearance is too small, ream the guide to produce a proper radial clearance.

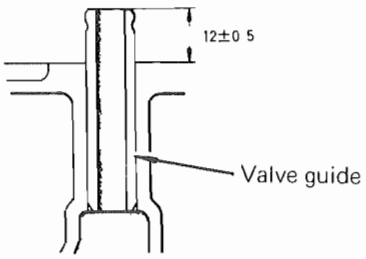

Pressing in of valve guide

Valve seats

(1) Visually inspect each valve seat for seating contact pattern and for damage and, as necessary, repair it by lapping in the usually manner to the seat angle and diameter specified.

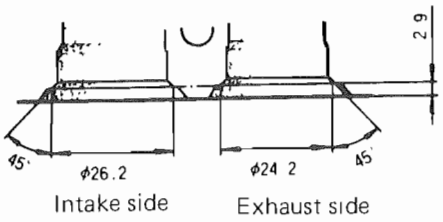

Valve seat angle and diameter

(2) An insert-type valve seat in service is subject to beating action of its valve and might force itself, though very gradually, into the cylinder head, thereby presenting a phenomenon of "seat sinkage," which is primarily due to creeping effect of stressed metal. This sinkage shows up as an increment in the as-installed length of valve spring.

Measure the length of each valve spring in place and, if the increment (corresponding to the sinkage) is found to exceed the limit, replace the whole cylinder head.

In measuring the as-installed length, it is permissible to read the distance between the bottom end of spring to the top face of spring retainer. In such a case, the thickness (measured in advance) of the retainer must be subtracted from the reading. The retainer (actually the flange) thickness is $1.7^{+0.3}_{0}$ mm ($0.067^{+0.0118}_{0}$ in).

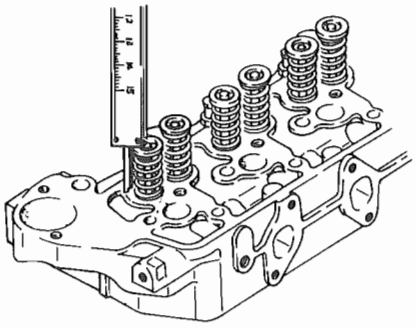

Measuring as-installed length of valve spring

Downloaded from www.Manualslib.com manuals search engine

https://truckmanualshub.com/

Valves

(1) Visually inspect the seating face and stem of each valve for wear and damage, and repair or replace the valve, as necessary.

(2) A valve whose head is worn down to the limit of "T" value must be replaced.

(3) Inspect the valve for localized wear at three places in particular, which are indicated in the illustration, and repair or replace the valve, as necessary. Make sure that the top end face and other surfaces of the stem as shown by arrows are smooth and that there are no dents nor groovy depressions on the stem.

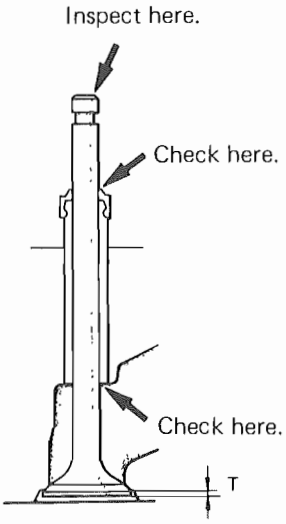

Valve wear

Valve springs

(1) Cracked, worn or otherwise damaged springs must be replaced.

(2) A weakened valve spring, the weakness being evidenced by its reduced free length or spring rate, must be replaced.

(3) Check each spring for squareness. Never re-use distorted valve springs.

Rocker arms and rocker shaft

(1) Take diameter measurement on rocker arms and rocker shaft to determine the clearance between the two. Replace the arms if the clearance exceeds the service limit.

(2) A rocker arm whose end face for pushing down the valve stem is badly worn must be replaced. The same consideration is required for the adjusting screw, whose end face comes into contact with the top of the pushrod: if this face is found badly worn, replace the adjusting screw.

Cylinder block

(1) Visually inspect the cylinder block before and after washing it clean. If any crack or serious damage is noted, replace the cylinder block.

(2) Check the camshaft front journal bushing for wear. If the bushing is worn beyond the service limit or damaged beyond repair, remove it by using the special tool (installer) and replace it with new one.

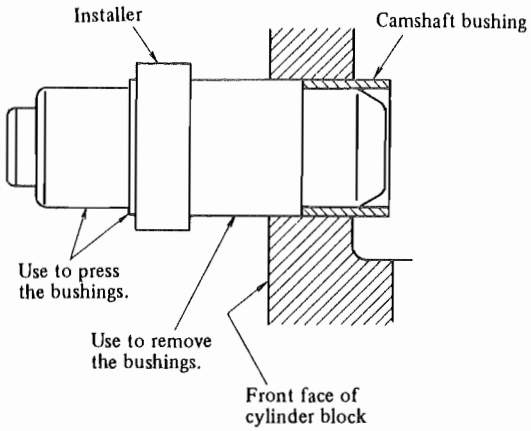

Removing camshaft bushing

Downloaded from www.Manualslib.com manuals search engine

https://truckmanualshub.com/

(3) Clean the water jackets of the cylinder block, removing water scales and rust, if any.

(4) Check each cylinder bore for wear and inspect the bore wall for scoring, scuffing and other types of surface flaw, to determine whether repair by reboring or honing is necessary or not. To take micrometer readings for wear determination, be sure to measure at three levels, 1, 2 and 3, in two directions, A and B, as shown, thereby producing a total of six readings.

(5) If the piston rings are the only parts to be renewed, there being no need of reboring or honing the cylinder bores, check the amount of "ridge" formed of the top portion of the bore and, as necessary, remove the ridge by reaming. The bore should be honed after this reaming.

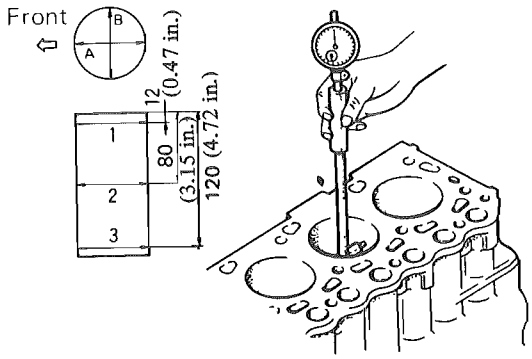

Measuring cylinder bore diameter

Pistons, piston pins and piston rings

(1) Burnt, grooved or badly scuffed pistons must be replaced.

(2) Measure the piston diameter at its skirt in the direction perpendicular to the piston pin to determine its radial clearance in the cylinder. If the piston is found excessively worn, replace it.

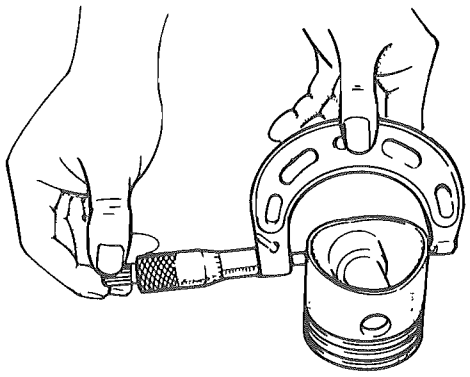

Measuring the piston outside diameter

(3) Check the side clearance of each ring in the groove and, as necessary, replace the ring.

To measure the side clearance of No. 1 ring, which is taper, hold the ring face flush with the land face, and insert a feeler gauge between the piston and the bottom (flat) side of the ring.

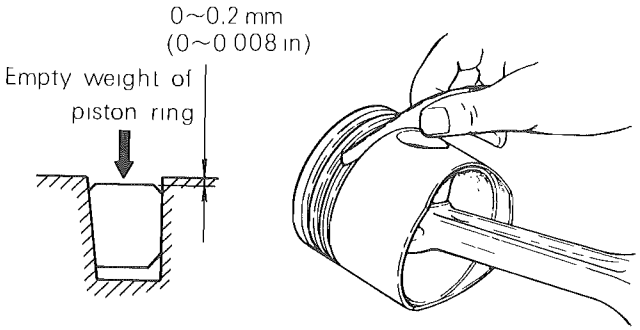

Checking ring side clearance

(4) Piston rings whose joint gap is too large must be replaced. To check the gap, place the ring in the cylinder bore and push it down with the piston inserted upside down.

Downloaded from www.Manualslib.com manuals search engine

https://truckmanualshub.com/

When the ring is located at the least worn part (lower section) of the cylinder, take out the piston and read the gap with a feeler gauge.

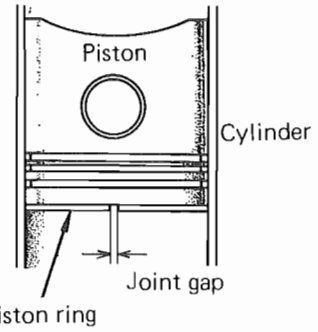

Checking rings for joint gap

Connecting rods

(1) To check each connecting rod for bend and twist, the connecting rod aligner must be used. Fit the connecting rod to the aligner and, if the rod is found to be excessively distorted, that is, bent or twisted, repair or replace it.

(2) Check the big end for thrust clearance by fitting the big end to the crankpin and by using a feeler gauge. If the clearance is noted excessively large, replace the connecting rod.

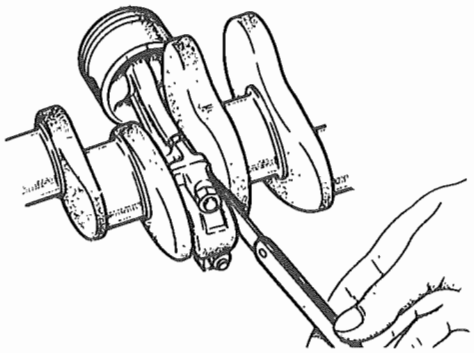

Checking connecting rod thrust clearance

Crankshaft

(1) A distorted crankshaft must be straightened or, if the distortion is too large to correct, be replaced. Distortion here refers to the bow, if any, of the crankshaft, which can be measured with a dial indicator in the usual manner.

(2) Inspect the surfaces of journals and crankpins for burning and damage and, as necessary, repair these surfaces by grinding to the next undersize. Grinding to an undersize necessitates replacement of the existing bearings by the corresponding undersize ones.

When grinding the journals and crankpins, be sure to finish the corner radii to 2.5 mm (0.1 in.).

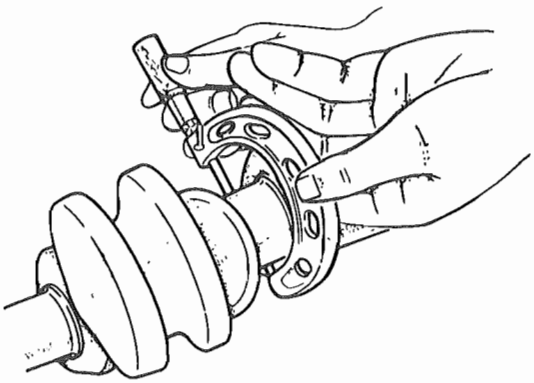

Measuring crankshaft outside diameter

(3) Check the crankshaft end play and, if the measured play is in excess of the specification, replace the No. 3 main bearing. End play measurement is valid only when the crankshaft is set in place in the normal condition, with its main bearings fitted correctly and its bearing cap bolts tightened to the prescribed torque value. Use a dial gauge in the illustrated manner to read the end play.

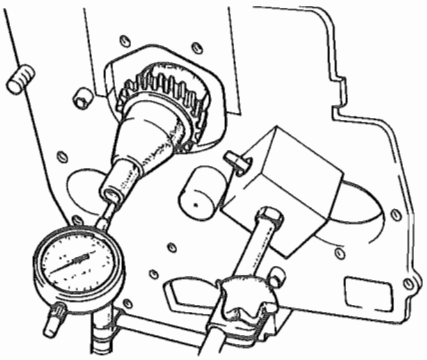

Reading crankshaft end play

Downloaded from www.Manualslib.com manuals search engine

https://truckmanualshub.com/

Main bearings and connecting-rod bearings

(1) Inspect the bearing shells, paying particular attention to the tri-metal surface for evidence of flaking. Burnt, pitted or wiped shells and shells showing bad contact pattern must be replaced.

(2) Mike the main bearings and connecting-rod bearings and also the crankshaft journals and crankpins to determine, on the basis of ID readings and OD readings, the amount of oil clearance available in each fit. (A press gauge can be used instead.)

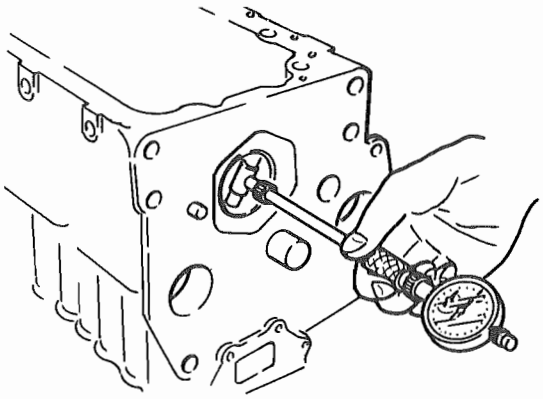

Measuring main bearing ID

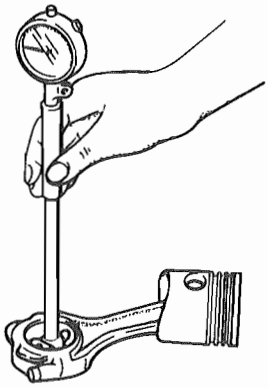

Measuring connecting rod (crankpin) bearing

When reading the bearing ID, whether it is a main bearing or a crankpin bearing, be sure that the bearings shells are tight in the usual manner, with the cap bolts torqued to the specification. If the clearance determined by computing with the ID and OD readings exceeds the limit, replace the bearings or, if mere bearing replacement does not produce the specified clearance, grind the crankshaft journals and crankpins to the next undersize and use the undersize bearings.

Timing gears and hydraulic pump gear

Inspect these gears for tooth contact pattern, tooth wear and damage and, as necessary, replace them. Inspect the Oldham coupling groove formed of the end of the pump gear; if this groove is disfigured or damaged, replace the gear.

Camshaft

(1) If the running clearance between the camshaft journal and its hole provided in the block is too large, then either the camshaft or the block must be replaced. This clearance is to be determined by measuring journal diameter and hole diameter.

(2) Visually inspect the cam faces for damage, and check each cam for cam height by miking. Replace the camshaft if any of the cams is in bad condition in regard to cam height and face.

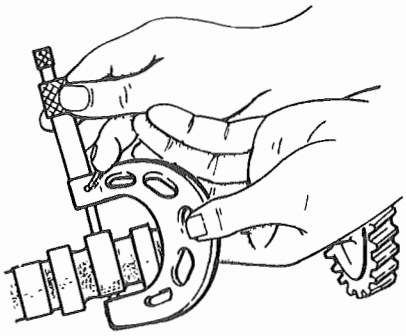

Measuring cam height on engine camshaft

Fuel-injection-pump camshaft

Inspect and check this camshaft as in the case of engine camshaft. Additionally, inspect the shaft end, which is shaped for Oldham coupling: the camshaft must be replaced if the coupling end is disfigured.

Downloaded from www.Manualslib.com manuals search engine

https://truckmanualshub.com/

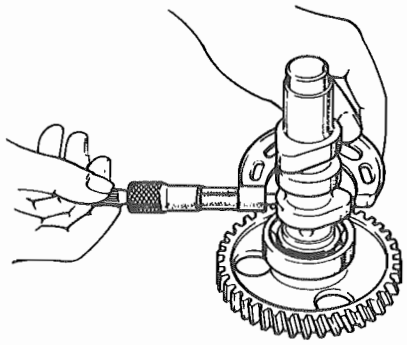

Measuring cam height on injection-pump camshaft

Tappets

(1) A tappet whose bottom face is flaked, grooved or cracked must be replaced.

(2) Check each tappet for radial clearance by miking its OD and hole ID. Be sure to replace the tappet if the clearance is found to exceed the limit.

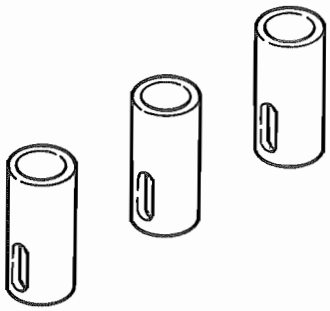

Engine tappets

Pushrods

(1) A pushrod which is excessively worn at either end must be replaced.

(2) Check each pushrod for straightness by rolling it on a surface plate. If it is bowed or otherwise distorted, straighten it in the usual manner or replace it.

Speedometer driven unit

Inspect this unit for wear and damage at its gear and shaft. Be sure, at the time of installing this unit, that the "O" ring is in good condition.

REASSMBLY

Cylinder head

To reassemble, use reverse of disassembly procedure. Observe the following rules:

(1) Install valve guides, making sure that each guide protrudes out of the top of the head to the specified height. (The method of installing them is explained in "Inspection," above.)

(2) Fit the valve stem seal to each valve guide, making the seal settle snugly on the guide end.

(3) Oil valve stems, and insert them into the guides. Put on valve springs, retainers and locks, in that order.

(4) Build up the rocker mechanism by proceeding as follows: Hold the front stay with its mounting bolt hole coming on the right-hand (nozzle) side. Insert the rocker shaft into the stay so that the identifying mark (3-mm or 0.1-in. dia. hole) on the end of the shaft faces the right-front side (the in pump). Mount the outer front rocker an and secure it in place by fitting snap ring; mount the inner front rocker, thus completing the reassembly of the first group.

Reassemble the second and third groups similarly, ending with the fitting of the rear-most snap ring; set the whole mechanism on the cylinder head; and secure it to the head by bolting. Be sure to use seat washers on the bolts for front and rear stays.

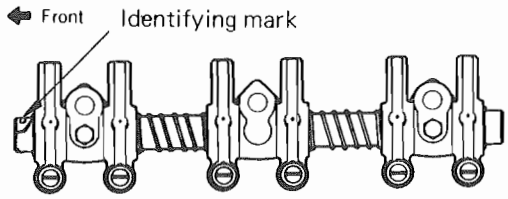

Rocker arms and shaft

(5) Run the glow plugs into the head, and tighten them to the prescribed torque

Downloaded from www.Manualslib.com manuals search engine

https://truckmanualshub.com/

value. (Gaskets are not required because of the tapered seal feature.)

(6) Mount the nozzle holders. The mounting bolts must be tightened equally, and to the prescribed torque value. Use new gaskets on the holders.

(7) Connect lead wires to the glow plugs in place.

(8) Do not apply any sealant to the cylinder head gasket: the replacement gasket comes with its surfaces coated with sealant.

(9) When securing the cylinder head to the block, be sure to tighten its bolts sequentially to make sure that the pressure will be equalized. This is accomplished by running all bolts in till they become finger-tight, and then tightening them with a torque wrench gradually and in two or three steps, each time moving the wrench from one bolt to another in the sequential order indicated by the numbers and tightening to the prescribed torque limit in the final step.

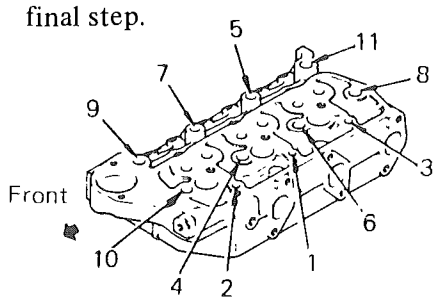

Cylinder head tightening order

(10) Several kinds of gaskets and packings are used on the cylinder head. Be sure to use new gaskets and packings in reassembly. Also, be sure to use the prescribed sealant at the places specifically designated.

(11) To adjust the valve clearance, proceed as follows:

(a) Valve clearance adjustment should be carried out with the piston in top dead center on compression stroke when the engine is cold.

Be sure to tighten the cylinder head bolts to the specified torque before adjusting the valve clearance.

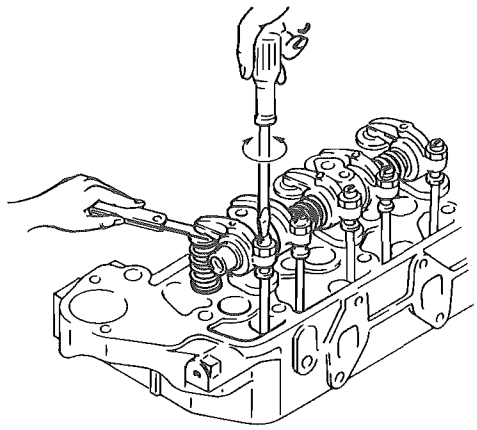

Adjusting valve clearance

(b) To bring the No. 1 cylinder piston to top dead center on compression stroke, align the timing (TDC) mark on the crank pulley with that on the gear case by turning the cranksahft in normal direction, as shown below. Now, the intake and exhaust valves of the No. 1 cylinder are ready to be checked. Check the clearance and, if it is incorrect, adjust it by turning the adjusting screw.

Be sure to align the timing marks perfectly or the valves are moved away from the correction position, making it impossible to obtain the correct valve clearance.

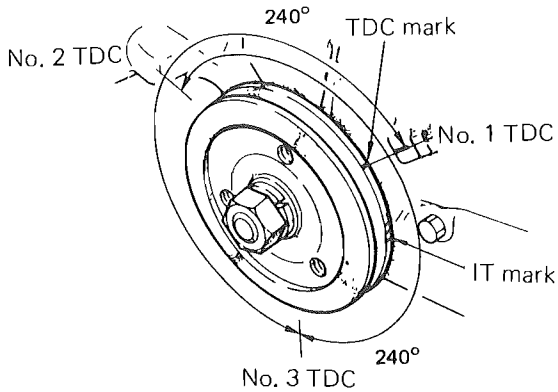

Timing marks

Downloaded from www.Manualslib.com manuals search engine

https://truckmanualshub.com/

(c) Next turn the crankshaft 240 degrees in normal direction to bring the No. 3 cylinder piston to top dead center on compression stroke. Having made sure that the timing marks are perfectly aligned, check and adjust the valve clearance on this cylinder.

(d) Further turn the crankshaft 240 degrees, and similarly adjust the valve clearance of No. 2 cylinder valves.

Cylinder block

The procedure of building the cylinder block assembly is as follows:

NOTE

a) Clean all parts thoroughly. Make sure oil holes are clean and clear, sliding surfaces free of any foreign matters, and rotary parts capable of smooth rotary motion.

b) Before fitting a part, be sure to oil it lightly.

c) Do not re-use the gaskets, packings, "O" rings and the like that have been removed in disassembly. Use new sealing parts in reassembly.

d) Use of sealant is specified for some joints and fits. Be sure to use the sealant where its use is prescribed.

e) Adhere to the standard practice of tightening bolts or nuts sequentially on a part secured by a plurality of bolts or nuts (in order to avoid distorting the part) and to use a torque wrench on bolts for which a torque limit is specified. Even those bolts or nuts for which no torque limit is specified must be tightened to a certain limit established for the type and size of the bolts or nuts. Undertightening or stripped screw threads are usually a result of ignoring the fact that a so-called "torque limit" is synonymous to required tightening torque.

f) Important clearances, end plays and thrust plays are specified to be within a certain range or to take a certain value. In the process of reassembly, be sure to check and double-check such a clearance or play.

The sequence of steps for reassembling the engine is exactly reverse of the disassembly. However, a large number of reassembling steps involve special techniques, treatments, checks for meeting specific requirements, and adjustments. Those steps will be described.

(1) When installing the camshaft front journal bushing into the cylinder block, use the installer and press in the bushing so that the oil holes in the bushing and cylinder block are aligned. It is advisable to put a mark indicating oil hole position on the front face of cylinder block with a soft pen before installing the bushing for the convenience of aligning the holes and also of checking after the installation of the bushing is completed

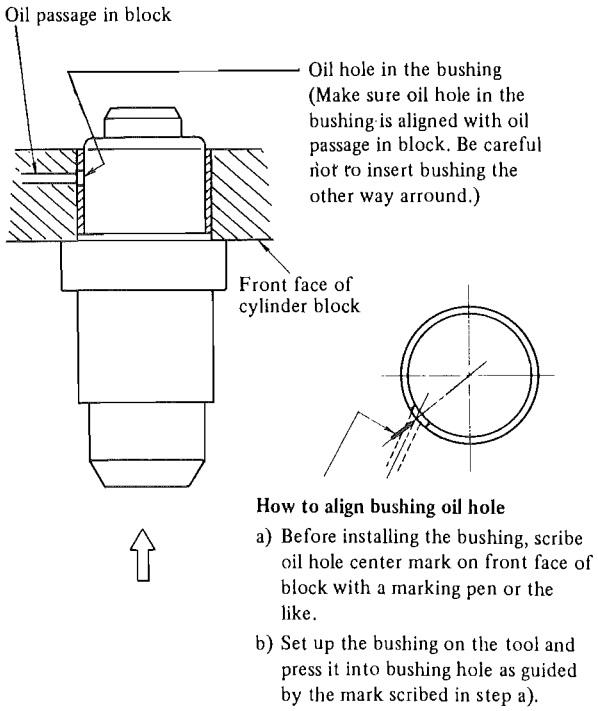

Installing camshaft front journal bushing

Downloaded from www.Manualslib.com manuals search engine

https://truckmanualshub.com/

(2) Fit the main bearing shells to the caps and to the half-bores formed of the block, making sure that each shell is correctly positioned.

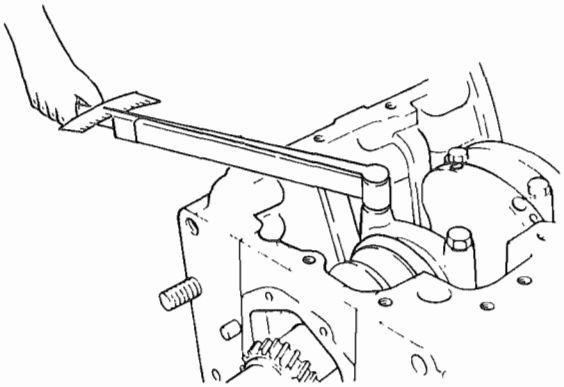

Securing main bearing caps

(3) Oil the crankshaft journals and crankpins, and set the crankshaft in place.

(4) Put on main bearing caps and secure them by tightening their bolts to the prescribed torque value.

Each cap has an arrow mark and numeral cast out: refer to these marks and position the cap correctly. When installing Nos. 1 and 4 caps, be sure to apply sealant to their mating faces.

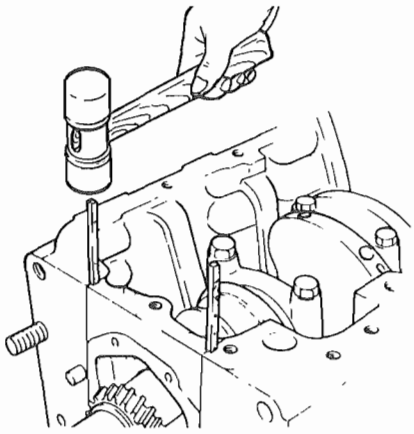

Fitting side seal of main bearing cap

(5) Check the end play of crankshaft.

(6) Apply sealant to the periphery of the side seals, and push them into the front and rear caps. This completes the installation of the crankshaft.

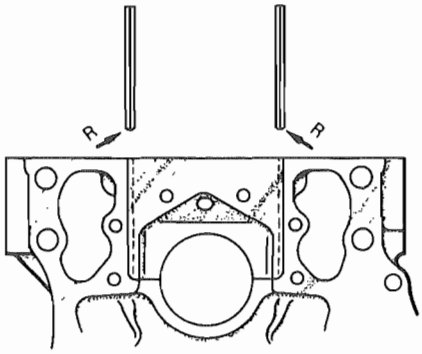

Fitting directions of side seals

(7) To the rear oil seal case of crankshaft, fit the oil seal; and install the seal case with its gasket, securing the case fast to the cylinder block.

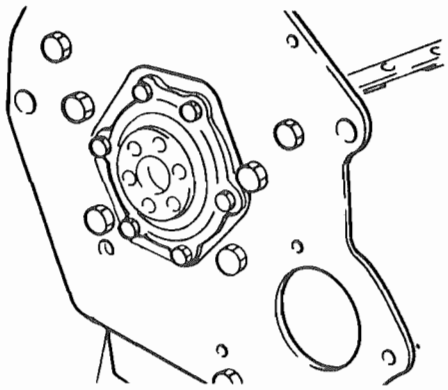

Installing oil seal case

(8) Using the piston pin setting tool (three-piece tool), combine piston with connecting rod in the following manner:

(a) Fit piston pin to the pushrod (tool), and run guide (tool) all the way into pushrod.

(b) Insert the combination of pushrod, pin and guide into the piston from the guide side, passing the pushrod through the small end of connecting rod, making sure that the front arrow mark (on piston crown) and the identifying mark on connecting rod come on the same side (top side).

Before inserting the pin, be sure to oil it as well as the small end.

Downloaded from www.Manualslib.com manuals search engine

https://truckmanualshub.com/

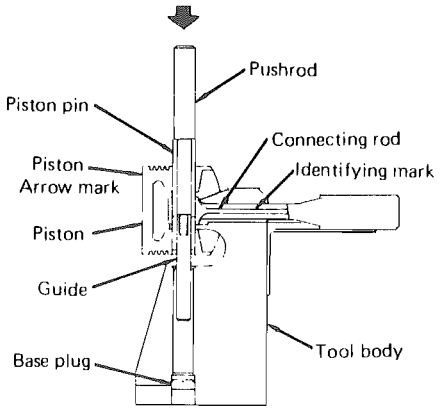

Pressing in piston pin

(c) Rest the whole work (piston, pin and connecting rod with pushrod and guide) on the tool body, bringing the notch of the guide into register with the notch provided in the tool body; and turn the guide by 90°, making sure that the small end is snugly settled in the recess of the body. Again, check to be sure that the front mark on piston crown and the identifying mark of the rod are both on top side and pointing upward.

(d) Using a press and applying a force of anywhere between 500 and 1500 kg (1103 and 3308 lb), push the pin into the connecting rod. Should the pin go in with a push of less than 500 kg (1103 lb) or greater than 1500 kg (3308 lb), the connecting rod or pin and piston must be replaced. The guide (tool) serves to locate the pin in the prescribed position. After pressing the pin in, turn the pushrod by 90° and take off the combination from the tool body.

NOTE

a) After combining piston with connecting rod, check to be sure that the pin is centered on the axis of connecting rod. If the pin is found displaced to one side, check the tool and, after correcting it as necessary, use it to push the pin back to the center position.

b) As stated previously, restore all parts to their original positions in reassembly. Remember, piston and pin constitute a set and must not be interchanged. Be sure, too, that the three pistons are of the same size (same mark).

(9) Fit the rings to the piston, discriminating the three compression rings, as shown, and distributing the gaps equiangularly. The side face of each ring with the maker and size marks comes on top side. When installing the oil ring with expander, be sure to position the expander tube opposite to the gap of the ring.

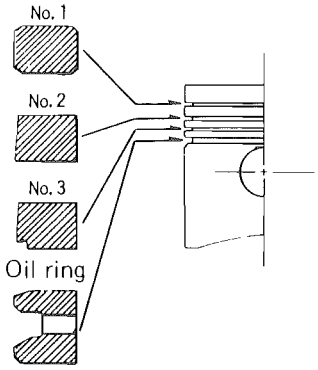

Piston rings

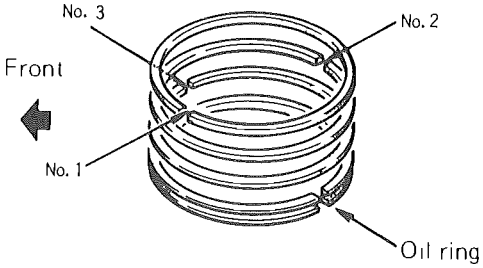

Gap distribution

(10) Insert the three combinations (piston and connecting rod) into the cylinders from the gasketed surface, using a ring band on each piston to embrace its rings. Make sure that the ring gaps are correctly distributed and that the arrow mark on piston crown points toward the front end of the engine. On the crankshaft side, connect the connecting rods to respective crankpins, with

Downloaded from www.Manualslib.com manuals search engine

https://truckmanualshub.com/

the bearings fitted properly, and secure the caps by tightening their bolts to the prescribed torque value.

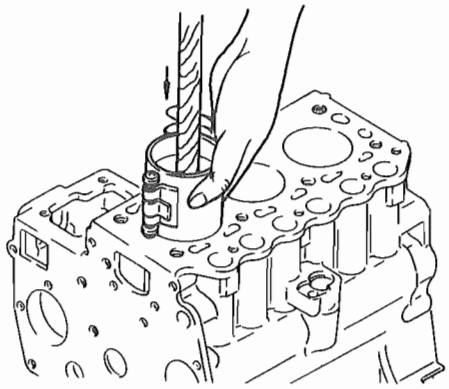

Inserting piston-connecting rod combination

(11) Install the front plate, with its gasket properly positioned and doweling the plate securely.

(12) Turn over the crankshaft to bring No. 1 piston to top dead center position.

(13) Fit the key into the keyway formed of crankshaft, and install the crankshaft gear.

(14) Set idle gear in place, matching its "1" mark to the "1" mark on crankshaft gear. If the crankshaft front bearing is already in place, the latter "1" mark may be hard to see and, in such a case, reference should be made to the engraved line, instead of the "1" mark, that is provided on the side face of gear boss. Fit the guide seals coated with sealant to the front and rear main bearing caps at this time by pushing the seals in, and have the cap bolts tightened to the torque limit.
Insert the camshaft assembly into the cylinder block, positioning its gear in such a way as to bring its match mark "2" into register with the mark "2" on idler gear. Similarly install the injection-pump camshaft, making the match mark "3" of its gear to the mark "3" of idle gear. Finally, install the hydraulic pump drive shaft, meshing its gear with camshaft gear.

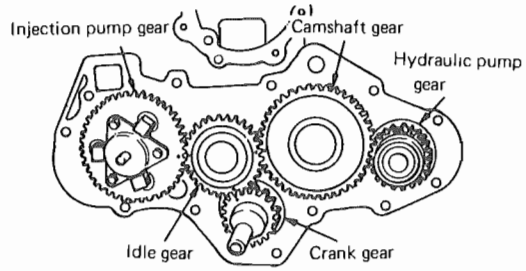

Timing gears

(15) Attach the governor weight assembly to the injection-pump camshaft gear.

(16) After installing governor parts, install the gear case, with its gasket properly set, while inserting the tie rod and its stopper spring into the cylinder block.

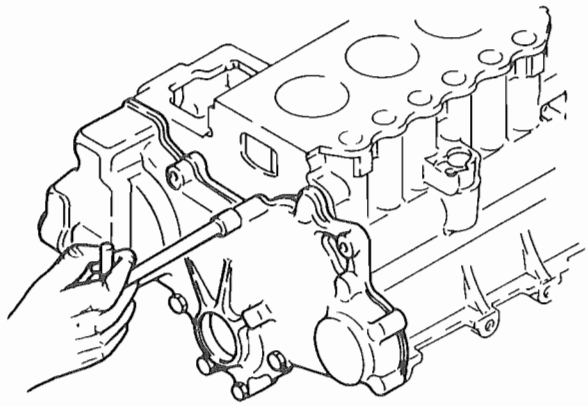

Securing gear case to cylinder block

(17) Put on the crank pulley, followed by its washer and nut, and tighten the nut to the torque limit.

(18) Fit the gasket to the block, and install the rear plate.

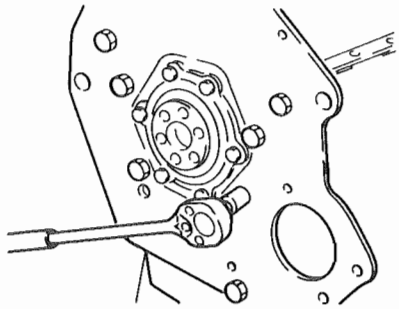

Securing rear plate to cylinder block

Downloaded from www.Manualslib.com manuals search engine

https://truckmanualshub.com/

(19) Attach the oil screen, and install the oil pan.

(20) Turn over the cylinder block. While slowly rotating the camshaft or the speedometer driven gear shaft, install the driven unit, making sure to fit its "O" ring correctly.

Apply sealant such as Three-Bond #2 to the periphery of the sleeve.

To reassemble the driven gear unit, proceed as follows:

(a) Fit "O" ring in the groove in the sleeve.

(b) Apply EP (extreme-pressure) type grease to the periphery of driven gear shaft, especially to its "O" ring surface, and insert the shaft.

(c) Secure the shaft to the sleeve by inserting the spring pin, being sure that the groove of the pin faces outward and that the tip of the pin is not protruded beyond the periphery of the sleeve.

(d) Put "O" ring to the groove on the periphery of sleeve. After completing reassembly, check to be sure that the gear shaft rotates smoothly.

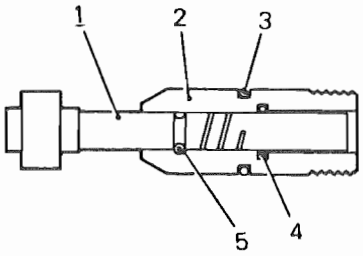

1-Driven gear shaft
2-Sleeve
3-"O" ring (large)
4-"O" ring (small)
5-Spring pin

Reassembling driven gear unit

(21) Oil the tappets liberally, insert them into the holes, and follow them with pushrods, making sure each pushrod fits snugly.

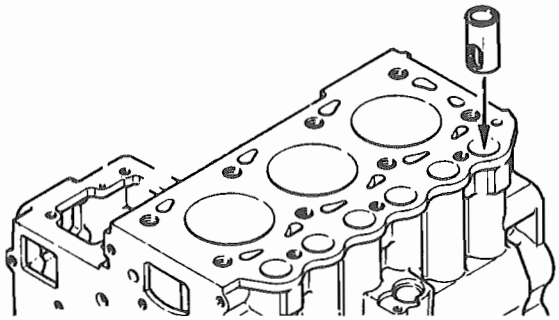

Inserting tappets

(22) Install the cylinder head assembly on the block, as outlined in the preceding section.

(23) Install the injection pump assembly: refer to the section dealing with the fuel system.

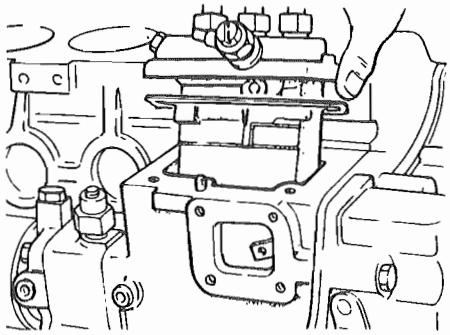

Installing injection pump

(24) Install the oil pump and filter: refer to the section covering the lubrication system. Be sure to apply sealant to the screw threads of the oil pressure switch when installing this switch.

(25) Install the fuel filter.

(26) Install the water pump and cooling fan.

(27) Install the starter and alternator. For this installation work, refer to the section dealing with the electrical system.

Downloaded from www.Manualslib.com manuals search engine

https://truckmanualshub.com/

LUBRICATION SYSTEM

DESCRIPTION

The oil pump is of trochoidal type; it is driven from the rear end of the injection-pump camshaft through an Oldham coupling. The discharge pressure is kept at a constant level by a check valve.

The oil filter is of full-flow type. Discharged oil is cleaned while flowing through the cartridge of this type oil filter before entering the cylinder block.

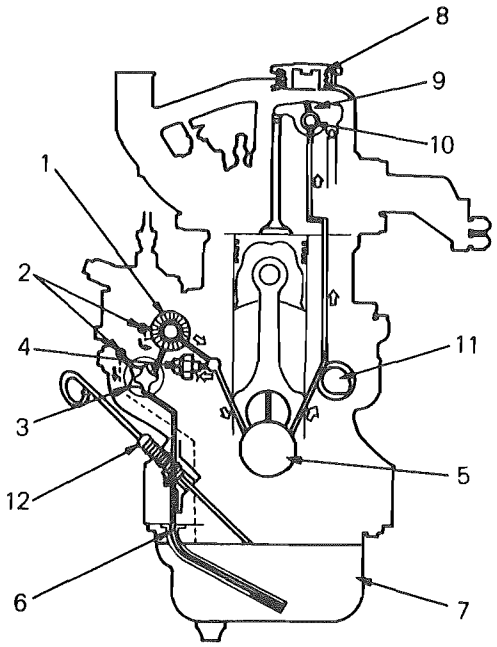

1-Oil filter
2-Check valves
3-Oil pump
4-Oil pressure switch
5-Crankshaft
6-Oil screen
7-Oil pan
8-Oil filler cap
9-Rocker arm
10-Rokcer shaft
11-Camshaft
12-Oil level gauge

Engine lubrication scheme

Engine oil information

For the present engine, the engine oil is prescribed to be of API classification of CC or above, whose viscosity rating is as follows:

Air temperature	Grade (SAE No.)	
	Single	Multi
Below −10°C (14°F)	5W	5W-20
−20°~ 0°C (−4°~ 32°F)	10W	10W-30
−10°~ 10°C (14°~ 50°F)	20W	
0°~ 20°C (32°~ 68°F)	20	
10°~ 35°C (50°~ 95°F)	30	
30°C (86°F) & above	40	20W-40

The oil in the oil pan should be changed every 100 hours of engine operation. The first oil change should be effected after 50 hours of initial operation.

Here's the method of changing the oil: When the engine is still hot after a substantial duty run, drain the oil pan completely, and add the fresh oil through the filler (whose cap is atop the rocker cover) until the oil surface comes up to the upper level mark on the level gauge. After filling up the oil pan, run the engine a minute or so and then re-check the level.

Oil filter

This cartridge-type filter is easier to handle because its body and filtering element are integral. It has a built-in check valve on the upstream side, which is arranged to respond to the differential pressure across the element When this pressure exceeds 1 kg/cm² (14.2 psi) (due, invariably, to a dirty element), the valve opens to allow the oil to bypass the element, causing an unfiltered oil to flow into the cylinder block in order to maintain an adequate supply of lube oil to the running parts of the engine. The filter element is prescribed to be replaced by a new one every 100 hours. The first replacement should be effected after 50 hours of initial operation.

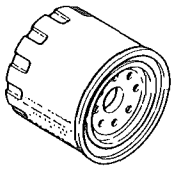

Oil filter

Downloaded from www.Manualslib.com manuals search engine

https://truckmanualshub.com/

Oil pump

The oil pump is of the trochoid type and is located at the right side of the cylinder block, behind the fuel injection pump. It has a build-in check valve; this valve limits the discharge pressure to 4 kg/cm² (57 psi).

When the check valve operates to relieve the excess pressure, part of the discharged oil is bled out into a line leading to the oil pan. The running parts of the pump are two: inner rotor and outer rotor.

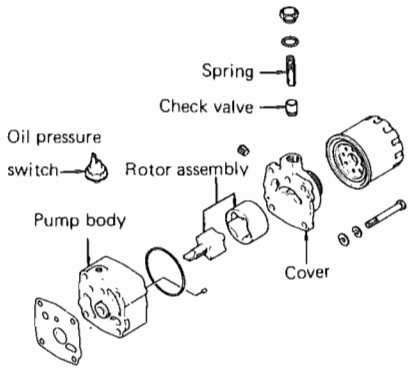

Oil pump – Exploded view

Oil pressure switch

This switch is located at the rear right-hand side of cylinder block, and senses the oil pressure by means of its diaphragm to close the circuit when the pressure falls to anywhere between 0.15 to 0.30 kg/cm² (2.13 to 4.27 psi.) As this switch operates, the warning lamp lights up to alert the operator. Whenever this lamp lights (except when the engine is started), the engine must be promptly shut down to search for the cause of low oil pressure condition.

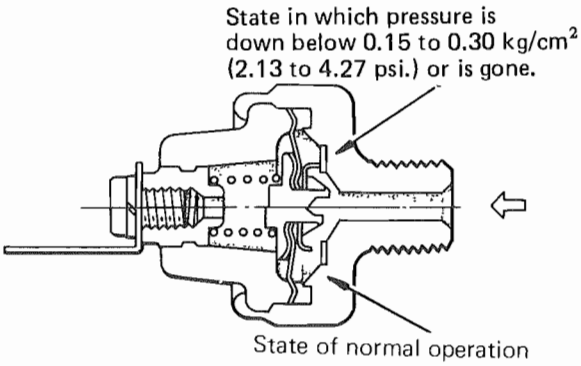

Oil pressure switch

REMOVAL AND DISASSEMBLY

Oil filter

The filter can be loosened and removed with bare hands. If the filter is too tight to turn, use a filter wrench (available in the market).

Oil pump

The oil filter must be removed to take down the oil pump. Separate the pump cover assembly from the body and take off the gasket.

INSPECTION

Oil pump

If the clearance of the outer rotor in the body is too large, replace the rotor assembly. To measure this clearance, use a feeler gauge, as shown.

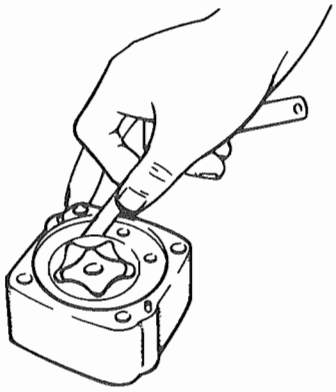

Checking outer-rotor clearance in the body

If inner rotor clearance in outer rotor (as measured in the manner shown with a feeler gauge) is too large, replace the rotor assembly.

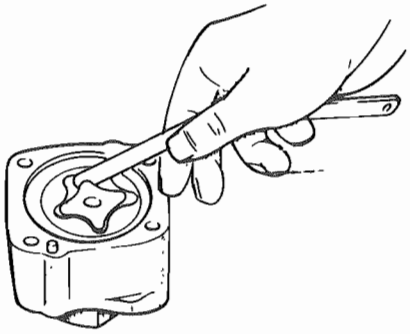

Checking inner-rotor clearance in the outer rotor

Downloaded from www.Manualslib.com manuals search engine

https://truckmanualshub.com/

Using a straightedge and feeler gauge, check the side clearance between the outer rotor and the pump cover. The body or rotors, or both, must be replaced if the clearance is found too large.

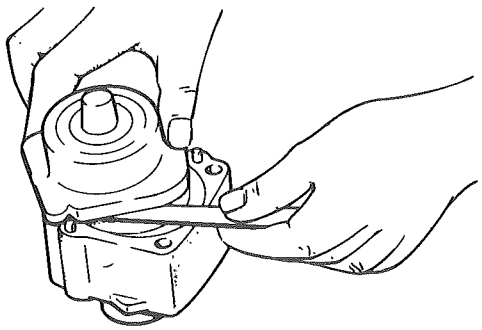

Checking rotor side clearance

Be sure to replace the "O" ring, which seals the joint between body and cover.

Oil pressure switch

Test the removed pressure switch in a test circuit arranged as shown, with variable oil pressure applied to its oil side, in order to see if the switch opens and closes its contact at the specified pressure values. If the switch does not close at a falling pressure between 0.15 to 0.30 kg/cm^2 (2.13 to 4.27 psi), replace it by a new one.

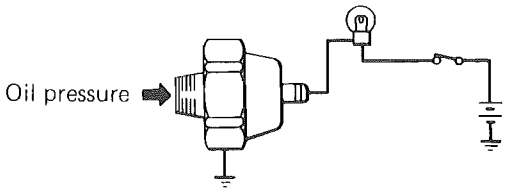

Oil pressure switch testing circuit

REASSEMBLY

Oil filter

The filter can be installed with bare hands to torque it in place. The required tightening torque is from 1.1 to 1.3 kg-cm (0.08 to 0.09 lb-ft). When fitting the filter, be sure that its "O" ring is snug in the groove. Oil the "O" ring when fitting it to the groove. After completing the whole installation work, observe the oil filter, when the engine is running, to be sure that no oil leaks from the filter.

Oil pump

Oil the inner and outer rotors; attach the gasket to the pump body; set the rotors in the body; fit "O" ring; put on the pump cover; and secure the pump by tightening its bolts.

Oil pressure switch

Apply sealant to the screw threads of the switch body just before running it into the hole. Apply sealant sparingly so that the oil sensing hole of the switch will not be clogged.

Downloaded from www.Manualslib.com manuals search engine

https://truckmanualshub.com/

FUEL SYSTEM

DESCRIPTION

Fuel oil in the tank flows by gravity through the fuel filter to the injection pump, by which it is pumped to the three injection nozzles through injection pipes. The injection nozzle is in the holder, and has its spraying tip exposed to the combustion chamber. Some of the oil reaching the nozzle from the top of the nozzle holder is spilled into overflow pipe and returns to the fuel tank.

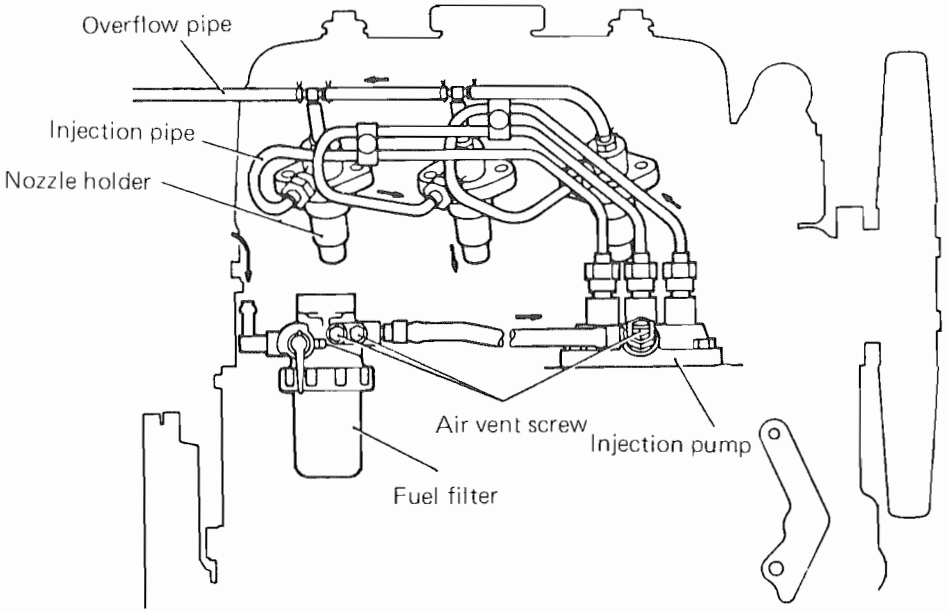

Fuel system components

Downloaded from www.Manualslib.com manuals search engine

https://truckmanualshub.com/

Fuel filter

This filter is complete with a cock at its inlet and two air-vent screws. The filtering element is a pleated paper unit easy to install and remove and high in filtering performance.

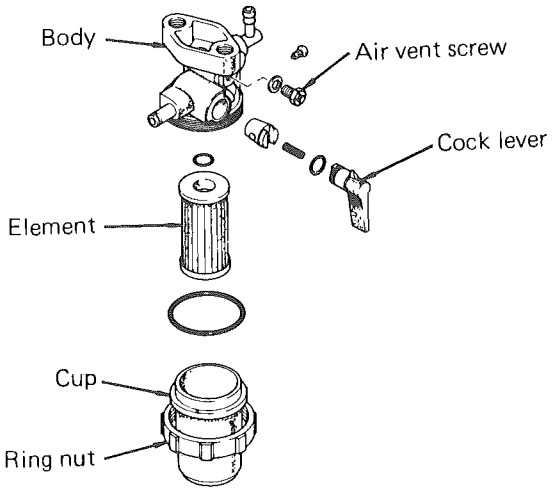

Fuel filter

Fuel injection pump

Each pumping element consists essentially of a barrel, plunger, spring, tappet, control pinion and delivery valve. Three such elements are contained in a single valve body to constitute an injection pump.

The injection pump is mounted on the right-hand side of the engine cylinder block, with its "smoke-set" device facing outward and its adjusting plates coming on the inboard side.

The three tappets ride on the three cams of the pump camshaft by their rollers and convert the rotary motion of the cams into a reciprocating motion for driving the plungers up and down in their barrels.

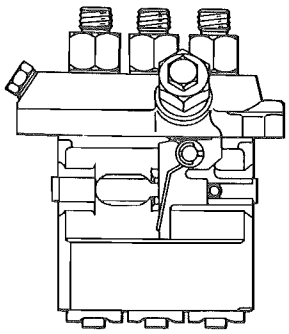

"Control rack" side of pump

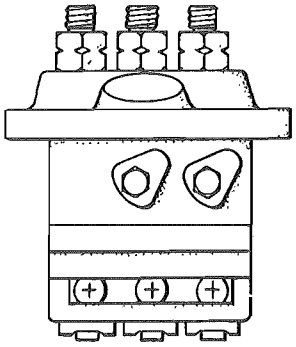

Adjusting plate side of pump

- Injection quantity control

The three plungers move up and down by the same amount: the plunger stroke is constant. "Injection quantity" refers to the amount of fuel injected through the nozzle into the cylinder for each slug of fuel delivered under very high pressure by the pumping element. (For test and adjusting purposes, the value of injection quantity is specified for so many slugs or, to say the same thing, plunger strokes.)

Injection quantity is varied, not by varying the plunger stroke (which is fixed), but by angularly displacing the plungers in place. This angular displacement of three plungers in unison is accomplished by the control rack, whose teeth are meshed with three control pinions. The control rack moves straight; its linear movement causes all three pinions to turn, thereby causing the plungers to turn around their axes.

The pinion is mounted on the control sleeve surrounding the lower portion of the plunger. The plunger is capable of reciprocating in but angularly restrained by the sleeve.

The control force for actuating the control rack comes from two sources: the fuel control lever used by the operator and the governor operating in response to engine speed.

Injection quantity decreases when the rack moves to the right (towards STOP → mark) and it increases when the rack moves to the left.

Downloaded from www.Manualslib.com manuals search engine

https://truckmanualshub.com/

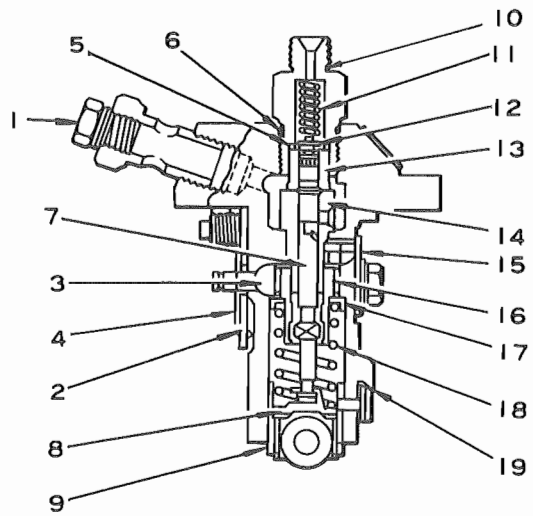

1-Air vent screw
2-Stopper
3-Control rack
4-Return spring
5-Gasket
6-"O" ring
7-Plunger
8-Lower seat
9-Tappet
10-Valve holder
11-Spring
12-Delivery valve
13-Valve seat
14-Plunger barrel
15-Adjusting plate
16-Control pinion
17-Upper seat
18-Plunger spring
19-Pump body (housing)

Injection pump — Cross section

- Smoke-set device

The smoke set unit restricts the maximum fuel injection rate from the injection pump and reduces the amount of exhaust smoke.
The stopper is held by a spring in the illustrated position. This position is the smoke set position. When starting the engine, pull the speed control lever fully toward the maximum speed, and the tie rod (with the stopper spring) moves the control rack, which overcomes the spring force and moves in the direction of the arrow, thus allowing over-injection for easy engine starting. On engines with an ungleich device described under the following item c, however, the operations described under item d are required.

Ungleich Device

When an overload is imposed on the engine during operation, the engine speed falls and the function of the governor moves the speed control rack in the direction that fuel injection is increased against the smoke set spring to provide larger torque. To ensure an optimum increase of the injection during operation, the ungleich set plate which controls the motion of the smoke set stopper is provided. This injection increase characteristic (ungleich effect "L") provides proper torque performance suitable for the work machine between the maximum output point and maximum torque point.

Resetting Ungleich Device and Starting Engine

To start the engine, push the speed control lever in all the way in the stop direction and then move it to the fully opened position, and the ungleich set plate will be reset and an excessive injection state created.

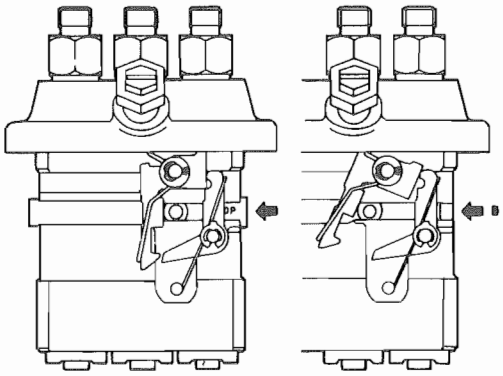

Smoke set position Over-injection

"Smoke-set" device

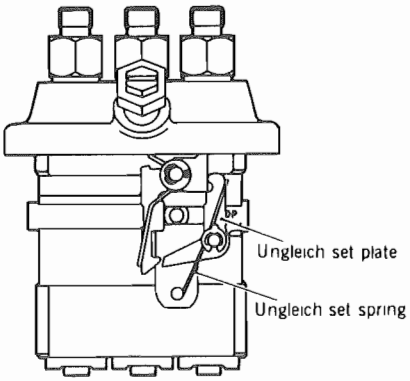

Ungleich Device

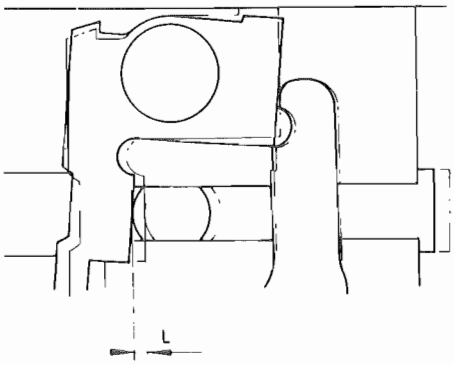

Ungleich Effect "L"

Downloaded from www.Manualslib.com manuals search engine

https://truckmanualshub.com/

- Injection-quantity equalizing adjustment

The three pumping elements are required to deliver the same quantity of fuel for each control rack position. The requirement is satisfied by allowing the two plunger barrels to be angularly repositioned while the third barrel is kept fixed in place. There are two adjusting plates, each functioning as a cam to angularly reposition the barrel.

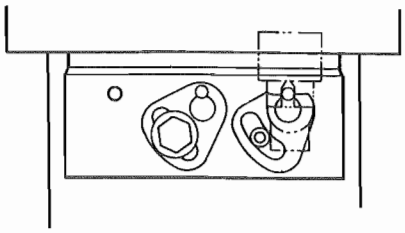

Cam mechanism for equalizing injection quantities

- Delivery valve

This is a spring-loaded valve similar in construction to a relief valve. In operation, the valve opens when the plunger rises to develop a very high fuel pressure within the barrel. As the pressure falls, the valve snaps back to its closed position in such a way as to draw back a tiny amount of fuel from the injection pipe. By this retracting action, the nozzle is prevented from producing an after-injection dribble. In other words, each injection is sharply articulated.

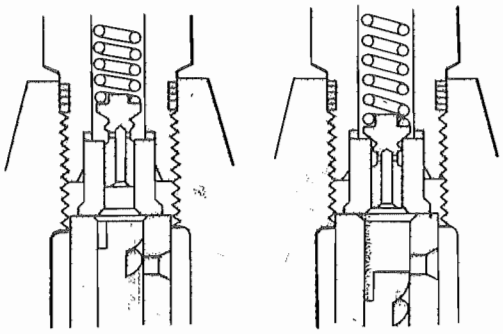

Delivery valve action

Injection nozzles and nozzle holders

The nozzle holder and nozzle constitute a unit, as will be noted in this partial cutaway view.

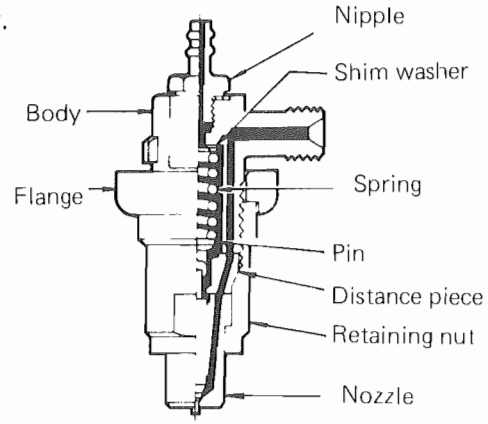

Nozzle holder and nozzle — Sectional view

In operation, the highly pressurized shot of fuel admitted into the top part of the holder acts on the face, near the spray tip, of the needle valve and forces the needle valve upward against the force of the spring to burst into the combustion chamber through the spray orifices in the tip. The drop of fuel pressure to terminate the shot is so abrupt that the needle valve seats itself sharply. Fuel spilled from the nozzle returns through overflow pipe to the fuel tank.

DISASSEMBLY

NOTE

a) Do not remove the two adjusting plates (locking the two rotatable plunger barrels) if pump testing equipment is not available. It is on the equipment (pump tester) that the pump can be adjusted and set for proper injection quantity.

b) Internal moving parts, particularly plungers, barrels, delivery valves and the like, are high-precision parts and, upon pump disassembly, must be protected against rusting. Be sure to keep them immersed in a clean diesel fuel contained in a suitably sized pan or tray.

Downloaded from www.Manualslib.com manuals search engine

https://truckmanualshub.com/

Fuel filter

Remove the retaining nut, pick out "O" ring, and take out the element.

Fuel injection pump

(1) Disconnect fuel injection pipes from delivery valve holders.

(2) Removing the pump mounting bolts allows the pump to be taken down. Just before lifting the pump off, have the tie rod disengaged from the control rack inside: to gain access to this rod, the side cover must be removed.

(3) Place the removed pump on the bench, and disassemble each pumping element in the following manner:

NOTE

During this disassembly, be sure to measure the thickness of the adjusting shims (indicated as (17) in the exploded view) and write down the reading and also the number of shims as reference data for reassembly.

(a) Remove delivery valve holder (1).

(b) Pick out delivery valve spring, valve (2) and "O" ring.

(c) Remove gasket and delivery valve seat.

(d) Straighten the lock plate, which restrains the tappet guide pin; push in the tappet (18) just a little and pull off the guide pin with pincers. Take out the tappet (18). Shims (17) and lower seat (16) will come out.

(e) Pick out spring (15) and upper seat (14).

(f) Pull down and remove pinion (13).

(g) Draw out plunger and barrel (3) from the delivery valve side of pump housing.

Be sure to group the delivery valve, plunger and barrel, so that these and related parts (pinion, spring, seats and shims) will be restored to the place to which they belong.

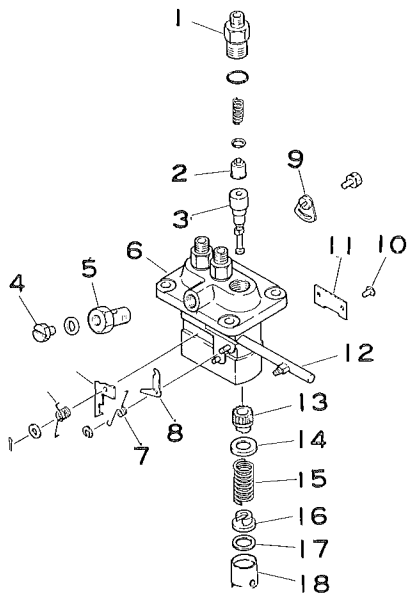

(1) Valve holder	(11) Plate
(2) Delivery valve	(12) Control rack
(3) Plunger and barrel	(13) Control pinion
(4) Air vent screw	(14) Upper seat
(5) Hollow screw	(15) Plunger spring
(6) Pump housing	(16) Lower seat
(7) Return spring	(17) Adjusting shim
(8) Stopper	(18) Tappet
(9) Adjusting plate	(19) Ungleich set plate
(1 0) Tappet guide pin	(20) Ungleich set spring

Fuel injection pump — Exploded view

(h) Remove the smoke-set stopper by pulling off split pin and taking off washer and return spring. Draw out control rack (12).

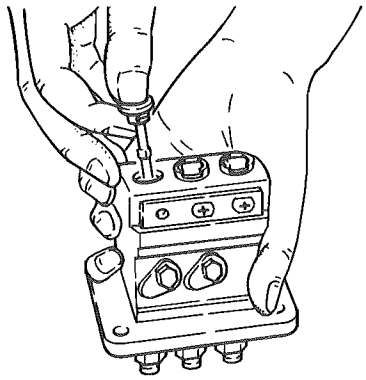

Removing plunger

Downloaded from www.Manualslib.com manuals search engine

https://truckmanualshub.com/

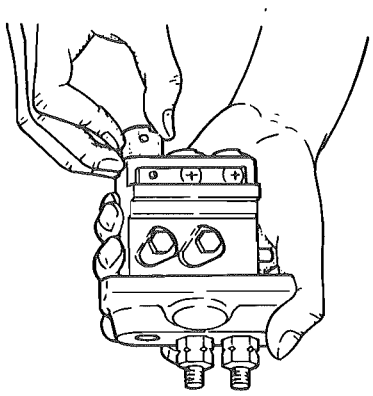

Removing tappet

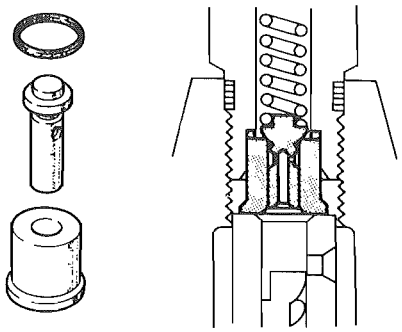

Removed delivery valve

NOTE

Do not remove the injection-quantity adjusting plates since this removal makes it necessary to test the pump on a bench tester. If necessary to remove these plates, be sure to mark the plates and pump body to aid reassembly.

Nozzle holders

(1) From each nozzle holder, disconnect overflow pipe.

(2) Similarly disconnect injection pipe.

(3) Loosen nozzle holder securing bolts, and remove the holder assembly.

(4) Break apart the nozzle holder assembly in the following manner:

(a) Grip the holder body in the vise; put the wrench to the retaining nut and loosen the body. Use soft-metal pads (aluminum or copper) between vise jaws and holder body to protect the body when tightening the vise.

(b) Take out shim washer, pressure spring, flange, pressure pin and distance piece in that order.

(c) Take nozzle out of retaining nut. If the nozzle will not come easily, shake it loose by tapping on it lightly with a wooden mallet: be careful not to damage the needle valve part in the nozzle.

Disassembled nozzle holder

INSPECTION

Fuel filter

Visually examine the filtering element and, if it is found in clogged, deteriorated or damaged condition, replace it.

Fuel injection pump

- Delivery valve seat

If the seat is found with evidence of poor seating contact, replace it.

(1) In addition to the above requirement, each pumping element has to meet the following requirement as proof of a proper fit of the plunger in its barrel: Into the barrel removed upon injection pump disassembly, insert its plunger about 15 ~ 20 mm (0.59 ~ 0.79 in) of the way, leaving a third of its length outside the barrel, while holding the barrel horizontal; then angle up the barrel slowly by about 60°. This

Downloaded from www.Manualslib.com manuals search engine

https://truckmanualshub.com/

should cause the plunger to slide in all the way by its own weight to evidence a proper fit. If the plunger goes inward in a free-falling manner or becomes stuck on the way, then the pumping element must be replaced.

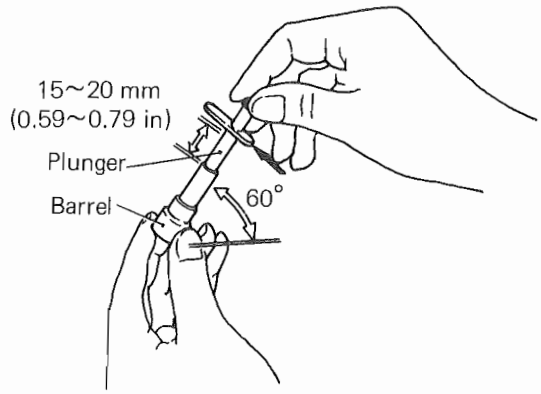

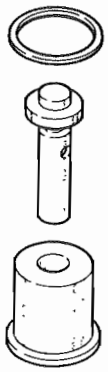

Delivery valve

- Plunger and barrel

(1) When the injection pump is in disassembled state, check the fit of the delivery valve piston in the bore by holding the valve with fingers as shown. First, let down the valve all the way into the bore, and give thumb pressure to the bore. This should raise the valve a little and release of thumb pressure should allow it to settle into seated condition; if the valve remains seated without responding to the thumb pressure, its fit in the bore is too loose.

(2) Upon disassembly, inspect plungers and barrels for signs of rusting, burning or any other malcondition, and repair or replace pumping elements as necessary. Each plunger inserted into its barrel should be capable of smooth sliding motion when pushed and pulled.

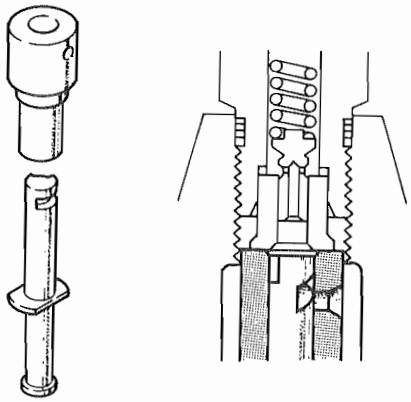

Plunger and barrel

Downloaded from www.Manualslib.com manuals search engine

https://truckmanualshub.com/

- Control rack and pinions

Inspect the rack and pinions for tooth wear and damage. Badly worn or damaged rack and pinions must be replaced.

- Tappet

Inspect each tappet for wear at its sliding surface, roller and shaft. A damaged or excessively worn tappet must be replaced.

Injection nozzles

(1) Inspect each nozzle for damage, paying particular attention to its needle valve. If the needle valve is not seating tight, as evidenced by its contact pattern, or if any part of the nozzle is damaged, replace the whole nozzle assembly.

(2) Check to be sure that pressure springs are in good condition, free from any signs of weakening.

(3) Each nozzle assembly must be tested for spray pattern after its reassembly. The testing method will be explained in "Reassembly," below.

REASSEMBLY

Fuel filter

(1) When setting the element, be sure that the "O" ring fits snugly. With the element set properly and "O" ring in place, tighten the retaining nut fully.

(2) Secure the filter assembly to the support.

Fuel injection pump

(1) Insert the barrel into the pump housing by aligning its notch with the dowel of adjusting plate.

(2) Fit "O" ring to valve holder.

(3) Insert spring seat, gasket and valve assembly into the valve holder, and run the holder into the pump housing. With the wrench, tighten the holder in place to compress the "O" ring fully.

(4) Feed the control rack into the pump housing.

(5) Install pinions, positioning each pinion in such a way as to index its tall tooth (sided by deep valleys) to the engraved line on the rack.

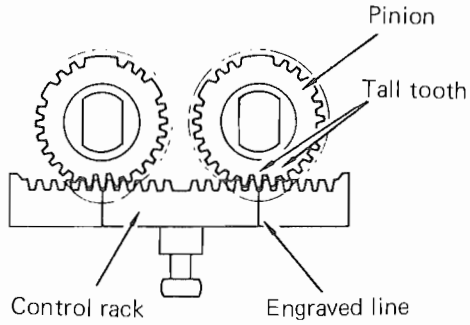

Meshing the rack with pinions

(6) Insert the upper seat and its spring into each pumping element.

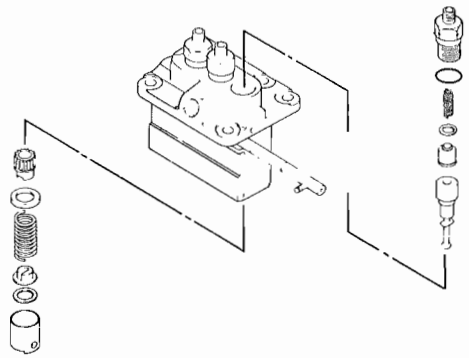

Pumping element parts

(7) Combine plunger with lower spring seat, and insert the combination, bringing the "L" mark on plunger flange to control rack side.

Downloaded from www.Manualslib.com manuals search engine

https://truckmanualshub.com/

(8) Insert the tappets, each tappet being complete with shim. Be sure that guide pin holes in tappet and pump housing are aligned. Attach lock plate and, through the plate, insert guide pin. After installing the guide pins, lock the pins by bending the plate sharply.

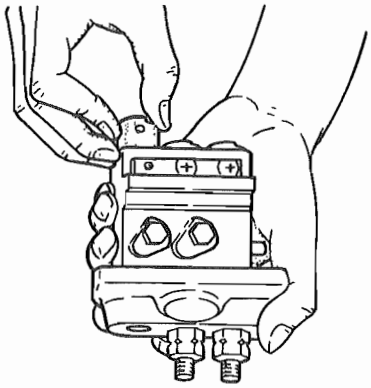

Installing tappet

(9) Install the smoke-set device, positioning its return spring and washer correctly, and lock it by inserting split pin.

(10) Adjust and set the reassembled injection pump in the following manner:

(a) A proper amount of shim must be used on the mounting seat when positioning the pump in place. Engage the tie rod (linked to the governor lever) with the control rack, and fit the tie rod spring. Shim stocks are available in nine thicknesses: 0.2 to 1.0 mm (0.01 to 0.04 in.), the thickness increment being 0.1 mm (0.004 in.).

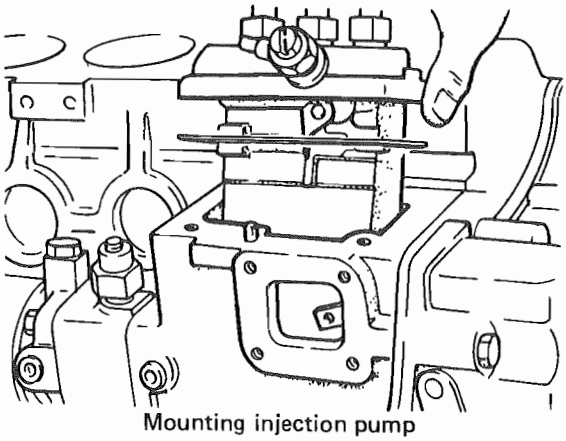

Mounting injection pump

(b) Reconnect the fuel feed line to the pump, admit fuel oil into the pump, and vent air out of this line by loosening the air vent screw.

(c) In the present engine, fuel injection is prescribed to begin at 19° before top dead center. In other words, each pumping element of the pump is required to start delivering a slug of fuel when the piston in its corresponding cylinder comes to a position of 19° (crank angle) B.T.D.C. on compression stroke. This start, that is, injection timing, can be checked in the following way:

- Take No. 1 cylinder as the reference. Remove the delivery valve holder, delivery valve and spring, and install the holder only, so that the fuel will continuously spill out from the holder.
- Slowly turn over engine crankshaft by hand until the fuel ceases to overflow from the holder and, right then at the crank pulley, observe the timing mark to see if the piston (in No. 1 cylinder) is at 19° B.T.D.C.; if not, increase or decrease the thickness of the shim on the mounting seat.

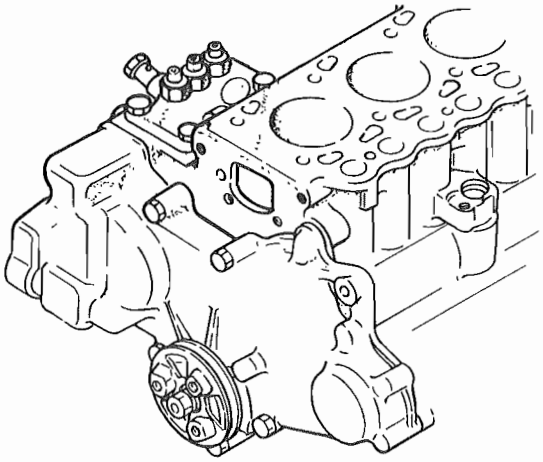

Checking injection timing

- The moment the fuel ceases to overflow corresponds to the start of injection. Increase the shim thickness to retard the timing and vice versa. Changing the thickness by 0.1 mm (0.04 in.) produces a change of about 1° in timing.
- The start of injection can be checked at the end of injection pipe, with

Downloaded from www.Manualslib.com manuals search engine

https://truckmanualshub.com/

the delivery valve and spring in place and with the injection pipes properly installed: this is an alternate checking method. In this case, disconnect No. 1 pipe from its nozzle holder. Using a socket wrench at the crank pulley nut, gradually turn over engine crankshaft to let No. 1 pumping element force fuel out of the pipe. The moment the fuel starts swelling out of the pipe is the start of injection. This will occur approx. 1 deg. behind the standard injection timing.

(d) After making sure that the injection timing is correct, install the tie rod cover. When installing the cover equipped with damper spring, keep the tie rod pushed in the direction of increasing the speed.

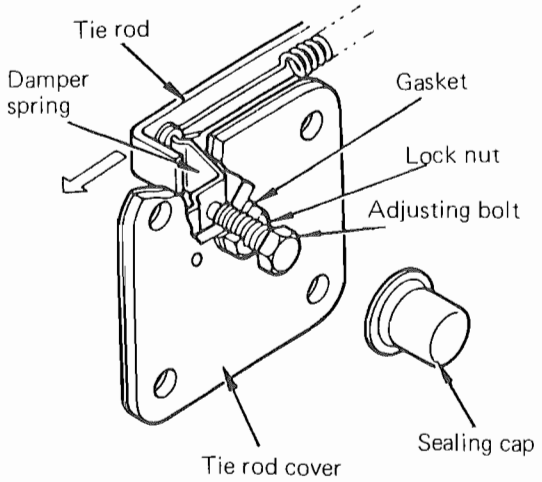

Installing tie rod cover

To set the high engine speed, proceed as follows:

① With the damper spring in free state (the adjusting bolt backed), set the engine speed to the "A" rpm by means of the high-speed set bolt. After setting, lock the set bolt with lock nut.

Specification

Model	"A" rpm
K3A-13MT	2840 $^{0}_{-40}$
K3C-13MT	2840 $^{0}_{-40}$

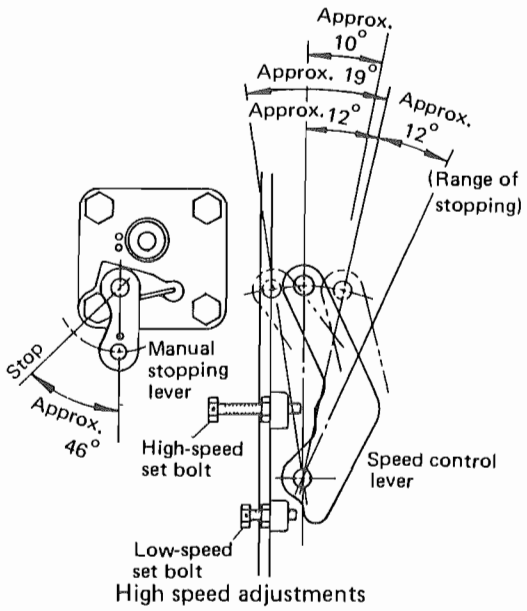

High speed adjustments

② Run in the damper spring adjusting bolt to set the engine speed to the "B" rpm, and lock the bolt with lock nut. (Apply Super Three-Bond #20 to the threads of the bolt before locking.)

Specification

Model	"B" rpm
K3A-13MT	2850 $^{+30}_{-25}$
K3C-13MT	2850 $^{+30}_{-25}$

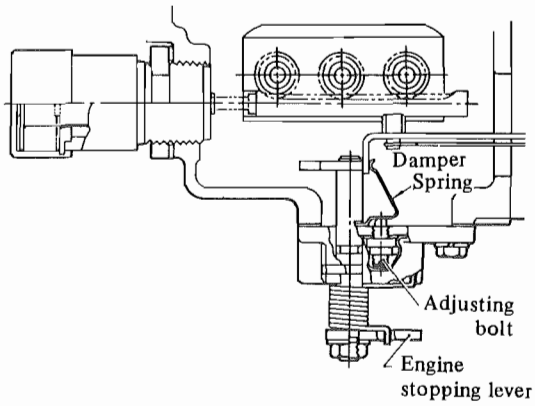

Damper spring adjustment

③ Seal the adjusting bolt with sealing cap.

④ Seal the high-speed set bolt with wire and cachet.

Injection nozzles and nozzle holder assemblies

(1) Fit nozzle assembly, distance piece and pressure pin to retaining nut.

Downloaded from www.Manualslib.com manuals search engine

https://truckmanualshub.com/

(2) Fit shim, spring and flange to body, and tighten the body and retaining nut together by torquing to the prescribed value.

NOTE

The body may be gripped in the vise, but not the retaining nut. This is because the nozzle might suffer distortion if the nut is clamped between the vise jaws.

(3) Fit gasket and nipple to the body.

(4) When installing the nozzle holder assemblies, be sure to use new gaskets and tighten the securing bolts to the prescribed torque value.

(5) Prior to installing the overhauled nozzle holder assemblies, test each for "start-of-injection" pressure, spray pattern, "after-injection" dribbling and fuel atomization.

(a) Start-of-injection pressure test

A nozzle tester must be used to determine the pressure at which the nozzle starts spraying. If the pressure noted on the nozzle under test is at variance with the specification, increase or decrease the shim thickness. Changing the thickness by 0.1 mm (0.04 in.) changes the start-of-injection pressure by about 10 kg/cm² (142 psi).

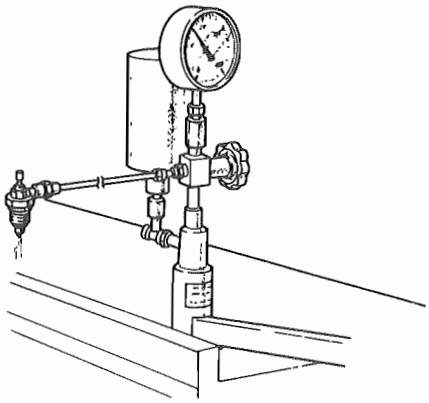

Start-of-injection pressure test

(b) Spray pattern test

Operate the tester lever rather slowly to see if the nozzle shoots out fuel intermittently. A small amount of fuel is discharged in this test at such a pressure as will allow the needle valve to chatter and, therefore, spray intermittently with some low-tone sound. The test is often called "chattering test." A good spray is characterized by fine atomization and straightforward jetting.

Good Bad Bad

Spray patterns in chattering test

(c) After-injection dribbling test

See if the nozzle dribbles after each injection. A dribbling nozzle must be replaced. In the chattering test, fuel might ooze out to form a globule of fuel at the nozzle tip but, since this is due to the chattering action of the needle valve, such a globule need not be taken as a cause of nozzle replacement.

Good Bad Bad

Dribbling in test condition

(d) Atomization test

Operate the tester lever rapidly, at a rate of about 800 strokes per minute to make the nozzle spray out with full force. Visually observe the spray to see if it consists of uniformly fine particles of fuel, straight in direction and having no fissures.

Downloaded from www.Manualslib.com manuals search engine

https://truckmanualshub.com/

GOVERNOR SYSTEM

DESCRIPTION

The principal device in the governor is three flyweights mounted on injection-pump gear to move its sliding shaft in linear direction. This shaft pushes the governor lever ahead, and the lever is connected to the control rack through the spring-loaded tie rod.

In operation, the flyweights spread apart and contract according as engine speed rises and falls. As the speed rises, the flyweights pushes its sliding shaft to pull out the control rack in the direction of decreasing injection quantity to reduce engine speed. In the steady-state condition, this push by flyweights is counterbalanced by the force of governor spring acting on the governor shaft.

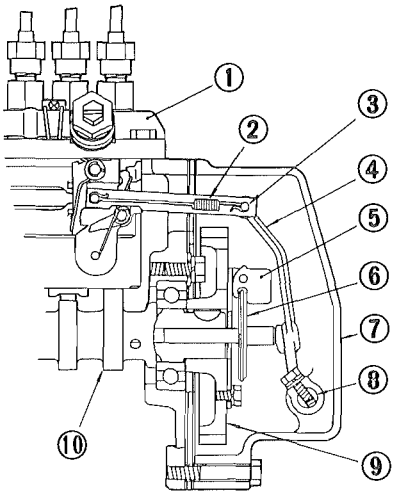

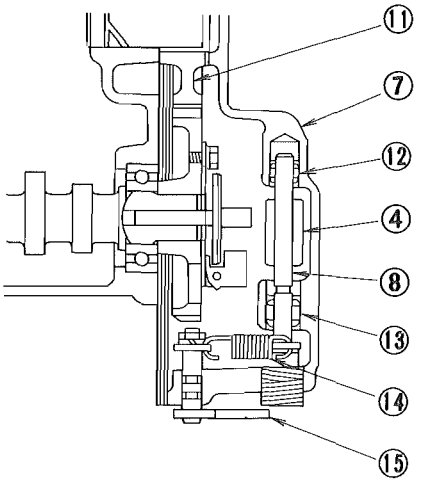

1-Injection pump
2-Stopper spring
3-Tie rod
4-Governor lever
5-Governor weight
6-Sliding shaft
7-Gear case
8-Governor shaft
9-Pump gear
10-Camshaft
11-Idle gear
12-Needle bearing
13-Needle bearing
14-Governor spring
15-Speed control lever

Governor mechanism

Downloaded from www.Manualslib.com manuals search engine

https://truckmanualshub.com/

DISASSEMBLY

(1) Remove fan belt. (Refer to the section dealing with the cooling system.)

(2) Remove crank pulley nut, and take off the pulley.

(3) Remove the fuel injection pump. (Refer to the section dealing with the disassembly of fuel injection pump.)

(4) Remove the gear case. (Refer to the removal method outlined in Cylinder block.)

(5) Take out governor spring, taking care not to disfigure the spring.

(6) Remove nut, washer and governor spring lever; and take out speed control lever from the gear case.

(7) Remove nut, washer and spring lever; loosen the bolt securing the governor lever; and remove the lever.

(8) Remove the governor weight assembly and sliding shaft from the pump camshaft.

(9) From the governor lever, take off the tie rod and spring.

INSPECTION

Governor weights assembly

Inspect the sliding and rotating portions of the weight assembly, and replace the assembly if any part is excessively worn or damaged badly. Be sure that the sliding shaft is capable of smooth sliding motion.

Governor lever

That part of the governor lever in contact with the sliding shaft must be inspected for wear. Similarly, the connection of the tie rod with the control rack must be inspected. Inspect the tie rod spring, too.

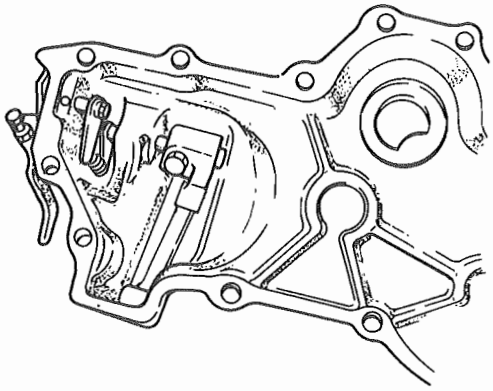

Governor lever

Governor spring

Check this spring for evidence of weakening, inspect it for breakage, and replace it if it is found in defective condition.

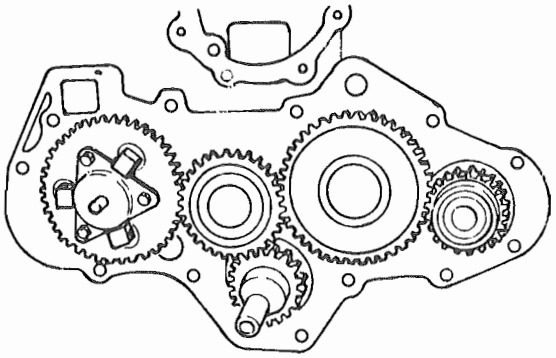

Governor weight assembly and sliding shaft

Needle bearings

Check to be sure that the needle bearings on the governor lever shaft which is held by the gear case, are in good condition, free from excessive wear.

REASSEMBLY

Reassemble the governor mechanism by reversing the sequence of disassembling steps. After reassembly, move the rotating and sliding parts by hand to be sure that they all move smoothly.

Downloaded from www.Manualslib.com manuals search engine

https://truckmanualshub.com/

COOLING SYSTEM

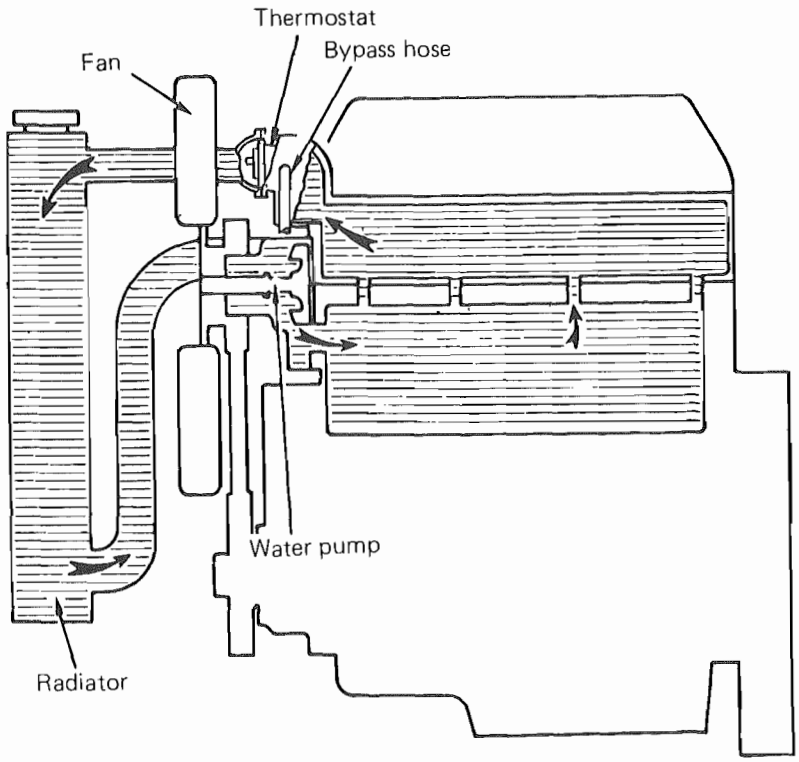

Schematic coolant circuit diagram

WATER PUMP

Construction

Engine coolant is set in recirculation by the water pump, a centrifugal pump mounted on the front end of cylinder block. The pump casing, shaped like a bracket, is bolted to the front end of cylinder block and, by its protruding end, holds the pump shaft through a double-row ball bearing. The inner portion of the shaft carries the pump impeller and the outer portion, outside of the casing, carries a bracket, to which the cooling fan hub and pulley are bolted.

The space between the two rows of balls, surrounded by the casing, is filled with grease: there is no need to give lubricating attention to this bearing. A seal unit is fitted to the shaft, right next to the bearing, to isolate the coolant space from the grease-filled space.

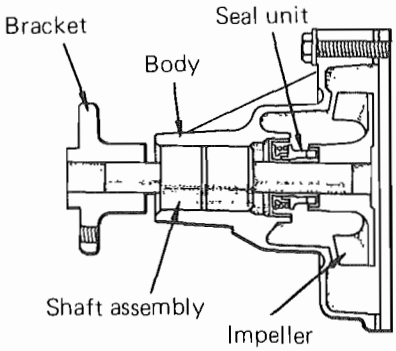

Water pump — Cross section

Removal

(1) Drain the coolant space of the engine by opening the drain cock, located on the left-hand side of the cylinder block.

(2) Disconnect water hoses from the pump.

(3) Remove fan belt.

(4) Remove cooling fan.

(5) Remove the mounting bolts and take down the pump.

Downloaded from www.Manualslib.com manuals search engine

https://truckmanualshub.com/

Inspection

- **Water pump**

(1) Inspect the as-removed pump for crack in the casing, evidence of failure in the seal unit and damage to the impeller.

(2) Spin the impeller by hand to see if the shaft rotates rough and, if so, the pump should be replaced as a whole.

(3) Inspect the fan blades and hub for damage.

(4) Check the fan belt for permanent stretch. A stretched or otherwise deteriorated belt must be replaced. Cracks in the belt mean that the belt is aged too much to stand further use.

- **Bypass hose**

Check the hose for cracks, deterioration or other defects.

Installation

- **Water pump and fan belt**

Install the pump by reversing the sequence of removing steps and, after putting on the belt, adjust its tension as follows:

The belt is in properly tensioned condition if its middle part between alternator pulley and crank pulley deflects 10 to 12 mm (0.4 to 0.5 in.) when pushed with a fingertip. To adjust the tension, displace the alternator in place. After displacing the alternator to give a proper tension to the belt, tighten the support bolt and brace bolt good and hard.

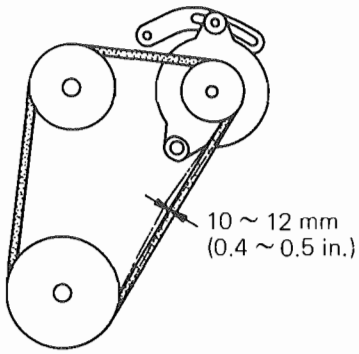

Adjusting fan belt tension

NOTE

Check to be sure that the bypass hose is installed away from the cooling fan.

THERMO SWITCH

This switch is installed on the cylinder head, on the front end face of its right-hand part. The actuating element, built in the switch body, responds to the change in coolant temperature and closes the switch contact at 108 ~ 114° C (226 to 237°F) of rising coolant temperature. As the switch closes, the warning lamp lights up to alert the operator, telling him to take a necessary step, namely, reducing the load, refill the cooling system as necessary or check the cooling-system components for the cause of abnormal temperature rise.

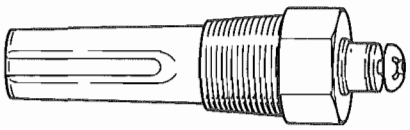

Thermo switch

THERMOSTAT

The thermostat, located in the path of returning coolant, has a wax-pellet expanding and contracting in response to the rise and fall of coolant temperature. By its expanding and contracting movements, the pellet actuates the valve to control the coolant flowrate in the return line to the radiator. When coolant temperature is low, a little coolant is admitted by the thermostat direct into the suction side of the pump, thereby reducing the flowrate through the radiator.

Downloaded from www.Manualslib.com manuals search engine

https://truckmanualshub.com/

Installation

To install the thermostat, first secure the thermostat fitting by tightening its mounting bolts (2 pcs) good and hard, and place the thermostat in it, as shown. Then install the water outlet fitting with its arrow mark up after placing its gasket. Installing this fitting the other way round will cause damage to the thermostat. Be sure to apply Three-Bond #4 to the nipple when installing it to the thermostat fitting.

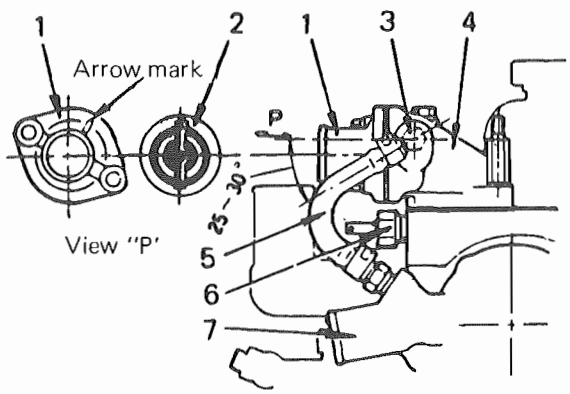

1-Water outlet fitting
2-Thermostat
3-Nipple
4-Thermostat fitting
5-Water bypass hose
6-Thermo switch
7-Water pump

Installing thermostat

Inspection

(1) The thermostat valve remains seated (closed) when coolant temperature is down. The temperature at which the valve starts unseating itself is specified; similarly, the temperature at which the valve reaches its full-open position is specified.

To test the thermostat to see if it meets these specifications, the thermostat must be taken down and placed in a pool of water, whose temperature can be raised and lowered. Remember, the thermostat is insensitive to the pressure of engine coolant.

A thermostat not meeting the specifications must be replaced.

(2) When tested as above, the thermostat valve should remain seated tight at the ambient temperature, that is, when the water is cold; if not, it means that the wax-type element is defective or has failed to require replacement of the thermostat as a whole.

Functional specifications

Item	Standard
Valve opening temperature	82°C (180°F)
Valve full-open temperature	95°C (203°F)

NOTE

The wax-pellet type thermostat will be stuck closed if its sensing part is damaged, causing the engine to overheat.

COOLANT CHANGE

Soft water should be used in the cooling system: hard water is likely to foul up the water side of the system in a relatively short time by forming scales and sludges – substances that interfere with smooth conduction of heat from metal to the coolant. Even soft water, if used too long, becomes high in the concentration of scale- and sludge-forming impurities.

Twice a year, or at least once a year, clean the whole cooling system by vigorous flushing and fill up the system with a fresh batch of coolant.

RUST INHIBITORS AND ANTIFREEZE ADDITIVES

It is recommendable that a rust inhibitor, which is commercially available in most of auto supply stores, should be added to the coolant in order to retard the formation of rust and sludges in the cooling system. In areas where the lowest temperature is anticipated to be below the freezing point, an antifreeze compound should be added to the coolant in an proportion appropriate for the lowest expected sub-zero temperature.

Downloaded from www.Manualslib.com manuals search engine

https://truckmanualshub.com/

A typical antifreeze compound is effective to the extent and degrees illustrated. Its percent concentration in the coolant (cooling water) and the corresponding temperature level, down to which the coolant will not freeze, are as listed in this chart:

Antifreeze concentration (%)	13	23	30	35	45	50	60
Freezing temperature [°C (°F)]	–5 (23)	–10 (14)	–15 (5)	–20 (–4)	–30 (–22)	–40 (–40)	–50 (–58)

Downloaded from www.Manualslib.com manuals search engine

https://truckmanualshub.com/

AIR CLEANER

DESCRIPTION

The air cleaner is composed of three stages of air cleaning: 1st stage is a wire-netting for keeping out larger dusts such as straw, weed, etc. 2nd stage is a cyclone-type centrifugal dust remover. 3rd stage is a paper-element cleaner. Incoming air entering the 2nd stage is set in swirling motion by cyclonic vanes, so that heavy dust particles are flung off the air stream. The air then enters the 3rd stage, in which it has to flow through microscopically small pores formed in the filtering paper and leaves fine dust particles on the outer surfaces of the pleated paper wall.

The heavy dust particles centrifugally separated from the air fall into a dust cup. The fine dust particles left on the paper element can be removed by air-blasting.

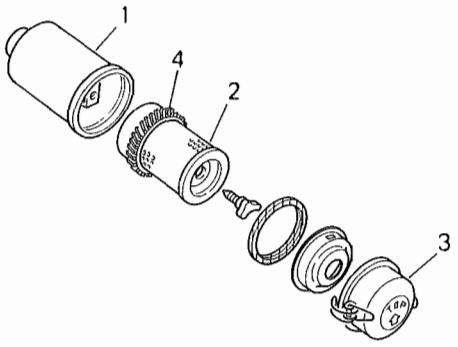

1-Body 3-Dust cap
2-Element 4-Vane

Partial cutaway view of air cleaner

AIR CLEANER SERVICES

After each 100 hours of operation, empty the dust cup, and clean the paper element, first with a blast of compressed air and, if this does not remove the deposited dust completely, then by washing with a non-sudsing water-detergent mixture.

If the machine is worked in a dusty area, the above-mentioned servicing interval of 100 hours should be shortened.

Downloaded from www.Manualslib.com manuals search engine

https://truckmanualshub.com/

PERIODICAL MAINTENANCE SERVICE CHART

○ . . . Check, adjust or replenish □ . . . Clean ● . . . Replace △ . . . Drain

Check and service point \ Time to check or adjust	Before operation (on delivery)	After first 50 hours	Every 100 hours	Every 400 hours	Every 800 hours	Long-period storage	Remarks
Engine proper							
Loose, damaged and leaky points	○						
Exhaust fume, noise, and vibration	○						
Additional tightening of engine parts		○			○		
Valve clearance		○		○			
Engine idle speed		○	○				
Engine compression pressure					○		
Lubrication system							
Engine oil	○	●	●				
Oil filter		●	●				
Fuel system							
Fuel	○					△	
Fuel tank				□		□	
Fuel filter			□	●			Replace only the element for the type with cock
Injection pump					○		Adjustment of fuel injection rate
Nozzle				○			
Intake system							
Air cleaner (filter paper type)			□	●			
Cooling system							
Cooling water	○	●			●	△	Unless anti-freeze is mixed, drain after each operation
Fan belt	○						
Electrical system							
Check of each instrument (pilot lamp)	○						
Starter motor, alternator, regulator				○	○*		* Adjustment of voltage and current
Glow plug				○			

Downloaded from www.Manualslib.com manuals search engine

https://truckmanualshub.com/

ENGINE MAINTENANCE GUIDE

When to overhaul

The object of engine overhauling is to reproduce, as closely as possible, the vitality and capability which the engine had when it was new. The symptoms that justify the decision to overhaul the engine are two: reduced power output and high consumption of fuel and lube oil, both being concurrent and attributable to internal deterioration inside the engine.

There is no method nor test that verifies the internal deterioration so accurately and quickly as compression test. With a special pressure gauge and its adaptor and fittings, one can readily measure the "compression" pressure on each cylinder of the engine and tell, from the readings taken, whether the engine should be overhauled or not.

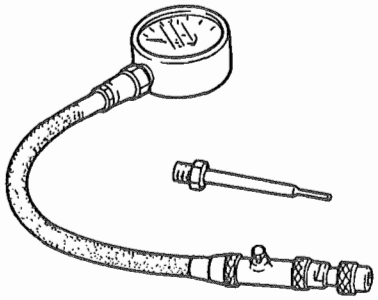

Pressure gauge, adaptor and fittings for engine "compression" test

In a diesel engine, low power output could often be due to some malconditions in the injection system – damaged injection nozzles, mistimed injection, low injection pressure, etc. These malconditions, if present, call for overhauling of the injection system components or for re-timing of the injection.

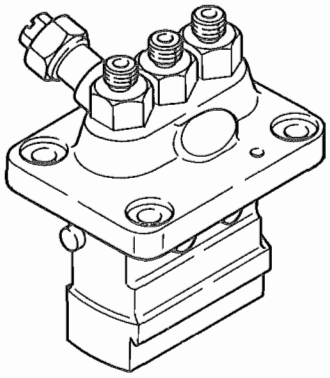

Fuel injection pump

Suppose that the engine has ceased to develop full power, so that you have to decide whether the engine should be overhauled or not. The right approach begins with posing these questions to yourself:

- Is fuel or oil consumption appreciably higher than before?
- Is it harder to start up the engine?
- Does the engine make more noise, coming from inside, than before?

If the answer is yes to all these questions, read "compression" pressures by the method to be described and, if the readings are too low (as compared with the specification), it means that the engine needs overhauling because it is internally deteriorated, that is, its internal running parts are excessively worn – cylinder bores, pistons, piston rings and valves.

If, however, the readings (compression pressure) are adequately high, then the injection system should be blamed for the low power output.

In conducting a "compression" pressure test, it should be borne in mind that the pressure rise occurring above the piston in the cylinder is affected by the speed with which the piston rises on compression stroke. It is for this reason that the specification (a certain pressure which

Downloaded from www.Manualslib.com manuals search engine

https://truckmanualshub.com/

a brand-new engine should be capable of developing) is based on a specific speed of engine cranking.

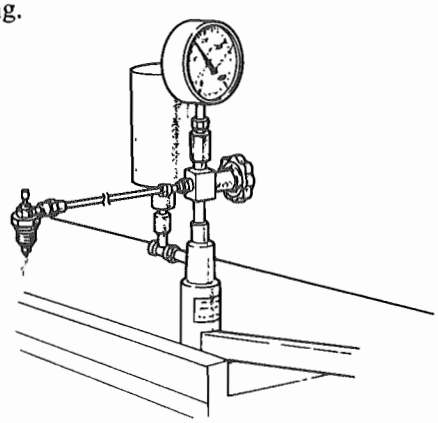

Nozzle tester

Compression pressure test – how to measure compression pressure

(1) Remove the preheater plug of the cylinder to be checked.

(2) Run the pressure-gauge adaptor into the threaded hole just vacated by the plug, and tighten the adaptor good and hard. Tie the gauge line, complete with the compression pressure gauge, into the adaptor. The gauge is now rigged up.

(3) Start cranking the engine with the speed control lever fully pushed in so that no fuel oil will be injected and read the engine speed just when the cranking speed has reached a steady level. Read the pressure gauge indication: this reading is the "compression" pressure of that cylinder.

(4) Carry out the foregoing steps on the next cylinder to read its "compression" pressure.

NOTE

Taking a reading only on one cylinder and assuming the other cylinders to produce the same pressure reading – this is a practice likely to result in an unwise decision. In the present engine, take three readings, one on each cylinder.

Engine diagnosis on the basis of compression pressure readings

(a) Compression pressure of a brand-new engine could be slightly increased as the piston rings, valve seats, etc. wear in. As the engine parts wear down after "run-in" period, compression pressure lowers gradually.

(b) If the readings are down to the limit (repair limit), the engine should be overhauled.

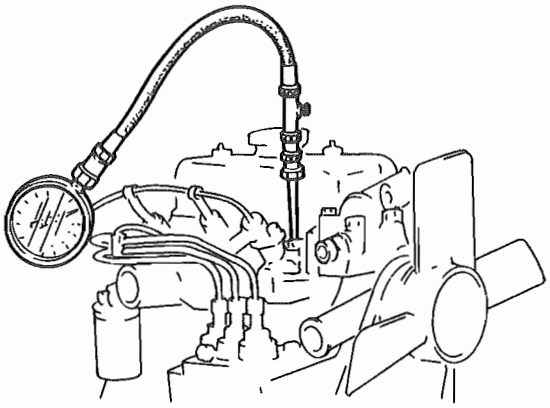

Measuring "compression" pressure

Engine diagnosis on the basis of oil consumption

Another yardstick is oil consumption: if the current oil consumption is higher by more than 50% than the normal consumption, the engine is probably in need of overhauling.

General working rules on disassembling and reassembling steps

(a) Cleanliness is absolutely essential for successful work, with respect to the place of work, shop facilities such as benches and fixtures, the engine parts handled, the tools and materials.

(b) Use of right kinds of tools is another essential.

(c) Before disassembling the engine, drain water, lube oil and fuel completely. Check oil for contamination. Also check the qualities of the oil and fuel.

Downloaded from www.Manualslib.com manuals search engine

https://truckmanualshub.com/

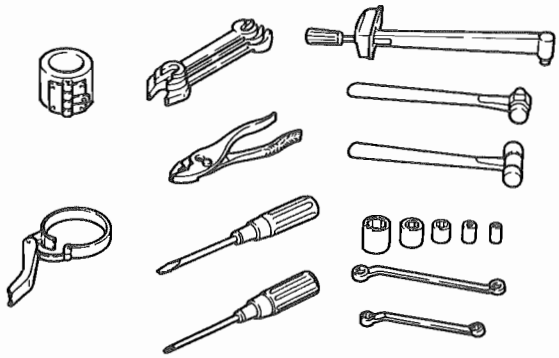

General hand tools

(d) Never try to economize sealing parts in rebuilding the engine. "O" rings, oil seals, gaskets and packings are "expendable" items in most cases.

(e) Read the instructions given in the manual, paying particular attention to the special notes, hints and warnings.

(f) Crank the engine by hand to be sure it will run smoothly before mounting it on the machine.

Downloaded from www.Manualslib.com manuals search engine

https://truckmanualshub.com/

TROUBLESHOOTING

Starting difficulties

Symptoms and possible causes		Remedy
Starting run is slow	a) Lube oil is too high in viscosity	a) Replace by a low-viscosity lube oil.
	b) Battery has run down	b) Recharge.
	c) Aged battery	c) Replace.
	d) Defective connections of cable clamps with battery terminal posts	d) Clean battery terminals and cable clamps; correct loose clamps.
	e) Starter is defective	e) Overhaul, repair or replace.
	f) Defective drive parts in power train	f) Check the clutch for OFF.
Defective fuel injection system	a) Air is present in fuel	a) Carry out an air bleeding operation on fuel lines.
	b) Fuel filter is clogged	b) Clean or replace.
	c) Injection pressure is low	c) Adjust injection pressure.
	d) Poor spray pattern	d) Clean or replace nozzle.
	e) Unsatisfactory fuel delivery from injection pump	e) Overhaul or replace injection pump.
	f) A wrong kind of fuel is used	f) Replace by No. 2-D fuel oil or a lower-viscosity fuel oil in severe cold season.
	g) Fuel injection timing is too advanced	g) Adjust fuel injection timing.
Poor compression	a) Improper valve clearance	a) Adjust valve clearance.
	b) Defective valve seats	b) Repair by relapping.
	c) Seized valve stems	c) Replace valves and valve guides.
	d) Broken valve springs	d) Replace valve springs.
	e) A leaky cylinder head due to blown gasket	e) Replace gasket.
	f) Piston rings are seized in the grooves	f) Replace pistons and piston rings.
	g) Piston rings, pistons or cylinders are excessively worn	g) Overhaul engine.

Downloaded from www.Manualslib.com manuals search engine

https://truckmanualshub.com/

Symptoms and possible causes		Remedy
Glow plugs	a) Glow plugs are burnt out b) Glow plugs do not become red hot	a) Replace glow plugs. b) Check and correct lead wire connections.
Governor	a) Governor control lever is set to a wrong position b) Governor spring is off	a) Reset it to the start position. b) Correct.

Not enough output power

Symptoms and possible causes		Remedy
Poor compression		Refer to a), poor compression "Starting difficulties," above.
Maladjusted fuel injection system	a) Improper fuel injection timing b) Injected fuel quantity is not enough c) Fuel injection pressure is too low	a) Adjust fuel injection timing. b) Overhaul or replace injection pump. c) Check injection nozzles and adjust pressure.
Fuel is not reaching injection pump	a) Air is trapped in fuel circuit b) Fuel filter is clogged c) Fuel tank is not clean	a) Check connectors and retighten. b) Clean filter or replace element. c) Clean fuel tank.
Insufficient intake air	Clogged air cleaner	Clean air cleaner and replace element.
Overheating	a) Cooling water shortage b) Loose fan V-belt c) Radiator is clogged or leaking d) Fuel injection is mis-timed e) Engine oil shortage	a) Add cooling water. b) Adjust or replace V-belt. c) Clean or replace radiator. d) Adjust fuel injection timing. e) Add engine oil.

Engine oil consumption rate is high

Symptoms and possible causes		Remedy
Oil leakage	a) Defective oil seals b) Blown gear case gasket c) Loose gear case mounting bolts d) Loose drain plug e) Loose oil pipe connectors f) Blown rocker cover gasket g) Loose rocker cover mounting bolts	a) Replace oil seals. b) Replace gasket. c) Retighten. d) Retighten. e) Retighten. f) Replace gasket. g) Retighten.

Downloaded from www.Manualslib.com manuals search engine

https://truckmanualshub.com/

Symptoms and possible causes		Remedy
Pumping up of oil	a) Piston ring gaps are not positioned correctly	a) Correct.
	b) Bent or twisted connecting rods	b) Replace connecting rods.
	c) Worn piston rings	c) Replace piston rings.
	d) Worn pistons or cylinders	d) Replace pistons or re-bore the cylinders.
Oil down	a) Defective stem seals	a) Replace stem seals.
	b) Worn valves or valve guides	b) Replace valves or valve guides.

Abnormal sound or noises

Sumptoms and possible causes		Remedy
Crankshaft main bearings	a) Worn bearings	a) Replace bearings or grind the crankshaft.
	b) Worn crankshaft	b) Grind the crankshaft.
	c) Fused bearings	c) Replace bearings and check lubrication system.
Connecting rods and connecting rod bearings	a) Worn connecting rod big end bearings	a) Replace bearings.
	b) Worn crankshaft pins	b) Grind the crankshaft.
	c) Bent connecting rods	c) Correct bend or replace.
Pistons, piston pins and piston rings	a) Worn cylinders	a) Re-bore and grind cylinders to oversize and replace pistons.
	b) Worn piston pins	b) Replace pistons.
	c) Seized pistons	c) Replace pistons and grind cylinders.
	d) Seized pistons and worn or broken piston rings	d) Replace pistons and piston rings.
Camshaft and others	a) Worn camshaft	a) Replace camshaft.
	b) Excessive valve clearance	b) Adjust.
	c) Worn timing gear	c) Replace gear.
	d) Worn fan pulley bearing	d) Replace bearing.

Downloaded from www.Manualslib.com manuals search engine

https://truckmanualshub.com/

Engine run is not smooth

Symptoms and possible causes		Remedy
Fuel injection pump	a) Injection quantity varies from one cylinder to another	a) Adjust fuel injection quantity or replace defective parts.
	b) Malfunctioning of control rack	b) Overhaul, check and repair the fuel injection pump.
	c) Worn delivery valves	c) Replace delivery valves.
	d) Poor atomization of fuel sprayed from nozzles	d) Replace nozzles.
Governor	a) Malfunctioning of governor	a) Check governor shaft and correct.
	b) Weakened governor spring	b) Replace spring.

Downloaded from www.Manualslib.com manuals search engine

https://truckmanualshub.com/

SPECIFICATIONS AND MAINTENANCE STANDARDS

Engine proper

All values in mm (in.) unless otherwise indicated

Description	Type	Standard value	Repair limit	Service limit
Compression pressure		32 kg/cm^2 (455.2 psi)/280 rpm	26 kg/cm^2 (369.8 psi)	Approx. 22 kg/cm^2 (312.9 psi)
Pressure difference between cylinders (max)		2.5 kg/cm^2 (35.6 psi)		
Injection order		1-3-2		
Injection timing	K3A, K3C-13MT	21° ± 1.5° B.T.D.C. (when started at smoke set position)	21° ± 2°	
Cylinder head				
Bottom surface flatness (distortion)		0.05 (0.0020) max.	0.1(0.0039)	
Valve guide L.D. (both intake and exhaust valves)		6.6 (0.2598)		
Valve seat angle (both intake and exhaust valve)		45°		
Valve seat width (both intake and exhaust valves)		1.3 to 1.8 (0.0512 to 0.0709)	2.5 (0.0984)	
Valve seat sinkage				−1 (−0.0394)
Valve timing				
Intake valve opened		18° B.T.D.C.		
Intake valve closed		46° A.B.D.C.		
Exhaust valve opened		46° B.B.D.C.		
Exhaust valve closed		18° A.T.D.C.		
Valve clearance (both intake exhaust valves)		0.25 (0.0098) (when engine is cold)		
Valve				
Valve head diameter				
Intake valve		27.2 (1.079)		
Exhaust valve		25.2 (0.9921)		
Overall length		114.5 (4.5079)		
Stem O.D.		6.6 (0.2598)		
Clearance between stem and guide				
Intake valve				0.10(0.0039)
Exhaust valve				0.15(0.0059)
Valve face angle		45°		
Valve head thickness(margin)		1.0 (0.0039)		0.5(0.0197)
Valve spring				
Free length		43 (1.6929)		41.7(1.6417)
Installed load/Installed length		14.0 ± 0.7 kg (30.9 ± 1.5 lbs.)/36 (1.42)		−15%
Squareness		1.5°		3°

Downloaded from www.Manualslib.com manuals search engine

https://truckmanualshub.com/

Description	Type	Standard value	Repair limit	Service limit
Rocker arm				
Rocker arm I.D.		18.9 (0.7441)		
Clearance between rocker arm and shaft				0.2(0.0079)
Cylinder block				
Camshaft hole I.D.				
Front		45 (1.7716)		
Center		44 (1.7323)		
Rear		34 (1.3386)		
Cylinder bore				
	K3A	65 (2.5591)	+0.2 (+0.0079)	+0.95 (+0.0374)
	K3C	70 (2.7559)	+0.2 (+0.0079)	+0.95 (+0.0374)
Oversize finish tolerance		0 to 0,03 (0 to 0.0012)		
Taper of cylinder		0.01 (0.0004) max.		
Top surface flatness (distortion)		0.05 (0.0020) max.	0.1 (0.0039)	
Piston				
	Solid type			
Material	Aluminum alloy			
O.D. (skirt end)	K3A	65 (2.5591)		
	K3C	70 (2.7559)		
Clearance between piston and cylinder				0.3(0.0118)
Oversize		0.25 (0.0098), 0.50 (0.0197) 0.75 (0.0295)		
Piston pin				
	Semi-floating type			
O.D		19 (0.7480)		
Clearance between piston pin and piston				0.08(0.0031)
Clearance between piston pin and connecting rod		Press-fitting load : 500 to 1,500 kg (1,102.3 to 3,306.9 lbs.)		
Piston ring				
Type and number of rings		3		
Compression ring				
No. 1	Barrel type			
No. 2	Tapered ring			
No. 3	Tapered ring			
Oil ring				

Downloaded from www.Manualslib.com manuals search engine

https://truckmanualshub.com/

Description	Type	Standard value	Repair limit	Service limit
Ring width				
Compression ring				
No. 1 to No. 3		2.5 (0.0984)		
Oil ring		4.0 (0.1575)		
Ring side clearance				
Compression ring				
No. 1		0.06 to 0.12 (0.0024 to 0.0047)		0.3(0.0118)
No. 2		0.05 to 0.09 (0.0020 to 0.0035)		0.2(0.0079)
No. 3		0.04 to 0.08 (0.0016 to 0.0031)		0.2(0.0079)
Oil ring		0.03 to 0.07 (0.0012 to 0.0028)		0.2(0.0079)
Ring end gap		0.15 to 0.40 (0.0059 to 0.0157)		1.5(0.0590)
Connecting rod				
	Forged I-beam			
Bend and distortion		0.05 (0.0020) max.		
Big end thrust clearance		0.1 to 0.35 (0.0039 to 0.0138)		0.5(0.0197)
Connecting rod bearing				
	Kelmet metal with backing metal			
Oil clearance				0.15(0.0059)
Undersize		0.25 (0.0098), 0.50 (0.0197) 0.75 (0.0295)		
Crankshaft				
	Fully counterbalanced			
Bend		0.03 (0.0012) max.		
End play		0.06 to 0.3 (0.0024 to 0.0118)		0.5(0.0197)
Journal O.D.		52 (2.0472)	−0.15 (−0.0059)	−0.95 (−0.0374)
Pin O.D.		42 (1.6535)	−0.15 −0.0059)	−0.95 (−0.0374)
Undersize finish dimensions				
Journal				
	U.S. 0.25	51.735 to 51.750 (2.0368 to 2.0374)		
	U.S. 0.50	51.485 to 51.500 (2.0270 to 2.0276)		
	U.S. 0.75	51.235 to 51.250 (2,0171 to 2,0177)		
Crankshaft				
Pi n				
	U.S. 0.25	41.700 to 41.715 (1.6417 to 1.6423)		
	U.S. 0.50	41,450 to 41.465 (1.6319 to 1.6325)		
	U.S. 0.75	41.200 to 41.215 (1.6220 to 1.6226)		

Downloaded from www.Manualslib.com manuals search engine

https://truckmanualshub.com/

Description	Type	Standard value	Repair limit	Service limit
Main bearing				
	Kelmet metal with backing metal (flanged metal for center bearing)			
Oil clearance				0.10(0.0039)
Undersize		0.25 (0.0098), 0.50 (0.0197) 0.75 (0.0295)		
Camshaft				
Driving system	Gear			
Clearance between journal and cylinder block hole or bushing (oil clearance)	Lead bronze alloy with backing metal			0.15(0.0059)
Cam lobe height (for intake and exhaust valves)		35.76 (1.4079)		−1.0(−0.0394)
Pump camshaft				
Driving system	Gear			
Bearing				
Front	Ball bearing			
Rear	Cylinder block			
Cam lobe height		44 (1.7323)		−1.0(−0.0394)
Tappet				
O.D.		23(0.9055)		
Clearance between tappet and cylinder block hole				0.15(0.0059)
Push rod				
Bend		0.3 (0.0118) max.		

Downloaded from www.Manualslib.com manuals search engine

https://truckmanualshub.com/

Lubrication system

Description	Type	Standard value	Repair limit	Service limit
Engine oil				
Engine oil		Upper limit: 3.0 lit. (0.79 gal), Lower limit: 1.8 lit. (0.48 gal): 0.5 lit. (0.13 gal) in oil filter not included		
Oil specification				
API classification		Class CC or above		
Viscosity				
20°C(68°F) or higher		SAE 30 or 10W–30		
5 to 20°C(41 to 68°F)		SAE 20 or 10W–30		
5°C(41°F) or lower		SAE 10W–30		
Oil pump				
	Trochoid type			
Check valve opening pressure		4 kg/cm^2 (56.9 psi)		
Chearance between outer rotor and body		0.15 to 0.2 (0.0059 to 0.0079)		0.3(0.0118)
Clearance between outer rotor and inner rotor		0.05 to 0.12 (0.0020 to 0.0047)		0.25(0.0098)
Clearance between rotor and cover		0.03 to 0.07 (0.0012 to 0.0028)		0.2(0.0079)
Oil pressure switch				
Contact closing pressure		0.15 to 0.3 kg/cm^2 (2.1 to 4.3 psi)		

Downloaded from www.Manualslib.com manuals search engine

https://truckmanualshub.com/

Fuel system

Description	Type	Standard value	Repair limit	Service limit
Fuel oil	ASTM grade	No.2-D diesel fuel (burn oils of low viscosities in the coldest season)		
Fuel filter	Filter paper type			
Fuel injection pump	ND-PFR3M			
Fuel injection				
At smoke set (SS)				
	K3A	1,300 rpm: 20.5 ± 1.00 mm^3 (0.00125 ± 0.00006 cu.in.)/st.		
	K3C	1,350 rpm: 22.5 ± 1.0 mm^3 (0.00137 ±0.00006 cu.in.)/st.		
AT start set (MS)				
	K3A	150 rpm: 30 ± 5mm^3 (0.00182 ± 0.00030 cu.in.)/st.		
	K3C	150 rpm: 35 ± 5 mm^3 (0.00214 ±0.00030 cu.in.)/st.		
Difference from reference cylinder		2 mm^3 (0.00012 cu.in.)/rev. cyl.max.		
Prestroke		2.2 0.1 (0.0866 0.0039)		
Nozzle	Throttle type ND-DN4SD24			
Injection starting pressure		120^{+10}_{-0} kg/cm (1,706.97 $^{+142.25}_{-0}$ psi.)	120 $^{\pm 10}$ kg/cm^2 (1,706.97 $\pm$142.25 psi.)	

Governor System

Description	Type	Standard value	Repair limit	Service limit
Governor	Centrifugal weight type			
Engine stopping solenoid	Electromagnetic pull-out type			
Rated voltage [20°C(68°F)]		12V		
Current [20°C(68°F)]		7A max.		
Stroke		13.5 ± 0.5 (0.53 ± 0.02)		

Downloaded from www.Manualslib.com manuals search engine

https://truckmanualshub.com/

Cooling System

Description	Type	Standard value	Repair limit	Service limit
Cooling fan				
K3A, K3C	4-blade, irregular pitch suction type	ϕ290mm (ϕ11.42 in.)		
Fan belt	HM type	932 (36.69)		
Water pump	Centrifugal impeller type			
Thermostat	Wax pellet type			
Valve opening temperature		82 ± 1.5°C (180 ±2.7° F)		
Valve full-opening temperature		95°C (203°F)		
Valve lift		Approx. 8 (0.3)		
Thermoswitch				
Contact closing temperature		105 to 111° C(221 to 232° F)		

Electrical System

Description	Type	Standard value	Repair limit	Service limit
Starter (1.6 kW)	Electromagnetic push-in type M002T50381			
Output-voltage		1.6 kW–12V		
Rotating direction		Clockwise as viewed from pinion side		
No-load characteristics [20°C (68°F)]				
Terminal voltage		11.5V		
Current		100A or less		
Speed		3,000 rpm or more		
Brush length		17 (0.67)		11.5(0.45)
Spring pressure		1.5 kg (3.31 lbs.)		0.7 kg (1.54 lbs.)
Pinion gap		0.5 to 2.0(0.0197 to 0.0787)		
Thrust gap		0.5(0.0197) or less		
Alternator	AC type Model (AH2035M4)			
Output-voltage		12V – 35A		
Direction of rotation		Clockwise as viewed from pully side		
No load output Characteristics:[20°C (68°F)]				
Terminal voltage		14V		
Current (at cold)		8A		
Speed(Alternator)		1300 rpm or less		
Load characteristics: [20°C (68°F)]				
Terminal voltage		14V		
Current (at cold)		13A or more		
Speed (Alternator)		2500 rpm		

Downloaded from www.Manualslib.com manuals search engine

https://truckmanualshub.com/

Description	Type	Standard value	Repair limit	Service limit
Regulator (180W, 420W)	Tirrill 2-element RQB 2220D4			
Regulating voltage		14.8 ± 0.3V		
Pilot lamp OFF voltage		4.2 to 5.2V		
Pilot lamp ON voltage		0.5 to 3.0V		
Glow plug	Sheathed type			
Voltage-current		10.5V–9.7		
Resistance value (s (at cold)		0.16Ω		
Glow plug indicator	Red-hot type			
Rated current		29A		
Terminal voltage (at 30A)		1.5 to 1.9V		

Downloaded from www.Manualslib.com manuals search engine

https://truckmanualshub.com/

Tightening Torque Chart

Description	Tightening torque	
	kg-m	ft.lbs.
Cylinder head bolt M12 screws 8	11 to 12	79.5 to 86.8
M10 screws 3	7 to 8	50.6 to 57.8
Crank pulley nut	20 to 25	144.6 to 180.8
Main bearing cap bolt	5 to 5.5	36.2 to 39.8
Connecting rod cap nut	3.2 to 3.5	23.1 to 25.3
Flywheel mounting bolt (8T)	11.5 to 12.5	83.1 to 90.4
Oil pan drain plug	5 to 6	36.2 to 43.4
Oil filter	1.1 to 1.3	8.0 to 9.4
Fuel injection pump		
Delivery valve holder	4 to 5	28.9 to 36.2
Nozzle holder		
Holder mounting bolt	1.5 to 2	10.8 to 14.5
Holder body and retaining nut	6 to 8	43.4 to 57.8
Glow plug	1.5 to 2	10.8 to 14.5
General screws		
M6	0.7	5.1
M8	1.7	12.3
M10	3.5	25.3
M12	6.4	46.3

Sealant Chart

Parts requiring sealant application	Surfaces requiring sealant application (Where to mount sealant-coated parts)	Sealant
Taper screw 1/2"	Thread portion (Gear case)	HERMESEAL HI
Taper screw 1/4"	Thread portion (Cylinder block right side, pump cover)	HERMESEAL HI
Taper screw 1/8"	Thread portion (Rear of cylinder head)	HERMESEAL HI
Oil pressure switch	Thread portion (Cylinder block right side)	HERMESEAL HI
Thermoswitch	Thread portion (Cylinder head side)	HERMESEAL HI
Joint gauge unit	Thread portion (Cylinder head side)	HERMESEAL HI
Side seal	Outside periphery (Main bearing caps No.1 and No.4)	SUPER THREE-BOND 20
Bearing cap No. 1	Contact surface with cylinder block	SUPER THREE-BOND 20
Bearing cap No.4	Contact surface with cylinder block	SUPER THREE-BOND 20

Downloaded from www.Manualslib.com manuals search engine

https://truckmanualshub.com/

Special Tools

Tool No.	Tool name	Sketch	Use.
ST332301	Piston pin setting tools	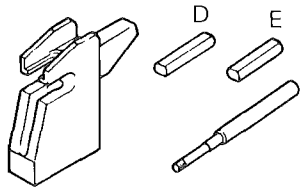	Removal and installation of piston pin Guide D 92.5 mm(3.64 in.): for K3A Guide E 91 mm(3.58 in.): for K3C
ST332340	Camshaft bushing installer	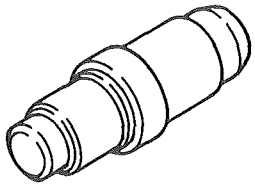	Removal and installation of camshaft front bushing
ST332230	Compression gauge adaptor	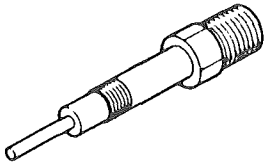	Measurement of compression pressure
MD998054	Oil pressure switch socket wrench (26)	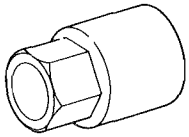	Removal and installation of oil pressure switch

Downloaded from www.Manualslib.com manuals search engine

https://truckmanualshub.com/

Downloaded from www.Manualslib.com manuals search engine

https://truckmanualshub.com/

CHAPTER 3
CLUTCH SYSTEM

3

Downloaded from www.Manualslib.com manuals search engine

https://truckmanualshub.com/

Downloaded from www.Manualslib.com manuals search engine

https://truckmanualshub.com/

TABLE OF CONTENTS

	Page
Description	3-1
Construction	3-2
Operating principles	3-4
Removal	3-5
Disassembly	3-8
Inspection and maintenance	3-10
Reassembly	3-11
Adjustment	3-14
Engine installation	3-15
Troubleshooting	3-16
Specifications	3-17

Downloaded from www.Manualslib.com manuals search engine

https://truckmanualshub.com/

Downloaded from www.Manualslib.com manuals search engine

https://truckmanualshub.com/

DESCRIPTION

The clutch of the MITSUBISHI Tractors MT160/D, MT180/D and MT180H/HD is a dry single-plate clutch of diaphragm-spring type.

This clutch, instead of coil springs and release levers acting on the pressure plate in the conventional type clutch, uses the diaphragm spring, looking like a round disc, to perform the functions of coil springs and release levers.

The diaphragm, made of spring steel, has equally spaced slits extending radially inward. Because of these slits, what are called "tapering fingers" are formed: the tapering fingers correspond to the conventional release levers. In the normal engaged state of the clutch, the diaphragm loads upon the pressure plate to keep it pressed against flywheel. Clutch disengagement or releasing action is effected by pushing the tips of the fingers to lift the pressure plate away from the facings by the outer edges of the diaphragm. In other words, the diaphragm behaves as if it consists of a countless number of release levers.

The advantage of the diaphragm-spring clutch over the conventional coil spring clutch may be summarized as follows:

(1) A less force is required to release the clutch and, consequently, the clutch pedal "feels" light. This reduces the operator's fatigue.

(2) During the initial wear of clutch facings, the urging force of the diaphragm spring increases. It is when maximum urging force is attained that it begins to weaken in step with the progressive wear of facings. Thus, the diaphragm spring lasts longer than the coil springs.

(3) In high speed condition, the diaphragm is less subject to centrifugal strain and assures more stable torque transmission.

(4) The clutch is built with a less number of parts, so that, because of its simpler construction, it is more trouble-free.

(5) Being a circular disc, the diaphragm spring exerts its spring force on the entire periphery of the pressure plate. This explains why the pressure plate as well as the diaphragm itself is not subject to distortion.

For the MT160/D, MT180/D and MT180H/HD tractors, the diaphragm-spring clutch is sized large enough in capacity for the maximum torque that it has to convey from engine to transmission, and is built sturdy to ensure its trouble-free service.

Downloaded from www.Manualslib.com manuals search engine

https://truckmanualshub.com/

CONSTRUCTION

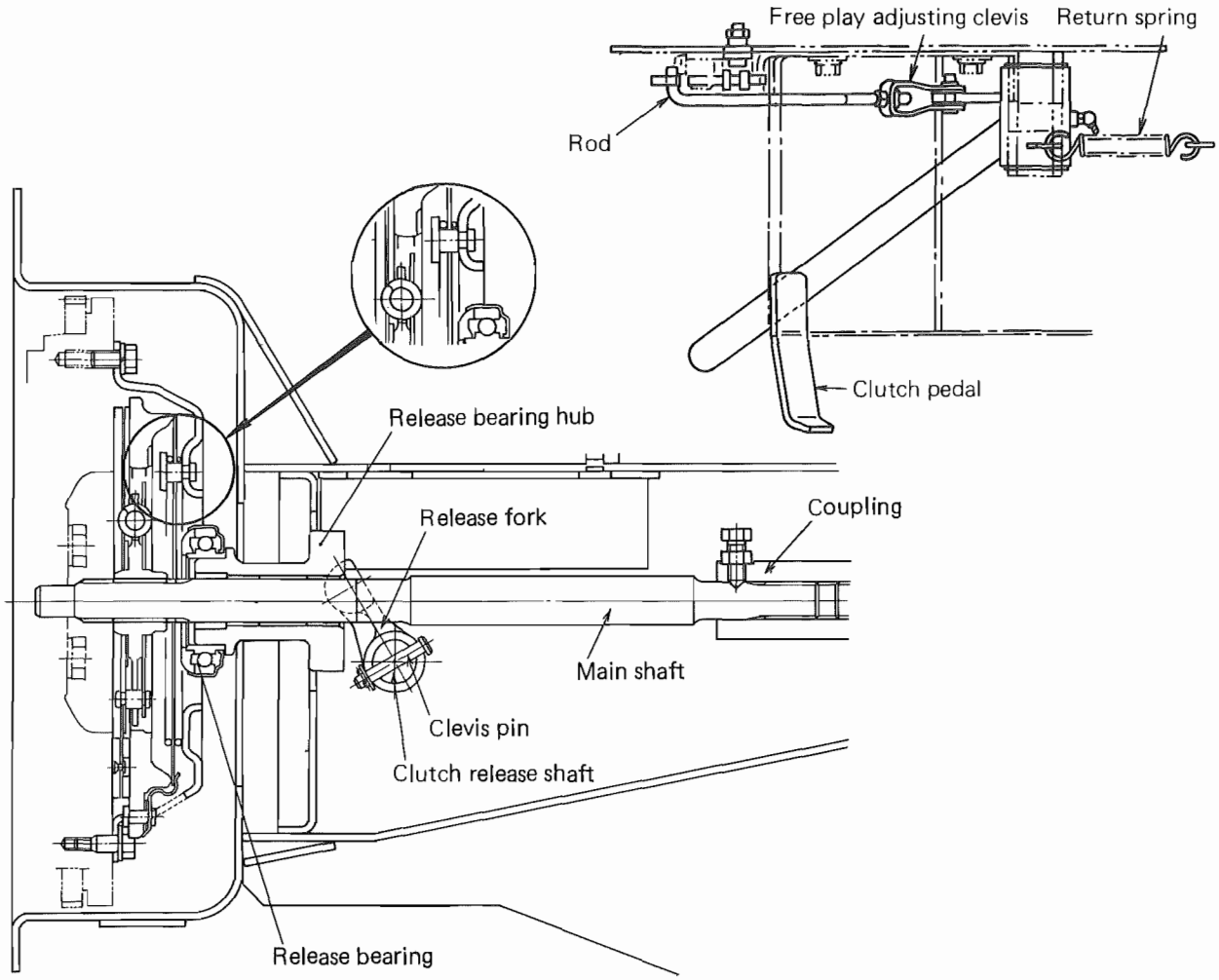

Clutch release mechanism

The release levers of a conventional coil spring clutch are not present in this release mechanism. Instead, a diaphragm spring whose center portion is radially slit to present a number of fingers is used. As far as the principles of clutch releasing action are concerned, there is no difference between this clutch release mechanism and the conventional one.

In the engaged condition of the clutch, there is a clearance between each "finger" tip and the release bearing. This clearance corresponds to the clearance between release levers and release bearing in the conventional clutch, and accounts for free play in the clutch pedal stroke.

Clutch cover assembly

This assembly consists of clutch cover, diaphragm spring, pressure plate and pivot rings.

The cover has a plurality of rivet-like studs distributed in a circular pattern. These studs correspond to the adjusting bolts studded in the pressure plate of a conventional coil spring clutch. Each stud protrudes through the diaphragm spring, at the outer end of its slit, and two rings, called pivot rings, are fitted to the protruding portion of the stud, one ring on each side of the diaphragm. The term "pivot rings" is due to the fact that, in engaged state of the clutch, the diaphragm bears against those rings next to the cover; in released state of the clutch, the diaphragm bears against those rings on the other side.

Downloaded from www.Manualslib.com manuals search engine

https://truckmanualshub.com/

The periphery of the diaphragm is held to the pressure plate by distributed clips: the diaphragm periphery pulls the pressure plate through these clips when the release bearing pushes the tips of "fingers," often referred to as tapering fingers because of their appearance.

A total of six bolts are used to secure the clutch cover to the flywheel. Of these bolts, two are reamer bolts.

Diaphragm spring

This spring is made by press-working a spring-steel plate and by heat-treating to provide a spring characteristic needed for its duty in the clutch. The obtained characteristic is illustrated in terms of plate pressure as a function of plate position. Note that the pressure available in initial condition is slightly below the maximum, which occurs when the plate displaces itself toward flywheel due to the initial wear of facings.

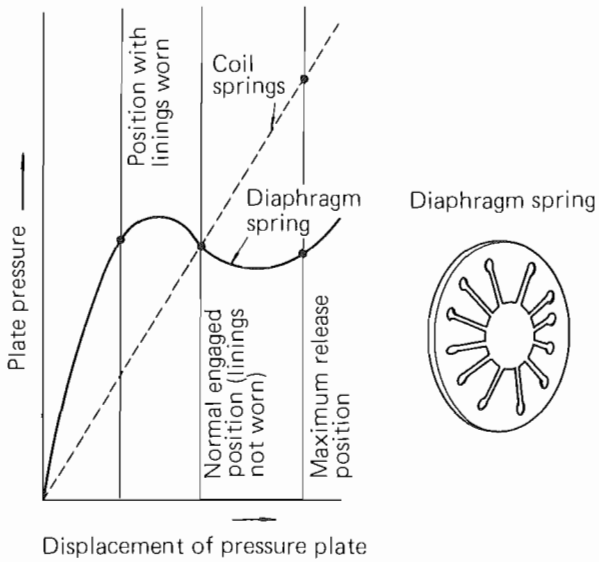

Clutch disc

The disc is splined to the transmission main shaft; it is normally pressed against flywheel by pressure plate (in the engaged condition of the clutch). It is constructed light in weight but sized large enough for the powerful torque the clutch has to conduct from the diesel engine. Lightweight or small inertia is what is needed for smooth gear change in the transmission.

Its facings are riveted to the cushioning plate, which is attached through six torsion springs and retaining plate to the clutch plate integral with the splined hub. For avoiding slippage in conveying torque, a special woven material containing wire is used for the facings. The torsion springs, through which drive flows from cushioning plate to clutch plate dampen torsional shocks and pulsations during a standing start and during operation on rough ground.

Radial grooves are provided in the face of the facing as a means of preventing abnormal temperature rise in the facing, thereby increasing its durability

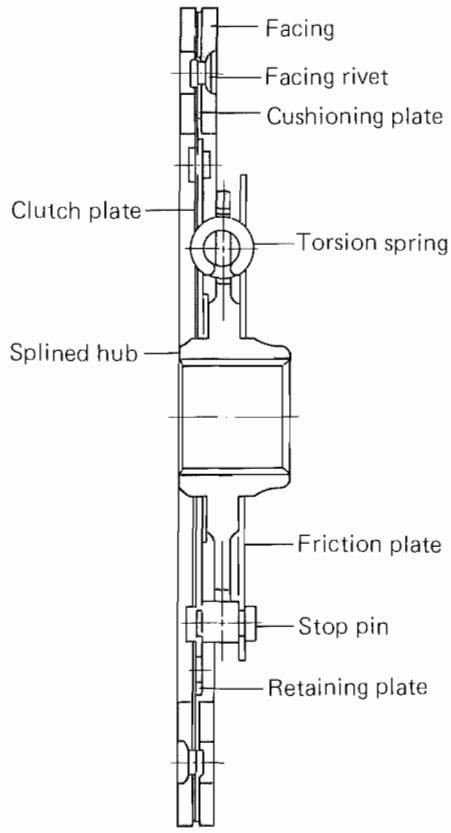

Downloaded from www.Manualslib.com manuals search engine

https://truckmanualshub.com/

OPERATING PRINCIPLES

The clutch is a means of providing a path of drive from engine flywheel to the input shaft (main shaft) of the transmission. In the clutch, its pressure plate is held through diaphragm spring by the clutch cover bolted to the flywheel, and the clutch disc, whose hub is splined to the main shaft, has its friction surfaces sandwiched between pressure plate and flywheel.

All of the above named parts revolve together with the flywheel, and drive the main shaft when the clutch is in engaged state, with the pressure plate being pressed by the diaphragm spring against flywheel. Under this condition, the path of drive flow is from flywheel to facings and to the main shaft through cushioning plate, clutch plate, stop pins, retaining plate, torsion springs and splined hub. Torsion springs are between clutch plate and retaining plate on the one side and the splined hub on the other, and serve as resilient members for conveying the torsional drive.

Depressing the clutch pedal to release the clutch, this pedal movement causes the release collar to displace itself toward flywheel, thereby pushing the release bearing against tapering fingers of the diaphragm spring. Now acting like a lever, the diaphragm spring deflects and, by its periphery, pulls the pressure plate away from flywheel side because this pheriphery is held to the plate by clips. With the pressure plate so pulled, the facings separate from the friction surface of flywheel, thereby interrupting the flow of drive.

Downloaded from www.Manualslib.com manuals search engine

https://truckmanualshub.com/

REMOVAL

Removing the clutch

The clutch housing must be detached from the engine to permit clutch removal. If the engine need not be disassembled, the recommended practice is to take down the whole engine unit complete with front axle, chassis and radiator, and separate the clutch housing from the engine: this method results in time and labor saving.

(1) Unhook bonnet, and open bonnet. (To facilitate work, remove the bonnet.)

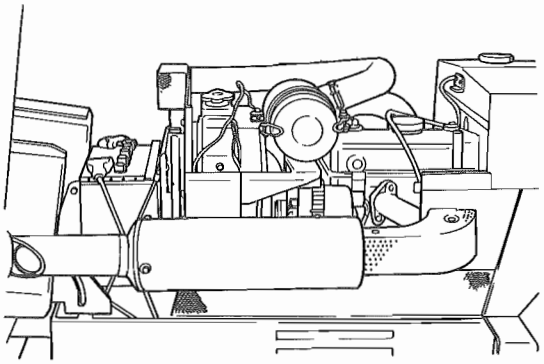

(2) Disconnect negative cord and positive cord from battery terminals in that order.

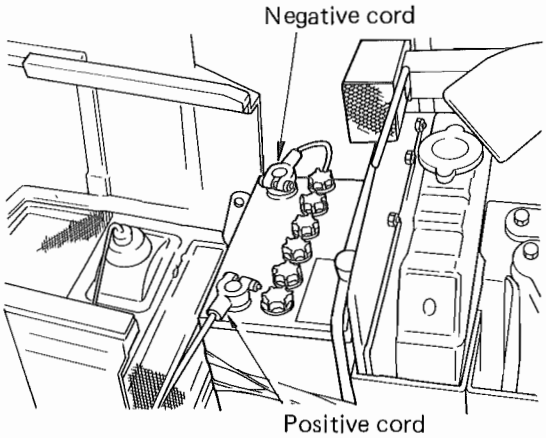

(3) Remove side covers, right and left.

NOTE

Remove the muffler as necessary.

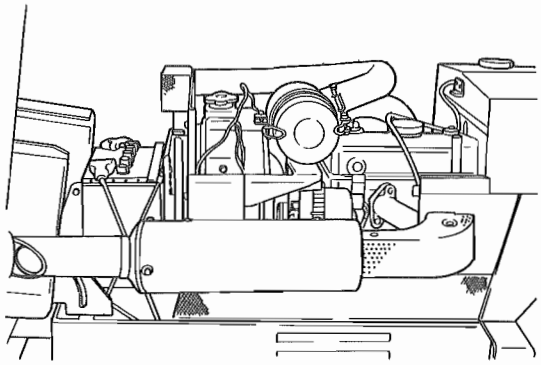

(4) Disconnect cords from respective terminals.

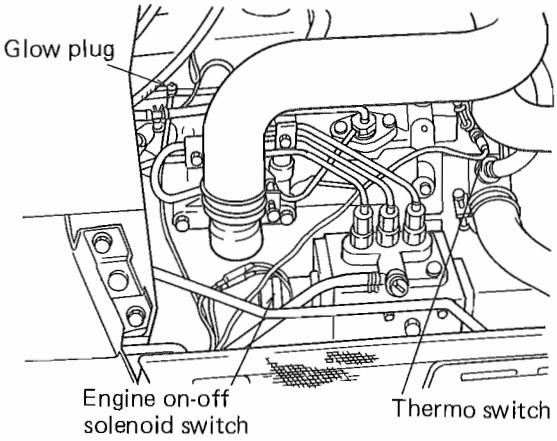

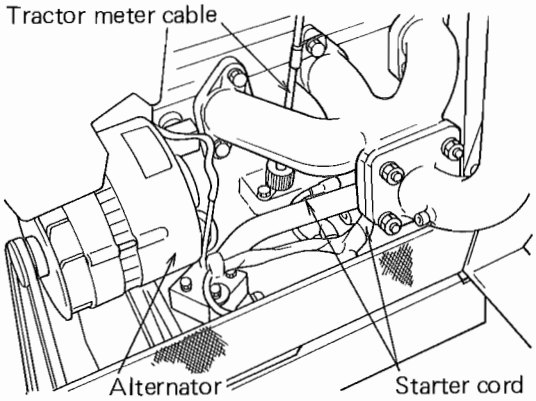

(5) Turn off fuel filter cock, and disconnect and remove piping between fuel filter and injection pump.

(6) Pull out snap pin on link pin by which governor lever is connected to engine control rod, and remove the control rod.

Downloaded from www.Manualslib.com manuals search engine

https://truckmanualshub.com/

(7) Remove bolts securing hydraulic pipes to hydraulic pump. Pay attention to "O" rings. (Transmission need not be drained if the oil is up to but not above the prescribed level.) In case of MT180H/HD (with HST transmission), after removing the left-hand engine cover, remove the cooler outlet pipe by loosening the union nut of HST unit-side and the union bolt of oil cooler-side. And disconnect the return pipe from the cooler inlet pipe by loosening the union nut.

(8) Pull off cotter pin from the castle nut on the front end of drag link, loosen castle nut, and remove ball socket.

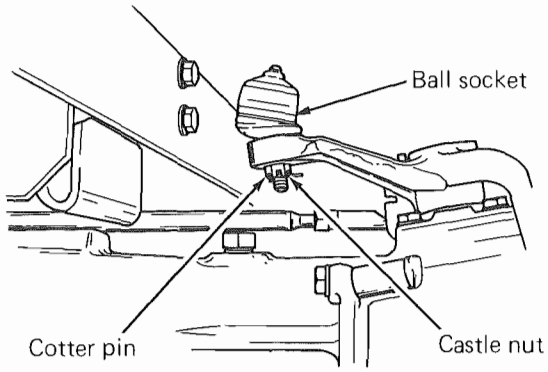

(9) <4-WHEEL DRIVE TRACTOR>
Remove joint covers, front and rear, take off circlips, draw out pins, and remove universal joints. (If the clutch housing is not to be removed, disconnect the front joint alone.)

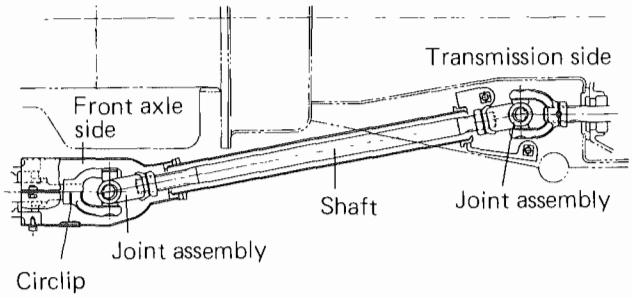

(10) Disconnect fuel return pipe from fuel tank. Loosen bolts on rear part of cylinder head cover.

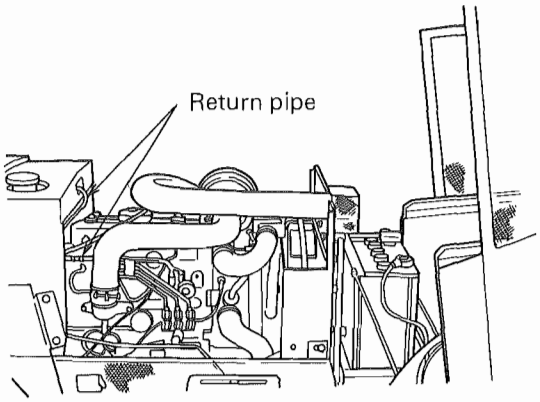

(11) Place a jack right under the bottom of clutch housing. Hitch lifting slings to engine hanger bolts and, by operating a chain block, take up the weight of engine, being careful not to lift the front tires off the floor.

(12) Remove the foot cover, left and right, from clutch housing and both steps.

(13) Remove bolts securing clutch housing to engine, separate engine gently from clutch housing by inserting a screwdriver between clutch housing and engine rear plate. Pull out the engine toward the front in suspended state. (It is not necessary to remove bolts securing fuel tank bracket.)

Downloaded from www.Manualslib.com manuals search engine

https://truckmanualshub.com/

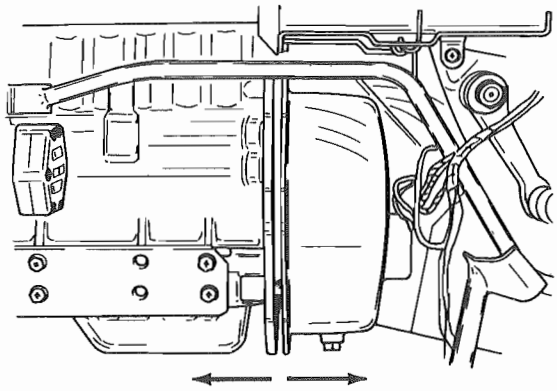

(13) Rest the engine, complete with chassis and front axle, on the work stand, keeping it in stable condition.

Removing the clutch

After removing the engine from the clutch housing, loosen the six bolts securing the main clutch to the flywheel, and remove the pressure plate assembly and clutch disc from the flywheel. The bolts must be loosened evenly.

When loosening the bolts, care should be taken so that no extremely heavy load is imposed on a bolt.

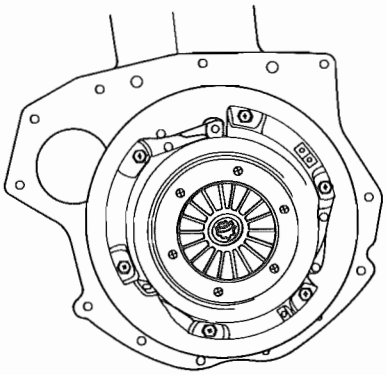

NOTE

The pressure plate assembly is not designed to be disassembled. If the pressure plate is worn more than the specified limit, the entire assembly must be replaced.

Removing the release bearing

Remove the release bearing together with the release bearing hub.

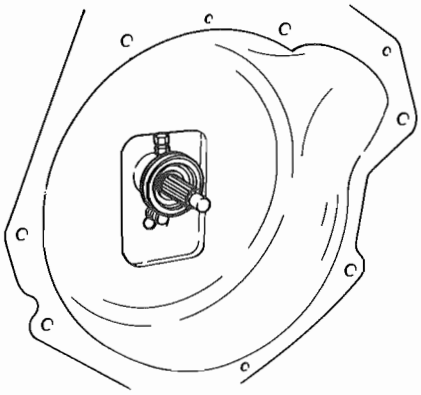

NOTE

Except when either the release bearing or the clutch hub is defective, don't attempt to disassemble them.

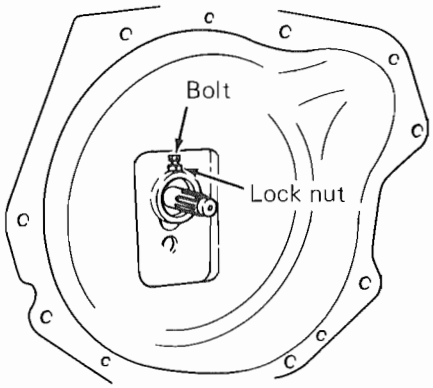

Downloaded from www.Manualslib.com manuals search engine

https://truckmanualshub.com/

DISASSEMBLY

Disassembling the clutch release shaft

Two steps must be taken to permit removal of clutch release shaft. First step is removal of engine and second, removal of clutch housing from transmission case. Remove the clutch housing as follows:

If the clutch housing is to be replaced with a new one, be sure to remove brake pedals, brake cross shaft, clutch pedal and steering gearbox from the clutch housing immediately after removing the engine.

(1) The engine having been removed, place a jack under transmission case.

(2) Remove two steps, right and left.

(3) Remove clamp on the hydraulic pipe to the left of clutch housing.

(4) Disconnect brake rods from brake cams.

(5) Check to be sure that there is nothing that will interfere with removal of clutch housing from transmission case. Remove bolts securing the housing to transmission case, and remove the former from the latter carefully.

NOTE

Clutch housing can be removed with the steering gearbox installed thereto. This housing is heavy and must be handled carefully.

(6) Remove clutch pedal rod.

(7) Pull of the cotter pin from "A" side, and remove the clevis pin from "B" side.

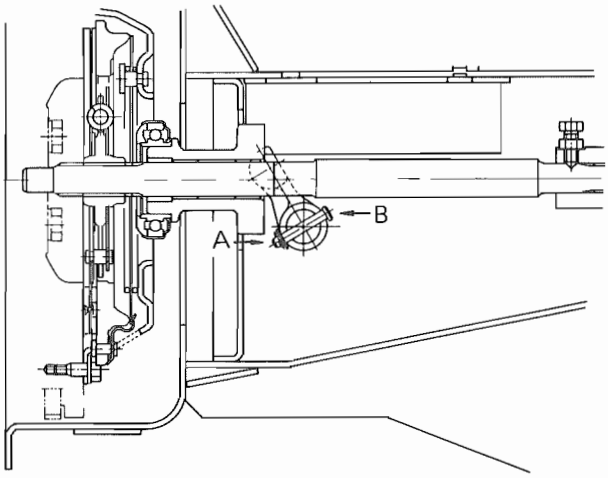

(8) Remove release fork while drawing clutch release shaft.

Disassembling the clutch pedal

The clutch pedal can be replaced, there being no need to remove clutch housing, transmission case and engine. The procedure of replacement is as follows:

(1) Remove two steps, right and left.

(2) Pull off cotter pin from the pin connecting brake rod to brake cam arm, draw out the pin and remove brake rod.

(3) Remove circlip on the right-hand end of brake cross shaft, and remove brake pedal on the right.

Downloaded from www.Manualslib.com manuals search engine

https://truckmanualshub.com/

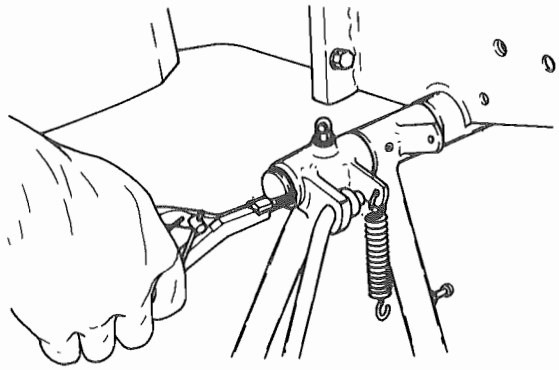

(4) Draw out spring pin on left brake pedal, and remove the pedal.

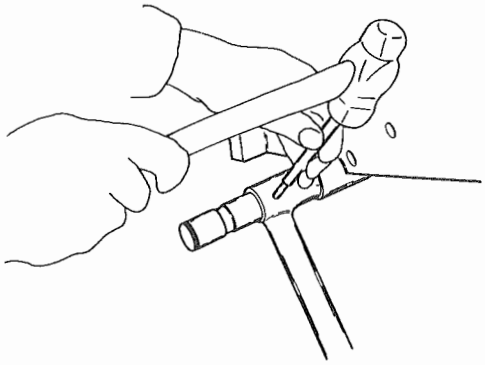

(5) Be sure that brake rod on the left is off, and remove brake cross shaft by pulling it toward the left.

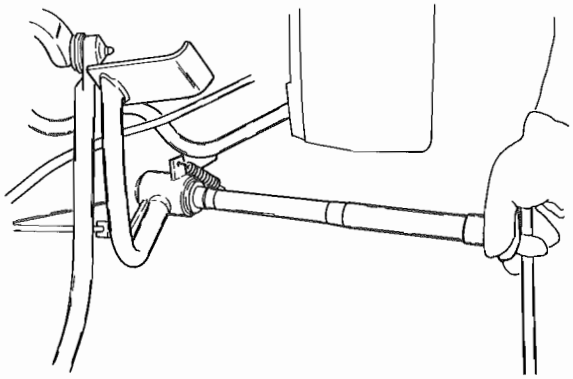

(6) After removing clutch pedal rod, remove circlip and take off clutch pedal.

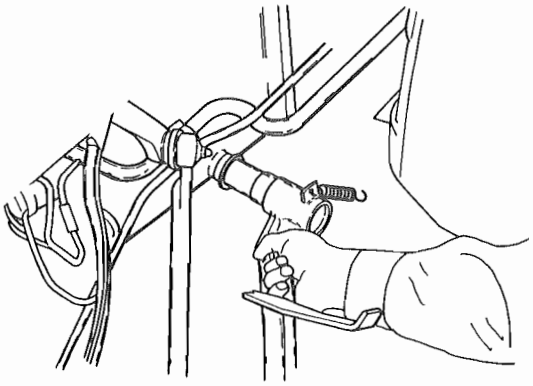

Downloaded from www.Manualslib.com manuals search engine

https://truckmanualshub.com/

INSPECTION AND MAINTENANCE

Inspection	Maintenance	Service limit
Contact of clutch disc with matching parts, seizure, and cracks	Smooth out if within the service limit. If exceed service limit, replace.	If the distance between rivet head and facing is 0.3 mm (0.012 in.) or less, replace.
Oily or greasy clutch disc	Eliminate the cause. If oil or grease is little, wipe it off with cloth damped with gasoline and allow it to dry.	If oil or grease is too much, replace.
Hardened surface of clutch disc	Smooth out hardened surface.	If the distance between rivet top and facing is 0.3 mm (0.012 in.) or less, replace.
Wear on clutch disc	Measure gap between rivet top and facing.	
Deflection of clutch disc	Rotate the clutch disc, and measure deflection at its outer edge.	If deflects 1 mm (0.03 in.) or more, replace.
Loose rivet		Replace, even if facing thickness is within the allowable limit.
Scratches or burning on pressure plate	Smooth out. Readjust clutch pedal free play properly.	25 ~ 30 mm (1 ~ 1-3/16 in.)
Flatness of pressure plate	If impossible to correct by smoothing out the surface, replace.	
Release bearing	Washing is not allowed.	Rotate it by hand. If abnormal noise is heard, or it turns irregularly, replace.

Downloaded from www.Manualslib.com manuals search engine

https://truckmanualshub.com/

REASSEMBLY

Reassembling the clutch

NOTE

a) Thoroughly wipe off the oil or grease on the flywheel or on the contact surface of the pressure plate assembly.

b) If the facings are worn out excessively so that the recession of the rivet heads from the facing is less than 0.3 mm (0.012 in.), discard the disc and install a new one.

c) When a new disc is to be installed, make sure that the recession is 1.2 ~ 2.0 mm (0.05 ~ 0.08 in.).

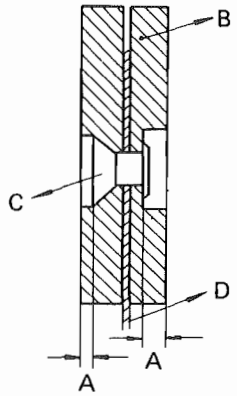

A-Service limit: 0.3 mm (0.012 in.)
(Top of rivet head to facing)
New disc: 1.2 ~ 2.0 mm (0.05 ~ 0.08 in.)
B-Clutch lining
C-Rivet
D-Cushion plate

(1) Apply a thin coat of grease to the flywheel pilot bearing.

(2) Place the clutch disc with the longer clutch disc splined boss on the transmission side, and center the clutch disc using the clutch disc centering tool, and install the pressure plate to the flywheel.

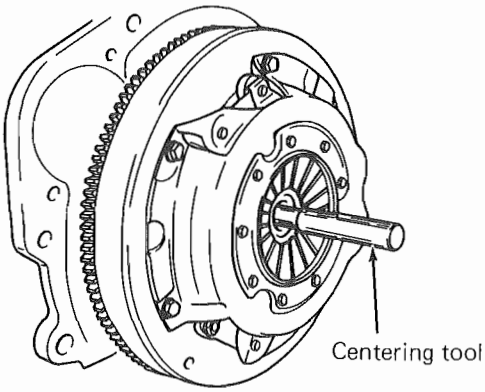

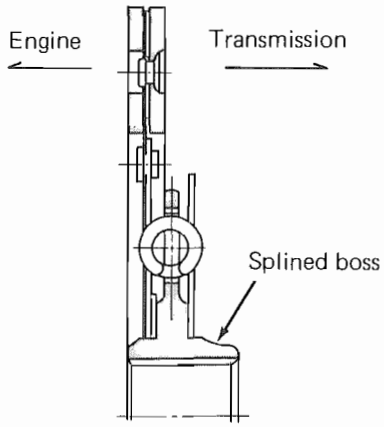

(3) Install the clutch cover to the flywheel. Insert the two reamer bolts into correct positions and tighten the six bolts evenly.

Tightening torque	2.5 ~ 3.0 kg-m (18 ~ 22 ft-lb)

Reassembling the release bearing

1) When reinstalling the release bearing to the main shaft, apply grease to the bushings and inside of release bearing hub.

2) Install the release bearing to the main shaft and make sure that the release bearing hub is directed to the release fork.

Downloaded from www.Manualslib.com manuals search engine

https://truckmanualshub.com/

Reassembling the clutch shifter

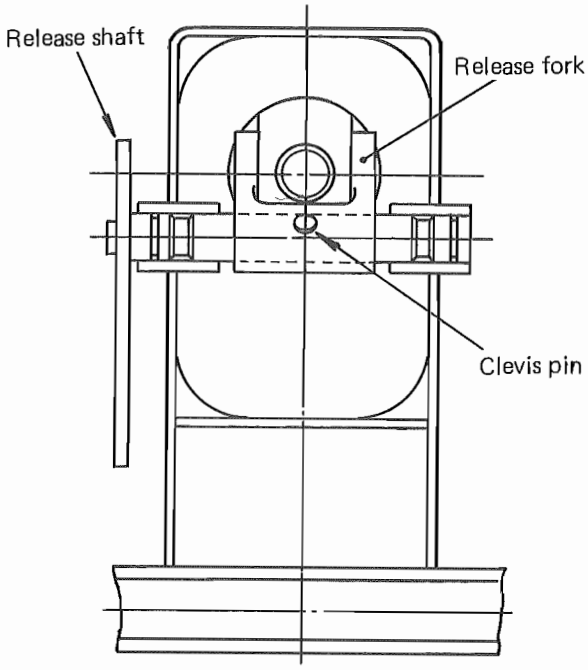

(1) Apply grease to the O-rings on the release shaft.

(2) Pack the machined area of release shaft with grease.

(3) In stall the release shaft and release fork to the clutch housing carefully.

(4) Insert the clevis pin into the release fork, and lock it with the cotter pin.

Reassembling the clutch housing

(1) Check to be sure that coupling set bolts are properly tightened on both sides, that is, drive shaft side and main shaft side, and are securely locked.

(2) Place 4-wheel drive shifter shaft in neutral position.

(3) Apply sealer to the clutch housing mounting face of transmission case, bolt the housing to the case: and tighten the bolts to this torque value:

Tightening torque	5.0 ~ 6.0 kg-m (36 ~ 43 ft-lb)

Reassembling the clutch pedal

(1) Liberally grease clutch pedal shaft, insert the shaft into the pedal, and retain it in place by installing circlips.

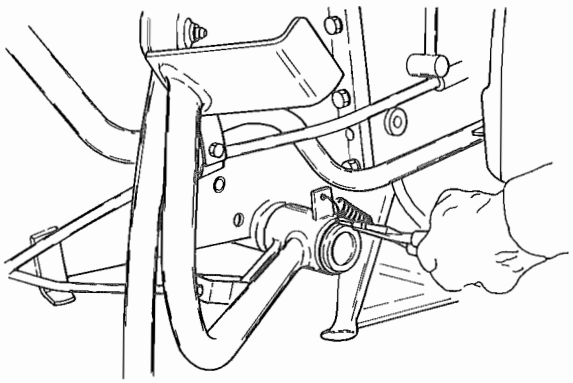

(2) Install clutch pedal rod.

(3) After installing brake cross shaft, install pedal steps, and attach clutch pedal spring.

NOTE

a) Install brake cross shaft and brake pedals steps by using reverse of removal procedure.

b) If steering gear box, fuel tank bracket, fuel tank, battery, instrument panel, etc., were removed, install them by using reverse of removal procedure.

Downloaded from www.Manualslib.com manuals search engine

https://truckmanualshub.com/

Reassembling the 4-wheel drive shift lever
(Only for MT160/D and MT180/D)

It is not necessary to remove the 4-wheel drive shift lever for clutch removal. This lever, however, should be removed when the clutch housing is reassembled.

(1) Coat shifter bracket with sealer, and install the bracket with the shifter shaft pin admitted into the groove provided in shifter. Tighten bracket mounting bolts to this torque value:

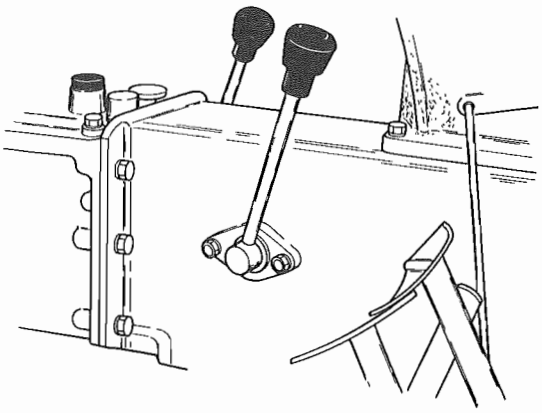

Tightening torque	2.5 ~ 3.0 kg-m (18 ~ 22 ft-lb)

(2) Check to be sure that 4-wheel drive gear can be shifted properly.

Downloaded from www.Manualslib.com manuals search engine

https://truckmanualshub.com/

ADJUSTMENT

Adjusting the clutch pedal

Clutch pedal free play is very important and it must be always maintained to be correct. If there is no free play, the clutch disc will wear quickly, while too much free play will cause clutch to drag even if the pedal is fully depressed, resulting in hard gear shift.

- **Free play**

The free play (A) in the clutch pedal should be between 20 and 30 mm (0.79 and 1.18 in.) and effective stroke (B) is 60~ 75 mm (2.36 ~ 2.95 in.).

After loosening the clevis lock nut, pull the split pin out of the setting pin for the clutch pedal and joint, remove the pin and adjust the clutch pedal free play to be 20~30mm (0.79 ~ 1.18 in.) by turning the joint. After proper adjustment, set the cotter pin and lock the clevis securely with lock nut.

NOTE

This adjustment is important for maintaining the clearance between the release lever and the release bearing to obtain a smooth gear shift and transfer all the driving power to the transmission.

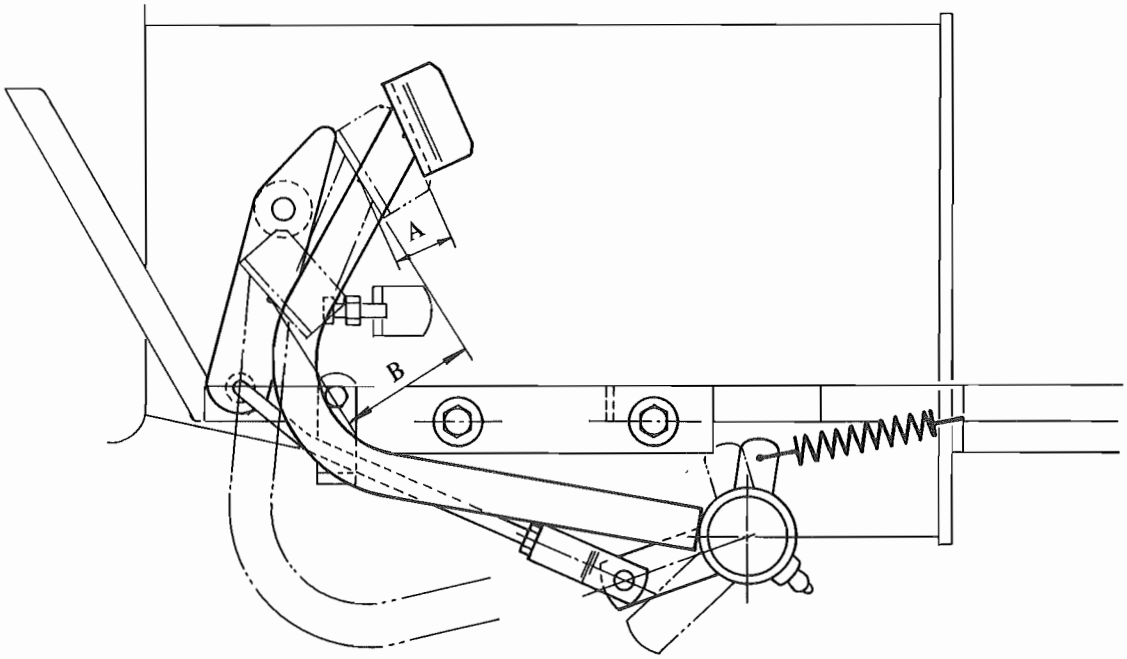

Downloaded from www.Manualslib.com manuals search engine

https://truckmanualshub.com/

ENGINE INSTALLATION

Mounting the engine

Assuming that the engine is ready for mounting, coat the mating face of clutch housing with sealer, and give a thin coat of grease to the main shaft splines. Bring in the engine in suspended state, level and steady it with clutch disc boss aimed squarely to the main shaft, and move the engine toward the clutch housing while admitting the splined end of main shaft smoothly into the boss. Make up the joint between clutch housing and engine by tightening the bolts to this torque value:

Tightening torque	8.5 ~ 9.5 kg-m (61 ~ 69 ft-lb)	for M12
	2.5 ~ 3.0 kg-m (18 ~ 22 ft-lb)	for M8

Those parts removed for allowing the engine to be taken down must be restored to their positions in the sequential order that is reverse of removing sequence: they are 4-wheel drive universal joints and others. Installing a part the other way around, leaving out washers needed for bolts and similar mistakes could occur unless usual servicing precautions are exercised: this holds particularly true for wiring.

Downloaded from www.Manualslib.com manuals search engine

https://truckmanualshub.com/

TROUBLESHOOTING

Clutch slippage

Slipping of clutch while it is engaged is very hard on the clutch facings. The relative movement between the clutch disc, pressure plate and flywheel causes heat to develop as well as loss of power developed by the engine. It also increases fuel consumption.

Possible cause	Remedy
No pedal free play	Adjust to 20 ~ 30 mm (0.79 ~ 1.18 in.)
Oil or grease getting on facings	After correcting its causes, replace clutch disc.
Worn clutch disc	If disc is worn too badly so that rivet head recession from top face of facings is less than 0.3 mm (0.01 in.), replace clutch disc.
Too little a pedal play due to wear on facings	Discard old disc and install a new one when rivet head recession is less than 0.3 mm (0.01 in.) Adjust pedal free play to 20~30mm (0.79 ~ 1.18 in.)
Excessive wobbling of disc	Replace if wobbling exceeds 1 mm (0.03 in.).
Corroded disc splines due to neglected lubrication	Remove rust and coat it with grease.

Shuddering when starting

Possible cause	Remedy
Hardened disc surface	Grind it with sandpaper or replace clutch disc.
Excessive pulsations of clutch disc	Replace clutch disc.
Rust in disc spline groove	Correct and apply grease.
Weakened or damaged torsion springs	Replace clutch disc

Overheating

Possible cause	Remedy
No pedal free play	Adjust to 20 ~ 30 mm (0.79~ 1.18in.).
Oil or grease getting on facings	After correcting its causes, replace clutch disc.
Worn clutch disc	If disc is worn too badly so that rivet head recession from top face of facings is less than 0.3 mm (0.01 in.), replace clutch disc.
Too little a pedal play due to wear on facings	Discard old disc and install a new one when rivet head recession is less than 0.3 mm (0.01 in.). Adjust pedal free play to 20~30mm (0.79 ~ 1.18 in.).

Downloaded from www.Manualslib.com manuals search engine

https://truckmanualshub.com/

Possible cause	Remedy
Excessive wobbling of disc	Replace if wobbling exceeds 1 mm (0.03 in.).
Corroded disc splines due to neglected lubrication	Remove rust and coat it with grease.
Burnt release bearing	Replace bearing.
Too little play in release bearing	Adjust.

SPECIFICATIONS

Type	Dry single disc plate diaphragm spring type
Facing material	Wire-reinforced special woven fabric
Dimension of clutch disc (OD × ID × thickness)	184 × 127 × 7.8 mm (7.2 × 5.0 × 0.3 in.)
Static transmission torque	11.0 kg-m (79.7 ft-lb)
Release bearing	Non-lubrication type
Operation	Foot operating system
Clutch disc depressing pressure	195 ± 20 kg (430 ± 44 lb)
Diaphragm spring max. operating length	7 mm (0.28 in.) max.
Tapering finger height (when new)	31.0 ± 1 mm (1.22 ± 0.04 in.)
Clutch pedal free play	20 ~ 30 mm (0.79 ~ 1.18 in.).

Downloaded from www.Manualslib.com manuals search engine

https://truckmanualshub.com/

Downloaded from www.Manualslib.com manuals search engine

https://truckmanualshub.com/

CHAPTER 4

FRONT AXLE AND STEERING LINKAGE SYSTEM

4

Downloaded from www.Manualslib.com manuals search engine

https://truckmanualshub.com/

Downloaded from www.Manualslib.com manuals search engine

https://truckmanualshub.com/

TABLE OF CONTENTS

	Page
4-wheel drive	4-1
Description	4-1
Construction	4-1
Disassembly	4-3
Inspection	4-6
Reassembly	4-6
Steering gearbox	4-14
2-wheel drive	4-18
Description	4-18
Construction	4-18
Disassembly	4-19
Inspection	4-20
Reassembly	4-20
Specifications	4-23

Downloaded from www.Manualslib.com manuals search engine

https://truckmanualshub.com/

Downloaded from www.Manualslib.com manuals search engine

https://truckmanualshub.com/

4-WHEEL DRIVE

DESCRIPTION

A 4-WD tractor is capable of easily operating and moving around in places such as marshy land, slippery fields, hilly areas, etc., where an ordinary 2-WD tractor would have difficulty. In the case of a 4-WD tractor, the force applied to the treads of the wheels is more widely distributed than with a 2-WD tractor since all the tires of the tractor work as traction wheels. Consequently the traction of the tractor is considerably increased due to less slippage. The efficiency of the tractor, especially during traction operations, will be fairly improved since the capacity of the engine can be effectively converted into traction. Also, the climbing capacity of its front axle is designed to be heavier than that of a 2-WD tractor; therefore, the tractor is capable of stably operating in sloping arears.

CONSTRUCTION

The mid-PTO is located at the front end of the transmission case. The front propeller shaft and universal joints convey power from the mid-PTO to the front axle, which, like the rear axle, consists of a dead axle (axle housings) and a live axle (differential shafts, right and left).

In the axle housing are provided a bevel gear-and-pinion assembly and a differential gearing. Each differential shaft drives the front wheel, not directly but through bevel pinions and a final-drive shaft looking like a kingpin. These pinions and shaft are housed in what is termed "gear case." A knuckle arm is bolted to the final case.

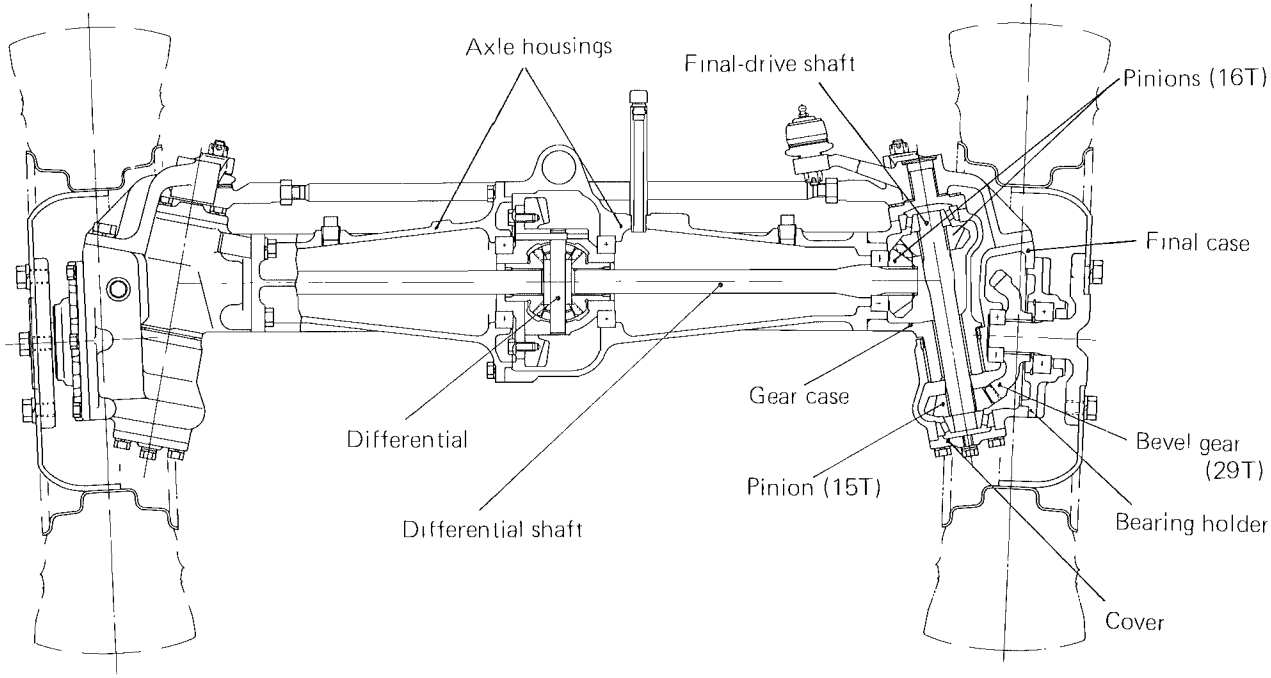

Front axle and wheels

Downloaded from www.Manualslib.com manuals search engine

https://truckmanualshub.com/

Mid-PTO

The mid-PTO is actually a clutch mechanism, by which the mid-PTO shaft (connected to a universal joint outside of the mid-PTO case) is coupled to and uncoupled from the transmission countershaft, depending on the position of its control lever.

I) In case of MT160D and MT180D

Referring to the mid-PTO cross section, gear 15T(MT180D) or 18T(MT160D) is splined to the forward end of counter-shift and is capable of sliding axially. When pushed in by the control (shift) lever through the shifter shaft, this gear meshes into gear 34T(MT180D) or 43T(MT160D) rigidly mounted on the mid-PTO shaft, thereby coupling the two shafts.

II) In case of MT180HD

Gear 20T is splined to the end of 4-wheel drive shaft which is connected with mid PTO shaft by means of gears, and is capable of silding axially. When pushed in by the control (shift) lever, this gear meshes into gear 29T rigidly mounted on the mid-PTO shaft, thereby coupling the two shafts.

I) In case of MT160D and MT180D

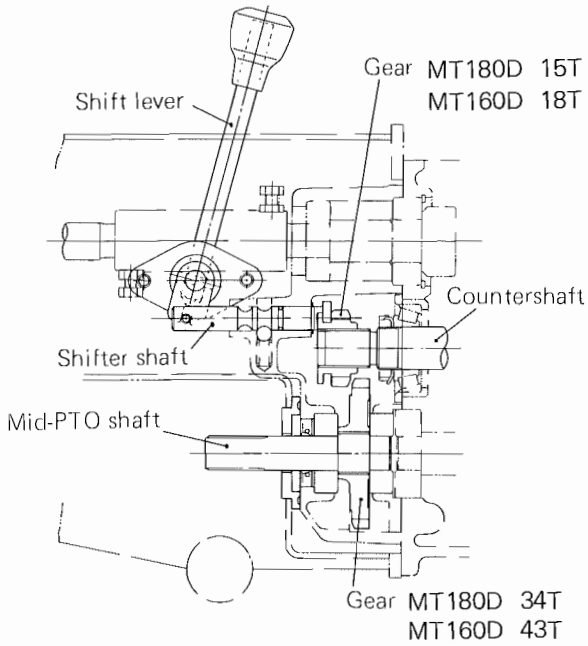

Mid-PTO

II) In case of MT180HD

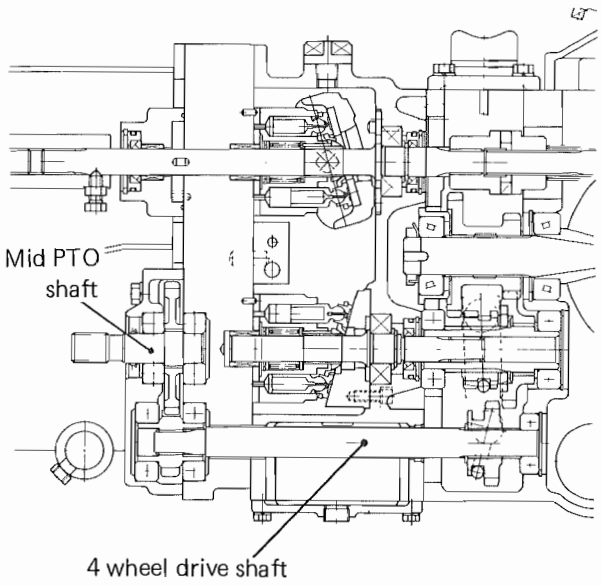

Propeller shaft

A yoke-type universal joint is fitted to each end of this shaft. The shaft and joints rotate smoothly and transmit power to the front axle. The shaft and each universal joint are enclosed to keep out foreign matters.

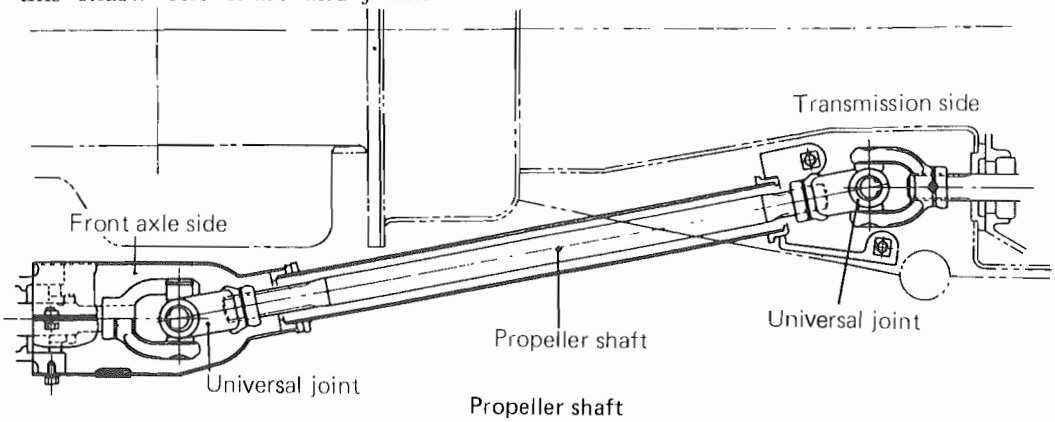

Propeller shaft

Downloaded from www.Manualslib.com manuals search engine

https://truckmanualshub.com/

Front axle

The dead axle (housings) takes up ground shocks and supports the weight while the live axle (differential shafts) merely transmits drive to front wheels. All running parts are hermetically enclosed.

At the middle section of the front axle, drive flows in from propeller shaft to the spiral bevel pinion, ring gear and the differential. The differential shafts, right and left, extend from the differential to the front wheels.

At the end of the axle housing on each side, the gear case is rigidly attached to the housing. On this gear case, the final case (carrying the final reduction gearing and the wheel) is rotatably mounted.

Drive to the front wheel is from differential shaft to bevel gear splined to the wheel shaft, through the final-drive shaft (having two bevel pinions) held in the gear case.

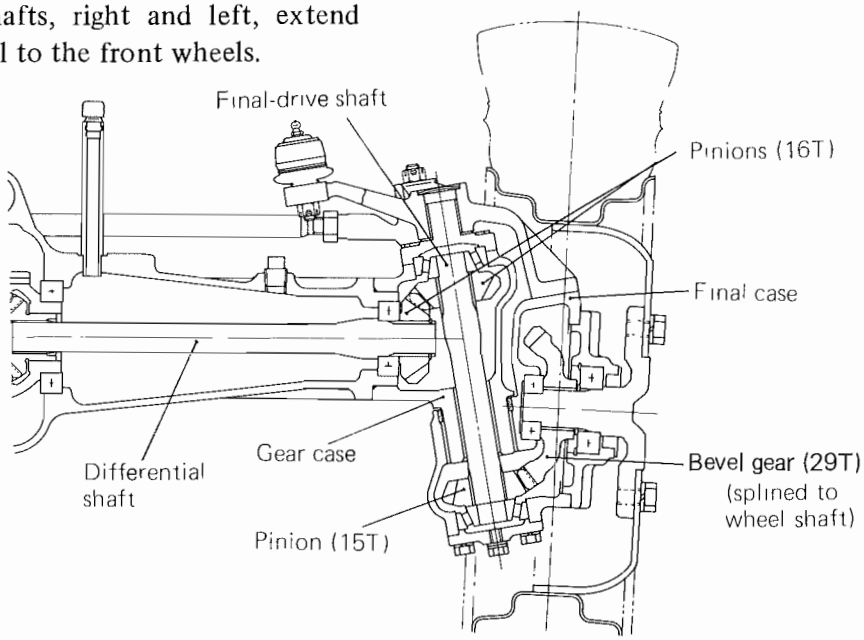

Front axle

DISASSEMBLY

A good program of diagnosing is the key to economy for the customer. Ask the operator; operate the machine if possible; check the machine; picture the possible causes; and examine them until you can pin-point the trouble before attempting to disassemble the front axle.

Removing the universal joints

To disconnect the propeller shaft from the front axle, remove the front universal joint, as follows:

(1) Remove bolts securing the upper and lower covers, and take down these covers to expose the universal joint.

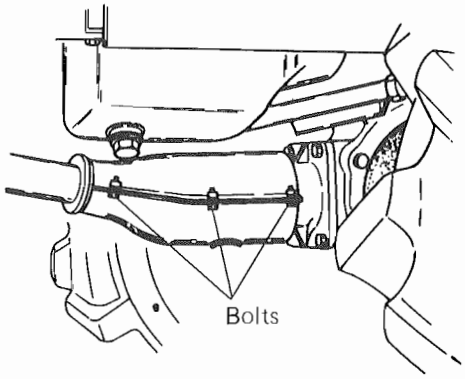

(2) At the front end, remove the snap rings and pull off pin from yoke. Push the joint backward, making its yoke slide off the pinion shaft extending out from the axle housing, and disconnect the joint from the shaft. Push the joint forward and

Downloaded from www.Manualslib.com manuals search engine

https://truckmanualshub.com/

remove the joint from the propeller shaft. (The rear joint can be similarly removed.)

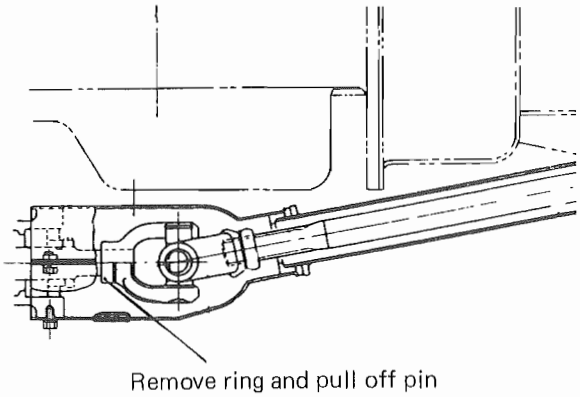

NOTE

When removing the snap ring, be careful not to spread it out any more than is necessary to make it come off.

Disassembling the yokes

Do not disassemble the yokes without valid reason. If it is necessary to disassemble them, remove circlips and carefully push the spider out of the yokes with a press.

To reassemble the yokes, use reverse of the disassembly procedure.

Disassembling the front axle

The two gear cases, right and left, are rigidly secured to the axle housing. These cases can be removed from the housing without requiring the whole front axle to be taken down.

The first step of front axle disassembly is to disconnect the propeller shaft in the manner already explained. After this step, proceed as follows:

(1) Remove front tires in the usual manner. To raise the front end, push up the clutch housing with a jack.

(2) On each side, remove tie rod and drag link by undoing respective ball socket joints. Each joint breaks apart when its cotter pin is pulled off lock nut and the nut is then loosened and removed.

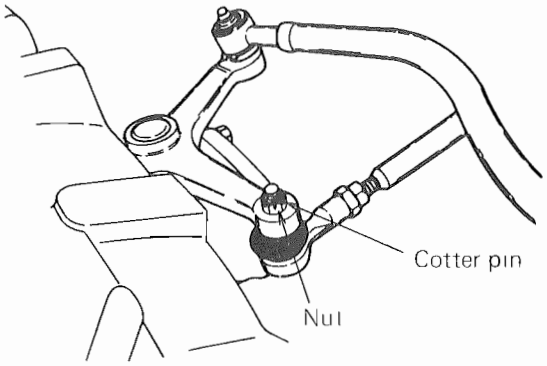

(3) Remove bolts securing the gear case to the axle housing, and pull the gear case complete with the final case.

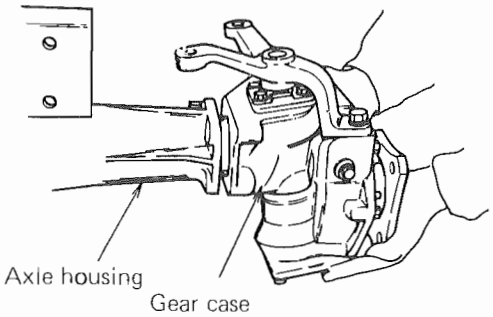

NOTE

Of the bolts securing the gear case, two on the bottom side are reamer bolts.

Disassembling the final case

(1) Remove bearing holder from the case. The holder will come out together with the wheel shaft.

Downloaded from www.Manualslib.com manuals search engine

https://truckmanualshub.com/

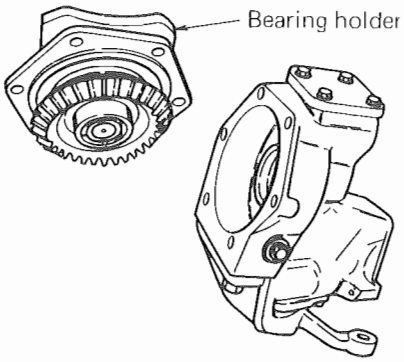

(2) Pull knuckle arm or tie rod arm off each final case. Be sure to recover the thrust liner.

(3) Remove the bolts securing the holder to gear case, and take off the holder to expose the top end of final-drive shaft. Drive lightly on the exposed shaft end so that the final case will slide off the gear case.

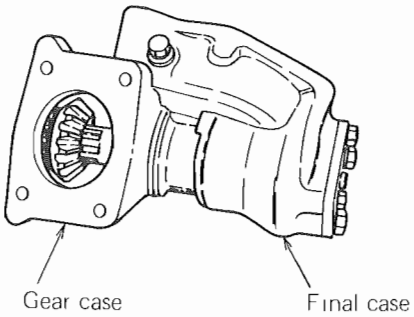

(4) Remove the bottom cover from final case to expose the botton end of the shaft. Draw the shaft off and take out the bevel pinion (15T).

Disassembling the wheel shaft

(1) Using the gear puller, draw the bevel gear and ball bearing off the shaft.

(2) Remove the shaft from bearing holder by lightly tapping on the shaft.

(3) Remove circlip from the holder, and remove the bearing outer race out together with oil seal.

Disassembling the axle housings

The two axle housings connected together are heavy for handling. Exercise caution to avoid personal injury.

(1) Place jacks under the axle to take up the weight of the two housings. Loosen center pin securing bolts, thus severing the front axle from chassis, and transfer the whole axle to the work bench.

NOTE

Be sure to recover the shim between center pin and chassis.

(2) Remove bolts securing the pinion case to the axle housing (A), take off the case.

(3) Separate axle housing (B) by removing bolts.

(4) Pull out differential shaft from housing (B).

(5) Remove differential gear assembly from axle housing (A).

(6) Pull out differential shaft from housing (A).

Disassembling the pinion case

(1) Straighten tap washer and remove sleeve nut after removing pinion case from axle housing (A).

(2) Force pinion shaft out of the case by tapping lightly on shaft end.

(3) Remove oil seal and bearings, as necessary.

Disassembling the differential

This differential is identical to the one located in the transmission. The procedures of disassembly and reassembly set forth for that differential apply to this differential.

Disassembling the mid-PTO

Since this PTO is inside the clutch housing, its disassembly involves separation of clutch housing from transmission case. The procedure is outlined in the section for transmission.

Downloaded from www.Manualslib.com manuals search engine

https://truckmanualshub.com/

INSPECTION

Clean the disassembled parts by washing. Inspect gears and pinions to be sure their teeth are in good condition. Check to be sure that each bearing is capable of smooth rotation. Examine each enclosure part (housing, case and the like) for evidence of cracking and repair or replace cracked parts, if any.

REASSEMBLY

Before commencing reassembly, be sure that necessary replacements and repair jobs have all been effected and that each part meets the dimensional and other specifications, if any. Fitting or installing rotating or sliding parts in dry condition is a bad practice: be sure to oil or grease their surfaces. Greasing is particularly needed for oil seals and "O" rings being fitted.

Reassembling the pinion shaft

(1) Fit the two outer races of tapered roller bearings into the pinion case, positioning each race as shown.

(2) Fit the inner race of tapered roller beairng to gear side of pinion shaft, pushing it all the way against the pinion shoulder.

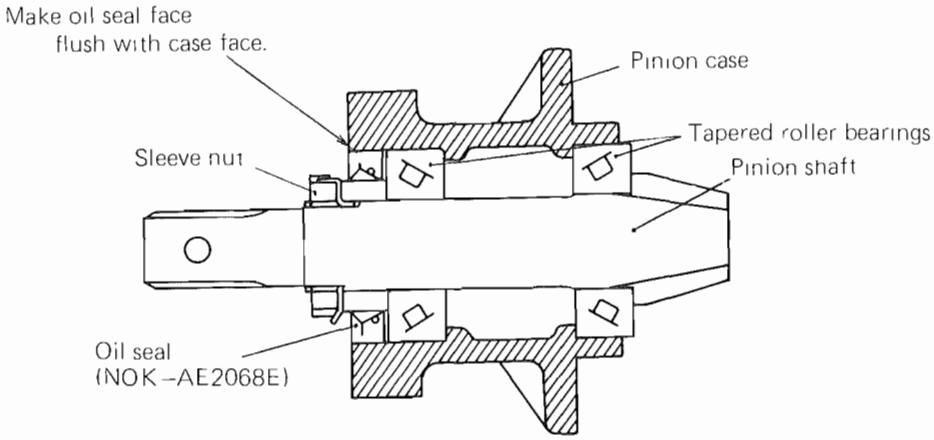

(3) Insert pinion shaft into the case. Fit the other inner race to the shaft, and install oil seal bushing. Pinion shaft is now securely positioned inside the case.

(4) Grease the oil seal, and force it into between case and bushing, making its outer end face flush with the mating face of pinion case.

(5) Put on tab washer and run down sleeve nut. Tighten this nut to give the specified preload to the bearings.

Pinion shaft bearing preload	0.04 ~ 0.06 kg-m (0.29 ~ 0.43 ft-lb)

NOTE

Be sure that the pinion shaft in place has no end play when checking its bearing preload.

(6) After obtaining the specified preload, lock the sleeve nut by sharply bending tab washer.

Downloaded from www.Manualslib.com manuals search engine

https://truckmanualshub.com/

Adjusting the pinion shaft cone center

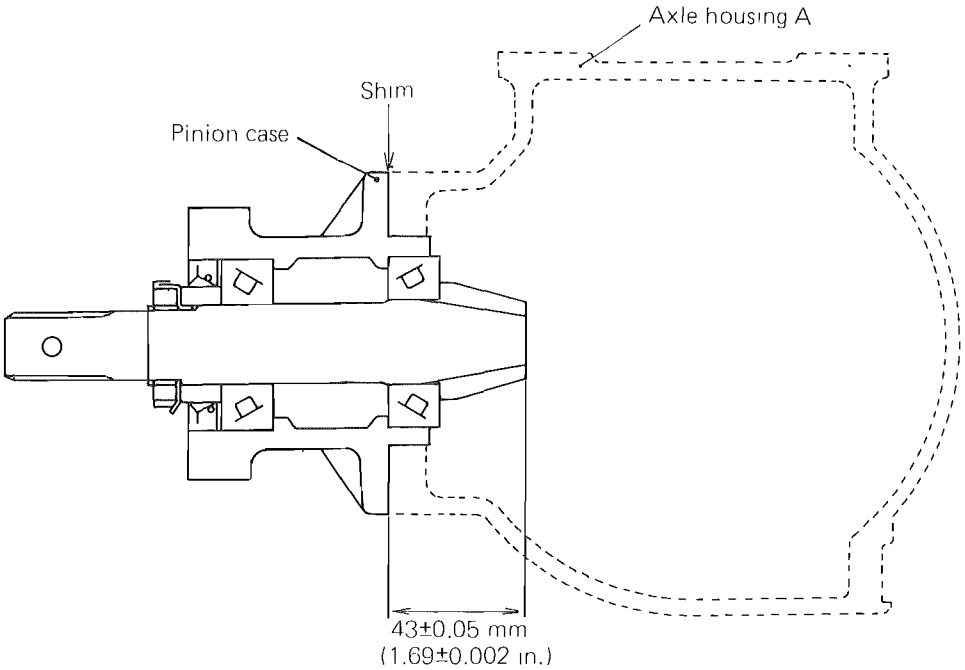

Cone center specification	43 ± 0.05 mm (1.69 ± 0.002 in.)

"Cone center" is the distance from the mating face of axle housing to the end face of pinion, and can be increased or decreased by decreasing or increasing the shim.

Shim stock for this adjustment is available in the following thicknesses:

Thickness	Part No.
Shim set	1019 0622 000
0.1 mm (0.004 in.)	1007 0605 000
0.2 mm (0.008 in.)	1007 0605 100
0.4 mm (0.016 in.)	1007 0605 200

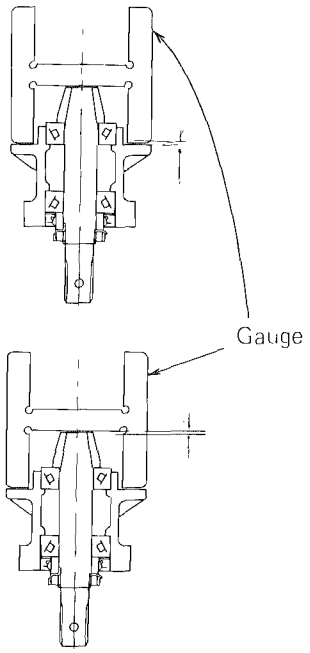

Using the gauge for cone center adjustment, determine the required thickness of the shim by proceeding as follows:

(1) Put the gauge alternately on the pinion shaft, and select the shim of such a total thickness that, with the short gauge, a clearance will occur between the gauge end and the case face but, with the long gauge, a similar clearance will occur between the gauge and the pinion's end face.

(2) Fit "O" ring (greased) to the mating face of pinion case, attach it to axle housing (A) and secure the case by tightening the bolts to this torque value:

Tightening torque	2.5 ~ 3.0 kg-m (18 ~ 22 ft-lb)

Downloaded from www.Manualslib.com manuals search engine

https://truckmanualshub.com/

Reassembling the differential

Refer to the section for transmission, wherein the method of reassembly is set forth. After reassembling, install the differential in the axle housing (A) by the same method.

Adjusting the backlash

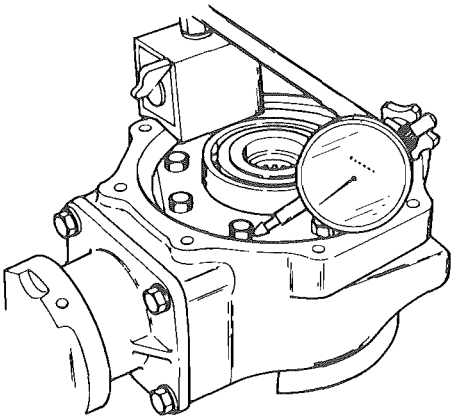

Backlash specification	0.25 ~ 0.35 mm (0.010 ~ 0.014 in.)

Adjust the shim thickness (between bearing housing of axle housing (A) and bearing) to produce the specified backlash. Shim stock for this adjustment is available in these thicknesses:

Thickness	Part No.
Shim set	1019 0623 000
0.1 mm (0.004 in.)	1007 0618 000
0.2 mm (0.008 in.)	1007 0618 100
0.4 mm (0.016 in.)	1007 0618 200

Shim between differential and axle housing B

After obtaining the specified backlash, determine the amount of shims needed, as follows:

(1) Place the gauge on axle housing (A) and read the clearance (a) between ball bearing and gauge.

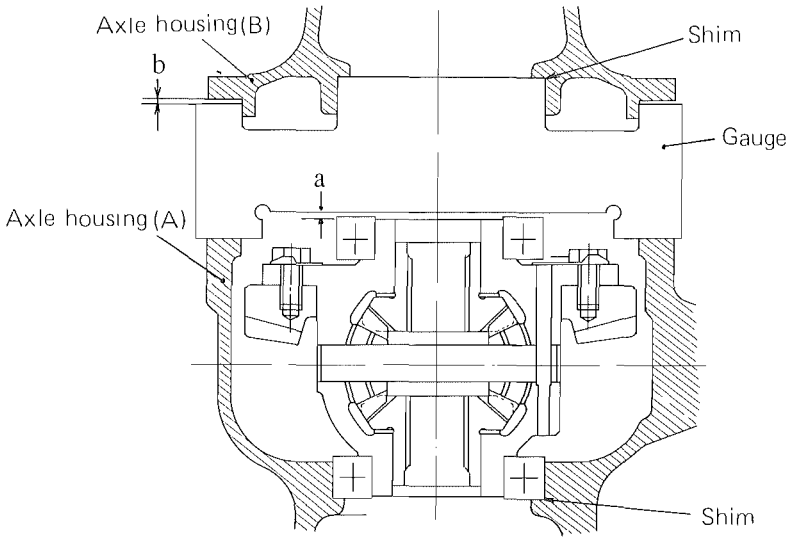

(2) Place the other side of the gauge in the bearing housing of axle housing (B) and read the clearance (b) between housing flange and gauge.

(3) Select from the shim stock mentioned above for backlash adjustment such an amount as will reduce the difference between the two readings (a – b) to anywhere between 0 and 0.1 mm (0.004 in.).

$$a - b = 0 \sim 0.1 \text{ mm } (0 \sim 0.004 \text{ in.})$$

If the gauge is not available, use a straightedge and proceed as follows:

(1) After making sure that the backlash is correct, place the straightedge flat on the ball bearing.

(2) Read the clearance A between axle housing (A) and straightedge.

Downloaded from www.Manualslib.com manuals search engine

https://truckmanualshub.com/

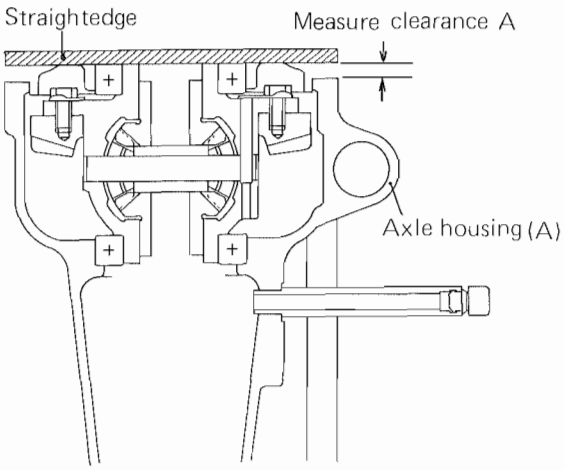

(3) Place the straightedge on axle housing (B) and read the clearances C and D. Subtract D from C, and call the difference B.

(4) Select from the shim stock (mentioned above for backlash adjustment) such an amount as to obtain A - B = 0 to 0.1 mm (0 to 0.004 in.).

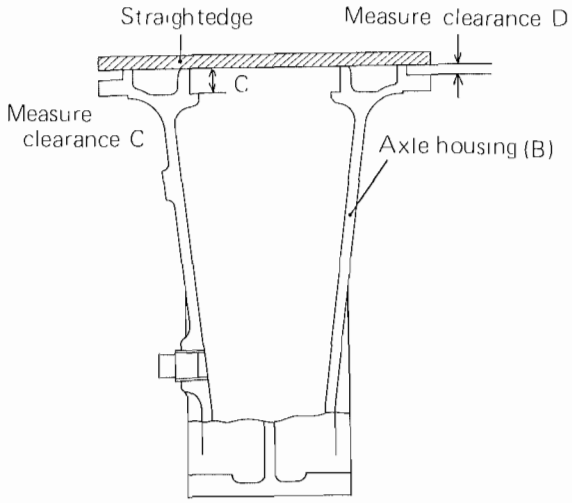

C – D = B

Reassembling the axle housing

(1) Coat the mating faces of two housings (A) and (B) with the sealant, and attach the selected shim to the face of housing (B). Put the two housing together and fasten them by tightening the bolts to this torque value:

Tightening torque	2.5 ~ 3.0 kg-m (18 ~ 22 ft-lb)

(2) Attach the axle housing to the chassis and insert the center pin to complete the axle-to-chassis connection. Be sure to apply the grease in the grease chamber.

(3) Select such a shim as will produce 0 to 0.2 mm (0 to 0.008 in.) clearance between the axle housing and center pin. Insert the shim into between the chassis and center pin and tighten the bolts.

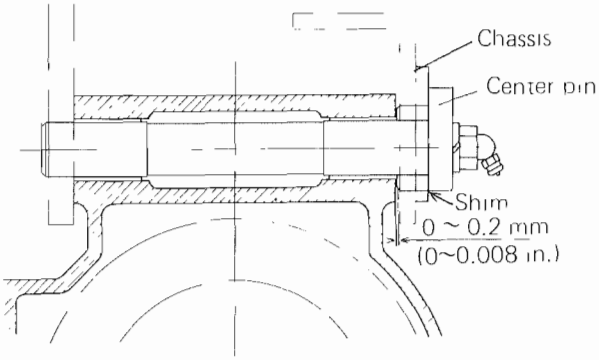

Thickness	Part No.
Shim set	1019 0621 000
0.2 mm (0.008 in.)	1119 0605 000
0.6 mm (0.024 in.)	1119 0605 100
1.0 mm (0.04 in.)	1119 0605 200

Tightening torque	5.0 ~ 6.0 kg-m (36 ~ 43 ft-lb)

(4) Be sure that the axle housing as connected to the chassis is capable of smooth rocking motion.

Downloaded from www.Manualslib.com manuals search engine

https://truckmanualshub.com/

NOTE

Apply THREAD LOCK to the grease fitting, and run it into the center pin part, pointing it downward. Tighten the fitting good and hard.

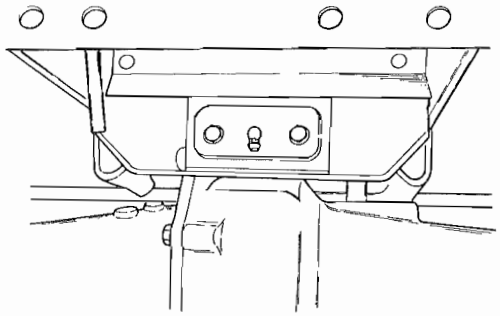

(5) Fit ball bearing to the outer end of each differential shaft, mount pinion (16T), and retain the pinion by installing circlip. The ball bearing has a groove cut in the end faces of its inner and outer races: be sure to position the bearing so that its grooved end comes on inner side, as shown.

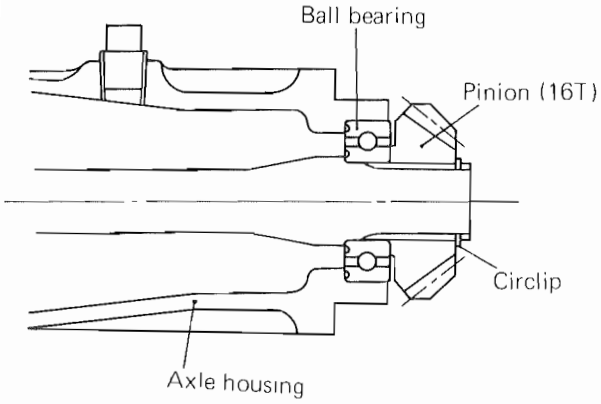

(6) The two differential shafts are now complete with bearings and pinions. Insert each into the axle housing.

Reassembling the gear case and final case

(1) Insert bushing into final case.

(2) Grease oil seal and fit it carefully to final case, making sure that the seal is trued up in place.

NOTE

The steel part of this oil seal is so thin that the seal itself is prone to distort at the time of its installation. Apply a push evenly when fitting it.

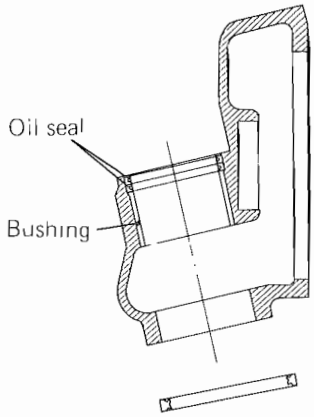

(3) Insert the final-drive shaft into gear case, bringing its large-diameter end to top side and fitting pinion (16T) onto the splined end. Install inner race of upper tapered roller bearing, as shown.

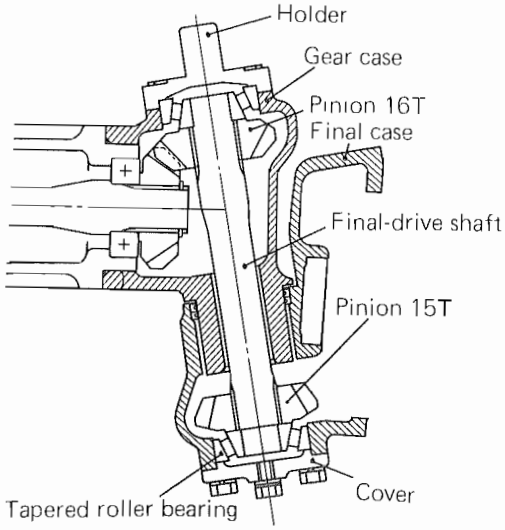

Downloaded from www.Manualslib.com manuals search engine

https://truckmanualshub.com/

(4) Fit the bearing outer race into gear case. Apply the sealant to the mating face of the holder and secure it to case by tightening its bolts to this torque value:

Tightening torque	2.5 ~ 3.0 kg-m (18 ~ 22 ft-lb)

NOTE

Be sure to wrap each bolt with sealing tape before running it in.

(5) Attach final case to gear case while fitting pinion (15T) onto the splined end of the shaft.

(6) Install tapered roller bearing. Apply the sealant to the mating face of the cover, and secure the cover to final case, tightening its bolts to this torque value:

Tightening torque	2.5 ~ 3.0 kg-m (18 ~ 22 ft-lb)

(7) Wrap the drain plug with sealing tape, and run it into the bottom cover. Tighten the plug good and hard.

(8) Turn the final case around the gear case by hand to be sure the former is capable of smooth rotation.

Installing the knuckle arm (or tie rod arm)

(1) Insert bushing into knuckle arm carefully.

(2) Position knuckle arm over the holder, fitting it to final case, and secure it tight to the case by bolting.

(3) Check the thrust clearance, which is prescribed to be anywhere between 0 and 0.2 mm (0.008 in.); if not, reduce the clearance to the specification by shimming. The shim stock for this adjustment is available in the following thicknesses:

Thickness	Part No.
Shim set	1019 0624 000
0.8 mm (0.03 in.)	1438 1305 100
1.2 mm (0.05 in.)	1438 1305 000
1.4 mm (0.055 in.)	1438 1304 000

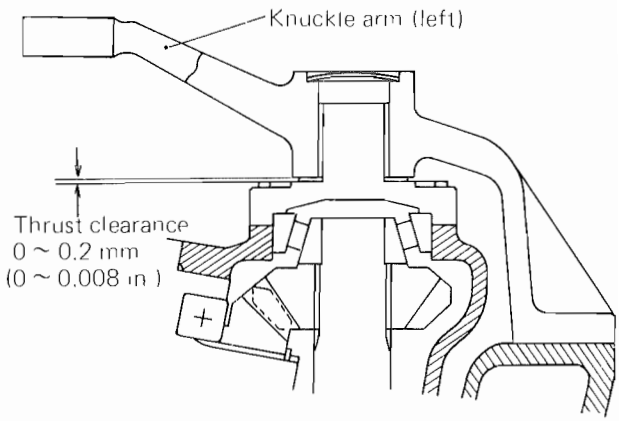

(4) After preparing the needed shim, take off knuckle arm. Apply lithium grease (heat- and water-resistant grease) to the OD part of the holder, put on knuckle arm with shim and secure it to final case by tightening the reamer bolts to this torque value:

Tightening torque	8.5 ~ 9.5 kg-m (61 ~ 69 ft-lb)

(5) Apply a bonding compound to the plug, and fit it into the pivot bore of knuckle arm, thereby sealing off the top end of the holder.

Installing the gear case assembly to axle housing

The gear cases, right and left, are now each complete with the final case and contains the final-drive shaft.

(1) In order to check the backlash between the two pinions (16T) (one on final-drive shaft and one on differential shaft), tentatively fit the gear case to the axle housing and tighten two bolts diametrically opposite.

Downloaded from www.Manualslib.com manuals search engine

https://truckmanualshub.com/

(2) Rig up a dial gauge on final case, putting the gauge spindle to a teeth of pinion (15T) (the pinion on the bottom end of final-drive shaft). Take a backlash reading. This backlash is prescribed to be within this range:

Pinion (16T) backlash	0.2 ~ 0.4 mm (0.008 ~ 0.016 in.)

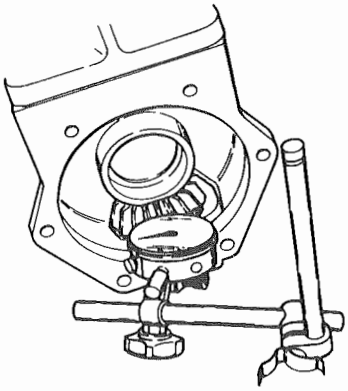

(3) If the reading is off the specified range, take off the gear case and adjust the shim between the pinion (16T) on differential shaft and the ball bearing. The shim stock for this adjustment comes in these thick-necesses:

Thickness	Part No.
Shim set	1019 0626 000
0.1 mm (0.004 in.)	1135 3016 000
0.2 mm (0.008 in.)	0731 0002 502
0.4 mm (0.016 in.)	0731 0002 504

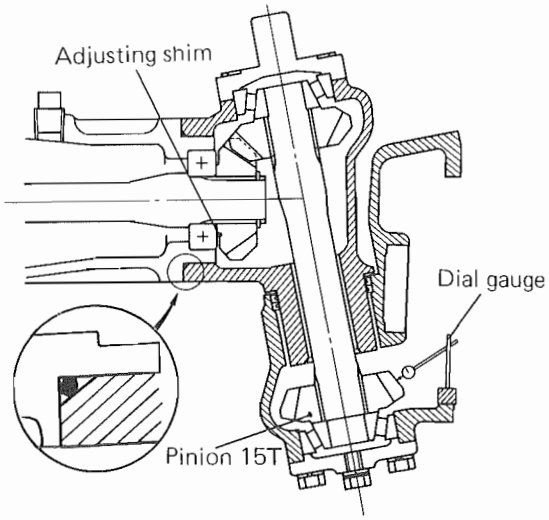

(4) Having ascertained a proper pinion (16T) backlash, grease "O" ring and fit it to the mating face of axle housing. Secure the gear case to the housing by tightening the bolts to this torque value:

Tightening torque	5.0 ~ 6.0 kg-m (36 ~ 43 ft-lb)

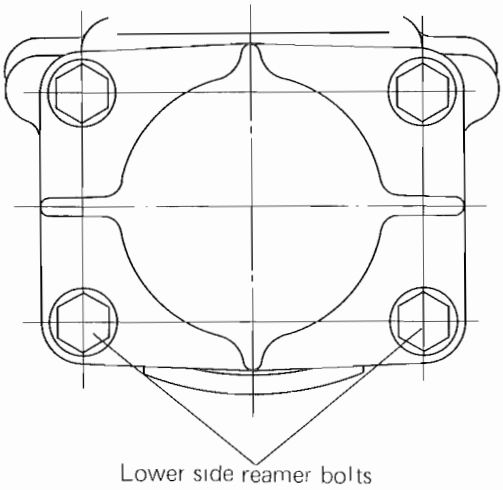

Downloaded from www.Manualslib.com manuals search engine

https://truckmanualshub.com/

Reassembling the wheel shaft

(1) Grease oil seal and fit it to the bearing holder.

(2) Insert the shaft into the holder, install ball bearing and retain the bearing by setting circlip.

(3) Mount bevel gear (29T) on the splined end of the shaft.

(4) Fit the bearing holder (complete with the shaft and bevel gear) to final case and tentatively secure it by bolting. Leave the bolts snug-tight.

NOTE

The inner ball bearing is left out at this time.

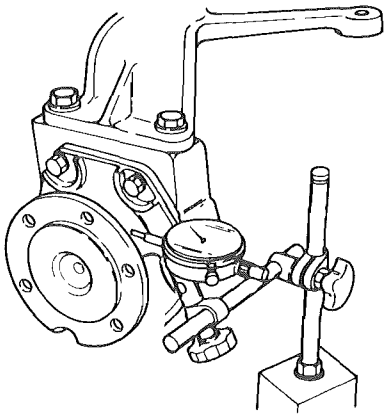

(5) Check the backlash between bevel gear (29T) and pinion (15T). This is accomplished by putting the dial gauge to the tip of wheel shaft. Adjust the shim between bevel gear (29T) and ball bearing if the reading is off the specification, which is:

Bevel gear (29T) backlash	0.2 ~ 0.4 mm (0.008 ~ 0.016 in.)

The shim stock for this adjustment comes in these thicknesses:

Thickness	Part No.
0.1 mm (0.004 in.)	0731 0003 001
0.2 mm (0.008 in.)	0731 0003 002
0.4 mm (0.016 in.)	0731 0003 004

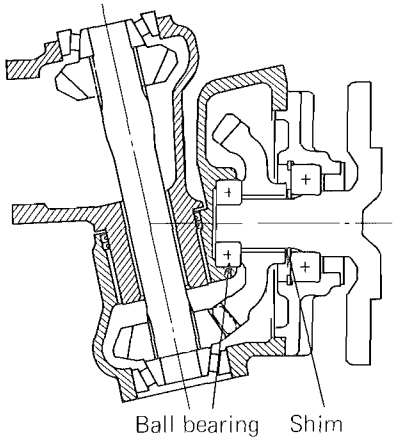

(6) Having obtained a proper backlash, remove the bearing holder, install the inner ball bearing on the shaft. Apply the sealant to the mating face of final case and attach the holder, tightening the bolts to this torque value:

Tightening torque	2.5 ~ 3.0 kg-m (18 ~ 22 ft-lb)

(7) Check the final case for torque needed to turn it around the gear case and be sure that no more torque than 0.03 kg-m (0.22 lb-ft) is required. For this checking, use a torque wrench as shown.

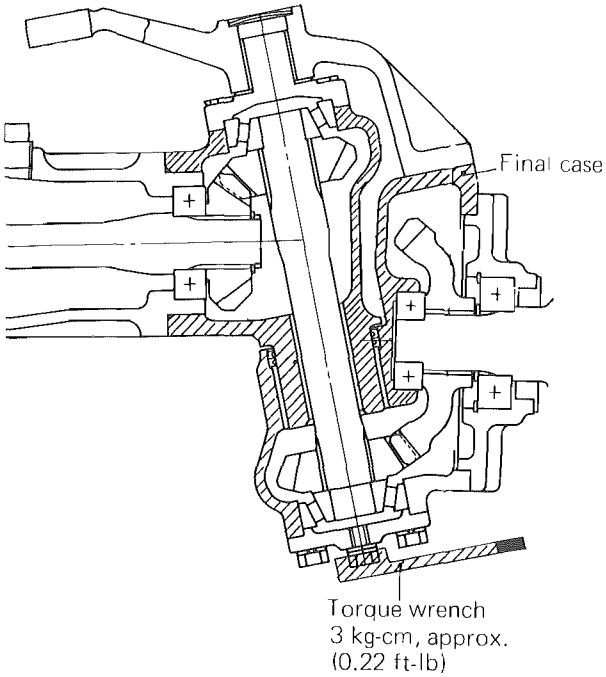

Downloaded from www.Manualslib.com manuals search engine

https://truckmanualshub.com/

Installing the tie rod and drag link

(1) Clean the tapered portions of knuckle arm and tie rod arm, apply grease to the cleaned portions, and make connections, locking each nut by inserting cotter pin.

(2) After installing the tie rod and drag link, mount front tires on wheel shafts, securing their hub bolts to:

Tightening torque	8.5 ~ 9.5 kg-m (61 ~ 69 ft-lb)

Adjust the tie rod to obtain the specified "toe-in," which is:

Toe-in specification	6 ± 2 mm (1/4 ± 3/32 in.)

(3) With the toe-in set properly, adjust the inner-wheel steering angle (A) to 55° (for MT160, MT180 and MT180H) or 53° (for MT160D, MT180D and MT180HD) on both sides, right and left, and secure each stopper bolt by tightening its lock nut.

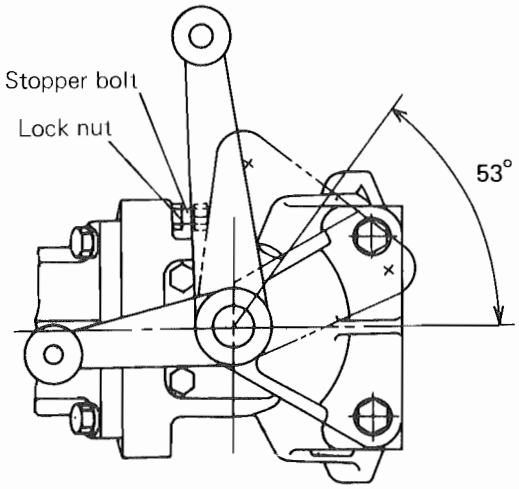

Installing the universal joints

Install the universal joints by reversing the order of removal.

STEERING GEARBOX

The gearbox is of ball screw type offering but a very small resistance to turning effort.

Removing the steering gearbox

(1) Open bonnet to gain access to the battery.

(2) Disconnect cables from the battery, and take it out.

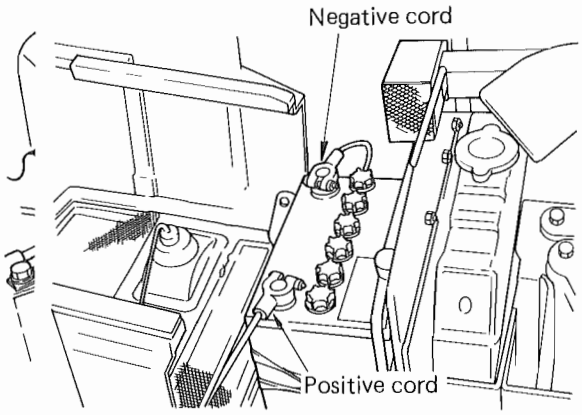

(3) From respective terminals, disconnect wires of glow plugs, oil pressure switch, water temperature switch, starting motor and alternator.

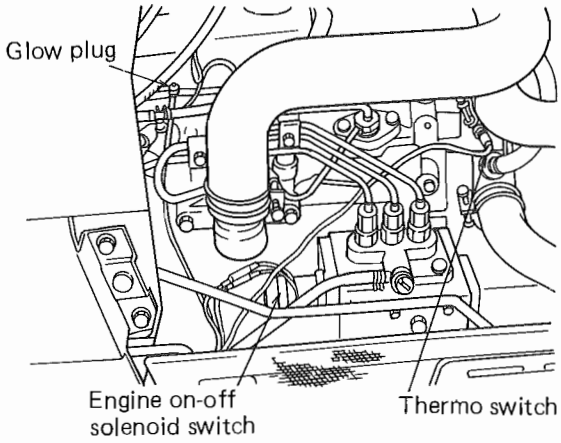

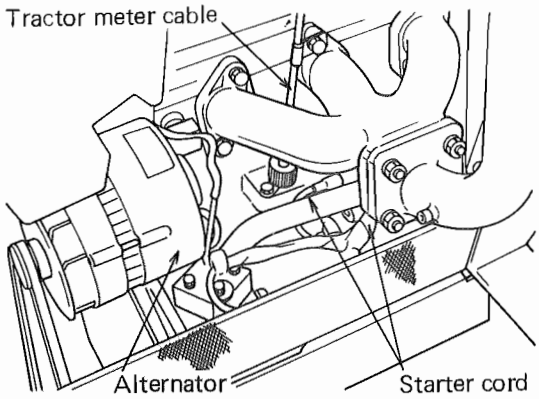

Downloaded from www.Manualslib.com manuals search engine

https://truckmanualshub.com/

(4) Disconnect the tractor meter cable.

(5) Remove the cap on steering handwheel, loosen the nut and take off the handwheel.

(6) Check to be sure, for safety's sake, that all electrical wires have been disconnected. From steering column, remove panel and panel cover together.

(7) From clutch housing and steering gear box, remove fuel tank bracket with fuel tank.

(8) Undo the ball socket joint between pitman arm and drag link. The gearbox is now accessible for its removal.

Disassembling the steering gearbox

Except when the gearbox need to be replaced, it is not necessary to take it down for it can be disassembled and reassembled in place.

(1) Remove the gearbox from clutch housing.

(2) Remove pitman arm from sector shaft.

(3) Loosen bolts securing the holder to the right-hand side of gearbox, turn adjusting screw clockwise, and take the holder off.

(4) Reposition the sector shaft gear to the shape of gearbox. Drive lightly on the pitman arm-side end face of sector shaft to force it out.

(5) From the sector shaft removed, separate adjusting screw and shim.

NOTE

If sector shaft is not to be replaced, preserve the shim for re-use. Keep the removed shim separate from others.

(6) Loosen bolts securing the steering column, remove the column, and remove the ball nut sub-assembly from the gearbox.

Reassembling the steering gearbox

Have all disassembled parts cleaned by washing. Be sure to oil moving parts before using them in reassembly.

(1) Press bearing outer races into the bottom of the gearbox and the column flange.

(2) Fill the gearbox with 0.3 liter (0.63 pint) of gear oil.

(3) Fit bearing inner race to the ball nut sub-assembly, and set this sub-assembly in place inside the gearbox.

(4) Attach steering column to the gearbox tentatively, making the bolts snug-tight.

(5) Adjust the thickness of the shim (whose location is shown) in such a way as to give a bearing preload of 0.025 ~ 0.055 kg-m (0.18 ~ 0.4 ft-lb) to the worm shaft in place. The shim stock for this adjustment is available in these thicknesses:

Shim set parts No. 67453-00115

Thickness	Q'ty
0.05 mm (0.002 in.)	2
0.07 mm (0.0028 in.)	2
0.08 mm (0.003 in.)	2
0.10 mm (0.004 in.)	2
0.20 mm (0.008 in.)	2

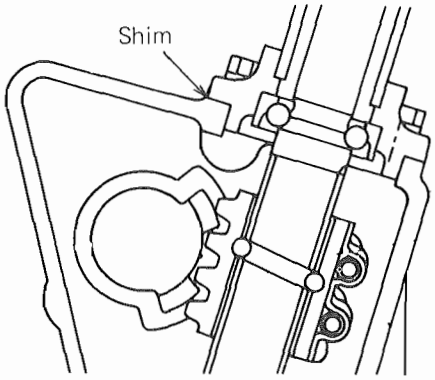

Downloaded from www.Manualslib.com manuals search engine

https://truckmanualshub.com/

NOTE

This preload refers only to the worm shaft. This is the reason why the column is tentatively attached without its bushing.

(6) Remove the column. Grease "O" ring and fit it to steering column, and attach it to gearbox by tightening to this torque value:

Tightening torque	2.5 ~ 3.0 kg-m (18 ~ 22 ft-lb)

NOTE

The end play for ball nut is prescribed to be from 0 to 0.03 mm (0.0012 in.). If this play is noted to be 0.1 mm or more, the ball nut sub-assembly must be replaced.

End play	0 ~ 0.03 mm (0.0012 in.)

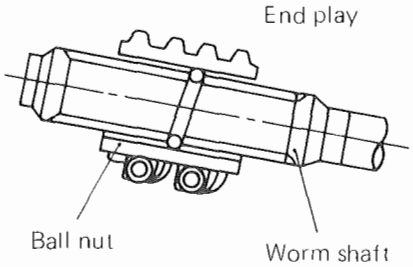

Reassembling the sector shaft

(1) Make a shim adjustment to produce a clearance (T) of less than 0.05 mm (0.002 in.) between sector shaft and adjusting screw, using the shim stock available in the following thicknesses:

Adjust screw shim set parts No. 67453-00114

Thickness	Q'ty
1.5 $^{+0.035}_{+0.015}$ mm (0.059 $^{+0.0014}_{+0.0006}$ in.)	1
1.5 $^{+0.065}_{+0.045}$ mm (0.059 $^{+0.0026}_{+0.0018}$ in.)	1
1.5 $^{+0.095}_{+0.075}$ mm (0.059 $^{+0.0037}_{+0.0030}$ in.)	1
1.5 $^{+0.125}_{+0.105}$ mm (0.59 $^{+0.0049}_{+0.0041}$ in.)	1
1.5 $^{+0.155}_{+0.135}$ mm (0.59 $^{+0.0061}_{+0.0053}$ in.)	1

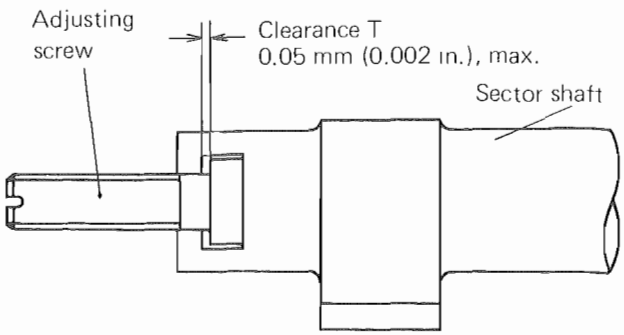

(2) Install adjusting screw in sector shaft, together with the selected shim. Center ball screw and sector shaft in the gearbox, as shown, and secure the shaft in place.

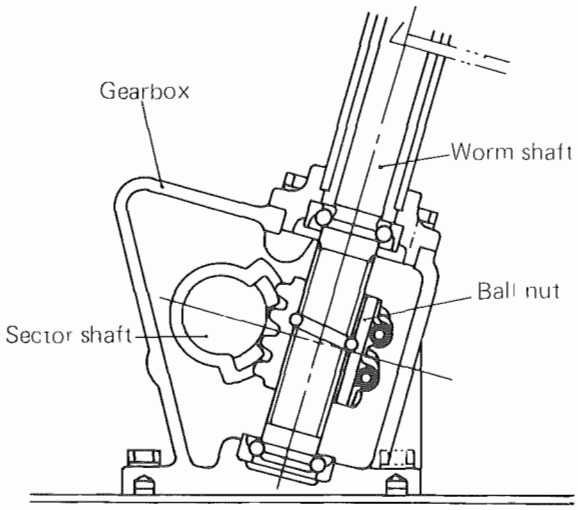

(3) Coat the face of the gearbox with the sealant. Secure the holder to gearbox, tightening its bolts to this value:

Tightening torque	2.5 ~ 3.0 kg-m (18 ~ 22 ft-lb)

(4) Grease oil seal, and fit the seal to gearbox. The following specifications are to be met:

Worm shaft preload	0.13 kg-m (0.94 ft-lb)

Steering handwheel starting torque (as checked at the rim)	0.61 kg (1.34 lb)

Downloaded from www.Manualslib.com manuals search engine

https://truckmanualshub.com/

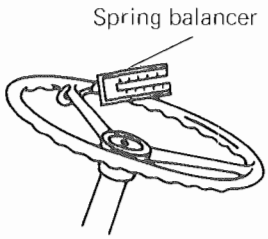

(5) Position adjusting screw in such a way that the backlash between ball nut and sector shaft will be anywhere between 0 and 10 mm (0.4 in.) as measured at the wheel rim. This much backlash corresponds to an angular play of 0° to 3° of sector shaft.

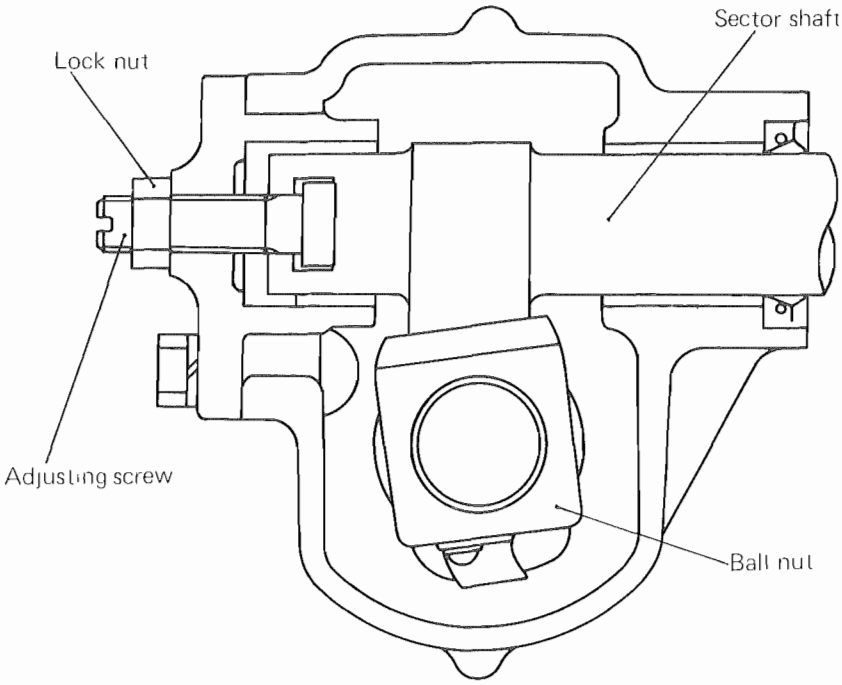

(6) Having produced a proper backlash between sector shaft and nut, lock the adjusting screw by tightening its lock nut.

(7) Match marks are punched on sector shaft and pitman arm. Fit the arm to the shaft, matching these marks, and secure the arm to the shaft by tightening its nut: be sure to use spring washer under this nut.

Installing the steering gearbox

(1) Position gearbox on clutch housing as dictated by dowel, and secure it to the housing by tightening its bolts to this value:

Tightening torque	2.5 ~ 3.0 kg-m (18 ~ 22 ft-lb)

(2) Install all removed parts (such as fuel tank bracket, fuel tank, panel, panel cover etc.), and reconnect all electrical wires and cables, in the sequential order which is reverse of disassembling and removing order.

Downloaded from www.Manualslib.com manuals search engine

https://truckmanualshub.com/

2-WHEEL DRIVE

DESCRIPTION

The MT160, 180, 180H steering system is the type that is most widely used for the farm tractors.

The front axle is a center pivot type and provided with a full swinging angle, permitting full-face contact even with a rough ground. Kingpin is the Lemoine type which allows greater ground clearance and stable steering.

The steering gear is a ball screw type which offers a very small resistance to turning effort.

CONSTRUCTION

The Ackerman Jant steering linkage is employed so that the front wheels can be swung concentrically.

The torque applied to the steering wheel is carried to the sector shaft integrated with the ball nut and then to the sector gear integrated with the sector shaft, thus causing the front wheels to turn to right or left.

The pitman arm is connected to the end of the sector shaft, and as the sector shaft turns, the end of the pitman arm moves describing an arc.

The drag link attached to the end of the pitman arm moves back and forth with the movements of the pitman arm, and the knuckle arm turns the kingpin. This causes the front wheels to swing, thus steering the tractor.

The steering system consists of the steering gear box incorporating a ball nut ass'y and a sector shaft, drag link, knuckle arm, tie rod, front axle, kingpins and front wheels.

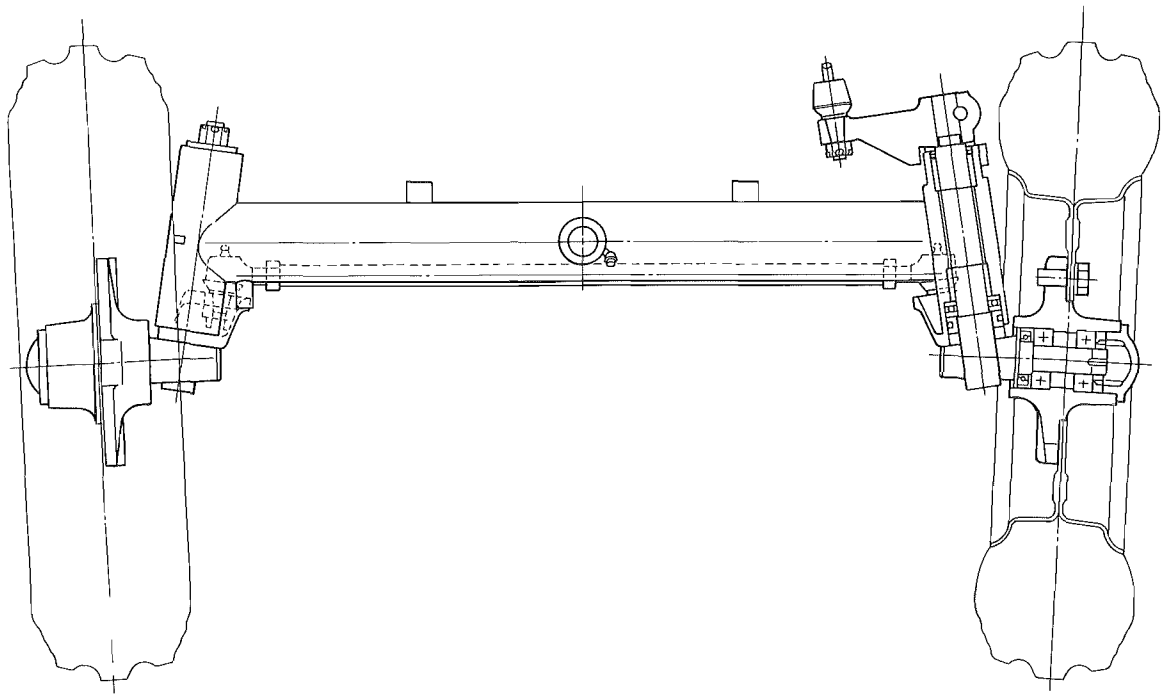

Downloaded from www.Manualslib.com manuals search engine

https://truckmanualshub.com/

DISASSEMBLY

Disassembling the front wheel hubs

(1) Lightly loosen the four front wheel mounting bolts.

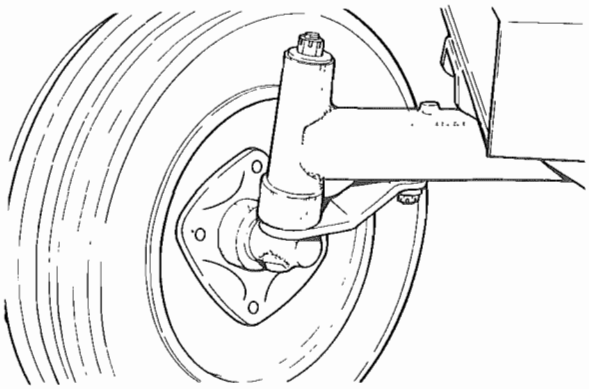

(2) Jack up the front axle, loosen the front wheel mounting bolts, and remove the front wheels.

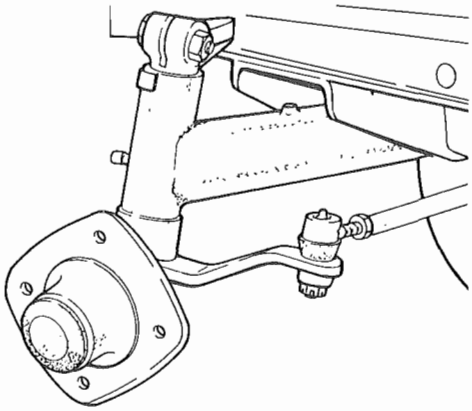

(3) Remove the front wheel hub cap, straighten the tab of the lock washer, and remove the sleeve nut.

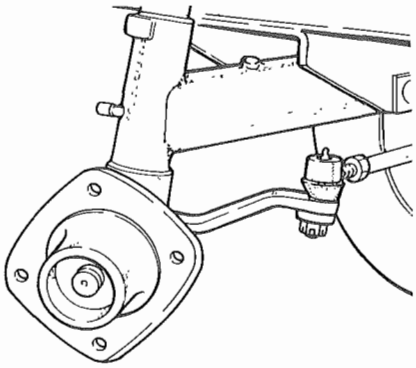

(4) Remove the front wheel hub using the gear puller, and remove the oil seal.

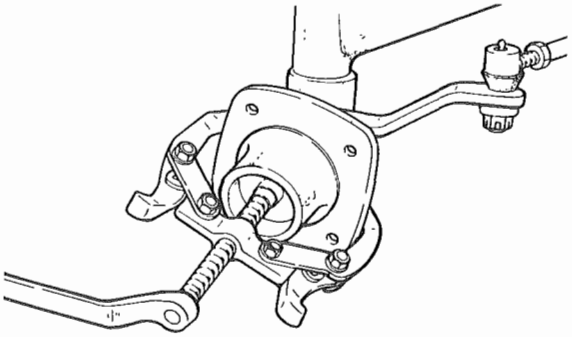

(5) Remove the ball bearing from the front wheel hub.

Disassembling the kingpins

(1) Remove the cotter pin locking the castle nut on each end of the tie rod, loosen the nut, and remove the tie rod.

(2) Loosen the knuckle arm bolt, and remove the knuckle arm while taking care so that the king pin does not fall.

Remove the drag link from the knuckle arm, as required.

(3) By tapping the top end of the kingpin, pull out the kingpin.

(4) Remove the right-side castle nut, and remove the right-side kingpin.

Downloaded from www.Manualslib.com manuals search engine

https://truckmanualshub.com/

Removing the front axle

(1) Pull out the cotter pin from the center pin and remove the castle nut.

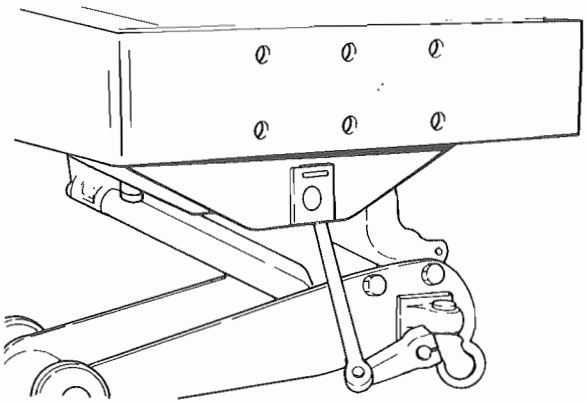

(2) Support the front axle, pull out the center pin and remove the front axle.

INSPECTION

Wash all the disassembled parts with cleaning oil and blow them dry with compressed air. Check for excessive wear or damage.

Replace with new one if defective or excessively worn.

(1) Grease fitting and grease passage for clogging.

(2) Tire setting tap for damage.

(3) Smooth rotation of ball bearing

Center pin outside diameter:

$22\ ^{-0.065}_{-0.098}$ mm ($0.866\ ^{-0.0026}_{-0.0039}$ in.)

Front axle center pin hole diameter:

$22\ ^{0}_{+0.052}$ mm ($0.866\ ^{0}_{+0.0020}$ in.)

Kingpin outside diameter:

$25\ ^{-0.020}_{-0.053}$ mm ($0.984\ ^{-0.0008}_{-0.0021}$ in.)

Kingpin bushing inside diameter:

$25\ ^{+0.073}_{+0.040}$ mm ($0.984\ ^{+0.0029}_{+0.0016}$ in.)

Measure the shaft outside diameter and bushing inside diameter. If measurements exceed the above limits, replacement of parts is necessary.

Install the kingpin bushing, and measure the inside diameter. If the measurement is smaller than specified above, correct the diameter using a reamer very carefully.

After this operation, thoroughly clean the metal dust.

Always use new "O" rings and oil seals.

REASSEMBLY

Apply oil or grease to contact surfaces of moving parts, and reassemble them carefully so that they maintain the specified dimensions.

Reassembling the front wheel hubs

(1) Install the washer to the kingpin. Install the grease-coated oil seal.

(2) Install two circlips to the front wheel hub, and insert the ball bearing into the hub.

(3) Install the front wheel hub to the kingpin, pack with Alvania grease, and insert the ball bearing into the hub.

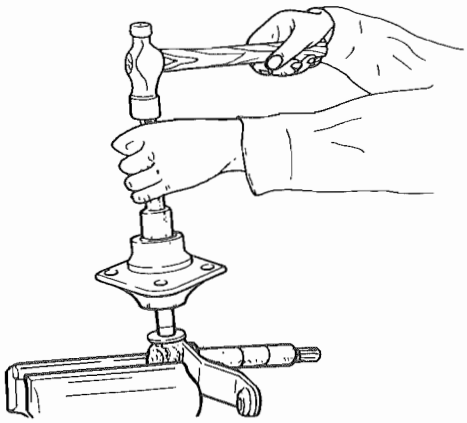

(4) Install the lock washer, and tighten the sleeve nut.

Front wheel hub starting torque	0.4 ~ 0.6 kg-m (10.1 ~ 11.6 ft-lb)

Downloaded from www.Manualslib.com manuals search engine

https://truckmanualshub.com/

(5) After tightening the nut with starting torque, make sure that the front wheel hub rotates smoothly, and lock with the lock washer. Apply a bond to the cap, and install it to the front wheel hub.

Reassembling the front axle

(1) Clean the center pin hole in the front axle and holes in the chassis, and install the front axle to the chassis with the longer boss facing forward.

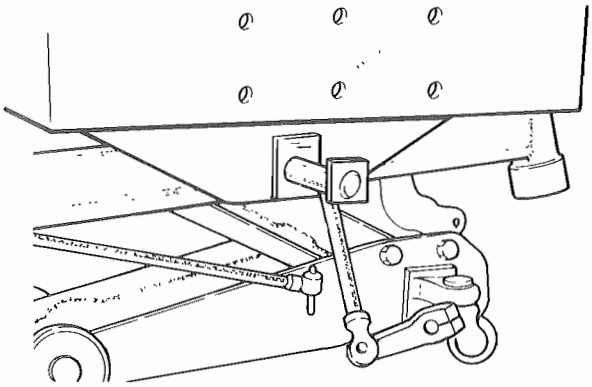

(2) Push in the greased center pin from the front side, and tighten the castle nut to specification. Then back it off 1/4 ~ 1/3 turn so that the cotter pin holes can be aligned.

Tightening torque	15.0 ~ 17 kg-m (108 ~ 123 ft-lb)

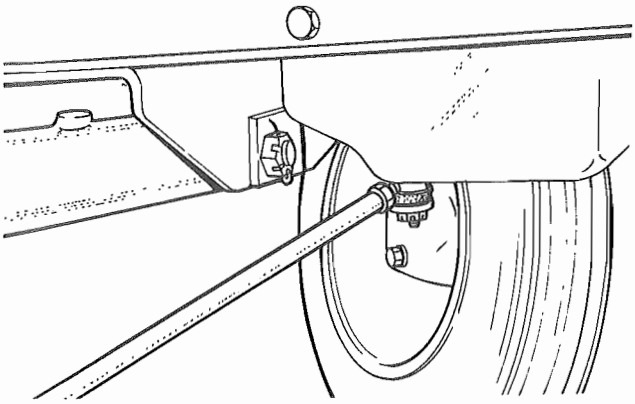

(3) Lock with the cotter pin.

(4) Make sure the front axle swings smoothly without end play.

Reassembling the kingpins

(1) Oil the kingpin sparingly, and push the bushing onto the kingpin. Install the grease-coated "O" ring.

(2) Install the thrust bearing, and apply a liberal amount of grease to it, and install the kingpin to the front axle.

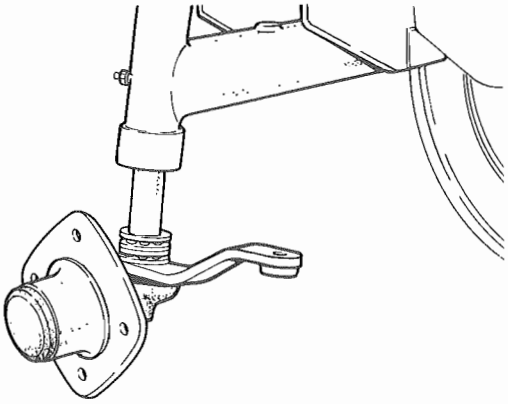

(3) Fit the greased oil seal to the kingpin, while taking care so that the kingpin does not slip off.

(4) Install the washer, and align the knuckle arm bolt hole with the cut on the left-side kingpin, and tighten the bolt.

Tightening torque	2.1 ~ 3.0 kg-m (15.2 ~ 21.7 ft-lb)

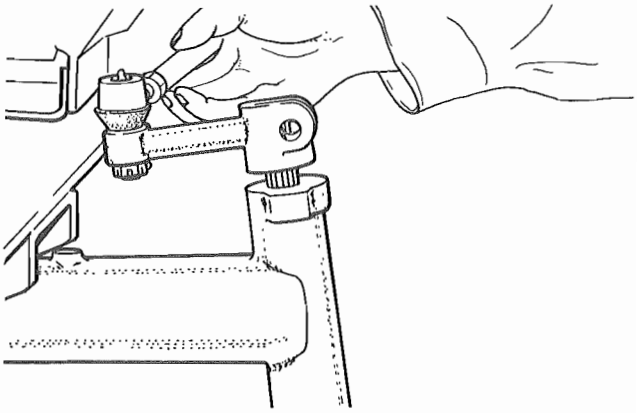

(5) Make sure the gap between the knuckle arm lower side and the washer is 0.5 mm (0.02 in.) or less.

Downloaded from www.Manualslib.com manuals search engine

https://truckmanualshub.com/

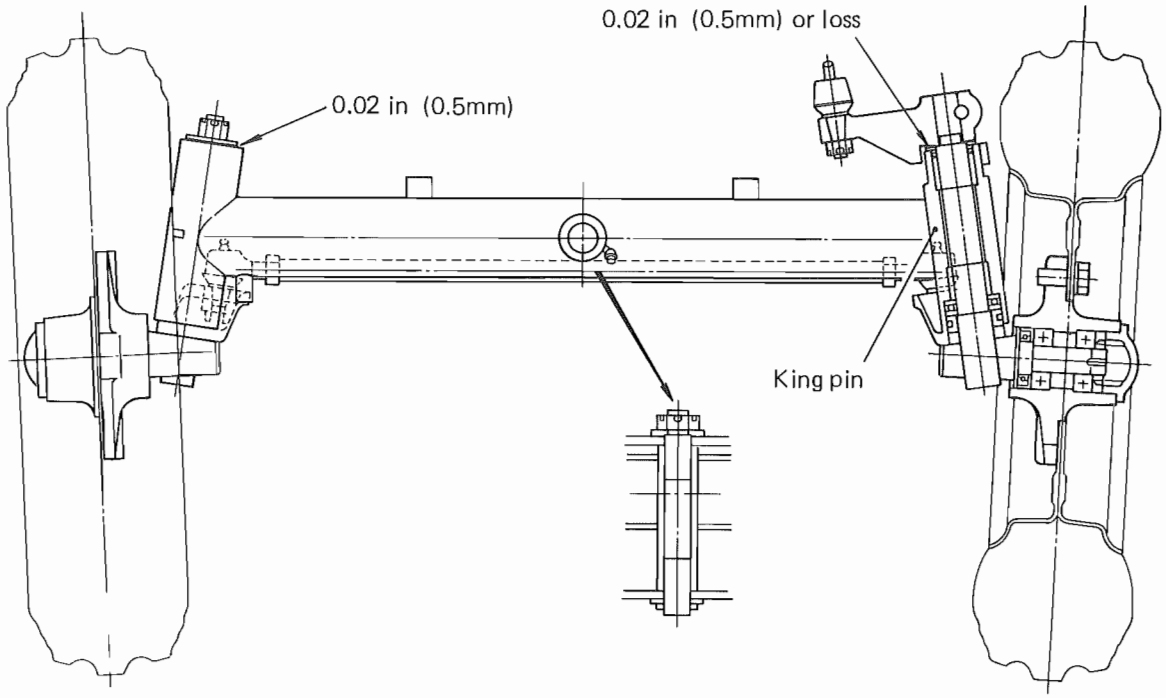

(6) Install the washer to the right-side kingpin, tighten the castle nut, and lock with the cotter pin.

Tightening torque	4.5 ~ 5.5 kg-m (32.5 ~ 39.7 ft-lb)

(7) Make sure the kingpins operate smoothly, and grease them as required.

Downloaded from www.Manualslib.com manuals search engine

https://truckmanualshub.com/

SPECIFICATIONS

			2-wheel drive	4-wheel drive
Steering system			Ackerman jant method	
Axle center			Center pivot type	
Steering knuckle arrangement			Lemoine	Reverse Elliot
Steering gearbox			Ball screw type	
Tread adjustment			Not adjustable	
Axle center swing angle		deg	8	8
King pin angle		deg	8	10
Chamber		deg	2.5	2.5
Caster		deg	3	0
Toe-in		mm (in.)	6.4±1.5(0.25±0.06)	0 ~ 6 (0 ~ 0.24)
Steering angle		deg	55	53
Steering gear ratio			1/15	
Steering wheel size		mm (in.)	403 (15.87)	
Turning radius (with brakes)		mm (in.)	1850 (72.83)	
MT160 Front AG tire	Tire size and ply rating		4.00–9–4 ply	5–12–4 ply
	Tire pattern		Three rib, F–2	Farm lug, R–1
	Tire pressure	kg/cm^2 (psi)	3.25 (46.2)	2.2 (31.3)
	Outside diameter	mm (in.)	457 (18)	550 (21.65)
	Tire width	mm (in.)	113 (4.45)	123 (4.84)
	Maximum load	kg (lb)	200 (441)	210 (463)
	Type of valve		TR–13	
	Rim size		3.00D X 9DT	4JA X 12
MT160 Front ES tire	Tire size and ply rating		18 X 7.00–8–4 ply	6–12–4 ply
	Tire pattern		Pillow dia, G-2	All weather, R-3
	Tire pressure	kg/cm^2 (psi)	2.0 (28.4)	2.2 (31.3)
	Outside diameter	mm (in.)	457 (18)	564 (22.20)
	Tire width	mm (in.)	170 (6.69)	155 (6.10)
	Maximum load	kg (lb)	310 (684)	270 (595)
	Type of valve		TR-413	TR-13
	Rim size		5.50 X 8DT	5JA X 12

Downloaded from www.Manualslib.com manuals search engine

https://truckmanualshub.com/

			2-wheel drive	4-wheel drive
MT180 & MT180H Front AG tire	Tire size and ply rating		4.5–10–4 ply	5–12–4 ply
	Tire pattern		Three rib, F–2	Farm lug, R–1
	Tire pressure	kg/cm² (psi)	2.2 (31.3)	
	Outside diameter	mm (in.)	488 (19.21)	550 (21.65)
	Tire width		120 (4.72)	123 (4.84)
	Maximum load	kg (lb)	205 (452)	210 (463)
	Type of valve		TR–13	
	Rim size		3.00D × 10DT	4JA × 12
MT180 & MT180H Front ES tire	Tire size and ply rating		20 × 8.00–10–4 ply	6–12–4 ply
	Tire pattern		Pillow dia, G–2	All weather, R–3
	Tire pressure	kg/cm² (psi)	1.7 (24.2)	2.2 (31.3)
	Outside diameter	mm (in.)	495 (19.49)	564 (22.20)
	Tire width		1193 (7.60)	155 (6.10)
	Maximum load	kg (lb)	410 (900)	270 (595)
	Type of valve		TR–413	TR–13
	Rim size		6.00I × 10DT	5JA × 12

Downloaded from www.Manualslib.com manuals search engine

https://truckmanualshub.com/

CHAPTER 5-1

TRANSMISSION SYSTEM

(Sliding gear type)

5-1

Downloaded from www.Manualslib.com manuals search engine

https://truckmanualshub.com/

Downloaded from www.Manualslib.com manuals search engine

https://truckmanualshub.com/

TABLE OF CONTENTS

	Page
Description	5-1
Construction	5-2
Removal and disassembly	5-6
Reassembly and installation	5-12
Speed change shifter	5-23

Downloaded from www.Manualslib.com manuals search engine

https://truckmanualshub.com/

Downloaded from www.Manualslib.com manuals search engine

https://truckmanualshub.com/

DESCRIPTION

The transmission in MITSUBISHI MT160(D) and MT180(D) is of selective sliding shift type, designed to give three forward speeds and one reverse speed on each of the two ranges, HIGH and LOW. Thus, a total of six forward speeds and two reverse speeds are available.

There are two PTOs in this transmission. One is called the mid-PTO (for driving front wheels) and the other is called the main PTO (for driving an implement such as the rotary).

The main PTO provides three speeds. Its output shaft is of an SAE standard type, 1-3/8" in nominal size and having 6 splines.

Transmission gears, shafts and shift mechanisms are in the front section, and differential gearing and spiral bevel gear drive, complete with differential lock, are in the rear section of the transmission case.

The spiral bevel gear (crown gear) is integral with the differential case. The differential lock device, designed compact and taking but a small inside space, is controlled from a pedal located on the right of the transmission case.

To both right and left sides of the rear of the transmission case are fitted an aluminum-alloy case in which a final reduction gearing, complete with a brake, is housed. The two cases are built sturdy.

The shift mechanism and the hydraulic control device for the working implement are located in the top of the transmission case. Transmission lubrication and hydraulic control (for the implement) share the oil: the oil in the transmission case is used also by the hydraulic control system, and is prescribed to be a gear oil of SAE #80 for standard weather condition. (The viscosity rating of this oil must be changed for seasonal changes.)

The main PTO is equipped with an overrunning clutch to prevent reverse flow of drive into the transmission from the working implement. Because of this clutch, there are not such operating difficulties as "gear grating" in shifting and "tractor refusing to halt" (even with the main clutch released), when the tractor is working with, say, the single blade rotary mower hitched to it.

Downloaded from www.Manualslib.com manuals search engine

https://truckmanualshub.com/

CONSTRUCTION

A total of fourteen transmission gears and three shafts constitute the selective paths of drive from engine to the rear axle through spiral bevel and differential gears. Drive to the front axle is on-off controlled in the mid-PTO. One of the three shafts is reverse shaft.

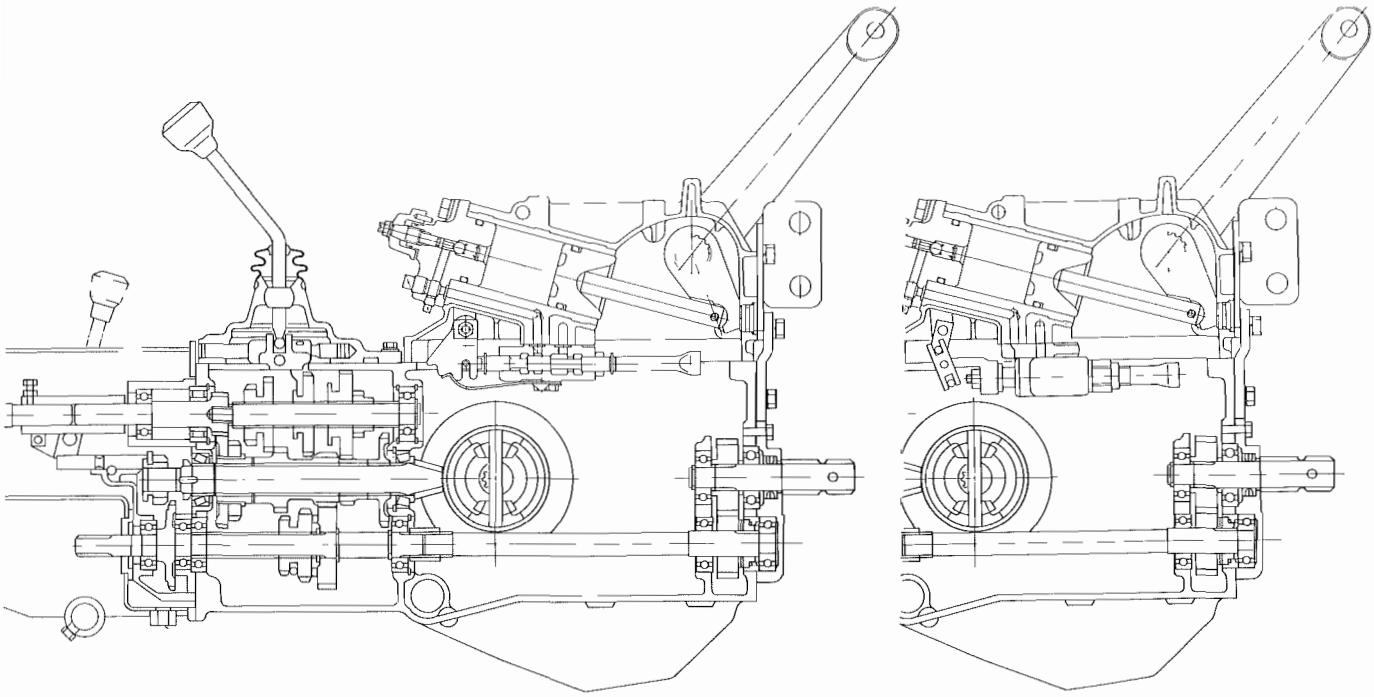

How gears are selected will be seen in the following illustrations. Note that there are two control levers: speed change lever and high-low selector lever.

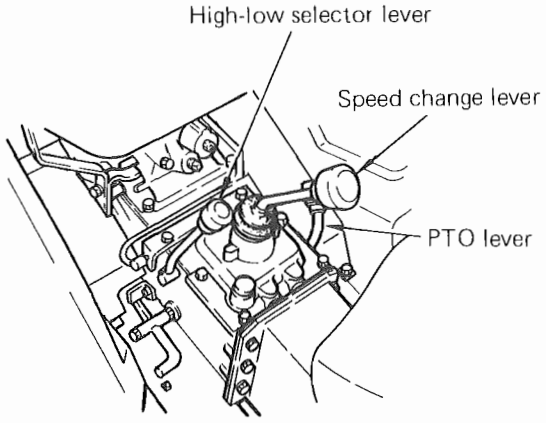

Shifting mechanism

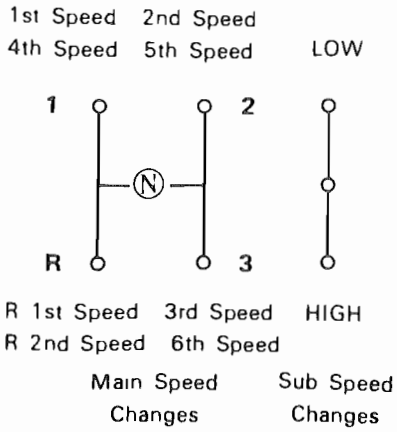

Shift patterns

Downloaded from www.Manualslib.com manuals search engine

https://truckmanualshub.com/

Forward speeds

F-1

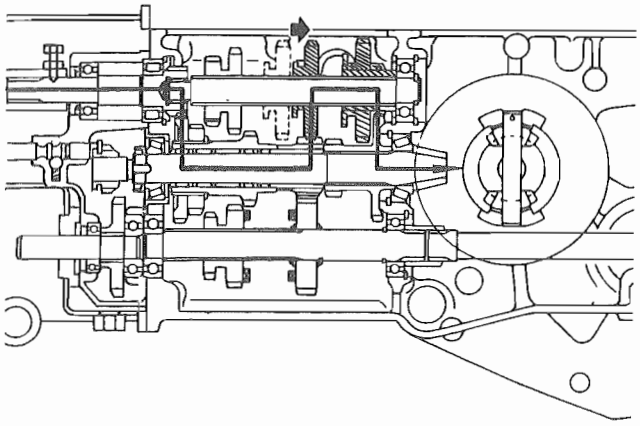

F-4

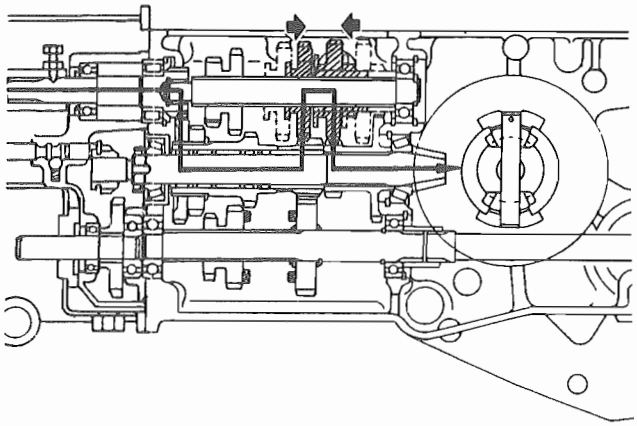

F-2

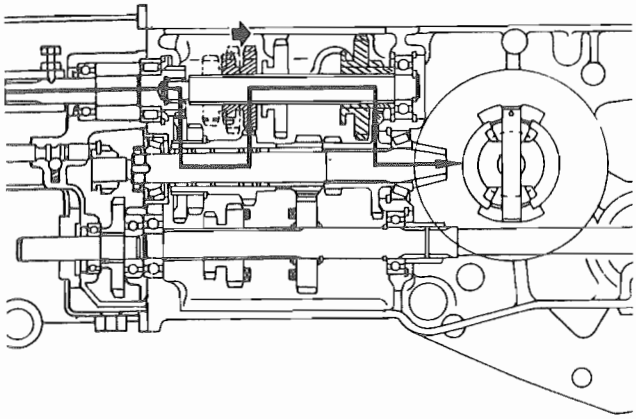

F-5

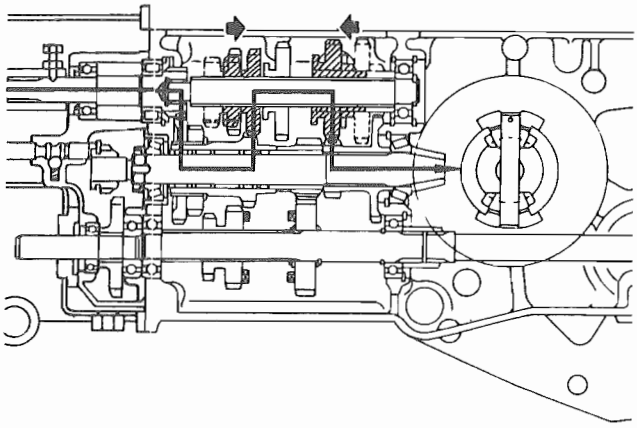

F-3

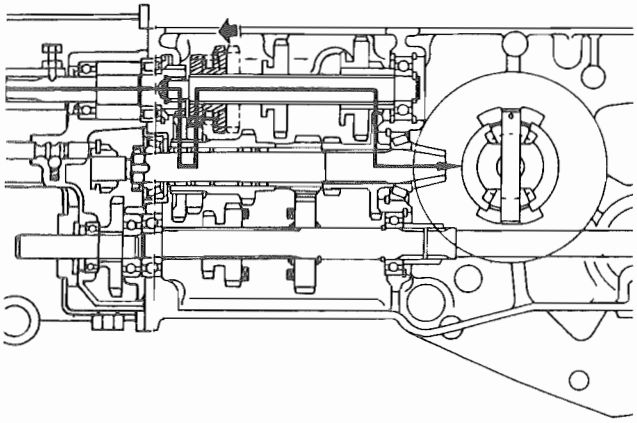

F-6

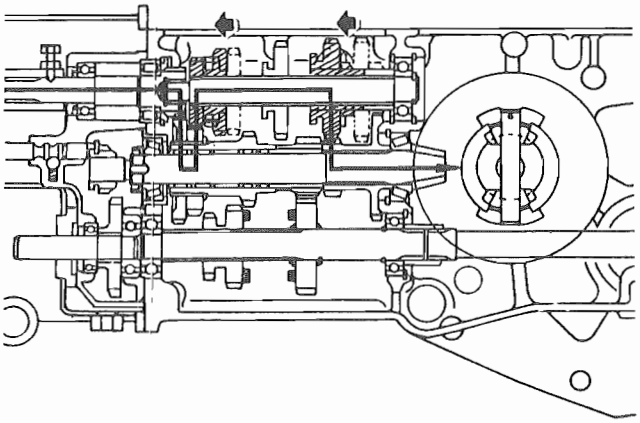

Downloaded from www.Manualslib.com manuals search engine

https://truckmanualshub.com/

Reverse speeds

R-1

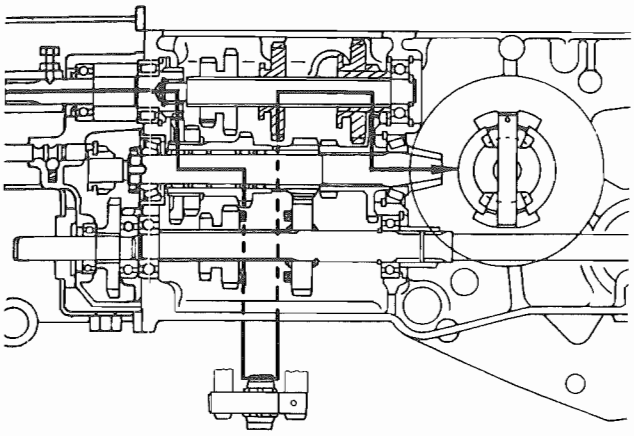

R-2

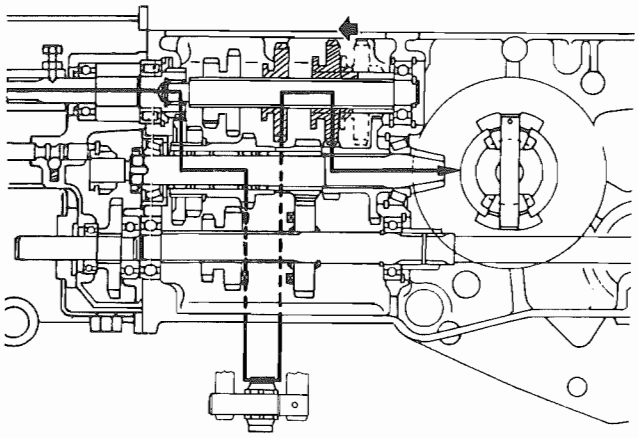

Power take-off

The main PTO, located in the bottom section, has five gears for providing three selective speeds. Its overrunning clutch permits one-way flow of drive (from PTO shaft to driven implement) and not the other way around.

P-1

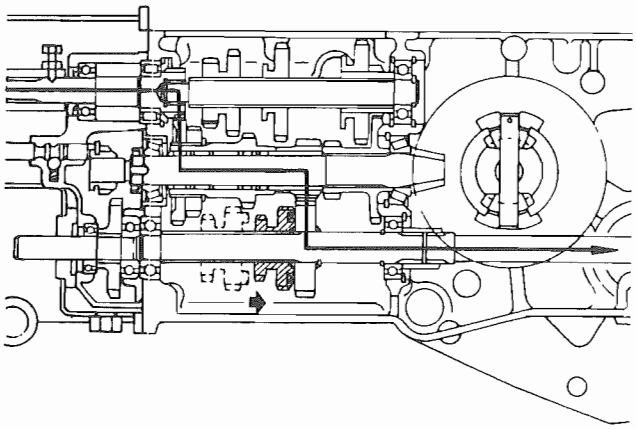

P-2

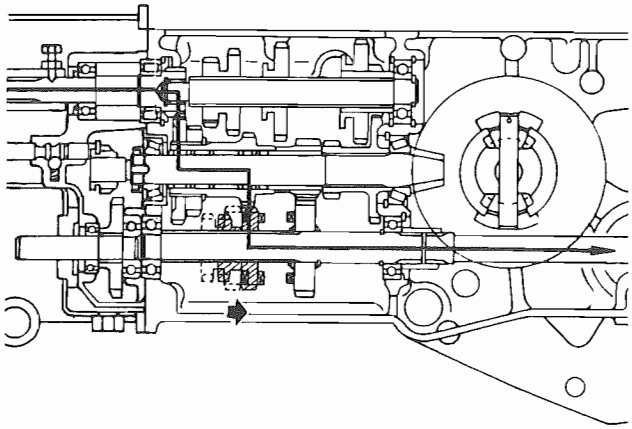

P-3

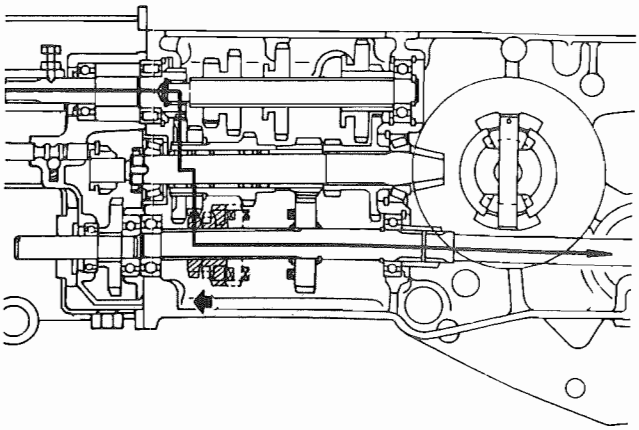

Downloaded from www.Manualslib.com manuals search engine

https://truckmanualshub.com/

Final cases

The brake provided in each aluminum-alloy case is of internally expanding type. It is a water-proof brake. The differential lock device is incorporated in the right-side case.

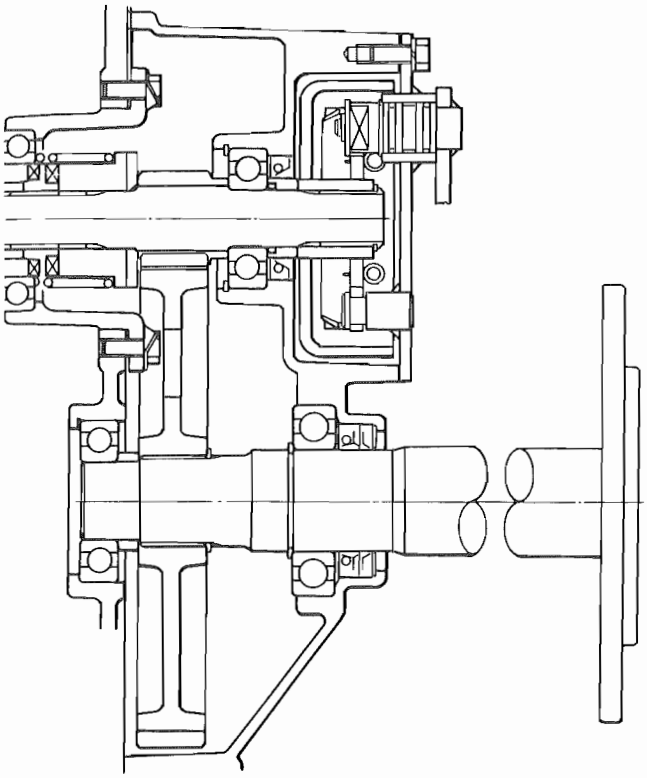

Mid-PTO

This PTO is for driving front axle, and is controlled from the shift lever located at the right side of clutch housing. Drive is taken from the front end of the transmission case.

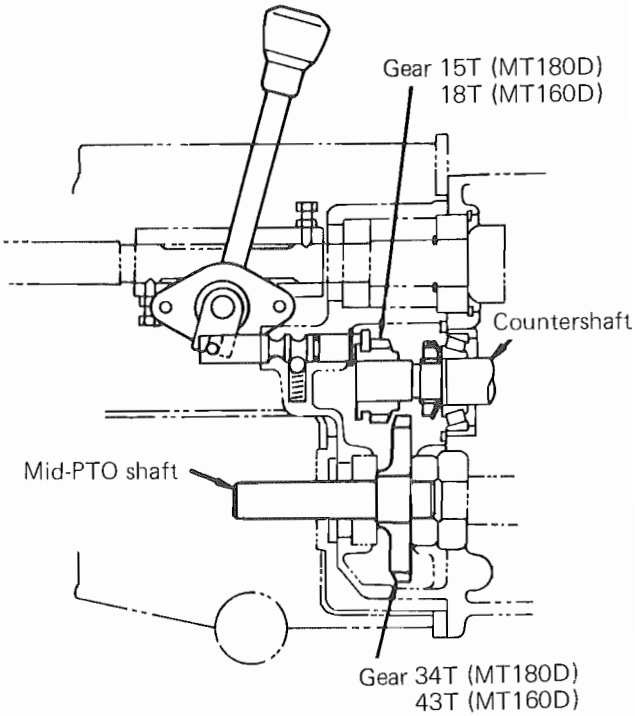

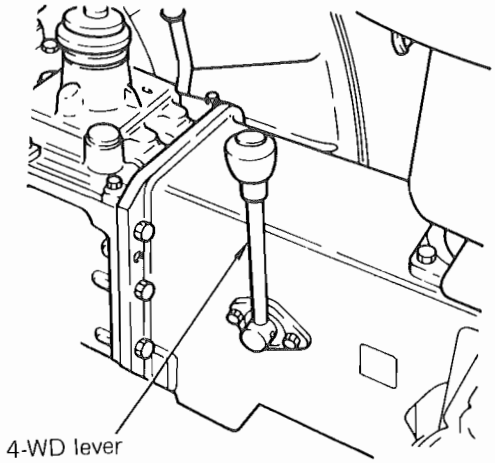

Downloaded from www.Manualslib.com manuals search engine

https://truckmanualshub.com/

REMOVAL AND DISASSEMBLY

NOTE

a) Complete transmission disassembly is occasioned by two cases: 1) when the transmission case has suffered damage, or 2) when PTO shaft has to be replaced. Partial disassembly will suffice in most cases when a gear, shaft or bearing has suffered damage in the transmission.

b) To disassemble the transmission partially or completely, it must be taken down from the machine. A sufficient working space should be secured in advance, and all the necessary hand tools and materials should be prepared for ready use. Before starting to disassemble, clean the case thoroughly, removing dirt, grime and greasy matter. The external surfaces of the case are usually greasy and slippery: be sure to handle it carefully upon removing the transmission from the machine.

Removing the transmission

It is not necessary to remove the transmission from the machine when the ring gear or select shaft has to be disassembled: this disassembly can be carried out on the transmission in place.

To take down the transmission, remove the bolts fastening the transmission case to the clutch housing: it is not necessary to take down the engine.

If, for one reason or another, the engine has to be taken down from the machine, refer to the removal procedure set forth for the clutch housing.

(1) Remove drain plugs, right and left, on transmission case at its rear part. Be sure to drain the case completely.

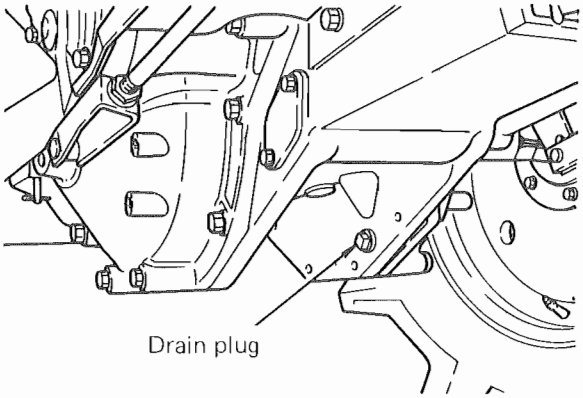

(2) Remove bolts securing the covers, front and rear, of 4-wheel drive universal joints, take off the covers, pick out circlips and pins, and remove the joint.

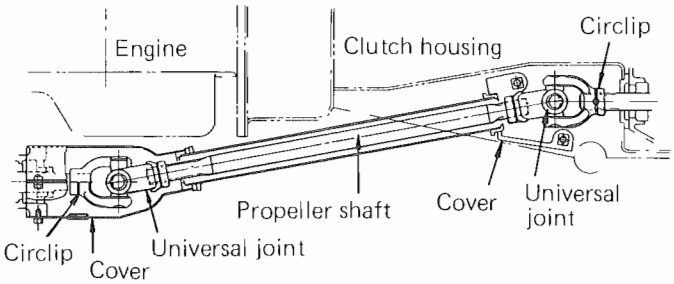

(3) Remove tool box and seat together.

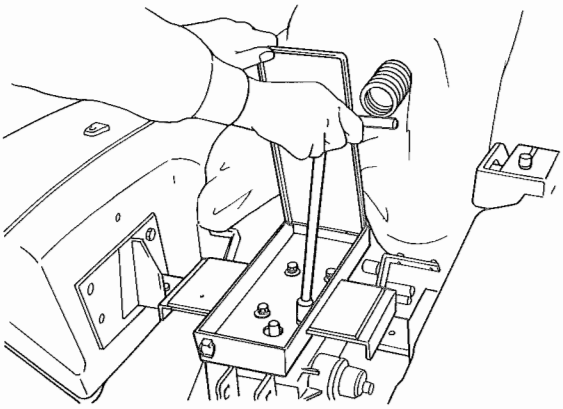

Downloaded from www.Manualslib.com manuals search engine

https://truckmanualshub.com/

(4) Place a jack under the rear part of transmission case, and take up the weight of the case with the jack. Loosen rear wheel bolts, jack up the rear axle at both ends, and take off the rear wheels. Take out the jack supporting the rear part of transmission case.

(5) Remove fenders and covers, right and left.

(6) From each brake cam arm, disconnect brake rod.

(7) Remove steps and footcovers, right and left, taking care not to injure the return springs for clutch pedal and brake pedals.

(8) Remove hydraulic pipe clamp on the left-hand side of clutch housing, and disconnect suction pipe from the left part of transmission case. (The suction pipe is secured by bolts.) From the hydraulic case, remove union bolt, by which the pressure pipe is secured to this case.

NOTE

Be sure to recover the seal washers used on the union bolt.

(9) Remove from the right-hand side of clutch housing the shift lever for 4-wheel drive.

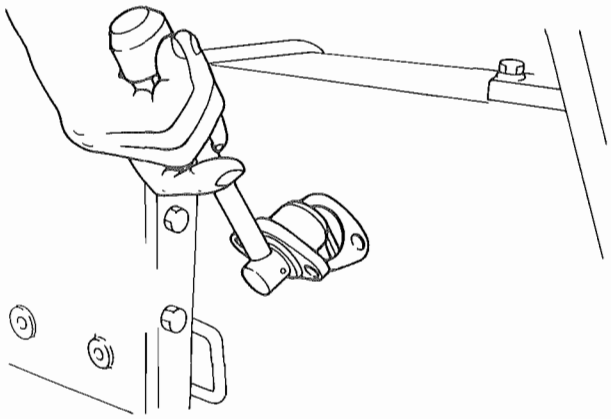

(10) Remove 3-point link bracket.

(11) Place two jacks under the machine to support clutch housing and transmission case, remove the bolts securing the two together, and separate them carefully.

(12) Using a lifting sling and a hoist, lift the transmission out of the machine, and set it on the work stand.

(13) Remove the bolts securing the hydraulic case to the transmission case, and take off the former case.

(14) Remove the cover, in which the shift mechanism is built.

NOTE

This cover and also the hydraulic case are of an aluminum alloy: do not hammer them. They must be handled with care so as to avoid distortion, dent or any other damage.

(15) Loosen set bolt on the drive shaft of the coupling between drive shaft and main shaft, and separate and remove main shaft, complete with the coupling, from drive shaft.

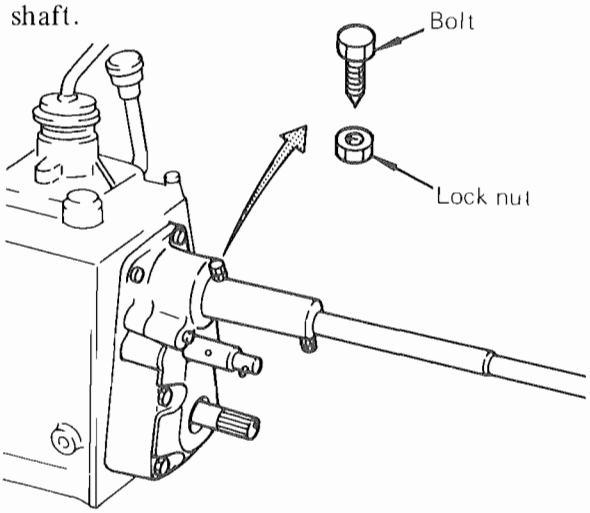

(16) Loosen bolts securing the mid-PTO, and remove this PTO.

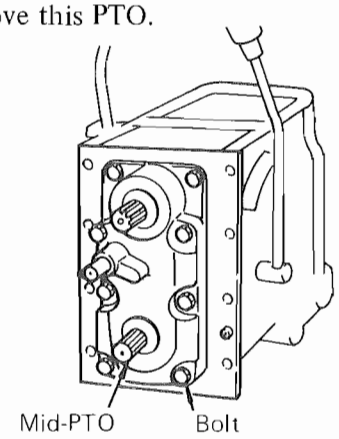

Downloaded from www.Manualslib.com manuals search engine

https://truckmanualshub.com/

(17) Loosen bolts securing each final case to the transmission case, and remove the two cases, right and left.

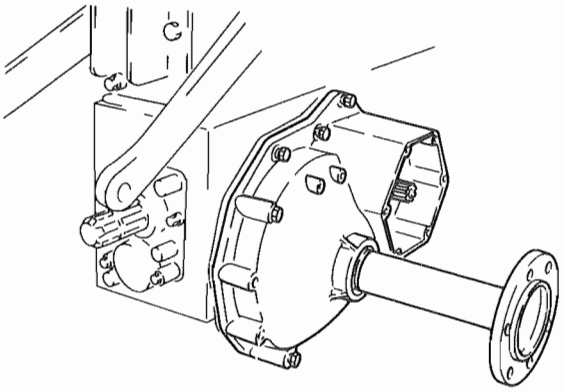

NOTE

Sealant is used in the joint between transmission case and final case. For this reason, the final cases may not separate easily from transmission case. Driving a chisel-like tool into the joint is sure to damage the case, which is made of an aluminum alloy. A soft-metal hammer may be used on the wheel boss in an attempt to sever it from the transmission case but be careful not to give strong hammer blows to the case.

Disassembling the select shaft

Disassembly of this shaft can be effected with the transmission in place: the two parts to be removed in order to allow the shaft to be disassembled are the hydraulic case and the cover on shifting mechanism.

Pick out circlip on the rear portion of select shaft; drive on its forward end lightly; and pull it out with its rear portion foremost while taking out its gears. As necessary, remove ball bearing after picking out its circlip.

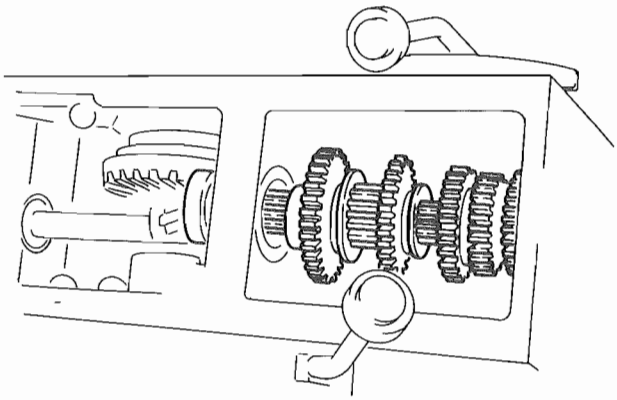

NOTE

Pay attention to the needle bearing and collar on the drive shaft.

Disassembling the drive shaft

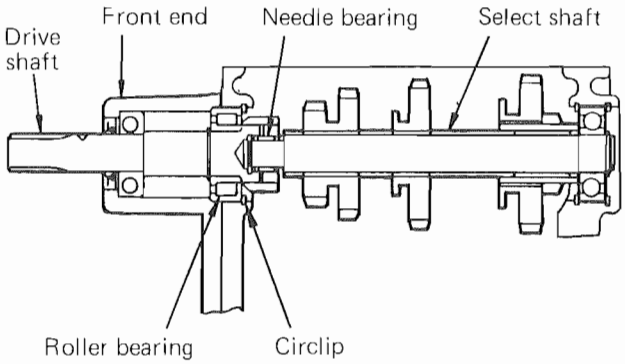

Drive shaft comes out easily from the front end of transmission case when mid-PTO has been removed. Just pull out drive shaft. As necessary, remove roller bearing on drive shaft: a circlip must be taken out to allow this bearing to come off.

NOTE

Pay attention to the needle bearing fitted into drive shaft gear.

Downloaded from www.Manualslib.com manuals search engine

https://truckmanualshub.com/

Removing the differential gear assembly

(1) Remove bearing holders, right and left, from transmission case. The bolts securing these holders are locked with stopper plates: be sure to straighten these plates and, after loosening the bolts, ease the holder off by putting the tip of a plain screwdriver to the notch formed of the holder.

NOTE

When taking out the differential gear assembly, be sure to recover the shim used for backlash adjustment and to check the shim thickness and the number of shim pieces used. The same shim must be re-used in reassembly if the assembly has not been broken apart and is to be restored in its original condition.

(2) Lift the differential gear assembly out of transmission case.

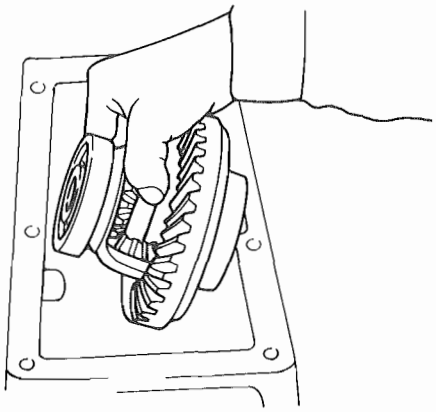

Disassembling the countershaft

(1) Straighten the tab washer under sleeve nut, loosen the nut and remove tapered roller bearing.

(2) Pick out circlip on the forward part of countershaft and, while lightly driving on its forward end, force the shaft out to the rear, taking out the gears, collars, needle bearings and thrust washers, one by one, as the shaft comes out.

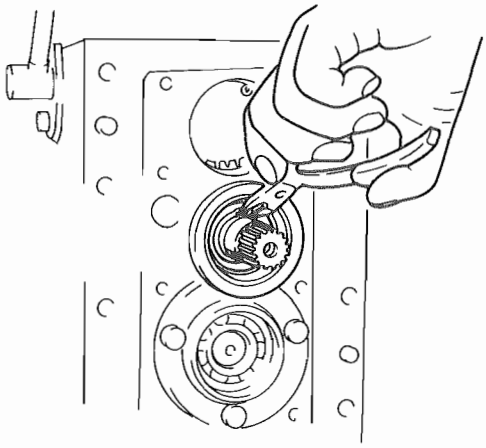

(3) Draw the inner race of tapered roller bearing off countershaft.

Disassembling the reverse shaft

(1) Remove the reverse shaft seal case from the front end of transmission case.

(2) Pull out spring pin from reverse shaft lock and, while displacing the circlips, pull reverse shaft out from the front end. Remove circlips and needle bearings from reverse shaft.

Disassembling the PTO shaft

PTO shaft can be removed with the transmission in place, provided that the hydraulic case be removed in advance. It is here assumed that this case has been taken down.

(1) Loosen bolts securing the cover to the rear end of transmission case, and remove the cover.

(2) Pick out circlip on the forward end portion of PTO shaft; lightly drive on the end face of PTO shaft and, while drawing it out, take out its gear. As necessary, remove ball bearings from PTO shaft, and oil seals from the cover.

Disassembling the PTO drive shaft

This drive shaft is in two parts: rear-side part and front-side part. Removal of rear-side shaft, too, can be effected with the transmission in place, after PTO shaft has been taken out.

Downloaded from www.Manualslib.com manuals search engine

https://truckmanualshub.com/

<Rear-side shaft removal>

(1) Ease out circlip on ball bearing inside transmission case.

(2) Draw rear-side shaft toward the rear, with a screwdriver hitched to ball bearing on the rear side.

(3) When rear-side shaft is halfway out, pick out circlip on the front side and the one already eased out of the groove next to ball bearing. With these circlips removed, draw out the shaft from transmission case.

<Front-side shaft removal>

To permit removal of this shaft, transmission case must be off clutch housing, and both countershaft and rear-side part of PTO drive shaft must be out.

(1) Remove bearing holder on the front end of transmission case.

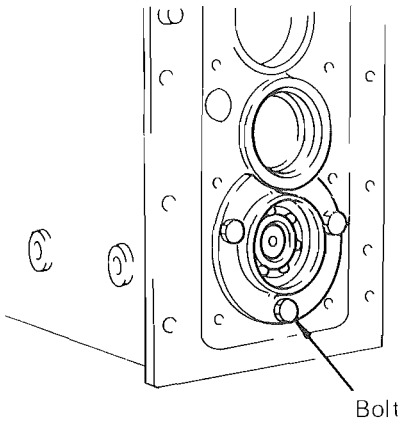

(2) Draw out the front-side shaft from the front end.

(3) Remove ball bearing (on the forward part of the front-side shaft so drawn out). Remove the shaft complete with gear 30T and gear 20T-26T from the upper side of transmission case.

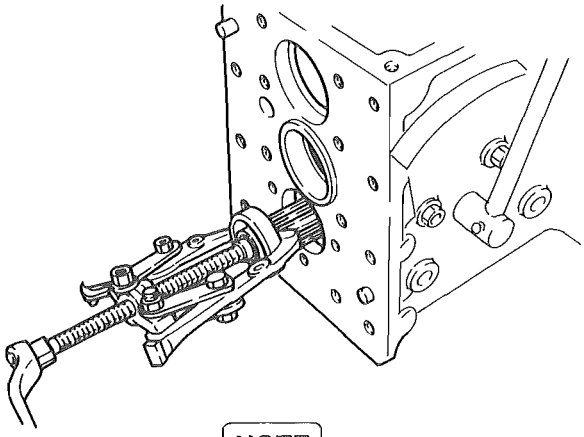

NOTE

Remove the other ball bearing from the front-side shaft as necessary.

Disassembling the differential gear assembly

(1) Give match marks to differential gear case and spiral gear.

(2) Straighten the stopper washers under the heads of bolts securing the spiral gear, remove the bolts and take off spiral gear.

(3) Pull off locking pin from center pin, draw out the pin, and take out pinion gears, side gears and thrust liners.

Disassembling the final cases

After removing the two final cases from transmission case and detaching brake cover and drum from each, proceed as follows:

<Differential shaft>

(1) Pick out circlip, remove pinion shaft (it may be necessary to lightly tap on this shaft), and draw out oil seal bushing together with ball bearing.

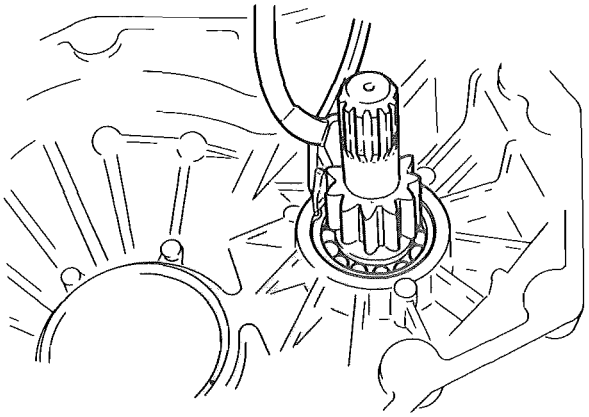

Downloaded from www.Manualslib.com manuals search engine

https://truckmanualshub.com/

(2) From the right final case, remove differential lock shifter: loosening the nut allows the shifter to come off.

<Rear wheel shaft>

(1) Draw out ball bearing, and remove collar and final reduction gear.

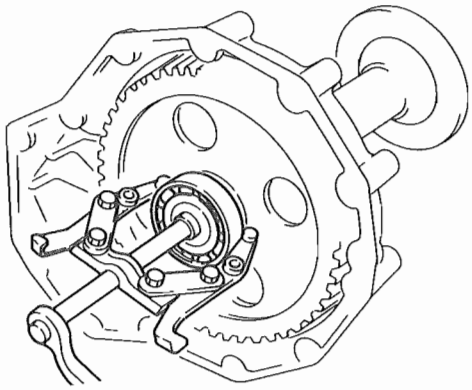

(2) Pick out two circlips and drive rear wheel shaft out of final case.

Disassembling the mid-PTO

Draw out the mid-PTO shaft and remove ball bearings and gears together. There is no unusual step involved in this disassembly.

Downloaded from www.Manualslib.com manuals search engine

https://truckmanualshub.com/

REASSEMBLY AND INSTALLATION

(1) Before starting the reassembly work, be sure that all transmission parts are perfectly clean, check to be sure that there is no missing parts, and, when building up sub-assemblies, refer to the specifications and assembly standards to make sure that each sub-assembly is properly built up with respect to gaps, running clearances, plays, backlashes, etc.

(2) Oil or grease sliding surfaces, as necessary, at the time of installing moving parts. Similarly, grease "O" rings, oil seals and the like just before fitting them.

(3) It is advisable but not mandatory that "O" rings, gaskets, packings, oil seals, tab washers and the like be regarded as expendable items and be replaced by new ones upon their removal in disassembly.

(4) Wrap through-bolts with sealing tape just before using them in reassembly.

(5) Have sealant on hand and use it on the mating faces of cases and covers.

(6) Build up the transmission in the following sequence:

(a) Differential gear reassembly

(b) Determination of shim thickness on the basis of countershaft cone center measurement

(c) PTO drive shaft (rear-side) reassembly

(d) PTO drive shaft (front-side) reassembly

(e) PTO shaft reassembly

(f) Reverse shaft reassembly

(g) Countershaft reassembly

(h) PTO gear tooth alignment and adjustment

(i) Mid-PTO shaft reassembly

(j) Main shaft installation

(k) Select shaft reassembly

(l) Differential gear installation

(m) Final case reassembly

(n) Final case installation.

(o) Speed change shifter reassembly

Reassembling the differential gear assembly

(1) Oil thrust liners, fit the liners to the differential gear case, install side gears, position pinion gears in place, together with liners, and insert center pin.

(2) Adjust the thickness of thrust liners, as necessary, to secure a backlash of 0.25 to 0.35 mm (0.010 to 0.014 in.) between pinion gear and side gear.

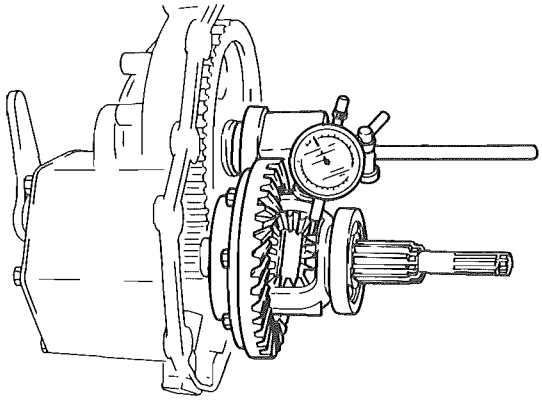

Backlash	0.25 ~ 0.35 mm (0.010 ~ 0.014 in.)

Shim stock for this backlash adjustment is available in the following thicknesses:

Unit: mm(in.)

Thickness	Part No.
1.2 (0.047)	1135 1408 001
1.4 (0.055)	1135 1409 001
1.6 (0.063)	1135 1411 001

(3) After producing the specified backlash, drive lock pin into center pin to lock the latter pin. Insert differential shaft and rotate the differential by hand to be sure that it rolls smoothly.

(4) Fit spiral gear to the case, as guided by the

Downloaded from www.Manualslib.com manuals search engine

https://truckmanualshub.com/

match marks, setting the gear in its original position, put on stopper washers and bolt the gear to the case, tightening the bolts to this torque value:

Tightening torque	2.5 ~ 3.0 kg-m (18 ~ 22 ft-lb)

NOTE

Stopper washer A (Part number 1135 1405 000) has a lug formed as shown. Position this washer in, such a way that the lug will cover up the spring pin locking the center spring.

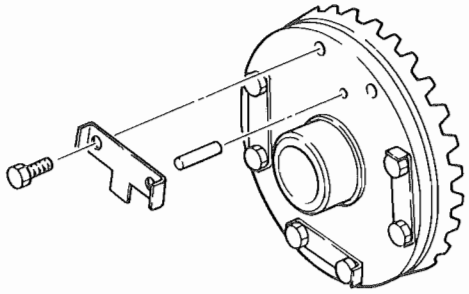

(5) Install ball bearings in the differential case.

Measuring the countershaft cone center for shim selection

(1) In the bore provided in the transmission case wall, through which the countershaft is to enter, set circlip, and fit the outer race of tapered roller bearing. Be sure to discriminate between the inside end face and the outside end face of this race.

(2) Mount the inner race of tapered roller bearing on countershaft.

(3) Position countershaft in place, install the other tapered roller bearing on the front side, and secure it by tightening sleeve nut. Check to be sure that the countershaft so secured has no end play. Remember, cone center measurement with the use of a special tool presumes absence of end play on this shaft. Select the shim thickness, in the manner explained, to obtain this value:

Countershaft cone center	77 ± 0.05 mm (3.031 ± 0.002 in.)

How to use the two-piece special tool

Set tool A on the seats (formed of transmission case) for the bearing holders of differential gear case. Position tool B between the end face of pinion (of countershaft) and tool A in place.

Select the shim thickness that permits the small-diameter end of tool B to enter freely and prevents the large-diameter end from entering. The shim so selected is to be inserted between the outer race of tapered roller bearing and the circlip at the time of reassembling the countershaft.

Shim stock for this selection is available in the following thicknesses:

Unit: mm (in.)

Thickness	Part No.
Shim set, drive shaft	1019 1309 000
0.1 (0.004)	1135 1315 011
0.2 (0.008)	1135 1316 011
0.5 (0.020)	1135 1317 011

The required shim thickness is equal to the clearance which occurs when the small-dia. tool B is placed between pinion gear and tool A.

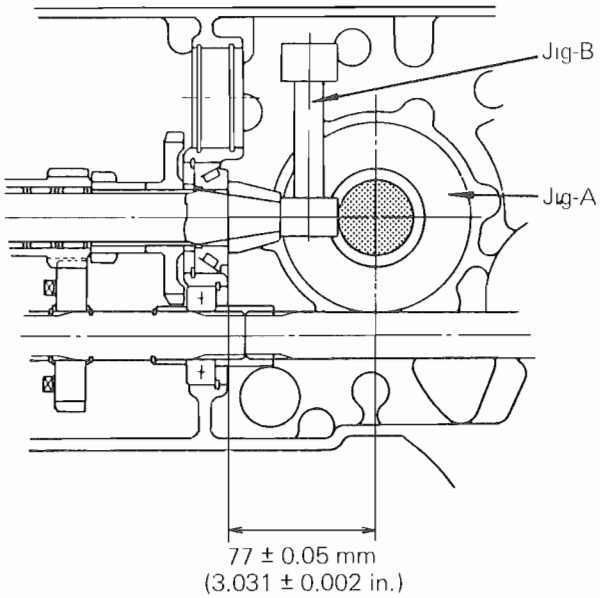

Downloaded from www.Manualslib.com manuals search engine

https://truckmanualshub.com/

Shim selection for countershaft gear clearance

The thickness of shim to be placed between the collar and gear 34T at the time of reassembling the countershaft must be determined in advance.

On the countershaft complete with tapered roller bearing, mount the collar, gear 34T, gear 17T, thrust liner, gear 18T-23T, gear 29T, gear 31T, needle bearings, collar, needle bearings, thrust liner – all in that order – and, as the last part, circlip next to the thrust liner. Under this condition, measure the clearance between the last circlip and the thrust liner, and on the basis of this reading, select the shim that will give the clearance to be anywhere between 0.1 and 0.4 mm (0.004 and 0.016 in.).

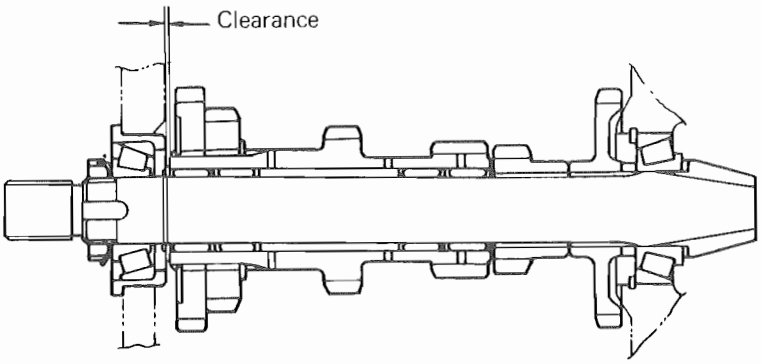

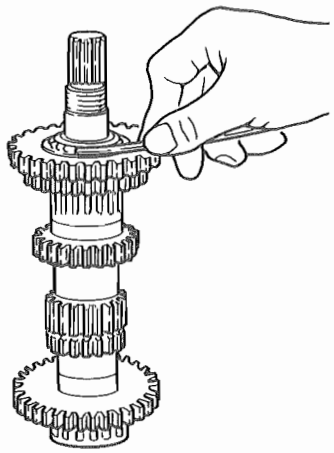

Shim stock for this adjustment is available in two thicknesses:

Unit: mm (in.)

Thickness	Part No.
0.2 (0.008)	1135 1314 011
0.4 (0.016)	1135 1318 000

Reassembling the PTO drive shaft

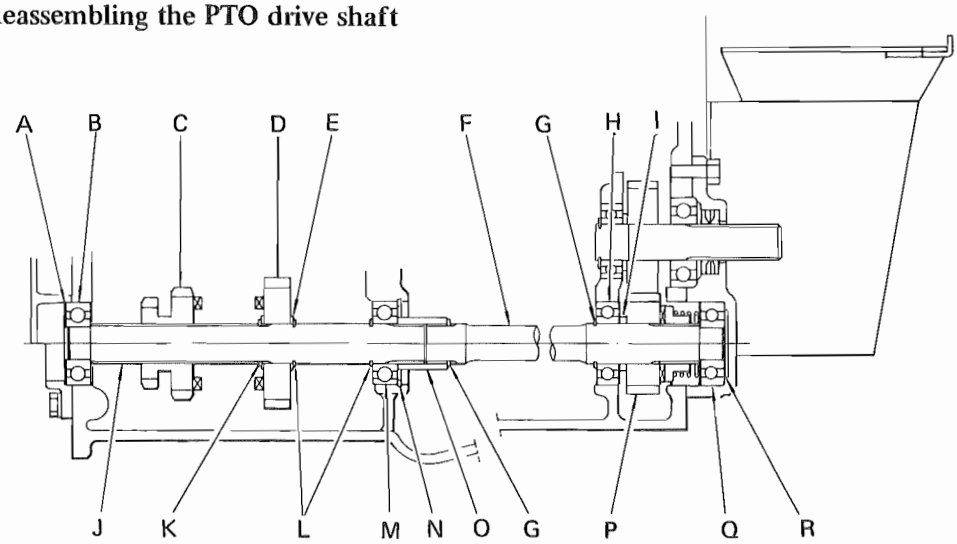

A-Liner (t=1.0, 0.4)
B-Ball bearing
C-Gear (20T-26T)
D-Gear (30T)
E-Liner
F-PTO drive shaft
G-Circlip
H-Ball bearing
I-Collar
J-Shaft
K-Circlip
L-Circlip
M-Ball bearing
N-Circlip
O-Collar
P-Gear (23T)
Q-Ball bearing
R-Circlip

<Rear-side shaft>

(1) Install circlip(N) in the bore for ball bearing. (M)This bearing is the one at the middle of transmission case. Fit two circlip (G) to the groove provided in rear-side shaft.(F)

Downloaded from www.Manualslib.com manuals search engine

https://truckmanualshub.com/

(2) Push ball bearing (H) onto rear-side shaft, bringing the bearing all the way until it meets the circlip (G) on the rear end. Installing the shaft (F) in transmission case, mount collar (I) and gear 23T (P), with its claws coming on the rear side.

(3) Fit the collar (O) to the shaft, (F) making sure the splined fit is smooth.

<Front-side shaft>

(1) Grease "O" ring and fit it to PTO shifter. Install the shifter by bringing it into transmission case.

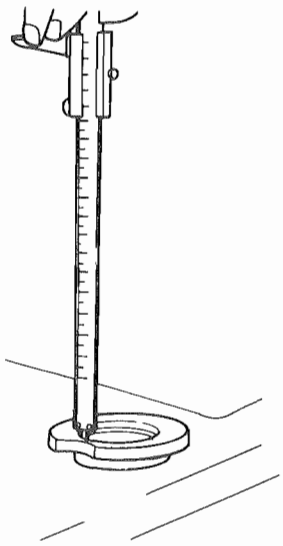

(2) Install circlip (L) on the rear portion of front-side shaft, (J) and mount the inner race of ball bearing.. (M)

(3) Set circlip (L) on that part of front-side shaft where gear 30T takes its position. Mount thrust liner (E) and gear 30T (be sure to locate its clutching claws on the correct side), fit thrust liner, (E) and retain them by installing circlip. (K)

(4) Put on gear 20T-26T, locating the claws on the correct side, and feed the front-side shaft into transmission case.

(5) Set the shifter on gear 20T-26T, and position the shaft (J) and shifter in place, and install ball bearing (B) on front side.

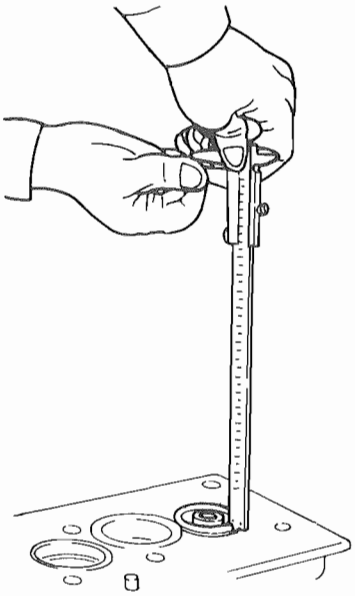

(6) Measure the amount by which the ball bearing (B) protrudes from transmission case and also the depth from bearing holder flange face to the bearing. On the basis of the readings, determine the liner (A) thickness necessary to reduce the clearance to less than 0.4 mm (0.016 in.), insert the needed liner between bearing holder and ball bearing, and secure these parts in place.

PTO drive shaft end play	0.4 mm (0.016 in.), maximum
Tightening torque	2.5 ~ 3.0 kg-m (18 ~ 22 ft-lb)

For this adjustment, use the liner (A) of the following thicknesses:

Unit: mm (in.)

Thickness	Part No.
Shim set, PTO	1974 1617 000
0.4 (0.016)	0730 0005 204
1.0 (0.039)	0730 0005 210

Downloaded from www.Manualslib.com manuals search engine

https://truckmanualshub.com/

Reassembling the PTO shaft

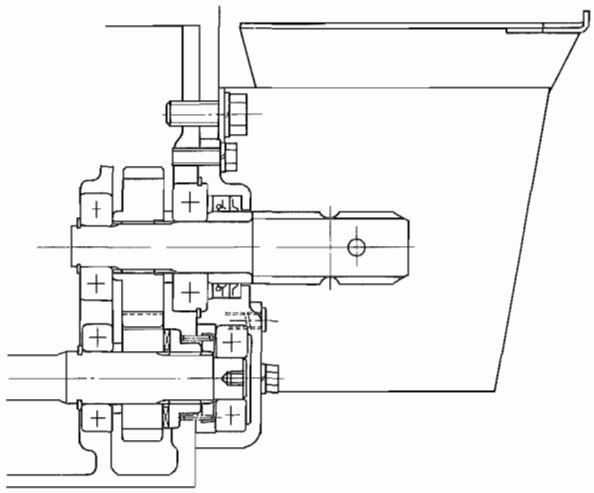

(1) Install oil seal collar on PTO shaft, with the chamfered face of the collar coming on the front side.

(2) Install ball bearing on PTO shaft, positioning the bearing in such a way that its circlip comes on the outer side and, through the rear end of transmission case, install the PTO shaft and then install collar and gear 27T on it.

(3) Grease oil seal, and fit the seal to the cover.

(4) Through the rear end of transmission case, install one-way clutch on PTO drive shaft.

(5) Insert spring and washer, and install ball bearing.

(6) Apply sealant to the cover, and install the cover from the rear end of transmission case.

NOTE

Wrap through-bolts with sealing tape.

Tightening torque	2.5 ~ 3.0 kg-m (18 ~ 22 ft-lb)

(7) To the front end of PTO shaft, fit ball bearing and retain it by installing circlip.

(8) Turn the shaft by hand to make sure that one-way clutch operates accurately and that the shaft rotates smoothly.

Reassembling the reverse shaft

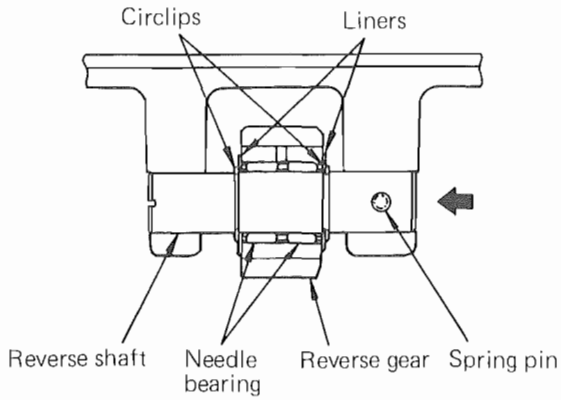

(1) Through the hole provided in the front end wall of transmission case, insert reverse shaft and, while pushing the shaft gradually, install it on the circlip, thrust liner, reverse gear complete with needle bearings, thrust liner and circlip, in that order. With the reverse shaft set in place, align the spring pin hole, and drive the pin into the hole to lock the shaft.

(2) Spin the gear by hand and be sure that it is capable of smooth rotation.

(3) Drive the seal cap into the hole in the front end wall of transmission case, making sure that the cap is flush with or down from the end surface.

Downloaded from www.Manualslib.com manuals search engine

https://truckmanualshub.com/

Reassembling the countershaft

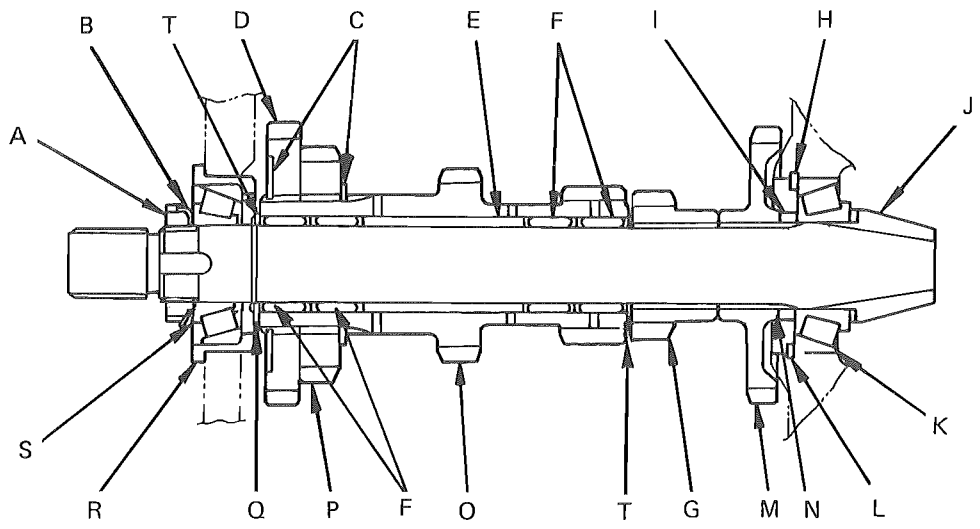

A-Nut
B-Washer
C-Circlip
D-Gear (31T)
E-Collar
F-Needle bearing
G-Gear (17T)
H-Circlip
I-Collar
J-Countershaft
K-Tapered roller bearing
N-Shim
M-Gear (34T)
N-Liner
O-Gear (18T-23T)
P-Gear (29T)
Q-Circlip
R-Holder
S-Tapered roller bearing
T-Liner

(1) Insert the shim (L)(which has been selected on the basis of cone center measurement) between the circlip (H) and the outer race of tapered roller bearing (K) in the wall of transmission case.

(2) Insert countershaft (J) (to which tapered roller bearing (K) has been mounted) into transmission case through its rear end. Place the shim (N) (which has been selected on the basis of the clearance measured on countershaft gear) between collar (I) and gear 34T (M). Mount on the countershaft being inserted with the following parts: gear 17T (G), thrust liner (T), gear 18T-23T (O), gear 29T (P), gear 31T (D), needle bearings (F), collar (E), needle bearings (F), and thrust liner (T), in that order. Retain these parts by installing circlip (Q).

NOTE

These gears have their tooth ends chamfered. Be sure to bring the chamfered end to the side shown in the sectional view.

(3) Install the outer race of tapered roller bearing (S) in the holder (R) fitted to the transmission case. Mount tapered roller bearing on countershaft and secure the countershaft in place by tightening its sleeve nut (A). Be sure to use tab washer (B) on this nut.

NOTE

When fitting the outer race, be sure to discriminate its inner end and outer end.

(4) Tap lightly on each end of countershaft in place, and make sure that there is no end play on this shaft. Measure the preload of countershaft and, as necessary, adjust the tightness of its bearings to produce the specified preload.

Countershaft preload	0.08 ~ 0.10 kg-m (0.58 ~ 0.73 ft-lb)

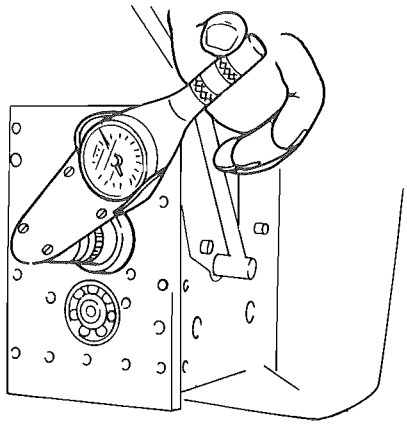

(5) With a proper preload obtained, lock the sleeve nut by bending tab washer sharply.

Downloaded from www.Manualslib.com manuals search engine

https://truckmanualshub.com/

PTO gear tooth alignment and adjustment

(1) Tentatively secure guide plate to transmission case.

(2) Fit stopper spring and stopper ball to PTO shift lever: grease the ball before inserting it. Attach shift lever to PTO shifter, and lock the lever by inserting spring pin.

(3) Operate the shift lever to see if the teeth of PTO gear and counter gear are properly aligned; if not, align them by shifting the guide plate on transmission case. After making sure that the shifting action is satisfactory, secure guide plate permanently by tightening to this torque value:

Tightening torque	2.5 ~ 3.0 kg-m (18 ~ 22 ft-lb)

Reassembling the mid-PTO

(1) Grease oil seal, and fit the seal to mid-PTO case.

(2) Set 4-WD shifter-shaft stopper spring and stopper ball in mid-PTO case. Grease "O" ring, and install"O"ring and circlip on shifter shaft. Install the shaft in mid-PTO case, and drive spring pin into the forward end of shifter shaft.

(3) Mount the roller-bearing(C) inner race on drive shaft,(J)brining the flanged end of the race to the opposite side of the gear, and retain the inner race by fitting circlip.(B) Refer to the upper figure on the page 5-19.

(4) Push in the ball bearing on mid PTO shaft. Install gear with its longer boss coming on the front side. Push in the ball bearing on the shaft.

(5) Install PTO shaft and drive shaft in the mid-PTO case.

(6) Mount gear 15T for 180D and 18T for 160D, positioning it properly relative to the fork of shifter shaft. Apply sealant to the mating face of mid-PTO case and fit it to transmission case. Secure the mid-PTO case by tightening its bolts to this torque value:

Tightening torque	2.5 ~ 3.0 kg-m (18 ~ 22 ft-lb)

Installing the main shaft

Fit the coupling to the main shaft, and connect this shaft to drive shaft. Be sure to lock the main shaft securely by means of set bolt. After tightening the set bolt, lock it positively.

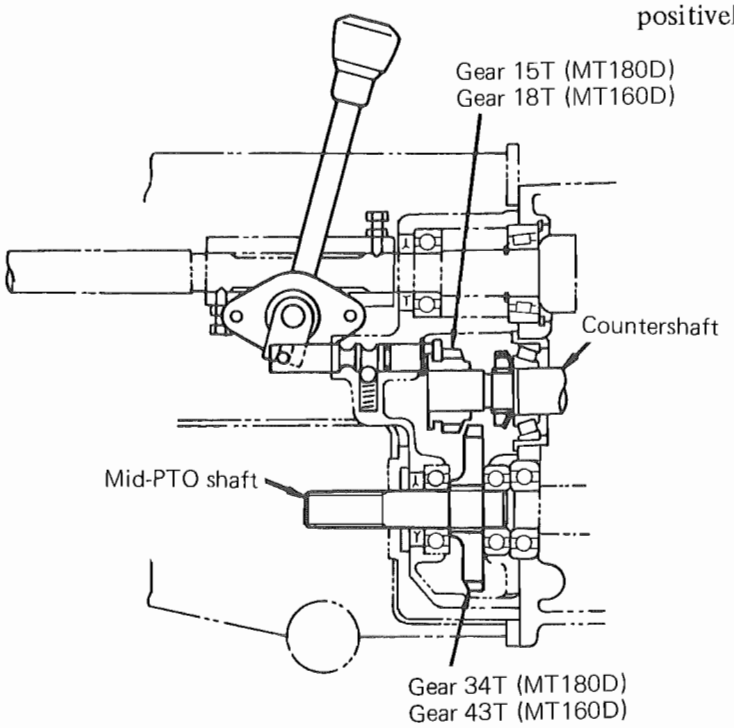

Downloaded from www.Manualslib.com manuals search engine

https://truckmanualshub.com/

Reassembling the select shaft

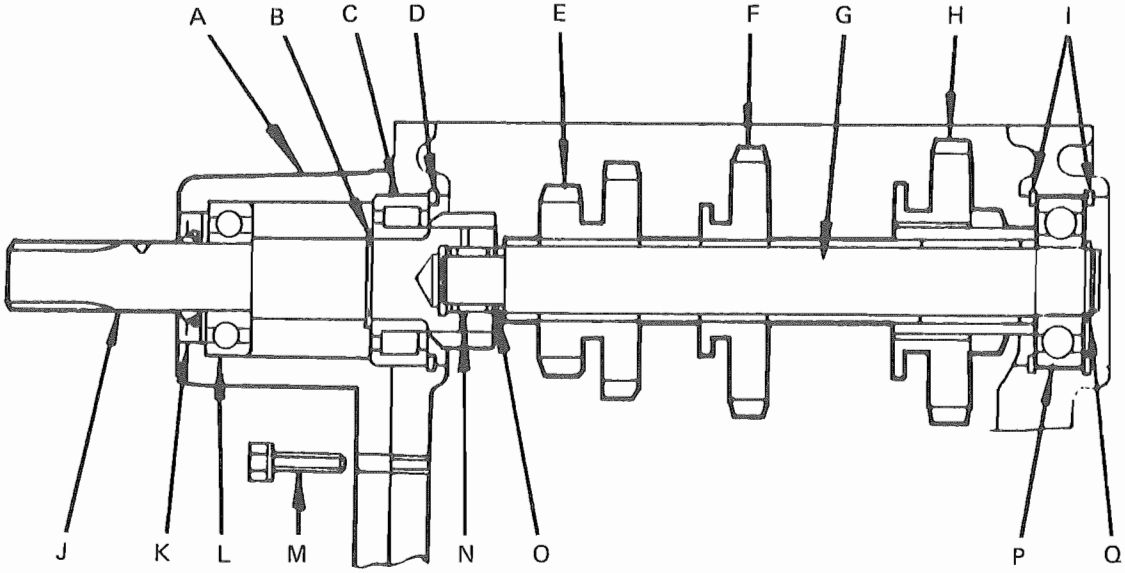

A-Bearing holder	F-Gear (32T)	K-Oil seal	P-Ball bearing
B-Circlip	G-Select shaft	L-Ball bearing	Q-Circlip
C-Roller bearing	H-Gear (15T-33T)	M-Bolt	
D-Circlip	I-Circlip	N-Needle bearing	
E-Gear (20T-27T)	J-Drive shaft	O-Collar	

(1) Install high-low shifter in transmission case. Grease "O" ring, and fit it to shifter at its portion outside of the case while pushing it against the case.

(2) Push in the shifter all the way, fit the plate to the case, and tighten its bolts tentatively, leaving them finger-tight.

(3) Fit ball bearing (P) to select shaft (G), and put on circlip to retain the bearing (Q).

(4) Install circlip (I) in the hole provided in the wall of transmission case for select shaft.

(5) While inserting select shaft (G) through the rear end of transmission case, mount on this shaft the following parts: gear 15T-33T (H), gear 32T (F) (bring their shifter fork grooves on the front side) and gear 20T-27T (E) (bring gear 20T on the front side). Set shifter in the fork grooves of gear 15T-33T (H).

(6) Fit collar (O) and needle bearing (N) to the forward part of select shaft (G), and connect this part of select shaft to drive shaft (J). Be sure to oil the needle bearing (N) before installing it.

(7) Install circlip (I) in the circlip groove provided in the wall of transmission case to retain the ball bearing on the rear part of select shaft and set the select shaft.

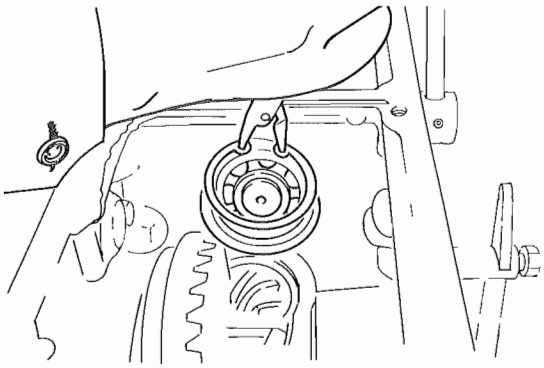

NOTE

Be sure to position the gears in place as shown. Discriminate the two ends of the gear: one end is chamfered but the other is not. "Hard shifting" is often due to these gears positioned the other way around.

(8) Move the installed parts by hand to be sure that select shaft is capable of smooth

Downloaded from www.Manualslib.com manuals search engine

https://truckmanualshub.com/

rotation and that each gear is capable of smooth sliding motion.

(9) Fit stopper spring and ball to high-low selector lever: grease ball before inserting it. Connect the lever to shifter shaft, and secure the connection by driving in spring pin.

(10) Bring the gear 34T and the gear 17T on countershaft into correct positional relationship with the gear 15T-33T in reference to their faces, by adjusting the guide plate on transmission case. After this adjustment, secure the plate permanently by tightening its bolts to this torque value:

Tightening torque	2.5 ~ 3.0 kg-m (18 ~ 22 ft-lb)

(11) Attach the knob to high-low selector lever. Operate the lever in the usual manner to make sure that shifting action is smooth and positive.

Installing the differential gear assembly

(1) The differential gear assembly is already in built-up condition at this stage, complete with the ring gear. Lower it into transmission case, with the ring gear coming on the left side.

(2) Position the two bearing holders (differing in length) in place, seating each holder correctly by matching its notch to the corresponding one formed of case. The long holder comes on the right side, and the short one on the left.

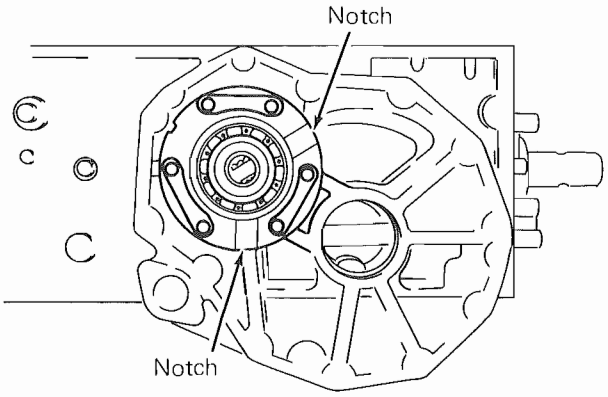

NOTE

Bear in mind that, if the holders are not positioned correctly as dictated by the matching notches, interference occurs between final gear and bearing holder. The final case might break if the case is secured under this condition (interference between holder and gear.)

(3) Tentatively tighten the two bearing holders in place, right and left, on transmission case, making their securing bolts snug-tight. Be sure that stopper washers are used on these bolts.

(4) Using the below-indicated sizes (thicknesses) of shim stock (liner), adjust the ring gear backlash to the specification in the manner hereunder described:

Ring gear backlash	0.25 ~ 0.35 mm (0.01 ~ 0.014 in.)

Shim stock for ring gear backlash adjustment

Unit: mm (in.)

Thickness	Part No.
Shim set	1019 1425 000
0.2 (0.008)	1135 1419 000
0.3 (0.012)	1135 1421 000
0.5 (0.020)	1135 1422 000

(a) Insert the liner between transmission case and left-side bearing holder. Be sure that the individual shims (each consisting of one or more sheets) of the liner are equal in thickness. This requirement is met by using the same number of shim sheets. The liner here is tentative and need not be exact in thickness, but make sure that the clearance is filled up uniformly all around.

(b) Tighten the left-side holder (which is now sided by the tentative liner) good and hard, but leave the right-side holder in snug-tight condition. Take a backlash reading, as shown, to see if the backlash is within the specified range indicated above; if not, loosen the left-side holder

Downloaded from www.Manualslib.com manuals search engine

https://truckmanualshub.com/

and increase or decrease the thickness of the liner there.

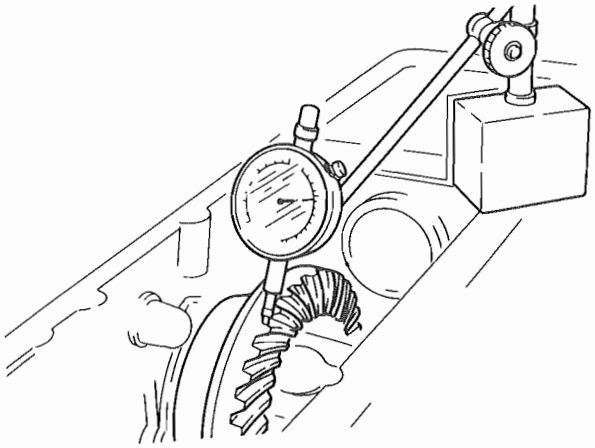

(c) A proper backlash having been secured, measure the clearance between the right-side holder and case, and fill the clearance with another liner equal in thickness to the reading. This liner, too, is to be formed in the same way as above. Put on stopper washers and tighten the right-side holder.

(d) Tap lightly on the differential gear case in place, directing the tapping force leftward and rightward to be sure that this case has no end play. Re-check the backlash and, upon noting that it is within the specified range, lock the bolts securing the bearing holders, right and left, by bending stopper washers sharply. The holder bolts are to be tightened to this torque value:

Tightening torque	2.5 ~ 3.0 kg-m (18 ~ 22 ft-lb)

Reassembling the final case

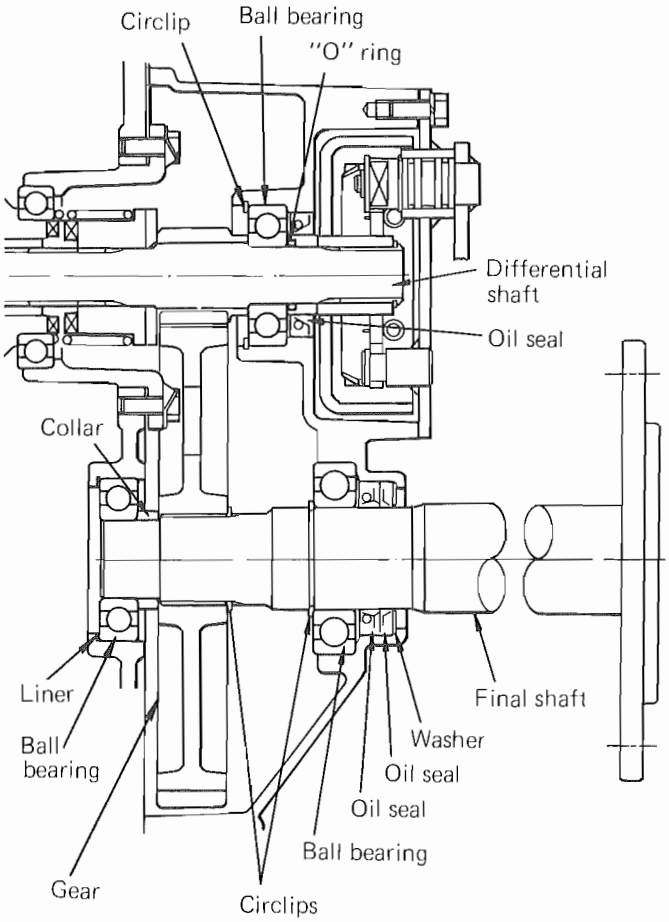

(1) Grease oil seals, and fit the seals to those parts of final case admitting differential shaft and final shaft. For the final shaft, however, a washer must be installed before fitting the oil seal.

(2) Press ball bearing onto differential shaft. Grease "O" ring and fit it to oil seal collar. Feed the collar onto differential shaft, with its "O" ring coming next to the ball bearing.

(3) Insert differential shaft into final case, and set it in place by fitting circlip.

(4) Position final shaft in final case, fit ball bearing by pressing, and retain the bearing by installing circlip.

NOTE

When forcing the bearing in, be sure to apply the push to its inner race.

Downloaded from www.Manualslib.com manuals search engine

https://truckmanualshub.com/

(5) Install circlip (for final gear stopper) on final shaft, mount final gear and collar, and press in ball bearing.

(6) Take two measurements: 1) height of ball bearing face above the seat formed of transmission case for final case, and 2) distance from transmission case face to ball bearing holder. On the basis of these two measurements, determine the shim (liner) thickness necessary for giving an end play of 0.0 to 0.4 mm (0.0 to 0.016 in.) to final shaft. The liner with the determined thickness is to be used on ball bearing holder.

Final shaft end play	0.0 ~ 0.4 mm (0.0 ~ 0.016 in.)

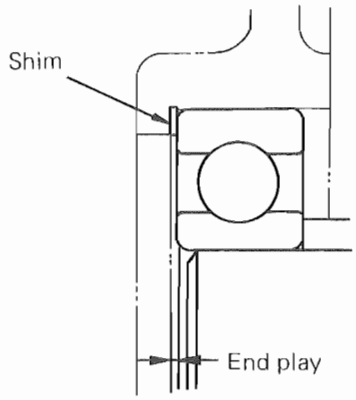

(7) Apply sealant to the mating face of final case, fit the case to transmission case, and secure it by tightening its bolts to this torque value:

Tightening torque	5.0 ~ 6.0 kg-m (36 ~ 43 ft-lb)

NOTE

The right-side final case must be complete with differential lock shifter and lock sleeve: the shifter must be installed before inserting differential shaft into the case.

Downloaded from www.Manualslib.com manuals search engine

https://truckmanualshub.com/

SPEED CHANGE SHIFTER

Disassembling the speed change shifter

Disassemble the shift mechanism, which has been removed from the transmission, by proceeding as follows:

(1) Loosen set bolts on the two shifter shafts, right and left. Each set bolt is locked by stopper washer: straighten the locking portion of the washer and loosen the bolts.

(2) Draw out each shifter shaft from the front side by pulling, and remove shift fork, steel ball and stopper spring.

(3) Loosen bolts securing the bracket, take off bracket, remove knob from speed change lever, and take out the lever.

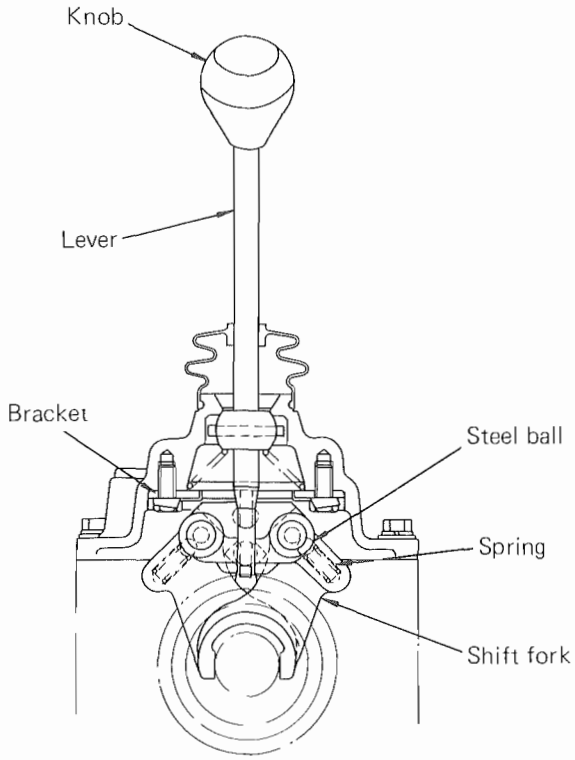

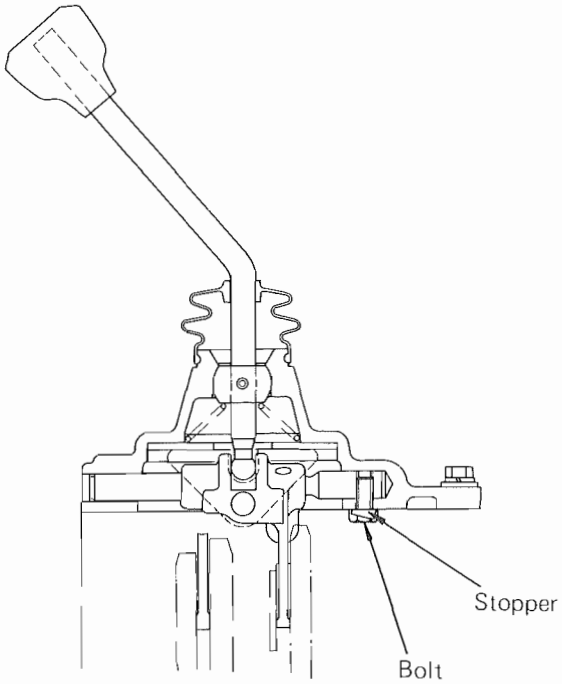

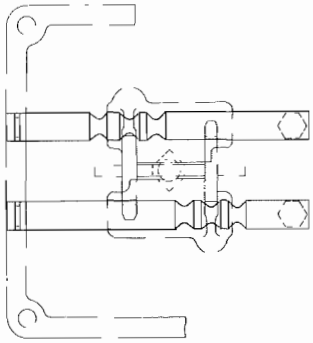

Downloaded from www.Manualslib.com manuals search engine

https://truckmanualshub.com/

Reassembling the speed change shifter

(1) Insert speed change lever into cover, attach spring, and position bracket in place. Put on stopper washer and tighten the bracket securing bolts to the torque value indicated below, and lock the bolts by bending the stopper washer.

Tightening torque	2.5 ~ 3.0 kg-m (18 ~ 22 ft-lb)

(2) Insert stopper springs and steel balls into the two shifter forks.

(3) Grease "O" ring and fit it to shifter shaft. Of the two shifter shafts, the distance between the two grooves (one for "O" ring and the other for stopper ball) tells the difference between the two, 1st-reverse shaft and 2nd-3rd shaft. The distance is longer on 1st-reverse shaft, as shown in this illustration:

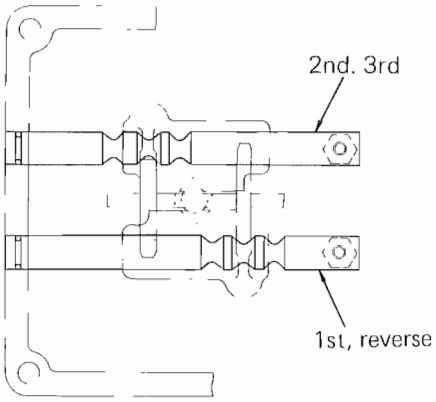

(4) Mount shifter fork on the rear part of 1st-reverse shifter shaft, and install the shaft in the cover.

(5) Mount shifter fork on the front part of 2nd-3rd shifter shaft, and install the shaft in the cover.

(6) Adjust each shifter shaft, aligning the stopper hole through cover and shaft, put on stopper washer and lock after tightening.

NOTE

The transmission case may be filled with oil at this time, provided that the drain plug and hydraulic pipe connection are tight. Oil filling is easier at this stage.

(7) Apply sealant to the mating face of cover, and secure it to transmission case by tightening its securing bolts to this torque value:

Tightening torque	2.5 ~ 3.0 kg-m (18 ~ 22 ft-lb)

Reassembly is reverse of disassembly as far as the sequence of steps is concerned for the following parts: hydraulic case, step boards, brake pedals, fenders, tool box, seat, clutch housing, and 4-wheel drive universal joint covers.

Downloaded from www.Manualslib.com manuals search engine

https://truckmanualshub.com/

CHAPTER 5-2
TRANSMISSION SYSTEM

(Hydrostatic Transmission)

5-2

Downloaded from www.Manualslib.com manuals search engine