https://truckmanualshub.com/

SERVICE MANUAL

E265C - E305C

Crawler Excavators

Print No.47357333A

NEW HOLLAND
CONSTRUCTION

https://truckmanualshub.com/

SERVICE MANUAL

E265C
E305C

Crawler Excavators

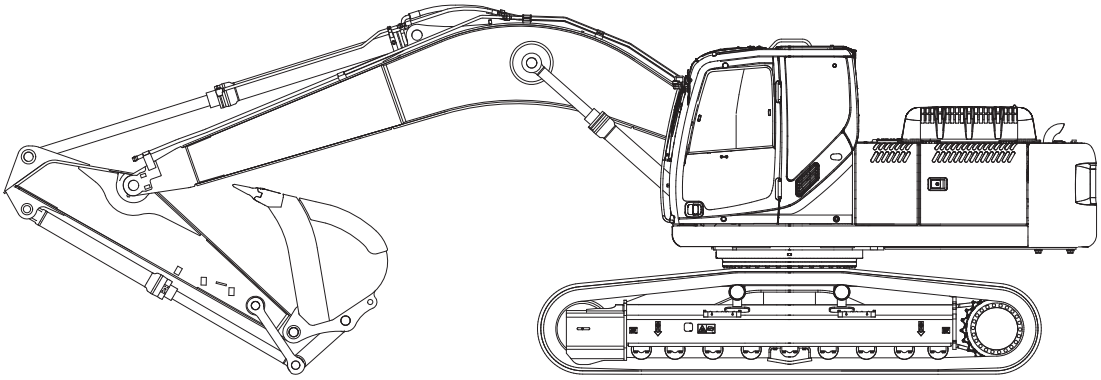

Print no. 47357333A
1st Edition
English 03/12

NEW HOLLAND
CONSTRUCTION

Find manuals at https://best-manuals.com

https://truckmanualshub.com/

WARNING

Read this manual before operating the machine

Most accidents occurring during work are due to non-observance of simple safety norms and elementary precautions.

Many accidents can be avoided if the causes are known and opportune cautions taken beforehand.

There is no device or protection, no matter how advanced, that may prove so effective at avoiding accidents as a careful and attentive behaviour.

WARNING

Ensure that the attachment is safely resting onto the ground before repairing, adjusting or servicing machines fitted with hydraulically, mechanically or cable controlled attachments (such as, excavators, loaders, dozers, scrapers, etc.). Should it be necessary to partially or fully raise the hydraulically, mechanically or cable controlled attachment to gain access to certain items, make sure the attachment is adequately retained in the raised position by means other than the hydraulic lift cylinders, cables and/or mechanical devices used for controlling it.

COPYRIGHT BY NEW HOLLAND KOBELCO CONSTRUCTION MACHINERY S.p.A.

Product Support

Strada di Settimo, 323 - S. MAURO T.SE (TO) ITALY

Find manuals at https://best-manuals.com

https://truckmanualshub.com/

TO THE READER

- This manual is written for an experienced technician to provide technical information needed to maintain and repair this machine.
  - Be sure to thoroughly read this manual for correct information concerning the service procedures.
  - If you have any questions or comments, or if you found any errors regarding the contents of this manual, please contact:

NEW HOLLAND KOBELCO
CONSTRUCTION MACHINERY S.p.A.
Strada Settimo, 323
San Mauro Torinese (TO)
10099 ITALIA
PRODUCT SUPPORT
Fax. ++39 011 0077357

ADDITIONAL REFERENCES

- Please refer to the materials listed below in addition to this service manual:
  - **Operator's Manual**
  - **Service Parts Catalogue**

COMPLETE SERVICE MANUAL

- The complete Service Manual consists of two distinct volumes:
  - **Service Manual “Crawler Excavators”**
  - **Service Manual “Engine”**

The two distinct volumes of the complete Service Manual can be identified through their print number as stated below:

VOLUME	PRINT NUMBER
Service Manual “Crawler Excavators”	47357333A
Service Manual “Engine”	84250493

- The Service Manual “Crawler Excavators” consists of five parts:
  - **“General Safety Information”**
  - **“Operational Principle”**
  - **“Operational Performance Test”**
  - **“Troubleshouting”**
  - **“Repair Instructions”**
  - The “General Safety Information” part includes the recommended procedures that, if followed, can avoid the risk of accident for operator and for staff related to the work and maintenance machine operations.
  - The “Operational Principle” part includes the technical information concerning the operation of main devices and systems.
  - The “Operational Performance Test” part includes the information needed to carry out the machine operational performance test.
  - The “Troubleshooting” part includes the technical information needed for troubleshooting and malfunction detection.
  - The “Repair Instructions” part includes information needed for maintenance and repair of the machine, tools and devices needed for maintenance and repair, maintenance standards, removal/installation and assembly/disassembly procedures.

Find manuals at https://best-manuals.com

PAGE NUMBER

- Each page has a number, located on the central lower side of the page. Each page number contains the following information:

Example: **T 1-2-3**

- **3** → Consecutive page number for each group
- **2** → Group number (if exist))
- **1** → Section number
- **T** → **T:** Technical Manual; **W:** Workshop Manual

SYMBOLS

In this manual, the following safety alert symbol and signal words are used to alert the reader to the potential for personal injury or machine damage.

This is the safety alert symbol.
When you see this symbol, be alert to the potential for personal injury.
Never fail to follow the safety instructions prescribed along with the safety alert symbol.
The safety alert symbol is also used to draw attentio in to component/part weights.
To avoid injury and damage, be sure to use appropriate lifting techniques and equipment when lifting heavy parts.

UNITS USED

SI Units (International System of Units) are used in this manual.
MKSA system units and English units are also indicated in parentheses just behinds SI units.

Example: 24.5 MPa (250 kgf/cm^2)

A table for conversion from SI units to other system units is shown below for reference purposes.

Quantity	To convert from (SI)	Into (Others)	Multiply by
Lenght	mm	in	0.03937
	mm	ft	0.003281
Volume	L	US gal	0.2642
	L	US qt	1.057
	m^3	yd^3	1.308
Mass	kg	lb	2.205
Force	N	kgf	0.10197
	N	lbf	0.2248
Torque	N.m	kgf.m	0.10197
	N.m	lbf.ft	0.7375

Quantity	To convert from (SI)	Into (Others)	Multiply by
Pressure	MPa	kgf/cm^2	10.197
	MPa	psi	145.0
Power	kW	CV-PS	1.360
	kW	HP	1.341
Temperature	°C	°F	°C x 1.8 + 32
Velocity	km/h	mph	0.6214
	min^{-1}	rpm	1.0
Flow rate	L/min	US gpm	0.2642
	mL/rev	cc/rev	1.0

Find manuals at https://best-manuals.com

MANUAL INDEX

GENERAL SAFETY INFORMATION

Page

Section 1 SAFETY INFORMATION S1
Section 2 SAFETY PRECAUTIONS S2
Section 3 SAFETY DECALS S3

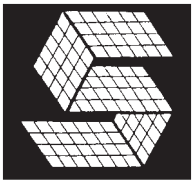

OPERATIONAL PRINCIPLE

Section 1 GENERAL INFORMATION
Group 1 Specifications T1-1

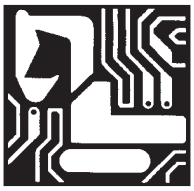

Section 2 SYSTEM
Group 1 Mechatro Control System T2-1
Group 2 Hydraulic System T2-2
Group 3 Electrical System T2-3

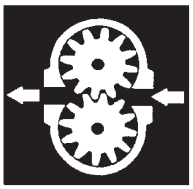

Section 3 COMPONENT OPERATION
Group 1 Hydraulic Pump Assy T3-1
Group 2 Pilot Valve T3-2
Group 3 Control Valve T3-3
Group 4 Swing Device T3-4
Group 5 Travel Device T3-5
Group 6 Swivel Joint T3-6
Group 7 Cylinders T3-7
Group 8 Air Conditioner system T3-8
Group 9 Electrical Equipment T3-9

OPERATIONAL PERFORMANCE TEST

Section 4 OPERATIONAL PERFORMANCE TEST
Group 1 Introduction T4-1
Group 2 Standard Performances T4-2
Group 3 Test Procedures T4-3
Group 4 Mechatro Controller T4-4

TROUBLESHOOTING

Section 5 TROUBLESHOOTING
Group 1 Troubleshooting (by error codes) T5-1
Group 2 Troubleshooting (by trouble) T5-2

Find manuals at https://best-manuals.com

REPAIR INSTRUCTIONS

Section 1 GENERAL INFORMATION

Group 1 Precautions for Disassembly and Assembly W1-1
Group 2 Tightening Torque W1-2

Section 2 UPPERSTRUCTURE

Group 1 Upperstructure W2-1
Group 2 Pump Device W2-2
Group 3 Control Valve W2-3
Group 4 Swing Device W2-4
Group 5 Pilot Valve W2-5

Section 3 UNDERCARRIAGE

Group 1 Swing Bearing W3-1
Group 2 Travel Device W3-2
Group 3 Swivel Joint W3-3
Group 4 Track Adjuster W3-4
Group 5 Front Idler W3-5
Group 6 Upper and Lower Roller W3-6
Group 7 Tracks W3-7

Section 4 FRONT ATTACHMENT

Group 1 Front attachment W4-1

Find manuals at https://best-manuals.com

https://truckmanualshub.com/

GENERAL SAFETY INFORMATION

Find manuals at https://best-manuals.com

https://truckmanualshub.com/

Find manuals at https://best-manuals.com

https://truckmanualshub.com/

INDEX

Section 1	SAFETY INFORMATION
Section 2	SAFETY PRECAUTIONS
Section 3	SAFETY DECALS

Find manuals at https://best-manuals.com

https://truckmanualshub.com/

https://truckmanualshub.com/

SAFETY RULES

GENERALITIES

Read the Operator's manual carefully before starting, operating, maintaining, fuelling or servicing the machine.

Carefully read the explanation to each and all safety signs in the special section of this Manual before starting, operating, maintaining, fuelling or servicing the machine.

Machine-mounted safety decals are colour coded yellow with black borders when they refer to points where special ATTENTION must be paid and failure to observe them may cause a serious DANGER to the integrity of machine operators.

It is fundamental that all machine operators know very well the meaning of each safety plate as this considerably decreases operating hazards and accidents.

Do not allow unauthorised personnel to operate or service this machine.

Do not wear rings, wrist watches, jewellery, loose or hanging garments, such as ties, torn clothing, scarves, unbuttoned or unzipped jackets that can get caught in moving parts. Wear certified safety clothes such as: hard hat, no-slip footwear, heavy gloves, ear protection, safety glasses, reflector vests, respirators every time the job requires it. Ask your employer about safety regulations in force and protective equipment.

Always keep the operator’s compartment, step plates, grab-rails and handles clean and clear of foreign objects, oil, grease, mud or snow to minimise the danger of slipping or stumbling. Remove mud or grease from your shoes before operating the machine.

Do not jump on or off the machine. Always keep both hands and one foot, or both feet and one hand in contact with steps and/or grab rails.

Do not use controls or hoses as hand holds. Hoses and controls are movable parts and do not provide solid support. Besides, controls may be inadvertently moved and cause unexpected movement of the machine or its attachments.

Never operate the machine or its attachments from any position other than sitting in the driver’s seat. Keep head, body, limbs, hands and feet inside the operator’s compartment at all times to reduce exposure to external hazards.

Be careful of possible slippery conditions of the steps and hand rails as well as of the ground around the machine. Wear protective boots or shoes with the soles made of highly no-slip rubber

Do not leave the machine until it has come to a complete stop.

Always check height, width and weight limitations which may be encountered in the working site and ensure the machine does not exceed them.

Assess exact paths of gas ducts, water mains, telephone lines, sewers, overhead and underground electric lines and all other possible obstacles.

Such paths should be opportunely defined by competent Authorities. If necessary, require that the service is interrupted or said installations are moved prior to starting the work.

Define the rear upperstructure swing area and provide for opportune barriers to prevent access into it.

Never exceed machine lifting capacity.

Remain within the limits shown in the loading capacity chart which located on the machine.

STARTING

Never start or operate a failed machine. Walk all around the machine before mounting.

Before operating the machine, make sure that any possible dangerous condition has been properly removed. Before starting machine, always check that all controls are in the neutral position and the safety lever is in the LOCK position. Immediately report any malfunction of parts or systems to the maintenance managers for proper action.

Prior to starting the engine, check, adjust and lock the driver’s seat for maximum riding comfort and control accessibility. Prior to operating the machine and/or its attachments, check that bystanders are outside the machine operating range. Sound the horn.

Obey all hand signals, safety indications and signs.

Due to the presence of flammable fluids, never check fuel level, refuel, charge the batteries in the presence of smoking materials, open flames or sparks.

Adjust all rear-view mirrors for maximum visibility of the area behind the machine.

Ensure that engine speed is appropriate to the job to be carried out.

If any hydraulic control or system exhibits erratic performance or responds abnormally, have the machine checked for air in the system.

Air in these circuits may cause incorrect movements with consequent accident hazard. Refer to the Operator's manual about corrective action to be taken.

OPERATING

Do not run the engine in closed buildings without proper ventilation capable to remove harmful exhaust gases which concentrate in the air.

Keep the operator's compartment free of foreign objects, especially if not firmly secured. Never use the machine to transport objects, unless proper securing points are provided.

Do not carry riders on the machine. Study and familiarise with escape routes alternative to normal exit routes. For your personal safety, do not climb on or off the machine while it is in motion.

Make sure that bystanders are clear of the machine operating range before starting the engine and operating the attachment. Sound the horn.

Obey all hand signals, safety indications and signs.

When backing, always look to where the machine is to be moved.

Be alert of the position of bystanders. Should someone enter the work area, stop the machine. Maintain a safe distance from other machines or obstacles to ensure required visibility conditions.

Always give way to loaded machines.

Maintain a clear vision of the surroundings of the travel or work area at all times. Keep cab windows clean and repaired.

When pulling loads or towing through a cable or chain, do not start suddenly at full throttle. Take-up slack carefully. Avoid kinking or twisting chains or cables.

Carefully inspect the towing items for flaws or problems before proceeding. Do not pull through a kinked chain or cable as the high anomalous stresses existing in this condition may induce failures in the kinked portion.

Always wear heavy gloves when handling chains or cables.

Chains and cables should be securely anchored using suitable hooks. Anchor points should be strong enough to withstand the expected load.

Keep anyone clear of anchor points and cables or chains.

Do not pull or tow unless the operator's compartments of the machines involved are properly protected against possible backlash in case of cable or chain failure or detachment.

Be alert of soft ground conditions close to newly constructed walls. The fill material and machine weight may cause the wall to collapse under the machine.

In darkness, check area of operation carefully before moving in with the machine. Use all lights provided. Do not move into low visibility areas.

If the engine tends to slow down and stall for whatever reason under load or at idle, immediately report this problem to the maintenance managers for proper action.

Do not operate the machine until this condition is corrected. Regularly check all exhaust system components, as exhaust fumes are toxic for the operator.

Operators must know the performance of the machine they are driving. When working on slopes or near sudden level drops in the terrain, pay attention not to lose adherence and avoid loose soft ground since overturn or loss of machine control could result.

If noise level is high and exceeds 90 dB (A) over 8 hours at the operator's ear, wear approved ear protection in compliance with local regulations.

Do not operate the machine if you are extremely tired or feel ill. Be especially careful towards the end of the working shift.

Where removable counterweights are provided, do not operate the machine if they have been removed.

When operating the machine, keep in mind height limits of overhead doors, arches, overhead cables and lines as well as width limits of corridors, roads and narrow passages.

Also, get to know load limits of the ground and paving type of the ramps you are to work on.

Beware of fog, smoke or dust that obscure visibility.

Always inspect the working area to identify potential risks such as: inclines, overhangs, trees, demolition rubble, fires, ravines, steep slopes, rough terrain, ditches, crowns, ridge trenches,diggings in traffic areas, crowded parking lots, crowded service areas, fenced zones. In such conditions, proceed with extreme care.

Whenever possible, avoid crossing over obstacles such as very rough terrain, rocks, logs, steps, ditches, railroad tracks.

When obstructions must be crossed, do so with extreme care and at a square angle, if possible. Slow down.

Ease up to the break-over point, pass the balance point slowly and ease down the other side also using the attachment, if necessary.

To overcome deep trenches or sinking ground, place the machine perpendicular to the obstacle, drastically reduce ground speed and start crossing using also the attachment if necessary, only after assessing that ground conditions allow the traverse safely and without risks.

The gradient you may attempt to overcome is limited by factors such as ground conditions, load being handled, machine type and speed, and visibility. There is no substitute for good judgement and experience when working on slopes.

Avoid operating the attachment too close to an overhang or high wall, either above or below the machine. Beware of caving edges, falling objects and landslides. Remember that such hazards are

https://truckmanualshub.com/

likely to be concealed by bushes, undergrowth and such.

Avoid bushes, logs and rocks. Never drive over them, nor over any other surface irregularities that discontinue adherence or traction with the ground, especially near slopes or drop-offs.

Be alert to avoid changes in adherence conditions that could cause loss of control. Work with extreme care on ice or frozen ground and on stepped slopes or near drop-offs.

The word “bulldozing” generally refers to work in virgin rough terrain, characterised by the presence of all the perils and risks listed above. We emphasise the danger represented in these conditions by large tree limbs (possibly falling on the machine) and large roots (which may act as a leverage under the machine when up-rooted and cause the unit to overturn).

Position the machine dependent upon the loading and unloading areas in order to swing leftwards to load to obtain best visibility.

Never use the bucket or attachment as a man lift or carry riders. Never use the machine as a work platform or scaffolding. The machine must not be improperly used for works not consistent with its features (such as pushing railway cars, trucks or other machines).

Always pay attention to people within the machine operating range.

Never move or stop the bucket, other loads or the attachment above ground personnel or truck cabs.

Ensure the truck driver is in a safe place before loading the truck.

Load trucks from side or rear.

Use only the type of bucket recommended considering machine type, materials to be handled, material piling up and loading characteristics, ground type and other typical conditions of the work to be performed.

When transporting a loaded bucket, keep it as rolled-back as possible. Keep boom and arm as low as possible.

Ground speed should be adequate to the load and ground conditions.

The load must always be properly arranged in the bucket; move with extreme care when transporting oversize loads.

Do not lift and move the bucket overhead where persons are standing or working, nor downhill when working on a slope as this would decrease machine stability. Load the bucket from the uphill side.

Loads to be raised using the machine should be exclusively hooked to the hitch specially provided.

The excavator is no lifting and transportation means, therefore it should not be used to position loads accurately. Should it be exceptionally used to lift and lay building components, special caution must be taken as follows:

- The machine must be equipped compulsorily with the appropriate variant provided upon request.
- Secure the loads to be raised using cables or chains fastened with appropriate hooking mechanisms.
- Nobody should be allowed to remain under the raised load or within the excavator operating range for any reason whatever.

Never exceed specified loading capacity. Incorrect fastening of slings or chains may cause boom/arm failure or failure of the lifting means with consequent bodily injuries and even death.

Always ensure that slings and chains used for lifting are adequate to the load and in good condition.

All loading capacities are referred to the machine on a level surface and should be disregarded when working on a slope.

Avoid travelling across slopes. Proceed from uphill downhill and vice-versa. If machine starts slipping sideways when on a slope, lower the bucket and thrust bucket teeth into the ground.

Working on slopes is dangerous. Grade the working area if possible. Reduce work cycle time if it is not possible to grade the working area.

Do not move full bucket or a load from uphill downhill as this would reduce machine stability. Do not work with the bucket turned to the uphill side.

Do not work with the bucket turned uphill as counterweights protruding downhill would reduce machine stability on the slope and increase risk of overturning.

We recommend to work on slopes with the bucket downhill, after checking machine stability with the bucket empty and attachment retracted, by slowly swinging the upper structure by 360°.

Position the carriage at a right angle relative to slopes, hanging walls, etc. to exit the working area easily.

Keep the machine sufficiently far from the ditch edge.

Never dig under the machine.

Should it be necessary to dig under the machine, always ensure that digging walls are opportunely propped up against landslide to prevent the machine from falling into the trench.

Do not swing the upperstructure, raise the load or brake abruptly if not required. This may cause accidents.

Prior to beginning the work near gas distribution mains or other public utilities:

- Contact the company owner of the gas mains or its nearest branch before starting the work.
- Define together which precautions should be taken to guarantee work safety.
- Decrease work speed. Reaction time could be too slow and distance evaluation wrong.
- When working near gas mains or other public utilities installations, appoint a person in charge of signalling duties. This person will have the responsibility of observing the machine, any part of it and/or the load approaching the gas mains from a standpoint more favorable than the Operator. This signal man (flag-man) must be in direct communication with the Operator and the Operator must pay undivided attention to the signals supplied.
- The gas distributing Company, if previously advised and involved in the work, as well as machine Operator, Owner and/or any natural person or legal entity having rent or leased the machine or being responsible at the time by contract or by law, are liable for the adoption of the necessary precautions.

Working near electric lines can be very dangerous, therefore some special precautions must be observed.

Within this Manual, “work near electric lines” means when the attachment or load raised by the excavator (in any position) may reach the minimum safety distance established by local or international Safety Regulations.

To work without risks, keep maximum possible distance from electric lines and never trespass minimum safety distance.

- Contact the Company owner of the electric lines or its nearest branch before starting the work.
- Define together with the Company representative which precautions should be taken to guarantee work safety.
- All electric lines should be considered as operative live lines even though it might be well known that the line in question is out of work and visibly connected to the ground.
- The Electric Power Company, if previously advised and involved in the work, as well as machine Operator, Owner and/or any natural person or legal entity having rent orleased the machine or being responsible at the time by contract or by law, are liable for the adoption of the necessary precautions.
- Decrease work speed. Reaction time could be too slow and distance evaluation wrong.
- Warn all ground personnel to keep clear of the machine and/or load at all times. If the load has to be guided down for laying, consult the Electric Power Company to know which precautions should be taken.
- Appoint a person in charge of signalling duties. This person will have the responsibility of observing the machine, any part of it and/or the load approaching the electric lines from a standpoint more favorable than the Operator. This signal man (flag-man) must be in direct communication with the Operator and the Operator must pay undivided attention to the signals supplied.

When working in or near pits, in ditches or very high walls, check that the walls are sufficiently propped up to avoid cave-in hazards.

Pay the utmost attention when working near overhang walls or where landslides may take place. Make sure that the support surface is strong enough to prevent landslides.

When digging, there is the risk of cave-ins and landslides.

Always check ground conditions and conditions of the material to be removed. Support everywhere it is required to prevent possible cave-ins or landslides when:

- Digging near previous trenches filled with material.
- Digging in bad ground conditions.
- Digging trenches subject to vibration from railroads, working machines or highway traffic.

STOPPING

When the machine is to be stopped for whatever reason, always check that all controls are in the neutral position and that the safety lever is on the lock position to guarantee risk-free start-up.

Never leave the machine unattended with the engine running.

Prior to leaving the driver’s seat, and after making sure that all people are clear of the machine, slowly lower the attachment until resting it safely to the ground. Retract possible auxiliary tools to the closed safety position.

Check that all controls are in the neutral position. Move engine controls to the shut-down position. Switch off the key-start switch.

Park the machine in a non-operating and no-traffic area. Park on firm level ground. If this is not possible, position the machine at a right angle to the slope, making sure there is no danger of uncontrolled sliding.

If parking in traffic lanes cannot be avoided, provide appropriate flags, barriers, flares and other signals as required to adequately warn the oncoming drivers.

Always switch off the key-start switch before cleaning, repairing, or parking the machine to prevent accidental unauthorised start-up.

Never lower the attachment or auxiliary tools other than from sitting in the operator’s seat. Sound the

https://truckmanualshub.com/

horn. Make sure that nobody is within the machine operating range. Lower the attachment slowly.

Securely block and lock the machine every time you leave it unattended. Return keys to the safe place previously agreed upon. Perform all necessary operations for stopping as detailed in the Operator's manual.

Drive the machine far from pits, trenches, rocky hanging walls, areas with overhead electric lines, and slopes before stopping it at the end of the working day.

Move all controls to the position specified for machine stopping.

Never park on an incline without accurately blocking the machine to prevent unexpected movement.

Follow stopping instructions contained in the Operator's manual.

MAINTENANCE

Carefully read the Operator's manual before starting, operating, maintaining, fuelling or servicing the machine in any manner.

Read all safety decals mounted on the machine and observe instructions they contain before starting, operating, repairing, fuelling or servicing the machine.

Do not allow unauthorised personnel to repair or service the machine.

Follow all recommended maintenance and service procedures.

Do not wear rings, wrist watches, jewellery, loose or hanging garments, such as ties, torn clothing, scarves, unbuttoned or unzipped jackets that can get caught in moving parts. Wear certified safety clothes such as: hard hat, no-slip footwear, heavy gloves, ear protection, safety glasses, reflector vests, respirators when required. Ask your employer about safety regulations in force and protective equipment.

Do not use controls or hoses as hand holds. Hoses and controls are movable parts and do not provide solid support. Besides, controls may be inadvertently moved and cause unexpected movement of the machine or its attachments.

Do not jump on or off the machine. Always keep both hands and one foot, or both feet and one hand in contact with steps and/or grab rails.

Never service the machine with someone sitting in the driver’s seat, unless this person is an authorised operator assisting in the maintenance being carried out.

Keep the operator’s compartment, step plates, grab rails and handles clear of foreign objects, oil, grease, mud orsnow to minimise the danger of slipping or stumbling.

Clean mud or grease from your shoes before climbing on the machine or driving it.

Never attempt to operate the machine or its attachments from any position other than sitting in the operator’s seat.

Keep the driver’s seat free from foreign objects, especially if these are not secured.

Should it be necessary to move the attachment for maintenance purposes, do not raise or lower the attachment from any other position than sitting in the operator’s seat. Before starting the machine or moving its attachment, sound the horn and require that nobody remains near the machine.

Raise the attachment slowly.

Always lock all moving components or parts of the machine that must be lifted for maintenance purposes using adequate external means as required by local and national regulations. Do not allow anyone to pass or stay near or below a raised attachment. If you are not absolutely sure about your safety, do not stay or walk under a raised attachment.

Do not place head, body, limbs, hands, feet or fingers near articulated cutting edges deprived of the necessary guards, unless they are suitably and safely locked.

Never lubricate, repair or adjust the machine with the engine running, except when this is specifically required by the Operator's manual.

Do not wear loose clothing, jewellery near rotating parts.

When service or maintenance require access to areas that cannot be reached from the ground, use a ladder or step platform conforming to local or national regulations to reach the working area. If such means are not available, use machine grab rails and steps. Always perform all service or maintenance work with the greatest care and attention.

Shop and/or field service platforms or ladders should be manufactured and maintained in accordance with local or national safety regulations in force.

Disconnect batteries and label all controls to warn that service work is in progress, according to local and national safety regulation requirements.

Block the machine and all attachments to be raised according to local and national safety regulation requirements.

Do not check or fill fuel tanks or install batteries near burning or smoking materials and open flames due to the presence of flammable vapours.

The fuel filler pipe nozzle must be constantly kept in contact with the filler neck and this even before fuel starts flowing in. Keep this contact from the beginning

to the end of the fuelling operation to avoid possible generation of sparks due to static electricity.

Use a truck or trailer to haul a failed machine. Should it be necessary to tow it, provide for suitable danger signals as required by the local norms and regulations and observe recommendations given in the Operator's manual. Load/unload the machine on firm level ground providing safe support to the wheels of the truck or trailer. Use strong access ramps, with adequate height and angle. Keep the trailer flatbed free of mud, oil or slippery materials. Tie the machine securely to the trailer and block carriages and upperstructure.

Never align holes or slots using your fingers; alwaysuse appropriate aligning tools.

Remove all sharp edges and burrs from re-worked parts.

Use only approved and effectively grounded auxiliary power sources for heaters, battery chargers, pumps and similar equipment to reduce electrical shock hazard.

Lift and handle heavy components using hoisting devices of appropriate capacity. Ensure the parts are supported by appropriate straps and hooks.

Use lifting eyes provided to this aim.

Pay attention to bystanders near the lifting area.

Never pour gasoline or diesel fuel into open containers. Never use gasoline, solvents or other flammable fluids to clean parts. Use proprietary certified non-flammable, non-toxic solvents only.

When using compressed air to clean parts, wear safety glasses with side shields. Limit pressure to max 2 bar, in accordance with local and national safety regulations in force.

Do not run the engine of this machine in closed buildings without proper forced ventilation capable to remove toxic exhaust gases concentrating in the air.

Do not use open flames as light sources to look for leaks or inspect anywhere on the machine.

Make sure that all mechanical tools provided are in good condition at all times. Never use tools with mushroomed or damaged heads. Always wear eye protections with side shields.

Move with extreme care when working under, on or near the machine or its attachments.

In case of attachment tests during which the engine should be kept running, a qualified operator must sit in the driver’s seat at all times while the mechanic is at work.

Keep hands and clothes far off moving parts.

Stop the engine and move the safey lever to the lock position before starting adjusting or repairing an assembly.

Do not carry out any work on the attachment without prior authorisation. Observe maintenance and repair procedures.

In case of field service, move the machine to level ground and block it. If work on an incline cannot be avoided, securely block the machine and its attachments. Move the machine to level ground as soon as possible.

Do not twist chains and cables. Never use a twisted chain or cable for lifting or pulling. Always wear safety gloves to handle chains or cables.

Be sure chains and cables are firmly fastened and that the anchor point is strong enough to withstand the expected load.

Keep all bystanders clear of the anchor point, cables or chains. Do not pull or tow unless the operator’s compartments of the machines involved are fitted with proper guards against cable or chain backlash.

Keep the maintenance area clean and dry at all times.

Clean immediately all water and oil spillage.

Do not pile up oily or greasy rags as they represent a major fire hazard. Always store them in closed metal containers.

Before starting the machine or its attachment, check, adjust and lock the operator’s seat. Also ensure that nobody is within the machine or attachment operating range before starting or operating the machine and/or its attachments.

Sound the horn.

Rust inhibitors are volatile and flammable.

Prepare parts in well ventilated areas. Keep open flames away.

Do not smoke.

Store containers in a cool well ventilated place where they could not be reached by unauthorised people.

Do not carry loose objects in your pockets that might fall unnoticed into open compartments.

Wear appropriate safety clothing such as hard hat, safety shoes and gloves, safety glasses when splinters or other particles may be ejected.

Wear the appropriate welder’s equipment such as dark safety glasses or mask, hard hat, protective clothing, safety gloves and footwear always while welding or arc-cutting. Wear dark safety glasses when you are near a welding in progress.

Do not look the welding arc without proper eye protection.

Become acquainted with all your jacking equipment and their capacity.

Ensure that the jacking point on the machine is appropriate for the load applied. Also, be sure the supports under the jack and between the jack and the machine are appropriate and stable.

Any equipment supported by a jack represents a possible hazard. Always support the load onto appropriate blocking means as a safety measure before proceeding with service or maintenance work,

https://truckmanualshub.com/

in compliance with local or national safety regulations.

Metal cables produce steel splinters. Always wear certified protection clothes such as safety gloves and glasses while handling them.

Handle all parts carefully. Keep hands and fingers away from gaps, gears, and similar. Always use and wear certified safety clothes such as safety glasses, gloves and footwear.

The attachment is kept constantly in position by an oil column trapped into the high pressure circuit. Lower the attachment to the ground and relieve pressure from all circuits prior to carrying out any type of maintenance or repair work.

Do not service or repair the machine if it is parked downhill. If this is unavoidable, in case of emergency, block the carriages to prevent unexpected movement, particularly if the work is to be carried out on the final reduction units or travel motors.

Consult the Operator' manual for correct maintenance procedure.

Areas near articulated cutting edges where mechanical parts are in motion are where personal injuries are most likely to occur. Pay attention to prevent possible part movements by means of blocks or by keeping clear of such zones when motion may take place during maintenance or repair.

Move the hydraulic system lock safety lever to the lock position when stopping the machine for whatever reason.

Always install the safety stays for the hood and other hinged covers before performing any maintenance or repair work in the engine compartment.

TRANSFERS AND TRANSPORTATION

Before moving or transporting the machine, block upperstructure swing to prevent accidental movement.

Pay particular attention during transfer on inclines, both uphill and downhill. Keep the bucket in a position to provide a possible anchor point into the ground in case of slipping.

Never transfer the machine in the working site, in a crowded area, or near people without having at least one person charged with hand-signals who could guide the Operator.

Sound the horn to inform that you are about to move off.

It is necessary to know load limits of bridges and dimensional limits of tunnels. Such limits must never be exceeded. You should also know machine height, width, and weight. Have a signal-man help you when clearances are limited.

Check distance between boom/arm and dimensional limits during transfer or transportation.

Rough terrain may cause the machine to sway and roll to such an extent that boom/arm could get to contact electric lines or other obstacles. Cross obstacles at a right angle at low speed. Pay attention to machine shaking when the centre of gravity overcomes the obstacle.

Keep the bucket down at all times during transfers.

Drive with the lights on and use appropriate signals and flags.

Get to know and respect local and national regulations.

Consider boom/arm and upperstructure dimensions while turning.

Use a ramp to load the machine on a trailer. If a ramp is not available, fabricate one using blocks. The ramp should be sufficiently strong to support machine weight. Always load and unload on level surface.

Tow the machine following the instructions contained in the Operator's manual.

ENGINE

Do not run the engine in closed buildings without proper ventilation capable to remove harmful exhaust fumes.

Do not place head, body, limbs, feet, hands or fingers near rotating fans or belts. Be especially careful near blower fans.

Loosen the radiator cap very slowly to relieve system pressure before removing it. Always top-up coolant level with the engine off or idling if hot.

Keep the exhaust manifold and tube free from combustible matters. Fit the machine with shields and guards when working in the presence of combustible matter free in the air.

Do not refuel with the engine running, especially if hot, as this increases fire hazard in case of fuel spillage.

Never attempt to check or adjust fan belt tensions when the engine is running.

Do not adjust the fuel injection pump when the machine is operating.

Do not lubricate the machine with the engine running.

Do not run the engine with the air intakes open and not protected. If this cannot be avoided for service reasons, place protection meshes on all intakes before servicing the engine.

ELECTRICAL SYSTEM

Pay attention to connect connecting cables to correct poles (+ to +) and (- to -) at both ends. Do not short-circuit terminals. Thoroughly follow instructions given in Operator's manual.

Always move the key-start switch in the lock position before servicing or repairing the machine.

Batteries contain SULFURIC ACID. Protect the eyes when working near the batteries against possible sprays of the acid solution. Should acid contact skin, eyes, or clothes, RINSE IMMEDIATELY IN WATER FOR AT LEAST 15 MINUTES. Immediately seek medical attention.

Battery released gas is highly flammable. Leave the battery compartment cover open during recharging to improve ventilation. Never check battery charge by placing metal objects across the posts. Keep sparks or open flames away from batteries. Do not smoke near the battery to prevent explosion hazard.

Before any maintenance or repair, make sure that there are no fuel or electrolyte leaks from the batteries. If any, correct prior to proceeding with further work. Do not recharge batteries in confined spaces. Ensure proper ventilation is provided to avoid accidental explosions due to build-up of explosive gas released during charging.

Disconnect batteries before working on the electrical system or carrying out any other type of work.

HYDRAULIC SYSTEM

Pressure fluid escaping from a very small hole can be almost invisible and still have sufficient force to penetrate the skin. Always check any suspected pressure leaks using a piece of cardboard or wood.

Do not use hands. If injured by escaping fluid, obtain medical attention immediately or serious infection or reaction may develop.

Stop the engine and ensure pressure is relieved from all systems before removing side panels, housings, guards and covers.

Always use gauges of adequate capacity for pressure testing.

TOOLS

Always keep head, body, limbs, feet, hands, and fingers away from the bucket and attachments, when in the raised position.

Prior to any maintenance or repair work, install all supports necessary to this aim according to local and national safety regulations.

In case the attachment is to be operated for maintenance or repair purposes, do so exclusively while sitting in the driver’s seat. Sound the horn before starting the machine or moving the attachment. Require that nobody remain near the machine. Raise the attachment slowly.

Do not use the machine to transport loose objects, unless proper securing devices are provided.

Never use gases other than nitrogen to charge the accumulators.

https://truckmanualshub.com/

SAFETY ALERT SYMBOL

When you see this symbol on your machine or in this Manual, be alert of the potential for personal injury.

Follow recommended precautions and safe operating practices.

UNDERSTAND SIGNAL WORDS

In this Manual you will find the following words referring to different hazard risks:

- **DANGER;**
- **WARNING;**
- **CAUTION.**

These words are always accompanied by the safety alert symbol.

DANGER: indicates an imminent hazardous situation which, if not avoided, will result in death or serious injury.

WARNING: indicated a potential hazardous situation which, if not avoided, could result in death or serious injury.

CAUTION: indicates a potential hazardous situation which, if not avoided, may result in minor or moderate injury.

ATTENTION: indicates a situation which, if not avoided, may cause damage to the machine.

NOTE: indicates an additional explanation for information purposes.

ENVIRONMENTAL PROTECTION

This Manual also contains this symbol accompanying instructions for correct behaviour as regards environmental protection.

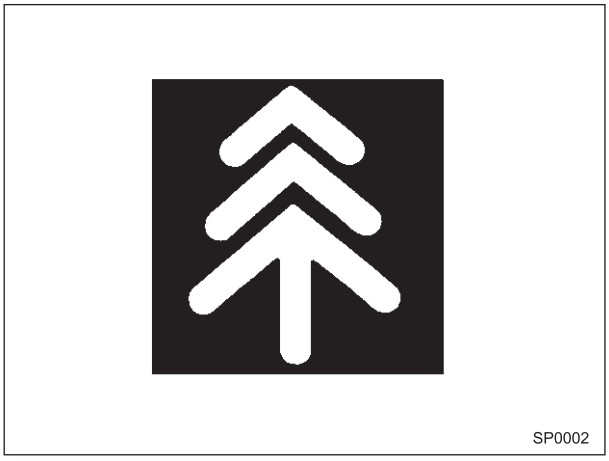

FOLLOW SAFETY PRECAUTIONS

Carefully read and observe all safety decals on the machine and read all safety precautions in this Manual.

Safety decals should be installed, maintained, and replaced when necessary.

- If a safety decal or this Manual are damaged or missing, obtain a replacement from your Dealer in the same way you order a spare part (be sure to detail machine model and serial number upon ordering).

Learn how to operate the machine and its controls correctly and safely.

Allow only trained, qualified, authorised personnel to operate the machine.

Keep the machine in proper working conditions.

- Unauthorised changes to the machine may impair function and/or safety and affect machine life.

Safety messages in this Chapter are intended to illustrate basic safety procedures of the machine. However, it is impossible for these safety messages to cover every hazardous situation you may encounter. If you have any doubts, consult your direct supervisor prior to operating or servicing the machine.

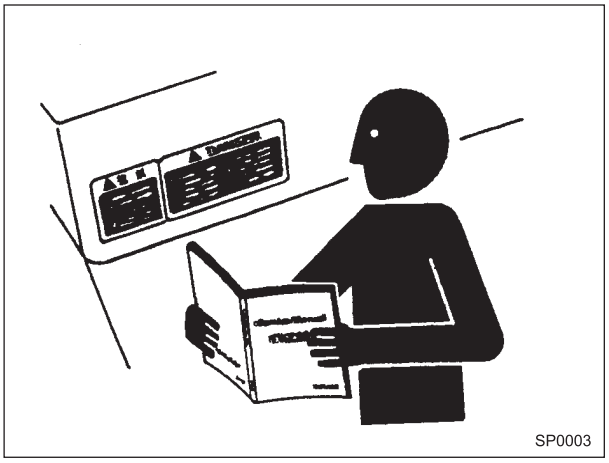
SP0003

PREPARE FOR EMERGENCIES

Be prepared if a fire starts or an accident occurs.

- Keep the first-aid kit and fire extinguisher on hand.
- Thoroughly read and understand the label attached to the fire extinguisher to use it properly.
- Establish emergency priority procedures to cope with fires and accidents.
- Keep emergency numbers for doctors, ambulance service, hospitals and fire department posted near the telephone.

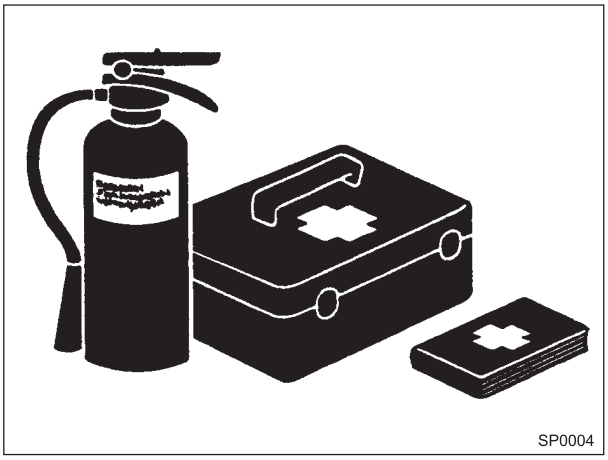
SP0004

https://truckmanualshub.com/

WEAR PROTECTIVE CLOTHING

Wear close fitting safety shoes, hard hat and working clothes. Put on protective glasses, face shields, ear protection and gloves. When necessary, wear reflective vest.

Avoid wearing loose clothing, jewelry, or other items that can catch on control levers or other parts of the machine.

Do not wear headphones while operating the machine.

Work clothing that has come in contact with oil could catch fire. Change clothes immediately.

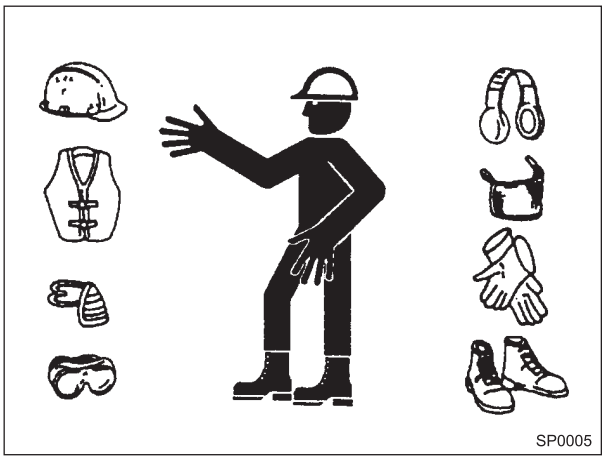

PROTECT AGAINST NOISE

Prolonged exposure to loud noise can cause impairment or loss of hearing.

- Wear a suitable hearing protection such as earmuffs or earplugs to protect objectionable or uncomfortably loud noise.

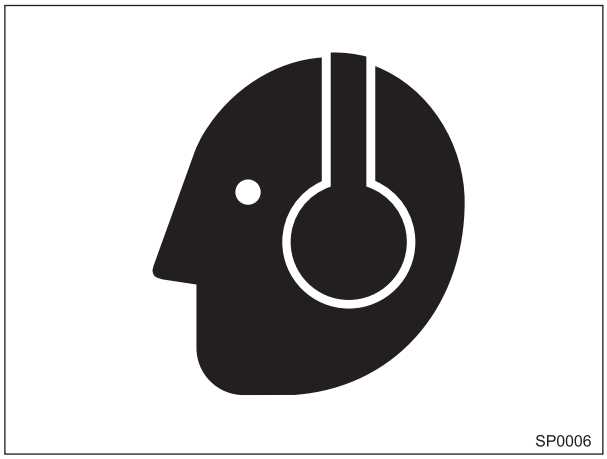

INSPECT THE MACHINE

Inspect the machine carefully every day or workshift by an attentive visual inspection of machine outside prior to starting it to prevent damages and personal injuries.

USE HAND HOLDS AND STEPS

When you get on and off the machine, always maintain a three-point contact with the steps and handrails and face the machine.

Do not use any controls as hand-holds.

Never jump on or off the machine.

Never enter a moving machine.

Be careful of slippery conditions on platforms, steps, and handrails when leaving the machine.

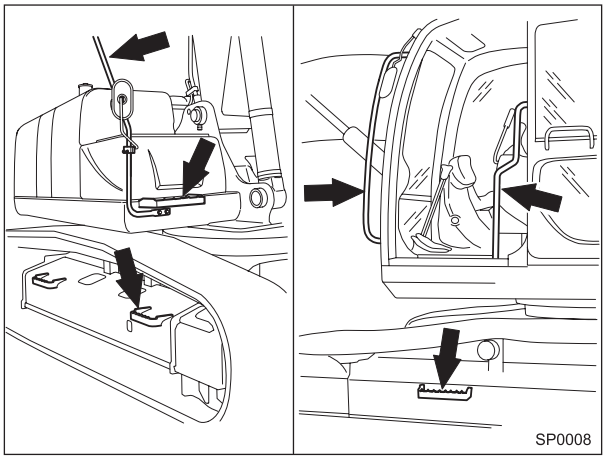

ADJUST THE OPERATOR'S SEAT

A seat poorly adjusted for operator or work requirements may quickly fatigue the operator leading to improper operations.

- The seat should be adjusted whenever machine operator changes.
- The operator should be able to fully press the pedals and correctly move the control levers with his back resting against the seat back.
- If not, move the seat fore and aft, and check again.

https://truckmanualshub.com/

FASTEN SEAT BELT

Should the machine overturn, the operator may become injured and/or thrown from the cab. Not only, the operator may be crushed by the overturning machine resulting in serious injury or even death.

- Prior to operating the machine, thoroughly examine belt webbing, buckle, and attaching hardware. If any item is damaged or worn, replace the seat belt or component before operating the machine.
- Be sure to remain seated with the seat belt securely fastened at all times when the machine is in operation to minimise injury hazard in case of accident.
- After a significant accident, replace the seat belts even though they do not look damaged.

OPERATE ONLY FROM THE DRIVER'S SEAT

Inappropriate engine starting procedures may cause the machine unexpected movement, possibly resulting in serious injury and even death.

- Start the engine only from the operator’s seat.
- Never start the engine while standing on the track or on the ground.
- Do not start the engine by shorting across starter motor terminals.
- Before starting the engine, ensure that all control levers are in the neutral position.

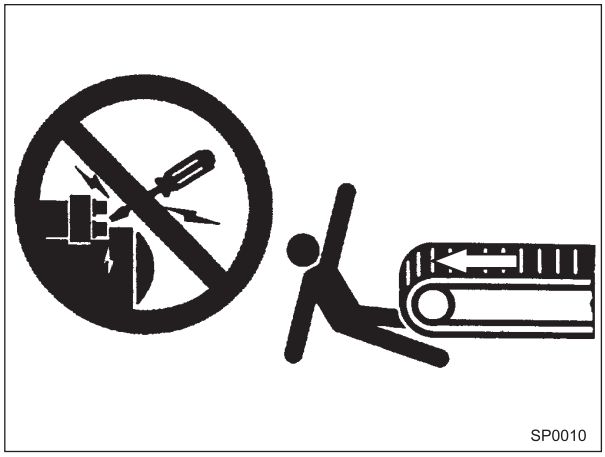

MOVE AND OPERATE MACHINE SAFELY

Bystanders can be run over.

- Pay the utmost attention not to run over bystanders.
- Be sure exposed personnel in the area of operation are clear of the machine before moving it or its attachments. Sound horn to inform bystanders that the machine is going to be operated.
- When operating, swinging, or moving the machine in a congested area use a signal man.

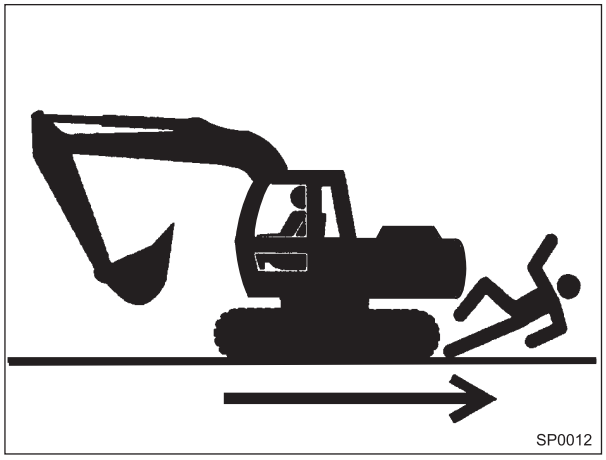

DO NOT CARRY PERSON ON THE MACHINE

Riders on the machine are exposed to serious injuries.

- Do not carry riders on the machine. Besides precluding a full vision by the operator, there is the possibility of serious bodily harm or death due to accidental falls from the machine.

CONFIRM TRAVEL DIRECTION

Incorrect travel controls operation may result in serious injury and even death.

- Before driving the machine, be aware of the undercarriage position relative to the operator's position. If travel motors (M) are located at the front of the cab, the machine will move reverse when travel controls are moved towards cab front.

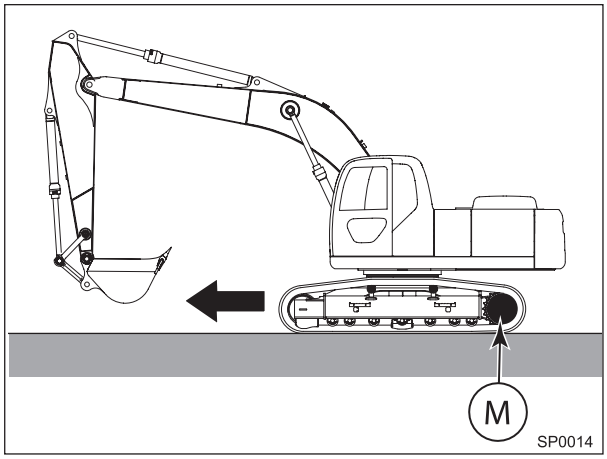

https://truckmanualshub.com/

AVOID INJURY FROM TRAVEL AND SWING ACCIDENTS

Make sure the swing and travel area of the machine is clear of all persons and obstacles before operating swing or travel controls. To avoid travel and swing accidents:

- Always look around before you travel or swing the machine. Be sure that all bystanders are clear.

- Always be alert for bystanders moving into the work area. Sound the horn or other signal to warn bystanders before moving machine.

- If your view is obstructed, use a signal person when traveling or swinging. Always keep the signal person in view.

- No machine motions shall be made unless signals are clearly understood by both signalman and operator.

- Learn the meanings of all flags, signs, and markings used on the job and confirm with the person in charge of signalling.

- Always make sure that rear mirrors are clean and correctly adjusted.

- Dust, heavy rain, fog, can reduce visibility. As visibility decreases, reduce speed and use proper lighting.

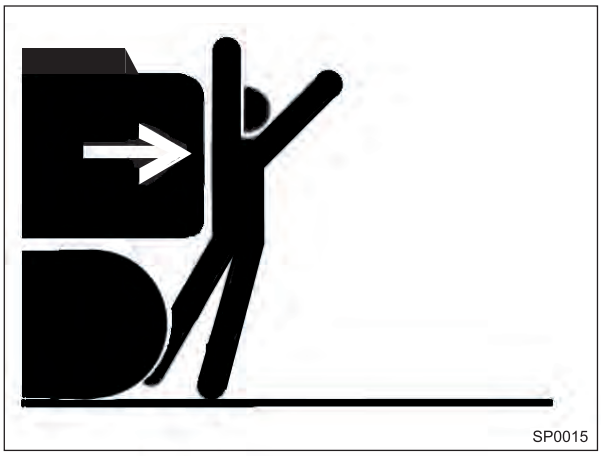
SP0015

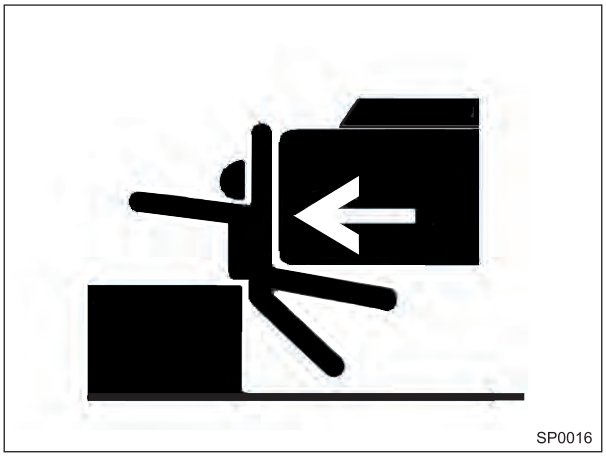
SP0016

TRAVELING ON SLOPE

Before moving the machine, confirm which way to move travel pedals/levers for the corresponding direction you wish to go.

Traveling on a slope may cause the machine to slip or to overturn, possibly resulting in serious injury or death.

- When traveling up or down a slope, keep the bucket in the direction of travel, approximately **20 - 30 cm** above the ground (**A**).

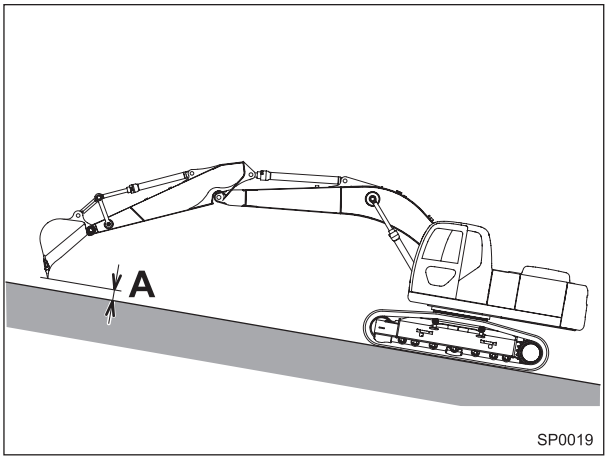

- If machine starts to skid or becomes unstable, lower the bucket immediately.

- Traveling across the face of a slope may cause the machine to skid or to overturn. When travelling (ascending/descending) on a slope, be sure to point the tracks uphill/downhill.

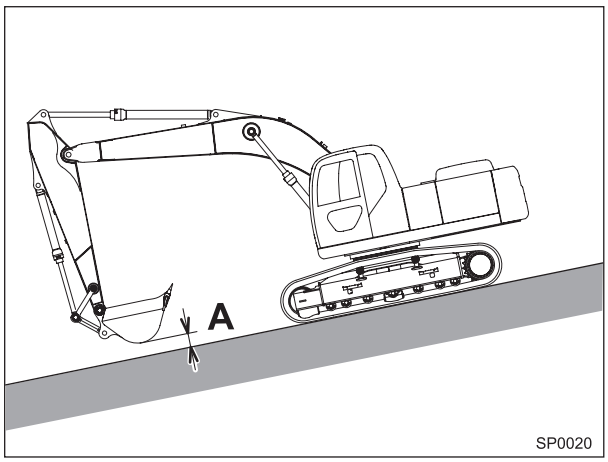

- Turning on an incline may cause the machine to tip over. If turning on an incline is absolutely unavoidable, do so at a place where the slope is gentle and the surface is firm.

- Do not travel on slopes with an angle exceeding **30°**. Do not travel across hill on slopes exceeding an angle of **15°**.

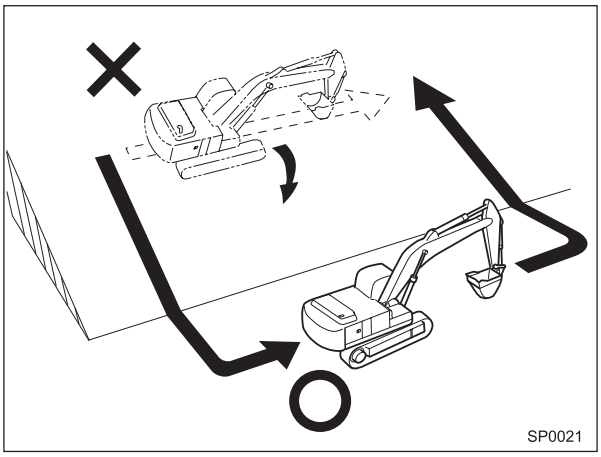

https://truckmanualshub.com/

AVOID OVERTURNING

When working on a slope or on unstable terrain, the danger of tipping over is present with the possibility of subsequent serious damages or fatal injuries.

- Pay the utmost attention when working on a slope. If possible, level first the work area.
- Avoid swing or steering the machine on a slope.
- Decrease the operating speed and actuate the controls carefully, to prevent sudden movements that could result in slipping or tipping over.
- In case the engine is cut-off, lower the bucket to the ground, move the controls in neutral and restart the engine.

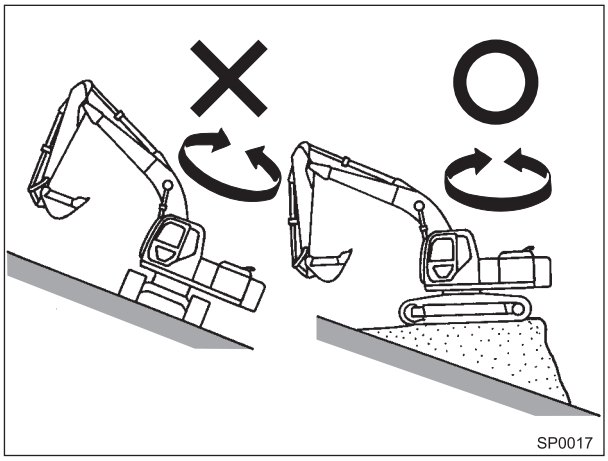

Pay the utmost attention when operating the machine on frozen ground or in snowy conditions.

- Frozen ground, when the ambient temperature increases, tends to be less firm jeopardising the stability of the machine.
- Operate carefully when in snowy conditions. The snow could hide invisible dangerous spots.
- Actuate the controls slowly and carefully to prevent the machine from making unwanted slippery manoeuvres or movements.
- Even on minor slopes, when snow is present and on frozen ground, unwanted slippery manoeuvres or movements of the machine could occur.

INVESTIGATE JOB SITE BEFORE OPERATING THE MACHINE

Explore the working area to identify potential risks before starting and operating the machine. Make sure that the structure and the conditions of the ground are safe before starting operations.

- Make sure that the digging area is sufficiently stable and firm to support the weight of the machine during the work operations.
- Working near edges and ditches presents a risk for the stability of the machine. Check first that edges and the walls of the digging are sufficiently strong. If necessary, prop the edges appropriately to prevent caving-ins.
- Do not dig too near the machine.
- Always position the tracks perpendicular to the edge of the digging with the travel motors on the rear side.
- When working on a slope or near the edge of the road, have a flagman available.

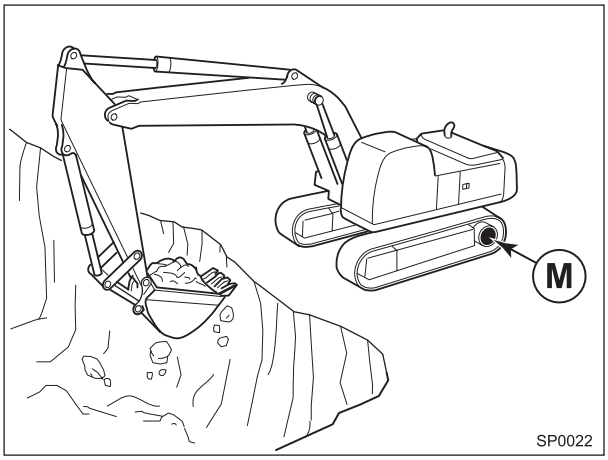

PROTECTING AGAINST THE FALL OF ROCKS AND LANDSLIDES

The machine is equipped with a **ROPS** (Roll-Over Protective Structure) and **FOPS** (Falling Objects Protective Structure) for the cab protection.

- Do not install any cab lifting device to the protection structures.
- Do not weld, drill or modify protective structures. Any type of modification could weaken the structural integrity of the safety system, with serious consequences for the operator, in case of collision, falling objects or landslides.
- After an accident, do not try to straighten or repair protective structures. Contact a Dealer to verify the functionality, to repair or to completely or partially replace the protective structures.

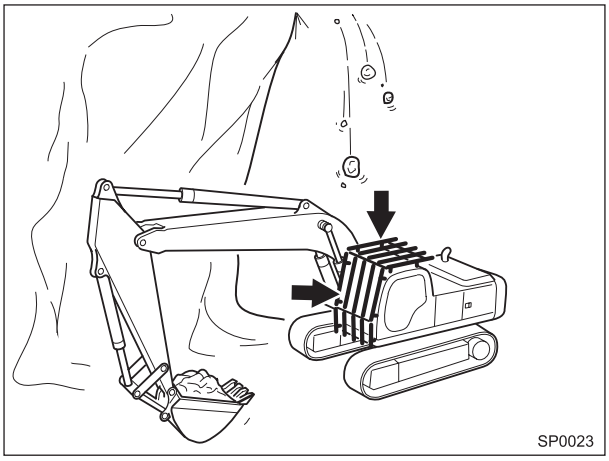

DIG WITH CAUTION

Accidental severing of underground cables or gas lines may cause an explosion and/or fire, possibly resulting in serious injury or death.

- Before digging, check the location of cables, gas lines, and water lines.
- Keep the minimum distance required by law from cables, gas lines, and water lines. If a fiber optic cable should be accidentally severed, do not look into the end. Doing so may result in serious eye injury.
- Contact local authorities and/or the utility companies directly (electric power, gas, telephone, water, sewers, telecommunications, etc.) to obtain information about underground utility lines.

https://truckmanualshub.com/

OPERATE WITH CAUTION

If the front attachment or any other part of the machine hits against an overhead obstacle, such as a bridge, both the machine and the overhead obstacle will be damaged, and personal injury may results as well.

- Take care to avoid hitting overhead obstacles with the boom or arm.

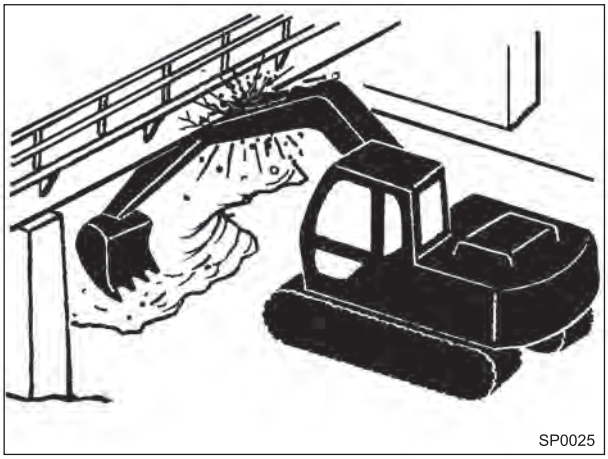

AVOID ELECTRIC LINES

Serious injury or death can result if the machine or front attachments are not kept a safe distance from electric lines.

- When operating near an electric line, never move any part of the machine or load closer than **5 m** plus twice the line insulator length (**L**).
- Check and comply with any local regulations that may apply.
- Wet ground will expand the area that could cause any person on it to be affected by electric shock.
- Keep all bystanders or co-workers away from the site.

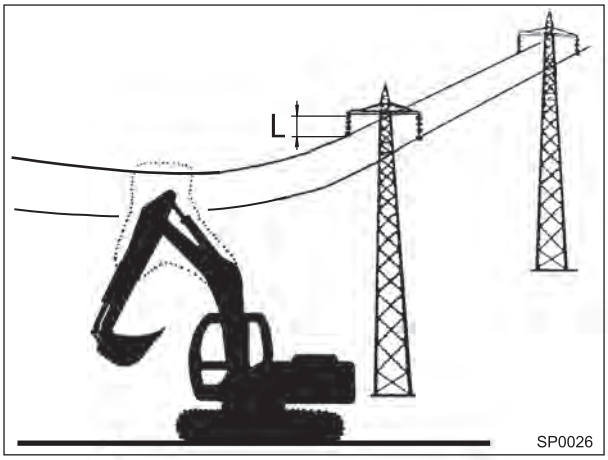

KEEP PERSONNEL CLEAR FROM WORKING AREA

A person may be hit severely by the swinging front attachment or counterweight and/or may be crushed against an other object, resulting in serious injury or death.

- Keep all persons clear from the area of operation and machine movement.
- Before operating the machine, set up barriers to the sides and rear area of the bucket swing radius to prevent anyone from entering the work area.

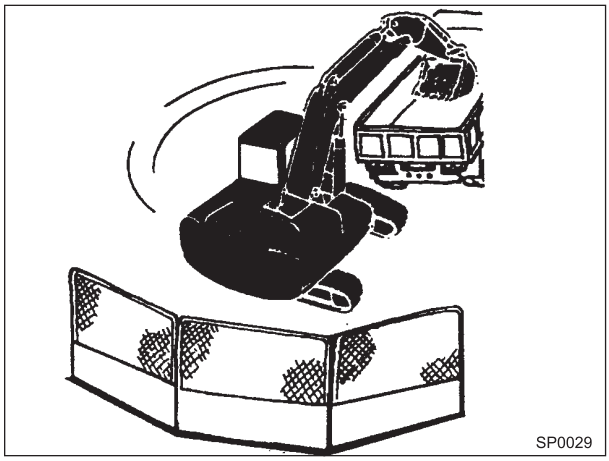

NEVER MOVE THE BUCKET OVER ANY ONE

Never lift, move, or swing bucket above anyone or a truck cab. Serious injury or machine damage may result due to bucket load spill or due to collision with the bucket.

DO NOT OPERATE IN TUNNELS

Do not operate the machine in enclosed spaces or, in any case, without appropriate ventilation. Operations in tunnels or underground sites where potential explosive conditions exist are not allowed. There is a danger for explosions and potentially deadly injuries.

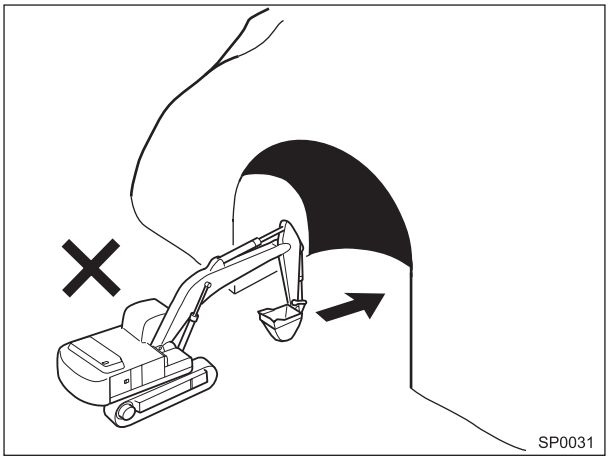

NEVER UNDERCUT A HIGH BANK

The edges could collapse or a land slide could occur causing serious injury or death.

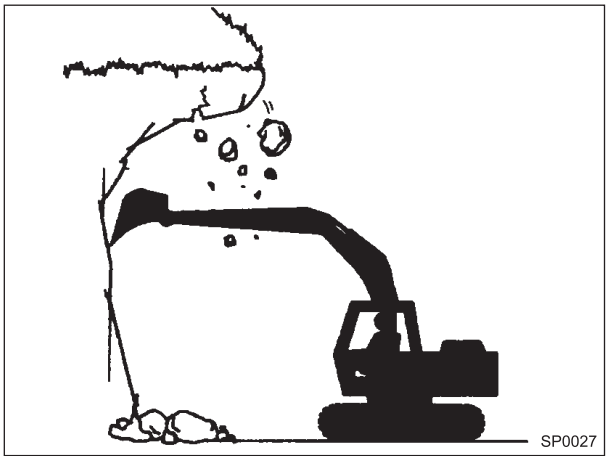

https://truckmanualshub.com/

SAFETY LOADS MOVING

The excavator is a machine designed specifically to perform digging/loading works, thus it must not be used to handle suspended loads. In the event, under exceptional conditions, it becomes necessary to handle materials, the following indications must be strictly implemented:

- The machine must be equipped compulsorily with the appropriate variant provided upon request. Also, totally comply with the safety precautions for the operation of the excavator as a lifting equipment.
- Secure the loads to be raised using cables or chains fastened with appropriate hooking mechanisms.
- Never hook cables or chains to the bucket teeth.
- Nobody should be allowed to remain under the raised load or within the excavator operating range for any reason whatever.
- Never exceed specified loading capacity. Incorrect fastening of slings or chains may cause boom/arm failure or failure of the lifting means with consequent bodily injuries and even death.
- Always ensure that slings and chains used for lifting are adequate to the load and in good condition.
- All loading capacities are referred to the machine on a level surface and should be disregarded when working on a slope.
- In any case, comply with the current national or local regulations on this matter.

AVOID EXCESSIVE DIGGING EFFORTS

Operate the machine complying with the load limits in accordance with the "table of lifting loads" located inside the cab.

- Do not exceed the prescribed load limits.
- Do not use the strength of the attachment to travel or move the machine.
- Do not try digging exploiting the mass of the machine.

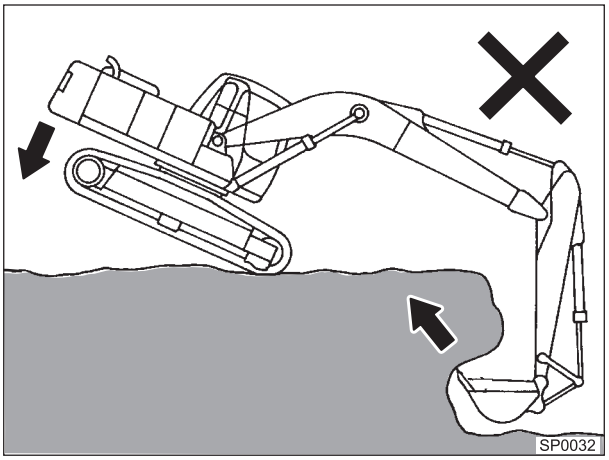

PAY ATTENTION WHEN DIGGING DEEPLY

When digging deeply, pay special attention to prevent contacts of the attachment and the relevant hydraulic hoses with the ground.

- Do not swing the turret or the undercarriage when the attachment boom is fully lowered. Under these conditions there is the danger that the boom collides with the track chains.

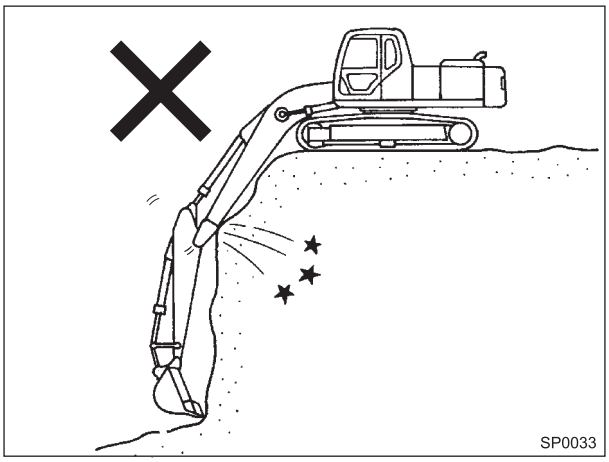

DO NOT USE THE TRACTION FORCE OF THE MACHINE FOR DIGGING

Do not travel the machine to dig. In doing this, an excessive stress on the front attachment could results in damages to the structure. Use the undercarriage for travelling only.

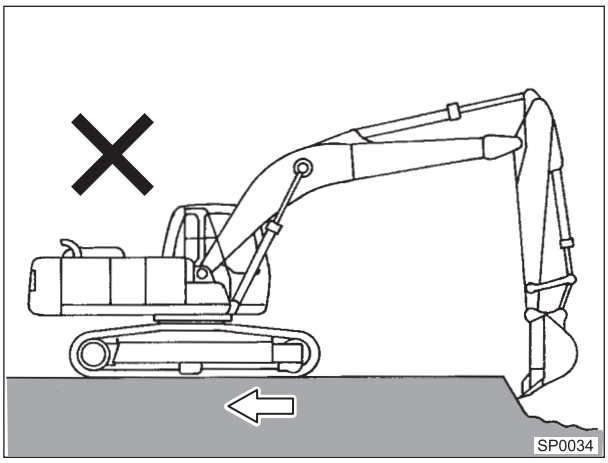

DO NOT USE THE TURRET SWING FOR DIGGING

Do not use the turret swing for digging or moving rocks. An excessive stress on the front attachment could results in damages to the structure reducing the operating life of the swing system. Also, this inappropriate use of the machine could cause serious injuries or fatalities.

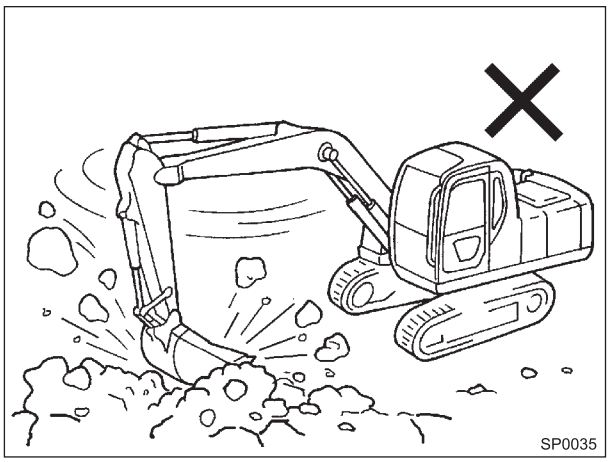

DO NOT USE THE BUCKET AS A HAMMER

The use of the bucket as a hammer or for piling operations could cause serious damages to the bucket itself and the components of the front attachment. Also, this inappropriate use of the machine could cause serious injuries or fatalities.

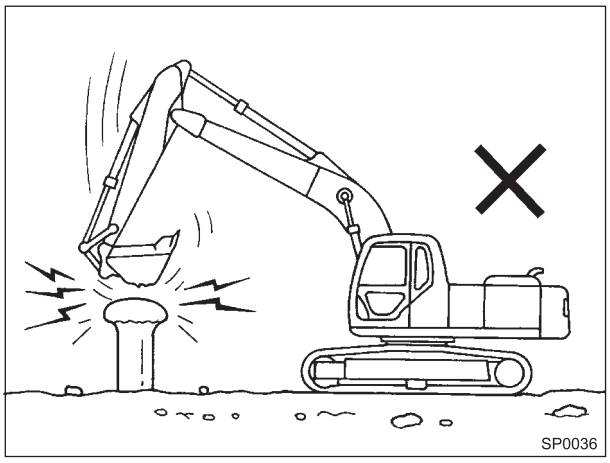

AVOID OPERATING THE CYLINDERS TO FULL STROKE

Do not extend repeatedly the bucket and the arm cylinders full stroke with the purpose of cleaning the bucket from residual materials. This could cause damages to the cylinders. To remove residues from the bucket, use water under pressure or remove them manually.
Tolerance A ≥ 50 mm

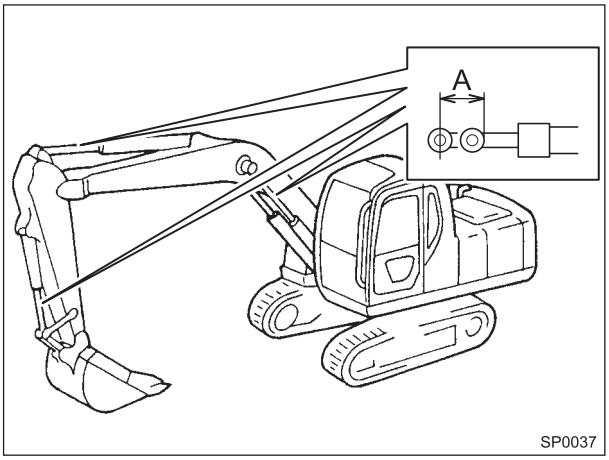

PROVIDE SIGNALS FOR JOBS INVOLVING A NUMBER OF MACHINES

For jobs involving several machines, provide signals commonly known by all personnel involved. Also, appoint a signal person to co-ordinate the job site. Make sure that all personnel obey the signal person's directions.

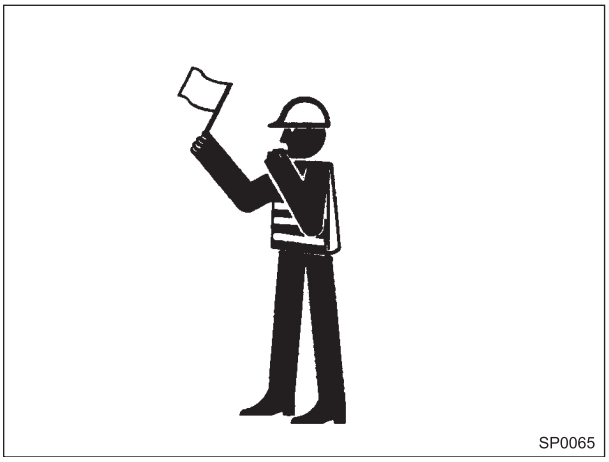

PARK MACHINE SAFELY

To avoid accidents:

- Park machine on a level surface.
- Lower bucket to the ground.
- Pull the safety lever (pilot-control shut-off lever) to the **LOCK** position.
- Turn auto-idle switch off.
- Run engine at slow idle speed without load for 5 minutes.
- Turn key-start switch to **OFF** to stop engine.
- Remove the ignition key from the key switch.

Prior to leaving the machine, close the windows, the cab door and all panels.

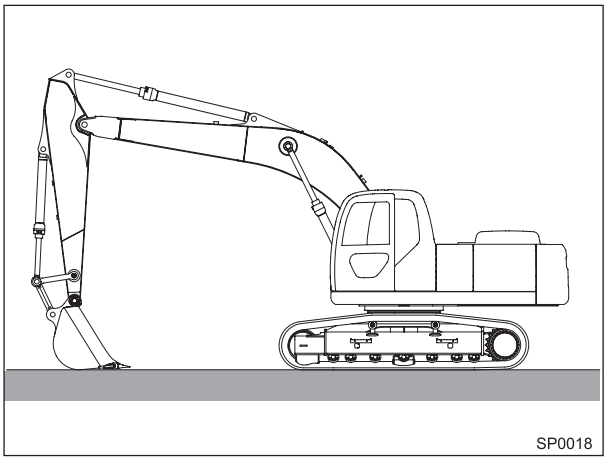

TRANSPORTING THE MACHINE UNDER SAFE CONDITIONS

During loading or unloading operations of the machine on a truck or trailer the danger for tipping over is always present.

- Use a truck or trailer appropriate for transporting the machine.
- Secure safely the machine to the trailer with appropriate chains or cables. Please refer to the chapter "**TRANSPORTATION**" of Operator's Manual for the safe loading and unloading procedures.
- Make sure that you comply with National and local regulations when transporting the machine on open roads.

SAFE MAINTENANCE

Prior to service in the machine:

- Park the machine on the level ground.
- Lower the bucket to the ground.
- Move the safety lever to the **LOCK** position.
- Switch off the Auto-Idle.
- Let the engine idle with no load for at least five minutes until it has cooled down.
- Turn the ignition key to the **OFF** position to stop the engine.
- Remove the ignition key from the start switch.
- Apply the "Maintenance in progress" tag (see SAFETY DECALS in this Chapter). This tag can be applied o the left-hand control lever, safety lever or cab door.

SP0039

To avoid accidents:

- Understand maintenance procedure before starting the work.
- Keep the working area clean and dry.
- Do not spray water or steam inside the cab.
- Do not lubricate or service the machine when it is in motion.
- Keep hands, feet and clothes far from moving parts.
- Do not leave the machine unattended if servicing requires the engine running.
- If the machine is to be raised, place boom and arm at an angle 90 to 110°. Lock machine components which should be raised for maintenance or repair using suitable supporting means.
- Never work under a machine kept raised by the boom.
- Inspect certain component regularly, repair or replace as necessary. Refer to the Chapter **MAINTENANCE** in Operator's Manual.
- Keep all components in good condition and properly install. Immediately repair any fault.
- Immediately repair any damage.Replace worn or failed components. Remove grease, oil, debris build-ups.
- Disconnect the negative cable from the battery before carry out any work on he electrical sysem or arc-welding on he machine.

SP0040

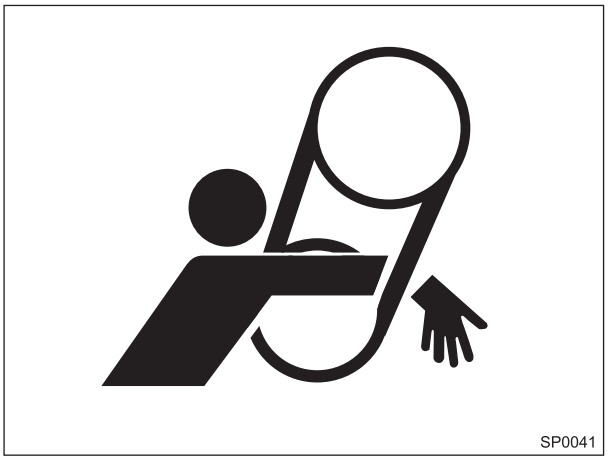
SP0041

https://truckmanualshub.com/

WARN OTHERS OF SERVICE WORK

Unexpected machine movement can cause serious injury.

- Before performing any work on the machine, attach a maintenance in progress tag (see also SAFETY DECALS in this Chapter) . This tag can be applied o the left-hand control lever, safety lever or cab door.

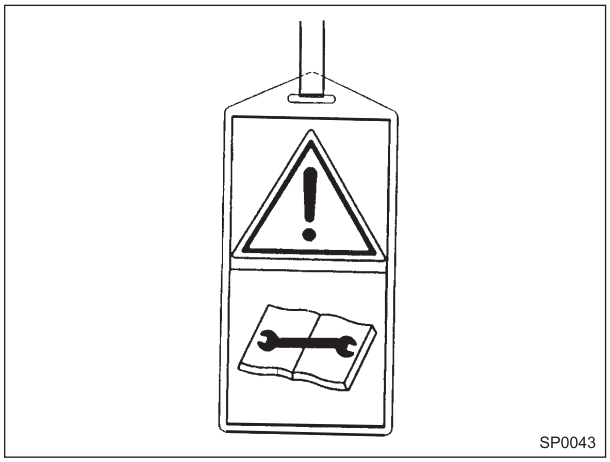

SUPPORT MACHINE PROPERLY

Never attempt to work on the machine without securing the machine first.

- Always lower the attachment or tool to the ground before working on the machine.
- If you must work on a lifted machine or attachment, securely support the machine or attachment.
- Do not support the machine on cinder blocks, hollow tires, or props that may crumble under continuous load.
- Do not work under a machine that is supported solely by a jack.

STOP THE ENGINE PRIOR TO PERFORMING

Do not perform any maintenance operation with the engine running. Trapping by moving parts could cause serious injuries. Stop the engine and wait that it cools-off prior to performing maintenance operations.
In case it is indispensable to perform maintenance operations with the engine running, have a person co-operating with you sitting in the operator's seat, to cut-off the engine immediately in case of necessity.

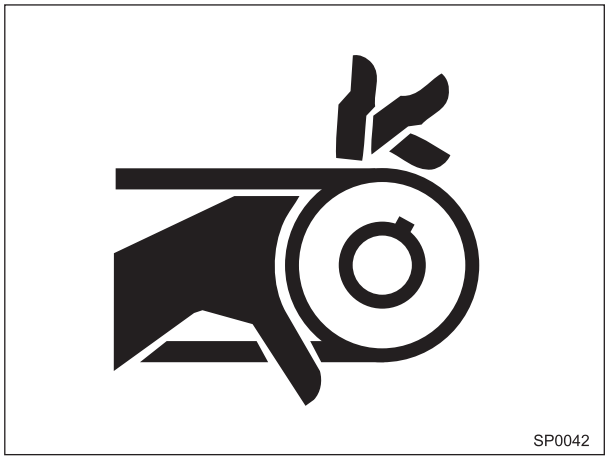

DISPOSE OF WASTE IN THE APPROPRIATE MANNER

Waste improperly disposed of represents a danger for the envinronment. Potentially dangerous waste used on the excavators includes lubricants, fuel, coolant, brake fluid, filters and batteries.

- Used sealed containers when discharging fluids. Do not use containers for food or beverages which may induce drinking.
- Do not spill waste over the ground, into drains, or water beds.
- Obtain information about the correct methods to recycle or dispose of waste from local Authorities, collection centres or your Dealer.

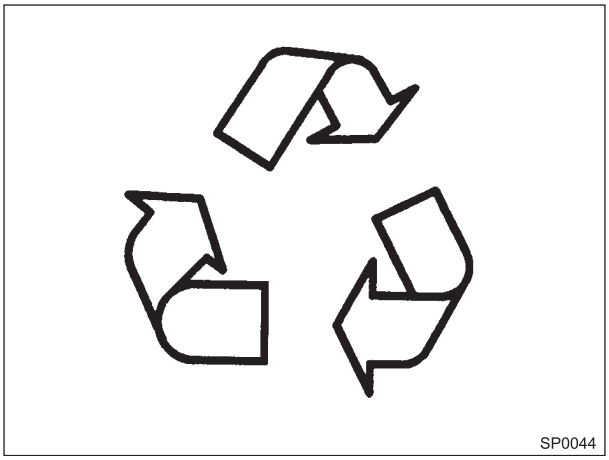
SP0044

PROPERLY LIGHT THE WORKING AREA

Properly and safely light the working area.

- Use safe portable lamps in order to work inside and under the machine.
- Make sure that the lamp is shielded by a cage; the incandescent filament of a lamp, accidentally broken, can cause fuel or oil fire.

SP0045

KEEP CLEAN THE MACHINE

- Keep the machine clean and free of debris, excess or spilled lubricants, fuel and fluids. Use approved solvents, detergents and water to clean the machine and its components on a regular basis.
- Keep clean the engine compartment, radiator, batteries, hydraulic pipes, fuel tank and operator's position.
  The engine compartment temperature can quickly rise, after stopping the engine. Be careful to possible fires.
  Open the access doors in order to quicken the engine cooling process and clean the compartment.

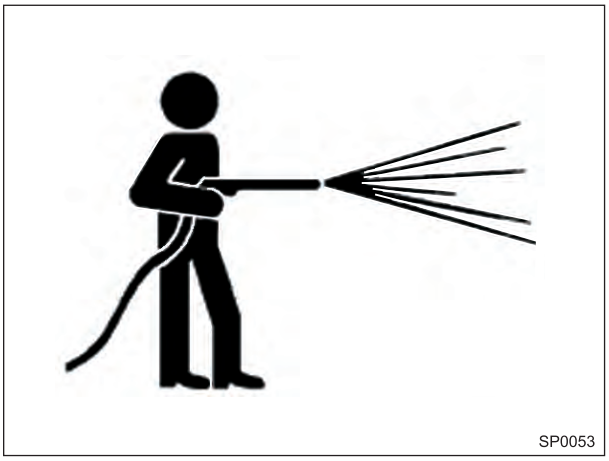
SP0053

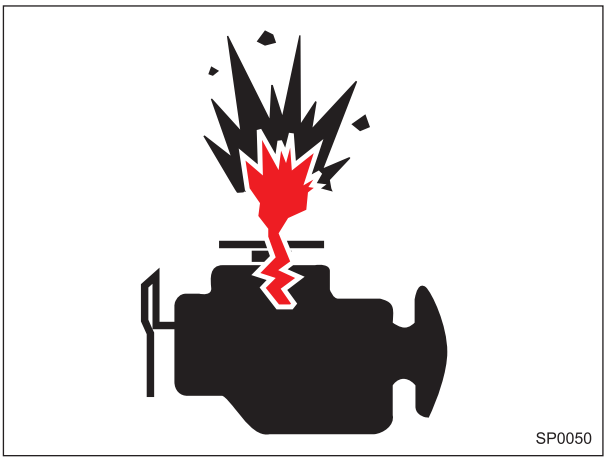
SP0050

PREVENT ACID SCALDS

The sulfuric acid, contained in the battery, is poisonous. It is strong enough to scald the skin, corrode clothes and cause blindness, if it is sprayed into the eyes.

To avoid dangers:

- Fill the batteries in airy areas.
- Wear eye protections and rubber gloves.
- Avoid breathing the electrolyte vapours when topping up.
- Avoid spilling or dripping the electrolyte.
- Use proper emergency starting techniques.

If you are touched with acid sprays:

- Rinse your skin well with water.
- Put on your skin sodium bicarbonate or clay to help the acid neutralization.
- Rinse your eyes with water for **15** minutes.
- Immediately see a doctor.

SP0055

STARTING THE ENGINE WITH BOOSTER BATTERIES

- The operator should be sitting in the driver's seat to keep the machine under control when the engine starts. Starting the engine with booster batteries is a two man operation.
- Do not use batteries that have been stored in the cold for a long time.
- Mistakes in following procedures detailed for starting the engine with slave batteries may cause the batteries to explode or machine to move unexpectedly

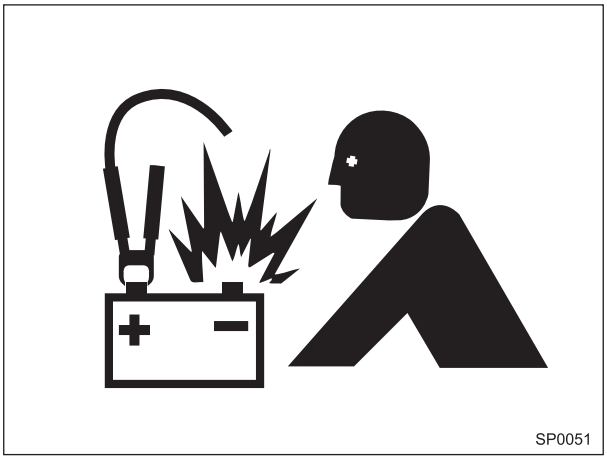

PREVENT BATTERY EXPLOSIONS

Battery gas can explode.

- Keep sparks, lighted matches, and flames away from the top of battery.
- Never check battery charge by placing a metal object across the posts. Use a voltmeter or hydrometer.
- Do not charge a frozen battery; it may explode. Warm battery to **16 °C**.
- Battery electrolyte is poisonous. If the battery should explode, battery electrolyte may be splashed into eyes, possibly resulting in blindness. Be sure to wear eye protection.

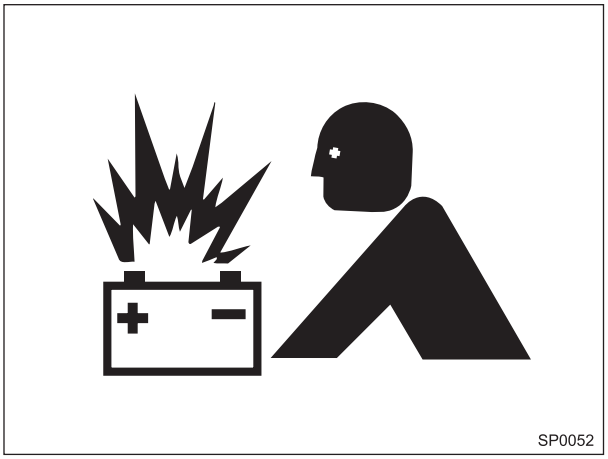

https://truckmanualshub.com/

PREVENT BURNS

After operation, engine coolant is hot and under pressure. Hot water or steam is contained in the engine, radiator and heater lines. Skin contact with escaping hot water or steam can cause severe burns.

- To prevent possible injury from hot spraying water. Do not remove the radiator cap until the engine is cool. When opening, turn the cap slowly to the stop. Allow all pressure to be released before removing the cap.

- The hydraulic oil tank is pressurized. Again, be sure to release all pressure before removing the cap.

- Engine oil, reduction gear oil and hydraulic oil also become hot during operation. The engine, hoses, lines and other parts become hot as well.

- Wait for the oil and components to cool down before starting any maintenance or inspection work.

STORE ATTACHMENTS SAFELY

Stored attachments such as buckets, hydraulic breakers and blades can fall and cause serious injury or death.

- Securely store attachments and implements to prevent falling.
- Keep bystanders away from storage areas.

https://truckmanualshub.com/

This as a preview PDF file from **best-manuals.com**

Best Manuals

Download full PDF manual at **best-manuals.com**