https://truckmanualshub.com/

DDC-SVC-MAN-0073

DD13™ / DD15™
Application and Installation

DETROIT DIESEL®
DEMAND PERFORMANCE℠

13400 Outer Drive, West, Detroit, Michigan 48239-4001
Telephone: 313-592-5000
www.detroitdiesel.com

Specifications are subject to change without notice. Detroit Diesel Corporation is registered to ISO 9001:2001. Copyright © Detroit Diesel Corporation. All rights reserved. Detroit Diesel Corporation is a Daimler company. Printed in U.S.A.

https://truckmanualshub.com/

CALIFORNIA
Proposition 65 Warning

Diesel engine exhaust and some of its constituents are known to the State of California to cause cancer, birth defects, and other reproductive harm.

https://truckmanualshub.com/

ATTENTION

This document is a guideline for qualified personnel. It is intended to be used by equipment manufacturers and contains Detroit Diesel Corporation's recommendations for the ancillary systems supporting the Detroit Diesel engines covered by this document. The equipment manufacturer is responsible for developing, designing, manufacturing and installing these systems, including component qualification. The equipment manufacturer is also responsible for furnishing equipment users complete service and safety information for these systems. Detroit Diesel Corporation makes no representations or warranties regarding the information contained in installation of these ancillary systems, or the preparation or distribution to equipment users of preliminary and incomplete and is subject to change without notice.

TRADEMARK INFORMATION

DD Platform, DDEC®, Ether Start®, Diagnostic Link® are registered trademarks of Detroit Diesel Corporation. Fuel Pro® and Pro-Chek® are registered trademarks of Davco Manufacturing, L.L.C. Viton® is a registered trademark of DuPont Dow Elastomers L.L.C. Loctite® is a registered trademark of Loctite Corporation. Delco Remy® is a registered trademark of Delco Remy America, Inc. Leece-Neville® is a registered trademark of Leece-Neville Company.

https://truckmanualshub.com/

https://truckmanualshub.com/

DD PLATFORM APPLICATION AND INSTALLATION MANUAL

ABSTRACT

This manual discusses the proper application and installation of the Detroit Diesel DD Platform engine. The intention of this manual is to provide information in general terms so that it may be applicable for all applications unless specifically noted or identified.

This manual contains the following information:

- General information on safety precautions and on accessing installation drawings
- Specific component and accessory information on various production models
- Information on the air inlet, exhaust, cooling, fuel, lubrication, electrical, mounting, and starting aid systems.
- Information on the data can be found on the www.detroitdiesel.com, a website that provides information such as technical data and installation drawings.

 Copyright © 2009 DETROIT DIESEL CORPORATION

https://truckmanualshub.com/

All information subject to change without notice.
DDC-SVC-MAN-0073 Copyright © 2009 DETROIT DIESEL CORPORATION

https://truckmanualshub.com/

TABLE OF CONTENTS

1 INTRODUCTION 1- 1

2 SAFETY PRECAUTIONS 2- 1
2.1 SAFETY MEASURES 2- 2
2.2 STANDS 2- 2
2.3 GLASSES 2- 2
2.4 WELDING 2- 2
2.5 WORK PLACE 2- 4
2.6 CLOTHING 2- 5
2.7 ELECTRIC TOOLS 2- 5
2.8 AIR 2- 5
2.9 FLUIDS AND PRESSURE 2- 5
2.10 BATTERIES 2- 6
2.11 FIRE 2- 7
2.12 FLUOROELASTOMER 2- 7

3 ENGINE AND ACCESSORY IDENTIFICATION 3- 1
3.1 ENGINE AND ACCESSORY IDENTIFICATION DESCRIPTION 3- 2
3.2 MAJOR COMPONENT LOCATIONS 3- 4
3.3 ENGINE IDENTIFICATION 3- 5

4 AIR INLET SYSTEM 4- 1
4.1 AIR INLET SYSTEM DESCRIPTION 4- 2
4.1.1 DD PLATFORM ON-HIGHWAY ENGINES 4- 2
4.2 INSTALLATION REQUIREMENTS 4- 4
4.2.1 DRY PAPER ELEMENT AIR CLEANERS 4- 5
4.2.1.1 LIGHT-DUTY AIR CLEANER 4- 5
4.2.1.2 MEDIUM-DUTY USE AIR CLEANER 4- 6
4.2.1.3 HEAVY-DUTY USE AIR CLEANER 4- 7
4.2.1.4 EXTRA HEAVY-DUTY USE 4- 9
4.2.1.5 FOAM TYPE AIR CLEANERS 4-10
4.2.1.6 OIL-BATH AIR CLEANERS 4-10
4.2.1.7 AUXILIARY PRECLEANERS 4-10
4.2.1.8 INLET SCREENS 4-11
4.2.1.9 RAIN CAPS AND INLET HOODS 4-11
4.2.1.10 WATER DRAINS 4-12
4.2.1.11 INLET SILENCERS 4-12
4.2.1.12 AIR CLEANER SELECTION 4-12
4.2.2 RESTRICTION INDICATOR 4-13
4.2.3 PIPEWORK 4-15
4.2.3.1 PIPEWORK MATERIAL SPECIFICATIONS 4-15
4.2.3.2 DIFFUSERS 4-15
4.2.4 HOSE CONNECTIONS 4-16
4.3 DESIGN GUIDELINES 4-17

 Copyright © 2009 DETROIT DIESEL CORPORATION

https://truckmanualshub.com/

4.3.1 MAXIMUM AIR INLET FLOW 4-17
4.3.2 AIR INLET SYSTEM RESTRICTION 4-17
4.3.3 INLET LOCATION 4-18
4.3.4 AIR-TO-AIR CHARGE AIR COOLER 4-18
4.3.4.1 RESTRICTION AND TEMPERATURE REQUIREMENTS 4-20
4.3.4.2 CLEANLINESS 4-20
4.3.4.3 LEAKAGE 4-21
4.3.4.4 SIZE 4-21
4.3.4.5 COOLING AIR FLOW RESTRICTION 4-21
4.3.4.6 MATERIAL 4-21
4.3.4.7 HEADER TANKS 4-22
4.3.4.8 LOCATION 4-22
4.3.4.9 FAN SYSTEMS 4-22
4.3.4.10 SHUTTERS 4-22
4.3.4.11 WINTERFRONTS 4-23
4.4 TESTING REQUIREMENTS 4-23
4.4.1 TESTING LOCATION 4-23
4.4.2 INLET SYSTEM RESTRICTION 4-24
4.4.3 AIR-TO-AIR SYSTEM EVALUATION TESTS 4-24
4.4.3.1 MAXIMUM TEMPERATURE RISE--AMBIENT TO INTAKE MANIFOLD 4-24
4.4.3.2 CHARGE AIR COOLER SYSTEM RESTRICTION 4-25
4.5 TEST 4-25
4.5.1 MOBILE AIR-TO-AIR 4-25

5 EXHAUST GAS RECIRCULATION SYSTEM 5- 1
5.1 EGR SYSTEM DESCRIPTION 5- 2
5.2 INSTALLATION AND DESIGN REQUIREMENTS 5- 3
5.2.1 COOLING SYSTEM 5- 3
5.2.2 AUXILIARY COOLERS 5- 3
5.3 TESTING REQUIREMENTS 5- 3

6 EXHAUST SYSTEM 6- 1
6.1 EXHAUST SYSTEM DESCRIPTION 6- 2
6.1.1 EXHAUST SYSTEM 6- 2
6.1.2 TURBOCHARGER 6- 4
6.1.3 AXIAL POWER TURBINE 6- 4
6.2 INSTALLATION REQUIREMENTS 6- 5
6.2.1 BACK PRESSURE 6- 5
6.2.2 NOISE 6- 6
6.2.3 FLEXIBLE FITTINGS 6- 6
6.2.4 EXHAUST CONNECTION POINTS 6- 6
6.2.5 MATERIAL SPECIFICATIONS FOR PIPEWORK 6- 8
6.3 DESIGN REQUIREMENTS 6- 8
6.3.1 TEMPERATURE DROP FROM TURBOCHARGER OUTLET TO AFTERTREATMENT DEVICE 6- 8
6.3.2 DISTANCE FROM HYDROCARBON DOSER TO ATD INLET 6- 8
6.3.3 OUTLET LOCATION 6- 8
6.3.4 DRAINAGE 6- 9

All information subject to change without notice.
DDC-SVC-MAN-0073 Copyright © 2009 DETROIT DIESEL CORPORATION

https://truckmanualshub.com/

6.3.5 SYSTEM INSULATION 6- 9
6.3.6 BENDING MOMENT CALCULATIONS 6- 9
6.4 TESTING REQUIREMENTS 6- 9
6.4.1 MEASUREMENT OF EXHAUST BACK PRESSURE 6-10
6.4.2 MEASUREMENT OF TEMPERATURE DROP FROM TURBOCHARGER TO ATD INLET 6-11
6.4.3 MEASUREMENT OF EXHAUST LEAKAGE BETWEEN TURBOCHARGER AND ATD INLET 6-12

7 AFTERTREATMENT SYSTEM 7- 1
7.1 AFTERTREATMENT SYSTEM DESCRIPTION 7- 2
7.2 SYSTEM DESCRIPTION / OPERATION 7- 4
7.2.1 AFTERTREATMENT DEVICE 7- 6
7.2.2 INTAKE THROTTLE 7- 7
7.2.3 HYDROCARBON (HC) DOSER 7- 8
7.3 AFTERTREATMENT DEVICE DESIGN FEATURES 7-10
7.3.1 FEET / HOOKS 7-10
7.3.2 LOCATING DEVICE 7-10
7.3.3 SENSOR BOX DISCUSSION 7-11
7.3.4 V-BAND CLAMPS 7-11
7.3.5 SENSOR AND HARNESS 7-11
7.4 AFTERTREATMENT DEVICE VARIATIONS 7-11
7.5 NOISE ATTENUATION 7-12
7.6 MASS OF THE AFTERTREATMENT DEVICE 7-12
7.7 MOUNTING REQUIREMENTS 7-12
7.7.1 MOUNTING ZONES 7-13
7.7.2 BENDING MOMENT FOR INLETS AND OUTLETS 7-13
7.7.3 DRAINAGE 7-13

8 COOLING SYSTEM, AIR-TO-AIR CHARGE COOLING 8- 1
8.1 COOLING SYSTEM, AIR-TO-AIR CHARGE COOLING SYSTEM DESCRIPTION 8- 2
8.2 JACKET WATER COOLING SYSTEM 8- 2
8.3 THERMOSTAT 8- 4
8.3.1 VENTING 8- 6
8.4 WATER PUMP 8- 7
8.5 TYPES OF COOLING SYSTEMS 8- 8
8.5.1 RAPID WARM-UP COOLING SYSTEM RECOMMENDED DESIGN 8- 8
8.5.2 AUXILIARY AIR-COOLED COOLER CORES 8-10
8.5.3 COOLANT HEATERS 8-10
8.6 AIR-TO-AIR CHARGE COOLING 8-10
8.6.1 CHARGE AIR COOLER 8-12
8.7 COOLING SYSTEM PERFORMANCE REQUIREMENTS 8-13
8.7.1 SYSTEM FILL 8-13
8.7.2 SYSTEM DRAIN 8-13
8.7.3 DEAERATION 8-13
8.7.4 SYSTEM COOLANT CAPACITY 8-14
8.7.5 DRAWDOWN CAPACITY 8-16
8.7.6 CORE CONSTRUCTION 8-16

 Copyright © 2009 DETROIT DIESEL CORPORATION

https://truckmanualshub.com/

8.7.7 WATER PUMP INLET PRESSURE/MAXIMUM STATIC HEAD 8-16
8.7.8 COOLANT FLOW RATE/EXTERNAL PRESSURE DROP 8-16
8.7.9 MINIMUM COOLANT TEMPERATURE 8-17
8.7.10 SYSTEM PRESSURIZATION 8-17
8.7.11 COOLANTS 8-17
8.8 CHARGE AIR COOLING REQUIREMENTS 8-17
8.8.1 COOLING CAPABILITY 8-17
8.8.2 MAXIMUM PRESSURE LOSS 8-17
8.8.3 CLEANLINESS 8-18
8.8.4 LEAKAGE 8-18
8.9 VEHICLE SIGN-OFF 8-18
8.10 COOLING SYSTEM DESIGN CONSIDERATIONS 8-18
8.10.1 COOLING SYSTEM REQUIREMENTS 8-18
8.10.1.1 ENGINE OPERATING TEMPERATURE 8-18
8.10.1.2 INTAKE MANIFOLD TEMPERATURE 8-19
8.10.2 ENGINE PERFORMANCE 8-19
8.10.2.1 ENGINE HEAT REJECTION 8-19
8.10.2.2 COOLANT FLOW 8-19
8.10.2.3 HEAT TRANSFER CAPABILITIES 8-19
8.10.3 ENVIRONMENTAL AND OPERATING CONDITIONS 8-20
8.10.3.1 AMBIENT TEMPERATURE 8-20
8.10.3.2 ALTITUDE 8-21
8.10.3.3 SPACE CONSTRAINTS 8-21
8.10.3.4 NOISE LIMITS 8-21
8.10.3.5 TILT OPERATIONS OR INSTALLATIONS 8-21
8.10.4 SYSTEM COMPONENTS 8-21
8.10.4.1 ADDITIONAL HEAT LOADS TO COOLANT 8-21
8.10.4.2 ADDITIONAL HEAT LOADS TO AIR 8-22
8.10.4.3 COOLANT TYPE 8-22
8.10.4.4 PLUMBING 8-22
8.10.4.5 AUXILIARY COOLANT FLOW PATH CIRCUITRY 8-24
8.10.4.6 WATER COOLED EXHAUST SYSTEMS 8-24
8.10.4.7 WATER PUMPS 8-24
8.11 CHARGE AIR COOLING DESIGN GUIDELINES 8-25
8.11.1 SIZE 8-25
8.11.2 COOLING AIR FLOW RESTRICTION 8-26
8.11.3 MATERIAL 8-26
8.11.4 HEADER TANKS 8-26
8.11.5 LOCATION 8-26
8.11.6 PIPEWORK 8-26
8.12 HEAT EXCHANGER SELECTION 8-27
8.12.1 SHELL AND TUBE HEAT EXCHANGERS 8-27
8.13 FAN SYSTEM RECOMMENDATIONS AND FAN SELECTION 8-28
8.13.1 BLOWER VS. SUCTION FANS 8-29
8.13.1.1 FAN PERFORMANCE 8-30
8.13.1.2 FAN POSITION 8-33
8.13.1.3 FAN SHROUDS 8-34

All information subject to change without notice.
DDC-SVC-MAN-0073 Copyright © 2009 DETROIT DIESEL CORPORATION

https://truckmanualshub.com/

8.13.1.4 FAN SYSTEM ASSEMBLIES 8-35
8.13.1.5 FAN DRIVES 8-35
8.13.1.6 BAFFLES TO PREVENT AIR RECIRCULATION 8-35
8.13.1.7 SHUTTERS 8-35
8.13.1.8 WINTERFRONTS 8-35
8.14 RADIATOR COMPONENT DESIGN 8-36
8.14.1 DOWN FLOW AND CROSS FLOW RADIATORS 8-36
8.14.1.1 HORIZONTAL RADIATOR 8-36
8.14.1.2 RAPID WARM-UP DEAERATION TANK — DOWN FLOW RADIATOR 8-36
8.14.1.3 REMOTE MOUNTED RADIATORS/HEAT EXCHANGER 8-37
8.14.1.4 INTEGRAL TOP TANK 8-37
8.14.1.5 REMOTE TANK 8-40
8.14.1.6 RADIATOR BOTTOM TANK 8-42
8.14.1.7 COOLANT PRESSURE CONTROL CAPS AND RELIEF VALVES 8-44
8.14.1.8 THERMOSTAT 8-46
8.14.1.9 COOLANT SENSOR DEVICES 8-47
8.14.1.10 COOLANT RECOVERY SYSTEM 8-48
8.14.2 COLD WEATHER OPERATING OPTIMIZATION 8-54
8.14.2.1 ENGINE 8-54
8.14.2.2 VEHICLE 8-54
8.14.2.3 COOLING SYSTEM 8-54
8.14.2.4 HEATER CIRCUIT 8-54
8.14.3 COOLANT HEATERS 8-55
8.14.4 MULTI-DUTY CYCLE 8-55
8.14.5 OTHER CONSIDERATIONS 8-55
8.15 COOLING SYSTEM EVALUATION TESTS 8-55
8.15.1 SYSTEM DESCRIPTION 8-56
8.15.2 INSTRUMENTATION 8-56
8.15.2.1 THERMOCOUPLES AND ASSOCIATED HARDWARE 8-56
8.15.2.2 PRESSURE GAUGES AND ASSOCIATED HARDWARE 8-57
8.15.2.3 THERMOSTAT 8-57
8.15.2.4 SIGHT GLASS AND TRANSPARENT TUBING 8-58
8.15.2.5 GRADUATED CONTAINER 8-59
8.15.2.6 PRESSURE CAP 8-59
8.15.2.7 STOP WATCH 8-59
8.15.2.8 LIGHT 8-59
8.15.2.9 WATER SUPPLY AND HOSE 8-59
8.15.2.10 ENGINE LOADING METHOD 8-59
8.15.2.11 TAPE MEASURE 8-59
8.15.2.12 FLOWMETERS AND ASSOCIATED HARDWARE 8-60
8.15.3 TEST PREPARATIONS 8-60
8.15.4 TYPES OF TESTS 8-61
8.15.4.1 CONTINUOUS FILL 8-61
8.15.4.2 INTERRUPTED FILL 8-62
8.15.4.3 BUCKET FILL 8-62
8.15.4.4 TOTAL SYSTEM CAPACITY 8-63
8.15.4.5 DRAINING CAPABILITY 8-63

 Copyright © 2009 DETROIT DIESEL CORPORATION

https://truckmanualshub.com/

8.15.4.6 WATER PUMP BINDING TEST 8-63
8.15.4.7 DEAERATION TEST 8-63
8.15.4.8 DRAWDOWN TEST 8-64
8.15.4.9 WATER FLOW AND PRESSURE TEST 8-66
8.15.4.10 COOLING INDEX TEST 8-66
8.15.5 CHARGE AIR COOLING EVALUATION TEST 8-70
8.15.6 SYSTEM DESCRIPTION 8-71
8.15.7 INSTRUMENTATION 8-72
8.15.7.1 TEMPERATURE MEASUREMENT 8-72
8.15.7.2 PRESSURE MEASUREMENT 8-72
8.15.8 LOCATION 8-74
8.15.9 INLET SYSTEM RESTRICTION 8-75
8.15.9.1 MAXIMUM TEMPERATURE RISE — AMBIENT TO TURBOCHARGER INLET . 8-75
8.15.9.2 AIR-TO-AIR SYSTEM EVALUATION TESTS 8-75
8.15.9.3 MAXIMUM TEMPERATURE RISE — AMBIENT TO INTAKE MANIFOLD 8-75
8.15.9.4 CHARGE AIR COOLER SYSTEM RESTRICTION 8-75
8.15.10 TEST 8-76
8.15.11 TEST ANALYSIS 8-76
8.16 COOLING SYSTEM DIAGNOSTICS AND TROUBLESHOOTING GUIDE 8-76
8.16.1 ENGINE OVERHEAT 8-77
8.16.1.1 TROUBLESHOOTING FOR ENGINE OVERHEAT 8-77
8.16.2 COLD RUNNING ENGINE (OVERCOOLING) 8-79
8.16.3 POOR CAB HEATER PERFORMANCE 8-79
8.16.3.1 THERMOSTAT LEAKAGE TEST 8-80
8.16.3.2 CAC AIR LEAKAGE TEST 8-82
8.17 MAINTENANCE 8-83

9 FUEL SYSTEM 9- 1
9.1 FUEL SYSTEM DESCRIPTION 9- 2
9.2 FUEL SYSTEM EQUIPMENT/INSTALLATION GUIDELINES 9- 5
9.2.1 FUEL TANK 9- 5
9.2.1.1 MATERIAL 9- 5
9.2.1.2 DESIGN 9- 5
9.2.1.3 CAPACITY 9- 6
9.2.1.4 POSITION 9- 6
9.2.2 FUEL FILTERS/FUEL FILTER MODULE 9- 7
9.2.3 FUEL FILTER CONFIGURATION 9- 7
9.2.4 FUEL LINES 9- 7
9.2.4.1 DESIGN 9- 8
9.2.4.2 MATERIAL 9- 8
9.2.4.3 SIZE 9- 8
9.3 FUEL SELECTION 9- 9

10 LUBRICATION SYSTEM 10- 1
10.1 LUBRICATION SYSTEM DESCRIPTION 10- 2
10.2 LUBRICATION OIL SELECTION 10- 4
10.3 LUBRICATION FILTER 10- 4
10.3.1 SUPPLEMENTAL FILTRATION SYSTEMS 10- 4

All information subject to change without notice.
DDC-SVC-MAN-0073 Copyright © 2009 DETROIT DIESEL CORPORATION

https://truckmanualshub.com/

10.4 ENGINE COMPONENT OIL SUPPLY REQUIREMENTS 10- 4
10.4.1 TURBOCHARGER LUBRICATION 10- 5
10.4.2 AIR COMPRESSOR LUBRICATION 10- 5
10.4.3 CRANKCASE BREATHER LUBRICATION 10- 5
10.5 COMPONENT OPTIONS & INSTALLATION REQUIREMENTS 10- 5
10.5.1 OIL SAMPLING VALVE 10- 5
10.5.2 OIL CHECKS AND FILLS 10- 5
10.5.3 OIL SUMPS 10- 6
10.5.4 ENVIRONMENTALLY SAFE OIL CHANGE (ESOC) FITTINGS 10- 6
10.5.5 OIL IMMERSION HEATERS 10- 6
10.5.6 OIL LEVEL SENSORS 10- 6
10.6 OPERATION AND MAINTENANCE 10- 7
10.6.1 FIRST TIME START 10- 7
10.6.2 OIL LEVEL MEASUREMENTS 10- 7
10.6.3 USED OIL ANALYSIS 10- 7
10.6.4 OIL DRAIN INTERVALS 10- 7

11 ELECTRICAL SYSTEM 11- 1
11.1 ELECTRICAL SYSTEM DESCRIPTION 11- 2
11.2 INSTALLATION GUIDELINES 11- 3
11.2.1 BATTERY 11- 3
11.2.1.1 FILLER CAP BATTERIES 11- 3
11.2.1.2 SEMI-MAINTENANCE FREE BATTERIES 11- 3
11.2.1.3 MAINTENANCE-FREE BATTERIES 11- 3
11.2.1.4 DEEP CYCLE BATTERIES 11- 4
11.2.1.5 GEL-CELL AND NICKEL CADMIUM BATTERIES 11- 4
11.2.1.6 BATTERY CAPACITY 11- 4
11.2.1.7 BATTERY MOUNTING AND LOCATION 11- 4
11.2.2 CRANKING MOTOR 11- 5
11.2.3 ALTERNATORS 11- 9
11.2.3.1 ALTERNATOR MOUNTING 11-10
11.2.4 GROUNDING REQUIREMENTS 11-11
11.2.5 WIRING 11-11
11.2.5.1 GUIDELINES FOR ELECTRICAL WIRING 11-11
11.2.5.2 CABLE LOSS TEST PROCEDURE 11-12
11.2.5.3 MEASURING CIRCUIT RESISTANCE 11-12
11.2.5.4 CALCULATING CIRCUIT RESISTANCE 11-13

12 MOUNTING SYSTEM 12- 1
12.1 MOUNTING SYSTEM DESCRIPTION 12- 2
12.1.1 THREE-POINT MOUNTING 12- 2
12.2 SOLID MOUNTING SYSTEMS 12- 3
12.3 FLEXIBLE MOUNTING SYSTEMS 12- 4
12.3.1 FLEXIBLE MOUNT SELECTION 12- 4
12.3.1.1 METHOD A 12- 5
12.3.1.2 METHOD B 12- 6
12.4 INSTALLATION CHECK LIST 12- 6
12.5 ENGINE SUPPORT 12- 7

 Copyright © 2009 DETROIT DIESEL CORPORATION

https://truckmanualshub.com/

13 TORSIONAL ANALYSIS 13- 1
13.1 TORSIONAL ANALYSIS DESCRIPTION 13- 2
13.2 MASS ELASTIC DATA 13- 2
13.3 TORSIONAL ANALYSIS REQUEST FORM 13- 6

14 ENGINE ELECTRONIC CONTROLS 14- 1
14.1 ENGINE ELECTRONIC CONTROLS DESCRIPTION 14- 2
14.2 ORIGINAL EQUIPMENT MANUFACTURER INSTALLATION REQUIREMENTS 14- 2
14.3 MOTOR CONTROL MODULE 14- 3
14.4 COMMON POWERTRAIN CONTROLLER 14- 3
14.5 ELECTRONIC FUEL INJECTOR 14- 4
14.6 WIRING HARNESSES 14- 5
14.6.1 INJECTOR HARNESSES 14- 6
14.6.2 VEHICLE INTERFACE HARNESS 14- 6
14.6.3 COMMUNICATION BETWEEN ELECTRONIC SYSTEMS 14- 8
14.6.4 ENGINE SENSOR HARNESS 14- 8
14.6.5 DIESEL PARTICULATE FILTER HARNESS 14- 8
14.7 SYSTEM SENSORS 14- 8
14.8 WELDING 14-11

15 AUXILIARY AIR SYSTEMS 15- 1
15.1 AIR START 15- 2
15.1.1 SYSTEM RECOMMENDATIONS 15- 2
15.1.1.1 AIR TANKS 15- 2
15.1.1.2 AIR CONTROL SYSTEM 15- 2
15.1.1.3 AIR STARTERS REQUIRING LUBRICATORS 15- 3
15.2 AIR COMPRESSOR 15- 3
15.2.1 16 CFM AND 32 CFM COMPRESSORS 15- 4

16 COLD WEATHER STARTING AND STARTING AID SYSTEMS 16- 1
16.1 COLD WEATHER STARTING AND STARTING AID SYSTEMS DESCRIPTION 16- 2
16.2 PREPARATION 16- 3
16.2.1 LUBRICATING OIL 16- 3
16.2.2 DIESEL FUEL 16- 4
16.2.3 COOLANT 16- 4
16.2.4 BATTERY 16- 6
16.2.5 STARTER MOTOR 16- 7
16.2.5.1 ELECTRIC STARTER MOTOR 16- 7
16.3 COLD WEATHER STARTING 16- 8
16.3.1 STARTING SYSTEMS 16- 8
16.3.1.1 INTAKE AIR HEATER 16- 8
16.3.1.2 COOLANT TANK TYPE HEATERS 16- 8
16.3.1.3 ENGINE BLOCK HEATER 16-11
16.3.1.4 OIL PAN HEATER 16-11
16.3.1.5 FUEL 16-11
16.3.1.6 FUEL HEATERS 16-11
16.3.1.7 BATTERY HEATER TYPES 16-11
16.3.1.8 HEATING ENGINE COMPARTMENT 16-12

All information subject to change without notice.
DDC-SVC-MAN-0073 Copyright © 2009 DETROIT DIESEL CORPORATION

https://truckmanualshub.com/

16.3.2 STARTING PROCEDURES 16-12
16.3.3 ENGINE STARTING REQUIREMENTS 16-13
16.4 COLD WEATHER OPERATION 16-13
16.4.1 ETHER INJECTION 16-13
16.4.2 IDLING AND LIGHT LOAD 16-13
16.4.3 MAINTENANCE 16-13
16.4.4 WIND PROTECTION 16-14
16.4.5 BATTERY AND CHARGING SYSTEM 16-14
16.4.6 AIR CLEANER MAINTENANCE 16-14
16.4.7 SUPPLEMENTAL HEATING DEVICE 16-14
16.4.8 DDC COLD START RECOMMENDATIONS 16-14

17 ACCESSORY DRIVE SYSTEM 17- 1
17.1 ACCESSORY DRIVES 17- 2
17.2 GEARTRAIN 17- 2
17.2.1 GEARTRAIN GEAR DRIVE RATIOS 17- 3
17.3 DRIVETRAIN 17- 4
17.4 BENDING MOMENT 17- 5

18 AUXILIARY POWER UNITS (APU) 18- 1
18.1 AUXILIARY POWER UNITS (APU) 18- 2
18.2 APU DESCRIPTION 18- 2
18.3 INSTALLATION REQUIREMENTS 18- 3
18.3.1 APU FUEL SYSTEM 18- 4
18.3.2 APU COOLANT SYSTEM 18- 6
18.3.3 APU EXHAUST SYSTEM 18- 9
18.3.4 APU ELECTRICAL SYSTEM 18- 9
18.4 APU ENGINE START-UP PROCEDURE 18-11
18.4.1 BLEEDING THE COOLANT SYSTEM 18-11
18.4.2 BLEEDING THE FUEL LINES 18-12
18.4.3 VERIFYING ENGINE OPERATION 18-12
18.5 EXAMPLE INSTALLATION PHOTOS 18-13

19 EFFECTS OF ENVIRONMENTAL CONDITIONS 19- 1
19.1 EFFECTS OF ENVIRONMENTAL CONDITIONS DESCRIPTION 19- 2
19.2 AIR INLET TEMPERATURE 19- 2
19.3 EXHAUST BACK PRESSURE 19- 2
19.4 FUEL TEMPERATURE 19- 3
19.5 ALTITUDE 19- 3

APPENDIX A: ABBREVIATIONS / ACRONYMS ..... A- 1

APPENDIX B: VENDORS ..... B- 1

GLOSSARY ..... G- 1

 Copyright © 2009 DETROIT DIESEL CORPORATION

https://truckmanualshub.com/

All information subject to change without notice.
DDC-SVC-MAN-0073 Copyright © 2009 DETROIT DIESEL CORPORATION

https://truckmanualshub.com/

LIST OF FIGURES

Figure 3-1	DD Platform On-Highway Engine	3- 2
Figure 3-2	Exhaust and Intake Valves	3- 3
Figure 3-3	Cylinder Designation and Firing Order, DD Platform	3- 3
Figure 3-4	Right Side Engine View	3- 4
Figure 3-5	Left Side Engine View	3- 5
Figure 3-6	The Engine Serial Numbers Stamp and Model Number, DD Platform	3- 6
Figure 3-7	Rocker Cover with Option Label	3- 6
Figure 4-1	Air Intake System Schematic – On-Highway	4- 3
Figure 4-2	Intake Manifold and Related Parts	4- 4
Figure 4-3	Light-Duty Air Cleaner, Single Stage Cartridge Type	4- 6
Figure 4-4	Medium-Duty Air Cleaner	4- 7
Figure 4-5	Heavy-Duty Air Cleaner	4- 8
Figure 4-6	Extra Heavy-Duty Air Cleaner	4- 9
Figure 4-7	Precleaner Centrifugal Action	4-11
Figure 4-8	Rain Cap and Inlet Hood	4-12
Figure 4-9	Altitude vs. Inlet Restriction	4-14
Figure 4-10	Acceptable Diffuser Configurations	4-16
Figure 4-11	Air Inlet System Calculation	4-18
Figure 4-12	Typical Radiator-mounted Charge Air Cooling System Right Side View	4-19
Figure 4-13	Typical Radiator-Mounted Charge Air Cooling System Left Side View	4-19
Figure 4-14	Typical Instrumentation Location	4-24
Figure 4-15	Air Inlet Data Sheet for Turbocharged and Air-to-Air Charge Cooled Engine	4-26
Figure 4-16	Air Inlet System Data Sheet for Turbocharged Engines	4-27
Figure 5-1	EGR System	5- 2
Figure 6-1	Turbocharger and Related Parts	6- 3
Figure 6-2	Turbine Outlet Connection Points for DD15™	6- 7
Figure 6-3	Turbine Outlet Connection Points for DD13™	6- 7
Figure 6-4	Piezometer Ring	6-10
Figure 6-5	Static Pressure Tap	6-11
Figure 7-1	Components of Aftertreatment System	7- 3
Figure 7-2	DD Platform Aftertreatment System Schematic	7- 4
Figure 7-3	Aftertreatment System Components	7- 5
Figure 7-4	Aftertreatment Device Components	7- 6
Figure 7-5	Operation of the Diesel Particulate Filter	7- 7
Figure 7-6	Location of the Intake Throttle	7- 8
Figure 7-7	Hydrocarbon (HC) Doser Location	7- 9
Figure 7-8	Hydrocarbon (HC) Doser Location	7- 9
Figure 7-9	Typical Mounting Views of an Aftertreatment Device	7-10
Figure 7-10	Aftertreatment Device Orientation Variations	7-12
Figure 8-1	Engine Jacket Water Cooling System — Thermostats Closed	8- 3
Figure 8-2	Engine Jacket Water Cooling System — Thermostats Fully Open	8- 3
Figure 8-3	Thermostat and Related Parts	8- 4
Figure 8-4	Cooling System Operation	8- 5

 Copyright © 2009 DETROIT DIESEL CORPORATION

https://truckmanualshub.com/

Figure 8-5	Cooling System Operation	8- 6
Figure 8-6	Vent Location	8- 7
Figure 8-7	Water Pump Mounting	8- 8
Figure 8-8	Rapid Warm-up Cooling System — Remote Tank, Cross Flow and Down Flow Radiators	8- 9
Figure 8-9	Typical Charge Air Cooling System Right Side	8-10
Figure 8-10	Typical Charge Air Cooling System Left Side	8-11
Figure 8-11	Air-to-Air Charge Air Cooler System	8-11
Figure 8-12	Typical Charge Air Cooler	8-12
Figure 8-13	Charge Air Cooler Cross-Section	8-12
Figure 8-14	Percent Increases in Volume for Water and Antifreeze Solution	8-15
Figure 8-15	Hose Clamp 180° Indexed Position	8-23
Figure 8-16	Shell and Tube Heat Exchangers	8-28
Figure 8-17	Blower vs. Suction Fans	8-30
Figure 8-18	Typical Fan Performance Curve	8-32
Figure 8-19	Fan Shroud Types	8-34
Figure 8-20	Down Flow Radiator and Cross Flow Radiator	8-36
Figure 8-21	Rapid Warm-up Down Flow Radiator Top Tank	8-38
Figure 8-22	Remote Surge Tank Design for Rapid Warm-up Cooling System	8-41
Figure 8-23	Down Flow Radiator Inlet Tank Deaeration Line Boss Position	8-42
Figure 8-24	Coolant Inlet/Outlet Locations	8-43
Figure 8-25	Radiator Outlet Contour	8-43
Figure 8-26	Pressure Control Cap — Pressure Valve Open	8-45
Figure 8-27	Pressure Control Cap — Vacuum Valve Open	8-45
Figure 8-28	Effect of Altitude and Pressure Caps	8-46
Figure 8-29	Nominal Settings For Coolant Temperature Control Devices — 190°	8-48
Figure 8-30	Cooling System Design (Warm-up — Closed Thermostat)	8-49
Figure 8-31	Cooling System Design (Stabilized Temperature — Open Thermostat)	8-50
Figure 8-32	Cooling System Design (Cool-down — Closed Thermostat)	8-51
Figure 8-33	Acceptable Top Tank Design	8-53
Figure 8-34	Unacceptable Top Tank Design	8-53
Figure 8-35	Thermostat	8-58
Figure 8-36	Sample Static Cooling Test Sheet	8-65
Figure 8-37	Sample Cooling Index Test Sheets	8-68
Figure 8-38	Cooling Index Calculation Sheet	8-69
Figure 8-39	Sample CAC Cooling Index Test Sheets	8-71
Figure 8-40	Piezometer Ring	8-72
Figure 8-41	Static Pressure Tap	8-73
Figure 8-42	Pressure Tap on a Bend	8-74
Figure 8-43	Typical Instrumentation Location	8-74
Figure 8-44	Thermostat Leakage Areas	8-81
Figure 8-45	Thermostat Leakage Check	8-82
Figure 9-1	Figure 1-2 Schematic Diagram of the DD Platform Fuel System	9- 4
Figure 9-2	Properly Designed Fuel Tank	9- 6
Figure 10-1	DD Platform Lubrication System	10- 3
Figure 11-1	Engine Electrical System	11- 2
Figure 11-2	Battery Retainers	11- 5

All information subject to change without notice.
DDC-SVC-MAN-0073 Copyright © 2009 DETROIT DIESEL CORPORATION

https://truckmanualshub.com/

Figure 11-3 Cranking Motor Mounting 11- 6
Figure 11-4 Acceptable Cranking Index with DD Platform 11- 7
Figure 11-5 Cranking Motor Indexing 11- 8
Figure 11-6 Typical Cranking Motor Cross-section 11- 9
Figure 11-7 Cable Resistance 11-13
Figure 12-1 General Three Point Mounting Scheme 12- 3
Figure 12-2 Transmissibility 12- 6
Figure 12-3 Distance of Rear Mounts for Zero Bending Moments 12- 8
Figure 12-4 Bending Moment for Fixed Mounting System 12- 9
Figure 13-1 Mass Elastic Data 13- 3
Figure 13-2 Mass Elastic Data Page 1 of 3 ..... 13- 4
Figure 13-3 Mass Elastic Data Page 2 of 3 ..... 13- 5
Figure 13-4 Torsional Analysis Request Form 13- 6
Figure 14-1 Motor Control Module 14- 3
Figure 14-2 Common Powertrain Controller 14- 4
Figure 14-3 Electronic Fuel Injector 14- 5
Figure 14-4 Typical DDEC VI Vehicle Interface Harness System 14- 7
Figure 14-5 DD Platform Sensor Location 1 ..... 14- 9
Figure 14-6 DD Platform Sensor Location 2 14-10
Figure 14-7 Sensor Locations for the DOC and DPF 14-11
Figure 14-8 Battery Connections for Proper Welding 14-12
Figure 15-1 Single Cylinder Air Compressor 16 CFM and Twin Cylinder 32 CFM 15- 3
Figure 15-2 Air Compressor Mounted Power Steering Pump 15- 4
Figure 16-1 Coolant Freezing and Boiling Temperature vs. Inhibited Propylene Glycol (IPG) Concentration (Sea Level) 16- 5
Figure 16-2 General Battery Cranking Power - Percent 16- 7
Figure 16-3 Watts Required to Raise Block Coolant Temperature to +30°F (-1.1°C) in in-line engines 16-10
Figure 17-1 Rear Geartrain for the DD Platform Engine 17- 3
Figure 17-2 GEARTRAIN GEAR DRIVE RATIOS 17- 4
Figure 17-3 DD Platform DRIVETRAIN 17- 5
Figure 17-4 DD Platform 14.8L Allowable Front Crankshaft Bending Moment 17- 6
Figure 17-5 Bending Moment on the Front of the Crank 17- 7
Figure 17-6 **Poly-V Belt integrated Vibration Damper Pulley Illustrating L_x Values** 17- 8
Figure 17-7 Net Belt Tension at the 90° Position 17- 9
Figure 18-1 TriPac Components 18- 3
Figure 18-2 Fuel Pick-Up Tool Installation 18- 5
Figure 18-3 Fuel Pick-Up Tool Installation Alternate Installation 18- 5
Figure 18-4 Coolant Hose Installation 18- 6
Figure 18-5 DD15 with 4-Port Coolant Return Manifold 18- 8
Figure 18-6 DD15 with 2-Port Coolant Return Manifold 18- 8
Figure 18-7 CPC Connectors 18-10
Figure 18-8 Coolant Supply Ports 18-13
Figure 18-9 Two-Port Coolant Return Manifold 18-14
Figure 18-10 Four-Port Coolant Return Manifold 18-14
Figure 18-11 Four-Port Coolant Return Manifold Installed 18-15
Figure 18-12 Right Side View Of Engine After APU Installation 18-15

 Copyright © 2009 DETROIT DIESEL CORPORATION

https://truckmanualshub.com/

Figure 18-13 Coolant Lines 18-16
Figure 18-14 Alternate View 18-16
Figure 19-1 The General Relationship of Exhaust Back Pressure and Engine Power 19- 3
Figure 19-2 The General Effects Of Altitude On Engine Power 19- 4

All information subject to change without notice.
DDC-SVC-MAN-0073 Copyright © 2009 DETROIT DIESEL CORPORATION

https://truckmanualshub.com/

LIST OF TABLES

Table 2-1	The Correct Type of Fire Extinguisher	2- 7
Table 4-1	Air Cleaner Applications	4- 5
Table 4-2	Air Inlet Restriction at Different Altitudes	4-15
Table 4-3	Hose Specifications for the Inlet Side of the Turbocharger	4-16
Table 4-4	Thermocouples	4-24
Table 4-5	Pressure Taps	4-25
Table 7-1	ATS Component Descriptions	7- 2
Table 8-1	Heat Exchanger Materials, Construction, and Design Choices	8-27
Table 8-2	Installed Fan Performance Factors	8-31
Table 8-3	Top Tank Component Guidelines — Standpipe(s), Baffle, Vortex Baffle, Fill Line and Connections, Vent Line, and Radiator Inlet	8-39
Table 8-4	Top Tank Component Guidelines— Fill Neck, Fill Neck Vent Hole, and Coolant Level Sensor	8-40
Table 8-5	Component Design and Location Guidelines for the Remote Top Tank	8-41
Table 8-6	Thermocouples	8-75
Table 8-7	Pressure Taps	8-76
Table 11-1	Minimum Battery Capacity for Acceptable Engine Cranking	11- 4
Table 11-2	Maximum Circuit Resistance	11-14
Table 16-1	Common Battery Heaters	16-12
Table 16-2	DDC Cold Start Recommendations - DD Platform Engine	16-15
Table 17-1	DD Platform Accessory Drives on Crankshaft (Non-Gear Driven)	17- 2
Table 17-2	DD Platform Accessory Drives on Crankshaft (Gear Driven)	17- 2
Table 17-3	DD Platform Vibration Damper Pulley L_x Values	17- 7
Table 18-1	CPC Pins	18-10

 Copyright © 2009 DETROIT DIESEL CORPORATION

https://truckmanualshub.com/

All information subject to change without notice.
DDC-SVC-MAN-0073 Copyright © 2009 DETROIT DIESEL CORPORATION

https://truckmanualshub.com/

1 INTRODUCTION

The DD Platform engines are a new line of six cylinder four–stroke diesel engines.

The DD15™ engine has a displacement of 14.8L, horsepower ranging from 455 to 560 BHP, and torque ranging from 1550 to 1850 lb·ft. The engine is also equipped with a turbocompound system for improved fuel economy.

The DD13™ shares very similar architecture and layout to the DD15™ engine, but with a displacement of 12.8L and no turbocompound system. Horsepower ratings are available from 350hp to 450hp and torque from 1350ft-lb to 1650 lb·ft.

Vital features of the DD Platform engines include an amplified common rail fuel injection system, dual overhead camshafts, an integrated Jake Brake®, DDEC VI electronic control system, active aftertreatment, outstanding NVH characteristics, and torque response that delivers 95% of peak torque at an engine speed of only 1000rpm.

The electronic control system is the Detroit Diesel Electronic Control System (DDEC®) — an advanced electronic fuel injection and control system. The engine calibration programmed in the memory of the Motor Control Module (MCM) uniquely defines the operational characteristics of the engine. The Common Powertrain Controller (CPC) contains all of the vehicle functionality.

Unique DD Platform engine features include:

- Variable Speed Governor
- Fuel economy incentive
- Emissions, smoke, and noise control
- Torque limiting
- Progressive Shift
- Throttle inhibit
- Engine protection
- Engine diagnostics
- Optimal idle
- Engine brake controls
- Cruise control

This manual covers engine models:

 Copyright © 2009 DETROIT DIESEL CORPORATION

https://truckmanualshub.com/

- □ 472900 DD Platform Western Star On-Highway Truck
- □ 472901 DD Platform Freightliner On-Highway Truck
- □ 472902 DD Platform Sterling On-Highway Truck
- □ 471900 DD Platform Western Star On–Highway Truck
- □ 471901 DD Platform Freightliner On-Highway Truck
- □ 471902 DD Platform Sterling On-Highway Truck

All information subject to change without notice.
DDC-SVC-MAN-0073 Copyright © 2009 DETROIT DIESEL CORPORATION

https://truckmanualshub.com/

2 SAFETY PRECAUTIONS

Section **Page**

2.1 SAFETY MEASURES 2- 2
2.2 STANDS 2- 2
2.3 GLASSES 2- 2
2.4 WELDING 2- 2
2.5 WORK PLACE 2- 4
2.6 CLOTHING 2- 5
2.7 ELECTRIC TOOLS 2- 5
2.8 AIR 2- 5
2.9 FLUIDS AND PRESSURE 2- 5
2.10 BATTERIES 2- 6
2.11 FIRE 2- 7
2.12 FLUOROELASTOMER 2- 7

 Copyright © 2009 DETROIT DIESEL CORPORATION

https://truckmanualshub.com/

2.1 SAFETY MEASURES

The following safety measures are essential when installing the DD Platform engine.

WARNING:

PERSONAL INJURY

Diesel engine exhaust and some of its constituents are known to the State of California to cause cancer, birth defects, and other reproductive harm.

- **Always start and operate an engine in a well ventilated area.**
- **If operating an engine in an enclosed area, vent the exhaust to the outside.**
- **Do not modify or tamper with the exhaust system or emission control system.**

2.2 STANDS

Use safety stands in conjunction with hydraulic jacks or hoists. Do not rely on either the jack or the hoist to carry the load.

2.3 GLASSES

Select appropriate safety glasses for the job. Safety glasses *must* be worn when using tools such as hammers, chisels, pullers and punches.

2.4 WELDING

Use caution when welding.

All information subject to change without notice.
DDC-SVC-MAN-0073 Copyright © 2009 DETROIT DIESEL CORPORATION

https://truckmanualshub.com/

WARNING:

PERSONAL INJURY

To avoid injury from arc welding, gas welding, or cutting, wear required safety equipment such as an arc welder's face plate or gas welder's goggles, welding gloves, protective apron, long sleeve shirt, head protection, and safety shoes. Always perform welding or cutting operations in a well ventilated area. The gas in oxygen/acetylene cylinders used in gas welding and cutting is under high pressure. If a cylinder should fall due to careless handling, the gage end could strike an obstruction and fracture, resulting in a gas leak leading to fire or an explosion. If a cylinder should fall resulting in the gage end breaking off, the sudden release of cylinder pressure will turn the cylinder into a dangerous projectile. Observe the following precautions when using oxygen/acetylene gas cylinders:

- **Always wear required safety shoes.**
- **Do not handle tanks in a careless manner or with greasy gloves or slippery hands.**
- **Use a chain, bracket, or other restraining device at all times to prevent gas cylinders from falling.**
- **Do not place gas cylinders on their sides, but stand them upright when in use.**
- **Do not drop, drag, roll, or strike a cylinder forcefully.**
- **Always close valves completely when finished welding or cutting.**

WARNING:

FIRE

To avoid injury from fire, check for fuel or oil leaks before welding or carrying an open flame near the engine.

 Copyright © 2009 DETROIT DIESEL CORPORATION

https://truckmanualshub.com/

NOTICE:

When welding, the following must be done to avoid damage to the electronic controls or the engine:

- □ Both the positive (+) and negative (-) battery leads must be disconnected before welding.
- □ Ground cable must be in close proximity to welding location - engine must never be used as a grounding point.
- □ Welding on the engine or engine mounted components is NEVER recommended.

2.5 WORK PLACE

Organize your work area and keep it clean.

WARNING:

PERSONAL INJURY

To avoid injury from slipping and falling, immediately clean up any spilled liquids.

Eliminate the possibility of a fall by:

- □ Wiping up oil spills
- □ Keeping tools and parts off the floor

A fall could result in a serious injury.

After installation of the engine is complete:

WARNING:

PERSONAL INJURY

To avoid injury from rotating belts and fans, do not remove and discard safety guards.

- □ Reinstall all safety devices, guards or shields
- □ Check to be sure that all tools and equipment used to install the engine are removed from the engine

All information subject to change without notice.
DDC-SVC-MAN-0073 Copyright © 2009 DETROIT DIESEL CORPORATION

https://truckmanualshub.com/

2.6 CLOTHING

Wear work clothing that fits and is in good repair. Work shoes must be sturdy and rough-soled. Bare feet, sandals or sneakers are not acceptable foot wear when installing an engine.

WARNING:

PERSONAL INJURY

To avoid injury when working near or on an operating engine, remove loose items of clothing and jewelry. Tie back or contain long hair that could be caught in any moving part causing injury.

2.7 ELECTRIC TOOLS

Improper use of electrical equipment can cause severe injury.

WARNING:

ELECTRICAL SHOCK

To avoid injury from electrical shock, follow OEM furnished operating instructions prior to usage.

2.8 AIR

Use proper shielding to protect everyone in the work area.

WARNING:

EYE INJURY

To avoid injury from flying debris when using compressed air, wear adequate eye protection (face shield or safety goggles) and do not exceed 276 kPa (40 psi) air pressure.

2.9 FLUIDS AND PRESSURE

Be extremely careful when dealing with fluids under pressure. Fluids under pressure can have enough force to penetrate the skin.

 Copyright © 2009 DETROIT DIESEL CORPORATION

https://truckmanualshub.com/

These fluids can infect a minor cut or opening in the skin. See a doctor at once, if injured by escaping fluid. Serious infection or reaction can result without immediate medical treatment.

WARNING:

PERSONAL INJURY

To prevent the escape of high pressure fuel that can penetrate skin, ensure the engine has been shut down for a minimum of 10 minutes before servicing any component within the high pressure circuit. Residual high fuel pressure may be present within the circuit.

WARNING:

HOT COOLANT

To avoid scalding from the expulsion of hot coolant, never remove the cooling system pressure cap while the engine is at operating temperature. Wear adequate protective clothing (face shield, rubber gloves, apron, and boots). Remove the cap slowly to relieve pressure.

WARNING:

PERSONAL INJURY

To avoid injury from penetrating fluids, do not put your hands in front of fluid under pressure. Fluids under pressure can penetrate skin and clothing.

2.10 BATTERIES

Electrical storage batteries give off highly flammable hydrogen gas when charging and continue to do so for some time after receiving a steady charge.

Always disconnect the battery cable before working on the Detroit Diesel Electronic Controls system.

All information subject to change without notice.
DDC-SVC-MAN-0073 Copyright © 2009 DETROIT DIESEL CORPORATION

https://truckmanualshub.com/

WARNING:

Battery Explosion and Acid Burn

To avoid injury from battery explosion or contact with battery acid, work in a well ventilated area, wear protective clothing, and avoid sparks or flames near the battery. If you come in contact with battery acid:

- □ **Flush your skin with water.**
- □ **Apply baking soda or lime to help neutralize the acid.**
- □ **Flush your eyes with water.**
- □ **Get medical attention immediately.**

2.11 FIRE

Keep a charged fire extinguisher within reach. Be sure you have the correct type of extinguisher for the situation. The correct fire extinguisher types for specific working environments are listed in the following table.

Fire Extinguisher	Work Environment
Type A	Wood, Paper, Textile and Rubbish
Type B	Flammable Liquids
Type C	Electrical Equipment

Table 2-1 The Correct Type of Fire Extinguisher

2.12 FLUOROELASTOMER

Fluoroelastomer (Viton®) parts such as O-rings and seals are perfectly safe to handle under normal design conditions.

A potential hazard may occur if these components are raised to a temperature above 316°C (600°F) (in a fire for example). Fluoroelastomer will decompose (indicated by charring or the appearance of a black, sticky mass) and produce hydrofluoric acid. This acid is extremely corrosive and, if touched by bare skin, may cause severe burns (the symptoms could be delayed for several hours).

 Copyright © 2009 DETROIT DIESEL CORPORATION

https://truckmanualshub.com/

WARNING:

CHEMICAL BURNS

To avoid injury from chemical burns, wear a face shield and neoprene or PVC gloves when handling fluoroelastomer O-rings or seals that have been degraded by excessive heat. Discard gloves after handling degraded fluoroelastomer parts.

All information subject to change without notice.
DDC-SVC-MAN-0073 Copyright © 2009 DETROIT DIESEL CORPORATION

https://truckmanualshub.com/

3 ENGINE AND ACCESSORY IDENTIFICATION

Section **Page**

3.1 ENGINE AND ACCESSORY IDENTIFICATION DESCRIPTION 3- 2
3.2 MAJOR COMPONENT LOCATIONS 3- 4
3.3 ENGINE IDENTIFICATION 3- 5

 Copyright © 2009 DETROIT DIESEL CORPORATION

https://truckmanualshub.com/

3.1 ENGINE AND ACCESSORY IDENTIFICATION DESCRIPTION

The DD Platform engines are a family of inline, six cylinder, four stroke engines. The DD15™ has a displacement of 2.47 liters per cylinder and total displacement of 14.8 liters. The DD13™ has a displacement of 2.13 liters per cylinder and total displacement of 12.8 liters. All DD Platform engines use a separate Charge Air Cooling (CAC) system in addition to the conventional Jacket Water (JW) cooling system.

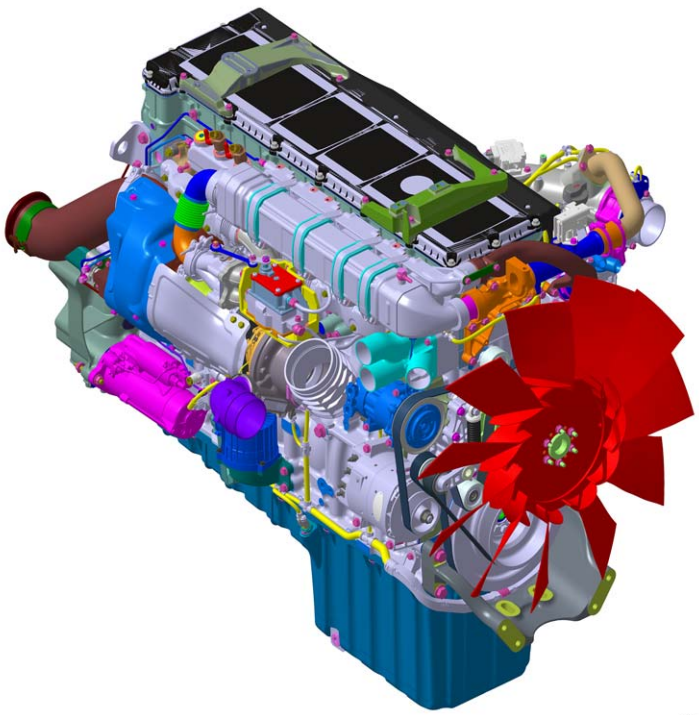

Figure 3-1 DD Platform On-Highway Engine

The DD Platform engine dual overhead cam design optimizes the intake and exhaust air passages in the cylinder head for easier breathing. The cam follower roller in the injector rocker arm is made of silicon nitride which makes it possible to operate at very high injection pressures while maintaining long life of the roller.

The intake and exhaust port configuration of the DD Platform is unique. In this design, the valve orientation has been rotated 90 degrees from the traditional arrangement used in push-rod engines. Other engines rotate the valves 45 degrees, to promote push-rod actuation. However, the 90 degree design provides several distinct advantages such as very short, unobstructed intake and exhaust ports for efficient air flow, low pumping losses, and reduced heat transfer.

All information subject to change without notice.
DDC-SVC-MAN-0073 Copyright © 2009 DETROIT DIESEL CORPORATION

https://truckmanualshub.com/

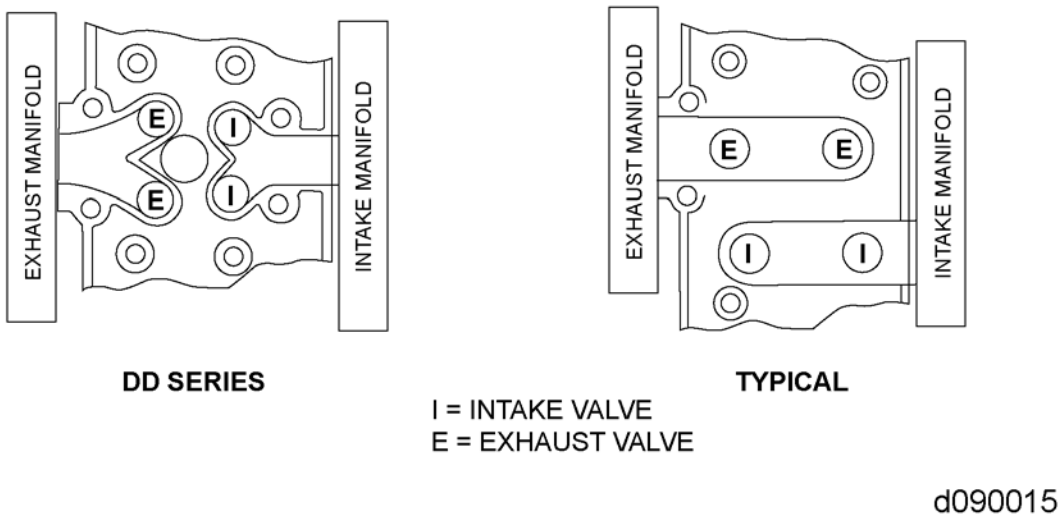

Figure 3-2 Exhaust and Intake Valves

The DD Platform engines utilize the same firing order as the Series 60 (1 – 5 – 3 – 6 – 2 – 4). This is the optimum firing order for an inline six-cylinder diesel engine in order to minimize vibration and torsional stress.

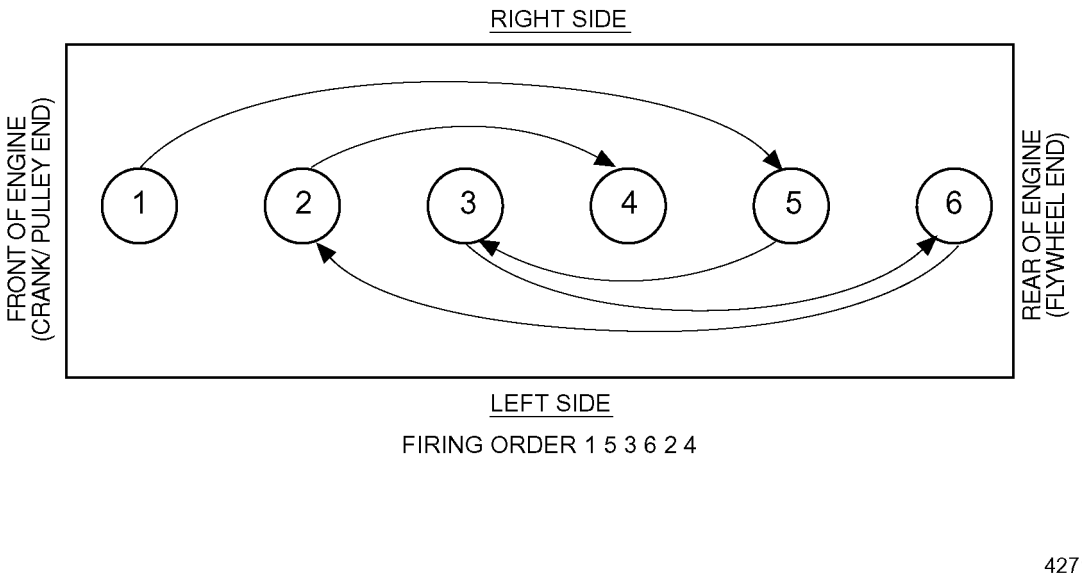

Figure 3-3 Cylinder Designation and Firing Order, DD Platform

 Copyright © 2009 DETROIT DIESEL CORPORATION

https://truckmanualshub.com/

3.2 MAJOR COMPONENT LOCATIONS

Any design variation of the components called out in the following illustrations may be found on www.detroitdiesel.com, if you do not have access to www.detroitdiesel.com contact your Distributor.

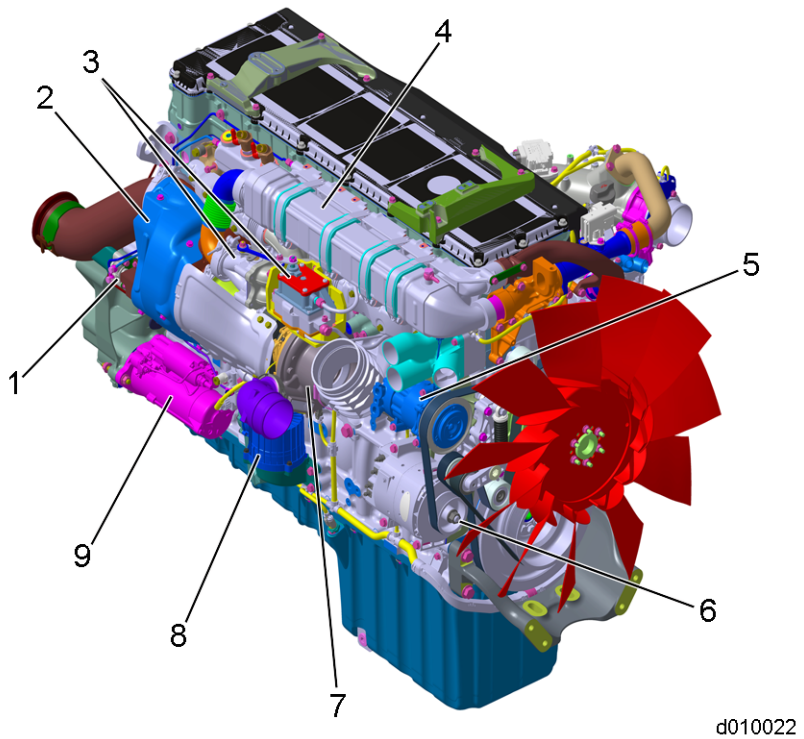

1. Exhaust Gas Recirculation Cooler
2. EGR Valve / Actuator
3. Axial Power Turbine
4. Hydrocarbon Doser Valve
5. APT Gearbox
6. Starter location
7. Air Seal Pressure Regulator Valve
8. Crankcase Breather
9. Turbocharger

Figure 3-4 Right Side Engine View

All information subject to change without notice.
DDC-SVC-MAN-0073 Copyright © 2009 DETROIT DIESEL CORPORATION

https://truckmanualshub.com/

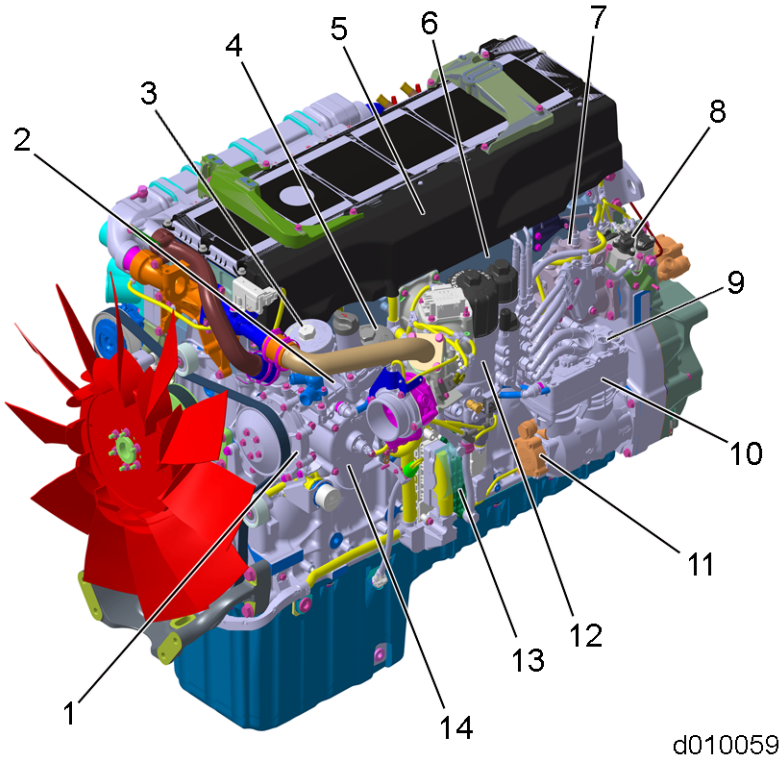

1. Waterpump
2. Oil / Coolant Module
3. Coolant Filter
4. Oil Filter
5. Fuel Rail (Behind Cover)
6. Intake Manifold
7. High Pressure Fuel Pump
8. HC Doser Block Assembly
9. Low Pressure Fuel Pump
10. Air Compressor
11. Power Steering Pump
12. Fuel Filter Module
13. Motor Control Module
14. Thermostat

Figure 3-5 Left Side Engine View

3.3 ENGINE IDENTIFICATION

The permanent engine serial number and model number are stamped on the cylinder block.

 Copyright © 2009 DETROIT DIESEL CORPORATION

https://truckmanualshub.com/

Figure 3-6 The Engine Serial Numbers Stamp and Model Number, DD Platform

The first six digits of the engine Serial Number are the Model Number, describing the engine displacement and the intended market. The 472 indicates a (14.8L) DD15 engine while a 471 indicates a (12.8L) DD13 engine. There are a variety of market codes indicating engines intended for use in the NAFTA, European or Asian markets.

Option labels and emission certification labels attached to the valve rocker cover contain the engine serial and model numbers and list any optional equipment used on the engine

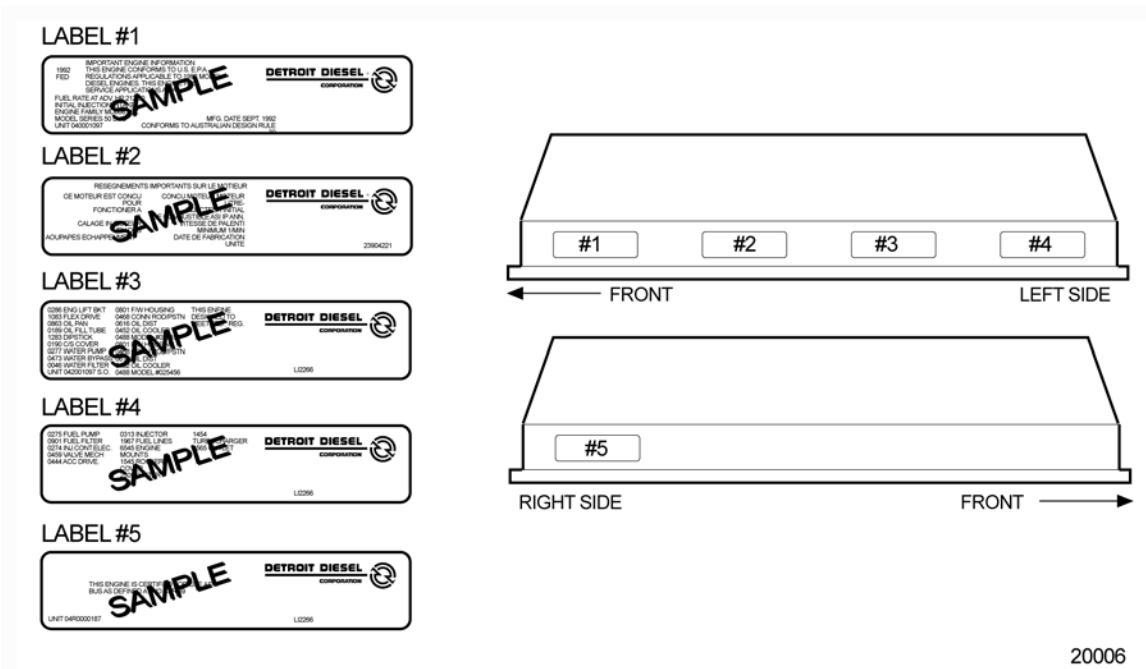

Figure 3-7 Rocker Cover with Option Label

The engine model number with serial number should be given with any order for parts. In addition, if a type number is shown on the option plate covering the equipment required, this number should also be included on the parts order.

All information subject to change without notice.
DDC-SVC-MAN-0073 Copyright © 2009 DETROIT DIESEL CORPORATION

https://truckmanualshub.com/

All groups or parts used on a unit are standard for the engine model unless otherwise listed on the option plate. For complete information on parts, refer to the *DD15™ Parts Catalog* (DDC-SVC-MAN-0042).

DD Platform engines may include additional information labels ordered in the 14B08 group.

 Copyright © 2009 DETROIT DIESEL CORPORATION

https://truckmanualshub.com/

THIS PAGE INTENTIONALLY LEFT BLANK

All information subject to change without notice.
DDC-SVC-MAN-0073 Copyright © 2009 DETROIT DIESEL CORPORATION

https://truckmanualshub.com/

4 AIR INLET SYSTEM

Section **Page**

4.1 AIR INLET SYSTEM DESCRIPTION 4- 2
4.2 INSTALLATION REQUIREMENTS 4- 4
4.3 DESIGN GUIDELINES 4-17
4.4 TESTING REQUIREMENTS 4-23
4.5 TEST 4-25

 Copyright © 2009 DETROIT DIESEL CORPORATION

https://truckmanualshub.com/

4.1 AIR INLET SYSTEM DESCRIPTION

An internal combustion engine requires an adequate supply of air for combustion to develop full rated power and burn fuel efficiently. This section describes the function, installation, design, and test requirements for the air inlet system of a Detroit Diesel DD Platform engine.

The intake manifold routes the air charge into the cylinder head ports through two intake valves, and into the cylinder. At the beginning of the compression stroke, each cylinder is filled with a mixture of clean, fresh air and recirculated exhaust gas, which provides for efficient combustion while reducing the formation of NOx. The turbocharger supplies air under pressure to the Charge Air Cooler (CAC) and then to the intake manifold. The recirculated exhaust gas is extracted from the exhaust manifold, cooled by a gas to water EGR Cooler, routed through the EGR cold pipe and venturi, and then mixed with fresh, cooled air from the CAC. The air enters the turbocharger after passing through the air cleaner or air silencer. Power to drive the turbocharger is extracted from energy in the engine exhaust gas. The expanding exhaust gases turn a single stage turbocharger wheel, which drives an impeller, thus pressurizing intake air. This charge air is then cooled by an air-to-air CAC before flowing into the cylinders for improved combustion efficiency.

4.1.1 DD PLATFORM ON-HIGHWAY ENGINES

All DD Platform on-highway engines have a single turbocharger which supplies filtered air through a CAC to the air intake manifold. The CACs are generally located in front of or next to the engine radiator core.

The inlet manifold options available may be found on www.detroitdiesel.com, if you do not have access to www.detroitdiesel.com contact your Distributor.

All information subject to change without notice.
DDC-SVC-MAN-0073 Copyright © 2009 DETROIT DIESEL CORPORATION

https://truckmanualshub.com/

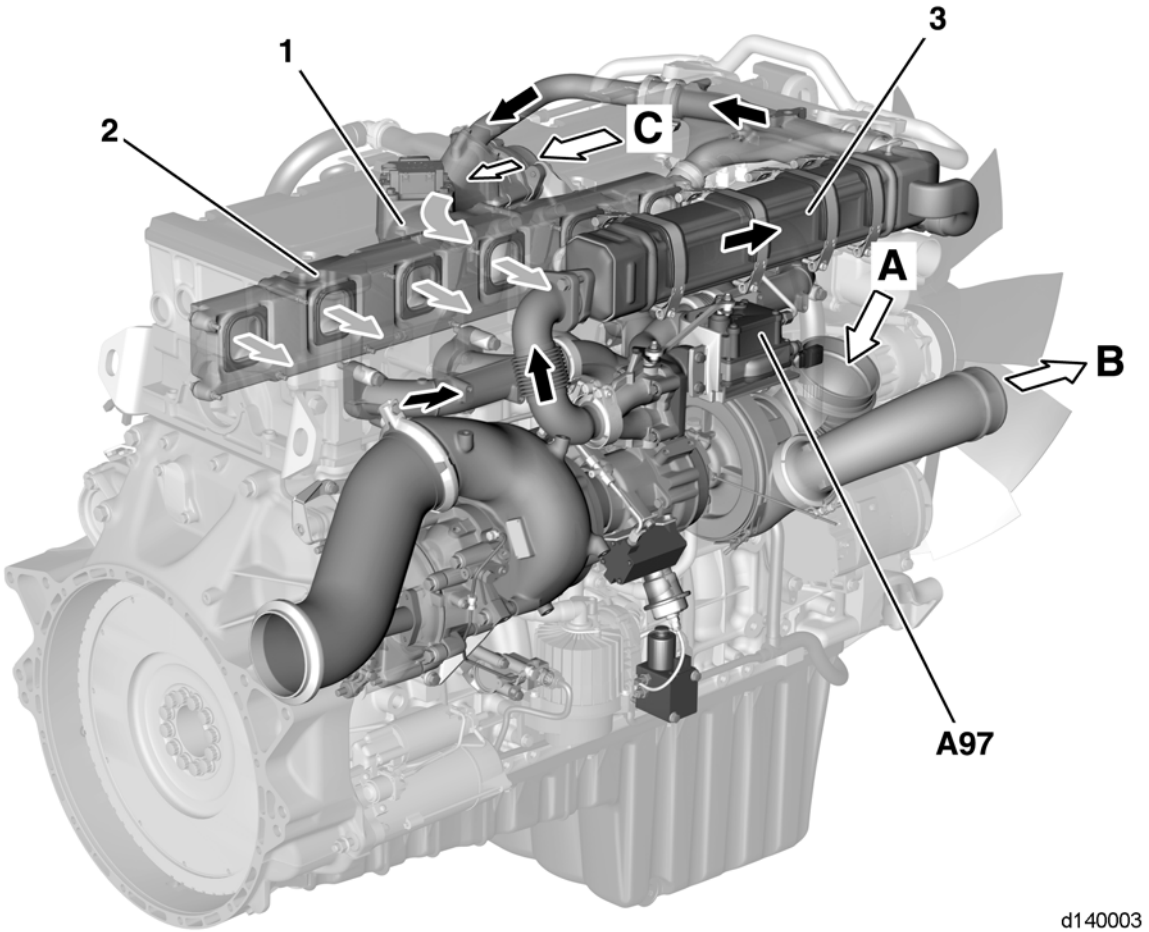

1.Cold Boost Pipe
2. Intake Manifold
3. EGR Cooler
A97. EGR Actuator

Figure 4-1 Air Intake System Schematic – On-Highway

A CAC is typically mounted ahead of the engine coolant radiator. The pressurized intake charge is routed from the discharge side of the turbocharger, through the CAC, through the air throttle and combined with recirculated exhaust gas in the intake manifold which directs the air to ports in the cylinder head, through two intake valves per cylinder, and into the cylinder. At the beginning of the compression stroke, each cylinder is filled with a mixture of clean, cooled air and recirculated exhaust gas. The intake manifold air inlet is attached to the CAC ducting and the air compressor using flexible hose and clamps.

 Copyright © 2009 DETROIT DIESEL CORPORATION

https://truckmanualshub.com/

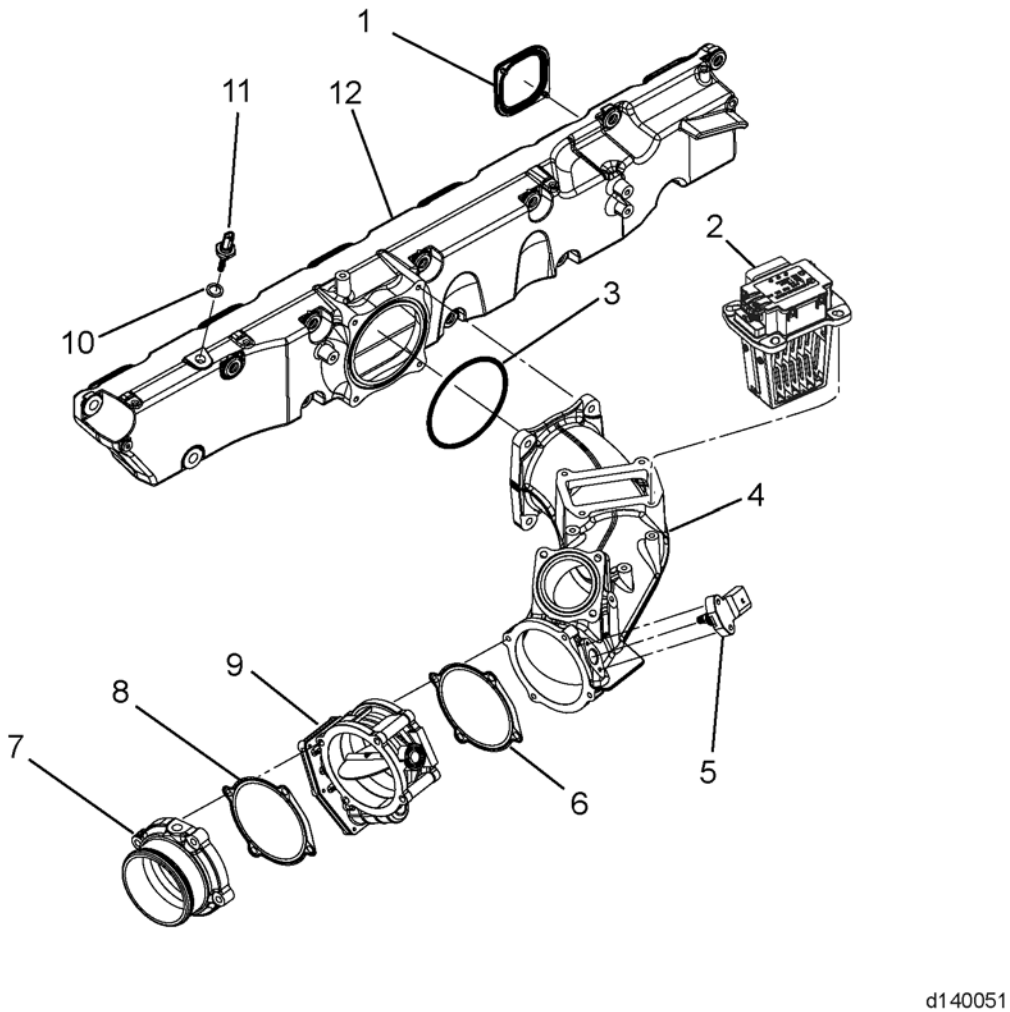

1. Intake Manifold Gasket
2. Grid Heater
3. O-ring
4. Cold Boost Pipe
5. Intake Manifold Pressure Sensor
6. Gasket
7. Throttle Adapter
8. Gasket
9. Intake Throttle Valve
10. Gasket
11. EGR Temperature Sensor
12. Intake Manifold

Figure 4-2 Intake Manifold and Related Parts

4.2 INSTALLATION REQUIREMENTS

The air inlet system has a direct effect on engine output, fuel consumption, exhaust emissions, and engine life. The parts and materials must be designed to withstand the working environment that applies to the system.

All information subject to change without notice.
DDC-SVC-MAN-0073 Copyright © 2009 DETROIT DIESEL CORPORATION

https://truckmanualshub.com/

4.2.1 DRY PAPER ELEMENT AIR CLEANERS

Dry paper element type cleaners are recommended for use on Detroit Diesel engines. Alternate types of air filtration systems, such as foam type and oil bath cleaners may be available in the aftermarket.

Dry paper element air cleaners are classified by function:

- Light-duty air cleaners
- Medium-duty air cleaners
- Heavy-duty air cleaners
- Extra heavy-duty air cleaners

The type of function relates to the dust holding capacity of the particular cleaner. The choice of cleaner depends upon the engine type, application, operating environment, and service life. The cleaner must meet filtration requirements across the engine speed and load range and be readily accessible for maintenance with adequate space provision for replacement. Air cleaners may have replaceable elements, or may be completely disposable. The different types of air cleaners and the application in which they are used are listed in the following table.

Type of Air Cleaners	Application
Light-duty	Marine engines, mobile and stationary engines in factories, warehouses, etc. and cranes (wheel-mounted)
Medium-duty	Stationary engines, air compressors, pumps, and cranes (wheel-mounted)
Heavy-duty	Trucks (nonroad, logging), tractors (wheel, agricultural) also tractors (crawler, small), motor graders, scrapers, cranes (shovels), stationary engines in dusty ambients
Extra Heavy-duty	Scrapers (large or rear engine), rock drills (self-contained), cranes and shovels (rough terrain), air compressors (rock drilling or quarrying), tractors (full-tracked, low speed), stationary engines in extreme dust

Table 4-1 Air Cleaner Applications

Tests to determine the service life of an air cleaners are usually performed in accordance with SAE J726-C.

4.2.1.1 Light-Duty Air Cleaner

Typical light-duty air cleaner.

 Copyright © 2009 DETROIT DIESEL CORPORATION

https://truckmanualshub.com/

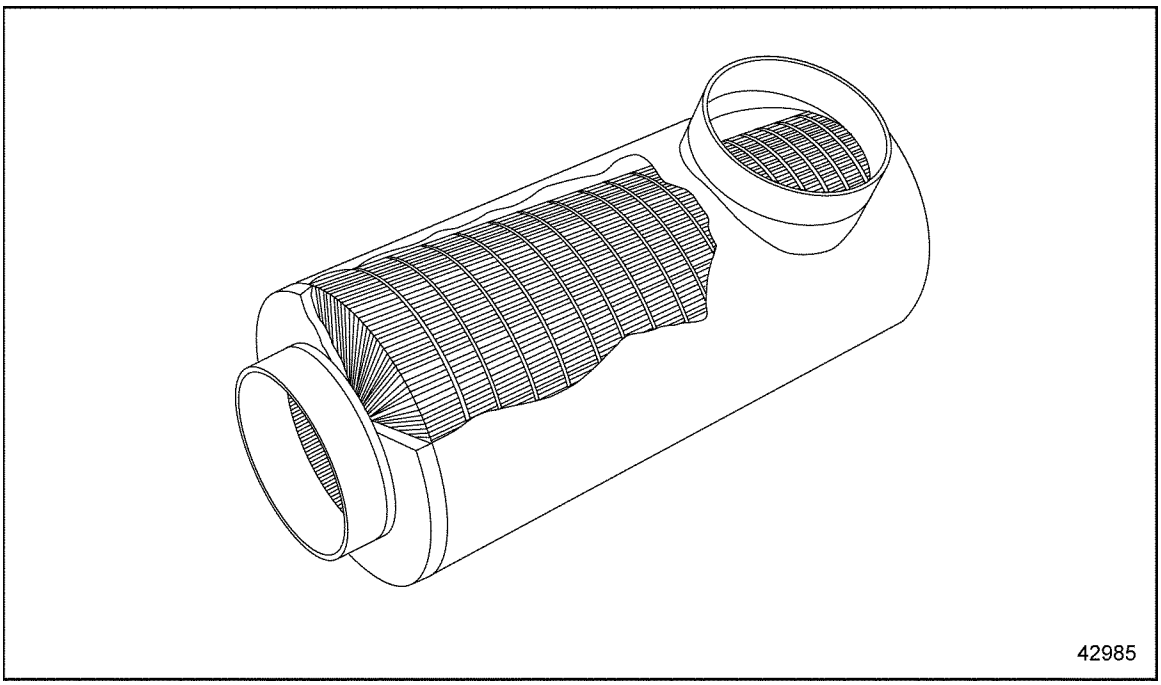

Figure 4-3 Light-Duty Air Cleaner, Single Stage Cartridge Type

4.2.1.2 Medium-Duty Use Air Cleaner

A medium-duty air cleaner is typically a two stage cyclonic/paper element cleaner. These cleaners have a cyclonic first stage that removes about 80-85% of the dust from the air before it passes through the paper element. Optional safety elements for increased reliability are available and may be included in these air cleaners.

All information subject to change without notice.
DDC-SVC-MAN-0073 Copyright © 2009 DETROIT DIESEL CORPORATION

https://truckmanualshub.com/

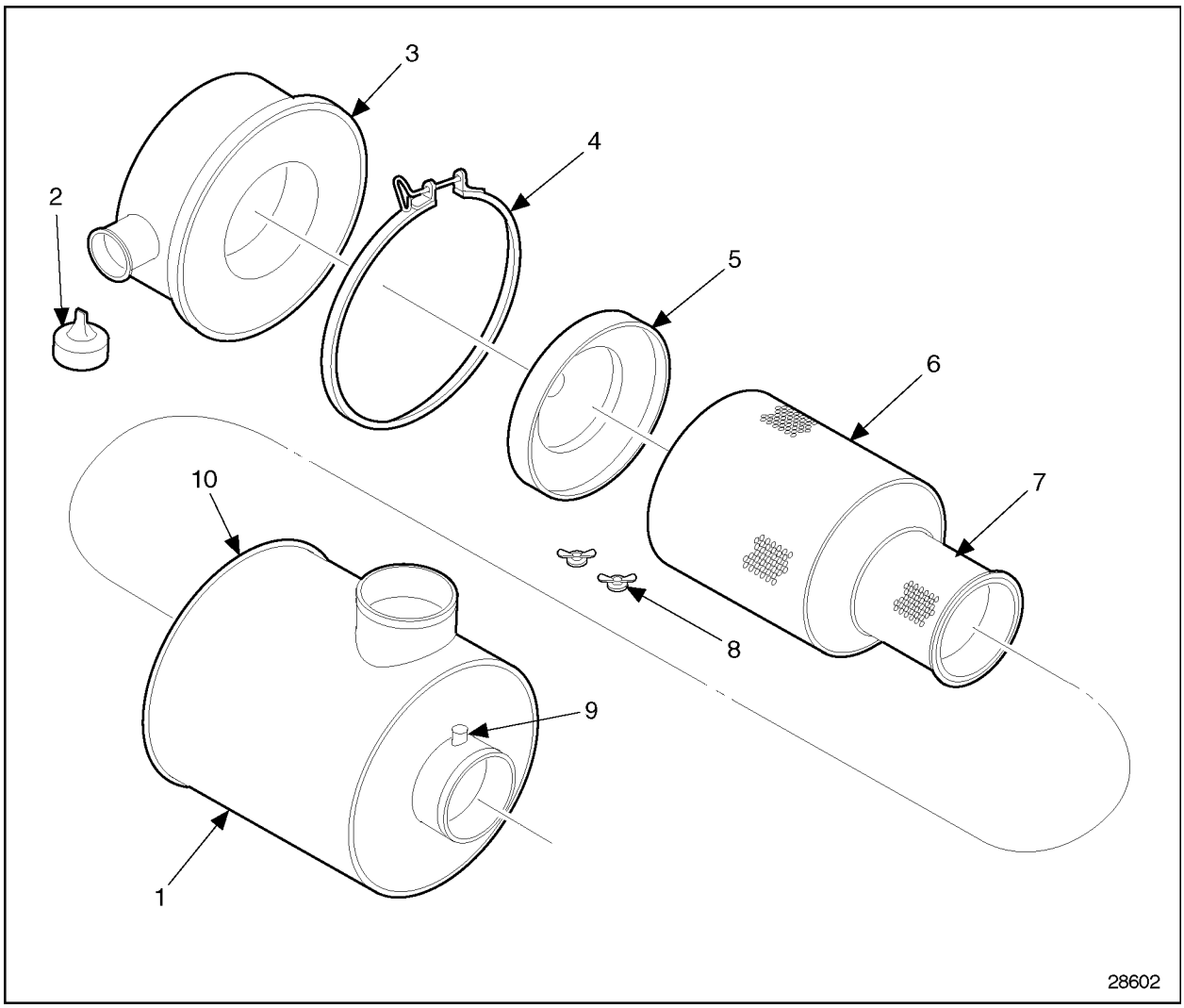

1. Body Assembly
2. Vacuator Valve
3. Cup Assembly
4. Clamp Assembly
5. Baffle Assembly
6. Primary Element
7. Safety Element
8. Nut Assembly (Wing Nut and Washer Gasket)
9. Restriction Indicator Fitting Cap
10. O-ring

Figure 4-4 Medium-Duty Air Cleaner

4.2.1.3 Heavy-Duty Use Air Cleaner

A heavy-duty air cleaner is typically a two stage cyclonic/paper element cleaner. These cleaners incorporate a highly efficient cyclonic pre-cleaner arrangement that removes 94-98% of the dust from the air before it passes through the paper element. Some types of heavy duty air cleaners do not include a mechanical precleaner but employ an oversized cleaner element to accomplish the same dust removal with similar service intervals. Optional safety elements for increased reliability are available and may be included in these air cleaners.

 Copyright © 2009 DETROIT DIESEL CORPORATION

https://truckmanualshub.com/

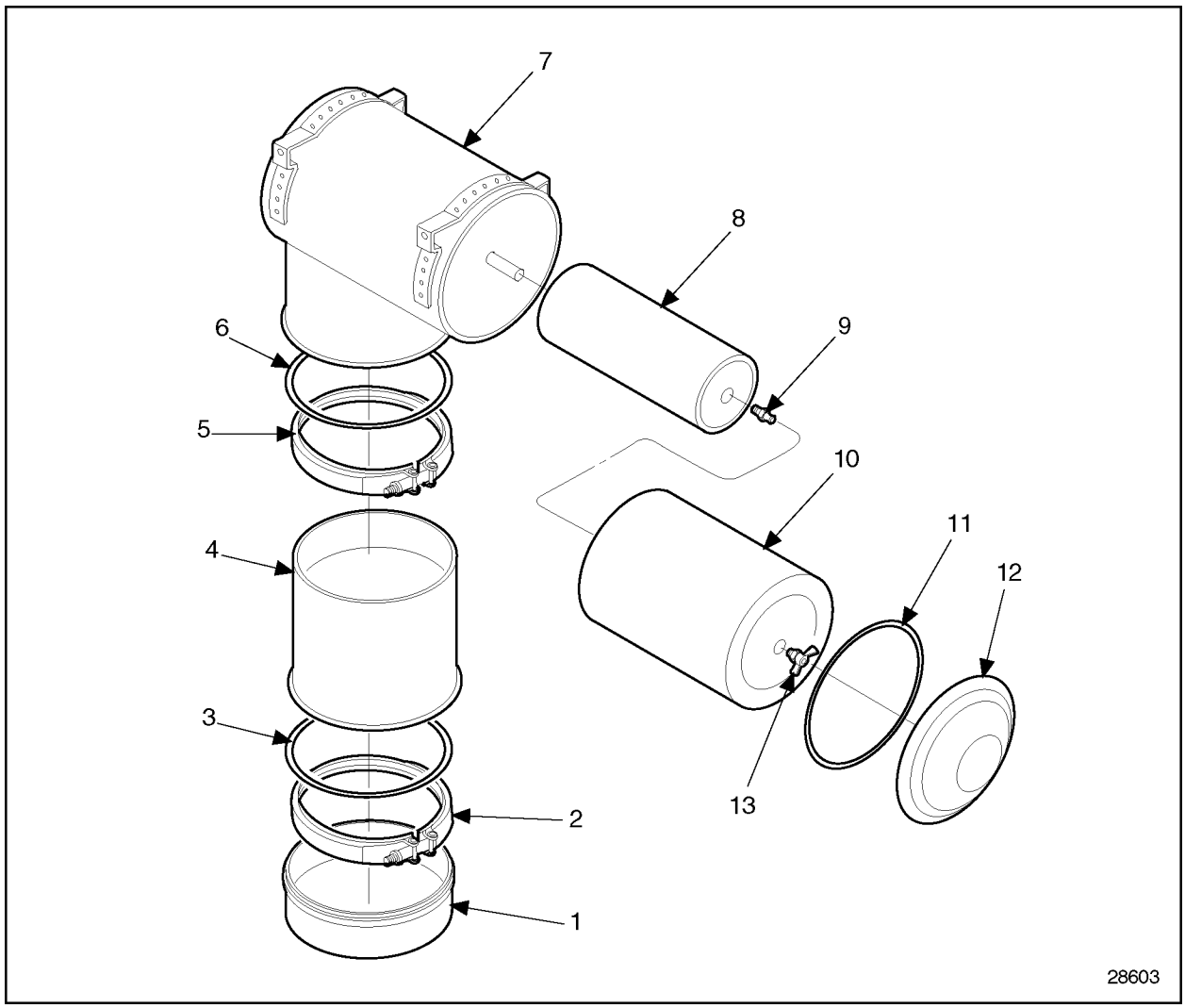

1. Dust Cup
2. Cup Clamp
3. Body or Cup O-ring
4. Lower Body Assembly
5. Body Clamp
6. O-ring
7. Upper Body Assembly
8. Safety Element
9. Safety Signal
10. Primary Element
11. Gasket
12. Access Cover
13. Wing Nut

Figure 4-5 Heavy-Duty Air Cleaner

All information subject to change without notice.
DDC-SVC-MAN-0073 Copyright © 2009 DETROIT DIESEL CORPORATION

https://truckmanualshub.com/

4.2.1.4 Extra Heavy-Duty Use

Extra heavy-duty air cleaners have large paper cleaners coupled with high efficiency mechanical precleaners. The dust from the precleaner section may be continually removed by the use of an exhaust aspirator, positive pressure bleed, or may have dust cups that open because of the weight of the dust when the engine stops. Optional safety elements for increased reliability are available and may be included in these air cleaners.

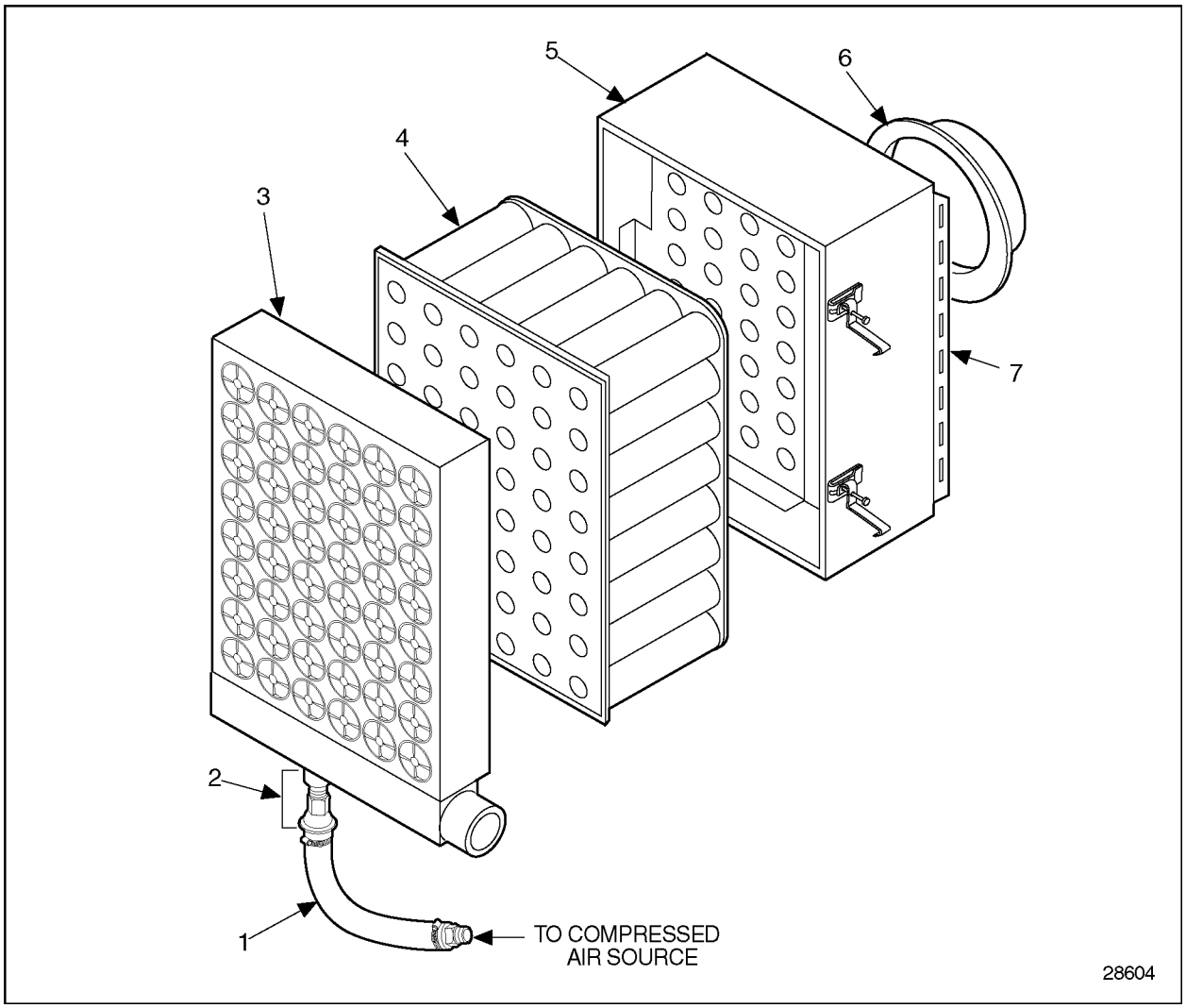

1. Bleed Tube
2. Positive Pressure Plumbing Kit
3. Positive Pressure Self-cleaning Precleaner
4. Pamic Element
5. Housing
6. Outlet Nozzle
7. Mounting Flange

Figure 4-6 Extra Heavy-Duty Air Cleaner

 Copyright © 2009 DETROIT DIESEL CORPORATION

https://truckmanualshub.com/

4.2.1.5 Foam Type Air Cleaners

Foam type air cleaner elements, available in the aftermarket, may produce gummy or varnish-like deposits which may affect engine operation.

NOTICE:
Detroit Diesel is aware of attempts to use air cleaner elements made of foam or fabric batting material soaked with a sticky substance to improve dirt-holding capability. This substance may transfer from the cleaner media and coat the inside surfaces of air ducts and engine air inlet systems, blowers, and air boxes. The result may be reduced engine performance and a change in engine operating conditions.

Detroit Diesel does not recommend the use of foam type air cleaners, in any application.

4.2.1.6 Oil-bath Air Cleaners

Use of an oil-bath air cleaner is not recommended. Oil-bath type air cleaners generally do not have enough gradability for mobile, nonroad applications.

NOTICE:
Air cleaner performance may be adversely affected by temperature extremes. Oil pullover from improper usage or extreme vehicle tilt may cause engine runaway and damage. The oil mist created by the cleaner may adversely effect turbocharger life and performance.

Oil-bath air cleaners generally have lower efficiencies and greater restriction to airflow than dry type air cleaners.

Detroit Diesel recognizes that oil bath air cleaners may be necessary in locations where dry type air cleaners are not readily available. Therefore, oil-bath type air cleaners are acceptable when used according to the air cleaner manufacturer's guidelines and Detroit Diesel air system requirements.

Prior approval from Detroit Diesel Application Engineering is required if an oil-bath air cleaner is needed.

4.2.1.7 Auxiliary Precleaners

Auxiliary precleaners are devices that separate contaminants from the incoming air and expel them through a discharge port prior to entering the air cleaner inlet. Precleaners remove most of the airborne dirt from incoming air which extends the service life of the cleaner element. Precleaners force the incoming air to rotate within the precleaner creating a centrifugal force and depositing the dirt into a bin or cup for removal while servicing.

All information subject to change without notice.
DDC-SVC-MAN-0073 Copyright © 2009 DETROIT DIESEL CORPORATION

https://truckmanualshub.com/

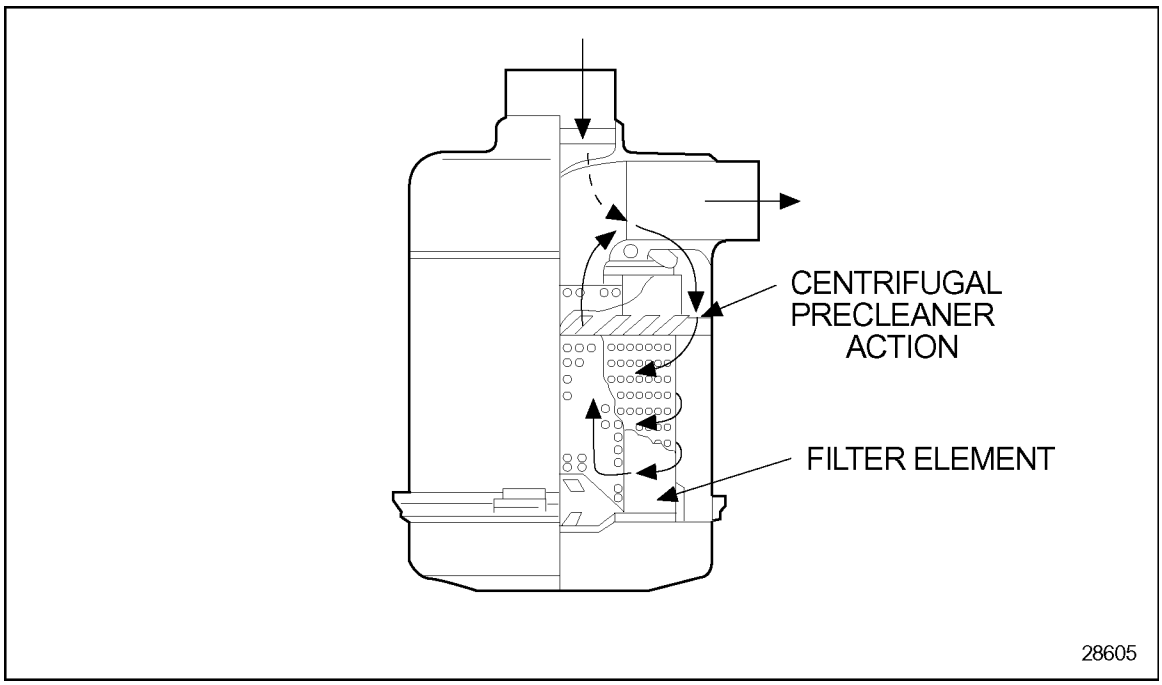

Figure 4-7 Precleaner Centrifugal Action

Precleaners may be used with the DD Platform engines as long as the air inlet restriction requirements are met. The use of a precleaner may necessitate the use of a larger air cleaner.

4.2.1.8 Inlet Screens

An inlet screen may be used with an air cleaner when larger airborne material is encountered in an operating environment. An inlet screen will prevent this material from blocking air passage through the air cleaner elements. The inlet screen should be inspected frequently and cleaned as necessary.

4.2.1.9 Rain Caps and Inlet Hoods

The entrance to the air cleaner must be designed to ensure that no water or snow can enter the air cleaner. Rain caps or inlet hoods are used for this purpose.

 Copyright © 2009 DETROIT DIESEL CORPORATION

https://truckmanualshub.com/

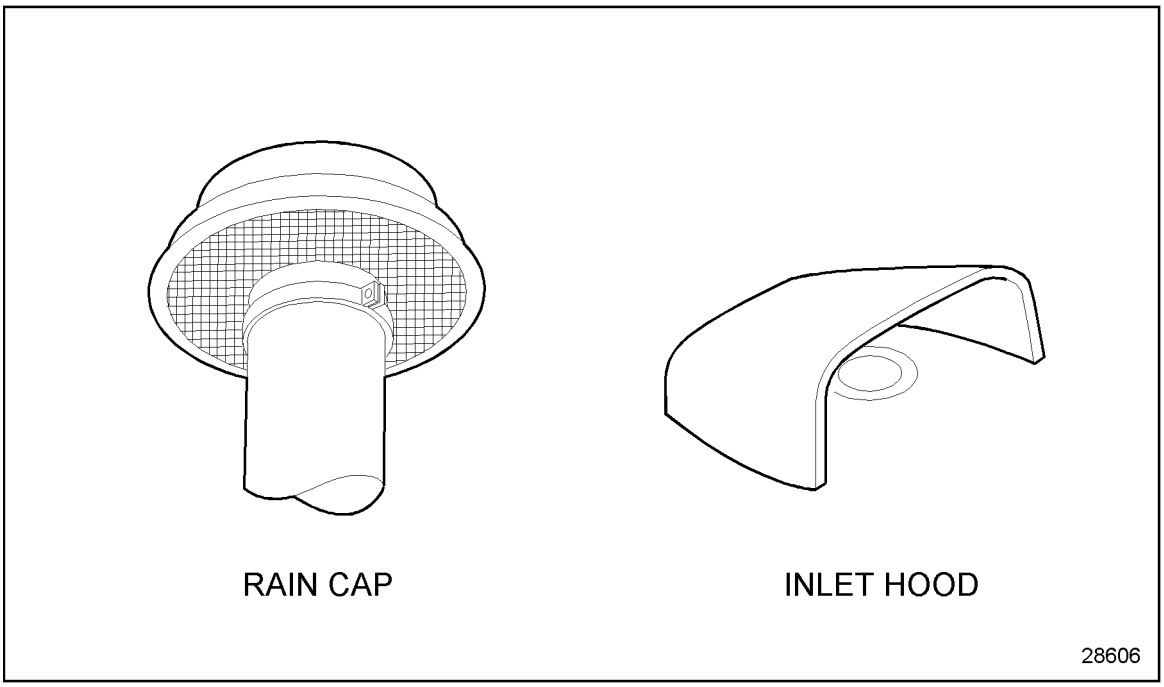

Figure 4-8 Rain Cap and Inlet Hood

4.2.1.10 Water Drains

Water injection is possible with most intake systems, either by unexpected operating conditions or failures in the intake parts. A water drain should be positioned at the lowest point in the system. A water collection trap may be necessary to overcome engine vacuum. Drains may also be needed on the bottom of the air cleaner.

NOTICE:
Excessive water injection may cause severe engine damage or complete failure.

4.2.1.11 Inlet Silencers

Appreciable reductions in noise levels can sometimes be achieved with the use of inlet silencers.

The installer should consult the supplier for specific recommendations. Care should be taken to ensure that the intake restriction is not raised above the allowable limit for clean air cleaners.

4.2.1.12 Air Cleaner Selection

Choose an appropriate air cleaner as follows:

1. Determine the maximum engine air flow requirement and the clean and dirty restriction limitations found on www.detroitdiesel.com, if you do not have access to www.detroitdiesel.com contact your Distributor.

All information subject to change without notice.
DDC-SVC-MAN-0073 Copyright © 2009 DETROIT DIESEL CORPORATION

https://truckmanualshub.com/

2. Determine the general application category.
3. Determine the air cleaner classification.
4. Select the appropriate cleaner from the manufacturer's recommendations.

4.2.2 RESTRICTION INDICATOR

Air inlet restriction is an important parameter of the air inlet system. High inlet restriction may cause insufficient air for combustion. Factors resulting in a high inlet restriction include:

- Small intake pipe diameter
- Excessive number of sharp bends in system
- Long pipe between the air cleaner and turbocharger compressor inlet
- High air cleaner resistance

Air inlet restriction that is too high may result in:

- Reduced power
- Poor fuel economy
- High combustion temperature
- Over-heating
- Reduced engine life

An air inlet restriction indicator must be fitted on the air intake system.

The operating setting of the indicator should correspond to the maximum permissible inlet restriction, 5.0 kPa (20 in. H_2O) maximum for systems with dirty cleaners, provided that it is connected to a tapping point close to the turbocharger inlet.

Altitude affects air inlet restriction The Altitude Performance Curve illustrates the effects of altitude on the percentage of inlet restriction.

 Copyright © 2009 DETROIT DIESEL CORPORATION

https://truckmanualshub.com/

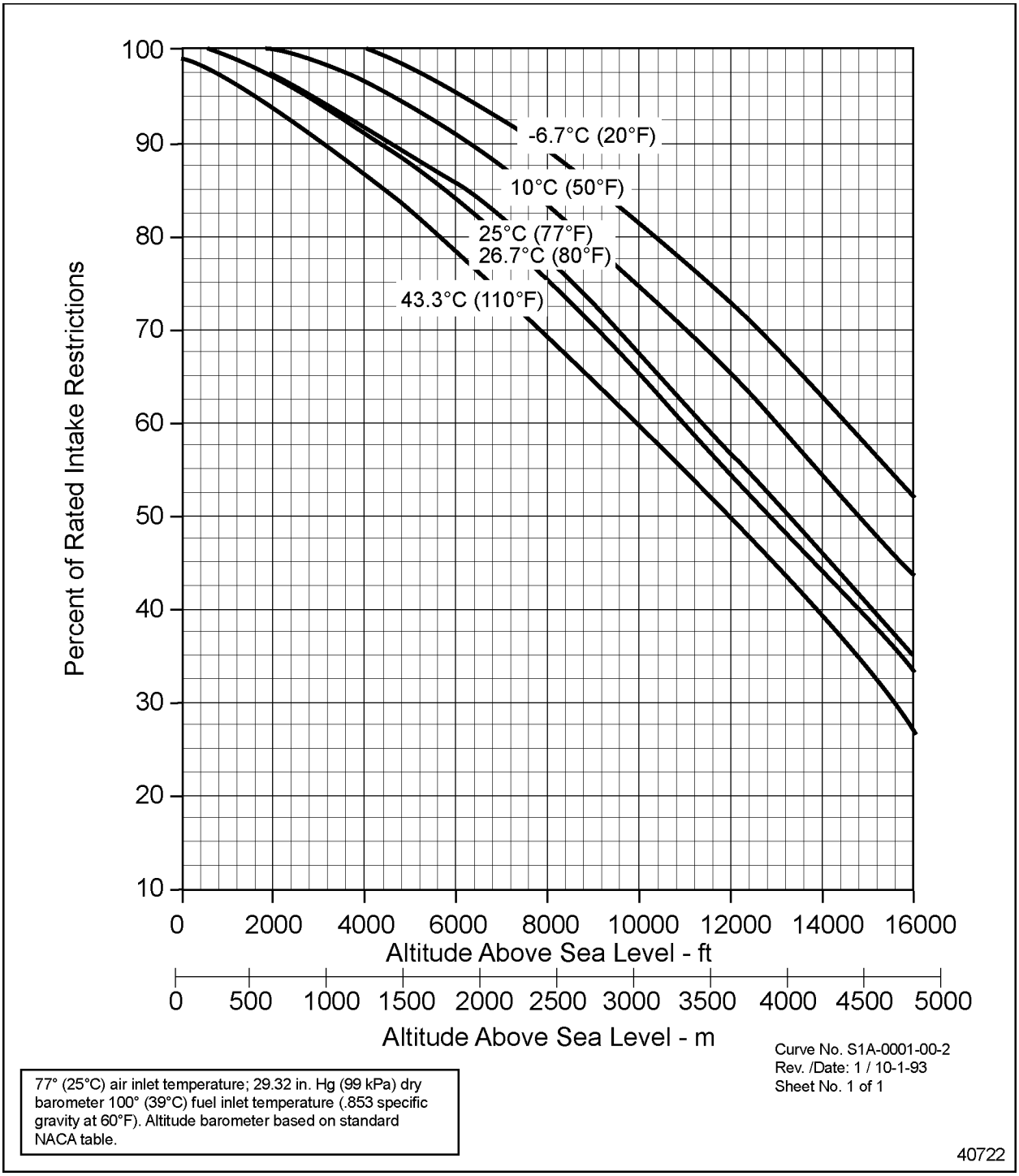

Figure 4-9 Altitude vs. Inlet Restriction

An example of the reduction of allowable restriction at different altitudes is listed in the following table.

All information subject to change without notice.
DDC-SVC-MAN-0073 Copyright © 2009 DETROIT DIESEL CORPORATION

https://truckmanualshub.com/

	Allowable Restriction		
	Clean System	Dirty System	
25°C (77°F)	3.0 kPa (12 in. H_2O)	5.0 kPa (20 in. H_2O)	At sea level
25°C (77°F)	2.31 kPa (9.25 in. H_2O)	3.85 kPa (15.5 in. H_2O)	2,438 m (8,000 ft.) above sea level

Table 4-2 Air Inlet Restriction at Different Altitudes

The reason for this reduction in allowable restriction is the lower air density at altitude.

Install the restriction indicator as close to the turbocharger compressor inlet as practical, but no closer than 12.7 cm (5 in.).

Compensate for the added restriction incurred from piping between the cleaner and the turbocharger inlet when the restriction indicator fits to the air cleaner tapping of a remote-mounted cleaner.

4.2.3 PIPEWORK

Give careful attention to the pipework and associated fittings used in the inlet system in order to minimize restriction and maintain reliable sealing.

Keep piping lengths short to minimize the number of bends and restriction incurred in the system. Use smooth bend elbows with a bend radius to tube diameter (R/D) ratio of at least 2.0 and preferably 4.0.

Keep air ducts away from heat sources such as exhaust manifolds, etc. Use appropriate insulation or shielding to minimize radiated heat from these sources to the inlet system.

4.2.3.1 Pipework Material Specifications

Aluminum or aluminized steel seamless tubing should be used. The tube ends require a 0.09 in. (2.3 mm) minimum bead to retain hose and clamp connections.

Fiberglass piping between the air cleaner and the turbocharger compressor inlet is also acceptable.

Detroit Diesel recommends that mitered elbows should have multiple sections for a smooth transition.

4.2.3.2 Diffusers

Make any necessary cross-sectional changes in the piping diameter gradually rather than using sudden expansions or contractions.

 Copyright © 2009 DETROIT DIESEL CORPORATION

https://truckmanualshub.com/

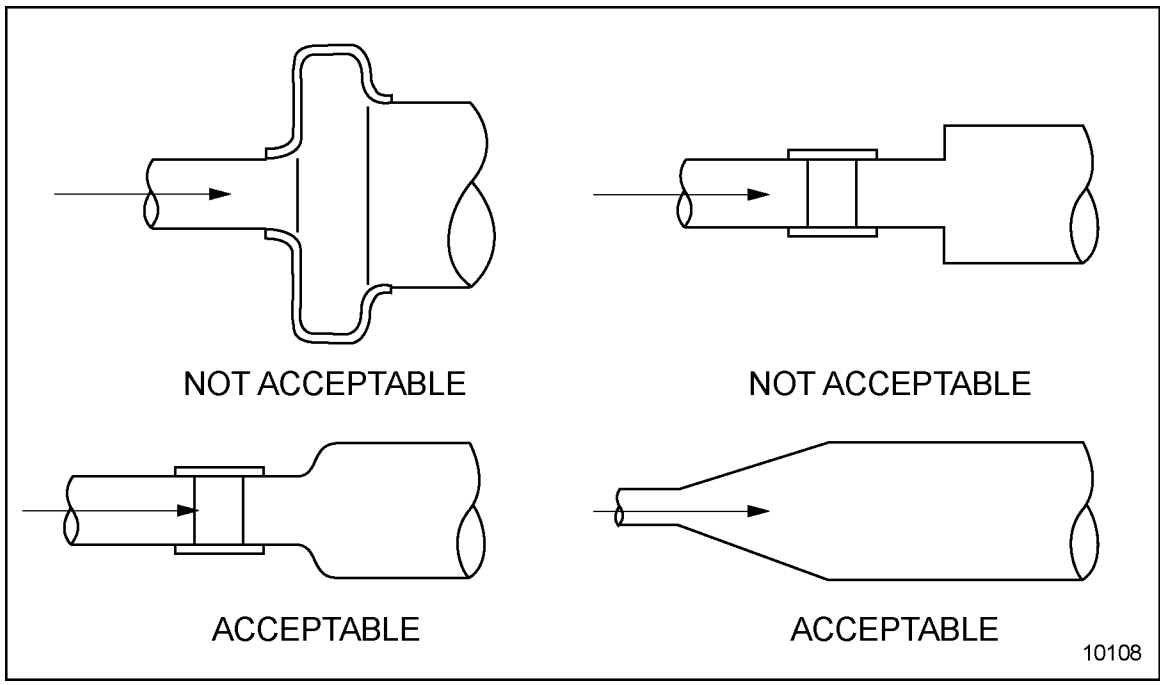

Figure 4-10 Acceptable Diffuser Configurations

4.2.4 HOSE CONNECTIONS

Use the following for hose connections:

- □ Plain (non reinforced) hose sections to connect items of rigid pipework which are in line and close together, or have little relative motion.
- □ A short section of reinforced hose between the ductwork sections where significant relative motion or misalignment occurs. High quality “Hump" hose is capable of meeting these requirements.
- □ Spring loaded clamps to provide positive clamping and to prevent piping separation.

Detroit Diesel does not approve the use of plain bore hoses with internal coil spring insertions.

Plain hoses used in the inlet system must be of adequate specification to withstand service conditions. The basic requirements are listed in the following table.

Service Conditions	Basic Requirements
Hose Material	Synthetic Rubber
Oil Resistance	Resistant to fuel oil and lubricating oil on both internal and external surfaces
Maximum Working Temperatures	105°C (220°F)
Working Pressure	Up to 1d2.5 kPa (50 in. H_2O) depression (negative pressure)

Table 4-3 Hose Specifications for the Inlet Side of the Turbocharger

All information subject to change without notice.
DDC-SVC-MAN-0073 Copyright © 2009 DETROIT DIESEL CORPORATION

https://truckmanualshub.com/

4.3 DESIGN GUIDELINES

The installed inlet system must be designed to supply clean, dry, cool air to the engine with minimum restriction. The system must also provide reliable sealing, durability, and require minimal maintenance.

NOTICE:
Never allow the turbocharger to support any weight of the air intake system.

The main design criteria for the air intake system includes:

- □ Maximum air inlet flow
- □ Air intake restriction
- □ Inlet location
- □ Temperature rise from ambient to turbo inlet

Refer to www.detroitdiesel.com, for limits on each of these criteria for your specific engine.

NOTE:
If you do not have access to www.detroitdiesel.com Contact your Distributor.

4.3.1 MAXIMUM AIR INLET FLOW

The first step in the design of the air inlet system is to determine the maximum air flow requirement for the engine. This information for the DD Platform engines is listed on www.detroitdiesel.com.

NOTE:
If you do not have access to www.detroitdiesel.com contact your Distributor.

4.3.2 AIR INLET SYSTEM RESTRICTION

Recommended pipe sizes may be used for the initial sizing of the air inlet system. Increase the pipe size or modify the piping configuration if the air intake restriction exceeds the maximum limit.

An air inlet restriction indicator must be installed on the air intake system.

The worse case scenario for air inlet system restriction can be estimated by adding up the sum of the individual restrictions in the system. These include rain caps, inlet hoods, air cleaners, and piping.

 Copyright © 2009 DETROIT DIESEL CORPORATION

https://truckmanualshub.com/

Rain Cap or Inlet Hood Restriction	_____	in. H_2O (kPa)
Precleaner Restriction	_____	in. H_2O (kPa)
Air Cleaner Restriction	_____	in. H_2O (kPa)
Piping Restriction	_____	in. H_2O (kPa)
	_____	
Total Air Inlet Restriction	_____	in. H_2O (kPa)

37056

Figure 4-11 Air Inlet System Calculation

4.3.3 INLET LOCATION

Position the air cleaner inlet so that air is drawn from an area clear of water splash with the lowest possible dust concentration; an area that minimizes:

- The temperature rise from ambient to turbo inlet
- The possibility of exhaust fumes and raw crankcase emissions being drawn into the inlet system

4.3.4 AIR-TO-AIR CHARGE AIR COOLER

Sufficient charge air cooling capability is required for optimum engine performance. Exceeding the system limits may adversely affect the fuel economy, power, emissions, and durability.

For on-highway engines the CAC is normally mounted ahead of the cooling system radiator.

All information subject to change without notice.
DDC-SVC-MAN-0073 Copyright © 2009 DETROIT DIESEL CORPORATION

https://truckmanualshub.com/

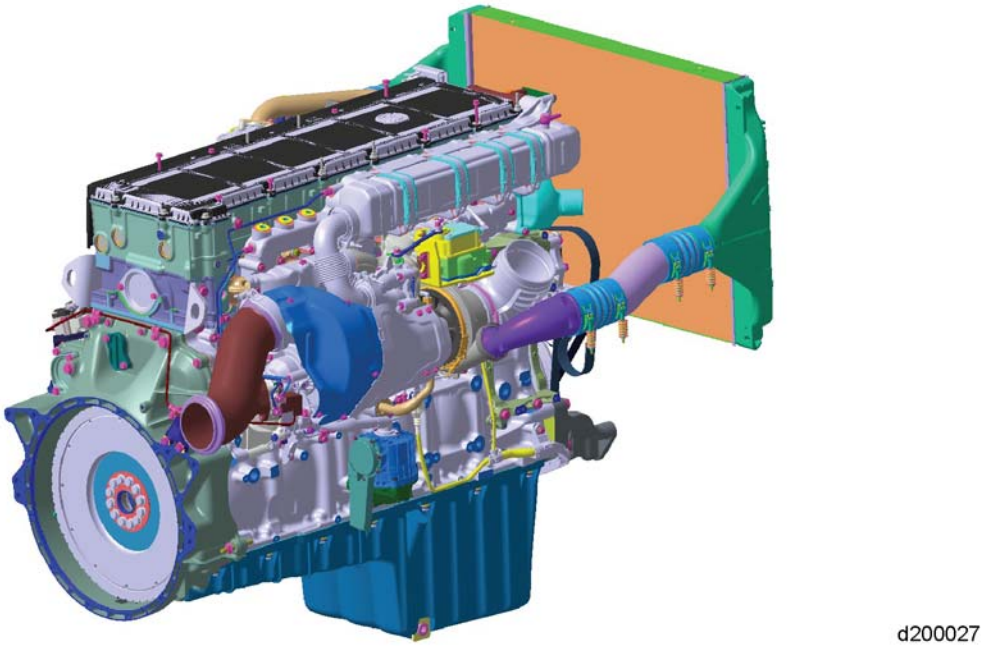

Figure 4-12 Typical Radiator-mounted Charge Air Cooling System Right Side View

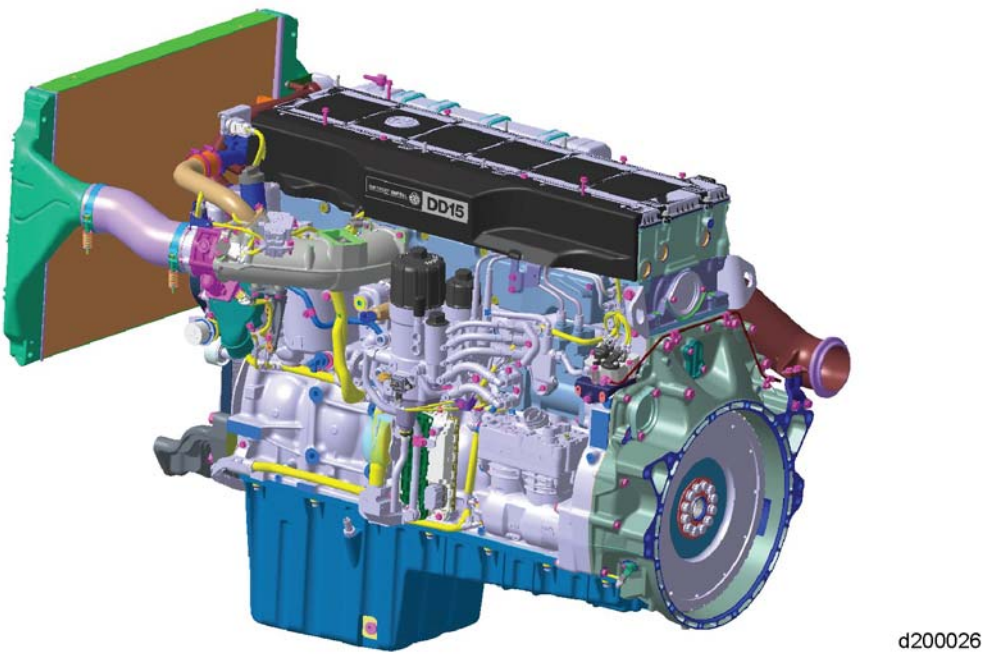

Figure 4-13 Typical Radiator-Mounted Charge Air Cooling System Left Side View

The air-to-air charge cooling (A/ACC) system should be designed for the highest horsepower engine offered in the application.

The same system can be used for derated versions of the engine, which offers the following advantages:

 Copyright © 2009 DETROIT DIESEL CORPORATION

https://truckmanualshub.com/

- Reduce the number of components in the manufacturing and part systems
- Lower power engines may achieve even greater fuel economy from the additional reduction in engine intake air temperature
- Extended engine life

The following guidelines will assist in the design and selection of the various components that make up the A/ACC system. It is critical that these components offer maximum air temperature reduction with minimal loss of air flow. The integrity of the components must provide for long life in its operating environment.

The pipework and hose connection requirements for the A/ACC system are similar to those for the air inlet system in general. Seamless, aluminum or aluminized steel should be used. The tube ends require a 0.09 in. (2.3 mm) minimum bead to retain hose and clamp connections.

Air system operating parameters such as heat rejection, engine air flow, air pressure, maximum pressure drop, minimum temperature loss, and turbocharger compressor discharge temperature are available on the on www.detroitdiesel.com.

NOTE:
If you do not have access to www.detroitdiesel.com, contact your distributor.

Charge air cooler considerations include size, cooling air flow restriction, material specifications, header tanks, location, and fan systems.

4.3.4.1 Restriction and Temperature Requirements

Make special consideration for the air flow restriction which exists between the turbocharger compressor outlet and intake manifold inlet for engines requiring a charge air cooler. The maximum allowable pressure drop, including charge air cooler and piping, is 14 kPa (3.0 in. Hg) at full load and rated speed. Refer to www.detroitdiesel.com for exceptions.

Core selection and location must meet charge air system temperature and pressure drop limits, and must be compatible for good coolant radiator performance. Charge air coolers have a cooling air flow restriction typically between 0.19 and 0.37 kPa (0.75 and 1.5 in. H_2O).

It is recommended that the charge air cooler system be constructed using 5.0 in. diameter piping with smooth radius bends.

The maximum temperature differential between ambient air and intake manifold is available on www.detroitdiesel.com.

NOTE:
If you do not have access to www.detroitdiesel.com, contact your distributor.

4.3.4.2 Cleanliness

All new air charge cooling system components must be thoroughly clean and free of any casting slag, core sand, welding slag, etc. or any that may break free during operation. These foreign particles can cause serious engine damage.

All information subject to change without notice.
DDC-SVC-MAN-0073 Copyright © 2009 DETROIT DIESEL CORPORATION

https://truckmanualshub.com/

4.3.4.3 Leakage

Leaks in the air-to-air cooling system can cause a loss in power, excessive smoke and high exhaust temperature due to a loss in boost pressure. Large leaks can possibly be found visually, while small heat exchanger leaks will have to be found using a pressure loss leak test.

WARNING:

PRESSURIZED CHARGE COOLER SYSTEM

To avoid eye or face injury from flying debris, wear a face shield or goggles.

Check for leaks as follows:

1. Disconnect the charge air cooler.
2. Plug the inlet and outlet.
3. Measure pressure loss using an adaptor plug on the inlet.

The charge air cooler is considered acceptable if it can hold 172 kPa (25 psi) pressure with less than a 34.5 kPa (5 psi) loss in 15 seconds after turning off the hand valve.

4.3.4.4 Size

The size of the heat exchanger depends on performance requirements, cooling air flow available, and usable frontal area. Using the largest possible frontal area usually results in the most efficient core with the least amount of system pressure drop. Consult your supplier to determine the proper heat exchanger for your application. Refer to appendix for a list of suppliers.

4.3.4.5 Cooling Air Flow Restriction

Core selection and location must meet charge air system temperature and pressure drop limits, and must be compatible for good coolant radiator performance. Charge air coolers have a cooling air flow restriction typically between 0.19 and 0.37 kPa (0.75 and 1.5 in. H_2O).

4.3.4.6 Material

Most charge air coolers are made of aluminum alloys because of their light weight, cost advantages and good heat transfer characteristics. Other materials may be used with approval from Detroit Diesel Application Engineering.

 Copyright © 2009 DETROIT DIESEL CORPORATION

https://truckmanualshub.com/

4.3.4.7 Header Tanks

Header tanks should be designed for minimum pressure loss, uniform airflow distribution across the core, and be strong enough to take pressure associated with turbocycling. Rounded corners and smooth interior surfaces provide a smooth transition of the air flow resulting in minimum pressure loss. The inlet and outlet diameters of the header tanks should be the same as the pipework to and from the engine. A 4 in. (102 mm) minimum diameter is required for the DD Platform engines. The tube ends require a 0.09 in. (2.3 mm) minimum bead to retain hose and clamp connections.

4.3.4.8 Location

To have the coolest possible air, the cooler is typically mounted (upstream of air flow) or along side the engine coolant radiator. Other locations are acceptable as long as performance requirements are met. The cooler should be located as close to the engine as practical to minimize pipe length and pressure losses.

Leave access space between the cores when stacked in front of one another so debris may be removed.

4.3.4.9 Fan Systems

The fan system must provide sufficient air flow to cool both the air-to-air heat exchanger as well as the engine coolant radiator under all operating conditions.

A controlled fan drive system must be able to maintain a required air and water temperature. DDEC controlled fan systems are PWM and drive clutch controlled.

A fan drive clutch with controls that sense engine coolant out temperature is the most suitable for air-to-air installations. Viscous and modulating fan drives which sense down stream radiator air out temperatures are not recommended.

4.3.4.10 Shutters

Shutters are not required under most operating conditions with a properly designed cooling system. Improperly installed or maintained devices may lead to reduced engine life, loss of power, and poor fuel economy.

NOTE:
It is imperative that all warning and shutdown monitoring devices be properly located and always in good operating condition.

Shutters must always be mounted downstream of the air-to-air heat exchanger and should open approximately 2.8°C (5°F) before the thermostat start to open temperature. The shutter control should sense engine water out (before thermostat) temperature and the probe be fully submerged in coolant flow.

All information subject to change without notice.
DDC-SVC-MAN-0073 Copyright © 2009 DETROIT DIESEL CORPORATION

https://truckmanualshub.com/

4.3.4.11 Winterfronts

Winterfronts are not required under most operating conditions with a properly designed cooling system. Some operators reduce the airflow through the radiator during cold weather operation to increase engine operating temperature. Consider on/off fans and shutters if long term idling during severe cold weather is necessary.

Improperly used winterfronts may cause excessive temperatures of coolant, oil, and charge air. This condition can lead to reduced engine life, loss of power, and poor fuel economy. Winterfronts may also put abnormal stress on the fan and fan drive components.

Never totally close or apply the winterfront directly to the radiator core. At least 25% of the area in the center of the grill should remain open at all times. All monitoring, warning, and shutdown devices should be properly located and in good working condition.

4.4 TESTING REQUIREMENTS

A thorough evaluation of the air inlet system will include:

- □ Complete descriptions and documentation of the system in the Vehicle Sign-Off forms
- □ Adequate instrumentation
- □ Proper test preparation
- □ Accurate tests
- □ Data analysis and documentation
- □ Diagnostics (troubleshooting) and corrective action (if necessary)

These tests must be run on all new installations, engine repowers, or whenever modifications have been made to the engine, air inlet system, engine load, duty cycle, or environmental operating conditions. The Detroit Diesel Vehicle Sign-Off form must be completed.

4.4.1 TESTING LOCATION

This section describes the methods needed to measure the temperatures and pressures of air inlet systems.

Location of temperature and pressure measurements needed to evaluate the air inlet system with air-to-air charge cooling is shown.

 Copyright © 2009 DETROIT DIESEL CORPORATION

https://truckmanualshub.com/

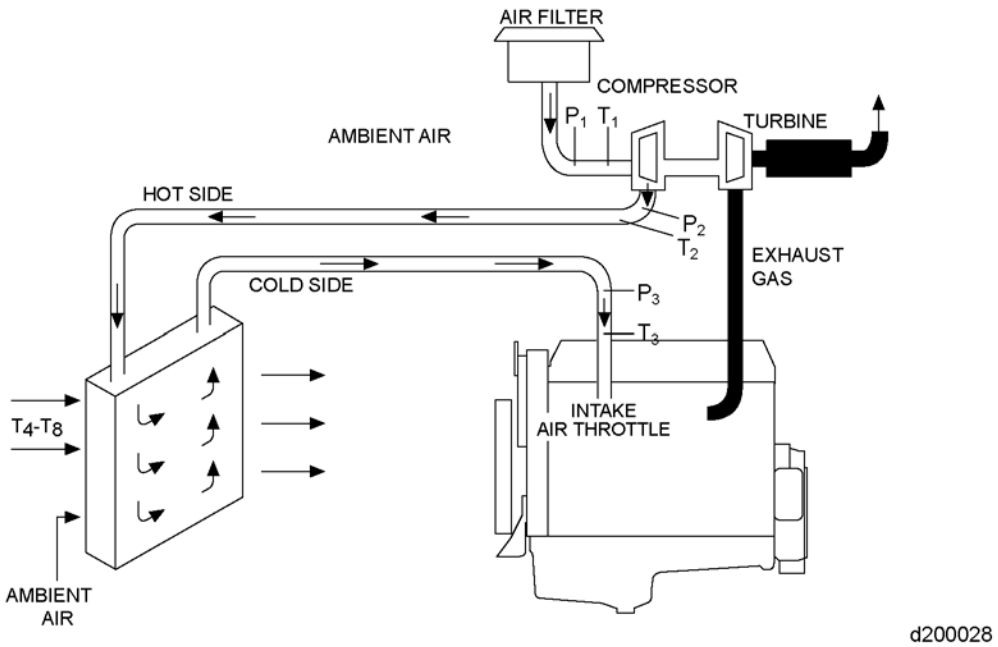

Figure 4-14 Typical Instrumentation Location

4.4.2 INLET SYSTEM RESTRICTION

The maximum permitted inlet restriction for a system with a clean air cleaner is 3 kPa (12 in. H_2O).

The maximum permitted inlet restriction for a system with a dirty air cleaner is 5 kPa (20 in. H_2O).

4.4.3 AIR-TO-AIR SYSTEM EVALUATION TESTS

The A/ACC system must be tested to verify that engine air intake temperatures and pressure drop limits can be met as shown on www.detroitdiesel.com, if you do not have access to www.detroitdiesel.com contact your Distributor. This evaluation can be done simultaneously with the engine cooling index test.

4.4.3.1 Maximum Temperature Rise–Ambient to Intake Manifold

The maximum temperature differential between the ambient temperature and the temperature at the intake manifold needs to be determined.

Symbol	Measurement	Location Description
T_1	Air inlet temperature	Within 5 in. of the turbocharger
T_2	Compressor discharge temperature	Within 5 in. of the compressor outlet
T_3	Intake manifold temperature	Within 5 in. of the inlet connection
T_4 - T_8	Charge air cooler core air inlet temperature	5 points in front of the core, one in the center and one at each corner for determining recirculation

Table 4-4 Thermocouples

All information subject to change without notice.
DDC-SVC-MAN-0073 Copyright © 2009 DETROIT DIESEL CORPORATION

https://truckmanualshub.com/

These temperature restrictions for the DD Platform engines are listed on www.detroitdiesel.com, if you do not have access to www.detroitdiesel.com contact your Distributor.

4.4.3.2 Charge Air Cooler System Restriction

The maximum pressure differential of the charge air cooler system results from the charge air cooler and all of the piping and connections between the turbocharger compressor outlet and the intake manifold.

Symbol	Measurement	Location Description
P_1	Air inlet restriction	Within 5 in. of the turbocharger, in a straight section after the last bend
P_2	Compressor discharge pressure	Within 5 in. of the turbocharger, in a straight section before the first bend
P_3	Intake manifold pressure	Within 5 in. of the inlet connection in a straight section after the last bend (or in the manifold itself)

Table 4-5 Pressure Taps

Connect a precision gage between pressure taps P_2 and P_3 to determine pressure drop of the system. Two precision gages may be used as desired.

The maximum pressure drop for the DD Platform engines is shown on www.detroitdiesel.com, if you do not have access to www.detroitdiesel.com contact your Distributor.

4.5 TEST

Thorough preparations prior to testing will ensure accurate results.

- □ Confirm all instrumentation and equipment is in good working condition and calibrated.
- □ Tests should be run on a finalized package installed in unit or vehicle representative of the final package to be released.
- □ Shutters must be fully opened and fan drive mechanisms in the fully engaged position.

All A/ACC tests should be performed with the engine operating at maximum rated speed and wide open throttle (full fuel).

4.5.1 MOBILE AIR-TO-AIR

Refer to www.detroitdiesel.com, for the appropriate ram air speed to be used for testing. Other mobile applications require appropriate ram air. In some mobile applications no ram air should be applied. Sample data sheets for the air inlet and charge air system tests are given below.

NOTE:
If you do not have access to www.detroitdiesel.com contact your Distributor.

 Copyright © 2009 DETROIT DIESEL CORPORATION

https://truckmanualshub.com/

Turbocharged and Air-to-Air Charge Cooled Engine

Symbol	Description	Measurement
T_1	Air Inlet Temperature	_____
T_2	Compressor Discharge Temperature	_____
T_3	Intake Manifold Temperature	_____
T_4	Top Right CAC Inlet Temperature	_____
T_5	Top Left CAC Inlet Temperature	_____
T_6	Center CAC Inlet Temperature	_____
T_7	Bottom Right CAC Inlet Temperature	_____
T_8	Bottom Left CAC Inlet Temperature	_____
P_1	Air Inlet Restriction	_____
P_2	Compressor Discharge Pressure	_____
P_3	Intake Manifold Pressure	_____

38611

Figure 4-15 Air Inlet Data Sheet for Turbocharged and Air-to-Air Charge Cooled Engine

All information subject to change without notice.
DDC-SVC-MAN-0073 Copyright © 2009 DETROIT DIESEL CORPORATION

https://truckmanualshub.com/

Turbocharged Engine

Symbol	Description	Measurement
ΔT_1	Air Inlet Temperature Rise	_____
ΔP_1	Air Inlet Restriction	_____
ΔP_2	Charge Air System Press. Drop	_____

42790

Figure 4-16 Air Inlet System Data Sheet for Turbocharged Engines

 Copyright © 2009 DETROIT DIESEL CORPORATION

https://truckmanualshub.com/

THIS PAGE INTENTIONALLY LEFT BLANK

All information subject to change without notice.
DDC-SVC-MAN-0073 Copyright © 2009 DETROIT DIESEL CORPORATION

https://truckmanualshub.com/

5 EXHAUST GAS RECIRCULATION SYSTEM

Section **Page**

5.1 EGR SYSTEM DESCRIPTION 5- 2
5.2 INSTALLATION AND DESIGN REQUIREMENTS 5- 3
5.3 TESTING REQUIREMENTS 5- 3

 Copyright © 2009 DETROIT DIESEL CORPORATION

 https://truckmanualshub.com/

5.1 EGR SYSTEM DESCRIPTION

An internal combustion engine produces emission by-products (such as CO, CO2, H2O, NOx and particulate matter) in addition to creating power and heat. Higher combustion temperatures produce higher levels of NOx. Recent changes in emission regulations require more complex and balanced combustion processes in order to achieve these limits. The strategy developed by Detroit Diesel Corporation for the DD Platform engines is the introduction of cooled exhaust gas back into the intake stream in order to reduce combustion temperatures and thereby, the production of NOx. This section describes the function, installation, design, and test requirements for the Exhaust Gas Recirculation (EGR) system of the Detroit Diesel DD Platform engines.

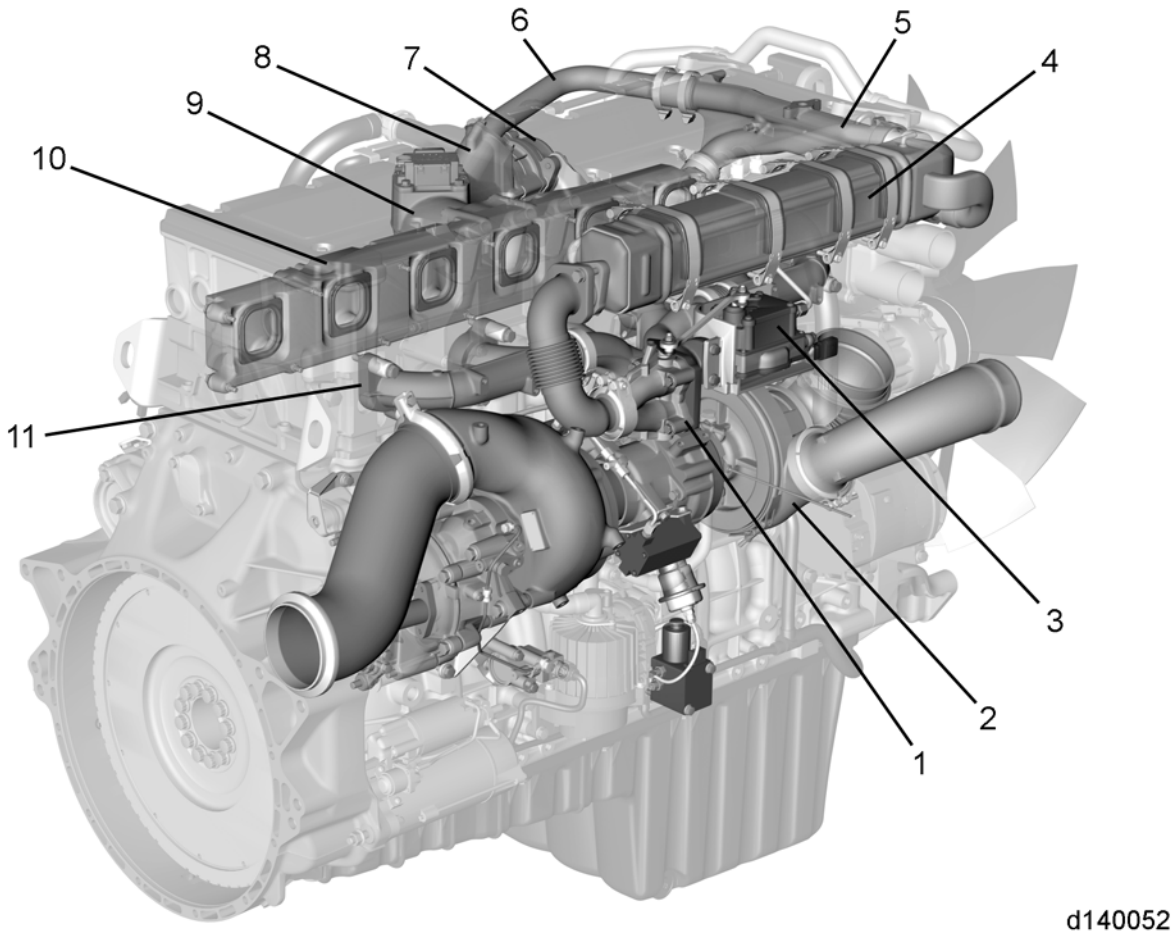

1. EGR Valve
2. Turbocharger
3. EGR Actuator
4. EGR Cooler
5. Venturi
6. EGR Delivery Pipe
7. Intake Throttle
8. EGR Mixer
9. Cold Boost Pipe
10. Intake Manifold
11. Exhaust Manifold

Figure 5-1 EGR System

All information subject to change without notice.
DDC-SVC-MAN-0073 Copyright © 2009 DETROIT DIESEL CORPORATION

https://truckmanualshub.com/

The exhaust gas is routed from the exhaust manifold through a gas to water EGR cooler, through a venturi, through a modulated mixing valve and into the intake manifold. The mixer valve is controlled by the engine electronics and are used to control and regulate the flow of EGR. Each cylinder is filled with a mix of cooled, compressed intake air and recirculated, cooled exhaust gas. This mix provides for efficient combustion with controlled combustion temperatures and a greatly reduced level of NOx production. The trade-off from the introduction of exhaust gas to the intake air is an increase in particulate matter. An exhaust Aftertreatment Device (ATD) is used to capture the increased particulate matter.

5.2 INSTALLATION AND DESIGN REQUIREMENTS

The installation of the EGR System is completely controlled by Detroit Diesel Corporation as part of the manufacturing and production process. There are no unique OEM requirements relative to the installation of the EGR system.

5.2.1 COOLING SYSTEM

The vehicle radiator must be sized to accommodate the increased heat rejection load resulting from EGR engines. The radiator must also be designed to handle the increase in water pump flow volume.

5.2.2 AUXILIARY COOLERS

The coolant supply for auxiliary coolers (i.e. transmission cooler, hydraulic cooler, auxiliary power unit, etc.) must be plumbed from the coolant collector on the right hand side of the engine. There are three M27 supply ports at the rear of the coolant collector and two M27 supply ports on the coolant outlet elbow located at the front of the coolant collector.

5.3 TESTING REQUIREMENTS

There are no unique OEM requirements relative to the testing and verification of the EGR system.

 Copyright © 2009 DETROIT DIESEL CORPORATION

https://truckmanualshub.com/

THIS PAGE INTENTIONALLY LEFT BLANK

All information subject to change without notice.
DDC-SVC-MAN-0073 Copyright © 2009 DETROIT DIESEL CORPORATION

https://truckmanualshub.com/

6 EXHAUST SYSTEM

Section **Page**

6.1 EXHAUST SYSTEM DESCRIPTION 6- 2
6.2 INSTALLATION REQUIREMENTS 6- 5
6.3 DESIGN REQUIREMENTS 6- 8
6.4 TESTING REQUIREMENTS 6- 9

 Copyright © 2009 DETROIT DIESEL CORPORATION

https://truckmanualshub.com/

6.1 EXHAUST SYSTEM DESCRIPTION

The purpose of the exhaust system is to direct the flow of exhaust gases from the combustion chamber through the turbocharger and Axial Power Turbine Aftertreatment Device (ATD) and to an appropriate discharge location.

The exhaust system consists of:

- Exhaust valves
- Exhaust manifold
- Turbocharger
- Axial Power Turbine
- Exhaust piping
- Aftertreatment Device (ATD)

6.1.1 EXHAUST SYSTEM

Exhaust gases exit the cylinders through exhaust ports and the exhaust manifold. At the exhaust manifold, the exhaust gas is split between the EGR circuit and the exhaust circuit. The flow of EGR circuit gases is covered in the EGR System Section. The remaining exhaust circuit gases expand through the exhaust turbine and drive the turbocharger compressor impeller. The exhaust gases are then routed through the axial power turbine. The axial power turbine converts thermal energy to mechanical energy through a gear box driving the flywheel. Exhaust gas then flows through an engine mounted S-pipe through the ATD to an appropriate discharge outlet.

All information subject to change without notice.
DDC-SVC-MAN-0073 Copyright © 2009 DETROIT DIESEL CORPORATION

https://truckmanualshub.com/

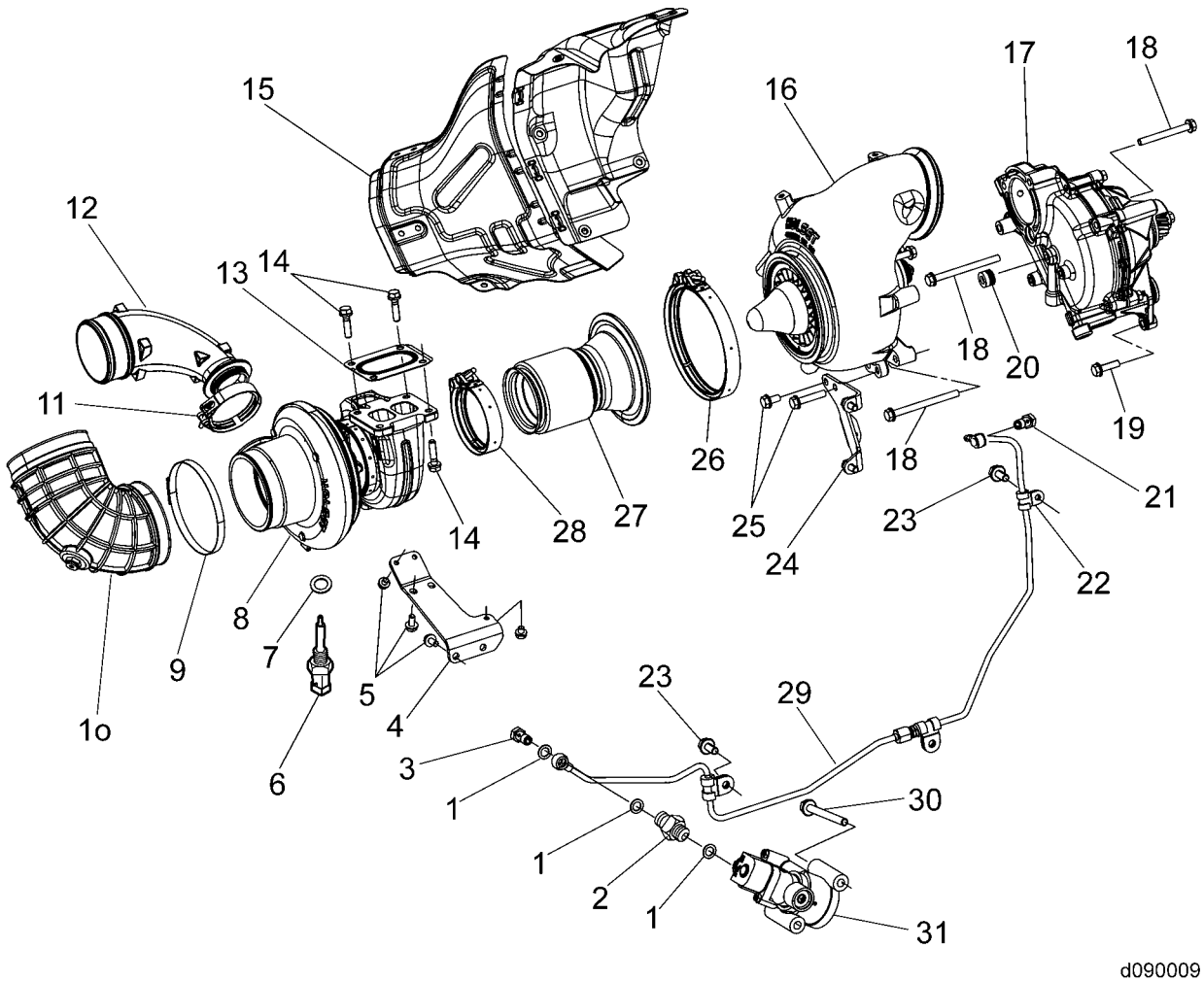

1. Washer	10. Exhaust Pipe	19. Bolt	28. Clamp
2. Connector	11. Clamp	20. Washer	29. Air Line
3. Banjo Bolt	12. Turbo Outlet Elbow	21. Banjo Bolt	30. Bolt
4. Bracket	13. Gasket	22. Clip	31. Air Seal Pressure Regulator
5. Bolts	14. Bolts	23. Bolt	
6. Turbo Speed Sensor	15. Heat Shield	24. Bracket	
7. O-ring	16. Axial Power Turbine	25. Bolt	
8. Turbocharger	17. Gear Box	26. Clamp	
9. Clamp	18. Bolt	27. Interstage Duct	

Figure 6-1 Turbocharger and Related Parts

 Copyright © 2009 DETROIT DIESEL CORPORATION

https://truckmanualshub.com/

6.1.2 TURBOCHARGER

Compression of air in the turbocharger causes an air mass to flow into the combustion chamber. The turbocharger consists of a turbine and a compressor which are attached to a shaft. The exhaust gas flows to the turbine wheel and causes it to turn. This turning motion is transmitted to the shaft and the compressor impeller. The intake air from the air filter is compressed by the compressor impeller and flows over a charge air pipe to the charge air cooler. The compressed air is cooled in the charge air cooler; this permits a more dense charge of air to be delivered to the engine and the output of the engine is increased. The charge air then passes from the charge air cooler into the charge air manifold cylinders.

The turbocharger is mounted on the exhaust outlet flange of the engine exhaust manifold.

The advantages are as follows:

- Increases the engine performance and torque
- Reduction of the fuel consumption compared to a similarly powered naturally aspirated engine
- Reduction of emissions

6.1.3 AXIAL POWER TURBINE

The axial power turbine increases the efficiency and the economy of the engine by converting thermal energy, in the exhaust flow from the turbocharger into mechanical energy and delivers the resulting torque to the crankshaft. The rated speed of the turbine wheel of the axial power turbine device is about 50,000 rpm. The turbine wheel generates a torque in this range of about 10 N·m (7 lb·ft) which is increased through various gear ratios of gears up to 260 N·m (192 lb·ft). The exhaust gas flows to the turbine wheel of the axial power turbine device and drives the wheel. The rotational movement created is transmitted to the shaft the small output gear and from the small output gear to the large output gear of the hydrodynamic clutch. The rotational speed is reduced because of the gear ratio between the output gear and drive gear and the torque increased. The impeller of the hydrodynamic clutch is connected to the housing of the hydrodynamic clutch to the drive gear and turns at the same rotational speed. The vanes on the impeller generate an oil flow in the hydrodynamic clutch which sets the turbine wheel of the hydrodynamic clutch into rotation and the output gear is driven over a shaft. The generated torque is transferred to the gear for the crankshaft via the intermediate gear and therefore to the crankshaft. It is therefore also possible to ensure via the hydrodynamic clutch that rotational speed matching takes place between the crankshaft and the axial power turbine-drive.

The axial power turbine device is connected to the engine oil circuit. The gears and the bearing are lubricated and cooled by the engine oil. The hydrodynamic clutch is supplied with engine oil by the hollow bearing shaft. One special aspect is the seal between the shaft and the exhaust turbine housing. The seal between these two components takes place by using two metal sealing rings which are pressed into their seat by compressed air. The pressure for pressing these sealing rings is reduced over the axial power turbine air seal pressure regulator valve to 0.5 bar which is actuated by the Motor Control Module (MCM) as soon as the engine starts.

All information subject to change without notice.
DDC-SVC-MAN-0073 Copyright © 2009 DETROIT DIESEL CORPORATION

https://truckmanualshub.com/

6.2 INSTALLATION REQUIREMENTS

The exhaust system must be designed to minimize the resistance to the flow of exhaust gases (back pressure). The ATD, in addition to acting as an exhaust catalyst and particulate filter also provides a level of noise attenuation so that a traditional muffler should no longer be required. A flexible section of piping is required between the turbocharger turbine outlet and the inlet to the ATD. This flexible section is necessary to minimize the amount of engine vibration that is transmitted to the exhaust system and the ATD. Additionally, since Detroit Diesel ATDs actively regenerate the diesel particulate filter (DPF) using diesel fuel, the flexible section must prevent any and all exhaust leaks.

The exhaust system upstream of the ATD will be operating at pressures higher than what previous engines had upstream of the muffler. The exhaust system must be capable of withstanding these pressures to prevent exhaust leaks. Adequate clearance must be provided for the complete exhaust system. The exhaust must not be routed too close to engine or vehicle components such that exhaust heat will The minimum required exhaust pipe Inside Diameter (I.D.) for DD Platform engines can be found at www.detroitdiesel.com.

These sizes may be used for the initial sizing of the exhaust system. Increase the pipe size or modify the piping configuration if the calculated back pressure exceeds the maximum limit.

6.2.1 BACK PRESSURE

The vehicle exhaust system introduces flow restriction or back pressure to the engine exhaust system. The design of the vehicle exhaust system should minimize this flow restriction. Vehicle exhaust systems include piping from the engine exhaust outlet to the ATD and exhaust discharge to the environment. The ATD causes exhaust flow restriction as well, however, vehicle manufacturers must comply with DD Platform exhaust back pressure specifications published at www.detroitdiesel.com.

One or more of the following factors usually causes excessive back pressure:

- Small exhaust pipe diameter
- Excessive number of sharp bends in the system
- Long exhaust pipe between the manifold and ATD
- Reduced power
- Poor fuel economy
- High combustion temperature
- Over-heating
- Excessive smoke
- Reduced engine life

 Copyright © 2009 DETROIT DIESEL CORPORATION

https://truckmanualshub.com/

6.2.2 NOISE

The exhaust system is one of the principal noise sources on many types of applications. Exhaust noise is caused by the intermittent release of high pressure exhaust gas from the engine cylinders, causing pulsations in the exhaust pipe. These pulsations lead not only to discharge noise at the outlet, but also to noise radiation from the exhaust pipe and muffler shell surfaces. The ATD provides a level of noise cancellation such that a traditional muffler should not be required. Double wall piping helps to reduce radiant noise. It remains the responsibility of the OEM to comply will all applicable noise standards.

6.2.3 FLEXIBLE FITTINGS

A flexible exhaust fitting or joint should separate the engine and exhaust system. Premature failure of the turbocharger, manifold, piping, ATD or joints caused by engine vibration may be prevented by including flexible joints or fittings. A flexible joint allows for thermal expansion and facilitates alignment of the engine with the exhaust system piping. A traditional style flexible section is not acceptable due to its inherent tendency to leak. Detroit Diesel recommends a bellows style flexible section in order to provide the necessary vibration isolation while providing a relatively leak-free section. The bellows section must be able to withstand operating pressures up to 31 kPa (4.5 psi).

NOTE:
Never allow the engine manifold or turbocharger to support the weight of the exhaust system.

6.2.4 EXHAUST CONNECTION POINTS

The axial power turbine outlet utilizes a marmon flange that the vehicle exhaust system must mount to.

All information subject to change without notice.
DDC-SVC-MAN-0073 Copyright © 2009 DETROIT DIESEL CORPORATION

https://truckmanualshub.com/

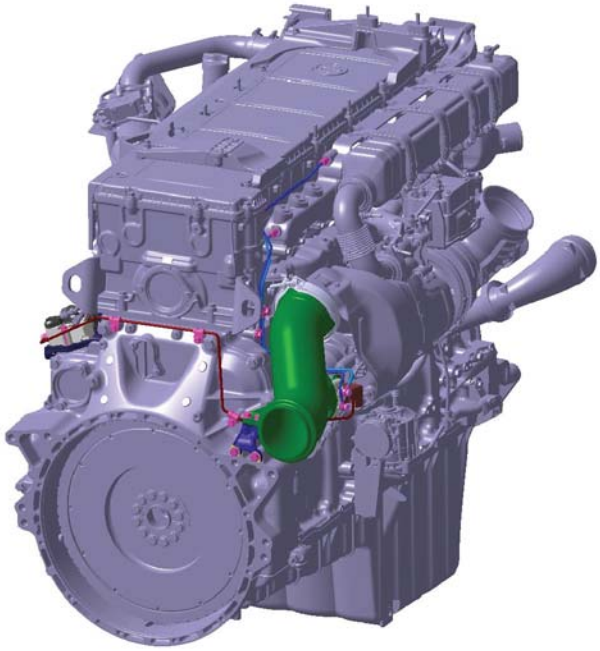

Figure 6-2 Turbine Outlet Connection Points for DD15™

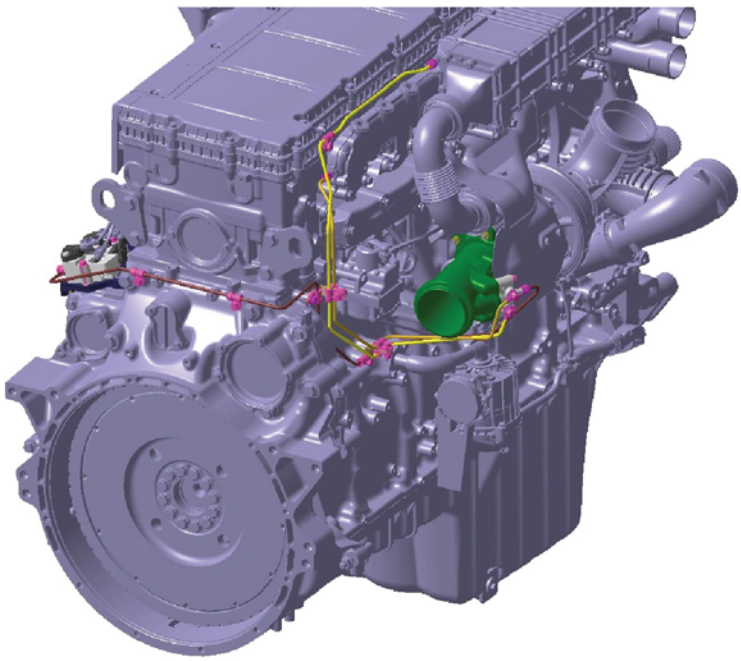

Figure 6-3 Turbine Outlet Connection Points for DD13™

 Copyright © 2009 DETROIT DIESEL CORPORATION

https://truckmanualshub.com/

6.2.5 MATERIAL SPECIFICATIONS FOR PIPEWORK

The minimum required exhaust pipe diameter for the DD Platform engines can be found at www.detroitdiesel.com. Detroit Diesel recommends AL409SS with a minimum wall thickness of 1.2 mm (0.047 in.) for all exhaust piping. The exhaust piping support must be secure, but still allow for thermal expansion and contraction. Mounting points should be on structurally sound members, such as the vehicle/vessel frame. Thermal insulation is required for all piping between the turbocharger and the ATD inlet in order to maintain as much exhaust temperature as possible within the exhaust flow. The temperature of the exhaust gas as it reaches the inlet to the ATD is critical to both the function of the DOC as well as regeneration of the DPF. Double wall piping is common in automotive applications. Exposed exhaust system components should not be located near flammable or otherwise temperature sensitive materials. Insulating the exhaust system will reduce the heat radiation and noise level caused by the exhaust system.

6.3 DESIGN REQUIREMENTS

The exhaust system for DD Platform powered vehicles must function under a variety of environmental conditions. Exposure to rain and snow and subjection to both thermal and mechanical stresses are inherent to vehicle operation.

6.3.1 TEMPERATURE DROP FROM TURBOCHARGER OUTLET TO AFTERTREATMENT DEVICE

The temperature of the exhaust gas as it reaches the inlet to the ATD is critical in both the function of DOC and the regeneration of the DPF (passively and actively). The maximum temperature drop allowed from the turbo outlet to the ATD inlet is 30°C (54°F) throughout the entire operating range, including “high idle,” which is defined as the elevated rpm and load where a stationary regeneration may occur. In order to maintain this temperature drop and retain as much of the exhaust energy as possible, the exhaust piping between the turbo and the ATD will require either insulation or double wall tubing.

6.3.2 DISTANCE FROM HYDROCARBON DOSER TO ATD INLET

A minimum of 0.8 meters (31 in.) of piping is required between the HC Doser and the inlet to the ATD. This length of piping is critical for the evaporation of fuel being injected into the exhaust stream during active regeneration. In the future, this specification may be modified to include a maximum length between the HC Doser and the ATD inlet.

6.3.3 OUTLET LOCATION

Select the direction and location of the tailpipe exit to prevent the following:

- □ Recirculation of exhaust into the air inlet
- □ Recirculation of exhaust through the radiator and charge air cooler
- □ Recirculation of exhaust into cab

All information subject to change without notice.
DDC-SVC-MAN-0073 Copyright © 2009 DETROIT DIESEL CORPORATION

https://truckmanualshub.com/

- Obstruction of the vehicle operator's line of sight
- Excessive noise emissions

Active regeneration may result in exhaust outlet temperatures of approximately 650°C (1200°F) at the ATD outlet. OEM piping beyond the ATD will reduce the exhaust temperature vented to the atmosphere. When designing exhaust system piping beyond the ATD, consideration should be given to these temperatures.

6.3.4 DRAINAGE

The exhaust system must be designed to prevent rain water from entering the engine. For vertical exhaust systems, it is recommended that the exhaust outlet be fitted with a counterbalanced rain cap. As an alternative, the end of the outlet pipe may be bent rearward 90 degrees, with the end cut on a diagonal such that the upper half is longer than the lower half. The exhaust pipe can accumulate a considerable amount of condensed moisture, especially in long piping. A condensation trap and drain are incorporated into the design of vertical ATD configurations. Horizontal ATD configurations will incorporate provisions to drain rain water as necessary.

6.3.5 SYSTEM INSULATION

Exposed exhaust system parts should not be near wood or other flammable material. Active regeneration may result in exhaust outlet temperatures of approximately 650°C (1200°F). Insulating the exhaust system will reduce the heat radiation and the noise level caused by the exhaust system. Certain applications may require insulated exhaust systems. Some engine models/ratings are available from the factory with optional insulated exhaust manifolds and turbocharger turbine housings. Consult DDC Application Engineering before using any type of insulation on the exhaust manifold or turbocharger on other models or ratings. Improper use of insulation may contribute to reduced engine component life. Any exhaust system components downstream of the turbocharger turbine discharge may be insulated as desired.

6.3.6 BENDING MOMENT CALCULATIONS

The maximum allowable value for bending moment at the rear of the turbocharger can be found at www.detroitdiesel.com, if you do not have access to www.detroitdiesel.com contact your Distributor. The maximum allowable value for bending moment at both the inlet to the ATD and the outlet from the ATD can be found at www.detroitdiesel.com. The ATD is significantly more massive that a traditional muffler. Stiff brackets should be considered to minimize the ATD inlet and outlet moment forces.

6.4 TESTING REQUIREMENTS

A thorough evaluation of the exhaust system will include:

- Complete descriptions and documentation of the system in the vehicle sign-off form
- Adequate instrumentation
- Proper test preparation

 Copyright © 2009 DETROIT DIESEL CORPORATION

https://truckmanualshub.com/

- □ Accurate tests
- □ Data analysis and documentation
- □ Diagnostics (troubleshooting) and corrective action (if necessary)

These tests must be run on all new installations, engine repowers, or whenever modifications have been made to the engine exhaust system. The appropriate section of the vehicle sign-off form must be completed.

6.4.1 MEASUREMENT OF EXHAUST BACK PRESSURE

The back pressure limit for 2007 and beyond will be measured differently than in the past. The OEM has no control over the design and performance of the ATD, which would have a significant impact on back pressure measured in the traditional manner. In addition, depending on the amount of engine hours accumulated prior to the back pressure check, a considerable amount of particulate matter and ash may have accumulated in the ATD further increasing the total back pressure.

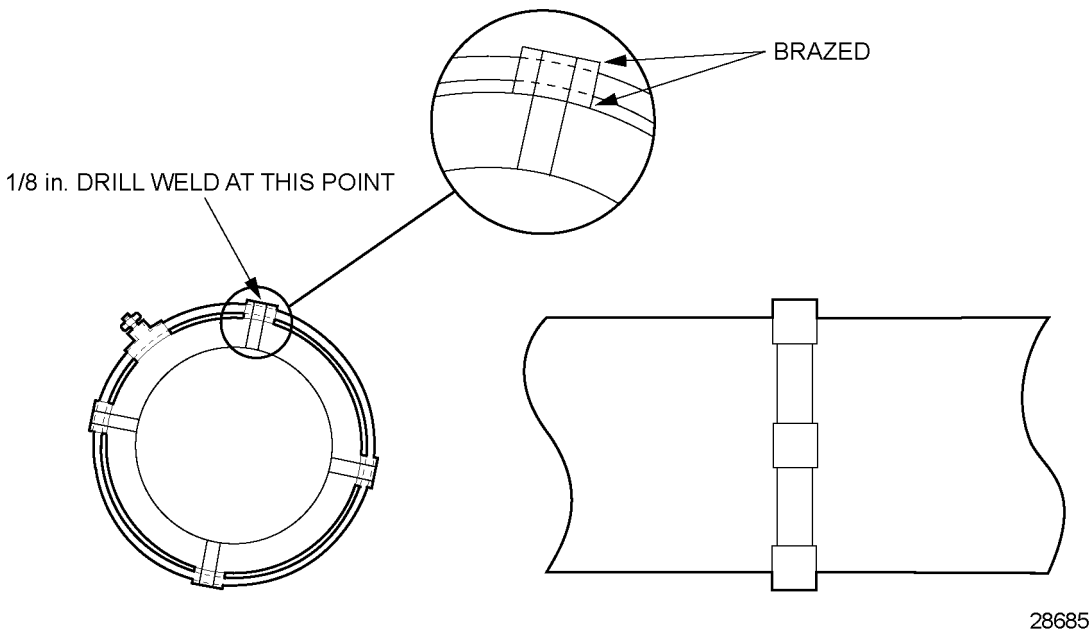

Figure 6-4 Piezometer Ring

As a result, Detroit Diesel will only hold the OEM accountable for the piping controlled by the OEM. Back pressure will be measured across the piping between the turbo outlet and the ATD inlet combined with the back pressure measured on the piping downstream of the ATD outlet. These two values will be combined and restricted to a maximum value of 4.0 kPa (1.2 in. Hg).

All information subject to change without notice.
DDC-SVC-MAN-0073 Copyright © 2009 DETROIT DIESEL CORPORATION

https://truckmanualshub.com/

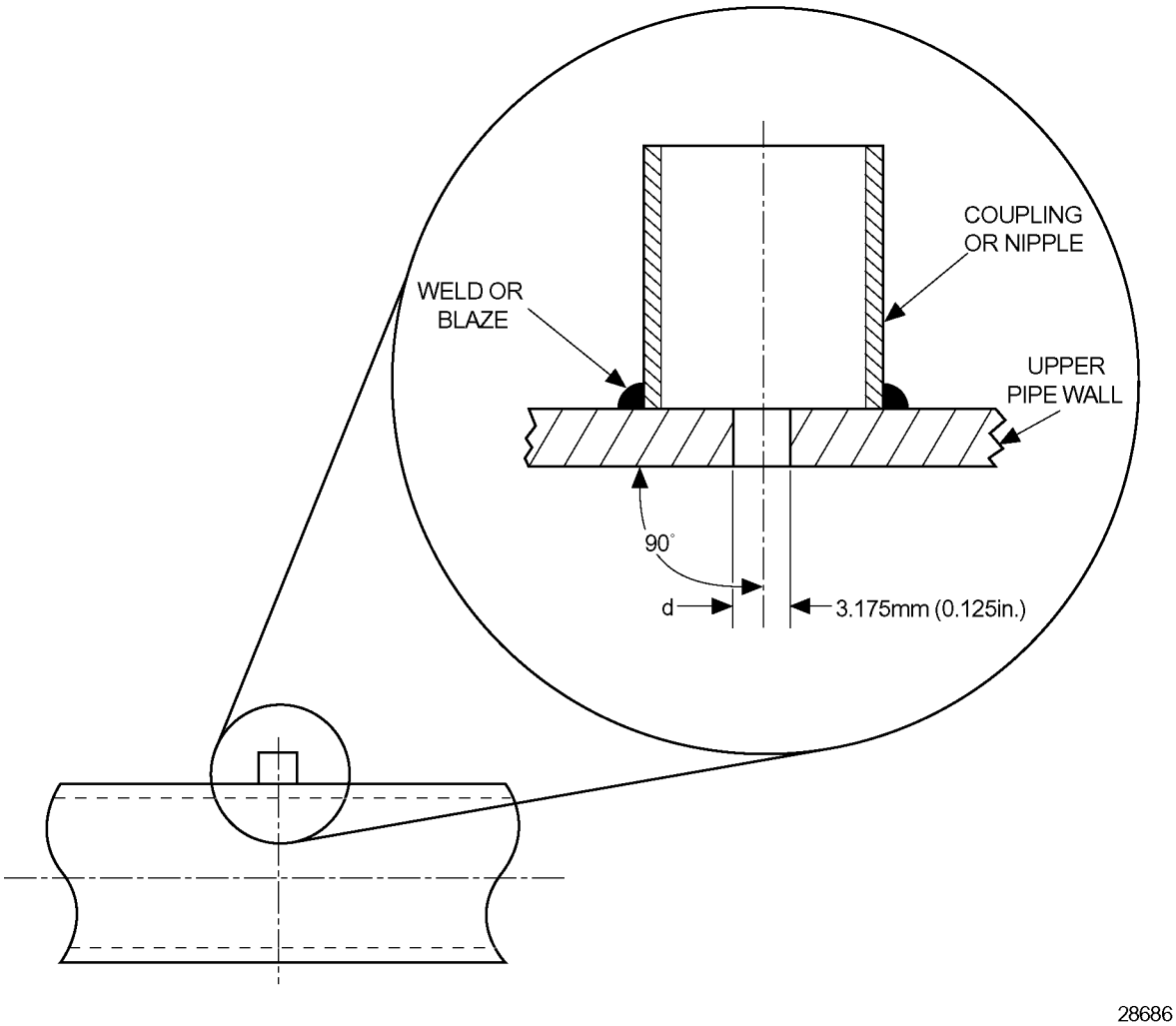

Figure 6-5 Static Pressure Tap

The instrumentation should be placed perpendicular to the plane of the bend where measurement on a bend is unavoidable.

6.4.2 MEASUREMENT OF TEMPERATURE DROP FROM TURBOCHARGER TO ATD INLET

The temperature of the exhaust gas exiting the turbocharger must be maintained as high as possible in order to maximize the performance of the DOC and to aid in the regeneration process of the DPF. Two temperature measurements are required to validate this criterion. The first measurement should be taken in the exhaust pipe as close as is practical to the outlet of the HC Doser elbow. The second measurement should be taken in the exhaust piping just before the inlet to the ATD, as close as practical to the ATD inlet flange.

 Copyright © 2009 DETROIT DIESEL CORPORATION

https://truckmanualshub.com/

6.4.3 MEASUREMENT OF EXHAUST LEAKAGE BETWEEN TURBOCHARGER AND ATD INLET

In order to maximize the effectiveness of the ATD, exhaust leaks upstream of the ATD must be kept to a minimum. To accurately measure the exhaust leakage, a bench test is required according to the following procedure:

1. Seal the ends of the exhaust pipe assembly (everything located between the turbocharger outlet and the ATD inlet) with Marmon flange caps.
2. Install an air fitting on one cap supplied with regulated air and a shutoff valve.
3. Install a flow meter to record the air leakage rate in the exhaust piping assembly.
4. Pressurize the exhaust piping assembly to 31 kPa (4.5 psi).
5. Measure the leakage rate and compare it to the 10 Standard Liters Per Minute (SLPM) per joint specification.
6. The system leakage rate between the turbocharger and ATD inlet should not exceed 30 slpm.
7. No visible smoke/fuel is allowed during a high idle regeneration.

All information subject to change without notice.
DDC-SVC-MAN-0073 Copyright © 2009 DETROIT DIESEL CORPORATION

https://truckmanualshub.com/

7 AFTERTREATMENT SYSTEM

Section **Page**

7.1 AFTERTREATMENT SYSTEM DESCRIPTION 7- 2
7.2 SYSTEM DESCRIPTION / OPERATION 7- 4
7.3 AFTERTREATMENT DEVICE DESIGN FEATURES 7-10
7.4 AFTERTREATMENT DEVICE VARIATIONS 7-11
7.5 NOISE ATTENUATION 7-12
7.6 MASS OF THE AFTERTREATMENT DEVICE 7-12
7.7 MOUNTING REQUIREMENTS 7-12

 Copyright © 2009 DETROIT DIESEL CORPORATION

https://truckmanualshub.com/

7.1 AFTERTREATMENT SYSTEM DESCRIPTION

Detroit Diesel Corporation continues its efforts to reduce exhaust emissions. Two primary exhaust gas constituents are Oxides of Nitrogen (NOx) and Particulate Matter (PM). Diesel particulate emissions are a mixture of both solid and liquid material. NOx emission reduction can be achieved by lowering combustion temperature. However, this increases particulate emissions. Therefore, when low NOx levels are achieved, an Aftertreatment Device (ATD) can be used to simultaneously reduce particulate emissions. Particulate filter technology has been demonstrated to be very effective in the control of particulate emissions.

The aftertreatment system consists of the following components:

The ATS is comprised of the following components:

Component	Description
Aftertreatment Device	An engine exhaust device that contains a DOC and a DPF along with several pressure and temperature sensors that work in conjunction to reduce particulate emissions from the engine.
Intake Throttle Valve	Electronically controlled valve that will open or close in order to control a proper temperature at the face of the DOC during regeneration.
Fuel Doser Valve	Coolant cooled valve used to deliver fuel into the exhaust stream to maintain the proper temperature across the DOC during regeneration.
Doser Block Assembly	Assembly that houses the Fuel Cutoff Valve (FCV), Fuel Compensation Pressure (FCP) Sensor, Electronic Dosing Valve (EDV) and the Fuel Line Pressure (FLP) Sensor.
Fuel Cutoff Valve	Controls fuel flow into the Doser Block Assembly, is either On or Off.
Fuel Line Pressure Sensor	Pressure sensor used to diagnose abnormal conditions in fuel pressure after fuel exits the Doser Block Assembly.
Electronic Dosing Valve	Pulse Width Modulation (PWM) controlled valve used to deliver the correct amount of fuel to the FDV in order to maintain the proper temperature across the DOC during regeneration.
Fuel Compensation Pressure Sensor	Monitors fuel pressure into the Doser Block Assembly in order to properly deliver the correct amount of fuel delivered via the Electronic Dosing Valve.

Table 7-1 ATS Component Descriptions

All information subject to change without notice.
DDC-SVC-MAN-0073 Copyright © 2009 DETROIT DIESEL CORPORATION

https://truckmanualshub.com/

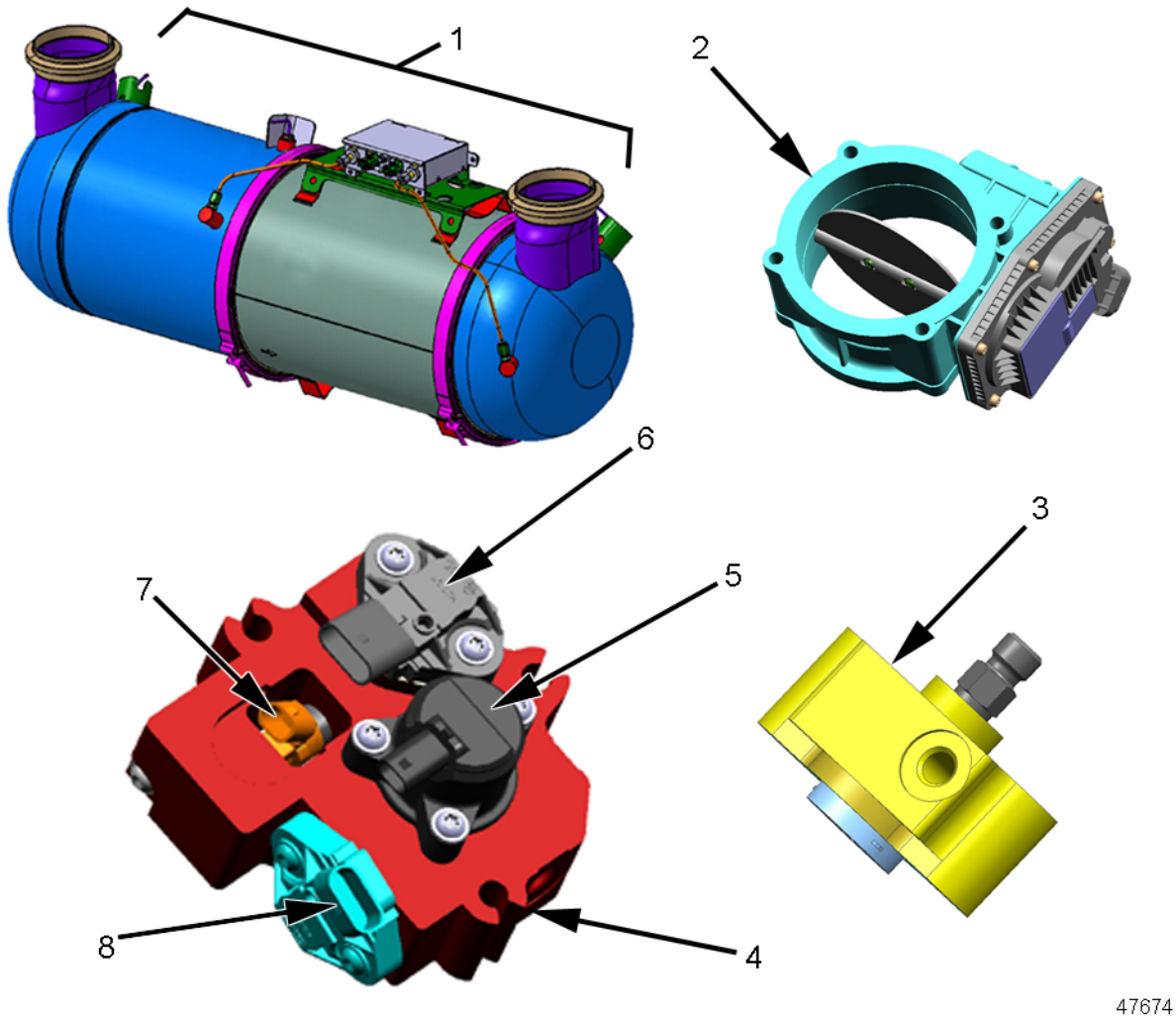

1. Aftertreatment Device
2. Intake Throttle Valve
3. Fuel Doser Valve
4. Doser Block Assembly
5. Fuel Cutoff Valve
6. Fuel Line Pressure Sensor
7. Electronic Dosing Valve
8. Fuel Compensation Pressure Sensor

Figure 7-1 Components of Aftertreatment System

A schematic of the DD Platform aftertreatment system is shown in the following illustration.

 Copyright © 2009 DETROIT DIESEL CORPORATION

https://truckmanualshub.com/

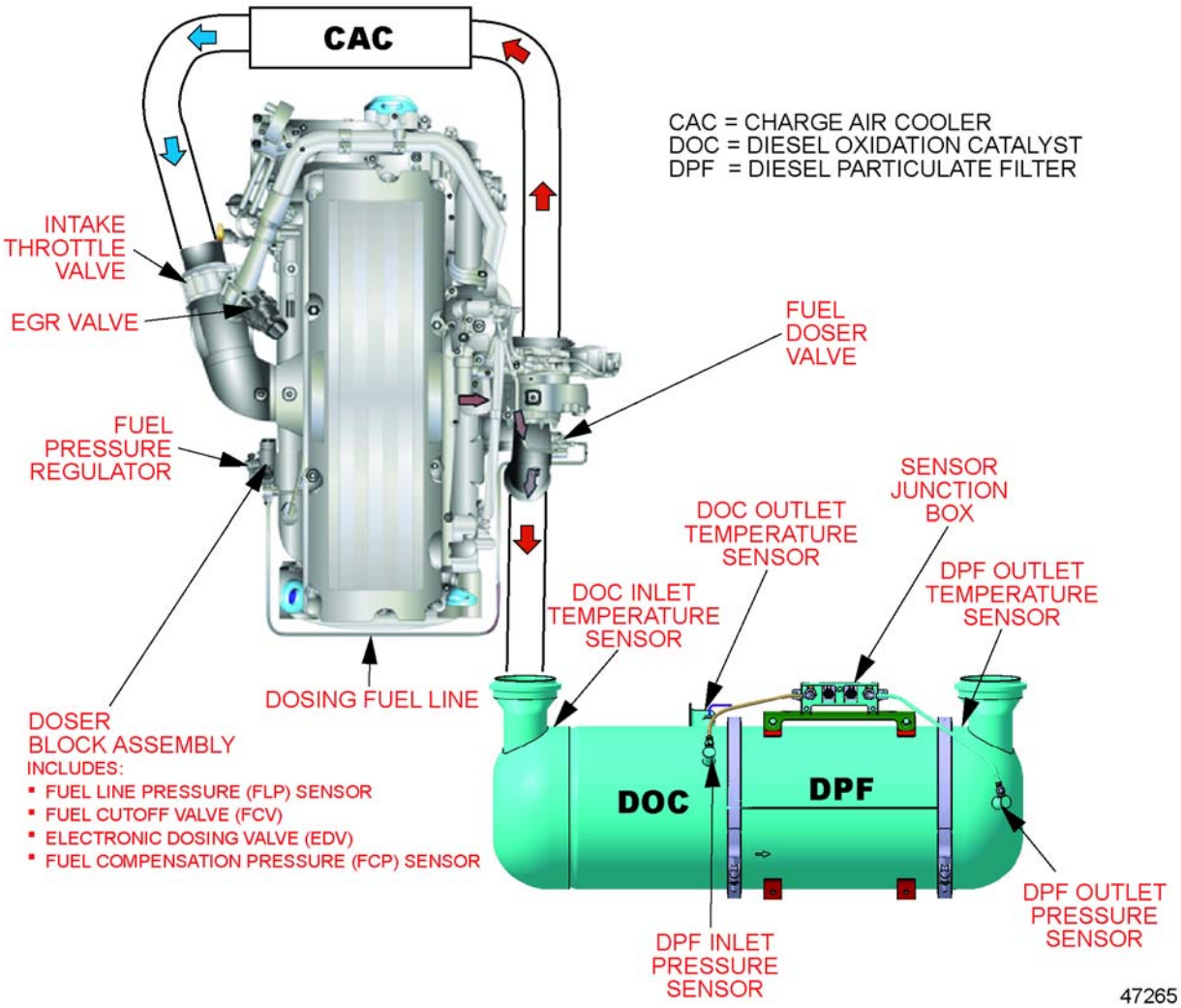

Figure 7-2 DD Platform Aftertreatment System Schematic

7.2 SYSTEM DESCRIPTION / OPERATION

The Detroit Diesel aftertreatment system is comprised of different sub-systems that work together to ensure emission compliance on all engines.

All information subject to change without notice.
DDC-SVC-MAN-0073 Copyright © 2009 DETROIT DIESEL CORPORATION

https://truckmanualshub.com/

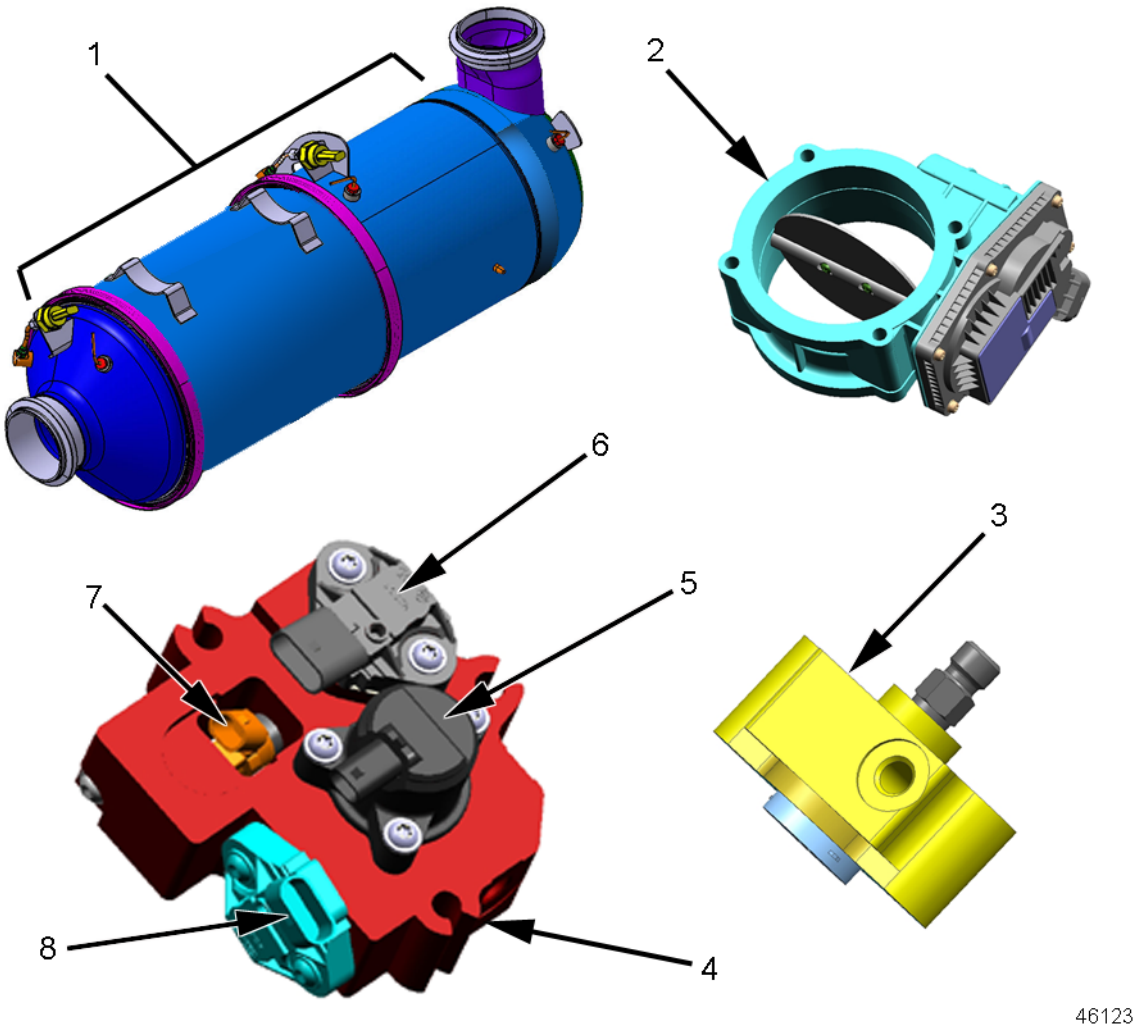

1. Aftertreatment Device Assembly
2. Intake Throttle
3. Fuel Doser Valve
4. HC Doser Block Assembly
5. Fuel Cutoff Valve
6. Fuel Pressure Sensor
7. Electronic Diesel Dosing Valve
8. Fuel Compensation Pressure Sensor

Figure 7-3 Aftertreatment System Components

 Copyright © 2009 DETROIT DIESEL CORPORATION

https://truckmanualshub.com/

7.2.1 AFTERTREATMENT DEVICE

The ATD replaces the muffler assembly and is located in the vehicle downstream of the engine. All of the engine exhaust is passed through this device, where the particulate matter is removed. The ATD is comprised of a Diesel Oxidation Catalyst (DOC) and a Diesel Particulate Filter (DPF). The DPF consists of channels that run the full length, and are blocked off at the alternate ends to force the exhaust through the porous walls. The channels are coated with a platinum washcoat material which acts as a catalyst, enhancing the oxidation process. The porous walls also collect the particulates. When the exhaust temperature reaches approximately 250°C (482°F), oxidation of particulate matter starts to occur. As the particulate matter oxidizes, passive cleaning of the filter takes place. This is called "regeneration." The key to successful regeneration is high exhaust temperature, above 300°C (572°F) for extended time. Without adequate temperature for regeneration, the filter will continue to trap particles and eventually plug.

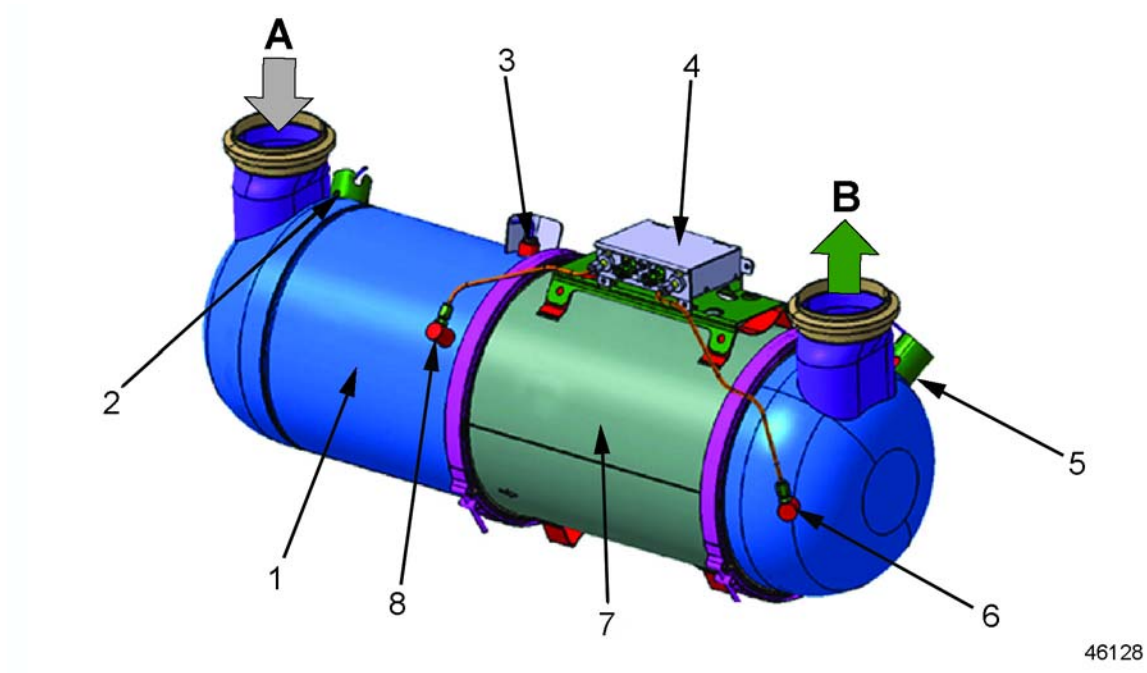

1. DOC Oxidation Catalyst
2. DOC Inlet Temperature Sensor
3. DOC Outlet Temperature Sensor
4. Sensor Junction Box
5. DPF Outlet Pressure Sensor
6. DPF Outlet Temperature Sensor
7. Diesel Particulate Filter
8. DPF Inlet Pressure Sensor

A = Engine Exhaust Outlet

B = Exhaust Outlet

Figure 7-4 Aftertreatment Device Components

All information subject to change without notice.
DDC-SVC-MAN-0073 Copyright © 2009 DETROIT DIESEL CORPORATION

https://truckmanualshub.com/

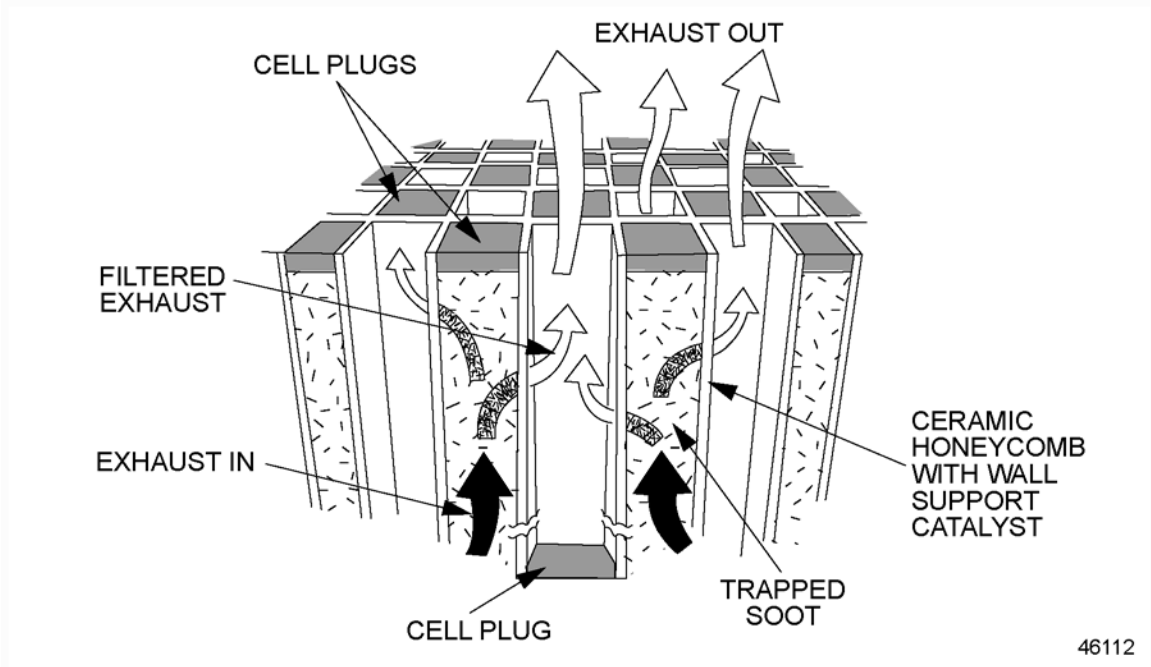

Figure 7-5 Operation of the Diesel Particulate Filter

7.2.2 INTAKE THROTTLE

The intake throttle is another sub-system of the ATS that works to thermally manage temperatures to aid in regeneration of the DPF. This component is electronically controlled by the engine controller. When the engine controller detects that the filter needs to regenerate that intake throttle will be commanded to a position that will elevate exhaust temperatures by preventing additional boost from entering the combustion chambers.

 Copyright © 2009 DETROIT DIESEL CORPORATION

https://truckmanualshub.com/

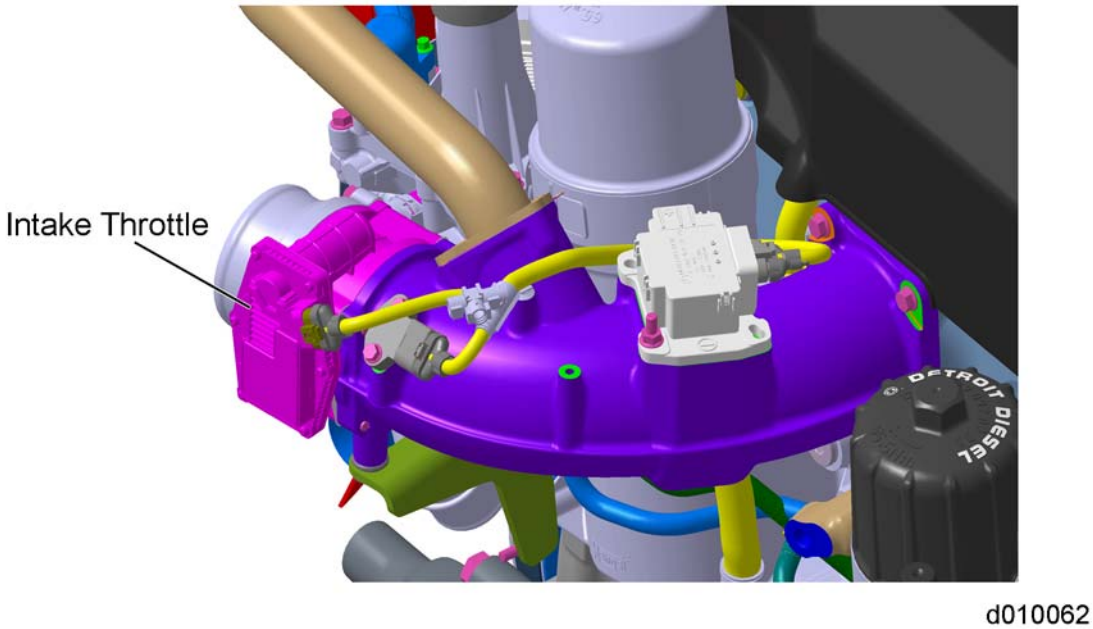

Figure 7-6 Location of the Intake Throttle

7.2.3 HYDROCARBON (HC) DOSER

The HC doser is another sub-system of the ATS that works to actively regenerate the DPF. The HC doser is comprised of fuel lines, fuel pressure regulator, HC dosing block assembly, and a mechanical diesel injection valve.

This component is electronically controlled by the engine controller. When the engine controller detects that the DPF needs to actively regenerate, because soot level is increasing in the DPF, the doser will begin to dose diesel fuel into the exhaust stream and actively regenerate the DPF, oxidizing the soot off of the DPF to review exhaust system requirements.

All information subject to change without notice.
DDC-SVC-MAN-0073 Copyright © 2009 DETROIT DIESEL CORPORATION

https://truckmanualshub.com/

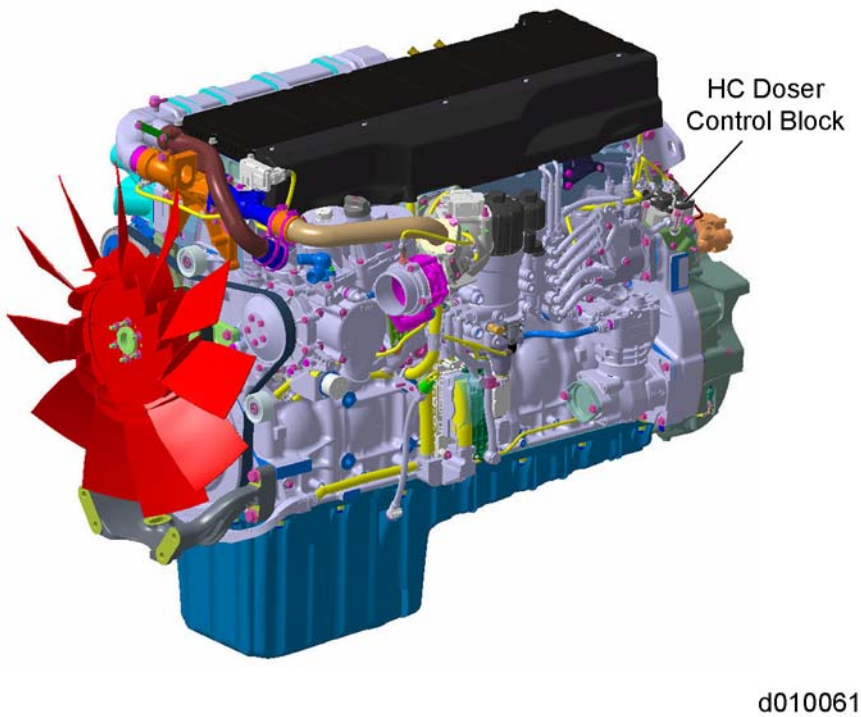

Figure 7-7 Hydrocarbon (HC) Doser Location

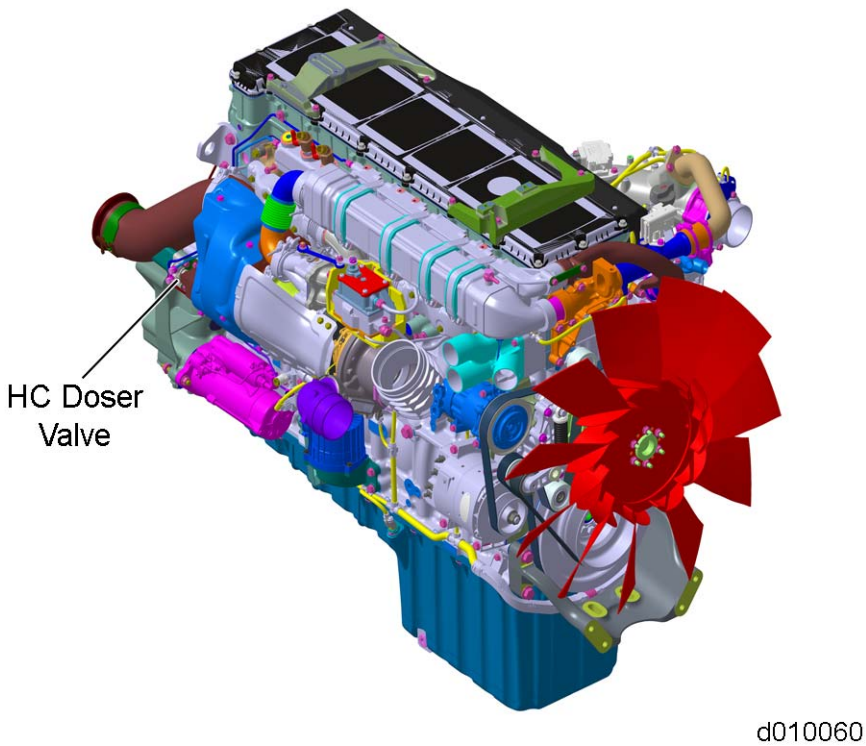

Figure 7-8 Hydrocarbon (HC) Doser Location

 Copyright © 2009 DETROIT DIESEL CORPORATION

https://truckmanualshub.com/

7.3 AFTERTREATMENT DEVICE DESIGN FEATURES

There are several features, that are designed into the ATD to ease installation and removal of the ATD into chassis at the production level as well as at the service level. Please refer to the specific ATD drawing to get dimensions of all these features and where they are located on each ATD.

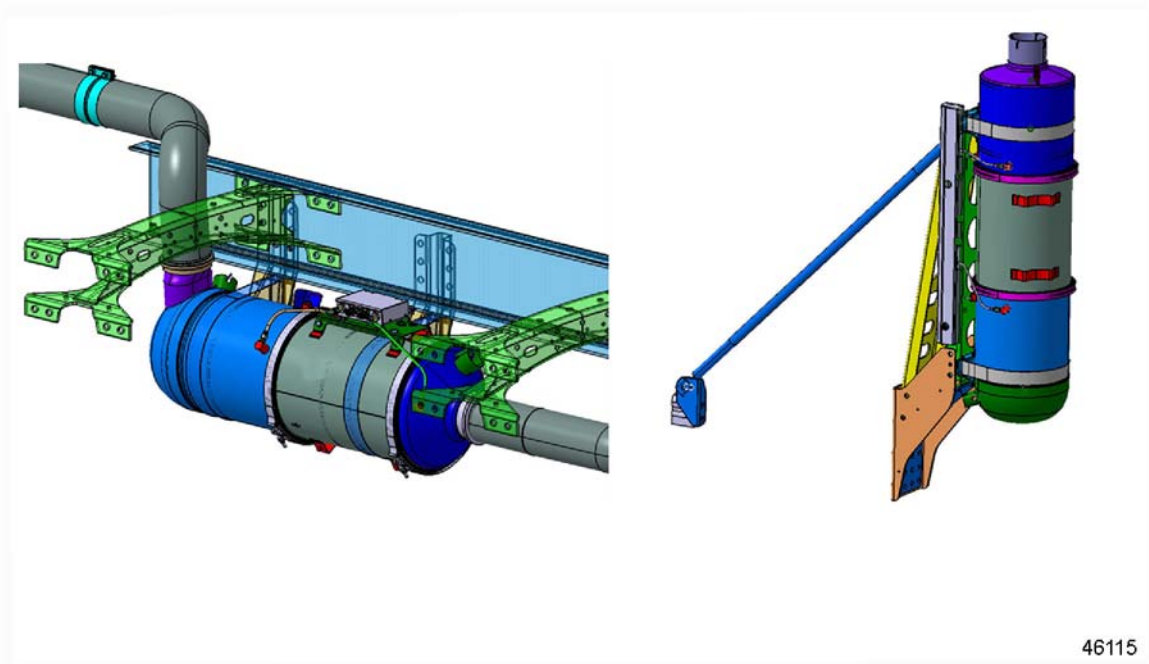

Figure 7-9 Typical Mounting Views of an Aftertreatment Device

7.3.1 FEET / HOOKS

The feet / hooks are designed to serve as the lifting points for the ATD assembly as well as the DPF when separated from the ATD assembly. When the DPF is separated from the assembly the feet / hooks also prevent the weight of the DPF from being supported by the flanges. Failing to set the DPF on the feet could result in damage to the flanges. They also prevent the ATD assembly and DPF, when separated, from rolling.

7.3.2 LOCATING DEVICE

The dowel pin is a locating feature that will allow the ATD to be installed rotationally correct. It is not a mandatory that OEM's mounting devices (i.e. brackets, straps, etc.) be designed to accept the dowel however it is suggested. Installing the ATD rotationally incorrect will cause stress on inlets and outlets of the ATD as well as the exhaust plumbing and brackets supporting it. The dowel is not designed to support any load. Utilizing this locating device can prevent the need for secondary operations in a manufacturing environment when aligning exhaust plumbing with the ATD.

All information subject to change without notice.
DDC-SVC-MAN-0073 Copyright © 2009 DETROIT DIESEL CORPORATION

https://truckmanualshub.com/

7.3.3 SENSOR BOX DISCUSSION

Sensor protection is designed into the ATD as to prevent damaging of the temperature and pressure sensors. The sensor protection is designed to aid in the prevention of damaging the sensors when installing the ATD in a manufacturing environment as well as while being installed during normal operation. Sensor protection should be considered when choosing the correct variation of ATD as well as location of where it is to be mounted in the application. The sensor protection should lead the sensors as to prevent debris coming in direct contact with the sensors. When mounting the ATD in locations near or behind tires, additional shielding should be considered as to prevent damaging of the sensors.

7.3.4 V-BAND CLAMPS

V-band clamps are designed to simplify the removal and installation of the DPF, a serviceable component. The DPF collects soot and ash. The soot is burned off either actively or passively. The ash is stored in the filter and needs regular maintenance to be cleaned out. The “sectioned” design of the ATD will allow for easy removal of just the serviceable portion of the ATD assembly.

7.3.5 SENSOR AND HARNESS

Sensor orientation should be considered when choosing the correct variation of ATD. Sensor orientations can be obtained from the ATD drawings. The ATD needs to be mounted such that the pressure sensor tubing continuously slopes downward away from the pressure sensors as to prevent condensate from collecting and puddling in the sensors and tubing. This downward slope is already designed into the pressure sensor tubing on vertical ATDs. The ATD comes as a complete assembly with the sensors and DPF harness installed. The OEM is responsible for the jumper harness between the DPF harness and the engine controller harness. The harness should be shielded or protected as to prevent debris from coming up and damaging the harness and sensors. It should also be mounted to prevent water collection, enabling freezing in cold weather, causing the wires to potentially break or support the weight of ice chunks. Consideration should also be given to the serviceability of the DPF portion of the ATD.

7.4 AFTERTREATMENT DEVICE VARIATIONS

There are several different ATDs to accommodate the variations of different engine horsepower ranges and exhaust routings. There are ATDs that are made for mounting vertically and also horizontally. Please see the drawing portion of the ATD or call your application engineer to help find the best ATD for your application.

 Copyright © 2009 DETROIT DIESEL CORPORATION

https://truckmanualshub.com/

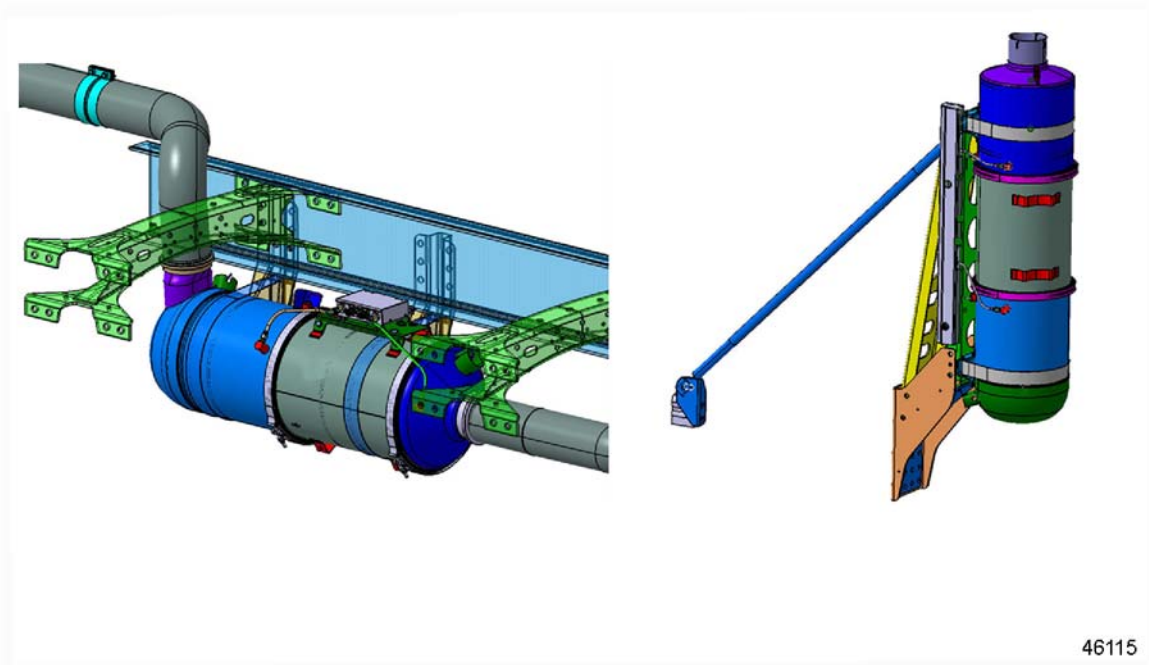

Figure 7-10 Aftertreatment Device Orientation Variations

7.5 NOISE ATTENUATION

The ATD, in addition to acting as an exhaust catalyst and particulate filter, also provides an adequate level of noise cancellation so that a traditional muffler is not required.

7.6 MASS OF THE AFTERTREATMENT DEVICE

The mass of the ATD depends on the configuration of the ATD. The heavy-duty ATDs are in the range of 130 lbs. (59 kg). The medium-duty ATDs are in the range of 90 lbs. (41 kg). Please refer to the ATD drawing to get the actual mass of the device you are installing.

7.7 MOUNTING REQUIREMENTS

The ATD is significantly more massive than a traditional muffler and therefore traditional brackets and straps that were used to hold traditional mufflers may not suffice. Please refer to the specific ATD drawing being installed to get the mounting related data such as mass, mounting zone dimensions, torque specifications, bending moments on inlets and outlets, etc. for the specific ATD being installed. It is important to read the Exhaust System portion of the ATD as these requirements intertwine with ATD installation requirements.

All information subject to change without notice.
DDC-SVC-MAN-0073 Copyright © 2009 DETROIT DIESEL CORPORATION

https://truckmanualshub.com/

7.7.1 MOUNTING ZONES

There are designated areas, or mounting zones, on the ATD that are reinforced. The mounting zone areas are the only locations where the ATD can be held. If the ATD is held outside the mounting zones the outer skin of the ATD could indent the outer skin of the ATD potentially causing a hole. Please refer to the ATD drawing to get the dimensions of the mounting zones and torque specifications for the specific ATD being installed.

7.7.2 BENDING MOMENT FOR INLETS AND OUTLETS

Under no circumstances should the inlets and outlets of the ATD support the weight exhaust plumbing going into and out of the ATD. The exception to this rule is for vertical ATDs only. The outlet is designed to withstand up to a particular amount of unsupported topstack mass. Please refer to the ATD drawing to get the inlet and outlet bending moment restrictions for the specific ATD being installed. Anything expected to exceed these limitations needs to have additional brackets to support the topstack. To reduce the loads into the inlet and outlet of the ATD, stiff brackets are to be used to mount the ATD to reduce low frequency wave vibration. Suggested frequency? A flexible section of piping is required between the turbocharger turbine outlet and the inlet to the ATD. A flexible section is also required on the outlet side of the ATD. These flex sections are necessary in order to minimize the amount of engine and exhaust system vibration that is transmitted to the exhaust system and the ATD. Premature failure of the turbocharger, manifold, piping, ATD or joints caused by engine vibration may be prevented by including flexible joints or fittings. A flexible joint allows for thermal expansion and facilitates alignment of the engine with the exhaust system piping. Please refer to the Exhaust System portion of the ATD. Note that a minimum separation distance of 6mm is needed to pull the DPF portion of the ATD out of the ATD assembly.

Aftertreatment Components group is going to perform the “lower over pass” crash test to see what happens with the rain trap and what fails. The DPF portion should not be damaged or else this will be an expensive failure.

7.7.3 DRAINAGE

Vertical ATDs have a rain trap incorporated into the top to aid in the prevention of water from entering the exhaust system. This is not 100% efficient. Horizontal ATDs have a small drain hole on the outlet of the ATD to aid in the prevention of water entering the exhaust system. Exhaust systems must be designed accordingly to prevent water from entering them and getting back to the engine. Please refer to the exhaust system portion of the ATD. These designs are secondary measures for water prevention. Should water pass through the exhaust system into the engine, catastrophic engine failure can occur. Horizontal ATDs need to be oriented such that the drain hole is in the correct orientation when mounted as to aid in water drainage.

There may be some sort of trap volume that needs to be required.
V = 1.7gal for 4 in.
V = 2.67gal for 5 in.

 Copyright © 2009 DETROIT DIESEL CORPORATION

https://truckmanualshub.com/

THIS PAGE INTENTIONALLY LEFT BLANK

All information subject to change without notice.
DDC-SVC-MAN-0073 Copyright © 2009 DETROIT DIESEL CORPORATION

https://truckmanualshub.com/

8 COOLING SYSTEM, AIR-TO-AIR CHARGE COOLING

Section **Page**

8.1 COOLING SYSTEM, AIR-TO-AIR CHARGE COOLING SYSTEM DESCRIPTION 8- 2
8.2 JACKET WATER COOLING SYSTEM 8- 2
8.3 THERMOSTAT 8- 4
8.4 WATER PUMP 8- 7
8.5 TYPES OF COOLING SYSTEMS 8- 8
8.6 AIR-TO-AIR CHARGE COOLING 8-10
8.7 COOLING SYSTEM PERFORMANCE REQUIREMENTS 8-13
8.8 CHARGE AIR COOLING REQUIREMENTS 8-17
8.9 VEHICLE SIGN-OFF 8-18
8.10 COOLING SYSTEM DESIGN CONSIDERATIONS 8-18
8.11 CHARGE AIR COOLING DESIGN GUIDELINES 8-25
8.12 HEAT EXCHANGER SELECTION 8-27
8.13 FAN SYSTEM RECOMMENDATIONS AND FAN SELECTION 8-28
8.14 RADIATOR COMPONENT DESIGN 8-36
8.15 COOLING SYSTEM EVALUATION TESTS 8-55
8.16 COOLING SYSTEM DIAGNOSTICS AND TROUBLESHOOTING GUIDE 8-76
8.17 MAINTENANCE 8-83

 Copyright © 2009 DETROIT DIESEL CORPORATION

https://truckmanualshub.com/

8.1 COOLING SYSTEM, AIR-TO-AIR CHARGE COOLING SYSTEM DESCRIPTION

This chapter covers the DD Platform engines air-to-air charge cooling system. The cooling system for the DD Platform engines is comprised of two separate systems; the jacket water cooling system and the Charge Air Cooling (CAC) system. Although these systems are separate, they usually share the same space which makes each system's performance dependent upon the other.

A well designed cooling system is a requirement for satisfactory engine performance and reliability. Thorough knowledge of the application, duty cycle, and environmental conditions is essential in designing and packaging the total cooling system. A properly designed system should still be able to perform within specifications after normal system degradation occurs.

The jacket water cooling system consists of a heat-exchanger or radiator, centrifugal type water pump, oil cooler, EGR cooler, thermostat, coolant collector and cooling fan. The water pump is used to pressurize and circulate the engine coolant. The engine coolant is drawn from the lower portion of the radiator and is forced through the oil cooler and into the cylinder block. The heat generated by the engine is transferred from the cylinders and oil to the coolant. The heat in the coolant is then transferred to the air flow generated by the cooling fan when it enters the radiator.

A single full blocking-type thermostat is built in to the thermostat housing on the inlet side of the water pump. The thermostat is designed to control the flow of coolant, providing fast engine warm-up and regulate coolant temperature.

The CAC system consists of the air inlet piping, the turbocharger, the cooling fan and the intake manifold. Ambient air is drawn in through the air cleaner and piping to the exhaust driven turbocharger. The turbo compresses the air which increases its temperature. The charge air is then cooled by the air from the cooling fan as it passes through the CAC to the intake manifold.

8.2 JACKET WATER COOLING SYSTEM

When the engine is at normal operating temperature, the coolant passes from the radiator, through the thermostat housing into the water pump, through the oil cooler, into the cylinder block, up through the cylinder head, out to the coolant collector, through the EGR cooler and then back to the radiator. The coolant then passes through a series of tubes where the coolant temperature is lowered by the air flow created by the fan.

Upon starting a cold engine or when the coolant is below operating temperature, the closed thermostat prevents coolant flow from the radiator from entering the water pump. Coolant is recirculated through the engine to aid engine warm-up. When the thermostat opening temperature is reached, coolant flow is divided between the radiator outlet and the bypass circuit. When the thermostat is completely open, all of the coolant flow is from the radiator outlet.

The function of the engine coolant is to absorb the heat developed as a result of the combustion process in the cylinders and from component parts such as the valves and pistons which are surrounded by water jackets. In addition, the heat absorbed by the oil is also removed by the engine coolant in the oil-to-water oil cooler.

All information subject to change without notice.
DDC-SVC-MAN-0073 Copyright © 2009 DETROIT DIESEL CORPORATION

https://truckmanualshub.com/

A pressurized cooling system permits higher temperature operation than a non-pressurized system. It is essential that the cooling system is kept clean and leak-free, that the filler cap and pressure relief mechanisms are properly installed and operate correctly, and that the coolant level is properly maintained.

The following illustrations show the coolant flow within the cooling system.

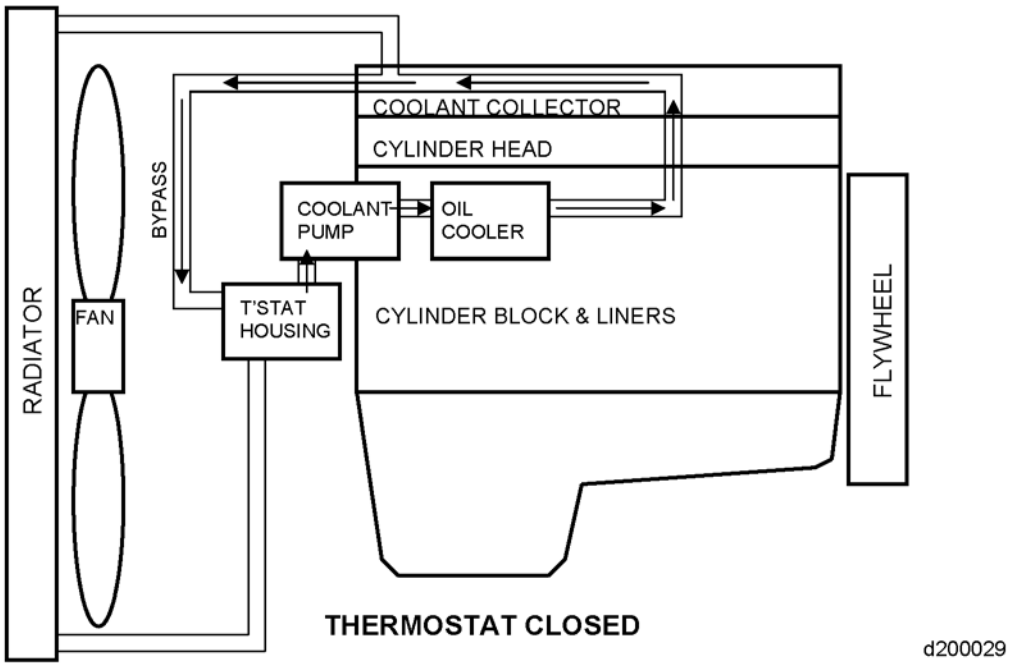

Figure 8-1 Engine Jacket Water Cooling System — Thermostats Closed

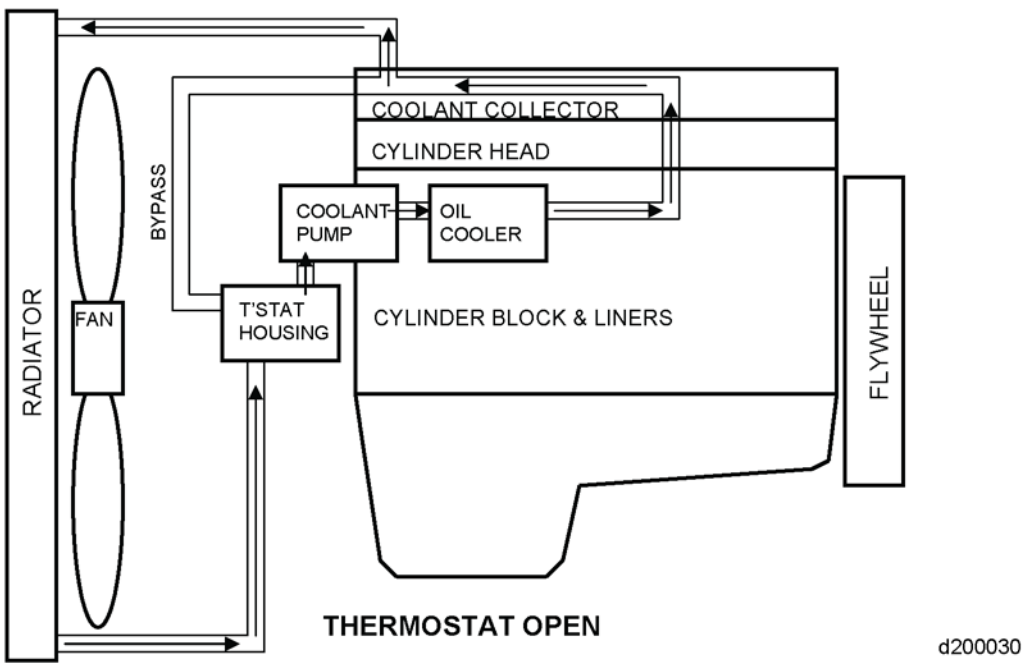

Figure 8-2 Engine Jacket Water Cooling System — Thermostats Fully Open

 Copyright © 2009 DETROIT DIESEL CORPORATION

https://truckmanualshub.com/

8.3 THERMOSTAT

The temperature of the engine coolant is controlled by a single integral full blocking-type thermostat located in a housing attached to the left side of the oil / coolant module.

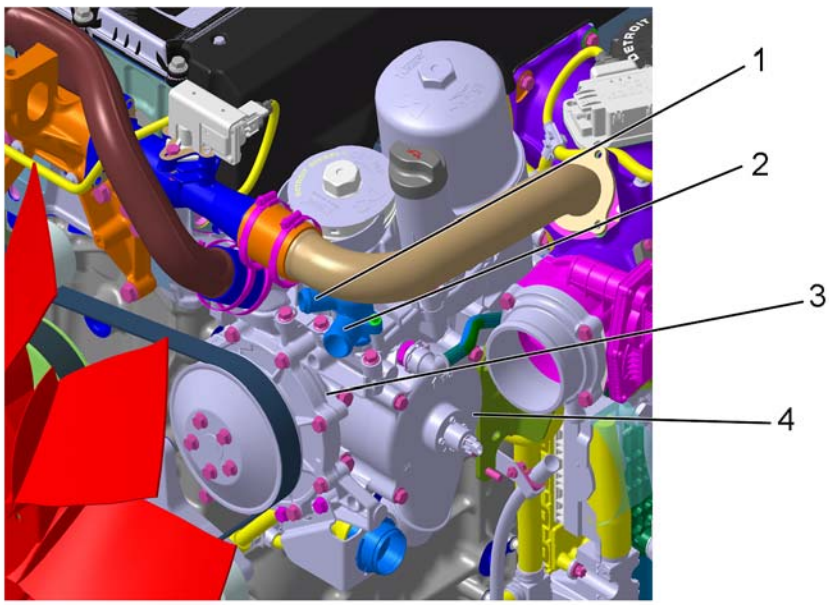

1. Coolant Return — Expansion Tank
2. Coolant Return — Cab Heater
3. Water Pump
4. Thermostat Housing

Figure 8-3 Thermostat and Related Parts

At coolant temperatures below the operating range the thermostat valve remains closed and blocks the flow of coolant from the radiator to the engine.

During this period, all of the coolant in the system is recirculated through the engine and is directed back to the suction side of the water pump via a bypass circuit. As the coolant temperature rises above the start–to–open temperature, the thermostat valve begins to open, restricting the bypass system, and allowing a portion of the coolant to circulate through the radiator. When the coolant temperature reaches an approximate fully open temperature, the thermostat valve is fully open, the bypass system is blocked off, and the coolant is directed through the radiator.

All information subject to change without notice.
DDC-SVC-MAN-0073 Copyright © 2009 DETROIT DIESEL CORPORATION

https://truckmanualshub.com/

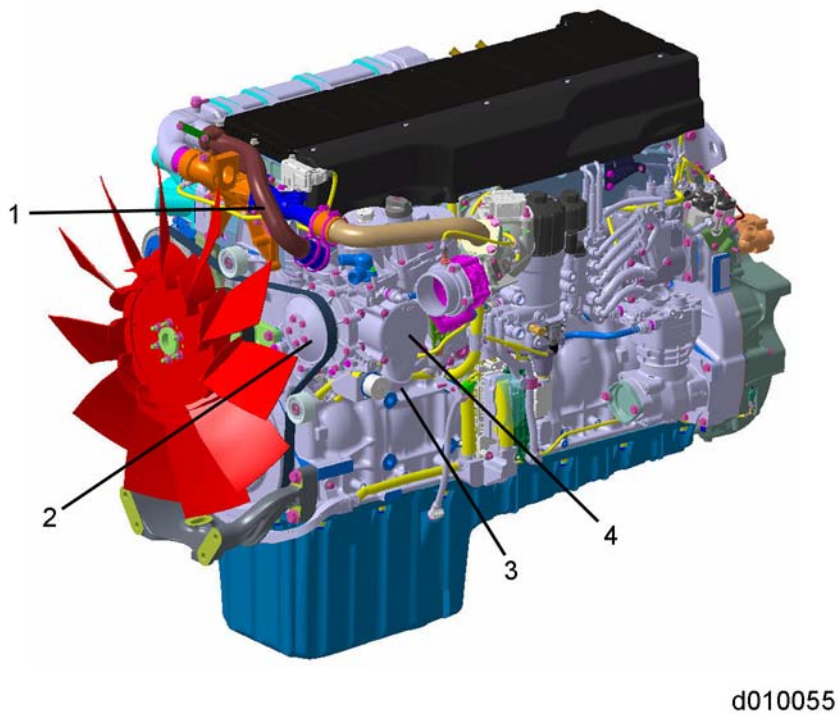

1. Coolant to EGR Cooler
2. Coolant Pump
3. Coolant Inlet from Radiator
4. Thermostat Housing

Figure 8-4 Cooling System Operation

 Copyright © 2009 DETROIT DIESEL CORPORATION

https://truckmanualshub.com/

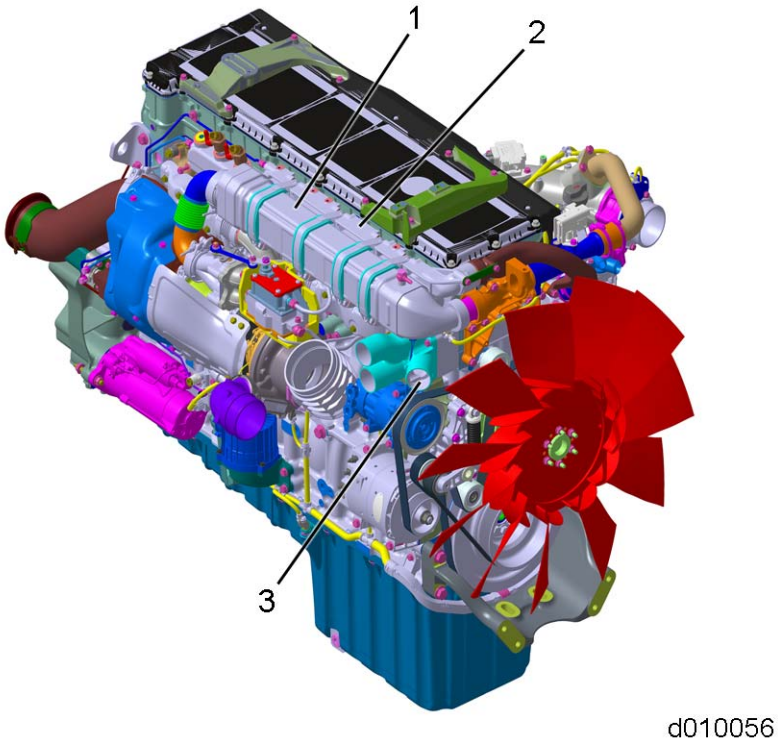

1. EGR Cooler
2. Coolant Collector
3. Coolant Outlet to Radiator

Figure 8-5 Cooling System Operation

A properly operating thermostat is essential for efficient operation of the engine.

8.3.1 VENTING

The EGR cooler on the right hand side of the engine has a vent location in the top of the cooler near the front. This is intended to be used to connect a vent line to the radiator top tank. This vent line (0.25 in. [6.0 mm] I.D.) should go to the top of the radiator top tank because this point in the cooling system will be pressurized at all times.

All information subject to change without notice.
DDC-SVC-MAN-0073 Copyright © 2009 DETROIT DIESEL CORPORATION

https://truckmanualshub.com/

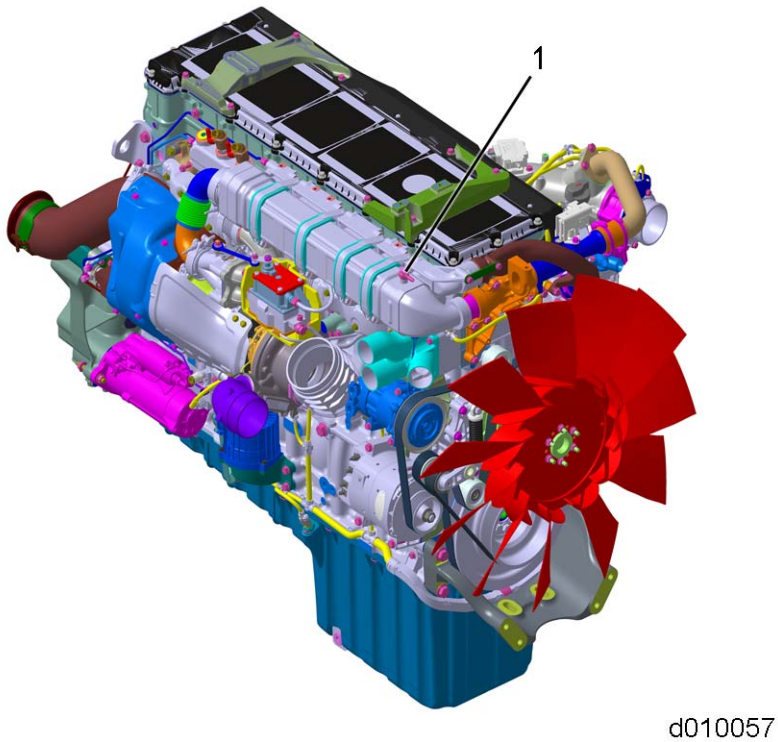

1. Vent

Figure 8-6 Vent Location

8.4 WATER PUMP

The centrifugal-type water pump circulates the engine coolant through the coolant system.

The pump is mounted on the left side of the engine in the oil / coolant module and is belt driven.

 Copyright © 2009 DETROIT DIESEL CORPORATION

https://truckmanualshub.com/

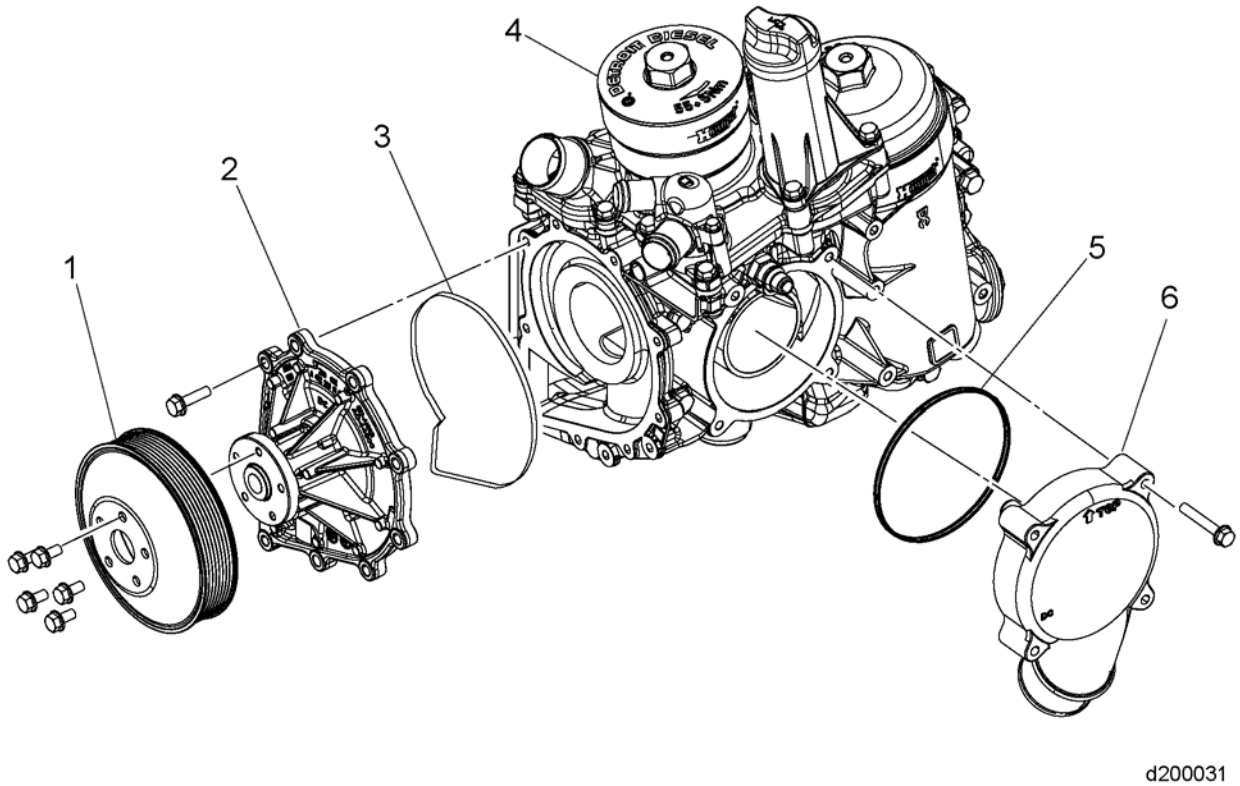

1. Coolant Pump Pulley
2. Coolant Pump
3. Coolant Pump Gasket
4. Coolant Filter
5. Thermostat Housing Gasket
6. Thermostat Housing

Figure 8-7 Water Pump Mounting

8.5 TYPES OF COOLING SYSTEMS

Radiator cooling systems can be classified into two broad categories: rapid warm-up and conventional.

8.5.1 RAPID WARM-UP COOLING SYSTEM RECOMMENDED DESIGN

The rapid warm-up cooling system eliminates coolant flow through the radiator core during closed thermostat operation.

This reduces warm-up time and maintains coolant temperature near the thermostat start to open value. Having the deaeration tank (internal or remote) separated from the radiator core will accomplish this. External bleed and fill lines as well as internal standpipe(s) (radiator core air vent) are required in the deaeration tank. Proper size and location of these components are critical to having a balanced system. The fill line coolant return flow capabilities *must* exceed the flow into the tank under all operating modes. The rapid warm-up cooling system has also been called positemp, continuous deaeration, or improved deaeration.

All information subject to change without notice.
DDC-SVC-MAN-0073 Copyright © 2009 DETROIT DIESEL CORPORATION

https://truckmanualshub.com/

Another advantage of this system is its ability to place a positive head on the water pump, thus reducing the possibility of cavitation.

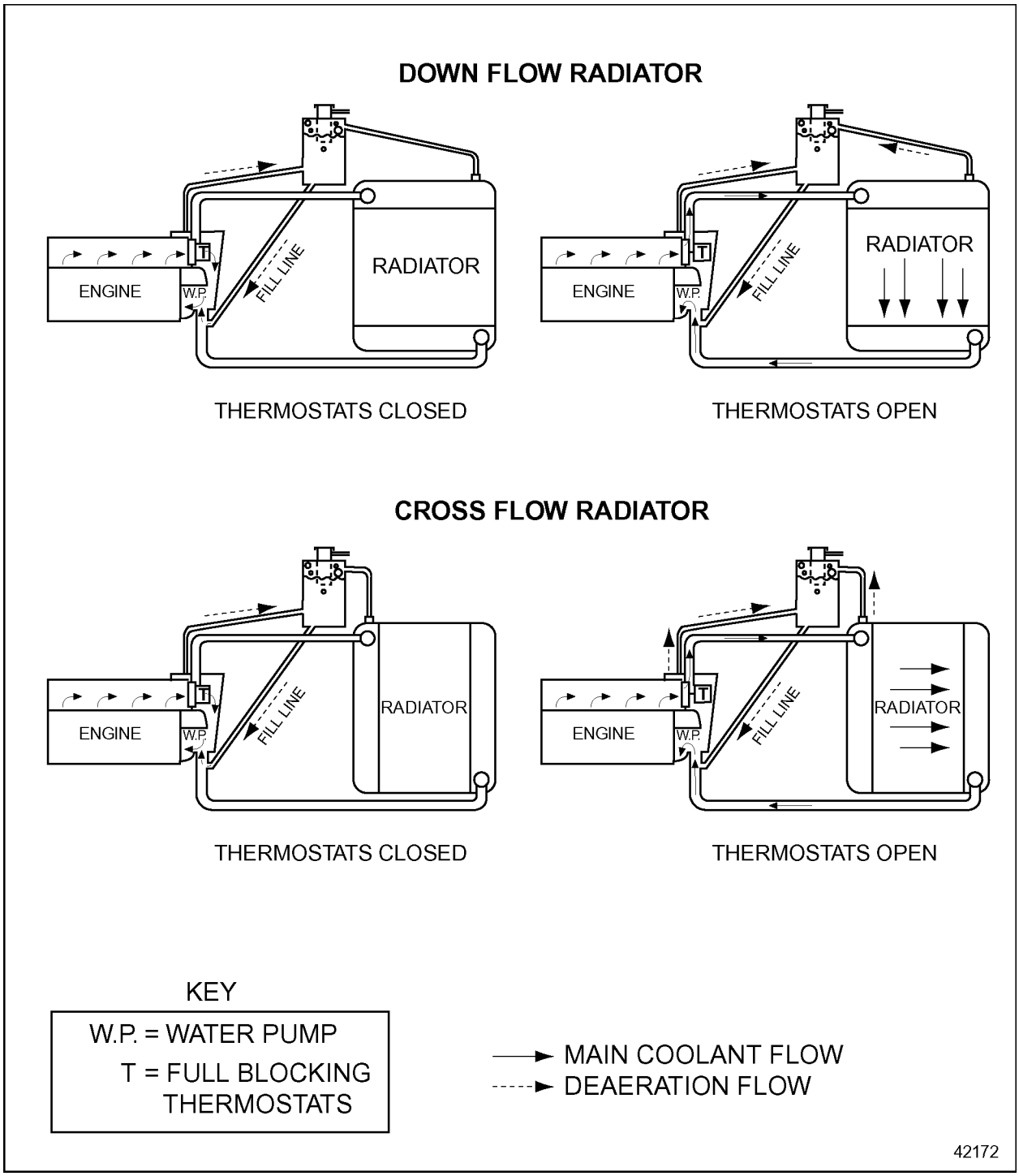

Figure 8-8 Rapid Warm-up Cooling System — Remote Tank, Cross Flow and Down Flow Radiators

 Copyright © 2009 DETROIT DIESEL CORPORATION

https://truckmanualshub.com/

8.5.2 AUXILIARY AIR-COOLED COOLER CORES

Heat exchangers in addition to jacket water and charge air cooler radiators are quite often part of the total cooling system. Heat exchangers such as air-to-oil, air-to-air, oil-to-air, or others are to be used and mounted either in front of the radiator or behind it. Consider the following factors if auxiliary coolers are used:

- □ Greater restriction of air flow
- □ Increased heat load

NOTE:
Provide access to the areas between the cores for cleaning purposes.

8.5.3 COOLANT HEATERS

Cold weather operation often requires the use of coolant heaters. Information on coolant heaters can be obtained from DDC Application Engineering.

8.6 AIR-TO-AIR CHARGE COOLING

An air-to-air charge air cooler is mounted ahead of or beside the engine coolant radiator. The pressurized intake charge is routed from the discharge side of the turbocharger, through the CAC, and then to the intake manifold. This effectively reduces the temperature of the compressed air leaving the turbocharger, permitting a denser charge of air to be delivered to the engine. Cooling is accomplished by outside air directed past the cooling fins and core tubes of the CAC.

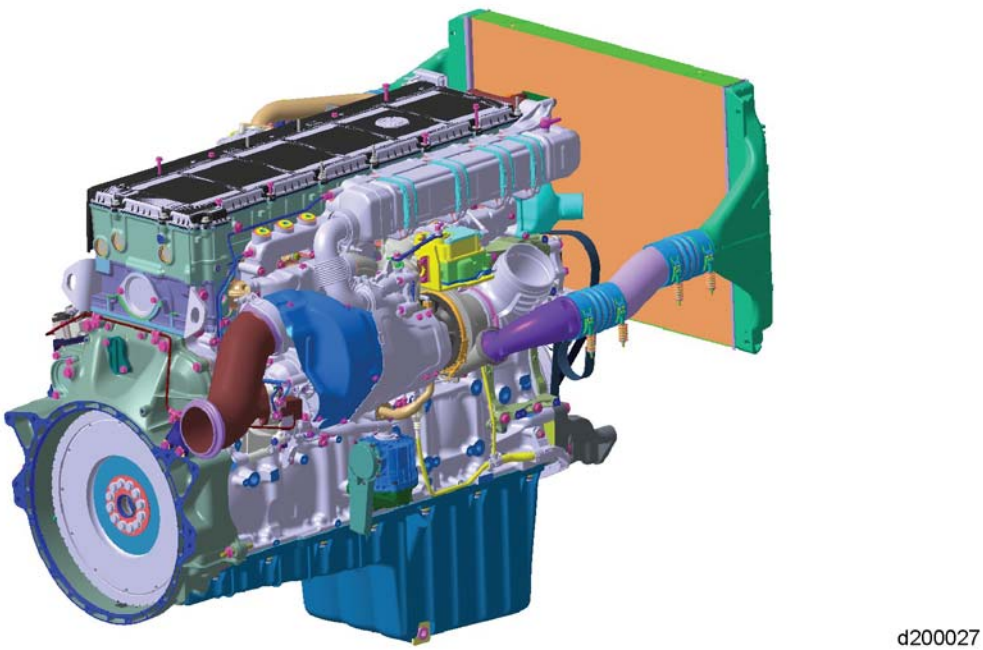

Figure 8-9 Typical Charge Air Cooling System Right Side

All information subject to change without notice.
DDC-SVC-MAN-0073 Copyright © 2009 DETROIT DIESEL CORPORATION

https://truckmanualshub.com/

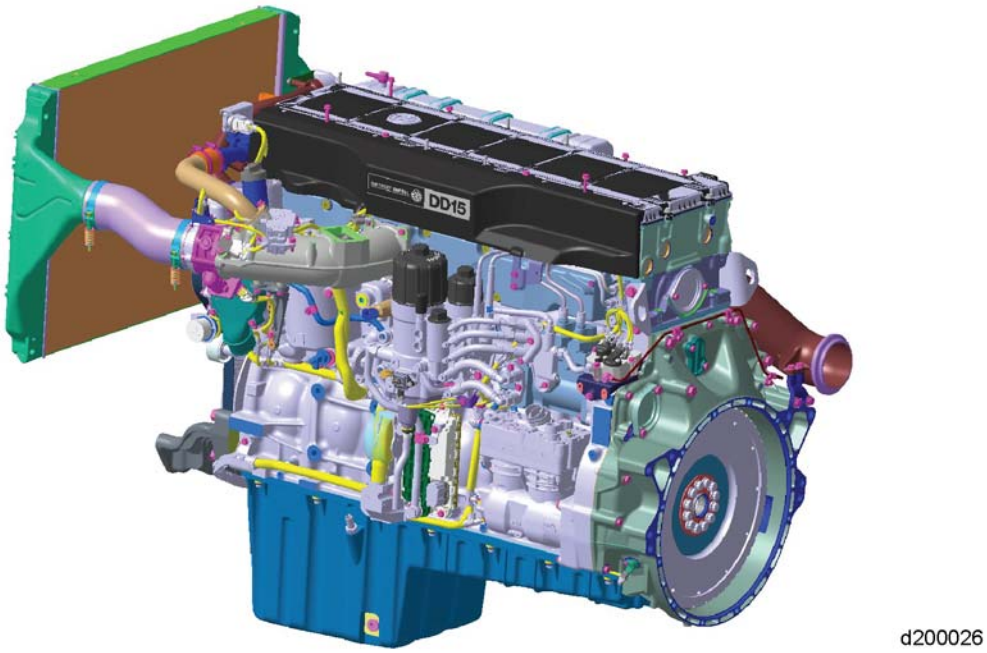

Figure 8-10 Typical Charge Air Cooling System Left Side

The intake air charge is routed to the cylinders by an intake manifold which directs the air to ports in the cylinder head, through two intake valves per cylinder, and into the cylinder. At the beginning of the compression stroke, each cylinder is filled with clean, fresh air which provides for efficient combustion.

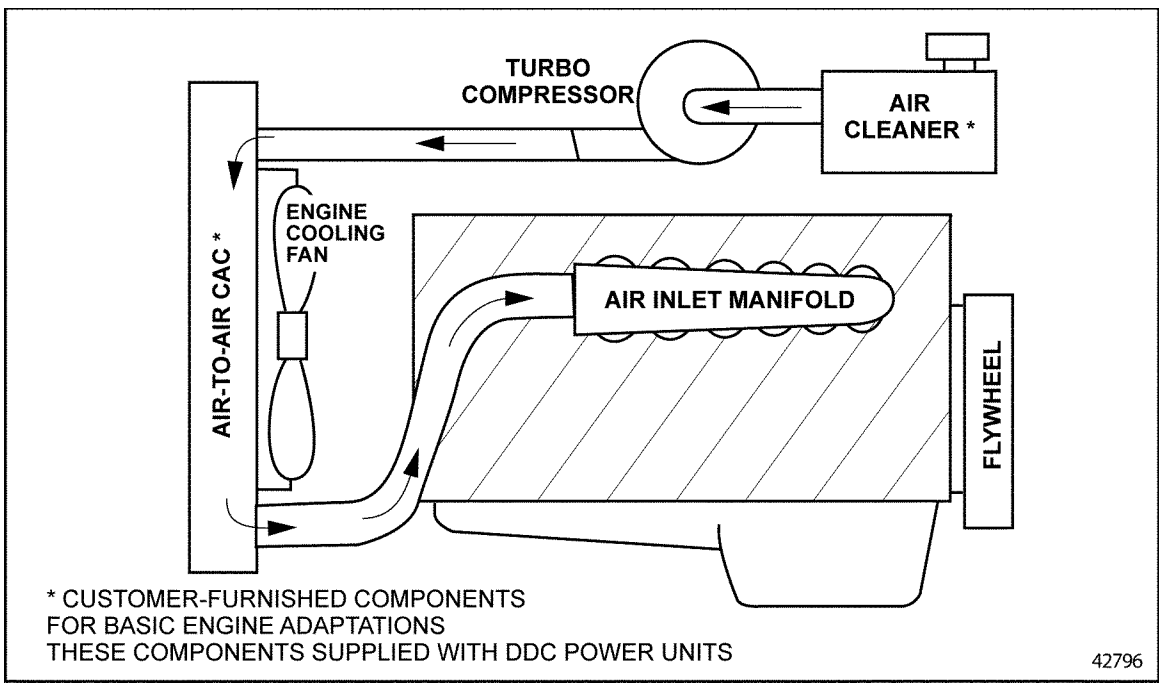

Figure 8-11 Air-to-Air Charge Air Cooler System

 Copyright © 2009 DETROIT DIESEL CORPORATION

https://truckmanualshub.com/

8.6.1 CHARGE AIR COOLER

A CAC is normally mounted ahead of the cooling system radiator. The compressed air leaving the turbocharger is directed through the charge air cooler before it goes to the air inlet side of the intake manifold. A typical arrangement with a CAC placed in front of the radiator with a suction fan. With a blower fan, the CAC would be between the radiator and the engine.

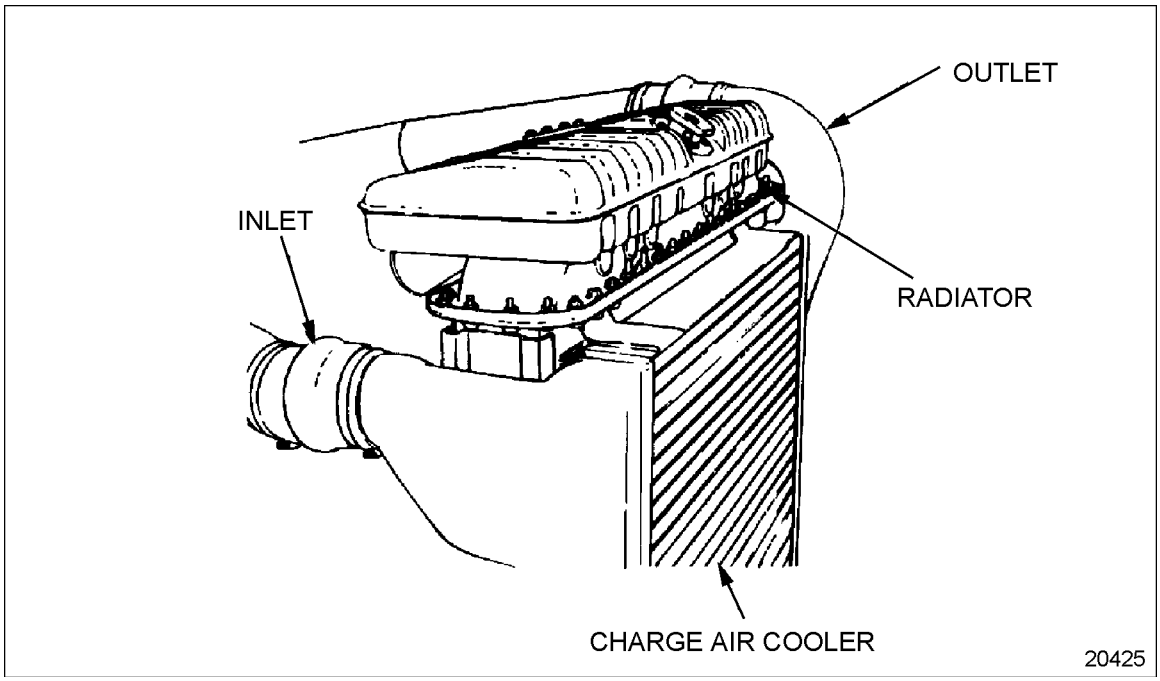

Figure 8-12 Typical Charge Air Cooler

The CAC is used to reduce the compressed air temperature leaving the turbocharger before it reaches the intake manifold. This permits a more dense charge of air to be delivered to the engine.

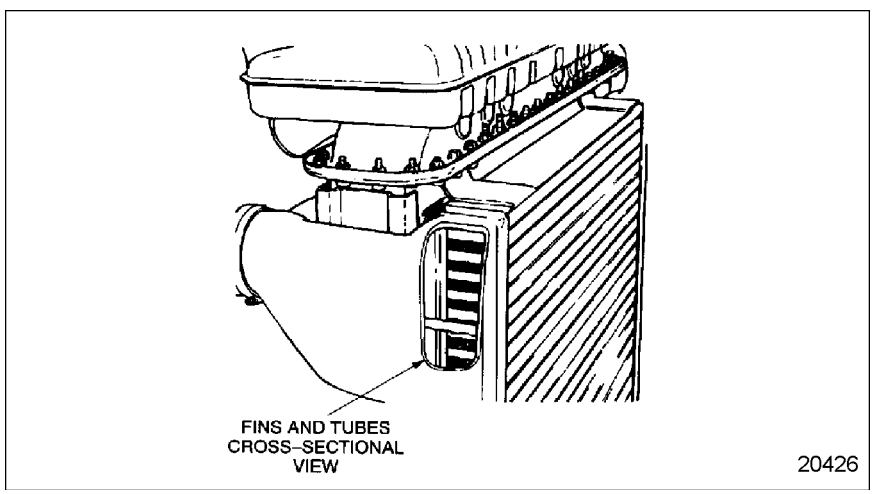

Figure 8-13 Charge Air Cooler Cross-Section

All information subject to change without notice.
DDC-SVC-MAN-0073 Copyright © 2009 DETROIT DIESEL CORPORATION

https://truckmanualshub.com/

Cooling is accomplished by incoming air flowing past the tubes and fins of the intercooler. The compressed intake charge flowing inside the CAC core transfers the heat to the tubes and fins where it is picked up by the incoming outside air. Powder coated, painted, untreated mild steel is unacceptable for piping.

Aluminum, aluminized steel, stainless steel or fiber reinforced plastic piping is used to transfer the air from the turbocharger outlet to the CAC, and from there to the intake manifold.

Flexible rubber couplings and hose clamps are used to secure the duct work to the turbocharger, the CAC inlet and outlet, and the intake manifold.

8.7 COOLING SYSTEM PERFORMANCE REQUIREMENTS

Engine heat transferred to the coolant *must* be dissipated at a sufficient rate so engine coolant temperature does not exceed established safe limits under all operating conditions. The typical maximum engine coolant temperature is 237°F. Specific requirements may be found on www.detroitdiesel.com, if you do not have access to www.detroitdiesel.com contact your Distributor

The maximum ambient temperature at which the maximum engine coolant temperature is reached is referred to as ambient capability.

Operating with antifreeze, at high elevation, or other severe environmental conditions will require increasing the cooling capability of the system so the maximum allowable engine coolant temperature is not exceeded.

8.7.1 SYSTEM FILL

The cooling system *must* have sufficient venting (air bleeding) to permit filling at a minimum continuous rate of 3 gal/min. (4.5 L/min) and on an interrupted basis using a 2-3 gallon (10 liter) bucket. The amount of coolant needed to complete the fill *must not* exceed the satisfactory drawdown amount upon first indication of a full system. This is also a requirement for interrupted fill.

8.7.2 SYSTEM DRAIN

Sufficient drains, strategically located, *must* be provided so the cooling system can be drained to:

- Prevent freeze problems during cold weather storage
- Remove all contaminated coolant during system cleaning
- Minimize refill problems due to trapped air or water pockets

8.7.3 DEAERATION

The cooling system *must*be capable of expelling all entrapped air within 30 minutes while running the engine near rated speed after an initial fill. The water pump *must not* become air bound.

 Copyright © 2009 DETROIT DIESEL CORPORATION

https://truckmanualshub.com/

NOTICE:
An air bound pump cannot adequately circulate coolant. This can lead to overheating and severe engine damage.

8.7.4 SYSTEM COOLANT CAPACITY

Total cooling system coolant capacity *must* be known in order to determine the expansion and deaeration volumes required in the top tank.

All information subject to change without notice.
DDC-SVC-MAN-0073 Copyright © 2009 DETROIT DIESEL CORPORATION

https://truckmanualshub.com/

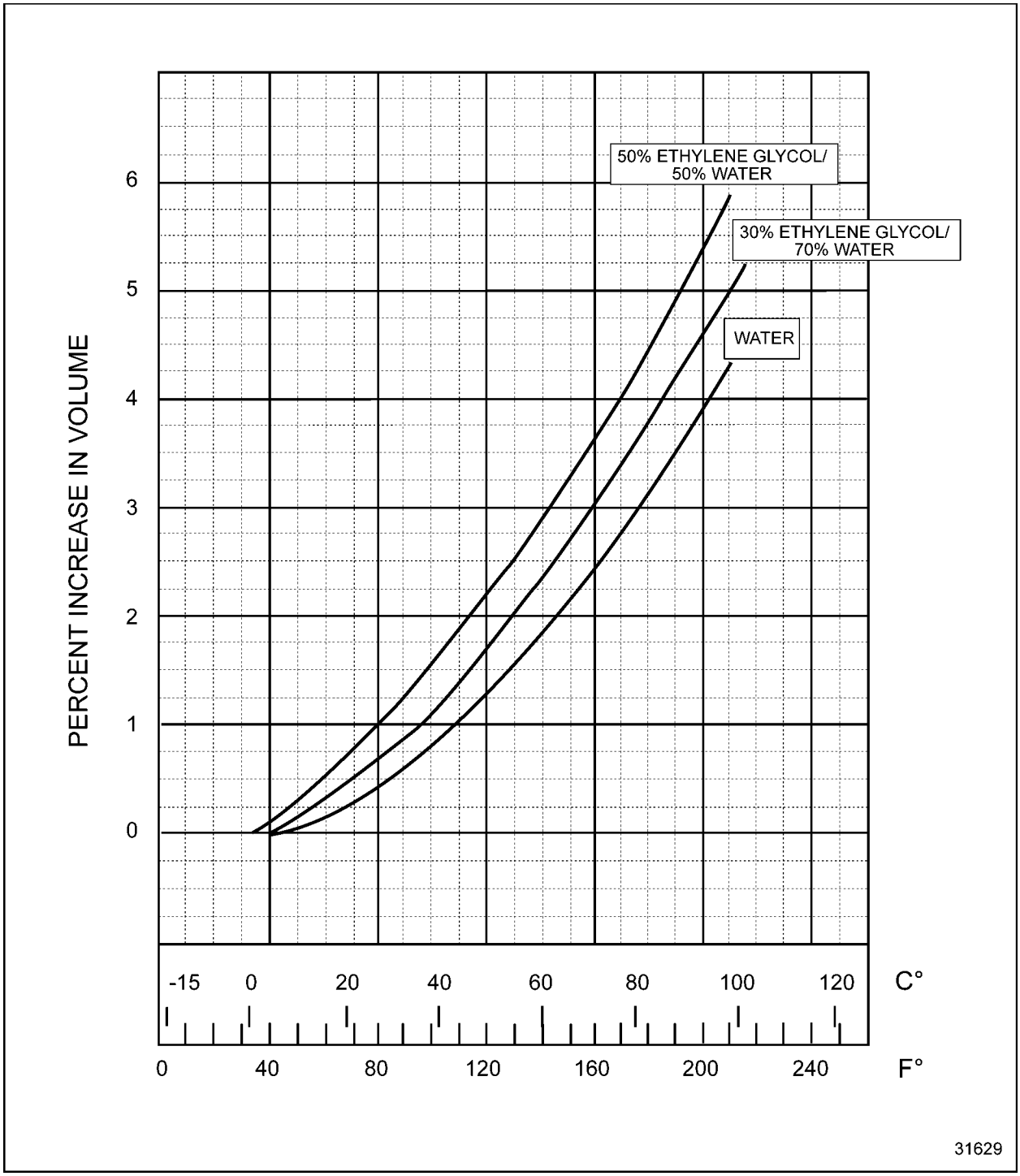

Figure 8-14 Percent Increases in Volume for Water and Antifreeze Solution

The total capacity *must* include the basic engine, radiator, heater circuit, plumbing, etc. A minimum 6% expansion volume *must* be provided in the top tank along with a 2% deaeration volume and sufficient reserve volume to meet drawdown capacity. This volume *must*be provided, with or without a coolant recovery system.

 Copyright © 2009 DETROIT DIESEL CORPORATION

https://truckmanualshub.com/

Basic engine coolant capacity is found on www.detroitdiesel.com, if you do not have access to www.detroitdiesel.com contact your Distributor.

8.7.5 DRAWDOWN CAPACITY

Drawdown capacity is the amount of coolant which can be removed from the system before the coolant pump begins to cavitate. The drawdown capacity for DD Platform engines is 10% of the total cooling capacity. System design *must* permit reasonable loss of coolant from the hot full level before aeration of the coolant begins. Additional coolant capacity may be necessary if aeration begins before this point. Perform drawdown tests at the maximum tilt angle.

8.7.6 CORE CONSTRUCTION

Tube and plate fin design is preferred because of lower restriction to both air and coolant flow. Tube and plate fin designs are easier to clean than louvered serpentine types and generally of more rugged construction making it more suitable to operate in the diesel engine environment.

8.7.7 WATER PUMP INLET PRESSURE/MAXIMUM STATIC HEAD

When the engine is operating at maximum rated engine speed, fill cap removed, and thermostat fully opened, the water pump inlet pressure *must not* be lower than atmospheric pressure (suction) with a rapid warm-up cooling system

These requirements *must* be met to minimize water pump cavitation and corresponding loss in coolant flow. Keep restrictions to the water pump inlet such as radiator cores, heat exchanger, auxiliary coolers and the associated plumbing to a minimum.

The maximum static head allowed on DD Platform engines is 145 kPa (21 psi). and the pressure relief valve or cap *must* be sized so the limit is not exceeded. Consider a non-pressurized vented cap system for radiators mounted 312 m (5 ft.) and higher above the engine. This ensures that the limit is not exceeded.

8.7.8 COOLANT FLOW RATE/EXTERNAL PRESSURE DROP

The coolant flow rate through the engine and radiator *must* be within 90% of the rated flow .found on www.detroitdiesel.com, if you do not have access to www.detroitdiesel.com contact your Distributor. Ensure that the flow is maintained when coolant is shunted away from the engine or radiator to supply cab heaters, air compressors, auxiliary coolers, wet exhaust systems, etc.

External pressure drop is defined as the sum of all components in the system. For example, a radiator with a 21 kPa (3 psi) restriction plus a heat exchanger, with a 14 kPa (2 psi) restriction mounted between the water pump and oil cooler gives a total pressure drop of 34 kPa (5 psi). This is within the typical DD Platform engine maximum allowable value. See www.detroitdiesel.com for current data.

All information subject to change without notice.
DDC-SVC-MAN-0073 Copyright © 2009 DETROIT DIESEL CORPORATION

https://truckmanualshub.com/

8.7.9 MINIMUM COOLANT TEMPERATURE

The overall design should ensure minimum coolant temperature 71°C (160°F) be maintained under all ambient operating conditions; operating conditions are listed on www.detroitdiesel.com.. A cold running engine can result in poor engine performance, excessive white smoke, and reduced engine life.

8.7.10 SYSTEM PRESSURIZATION

DD Platform engines typically require a minimum 62 kPa (9 psi) pressure cap. See www.detroitdiesel.com for specific requirements. The pressure caps raise the boiling point of the coolant which minimizes coolant or flow rate loss due to localized boiling and water pump cavitation. Higher rated pressure caps may be required for high altitude and severe ambient operation. Cooling system components *must* be able to withstand increased pressure.

8.7.11 COOLANTS

A proper glycol (ethylene, propylene) or extended life organic acid, water, Supplemental Coolant Additive (SCA) mixture meeting DDC requirements is required for year-round usage.

The coolant provides freeze and boil protection and reduces corrosion, sludge formation, and cavitation erosion. Antifreeze concentration should not exceed 67% for ethylene glycol (50% for propylene glycol). Detroit Diesel requires SCAs be added to all cooling systems at initial fill and be maintained at the proper concentration. Follow SCA manufacturers' recommendations. Refer to *Coolant Selections for Engine Cooling Systems* (DDC-SVC-BRO-0002), available on www.detroitdiesel.com.

8.8 CHARGE AIR COOLING REQUIREMENTS

Sufficient cooling capability is required for optimum engine performance. Exceeding the system temperature and pressure design limits defined in this chapter can adversely affect fuel economy, power, emissions and durability.

8.8.1 COOLING CAPABILITY

The cooling capability of the air-to-air system must be sufficient to reduce the turbocharger compressor out air temperature to within 25°C (45°F) of ambient temperature on all DD Platform engines. Air inlet manifold temperature requirements are available on www.detroitdiesel.com. Typically the maximum intake manifold temperature is 85°C (185°F).

8.8.2 MAXIMUM PRESSURE LOSS

The maximum allowable total static pressure drop across the DD Platform charge air system is 13.5 kPa (4 in. Hg). This includes the restriction of the charge air cooler and all the plumbing and accessories (e.g. shutdown valve) from the turbocharger compressor to the engine air inlet manifold.

 Copyright © 2009 DETROIT DIESEL CORPORATION

https://truckmanualshub.com/

8.8.3 CLEANLINESS

All new charge air cooling system components must be thoroughly clean and free of any casting slag, core sand, welding slag, etc. or anything that may break free during operation. These foreign particles can cause serious engine damage.

8.8.4 LEAKAGE

Leaks in the air-to-air cooling system can cause a loss in power, excessive smoke and high exhaust temperature due to a loss in boost pressure. Large leaks can possibly be found visually, while small heat exchanger leaks will have to be found using a pressure loss leak test.

The charge air cooler is considered acceptable if it can hold 172 kPa (25 psi) pressure with less than a 34.5 kPa (5 psi) loss in 15 seconds after turning off the hand valve.

8.9 VEHICLE SIGN-OFF

A Detroit Diesel Vehicle Sign-Off must be completed for all new installations, engine repowers, and installation modifications. To obtain a Vehicle Sign-Off form contact Application Engineering.

8.10 COOLING SYSTEM DESIGN CONSIDERATIONS

Many factors *must* be considered when designing the overall cooling system. The design process can be broken down into two phases:

- Consideration of heat rejection requirements
- Consideration of specific component design

The following guidelines are presented as a systematic review of cooling system considerations in order to meet minimum standards.

8.10.1 COOLING SYSTEM REQUIREMENTS

The first cooling system consideration is to establish what coolant and air temperature values must be met for an application.

8.10.1.1 Engine Operating Temperature

Engine coolant temperature, under normal operating conditions, will range from -5.5°C (10°F) below to -8.3°C (15°F) above the start to open temperature of the thermostat. The temperature differential between the engine coolant in and out is typically -5.5°C (10°F) at maximum engine speed and load. A temperature differential around -7.8°C (14°F) can be anticipated on those applications where torque converter oil cooler heat load is added to the coolant. The maximum allowable engine coolant temperature is found on www.detroitdiesel.com.

All information subject to change without notice.
DDC-SVC-MAN-0073 Copyright © 2009 DETROIT DIESEL CORPORATION

https://truckmanualshub.com/

The engine coolant temperature rise and radiator coolant temperature drop values will be different whenever the engine and radiator flows are not the same (partial thermostat open operation). Placing auxiliary coolers between the engine and the radiator will cause the same effect. The maximum allowable coolant temperature represents the temperature above which engine damage or shortened engine life can occur.

8.10.1.2 Intake Manifold Temperature

Turbocharger air outlet temperature can vary greatly over the wide range of ambient temperatures and altitudes possible for various operating conditions. Regardless of ambient conditions, the DD Platform engines are required to maintain an intake manifold temperature of no more than 7°C (45°F) above ambient with a typical maximum of 66°C (151°F). The ambient temperature and altitude of a specific application must be considered when designing a cooling system. See the Information Highway for specific limits.

8.10.2 ENGINE PERFORMANCE

Each engine rating has its own individual performance characteristics. The two areas of performance which have the greatest effect on cooling system design are heat rejection and water pump output. These values can be found on www.detroitdiesel.com.

8.10.2.1 Engine Heat Rejection

Heat is rejected from an engine into four areas; jacket water, charge air, exhaust and radiation. The jacket water and charge air heat must be dissipated in order to meet coolant and intake manifold rejection requirements. The exhaust heat and radiated heat must be considered because both often have an effect on air temperature which affects fan and heat exchanger performance Limiting ambient temperature may occur at engine speeds other than maximum.

8.10.2.2 Coolant Flow

The pump flow found on www.detroitdiesel.com, is derived from a laboratory engine operating under SAE J1995 conditions. Actual engine installations often have substantially different plumbing arrangements and employ different coolants. Refer to section 8.10.4.7 for information about water pump performance.

NOTE:
If you do not have access to www.detroitdiesel.com contact your Distributor.

8.10.2.3 Heat Transfer Capabilities

Heat transfer capabilities *must* be adequate for the designated coolant, air temperatures, and flows. These capabilities should include reserve capacity to allow for cooling system deterioration.

 Copyright © 2009 DETROIT DIESEL CORPORATION

https://truckmanualshub.com/

8.10.3 ENVIRONMENTAL AND OPERATING CONDITIONS

Consider both environmental and operating modes of the installation when designing the cooling system. Reserve capacity and special selection of components are required for operation in the following extremes:

- □ Hot or cold ambient temperatures
- □ High altitude
- □ Space constraints
- □ Noise limits
- □ Tilt operation or installations
- □ Arid, damp, dusty, oily, windy conditions
- □ Long-term idle, full load, peak torque operation
- □ Long-term storage or standby operation
- □ Indoor/outdoor operation
- □ Serviceability limitations
- □ Infrequent maintenance intervals
- □ Severe shock or vibration
- □ System deterioration
- □ Multiple engine installations

The heat rejected to the coolant generally increases when engine performance is reduced due to external conditions. Engine performance is adversely affected by:

- □ High air restrictions
- □ High exhaust back pressure
- □ High air inlet temperature
- □ Altitude

8.10.3.1 Ambient Temperature

The ambient temperature in which an engine will be operated must be considered when designing the jacket water (JW) and CAC systems. The worst case cooling conditions are often at the highest expected ambient temperature.

Operating in extremely cold ambient, at light loads, or during extended idling will require conservation of heat energy. Coolant temperatures *must* be maintained near the thermostat opening value. This controls engine oil temperature at a satisfactory level for good engine performance and reliability. Cab heater performance is adversely affected if coolant temperatures are not maintained.

All information subject to change without notice.
DDC-SVC-MAN-0073 Copyright © 2009 DETROIT DIESEL CORPORATION

https://truckmanualshub.com/

8.10.3.2 Altitude

As altitude increases air density decreases, and reduces engine and cooling system performance. A 1°C per 273 m (2°F per 1000 ft.) decrease in the ambient capability is assigned as a general rule.

The reduced atmospheric pressure will lower the boiling point of the coolant. A higher rated pressure cap/relief valve may be required to suppress boiling.

8.10.3.3 Space Constraints

Cooling system design is often influenced by space constraints. Heat exchanger height, width, and depth can be dictated by the application. This, in turn, limits fan diameter and heat exchanger surface area.

8.10.3.4 Noise Limits

Noise limitations are another environmental concern which can affect the cooling system. Operating location and/or government regulations can limit noise generated by a cooling fan. Fan noise is directly related to fan speed which affects air flow.

8.10.3.5 Tilt Operations or Installations

Cooling systems *must* perform satisfactorily at maximum tilt operation. This is especially critical for applications where the engine *must* operate for extended periods on steep grades.

8.10.4 SYSTEM COMPONENTS

Total heat rejected to the coolant and air must be determined to properly size the radiator , CAC, and fan arrangement so sufficient heat can be dissipated. This information is found on www.detroitdiesel.com, if you do not have access to www.detroitdiesel.com contact your Distributor.

8.10.4.1 Additional Heat Loads to Coolant

The following items will add an additional heat load to the engine coolant:

- □ Transmission coolers
- □ Torque converters
- □ Hydraulic oil coolers
- □ Air compressors
- □ Retarders
- □ Brake coolers
- □ Water cooled exhaust systems
- □ Exhaust gas coolers

 Copyright © 2009 DETROIT DIESEL CORPORATION

https://truckmanualshub.com/

The highest single source heat load to the coolant generally occurs during the no fuel braking mode in applications that use retarders. The amount of heat generated from a retarder is dependent upon its frequency and duration of application. The heat load source is from the retarder oil cooler, but engine friction heat also exists. The cooling system *must* be able to control maximum engine coolant temperature regardless of the mode of operation.

8.10.4.2 Additional Heat Loads to Air

The following factors or components will raise the temperature of the radiator inlet air or increase restriction to air flow when selecting a radiator and fan. The following are some of the common factors:

- □ Air-to-air coolers
- □ Oil-to-air coolers
- □ Hydraulic coolers
- □ Transmission coolers
- □ Recirculated radiator discharge air
- □ Engine radiated heat (blower fans)
- □ Air conditioning condenser
- □ Engine compartment configuration
- □ Fuel coolers

8.10.4.3 Coolant Type

The type of coolant chosen for a cooling system can have an effect on the system performance. Water pump output and heat transfer characteristics are different for water than for antifreeze because the fluids have different densities, viscosities and thermal conductivity. The heat exchanger manufacturer is the best source for determining what the difference in performance would be from one type of coolant to the next.

8.10.4.4 Plumbing

Consider the following requirements for all water connections made between the engine and the radiator, deaeration tank, heaters, filters, etc.:

- □ All connections *must* be as direct as possible, durable, and require minimal maintenance.
- □ Pipe and hose connections *must not* be necked down or be smaller than the engine inlet(s) and outlet(s). Fitting size *must* be considered so minimum hose inside diameter requirements are not exceeded.
- □ The number of connections *must* be kept to a minimum to reduce potential leakage.
- □ Bends should be smooth and have a generous radius. Avoid mitered bends and crush-bend tubing.

All information subject to change without notice.
DDC-SVC-MAN-0073 Copyright © 2009 DETROIT DIESEL CORPORATION

https://truckmanualshub.com/

- Beaded pipe ends *must* be used to prevent the hose from separating from the pipe.
- Fittings on the lines (especially fill line) *must not* reduce effective size.
- Quality constant tension hose clamps *must* be used to maintain tension and prevent leakage during both cold and hot operation. Use the correct style of clamp when silicone hoses are used.
- Two clamps should be used at each connection, indexed 180° apart.

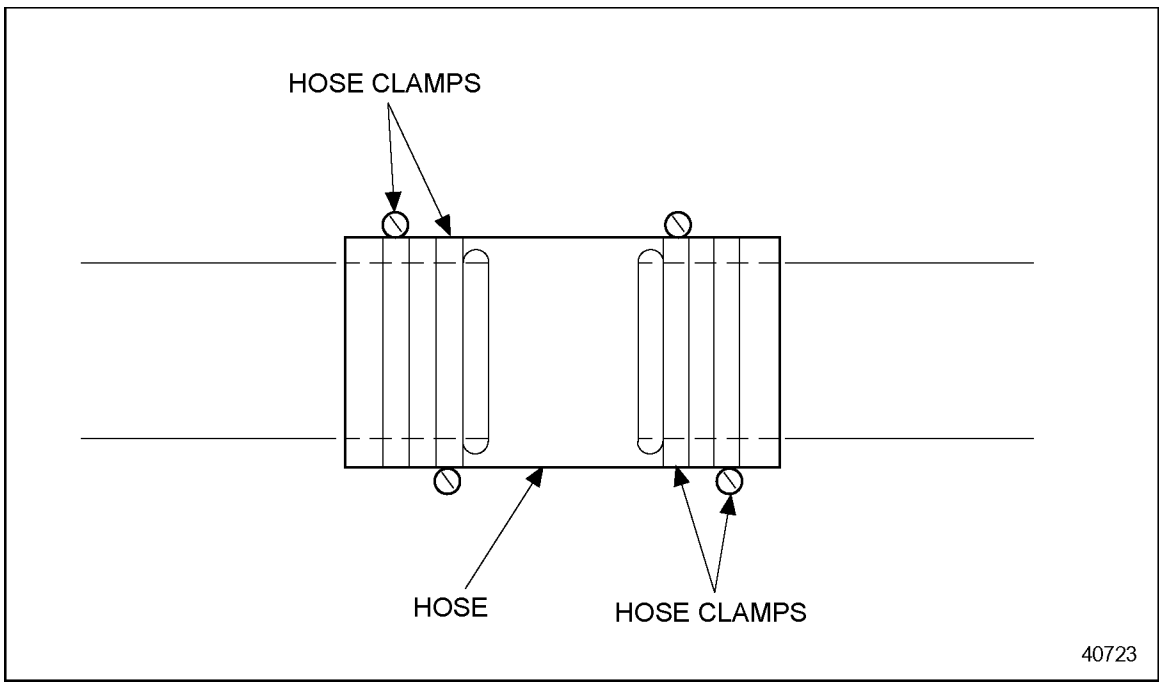

Figure 8-15 Hose Clamp 180° Indexed Position

- Connections *must* be flexible enough to accommodate relative motion between connecting components.
- Quality hoses that can withstand the expected temperatures, pressures, coolants, and inhibitors *must* be used.
- Corrugated hoses are not recommended.
- Hoses must be fuel and oil resistant.
- Hoses should not span more than a 2 in. (5 cm) unsupported section. Use reinforced hose for longer spans.
- All connecting hoses and pipes *must* provide adequate support to prevent collapse and rupture. Loose internal springs are not recommended.
- All lines *must* have a continuous downward slope without droops to ensure good cooling system draining and refilling capabilities. Additional drains and vents may be required if this is not possible.

 Copyright © 2009 DETROIT DIESEL CORPORATION

https://truckmanualshub.com/

8.10.4.5 Auxiliary Coolant Flow Path Circuitry

Consider the following when using add on components such as cab heater systems, air compressors, auxiliary oil coolers, retarders, exhaust gas cooler, etc.:

- □ Location of coolant supply and return connection points.
- □ Restriction to coolant flow. Select engine connection points that will give adequate flow under all operating conditions, but do not adversely affect main engine/radiator flow.
- □ Location of auxiliary components. Components should be mounted below the top tank or surge tank coolant level whenever possible. This will allow removal of trapped air and to help complete filling of the cooling system.
- □ Special vents which may be required to ensure excessive air can be purged during system fill, if components are mounted above the coolant level. The engine *must*be run after the system has been filled to purge any remaining trapped air. Add makeup coolant as required.

Specific considerations are as follows:

- □ Connect auxiliary oil coolers, retarder heat exchangers, and cab and passenger compartment heaters in series with the main coolant flow on the pressure side of the pump. Coolers located on the inlet side of the water pump require modifications to the engine water bypass circuit to provide coolant flow through the cooler during closed thermostat operation. Modifications *must not* hinder air from being purged from the water pump. Engine coolant warm-up problems may occur when coolers are located in the radiator bottom tank. Connect the heater supply at the water pump discharge and the return to the thermostat housing base. See the installation drawings on www.detroitdiesel.com for specific locations.
- □ Give special care to excessively cold ambient operating conditions.
- □ Enhance driver/passenger comfort through the use of highly efficient, low restriction heater cores. Highly efficient, modern engines reject less heat to the coolant. It may be necessary to increase idle speed to maintain coolant temperatures.

8.10.4.6 Water Cooled Exhaust Systems

Heat rejection to the JW system will be considerably higher than with a dry exhaust system. Additional vents are required with water cooled components. Consult an authorized distributor or DDC Application Engineering when water cooled exhaust systems are being considered.

8.10.4.7 Water Pumps

A water pump is used to circulate the coolant throughout the cooling system, including customer add-on features such as cab heaters, filters, and auxiliary oil coolers. Pumps are sensitive to inlet restrictions, coolant temperature, coolant type and aerated coolant. Discharge flow can be seriously reduced and damaging cavitation can occur if the cooling system is not designed properly.

All information subject to change without notice.
DDC-SVC-MAN-0073 Copyright © 2009 DETROIT DIESEL CORPORATION

https://truckmanualshub.com/

Water pump inlet restriction *must* be kept to a minimum to prevent cavitation. This means radiators, auxiliary oil coolers located between the radiator and the pump inlet (not preferred location), as well as the associated plumbing *must* introduce minimal restriction. Lines connected to the water pump inlet *must* have at least the same area as the pump inlet. Bends should be kept to a minimum and they should have a generous radius (no mitered bends). The water pump inlet pressure (suction) *must not* exceed allowable limits (see the Information Highway for actual limits). The lowest pressure in the entire cooling system is found at the water pump inlet. This pressure can be below atmospheric; thus cavitation (boiling) will occur below 100°C (212°F) at sea level. Altitude causes higher probability of cavitation in cooling systems.

The pump can easily become air bound if a large volume of air is trapped in the pump during coolant filling, or if air is fed to the pump when the pump is running. Vehicle heater systems can be a major source of air. Air can also be introduced into the cooling system from a severely agitated or improperly designed top tank.

Alternatively, an optional water pump group with an inlet elbow is available. It provides a traditional inlet position and it includes vent and fill line ports.

8.11 CHARGE AIR COOLING DESIGN GUIDELINES

The air to air CAC system should be designed for the highest horsepower engine offered in the application. The same system can be used for derated versions of the engine, which offers the following advantages:

- Reduces the number of components in the manufacturing and part systems
- Lower power engines may achieve even greater fuel economy from the additional reduction in engine intake air temperature
- Extends engine life

The following guidelines will assist in the design and selection of the various components that make up the charge air system. It is critical that these components offer maximum air temperature reduction with minimal loss of pressure. The integrity of the components must provide for long life in its operating environment.

Air system operating parameters such as heat rejection, engine air flow, air pressure, maximum pressure drop, and minimum temperature loss are available on www.detroitdiesel.com.

Charge air cooler considerations include size, cooling air flow restriction, material specifications, header tanks, location, and fan systems.

8.11.1 SIZE

The size of the heat exchanger depends on performance requirements, cooling air flow available, and usable frontal area. Using the largest possible frontal area usually results in the most efficient core with the least amount of system pressure drop. Consult your supplier to determine the proper heat exchanger for your application.

 Copyright © 2009 DETROIT DIESEL CORPORATION

https://truckmanualshub.com/

8.11.2 COOLING AIR FLOW RESTRICTION

Core selection and location must meet charge air system temperature and pressure drop limits, and must be compatible for good coolant radiator performance. Charge air coolers have a cooling air flow restriction typically between 0.19 and .37 kPa (0.75 and 1.5 in. H_2O).

8.11.3 MATERIAL

Most charge air coolers are made of aluminum alloys because of their light weight, cost advantages and good heat transfer characteristics. Other materials may be used with approval from DDC Applications Engineering.

8.11.4 HEADER TANKS

Header tanks should be designed for minimum pressure loss and uniform airflow distribution across the core. Rounded corners and smooth interior surfaces provide a smooth transition of the air flow resulting in minimum pressure loss. The inlet and outlet diameters of the header tanks should be the same as the pipework to and from the engine. A 5 in. (127 mm) minimum diameter is required for the DD Platform engines. The tube ends require a 0.09 in. (2.3 mm) minimum bead to retain hose and clamp connections.

8.11.5 LOCATION

The cooler is typically mounted directly in front (upstream of air flow) or along side the engine coolant radiator. Other locations are acceptable as long as performance requirements are met. The cooler should be located as close to the engine as practical to minimize pipe length and pressure losses.

Leave access space between the cores when stacked in front of one another so debris may be removed.

8.11.6 PIPEWORK

Give careful attention to the pipework and associated fittings used in the inlet system, in order to minimize restriction and maintain reliable sealing.

Pipework length should be as short as possible in order to minimize the restriction incurred in the system and to keep the number of bends to a minimum. Use smooth bend elbows with an R/D (bend radius to tube diameter) ratio of at least 2.0 and preferably 4.0. The cross-sectional area of all pipework to and from the charge air cooler must not be less than that of the intake manifold inlet.

The recommended tube diameter for DD Platform engines is 5 in. (127 mm) for both the turbocharger to CAC heat exchanger, and from the CAC heat exchanger to the engine air intake manifold.

All information subject to change without notice.
DDC-SVC-MAN-0073 Copyright © 2009 DETROIT DIESEL CORPORATION

https://truckmanualshub.com/

8.12 HEAT EXCHANGER SELECTION

Heat exchanger cores are available in a wide variety of configurations. Heat exchanger materials, construction and design can be any of the materials and designs listed in the following table.

Materials, Construction, and Design	Choices
Heat Exchanger Materials	Copper, Brass, Aluminum, Steel
Heat Exchanger Construction	Lead Soldered, No Lead Soldered, Brazed, Welded, Mechanical Bond
Fin Geometry	Plate, Serpentine, Square, Louvered, Non Louvered
Tube Geometry	Oval, Round, Internally Finned, Turbulated
Coolant Flow	Down Flow, Cross Flow, Multiple Pass Series Flow, Multiple Pass Counter Flow

Table 8-1 Heat Exchanger Materials, Construction, and Design Choices

All of these variations can have an effect on heat exchanger size, performance and resistance to flow on both the fin side and tube side for both radiators and charge air coolers.

Meet the following design criteria to achieve greatest efficiency for fan cooled applications:

- Utilize the largest practical frontal area in order to minimize restriction to air flow.
- Use square cores. The square core allows maximum fan sweep area, thus providing most effective fan performance.
- Keep core thickness and fin density (fins per unit length) to a minimum. This keeps air flow restriction low, helps prevent plugging, and promotes easier core cleaning.
- Fin density in excess of 10 fins per inch should be reviewed with Detroit Diesel Application Engineering.
- Use the largest possible fan diameter to permit operating at slower fan speeds, resulting in lower noise and horsepower demand.

8.12.1 SHELL AND TUBE HEAT EXCHANGERS

Shell and tube heat exchangers are often required for transmission cooling in industrial applications. These types of heat exchangers are to be placed between the water pump outlet and the engine oil cooler inlet. Shell and tube heat exchangers are constructed of a bundle of tubes encased in a tank or shell. Typically, engine coolant enters an end bonnet, travels through the tubes and exits an end bonnet. Oil typically enters the shell, passes over the tubes, then exits the shell on the other end. Partition bars are present in the end bonnets if multiple passes are required on the tube side, while baffles are always present within the shell to force the oil to pass over the tubes multiple times.

 Copyright © 2009 DETROIT DIESEL CORPORATION

https://truckmanualshub.com/

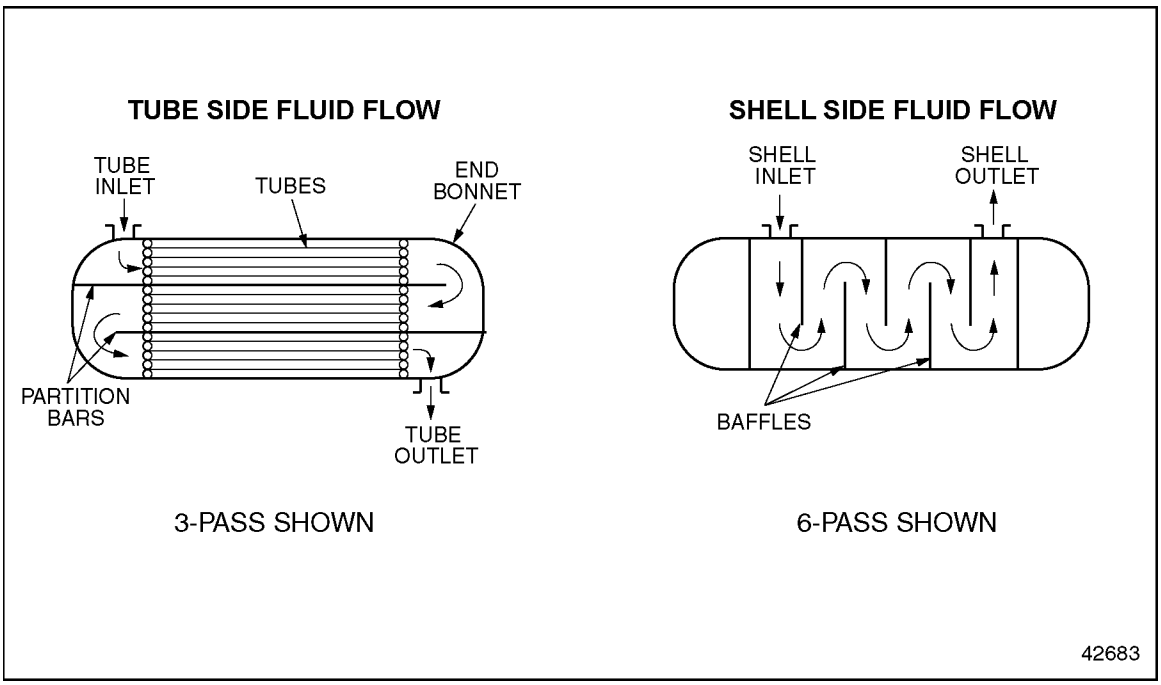

Figure 8-16 Shell and Tube Heat Exchangers

Consider the following guidelines when selecting a shell and tube heat exchanger:

- Minimize restriction to the engine cooling system by keeping the number of tube side passes to a minimum
- Prevent tube erosion by keeping tube velocities below 7 ft./sec.
- Shell side flow velocities should be higher than 1 ft./sec.
- Typically, in industrial applications, tubes are copper and the shell is steel. Choose more corrosion resistant materials if fluids are more corrosive.

8.13 FAN SYSTEM RECOMMENDATIONS AND FAN SELECTION

Proper selection and matching of the fan and radiator as well as careful positioning will maximize system efficiency and will promote adequate cooling at the lowest possible parasitic horsepower and noise level. Obtain radiator and fan performance curves from the manufacturer to estimate air system static pressure drop and determine if a satisfactory match is possible.

Installations using the largest fan diameter possible, turning at the lowest speed to deliver the desired air flow, are the most economical.

NOTE:
Fan blades should not extend beyond the radiator core. Blades that reach beyond the core are of minimal or no benefit.

Other important considerations include:

All information subject to change without notice.
DDC-SVC-MAN-0073 Copyright © 2009 DETROIT DIESEL CORPORATION

https://truckmanualshub.com/

- □ Cooling air flow required by the radiator core
- □ Cooling air system total pressure drop
- □ Space available
- □ Noise level limit
- □ Fan drive limits
- □ Fan speed limit
- □ Fan weight and support capabilities
- □ Fan spacers

Make sure that the manufacturer of the fan knows the tip speed.

8.13.1 BLOWER VS. SUCTION FANS

The application will generally dictate the type of fan to be used (i.e. mobile applications normally use a suction fan, and stationary units frequently use blower fans). Blower fans are generally more efficient in terms of power expended for a given mass flow, since they will always operate with lower temperature air as compared to a suction fan. Air entering a suction fan is heated as it passes through the radiator where a blower fan, even when engine mounted, can receive air closer to ambient temperatures.

Proper fan spacing from the core and good shroud design are required, so air flow is completely distributed across the core to obtain high efficiency.

A suction fan, when mounted, will generally have the concave side of the blade facing the engine, whereas a blower fan will have the concave side facing the radiator. A suction fan cannot be made into a blower fan by simply mounting the fan backwards. Fan rotation *must* also be correct.

 Copyright © 2009 DETROIT DIESEL CORPORATION

https://truckmanualshub.com/

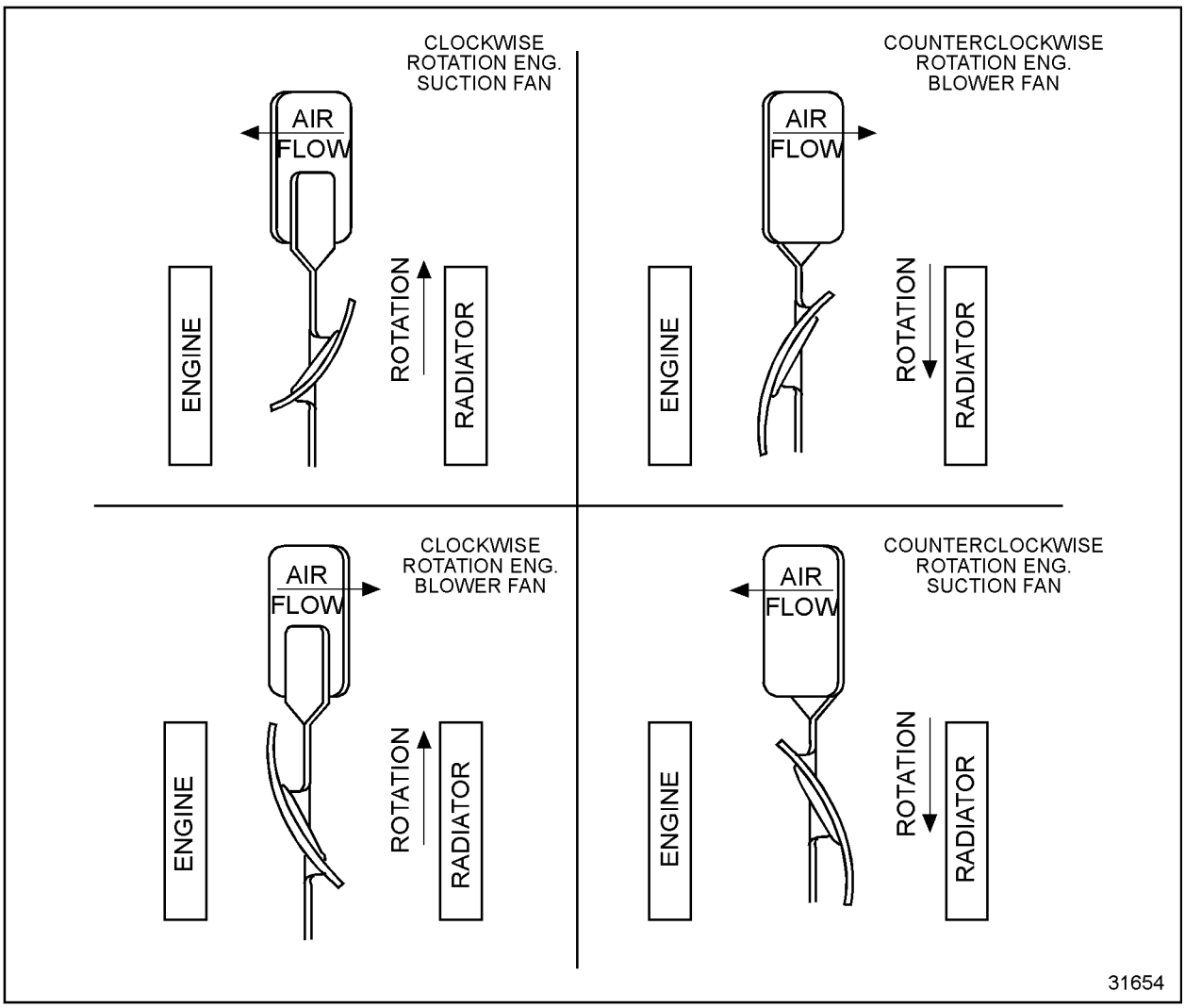

Figure 8-17 Blower vs. Suction Fans

8.13.1.1 Fan Performance

Fan curve air flow (m^3/min. [$ft.^3$/min.]) is a theoretical output value which is seldom achieved. This value can be approached with a well formed, tight fitting shroud and proper fan positioning (fan tip clearances of 1/16 in. [1.59 mm] or less). Consult the fan supplier on how to determine what the realistic fan air flow delivery will be on the installation.

Select a fan/core match with sufficient reserve cooling capacity to allow for some degradation. This degradation occurs as the unit gets older and there is fouling from airborne debris. These conditions cause higher air restriction and/or lower heat transfer capability. This is especially true for applications such as agriculture, earth moving, or mining. Fin density should be as low as practical to keep air flow high, minimize plugging, and permit easier cleaning.

NOTE:
Fin density in excess of 10 fins per inch should be reviewed with Detroit Diesel Application Engineering.

All information subject to change without notice.
DDC-SVC-MAN-0073 Copyright © 2009 DETROIT DIESEL CORPORATION

https://truckmanualshub.com/

Increasing core thickness increases the restriction to air flow. This condition causes fouling to occur faster.

Consider the following when analyzing fan performance:

- Speed
- Static Pressure
- Horsepower

The following fan law relationships are useful when interpreting basic fan curves:

- Air flow varies directly with fan speed $ft.^3/min._2 = (ft.^3/min._1) \times (r/min._2) / (r/min._1)$
- Static head varies with the square of fan speed $P_{S2} = (P_{S1}) \times [(r/min._2) / (r/min._1)]^2$
- Horsepower varies with the cube of fan speed $hp_2 = (hp_1) \times [(r/min._2) / (r/min._1)]^3$

Additional factors that affect the installed performance of a fan are listed in the following table.

Installed Fan	Factors Affecting Performance
Fan Position	Fan to Core Distance, Fan to Engine Distance
Air Flow Restriction	Radiator Core, Engine and Engine Compartment Configuration, Grills and Bumpers, Air Conditioning Condenser, Air-to-Oil Cooler, Air-to-Air Cores
Shroud	Shroud-to-Fan Tip Clearance, Shroud-to-Fan Position, Shroud Type (i.e. Ring, Box, Venturi), Shroud-to-Core Seal, Shutters, Bug Screens, and Winterfronts

Table 8-2 Installed Fan Performance Factors

Typical fan performance graphs have total pressure curves and power absorption curves for a given speed of rotation. The pressure, measured in water gage, represents the resistance to flow. The higher the resistance, the lower the flow. The fan horsepower absorption follows a similar, but not exactly the same, characteristic to the pressure curve. Depending on the installed system characteristics, the fan operates only at one point of water gage and power.

 Copyright © 2009 DETROIT DIESEL CORPORATION

https://truckmanualshub.com/

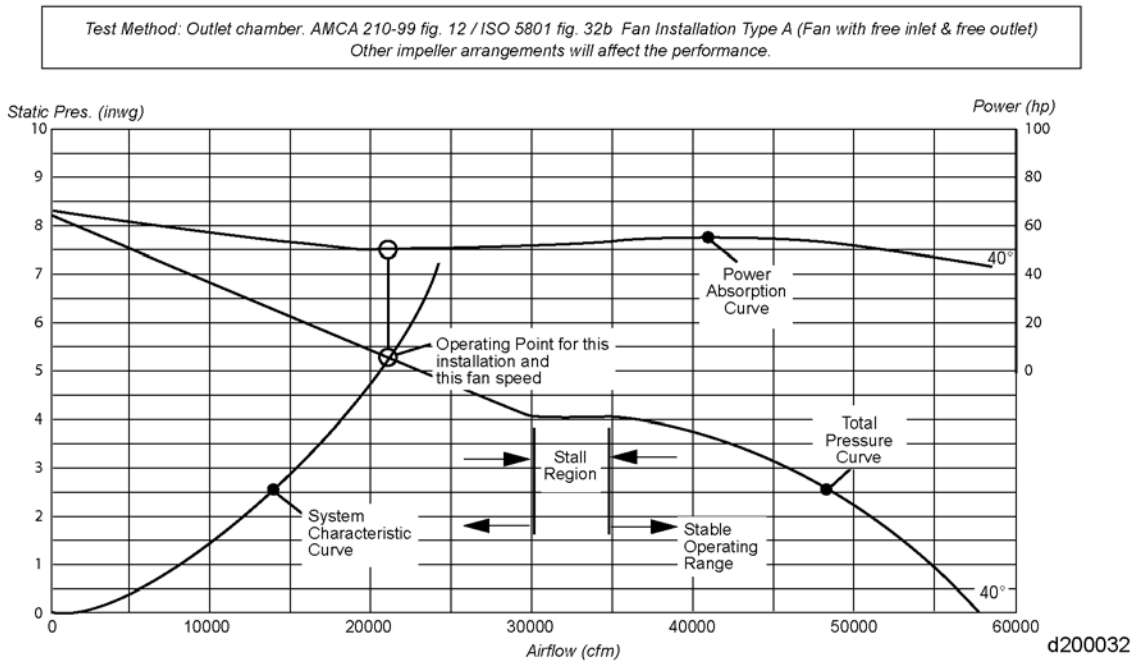

Figure 8-18 Typical Fan Performance Curve

Most fans have some region in which the flow separates from the blade and the flow becomes unstable. This is called a stall region. Operation in the stall region is not recommended because results are not consistent and the fan is inefficient and noisy.

There are maximum tip speeds in the range of 18,000 to 23,000 feet per minute that the fan manufacturer based on his design. Check with the fan manufacturer.

The system characteristics are defined by the air flow restrictions that are a result of:

- Engine enclosure louvers
- Engine and accessories
- Fan guard
- Radiator core
- Charge air cooler if in tandem with radiator
- Oil cooler if in tandem with radiator
- Bug screen
- Any other internal or external obstructions

All information subject to change without notice.
DDC-SVC-MAN-0073 Copyright © 2009 DETROIT DIESEL CORPORATION

https://truckmanualshub.com/

NOTICE:
The fan should never operate in the stall area, where a small change in static pressure results in no change in airflow.

NOTICE:
The air side of the cooling system is critical and a change in the air flow will generally have a greater impact on cooling than a similar percentage change in coolant flow.

Consider these additional factors to determine actual fan performance at worst case operating conditions.

- Air temperature
- Atmospheric pressure

WARNING: PERSONAL INJURY
To avoid injury from rotating belts and fans, do not remove and discard safety guards.

Fan curves are generated at standard conditions (77°F [25°C] 0 elevation). If the fan is operating in different temperature or pressure (altitude) than standard the performance must be adjusted.

8.13.1.2 Fan Position

Fan position relative to the radiator depends on the fan diameter and the radiator frontal area. Position the fan further away from the core as the fan swept area becomes less than the radiator frontal area. This allows the air to spread over the full core area. The fan will not spread air over the entire core area if it is mounted too close to the radiator.

The optimum position of the fan blade on a blower or suction fan with respect to the shroud opening is dependent on the fan design as well as the many variables associated with an installation. Different system performance may occur for the same fan positions in different applications due to air flow restriction and flow obstructions. Consult the fan manufacturer for assistance in optimizing the fan positioning.

Keep fan tip-to-shroud clearance to a minimum because it influences air flow and noise level significantly. Minimum clearance is achieved by using a shroud with a round opening. An adjustable fan shroud is recommended if the fan pulley is adjustable for belt tightening. Consider allowances for engine/radiator movement when determining tip clearance.

Consider components located behind the fan so air flow is not adversely affected or vibration introduced to the fan. These conditions will cause premature failures, or increased noise, or both. Fan height is also important.

 Copyright © 2009 DETROIT DIESEL CORPORATION

https://truckmanualshub.com/

The use of fan spacers on DD Platform engines are allowed only when a fan drive configuration review and/or vibration testing has been completed. Consult with DDC Application Engineering for assistance.

8.13.1.3 Fan Shrouds

The use of a fan shroud is required for achieving good cooling system performance. A properly designed shroud will distribute the air across the core more uniformly, increase core air flow, and prevent air recirculation around the fan. Seal holes and seams in the shroud. An air tight seal between the shroud and the radiator core will maximize air flow through the core.

There are three basic types of shrouds: the well rounded entrance venturi shroud, the ring shroud, and the box shroud. The ring and box type shrouds are most common because they are easier to fabricate.

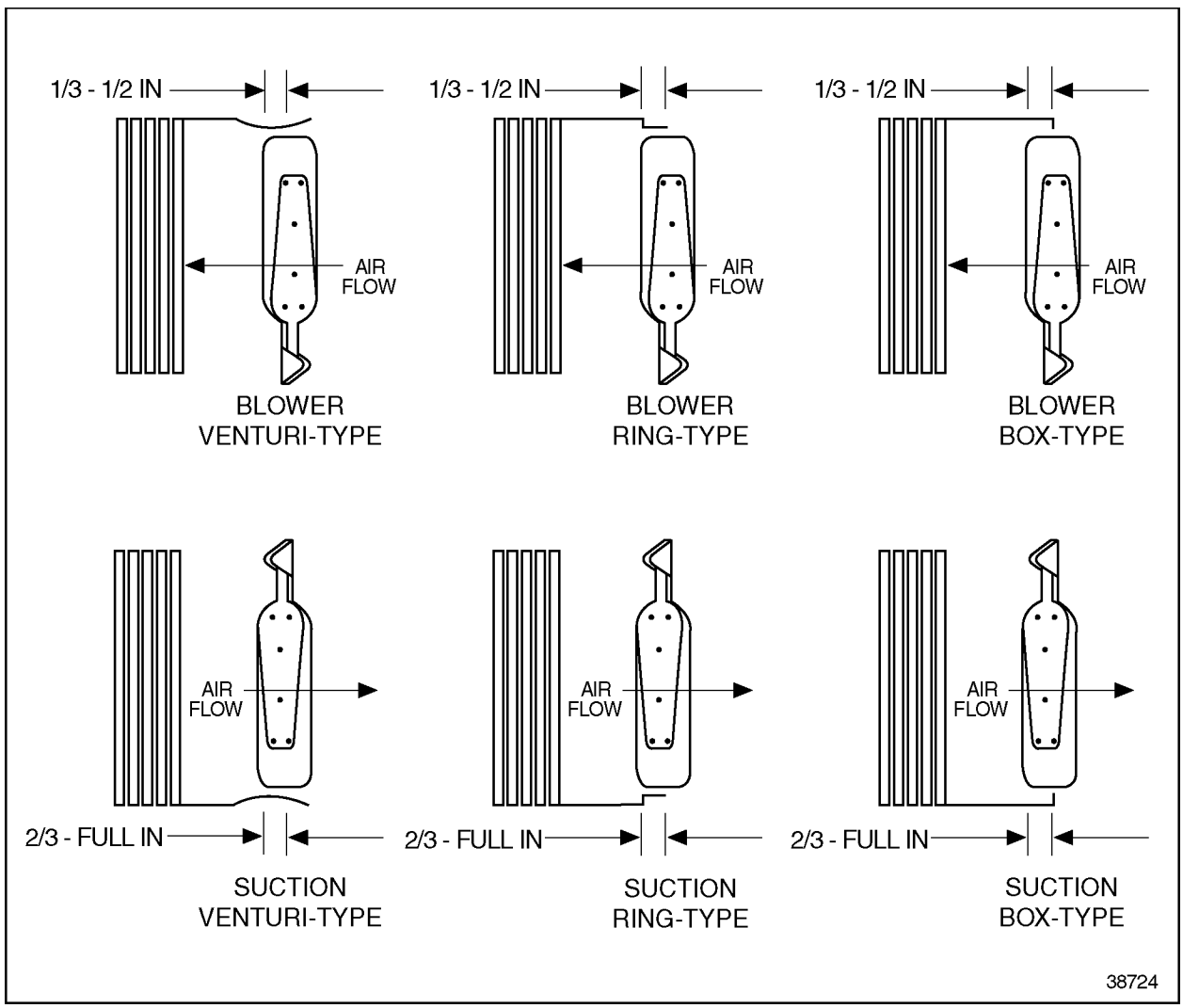

Figure 8-19 Fan Shroud Types

All information subject to change without notice.
DDC-SVC-MAN-0073 Copyright © 2009 DETROIT DIESEL CORPORATION

https://truckmanualshub.com/

8.13.1.4 Fan System Assemblies

Do not exceed the design limits of any component when OEM components such as fans, fan drives, spacers, etc. are attached to Detroit Diesel supplied components (fan hub and pulley assemblies). Vibration tests must be performed when the customer wants to use a fan system not previously approved by DDC.

8.13.1.5 Fan Drives

The DD Platform engines provide a 10–groove poly V fan drive. Refer to Accessory Drive System section for specifications and belt configuration data.

8.13.1.6 Baffles to Prevent Air Recirculation

Use baffles around the perimeter of the radiator assembly to prevent hot air which has passed through the radiator core from being recirculated back through the core. The cooling capability of the system may be seriously hindered if this baffling is not utilized.

8.13.1.7 Shutters

Shutters are not required under most operating conditions with a properly designed cooling system. Shutters may improve performance under extreme cold ambient conditions and long term idling or light loading. Improperly installed or maintained devices may lead to reduced engine life, loss of power, and poor fuel economy.

Shutters should open approximately 3°C (5°F) before the thermostat start to open temperature. The shutter control should sense engine water out (before thermostat) temperature and the probe must be fully submerged in coolant flow.

8.13.1.8 Winterfronts

Winterfronts are not required under most operating conditions with a properly designed cooling system. Some operators reduce the airflow through the radiator during cold weather operation to increase engine operating temperature. Consider on/off fans and shutters if long term idling during severe cold weather is necessary.

Improperly used winterfronts may cause excessive temperatures of coolant, oil, and charge air. This condition can lead to reduced engine life, loss of power, and poor fuel economy. Winterfronts may also put abnormal stress on the fan and fan drive components.

Never totally close or apply the winterfront directly to the radiator core. At least 25% of the area in the center of the grill should remain open at all times. All monitoring, warning, and shutdown devices should be properly located and in good working condition.

 Copyright © 2009 DETROIT DIESEL CORPORATION

https://truckmanualshub.com/

8.14 RADIATOR COMPONENT DESIGN

The design of individual radiator components may have an effect on cooling system performance. The following sections describe these considerations.

8.14.1 DOWN FLOW AND CROSS FLOW RADIATORS

Down flow radiators are customarily used and required for heavy duty diesel engine applications. A cross flow radiator may be used if height limitations exist, but deaeration, thermal stratification, adequate core tube coverage and freeze damage are generally more difficult to control.

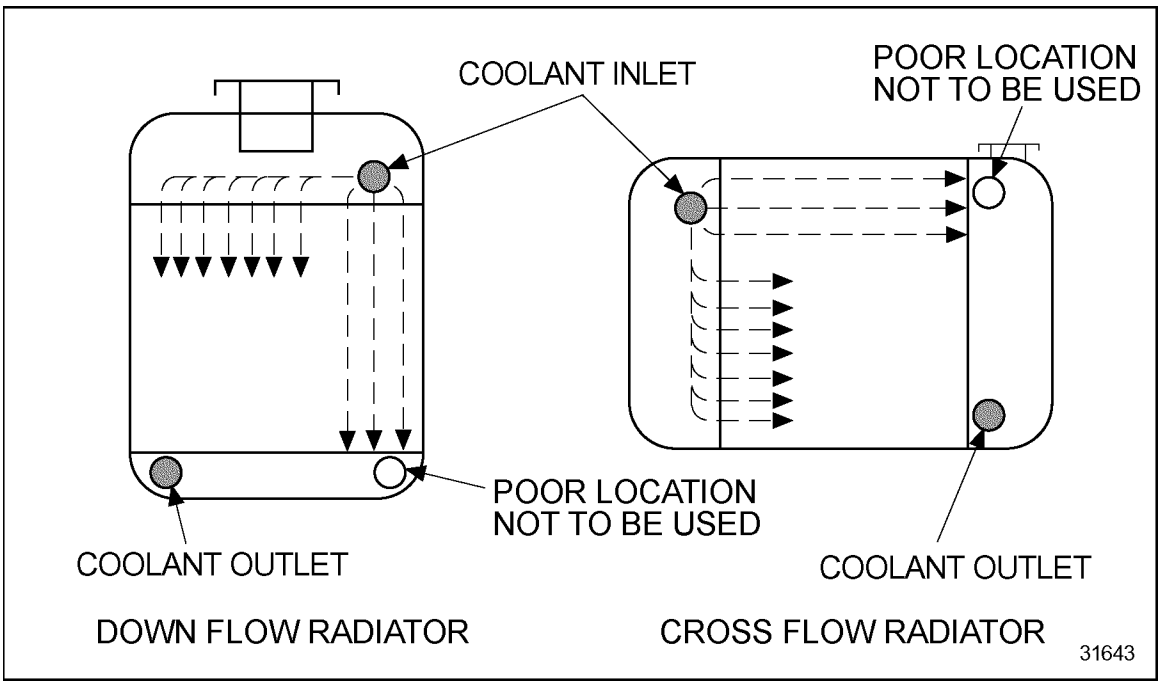

Figure 8-20 Down Flow Radiator and Cross Flow Radiator

8.14.1.1 Horizontal Radiator

Horizontal radiators may be used in situations where space restrictions preclude the use of other types. It is essential that vent lines go to the fill tank with the cap. Consult DDC Application Engineering for assistance in applying horizontal radiators.

8.14.1.2 Rapid Warm-up Deaeration Tank — Down Flow Radiator

The rapid warm-up deaeration tank consists of an integral top tank or a remote tank with the same design features. The top tank design should provide the following characteristics:

- A non turbulent chamber for separating air (gases) from the coolant
- Ability to fill at a minimum specified rate

All information subject to change without notice.
DDC-SVC-MAN-0073 Copyright © 2009 DETROIT DIESEL CORPORATION

https://truckmanualshub.com/

- Adequate expansion and deaeration volume as well as sufficient coolant volume so the system will operate satisfactorily with partial loss of coolant
- Impose a positive head on the water pump
- Prevent coolant flow through the radiator core during closed thermostat operation
- Prevent introduction of air into the cooling system during maximum tilt or angle operation

8.14.1.3 Remote Mounted Radiators/Heat Exchanger

Consult an authorized distributor, radiator supplier, or DDC Application Engineering when remote (i.e. non engine driven fans) mounted radiators/heat exchangers are being considered as many variables *must* be considered for each application. The requirements that must be met for remote mount are:

- Standard DDC installation and test requirements including restriction to flow and coolant flow rate
- Maximum allowable static head pressure is 32 ft. of water column with a pressure cap, 50 ft. of water column with an open system
- Installations where flow rate restrictions cannot be met may require using an inline pump

8.14.1.4 Integral Top Tank

The following top tank component guidelines are provided to assist in the design of a new tank, to critique existing tanks, and to troubleshoot problem cooling systems.

 Copyright © 2009 DETROIT DIESEL CORPORATION

https://truckmanualshub.com/

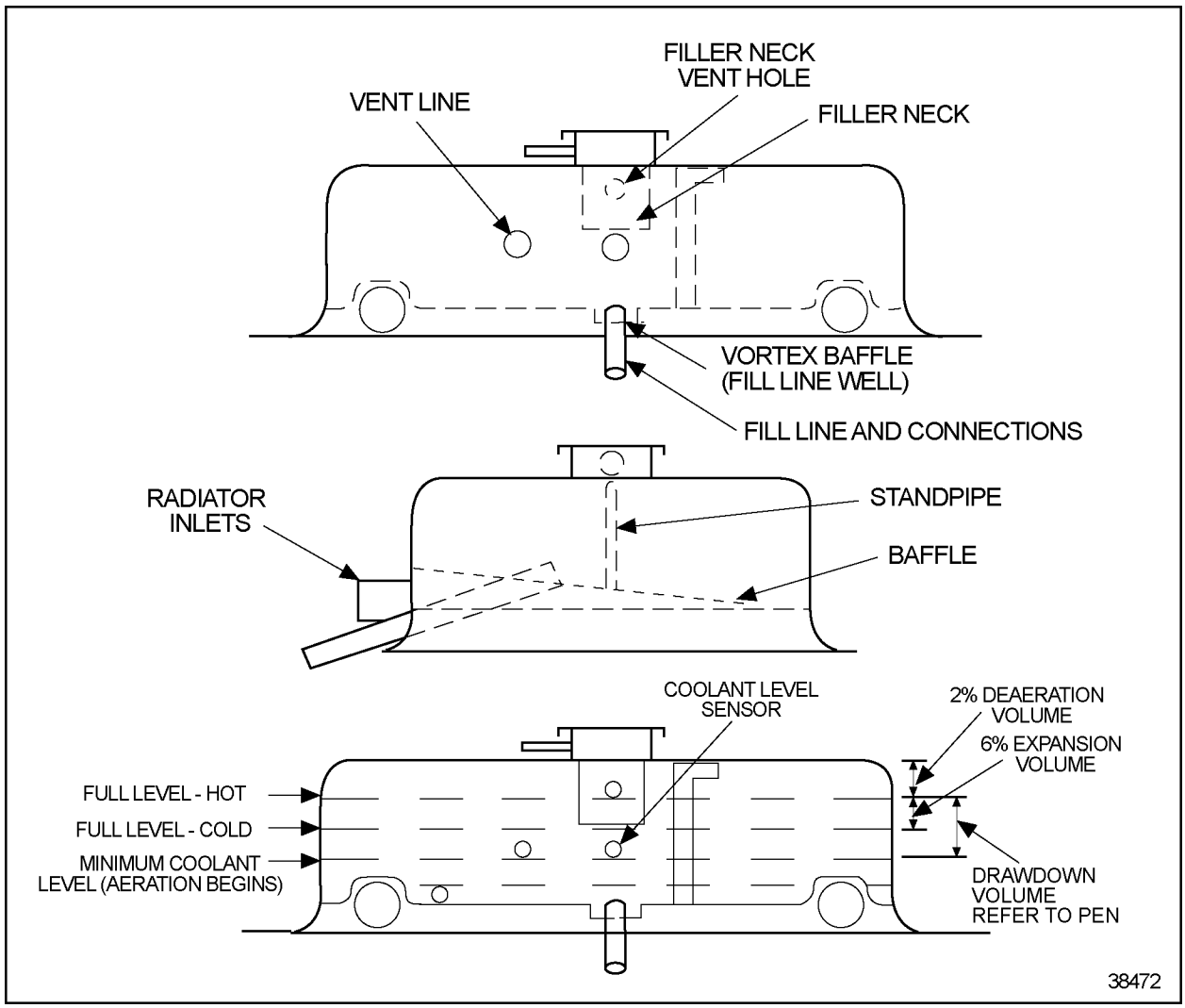

Figure 8-21 Rapid Warm-up Down Flow Radiator Top Tank

The guidelines for the design of an integral top tank are listed in tables.

All information subject to change without notice.
DDC-SVC-MAN-0073 Copyright © 2009 DETROIT DIESEL CORPORATION

https://truckmanualshub.com/

Component	Guidelines
Standpipe(s)	Locate the standpipe(s) as far away from radiator inlet(s) as practical and center over core. This is the area of least coolant turbulence, thus best for separating air out of the coolant.
	Use 1 or 2 standpipes with 0.25 in. (6.35 mm) inside diameter (general rule).
	Bottom of tube *must not* protrude below baffle.
	Top of tube must extend above hot full coolant level. The flow *must* be directed away from the low coolant level sensor, as well as the filler neck and/or pressure relief valve opening. This minimizes coolant loss.
Baffle	A clearance of 1 in. (25.4 mm) or more should be maintained between the top of the radiator core and the bottom of the top tank baffle. This produces a good transition of the coolant flow and enhances air separation from the coolant.
	Seal baffle completely so the only flow path between the deaeration tank and the radiator core is through the standpipe(s). This is essential for proper engine warm-up, preventing top tank coolant agitation, and providing a positive head on the water pump.
Vortex Baffle	Use a vortex baffle to prevent formation of a coolant vortex. This also permits maximum usage of top tank coolant volume.
	A vertical baffle is preferred. Horizontal vortex baffles at the fill line opening may hinder the venting of trapped air.
Fill Line and Connections	The recommended minimum inside diameter is 1 in. (25.4 mm).
	Fill line connections (fittings) *must not* reduce the minimum inside diameter requirement.
	Locate the fill line as low as possible above the baffle and at the center of the tank. This minimizes uncovering the fill opening and drawing air into the cooling system during vehicle operations.
	Make the engine connection as close to the water pump inlet as practical. This will provide maximum head to the water pump and minimize heat migration to the radiator core, resulting in quicker engine warm-up. Avoid connecting the fill line to the coolant bypass circuit. A continuous downward slope (including fittings) *must* be maintained from the top tank to the water pump inlet to ensure good filling capabilities.
Vent (deaeration) Line – High Position (above coolant level)	Locate the vent line at the top of the top tank above the coolant level in the deaeration space.
	The recommended line size is 3/16 in. (4.76 mm) inside diameter
	Do not direct deaeration line coolant flow toward the fill neck, pressure relief valve openings, or low coolant level sensor
	All vent lines must maintain a continuous downward slope
Radiator Inlet	Locate the radiator inlet as low as possible with at least the lower half of the inlet below the baffle level to minimize air trapped during fill.
	The inside diameter of the inlet should match the inside diameter of the thermostat housing.
	Design the radiator inlet to uniformly spread coolant under the baffle.
	The radiator inlet *must* be sealed from top tank
	No vent holes. Extend the fill neck into the tank to establish the cold coolant full level, allowing for expansion (6%) and deaeration (2%) volume.

Table 8-3 Top Tank Component Guidelines — Standpipe(s), Baffle, Vortex Baffle, Fill Line and Connections, Vent Line, and Radiator Inlet

 Copyright © 2009 DETROIT DIESEL CORPORATION

https://truckmanualshub.com/

Component	Guidelines
Fill Neck	Select the fill neck size capable of accepting highest rated pressure cap required for application
	The fill neck cap *must* provide safe release of system pressure upon removal of the cap when a separate pressure relief valve is used.
	Locate the fill neck at the top center of the top tank. This will ensure a complete fill if unit is in a tilted position.
Fill Neck Vent Hole	A 1/8 in. (3.18 mm) vent hole located at the top of the fill neck extension is required for venting air and preventing coolant loss.
Low Coolant Level Sensor	Location *must* be above the satisfactory drawdown coolant level. This is generally a height representing 98% of the drawdown quantity.
	Coolant flow and/or splash from deaeration line and standpipe(s) *must not* contact sensor. A shroud around the sensor may be beneficial.
	Locating the sensor in the middle of the tank will minimize tilt operation sensitivity.

Table 8-4 Top Tank Component Guidelines— Fill Neck, Fill Neck Vent Hole, and Coolant Level Sensor

General guidelines for top tank design, critique, or troubleshooting are:

- □ Increasing top tank depth permits maximum usage of coolant volume and reduces tilt operation problems.
- □ Consider hose fitting inside diameters when determining vent and fill line inside diameter requirements.
- □ Low fill line flow velocity (large inside diameter line) will generally improve drawdown capacity and maintain higher pressure on the water pump.
- □ Oversized and/or excessive number of deaeration line(s) and standpipe(s) can result in poor deaeration and drawdown capabilities and increases coolant flow bypassing the radiator core.
- □ Undersizing deaeration line(s) and standpipe(s) may not provide adequate deaeration and they can become plugged easier.
- □ Make observations of top tank agitation, deaeration and fill line(s), flow direction, and velocity during both open and closed thermostat operations (throughout engine speed range), to determine satisfactory system design. The observations are especially helpful during fill and drawdown evaluation tests.
- □ A sight glass in the radiator top tank to determine proper coolant level will eliminate unnecessary removal of the radiator cap.

8.14.1.5 Remote Tank

The design of the remote tank *must* provide the same features as the integral top tank design. The guidelines for the radiator inlet tank are listed in the following table.

All information subject to change without notice.
DDC-SVC-MAN-0073 Copyright © 2009 DETROIT DIESEL CORPORATION

https://truckmanualshub.com/

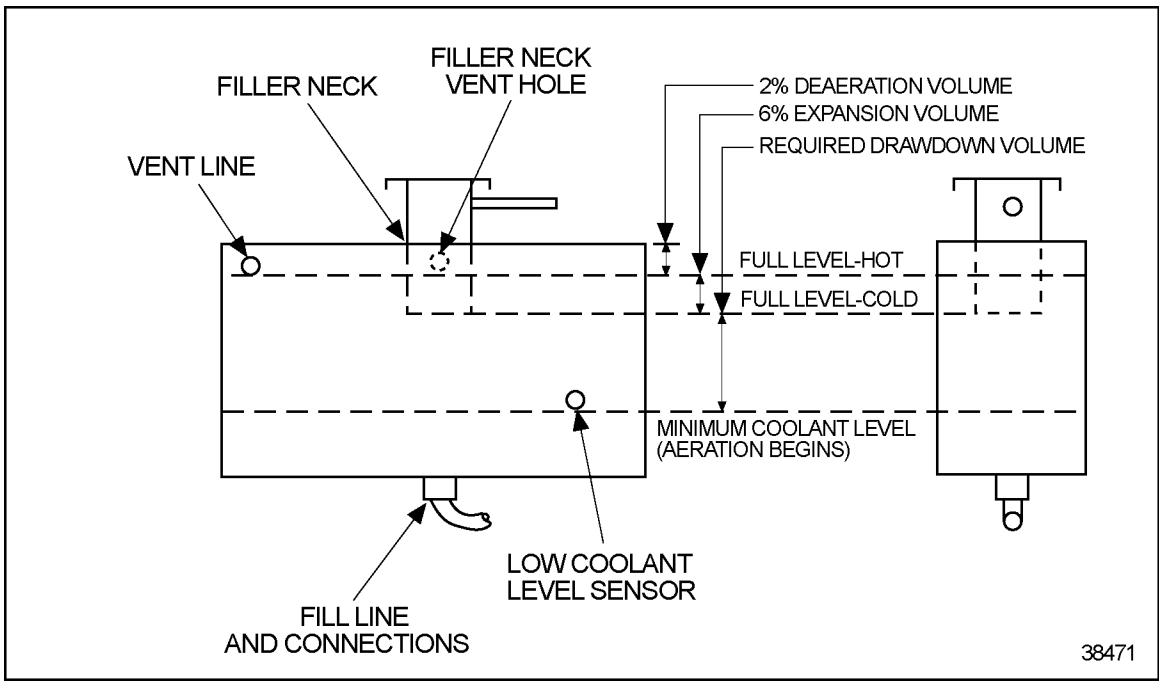

Figure 8-22 Remote Surge Tank Design for Rapid Warm-up Cooling System

Component and Location	Guidelines
Radiator Inlet Tank	*Must* be large enough so air can be separated from the coolant.
	The deaeration line from the radiator inlet tank to the remote/top tank *must* be at the highest point of each and generally as far away from the inlet as practical.
Location	Locate tank as high as practical. The bottom of the tank should be above the rest of the cooling system. This will prevent coolant level equalization problems.
	Generally, low mounted tanks make filling the system more difficult, especially near the end of the fill, because of small head differential. Also, equalization of the coolant level occurs during engine stop or low speed operation.

Table 8-5 Component Design and Location Guidelines for the Remote Top Tank

 Copyright © 2009 DETROIT DIESEL CORPORATION

https://truckmanualshub.com/

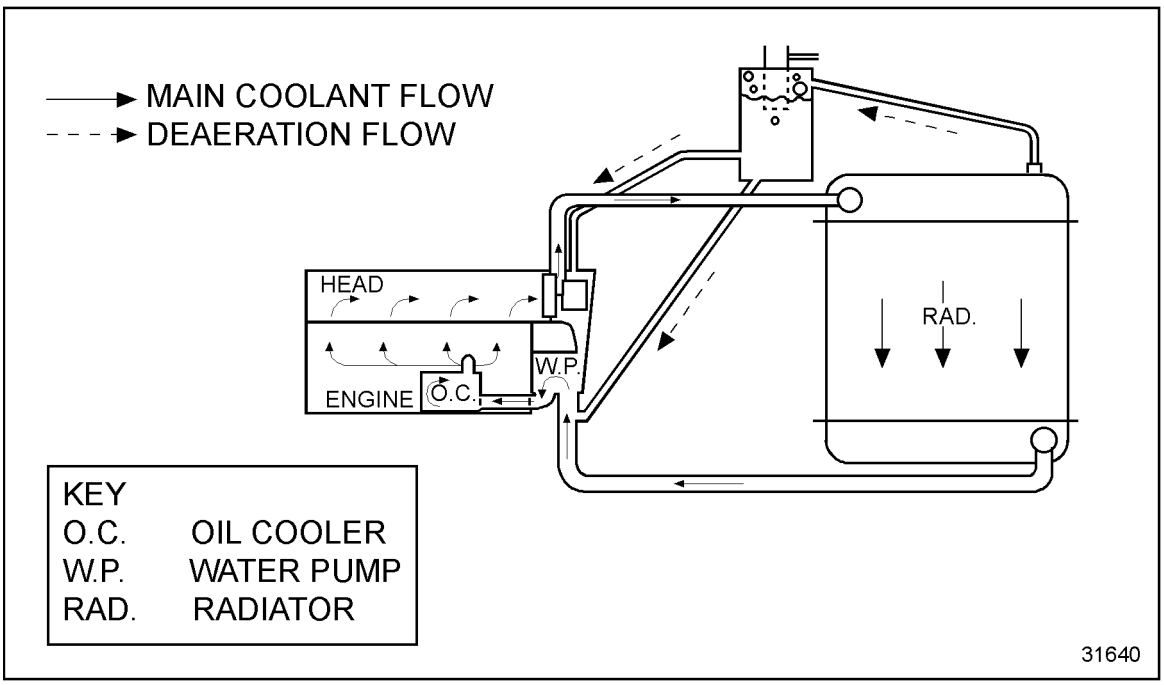

Figure 8-23 Down Flow Radiator Inlet Tank Deaeration Line Boss Position

8.14.1.6 Radiator Bottom Tank

Consider the following guidelines when designing the radiator bottom tank.

- Locate the coolant opening diagonally opposite the inlet tank opening or as far away as is practical. This provides uniform distribution of the coolant across the core and prevents short circuiting.

All information subject to change without notice.
DDC-SVC-MAN-0073 Copyright © 2009 DETROIT DIESEL CORPORATION

https://truckmanualshub.com/

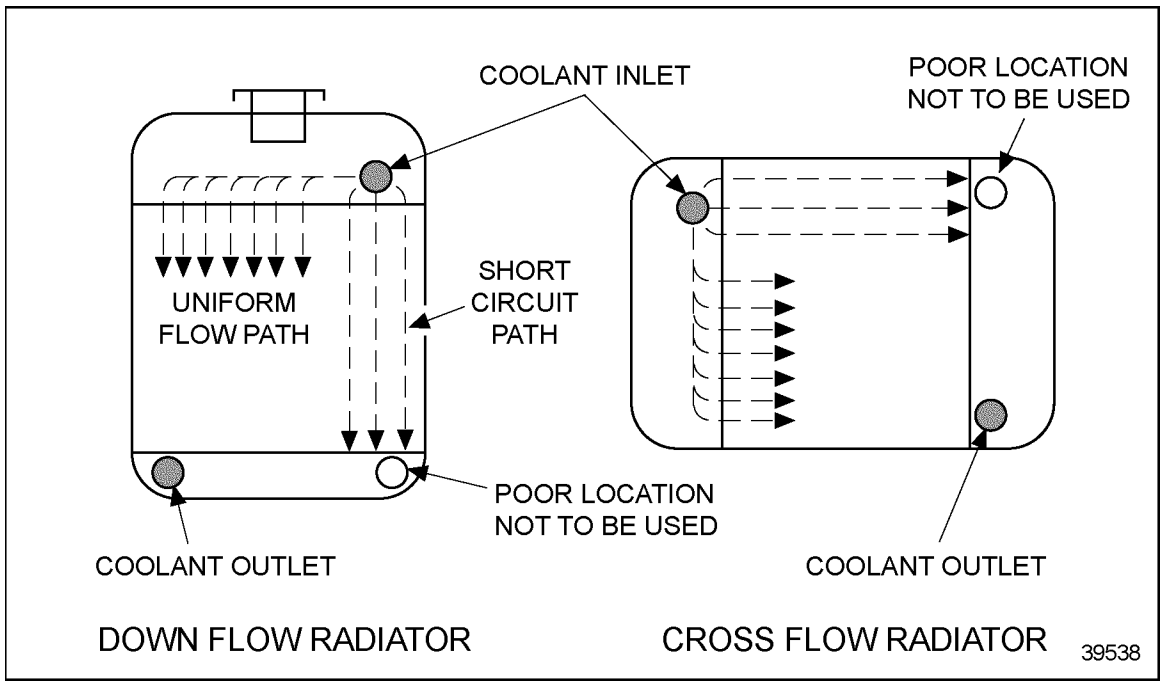

Figure 8-24 Coolant Inlet/Outlet Locations

- □ Inside diameter of outlet *must* be greater than, or equal to respective inlet connections.
- □ A well rounded coolant outlet exit area is preferred to minimize restriction and aeration.

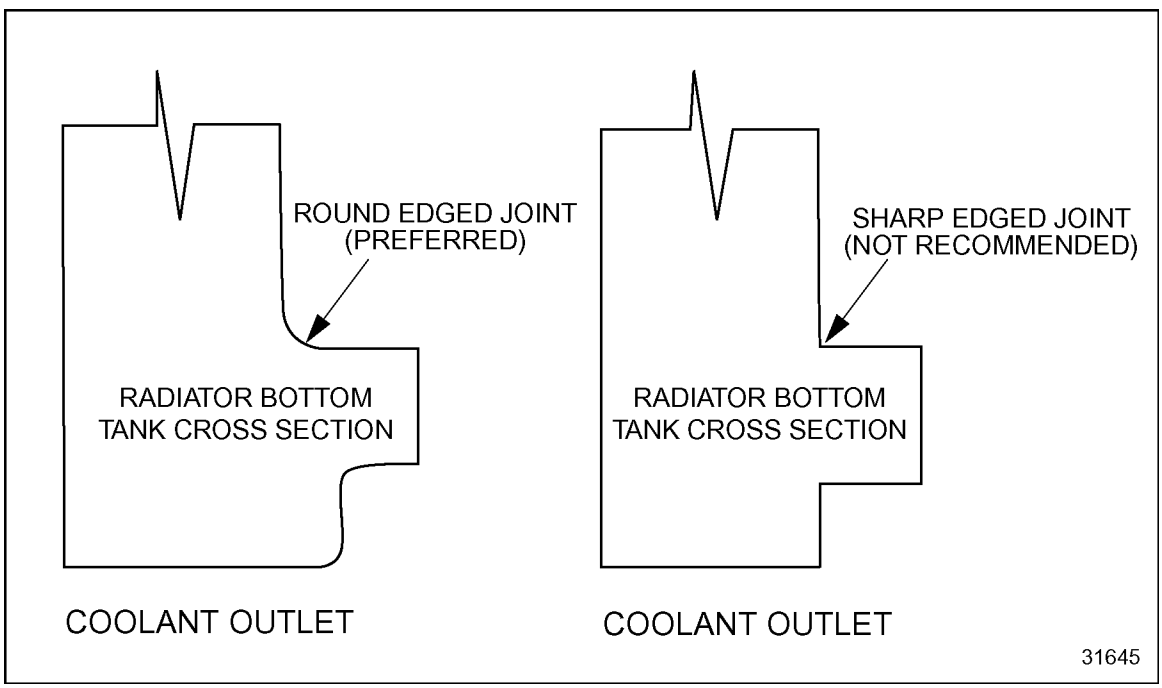

Figure 8-25 Radiator Outlet Contour

- □ Depth of the tank should be no less than the diameter of the outlet pipe to minimize restriction.

 Copyright © 2009 DETROIT DIESEL CORPORATION

https://truckmanualshub.com/

- Locate a drain plug/cock on the lowest portion of the cooling system to ensure complete draining and removal of any sediment (remember that the bottom tank may not be the lowest point).

8.14.1.7 Coolant Pressure Control Caps and Relief Valves

Pressurizing the cooling system:

- Reduces boiling
- Prevents coolant loss due to evaporation
- Maintains water pump performance

Pressurization is obtained by the expansion of the coolant as it is heated and controlled through the use of an integral pressure/fill cap or a separate relief valve.

NOTICE:
System pressurization will not occur if pressure/fill cap is installed when coolant is hot.

Locate the pressure control device high in the deaeration tank above the hot coolant level to minimize coolant loss and dirt contamination of the relief valve seat.

WARNING: HOT COOLANT
To avoid scalding from the expulsion of hot coolant, never remove the cooling system pressure cap while the engine is at operating temperature. Wear adequate protective clothing (face shield, rubber gloves, apron, and boots). Remove the cap slowly to relieve pressure.

The pressure valve (in the normally closed position) should maintain top tank pressure to within +/- 6.9 kPa (+/- 1 psi) of the rating stamped on top of the cap/valve. The valve will lift off the seat as pressure exceeds the specified rating.

All information subject to change without notice.
DDC-SVC-MAN-0073 Copyright © 2009 DETROIT DIESEL CORPORATION

https://truckmanualshub.com/

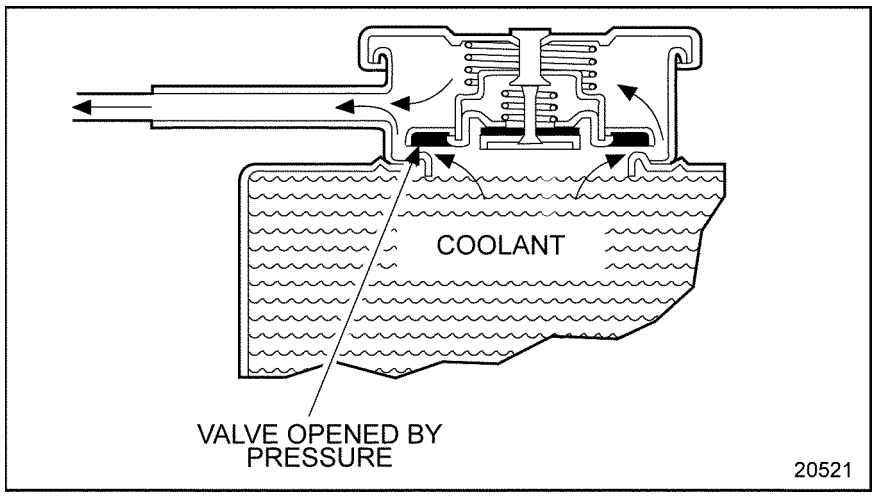

Figure 8-26 Pressure Control Cap — Pressure Valve Open

A vacuum actuated valve is incorporated in the assembly to prevent collapse of hoses and other parts as the coolant cools.

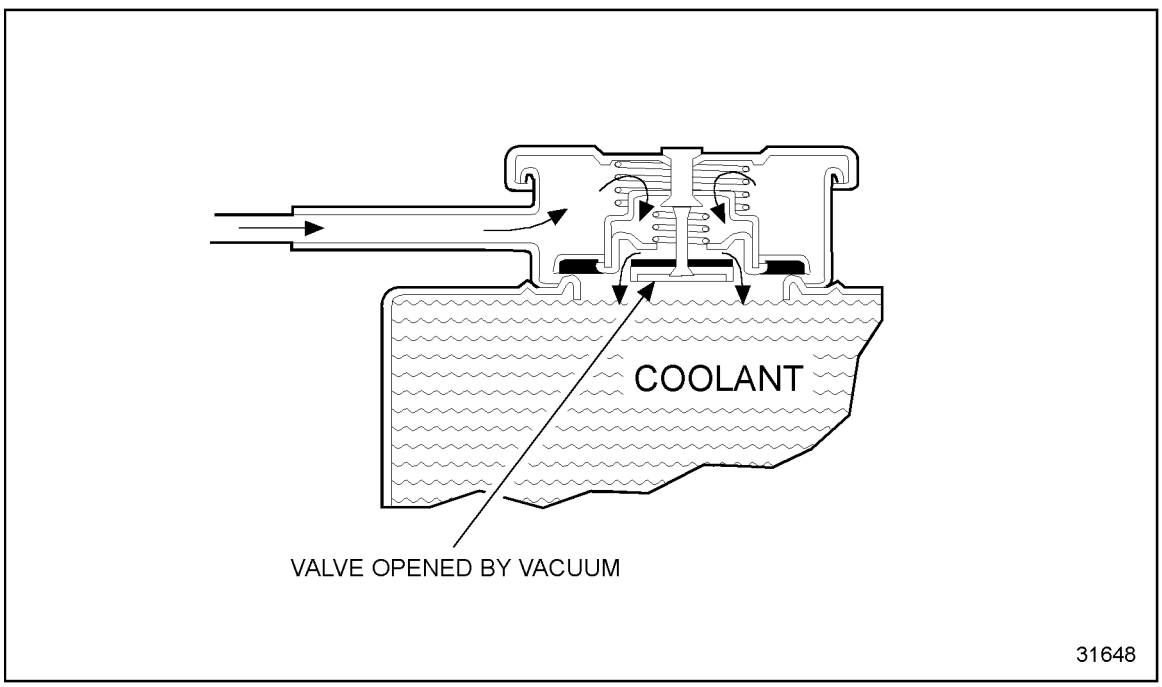

Figure 8-27 Pressure Control Cap — Vacuum Valve Open

The filler neck cap *must* provide for a safe release of the pressure upon cap removal if a separate pressure relief valve is used.

Inspect the valve/cap, periodically, to ensure components are clean, not damaged, and in good operating order.

 Copyright © 2009 DETROIT DIESEL CORPORATION

https://truckmanualshub.com/

A 82.7 kPa (12 psi) pressure cap is required for most systems and applications. See www.detroitdiesel.com to verify required minimum pressure cap rating. Consider higher pressure rated caps for operation at increased altitudes.

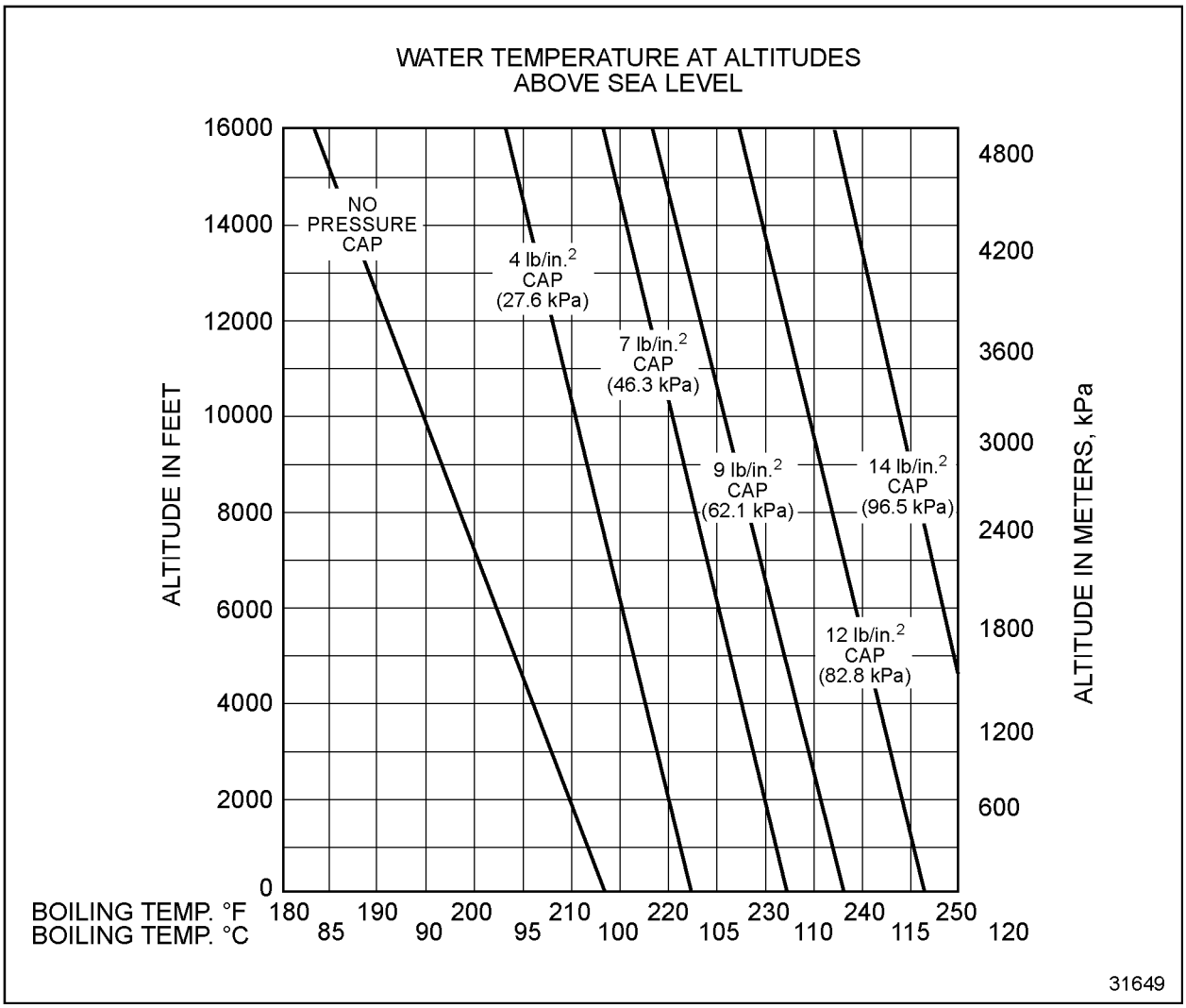

Figure 8-28 Effect of Altitude and Pressure Caps

8.14.1.8 Thermostat

A full blocking thermostat is used to automatically regulate coolant temperature by controlling the coolant flow to the radiator and engine bypass circuit. A full blocking thermostat design in the full open position (15° to 17°F [8° to 9°C]) above the start to open temperature) controls the engine bypass circuit, and provides maximum coolant flow to the radiator.

The start-to-open thermostat temperature varies with the rating and model. The engine coolant temperature will be controlled at the thermostat start to open value, under normal operating conditions.

All information subject to change without notice.
DDC-SVC-MAN-0073 Copyright © 2009 DETROIT DIESEL CORPORATION

https://truckmanualshub.com/

NOTICE:
Never operate the engine without thermostats.

8.14.1.9 Coolant Sensor Devices

Engine coolant temperature monitors (gages, alarms, shutdowns, fan and shutter control switches, etc.) *must* be durable, reliable and accurate. Submerge the probe completely in a high flow stream to sense uniform coolant temperature. Locate the probe in an area without air pockets, or mount it in a place where it will not be affected by coolant being returned from parallel circuits such as heater, air compressor, and aftercooler return lines.

The coolant temperature monitor may not respond fast enough to prevent engine damage if a large quantity of coolant is suddenly lost, or if the water pump becomes air bound. Low Coolant Level Sensors are mandatory with DD Platform engines.

Temperature Gauges: Every temperature gage should have sufficient markings to allow an operator to determine actual operating temperature. The temperature range should go beyond 99°C (210°F) so the operator will know if the maximum coolant temperature is being exceeded. Maintain accuracy of +/- 3°C (5°F) to prevent inaccurate indication of either hot or cold running engine conditions.

Temperature Alarms: An auxiliary warning device (audible or visible) should be included if a digital gage is used. Set temperature alarm units at coolant temperature level that is 3°C (5°F) above the maximum allowable coolant temperature. Accuracy should be +/- 3°C (5°F). Locate each alarm sensor before the thermostat. Special considerations, including testing *must* be done when a coolant recovery system is used.

Temperature Shutdowns: Set temperature shutdown devices for a coolant temperature level of 104°C (220°F). Accuracy should be +/- 1°C (2°F).

Low Coolant Level Sensor: Locate the sensor for low engine coolant level in the top tank. See tank design section for additional recommendations.

Shutter Control Switches: Mount shutter switches before the engine thermostat so they can sense engine coolant temperature. The various temperature control devices (shutters, fan drives and thermostats) *must* operate in proper sequence to prevent coolant temperature instability or overheat conditions.

The recommended temperature settings of the various coolant sensor devices can be seen in the following illustration.

 Copyright © 2009 DETROIT DIESEL CORPORATION

https://truckmanualshub.com/

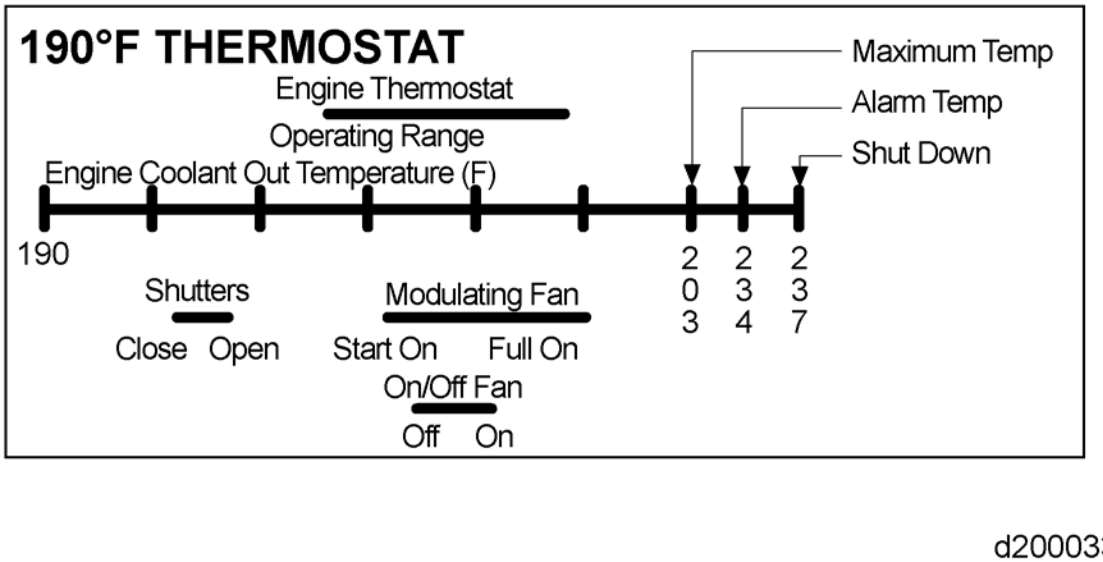

Figure 8-29 Nominal Settings For Coolant Temperature Control Devices — 190°

8.14.1.10 Coolant Recovery System

Use the coolant recovery tank system only when adequate expansion, drawdown, and deaeration volume cannot be designed into the radiator or remote top tanks.

All information subject to change without notice.
DDC-SVC-MAN-0073 Copyright © 2009 DETROIT DIESEL CORPORATION

https://truckmanualshub.com/

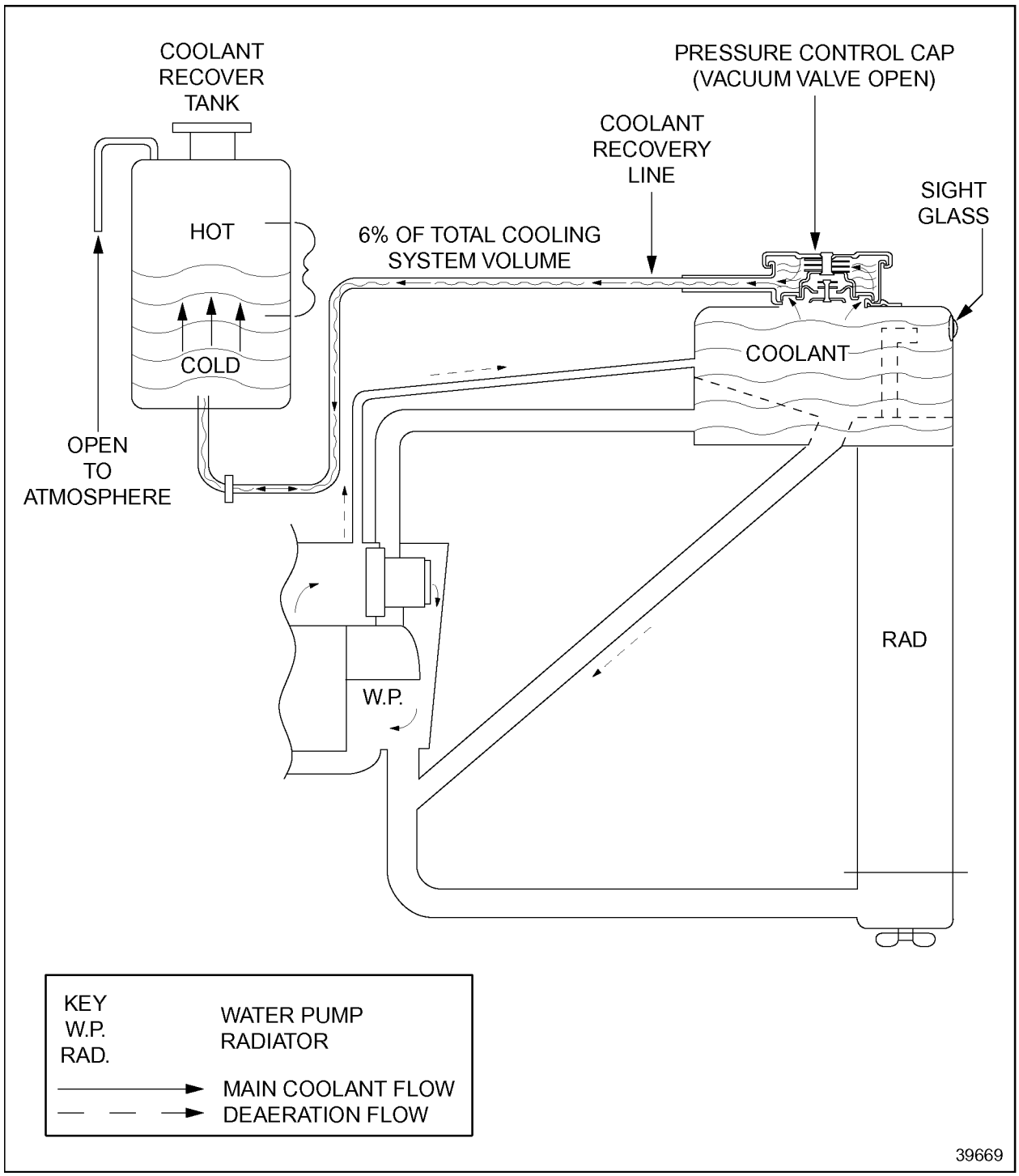

Figure 8-30 Cooling System Design (Warm-up — Closed Thermostat)

 Copyright © 2009 DETROIT DIESEL CORPORATION

https://truckmanualshub.com/

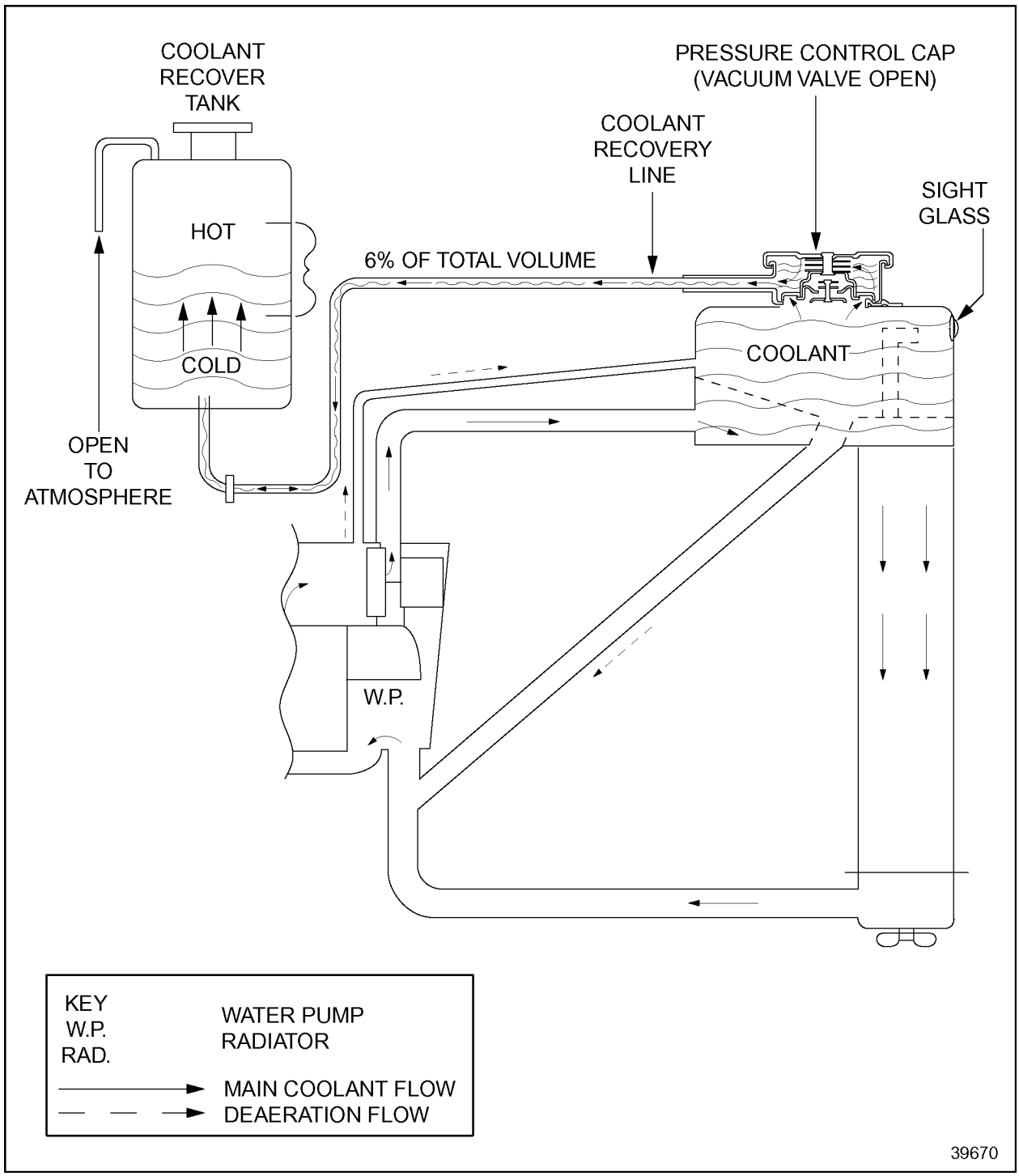

Figure 8-31 Cooling System Design (Stabilized Temperature — Open Thermostat)

The total coolant volume increases as the engine coolant temperature rises. The pressure valve in the pressure control cap will open due to this pressure causing coolant to flow into the coolant recovery tank.

All information subject to change without notice.
DDC-SVC-MAN-0073 Copyright © 2009 DETROIT DIESEL CORPORATION

https://truckmanualshub.com/

When the tank is open to the atmosphere, the coolant will be drawn back into the top tank through the vacuum valve in the pressure control cap when the coolant temperature decreases. The total coolant volume decreases as the engine coolant temperature falls.

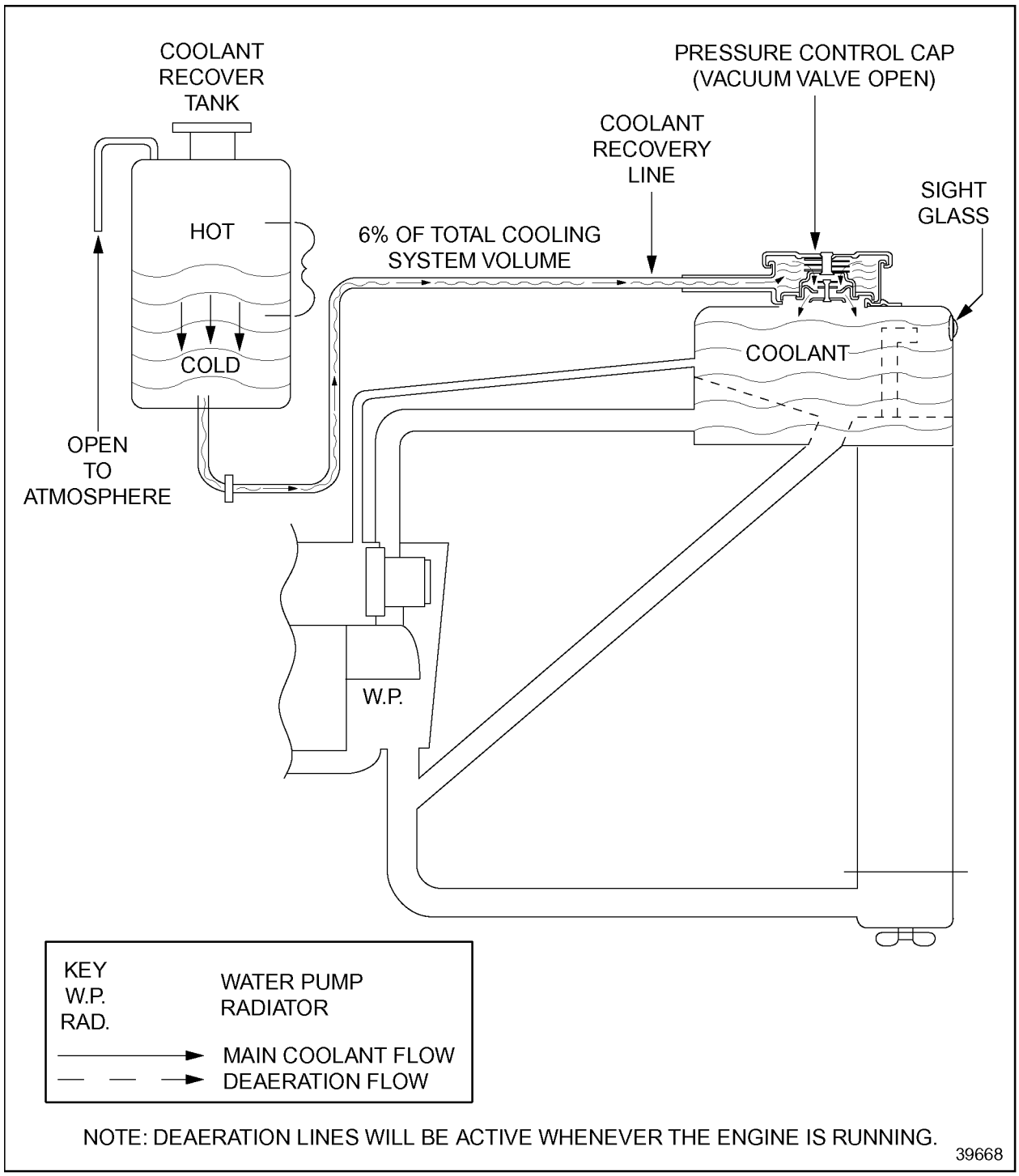

Figure 8-32 Cooling System Design (Cool-down — Closed Thermostat)

 Copyright © 2009 DETROIT DIESEL CORPORATION

https://truckmanualshub.com/

The coolant recovery tank *must* have sufficient volume to meet the coolant expansion requirements of the entire cooling system. A minimum of 6% capacity of the total cooling system volume should exist between the hot and cold levels in the recovery tank.

Mount the coolant recovery tank as close as possible to the pressure control cap.

Locating the tank as high as possible with respect to the control cap may make leaks easier to find and may prevent air from being drawn into the system.

The air-tight line connections become more crucial when the tank is mounted low. Should a leak occur under these conditions air could be drawn into the system.

The coolant recovery line between the tank and radiator is typically 0.25 in. (6.35 mm) I.D. Connect this line as close to the bottom of the tank as possible. A standpipe may be used in the tank to prevent sediment from being drawn into the cooling system.

Meet the following design criteria to achieve a properly functioning coolant recovery system:

- □ Use an air tight pressure cap
- □ Install and maintain air tight seals on either ends of the line
- □ Ensure that the coolant level in the tank does not go below the level where the coolant recovery line connects to the recovery tank

Do not visually check the recovery tank because it may give a false indication of the coolant level in the entire cooling system. Use a sight glass in the top tank if a visual check is necessary.

Use a pressure control cap which has a design similar to the cap. A minimum of 1 bar (87.2 kPa, 12 psi) pressure cap is required.

WARNING:

HOT COOLANT

To avoid scalding from the expulsion of hot coolant, never remove the cooling system pressure cap while the engine is at operating temperature. Wear adequate protective clothing (face shield, rubber gloves, apron, and boots). Remove the cap slowly to relieve pressure.

Do not use a cap design in which the vacuum valve opens directly to the atmosphere.

Locate the pressurized control cap at the highest point of the top tank. Do not design a filler neck onto the cap to ensure that air is not trapped at the top of the top tank.

All information subject to change without notice.
DDC-SVC-MAN-0073 Copyright © 2009 DETROIT DIESEL CORPORATION

https://truckmanualshub.com/

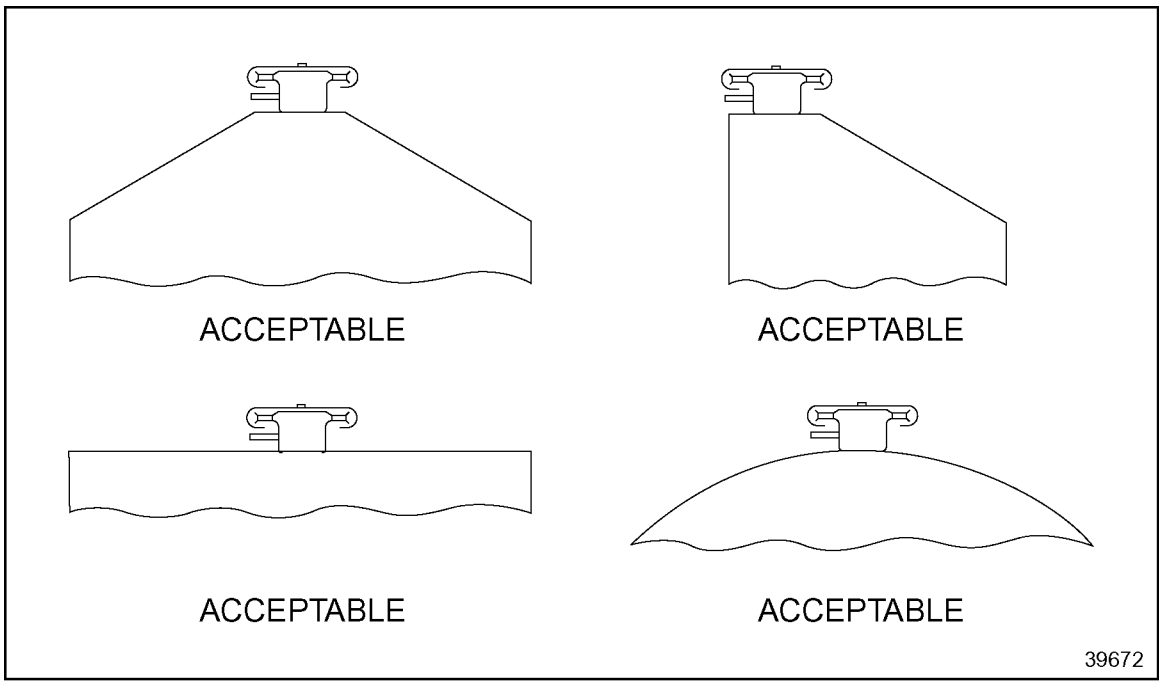

Figure 8-33 Acceptable Top Tank Design

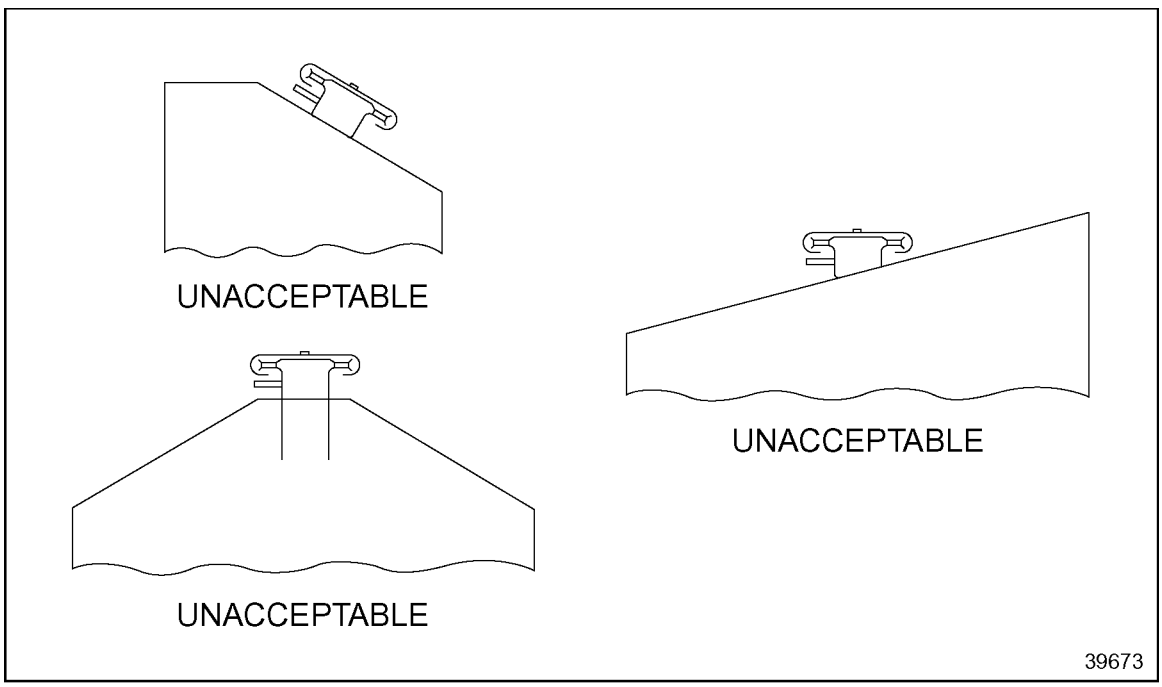

Figure 8-34 Unacceptable Top Tank Design

Connect the deaeration line as high as possible to the top tank when using a coolant recovery system.

Air handling may be poorer and the coolant in the top tank may be more agitated when a coolant recovery system is used.

 Copyright © 2009 DETROIT DIESEL CORPORATION

https://truckmanualshub.com/

Perform the necessary tests to determine whether the cooling system design provides adequate expansion, drawdown, and deaeration volume in the radiator or remote top tanks.

8.14.2 COLD WEATHER OPERATING OPTIMIZATION

Newer fuel efficient engines transfer less heat to the coolant; thus, it is important to maintain proper coolant temperatures for optimum engine and heater performance, especially during severe cold ambient operation. The following guidelines are given to maximize the available heat energy.

8.14.2.1 Engine

To maximize the available heat energy of the engine:

- □ Increase idle speed
- □ Avoid long term idle and/or light load operation (maintain minimum exhaust temperature)
- □ Use under hood air intake for engine (cold weather only)

8.14.2.2 Vehicle

To maximize the available heat energy of the vehicle:

- □ Auxiliary oil coolers *must not* be located in radiator outlet tank
- □ Seal operator's compartment interior to eliminate any direct cold outside air source
- □ Consider full winterizing package for maximum comfort level
  - □ Thermal windows
  - □ Insulate walls, roofs, floors, doors, etc.
  - □ Reduce exposed interior metal surfaces
  - □ Auxiliary fuel fired coolant heater
- □ Install shutters only as a last effort

8.14.2.3 Cooling System

To maximize the available heat energy of the cooling system:

- □ Use optimized Rapid Warm-up System
- □ Set coolant antifreeze concentration correctly

8.14.2.4 Heater Circuit

To maximize the available heat energy of the heater circuit:

- □ Use low restriction, high efficiency cores
- □ Optimize plumbing to give minimum restriction to coolant flow

All information subject to change without notice.
DDC-SVC-MAN-0073 Copyright © 2009 DETROIT DIESEL CORPORATION

https://truckmanualshub.com/

- Do not hinder air side restriction air flow for good distribution of heat
- Use inside recirculated air (if window fogging is not a problem)
- Use booster water pump if required
- Do not place fuel heaters in the cab/sleeper heater circuits
- Core and air ducts should favor defrost operation and driver/passenger comfort

Refer to www.detroitdiesel.com installation data for recommended heater connect points.

8.14.3 COOLANT HEATERS

Information on coolant heaters can be obtained from Detroit Diesel Application Engineering.

8.14.4 MULTI-DUTY CYCLE

Cooling systems *must* perform satisfactorily under all operating modes. Consideration *must* be given when an engine is used for prime power under several duty cycles such as cranes, drill/pumping rigs, etc. Cooling system must be sized for the maximum rated load.

8.14.5 OTHER CONSIDERATIONS

Cooling system performance *must* be reevaluated any time engine, cooling system, vehicle components, timing, etc., are changed due to potential increased heat load or reduced cooling system capacity. Conduct a reevaluation of the cooling system if load, duty cycle, or environmental operating conditions are different than originally approved.

8.15 COOLING SYSTEM EVALUATION TESTS

Cooling tests *must* be conducted on all new installations and engine re-powers. The same test *must* be conducted whenever modifications have been made to the engine or cooling system as well as changes in load, duty cycle, or environmental operating conditions. This will verify that the cooling system will perform satisfactorily in the installation by having adequate heat dissipation capability and coolant flow.

A thorough evaluation will require:

- Complete description and documentation of the system
- Adequate instrumentation
- Proper test preparations
- Accurate tests
- Data analysis and documentation
- Diagnostics (troubleshooting)
- Corrective action (if necessary)

 Copyright © 2009 DETROIT DIESEL CORPORATION

https://truckmanualshub.com/

8.15.1 SYSTEM DESCRIPTION

A complete system description *must* be documented in the Detroit Diesel Vehicle Sign-Off form. Attach cooling system component prints, installation drawings, photographs, and sketches of the overall system to the Vehicle Sign-Off.

This information will assist in determining system approval and also serve as a reference point if future difficulties are encountered.

8.15.2 INSTRUMENTATION

The following instrumentation and materials are required to conduct a complete evaluation of the cooling system:

- □ Thermocouples and associated readout equipment
- □ Pressure gages and associated hoses and fittings
- □ Thermostat
- □ Stop watch
- □ Light (flashlight, trouble light)
- □ Water supply hose
- □ Diagnostic data reader or Detroit Diesel Diagnostic Link™ software
- □ Engine loading method
- □ Tape measure
- □ Flowmeters and associated hardware (if necessary)

NOTE:
All instrumentation *must* be calibrated and in good working condition. Size and range should maintain data accuracy.

8.15.2.1 Thermocouples and Associated Hardware

This section discusses the attributes needed for coolant, air and oil in relation to thermocouples and associated equipment.

Measure air, engine coolant out, and lube oil gallery temperatures until the coolant and engine lube oil temperatures are fully stabilized. Other temperature measurements such as engine coolant in, engine intake air, and exhaust temperatures may be measured to aid in troubleshooting cooling system deficiencies.

All thermocouples, wires, and readout equipment *must* be compatible. All junction points should have wire insulation completely removed, cleaned, and securely joined for good electrical continuity. Polarity *must* also be correct.

Use calibrated matched pairs to obtain accurate temperature differential values.

All information subject to change without notice.
DDC-SVC-MAN-0073 Copyright © 2009 DETROIT DIESEL CORPORATION

https://truckmanualshub.com/

A digital readout is preferred and should have 12V (DC) and 110V (60Hz AC) capability. A remote multi-channel switch can be wired into the circuit if the readout box does not have sufficient positions for all the thermocouples.

Location of the thermocouples is critical. The thermocouples *must* protrude into a high flow path and not touch surrounding surfaces. Ambient air thermocouples *must* be shielded from direct sunlight and not sense any radiated or recirculated heat sources. Radiator thermocouples *must* also be shielded from sunlight. The sump thermocouple *must* be in the oil while the engine is running.

8.15.2.2 Pressure Gauges and Associated Hardware

To measure water pump inlet pressure, use a381 mm Hg to +206.8 kPa (15 in. Hg, +30 psi), compound gage or 72.6 cm (30 in.) or greater “U” type manometer.

Additional pressure measurements may be required for analysis of the system.

Use a vent at each gage to expel all entrained air and water and ensure no blockage in the circuit.

All hoses *must* be full of the substance being measured.

NOTE:
Locating gages at the same height as the measurement point eliminates the need to correct the readings.

Hose length should be as short as is practical.

8.15.2.3 Thermostat

Both blocked open and operating thermostats are required. A thermostat *must* be blocked open to the proper dimension for obtaining correct data. Full blocking thermostats *must* be opened so the coolant bypass circuit is completely shut off. Make a visual check. The oil cooler bypass thermostat *must* be blocked to the minimum travel distance at full open temperature. Inspect and replace thermostat seals if necessary.

 Copyright © 2009 DETROIT DIESEL CORPORATION

https://truckmanualshub.com/

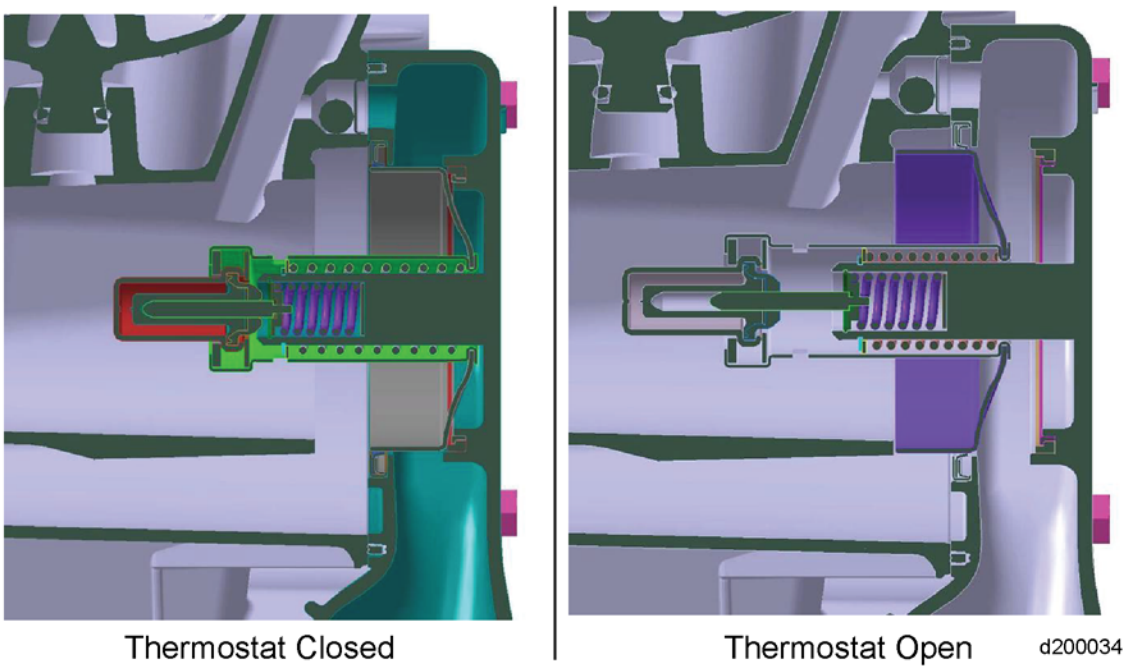

Figure 8-35 Thermostat

8.15.2.4 Sight Glass and Transparent Tubing

Observation of coolant aeration, flow direction, and velocity greatly assists in analyzing test results and determining system acceptability.

Install a sight glass in the engine water out line between thermostat housing and radiator inlet.

NOTE:
To avoid personal injury such as scalding or eye injury, thick wall transparent tubing must be used. Safety straps must be used with the sight glass and flow meters.

NOTICE:
All connections must be secured carefully and be routed so they do not kink and will not be damaged during testing.

Replace deaeration and fill lines with transparent tubing. It is also helpful to replace coolant return lines on heater, air compressor, filter, coolant conditioner, and other components that use engine coolant.

Sight glass and transparent tubing is useful during fill, drain, capacity check, deaeration, flow and pressure vs. engine speed maps, and drawdown tests. These visual aids should be removed for safety reasons prior to air handling, cooling index, and any other tests where the system is pressurized and high coolant temperatures are expected.

All information subject to change without notice.
DDC-SVC-MAN-0073 Copyright © 2009 DETROIT DIESEL CORPORATION

https://truckmanualshub.com/

8.15.2.5 Graduated Container

An 3 gal (11 L) bucket, graduated in 1 qt. (.95 L) increments is recommended for most cooling systems.

The container is needed to determine total cooling system capacity, measure coolant removed during drawdown test, and coolant expelled during air handling test, and measuring water supply flow rate for fill test.

8.15.2.6 Pressure Cap

The pressure relief cap/valve *must* be functional and develop rated pressure.

8.15.2.7 Stop Watch

A stop watch is used in conjunction with a graduated bucket to set flow rate for fill test and to record time to expel all entrained air after filling the system (deaeration time).

8.15.2.8 Light

A flashlight or trouble light held against the sight glass or transparent tubing is helpful in observing coolant aeration. A light is also useful to look for top tank coolant agitation.

8.15.2.9 Water Supply and Hose

A water supply and hose capable of flowing at minimum 3 gal/min. (11.35 L/min) should be available to conduct continuous and interrupted fill tests. A flow meter that can regulate rate and measure capacity is ideal.

Normally a stop watch, graduated bucket, and a valve on the hose are needed to regulate water flow to the required fill rate.

8.15.2.10 Engine Loading Method

The test facility should provide a method for fully loading the engine, in order to conduct cooling index tests. The loading method will vary with application and test site location.

8.15.2.11 Tape Measure

Size and distance measurements of radiator assembly, fan components, and other related hardware are required to complete cooling system evaluation.

 Copyright © 2009 DETROIT DIESEL CORPORATION

https://truckmanualshub.com/

8.15.2.12 Flowmeters and Associated Hardware

Engine coolant out (radiator in) is the preferred location for measuring radiator flow. Inside diameter of flowmeters *must not* cause excessive restriction. Use engine coolant in (radiator out), only as a last resort because of added inlet restriction to the water pump.

The flowmeter should offer low restriction to the coolant flow, regardless of the type used (turbine, differential pressure, etc.). Refer to the manufacturers instructions for correct installation, operation, and limitations of the individual flowmeter.

8.15.3 TEST PREPARATIONS

The following preparations are necessary before conducting the cooling system tests:

1. Confirm all instrumentation and equipment is in good working condition and calibrated.
2. Know how to use and operate all equipment.
3. Understand overall cooling system circuitry and operation, test procedures, and data analysis.
4. Obtain all available information on the specific cooling system to be evaluated such as radiator/top tank assembly print, fan/fan drive, shrouds, circuitry, etc. prior to conducting tests.

⚠ WARNING:

HOT COOLANT

To avoid scalding from the expulsion of hot coolant, never remove the cooling system pressure cap while the engine is at operating temperature. Wear adequate protective clothing (face shield, rubber gloves, apron, and boots). Remove the cap slowly to relieve pressure.

5. Be sure the test unit represents the final complete package to be released.
6. Check coolant concentration and take sample for possible analysis.
7. Drain entire cooling system completely. This may require removing hoses and even blowing air through coolant passages.
8. Flush cooling system with water to remove all residual antifreeze solution. Flush system with a reputable cleaner if it is contaminated.
9. Install instrumentation, sight glass, and transparent tubing.
10. Disarm high temperature and low coolant shutdown devices for these tests. Shutdown and alarm settings should be determined.
11. Modify shutter controls, fan controls, and transmissions, if necessary to perform certain tests correctly.

All information subject to change without notice.
DDC-SVC-MAN-0073 Copyright © 2009 DETROIT DIESEL CORPORATION

https://truckmanualshub.com/

12. Know cooling system requirements (specifications) for the application and engine configuration to be evaluated.
13. Locate test vehicle or equipment on a level surface for all stationary tests (except high gradeability applications).

8.15.4 TYPES OF TESTS

The following tests and evaluations are normally conducted to determine system acceptability:

- Fill and Capability Tests
  - Continuous Fill
  - Interrupted Fill
  - Total System Capacity
  - Draining Capability
  - Water Pump Air Test
  - Deaeration Test
- Drawdown Test
- Water Flow and Pressure Test
- Cooling Index Test

The cooling system *must* be clean. Run qualification tests on a finalized complete package installed in unit or vehicle.

Perform fill tests with closed thermostats, no pressure cap, and heater, filter circuits, etc. open.

The following factors can cause poor filling capabilities and possible water pump air binding problems:

- Fill line routing (horizontal)
- Drooped deaeration lines
- Incorrect deaeration line location on the engine or deaeration tank
- Horizontal vortex baffle located on the engine or deaeration tank at fill line opening
- Routing of coolant lines (drooped) not having a continuous slope
- Coolant trapped in various cooling system components from a previous fill can prevent air from being purged on the refill
- Deaeration tank not the highest cooling system component

8.15.4.1 Continuous Fill

Perform the continuous fill test as follows:

 Copyright © 2009 DETROIT DIESEL CORPORATION

https://truckmanualshub.com/

1. Fill the system with water at a constant 3 gal/min. (11.35 L/min) rate with cooling system completely empty and all drains closed, until fill neck overflows. The fill *must* be timed so the amount of water can be determined.
2. Start engine (no pressure cap) and idle for approximately two minutes.
3. Increase engine speed slowly to high idle and hold for about one minute.
4. Reduce speed to idle and cycle up and down several times.
5. Make continuous observations throughout the test for aeration, coolant flow direction, and coolant agitation in the deaeration tank.
   [a] Stop engine.
   [b] Add coolant as required to achieve cold full level and record amount. Coolant should be at the bottom of the fill neck extension or to the recommended cold full mark at the conclusion of the test. A satisfactory fill will not require more make up volume than the satisfactory drawdown capacity of the system. The amount of water during the initial fill plus the make up will equal the total system capacity.
6. Verify that no flow in either direction occurs in the bleed line from the radiator to a remote mounted deaeration tank system while the thermostat is closed.
   [a] Verify that no air is being drawn down the fill line as a result of improper engine deaeration line size or location in deaeration tank and excessive agitation of the coolant.

8.15.4.2 Interrupted Fill

Perform the interrupted fill test as follows:

1. After completing the continuous fill test, drain approximately half the coolant from a full system and start refilling the system following the previous procedure (3 gpm.) until the fill neck overflows).
2. Start the engine and measure make-up water as described in the continuous fill test.
3. Confirm that make-up water volume does not exceed satisfactory drawdown capacity and that the water pump did not become air bound.

8.15.4.3 Bucket Fill

Perform the bucket fill test as follows:

1. Pour a measured amount of water into the cooling system fill neck as quickly as possible, using the 2–3 gallon bucket. Allow coolant level to come to rest.
2. Repeat this procedure until fill neck overflows. The measured amount of water is the initial fill volume.
3. Start the engine and measure make-up water as described in the continuous fill test.

All information subject to change without notice.
DDC-SVC-MAN-0073 Copyright © 2009 DETROIT DIESEL CORPORATION

https://truckmanualshub.com/

8.15.4.4 Total System Capacity

Perform the total system capacity test as follows:

1. Completely drain cooling system.
2. Fill to cold full level (bottom of fill neck extension), measuring amount (graduated bucket).
3. Start engine and run near rated speed (no load) for several minutes.
4. Stop engine and add water as required (record amount) until system is to the cold full level.

NOTE:
This amount plus original quantity equals total system capacity.

8.15.4.5 Draining Capability

Perform the draining capability test as follows:

1. Cool down engine until the thermostat has fully closed.
2. Drain system from supplied draincocks.
3. Measure coolant removed to determine the amount still in the system. Difficulty on the refill can occur if an excessive amount of coolant remains in the system.
4. Refill system per previous procedure and determine if a satisfactory fill can be obtained.

NOTICE:
Cooling systems that cannot be drained completely may also experience freeze cracking of components. Additional drain(s) and a caution notice should be provided by the OEM to ensure complete draining of the cooling system.

8.15.4.6 Water Pump Binding Test

Determine if the water pump became air bound (pump discharge pressure goes to zero or does not vary with speed change) after initial fill. If so, stop the engine immediately and determine the cause. The deficiency should be corrected and test restarted.

8.15.4.7 Deaeration Test

The deaeration test should be run with a blocked open thermostat, no pressure cap, site glass in the coolant out line, clear Tygon™ deaeration line, and coolant at the hot full level. Perform the deaeration test as follows:

1. Restart the engine and run near rated speed.
2. Record time to expel all entrained air (larger than pin head size).
3. Satisfactory deaeration should occur within 30 minutes. If system does not appear to deaerate, check for:

 Copyright © 2009 DETROIT DIESEL CORPORATION

https://truckmanualshub.com/

- □ Coolant agitation in deaeration tank
- □ High water pump inlet suction
- □ Dirty cooling system or contaminated coolant
- □ Exhaust gas leak into coolant
- □ Water pump seal air leak

Determine the expansion and deaeration volume by adding 8% of the total system capacity on top of the cold full level. If this amount of coolant cannot be added to the deaeration tank, cold full level is set too high or the fill neck extension vent hole is not at the top of the tube. If more than 8% can be added, cold full level could be set higher so more reserve coolant volume is available.

8.15.4.8 Drawdown Test

The drawdown test should be run with a blocked open thermostat, no pressure cap unless coolant recovery system is used, a site glass in the coolant out line, and coolant at the hot full level.

1. Record the following data while running at rated engine speed (no load speed if rated cannot be held) and after coolant has been completely deaerated.
   - □ Engine speed
   - □ Coolant removed
   - □ Radiator water flow
   - □ Water pump discharge pressure
   - □ Water pump inlet pressure (suction)
   - □ Engine water out temperature
   - □ Observations for coolant aeration
2. All pressure gages and connecting hoses must be thoroughly bled of air prior to taking data (engine stopped).
3. Take data with system full and thereafter in 1–quart increments. If system capacity is above 100 quarts, 2–quart increments are acceptable. Remove water from high pressure point, preferable water pump discharge.
4. After each incremental draining, check for signs of air in bleed and fill line (transparent) as well as the radiator (in sight glass). If the bottom of the deaeration tank is not above the rest of the cooling system, stop the engine at each increment and check for coolant level equalization. Restart the engine and run again at rated speed. Look for system aeration. The drawdown rating is determined at the first sign of air. There may not be a loss of flow or pressure at this point. Continue removing water until a significant amount of aeration occurs or loss of coolant flow (25%-50%) is recorded.
5. Run at maximum tilt angle for installations that operate at severe tilt angles for long periods of time. The drawdown test has been successfully passed if the amount of coolant drained is greater than 10% of system capacity or 4 qt. (3.8 L), whichever is greater.

All information subject to change without notice.
DDC-SVC-MAN-0073 Copyright © 2009 DETROIT DIESEL CORPORATION

https://truckmanualshub.com/

Application:
Unit No.:
Engine No.:

Observer:
Date:
Test Site:

FLOW AND PRESSURE VS. ENGINE SPEED TEST

Engine Speed (RPM)									
Radiator Flow (GPM)									
Pump Inlet Pr. (PSI)									
Pump Disch. Pr. (PSI)									
Pump Diff. Pr. (PSI)									
Engine Disch Pr. (PSI)									
External Restrict. (PSI)									
Eng. Wtr. Out (°F)									

DRAWDOWN TEST

Engine Speed (RPM)													
Coolant Rem. (qts)													
Pump Inlet Pr. (PSI)													
Pump Disch. Pr. (PSI)													
Radiator Flow (GPM)													
Eng. Wtr. Out (°F)													
Aearation (Yes/No)													
CEL / SEL On (Yes/No)													

42923

Figure 8-36 Sample Static Cooling Test Sheet

 Copyright © 2009 DETROIT DIESEL CORPORATION

https://truckmanualshub.com/

8.15.4.9 Water Flow and Pressure Test

The coolant flow rate through the engine and/or radiator (heat exchanger) must be within 90% of the values published on www.detroitdiesel.com to ensure proper cooling. Care must be taken so coolant shunted away from the engine or radiator to supply cab heaters, air compressors, auxiliary coolers, wet exhaust systems, etc., are not excessive.

Perform the water flow and pressure test with blocked open thermostats, no pressure cap, below 180°F engine water out. Conduct the test with the system at full level and deaerated.

1. Thoroughly bleed all pressure gages and connecting hoses of air (engine stopped) before recording the following data.
   - □ Engine speed, radiator water flow, water pump discharge pressure, water pump inlet pressure (suction), and engine water out temperature
   - □ Observations of bleed and fill lines and deaeration tank (flow, flow direction, aeration)
   - □ Others — depending on application and complexity of the cooling system
2. Start recording data and observations at idle and then in approximately 300-500 rpm increments up to high no load speed. Be sure data is taken at rated full load speed.
3. Observe fill and bleed line for flow direction, and velocity. Note if deaeration tank coolant is being agitated causing air to be drawn down fill line. Excessive agitation can be due to bleed line(s) size or location, size and height of the standpipe(s), vent holes in "doghouse" inlet(s), or top tank baffle design. The bleed line(s) should be located low in the deaeration tank (just above baffle) if flow is backwards from the top tank to the engine
4. Check water flow and pump inlet pressure at rated engine speed and determine if they meet the published requirements found on www.detroitdiesel.com, if you do not have access to www.detroitdiesel.com contact your Distributor.

NOTE:
If non-factory-supplied engine water components are used, such as wet exhaust manifolds, oil coolers, etc., additional flow measurements may be required to ensure coolant flow through cylinder block and heads has not been seriously reduced. Consult DDC Application Engineering for assistance.

8.15.4.10 Cooling Index Test

Perform the cooling index test with a blocked open thermostat and the pressure cap installed.

1. Determine the cooling index requirement (ATW) by subtracting the maximum ambient temperature, other correction (recirculation & radiation), altitude compensation (corrected to sea level — operating altitude x 1°C per 305 m [2°F per 1000 ft.]), and coolant compensation (3°C [6°F] for 50/50 Ethylene Glycol, 4.4°C (8°F) for 50/50 Proplyene Glycol, 0°C (0°F) for water), from the maximum allowed coolant out temperature.
2. Calculate the cooling index measurement by subtracting the true ambient temperature and the altitude compensation, from the coolant out temperature.
3. Start the test with the cooling system at the deaeration cold full level.

All information subject to change without notice.
DDC-SVC-MAN-0073 Copyright © 2009 DETROIT DIESEL CORPORATION

https://truckmanualshub.com/

4. Operate the engine at rated speed and full load. The cooling system *must* be set for maximum cooling. All heat sources that will affect engine coolant or radiator air temperatures must be in operation (fans must be in the full on position, shutters locked full open, appropriate ram air supplied, cab heaters in off position, air conditioner set for maximum cooling, etc.).

NOTE:
Other load points (peak torque, 80% converters efficiency, etc.) may be required depending on the application. This should be determined prior to the test.

5. Various methods of loading the engine to determine cooling index include:
   - □ Driveline dynamometer
   - □ Towing dynamometer
   - □ Chassis dynamometer
   - □ Steep hill/heavy load
   - □ In operation load cycle
   - □ Stationary unit

NOTE:
Test results may be difficult to interpret if wind conditions exceed 10 miles per hour.

6. Calculate a corrected cooling index.

 Copyright © 2009 DETROIT DIESEL CORPORATION

https://truckmanualshub.com/

Application:
Unit No.:
Engine No.:

Observer
:
Date:

Heat Exchanger Descriptions (type, size, configuration):

Fan Description (type, diameter, speed):

Test Operating Conditions:

Coolant:
Ram Air (kph):
Air Cond. (y/n):
Engine Load Method:

Altitude:
Wind Cond. (dir. kph):
Air Cond. Max Load (y/n):

Reading No.	1	2	3	4	5	6	7	8	9	10
Time										
Ambient Air Temperature										
Engine Coolant Out Temperature										
Engine Coolant In Temperature										
Engine Intake Air Temperature										
Lube Oil Gallery* Temperature										
Exhaust Temperature										
Engine Coolant Flow Rate										
External Pressure In										
External Pressure Out										
Engine Speed - RPM										

*preferred, sump as practical - described

Optional Instrumentation for More Detailed System Analysis:

Reading No.		1	2	3	4	5	6	7	8	9	10
Rad. Inlet Air Temperature	UL										
	UR										
	LL										
	LR										
Rad. Outlet Air Temperature	UL										
	UR										
	LL										
	LR										
Air Velocity at Rad. Face	UL*										
	UR*										
	LL*										
	LR*										

*Air velocity need only be measured once for each engine test speed

40404

Figure 8-37 Sample Cooling Index Test Sheets

All information subject to change without notice.
DDC-SVC-MAN-0073 Copyright © 2009 DETROIT DIESEL CORPORATION

https://truckmanualshub.com/

Cooling Index Calculation Sheet

Determining Cooling Index Requirements

Max. Allowed Water Temperature Refer to sheet 2		_____ ˚C (˚F)
Less Max Ambient Air Temperature Specified by OEM		_____ ˚C (˚F)
Less Altitude Compensation Corrected to sea level - Operating altitude x 1˚C per 305 meters (2˚F per 1000 ft)		_____ ˚C (˚F)
Less Coolant Compensation 3˚C (6˚F) fior 50/50 Ethylene Glycol 4.4˚C (8˚F) for 50/50 Propylene Glycol 0˚C (0˚F) for water		_____ ˚C (˚F)
Cooling Index Requirement (ATW)	(Total)	_____ ˚C (˚F)

Cooling Index Measurement Calculation

Average Engine Water Out Temperature		_____ ˚C (˚F)
Less Max Ambient Air Temperature		_____ ˚C (˚F)
Less Altitude Correction Corrected to sea level - Operating altitude x 1˚C per 305 meters (2˚F per 1000 ft)		_____ ˚C (˚F)
Less Coolant Compensation If water is not used during test		_____ ˚C (˚F)
Cooling Index Requirement Achieved	(Total)	_____ ˚C (˚F)

Ambient to Intake Manifold Temperature Difference Calculation

Measured Intake Manifold Temperature		_____ ˚C (˚F)
Less Ambient Air Temperature		_____ ˚C (˚F)
Ambient to Intake Manifold Temperature Difference	(Total)	_____ ˚C (˚F)

40585

Figure 8-38 Cooling Index Calculation Sheet

The most effective way to increase cooling capability is by increasing air flow and preventing hot air recirculation.

 Copyright © 2009 DETROIT DIESEL CORPORATION

https://truckmanualshub.com/

8.15.5 CHARGE AIR COOLING EVALUATION TEST

The air-to-air charge cooling system must be tested to verify that engine air intake temperatures and pressure drop limits can be met as shown on www.detroitdiesel.com, if you do not have access to www.detroitdiesel.com contact your Distributor. This evaluation can be done simultaneously with the engine cooling index text.

A thorough evaluation will include:

- □ Complete description and documentation of the system
- □ Adequate instrumentation
- □ Proper test preparation
- □ Accurate tests
- □ Data analysis and documentation
- □ Diagnostics (trouble shooting)
- □ Corrective action (if necessary)

These tests must be run on all new installations, vehicle re-powers, or whenever modifications have been made to the engine, cooling or air-to-air systems as well as changes in load, duty cycle or environmental operating conditions.

All information subject to change without notice.
DDC-SVC-MAN-0073 Copyright © 2009 DETROIT DIESEL CORPORATION

https://truckmanualshub.com/

Application:
Unit No.:
Engine No.:

Observer:
Date:
Test Site:

Heat Exchanger Descriptions (type, size, configuration):

Fan Description (type, diameter, speed):

Test Operating Conditions:

Ram Air (kph):
Air Cond. (y/n):
Engine Load Method:

Altitude:
Wind Cond. (dir. kph):
Air Cond. Max Load (y/n):

Reading No.	1	2	3	4	5	6	7	8	9	10
Time										
Ambient Air Temperature										
Turbo Compressor Outlet Temp.										
Intake Manifold Air Temperature										
Turbo Compressor Outlet Temp.										
Intake Manifold Pressure										

Optional Instrumentation for More Detailed System Analysis:

Reading No.		1	2	3	4	5	6	7	8	9	10
CAC Rad. Inlet Air Temp.	UL										
	UR										
	LL										
	LR										
CAC Rad. Outlet Air Temp.	UL										
	UR										
	LL										
	LR										
Air Velocity at CAC Rad. Face	UL*										
	UR*										
	LL*										
	LR*										

*Air velocity need only be measured once for each engine test speed

38478

Figure 8-39 Sample CAC Cooling Index Test Sheets

8.15.6 SYSTEM DESCRIPTION

A complete system description must be documented in the Vehicle Sign-Off form. System component prints, installation drawings, photographs, and sketches of the overall system should be attached to the Vehicle Sign-Off.

 Copyright © 2009 DETROIT DIESEL CORPORATION

https://truckmanualshub.com/

This information will assist in determining system approval and also be a reference point if future difficulties are encountered.

8.15.7 INSTRUMENTATION

This section describes the instruments and methods needed to measure the temperatures and pressures of air inlet systems with and without air-to-air charge cooling.

8.15.7.1 Temperature Measurement

Use a precision thermocouple and an appropriate read-out device to measure temperatures.

Thermocouples should be located downstream of the pressure taps.

8.15.7.2 Pressure Measurement

Use a precision gage or a water manometer capable of reading 14 kPa (60 in. H_2O) for $\triangle P$.

Use a piezometer ring to measure static pressure in straight pipe sections.

NOTE:
The piezometer ring should be placed within 12.7 cm (5 in.) of the desired measurement location.

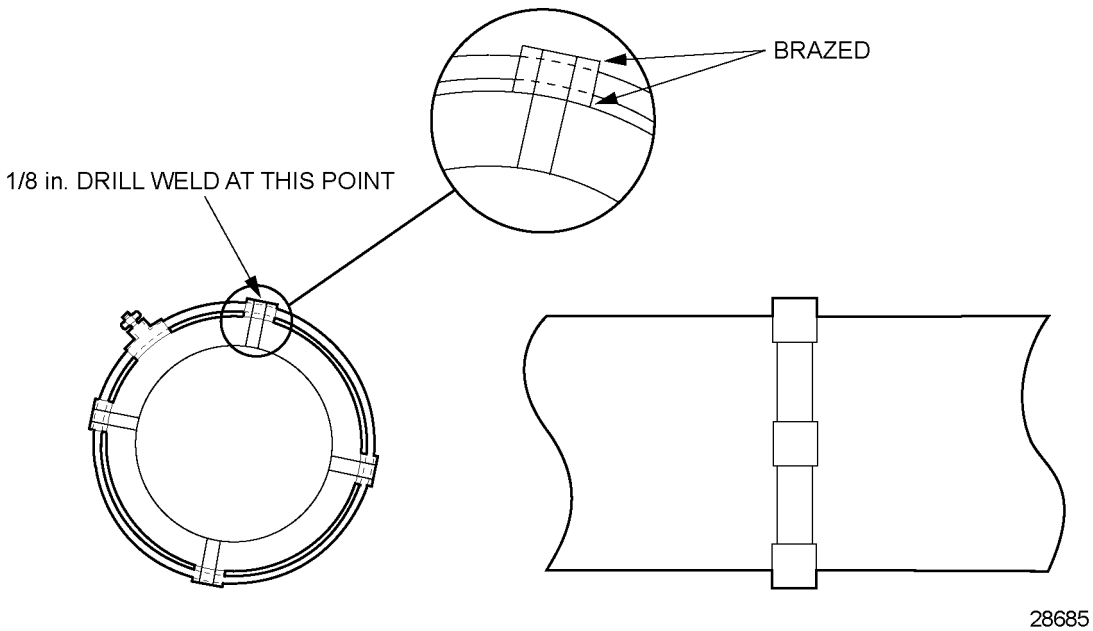

Figure 8-40 Piezometer Ring

All information subject to change without notice.
DDC-SVC-MAN-0073 Copyright © 2009 DETROIT DIESEL CORPORATION

https://truckmanualshub.com/

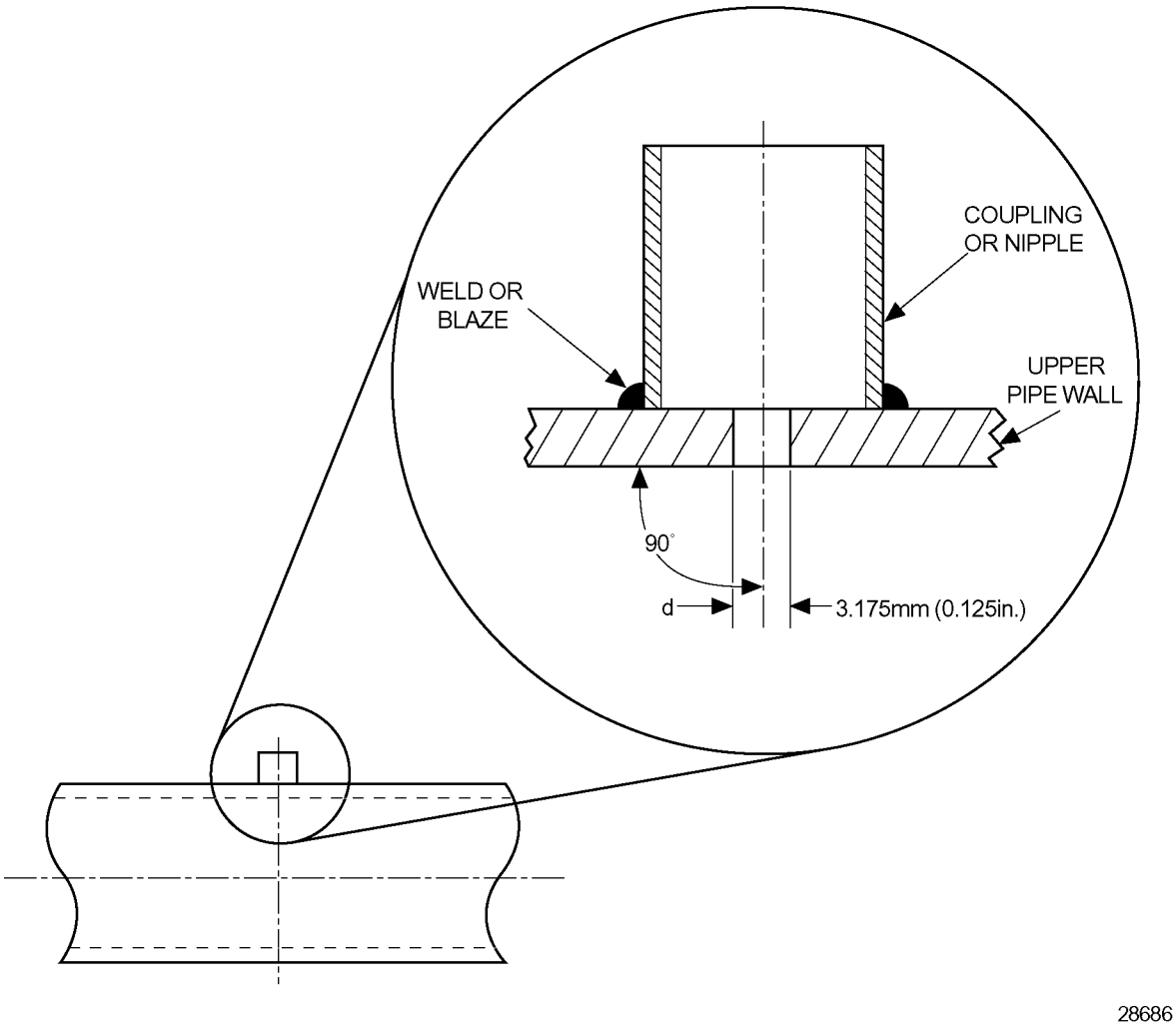

Figure 8-41 Static Pressure Tap

The instrumentation should be placed perpendicular to the plane of the bend where measurement on a bend is unavoidable.

 Copyright © 2009 DETROIT DIESEL CORPORATION

https://truckmanualshub.com/

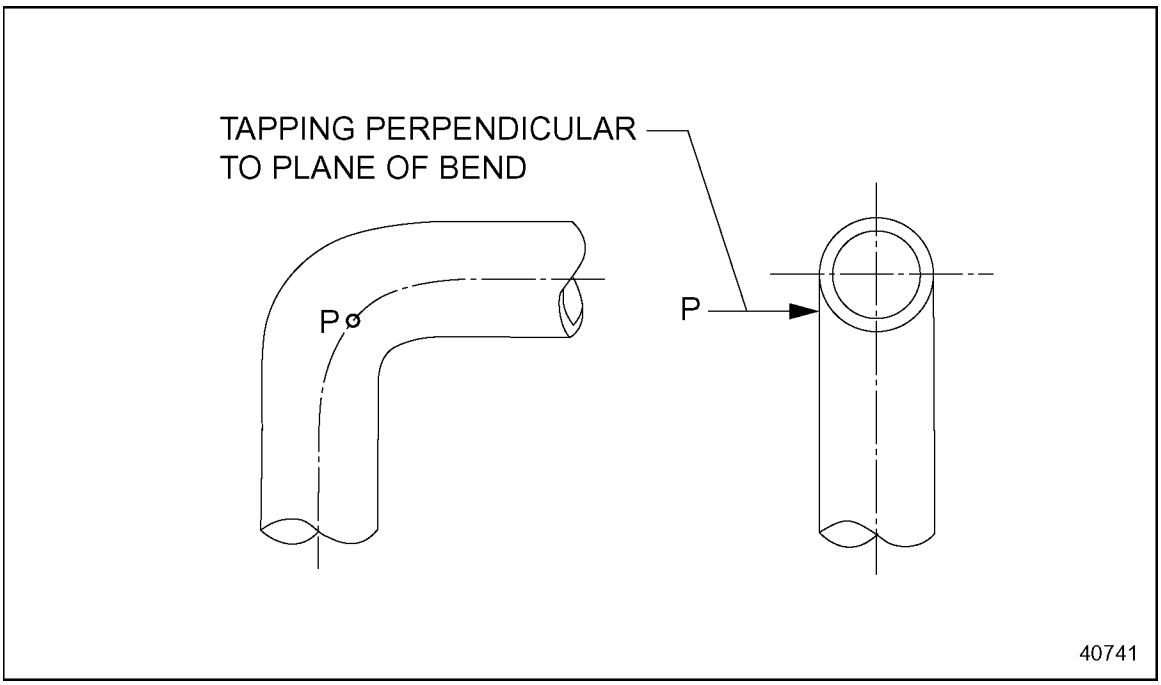

Figure 8-42 Pressure Tap on a Bend

8.15.8 LOCATION

Location of temperature and pressure measurements needed to evaluate the air inlet system with air-to-air charge cooling is shown.

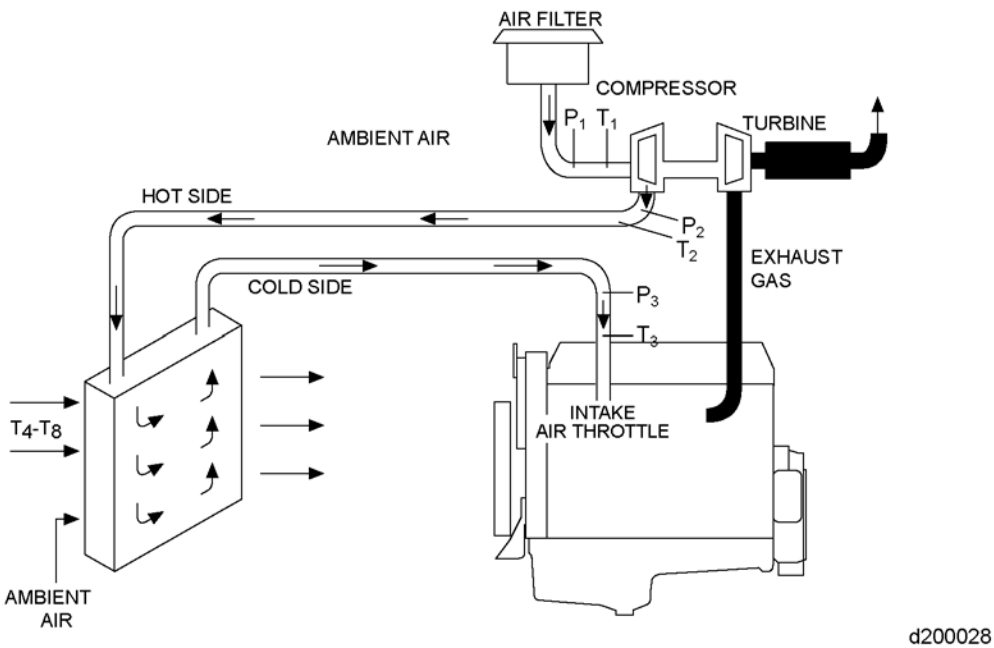

Figure 8-43 Typical Instrumentation Location

All information subject to change without notice.
DDC-SVC-MAN-0073 Copyright © 2009 DETROIT DIESEL CORPORATION

https://truckmanualshub.com/

8.15.9 INLET SYSTEM RESTRICTION

The maximum permitted inlet restriction for a system with a clean air cleaner is 2.5 kPa (10 in. H_2O).

The maximum permitted inlet restriction for a system with a dirty air cleaner is 5.5 kPa (22 in. H_2O).

Restriction should be measured at maximum speed and load.

8.15.9.1 Maximum Temperature Rise — Ambient to Turbocharger Inlet

The maximum temperature differential between the ambient temperature and the temperature at the turbocharger inlet (T_1) needs to be determined.

The temperature differential for the DD Platform engine is 8°C (15°F).

8.15.9.2 Air-to-Air System Evaluation Tests

The air-to-air charge cooling system must be tested to verify that engine air intake temperatures and pressure drop limits can be met as shown on www.detroitdiesel.com, if you do not have access to www.detroitdiesel.com contact your Distributor. This evaluation can be done simultaneously with the engine cooling index test.

8.15.9.3 Maximum Temperature Rise — Ambient to Intake Manifold

The maximum temperature differential between the ambient temperature and the temperature at the intake manifold needs to be determined. The maximum temperature differential is listed on the Information Highway.

Temperature location is listed in the following table

Symbol	Measurement	Location Description
T_1	Air inlet temperature	Within 5 in. (12 7 cm) of the turbocharger
T_2	Compressor discharge temperature	Within 5 in. (12 7 cm) of the compressor outlet
T_3	Intake manifold temperature	Within 5 in. (12 7 cm) of the inlet connection
T_4 - T_8	Charge air cooler core air inlet temperature	5 points in front of the core, one in the center and one at each corner for determining recirculation

Table 8-6 Thermocouples

8.15.9.4 Charge Air Cooler System Restriction

The maximum pressure differential of the charge air cooler system restriction results from the charge air cooler and all of the piping and connections between the turbocharger compressor outlet and the intake manifold.

Pressure tap locations are listed in the following table.

 Copyright © 2009 DETROIT DIESEL CORPORATION

https://truckmanualshub.com/

Symbol	Measurement	Location Description
P_1	Air inlet restriction	Within 5 in. (12 7 cm) of the turbocharger, in a straight section after the last bend
P_2	Compressor discharge pressure	Within 5 in. (12 7 cm) of the turbocharger, in a straight section before the first bend
P_3	Intake manifold pressure	Within 5 in. (12 7 cm) of the inlet connection in a straight section after the last bend (or in the manifold itself)

Table 8-7 Pressure Taps

Connect a precision gage between pressure taps P_2 and P_3 to determine pressure drop of the system. Two precision gages may be used as desired.

The maximum pressure drop for DD Platform engines is 10 kPa (39 in. H2O).

8.15.10 TEST

Thorough preparations prior to testing will ensure accurate results.

- □ Confirm all instrumentation and equipment is in good working condition and calibrated.
- □ Tests must be run on a finalized package installed in unit or vehicle representative of the production package to be released.
- □ Shutters must be fully opened and fan drive mechanisms in the fully engaged position.
- □ Confirm that the engine can develop proper load at rated speed using a Diagnostic Data Reader (DDR) or Detroit Diesel Diagnostic Link®software.
- □ Engine should be at normal operation temperature and run at full load.

All air-to-air charge cooling tests should be performed with engine operating at maximum rated speed and wide open throttle (full fuel). Highway vehicles use either 15 or 30 m.p.h. ram air during testing. Review www.detroitdiesel.com for proper ram air flow conditions for each installation.

Sample data sheets for air inlet system and charge air cooling system tests are shown.

8.15.11 TEST ANALYSIS

At the completion of the test run, determine the cooling capability of the CAC and whether it meets requirements.

8.16 COOLING SYSTEM DIAGNOSTICS AND TROUBLESHOOTING GUIDE

System diagnostics and troubleshooting covers:

- □ Engine overheat
- □ Cold running engine

All information subject to change without notice.
DDC-SVC-MAN-0073 Copyright © 2009 DETROIT DIESEL CORPORATION

https://truckmanualshub.com/

- Poor cab heater performance

8.16.1 ENGINE OVERHEAT

Coolant temperatures should not exceed maximum limit of 114 °C (237 °F) so metal and oil temperatures can be controlled for optimum engine performance, fuel economy, and life.

Obvious overheat conditions are determined from the coolant temperature gage, warning, or shutdown devices. Steam vapor or coolant being expelled through the pressure relief overflow tube is another indication of overheat. Reduced engine performance or engine oil having a burnt odor are other indicators.

8.16.1.1 Troubleshooting for Engine Overheat

Troubleshoot for engine overheat as follows:

1. Check for inaccurate gage, warning, or shutdown device, insufficient coolant flow, and inadequate heat transfer capabilities during coolant side investigation.

WARNING:

HOT COOLANT

To avoid scalding from the expulsion of hot coolant, never remove the cooling system pressure cap while the engine is at operating temperature. Wear adequate protective clothing (face shield, rubber gloves, apron, and boots). Remove the cap slowly to relieve pressure.

2. Check that the various temperature monitoring devices are calibrated.
   [a] Sensor probes *must* be located (before thermostat) in a high temperature, well mixed coolant flow path.
   [b] The sensor *must* be free of scale and other contamination.
3. Check for insufficient coolant flow. The following may be causes of insufficient coolant flow:
   - Thermostat — Stuck, sluggish, worn, broken
   - Thermostat seal — Worn, missing, improper installation
   - Water pump — Impeller loose or damaged, drive belt loose or missing, worn pulley
   - Aerated coolant — Low coolant level, excessive agitation of deaeration tank coolant, water pump seal failure, exhaust gas leakage (cracked cylinder head or block, damaged seals or gaskets, etc.), incorrect bleed line installation
   - Pressurization loss — Defective pressure cap/relief valve or seat, debris trapped between seats, internal or external leaks anywhere in the system

 Copyright © 2009 DETROIT DIESEL CORPORATION

https://truckmanualshub.com/

- □ High restriction — Radiator plugging (solder bloom), silicate dropout, dirt, debris, etc. collapsed hose(s), foreign objects in the system (shop towels, plugs, etc.)
- □ Core Coolant Flow Capacity — Core coolant flow capacity is often described as “free flow." This term is used to indicate gravity flow rate through the core and should equal or exceed the coolant flow rate given on the performance curve. The design of the radiator inlet and outlet tanks *must* also offer low restriction to coolant flow.
- □ Coolant loss — Internal and external

4. Check for inadequate heat transfer capabilities. The following are possible causes of inadequate heat transfer capabilities:
   - □ Radiator selection — Core selection inadequate for application
   - □ Incorrect coolant mixture — Over/under concentration of antifreeze or inhibitors, corrosive water, incorrect antifreeze or inhibitors
   - □ Contamination — Oil or other material depositing on heat transfer surfaces
5. Check for insufficient air flow. The following are possible causes of insufficient air flow:
   - □ High restriction — Plugged core, damaged or bent fins, shutters not opening correctly, addition of bug screens, winter fronts, noise panels, small air in or air out openings, etc.
   - □ Fan/Drives — Lose or worn belts and pulleys, improper drive engagement, fan installed backwards or damaged, insufficient fan speed (drive ratio), etc.
   - □ Shroud — Damaged or missing, not completely sealed
   - □ Fan positioning — Excessive fan tip to shroud clearance, incorrect fan placement in shroud, insufficient fan to core distance, insufficient fan to engine distance
6. Check for inadequate heat transfer capabilities. The following are possible causes of inadequate heat transfer capabilities:
   - □ Incorrect fan/radiator match — Severest operating conditions not correctly identified.
   - □ Core degradation — Tube/fin separation, oil film, debris, contamination, etc.
   - □ Air recirculation — Radiator baffles damaged or missing, fan shroud and seal damaged or missing, wind conditions, etc.
7. Also check the following:
   - □ Increased heat rejection or engine horsepower upgrade
   - □ Engine, installation, or cooling system modified
   - □ Increased engine loading, change in duty cycle
   - □ Running at more adverse conditions than original system design permits, higher altitude or temperature

All information subject to change without notice.
DDC-SVC-MAN-0073 Copyright © 2009 DETROIT DIESEL CORPORATION

https://truckmanualshub.com/

8.16.2 COLD RUNNING ENGINE (OVERCOOLING)

Extended low coolant temperature operation can adversely affect engine performance, fuel economy, and engine life. Overcooling most frequently occurs at extreme low ambient temperatures during long idling or low speed and light load operation.

Consider the following for cold running engines:

- □ Inaccurate gage, out of calibration, lack of markings to determine actual temperature, sensor probe in poor location or not fully submerged in a high coolant flow area.
- □ Closed thermostat core coolant flow — Top tank baffle not completely sealed, standpipe too short or missing, improper sizing of dearation line or standpipe(s) so flow to the top tank exceeds fill line capacity, overfilled cooling system, reverse core flow, thermostat coolant leakage. See test procedures for determining these deficiencies.
- □ Defective thermostat — Stuck open, worn, misaligned, excessive leakage, improper calibration, incorrect start to open setting.
- □ Insufficient engine heat rejection — Excessive low speed and load or idle operation, idle setting too low, over concentration of antifreeze and/or inhibitors, cab and fuel heaters, charge air fan removing heat faster than engine can supply.
- □ Fixed fans — Moves air through core when not required.
- □ Shutters/Controls — Not fully closed, opening temperature too low.

8.16.3 POOR CAB HEATER PERFORMANCE

Poor cab heater performance results from cold running engines.

Inadequate heat in the operator's environment is symptomatic of poor cab heater performance.

Consider the following to solve poor cab heater performance:

- □ Engine coolant temperature below normal.
- □ Coolant-side causes
- □ Air-side causes
- □ Thermostat leakage test
- □ Radiator top tank baffle leakage test
- □ Top tank imbalance test

1. Check coolant-side cause, low flow, by investigating the following:
   - □ Supply and return lines not connected to proper locations on the engine
   - □ Heater system too restrictive — core, plumbing size, bends, shutoff valves, length of circuitry, etc.
   - □ Parallel circuitry with multiple cores
   - □ Boost pump required, defective, not turned on

 Copyright © 2009 DETROIT DIESEL CORPORATION

https://truckmanualshub.com/

- □ Air in heater circuit and coolant
- □ Solder bloom, silicate dropout, dirt, debris, etc.
- □ Shutoff valves not fully opened
- □ Fuel heater in circuit

2. Check coolant-side cause, reduced heat transfer capabilities, by investigating the following:
   - □ Improper concentration or grade of antifreeze and inhibitors
   - □ Undersized heater core(s)
   - □ Heater plumbing not insulated
   - □ Low efficiency cores
   - □ Contamination of core tube surfaces, deposits, etc.
   - □ Fuel heaters plumbed in cab heater circuit
3. Check the following air-side causes:
   - □ Low efficiency cores
   - □ Improper air flow
   - □ Excess outside air through core
   - □ Core fins separated from tubes
   - □ Core surface contamination, dirt, debris, oil film, etc.
   - □ Leaking air ducts
   - □ Malfunctioning air flow control valves
   - □ Undersized heater cores
   - □ Poor distribution system

Cab interior should be completely sealed to eliminate direct cold air source, in order to conserve available heat energy. Heat loss to outside can be minimized by using thermo windows, reducing exposed metal surfaces, increasing insulation usage, etc.

8.16.3.1 Thermostat Leakage Test

The following procedure should be used to determine thermostat leakage:

All information subject to change without notice.
DDC-SVC-MAN-0073 Copyright © 2009 DETROIT DIESEL CORPORATION

https://truckmanualshub.com/

NOTICE:
No coolant should leak past the thermostat when the thermostat is closed. Overcooling may occur, resulting in poor engine performance, poor cab heater performance, or both.

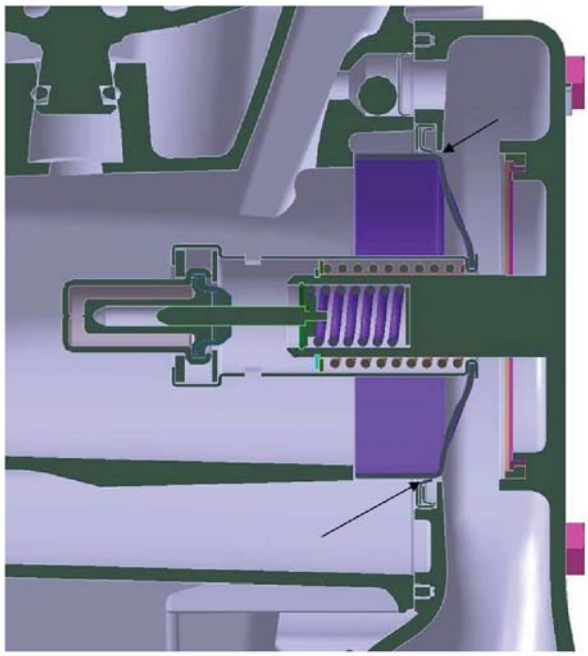

Figure 8-44 Thermostat Leakage Areas

1. Remove radiator inlet hose at the radiator to collect coolant in a container.

 Copyright © 2009 DETROIT DIESEL CORPORATION

https://truckmanualshub.com/

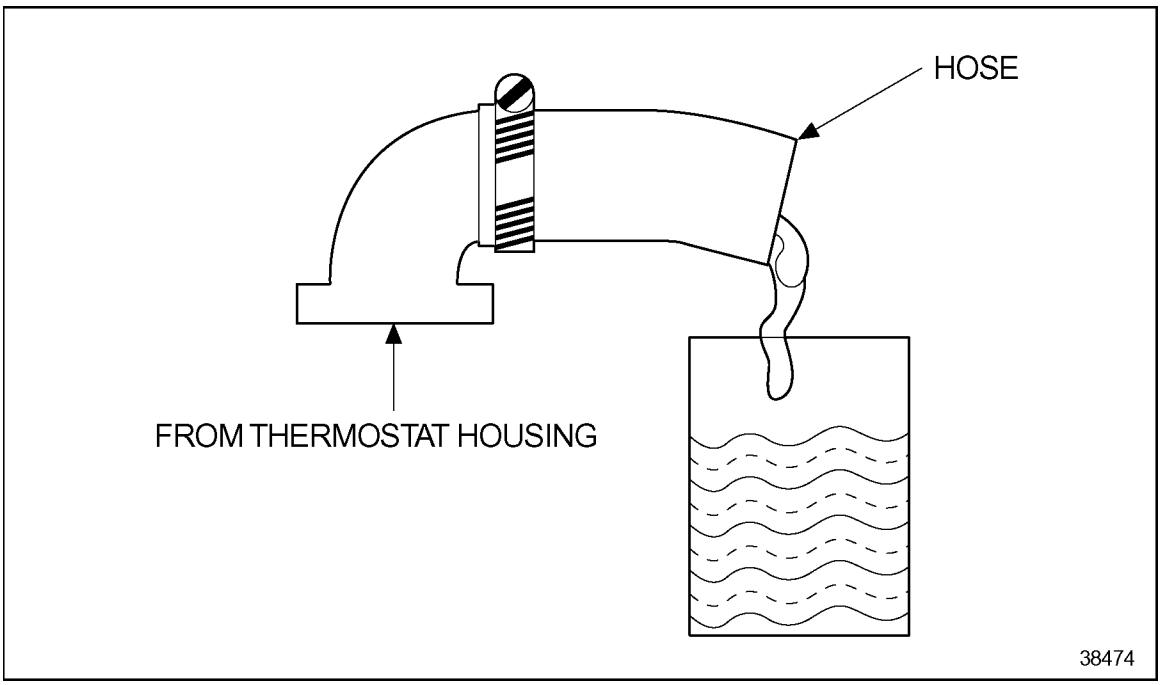

Figure 8-45 Thermostat Leakage Check

2. Fill system with coolant. If thermostat leakage occurs at this point go to step 4.
3. Start engine and accelerate to high idle and hold for approximately one minute. If leakage is more than a trickle, continue to step 5.
4. Remove thermostat and visually inspect thermostat for obvious discrepancies. Go to step 6.
5. Calibrate thermostat to ensure it is not opening prematurely.
6. Replace defective parts.

No coolant should leak past the thermostat when the thermostat is closed. Overcooling may occur, resulting in poor engine performance, poor cab heater performance, or both.

8.16.3.2 CAC Air Leakage Test

The following procedure should be followed to determine if air leakage from a CAC is excessive:

1. Disconnect the charge air cooler.
2. Plug the inlet and outlet.
3. Measure pressure loss using an adaptor plug on the inlet.

The charge air cooler is considered acceptable if it can hold 172 kPa (25 psi) pressure with less than a 34.5 kPa (5 psi) loss in 15 seconds after turning off the hand valve.

All information subject to change without notice.
DDC-SVC-MAN-0073 Copyright © 2009 DETROIT DIESEL CORPORATION

https://truckmanualshub.com/

8.17 MAINTENANCE

The design of the installation must take into account the engine's need for periodic maintenance and allow access to these service points.

A schedule of periodic maintenance will provide for long term efficiency of the cooling system and extended engine life. Daily visual inspections should be made of the coolant level and the overall condition of the system components. This should include looking for obvious leaks and abnormal distress of the following components:

- □ Radiator Core and CAC — Contaminated with oil, dirt and debris; fins/tubes damaged
- □ Fill Cap/Neck — Dirty or damaged seats; gasket/seal deteriorated
- □ Fan — Blades bent, damaged or missing
- □ Belts/Pulleys — Loose belts; frayed; worn; missing
- □ Fan Shroud — Loose; broken; missing
- □ Hoses/Plumbing — Frayed; damaged; ballooning; collapsing; leaking
- □ Coolant — Contaminated, concentration
- □ Recirculation Baffles — Missing; not sealing

If any of the above conditions are observed, corrective action should be taken immediately. Any time a coolant gage, warning, shutdown, or low level device is malfunctioning, it should be fixed immediately.

A proper glycol (ethylene, propylene, or extended life organic acid), water, Supplemental Coolant Additive (SCA) mixture meeting DDC requirements is required for year-round usage.

The coolant provides freeze and boil protection and reduces corrosion, sludge formation, and cavitation erosion. Antifreeze concentration should not exceed 67% for ethylene glycol (50% for propylene glycol). Detroit Diesel requires SCAs be added to all cooling systems at initial fill and be maintained at the proper concentration. Follow SCA manufacturers' recommendations.

 Copyright © 2009 DETROIT DIESEL CORPORATION

https://truckmanualshub.com/

THIS PAGE INTENTIONALLY LEFT BLANK

All information subject to change without notice.
DDC-SVC-MAN-0073 Copyright © 2009 DETROIT DIESEL CORPORATION

https://truckmanualshub.com/

9 FUEL SYSTEM

Section **Page**

9.1 FUEL SYSTEM DESCRIPTION 9- 2
9.2 FUEL SYSTEM EQUIPMENT/INSTALLATION GUIDELINES 9- 5
9.3 FUEL SELECTION 9- 9

 Copyright © 2009 DETROIT DIESEL CORPORATION

https://truckmanualshub.com/

9.1 FUEL SYSTEM DESCRIPTION

The purpose of the fuel system is to ensure that the fuel required for combustion is available under all operating conditions in sufficient quantity, in the correct sequence, and at the required pressure. The fuel circuit ensures that the fuel is cleaned before supplying fuel to the fuel injectors.

A fuel system consists of:

- Fuel Tank
- Fuel Filter Module with Fuel Prefilter, Water Separator, and Main Filter
- Water-in-Fuel Sensor
- Low Pressure Fuel Pump
- High Pressure Fuel Pump
- Quantity Control Valve
- Fuel Rail
- Fuel Rail Pressure Sensor
- Pressure Limiting Valve (PLV)
- Fuel Injectors
- Fuel Cooler
- Fuel Doser Valve
- Hydrocarbon (HC) Doser
- Fuel Lines
- Motor Control Module (MCM)

The DD Platform engines employ common rail fuel injection technology. This system works with a low pressure circuit and an Amplified Pressure Common Rail System (APCRS). The low pressure circuit delivers fuel to the APCRS. The APCRS delivers fuel to the individual cylinders through a common rail common to all six fuel injectors.

When the engine is started, the gear driven low pressure fuel pump pulls fuel from the fuel tank and delivers it to the fuel low pressure circuit. Fuel from the fuel tank is sent through the fuel filter module. The fuel flows from the fuel filter module to the fuel heat exchanger located on the Motor Control Module (MCM). The electronic components of the MCM are cooled via the fuel heat exchanger. The fuel in the fuel filter module first passes into the fuel prefilter where large particles greater than 100 microns are filtered out. The fuel which has been cleaned by the fuel prefilter passes out of the fuel filter module to the low pressure fuel pump. From there the fuel is delivered back into the fuel filter module and to the water separator. The water inside the fuel is separated out by the water separator and begins to fall into the water accumulator. If the water level in the water accumulator reaches its maximum level, this will be detected by the Water-in-Fuel sensor. The MCM transmits an appropriate message for illuminating the indicator lamp. After leaving the water separator, the fuel flows through the final filter. Both the water separator and final filter elements filter out fine-grained contaminants greater than 2 microns.

All information subject to change without notice.
DDC-SVC-MAN-0073 Copyright © 2009 DETROIT DIESEL CORPORATION

https://truckmanualshub.com/

Once all of the contaminants have been filtered out by the final filter, the fuel is delivered out of the fuel filter module to the quantity control valve of the ACPRS. The quantity control valve is used to regulate the fuel feed to the high pressure fuel pump and to regulate the fuel rail pressure. The high pressure fuel pump receives the fuel and pressurizes the fuel up to 900bar. The fuel is then fed to the fuel rail. Excess fuel from the quantity control valve and high pressure fuel pump is routed past a 2–stage valve internal to the fuel pump which then routes excess fuel to the fuel accumulator internal to the fuel filter module. The internal fuel accumulator gathers fuel from all return lines and passes it through a bypass valve to either the fuel prefilter or back to the fuel tank.

The fuel that is sent to the fuel rail is regulated by the Fuel Rail Pressure Sensor. If the maximum rail pressure is exceeded (leakage at 1075 bar, open at 1380 bar), the Pressure Limiting Valve (PLV) opens and passes the excess fuel through the fuel return lines to the fuel accumulator. If the system level drops below 3 bar due to the opened PLV, part of the excess fuel is routed to the high pressure fuel pump for lubrication of the pump. From the fuel rail, fuel is then routed to each individual fuel injector where the fuel is injected under high pressure into the cylinders. The excess and warmed fuel from the amplified circuits of each individual injector is routed through a passage within the cylinder head where it eventually makes its way through the fuel cooler, which serves to lower the temperature of the fuel to below 100C. From there, the fuel travels into the fuel filter module where the cooled fuel is mixed with the colder fuel from the low pressure fuel pump.

The Detroit Diesel Electronic Control (DDEC) System controls fuel injection timing and output by the common rail injectors on the engine. The system also monitors several engine functions using electrical sensors which send electrical signals to the MCM. The MCM then computes the incoming data and determines the correct fuel output and timing for optimum power, fuel economy and emissions.

 Copyright © 2009 DETROIT DIESEL CORPORATION

https://truckmanualshub.com/

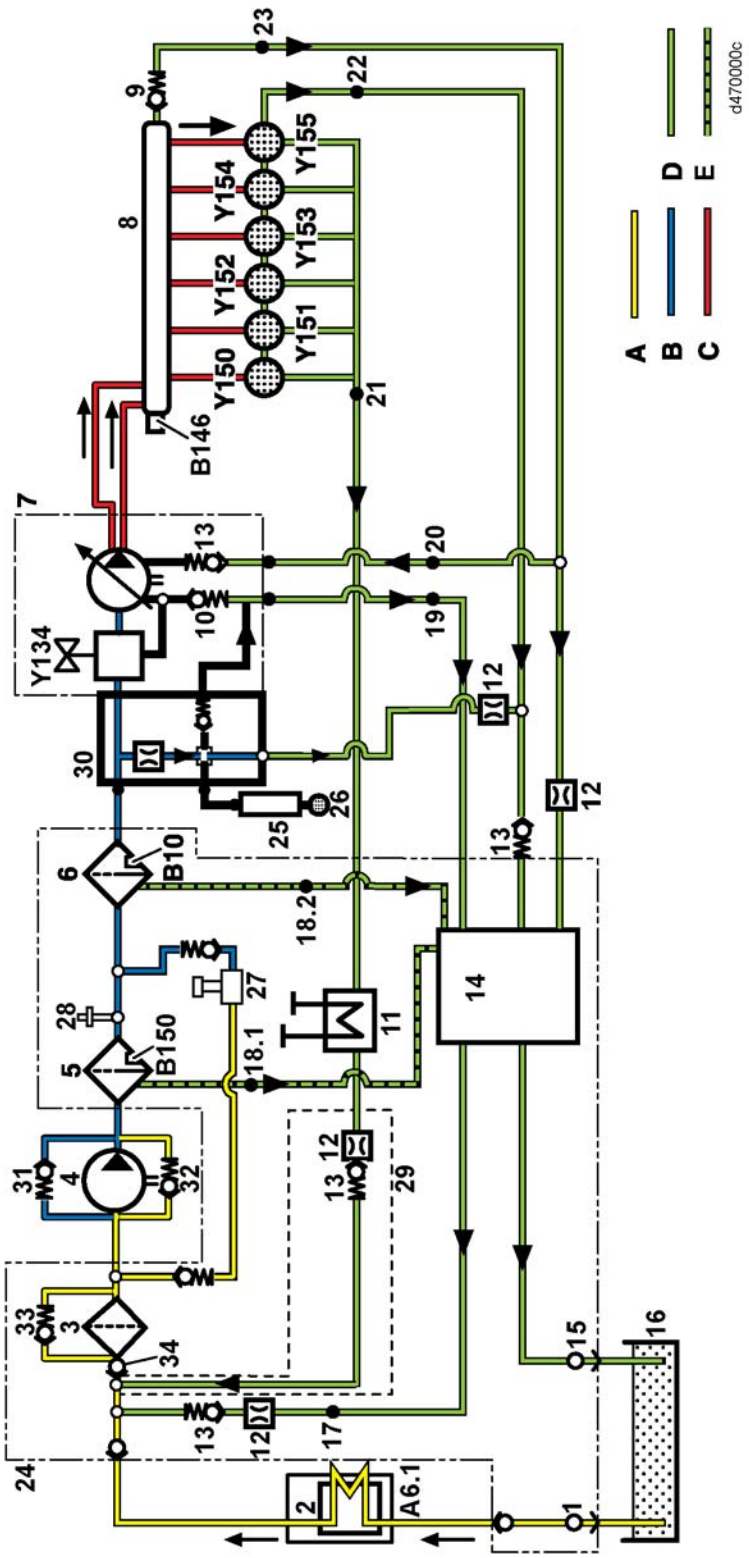

Figure 9-1 Figure 1-2 Schematic Diagram of the DD Platform Fuel System

All information subject to change without notice.
DDC-SVC-MAN-0073 Copyright © 2009 DETROIT DIESEL CORPORATION

https://truckmanualshub.com/

9.2 FUEL SYSTEM EQUIPMENT/INSTALLATION GUIDELINES

The following installation guidelines cover:

- □ Fuel Tank
- □ Fuel Filters
- □ Fuel Lines

9.2.1 FUEL TANK

Fuel tanks must be made of the correct material, be properly designed and located, and be adequately sized regardless of the fuel tank configuration being used.

9.2.1.1 Material

Satisfactory fuel tank material is steel, aluminum, or a suitably reinforced plastic. The inside(s) should be clean and free from all impurities likely to contaminate the fuel.

NOTICE:
Do not use a fuel storage tank or lines or fittings made from galvanized steel. The fuel will react chemically with the galvanized coating to form powdery flakes that will quickly clog fuel filters and cause damage to the fuel pump and injectors

The fuel tank(s) ***must not*** be galvanized internally under any circumstances.

The fuel tank(s) or piping may be galvanized or painted on the ***outside only*** to prevent rusting.

Zinc in a galvanized coating reacts with sulphur in the fuel to form a white zinc sulfate which will clog filters as well as damage the fuel pump and injectors.

9.2.1.2 Design

Baffles *must* be positioned to separate air from fuel and to prevent fuel from sloshing between the ends of the tank(s). The baffles should extend from the top to the bottom of the tank(s). These baffles should have passageways which allow the fuel to maintain an even level throughout the tank(s).

The tank(s) should have a readily accessible drain valve at the bottom for easy removal of contaminants. There should also be an access hole in the tank to permit cleaning when the tank has been emptied.

The fill neck(s) should be in a clean, accessible location with sufficient height and room for an average size fill can or tanker truck hose.

The tanks must have a vent which should be installed at the highest point of the tank. The vent should be protected so water and dirt cannot enter the system.

 Copyright © 2009 DETROIT DIESEL CORPORATION

https://truckmanualshub.com/

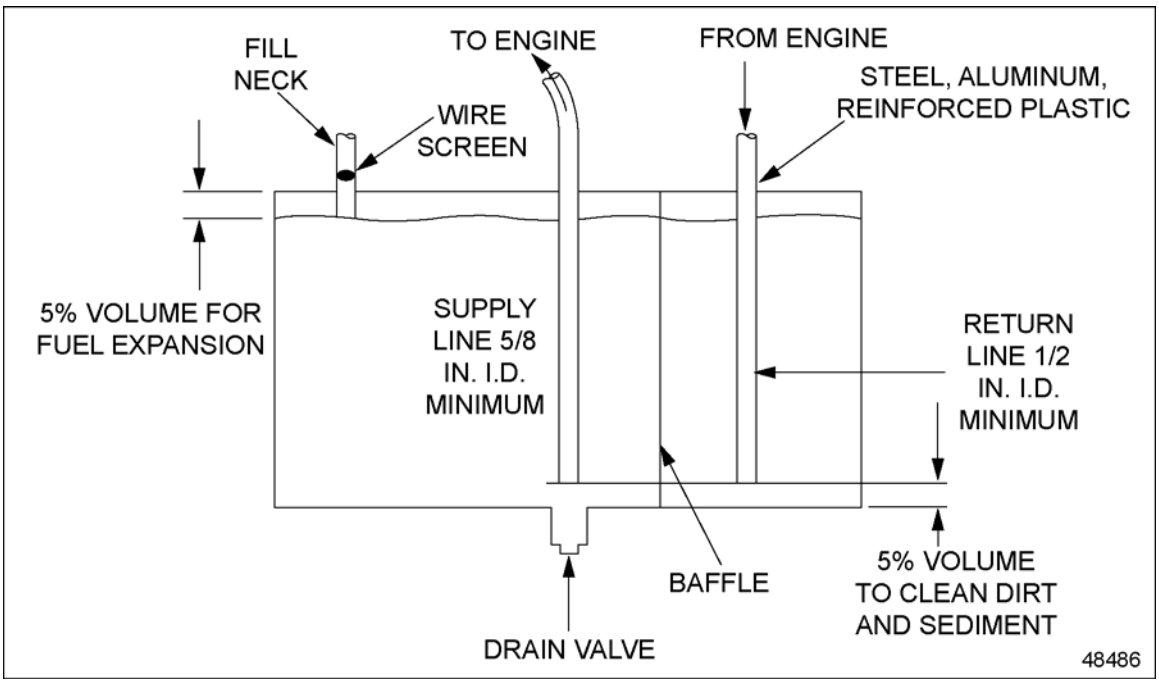

Figure 9-2 Properly Designed Fuel Tank

9.2.1.3 Capacity

Carefully choose the capacity of the fuel tank(s) to suit the specific engine installation. The design of tanks in mobile applications must include the supply pipe so that adequate fuel is available under all operational gradients. The tank(s) capacity must be at least 5% greater than the maximum fill level to allow for fuel expansion.

Fuel capacity of the tank(s) should be appropriate for the specific application involved.

9.2.1.4 Position

The position of the fuel tank(s) is an important factor in any application.

The position of the fuel tank(s) should ensure the following whenever possible.

- □ The difference in height between the fuel tank(s) and engine supply pump shall be kept to a minimum.
- □ The length of the fuel feed pipe shall be kept to a minimum.
- □ Location of the fuel tank(s) shall be away from any excessive heat source.
- □ The filling point shall be easy to access and simple to use.

The fuel supply pump should not be more than 5 feet above the lowest fuel level possible in the fuel tank(s). If it becomes necessary to locate the fuel tank at a position, with respect to the engine regardless of the size of the fuel lines, to where the maximum fuel restriction of 2.9 PSI (200 mbar) is exceeded, then a high lift fuel pump (not supplied by DDC) may be required.

All information subject to change without notice.
DDC-SVC-MAN-0073 Copyright © 2009 DETROIT DIESEL CORPORATION

https://truckmanualshub.com/

The fuel tank(s) should not be located higher than the fuel pump. However, when this can not be avoided, the fuel return line should not extend into the fuel supply to prevent possible siphoning in the event a leak occurs in the line. The fuel return line must incorporate a check valve. The fuel inlet must incorporate a shutoff valve of the needle or globe type construction and must not impose any undue restriction to fuel flow.

Install a shutoff valve for use when changing the fuel pre-filter and the water separator if the fuel tank(s) is above the fuel filter module. This will prevent the tank(s) from draining.

A check valve in the fuel spill prevents supply side fuel from draining back into the tank(s) in a tank-below-engine installation.

In applications where multiple tanks are used, a crossover line with valves located near the tanks low points is recommended to allow equal use of fuel from the tanks. The valves can also be used to isolate an individual tank in the event that a problem arises with any one tank.

9.2.2 FUEL FILTERS/FUEL FILTER MODULE

A fuel pre-filter, water separator, and a final fuel filter are all required for the DD Platform engines. These filters are contained within the fuel filter module located between the fuel tank and the engine low pressure fuel pump. These filters are needed to provide additional water and debris filtering capacity and to prevent damage to the fuel system. The fuel pre-filter is a 100 micron rated filter and is an inside out flow filter. The water separator is a 10 micron filter and is an inside out flow filter. The final fuel filter element is a 3–5 micron rated filter and is an outside in flow filter. The use of a separate remote mount primary fuel filter, which would typically be installed between the fuel tank and the engine fuel filter module, are not permitted for use with the DD Platform engines. However, please contact Detroit Diesel Application Engineering for current requirements in the event remote mount primary fuel filters become permissible.

9.2.3 FUEL FILTER CONFIGURATION

Fuel filter requirements for the DD Platform engine may be found in DDC publication *Lubricating Oil, Fuel, and Filters,* (DDC–SVC–BRO–0001), available on the DDC Extranet.

Care should be taken not to exceed the maximum fuel pump suction limits (2.9 PSI) when substituting the fuel pre-filter and the water separator elements.

Remote mounting of the fuel filter module filters is not acceptable for the DD Platform engines.

9.2.4 FUEL LINES

The following guidelines apply to supply and return fuel lines between the fuel filter module and the tank(s) only.

These guidelines apply regardless of which fuel tank configuration is being used.

Do not modify or tamper with any fuel lines supplied with the engine.

 Copyright © 2009 DETROIT DIESEL CORPORATION

https://truckmanualshub.com/

9.2.4.1 Design

All lines should be in protected areas. These areas should be free from possible damage and securely clipped in position to prevent chaffing from vibration. Take the necessary precautions to ensure that the inlet line connections are tight so air cannot enter the fuel system.

The careful selection of line routing cannot be overemphasized. Avoid excessively long runs.

Minimize the number of connections, sharp bends, or other features that could lead to air trapping, excessive resistance to flow, or waxing of fuel in cold conditions.

The supply and return lines must extend to the low level of useful tank volume. Extending the return line to this level prevents siphoning of fuel on the supply side back to the tank.

The fuel supply line must be above the bottom of the tank to ensure that dirt and sediments are not drawn into the fuel system. Allow 5% clearance volume above the bottom of the tank.

The supply and return lines must be well supported within the tank. Cracks on the supply side can cause the entrance of air and a subsequent loss of power. The supply and return lines must be separated by at least 0.3 m (12 in.) inside the tank to prevent the possibility of air or hot fuel from the return line being discharged directly into the suction line.

The supply line should be at the center of the tank to compensate for angular operation.

Connections of fuel lines to the engine should be made through flexible hoses which accommodate the movement of the engine and the chassis. Solid tubing cannot be directly connected to the engine supply or return connections. A minimum of 1 m (3 ft.) of flexible hose should be used between the engine and chassis fuel lines.

9.2.4.2 Material

DDC does not approve the use of copper tubing because copper becomes brittle due to cold working when subjected to vibration.

Flexible hosing must be resistant to fuel oil, lubricating oils, mildew, and abrasion, and must be reinforced.

The lines must withstand a maximum suction of 67.54 kPa (20 in. Hg) without collapsing, a pressure of 690 kPa (100 psi) without bursting, and temperatures between -40°C (-40°F) and 149°C (300°F).

9.2.4.3 Size

The fuel supply lines should be AN Dash size 10 (5/8” I.D.) or larger. The return lines must be AN Dash size 8 (1/2” I.D.) or larger. Fuel line size on an engine will depend on the engine flow rate, length of line, number of bends, and the number and type of fittings. Larger fuel line sizes may be required when the fuel tanks are located farther than 10 ft. (3 m) from the engine or when there are numerous bends in the system.

The determinant of fuel line size is the restriction measured at the inlet of the fuel pump. The maximum allowable inlet restriction is 2.9 PSI (200 mbar) for all applications.

All information subject to change without notice.
DDC-SVC-MAN-0073 Copyright © 2009 DETROIT DIESEL CORPORATION

https://truckmanualshub.com/

9.3 FUEL SELECTION

The quality of fuel used is a very important factor in obtaining satisfactory engine performance, long engine life, and acceptable exhaust emission levels. The use of Ultra Low Sulfur Diesel (ULSD) fuel, sulfur content less than 15 ppm, is required on all DD Platform engines.
For information on fuel selection, refer to DDC publication *Lubricating Oil, Fuel, and Filters*(DDC–SVC–BRO–0001).

WARNING:
FIRE
To avoid injury from fire, contain and eliminate leaks of flammable fluids as they occur. Failure to eliminate leaks could result in fire.

 Copyright © 2009 DETROIT DIESEL CORPORATION

https://truckmanualshub.com/

THIS PAGE INTENTIONALLY LEFT BLANK

All information subject to change without notice.
DDC-SVC-MAN-0073 Copyright © 2009 DETROIT DIESEL CORPORATION

https://truckmanualshub.com/

10 LUBRICATION SYSTEM

Section **Page**

10.1 LUBRICATION SYSTEM DESCRIPTION 10- 2
10.2 LUBRICATION OIL SELECTION 10- 4
10.3 LUBRICATION FILTER 10- 4
10.4 ENGINE COMPONENT OIL SUPPLY REQUIREMENTS 10- 4
10.5 COMPONENT OPTIONS & INSTALLATION REQUIREMENTS 10- 5
10.6 OPERATION AND MAINTENANCE 10- 7

 Copyright © 2009 DETROIT DIESEL CORPORATION

https://truckmanualshub.com/

10.1 LUBRICATION SYSTEM DESCRIPTION

The DD Platform engine features a full-flow filtered, pressurized lubricating oil system. The system incorporates various valves and restriction orifices to optimize the oil flow. The DD Platform engine comes standard with a thermatic oil cooler, which improves fuel economy in low oil temperature situations by providing an oil cooler bypass route. A backflow valve retains oil upstream of the oil pump upon engine shutdown to speed up engine lubrication during start-up. A crankcase breather is utilized to vent gases from the crankcase. External piping and plumbing is kept to a minimum to avoid oil leakage. Oil temperature and pressure are monitored by the Motor Control Module (MCM) for engine protection and diagnostics.

The lubricating system consists of the following components:

- Oil pump
- Pressure regulator valve
- Pressure relief valve
- Backflow valve
- Oil filter
- Oil cooler
- Oil fill tube
- Oil level dipstick
- Oil pan & suction tube
- Crankcase ventilation breather
- Oil spray nozzles for each piston
- Oil pressure sensor
- Oil temperature sensor

All information subject to change without notice.
DDC-SVC-MAN-0073 Copyright © 2009 DETROIT DIESEL CORPORATION

https://truckmanualshub.com/

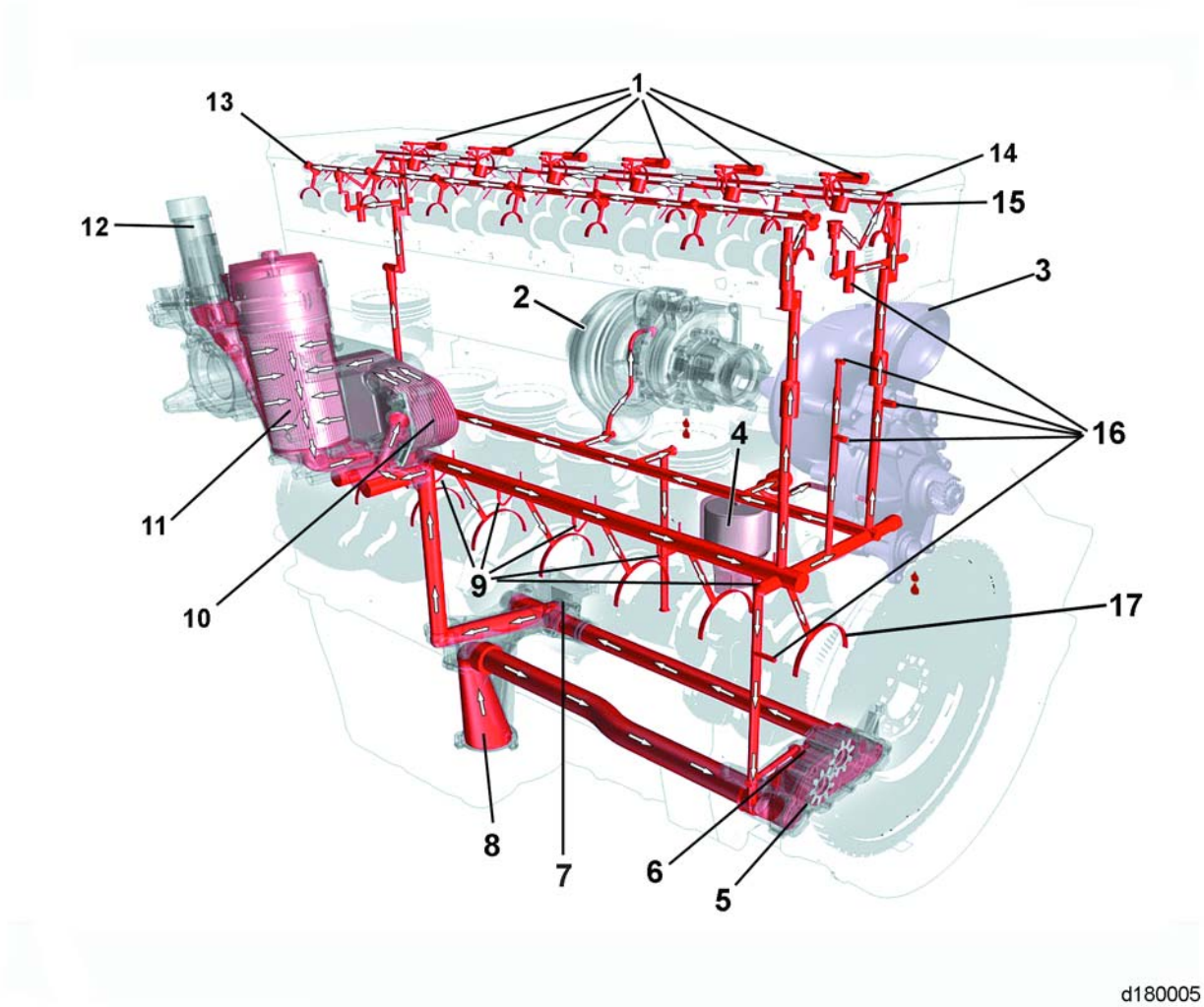

1. Engine Brake
2. Turbocharger
3. Axial Power Turbine
4. Crankcase Breather
5. Oil Pump
6. Pressure Valve
7. Backflow Valve
8. Suction Pipe
9. Oil Spray Nozzle
10. Oil Cooler and Housing
11. Oil Filter
12. Oil Refill
13. Intake Rocker Arm Spindle Supply
14. Engine Brake Supply
15. Exhaust Rocker Arm Spindle Supply
16. Gear Train Oil Supply
17. Main Bearing Supply

Figure 10-1 DD Platform Lubrication System

An internal tooth gear pump is mounted at the rear of the engine block internal to the oil sump and direct driven by the crankshaft at 1.33 times engine speed. The location of the oil sump suction tube varies with oil pan choice.

 Copyright © 2009 DETROIT DIESEL CORPORATION

https://truckmanualshub.com/

Oil leaving the pump is routed through the backflow valve to the oil cooler and into the oil filter, then into the main oil gallery in the cylinder block. From there, oil is distributed to the crankshaft, rods and pistons. Oil spray nozzles exist in the block, which provide a continuous spray of oil to the underside of the pistons. From the main gallery, oil is routed to the crankcase breather, turbocharger, through each rocker arm shaft, and into the valve train components, rocker arms, and engine brakes. Drains from the head, turbocharger, and crankcase breather return oil to the pan. Oil for gear train components at the rear of the engine is fed through drilled holes out of the main gallery lubricating the gear spindles for each gear drive individually.

There are a variety of options for location of gage and fill, as well as a variety of oil sump configurations for the DD Platform engine.

10.2 LUBRICATION OIL SELECTION

The DD Platform engine is designed to work with a low ash oil, called API CJ–4. This oil is uniquely formulated to optimize cleaning intervals of the Diesel Particulate Filter (DPF). For more information on lubricating oil selection, refer to DDC publication *Lubricating Oil, Fuel, and Filters*, (DDC-SVC-BRO-0001).

10.3 LUBRICATION FILTER

The DD Platform engine consists of one full-flow cartridge filter mounted directly to the oil/coolant module on the left side of the engine. It is not permitted to remote-mount the engine supplied oil filter.

The micron rating of the oil filters used on the DD Platform engine is given in DDC publication *Lubricating Oil, Fuel, and Filters*, (DDC-SVC-BRO-0001), available on the www.detroitdiesel.com.

Detroit Diesel does not recommend the use of fiberglass-media oil filters such as AC® PF-911L or equivalent, on the DD Platform engine.

10.3.1 SUPPLEMENTAL FILTRATION SYSTEMS

Bypass oil filters and other after-market supplemental filtration systems are not permitted for use with the DD Platform engine.

10.4 ENGINE COMPONENT OIL SUPPLY REQUIREMENTS

There are also components mounted externally on the engine which are lubricated by the engine lubrication system. These are the turbocharger, air compressor, crankcase breather, and customer supplied components such as alternators, fan clutch, etc.

All information subject to change without notice.
DDC-SVC-MAN-0073 Copyright © 2009 DETROIT DIESEL CORPORATION

https://truckmanualshub.com/

10.4.1 TURBOCHARGER LUBRICATION

An oil supply line from the upper right hand side of the engine block supplies oil to the turbocharger bearing housing. The oil passes through the bearing housing and exits at the bottom, where an oil drain tube returns the oil to the lower crankcase of the engine block.

10.4.2 AIR COMPRESSOR LUBRICATION

The air compressor receives its oil supply directly from the crankcase through the flange mounted side of the air compressor. The oil lubricates the compressor crankshaft and rod bearings, compressor cylinder walls, and then returns the oil to the sump through the crankcase. A separate oil feed is supplied to the gear spindle.

10.4.3 CRANKCASE BREATHER LUBRICATION

Oil directly from the lower crankcase of the engine block enters into the turbine wheel of the crankcase breather. Crankcase gases enter the crankcase breather through the top of the unit and pass through a rotating disc stack driven by the oil lubricated turbine wheel. The rotational speed of the discs separate the oil particles from the crankcase gases. The gases are vented to the atmosphere. The resulting oil particles as well as the oil used to drive the turbine wheel are returned to the oil pan.

10.5 COMPONENT OPTIONS & INSTALLATION REQUIREMENTS

The following component options are available with the following installation requirements being met.

10.5.1 OIL SAMPLING VALVE

On-Highway customers that perform regular oil sampling tests may request a permanent oil sampling valve for more convenient service. Detroit Diesel has a provision for an oil sampling valve to be installed on the DD Platform engine at the oil/coolant module connection. This option may be specified with the engine and is part of the oil/coolant module group.

10.5.2 OIL CHECKS AND FILLS

Detroit Diesel has a variety of pre-calibrated dipstick and tube assemblies for all oil sump configurations for DD applications. These parts may be specified with the engine or purchased separately from the Parts Distribution Center. When the same engine configuration is used in more than one installation, where the installation angles may vary, it is critical that the proper oil gage is used for each variant.

 Copyright © 2009 DETROIT DIESEL CORPORATION

https://truckmanualshub.com/

Detroit Diesel provides two oil fill options. The standard oil fill location is on the oil/coolant module. The optional location is on the oil sump. If appropriate check and fill options are not shown for your particular installation, please contact Detroit Diesel Application Engineering for new and/or alternative designs.

10.5.3 OIL SUMPS

Various oil sump configurations are available and may be seen on the www.detroitdiesel.com. If you do not have access to the www.detroitdiesel.com contact your Distributor. For application guidelines on the use of the various sumps, please contact Detroit Diesel Application Engineering.

10.5.4 ENVIRONMENTALLY SAFE OIL CHANGE (ESOC) FITTINGS

ESOC drain and fill fittings may be specified as part of the engine assembly. These options may only be used on sumps which include M27 x 2 bulkhead fittings.

When the drain and fill ESOC option is used, a fitting assembly is installed in the front-facing side of the oil/coolant module. This fitting assembly extends the oil fill connection downward towards the oil pan rail. A quick-disconnect fitting and dust cover are provided for the customer attachment.

The drain fitting used with the ESOC drain and fill option replaces the standard drain plug. Alternative locations are not recommended, as the fastening of external fittings to the drain assembly may rotate the tube away from the bottom of the pan.

10.5.5 OIL IMMERSION HEATERS

Oil immersion heaters may be installed in any DD Platform engine oil sump. These heaters should be installed in a sump port that is constantly submerged in oil. Preferably, the lowest opening in the side of the pan. Care must be taken in the selection of heaters to ensure they do not interfere with other components installed in the pan, such as ESOC fittings and the sump pickup. When an ESOC connection is installed opposite to an oil immersion heater, the element of the heater should be limited to 140 mm (5.5 in.) in length. Straight heater elements do not present any interference problems with sump pickups. To ensure maximum performance and avoid interference problems, heater elements that bend or curl away from the axis of the installation hole are not recommended.

Oil immersion heaters perform best when energized immediately after engine shutdown, while the oil is still warm. This practice will minimize the possibility of coking the oil on the heater element. Elements are most susceptible to oil coking when used on a cold engine. The power density of the heater element should be kept below 4 Watts per square centimeter, to prevent oil coking in extreme cold conditions.

10.5.6 OIL LEVEL SENSORS

There will be no oil level sensors available for the DD Platform engine.

All information subject to change without notice.
DDC-SVC-MAN-0073 Copyright © 2009 DETROIT DIESEL CORPORATION

https://truckmanualshub.com/

10.6 OPERATION AND MAINTENANCE

The following must be considered for proper operation and maintenance.

10.6.1 FIRST TIME START

DD Platform engines are shipped from the factory with a full oil filter and a minimal amount of oil in the sump. The engine needs to be filled with oil to its high limit previous to a first time start. The oil level should be verified after the entire engine installation is complete, to avoid false readings from incorrect angularity during the initial fill.

10.6.2 OIL LEVEL MEASUREMENTS

Oil level should always be checked with the vehicle or apparatus on level ground, and any ride-height altering controls set to their rest positions. A minimum wait of ten minutes after engine shutdown is required to achieve an accurate oil level measurement. A twenty minute wait after shutdown is recommended to allow the oil to fully drain back to the pan from the overhead space.

10.6.3 USED OIL ANALYSIS

Refer to the Technician's Guide *Used Lubricating Oil Analysis*, DDC-SVC-MAN-0047, for a detailed procedural description and interpretation of analysis results.

10.6.4 OIL DRAIN INTERVALS

For information on oil drain intervals, refer to DDC publication *Lubricating Oil, Fuel, and Filters*, (DDC-SVC-BRO-0001), on the www.detroitdiesel.com.

 Copyright © 2009 DETROIT DIESEL CORPORATION

https://truckmanualshub.com/

THIS PAGE INTENTIONALLY LEFT BLANK

All information subject to change without notice.
DDC-SVC-MAN-0073 Copyright © 2009 DETROIT DIESEL CORPORATION

https://truckmanualshub.com/

11 ELECTRICAL SYSTEM

Section **Page**

11.1 ELECTRICAL SYSTEM DESCRIPTION 11- 2
11.2 INSTALLATION GUIDELINES 11- 3

 Copyright © 2009 DETROIT DIESEL CORPORATION

https://truckmanualshub.com/

11.1 ELECTRICAL SYSTEM DESCRIPTION

This section describes the function, design, and application of the electrical system for the Detroit Diesel DD Platform engines.

The purpose of the electrical system is to provide the energy required to start the engine. The electrical system consists of the following components:

- □ Battery charging alternator (Alternator)
- □ Voltage regulator (generally integral to the alternator)
- □ Storage battery(s)
- □ Cranking motor (Starter)
- □ Ignition switch

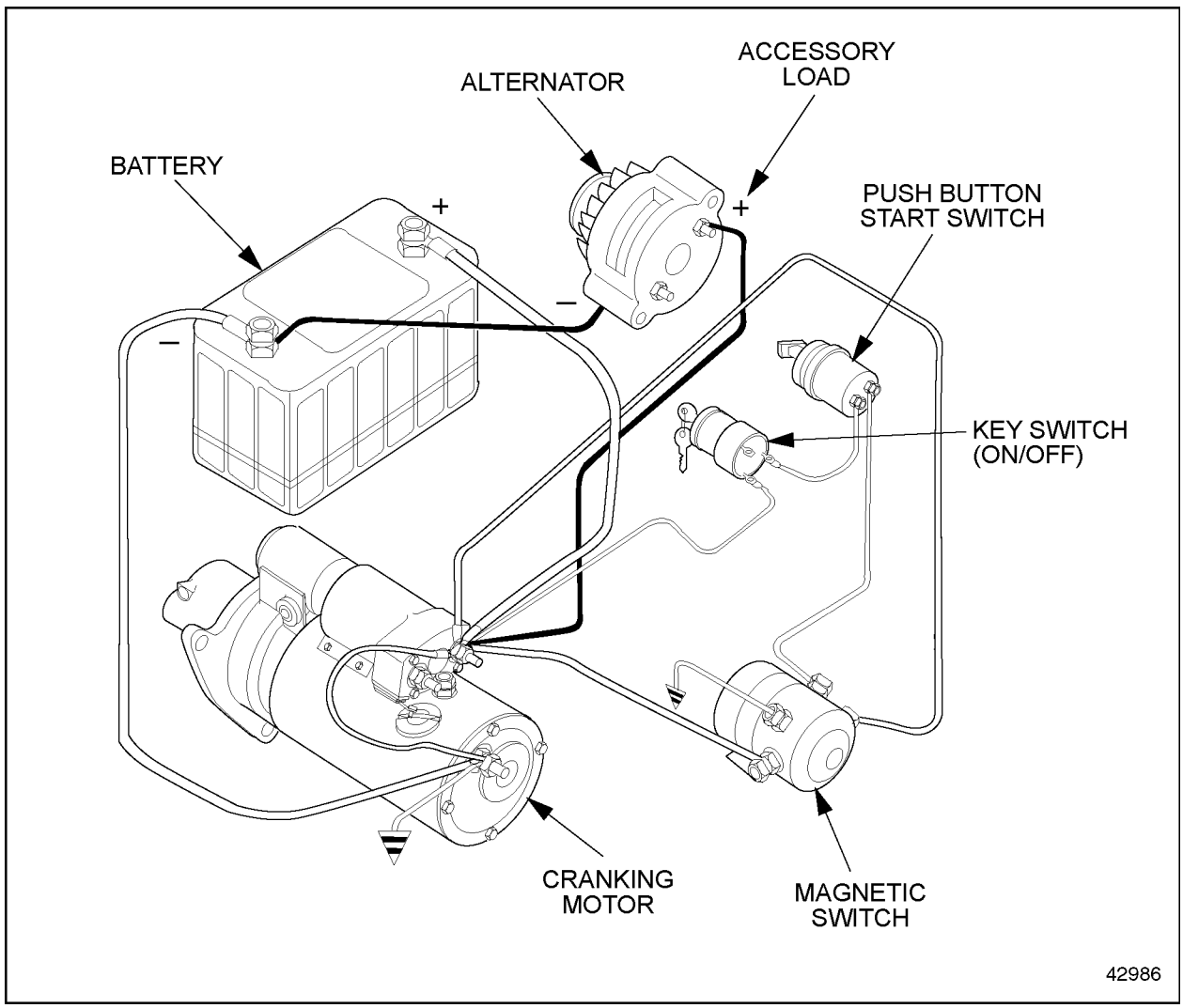

Figure 11-1 Engine Electrical System

All information subject to change without notice.
DDC-SVC-MAN-0073 Copyright © 2009 DETROIT DIESEL CORPORATION

https://truckmanualshub.com/

The battery stores electrical energy. The cranking motor converts electrical energy from the battery into mechanical energy, then transfers the mechanical energy to the engine as a rotational force. The alternator converts rotational energy from the engine to electrical energy. This electrical output of the alternator is transferred to the battery where it is stored for later use. The wiring links the battery to the starter and the alternator to the battery.

The electrical system is activated by means of a master (key) switch. This switch may include a start position, or a separate start switch may be used. Because the starter solenoid has very high rush current when energized, a magnetic switch is used to carry this current, thereby isolating the master (key) switch to avoid damage to its switch contacts.

11.2 INSTALLATION GUIDELINES

The engine electrical system with properly matched parts provides a balanced system which should meet all operating requirements.

11.2.1 BATTERY

The battery is a device for storing electrical energy and converting chemical energy into electrical energy. Five basic types of batteries are currently available:

- Filler cap batteries
- Semi-maintenance free batteries
- Maintenance-free batteries
- Deep cycle batteries
- Gel-cell and nickel cadmium batteries

11.2.1.1 Filler Cap Batteries

Filler cap batteries are lead-acid with a high degree of antimony in the grid alloy. These batteries require frequent servicing especially adding water and cleaning salts and corrosive deposits from the terminal posts.

11.2.1.2 Semi-Maintenance Free Batteries

Servicing is reduced with semi-maintenance free batteries due to reduced amount of antimony in the grid alloy. Water must still be added periodically. Salt and corrosive deposits must be cleaned from the terminal posts.

11.2.1.3 Maintenance-Free Batteries

Maintenance-free batteries use lead-calcium grid construction without antimony. These batteries never need water. Terminal posts do not tend to accumulate salt and corrosive deposits since there are no filler caps to leak acid fumes, so cable inspection and cleaning are infrequent.

 Copyright © 2009 DETROIT DIESEL CORPORATION

https://truckmanualshub.com/

11.2.1.4 Deep Cycle Batteries

Deep cycle batteries are used for applications like electric drive carts and are not recommended for engine starting.

11.2.1.5 Gel-Cell And Nickel Cadmium Batteries

Gel-cell and nickel cadmium batteries require charging rates that differ from those used for lead-acid batteries. The charging rate of DDC supplied alternators is not compatible with gel-cell and nickel cadmium batteries. If gel-cell batteries are to be used, consult the battery and alternator suppliers.

11.2.1.6 Battery Capacity

The minimum battery capacity recommended for acceptable engine cranking is listed in the following table.

Engine Model	System Voltage	Minimum Battery Ratings
		SAE Cold Cranking Amps @ -17.8°C (0°F)
		Above 0°C (32°F)
DD Platform	12V	1875

Table 11-1 Minimum Battery Capacity for Acceptable Engine Cranking

11.2.1.7 Battery Mounting and Location

Battery mounting boxes, or carriers, support the batteries and protect them from excess vibration, road splash, saltwater, and other environmental conditions. The battery carrier may be heated or cooled to keep the battery at optimum operating temperature, 27°C (80°F).

The recommended battery carrier designs are:

- Top crossbar
- Top mid-frame
- Top picture frame
- Angled J-bolt

All information subject to change without notice.
DDC-SVC-MAN-0073 Copyright © 2009 DETROIT DIESEL CORPORATION

https://truckmanualshub.com/

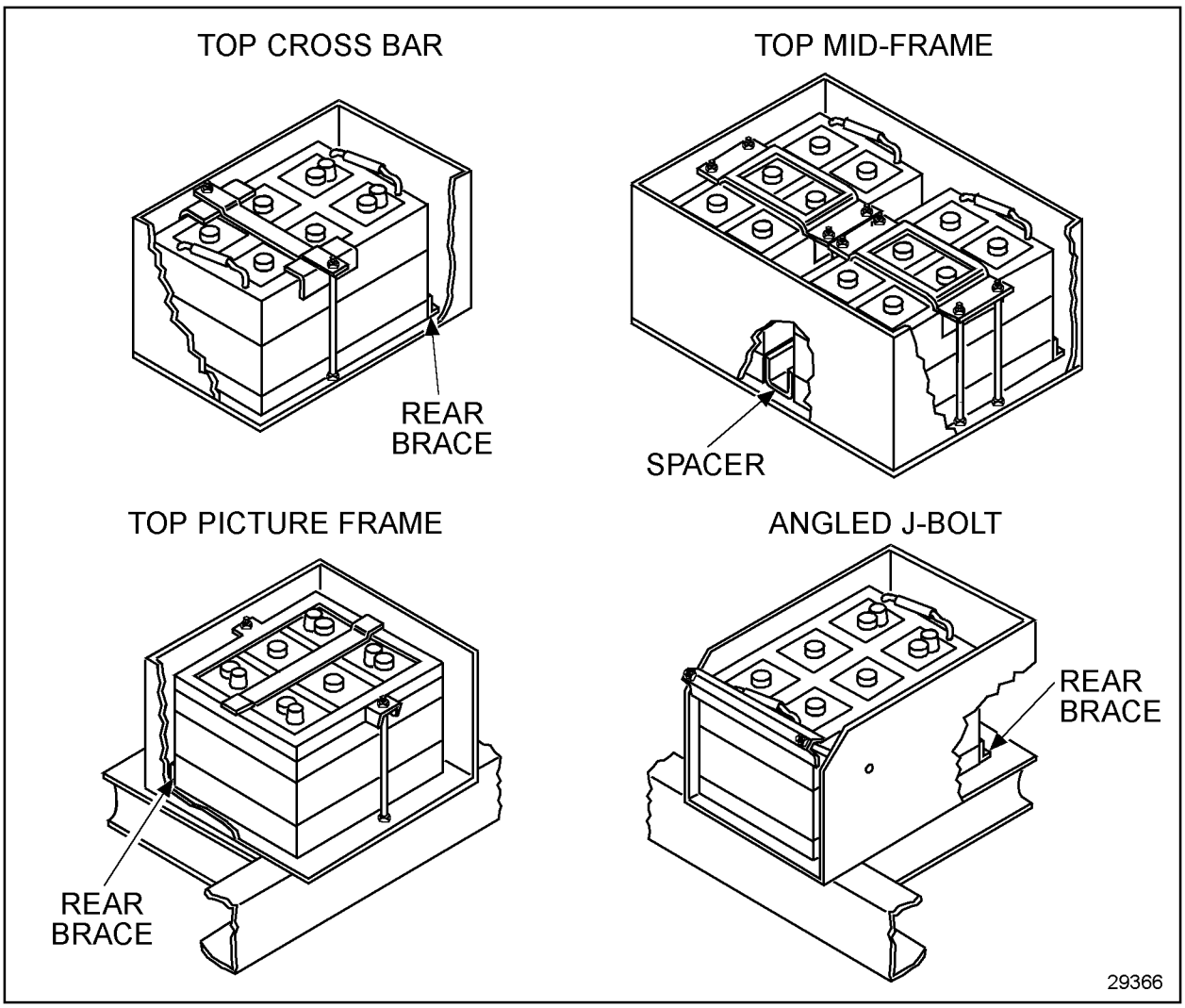

Figure 11-2 Battery Retainers

The battery should be located away from any flame or spark source, road splash, and dirt but as close as possible to the starting motor. The battery should be located in a place with minimum vibration and easy access for visual inspection and maintenance.

Batteries mounted between frame rails, either inside or above the rails, experience minimum vibration. Batteries mounted outside, but close and parallel to frame rails, experience greater vibration. Both of these locations are recommended for all applications. Cantilever battery mountings are not recommended.

11.2.2 CRANKING MOTOR

The cranking motor is bolted to the flywheel housing.

 Copyright © 2009 DETROIT DIESEL CORPORATION

https://truckmanualshub.com/

NOTICE:
To prevent excessive overrun and damage to the drive and armature windings, the switch should be opened immediately when the engine starts. A cranking period should not exceed 30 seconds without stopping to allow the motor to cool for at least two minutes.

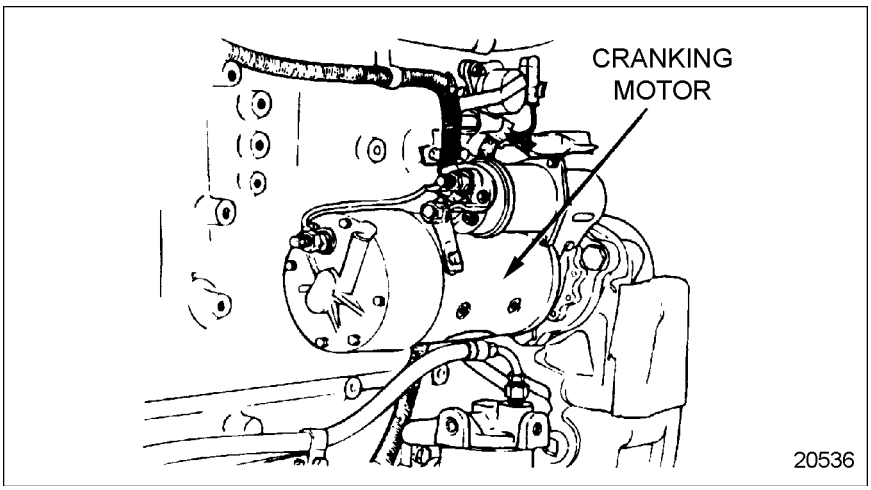

Figure 11-3 Cranking Motor Mounting

When the engine start circuit is closed, a drive pinion on the armature shaft engages with the teeth on the engine flywheel ring gear to crank the engine. When the engine starts, it is necessary to disengage the drive pinion to prevent the armature from overspeeding and damaging the cranking motor. To accomplish this, the cranking motor is equipped with an overrunning clutch within the drive pinion. The cranking motor drive pinion and the engine flywheel ring gear must be matched to provide positive engagement and to avoid clashing of the gear teeth.

The 39 MT or 42 MT cranking motor typically used on the DD Platform engine has a nose housing that can be rotated to obtain a number of different solenoid positions with respect to the mounting flange.

All information subject to change without notice.
DDC-SVC-MAN-0073 Copyright © 2009 DETROIT DIESEL CORPORATION

https://truckmanualshub.com/

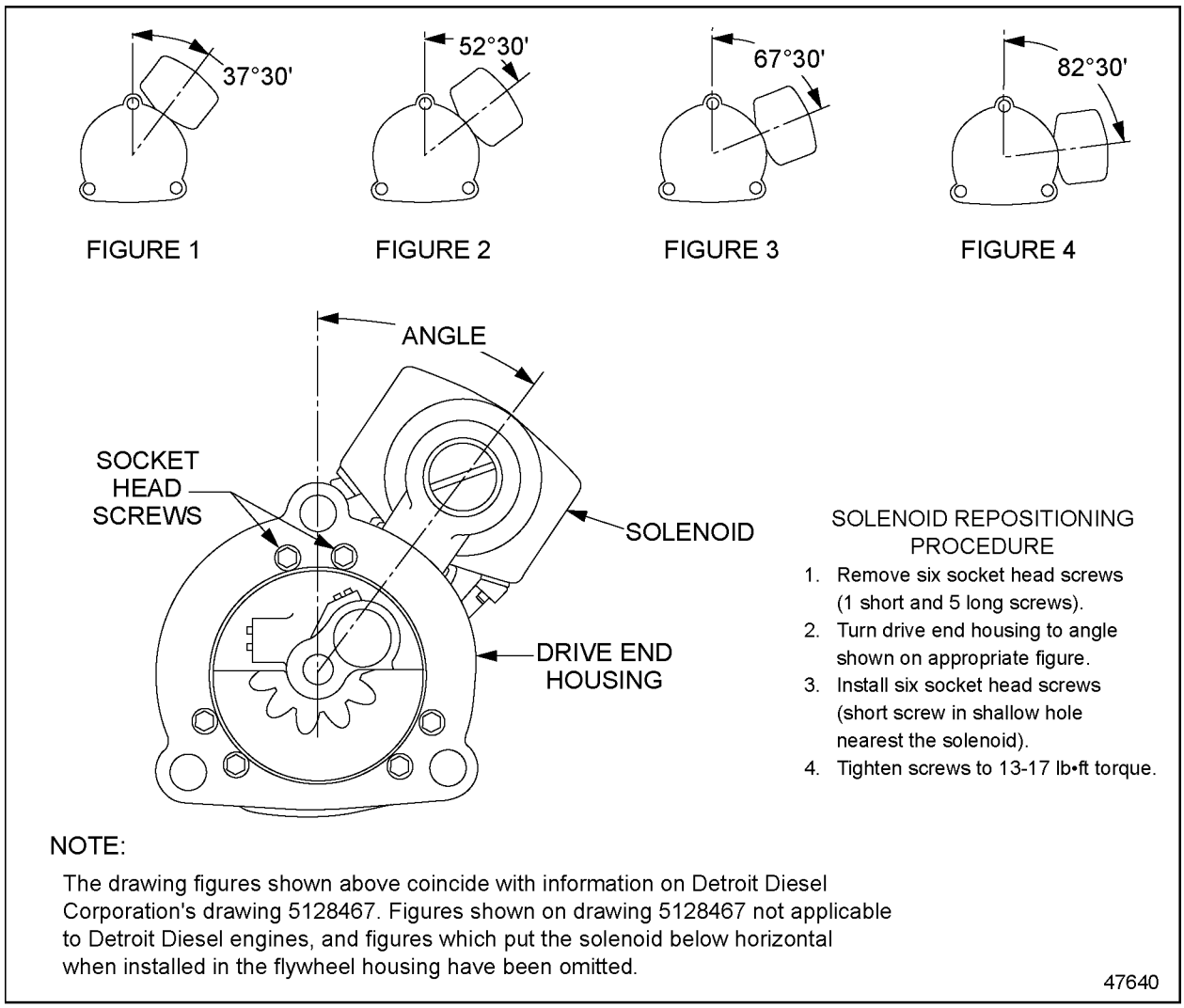

Figure 11-4 Acceptable Cranking Index with DD Platform

The cranking motor should be installed so that the solenoid is above horizontal.

Mounting the cranking motor with the solenoid above horizontal allows any accumulated moisture to drain out of the shift housing through the open nose housing. Moisture and condensation may remain trapped and accumulate in the area of the solenoid and shift linkage and damage the solenoid if the solenoid is below horizontal.

 Copyright © 2009 DETROIT DIESEL CORPORATION

https://truckmanualshub.com/

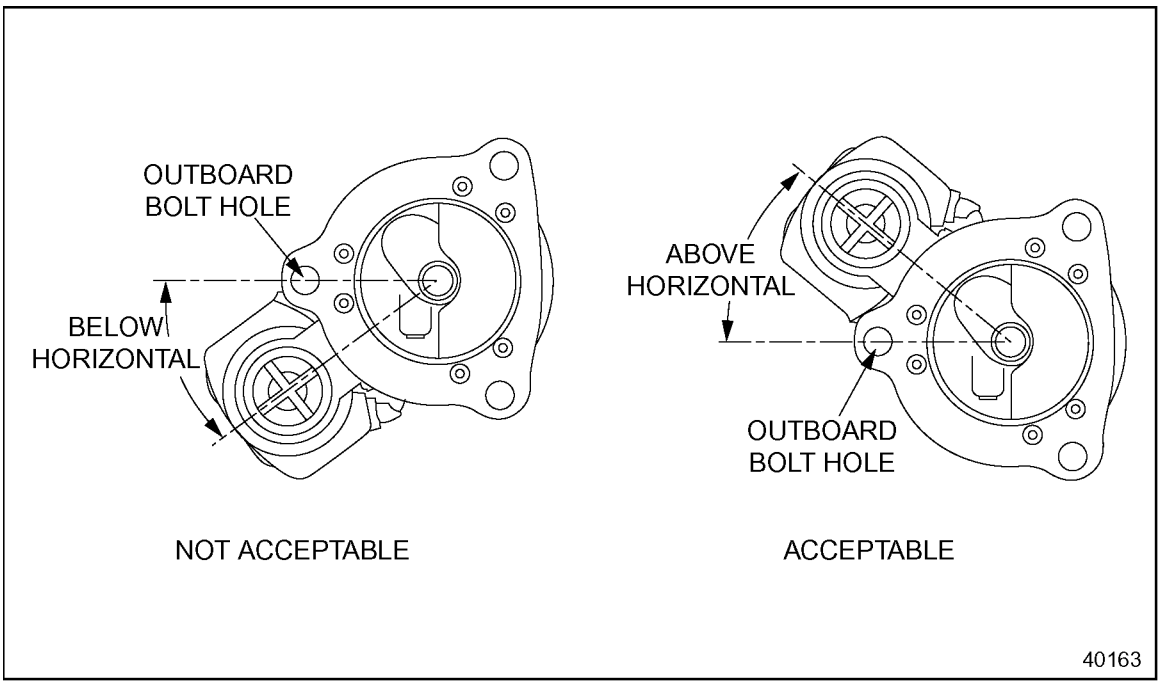

Figure 11-5 Cranking Motor Indexing

The starter motor armature is supported by three centered bronze bearings located, one each, in the nose and intermediate housings, with one in the commutator end cap.

All information subject to change without notice.
DDC-SVC-MAN-0073 Copyright © 2009 DETROIT DIESEL CORPORATION

https://truckmanualshub.com/

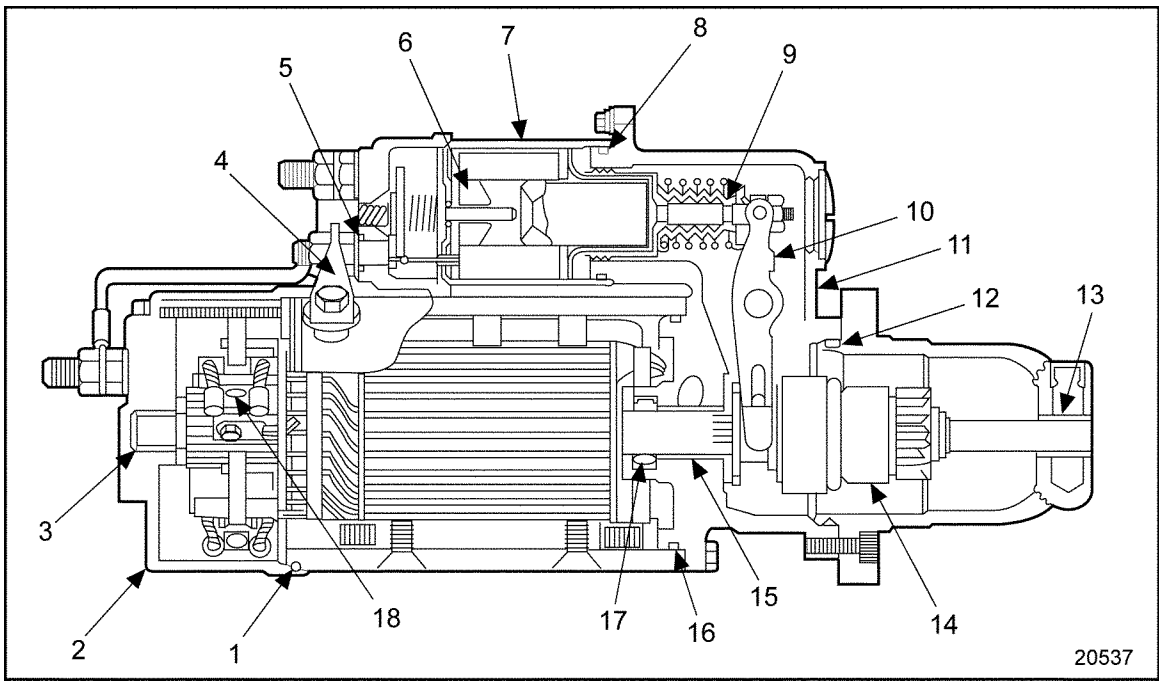

1. O-ring
2. End Cap (Removal for Inspection)
3. Bronze Bearing
4. Connector Strap
5. Gasket
6. Low Friction Bushing
7. Seamless, One-piece Solenoid Case
8. O-ring
9. Sealing Boot
10. Shift Mechanism (Totally Enclosed)
11. Two-piece Housing
12. O-ring
13. Bronze Bearing
14. Heavy-duty Drive Overrunning Clutch
15. Bronze Bearing
16. O-ring
17. Shaft Seal
18. One-piece Brush

Figure 11-6 Typical Cranking Motor Cross-section

Excessive engine cranking may cause the starter to overheat and may reduce its life.

Cranking time should not exceed 30 seconds, with a two minute cool down interval between cranking periods.

11.2.3 ALTERNATORS

The battery-charging alternator provides a source of electrical current for maintaining the storage battery in a charged condition. The alternator also supplies sufficient current to carry any other electrical load requirements up to the rated capacity of the alternator.

 Copyright © 2009 DETROIT DIESEL CORPORATION

https://truckmanualshub.com/

11.2.3.1 Alternator Mounting

The typical mounting assembly includes a mounting bracket that matches the alternator mounting lugs, an adjusting strap, and associated hardware.

The following guidelines are provided for correct alternator mounting:

NOTICE:
Do not mount the alternator near the exhaust manifold. Mounting near the exhaust manifold could overheat the alternator and the regulator.

- □ A mounting location close to the engine block minimizes mounting bracket overhang.
- □ A mounting location not subject to resonant vibration is best.
- □ The alternator mounting assembly should support the alternator rigidly so that the alternator pulley grooves are in the same plane as the driving pulley grooves on the engine. Provision must be made for belt tension adjustment.
- □ Drive and driven pulleys must be in parallel and angular alignment to prevent short belt life or loss of belt.
- □ Anchor the adjusting strap and mounting brackets to a rigidly fixed heavy section. Motion between the mounting bracket and adjusting strap can create an unacceptable vibration.

Incorrect mounting can result in:

- □ Improper alignment of pulleys
- □ Excessive vibration of mounting assembly components

Improper alignment of pulleys causes excessive belt or pulley wear. Society of Automotive Engineers' (SAE) recommended practice should be followed with respect to pulley alignment and tolerances. The pulley groove must be concentric with the bore and the pulley should be adequately balanced. Fabricated sheet metal pulleys are not recommended for applications with heavy belt loads. Belt resonance will result in short belt life. Contact the belt manufacturer if belt resonance is a problem.

Excessive vibration of mounting assembly components can cause failure of the mounting bracket, the adjusting strap, the alternator mounting lugs, or other alternator components. An effective bracket must stay firmly attached to the engine.

Under special circumstances, an OEM or distributor may require the mounting location of an alternator not supplied by DDC. Prior to the manufacturing of the mounting components, the OEM or distributor must supply details of the design for review. Also a vibration test will be required. Contact Application Engineering for details.

All information subject to change without notice.
DDC-SVC-MAN-0073 Copyright © 2009 DETROIT DIESEL CORPORATION

https://truckmanualshub.com/

11.2.4 GROUNDING REQUIREMENTS

The preferred method of ground return is to use a copper cable from the ground side of the cranking motor or alternator back to the battery. The cable size should be the same as the supply cable coming from the battery. When calculating the correct cable size, the distance from the battery to the cranking motor or alternator as well as the ground return distance must be used to determine the total cable resistance or system voltage drop.

11.2.5 WIRING

Cables and wiring are an important part of the electrical system which is often overlooked or neglected.

The cables are the highway on which the electrical energy travels.

Just one faulty or dirty connection can reduce electrical energy transfer just as surely as traffic on a modern four lane highway that is narrowed down to one lane. As long as traffic is light there is no problem but during rush hour it is quite different. Cranking the engine on a cold morning with a faulty or dirty connection which restricts the flow is the same as rush hour on a suddenly reduced highway.

11.2.5.1 Guidelines for Electrical Wiring

Guidelines for electrical wiring start with determining the vehicle or chassis type, system voltage, starting motor type, batteries used, and location. That information is then used to determine proper routing, cable length and size, insulation, terminals, routing clamps, loom or conduit requirements and connections.

Use for following guidelines for electrical wiring:

- □ Rope stranded copper cable is recommended for #0 or larger cable sizes because of its added flexibility.
- □ A full copper circuit is recommended for all installations because it maintains the lowest resistance and is the most trouble free.
- □ Good cable routing is not too tight or loose, is properly supported, and avoids excessive heat, abrasion, and vibration.
- □ Conduit or loom should be considered to protect cable where extreme heat or abrasion cannot be avoided.
- □ Die-cast lead alloy terminals are recommended for post-type batteries.
- □ Sealed terminals are recommended where sealed terminal batteries are available.
- □ Ring terminals are not recommended for battery connections but are recommended for other connections.
- □ Clamps should be used to support the battery cable every 24 in. and to relieve strain at battery and motor terminals, around corners, and other stress points.

 Copyright © 2009 DETROIT DIESEL CORPORATION

https://truckmanualshub.com/

- □ External or internal tooth lock washers are not recommended for battery cable electrical connections.
- □ Frame area where ground connection is made should be stripped of paint and tinned to prevent corrosion.
- □ Recommended battery cable connections to the frame have hardened steel flat washers with a locking nut.

11.2.5.2 Cable Loss Test Procedure

Correct sizing and installation can be checked by measuring voltages. Once you have the voltages: Battery Voltage minus Motor Voltage equals Cable Loss.

Measure voltages for correct sizing as follows:

1. Tighten nuts holding battery cables to solenoid and starter terminals.

NOTE:
Solenoid “BAT” terminal is at battery voltage when batteries are connected.

2. Connect the positive carbon pile lead to the starter solenoid “BAT” terminal. Connect the negative lead to the starter ground terminal.
3. Connect the battery cables within the battery box and tighten to specification.
4. Adjust the load to 500 amps.
5. Quickly measure voltage of a connected battery (measure at a terminal nut or actual post).
6. Turn off load, allow carbon pile to cool.
7. Connect voltmeter to the solenoid “BAT” terminal and starter ground. Connect directly to terminals, not to load clamp.
8. Adjust load to 500 amps.
9. Measure motor voltage.
10. Turn off load.

11.2.5.3 Measuring Circuit Resistance

To measure cranking circuit resistance, disconnect positive and negative cables at the battery. Install a galvanometer or precision ohmmeter (0.0001 ohms resolution) and read the resistance. Resistance should be less than the maximum allowable for this system. If the measurement exceeds the maximum values, corrective measures such as cleaning the connections, reducing the number of connections, or increasing wire gage will have to be taken.

All information subject to change without notice.
DDC-SVC-MAN-0073 Copyright © 2009 DETROIT DIESEL CORPORATION

https://truckmanualshub.com/

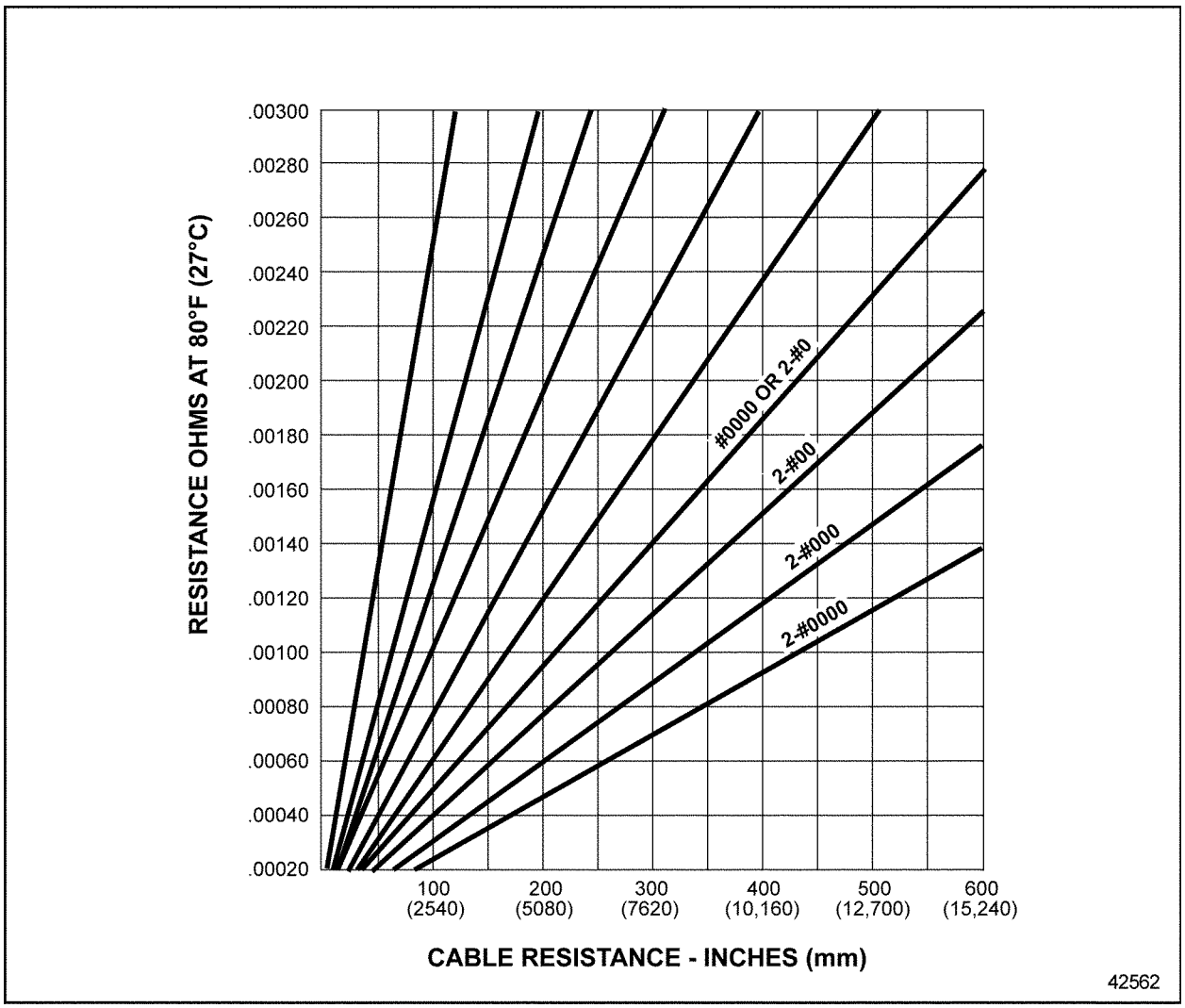

Figure 11-7 Cable Resistance

11.2.5.4 Calculating Circuit Resistance

If a galvanometer is not available, circuit resistance may be estimated as follows:

1. Measure the total length of the cable from the battery to the starter and back to the battery.
2. Use the chart to estimate cable resistance.
3. Count the number of connections in circuit.
4. Multiply the number of connections by 0.00001 ohms.
5. Add this number to the cable resistance number found in step 4. Also add 0.0002 ohms for any contacts in the circuit.
6. If this total resistance exceeds the value listed in the following table, corrective action must be taken.

 Copyright © 2009 DETROIT DIESEL CORPORATION

https://truckmanualshub.com/

Magnetic Switch and Series-Parallel Circuit	Circuit Resistance
12 V system	0.048 ohms
Solenoid Switch Circuit	
12 V system	0.0067 ohms
Starting Motor Circuit	
12 V system	0.0012 ohms
12 V high output system	0.00075 ohms

Table 11-2 Maximum Circuit Resistance

All information subject to change without notice.
DDC-SVC-MAN-0073 Copyright © 2009 DETROIT DIESEL CORPORATION

https://truckmanualshub.com/

12 MOUNTING SYSTEM

Section **Page**

12.1 MOUNTING SYSTEM DESCRIPTION 12- 2
12.2 SOLID MOUNTING SYSTEMS 12- 3
12.3 FLEXIBLE MOUNTING SYSTEMS 12- 4
12.4 INSTALLATION CHECK LIST 12- 6
12.5 ENGINE SUPPORT 12- 7

 Copyright © 2009 DETROIT DIESEL CORPORATION

https://truckmanualshub.com/

12.1 MOUNTING SYSTEM DESCRIPTION

The purpose of the engine mounting system is to isolate engine vibrations from the supporting structure. This section describes the functions, design, and application for the mounting system of a DD Platform engine.

The major functional requirements of an engine mounting system are:

- To control and reduce the engine motion
- To isolate engine vibrations from the structure
- To control external forces during shock or transient conditions to prevent physical contact between the engine and the application
- To limit the bending moments at the cylinder block-to-flywheel housing within the maximum values specified for the engine and application

Flexible mounts, solid mounts, or a combination of the two types of mounts represent the different mounting system configurations. Flexible mountings enable the supporting structure to be isolated from engine vibration. Solid mountings are used when the movement of an engine with flexible mounts is not acceptable. Solid mountings are also used in applications where shock, torque, and thrust loads exceed the limits of resilient flexible mounts. A combination of solid and flexible mountings may be used based on the relationship required between the engine and the machine. The vibration characteristics of the total installation will depend on the combined weight of the engine, accessories, and interface equipment, the rigidity of the mounting system and the structure where it sits. Most mount manufacturers have computer analysis programs which determine the proper mounts for specific applications.

12.1.1 THREE-POINT MOUNTING

Three-point mounting is based on the principle that three points define a plane and therefore engine block and driven machinery twisting will not occur. Three point mounting is required for off highway and rough terrain mobile applications, but it can also readily be used in stationary applications. It is accomplished with one mounting point at the front and two at the rear. The front mount provides support vertically and transversely but will not restrain torsionally. For torsional support a bracket is attached to each side of the flywheel housing, with the driven mechanism flange mounted to the engine.

Care must be taken to ensure that the mounting points are located in a way such that the bending moment at the rear face of the block is less than 1000 lb·ft.

All information subject to change without notice.
DDC-SVC-MAN-0073 Copyright © 2009 DETROIT DIESEL CORPORATION

https://truckmanualshub.com/

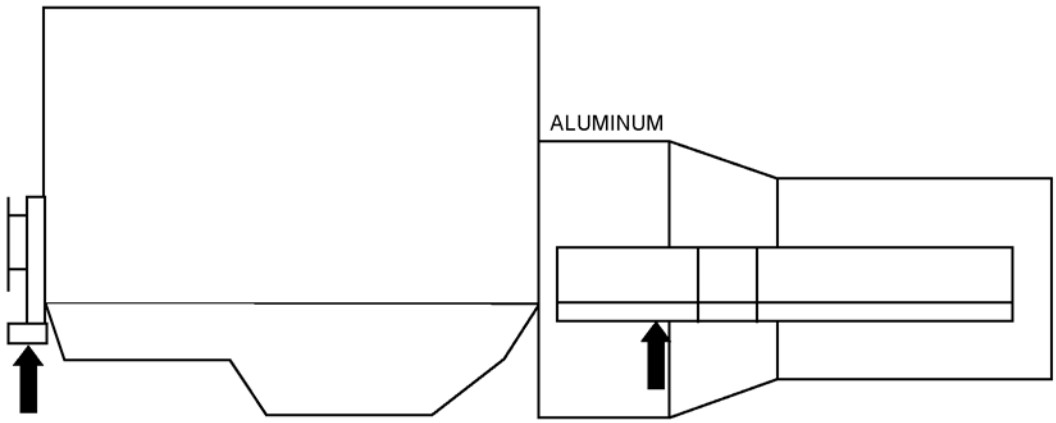

ARROWS REPRESENT THE ENGINE/ACCESSORY MOUNT CONNECTION TO THE VEHICLE

d300010

Figure 12-1 General Three Point Mounting Scheme

NOTE:
The engine must be analyzed for the bending moment produced at the rear face of the block. If the bending moment exceeds the limit of 1,356 N·m (1,000 ft·lb), then the rear mounts must be located to achieve a bending moment within these limits, ideally as close to zero as possible.

The rear mounts should restrain motion in all six degrees of freedom and provide the necessary torque reaction forces. Isolation mounts can be used under both front and rear mounting brackets if applicable.

12.2 SOLID MOUNTING SYSTEMS

Solid mounting is used in applications where severely high shock, torque and/or thrust loads are introduced. Solid mounts are, therefore, used in instances where flexible mounting is not acceptable due to the physical conditions which will be encountered for the given application.

In any solid mounting arrangement, consider the following :

- □ Make the mounting brackets and mounting base as rigid as possible.
- □ Alignment of the engine and the machine being driven must be carefully controlled to minimize loading on the coupling, flywheel, and flywheel housing. If the assembly is remote mounted and shaft driven with a coupling, check for face run out to 0.002 in. (0.051 mm) on each flange apart. With flanges together a 0.127 mm. (0.005 in) gap is permitted for angular misalignment. Concentricity, also checked with dial indicators, should be good within 0.127 mm. (0.005 in). (Make adjustments by shimming under one or more of the solid mounts.

 Copyright © 2009 DETROIT DIESEL CORPORATION

https://truckmanualshub.com/

- Use isolators for instruments, radiators, etc. attached to the top of the subbase to prevent damage caused by the vibrations that are transferred through the solid engine mounts.
- All mounting components must be strong enough to withstand the dynamic loadings associated with the application.
- Control the bending moment at the rear of the cylinder block by placement of the rear mount or cradle.

12.3 FLEXIBLE MOUNTING SYSTEMS

Flexible mountings enable the supporting structure to be isolated from engine vibration.

In any flexible mounting arrangement, consider the following requirements;

- The selected mounts must be rated to support the static and dynamic loads calculated for each mount.
- The mountings should protect the engine from any stresses caused by flexing and distortion of the machine frame.
- All mounting components must be strong enough to withstand the dynamic loadings associated with the application.
- The mountings must isolate the application from engine vibration at all engine speeds.

12.3.1 FLEXIBLE MOUNT SELECTION

The easiest method to obtain the correct resilient mounts is to contact one of the many manufacturers of resilient mounts. They have computer programs that will come up with the right mounts for the application. However you still have to be prepared to furnish them the necessary information as follows:

1. Name and description of the application and usage anticipated. This includes:
   - [a] Mobile
   - [b] On-Highway
   - [c] Engine Model
   - [d] Number of Cylinders
   - [e] Four-Cycle
   - [f] RPM of Operation including idle speed
   - [g] Configuration (In-line for DD Platform)
   - [h] Firing Order
   - [i] Crankshaft Arrangement
   - [j] HP and Torque
2. Total weight of engine plus driven components or their individual weights.
3. Center of Gravity (CG), x, y, and z of each component individually or combined.

All information subject to change without notice.
DDC-SVC-MAN-0073 Copyright © 2009 DETROIT DIESEL CORPORATION

4. Moments of inertia Ixx, Iyy, Izz about the CG if known. Otherwise, a dimensional drawing of the engine is needed to make an estimate.
5. Mounting pad positions x, y, and z relative to RFOB and crankshaft centerline.
6. Desired amount of isolation if known, usually a minimum of 90%, and 96-98% for generators in buildings.
7. Any expected shock or impact loads described in g's and direction.
8. Closest point x, y, z and clearances to machine members.
9. Any external forces, such as belt and chain drives, their direction and position.
10. Any environmental conditions such as temperature highs and lows, chemical or oil exposures, etc.

For common, non shock load applications the general procedure for self selection of mounts has two possible methods:

- Method A: Select a type of mount that supports the load from the supplier catalog and then calculate its isolation capability.
- Method B: Specify the isolation desired and calculate the mount characteristics required to obtain this. Then select the mount from the catalog.

For more details and formulas to use in your calculations, refer to Barry Controls bulletin IOEM1, or Lord Manufacturing bulletin PC2201o. The suitability of the selected mounts should still be confirmed with the manufacturer. Detroit Diesel assumes no responsibility for the resilient mounting system performance.

12.3.1.1 Method A

Select a type of mount that supports the load from the supplier catalog.

1. Determine the location of CG of the engine and transmission package.
2. Calculate the reaction forces at each mount using the weight and CG. Some mount manufacturers include safety factors up to three times the mount load rating, to allow for forces due to engine torque and rugged terrain, so weight only is normally sufficient to use for this calculation. However, if the power package will be subject to low gear, high torque operation, then the force due to torque must be added. Consult the manufacturer to be sure.
3. Refer to the mount tables in the catalog that suits the application and the environmental conditions. There might be more than one suitable table to refer to.
4. From your table of choice, select a mount that is within the load range. There might be several mount models to choose from.
5. Using constant for stiffness (K) from the table or accompanying load vs. deflection charts, and the weight (W) at the mounting point, calculate the natural frequency (Fn.) of that mount.

$$Fn = \frac{1}{2\pi}\sqrt{K/M}$$

where M = W/g, g = gravitational constant

 Copyright © 2009 DETROIT DIESEL CORPORATION

https://truckmanualshub.com/

6. Determine what are the prominent disturbing frequencies (Fi) of the input source. It usually consists of the engine first order or other known disturbing orders, or it could be the bumpy terrain. If the engine speed varies, use the lowest speed setting as well as the normal steady running speed. Calculate Fi/Fn. If it is greater than $\sqrt{2}$ the mount system is in the isolation range. If it is less than $\sqrt{2}$ it is in the amplification range and may not be suitable. If it is close to 1.0, it is close to resonance and should not be used at all.

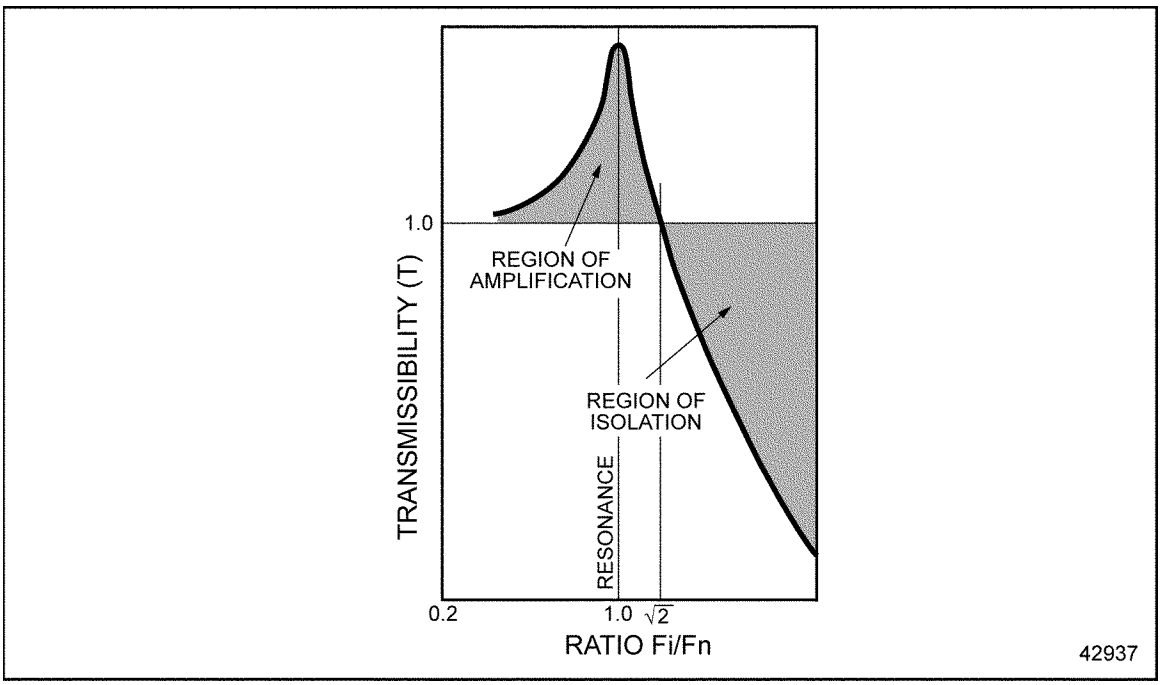

Figure 12-2 Transmissibility

12.3.1.2 Method B

Specify the isolation desired and calculate the mount characteristics required then select the mount from the catalog.

1. Establish a desired isolation requirement (I). 80% isolation efficiency or 0.8 is acceptable.
2. Determine transmissibility (T). T = 1.0 – I. In this case, T = 1.0 – 0.8 = 0.2
3. Determine Fn by the following formula: $Fn = Fi/\sqrt{1/T + 1}$
4. With this Fn determine spring rate needed (K) from the formula $Fn = \frac{1}{2\pi}\sqrt{K/M}$ where M = W/g, W/g = weight at the mount point/gravitational constant.
5. Refer to the catalog for the desired mount that has that spring rate, or close to it. Recheck its suitability by repeating the steps in Method A.

12.4 INSTALLATION CHECK LIST

To ensure proper installation of the isolators, DDC has found several common problems to check for upon completion. The most important items are:

All information subject to change without notice.
DDC-SVC-MAN-0073 Copyright © 2009 DETROIT DIESEL CORPORATION

https://truckmanualshub.com/

1. Based on the engine support calculation, ensure that the load capacity of the isolator is adequate at each location.
2. When applicable, ensure that the space between the mount and structure is enough to prevent "shorting" of the isolator.
3. Ensure that there are no sound-shorts: direct contact of the engine with other components (brackets, pipes, etc.) which are rigidly attached to the frame/applications.
4. For mounting systems other than three-point the load at each mount should be balanced or adjusted to prevent excessive loads at the mountings and high engine vibration levels.

12.5 ENGINE SUPPORT

To determine the distance of rear mounts to achieve a zero bending moment at the rear of the cylinder block. The following information must be filled out.

 Copyright © 2009 DETROIT DIESEL CORPORATION

https://truckmanualshub.com/

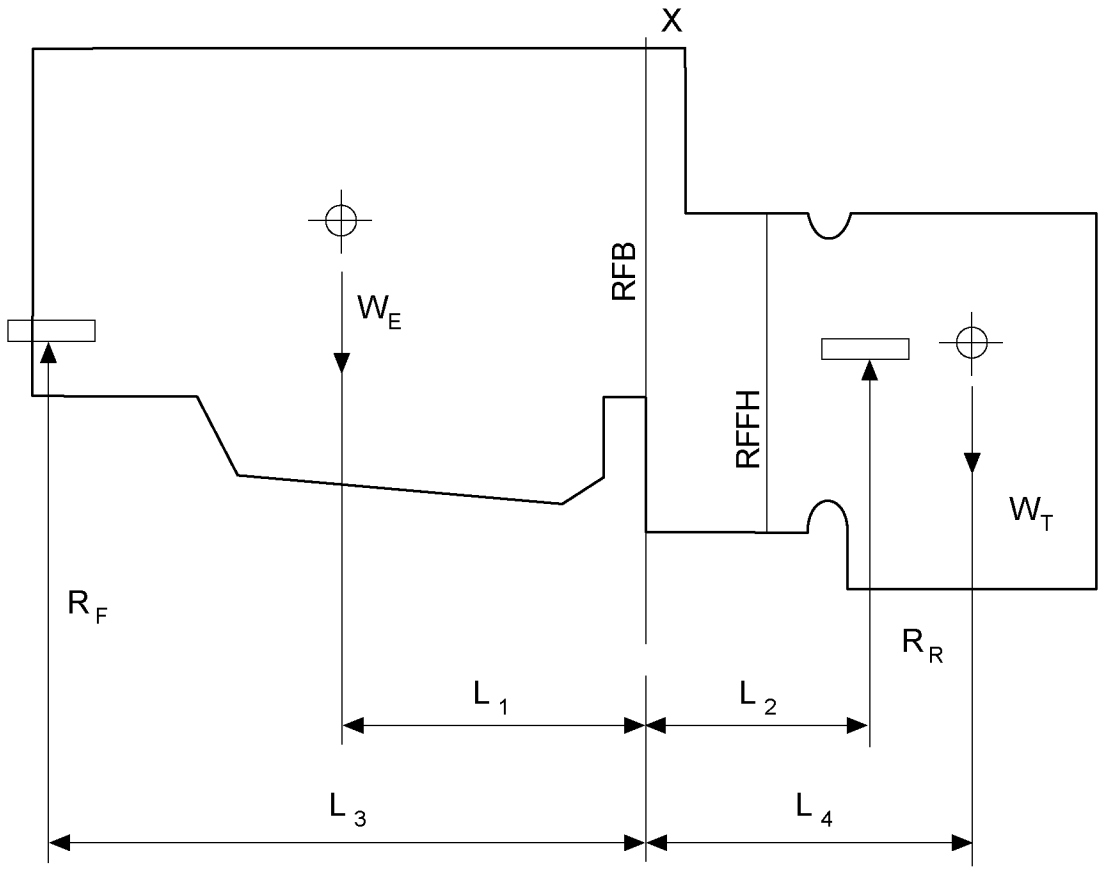

DETERMINATION OF DISTANCE OF REAR MOUNTS (L_2) TO ACHIEVE ZERO BENDING MOMENT AT REAR OF CYLINDER BLOCK.

WEIGHT OF ENGINE (DRY PLUS OIL AND WATER)	W_E	_____
WEIGHT OF TRANSMISSION (DRY PLUS OIL)	W_T	_____
DISTANCE TO ENGINE C.G.	L_1	_____
DISTANCE TO FRONT MOUNT	L_3	_____
DISTANCE TO TRANSMISSION C.G.	L_4	_____
DISTANCE TO CENTERLINE REAR MOUNT	L_2	_____

$$L_2 = \frac{W_T L_4 L_3}{W_E (L_3 - L_1) + W_T L_3} = _____$$

41195

Figure 12-3 Distance of Rear Mounts for Zero Bending Moments

To determine the bending moment at the rear of the cylinder block when engine mount locations are fixed, the following measurements must be taken.

All information subject to change without notice.
DDC-SVC-MAN-0073 Copyright © 2009 DETROIT DIESEL CORPORATION

https://truckmanualshub.com/

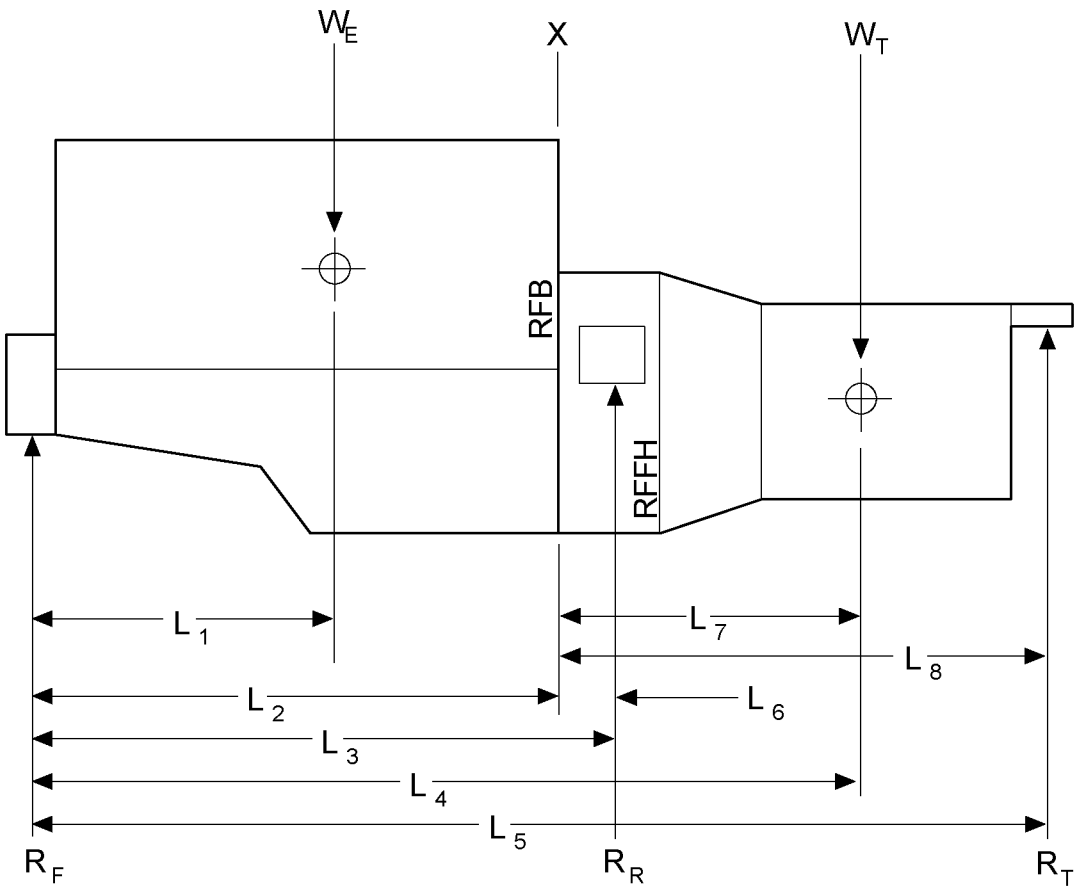

DETERMINATION OF BENDING MOMENT AT REAR OF CYLINDER BLOCK (M_X) WHEN ENGINE MOUNT LOCATIONS ARE FIXED. THE ENGINE MOUNT REACTIONS, R_F AND R_R, MUST FIRST BE DETERMINED. TO DO THIS, THE TAIL SUPPORT REACTION, R_T, MUST BE ASSUMED TO BE ZERO OR A PREDETERMINED VALUE WHICH MAY BE BUILT INTO THE APPLICATION.

$$R_R \quad \frac{W_E L_1 + W_T L_4 - R_T L_5}{L_3} = _____ \text{ LBS.}$$

$$M_X \quad W_T L_7 - R_R L_6 - R_T L_8 = _____ \text{ IN. LBS./12} = _____ \text{ FT. LBS.}$$

1000 FT.LBS = MAXIMUM ALLOWED

41194

Figure 12-4 Bending Moment for Fixed Mounting System

 Copyright © 2009 DETROIT DIESEL CORPORATION

https://truckmanualshub.com/

THIS PAGE INTENTIONALLY LEFT BLANK

All information subject to change without notice.
DDC-SVC-MAN-0073 Copyright © 2009 DETROIT DIESEL CORPORATION

https://truckmanualshub.com/

13 TORSIONAL ANALYSIS

Section **Page**

13.1 TORSIONAL ANALYSIS DESCRIPTION 13- 2
13.2 MASS ELASTIC DATA 13- 2
13.3 TORSIONAL ANALYSIS REQUEST FORM 13- 6

 Copyright © 2009 DETROIT DIESEL CORPORATION

https://truckmanualshub.com/

13.1 TORSIONAL ANALYSIS DESCRIPTION

A Torsional Vibration Analysis (TVA) is required for all applications. If an installation is identical (same engine power and torque ratings, crankshaft pulley, damper, flywheel, rotational devices connected to the engine and same types of connection hardware to drive the rotational devices) to an application that was previously analyzed, then the previously approved TVA can be applied.

DDC will perform the only acceptable Torsional Vibration Analysis for the engine. Other organizations also perform TVAs; however, the results obtained from other organizations will not be accepted for the evaluation of stresses occurring in the crankshaft. Typically, the analysis completed by the other organizations will sufficiently define mode shapes, system natural frequencies, and amplitudes or velocities. DDC will not accept these analyses as approval for the engine for any application. The only acceptable evaluation of the stresses occurring in the crankshaft is the analysis completed by DDC.

Torsional analysis request (TAR) forms are included in this manual for use in submitting requests to DDC. In order to minimize the turn around time of the analysis, only forms completed in their entirety should be submitted. For additional information regarding this topic, please refer to the Noise, Vibration, Harshness (NVH) Portal available through the DDC www.detroitdiesel.com or contact your application engineer.

13.2 MASS ELASTIC DATA

Mass elastic system data consists of inertias, torsional stiffness, and minimum shaft polar section modules for all rotating components (excluding belt driven components such as fans, pumps, compressors, etc.). Equivalent mass elastic systems of a DD Platform engine are provided on the following pages. These figures represent typical mass elastics without crankshaft pulleys, vibration dampers or flywheels. The specific information regarding optional equipment can be obtained by contacting: Nicole Bond (+1 313 592 5872), Torsional Vibration Analyst

All information subject to change without notice.
DDC-SVC-MAN-0073 Copyright © 2009 DETROIT DIESEL CORPORATION

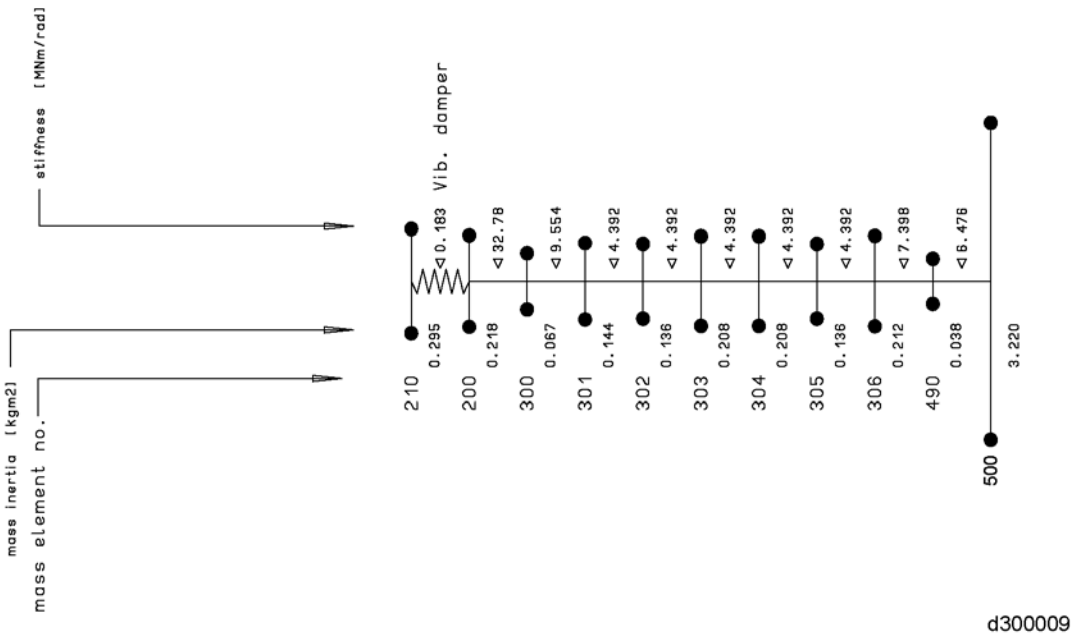

Figure 13-1 Mass Elastic Data

 Copyright © 2009 DETROIT DIESEL CORPORATION

https://truckmanualshub.com/

DETROIT DIESEL
DEMAND PERFORMANCE™

AUTOMOTIVE

1. VEHICLE

MANUFACTURER _____ MODEL _____

2. ENGINE

ENGINE MODEL _____ SERIAL NO _____

RATED POWER _____ hp RATED SPEED _____ r/min IDLE SPEED _____ r/min

PEAK TORQUE _____ lb·ft PEAK TORQUE SPEED _____ r/min

CRANKSHAFT PULLEY 6K1A _____ VIBRATION DAMPER 6C2 _____ FLYWHEEL 6C3 _____

FLYWHEEL HOUSING 6B _____ INJECTORS 6M6 _____ DDEC RATING 6N4M _____

3. CLUTCH (for manual transmissions)

MANUFACTURER _____ MODEL _____ SAE CLUTCH SIZE _____

NUMBER OF SPRINGS _____ MAXIMUM ZERO TO PEAK ANGULAR DEFLECTION _____

INERTIA WR^2 ☐ GD^2 ☐ ($lb{\cdot}in{\cdot}s^2$, $kg{\cdot}m^2$, other) UNITS

ATTACHED TO FLYWHEEL (COVER, PRESSURE PLATE, DISC, ETC.) _____ _____

ATTACHED TO SHAFT (HUB AND INNER PORTION OF DISC) _____ _____

TORSIONAL STIFFNESS (lb·ft/deg, N·m/deg, lb·in /rad, N·m/rad, other) _____ _____

NOTE: If clutch is not a single stage design, a load-deflection diagram is required.

CLUTCH FRICTION DAMPING IF APPLICABLE (lb·ft, N·m, other) _____ _____

4. TORQUE CONVERTER (for automatic transmissions)

MANUFACTURER _____ MODEL _____

PROVIDE TORQUE CONVERTER INERTIA IF NOT INCLUDED ON TRANSMISSION MASS-ELASTIC DIAGRAM UNITS

WR^2 ☐ GD^2 ☐ ($lb{\cdot}in{\cdot}s^2$, $kg{\cdot}m^2$, other) _____ _____

LOCK-UP CAPABILITY YES ☐ NO ☐

If torque converter is not capable of lock-up operation, no additional information is required with the exception of sections 9) and 10) if they apply.

For lock-up torque converters, a shift schedule which indicates converter lock-up operation should be provided. If this is not avaiable, the approximate speed at which the converter goes into lockup for each gear must be provided.

5. TRANSMISSION

TYPE MANUAL ☐ AUTOMATIC ☐ MANUFACTURER _____ MODEL _____

NUMBER OF FORWARD GEARS _____ TRANSMISSION RATIO IN TOP GEAR _____:1 IF OVERDRIVE, CHECK BOX ☐

IF TRANSMISSION IS MOUNTED REMOTELY, CHECK BOX AND FILL OUT SECTION 10. REMOTE MOUNTED ☐

Supply complete mass-elastic diagram of transmission. Also include minimum diameters for each shaft element in this diagram.

d300012

1 of 3

Figure 13-2 Mass Elastic Data Page 1 of 3

All information subject to change without notice.
DDC-SVC-MAN-0073 Copyright © 2009 DETROIT DIESEL CORPORATION

DETROIT DIESEL
DEMAND PERFORMANCE™

AUTOMOTIVE

6. DRIVESHAFT FROM TRANSMISSION TO AXLE

U-JOINT DRIVESHAFT MANUFACTURER _____ SERIES _____ PART NUMBER _____

SHAFT INERTIA WR^2 ☐ GD^2 ☐ UNITS (lb·in·s^2, kg·m^2, other)

DRIVE END (1/2 shaft plus yokes and cross) _____ _____

DRIVEN END (1/2 shaft plus yokes and cross) _____ _____

SHAFT TORSIONAL STIFFNESS (lb·in·/rad, N·m/rad, other) _____ _____

LENGTH (OVERALL - CROSS TO CROSS) _____

MINIMUM SHAFT DIAMETER OF THE SLIP JOINT _____

NOTE: For muliple piece driveshafts, provide the abouve mass elastic data for each shaft along with a layout drawing of the driveline.

7. AXLE

MANUFACTURER _____ MODEL NUMBER _____ RATIO _____

SINGLE ☐ TANDEM ☐ Fill out the approriate table below.

SINGLE AXLES

UNITS (lb·in·s^2, kg·m^2, other)

INERTIA OF THE PINION GEAR, RING GEAR, PINION SHAFT, AND AXLE SHAFTS (adjusted to pinion shaft speed) _____ _____

UNITS (lb·in·/rad, N·m/rad , other)

AXLE INPUT TORSIONAL STIFFNESS (i.e., effective torsional stiffness from input yoke or flange to the pinion gear) _____ _____

AXLE SHAFT TORSIONAL STIFFNESS (i.e., axle shaft torsional stiffness from ring gear to wheel hub, both shafts modeled in parallel) _____ _____

TANDEM AXLES

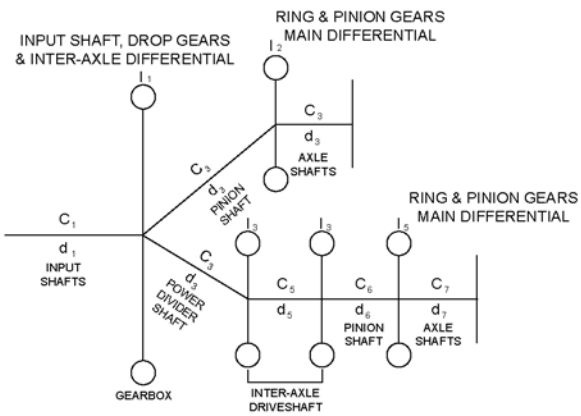

Inertias I_2 and I_5 should be adjusted to pinion shaft speed. Specify if stiffnesses c and c_7 have been adjusted by the square of the axle ratio. Also note c_3 (c_7) is the equivalent stiffness value for left and right axle shafts in parallel on the front (rear) axle.

d300013

2 of 3

Figure 13-3 Mass Elastic Data Page 2 of 3

 Copyright © 2009 DETROIT DIESEL CORPORATION

https://truckmanualshub.com/

13.3 TORSIONAL ANALYSIS REQUEST FORM

DETROIT DIESEL
DEMAND PERFORMANCE™

TORSIONAL ANALYSIS REQUEST FORM

TO BE COMPLETED BY REQUESTING ORGANIZATION. MUST BE ACCOMPANIED BY 7SA0667, 7SA0668, 7SA0669 OR 7SA0670 (WHICHEVER IS APPLICABLE)

DATE _____ NAME OF ORGANIZATION _____

WRITTEN BY _____ TELEPHONE _____ FAX _____

ADDRESS _____ CITY _____ STATE _____ ZIP _____

PURCHASE ORDER NO. _____ TYPE OF APPLICATION _____

ENGINE MODEL NO. _____ ENGINE SERIAL NO. _____

DD SALES ORDER NO. _____ CERTIFICATION BY _____

If certification is other than Lloyds Register of Shipping, American Bureau of Shipping, Det Norske Veritas or MIL-STD-167-2, please supply a copy of the requirements.

NOTE: Submit completed forms to:
Detroit Diesel
Service Communications (A14)
13400 Outer Drive West, Detroit, MI 48239-4001

TO BE COMPLETED BY DD SERVICE COMMUNICATIONS DEPARTMENT

TAR NO. _____

DUE DATE _____

AUTHORIZED BY: (Service Communications Department

CHARGE: BASIC $ _____

EXPEDITION $ _____

OTHER $ _____

TOTAL $ _____

d300015

Figure 13-4 Torsional Analysis Request Form

All information subject to change without notice.
DDC-SVC-MAN-0073 Copyright © 2009 DETROIT DIESEL CORPORATION

https://truckmanualshub.com/

14 ENGINE ELECTRONIC CONTROLS

Section **Page**

14.1 ENGINE ELECTRONIC CONTROLS DESCRIPTION 14- 2
14.2 ORIGINAL EQUIPMENT MANUFACTURER INSTALLATION REQUIREMENTS 14- 2
14.3 MOTOR CONTROL MODULE 14- 3
14.4 COMMON POWERTRAIN CONTROLLER 14- 3
14.5 ELECTRONIC FUEL INJECTOR 14- 4
14.6 WIRING HARNESSES 14- 5
14.7 SYSTEM SENSORS 14- 8
14.8 WELDING 14-11

 Copyright © 2009 DETROIT DIESEL CORPORATION

https://truckmanualshub.com/

14.1 ENGINE ELECTRONIC CONTROLS DESCRIPTION

The Detroit Diesel Electronic Control System (DDEC) is an electronic fuel injection and control system. The system optimizes control of critical engine functions which affect fuel economy, performance, and emissions. The DDEC system provides the capability to protect the engine from serious damage resulting from conditions such as high engine temperatures or low oil pressure.

The major subsystems of DDEC include:

- Motor Control Module (MCM)
- Common Powertrain Controller (CPC)
- Electronic Injectors
- System Sensors

The MCM receives electronic inputs from sensors on the engine and vehicle and uses the information to control engine operation. The MCM computes fuel timing and fuel quantity based upon predetermined calibration tables in its memory. The MCM precisely times and meters fuel to each injector.

Detroit Diesel Diagnostic Link® (DDDL), a sophisticated software package supporting the set up, maintenance and repair of engines using DDEC, facilitates access to DDEC's diagnostic capabilities. Used as a diagnostic tool DDDL can be used to change the engine rating, view an audit trail of CPC changes, monitor fault codes as they occur, snapshot recording, set the MCM output functions to particular values to support troubleshooting, and configure and change CPC parameter values.

DDEC VI provides one industry standard serial data link: SAE Standard J1939. SAE Standard J1939 provides control data to other vehicle systems such as transmissions and ABS control devices. High-speed CAN link is also used for transmittals between the CPC and MCM modules.

14.2 ORIGINAL EQUIPMENT MANUFACTURER INSTALLATION REQUIREMENTS

Original Equipment Manufacturer (OEM) supplied hardware is required to install DDEC VI. The following is the minimum hardware required:

- 31–pin Vehicle Interface Harness assembly (VIH) — This harness connects the vehicle functions and DPF harness to the MCM
- 21–pin Vehicle Interface Harness (VIH) assembly — This harness connects battery power (12 volts) and ground to the MCM and CPC, includes fuse(s) or circuit breaker(s), and CAN lines for communication between MCM and CPC.
- Ignition switch — Switched 12 volt ignition
- Amber Warning Lamp (AWL) — A panel mounted amber indicator light
- Red Stop Lamp (RSL) — A panel mounted red indicator light
- Throttle input device — An electronic foot pedal assembly (EFPA), hand throttle, or alternative throttle device

All information subject to change without notice.
DDC-SVC-MAN-0073 Copyright © 2009 DETROIT DIESEL CORPORATION

https://truckmanualshub.com/

- Coolant Level Sensor (CLS) — A radiator top tank or remote surge tank mounted sensor
- J1939 — Panel mounted Deutsch diagnostic connector
- Malfunction Indicator Lamp (MIL) — Panel mounted amber indicator light to indicate faulty sensors
- High Exhaust Stationary Temp (HEST) Lamp — Panel mounted indicator light to indicate high exhaust temps during DPF regeneration
- DPF Regen Active Lamp — Panel mounted indicator light to indicate DPF regeneration
- Manual DPF Regen Request Switch — Panel mounted selector switch to request a regeneration event.

Refer to *DDEC VI Application and Installation Manual* (DDC-SVC-MAN-0054) for more information and schematic diagrams.

14.3 MOTOR CONTROL MODULE

The engine mounted MCM includes control logic to provide overall engine management.

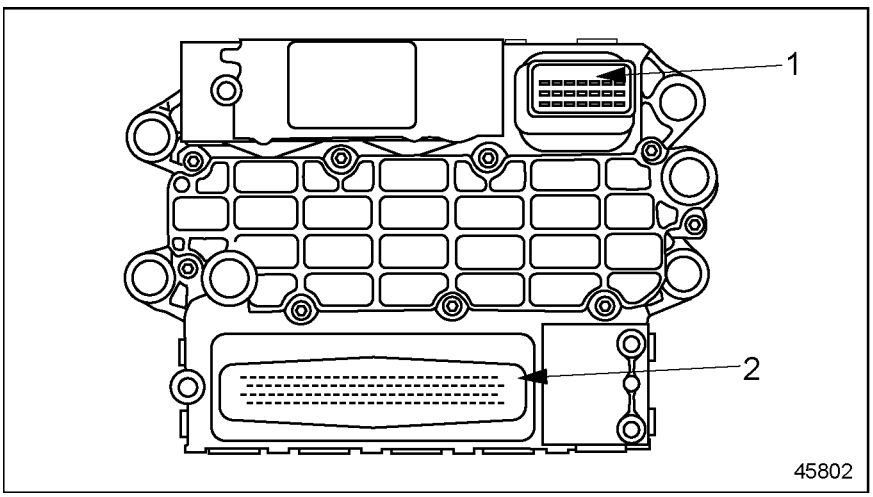

1. 21 Pin
2. 120 Pin

Figure 14-1 Motor Control Module

The MCM continuously performs self diagnostic checks and monitors the other system components. System diagnostic checks are made at ignition-on and continue throughout all engine operating modes. The nameplate on the MCM shows the manufacturer's specifications and is important for assisting operator or maintenance personnel.

14.4 COMMON POWERTRAIN CONTROLLER

The vehicle mounted CPC includes control logic to provide overall vehicle management.

 Copyright © 2009 DETROIT DIESEL CORPORATION

https://truckmanualshub.com/

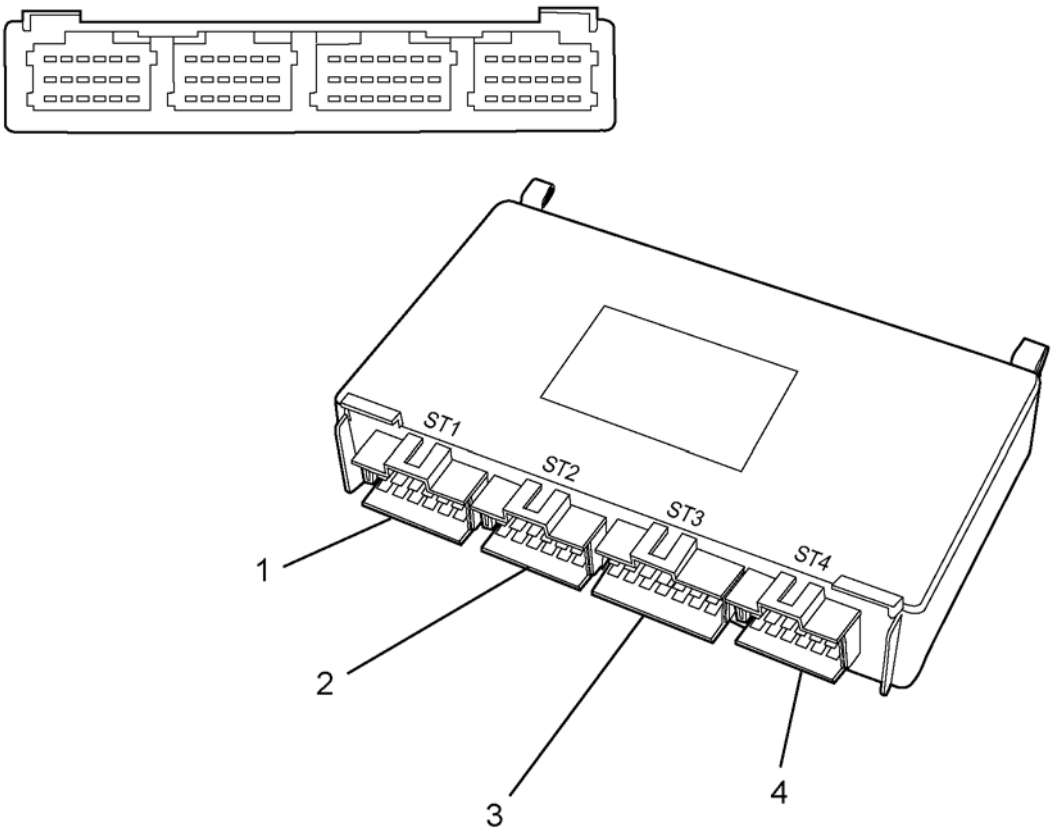

d150034

1. Connector #1 18-PIN Connector DDC P/N: A 018 545 67 26
2. Connector #2 18-PIN Connector DDC P/N: A 013 545 64 26
3. Connector #3 21-PIN Connector DDC P/N: A 013 545 65 26
4. Connector #4 18-PIN Connector DDC P/N: A 018 545 68 26

Figure 14-2 Common Powertrain Controller

The CPC needs to be mounted in an enclosed, protected location of the vehicle. The mounting bracket is the responsibility of the OEM. Reference the *DDEC VI Application and Installation Manual (DDC-SVC-MAN-0054)* for other installation requirements.

14.5 ELECTRONIC FUEL INJECTOR

The Electronic Fuel Injectors use a needle solenoid operated valve controlled by an internal Amplifier Control Module to control injection timing and metering pressure. The source for high pressure fuel delivery is the high pressure fuel rail common to all six injectors.

All information subject to change without notice.
DDC-SVC-MAN-0073 Copyright © 2009 DETROIT DIESEL CORPORATION

https://truckmanualshub.com/

Because fuel injection is controlled electronically and is not tied to the injector in a mechanical sense, fuel metering becomes a function of a variety of selected parameters such as throttle position, engine speed, oil, water and air temperatures, turbocharger boost levels, and barometric conditions.

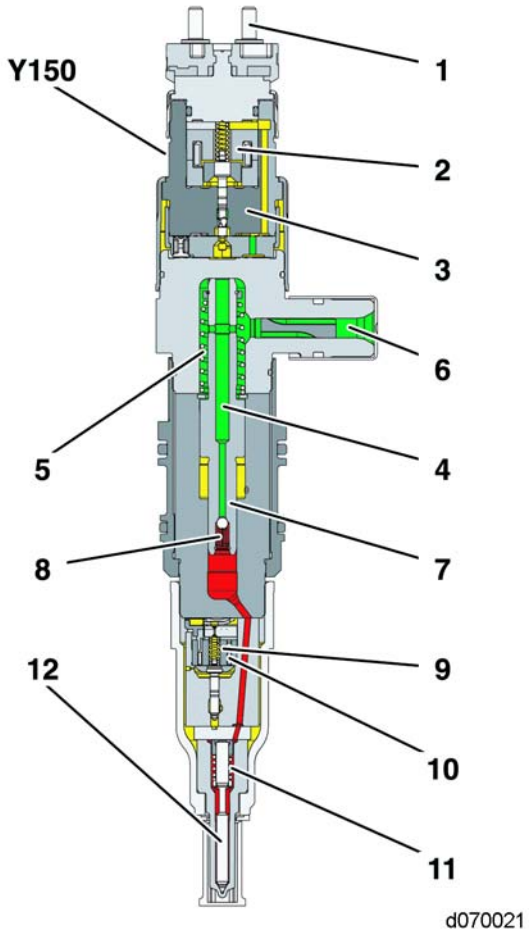

1. Electrical Connector
2. Coil
3. Amplifier Control Module
4. Amplifier
5. Return Spring
6. High Pressure Feed
7. Pressure Converter
8. Check Valve
9. Needle Solenoid Valve
10. Coil
11. Spring
12. Injector Needle

Y150 Injector (Cylinder 1)

Figure 14-3 Electronic Fuel Injector

14.6 WIRING HARNESSES

The following harnesses are needed for DDEC VI applications:

 Copyright © 2009 DETROIT DIESEL CORPORATION

https://truckmanualshub.com/

- Injector Harnesses (DDC supplied)
- Vehicle Interface Harnesses (OEM supplied)
  - 21–pin Harness
  - 31–pin Pigtail Harness
- Engine Sensor Harness (DDC supplied)
- DPF Harness (DDC supplied)

14.6.1 INJECTOR HARNESSES

The harnesses are installed at the factory and are delivered completely connected to the injection units and the MCM.

14.6.2 VEHICLE INTERFACE HARNESS

The VIH *must* be provided by the OEM. The VIH plays several critical roles as follows:

- Facilitates the communication of other systems and CPC with the engine MCM via CAN link.
- Provides feedback from DPF sensors.
- Transmits MCM and CPC output signals to the appropriate devices.
- Provides 12V power and ground to the MCM and CPC modules.

The VIH must contain the wires, fuses, relays, switches, connectors, and communication link necessary to perform the aforementioned roles. The VIH must be completely detachable from the engine and all devices it connects to with locking weather-proof connectors.

NOTE:
The MCM must be wired directly to the battery. Connection to reverse polarity will damage the system if not properly fused.

A schematic of a DDEC VI VIH is shown in the following illustration.

All information subject to change without notice.
DDC-SVC-MAN-0073 Copyright © 2009 DETROIT DIESEL CORPORATION

https://truckmanualshub.com/

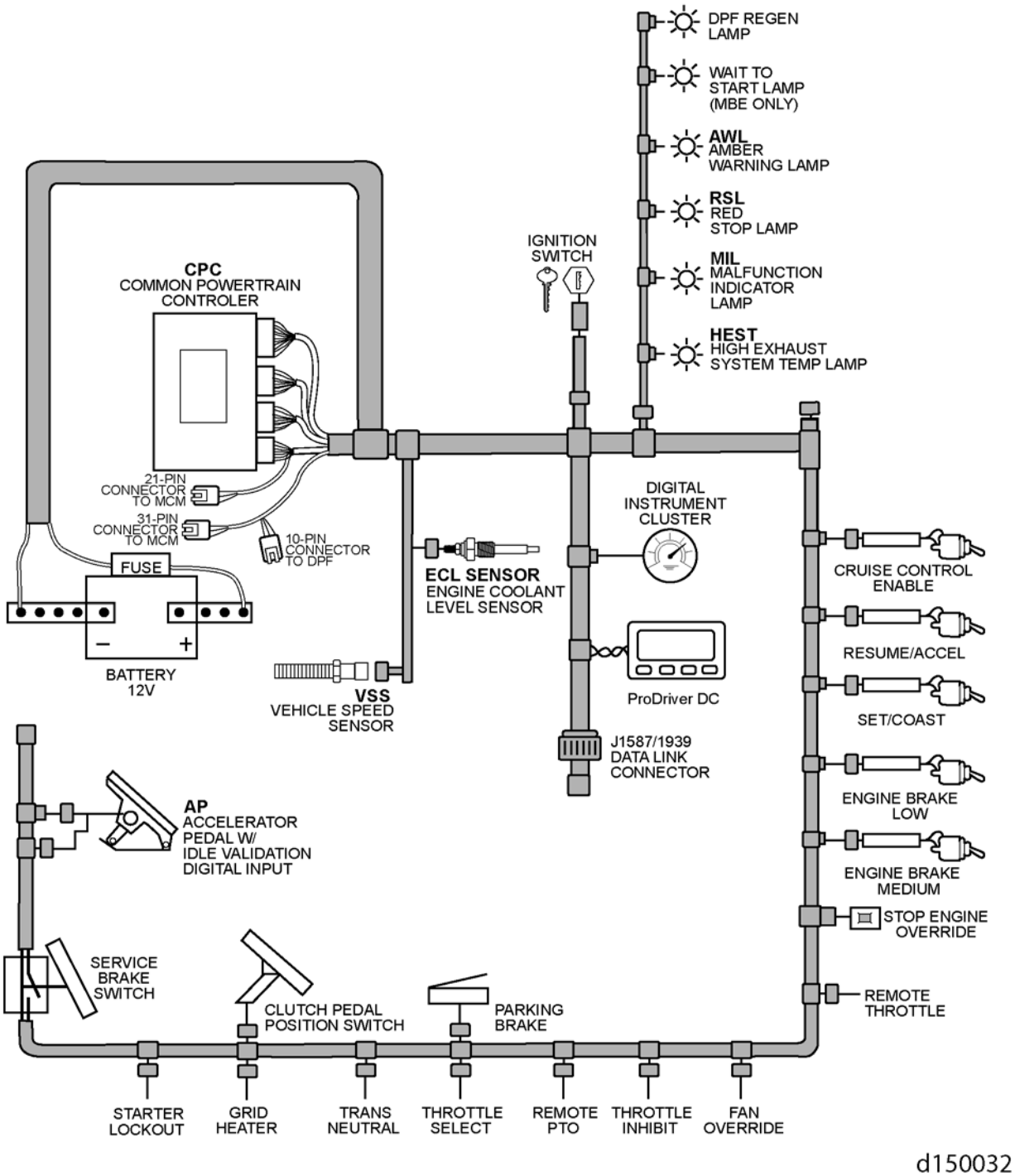

Figure 14-4 Typical DDEC VI Vehicle Interface Harness System

 Copyright © 2009 DETROIT DIESEL CORPORATION

https://truckmanualshub.com/

14.6.3 COMMUNICATION BETWEEN ELECTRONIC SYSTEMS

Electronic controls for engines, transmissions, braking systems, and retarders share common measured parameters. SAE has two standard methods to communicate between engine systems, J1939 communication link and CAN Data Link. J1939 provides for the interchange of interactive control data between vehicle systems and eliminates the need for redundant sensors. J1939 runs at 250K baud. The CAN Data Link provides for interchange of interactive control data between the CPC and the MCM.

The OEM supplied 21–pin VIH Harness connects the MCM's J1939 ports to other vehicle systems such as ABS devices and transmissions. The OEM supplied VIH Harnesses also connects the CAN ports from the MCM to the CPC.

14.6.4 ENGINE SENSOR HARNESS

This 120–pin harness facilitates the communication of engine sensor input to the MCM. The Engine Sensor Harness facilitates the reception of input and output signals controlling the fuel injection process and engine speed.

14.6.5 DIESEL PARTICULATE FILTER HARNESS

There are various Aftertreatment Device (ATD) configurations offered to the OEM. There are two DPF harness designs depending on whether the OEM has a vertical mount configuration or a horizontal mount configuration. For horizontal mount ATD units, there exists two pigtail harnesses factory installed onto each ATD unit. One pigtail harness connects the 4 sensors housed in the sensor box mounted on the center surface of the DPF section of the ATD unit. This harness is 9” long leading to a 10-pin connector. On the surface of the Diesel Oxidation Catalyst section of the ATD unit, there exists a separate temperature sensor. This sensor has a pigtail harness leading to a 2-pin connector. The OEM is responsible for integrating the 10-pin DPF pigtail harness and the 2-pin DPF pigtail harness into the VIH 31-pin harness.

For vertical mount ATD units, there is one factory mounted DPF harness leading to a 10-pin connector. The OEM is responsible for wiring the 10-pin DPF harness into the VIH 31-pin harness. See the *DDEC VI Application and Installation Manual* (DDC-SVC-MAN-0054) for wiring diagrams and pin assignments.

14.7 SYSTEM SENSORS

DDEC system sensors provide information to the MCM regarding various engine and vehicle performance characteristics. The information is used to regulate engine and vehicle performance, provide diagnostic information, activate the engine protection system, and monitor after-treatment conditions. Refer to the *DDEC VI Application and Installation Manual*(DDC-SVC-MAN-0054) for a list and functional description of the factory installed system sensors. Refer to Figures 1–5, 1–6, and 1–7 for the engine sensor locations that comprise of the Engine Sensor Harness (ESH) for the DD Platform engine.

All information subject to change without notice.
DDC-SVC-MAN-0073 Copyright © 2009 DETROIT DIESEL CORPORATION

https://truckmanualshub.com/

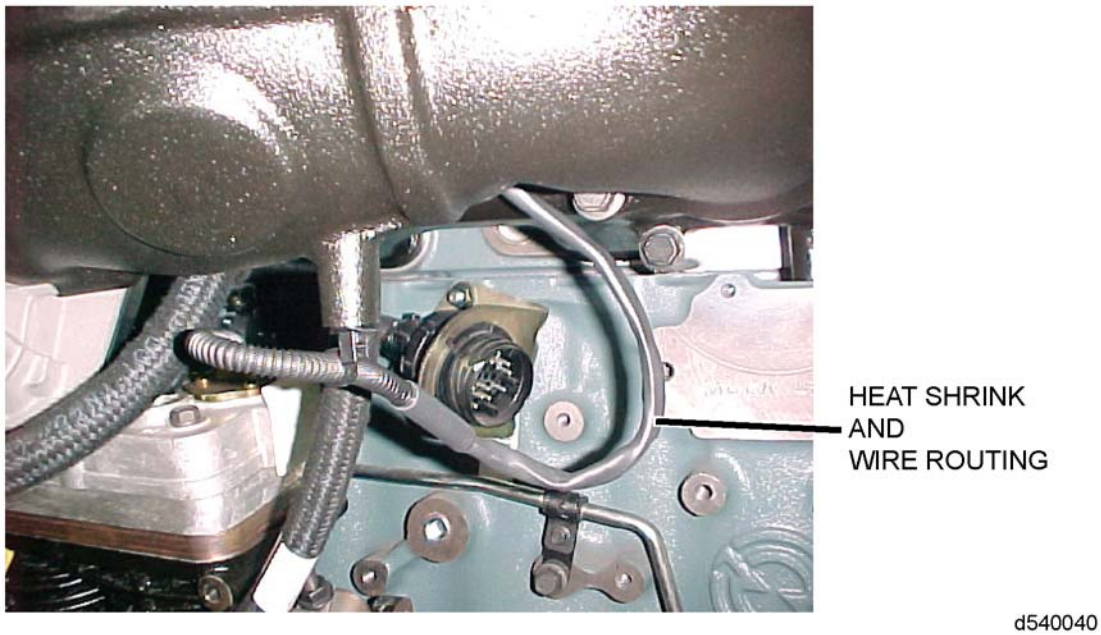

1. Oil Pressure Sensor
2. Oil Temperature Sensor
3. Coolant Temperature Sensor
4. Intake Throttle Valve
5. Inlet Pressure Sensor
6. Inlet Temperature Sensor
7. Delta P Sensor
8. Intake Air Temperature Sensor
9. Rail Pressure Sensor
10. EGR Valve
11. Quality Control Valve
12. Camshaft Position Sensor
13. Doser Block Assembly
14. Fuel Line Pressure Sensor
15. Fuel Cut-Off Valve
16. Electronic Dosing Valve
17. Fuel Compensation Pressure Sensor
18. Fuel Pressure Regulator
19. Crankshaft Position Sensor
20. Fuel Temperature Sensor
21. Water-In-Fuel Sensor

Figure 14-5 DD Platform Sensor Location 1

 Copyright © 2009 DETROIT DIESEL CORPORATION

https://truckmanualshub.com/

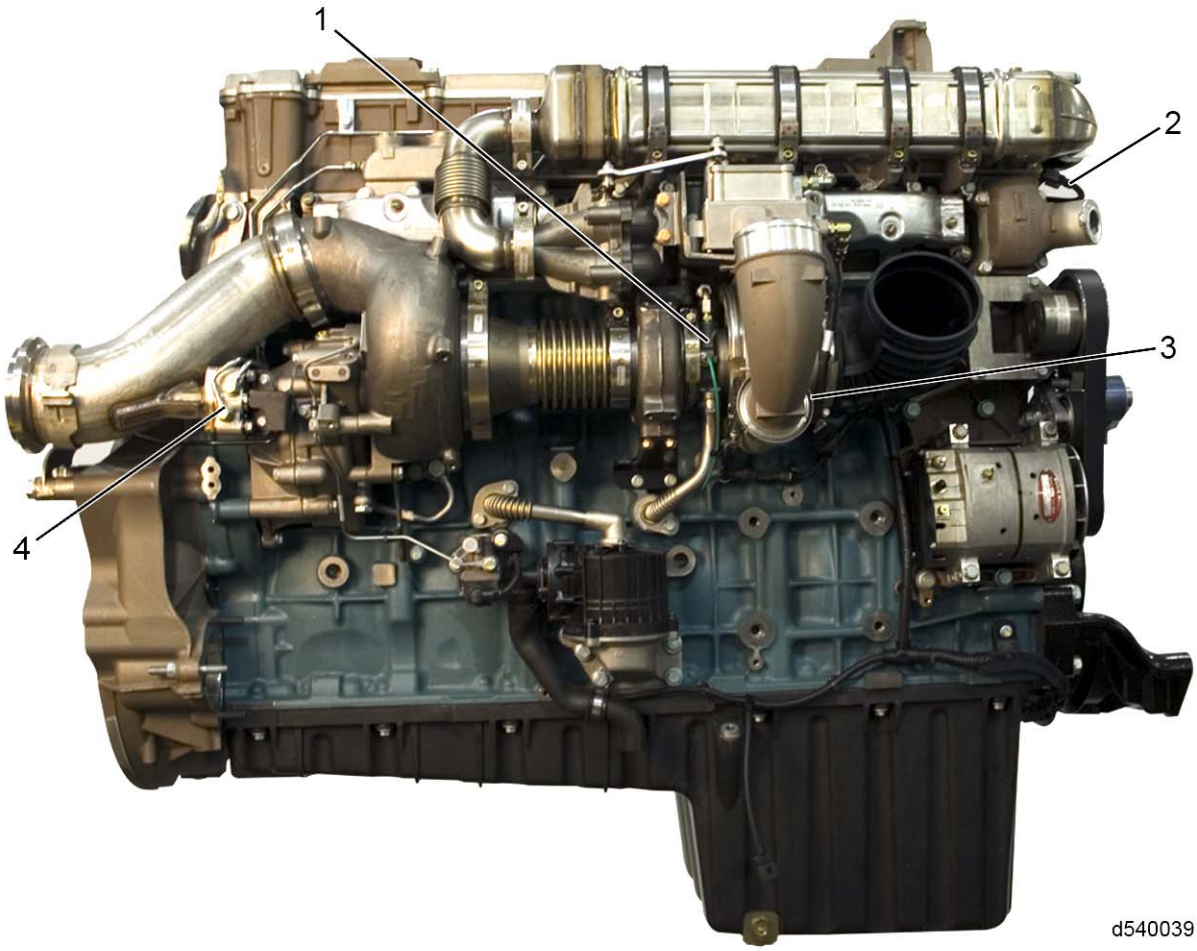

1. Turbocharger Speed Sensor
2. Turbocharger Inlet Temperature Sensor
3. Mixed Coolant Temperature Sensor
4. Fuel Doser Valve

Figure 14-6 DD Platform Sensor Location 2

All information subject to change without notice.
DDC-SVC-MAN-0073 Copyright © 2009 DETROIT DIESEL CORPORATION

https://truckmanualshub.com/

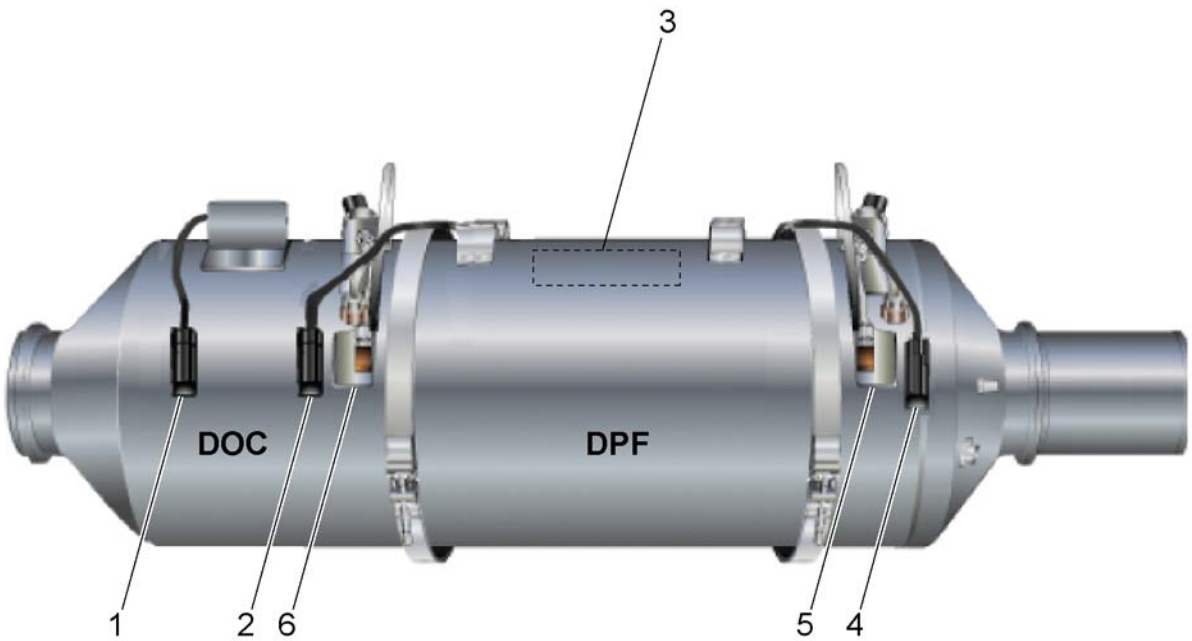

d140043

DOC - Diesel Oxidation Catalyst

1. DOC Inlet Temperature Sensor
2. DOC Outlet Temperature Sensor
3. Sensor Junction Box

DPF - Diesel Particulate Filter

4. DPF Outlet Temperature Sensor
5. DPF Outlet Pressure Sensor
6. DPF Inlet Pressure Sensor

Figure 14-7 Sensor Locations for the DOC and DPF

14.8 WELDING

Prior to any welding on the vehicle or equipment, the MCM must be disconnected from the battery and chassis. This may be accomplished by removing connectors from the battery or by installing switches which must remain closed for 30 seconds after ignition is off for non-volatile data. Ground cable must be in close proximity to welding location.

 Copyright © 2009 DETROIT DIESEL CORPORATION

https://truckmanualshub.com/

NOTICE:
Install dual-pole, single throw switches. Both switches must be open before welding.

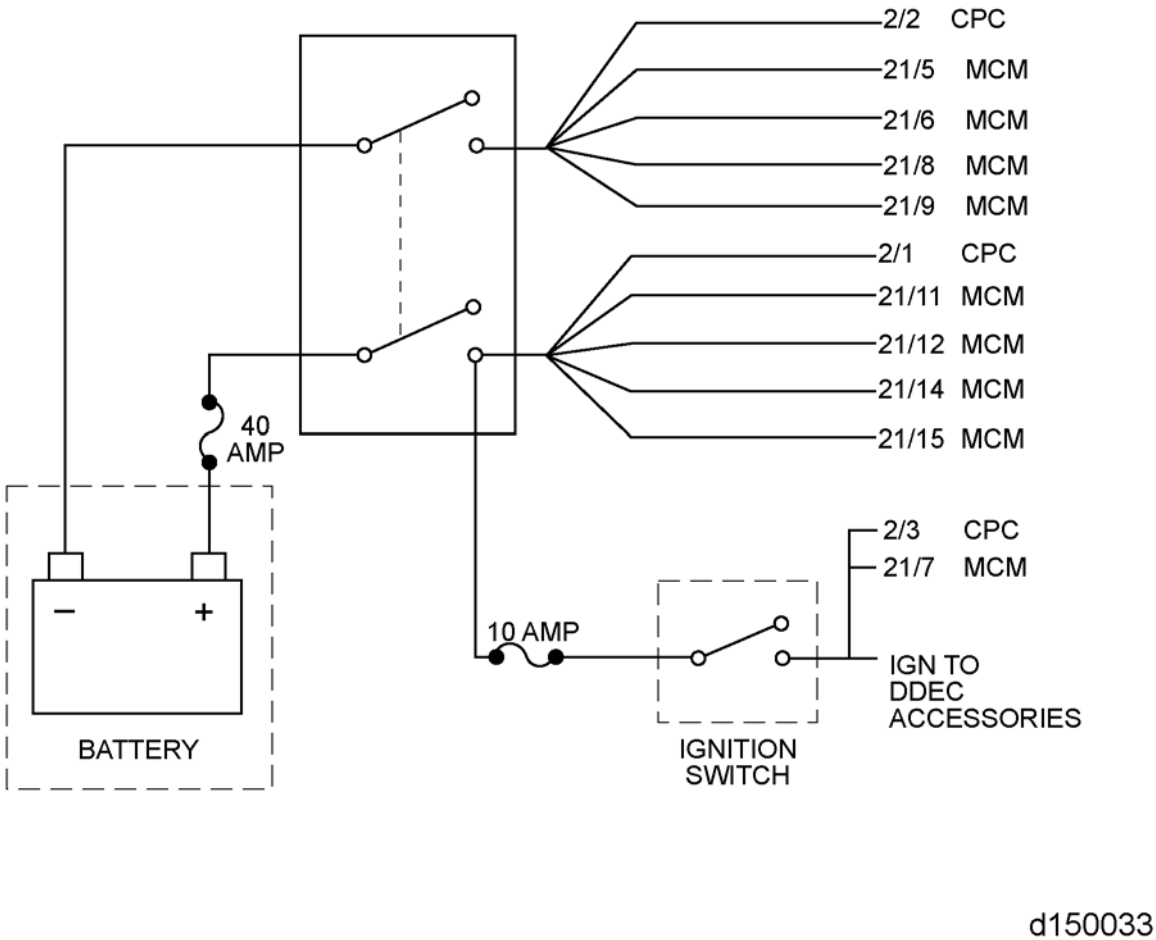

Figure 14-8 Battery Connections for Proper Welding

All information subject to change without notice.
DDC-SVC-MAN-0073 Copyright © 2009 DETROIT DIESEL CORPORATION

https://truckmanualshub.com/

15 AUXILIARY AIR SYSTEMS

Section **Page**

15.1 AIR START 15- 2
15.2 AIR COMPRESSOR 15- 3

 Copyright © 2009 DETROIT DIESEL CORPORATION

https://truckmanualshub.com/

15.1 AIR START

The system must provide an engine cranking speed above 100 rpm for a minimum period of 10 seconds at 44°C (40°F), without recharging the air tank. A 15 second or longer cranking period is recommended for optimum starting. Engine cranking speed above 250 rpm is not necessary. Energy spent above 250 rpm would be better used to extend the cranking period.

Starting aids may be required if the engine must be started in an ambient below 44°C (40°F).

15.1.1 SYSTEM RECOMMENDATIONS

The following sections list the system recommendations for air tanks, the air control system, air starters, and hoses.

15.1.1.1 Air Tanks

The following is a list of system recommendations for air tanks:

- □ Air tanks should meet ASME pressure vessel specifications. Include a safety valve and pressure gage.
- □ An air drain cock should be provided in the lowest part of the air tank to drain condensation.
- □ Use of an air dryer is recommended at the compressor outlet to minimize condensation in the air tank.
- □ There should be zero leak down of air tank pressure when the equipment is idle. A check valve at the air tank inlet is recommended.
- □ Connections to the air tank should be such that there is no trapped moisture in the system.
- □ Typical minimum air tank size for the DD Platform is 65 gallons.

NOTE:
The minimum air tank size of 65 gallons is not a recommended tank size. Larger tanks may be required for a given application, starter type, or starting system. Contact the air starter manufacturer for proper tank size.

15.1.1.2 Air Control System

The system should disengage the starter and shut off the air supply to the starter the instant the engine starts. This will conserve air pressure for the next start attempt, if required. Use a 3 to 5 psi fuel pressure switch to trigger starter disengagement. Sensing lube oil pressure is not recommended due to slow response time.

The system should have a lockout to prevent an attempt to engage the starter into a running engine. A 3 to 5 psi fuel pressure switch will serve to prevent starter engagement while the engine is running.

All information subject to change without notice.
DDC-SVC-MAN-0073 Copyright © 2009 DETROIT DIESEL CORPORATION

https://truckmanualshub.com/

15.1.1.3 Air Starters Requiring Lubricators

Where lubricators are required, proper starter lubrication is a must. Ensure that the lubricator gets a positive feed of fuel; without proper starter lubrication the engine cranking speed will be greatly reduced. The starter may need to be prelubed prior to installation. Contact the starter manufacturer for instructions.

15.2 AIR COMPRESSOR

Detroit Diesel offers two sizes of air compressors on DD Platform engines: the single cylinder BA–921 rated at 16 cfm, and the twin cylinder BA–922 rated at 32 cfm. Both compressors are adaptorless style installations

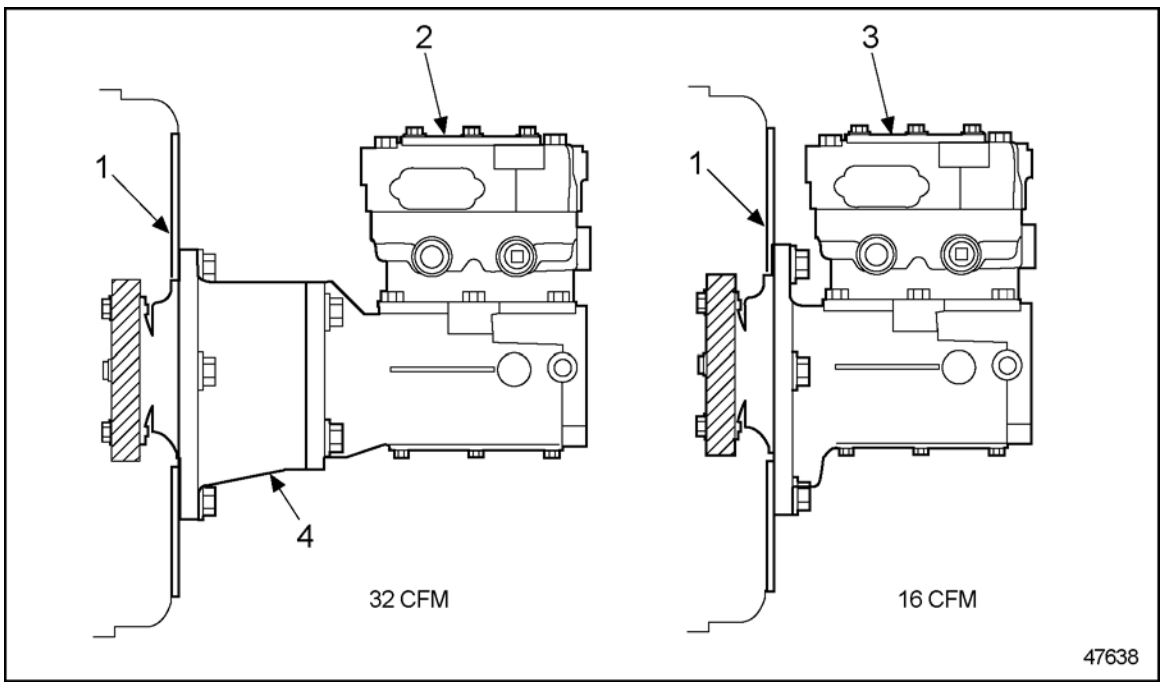

1. Gear Case
2. Twin Cylinder Air Compressor 32 CFM
3. Single Cylinder Air Compressor 16 CFM
4. Crankcase and Cylinder Block

Figure 15-1 Single Cylinder Air Compressor 16 CFM and Twin Cylinder 32 CFM

These air compressors are driven by the bull gear and are water-cooled. Engine coolant is fed to the compressor through a flexible hose tapped into the engine block water jacket or a line from the water pump, which is then connected to the front of the compressor. Coolant returns from the rear of the compressor through a flexible hose to the engine cylinder head. Lubricating oil is supplied to the compressor by a line from the cylinder block oil gallery that connects to the air compressor. Lubricating oil returns to the engine crankcase through the air compressor drive assembly.

Air compressors may require any or all of the following components for operation:

- Governor

 Copyright © 2009 DETROIT DIESEL CORPORATION

https://truckmanualshub.com/

- □ Air Dryer
- □ Air Filter (installations not using engine air system)
- □ Pressure Protection Valve

Contact a Bendix authorized distributor for additional application assistance.

15.2.1 16 CFM AND 32 CFM COMPRESSORS

The 16 cfm and 32 cfm compressors are adaptorless style, flange mounted to the engine gearcase. The air compressor also provides the mounting location for a power steering pump, which is bolted to the rear end of the compressor.

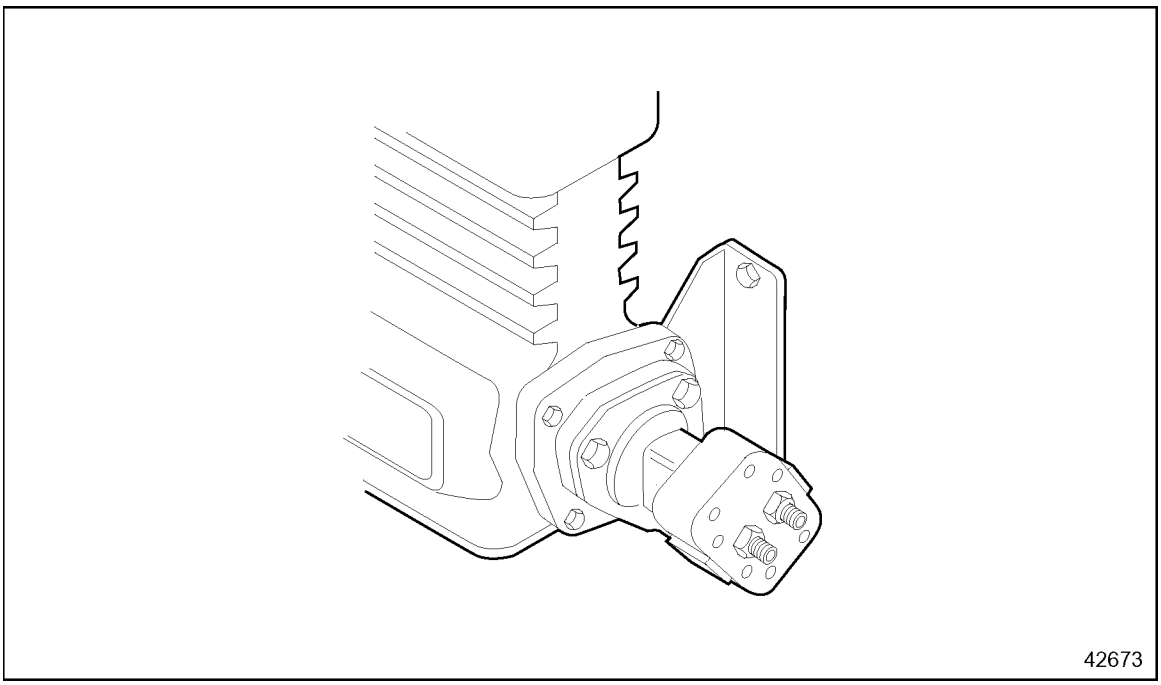

Figure 15-2 Air Compressor Mounted Power Steering Pump

With the addition of exhaust gas recirculation (EGR), these compressors may not be supercharged. The air supply must be plumbed to the compressor intake from the clean side of the air filter.

All information subject to change without notice.
DDC-SVC-MAN-0073 Copyright © 2009 DETROIT DIESEL CORPORATION

https://truckmanualshub.com/

16 COLD WEATHER STARTING AND STARTING AID SYSTEMS

Section **Page**

16.1 COLD WEATHER STARTING AND STARTING AID SYSTEMS DESCRIPTION 16- 2
16.2 PREPARATION 16- 3
16.3 COLD WEATHER STARTING 16- 8
16.4 COLD WEATHER OPERATION 16-13

 Copyright © 2009 DETROIT DIESEL CORPORATION

https://truckmanualshub.com/

16.1 COLD WEATHER STARTING AND STARTING AID SYSTEMS DESCRIPTION

Cold weather operation of diesel engines at temperatures below +40°F could require modification of vehicle equipment and the application of aids to assist engine starting.

To ensure a successful engine start, the engine combustion air temperature, at full compression, must be higher than auto ignition temperature of fuel being used.

Diesel engine starting depends on combustion chamber temperatures being high enough to ignite the fuel oil injected into the cylinder. Cold temperatures affect the in-cylinder temperature because:

- Cylinder wall temperatures are low due to low coolant and block temperatures.
- The temperature of the air entering the cylinder is at ambient temperature.
- Engine cranking speed at low temperatures is reduced because of higher lubricating oil viscosity and decreased battery efficiency.
- Fuel temperature, as reduced by low ambient temperatures, will decrease the cylinder temperature.
- The temperature of the compressed air in the cylinder is affected by the engine compression ratio; as the compression ratio is reduced, the compressed air temperature is also reduced.

This chapter is divided into three sections.

- **Preparation**

Necessary changes or modifications in lubricating oil, fuel, coolant, battery, cranking motor and other areas which affect the starting of the engine in cold weather.

- **Cold Weather Starting**

The various cold weather starting systems available, cold weather aids and starting procedures. The OEM installed starting aids typically used to overcome cold temperatures are the Grid Heater and the Block heater.

NOTE:
Due to the installation of a grid heater (intake air heater) coming standard on DD Platform engines, injection of ether as a starting aid is prohibited. Injecting ether upstream of the grid heater could result in major damage to the engine and result in serious personal injury.

- **Cold Weather Operation**

Precautions and special practices required assuring proper engine operation at cold temperatures.

Aftermarket starting aids may be used. When aftermarket starting aids are used Detroit Diesel Application Engineering must be consulted. Aftermarket starting aids that may be used are the Oil heaters, Remote coolant heater, Battery Heater, and the Coolant Heater.

All information subject to change without notice.
DDC-SVC-MAN-0073 Copyright © 2009 DETROIT DIESEL CORPORATION

https://truckmanualshub.com/

16.2 PREPARATION

The engine must be properly maintained and in optimum operating condition, to assure acceptable cold weather starting and satisfactory operation, the following areas must be addressed.

- □ Lubricating Oil
- □ Diesel Fuel
- □ Coolant
- □ Battery
- □ Starter Motor

16.2.1 LUBRICATING OIL

Detroit Diesel engines will deliver optimum year round performance and long service life with the recommended lubricating oil. To keep current with the acceptable oils, refer to DDC publication *Lubricating Oil, Fuel and Filter Recommendations* (DDC-SVC-BRO–0001) available at detroitdiesel.com.

Starting and operation of the engine at cold temperatures may require additional considerations in the selection of the lubricant. As ambient temperatures decrease, the oil viscosity increases or thickens. If the temperature is low enough, it will turn solid. Attempting to start an engine with very thick oil places excessive stress on the engine and starter components; starting the engine with oil too thick to pump and circulate through out the engine may cause engine failure or failure to start. Generally, lower viscosity grade oils should be used at lower temperatures.

To counteract this effect, either auxiliary heat must be introduced to maintain proper oil viscosity, or the lubricating oil grade may be changed to lower viscosity for ease of engine starting. Lube oil heaters for raising oil temperature at cold ambient temperatures are discussed later on in this chapter.

Unfortunately, low viscosity oils do not provide adequate wear protection at higher engine temperatures. The use of multigrade oil can provide benefits at low starting temperatures and at higher operating temperatures. These oils are generally identified using both a low and high temperature designation with a "W" between. For example 15W40 indicates the meets the low temperature requirements of a 15 grade oil and the high temperature requirements of a 40 grade oil.

At low ambient temperatures, below -0°C (14°F), SAE 5W-30, 10W-30, 5W-40 or 10W-40 oils may be used, provided they are API CJ-4 (low ash) oils. Please refer to DDC publication (DDC-SVC-BRO–0001) for more information.

 Copyright © 2009 DETROIT DIESEL CORPORATION

https://truckmanualshub.com/

16.2.2 DIESEL FUEL

The diesel fuel used is very important for obtaining satisfactory engine performance, long engine life, and acceptable exhaust emissions. For EPA 2007 exhaust emission compliant engines, the use of Ultra-Low Sulfur Diesel (ULSD, 15ppm) is critical. When operating for prolonged periods of idling or in cold ambient conditions (below 0°C/32°F), the use of 1-D fuel is recommended. Please note, transit coach engines are emissions certified on both No. 1 and No. 2 fuel; to maintain emission compliance, use only certified fuel. Please refer to the publication *Lubricating Oil, Fuel and Filter Recommendations* (DDC-SVC-BRO–0001) at detroitdiesel.com.

DDC does not recommend the use of supplemental additives in the fuel for improving the fuel for cold temperature operation.

If fuel heaters are used on electronically controlled engines, fuel temperature to the Motor Control Module (MCM) inlet cannot exceed 60°C (140°F) .

Incomplete fuel combustion is indicated by appearance of white, gray, or bluish exhaust smoke. White or gray smoke is a sign of incomplete combustion in the cylinders and may be counteracted by increasing the fuel Cetane number. Blue smoke is indicative of insufficient fuel vaporization and can be corrected by an increase of fuel volatility or by increasing the cylinder combustion temperature.

16.2.3 COOLANT

An engine coolant solution of water and antifreeze must be used to protect the engine coolant system when operating in ambient conditions below freezing. Detroit Diesel Power Cool (P/N 23512138) is recommended to be mixed with water for a 50-50 solution. DD Power Cool is an ethylene glycol coolant, if a propylene glycol coolant is used, it must meet the requirement TMC RP-330 “Type A”. Please refer to the Detroit Diesel Customer Support Network (DDCSN) on the internet for more information regarding our coolant recommendations. Refer to DDC publications*Coolant Selections* (DDC-SVC-BRO-0002) for engine coolant details.

The most commonly used antifreeze solutions is ethylene glycol. A 25% solution protects to -12°C (+10°F), a 50% solution protects to -36°C (-33°F), and a 63% solution protects to -59°C (-75°F). However, note that a 100% solution freezes at -22°C (-8°F). (A solution containing more than 67% ethylene glycol <u>is</u> <u>not</u> recommended.)

There is another inhibitor package used with ethylene glycol consisting of a Nitrite Organic Acid Technology (NOAT). This does not affect the antifreeze performance; this also applies for NOAT antifreeze.

The other common type of antifreeze is propylene glycol. See for freezing point of aqueous propylene glycol solutions.

All information subject to change without notice.
DDC-SVC-MAN-0073 Copyright © 2009 DETROIT DIESEL CORPORATION

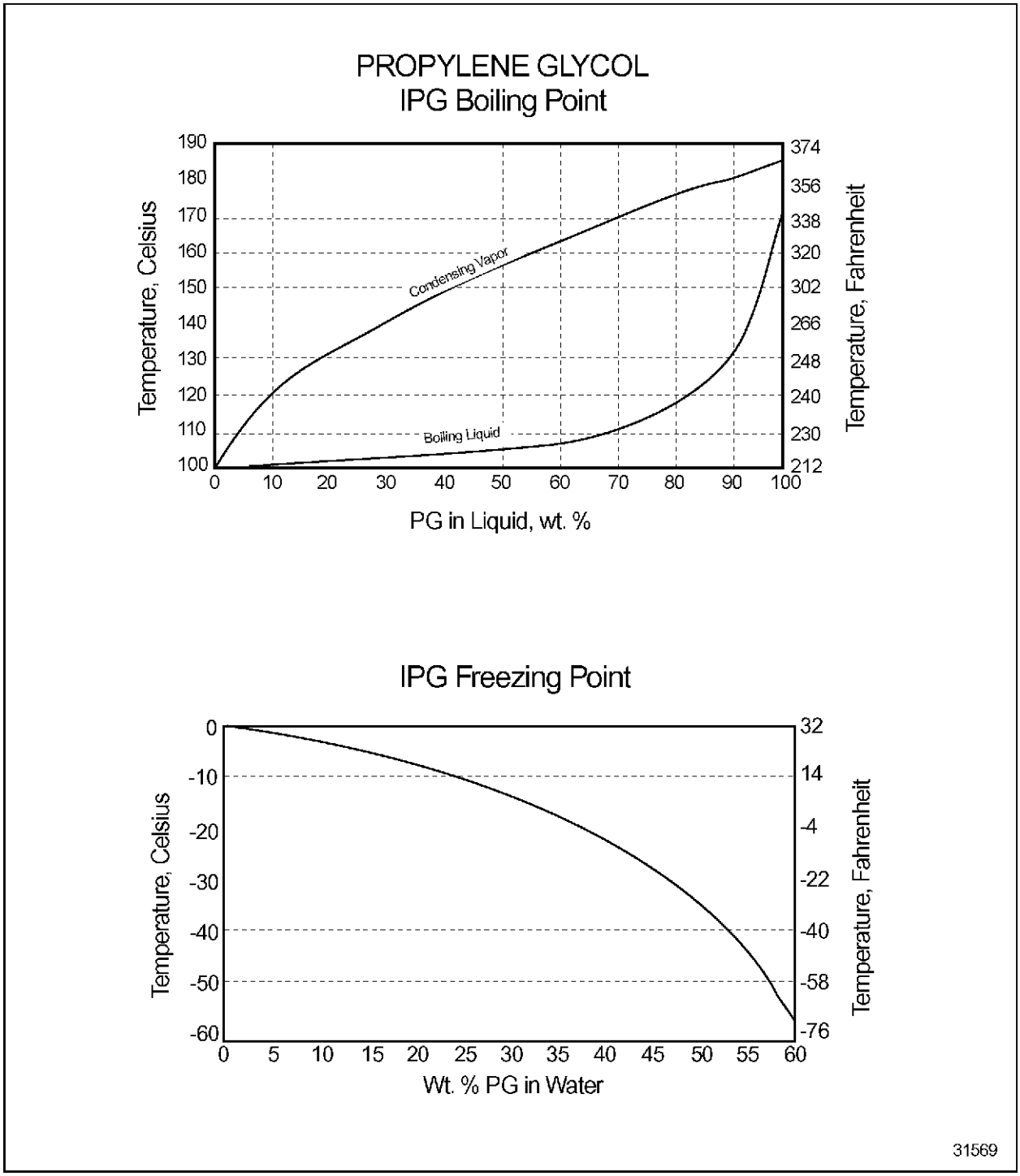

Figure 16-1 Coolant Freezing and Boiling Temperature vs. Inhibited Propylene Glycol (IPG) Concentration (Sea Level)

Other coolant solutions with antifreeze are not recommended. These include methyl alcohol-based, methoxy propanol-based, phopate based and glycol-based coolants for heating/ventilation/air conditioning (HVAC).

 Copyright © 2009 DETROIT DIESEL CORPORATION

https://truckmanualshub.com/

Automotive coolant solutions with antifreeze are not suitable for Detroit Diesel heavy-duty engines.

16.2.4 BATTERY

To provide the greatest amount of cranking energy, a high cold cranking ampere battery should be specified. This requirement will result in the lowest battery internal resistance which will furnish the maximum battery voltage at high cranking currents. If this is not possible, increase the number of batteries for more cranking energy or use a higher voltage battery if possible.

Battery internal resistance is inversely proportional to the plate area. In order to reduce internal resistance, battery plate area must be increased.

Batteries should be maintained at or near the full charged condition. A lead-acid battery should have a specific gravity of 1.26 at 27°C (80°F).

A lead-acid battery is most efficient when operating at ambient temperatures of approximately 27°C (80°F). When operating at temperatures below -1.1°C (30°F), battery heaters may be employed so that maximum power can be obtained from the battery.

As its internal temperature drops, a battery loses power. The state of the battery charge, as determined by its specific gravity, also plays a significant role in the ability to start an engine in cold temperatures. A battery with a 50% charge has 45% of its cranking power available at 27°C (80°F), but the same battery will have only 20% of its cranking power at -1.1°C (0°F).

Battery size recommendations for the engine can be found at detroitdiesel.com. These recommendations are for the bare engine only and do not reflect increases in battery capacity required by parasitic loads imposed by the vehicle or other systems attached to the engine.

All information subject to change without notice.
DDC-SVC-MAN-0073 Copyright © 2009 DETROIT DIESEL CORPORATION

https://truckmanualshub.com/

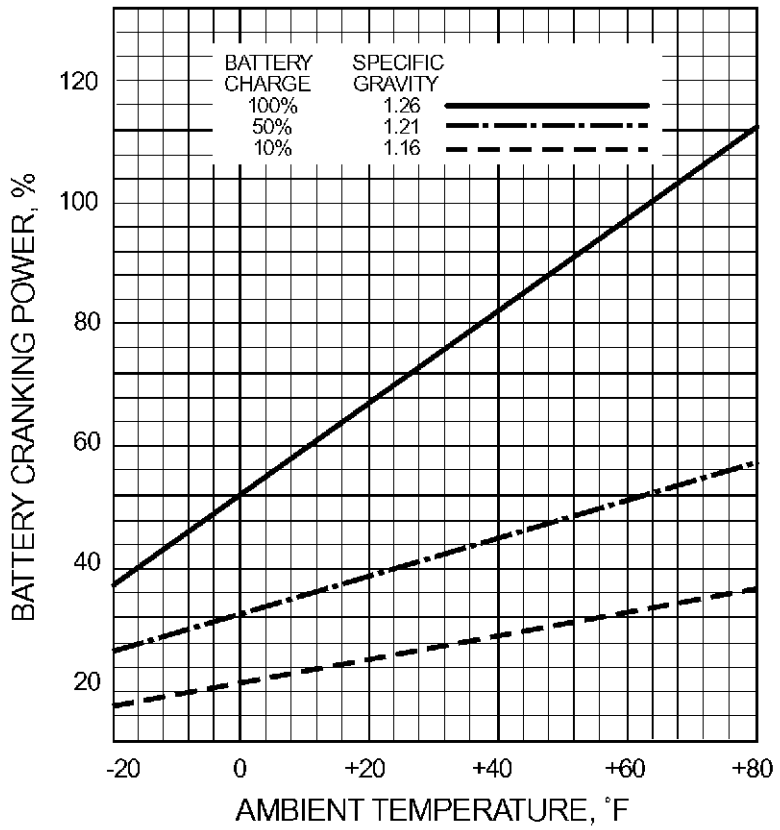

Figure 16-2 General Battery Cranking Power - Percent

16.2.5 STARTER MOTOR

Electric starter motors are recommended for use with Detroit Diesel engines. Other types of starter motors exist, but are not generally recommended.

16.2.5.1 Electric Starter Motor

Correct motor size depends on the torque required to crank the engine and parasitic loads. To obtain dependable starting, the starting motor must be capable of turning the engine and parasitic loads. Cranking of the engine should not exceed 15 seconds or the starter and/or engine may be damaged.

Cranking motor speed is directly proportional to the motor terminal voltage. To obtain the highest motor terminal voltage, it is necessary to limit the cranking circuit resistance to less than .0008 ohms for this 12 volt systems.

 Copyright © 2009 DETROIT DIESEL CORPORATION

https://truckmanualshub.com/

The starting circuit design should be analyzed. The starting circuit includes the number and size of batteries, cables including size, length and connectors, the starter and any device the starter must rotate during cranking. This includes the engine and parasitic loads such as automatic transmission, power steering pump, hydraulic pump(s), fan(s) and alternator(s). The Original Equipment Manufacture must determine the lowest expected ambient temperature the vehicle or application is expected to start.

All the information should be reviewed with the starter manufacture for further analysis and recommendations of which starter motor is appropriate.

Generally, as parasitic loads increase and the ambient temperature decrease the cranking load imposed on the starter motor increases causing a reduction in cranking speed.

For more information on DDC compliant electric starter motors, please refer to “Electrical Systems” section of this manual.

16.3 COLD WEATHER STARTING

There are many different external hardware, engine components and approaches used to achieve cold weather starting. This section contains these in the following topics:

- Starting Systems
- Starting Aids
- Starting Procedures
- Engine Starting Requirements

16.3.1 STARTING SYSTEMS

The following hardware systems are used to improve cold weather starting by reducing the negative affects of low ambient temperatures. These systems may affect the engine starting procedure.

16.3.1.1 Intake Air Heater

An intake air heater, or grid heater, comes standard on DD Platform engines. The grid heater uses electric current to heat the air entering the intake manifold. The heated air temperature aids in cold weather starting by increasing the temperature of the combustion fluid to a temperature suitable for compression ignition.

16.3.1.2 Coolant Tank Type Heaters

Tank type heaters consist of resistance type elements mounted inside of a tank. Coolant enters at one point of the tank and exits at a second point. Heated coolant rises to the top of the block and is replaced by unheated coolant. Some tank type heaters contain a valve at the entrance to the tank. This valve causes a "percolating" action and results in better circulation of coolant through the engine. The valve also serves as a check valve and prevents coolant flow through the heater during engine operation.

All information subject to change without notice.
DDC-SVC-MAN-0073 Copyright © 2009 DETROIT DIESEL CORPORATION

https://truckmanualshub.com/

In order to obtain a rapid warm up of the coolant a separate coolant, a circulating pump should be included with the tank type coolant heater. It is important that the heater is not energized while the engine is running.

The tank type heater requires two connections to the engine coolant system. The tank inlet connection must be taken from a point, which is low in the coolant system on the suction side of the pump. The exit side of the heater should be connected to a coolant point high in the engine cylinder block. It is important that the heater be installed inlet to pump suction to prevent a bypass coolant path during engine operation.

The tank type heater can be installed on any engine and can be designed with kW capacities large enough to preheat the coolant in any engine. Various thermostat ranges may be chosen so that the final temperature can be controlled as required.

It should be noted that these temperature rise charts are based on laboratory data. However, the wattage requirements may vary slightly depending upon the location of the heating element relative to the cylinder walls, the configuration of the coolant passages, and the flow rate of coolant through the passages.

The wattage requirements specified are without wind considerations.

This curve is based on a 12-hour heating time with 80% of the temperature rise occurring in the first five hours of heating.

 Copyright © 2009 DETROIT DIESEL CORPORATION

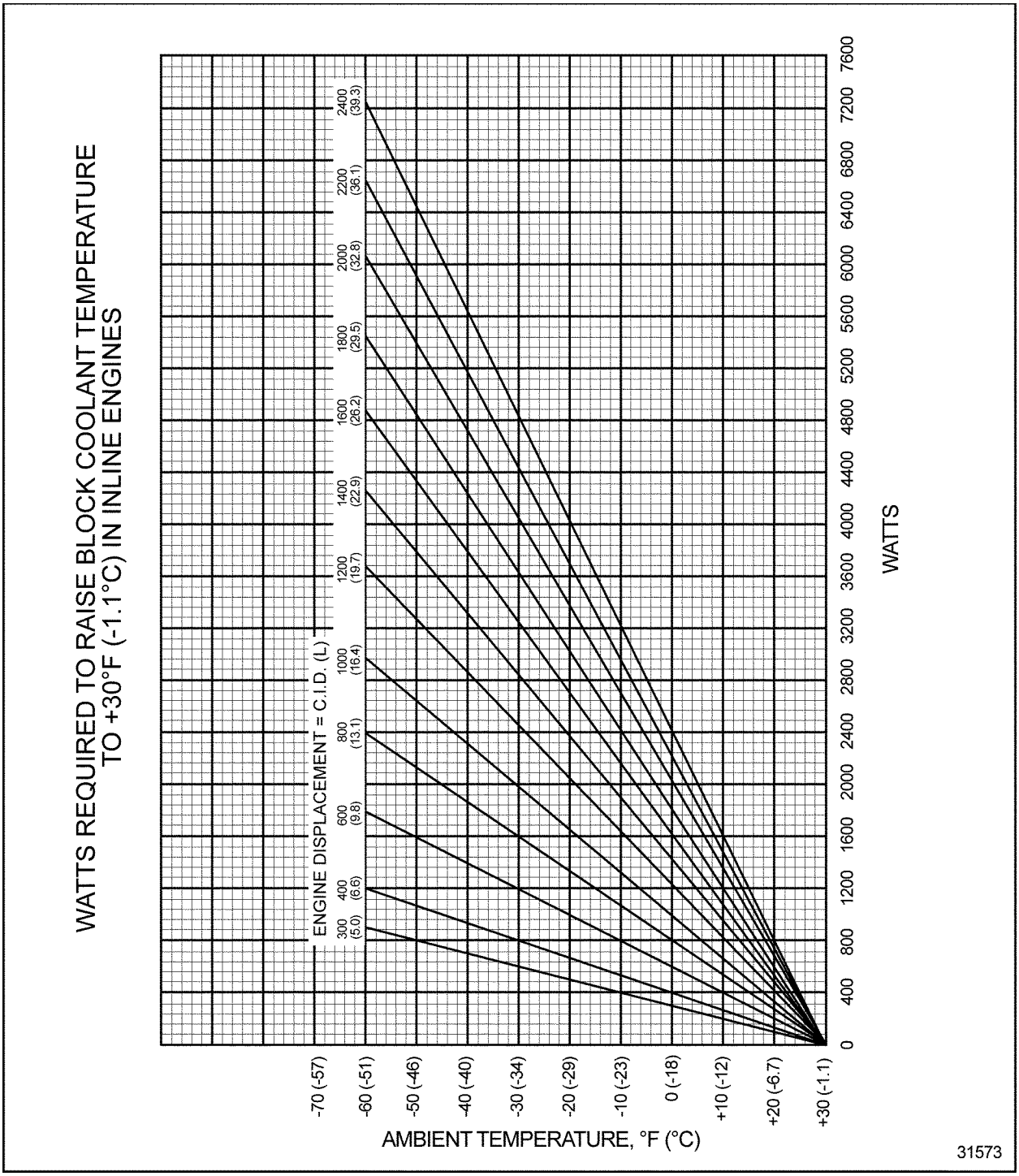

Figure 16-3 Watts Required to Raise Block Coolant Temperature to +30°F (-1.1°C) in in-line engines

All information subject to change without notice.
DDC-SVC-MAN-0073 Copyright © 2009 DETROIT DIESEL CORPORATION

https://truckmanualshub.com/

16.3.1.3 Engine Block Heater

An engine block heater can be installed as an option on DD Platform engines. This heater is installed into the M27x2 port on the oil module, next to the oil filter. For more detailed information regarding this application, contact your application engineer.

16.3.1.4 Oil Pan Heater

Please refer to the section “Oil Immersion Heaters”.

16.3.1.5 Fuel

Refer to DDC publication *Lubricating Oils, Fuel, and Filters* (DDC-SVC-BRO–0001) available at detroitdiesel.com.

16.3.1.6 Fuel Heaters

If blending or selection of fuels is not practical, then a fuel heater should be considered which would assure fuel temperatures above the "cloud point". The "cloud point" of a fuel is the point in which wax crystals begin to form in the fuel and begin to clog the fuel system. Fuel heaters typically are used to raise the temperature of the fuel as it is sent to the engine. Increasing fuel temperature above the "cloud point" prevents wax crystal formation and subsequent fuel line and fuel filter plugging.

A fuel heater may not help start an engine with waxed fuel already in the engine.

Fuel heaters may generate heat by the use of an electric element, or use engine coolant or even recalculate return fuel from the cylinder head to heat the incoming fuel. A fuel heater must be thermostatically controlled to limit the heat input into the fuel and a shut off must be provided for the warmer time of the year. **On DD Platform engines, the fuel temperature must not exceed 90°C (194°F) at the inlet to the high pressure fuel pump.**

16.3.1.7 Battery Heater Types

It is essential that steps be taken to insure that the maximum battery capacity is available under severe cold weather conditions. The electric battery warmers available can provide maximum battery capacity but require an electrical power source for operation. This power source may be an on-board system or an outside power supply. The following heaters usually use an outside power supply in standby operations. It is advisable that the heater manufacturer be contacted for the correct design, construction, and installation of their products. These units are available in various sizes, wattage, and voltages.

 Copyright © 2009 DETROIT DIESEL CORPORATION

https://truckmanualshub.com/

Heater Type	Description
Insulated Box Type	This unit can be fabricated from heavy gage sheet metal with rigid foam insulation applied to the outer surfaces, or it may be of double-walled formed-in-place urethane construction.
Plate Type	This unit employs a metal sheathed tubular element of "U" shaped sandwiched between heavy gage sheet metal plates and equipped with an integral control thermostat. This unit is mounted directly under the battery.
Mat Type	This unit is comprised of a heavy gage rubber material, incorporating a serpentine pattern resistance wire element imbedded in the center area of the material. The unit relies on low watt density radiant energy to heat the battery and is intended to be mounted directly under the battery.
Strip Type	Commercially available strip heaters can be employed for heating batteries. These are generally of higher watt densities. Care must be exercised to ensure that they do not come into direct contact with the battery casing. It is advisable to mount these units on the inside wall of the battery box.
Blanket Type	Flexible construction comprised of a heavy aluminum foil element assembly of low watt density, complete with fiberglass insulation on one side, enclosed in a heavy gage acid-resistant plastic sheath. The unit is provided with ties and is intended to be installed tightly around the sides of the battery or batteries. This unit has the advantage of integral insulation.
Air and Coolant Types	Other sources of battery heat in addition to electric heaters are forced hot air or coolant. These either circulate hot air through the battery box or the use of warm coolant circulated through passages in the battery box.

Table 16-1 Common Battery Heaters

16.3.1.8 Heating Engine Compartment

Another means of heating an engine is to use an external fuel fired air heater, which blows hot air onto the engine oil pan, air inlet, and batteries. To make this system effective, the engine compartment should be totally protected from the effects of outside wind, which will reduce the efficiency of the heater. Care must be taken not to damage any electrical engine component or wiring.

16.3.2 STARTING PROCEDURES

The engine starting procedure may change with the use any starting aid. Please review the recommendations with each starting aid.

Changes to starting procedures because of cold weather may include:

- A specific order of operation to achieve an engine start.
- On electronically controlled engines this may include:
  - Automatic changes made by MCM to the fuel timing
  - Automatic operation of the Ether Start
  - Automatic setting and adjustment of high idle speed
- A time delay for air intake heater operation.

All information subject to change without notice.
DDC-SVC-MAN-0073 Copyright © 2009 DETROIT DIESEL CORPORATION

https://truckmanualshub.com/

- Changes to the engine idle speed until the engine warms. On electronically controlled engines, cold idle speed is accomplished automatically by factory preset speeds; options for user specified higher idle speeds usually exist.

16.3.3 ENGINE STARTING REQUIREMENTS

A diesel engine creates enough heat during compression to initiate combustion when fuel is introduced. In cold weather, an engine may have to crank for a longer period in order to generate sufficient heat. Traditionally, starter motor manufactures' recommend cranking no more than thirty seconds. Cranking an engine beyond 15 seconds, especially in warmer ambient temperatures, may cause damage to the starter motor and/or engine.

16.4 COLD WEATHER OPERATION

There are a number of precautions and special practices which should be followed to ensure satisfactory engine operation in cold temperatures.

16.4.1 ETHER INJECTION

The installation of an ether injection device on a DD Platform engine is strictly prohibited. The injection of ether ,or any other substance, into the air intake system for improved cold start capability could result in serious engine damage and/or severe personal injury.

16.4.2 IDLING AND LIGHT LOAD

Idling of the engine should be avoided and light load operation restricted to a minimum. Where idling represents an unavoidable part of the load cycle, the idling speed should be increased to approximately 800 to 1000 rpm. If prolonged light load operation cannot be avoided, the engine should be periodically operated at a higher speed until lube oil and coolant reach the normal operating temperature.

16.4.3 MAINTENANCE

For optimum performance at low temperatures, there should be no loss of compression due to worn rings or leaking valves. Consequently the engine condition, rings and valves should be checked prior to cold weather to ensure proper operation at low temperatures. Fuel tanks should be kept filled. This practice will aid in reducing tank condensation and will insure the quality of the fuel. Change fuel filters at recommended intervals and when the grade of fuel is switched. Please refer to service literature at detroitdiesel.com for details.

 Copyright © 2009 DETROIT DIESEL CORPORATION

https://truckmanualshub.com/

16.4.4 WIND PROTECTION

Non-operating engines should be protected from wind, snow, and rain by compartment curtains, shield or shroud. These may be needed in extreme cold weather conditions when the vehicle is operating. Wind can quickly dissipate the heat from the engine oil, coolant, fuel and battery heaters. This effect is known as wind chill factor. It should be noted that wind chill factor cannot take the temperature of an object to a point lower than the ambient air temperature. The oil pan should be protected from cold air blasts. A shield or shroud should be provided which will deflect the air away from the pan thus preventing sludge from forming in the oil pan. The oil pan shroud should allow an oil temperature no greater than 121°C (250°F) while the engine is operating. The curtain, shield or shroud must be removed in warm weather conditions.

16.4.5 BATTERY AND CHARGING SYSTEM

The battery should always be maintained in a high state of charge. This can be accomplished by specifying an alternator capable of supporting electrical accessory loads at idle speeds and keeping the cable connections tight.

16.4.6 AIR CLEANER MAINTENANCE

The air cleaner should be inspected for plugging by moisture, snow or ice formation. In some cases, snow or moisture laden air will plug or wet the air cleaner element. A wet, air cleaner element may be more susceptible to mechanical damage. Minute droplets of salt spray ingested into the engine through the air cleaner element can cause damage to internal components. Ice can also form in cold temperatures in air cleaners with wet elements, leading to possible turbocharger damage. If evidence of wet or plugged filters is observed, steps must be taken to provide airflow to the engine which is snow or moisture free. This may require a revision to the vehicle air intake system. Please refer to the service literature available at detroitdiesel.com for details.

16.4.7 SUPPLEMENTAL HEATING DEVICE

Supplemental heating devices add heat to the engine while the engine is running. The additional heat allows the engine to maintain the proper operating temperature under extreme cold weather conditions. The need for such system can be affected by the design of the engine installation and is typically location dependent.

16.4.8 DDC COLD START RECOMMENDATIONS

DDC cold start recommendations are below.

All information subject to change without notice.
DDC-SVC-MAN-0073 Copyright © 2009 DETROIT DIESEL CORPORATION

https://truckmanualshub.com/

ITEM	Above 14°F	Below 14°F
Lube Oil Classification API CJ-4	1 - API CJ-4, low ash oil: 15W-40	1 - SAE 5W-30, 10W-30, 5W-40, 10W-40 *must still be API CJ-4*
	Lube oils must meet appropriate API CJ-4 performance levels as described in DDC publication (DDC-SVC-BRO–0001), *Lubricating Oils, Fuel, and Filters*, available on the DDC www.detroitdiesel.com. Use of synthetic oil permitted within constraints also defined in DDC publication (DDC-SVC-BRO–0001).	
Fuel Oil	Cloud point must be 10°F below the lowest anticipated operating temperature. Refer to DDC publication DDC-SVC-BRO–0001 for details.	
Coolant	50/50 antifreeze-water	1 — 50/50 DD Power Cool-Water 2 - 60/40 DD Power Cool-Water, if anticipated operating temperature will be -40°F or below.
Electrical Capacity (Battery Capacity CCA @ 0°F) Engine only	DD Platform - 12V - 1875 CCA Applies only when using DDC factory recommended wire sizes and length.	
Other Starting Aids	Usually not required above 32°F but may be used if desired below 32°F.	Lube oil heaters, coolant heaters, battery warmers, etc. (singly or in combination) may be required depending on oil choice.

Table 16-2 DDC Cold Start Recommendations - DD Platform Engine

 Copyright © 2009 DETROIT DIESEL CORPORATION

https://truckmanualshub.com/

THIS PAGE INTENTIONALLY LEFT BLANK

All information subject to change without notice.
DDC-SVC-MAN-0073 Copyright © 2009 DETROIT DIESEL CORPORATION

https://truckmanualshub.com/

17 ACCESSORY DRIVE SYSTEM

Section **Page**

17.1 ACCESSORY DRIVES 17- 2
17.2 GEARTRAIN 17- 2
17.3 DRIVETRAIN 17- 4
17.4 BENDING MOMENT 17- 5

 Copyright © 2009 DETROIT DIESEL CORPORATION

https://truckmanualshub.com/

17.1 ACCESSORY DRIVES

There are no accessory drives Rear Engine Power Take-Off (REPTO) located on the flywheel housing for the DD Platform engine at this time.

The Accessory Drives Front Engine Power Take-off (FEPTO) located on the front cover housing are listed in Table 1–1 and Table 1–2 below.

Accessory/Location Front Cover Housing	Drive Ratio	Rotation (as viewed from front of engine)	Drive Type (SAE Flange)	Comments
Vibration Damper Pulley off Front Crankshaft	--	CW	8 groove Poly-V w/10 groove Poly-V	Z53700903 Z53700904 Z53700908

Table 17-1 DD Platform Accessory Drives on Crankshaft (Non-Gear Driven)

Accessory / Location Front Cover Housing	Drive Ratio	Rotation (as viewed from front of engine)	Shaft Coupling (SAE)	Drive type (SAE Flanges)	Capacity in lb·ft @ rpm	Comments
PTO Front Crankshaft	—	CW	Spicer 1350	4 groove pulley	224 lb·ft (77hp) @ 1800rpm	
PTO Front Crankshaft	—	CW	Spicer 1310	4 groove pulley	120 lb·ft (41hp) @ 1800rpm	
PTO Front Crankshaft	—	CW	Spicer 1350	10 groove pulley	224 lb·ft (77hp) @ 1800rpm	

* An adaptor is necessary for adaptation of the PTO Front Crankshaft Accessory Drive to adapt to DD Platform Vibration Damper Pulley

† Maximum combined PTO of accessory drive plus front drive not to exceed 25 hp continuous, 30 hp intermittent @ rated engine speed

Table 17-2 DD Platform Accessory Drives on Crankshaft (Gear Driven)

17.2 GEARTRAIN

The geartrain for a DD Platform engine is located at the rear of the engine. The geartrain consists of intake and exhaust camshaft gears, idler gears 1-5, crankshaft gear, oil pump gear, fuel pump gear, air compressor gear, and turbocompound gear.

All information subject to change without notice.
DDC-SVC-MAN-0073 Copyright © 2009 DETROIT DIESEL CORPORATION

https://truckmanualshub.com/

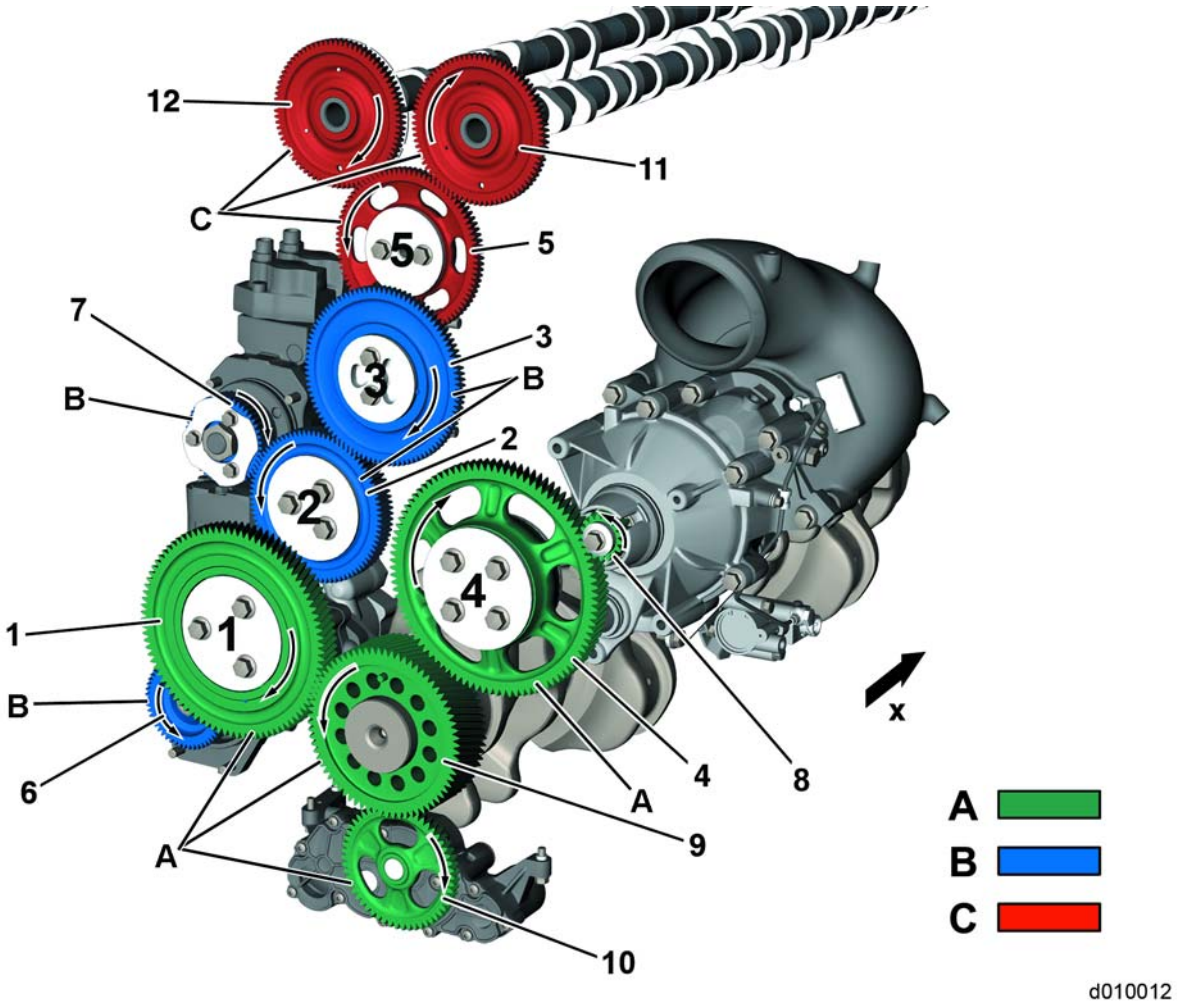

1. Idler Gear No. 1
2. Idler Gear No. 2
3. Idler Gear No. 3 (Adjustable)
4. Idler Gear No. 4 (Optional on DD13 with REPTO)
5. Idler Gear No. 5
6. Air Compressor Gear*
7. Fuel Pump Gear**
8. Axial Power Turbine Gear (N/A for DD13)*
9. Crankshaft Gear
10. Oil Pump Gear
11. Camshaft Gear Exhaust
12. Camshaft Gear Intake

A. Level A
B. Level B
C. Level C
x. To Front of Engine

NOTE: * Power Steering Pump mounted to rear of Air Compressor for 1–cylinder Air Compressor applications. PSP driven by Air Compressor driveshaft.
** Power Steering Pump mounted to front of Fuel Pump for 2–cylinder Air Compressor applications

Figure 17-1 Rear Geartrain for the DD Platform Engine

17.2.1 GEARTRAIN GEAR DRIVE RATIOS

Gear drive ratios for the gear drives on a DD Platform engine.

 Copyright © 2009 DETROIT DIESEL CORPORATION

https://truckmanualshub.com/

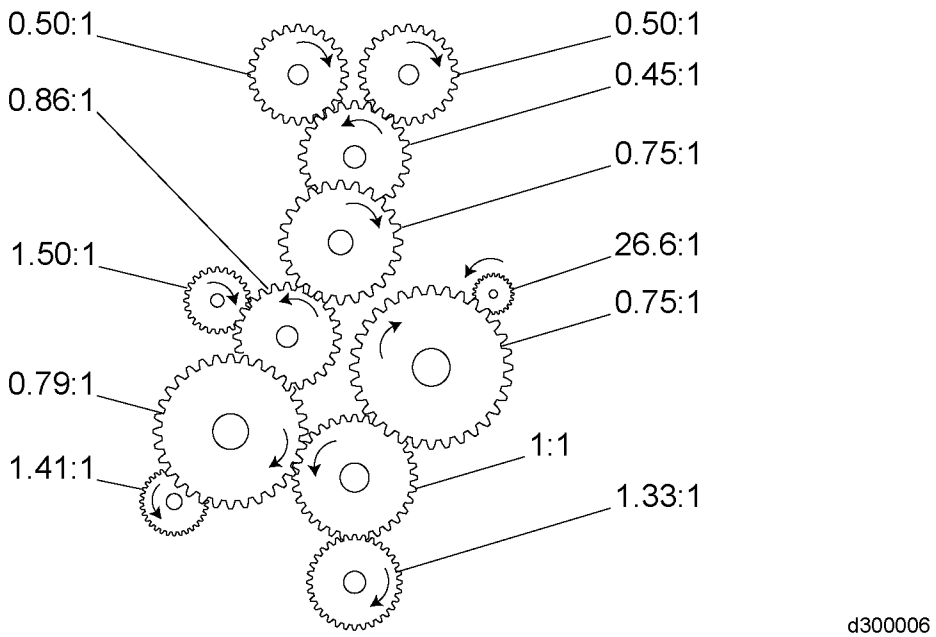

Figure 17-2 GEARTRAIN GEAR DRIVE RATIOS

17.3 DRIVETRAIN

The standard drivetrain for a DD Platform engine contains the water pump, vibration damper pulley, and a tensioner driven by a drive belt. The vibration damper pulley consists of 2 Poly-V crankshaft pulleys integrated into one combined pulley. The inner plane of the pulley is an 8–groove pulley, which drives the waterpump, alternator, and freon compressor. The outer plane of the vibration damper pulley is a 10–groove pulley, which drives the fan drive system. The drive ratio of the water pump is 2.22:1 for the DD Platform engine and 2.05:1 for the DD Platform engine. See Figure 1–3 for a schematic of the DD Platform drivetrain.

All information subject to change without notice.
DDC-SVC-MAN-0073 Copyright © 2009 DETROIT DIESEL CORPORATION

https://truckmanualshub.com/

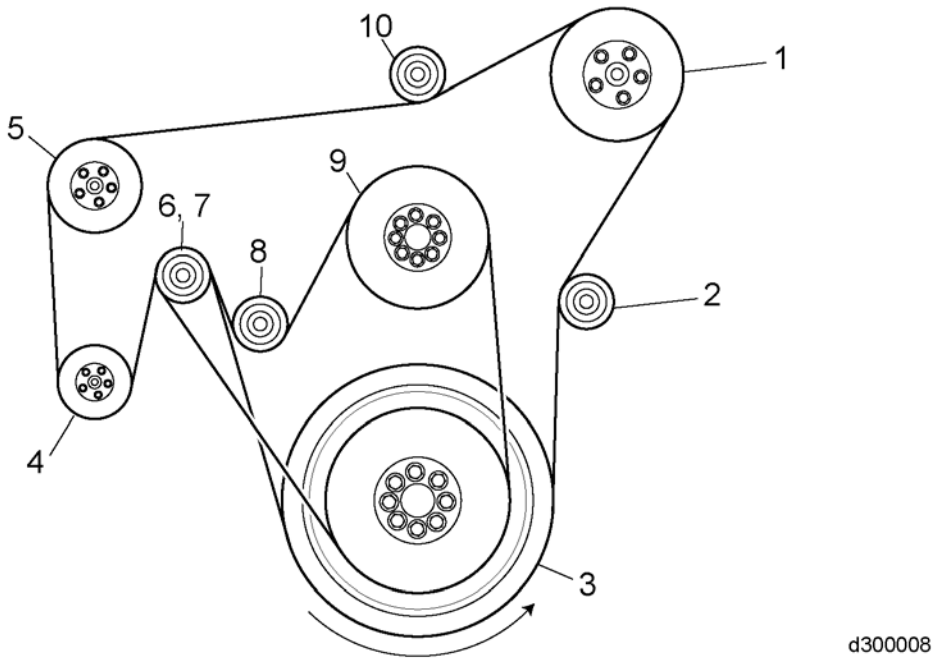

1. Waterpump Pulley
2. Idler Pulley
3. Crank
4. Generator
5. Freon Compressor
6. Tensioner
7. Tensioner
8. Tensioner
9. Cooling Fan
10. Idler

Figure 17-3 DD Platform DRIVETRAIN

17.4 BENDING MOMENT

The bending moment (**M**) on the front of the crank equals force (**F**) times distance (**L**) from the front face of the block. The force is usually caused by belt tension on the crankshaft pulleys .

The maximum allowable bending moment depends upon the angled direction that the force around the crank (as referenced from the front face of the engine) is to be applied. For multiple hub loads, take the vectorial sum of the maximum allowable bending moments at each angled direction of force to determine the total maximum allowable bending moment.

The front crankshaft maximum allowable polar bending moment diagram is in ft·lb and referenced from the front face of the block.

 Copyright © 2009 DETROIT DIESEL CORPORATION

https://truckmanualshub.com/

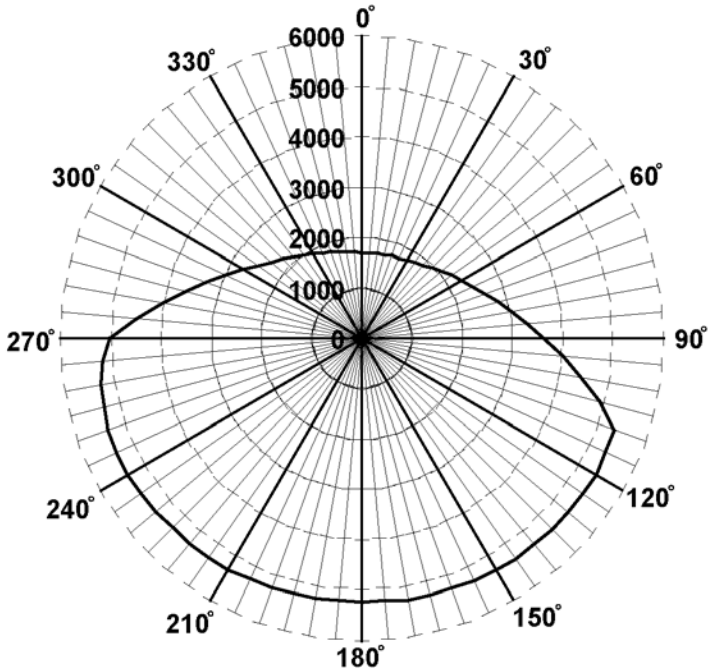

Angle	M (ft.lbs)
0	1697
30	1800
60	2283
90	3629
120	5359
150	5313
180	5237
210	5284
240	5363
270	5019
300	2730
330	1919

d300007

Figure 17-4 DD Platform 14.8L Allowable Front Crankshaft Bending Moment

To calculate the maximum allowable force (**F**) at a given belt load direction:

1. Determine the direction the individual force is to be applied from a belt drive analysis or from a belt layout diagram.
2. Find the corresponding maximum allowable bending moment.
3. Divide by the corresponding distance (**L**) to derive the maximum allowable force (**F**).

L is the distance from the front face of the block to the centerline of the belt driving the load and is mathematically defined as $\mathbf{L_1}$ + .99 in., where .99 in. is a constant value and represents the distance between the front face of the block to the rear face of the vibration damper pulley. $\mathbf{L_1}$ is then the distance from the rear face of the vibration damper pulley to the centerline of the belt or pulley.

All information subject to change without notice.
DDC-SVC-MAN-0073 Copyright © 2009 DETROIT DIESEL CORPORATION

https://truckmanualshub.com/

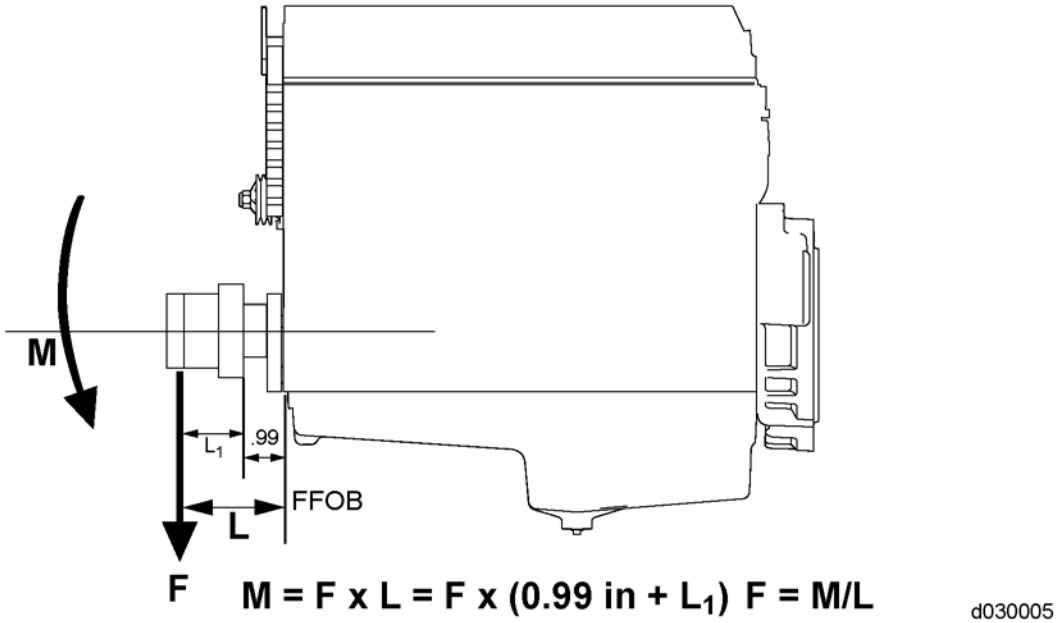

Figure 17-5 Bending Moment on the Front of the Crank

If multiple belts are used to drive multiple loads, use the distance to the centerlines of each belt when determining each force applied. Refer to Table below for a description of the $\mathbf{L_x}$ values for the DD Platform poly-v vibration damper pulley configuration and for a schematic representation of the $\mathbf{L_x}$ values.

Poly-V Vibration Damper Pulley Group	8–groove L_1 mm (in)	10–groove L_2 mm (in)
Z53700903, Z53700904, Z53700908	21.46 (.84)	76.06 (2.99)

Table 17-3 DD Platform Vibration Damper Pulley L_x Values

 Copyright © 2009 DETROIT DIESEL CORPORATION

https://truckmanualshub.com/

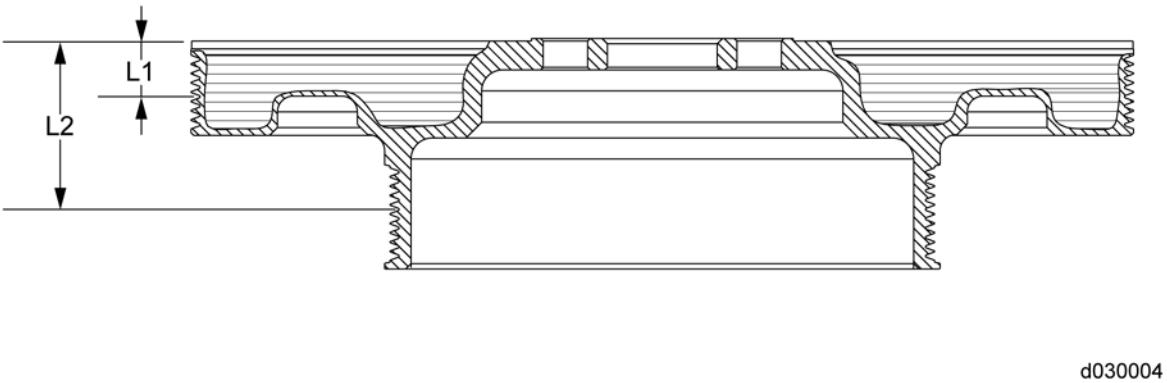

Figure 17-6 Poly-V Belt integrated Vibration Damper Pulley Illustrating L_x Values

If using a v-belt pulley, use the centerline of the pulley for $\mathbf{L_1}$ only if the belt is centered along the pulley. If the belt is NOT positioned in line with the centerline of the pulley, then you must measure the distance from the rear face of the vibration damper pulley to the centerline of the belt location and use this distance in your calculations.

EXAMPLE: 8–groove section of the DD Platform Vibration Damper Pulley = Z53700903. Belt Force Direction = 90°. Find the Maximum Allowable Belt Force as follows:

1. Determine **M** for a DD Platform engine at 90°. In our example, a fan drive belt pulling at 90°, **M** would have a value of 3629 lb·ft.

All information subject to change without notice.
DDC-SVC-MAN-0073 Copyright © 2009 DETROIT DIESEL CORPORATION

https://truckmanualshub.com/

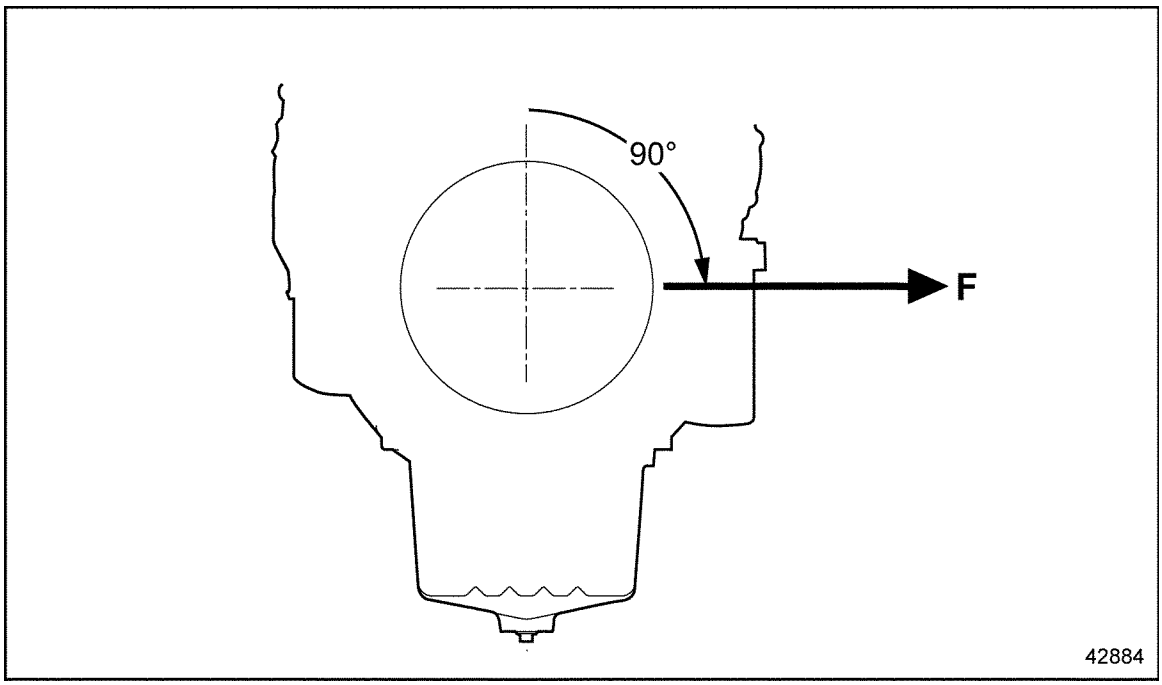

Figure 17-7 Net Belt Tension at the 90° Position

2. Determine **L** by using the formula **L** = $\mathbf{L_1}$ + **.99 in**. In our example, we use the table to find $\mathbf{L_1}$ for the vibration damper pulley group Z53700903 (8–groove section). This value is .84 in. Therefore, **L** = .99 in. + .84 in. = 1.83 in. (.15 ft.)
3. Find **F** using the formula **F** = **M** /**L**. In the example, **F**= 3629 lb·ft/.15 ft. = **24193 lbs** (**F**) .
4. Therefore the net total static belt tension (each leg of the belt x 2) should be no more than lbs at the 90° position of the 8–groove section of the vibration damper pulley.

If there are fan belts and other accessories, then the combined net force should be calculated at its resultant angle. Contact Detroit Diesel Application Engineering for assistance.

 Copyright © 2009 DETROIT DIESEL CORPORATION

https://truckmanualshub.com/

THIS PAGE INTENTIONALLY LEFT BLANK

All information subject to change without notice.
DDC-SVC-MAN-0073 Copyright © 2009 DETROIT DIESEL CORPORATION

https://truckmanualshub.com/

18 AUXILIARY POWER UNITS (APU)

Section **Page**

18.1 AUXILIARY POWER UNITS (APU) 18- 2
18.2 APU DESCRIPTION 18- 2
18.3 INSTALLATION REQUIREMENTS 18- 3
18.4 APU ENGINE START-UP PROCEDURE 18-11
18.5 EXAMPLE INSTALLATION PHOTOS 18-13

 Copyright © 2009 DETROIT DIESEL CORPORATION

https://truckmanualshub.com/

18.1 AUXILIARY POWER UNITS (APU)

Auxiliary Power Units (APU) are optional systems, either factory installed or after-market, that are driven by an independent power source and provide electricity (either 12-volt, 120-volt or both) and HVAC functions for on-highway trucks to eliminate excessive engine idling during long duration or over-night stops. Some states have regulations limiting idle time to no more than five minutes, at which point the main vehicle engine must automatically shut down. For an overnight stay in a sleeper cab, HVAC functions or electrical power are often required for driver comfort.

NOTE:
The installation described herein is specific to the ThermoKing TriPac APU installed with a Detroit Diesel DD15 engine. These guidelines should be applicable to other brand or model APU's. Please confirm the installation requirements for different model APUs with Detroit Diesel Application Engineering.

18.2 APU DESCRIPTION

An APU is typically comprised of a small diesel engine, an in-cab control panel, a thermostat, an alternator, an air conditioning circuit, a heater circuit, and in some cases, a generator to provide 120-volt power. The APU is engaged when the main vehicle engine is shut off to provide heating and cooling, charge the batteries and provide 12-volt or 120-volt power for small appliances, laptop computers, etc. The APU can be set up to start automatically when the engine is stopped or can be switched on manually. Some APUs may also have a battery monitor function which will engage the APU while the main vehicle engine is running to charge the batteries in the event of an alternator failure.

All information subject to change without notice.
DDC-SVC-MAN-0073 Copyright © 2009 DETROIT DIESEL CORPORATION

https://truckmanualshub.com/

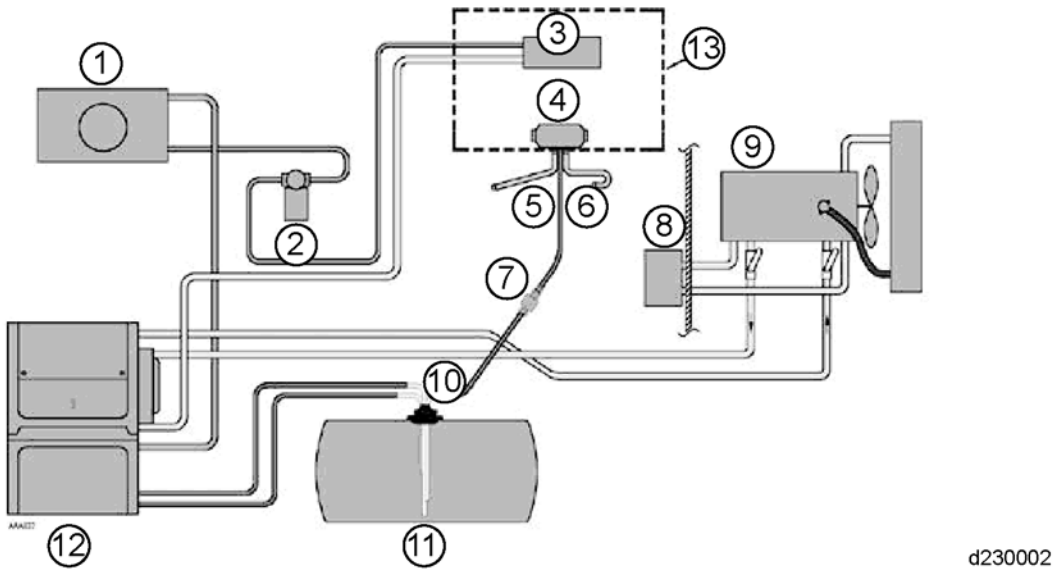

1. A/C Condenser
2. Receiver Dryer
3. A/C Evaporator
4. Heater
5. Heater Exhaust
6. Heater Intake
7. Heater Fuel Pump
8. Truck's Heater Core
9. Truck's Engine
10. Fuel Pick-Up Tubes
11. Truck's Fuel Tank
12. TriPac APU
13. Truck's Sleeper

Figure 18-1 TriPac Components

18.3 INSTALLATION REQUIREMENTS

The installation requirements for APUs vary from brand to brand. Some are completely independent systems and require no interface with the main vehicle engine systems. Other APUs require the coolant circuit for the APU to be shared with the main vehicle engine cooling circuit. The installation of an APU should only be performed by the vehicle manufacturer or an authorized after-market APU dealer or distributor. The installation of an APU should not compromise or inhibit the required function of any engine systems described in this manual. Component or system failures that result from not following these guidelines could result in engine or vehicle warranty coverage being denied.

 Copyright © 2009 DETROIT DIESEL CORPORATION

https://truckmanualshub.com/

18.3.1 APU FUEL SYSTEM

Most APUs share the fuel supply with the primary vehicle fuel tank. Separate fuel supply and return lines must be installed for the APU's diesel engine directly to the primary vehicle fuel tank. Connection to engine supply and return fuel lines is not permitted. Material specifications and line sizes will be indicated by the manufacturer of the APU being installed. It is important to also consider the location of the APU relative to the vehicle fuel tank to avoid siphoning or other unwanted scenarios. If any modifications are performed on the fuel tank, make sure the fuel tank is cleaned of debris prior to engine operation.

WARNING:
FIRE
To avoid injury from fire, contain and eliminate leaks of flammable fluids as they occur. Failure to eliminate leaks could result in fire.

All information subject to change without notice.
DDC-SVC-MAN-0073 Copyright © 2009 DETROIT DIESEL CORPORATION

https://truckmanualshub.com/

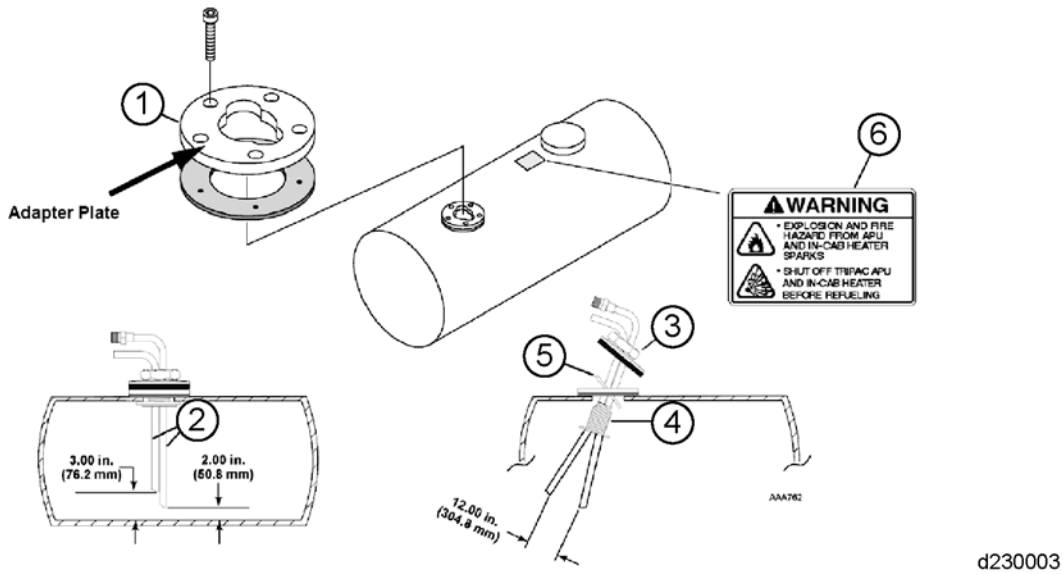

1. Adapter Plate
2. Pick-Up Tube Assembly
3. Nut
4. Threaded Ferrule
5. Back-Up Washer
6. Warning Label

Figure 18-2 Fuel Pick-Up Tool Installation

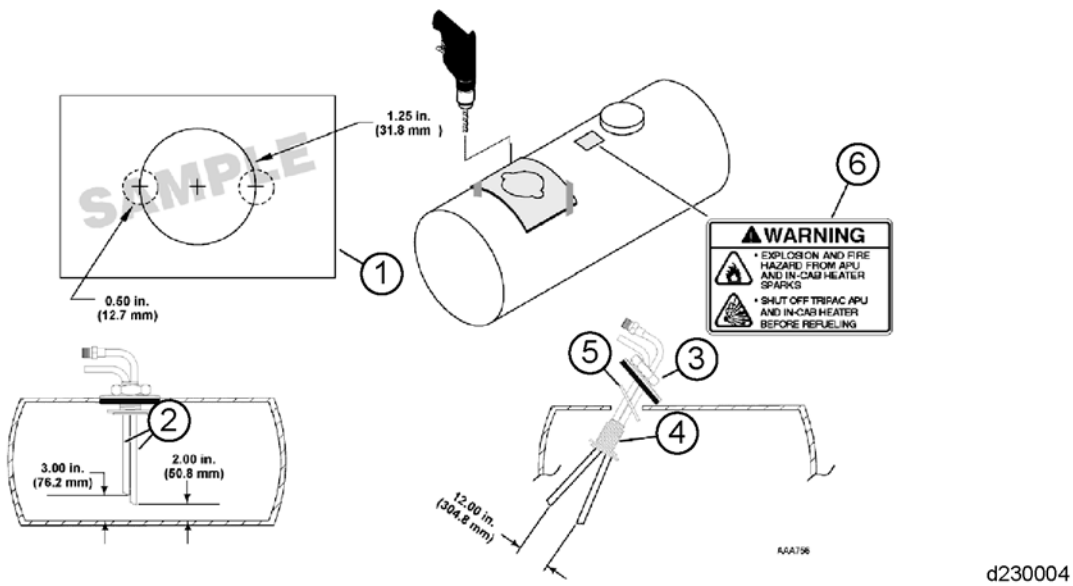

1. Drilling Template
2. Pick-Up Tube Assembly
3. Nut
4. Threaded Ferrule
5. Back-Up Washer
6. Warning Label

Figure 18-3 Fuel Pick-Up Tool Installation Alternate Installation

 Copyright © 2009 DETROIT DIESEL CORPORATION

https://truckmanualshub.com/

18.3.2 APU COOLANT SYSTEM

If the APU shares coolant with the main vehicle engine, it is important that the APU installation does not create problems for the main engine cooling system. The installation method preferred by Detroit Diesel uses coolant lines connected directly to the main vehicle engine to supply coolant to the APU. Detroit Diesel does not allow the APU coolant circuit to be connected to the bunk heater circuit due to insufficient coolant flow. Material specifications and line sizes will be indicated by the manufacturer of the APU being installed.

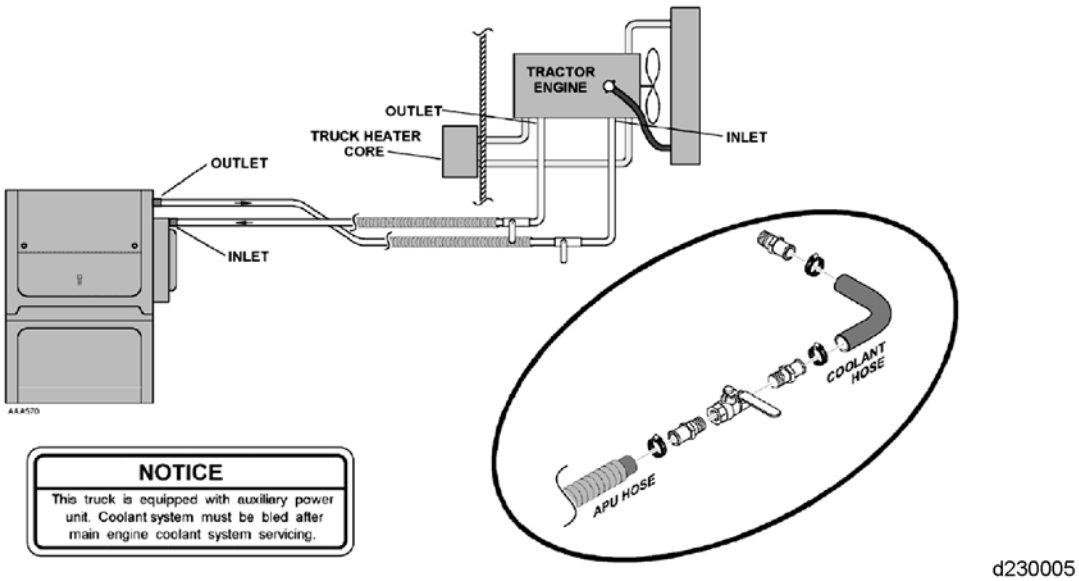

Figure 18-4 Coolant Hose Installation

NOTICE:
An air bound pump cannot adequately circulate coolant. This can lead to overheating and severe engine damage.

⚠ WARNING: PERSONAL INJURY
To avoid injury from rotating belts and fans, do not remove and discard safety guards.

All information subject to change without notice.
DDC-SVC-MAN-0073 Copyright © 2009 DETROIT DIESEL CORPORATION

https://truckmanualshub.com/

WARNING:

HOT COOLANT

To avoid scalding from the expulsion of hot coolant, never remove the cooling system pressure cap while the engine is at operating temperature. Wear adequate protective clothing (face shield, rubber gloves, apron, and boots). Remove the cap slowly to relieve pressure.

NOTICE:

Cooling systems that cannot be drained completely may also experience freeze cracking of components. Additional drain(s) and a caution notice should be provided by the OEM to ensure complete draining of the cooling system.

Three (3) coolant supply ports are located at the rear of the coolant collector as shown below. These ports are M22 x 1.5 ISO threads. A coolant return manifold is available through Daimler Trucks North America in either a 2-port or 4-port configuration. The 4-port configuration is standard on Freightliner sleeper cab units. For trucks built with a 2-port manifold, an additional port is required for the APU coolant return. Two options exist: 1) replace the 2-port manifold with a 4-port manifold; 2) install a tee fitting or “Y” fitting at the rear port. The coolant return ports are ½” FPT threads. A shut-off valve should be installed on the APU coolant supply and APU coolant return lines. These shut-off valves should be located as close to the engine ports as practical. Care should be taken with the routing of coolant supply and return lines for the APU not to locate the lines too close to exhaust system components. The APU coolant return should be routed to either of the two rear-most ports on the 4-port manifold.

 Copyright © 2009 DETROIT DIESEL CORPORATION

https://truckmanualshub.com/

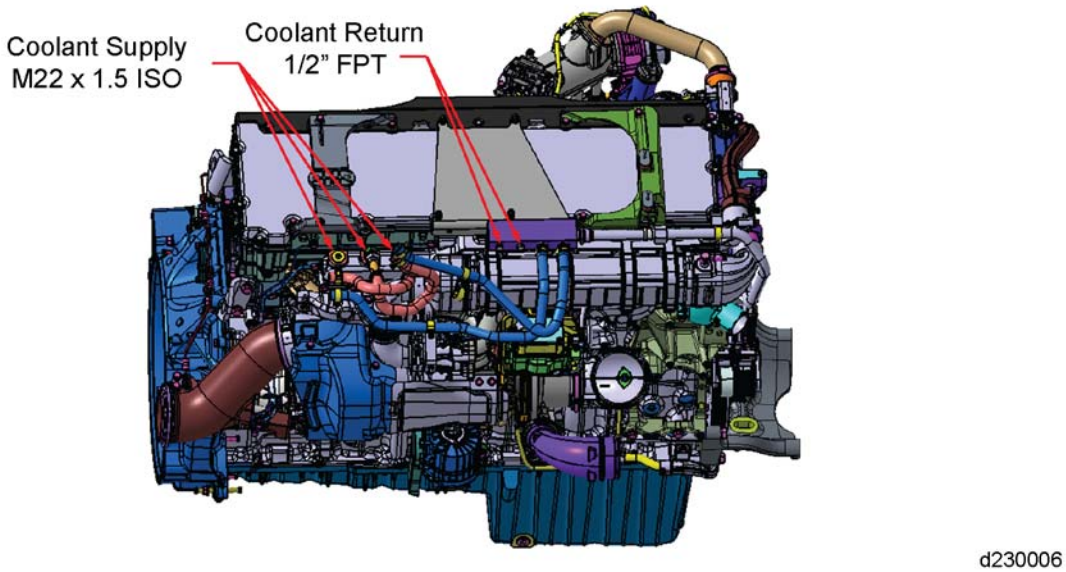

Figure 18-5 DD15 with 4-Port Coolant Return Manifold

Coolant supply and return lines should be routed away from the turbocharger turbine housing and any exhaust components. Both lines should be routed forward of the turbocharger compressor discharge elbow and below the turbo inlet, down toward the frame rail. The lines should be securely fastened to the engine so as not to unnecessarily stress the fittings which may result in coolant leaks. Avoid sharp bends and angles whenever possible. A minimum spacing of 13mm is required between coolant lines and the frame rails. See photographic examples of coolant line routings in the last section of this chapter.

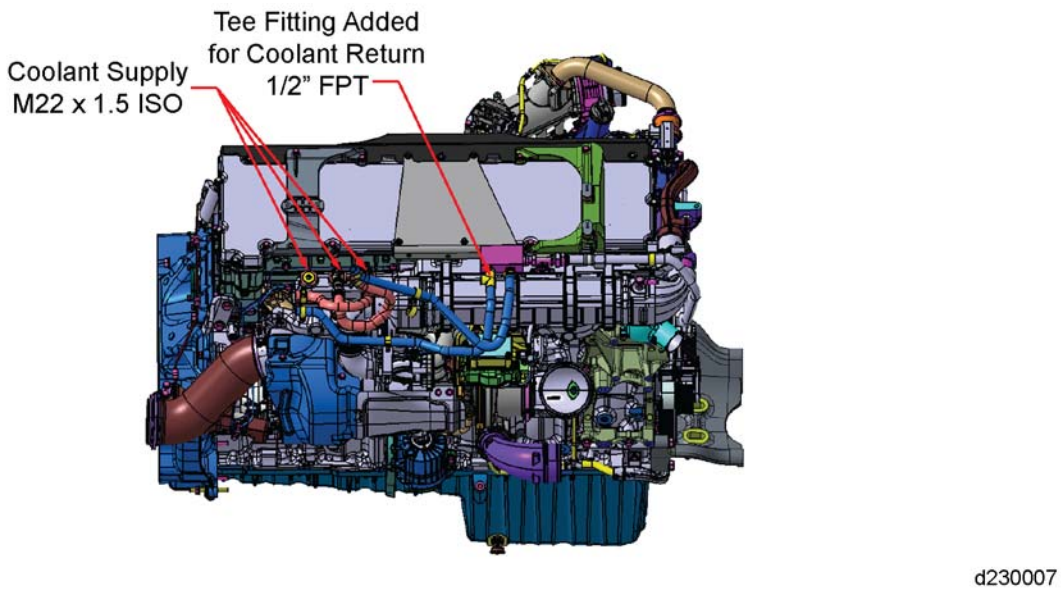

Figure 18-6 DD15 with 2-Port Coolant Return Manifold

All information subject to change without notice.
DDC-SVC-MAN-0073 Copyright © 2009 DETROIT DIESEL CORPORATION

https://truckmanualshub.com/

DD15 engine shown with 2-port coolant return manifold. For installations having a 2-port manifold, the rear coolant line (bunk heater return) should be used to return coolant from the APU. If a tee fitting is used, it should be installed into the rear port of the manifold. The bunk heater return is connected to the outboard port on the tee, and the APU coolant return is plumbed to the rear facing port on the tee. A “Y” connector could also be used to connect to APU return to the bunk heater return line.

Refer to Detroit Diesel Coolant Selections Bulletin, 7SE298, for proper selection of engine coolant and additives.

If an APU is selected that shares engine coolant with the main vehicle engine and could also run simultaneously, an installation review would be required from Detroit Diesel Application Engineering prior to installation.

18.3.3 APU EXHAUST SYSTEM

The APU exhaust system must remain separate from the main vehicle engine exhaust system. Under no circumstances should the APU exhaust be connected to the main vehicle exhaust piping. Care should be taken to route the APU exhaust away from the cab and all air intake locations.

18.3.4 APU ELECTRICAL SYSTEM

If the APU requires input from the main vehicle engine electronics to indicate when the main vehicle engine is running, the ignition signal from the main vehicle engine is located in the CPC on pin #3 of connector #2.

 Copyright © 2009 DETROIT DIESEL CORPORATION

https://truckmanualshub.com/

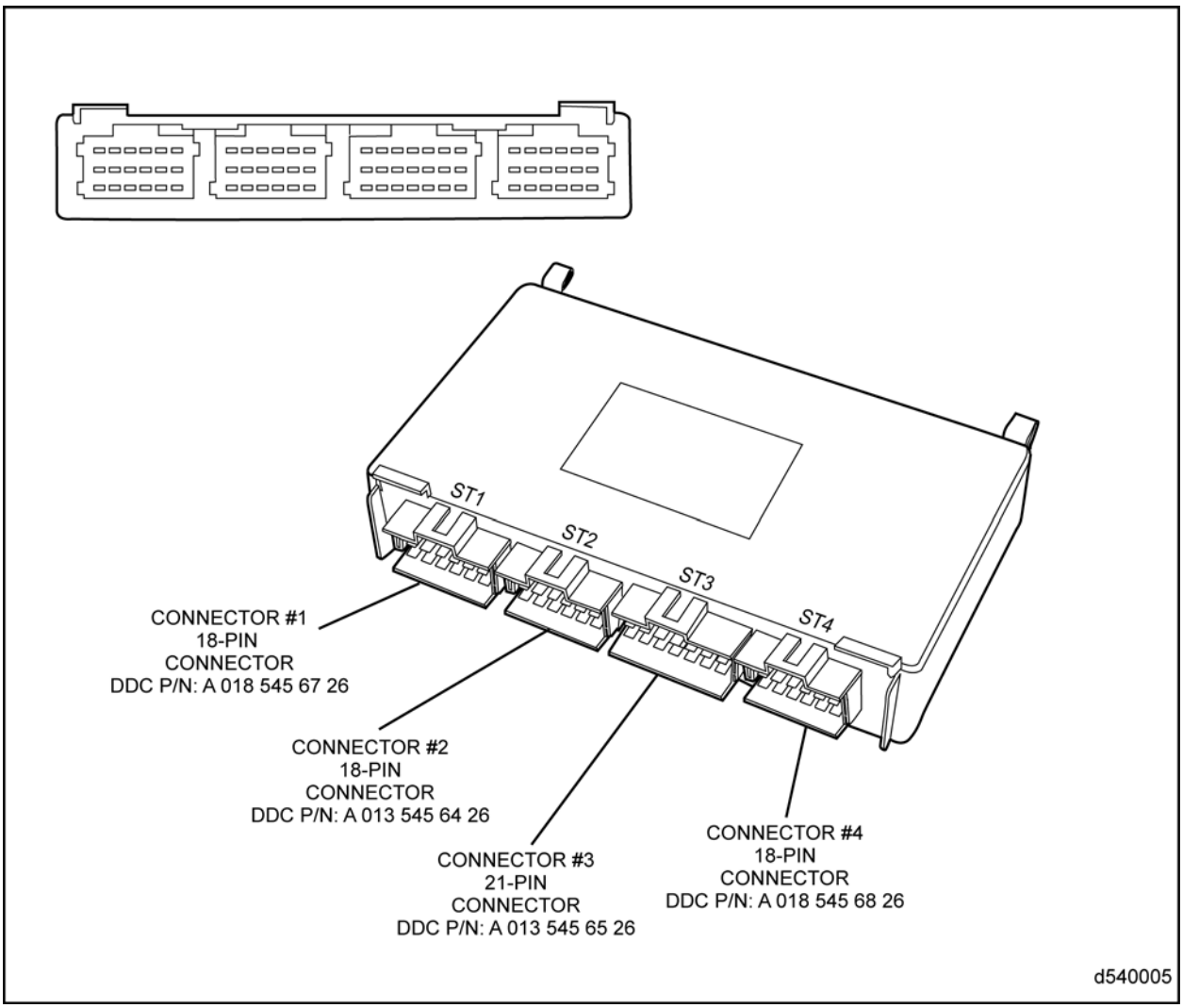

Figure 18-7 CPC Connectors

The part numbers for CPC pins are listed below.

Part	DDC Part Number
CPC - socket 0.5-1.0mm wire (single)	013 545 76 26
CPC - socket 1.0-2.5mm wire (single)	013 545 78 26

Table 18-1 CPC Pins

The vehicle ignition is a 12-volt signal. No other electrical signals should be required from the main vehicle engine electronics. If the APU requires vehicle battery power, please refer to the main Electrical System section of the DD15 Application & Installation Manual.

All information subject to change without notice.
DDC-SVC-MAN-0073 Copyright © 2009 DETROIT DIESEL CORPORATION

https://truckmanualshub.com/

NOTICE:
Do not mount the alternator and / or generator near exhaust components that radiate substantial heat. Mounting near substantial heat sources could overheat the alternator, generator and / or regulator.

18.4 APU ENGINE START-UP PROCEDURE

It is important to verify the installation has been performed correctly and to prepare the various APU sub-systems for proper operation. The A/C circuit, the lubrication system, the cooling system, and the fuel system all must be in proper working condition before the APU is started for the first time to avoid unnecessary component damage.

CAUTION:
DO NOT operate the APU engine before a partial refrigerant charge has been added or damage to the A/C compressor will result.

NOTICE:
BEFORE operating the APU engine check the oil level. Add the proper amount and type of oil, if needed.

18.4.1 BLEEDING THE COOLANT SYSTEM

Bleed as follows:

1. Verify the APU OUTLET hand valve is CLOSED. If this valve is left open, coolant will be sitting on top of the TriPac thermostat and not allow the TriPac engine to bleed air.
2. Open the APU INLET hand valve.
3. Place a clean container under the bleed line to catch coolant that is drained.
4. Entrapped air must be purged from the main vehicle engine after filling the cooling system. To do this, allow the engine to warm up with the pressure cap removed. With the transmission in neutral, increase engine speed to 1,000 rpm and add coolant to the surge tank as required.
5. Open the bleed petcock on the APU engine to allow air to bleed out.
6. When a steady stream of coolant flows from the bleed line, close the petcock.
7. Open the APU OUTLET hand valve.
8. Replace drained coolant from the TriPac back into the tractor’s radiator.
9. Bleed TriPac fuel system. Refer to section "Bleeding The Fuel Lines".

 Copyright © 2009 DETROIT DIESEL CORPORATION

https://truckmanualshub.com/

CAUTION:

Verify the APU engine has proper amount of oil and the A/C system has a partial refrigerant charge before starting the engine.

10. Start the TriPac engine.
11. The remaining air in the system will be forced to the tractor radiator and the TriPac APU should now be bled of all air.

18.4.2 BLEEDING THE FUEL LINES

Bleed as follows:

1. Locate the On/OFF switch inside the APU and turn the switch “ON”.
2. Open the fuel return line banjo fitting on the APU engine.
3. At the HMI (in-cab APU control panel):
   [a] Press MAIN POWER Key “ON”.
   [b] Press APU SYSTEM Key “ON”.
   [c] Press MODE Key to “AC”.
   [d] Press FAN Key to set fan speed.
   [e] Press UP or DOWN Keys to set the thermostat to 50°F (10°C).
   [f] Multiple start attempts will be required to start the engine.

NOTE:
The fuel pump only runs when the engine is turning over. If the engine cranks for 30 seconds and fails to start, a start fault shutdown will be generated. This alarm code will have to be cleared before attempting another start sequence.

4. Close the fuel return line banjo fitting when a steady flow of fuel is observed.
5. Allow engine to start.

18.4.3 VERIFYING ENGINE OPERATION

Once the APU engine is running:

- □ Verify with a strobe light tachometer the engine rpm is 1800 RPM loaded (A/C clutch engaged). Adjust as required.
- □ Check cooling system for leaks
- □ Check for fuel leaks

All information subject to change without notice.
DDC-SVC-MAN-0073 Copyright © 2009 DETROIT DIESEL CORPORATION

https://truckmanualshub.com/

- ☐ Check for oil leaks
- ☐ Check for exhaust leaks
- ☐ Verify with a digital meter that the charging voltage at the battery cables is at least 13.6 Vdc.

18.5 EXAMPLE INSTALLATION PHOTOS

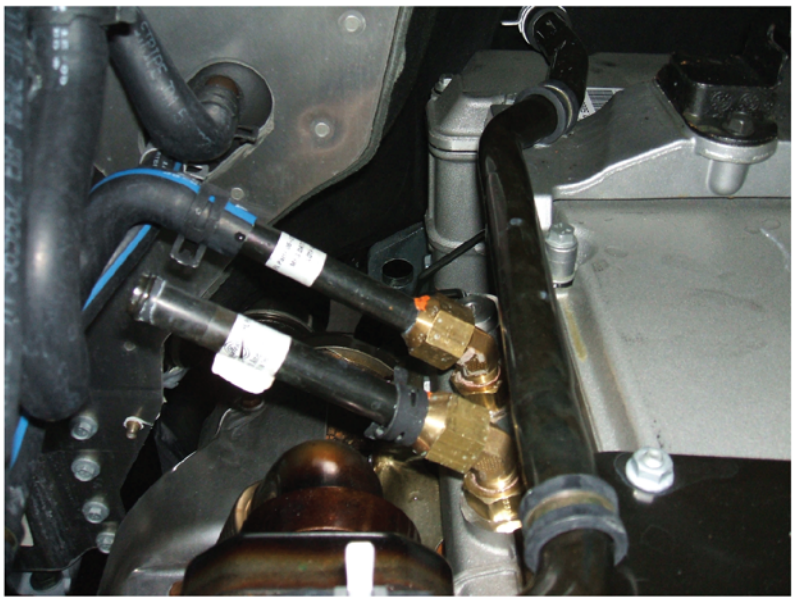

d230009

Figure 18-8 Coolant Supply Ports

Coolant supply ports located on coolant collector, upper right side of engine, near back of rocker cover. Coolant supply for APU has not yet been installed on third, rear-most ISO port. Cab heater and bunk heater supply lines are installed on the two forward ISO supply ports of the coolant collector.

 Copyright © 2009 DETROIT DIESEL CORPORATION

https://truckmanualshub.com/

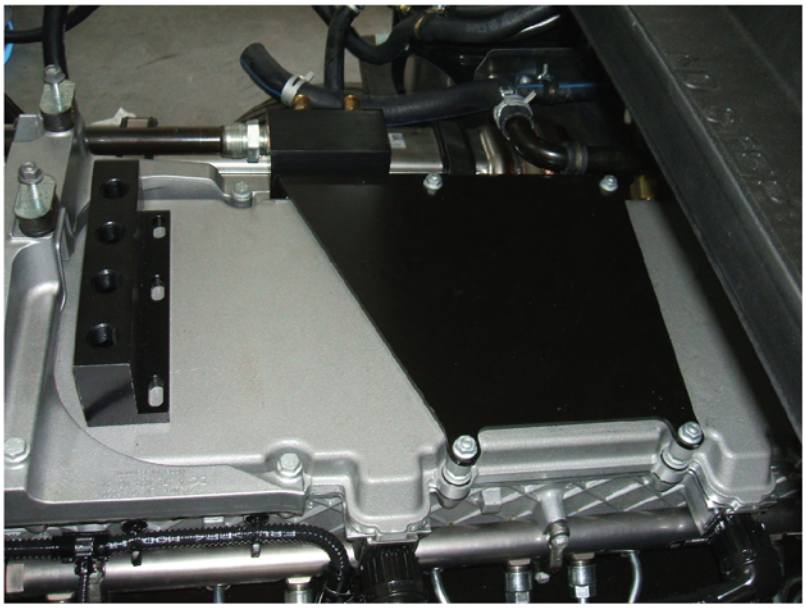

d230010

Figure 18-9 Two-Port Coolant Return Manifold

Top of engine showing two-port coolant return manifold (mounted) with replacement four-port manifold waiting to be installed.

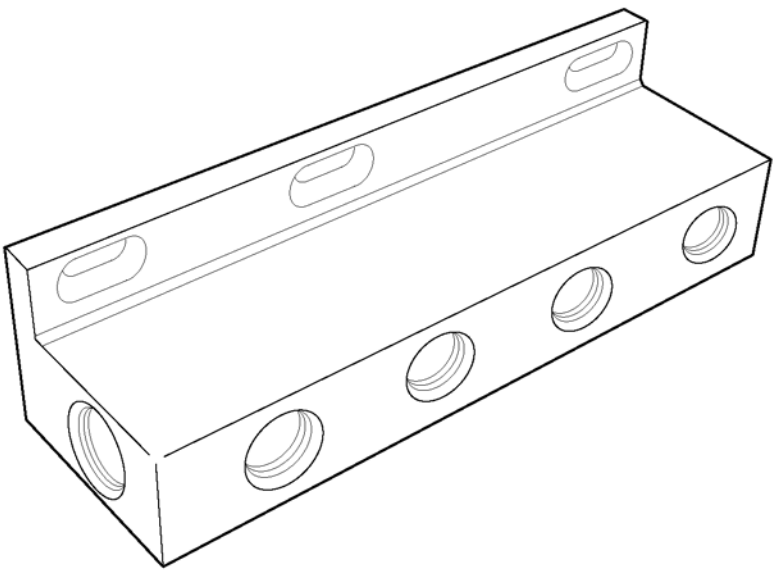

d230008

Figure 18-10 Four-Port Coolant Return Manifold

All information subject to change without notice.
DDC-SVC-MAN-0073 Copyright © 2009 DETROIT DIESEL CORPORATION

https://truckmanualshub.com/

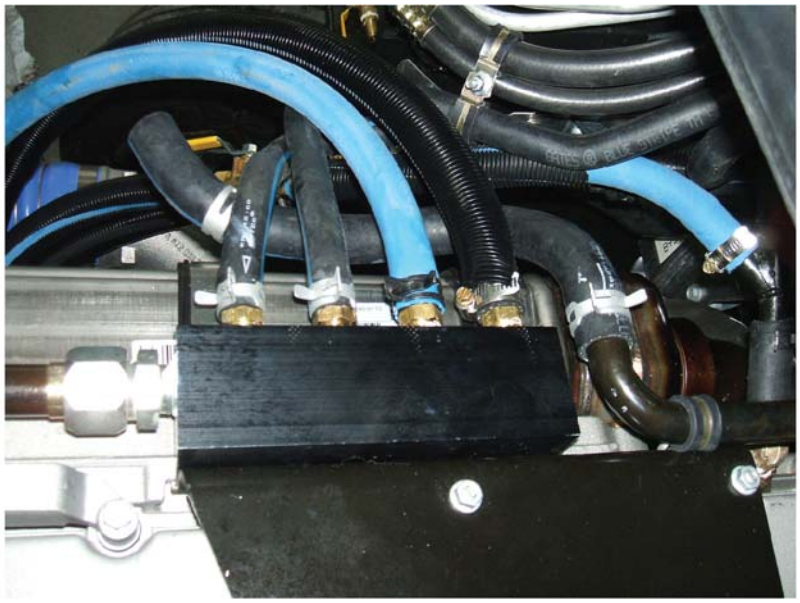

d230011

Figure 18-11 Four-Port Coolant Return Manifold Installed

Four-port coolant return manifold installed with cab heater return, bunk heater return, fuel tank heater return, and APU coolant return lines installed.

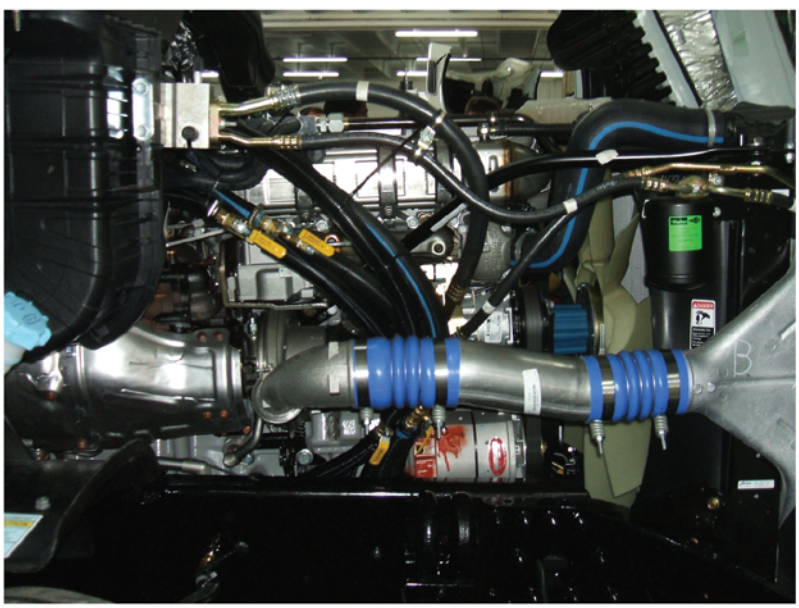

d230012

Figure 18-12 Right Side View Of Engine After APU Installation

Right side view of engine after APU installation completed. Two yellow handled shut-off valves in upper left are installed on APU supply and fuel tank heater supply lines. Lower shut-off valves are installed on APU and fuel tank heater return lines. Note line routing, away from exhaust components, forward of turbo compressor housing, inboard of CAC inlet tubing, and down into frame rail.

 Copyright © 2009 DETROIT DIESEL CORPORATION

https://truckmanualshub.com/

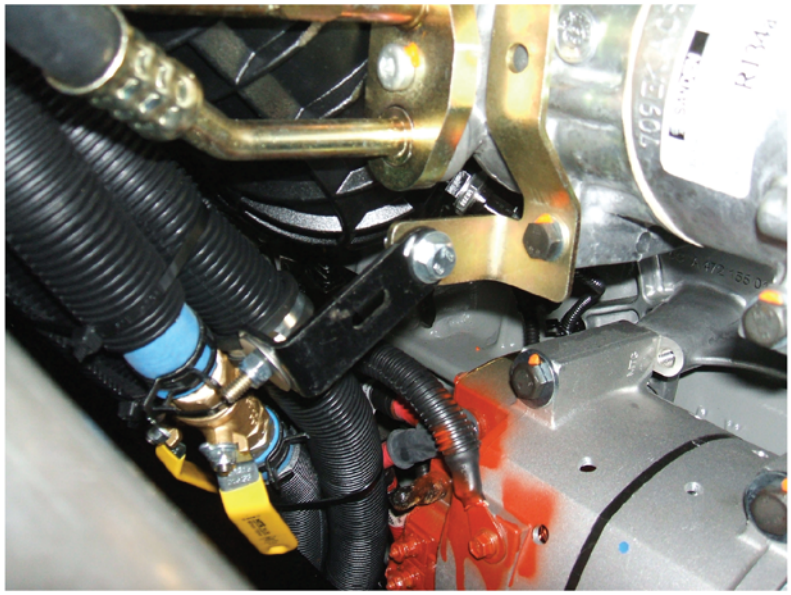

d230013

Figure 18-13 Coolant Lines

Coolant lines clipped to bracket on freon compressor bracket.

d230014

Figure 18-14 Alternate View

Alternate view of coolant line clipping at freon compressor.

All information subject to change without notice.
DDC-SVC-MAN-0073 Copyright © 2009 DETROIT DIESEL CORPORATION

https://truckmanualshub.com/

19 EFFECTS OF ENVIRONMENTAL CONDITIONS

Section **Page**

19.1 EFFECTS OF ENVIRONMENTAL CONDITIONS DESCRIPTION 19- 2
19.2 AIR INLET TEMPERATURE 19- 2
19.3 EXHAUST BACK PRESSURE 19- 2
19.4 FUEL TEMPERATURE 19- 3
19.5 ALTITUDE 19- 3

 Copyright © 2009 DETROIT DIESEL CORPORATION

https://truckmanualshub.com/

19.1 EFFECTS OF ENVIRONMENTAL CONDITIONS DESCRIPTION

Power developed by any internal combustion engine depends on the amount of fuel burned with the available oxygen in the cylinder. The amount of oxygen in a cubic foot of air is reduced if water vapor is present, or if the air is expanded due to increased temperature or reduced pressure.

This section includes de-ratings for:

- Air Inlet Temperature
- Exhaust
- Altitude
- Fuel Temperature

DD Platform engine power is not affected by air inlet restriction, fuel inlet restrictions, fuel temperature, and barometric pressure within the range of normal operational conditions.

19.2 AIR INLET TEMPERATURE

High inlet air temperature to the engine can cause loss of power and heat problems with the cooling system, the lubricating oil and hydraulic oil systems. This may be either due to high ambient temperatures, or because the engine is being used inside an engine compartment which needs more air flow. As ambient air temperatures increase to the physical limit, a reduction in horsepower is expected. High inlet air temperature can also increase the turbocharger compressor outlet temperature and the compressor skin temperature, which should be taken into account when packaging engine peripherals.

19.3 EXHAUST BACK PRESSURE

In general, as exhaust back pressure increases there is a loss of horsepower. With the after treatment devices necessary to meet emissions standards, exhaust back pressure can build as high as 25 kPa.

All information subject to change without notice.
DDC-SVC-MAN-0073 Copyright © 2009 DETROIT DIESEL CORPORATION

https://truckmanualshub.com/

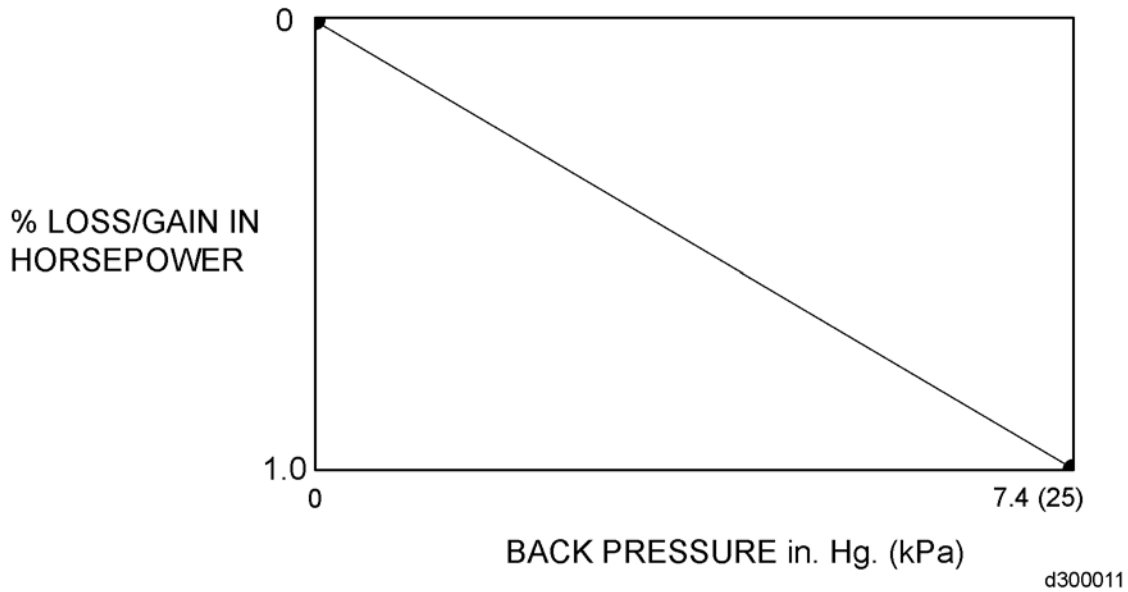

Figure 19-1 The General Relationship of Exhaust Back Pressure and Engine Power

19.4 FUEL TEMPERATURE

The DD Platform engine provides fueling compensation to maintain rated engine power for fuel temperatures up to 90°C (194°F). Above this temperature the engine will de-rate by 10%.

19.5 ALTITUDE

Power loss at altitudes of less than 150 m (500 ft.) above sea level is insignificant. The degree of power loss at higher altitudes is determined by the altitude and the fuel injection specification needed.

The Altitude Performance Curve depicts the effects of altitude on engine power.

 Copyright © 2009 DETROIT DIESEL CORPORATION

https://truckmanualshub.com/

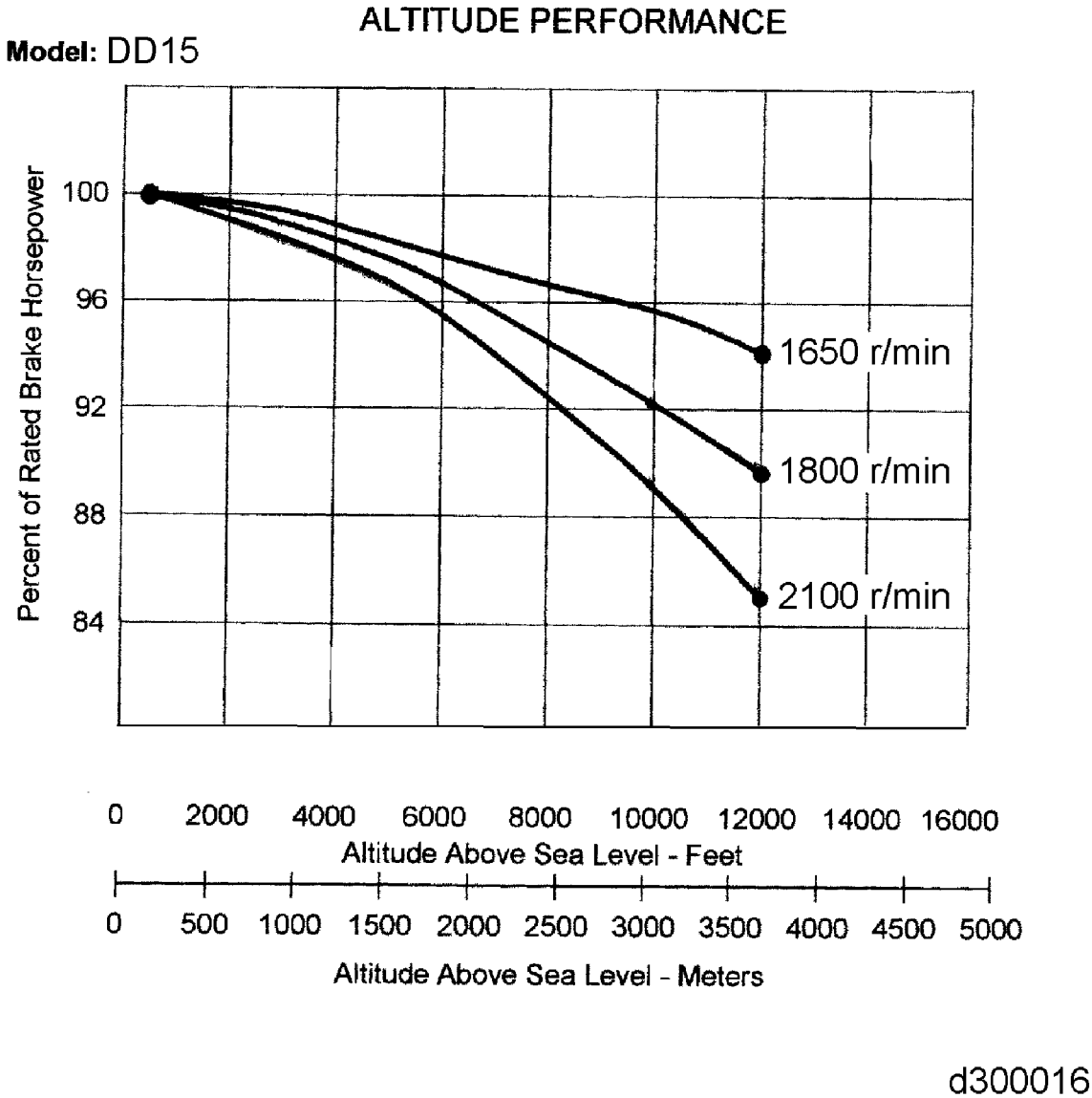

Figure 19-2 The General Effects Of Altitude On Engine Power

All information subject to change without notice.
DDC-SVC-MAN-0073 Copyright © 2009 DETROIT DIESEL CORPORATION

https://truckmanualshub.com/

APPENDIX A: ABBREVIATIONS / ACRONYMS

A/ACC	Air-to-Air Charge Cooling
AC	Alternating Current
A/F	Air Fuel Ratio
ALCC	Advance Liquid Charge Cooling
Amb.	Ambient
API	American Petroleum Institute
Approx.	Approximately
ATB	Air to Boil
ATD	Aftertreatment Device
ATW	Air to Water
AWHP	Available Wheel Horsepower
AWL	Amber Warning Lamp
C	Centigrade
CAC	Charge Air Cooler
CAN	Controller Area Network
CFM	Cubic Feet per Minute
Cool.	Cooling/Coolant
Corr.	Corrected
CPC	Common Powertrain Controller (DDEC VI Two-box system)
Cyl.	Cylinder
DC	Direct Current
DDC	Detroit Diesel Corporation
DDEC	Detroit Diesel Electronic Control
DFP	Dosing Fuel Pressure
DOC	Diesel Oxidation Catalyst
DPF	Diesel Particulate Filter
DVB	Decompression Valve Brake
EDV	Electronic Dosing Valve
EH	Engine Harness
EMA	Engine Manufacturers' Association
EPA	Environmental Protection Agency
EPQ	End Product Questionnaire
EUP	Electronic Unit Pump
F	Fahrenheit
FCV	Fuel Cutoff Valve
FMI	Failure Mode Indicator
FPS	Fuel Pressure Sensor
ga	Gage
Gal/min.	Gallons per Minute
HC	Hydrocarbon

 Copyright © 2009 DETROIT DIESEL CORPORATION

https://truckmanualshub.com/

A/ACC	Air-to-Air Charge Cooling
Hd.	Head
Hg	Mercury
HP	Horsepower
I.D.	Inner Diameter
ILCC	Integrated Liquid Charge Cooling
ITT	Integral Top Tank
JWAC	Jacket Water After Cooled
lb.	Pound
m	Meters
MCM	Motor Control Module
MIL	Malfunction Indicator Lamp
mile/hr.	Miles per Hour
MIV	Mechanical Injection Valve (DDEC VI Two-box system)
MSCR	MCM Software Change Request
MTU	MTU-Friedrichshafen
NA	Naturally Aspirated Engine
OBD	On-board Diagnostics
OEM	Original Equipment Manufacturer
PM	Particulate Matter
Ps	Static Pressure
Rad.	Radiator
R/min.	Revolutions per Minute
RSL	Red Stop Lamp
SCA	Supplemental Coolant Additive
SCCC	Separate Circuit Charge Cooling
SRS	Synchronous Reference Sensor
T	Turbocharged Engine
TA	Turbocharged Aftercooled Engine
TBN	Total Base Number
TI	Turbocharged Intercooled Engine
TRS	Timing Reference Sensor
TT	Tailor Torqued Engine
VIH	Vehicle Interface Harness
WOT	Wide Open Throttle

All information subject to change without notice.
DDC-SVC-MAN-0073 Copyright © 2009 DETROIT DIESEL CORPORATION

https://truckmanualshub.com/

 Copyright © 2009 DETROIT DIESEL CORPORATION

https://truckmanualshub.com/

THIS PAGE INTENTIONALLY LEFT BLANK

All information subject to change without notice.
DDC-SVC-MAN-0073 Copyright © 2009 DETROIT DIESEL CORPORATION

https://truckmanualshub.com/

APPENDIX B: VENDORS

Compatible engine accessories may be obtained from several vendors. This section provides vendors' name, address, and phone number.

HEAT EXCHANGERS

Heat exchangers are available from:

AKG Thermal Systems, Inc.
P.O. Box 189
7315 Oakwood St. Ext.
Mebane N.C. 27302–0189
Phone: (919) 563-4286
Fax: (919) 563-4917
Contact: Heinrich Kuehne
Web: www.akgts.com

Honeywell
3201 Lomita Boulevard
Torrance, CA 90505
Phone: (310) 257-2472
Fax: (310) 517-1173
Contact: William Smith
Contact Email: William.J.Smith@Honeywell.com
Web: www.honeywell.com

API Airtech
91 North Street
Arcace, New York 14009-0068
Phone: (716) 496-7553
Contact: Fred Roy
Web: www.apiheattransfer.com

L & M Radiator Inc.
1414 East 37th Street
Hibbing, MN 55746
Phone: (218) 263-8993
Fax: (218) 263-8234
Contact: Ralph Barker
Web: www.mesabi.com

Modine Manufacturing Co.
1500 Dekoven Ave.
Racine, WI 53403
Phone: (262) 636-1200
Fax: (262) 636-1424
Contact: Ralph Zick
Web: www.modine.com

General ThermoDynamics
4700 Ironwood Drive
Franklin, WI 53403
Phone: (414) 761-4500
Fax: (414) 761-4510
Contact: Robert Brandmeier
Web: www.thermasys.com

Young Touchstone A Wabtec Co.
Dave A. Larsen
2825 Four Mile Road
Racine, WI 53404
Phone: (262) 639-1010
Fax: (262) 639-1013
Contact: Jeff Siclavan
Web: www.wabtec.com

Transpro, Inc.
100 Gando Drive
New Haven, CT 06513
Phone: (203) 562-5121
Fax: (203) 789-8760
Contact: Edgar Hetrich
Web: www.transpro.com

 Copyright © 2009 DETROIT DIESEL CORPORATION

https://truckmanualshub.com/

AIR STARTERS

Air starters are available from:

Ingersoll-Rand Company
Engine Starting Systems

P.O. Box 8000

Southern Pines, NC 28387

Phone: (888) START AIR

POW-R-QUIK

5518 Mitchelldale

Houston, TX 77092

(713) 683–9546

TDI Turbostart
Tech Development Inc.

6800 Poe Avenue

P.O. Box 14557

Dayton, Ohio 45414–4557

(513) 898–9600

FAN CLUTCHES

Fan clutches are available from:

Horton, Inc.

2565 Walnut Street

Roseville, MN 55113

Phone: (651) 361–6400

Toll free: (800) 621–1320

Fax: (651) 361–6801

E-mail: info@hortoninc.com

www.hortoninc.com

AIR COMPRESSOR

Air compressors are available from:

Bendix Commercial Vehicle Systems

901 Cleveland Street

Elyrua, Ohio 44035

Phone 1–800–AIRBRAKE

Phone: (440) 329–9000

Fax; (440) 329–9557

E-mail: Support@Bendix.com

www.bendix.com

All information subject to change without notice.
DDC-SVC-MAN-0073 Copyright © 2009 DETROIT DIESEL CORPORATION

https://truckmanualshub.com/

GLOSSARY

Aeration	Entrainment (progressive or otherwise) of air or combustion gases in the engine coolant.
Air Bind	A condition where a pocket of air has been trapped in the water pump causing it to lose its prime and ability to pump coolant.
Air Cleaner	A device that prevents airborne particles from entering air-breathing machinery. The device can be porous paper, wire mesh filter or oil-bath cleaner.
Afterboil	Boiling of the coolant after engine shutdown due to residual heat in the engine.
Afterboil Volume	Quantity of coolant discharged from the pressure relief overflow tube following engine shutdown.
Aftertreatment Device (ATD)	A unit, such as a diesel particulate filter or catalytic converter, which removes pollutants from the engine exhaust gasses after the gasses leave the catalyst combustion chamber.
Air Handling	The cooling system's ability to purge air when injected at a given rate determined by the engine manufacturer and meeting specified criteria.
Air Recirculation	A condition either occurring around the tips of the fan blades or where discharge air from a radiator core is returned to the front of the core. Either condition hinders cooling capability.
Air to Boil Temperature(ATB)	The ambient temperature at which engine coolant out temperature reaches 212°F.
Air to Water Temperature(ATW)	The differential between engine coolant out and ambient temperatures.
Ambient Temperature	The environmental air temperature in which the unit operates.
Ash	The unburnable solid remains of a fire or oxidation in diesel soot combustion. This is primarily composed of Calcium, Zinc, Sulfur, and Phosphorus (usually white to light gray in color).

 Copyright © 2009 DETROIT DIESEL CORPORATION

https://truckmanualshub.com/

Automatic (Active) Regeneration A controlled action by the engine system to elevate the exhaust temperature to the point where soot can be directly oxidized with O_2.

Bleed Line(s) Line(s) strategically placed on the cooling system to vent air/gases from the system both during fill and engine running mode. They are also know as deaeration or vents lines.

Blocked Open Thermostat Mechanically blocked open to required position. Used for cooling tests only.

Blower Fan A fan that pushes the air through the radiator core.

Bottom Tank Temperature Refers to the down stream radiator tank temperature which is usually the lowest temperature.

Catalyst Any substance which alters the rate of a chemical reaction, but is not altered or affected by reaction.

Cavitation A localized event where a vapor pressure/temperature phenomenon of the cooling liquid allows partial vaporization of the coolant. These cavities of vapor are carried downstream to a region of higher pressure, causing them to collapse. Cavitation reduces coolant flow and increases pump wear.

Cetane Number A relative measure of the time delay between the beginning of fuel injection and the start of combustion.

Common Powertrain Controller (CPC) The CPC will be cab mounted. Provides a direct connection to cab switches, lamps and data links. The CPC connects to the engine controller via a CAN. Monitors and diagnoses all in cab I/O sensors, switches, actuators. Handles vehicle functions such as cruse control, vehicle speed limiting, engine speed control (PTO), progressive shift, and torque limiting.

Controller Area Network (CAN) The CAN is a multicast shared serial bus standard for connecting the Motor Control Units (MCM).

Coolant A liquid medium used to transport heat from one area to another.

Cooling Index See Air to Water (ATW) or Air to Boil (ATB) definition.

All information subject to change without notice.
DDC-SVC-MAN-0073 Copyright © 2009 DETROIT DIESEL CORPORATION

https://truckmanualshub.com/

Cooling Potential — The temperature difference between air entering the radiator core and the average temperature of the coolant in the radiator core.

Cooling Capability — The ambient in which a cooling system can perform without exceeding maximum engine coolant out temperature approved by the engine manufacturer.

Coolant Flow Rate — The rate of coolant flow through the cooling system and/or radiator.

Coolant Recovery Bottle — An add on coolant reserve tank that is used when radiator top tank and/or remote deaeration tank can not be sized large enough to meet cooling system drawdown requirements. Also known as an overflow bottle.

Cooling System — A group of inter-related components used in the transfer of heat.

Cooling System Air Restriction — The pressure drop across the radiator core and other up and down stream components that offer resistance to the air flow.

Cooling System Capacity (Volume) — The amount of coolant to completely fill the cooling system to its designated cold full level.

DDEC VI — The sixth generation of Detroit Diesel Electronic Controls, are an advanced technology electronic fuel injection and engine operation control system. Along with the engine related sensors and the engine-resident control unit Motor Control Module (MCM) which controls the functionality of the engine. The DDEC VI system also has a cab-mounted control unit for vehicle engine management, the Common Powertrain Controller (CPC). The connection to the vehicle is made via a CAN interface which digitally transmits the nominal values of torque, engine speed specifications, and the actual values of engine speed, oil pressure etc.

Deaeration — The cooling systems ability to purge entrained gases from the coolant.

Deaeration Capability — The running time required to expel all the entrained gases from the cooling system after an initial fill.

Deaeration Tank — A tank used to separate air/gases from the circulating coolant and return unaerated coolant to the system. Also

 Copyright © 2009 DETROIT DIESEL CORPORATION

https://truckmanualshub.com/

used for filling, expansion of the coolant, reserve capacity, etc. Sometimes called a surge tank or top tank.

Deaeration Volume — The volume of space designed into the deaeration tank and located above the expansion volume for collecting the entrained gases as it is expelled into the tank.

Derate — Reducing engine torque from normal levels.

Diesel Oxiation Catalyst — A catalyst that will oxidize CO to CO_2, HC to CO_2 and H_2O and NO to NO_2.

Diesel Particulate Filter (DPF) — A diesel particulate filter (DPF) is a device installed on a diesel engine system which traps particulate matter (PM) from the exhaust gas flow. The filter forces the exhaust gasses through porous cell walls of a core comprised of ceramic material.

Drawdown — The quantity of coolant which can be removed from a full cooling system before aeration occurs.

Engine Coolant Out Temperature — Usually the hottest coolant and measured at the thermostat housing. Also called radiator inlet or top tank temperature.

Expansion Volume — The volume of space designed into the deaeration tank to permit the coolant to expand as it is heated without being lost to the environment.

Fan Air Flow — The rate of air flow that a fan can deliver at a given speed and static pressure.

Fill Line — Used to rout coolant from the deaeration tank to the inlet of the water pump. It is also called a shunt or make up line.

Fill Rate — The coolant flow rate at which an empty cooling system can be completely filled without overflowing.

Heat Dissipation — The amount of heat energy (Btu) that a heat transfer component can dissipate to the environment at specified conditions.

Motor Control Module (MCM) — The MCM is designed to support the high voltage, multi-pulse, duel solenoid fuel systems. The MCM monitors all engine sensors, determines injection fuelling (position and duration), performs low speed and high speed governing, controls after-treatment systems,

All information subject to change without notice.
DDC-SVC-MAN-0073 Copyright © 2009 DETROIT DIESEL CORPORATION

https://truckmanualshub.com/

controls the starter, engine brakes, fan and diagnostics including emissions related diagnostics.

Overcooling A condition where the coolant temperature will not approach the start to open temperature value of the thermostat under normal engine operation.

Overheating A condition where the coolant temperature exceeds allowable limits.

Oxidation A chemical reaction which changes an element from a lower to higher oxidation state, usually created by a combination with oxygen atoms.

Particulate Matter (PM) Particles that are formed when diesel engines have an incomplete fuel combustion. These particles are composed of sulfate particles, elemental carbon and Soluble Organic Fractions (SOF) which includes heavy hydrocarbons.

Passive Regeneration Oxidation of soot with NO_2.

Radiator Shutters A device placed either in front of or behind the radiator to block air flow when not required.

Ram Air Flow Air flow through the radiator core due to the motion of the vehicle or wind.

Ramp Down Similar to a derate, often in conjunction with an impending engine shut down.

Reserve Volume A volume designed into the deaeration tank to provide a surplus of coolant to offset losses that might occur.

Soot A dark powdery deposit of unburned fuel residues, usually composed mainly of amorphous carbon, that accumulates in exhaust systems and other surfaces exposed to smoke especially from the combustion of carbon-rich organic fuels in the lack of sufficient oxygen.

Stabilization A condition where under a controlled operating environment the coolant, oil, air and exhaust temperatures will not change regardless of the length of time the unit is run.

 Copyright © 2009 DETROIT DIESEL CORPORATION

https://truckmanualshub.com/

Standpipe(s) Deaeration tube(s) located in the integral radiator deaeration tank to vent the radiator core of gases. Also been called "J" tubes.

Substrate Core material used in diesel particulate filters that is made of ceramic, silicon carbide, or sintered metal.

Suction Fan A fan that pulls air through the core.

Surge Tank See "Deaeration Tank".

Total Base Number Measures an oil's alkalinity and ability to neutralize acid using a laboratory test (ASTM D 2896 or D 4739). TBN is important to deposit control in four-stroke, four cycle diesel engines and to neutralize the effects of high sulfur fuel in all diesel engines.

Temperature Stability or Drift The ability of the cooling system to maintain coolant temperature at light loads and/or engine speed or long vehicle drift (coasting). An important system characteristic for good heater operation during cold ambients.

Top Tank See "Deaeration Tank"

Top Tank Temperature See "Engine Coolant Out Temperature".

Water Pump Inlet Restriction The pressure (suction) at the inlet to the water pump (pressure cap removed) which represent up-stream restriction.

All information subject to change without notice.
DDC-SVC-MAN-0073 Copyright © 2009 DETROIT DIESEL CORPORATION