https://truckmanualshub.com/

A ATAŞMANLAR ATTACHMENTS

A1 YÜKLEYiCi ATAŞMANLAR LOADER ATTACHMENTS

A2 KAZICI ATAŞMANLAR BACKHOE ATTACHMENTS

https://truckmanualshub.com/

KEPÇE, AÇILIR
SHOVEL, CLAM

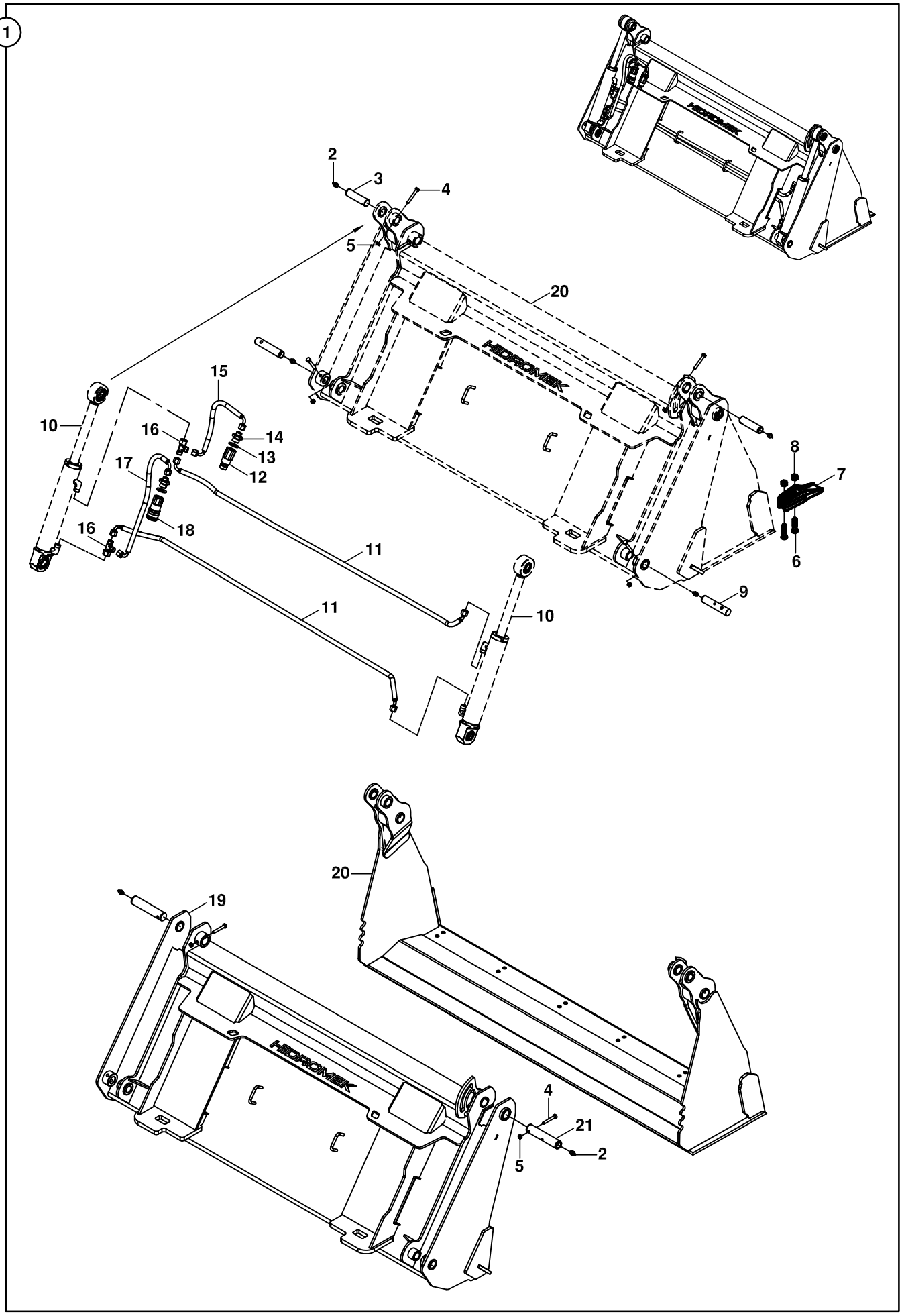

https://truckmanualshub.com/

KEPÇE, AÇILIR
SHOVEL, CLAM

NO NO	PARÇA NO PART NO	TANIM	DESCRIPTION	ADET QTY	S.K. S.C.	SERİ NO SERIAL NO	D.T. ICA	NOT NOTE
1	M111100000	AÇILR KEPÇE KOMPLE	SHOVEL, CLAM, ASSY.	1				
2	N08/1210020	GRESÖRLÜK	GREASSE NIPPLE	6				
3	801/04310	PİM	PIN	2				
4	N01/0380434	CİVATA M8x55	BOLT M8X55	6				
5	N02/5900062	SOMUN M8	NUT M8	6				
6	N01/0232882	CİVATA M12x45	BOLT M12x45	12				
7	M111104100	TIRNAK	TOOTH	6				
8	N02/8320300	SOMUN	NUT	12				
9	801/04305	PİM	PIN	2				
10		SİLİNDİR	RAM	2				☞ E3-3-1
11	651/1128153	HORTUM	HOSE	2				
12	N16/9900091	ÇABUK SÖK TAK	QUICK COUPLER	1				
13	N03/0000015	O-RİNGLİ PUL	WASHER	2				
14	806/24820	NİPEL	ADAPTER	2				
15	651/1124042	HORTUM	HOSE	1				
16	N16/3790038	T- RAKOR	TEE	2				
17	651/1124050	HORTUM	HOSE	1				
18	N16/9900092	ÇABUK SÖK TAK	QUICK COUPLER	1				
19	M111100101	SABİT KANAT	BLADE, BACK	1				
20	M111100201	HAREKETLİ KANAT	JAW, CLAMSHOVEL	1				
21	801/04300	PİM	PIN	2				

https://truckmanualshub.com/

KEPÇE, AÇILIR
SHOVEL, CLAM

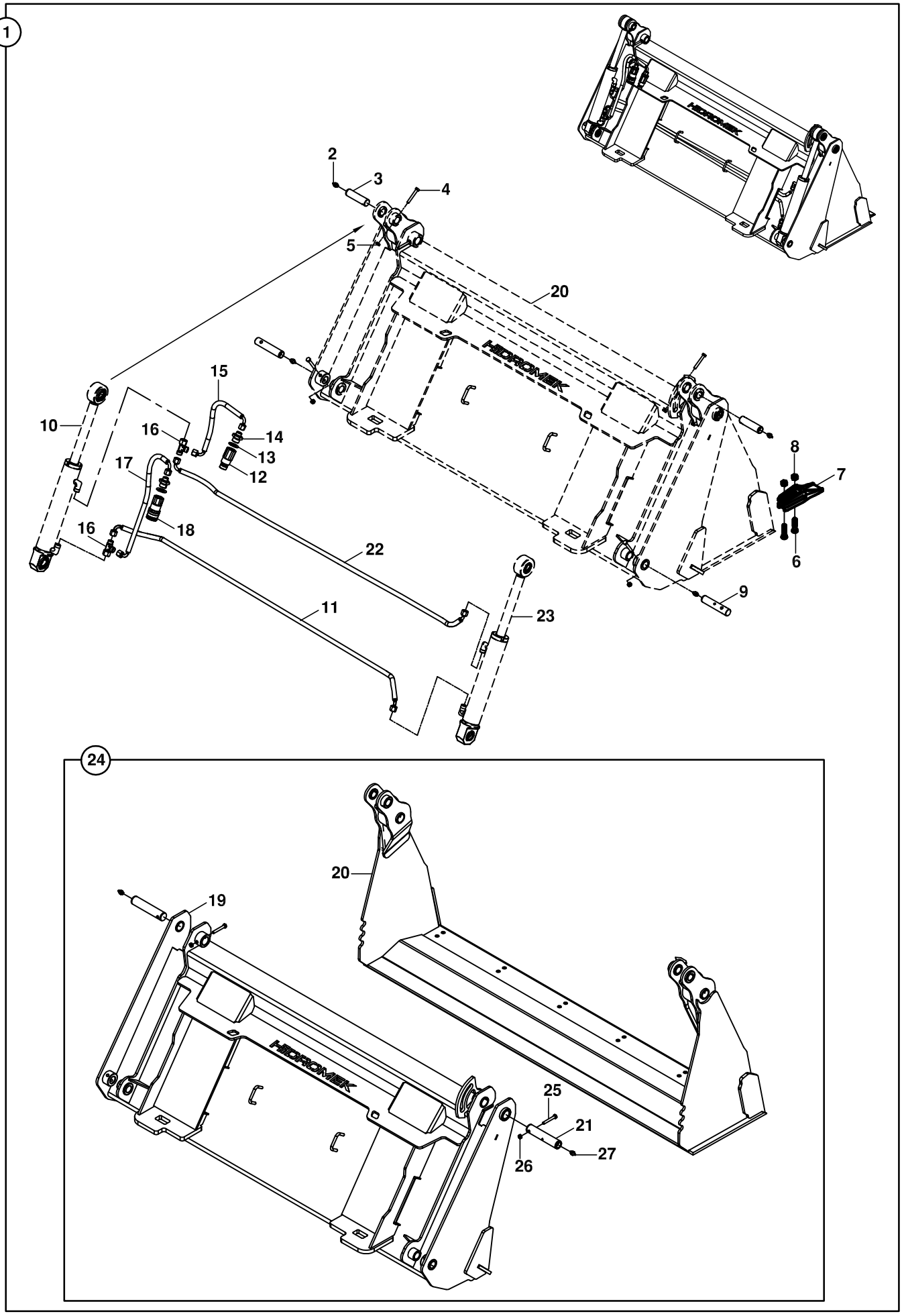

https://truckmanualshub.com/

KEPÇE, AÇILIR
SHOVEL, CLAM

NO NO	PARÇA NO PART NO	TANIM	DESCRIPTION	ADET QTY	S.K. S.C.	SERİ NO SERIAL NO	D.T. ICA	NOT NOTE
1	M111100000	AÇILIR KEPÇE KOMPLE	SHOVEL, CLAM, ASSY.	1				
2	N08/1210020	GRESÖRLÜK	GREASSE NIPPLE	6				
3	801/04311	PİM	PIN	2				
4	N01/0380470	CİVATA M8x70	BOLT M8x70	4				
5	N02/5900062	SOMUN M8	NUT M8	4				
6	N01/0232882	CİVATA M12x45	BOLT M12x45	12				
7	M111104100	TIRNAK	TOOTH	6				
8	N02/8320192	SOMUN	NUT	12				
9	801/04306	PİM	PIN	2				
10		SİLİNDİR	RAM	2				☞ E3-3-1
11	651/1122145	HORTUM	HOSE	1				
12	N16/9900091	ÇABUK SÖK TAK	QUICK COUPLER	1				
13	N03/0000015	O-RİNGLİ PUL	WASHER	2				
14	806/24820	NİPEL	ADAPTER	2				
15	651/11P4040	HORTUM	HOSE	1				
16	N16/3790038	T- RAKOR	TEE	2				
17	651/11P4050	HORTUM	HOSE	1				
18	N16/9900092	ÇABUK SÖK TAK	QUICK COUPLER	1				
19	M11/1100102	SABİT KANAT	BLADE, BACK	1				
20	M11/1100202	HAREKETLİ KANAT	JAW, CLAMSHOVEL	1				
21	801/04301	PİM	PIN	2				
22	651/1128150	HORTUM	HOSE	1				
23		SİLİNDİR	RAM	2				☞ E3-3-2
24	M111104300	AÇILIR KEPÇE	SHOVEL, CLAM, ASSY.	1				
25	N01/0380470	CİVATA M8x70	BOLT M8x70	2				
26	N02/5900062	SOMUN M8	NUT M8	2				
27	N08/1210020	GRESÖRLÜK	GREASSE NIPPLE	2				

https://trucksmanualshub.com/

ÇABUK SÖK TAK
QUICK COUPLER

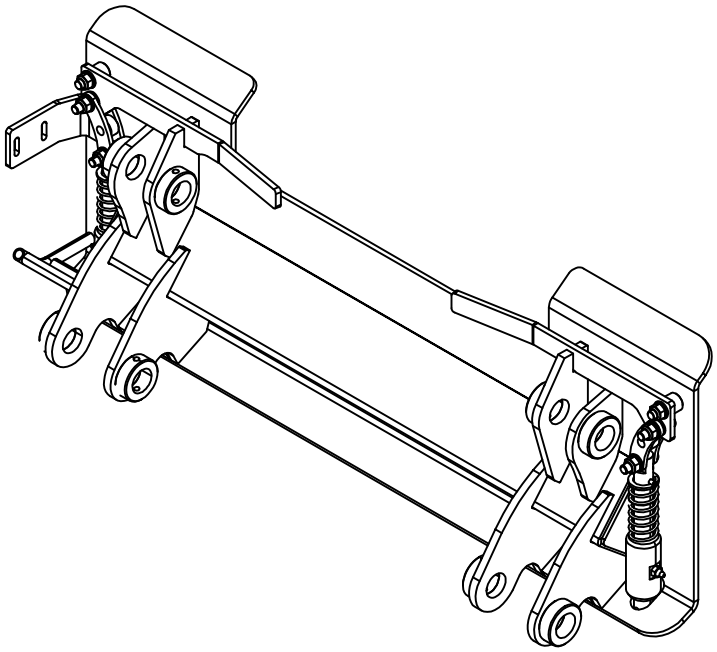

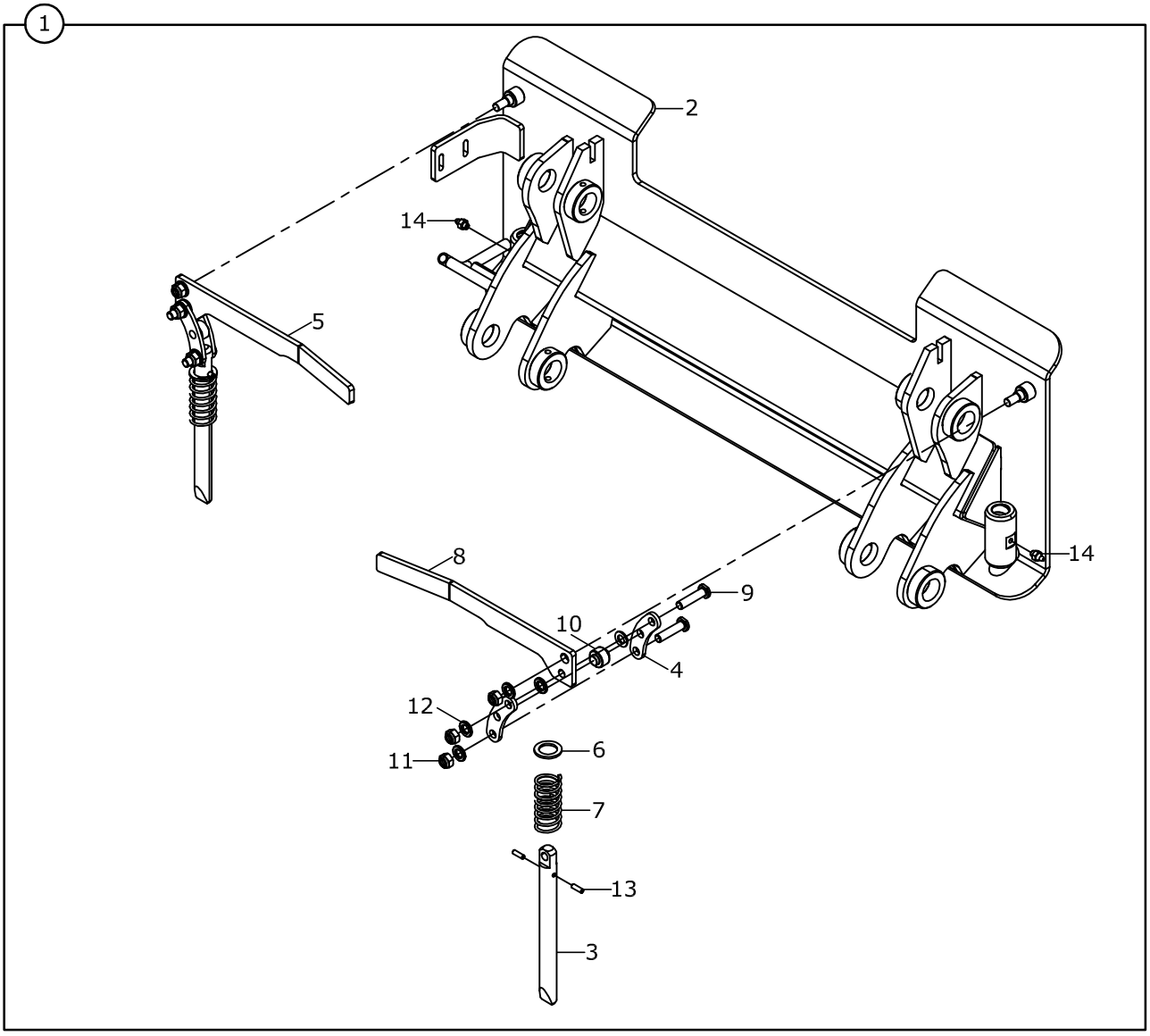

https://truckmanualshub.com/

ÇABUK SÖK TAK
QUICK COUPLER

NO NO	PARÇA NO PART NO	TANIM	DESCRIPTION	ADET QTY	S.K. S.C.	SERİ NO SERIAL NO	D.T. ICA	NOT NOTE
	* M111300100							
1	M111302700	QUICK COUPLER KOMPLE	QUICK COUPLER ASSEMB.	1				
2	M111302800	QUICK COUPLER	QUICK COUPLER	1				
3	M111304400	KİLİT PİMİ	PIN, LOCKING	2				
4	M111304500	KİLİT KOLU	LOCKING, HANDLE	4				
5	M111304600	KOL, KİLİT AÇMA, SOL	ARM, LOCKING, LEFT	1				
6	M111304700	YAY SABİTLEME	WASHER	2				
7	M111304800	YAY	SPRING	2				
8	M111304900	KOL, KİLİT AÇMA, SAĞ	ARM, LOCKING, RIGHT	1				
9	M111305600	MENTEŞE PİMİ	PIN	4				
10	M111305700	PİM	PIN	2				
11	N02//5900122	SOMUN M12	NUT M12	6				
12	N03/0810001	SERT PUL M12	WASHER M12	10				
13	N04/3120650	VİDA M6x20	SCREW M6x20	4				
14	N08/1210020	GRESÖRLÜK	GREASE NIPPLE	2				

https://trucksmanualshub.com/

ÇABUK SÖK TAK
QUICK COUPLER

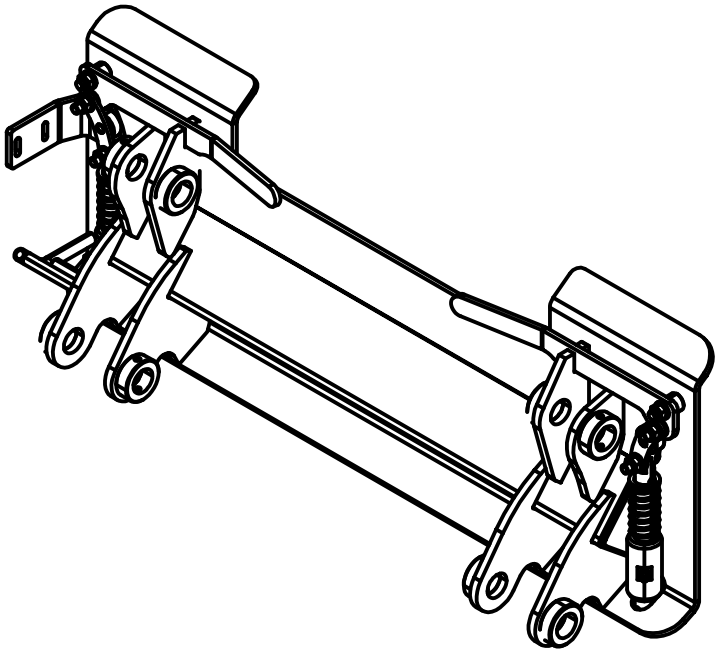

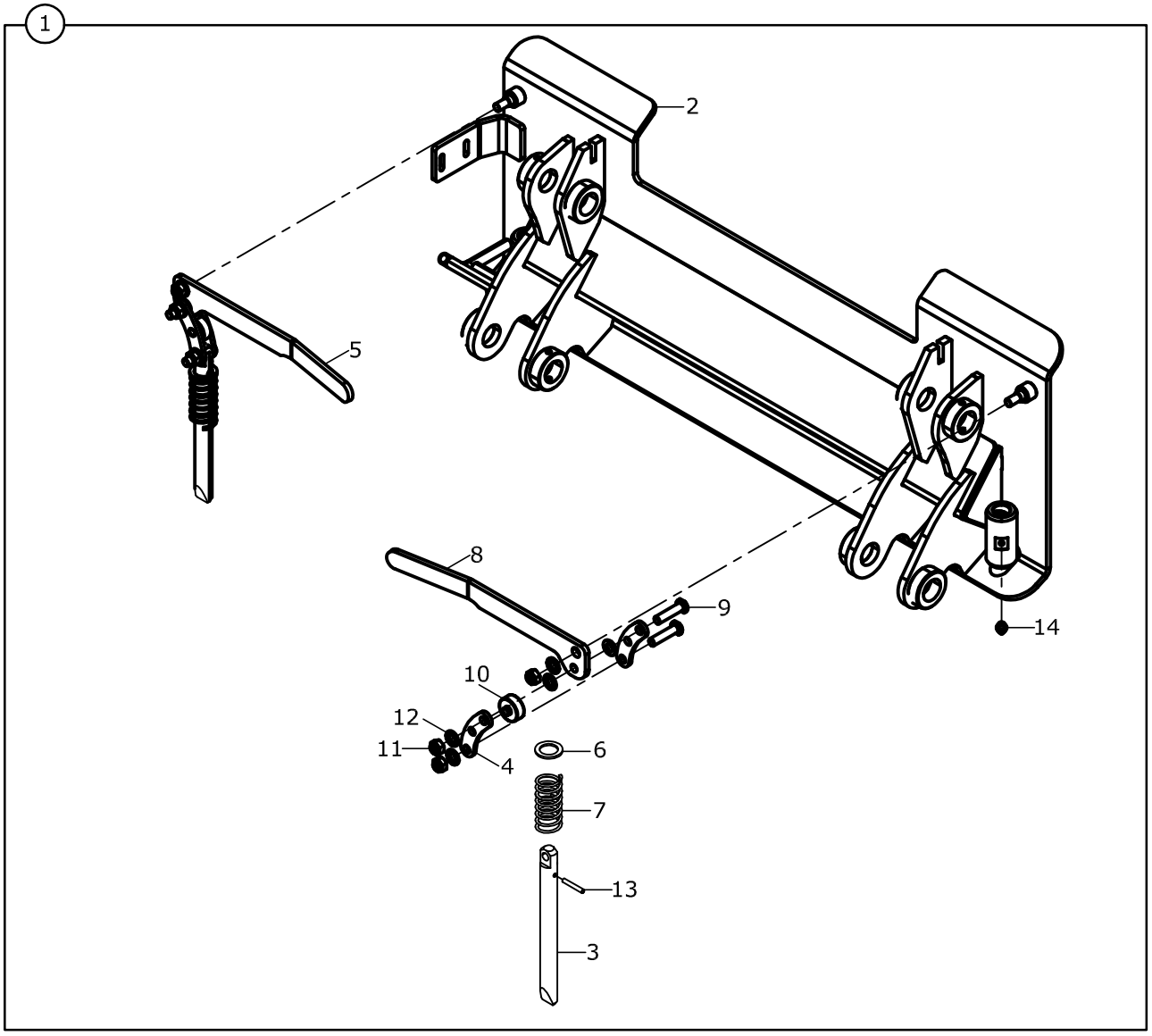

https://truckmanualshub.com/

ÇABUK SÖK TAK
QUICK COUPLER

NO NO	PARÇA NO PART NO	TANIM	DESCRIPTION	ADET QTY	S.K. S.C.	SERİ NO SERIAL NO	D.T. ICA	NOT NOTE
	* M111300100							
1	M111302700	QUICK COUPLER KOMPLE	QUICK COUPLER ASSEMB.	1				
2	M111302800	QUICK COUPLER	QUICK COUPLER	1				
3	M111304400	KİLİT PİMİ	PIN, LOCKING	2				
	M111304401	KİLİT PİMİ	PIN, LOCKING	2			Y	
4	M111304500	KİLİT KOLU	LOCKING, HANDLE	4				
	M111304501	KİLİT KOLU	LOCKING, HANDLE	4			Y	
5	M111304600	KOL, KİLİT AÇMA, SOL	ARM, LOCKING, LEFT	1				
	M111304601	KOL, KİLİT AÇMA, SOL	ARM, LOCKING, LEFT	1			Y	
6	M111304700	YAY SABİTLEME	WASHER	2				
7	M111304800	YAY	SPRING	2				
8	M111304900	KOL, KİLİT AÇMA, SAĞ	ARM, LOCKING, RIGHT	1				
	M111304901	KOL, KİLİT AÇMA, SAĞ	ARM, LOCKING, RIGHT	1			Y	
9	M111305600	MENTEŞE PİMİ	PIN	4				
10	M111305700	PİM	PIN	2				
	M111305701	PİM	PIN	2			Y	
11	N02//5900122	SOMUN M12	NUT M12	6				
12	N03/0810001	SERT PUL M12	WASHER M12	10				
13	N15/6451628	SIKMA KOVANI	PIN EXPANSION	2			Y	
14	N08/1210020	GRESÖRLÜK	GREASE NIPPLE	2				

https://truckmanualshub.com/

A ATAŞMANLAR ATTACHMENTS

A1 YÜKLEYİCİ ATAŞMANLAR LOADER ATTACHMENTS

A2 KAZICI ATAŞMANLAR BACKHOE ATTACHMENTS

https://truckmanualshub.com/

KEPÇE, KAZICI
BUCKET, BACKHOE

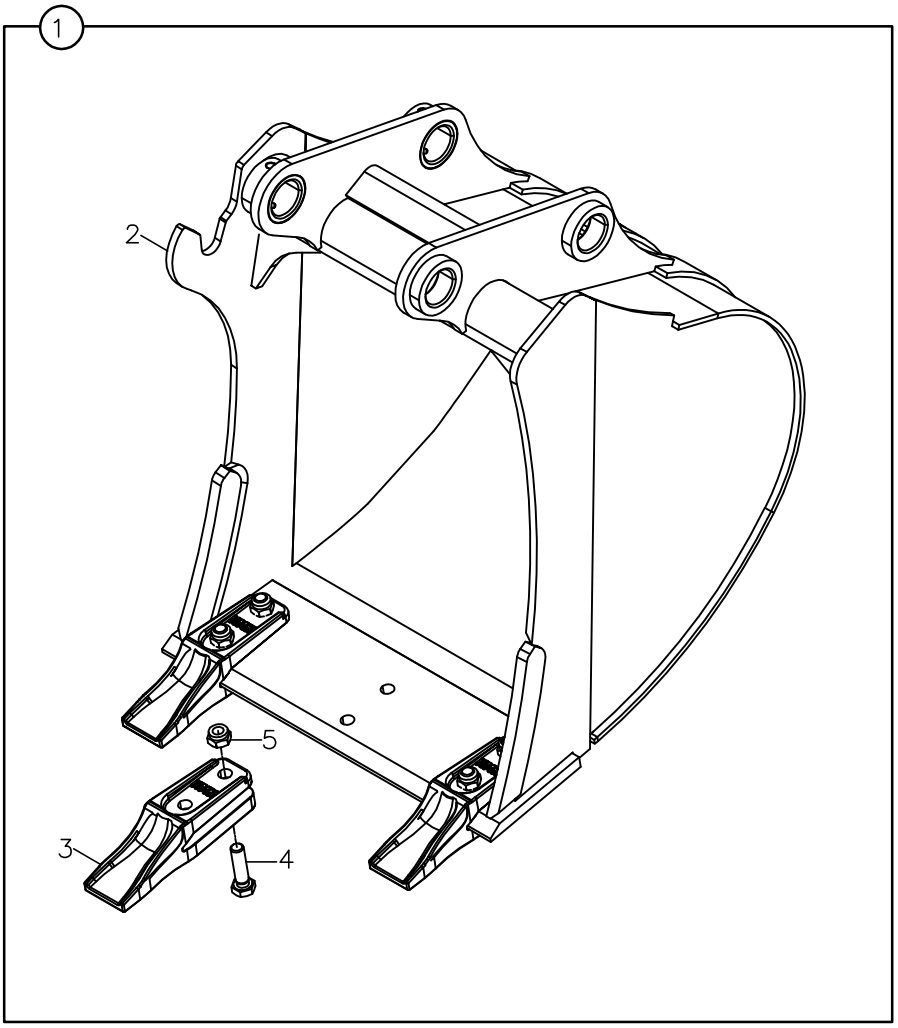

https://truckmanualshub.com/

KEPÇE, KAZICI
BUCKET, BACKHOE

NO NO	PARÇA NO PART NO	TANIM	DESCRIPTION	ADET QTY	S.K. S.C.	SERİ NO SERIAL NO	D.T. ICA	NOT NOTE
1A	M115300300	KEPÇE (420mm), KOMPLE	BUCKET (420mm), ASSY	1				
1B	M115300100	KEPÇE (320mm), KOMPLE	BUCKET (320mm), ASSY	1	OP			
2A	M115300400	KEPÇE (420mm)	BUCKET (420mm)	1				
2B	M115300200	KEPÇE (320mm)	BUCKET (320mm)	1	OP			
3	M111104100	TIRNAK	TOOHT, FOR	3				
4	N01/0232882	CİVATA M12x45	BOLT M12x45	6				
5	N02/5910122	SOMUN M12	NUT M12	6				

https://truckmanualshub.com/

B GÖVDE BODY PARTS

B1 GÖVDE MONTAJLARI BODY PARTS MOUNTINGS

B2 KABİN OPERATOR CAB

B3 YÜKLEYİCİ LOADER

B4 KAZICI BACKHOE

https://truckmanualshub.com/

?AS?
CHASSIS

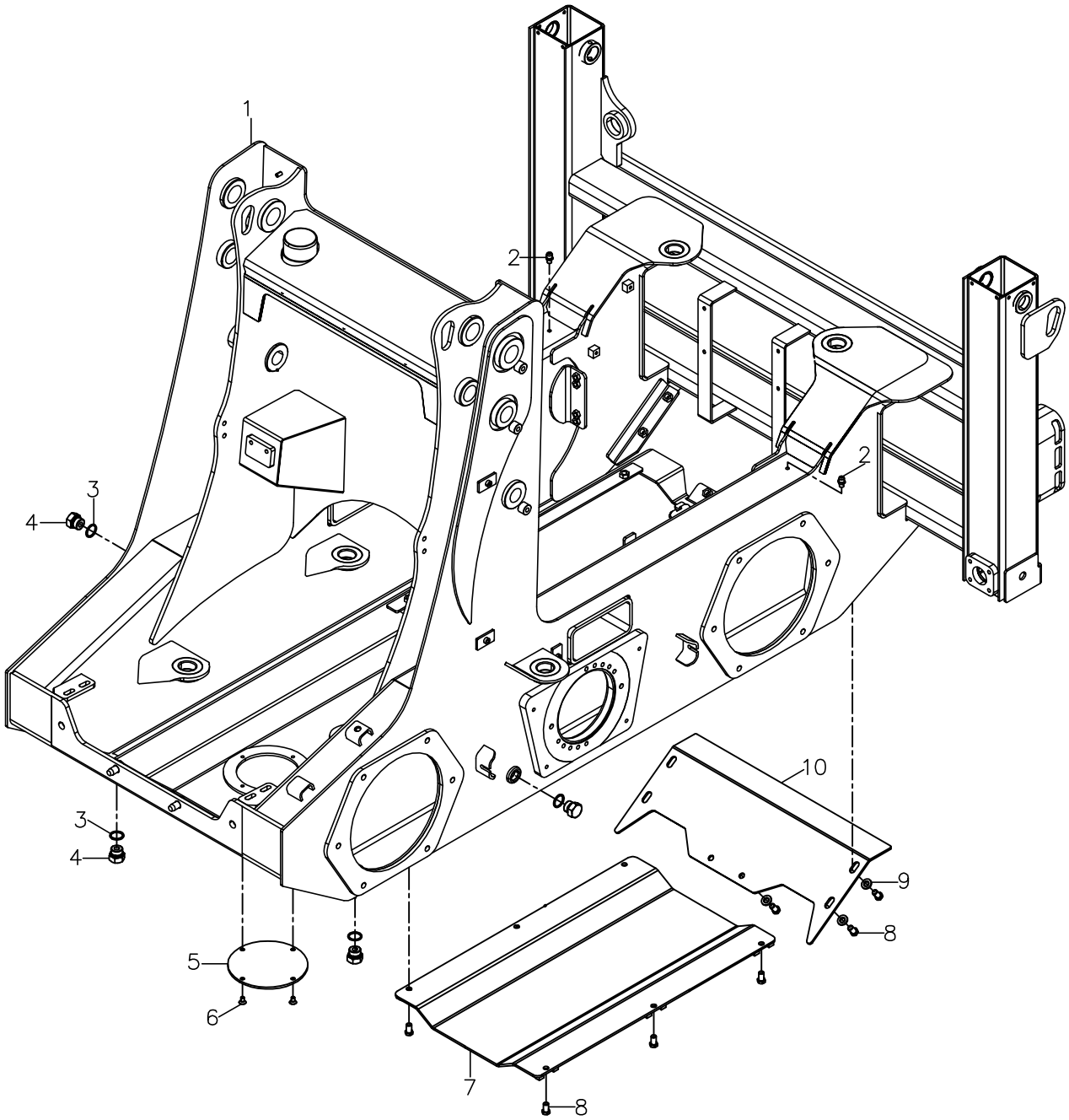

https://truckmanualshub.com/

ŞASİ
CHASSIS

NO NO	PARÇA NO PART NO	TANIM	DESCRIPTION	ADET QTY	S.K. S.C.	SERİ NO SERIAL NO	D.T. ICA	NOT NOTE
	* M114100100							
1	M114100200	ŞASİ	CHASSIS	1				
2	F06/13852	HAVALANDIRMA TAPASI	PLUG	2				
3	N03/0226331	PUL	WASHER	4				
4	814/03010	TAPA	PLUG	4				
5	M114110600	MOTOR YAĞI BOŞALTMA DELİK KAPAĞI	COVER	1				
6	N04/4320482	VİDA M8x14	SCREW M8x14	4				
7	M114110700	MUDAHALE KAPAĞI	COVER	1				
8	N01/0232798	CİVATA M12x20	BOLT M12x20	12				
9	N03/0810001	PUL	WASHER	6				
10	M114111000	ŞASİ ARKA KAPAMA SACI	SHEET	1				

https://truckmanualshub.com/

KAPUT-PANEL- PANJUR- TAMPON ?AS? BA?LANTILARI
BONNET- NOSE GUARD- BUMPER- FRONT GRILLE- CHASSIS MOUN.

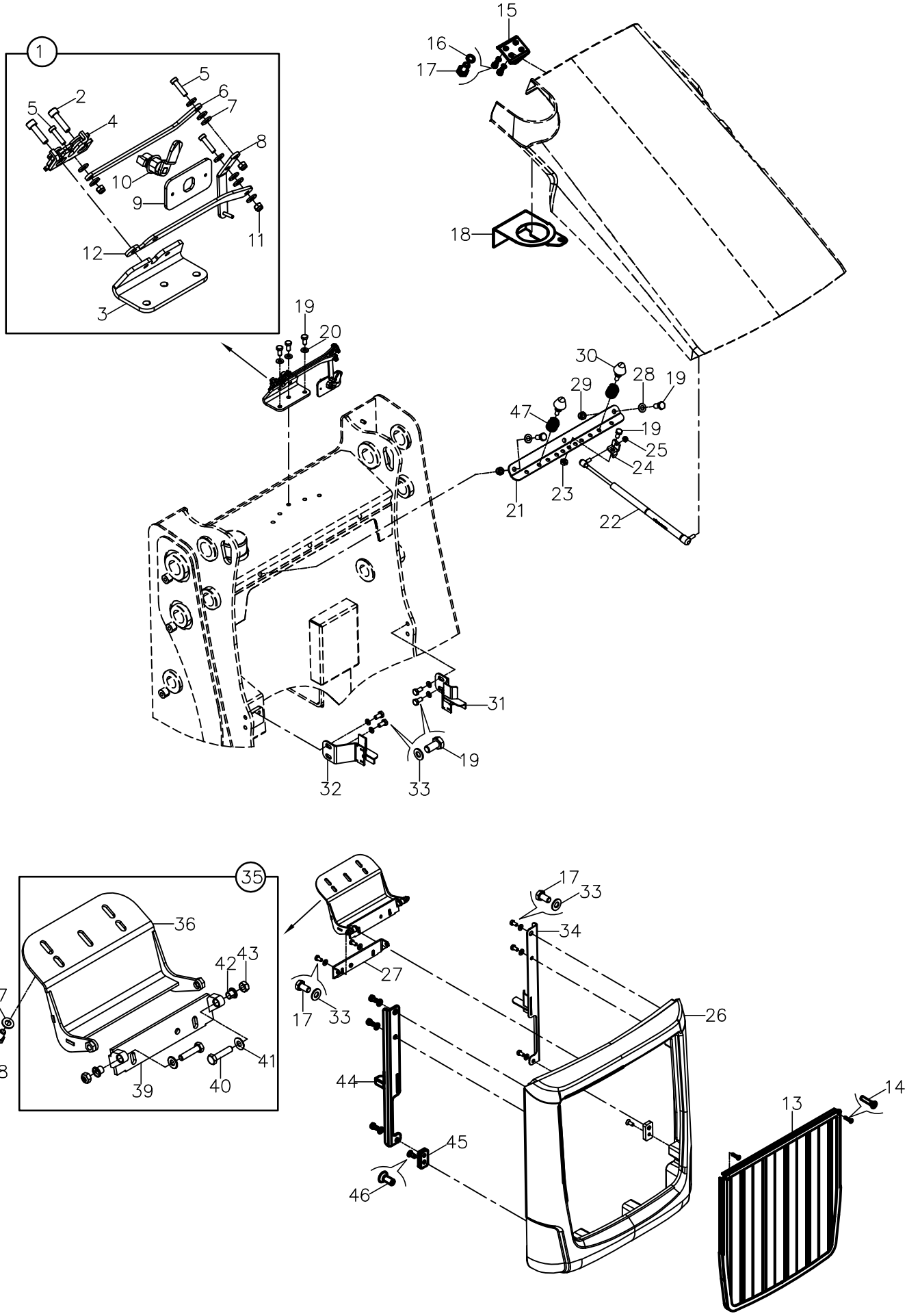

https://truckmanualshub.com/

KAPUT- MOTOR YAN KAPAĞI- PANEL- PANJUR- TAMPON- ŞASİ BAĞLANTILARI
BONNET- ENGINE PANEL- NOSE GUARD- BUMPER- FRONT GRILLE CHASSIS MOUN.

NO NO	PARÇA NO PART NO	TANIM	DESCRIPTION	ADET QTY	S.K. S.C.	SERİ NO SERIAL NO	D.T. ICA	NOT NOTE
	* M114200100							
1	M114200300	KAPUT KİLİT KOMPL.	BONNET LOCKING ASSY.	1				
2	N01/5890494	CİVATA M8x30	BOLT M8x30	2				
3	M114200500	KİLİT SACI	PLATE, LOCKING	1				
4	F99/60260	KİLİT	LOCKING	1				
5	N01/5890326	CİVATA M6x25	BOLT M6x25	3				
6	M114200600	KİLİT HAREKET SACI	LOCK MOVEMENT, LING	1				
7	M114200900	PUL	WASHER	9				
8	M114200800	KİLİT SACI	PLATE, LOCKING	1				
9	M114200700	BUTON YATAĞI SACI	LOCK ATTACHMENT, LING	1				
10	F99/60265	KİLİT, KELEBEK	LOCKING	1				
11	N02/5910050	SOMUN M6	NUT M6	3				
12	M114200400	KİLİT BAĞLANTI SACI	LOCKING MOUNTING	1				
13	M114203900	ÖN PANJUR	GRILLE, FRONT	1				
14	N04/4330266	VİDA M5x25	SCREW M5x25	2				
15	M114202800	KİLİT KARŞILIĞI	LOCKING PLATE	1				
16	N03/0020011	PUL M8	WASHER M8	4				
17	N01/0232078	CİVATA M8x16	BOLT M8x16	12				
18	M114201900	EGSOZ KORUYUCU SACI	EXHAUST, VENTURI BRACKET	1				
19	N01/0232438	CİVATA M10x20	BOLT M10x20	9				
20	N02/5910086	PUL M10	WASHER M10	3				
21	M114201800	BAĞLANTI SACI	MOUNTING PLATE	1				
22	M114203100	AMORTİSÖR	DAMPER	1				
23	N02/5910086	SOMUN M10	NUT M10	1				
24	M114202100	BAĞLANTI SACI	MOUNTING PLATE	1				
25	N02/5910062	SOMUN M8	WASHER M8	1				
26	M114200200	ÖN PANEL	NOSE GUARD	1				
27	M114202300	MENTEŞE BAGL. SACI	HINGE MOUNTING PLATE	1				
28	N03/0020018	PUL M10	WASHER M10	3				
29	N02/5910086	SOMUN M10	NUT M10	3				
30	810/40041	STOPER	STOPER	2				
31	M114203500	KAPAK KİLİT KARŞILIĞI, SOL	COVER LOCKING PLATE, LEFT	1				
32	M114203300	KAPAK KİLİT KARŞILIĞI, SAĞ	COVER LOCKING PLATE, RIGHT	1				
33	N03/0100017	PUL M8	WASHER M8	12				
34	M114201000	KAPUT BAGL. BRAKETİ, SOL	BONNET MOUNTING BRACKET, LEFT	1				
35	M114202200	KAPUT MENTEŞE KOMPL.	BONNET HINGE ASSY.	1				
36	M114202400	MENTEŞE BRAKETİ	HINGE BRACKET	1				
37	N03/0100017	PUL M8	WASHER M8	3				
38	N01/0232078	CİVATA M8x16	BOLT M8x16	3				
39	M114203700	MENTEŞE YATAK SACI	HINGE PLATE	1				
40	N01/0380374	CİVATA M8x35	BOLT M8x16	2				
41	N03/0108017	PUL M8	WASHER M8	2				
42	F99/14899	BURÇ	BUSHING	2				
43	N02/5910062	SOMUN M8	NUT M8	2				
44	M114201200	KAPUT BAGL. BRAKETİ, SAĞ	BONNET MOUNTING BRACKET, RIGHT	1				
45	M114202000	ARA DESTEK SACI	SPACER,SUPPORT	1				
46	N04/4320506	VİDA M8x20	SCREW M8x20	2				
47	807/06650	YAY	SPRING	2				

https://truckmanualshub.com/

KAPUT-PANEL- PANJUR- TAMPON ?AS? BA?LANTILARI
BONNET- NOSE GUARD- BUMPER- FRONT GRILLE- CHASSIS MOUN.

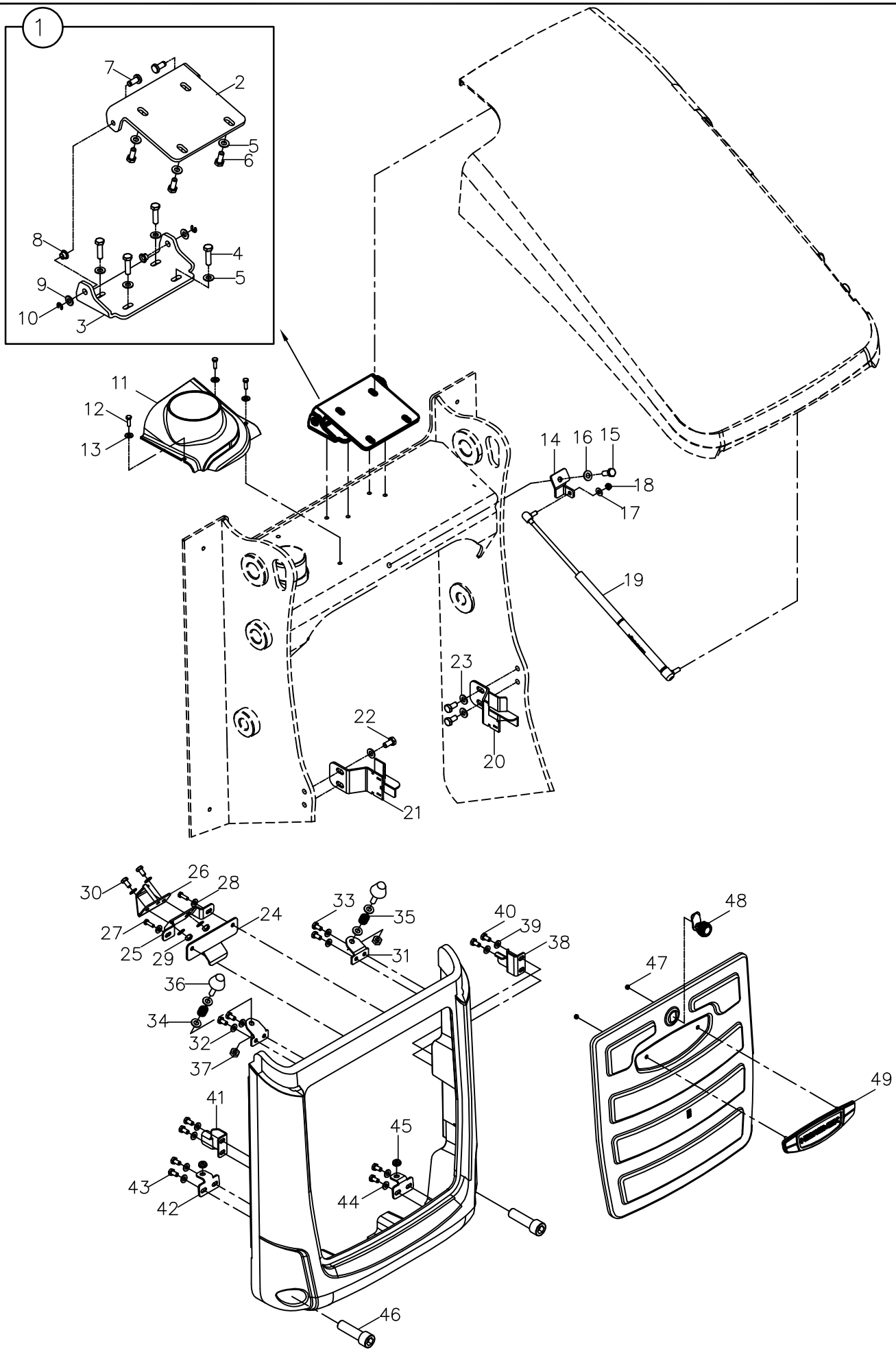

https://truckmanualshub.com/

KAPUT- MOTOR YAN KAPAĞI- PANEL- PANJUR- TAMPON- ŞASİ BAĞLANTILARI
BONNET- ENGINE PANEL- NOSE GUARD- BUMPER- FRONT GRILLE CHASSIS MOUN.

NO NO	PARÇA NO PART NO	TANIM	DESCRIPTION	ADET QTY	S.K. S.C.	SERİ NO SERIAL NO	D.T. ICA	NOT NOTE
	* M114206600							
1	M114204800	MENTEŞE KOMPLESI	HINGE ASSY.	1				
2	M114205000	MENTEŞE SACI	HINGE BARCKET	1				
3	M114204900	MENTEŞE SACI	HINGE BARCKET	1				
4	N01/0232162	CİVATA M8x30	BOLT M8x30	4				
5	N03/0140017	RONDELA M8 DIN125	WASHER M8 DIN125	8				
6	N01/0222114	CİVATA M8X20	BOLT M8X20	4				
7	M114205100	MENTESE PİMİ	PIN	2				
8	F99/14899	BURÇ	BUSHING	2				
9	N03/0108001	PUL Ø8X1	WASHER M8X1	2				
10	N05/0760001	SEGMAN	RETAINING RING	2				
11	M114204200	EGZOS KAPLAMA	EXHAUST, VENTURI BRACKET	1				
12	N01/0231514	CİVATA M6X20	BOLT M6X20	3				
13	N03/0108001	PUL,Ø8X1	WASHER M8X1	3				
14	M114204700	AMORTiSOR BAG. SACI	MOUNTING PLATE	1				
15	N01/0222462	CİVATA M10X25	BOLT M10X25	1				
16	N03/0020018	PUL M10	WASHER M10	1				
17	N03/0140017	RONDELA M8 DIN125	WASHER M8 DIN125	1				
18	N02/5900062	SOMUN M8	NUT M8	1				
19	M114207300	AMORTiSÖR	DAMPER	1				
20	M114206900	KAPAK KİLİT KARŞILIĞI,SOL	COVER LOCKING PLATE,LEFT	1				
21	M114206800	KAPAK KİLİT KARŞILIĞI,SAĞ	COVER LOCKING PLATE,RİGHT	1				
22	N01/0222438	CİVATA M10X20	BOLT M10X20	4				
23	N03/0020018	PUL M10	WASHER M10	4				
24	M114205900	KiLiT KARSILIK SACI	LOCKING PLATE	1				
25	M114205700	KiLiT KARSILIK SACI	LOCKING PLATE	1				
26	M114205600	KiLiT KARSILIGI	LOCKING PLATE	1				
27	N01/0231514	CİVATA M6X10	BOLT M6X6	2				
28	N03/0140017	RONDELA M8	WASHER M8	6				
29	N02/5900062	SOMUN M8	NUT M8	2				
30	N01/0232078	CİVATA M8X15	BOLT M8X15	2				
31	M114205200	STOPER SACI	MOUNTING PLATE	2				
32	N03/0140017	PUL M8,DIN125	WASHER M8 ,DIN125	4				
33	N01/0232078	CİVATA M8X15	BOLT M8X15	4				
34	N03/0020018	PUL,M10,DIN125	WASHER,M10,DIN125	4				
35	807/06650	YAY	SPRING	2				
36	810/40041	STOPER	STOPER	2				
37	N02/5900086	SOMUN M10	NUT M10	2				
38	M114205300	YAN KAPUT BAĞLANTI SACI,SOL	BONNET MOUNTING BRACKET, LEFT	1				
39	N03/0140017	PUL M8,DIN125	WASHER M8 ,DIN125	4				
40	N01/0232078	CİVATA M8x15	BOLT M8x15	4				
41	M114205400	YAN KAPUT BAĞLANTI SACI,SAĞ	BONNET MOUNTING BRACKET, RIGHT	1				
42	M114206200	SABiTLEME SACI	SUPPORT	2				
43	N01/0232078	CİVATA,M8X15	BOLT,M8X15	4				
44	N03/0140017	PUL M8,DIN125	WASHER M8 ,DIN125	4				
45	810/40016	GROMET	GROMMET	2				
46	N01/5892078	CİVATA,M20X70	BOLT,M20X70	2				
47	N02/5880026	SOMUN,M5	NUT,M5	2				
48	M11/6102700	KİLİT	LOCKING	1				
49	M114206100	PANJUR	BUMPER	1				
50	M114204300	ÖN PANEL	NOSE GUARD	1				
51	M114206000	ÖN PANJUR	GRILLE, FRONT	1				

https://truckmanualshub.com/

MOTOR KAPA?I, YAN SA?
PANEL, ENGINE, RIGHT SIDE

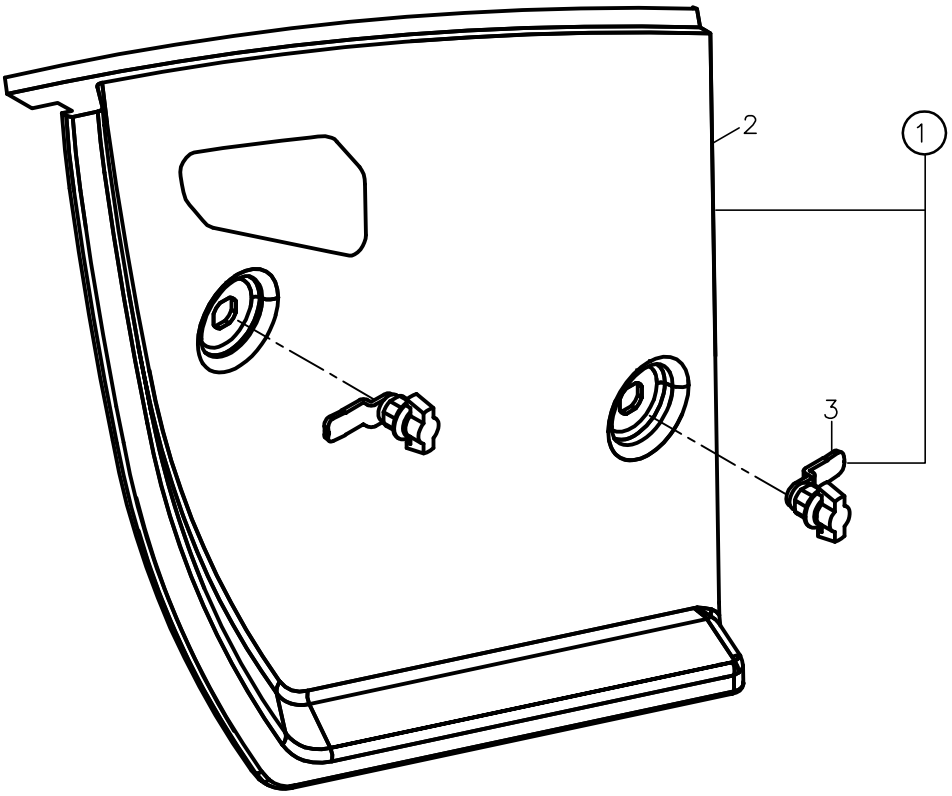

https://truckmanualshub.com/

MOTOR KAPAĞI, YAN, SAĞ
PANEL, ENGINE, RIGHT SIDE

NO NO	PARÇA NO PART NO	TANIM	DESCRIPTION	ADET QTY	S.K. S.C.	SERİ NO SERIAL NO	D.T. ICA	NOT NOTE
	* M114200100							
1	M114201600	MOTOR KAPAĞI, YAN, SAĞ, KOMP.	PANEL, ENGINE, RIGHT, ASSY	1				
2	M114201700	YAN KAPAK, SAĞ	PANEL, RIGHT	1				
3	F99/60265	KİLİT, KELEBEK	LOCK	2				

https://truckmanualshub.com/

MOTOR KAPA?I ,YAN SA?
PANEL,ENGINE,RIGHT SIDE

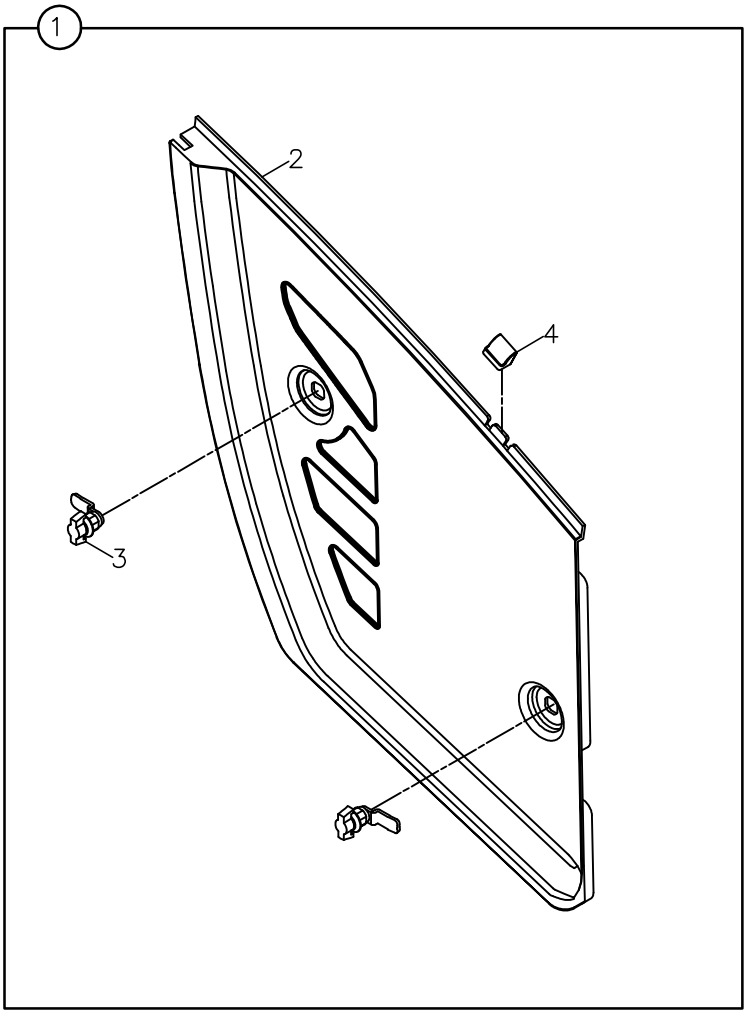

https://truckmanualshub.com/

MOTOR KAPAĞI, YAN, SAĞ
PANEL, ENGINE, RIGHT SIDE

NO NO	PARÇA NO PART NO	TANIM	DESCRIPTION	ADET QTY	S.K. S.C.	SERİ NO SERIAL NO	D.T. ICA	NOT NOTE
	M114206600							
1	M114201600	MOTOR KAPAĞI, YAN, SAĞ, KOMP.	PANEL, ENGINE, RIGHT, ASSY	1				
2	M114201700	YAN KAPAK, SAĞ	PANEL, RIGHT	1				
3	F99/60265	KİLİT, KELEBEK	LOCK	2				
4	810/40091	STOPER	STOPER	1				

https://truckmanualshub.com/

MOTOR KAPA?I, YAN SOL
PANEL, ENGINE, LEFT SIDE

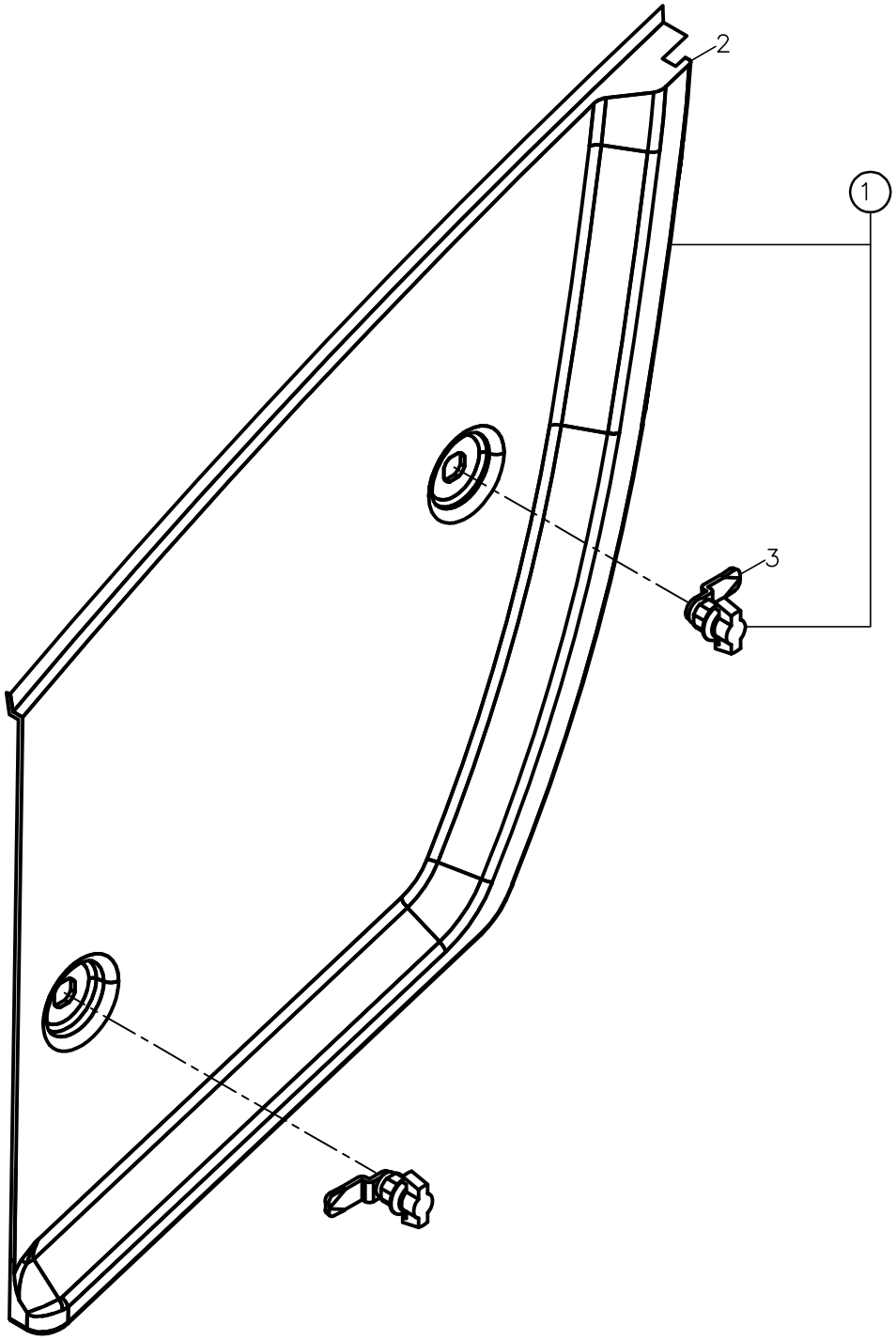

https://truckmanualshub.com/

MOTOR KAPAĞI, YAN, SOL
PANEL, ENGINE, LEFT SIDE

NO NO	PARÇA NO PART NO	TANIM	DESCRIPTION	ADET QTY	S.K. S.C.	SERİ NO SERIAL NO	D.T. ICA	NOT NOTE
	* M114200100							
1	M114201400	MOTOR KAPAĞI, YAN, SOL, KOMP.	PANEL, ENGINE, LEFT, ASSY	1				
2	M114201500	YAN KAPAK, SOL	PANEL, LEFT	1				
3	F99/60265	KİLİT, KELEBEK	LOCK	2				

https://truckmanualshub.com/

MOTOR KAPA?I,YAN SOL
PANEL,ENGINE,LEFT SIDE

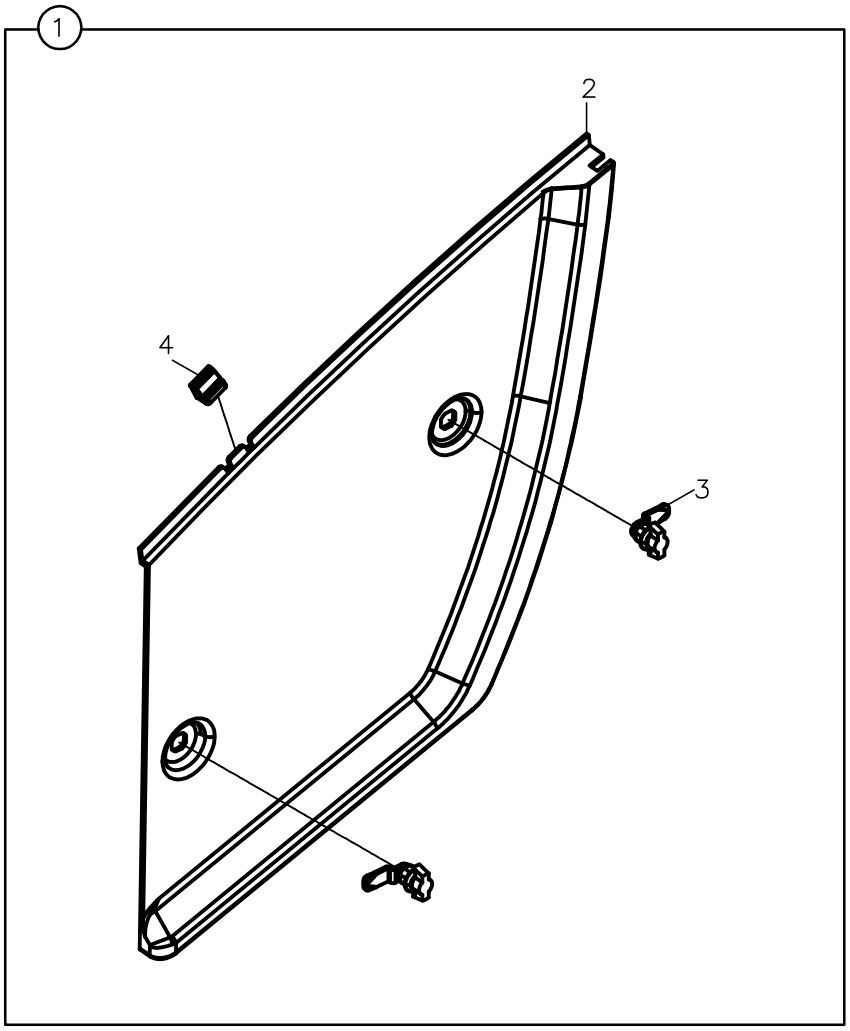

https://truckmanualshub.com/

MOTOR KAPAĞI, YAN, SOL
PANEL, ENGINE, LEFT SIDE

NO NO	PARÇA NO PART NO	TANIM	DESCRIPTION	ADET QTY	S.K. S.C.	SERİ NO SERIAL NO	D.T. ICA	NOT NOTE
	* M114206600							
1	M114201400	MOTOR KAPAĞI, YAN, SOL, KOMP.	PANEL, ENGINE, LEFT, ASSY	1				
2	M114201500	YAN KAPAK, SOL	PANEL, LEFT	1				
3	F99/60265	KİLİT, KELEBEK	LOCK	2				
4	810/40091	STOPER	STOPER	1				

https://truckmanualshub.com/

KAPUT
BONNET

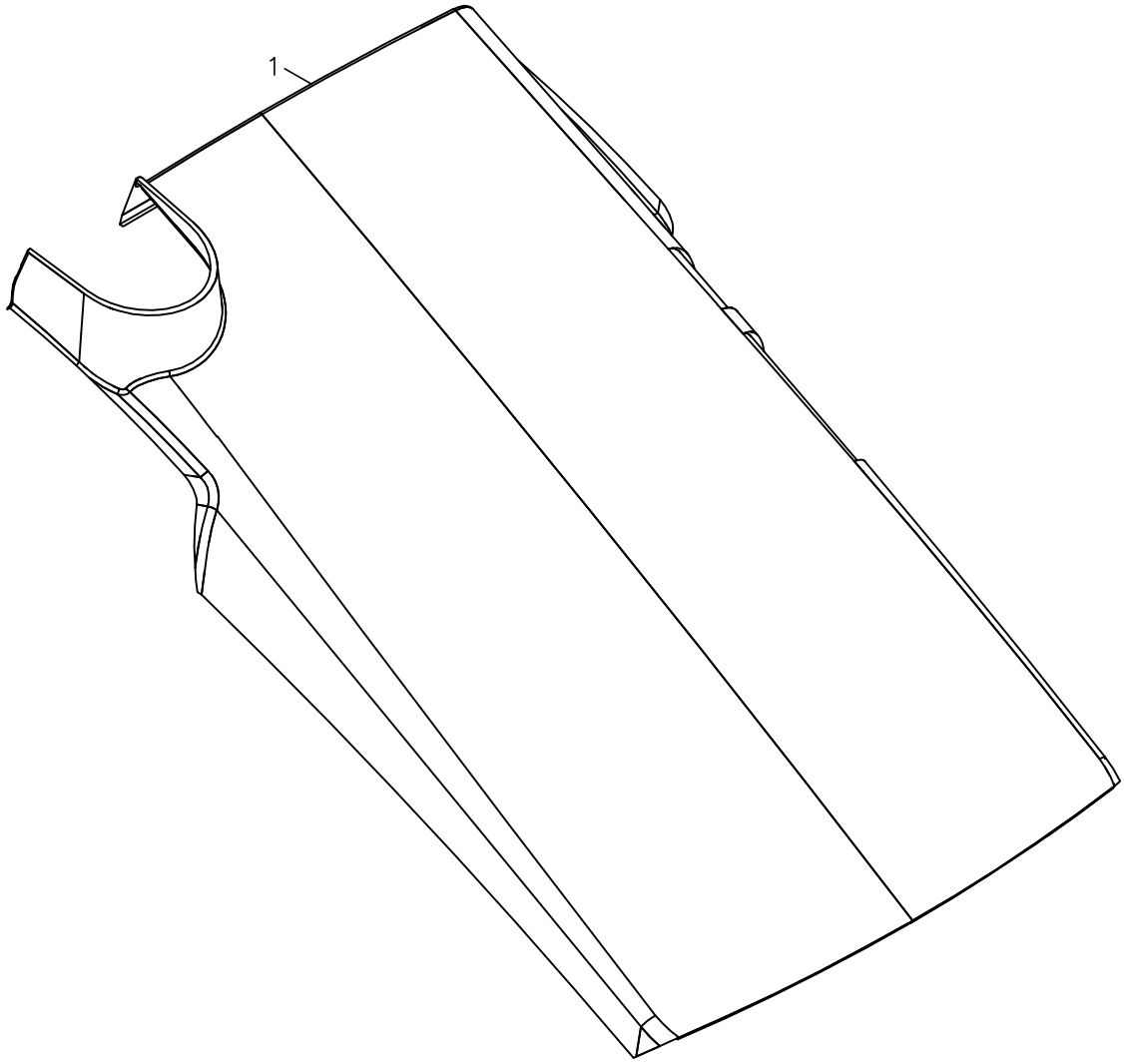

https://truckmanualshub.com/

KAPUT
BONNET

NO NO	PARÇA NO PART NO	TANIM	DESCRIPTION	ADET QTY	S.K. S.C.	SERİ NO SERIAL NO	D.T. ICA	NOT NOTE
	* M114200100							
1	M114202700	KAPUT KOMPLE	BONNET ASSY.	1				

https://truckmanualshub.com/

KAPUT
BONET

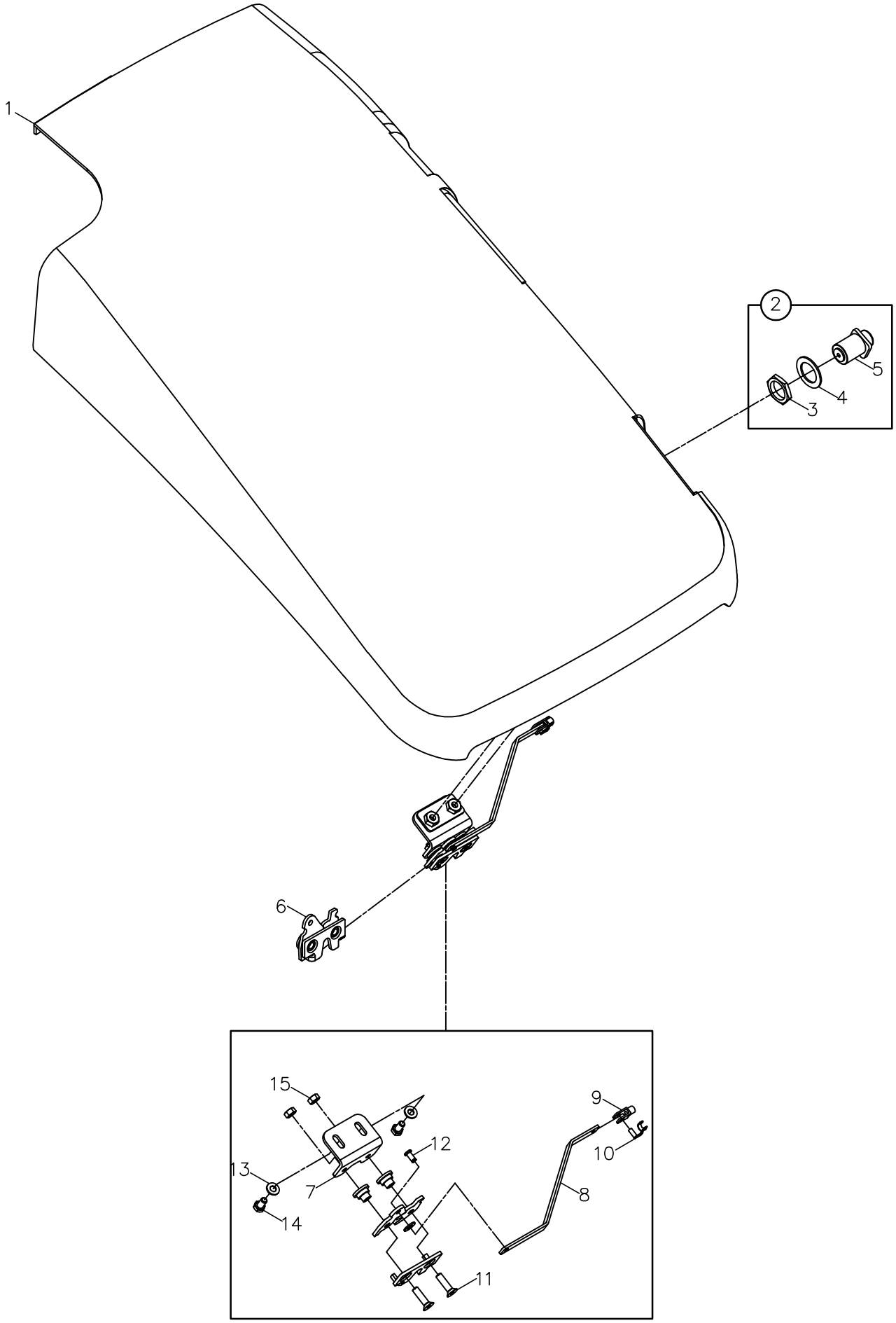

https://truckmanualshub.com/

KAPUT
BONNET

NO NO	PARÇA NO PART NO	TANIM	DESCRIPTION	ADET QTY	S.K. S.C.	SERİ NO SERIAL NO	D.T. ICA	NOT NOTE
	* M114205500							
1	M114204100	KAPUT KOMPLE	BONNET ASSY.	1				
2	F99/60270	BUTON, KAPUT ACMA	BUTTON	1				
3	804/00658	OZEL SOMUN	SPECIAL NUT	1				
4	805/00097	PUL	WASHER	1				
5	N02/3570182	SOMUN M8, ISO 4032	NUT M8,ISO 4032	2				
6	F99/60260	KILIT	LOCK	1				
7	M114204400	KiLiT BAGLANTI SACI	LOCKING BRACKET	1				
8	M114204500	BUTON SACI	LOCKING LEVER	1				
9	H90/6103100	KILIT MEKANIZMA	CLEVIS	1				
10	H90/6103200	KILIT MEKANIZMA BIRLESTIRME MILI	CLEVIS, PIN	1				
11	N04/4320530	VİDA,M8X30,DIN7991	SCREW,M8X30,DIN7991	2				
12	M114204600	MENTESE PiMi	PIN	1				
13	N03/0140017	RONDELA,M8,DIN125	WASHER M8 DIN125	3				
14	N01/0232078	CİVATA,M8x15,DIN933	BOLT,M8x15,DIN933	2				

https://truckmanualshub.com/

ÇAMURLUK, SOL
FENDER, LEFT

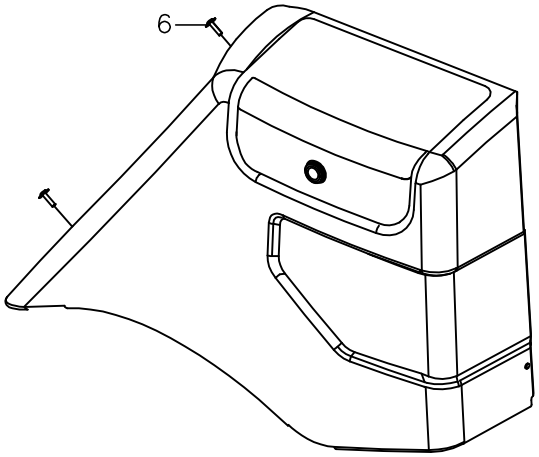

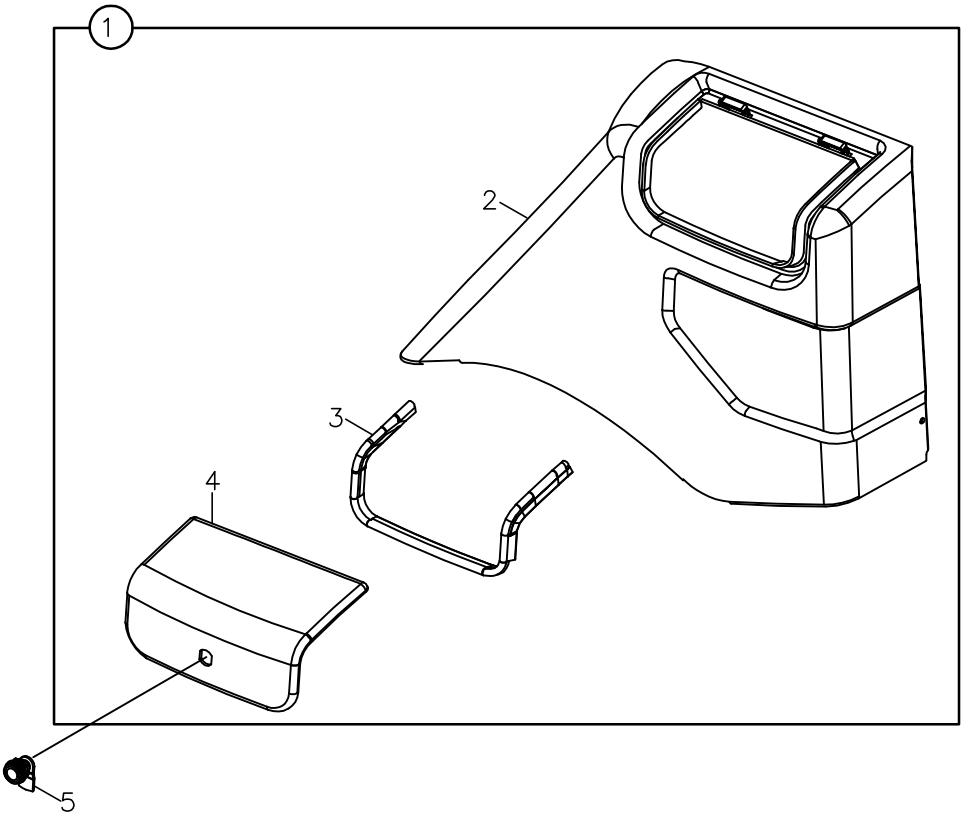

https://truckmanualshub.com/

ÇAMURLUK, SOL
FENDER, LEFT

NO NO	PARÇA NO PART NO	TANIM	DESCRIPTION	ADET QTY	S.K. S.C.	SERİ NO SERIAL NO	D.T. ICA	NOT NOTE
	* M116100100				RK			
1	M116100600	SOL ÇAMURLUK KOMPL.	FENDER ASSY., SOL	1				
2	M116101800	SOL ÇAMURLUK GÖVDESİ	FENDER , SOL	1				
3	816/00820	FİTİL	STRIP, RUBBER	1				
4	M116101900	SOL ÇAMURLUK KAPAĞI	COVER	1				
5	M116103300	KİLİT	LOCK	1				
6	N04/4320245	VİDA M5x16	SCREW M5x16	6				

https://truckmanualshub.com/

ÇAMURLUK, SA?
FENDER, RIGHT

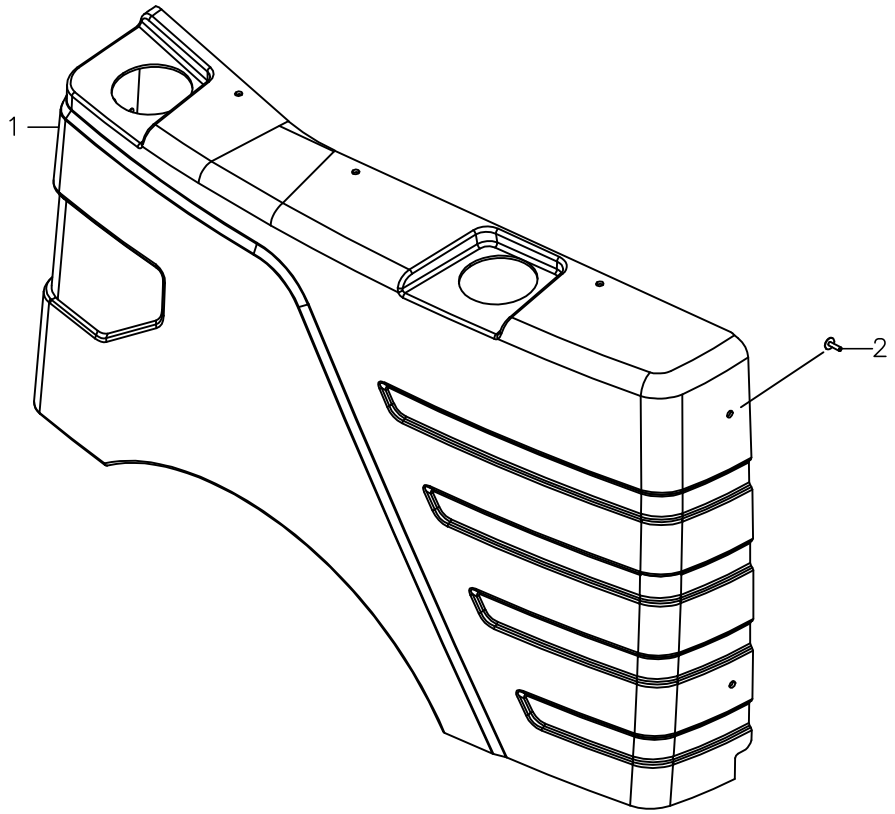

https://truckmanualshub.com/

ÇAMURLUK, SAĞ
FENDER, RIGHT

NO NO	PARÇA NO PART NO	TANIM	DESCRIPTION	ADET QTY	S.K. S.C.	SERİ NO SERIAL NO	D.T. ICA	NOT NOTE
	* M116100100				RK			
1	M116100500	ÇAMURLUK KOMPL., SAĞ	FENDER ASSY., RIGHT	1				
2	N04/4320245	VİDA M5x16	SCREW M5x16	7				

https://truckmanualshub.com/

DEPO, HIDROLIK YAĞ
TANK, HYDRAULIC

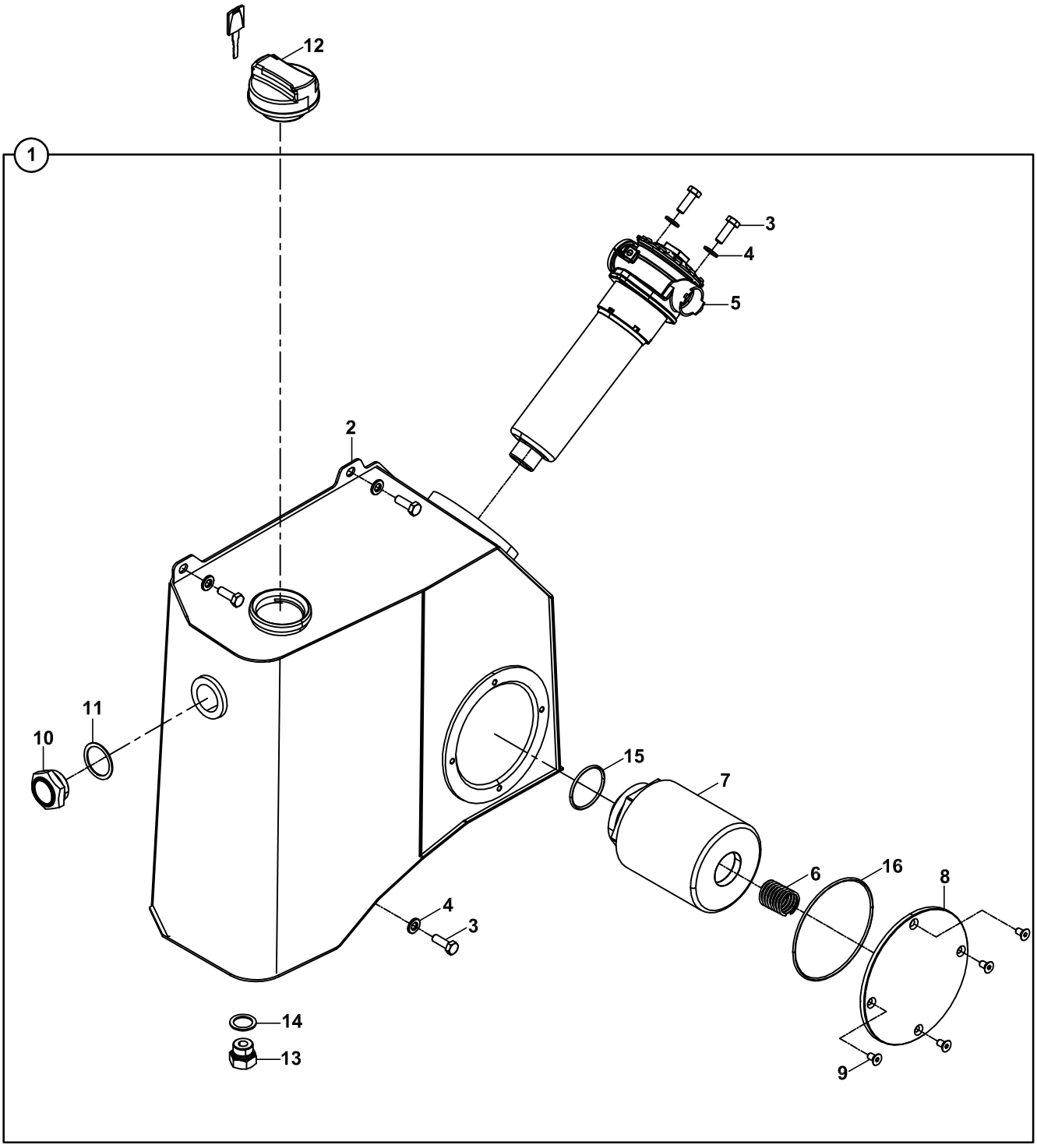

https://truckmanualshub.com/

DEPO, HİDROLİK YAĞ
TANK, HYDRAULIC

NO NO	PARÇA NO PART NO	TANIM	DESCRIPTION	ADET QTY	S.K. S.C.	SERİ NO SERIAL NO	D.T. ICA	NOT NOTE
1	M113400100	YAĞ DEPOSU, KOMPLE	TANK HYDRAULIC, ASSY.	1	SOP			
2	M113400200	HİDROLİK DEPO	TANK HYDRAULIC	1				
3	N01/0380566	CİVATA M10x30	BOLT M10x30	6				
4	N03/0810015	PUL M10	WASHER M10	6				
5	M113402500	FİLTRE, DÖNÜŞ	FILTER, RETURN	1				
6	M113402400	YAY, EMİŞ SÜZGECİ	SPRING	1				
7	M113401900	EMİŞ FİLTRESİ	FILTERİ SUCTION	1				
8	M113401600	KAPAK	COVER	1				
9	N04/4320484	VİDA M8x16	SCREW M8x16	4				
10	F99/14030	YAĞ SEVİYE GÖSTERGESİ	INDICATOR, OIL LEVER	1				
11	F99/15160	GÖSTERGE SOMUNU	GASKET	1				
12	F99/15022	DEPO KAPAĞI	CAP. HYD. FILLER	1				
13	814/03010	TAPA	PLUG	1				
14	N03/0000025	PUL	WASHER	1				
15	N10/2005735	O-RİNG	O-RING	1				
16	N10/2014235	O-RİNG	O-RING	1				

https://truckmanualshub.com/

DEPO, YAKIT
TANK, FUEL

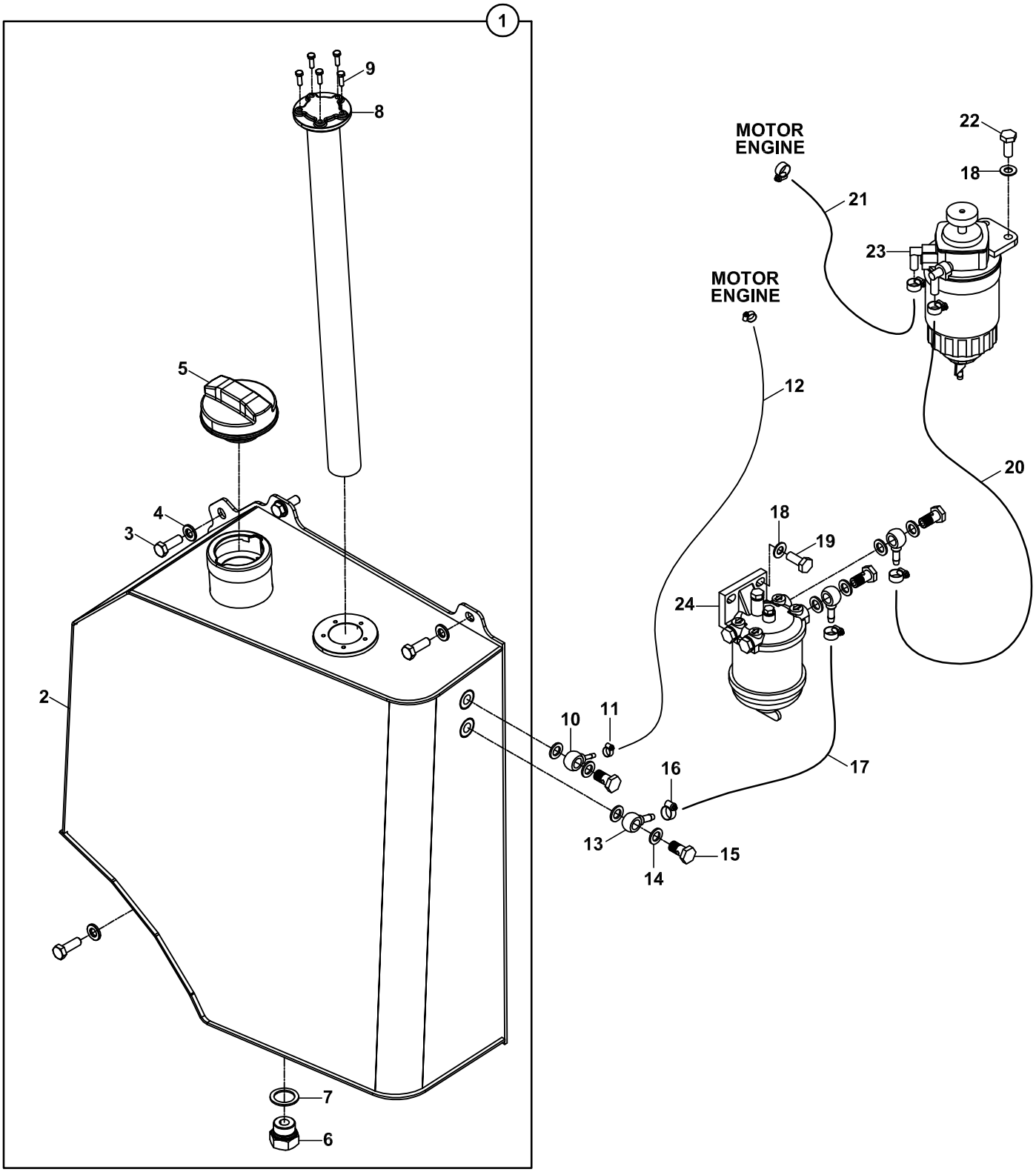

https://truckmanualshub.com/

DEPO, YAKIT
TANK, FUEL

NO NO	PARÇA NO PART NO	TANIM	DESCRIPTION	ADET QTY	S.K. S.C.	SERİ NO SERIAL NO	D.T. ICA	NOT NOTE
	M112500100							
1	M112500300	YAKIT DEPOSU	TANK, DIESEL FUEL	1				
2	M112500400	YAKIT DEPOSU	TANK, DIESEL FUEL	1				
3	N01/0380566	CİVATA M10x30	BOLT M10x30	4				
4	N03/0810015	PUL M10	WASHER M10	4				
5	F99/15018	DEPO KAPAĞI	CAP, HYD. FILLER	1				
6	814/03010	BOŞALTMA TAPASI	PLUG	1				
7	N03/0000025	PUL	WASHER	1				
8	M112501800	ŞAMANDIRA	FLOAT SWITCH	1				
9	N01/0221202	CİVATA M5x16	BOLT M5x16	5				
10	F99/00465	HALKA RAKOR	BANJO NIPPLE	1				
11	N07/4010016	KELEPÇE	CLAMP	6				
12	H06/1600316	HORTUM	HOSE	1				metre/meters
13	F99/00460	HALKA RAKOR	BANJO NIPPLE	3				
14	N03/0000004	ORINGLI PUL	WASHER	8				
15	F99/00459	BSP CIVATA	BOLT	4				
16	N07/4008013	KELEPÇE	CLAMP	6				
17	H06/1600516	HORTUM	HOSE	1.2				metre/meters
18	N03/0100020	PUL	WASHER	4				
19	N01/0232438	CİVATA M10x20	BOLT M10x20	2				
20	H06/1600516	HORTUM	HOSE	4.47				metre/meters
21	H06/1600516	HORTUM	HOSE	0.6				metre/meters
22	N01/0232486	CİVATA M10x30	BOLT M10x30	2				
23	F28/91030	YAKIT FİLTRESİ, SU AYIRICI	FUEL FILTER	1				
24	M113100150	YAKIT FİLTRESİ	FUEL FILTER	1				

https://truckmanualshub.com/

B GÖVDE BODY PARTS

B1 GÖVDE MONTAJLARI BODY PARTS MOUNTINGS

B2 KABiN OPERATOR CAB

B3 YÜKLEYiCi LOADER

B4 KAZICI BACKHOE

https://truckmanualshub.com/

KAB?N
OPERATOR CAB

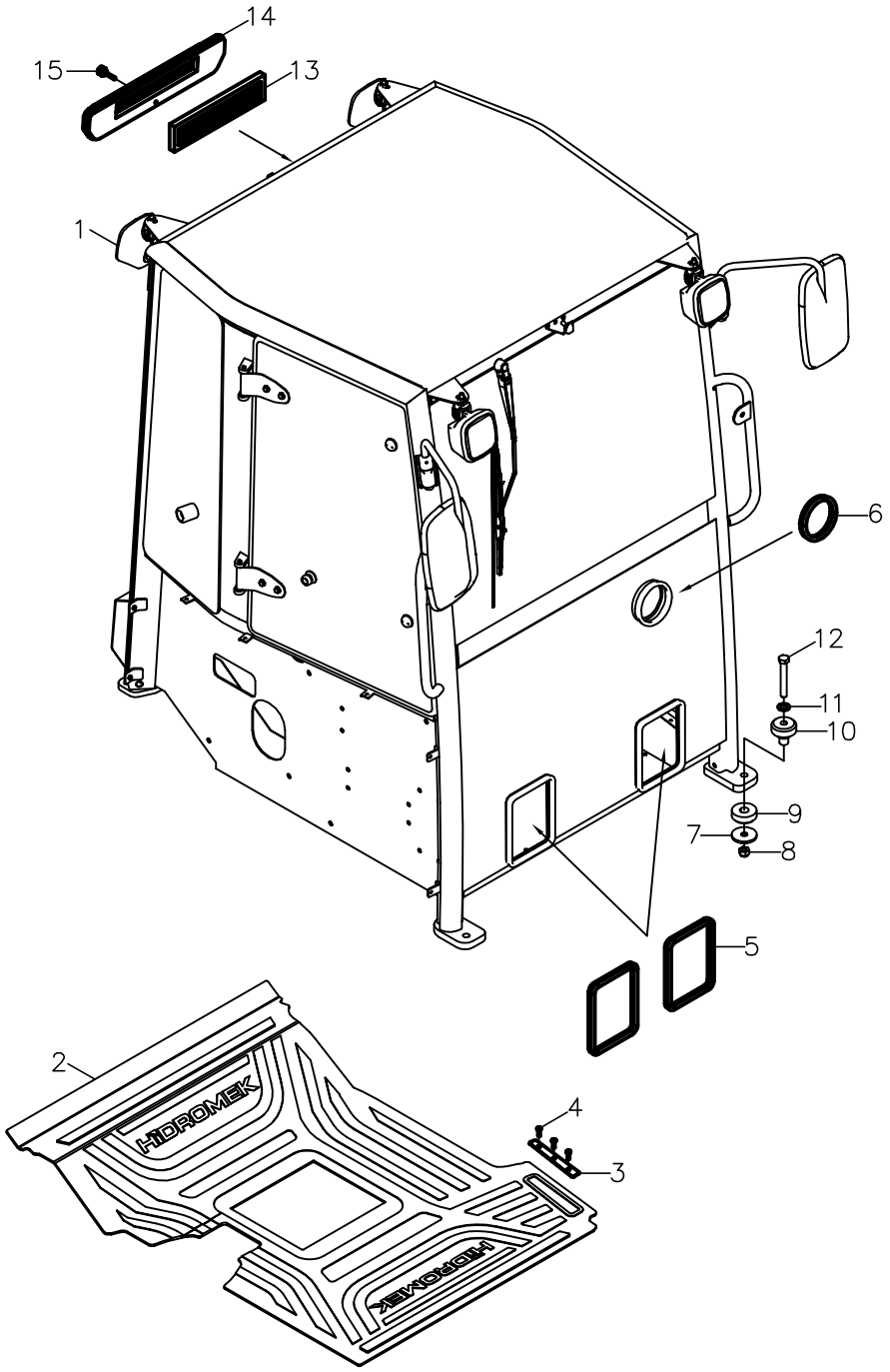

https://truckmanualshub.com/

KABİN, LEVYE MEKANİZMALI
OPERATOR CAB, LEVERS MECHANISM

NO NO	PARÇA NO PART NO	TANIM	DESCRIPTION	ADET QTY	S.K. S.C.	SERİ NO SERIAL NO	D.T. ICA	NOT NOTE
	* M116000100							
1	M116000200	KABİN	OPERATOR CAB	1				
2	M116100400	PASPAS	FLOORMAT	1				
3	M116000800	PASPAS SACI	PLATE, FLOORMAT	1				
4	N01/0231514	CİVATA M6x20	BOLT M6x20	3				
5	M116002000	FİTİL	STRIP	2				
6	M116002100	FİTİL	STRIP	1				
7	M112002200	TAKOZ ALT SACI	WASHER	4				
8	N02/5910182	SOMUN M16	NUT M16	4				
9	M112002600	MOTOR TAKOZU ALT PARCA	MOUNTING, LOWER	4				
10	M112002500	MOTOR TAKOZU UST PARCA	MOUNTING, RUBBER	4				
11	N03/0810002	PUL, M16	WASHER M16	4				
12	N01/0381370	CİVATA, M16x110	BOLT M16x100	4				
13	M116018500	FİLTRE, KLİMA	FILTER, AIR CONDITIONER	1				
14	M116018100	KAPAK, KLİMA FİLTRE	COVER, AIR CONDITIONER FILTER	1				
15	M116017800	ÖZEL CİVATA	BOLT, SPECIAL	1				

https://truckmanualshub.com/

KAPI VE CAMLAR, YAN, SAG
DOOR AND WINDOW SIDE, RIGHT

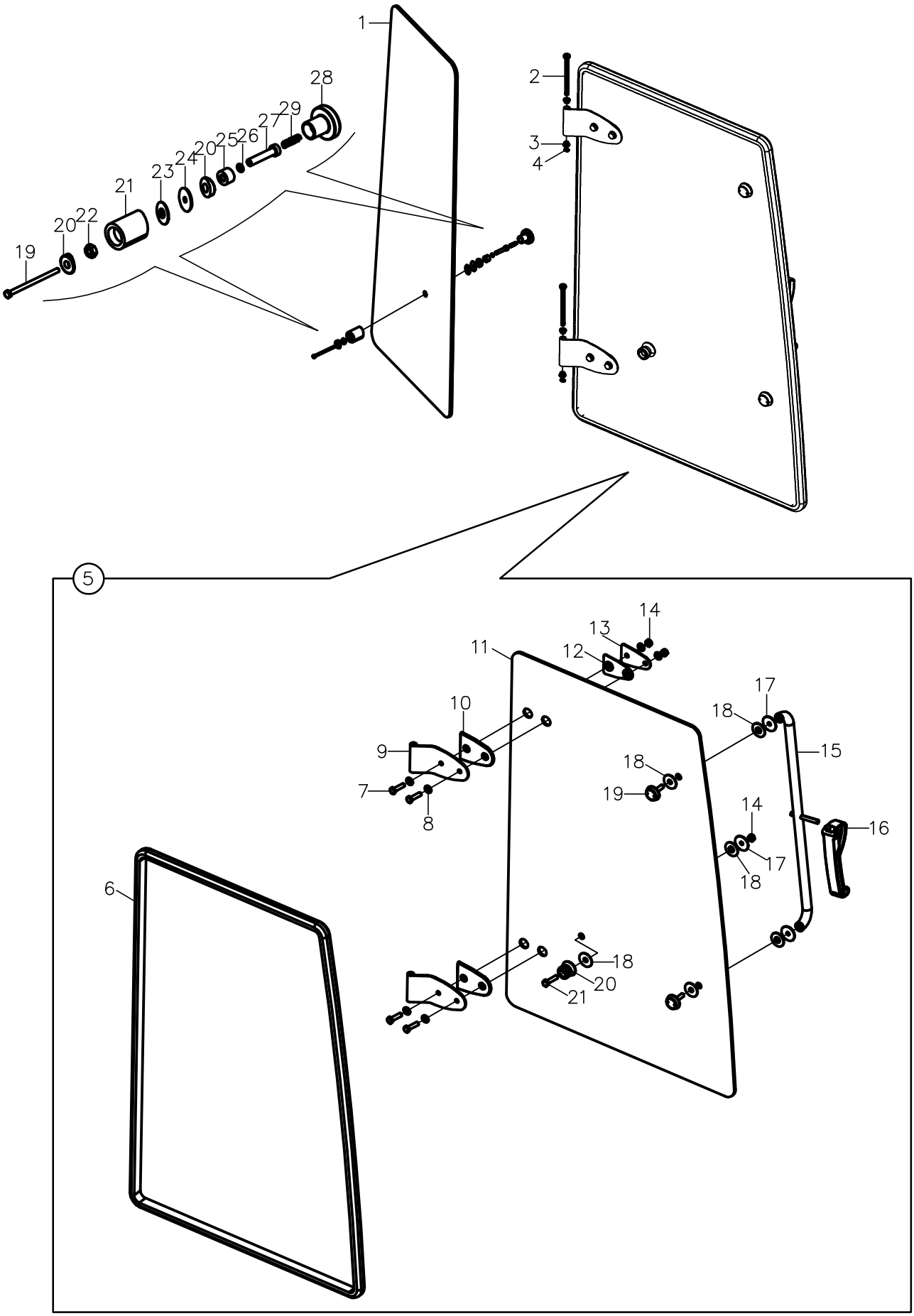

https://truckmanualshub.com/

KAPI VE CAMLAR, YAN SAG
DOOR AND WINDOW SIDE, RIGHT

NO NO	PARÇA NO PART NO	TANIM	DESCRIPTION	ADET QTY	S.K. S.C.	SERİ NO SERIAL NO	D.T. ICA	NOT NOTE
	M116000200							
1	M116001400	ARKA CAM, SAĞ	REAR CLASS, RIGHT	1				
2	M116001500	PİM, MENTEŞE	PIN	2				
3	F99/14897	BURÇ, YATAK	BUSHING	4				
4	N05/0020007	SEGMAN	RETAINING RING	2				
5	M116000500	AÇILIR CAM, SAĞ KOMPLE	GLASS REAR, RIGHT	1				
6	M116003000	KAPI FİTİLİ	STRIP, DOOR	1				
7	N01/0232162	CİVATA M8x30	BOLT M8x30	4				
8	N03/0140017	PUL M8	WASHER M8	8				
9	M116003300	YAN CAM MENTESE SACI	HINGE PLATE, SIDE WINDOW	2				
10	M116003200	CONTA YAN CAM MENTEŞE	GASKET	2				
11	M116002900	AÇILIR CAM SAG ON	GLASS REAR, RIGHT FRONT	1				
12	M116003400	YAN CAM MENTESE CONTASI İÇ	GASKET	2				
13	M116003500	YAN CAM MENTESE BAGL. SACI	HINGE MOUNTING PLATE, SIDE WINDOW	2				
14	N02/5900062	SOMUN M8	NUT M8	4				
15	M116003600	TUTAMAK	HANDLE	1				
16	F32/18103	KİLİT, YAN CAM	LOCK, SIDE WINDOW	1				
17	810/40045	SERT PLASTİK PUL	WASHER, PLASTIC, HARD	3				
18	810/40046	YUMUŞAK PLASTİK PUL	WASHER, PLASTIC, SOFT	6				
19	810/40046	YUMUŞAK PLASTİK PUL	WASHER, PLASTIC, SOFT	1				
20	810/40082	KİTLEK SABİTLEME PARÇ.	BRACKET,LOCK MOUNTING	2				
21	810/40070	GERİ KİTLEK PLASTİGİ	PLASTIC, LOCK	1				
22	N02/3580206	SOMUN	NUT	1				
23	810/40045	SERT PLASTİK PUL	WASHER, PLASTIC, HARD	1				
24	810/40046	YUMUSAK PLASTİK PUL	WASHER, RUBBER, SOFT	1				
25	020/21462	CİVATA ALTLIĞI	SPACER	1				
26	N03/0100013	PUL	WASHER	1				
27	810/99950	CİVATA M10x50	BOLT M10x50	1				
28	810/40090	TUTAMAK	HOLDER	1				
29	807/01515	YAY	SPRING	1				

https://truckmanualshub.com/

KAPI VE CAMLAR, YAN, SOL
DOOR AND WINDOW SIDE, LEFT

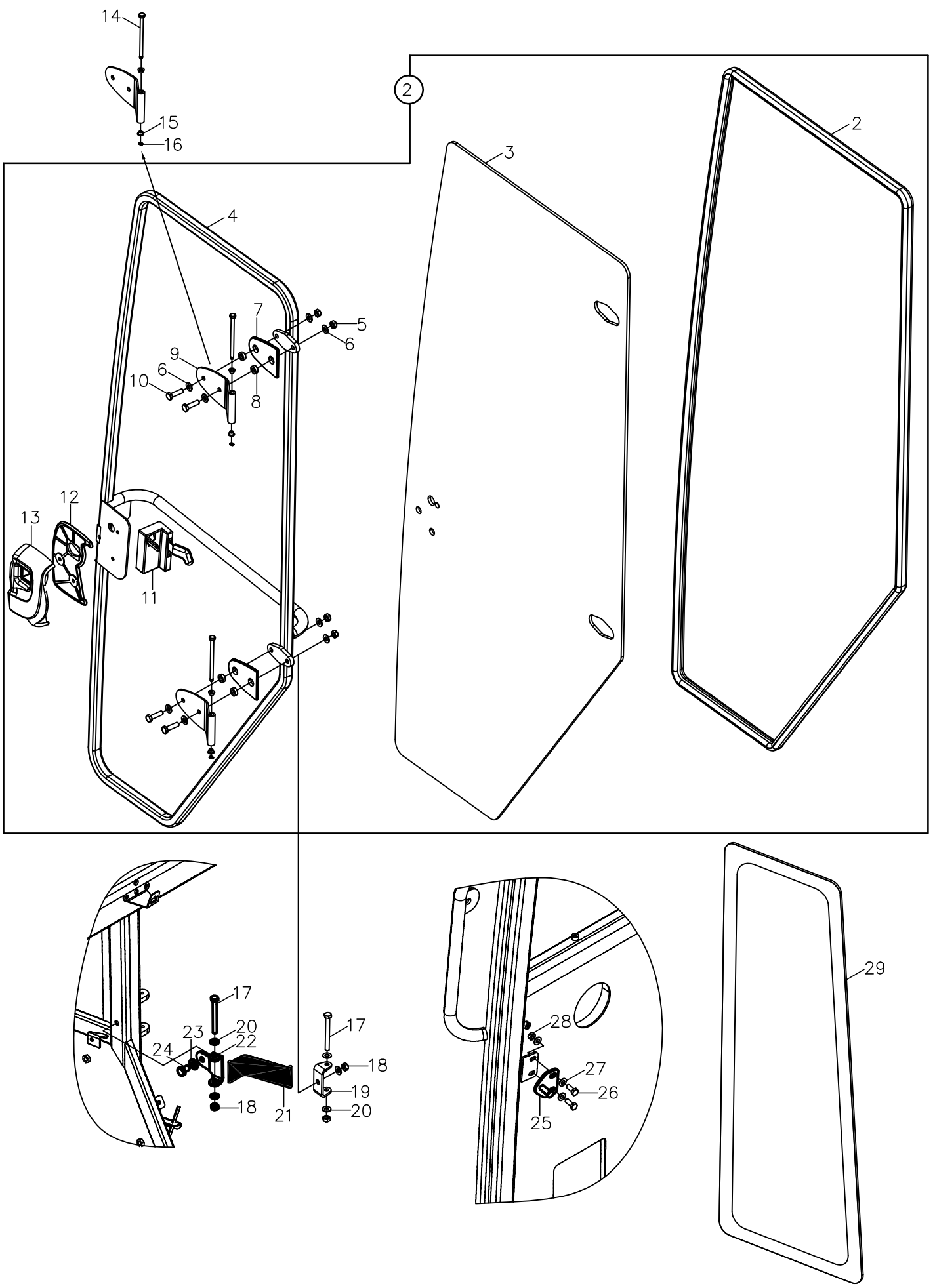

https://truckmanualshub.com/

KAPI VE CAMLAR, YAN SOL
DOOR AND WINDOW SIDE, LEFT

NO NO	PARÇA NO PART NO	TANIM	DESCRIPTION	ADE QTY	S.K. S.C.	SERİ NO SERIAL NO	D.T. ICA	NOT NOTE
	M116000200							
1	M116000600	KAPI KOMPLE, SOL	DOOR, LEFT, ASSY.	1				
2	M116002800	KAPI FİTİLİ	STRIP, DOOR	1				
3	M116002600	KAPI CAMI	GLASS DOOR	1				
4	M116002700	KAPI	DOOR	1				
5	N02/5910062	SOMUN M8	NUT M8	4				
6	N03/0140017	PUL M8	WASHER M8	8				
7	M116003200	CONTA YAN CAM MENTEŞE	GASKET	2				
8	M116003700	PLASTİK BURÇ	BUSHING	4				
9	M116003300	MENTEŞE SACI, KAPI	HINGE PLATE, DOOR	2				
10	N01/0232162	CİVATA M8x30	BOLT M8x30	4				
11	S91/00631	KİLİT, KAPI İÇ	LOCK, DOOR	1				
12	810/40064	KAPI KOLU ALTLIĞI, SOL	BASE, HANDLE, LEFT	1				
13	S91/00657	KAPI KOLU, F TİPİ, SOL	HANDLE, F TYPE, LEFT	1				
14	M116001500	PIM MENTESE	PIN	2				
15	F99/14897	BURC,YATAK	BUSHING	4				
16	N05/0020007	SEGMAN	RETAINING RING	2				
17	N01/0380493	CİVATA M8x80	BOLT M8x80	1				
18	N02/5910062	SOMUN M8	NUT M8	2				
19	M116005500	KAPI GERGİ BAĞLANTI SACI	STAY PLATE, DOOR	1				
20	N03/0100017	PUL M8	WASHER M8	4				
21	M116000900	HALAT	LASHING	1				
22	M116005600	KAPI GERGİ BAĞLANTI SACI	STAY PLATE, DOOR	1				
23	N03/0020018	PUL M10	WASHER M10	1				
24	N01/0232402	CİVATA M10x16	BOLT M10x16	1				
25	M116002400	KİLİT KARŞILĞI	LOCK TOWARD	1				
26	N01/0232114	CİVATA M8x20	BOLT M8x20	2				
27	N03/0140017	PUL M8	WASHER M8	4				
28	N02/5910062	SOMUN M8	NUT M8	2				
29	M116001300	SOL ARKA CAM	REAR GLASS, LEFT	1				

https://truckmanualshub.com/

CAMLAR, ON- ARKA WINDOWS, FRONT- REAR

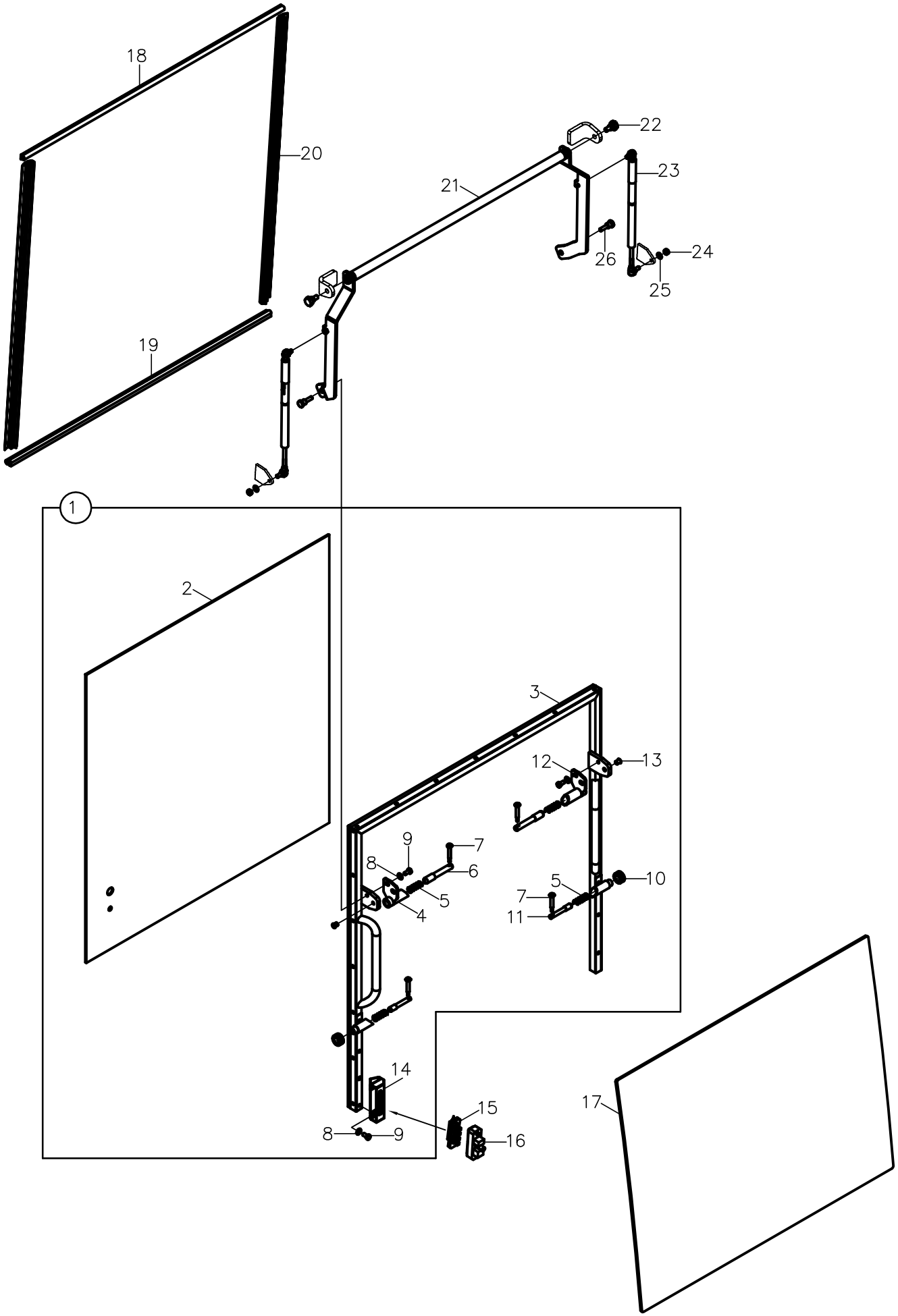

https://truckmanualshub.com/

CAMLAR, ÖN - ARKA
WINDOWS, FRONT - REAR

NO NO	PARÇA NO PART NO	TANIM	DESCRIPTION	ADET QTY	S.K. S.C.	SERİ NO SERIAL NO	D.T. ICA	NOT NOTE
	* M116000200				RK			
1	M116000400	ARKA AÇILIR CAM KOMPL.	BACKHOE SIDE, REAR WINDOW COMPL.	1				
2	M116003100	ARKA AÇILIR CAM	BACKHOE SIDE, REAR WINDOW	1				
3	M116003800	ARKA ÇERÇEVE KOMPLE	FRAME, REAR WINDOW	1				
4	M116004600	KİLİT MEKANİZMA MONTAJI, SOL	LOCK MECHANISM MOUNTING, LEFT	1				
5	M116004400	YAY	SPRING	1				
6	M116004200	PİM	PIN	2				
7	M116004500	MEKANİZMA KOLU	MECHANISM LEVER	2				
8	N03/0100017	PUL	WASHER	2				
9	N01/0222090	CİVATA	BOLT	2				
10	N09/0404903	RULMAN	BEARING	2				
11	M116004700	MEKANİZMA DİLİ	MECHANISM PIN	2				
12	M116004000	KİLİT MEKANİZMA MONTAJI, SAĞ	LOCK MECHANISM MOUNTING, RIGHT	1				
13	F99/14898	BURÇ, YATAK	BUSHING	2				
14	M116003900	SVİÇ BAĞLANTI SACI	SWITCH MONTING PLATE	2				
15	554/00601	KONTAK SVİÇ 4' LÜ	SWITCH	1				
16	554/00611	KONTAK SVİÇ 4' LÜ	SWITCH	1				
17	M116000300	ÖN CAM	GLASS, FRONT	1				
18	816/00618	FİTİL, ARKA ÜST	STRIP, REAR UPPER	1				
19	S33/00620	ARKA CAM ALT FİTİLİ	STRIP, REAR LOWER	1				
20	S3300656	ARKA CAM FİTİLİ	STRIP	2				
21	M116001600	AÇILIR CAM MEKANİZMASI	GLASS REAR MECHANISM	1				
22	813/00165	CİVATA	BOLT	2				
23	M116001700	AMORTİSÖR	DAMPER	2				
24	N02/5900062	SOMUN M8	NUT M8	2				
25	N03/0100017	PUL M8	WASHER M8	2				
26	M116002500	CİVATA	BOLT	2				