https://truckmanualshub.com/

Sno-Thro®

Owner/Operator Manual

Models

921004 – ST924DLE
921005 – ST927LE
921006 – ST1130DLE
921007 – ST924LET
921008 – ST927LET
921009 – ST1130LET

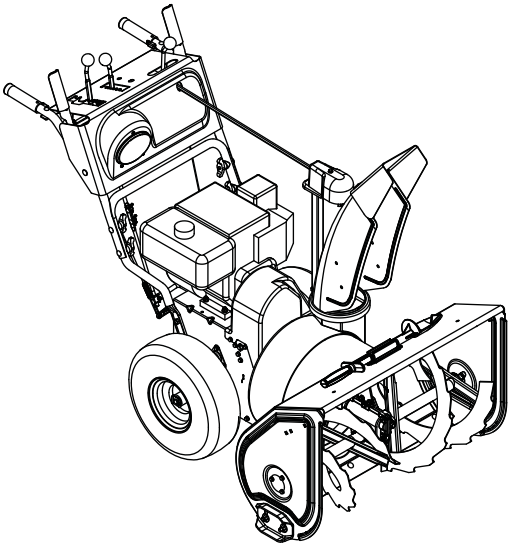

GB ENGLISH

03389300 4/08
Printed in USA

https://truckmanualshub.com/

TABLE OF CONTENTS

SAFETY 4
ASSEMBLY. 8
CONTROLS and FEATURES. 13
OPERATION 16
MAINTENANCE 22
SERVICE AND ADJUSTMENTS 24
STORAGE 35
SERVICE PARTS 35
ACCESSORIES 35
TROUBLESHOOTING 36
SPECIFICATIONS 37
WARRANTY 39

INTRODUCTION

NON-ENGLISH MANUALS

Manuals in languages other than English may be obtained from your Dealer. Visit your dealer or www.ariens.com for a list of languages available for your equipment.

Manuals printed in languages other than English are also available as a free download on our website:

http://www.ariens.com

MANUALES EN IDIOMAS DIFERENTES DEL INGLES

Puede obtener manuales en idiomas diferentes del inglés en su distribuidor. Visite a su distribuidor o vaya a www.ariens.com para obtener una lista de idiomas disponibles para su equipo.

También puede imprimir manuales en idiomas diferentes del inglés descargándolos gratuitamente de nuestra página Web:

http://www.ariens.com

Manuels non anglais

Des manuels dans différentes langues sont disponibles chez votre revendeur. Rendez-vous chez votre revendeur ou allez sur le site www.ariens.com pour consulter la liste des langues disponibles pour votre équipement.

Les manuels imprimés dans des langues différentes de l’anglais sont également disponibles en téléchargement gratuit sur notre site Web :

http://www.ariens.com

MANUALS

Before operation of unit, carefully and completely read your manuals. If used improperly, this unit could be dangerous and cause personal injury or property damage. The contents will provide you with safety instructions for the safe use of your unit during normal operation and maintenance.

All reference to left, right, front, or rear are given from operator standing in operation position and facing the direction of forward travel.

ENGINE MANUAL

The engine on this unit is covered by a separate manual specific to the engine. This manual is included in the literature package that shipped with the unit. Refer to this manual for engine service recommendations. If the engine manual is not available, contact the engine manufacturer for a replacement manual.

MODEL AND SERIAL NUMBERS

When ordering replacement parts or making service inquiries, know the Model and Serial numbers of your unit and engine.

Numbers are located on the product registration form in the unit literature package. They are printed on a serial number label, located on the frame of your unit.

https://truckmanualshub.com/

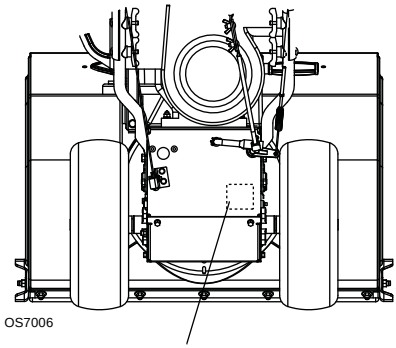

Figure 1

- Record Unit Model and Serial numbers here.

- Record Engine Model and Serial numbers here.

PRODUCT REGISTRATION

The Ariens dealer must register the product at the time of purchase. Registering the product will help the company process warranty claims or contact you with the latest service information. All claims meeting requirements during the limited warranty period will be honored, whether or not the product registration card is returned. Keep a proof of purchase if you do not register your unit.

Customer Note: If the dealer does not register your product, please fill out, sign, and return the product registration card to Ariens or go to www.ariens.com.

UNAUTHORIZED REPLACEMENT PARTS

Use only Ariens replacement parts. The replacement of any part on this vehicle with anything other than an Ariens authorized replacement part may adversely affect the performance, durability, or safety of this unit and may void the warranty. Ariens disclaims liability for any claims or damages, whether warranty, property damage, personal injury or death arising out of the use of unauthorized replacement parts. To locate your nearest Ariens Dealer, go to www.ariens.com on the internet.

DISCLAIMER

Ariens reserves the right to discontinue, make changes to, and add improvements upon its products at any time without public notice or obligation. The descriptions and specifications contained in this manual were in effect at printing. Equipment described within this manual may be optional. Some illustrations may not be applicable to your unit.

DELIVERY

Customer Note: If you have purchased this product without complete assembly and instruction by your retailer, it is your responsibility to:

1. Read and understand all assembly instructions in this manual. If you do not understand or have difficulty following the instructions, contact your nearest Ariens Dealer for assistance. Make sure all assembly has been properly completed.

NOTE: To locate your nearest Ariens Dealer, go to www.ariens.com on the Internet.

WARNING: Improper assembly or adjustments can cause serious injury.

2. Understand all Safety Precautions provided in the manuals.
3. Review control functions and operation of the unit. Do not operate the Sno-Thro unless all controls function as described in this manual.
4. Review recommended lubrication, maintenance and adjustments.
5. Review Limited Warranty Policy.
6. Fill out a Product Registration Card and return the card to the Ariens Company or go to www.ariens.com.

https://truckmanualshub.com/

WARNING: To avoid injury to hands and feet, always disengage clutches, shut off engine, and wait for all movement to stop before unclogging or working on snow thrower.

Hand contact with the rotating impeller is the most common cause of injury associated with snow throwers. Never use your hand to clean out the discharge chute.

Keep hands and feet away from auger and impeller.

SAFETY ALERTS

Look for these symbols to point out important safety precautions. They mean:

Attention!

Personal Safety Is Involved!

Become Alert!

Obey The Message!

The safety alert symbols above and signal words below are used on decals and in this manual. Read and understand all safety messages.

DANGER: IMMINENTLY HAZARDOUS SITUATION! If not avoided, WILL RESULT in death or serious injury.

WARNING: POTENTIALLY HAZARDOUS SITUATION! If not avoided, COULD RESULT in death or serious injury.

CAUTION: POTENTIALLY HAZARDOUS SITUATION! If not avoided, MAY RESULT in minor or moderate injury. It may also be used to alert against unsafe practices.

NOTATIONS

NOTE: General reference information for proper operation and maintenance practices.

IMPORTANT: Specific procedures or information required to prevent damage to unit or attachment.

PRACTICES AND LAWS

Practice usual and customary safe working precautions, for the benefit of yourself and others. Understand and follow all safety messages. Be alert to unsafe conditions and the possibility of minor, moderate, or serious injury or death. Learn applicable rules and laws in your area. Always follow the practices set forth in this manual.

REQUIRED OPERATOR TRAINING

Original purchaser of this unit was instructed by the seller on safe and proper operation. If unit is to be used by someone other than original purchaser; loaned, rented or sold, ALWAYS provide this manual and any needed safety training before operation.

SAFETY DECALS AND LOCATIONS

ALWAYS replace missing or damaged Safety Decals. Refer to figures below for Safety Decal locations.

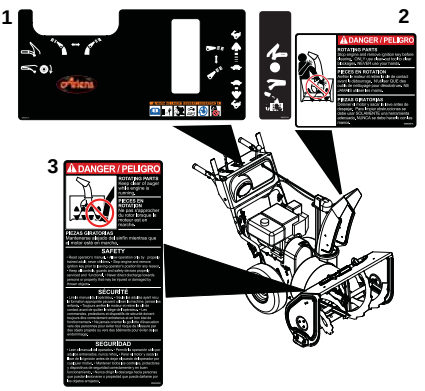

Figure 2 OS7016

1. WARNING!

OL1801

Read Owner/Operator Manual.

https://truckmanualshub.com/

OL4370

Keep people away from unit while operating. Keep children out of work area and under watchful care of a responsible adult.

OL0910

Never direct discharge towards persons or property that may be injured or damaged by thrown objects.

OL4010

Stop engine, remove key, read manual before making any repairs or adjustments.

OL4690

Wear appropriate hearing protection.

ONLY use clean-out tool to clear blockages. NEVER use your hands.

2. DANGER!

OS6610

ROTATING PARTS! ONLY use clean-out tool to clear blockages. NEVER use your hands. **High speed impeller rotates below discharge opening. Wait for all moving parts to stop before removing clogs or servicing.**

3. DANGER!

OS2080

ROTATING PARTS.
Keep clear of auger while engine is running.

- Read Operator's Manual.
- Allow operation only by properly trained adult, never children.
- Stop engine and remove ignition key prior to leaving the operator's position for any reason.
- Keep all controls, guards and safety devices properly serviced and functional.
- Never direct discharge towards persons or property that may be injured or damaged by thrown objects.

SAFETY RULES

Read, understand, and follow all safety practices in Owner/Operator Manual before beginning assembly or operating. Failure to follow instructions could result in personal injury and/or damage to unit.

ALWAYS remove key and/or wire from spark plug before assembly, maintenance or service. Unintentional engine start up can cause death or serious injury.

Complete a walk around inspection of unit and work area to understand:

• Work area • Your unit • All safety decals

ALWAYS check overhead and side clearances carefully before operation. ALWAYS be aware of traffic when operating along streets or curbs.

Keep children and people away. Keep children out of work area and under watchful care of a responsible adult.

NEVER allow children to operate or play on or near unit. Be alert and shut off unit if children enter area.

DO NOT allow adults to operate unit without proper training. Only trained adults may operate unit. Training includes actual operation.

Keep area of operation clear of all toys, pets, and debris. Thrown objects can cause injury.

Check for weak spots on docks, ramps or floors. Avoid uneven work areas and rough terrain. Stay alert for hidden hazards.

https://truckmanualshub.com/

DO NOT operate near drop-offs, ditches, or embankments. Unit can suddenly turn over if a wheel is over the edge of a cliff or ditch, or if an edge caves in.

Falling snow, fog, etc. can reduce vision and cause an accident. Operate unit only when there is good visibility and light.

NEVER operate unit after or during the use of medication, drugs or alcohol. Safe operation requires your complete and unimpaired attention at all times.

NEVER allow anyone to operate this unit when their alertness or coordination is impaired.

DO NOT operate unit without wearing adequate winter outer garments. Wear adequate safety gear, including safety glasses with side shields, and protective gloves. Wear proper footwear to improve footing on slippery surfaces.

DO NOT wear loose clothing or jewelry and tie back hair that may get caught in rotating parts.

Protect eyes, face and head from objects that may be thrown from unit. Wear appropriate hearing protection.

Avoid sharp edges. Sharp edges can cut. Moving parts can cut off fingers or a hand.

ALWAYS keep hands and feet away from all rotating parts during operation. Rotating parts can cut off body parts.

NEVER place your hands or any part of your body or clothing inside or near any moving part while unit is running.

ALWAYS keep hands away from all pinch points.

DO NOT touch unit parts which might be hot from operation. Allow parts to cool before attempting to maintain, adjust or service.

Never direct discharge towards persons or property that may be injured or damaged by thrown objects. Use extreme caution on gravel surfaces. Stay alert for hidden hazards or traffic. Adjust Runners so Scraper Blade does not contact gravel.

DO NOT throw snow any higher than necessary.

Deflected materials can cause injury and property damage.

Always stand clear of the discharge area when operating this unit.

Fumes from engine exhaust can cause injury or death. DO NOT run engine in an enclosed area. Always provide good ventilation.

ALWAYS disengage attachment, stop unit and engine, remove key and allow moving parts to stop before leaving operator's position.

ROTATING AUGER CAN CAUSE SERIOUS INJURY. NEVER ATTEMPT TO UNCLOG OR CLEAN UNIT WHILE ENGINE IS RUNNING.

Read, understand, and follow all instructions in the manual and on the machine before starting.

Understand:

- How to operate all controls.
- The functions of all controls.
- How to STOP in an emergency.

Before starting engine, disengage control(s).

Use only approved extension cords and receptacles when starting units equipped with electric starter. DO NOT connect electric starter cord to any wiring system that is not a three-wire grounded system.

ALWAYS allow unit and engine to adjust to outdoor temperatures before clearing snow.

DO NOT overload the machine capacity by attempting to operate or to clear snow at too fast a rate.

Slow down and turn corners slowly.

Do not operate in reverse unless absolutely necessary. ALWAYS back up slowly. Always look down and behind before and while backing.

Disengage attachment drive when traveling from one work area to another.

Abnormal Vibrations are a warning of trouble. Striking a foreign object can damage unit. Immediately stop unit and engine. Remove key and wait for all moving parts to stop. Remove wire from spark plug. Inspect unit and make any necessary repairs before restart.

Before cleaning, removing clogs or making any inspections, repairs, etc.: disengage clutch(es), stop unit and engine, remove key, allow moving parts to stop. Allow hot parts to cool.

Run unit a few minutes after clearing snow to prevent freeze-up of attachment.

Disengage attachment when not in use. Disengage all clutches before starting engine. Adjust runners to clear gravel or crushed rock surfaces safely.

Never leave a running unit unattended. ALWAYS shut off engine before leaving unit. ALWAYS remove key to prevent unauthorized use.

Never carry passengers.

https://truckmanualshub.com/

Check clutch and brake operation frequently. Adjust and service as required. All motion of drive wheels and auger/impeller must stop quickly when control levers are released.

DO NOT operate on steep slopes. DO NOT clear snow across the face of slopes. Keep all movement on slopes slow and gradual. DO NOT make sudden changes in speed or direction. Use a slow speed to avoid stops or shifts on slopes. Avoid starting or stopping on a slope.

DO NOT park unit on a slope unless absolutely necessary. When parking on a slope always block the wheels.

ALWAYS shut off engine, remove key, and close fuel shut-off valve or drain fuel when transporting unit on a truck or trailer.

Use extra care when loading or unloading unit onto trailer or truck.

Secure unit chassis to transport vehicle. NEVER secure from rods or linkages that could be damaged.

DO NOT transport machine while engine is running.

Keep unit free of ice or other debris. Clean up oil or fuel spills.

This product is equipped with an internal combustion type engine. DO NOT use unit on or near any unimproved, forest-covered or brush covered land unless exhaust system is equipped with a spark arrester meeting applicable local, state or federal laws. A spark arrester, if it is used, must be maintained in effective working order by operator.

Fuel is highly flammable and its vapors are explosive. Handle with care. Use an approved fuel container.

NO smoking, NO sparks, NO flames. ALWAYS allow engine to cool before servicing.

NEVER fill fuel tank when engine is running or hot from operation.

NEVER fill or drain fuel tank indoors.

Replace fuel cap securely and clean up spilled fuel.

Never fill containers inside a vehicle or on a truck or trailer bed with a plastic liner. Always place containers on the ground away from your vehicle before filling.

When practical, remove gas-powered equipment from the truck or trailer and refuel it on the ground. If this is not possible, then refuel such equipment on a trailer with a portable container, rather than from a gasoline dispenser nozzle.

Keep the nozzle in contact with the rim of the fuel tank or container opening at all times until fueling is complete. Do not use a nozzle lock-open device.

If fuel is spilled on clothing, change clothing immediately.

Before tipping unit up onto housing, remove fuel so no spills will occur. Ensure unit is secure and will not tip over during maintenance.

ALWAYS keep protective structures, guards, and panels in good repair, in place and securely fastened. NEVER modify or remove safety devices.

DO NOT change engine governor settings or over-speed engine.

Fumes from engine exhaust can cause injury or death. DO NOT run engine in an enclosed area. Always provide good ventilation.

ALWAYS maintain unit in safe operating condition. Damaged or worn out muffler can cause fire or explosion.

Keep all hardware properly tightened. Check shear bolts frequently.

Maintain or replace safety and instruction labels, as necessary.

NEVER store unit with fuel in fuel tank, inside a building where any ignition sources are present such as hot water heaters, space heaters, or clothes dryers. Allow the engine to cool before storing in any enclosure.

Shut off fuel and allow engine to cool completely before storing in closed area or covering unit.

For extended storage, clean unit thoroughly. See Engine Manual for proper storage.

Use only attachments or accessories designed for your unit.

Check components frequently. If worn or damaged, replace with manufacturer’s recommended parts.

https://truckmanualshub.com/

ASSEMBLY

WARNING: AVOID INJURY. Read and understand the entire *Safety* section before proceeding.

WARNING: Dropping or tipping over boxed unit could result in personal injury or damage to unit.

PACKAGE CONTENTS

921004, 006, 007, 008, 009

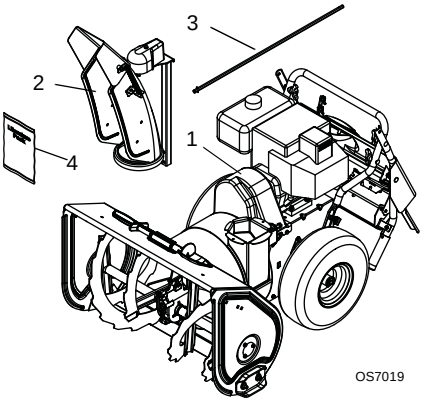

1. Sno-Thro Unit
2. Discharge Chute
3. Chute Rod
4. Literature Pack with Extra Shear Bolts

Figure 3

921005

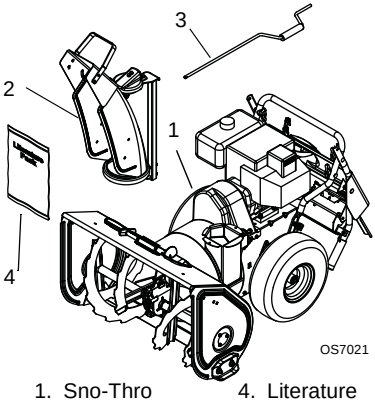

1. Sno-Thro Unit
2. Discharge Chute
3. Chute Rod
4. Literature Pack with Extra Shear Bolts

Figure 4

ASSEMBLY

Tools Required:

- Pliers
- Open-End Wrenches: 3/8, 7/16, 1/2, 9/16 in. and/or Adjustable Wrench
- Tire Gauge

Unfold Handlebar (Figure 5)

1. Remove the lower and loosen the upper wing knobs on the handlebar assembly.
2. Loosen the wing nuts on the shift rod.
3. Put the speed selector lever in the first forward position.
4. Rotate the handlebars into operating position.
5. Install and tighten all wing knobs and wing nuts on the handlebar assembly and shift rod.

https://truckmanualshub.com/

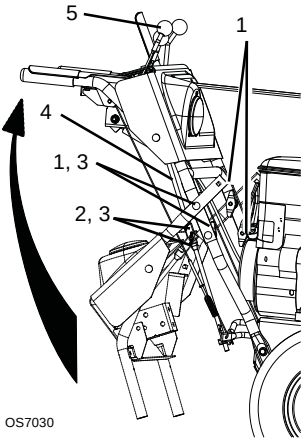

1. Wing Knobs
2. Wing Nut
3. Bolt
4. Shift Rod
5. Speed Selector Lever

Figure 5

Install Discharge Chute and Discharge Chute Crank (921004, 006, 007, 008, 009)

(Figure 6)

1. Grease underside of discharge chute ring (if not already greased).
2. Remove mounting hardware from auger housing.
3. Install discharge chute over opening in the auger housing. Finger tighten the mounting hardware removed in step 2.

NOTE: Leave discharge chute pedestal loose to help install the chute rod and connect it to the control assembly.

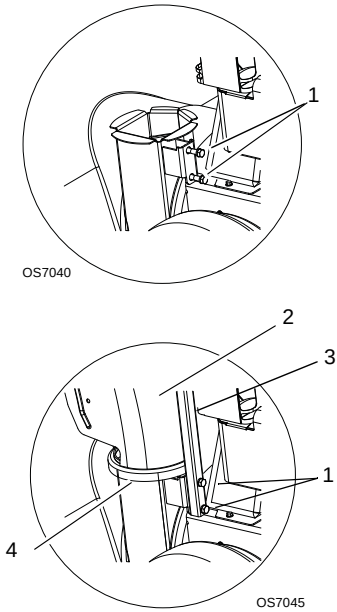

1. Mounting Hardware
2. Discharge Chute
3. Chute Pedestal
4. Discharge Chute Ring

Figure 6

(Figure 7, Figure 8)

4. Remove the cover from the gear assembly on the discharge chute.
5. Release the lock teeth on the gear assembly with your finger and rotate the discharge chute 90° left.
6. Remove and save the hairpin from the control assembly underneath the control panel.

NOTE: Do not remove the pin installed on the chute rod.

NOTE: To ensure the discharge chute follows its full range of travel, make sure the control lever is pushed all the way to the left before installing and pinning the chute rod.

7. Align the holes on the end of the chute rod with the mark on the gear assembly and slide the end without a pin through the gear assembly, through the hook on the chute lock cable and into the hex hole in the control assembly.

IMPORTANT: The hook will prevent the control cable from contacting the engine or muffler guard.

https://truckmanualshub.com/

NOTE: After the chute rod has been inserted through the hex hole in the control assembly, placing the unit in the service position (see *Service Position* on page 22) will ease alignment and installation of the hair pin.

8. Secure the chute rod to the control assembly with the hair pin removed in step 6 using the end hole location as shown in Figure 8. Insert the hair pin with the loop end to the left of the chute rod so the control assembly follows a full range of travel.

921004, 006, 007, 008, 009

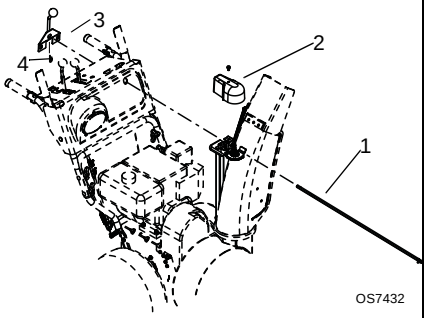

1. Chute Rod
2. Gear Cover
3. Control Assembly
4. Hair Pin

Figure 7

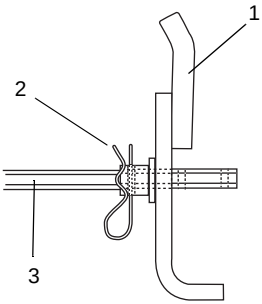

1. Chute Control Assembly
2. Hair Pin
3. Chute Rod

Figure 8

OS7157

9. Insert the chute lock cable fitting into the bracket on the chute pedestal, and then connect the chute lock cable to the lock teeth by fitting the cable ball end into the slot on the lock teeth. See Figure 9.

NOTE: Press down on lock teeth with your finger to align the cable ball end with the slot (Figure 9).

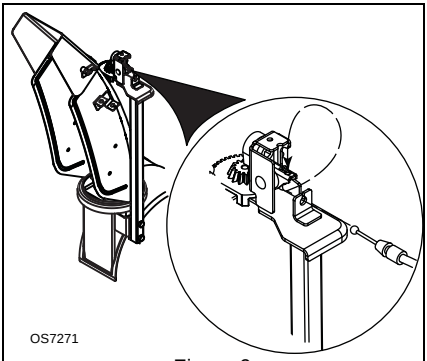

Figure 9

10. Replace the gear cover removed in step 4.

IMPORTANT: Rotate the discharge chute to the left when tightening the pedestal hardware to ensure clearance between the discharge chute and the belt cover.

11. Tighten pedestal hardware to 15 – 31 lbf-ft (20 – 42 N•m).
12. Make sure the discharge chute rotates left and right when you push the discharge chute control lever left and right.

Install Discharge Chute and Discharge Chute Crank (921005)

(Figure 10)

1. Grease underside of discharge chute ring (if not already greased).
2. Remove mounting hardware from auger housing.
3. Install discharge chute over opening in the auger housing. Finger tighten the mounting hardware removed in step 2.

NOTE: Leave discharge chute pedestal loose to help install the chute rod.

https://truckmanualshub.com/

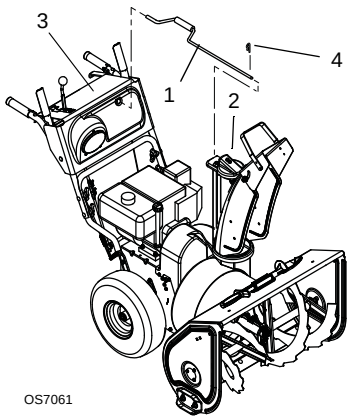

1. Chute Rod
2. Gear Cover
3. Control Panel
4. Spring Pin Clip

Figure 10

4. Insert the short end of the chute rod into the hole in the front of the control panel.
5. Connect the chute crank to the pinion gear on chute with spring clip.

IMPORTANT: Rotate the discharge chute to the left when tightening the pedestal hardware to ensure clearance between the discharge chute and the belt cover.

6. Tighten pedestal hardware to 15 – 31 lbf-ft (20 – 42 N•m).

Deflector Remote (921004, 006, 007, 008, 009)

(Figure 11)

Connect the cable end to the cable anchor on the discharge deflector before clipping the cable to the cable bracket on the discharge chute.

1. Route deflector remote cable along the left side of the chute pedestal.
2. Insert the barrel on the cable end into the bracket on left side of chute deflector (Figure 11).
3. Hold seal out of the way while routing the cable through the bracket on the left side of the discharge chute, and then push the cable fitting into the bracket.
4. Push the seal securely over the end of the cable fitting to prevent water from entering the cable.
5. Check deflector travel. Adjust nut on cable end under handlebar to obtain full travel, if necessary. (see *Deflector Remote (921004, 006, 007, 008, 009)* on page 25).

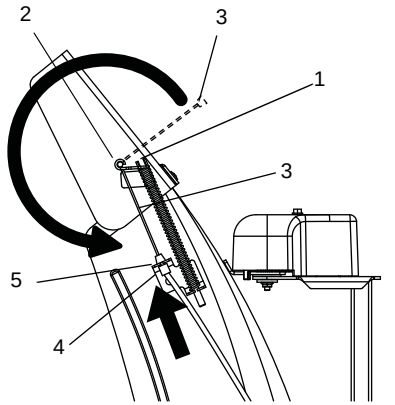

1. Cable Anchor
2. Cable End
3. Deflector Cable
4. Cable Fitting
5. Cable Bracket

Figure 11

Check Function of Dual Handle Interlock

Without the engine running, press down (engage) both clutch levers. Release attachment clutch lever. Attachment clutch should remain engaged until traction clutch lever is released, then both clutches *must* disengage. If they do not, contact your Dealer for repairs.

Check Tire Pressure (921004, 005, 006)

Check tire pressure and adjust to the pressure listed on tire sidewall.

https://truckmanualshub.com/

CAUTION: Avoid injury! Explosive separation of tire and rim parts is possible when they are serviced incorrectly:

- Do not attempt to mount a tire without the proper equipment and experience to perform the job.
- Do not inflate the tires above the recommended pressure.
- Do not weld or heat a wheel and tire assembly. Heat can cause an increase in air pressure resulting in an explosion. Welding can structurally weaken or deform the wheel.
- Do not stand in front or over the tire assembly when inflating. Use a clip-on chuck and extension hose long enough to allow you to stand to one side.

Check Track Tension (921007, 008, 009)

Check tracking of unit and tension of tracks (see *Track Tension Adjustment (921007, 008, 009)* on page 34).

Check Auger Gearcase Oil

Check oil level in auger gearcase (see *Check Auger Gearcase* on page 23).

Check Engine Crankcase Oil

IMPORTANT: The engine is shipped with 5W-30 oil in crankcase. Refer to Engine Manual for detailed instructions.

Fill Engine Fuel Tank

Refer to Engine Manual for proper fuel type and tank capacity.

Check Function of all Controls

Ensure unit runs and performs properly. Refer to *OPERATION* on page 16.

Run-in Attachment Belt

1. Start unit in a well-ventilated area according to *Starting and Shut Off* on page 20.
2. Engage attachment clutch lever and run attachment for about 15 minutes.
3. Stop unit, wait for all moving parts to stop, and remove spark plug wire.
4. Adjust belt finger, if necessary. See *Check Belt Finger Clearance* on page 30.
5. Adjust clutch idler according to *Attachment Clutch/Brake Adjustment* on page 28.

https://truckmanualshub.com/

CONTROLS AND FEATURES

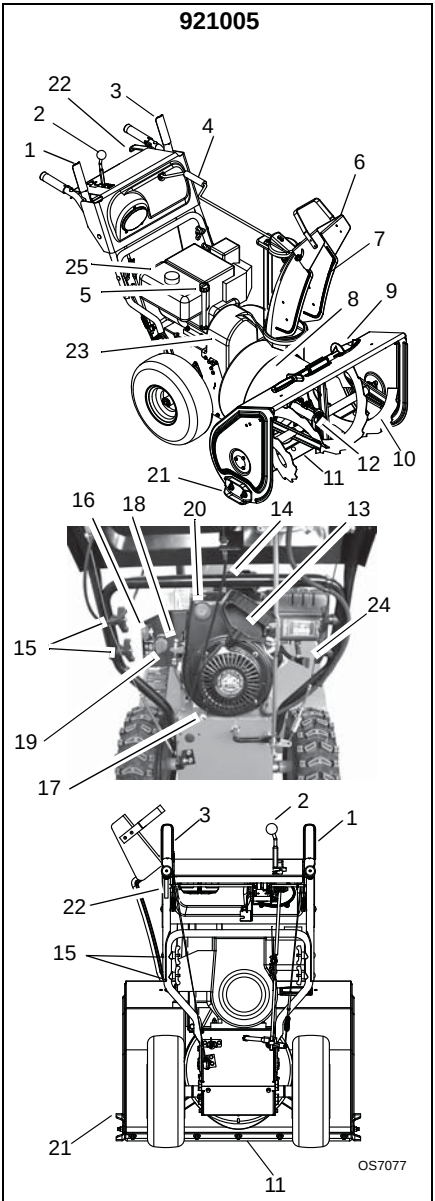

Figure 12

1. Attachment Clutch Lever
2. Speed Selector
3. Traction Drive Clutch Lever
4. Chute Control
5. Oil Fill/Dipstick
6. Discharge Chute Deflector
7. Discharge Chute
8. Impeller
9. Clean-Out Tool
10. Auger
11. Scraper Blade
12. Auger Gearcase
13. Recoil Starter Handle
14. Electric Starter
15. Wing Knobs
16. Ignition Key, Push-Pull
17. Oil Drain Plug
18. Throttle (Engine Stop)
19. Choke Control Knob
20. Primer Bulb
21. Runner
22. Remote Axle Lock Control
23. Belt Cover
24. Fuel Shut-Off Valve
25. Fuel Tank and Cap

https://truckmanualshub.com/

921004, 006

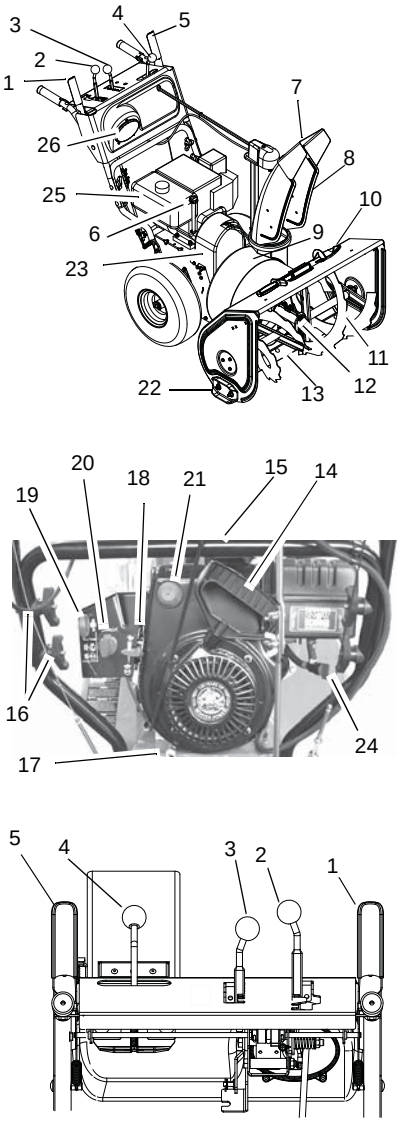

Figure 13

OS7090
OS7080
OS7075

1. Attachment Clutch Lever
2. Speed Selector
3. Deflector Remote Control
4. Chute Control
5. Traction Drive Clutch Lever
6. Oil Fill/Dipstick
7. Discharge Chute Deflector
8. Discharge Chute
9. Impeller
10. Clean-Out Tool
11. Auger
12. Auger Gearcase
13. Scraper Blade
14. Recoil Starter Handle
15. Electric Starter
16. Wing Knobs
17. Oil Drain Plug
18. Throttle (Engine Stop)
19. Ignition Key, Push-Pull
20. Choke Control Knob
21. Primer Bulb
22. Runner
23. Belt Cover
24. Fuel Shut-Off Valve
25. Fuel Tank and Cap
26. Headlight

https://truckmanualshub.com/

921007, 008, 009

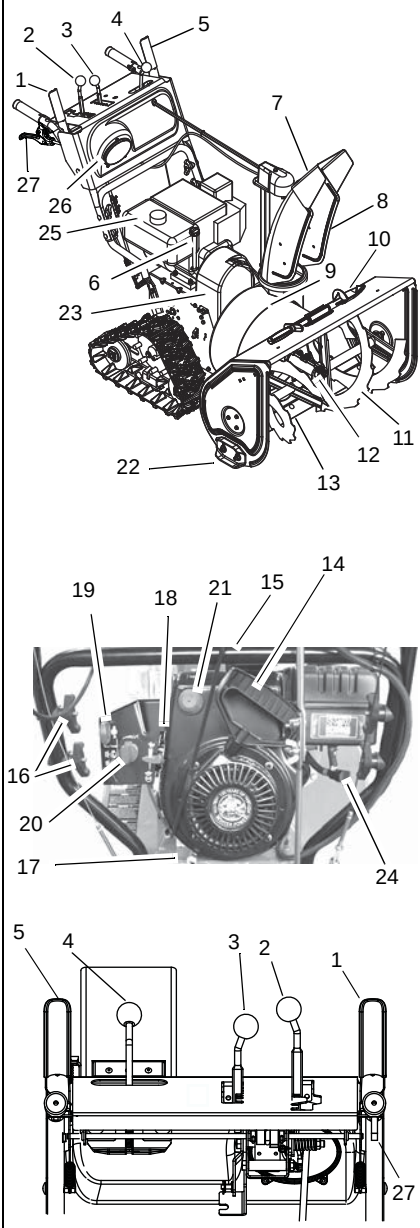

Figure 14

OS7090
OS7080
OS7075

1. Attachment Clutch Lever
2. Speed Selector
3. Deflector Remote Control
4. Chute Control
5. Traction Drive Clutch Lever
6. Oil Fill/Dipstick
7. Discharge Chute Deflector
8. Discharge Chute
9. Impeller
10. Clean-Out Tool
11. Auger
12. Auger Gearcase
13. Scraper Blade
14. Recoil Starter Handle
15. Electric Starter
16. Wing Knobs
17. Oil Drain Plug
18. Throttle (Engine Stop)
19. Ignition Key, Push-Pull
20. Choke Control Knob
21. Primer Bulb
22. Runner
23. Belt Cover
24. Fuel Shut-Off Valve
25. Fuel Tank and Cap
26. Headlight
27. Height Adjust Trigger

https://truckmanualshub.com/

WARNING: AVOID INJURY. Read and understand the entire *Safety* section before proceeding.

WARNING: To avoid injury to hands and feet, always disengage clutches, shut off engine, and wait for all movement to stop before unclogging or working on snow thrower.

Keep hands and feet away from auger and impeller.

CONTROLS AND FEATURES

See *CONTROLS and FEATURES* on page 13 for all Controls and Features locations.

Dual Handle Interlock

When Attachment Clutch and then Traction Drive Clutch are engaged, the Attachment Clutch will remain engaged (lever down) if released. To stop attachment, release Traction Drive Clutch and both clutches will disengage.

Traction Drive Clutch - Left Hand Lever

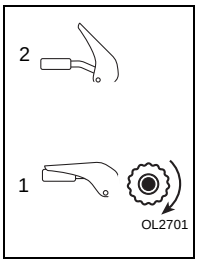

Squeeze the Traction Drive Clutch Lever against the Handlebar (1) to engage wheel drive for propelling unit. Forward speed will vary according to snow depth and moisture content.

Release lever (2) to stop movement.

NOTE: When traveling to or from the area to be cleared, press down on the handlebars enough to raise the front of the unit slightly off the surface. Engage the traction drive clutch without engaging the attachment drive clutch.

Attachment Clutch - Right Hand Lever

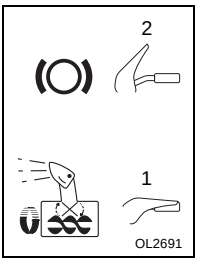

Squeeze Attachment Clutch Lever against handlebar (1) to engage attachment. Release both clutch levers (2) to disengage power and apply brake to attachment.

IMPORTANT: If the belt squeals when the attachment clutch lever is engaged, the impeller may be frozen in the auger housing. Immediately release the attachment clutch lever and move the unit into a heated area to thaw.

NOTE: If belt squeals when impeller turns freely, see *Attachment Clutch/Brake Adjustment* on page 28.

Ignition Switch (Push/Pull Safety Key)

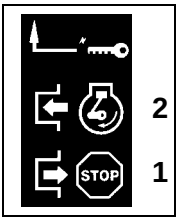

Key Switch has two positions:

1. “Stop” - pulled out
2. “Run” - pushed in

NOTE: DO NOT twist key after it is inserted.

Primer Bulb

Pushing the primer bulb in adds fuel for easier engine start. Refer to *Starting and Shut Off* on page 20.

https://truckmanualshub.com/

Speed Selector

Position the Speed Selector in the appropriate speed notch to control forward and reverse travel.

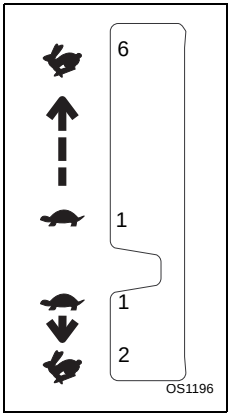

Forward:

(6) Fastest

(1) Slowest

Reverse:

(1) Slow

(2) Fast

IMPORTANT: DO NOT change motion from forward to reverse with clutch engaged. Forward speed can be changed without declutching.

Choke Control Knob

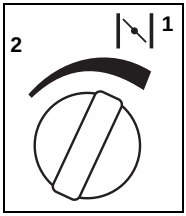

1.Choke Closed position: chokes off air to engine for easier start.

2.Choke Open position: allows for normal operation.

IMPORTANT: Gradually open choke after engine starts.

Throttle

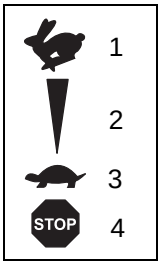

The throttle controls the engine speed. To increase or decrease the engine speed, adjust to:

1. Fast (normal or warm starts)
2. Part-Throttle
3. Slow (cold weather starts)
4. Stop (engine is off)

Electric Starter

The electric starter will start a properly choked and cranked engine when the starter button is pushed. Refer to *Starting and Shut Off* on page 20.

Recoil Starter Handle

When pulled, handle will turn engine over.

IMPORTANT: DO NOT let handle snap back against starter.

Snow Clean-Out Tool

(Figure 15)

WARNING: Hand contact with the rotating impeller is the most common cause of injury associated with snow throwers. Never use your hand to clean out the discharge chute.

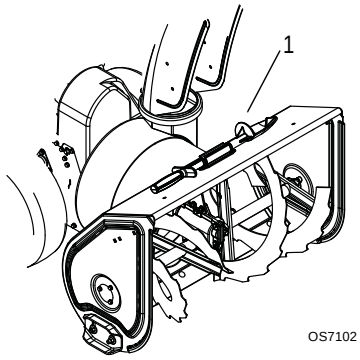

Figure 15

To clear the discharge chute:

1. Shut off the engine.
2. Wait 10 seconds and make sure impeller blades have stopped rotating.
3. Remove the snow clean-out tool (1) from the auger housing and use it to remove the clog from the discharge chute.
4. Replace the snow clean-out tool on the auger housing.

Deflector Remote (921004, 006, 007, 008, 009)

Place deflector into position before operation. DO NOT throw snow any higher than necessary.

Place deflector remote in a forward notch to throw snow lower. Place deflector remote in a rearward notch to throw snow higher.

Discharge Deflector (921005)

ALWAYS position discharge chute deflector at a safe angle before starting engine. DO NOT throw snow any higher than necessary.

1. Push deflector handle forward or down to throw snow lower.
2. Pull deflector handle up or to the rear to throw snow higher (Figure 16).

https://truckmanualshub.com/

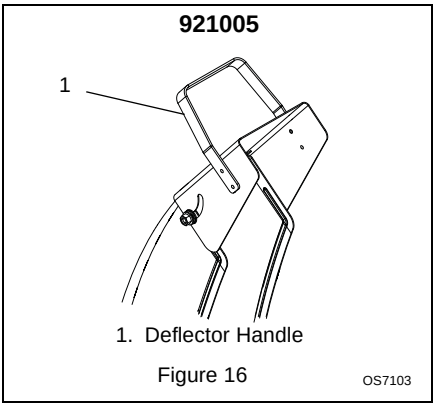

1. Deflector Handle

Figure 16

Discharge Chute

Discharge chute rotates 200°.

ALWAYS position discharge chute in safe direction and angle, away from operator and bystanders, before starting engine.

Discharge Chute Control (921004, 006, 007, 008, 009)

IMPORTANT: If chute does not stay in set position, adjust as directed in *SERVICE AND ADJUSTMENTS* on page 24, or repair before operation.

Rotate the Chute with Discharge Chute Control.

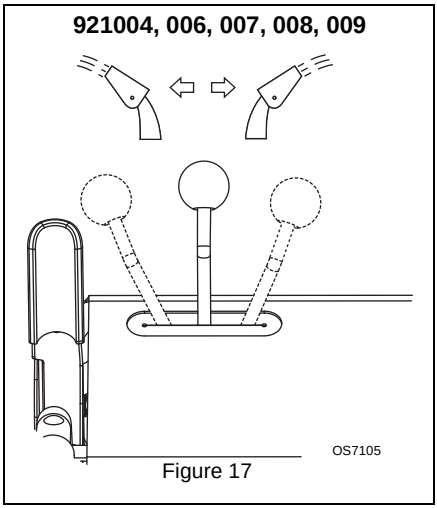

Figure 17

IMPORTANT: DO NOT force frozen chute controls. If frozen, take to warm place until controls are free.

Discharge Chute Crank (921005)

IMPORTANT: If chute does not stay in set position, adjust as directed in *SERVICE AND ADJUSTMENTS* on page 24, or repair before operation.

Rotate the Chute with Discharge Chute Crank.

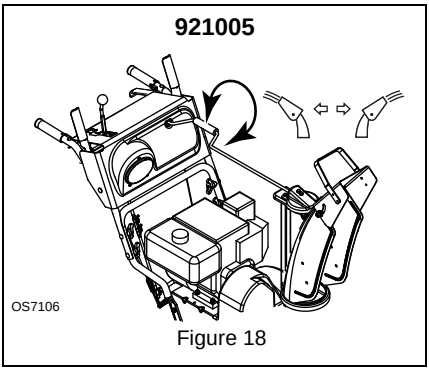

Figure 18

IMPORTANT: DO NOT force frozen chute controls. If frozen, take to warm place until controls are free.

Remote Wheel Lock (921005)

Squeeze and release the remote wheel lock control to lock the left wheel for better traction when throwing snow or to unlock the left wheel for easier steering.

NOTE: The wheel lock will not release when under load. Do not unlock the wheel while turning. If the wheel lock will not release, turn the unit slightly left or right to relieve axle load and release the axle lock.

If remote wheel lock does not lock or unlock properly, adjust or repair before operation (see *Remote Wheel Lock (921005)* on page 25).

Scraper Blade

The scraper blade allows the back of the housing to keep better contact with the surface being cleared. It also prevents damage to the housing from normal wear.

IMPORTANT: DO NOT allow Scraper Blade to wear too far or Auger/Impeller housing will become damaged.

Runners

The runners control the distance between the scraper blade and the ground. Adjust runners equally to keep blade level with the ground. Refer to *Pre-Start* on page 19 for recommended settings.

https://truckmanualshub.com/

Track Angle (921007, 008, 009)

(Figure 19)

The track angle can be adjusted to position the auger housing for level clearing, deep cutting or transport.

Squeeze the handlebar trigger and press down on the handlebars to move the auger housing into an up position. Release the trigger to hold the position.

Lift up on the handlebars and squeeze and release the handlebar trigger to move the auger housing into a down position.

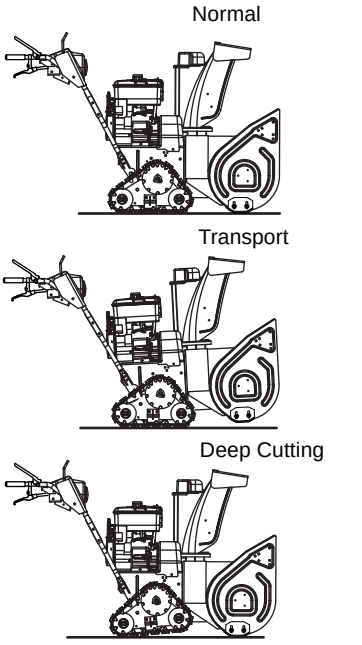

Figure 19

FILLING FUEL TANK

WARNING: AVOID INJURY. Read and understand the entire *Safety* section before proceeding.

Fuel Shut-Off Valve

IMPORTANT: The fuel shut-off valve MUST be in the closed position prior to transporting the unit.

The fuel shut-off valve has two positions:

Closed Position: Use this position to service, transport, or store the unit.

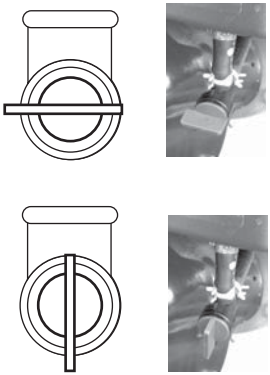

Open Position: Use this position to run the unit.

Figure 20

To add fuel to fuel tank:

1. ALWAYS place unit in open or well-ventilated area.
2. Stop engine and allow to cool.
3. Clean Fuel Cap and surrounding area to prevent dirt from entering Fuel Tank.
4. Remove Cap.

IMPORTANT: DO NOT use gasohol or gasoline containing alcohol. See Engine Manual for correct type and grade of fuel.

5. Fill fuel tank to within 1/2 in. (1.2 cm) below bottom of filler neck with unleaded gasoline.

NOTE: Tank capacity is 1 gallon (3.8 liters).

6. Replace Fuel Cap and tighten.
7. ALWAYS clean up any spilled fuel.

PRE-START

1. Frozen Impeller

IMPORTANT: Before starting engine, check impeller to be sure it is not frozen.

To check impeller:

1. With ignition key switch in “Stop” position, squeeze Attachment Clutch Lever to Engaged position.
2. Pull Recoil Starter Handle.
3. If Impeller is frozen, (cannot pull Starter Handle) move unit to a heated area and thaw to prevent possible damage.

https://truckmanualshub.com/

2. Check Function of Clutches

If clutches do not engage or disengage properly, adjust or repair before operation. See *Attachment Clutch/Brake Adjustment* on page 28 and *Traction Drive Clutch Adjustment* on page 30.

3. Check Dual Handle Interlock

Without the engine running, press down (engage) both clutch levers. Release attachment clutch lever. Attachment clutch should remain engaged until traction clutch lever is released, then both clutches *must* disengage.

If clutches do not engage or disengage properly, adjust or repair before operation (see *Attachment Clutch/Brake Adjustment* on page 28 and *Traction Drive Clutch Adjustment* on page 30).

4. Check Remote Wheel Lock (921005)

Squeeze and release the remote wheel lock control to lock the left wheel for better traction when throwing snow or to unlock the left wheel for easier steering.

If remote wheel lock does not lock or unlock properly, adjust or repair before operation (see *Remote Wheel Lock (921005)* on page 25).

5. Check Runners

Check and adjust Runners (See *Runners* on page 24). Allow 1/8 in. (3 mm) between scraper blade and hard, smooth surface(s). Allow 1-1/4 in. (30 mm) between scraper blade and uneven or gravel surfaces.

6. Check Engine Fuel & Crankcase Oil

> **WARNING:** AVOID INJURY. Read and understand the entire *Safety* section before proceeding.

Check and add fuel if required. Check that the engine crankcase oil is full using dipstick. Refer to Engine Manual for detailed instructions.

TO STOP IN AN EMERGENCY

Immediately release both control levers to stop unit in an emergency. Stop engine, remove key and wait for all rotating parts to stop before leaving operator's position.

STARTING AND SHUT OFF

> **WARNING:** FAILURE TO FOLLOW INSTRUCTIONS could result in personal injury and/or damage to unit. DO NOT attempt to start your unit at this time. Read entire Owner/Operator Manual and the Engine Manual first.

IMPORTANT: Allow unit and engine to adjust to the outdoor temperature before clearing snow. Before shut-off, run the attachment a few minutes to prevent impeller freeze-up.

NOTE: Try out each control without the engine running to see how it works and what it does.

Manual Start

1. Turn discharge chute straight ahead.
2. Make sure that the traction clutch and attachment drive clutch levers are fully disengaged.
3. Push Primer Bulb 2 or 3 times for cold engine.

NOTE: When temperature is below -15° F (-26° C) additional priming may be needed.

4. If engine is cold, apply choke. See Engine Manual for detailed instructions.

NOTE: A warm engine requires less choking than a cold engine.

5. Set throttle to proper starting position.
6. Insert key into ignition switch on engine and push into "Run" position. DO NOT twist key after it is inserted.
7. Grasp starter handle and pull rope out slowly until it pulls harder. Let rope rewind slowly.
8. Pull rope with a rapid continuous full arm stroke. Let rope rewind slowly.

IMPORTANT: DO NOT let Starter Handle snap against Starter.

9. Repeat steps 7 and 8 until engine starts. (If engine does not start, refer to *TROUBLESHOOTING* on page 36.)
10. Adjust choke as needed.
11. Set throttle to Part Throttle or Slow position for adaptation to outside temperature or travel. Set throttle to Fast position for normal operation.

Electric Start (120V)

1. Connect extension cord to starter.

IMPORTANT: Prevent damage to unit. Know voltage of your starter and only use matching outlets.

2. Plug extension cord into 120V 3-wire, grounded outlet.
3. Turn discharge chute straight ahead.

https://truckmanualshub.com/

4. Make sure that the traction clutch and attachment drive clutch levers are fully disengaged.
5. Push Primer Bulb 2 or 3 times for cold engine.

NOTE: When temperature is below -15° F (-26° C) additional priming may be needed.

6. Insert key into ignition switch on engine and push into "Run" position. DO NOT twist key after it is inserted.
7. If engine is cold, apply choke. A warm engine requires less choking than a cold engine. See Engine Manual for detailed instructions.
8. Set throttle to proper starting position.
9. Press starter button on engine until engine starts.

IMPORTANT: DO NOT operate starter more than 15 seconds per minute, as overheating and damage can occur. (If engine does not start, refer to *TROUBLESHOOTING* on page 36.)

10. Adjust choke as needed.
11. Disconnect power cord from outlet, then starter.
12. Set throttle to Part Throttle or Slow position for adaptation to outside temperature or travel. Set throttle to Fast position for normal operation.

Shut Off

1. Release Traction Drive Clutch Lever and allow unit to come to a complete stop.
2. Run Impeller a few minutes after use to prevent freeze-up of Impeller.
3. Release Attachment Clutch Lever and wait for all moving parts to come to a complete stop.
4. Move Throttle to the “Stop” position.
5. Remove key.

SNOW REMOVAL

IMPORTANT: Allow unit and engine to adjust to the outdoor temperature before clearing snow.

NOTE: Attachment clutch should be engaged before wheel drive clutch when throwing snow.

1. Select Speed Control position and direction.
2. Engage Attachment Clutch - Right Hand Lever.
3. Engage Traction Drive Clutch - Left Hand Lever.

IMPORTANT: DO NOT overload unit capacity by attempting to clear snow at too fast a rate. Use slow speed to clear deep or hard packed snow.

Tips for Operation

Snow is best removed as soon as possible after snow fall.

To clear an area, run unit in an overlapping series of paths. For large areas, start in the middle and throw snow to each side, so snow is not cleared more than once.

ALWAYS direct snow away from area to be cleared and with direction of the wind.

TRAVELING

To travel from one work area to another:

1. Set Throttle to Slow or Part-Throttle position.
2. 921004, 005, 006: Press down on handlebars enough to raise front of unit slightly off surface. 921007, 008, 009: Place the unit in the transport position (see *Track Angle (921007, 008, 009)* on page 19).
3. Engage wheel or track drive clutch without engaging attachment drive clutch.

TRANSPORT

ALWAYS shut off engine, remove key, and close fuel shut-off valve when transporting unit on a truck or trailer.

Use extra care when loading or unloading unit onto trailer or truck.

Secure unit chassis to transport vehicle. NEVER secure from rods or linkages that could be damaged.

DO NOT transport machine while engine is running.

https://truckmanualshub.com/

MAINTENANCE

Ariens Dealers will provide any service or adjustments which may be required to keep your unit operating at peak efficiency. Should engine service be required, contact an Ariens dealer or an authorized engine manufacturer's service center.

WARNING: AVOID INJURY. Read and understand the entire *Safety* section before proceeding.

SERVICE POSITION

WARNING: Before tipping unit up onto housing, remove fuel so no spills will occur. Ensure unit is secure and will not tip over during maintenance.

Place unit on a flat level surface. Tip unit forward onto front of auger housing for service. Ensure unit is secure and will not tip over. Strap and clamp onto bench if needed.

Service Position

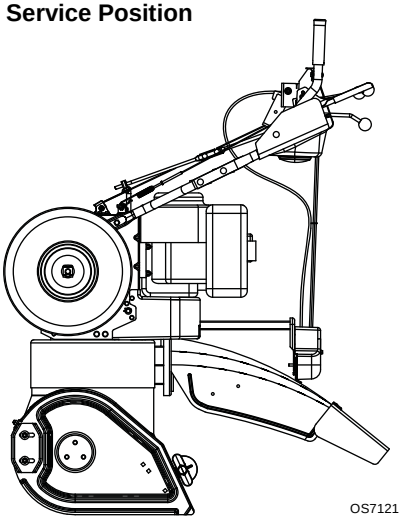

Figure 21

MAINTENANCE SCHEDULE

The chart below shows the recommended maintenance schedule that should be performed on a regular basis. More frequent service may be required.

MAINTENANCE SCHEDULE

Service Performed	Each Use	Every 5 hrs.	Every 25 hrs.	Yearly
Check Dual Handle Interlock	•			
Check Fasteners	•			
Check Clutch Operation	•			
Check Clutch Spring Adjustments		*	•	
Clean Engine	•			
Check Engine Oil	•	•		
Change Engine Oil		**	**	•
Check Tire Pressure			•	
Check Auger Gearcase			•	•
General Lubrication			•	•

* After first five hours of operation.

** After first two hours of operation, thereafter every 25 hours.

CHECK DUAL HANDLE INTERLOCK

Without the engine running, press down (engage) both clutch levers. Release attachment clutch lever. Attachment clutch should remain engaged until traction clutch lever is released, then both clutches *must* disengage.

CHECK FASTENERS

Make sure all hardware is tightened properly.

CHECK CLUTCH OPERATION

Auger / impeller must stop within 5 seconds when attachment clutch/impeller brake lever is released.

Wheels must stop quickly when traction drive clutch lever is released.

https://truckmanualshub.com/

If clutches do not engage or disengage properly, adjust or repair before operation. See *Attachment Clutch/Brake Adjustment* on page 28 and *Traction Drive Clutch Adjustment* on page 30.

CLEAN ENGINE

Refer to Engine Manual for detailed instructions.

CHECK ENGINE OIL

The engine crankcase oil should be checked every 5 hours of operation. Oil level MUST be maintained in safe operating range on dipstick at all times or engine damage will result (See Engine Manual).

Park unit on a level surface. Refer to Engine Manual for detailed instructions.

CHANGE ENGINE OIL

Change oil after first 2 hours of operation, thereafter change oil every 25 hours (more often if required). Refer to Engine Manual for detailed instructions.

Run engine just prior to changing oil. Warm oil will flow more freely and carry away more contamination. Remove the oil drain plug from the rear of the unit and tip the unit back to help drain all the oil.

CHECK TIRE PRESSURE (921004, 005, 006)

Keep tires at pressure listed on the tire sidewall. See *Check Tire Pressure (921004, 005, 006)* on page 11.

CHECK AUGER GEARCASE

IMPORTANT: Proper oil level must be maintained.

Gear cases are filled to the correct level at the factory. Unless there is evidence of leakage, no additional lubricant should be required. Check oil level each season or every 25 hours of operation.

To ensure adequate lubricant level:

1. Remove filler plug (Figure 22). Lubricant must be at least up to bottom of lubricant filler hole with unit resting on a level-surface.
2. Add lubricant if required. Allow oil to drain to level of plug and replace plug.

IMPORTANT: Use only Ariens special gear lubricant L-2 (Part Number 00008000). Gearcase filler plug may require an application of Loc-Tite® 565 thread sealant with repeated servicing.

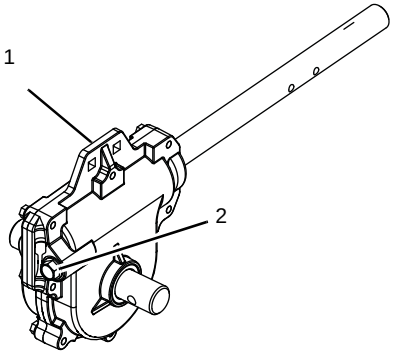

1. Auger Gearcase
2. Oil Fill and Drain Plug

Figure 22 OS7132

https://truckmanualshub.com/

GENERAL LUBRICATION

IMPORTANT: Wipe each fitting clean before and after lubrication. Do not wipe gearcase filler plug; wiping the gearcase filler plug may remove thread sealant and cause leaks.

IMPORTANT: DO NOT allow grease or oil to get on friction disc, friction plate or belts.

NOTE: Apply Ariens Hi-Temp Grease or equivalent to the lubrication fittings. See *SERVICE PARTS* on page 35.

Sno-Thro should be lubricated (Figure 23) at beginning of season or every 25 operating hours.

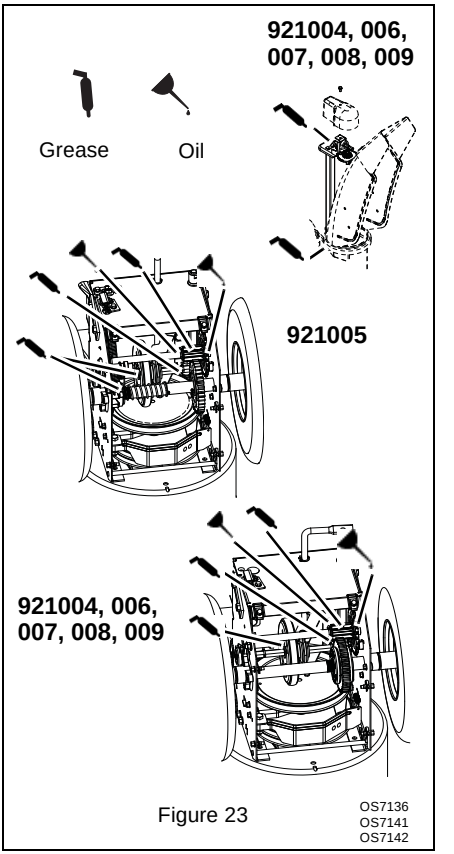

Figure 23

SERVICE AND ADJUSTMENTS

WARNING: AVOID INJURY. Read and understand the entire *Safety* section before proceeding.

SCRAPER BLADE

IMPORTANT: Damage to auger/impeller housing will result if blade wears down too far.

Scraper blade is adjustable to compensate for wear.

To adjust scraper blade:

1. Tip unit back onto handlebar, support housing and loosen nuts retaining blade.
2. Adjust runners to fully raised position (housing closest to ground).
3. Reposition scraper blade flush with runners and tighten lock nuts.

RUNNERS

Runners should be adjusted as conditions require (Figure 24).

1. Position unit on a hard, flat, smooth level surface.
2. Adjust runners by inserting a spacer of desired thickness under center of scraper blade, loosen runner hardware, slide runners to flat surface. Allow 1/8 in. (3 mm) between scraper blade and hard smooth surfaces. Allow 1-1/4 in. (30 mm) between scraper blade and uneven or gravel surfaces. Retighten hardware.

NOTE: Keep housing level by adjusting runners equally.

https://truckmanualshub.com/

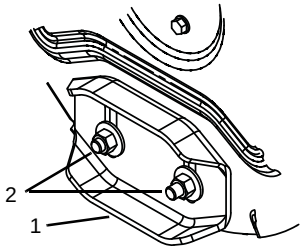

1. Runner
2. Runner Hardware

Figure 24

OS0482

SHEAR BOLTS

IMPORTANT: Use only Ariens shear bolts for replacement. Use of any other type of shear bolt may result in severe damage to unit. See *SERVICE PARTS* on page 35.

Occasionally a foreign object may enter the auger/impeller housing and jam the auger, breaking shear bolts (Figure 25) which secure the auger to the shaft. This allows auger to turn freely on the shaft which may help prevent damage to gear drive.

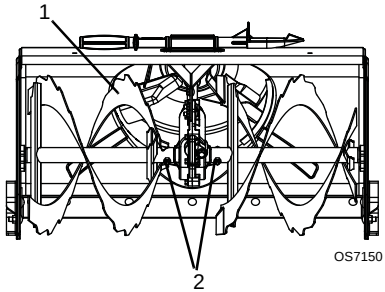

OS7150

1. Auger
2. Shear Bolts

Figure 25

For Replacement:

1. Align shear bolt holes in auger with shear bolt holes in the shaft.
2. Drive shear bolt through hole (if shear bolt was broken this will drive remaining part from shaft).
3. Secure shear bolt with nut.

REMOTE WHEEL LOCK (921005)

If remote wheel lock does not lock or unlock:

1. Place unit in service position (see *Service Position* on page 22).
2. Loosen jam nuts on cable. Make sure the bottom jam nut is loosened enough to remove slack from cable (Figure 26).
3. Pull the cable adjuster to remove slack between the cable adjuster and the extension spring and hold the cable adjuster in position while finger tightening the top jam nut against the bracket. Do not extend the spring or engage the mechanism.
4. Tighten the bottom jam nut.
5. Check function of remote wheel lock. If wheel lock does not function properly, remove bottom cover to check cable slack.
6. Repeat steps 2 – 4 while watching cable to remove slack.
7. Check function of remote wheel lock. If wheel lock does not function properly, take the unit to Dealer for repairs.

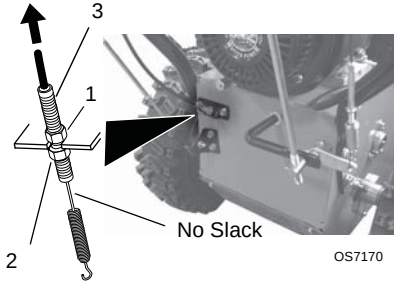

OS7170

1. Top Jam Nut
2. Bottom Jam Nut
3. Cable Adjuster

Figure 26

DEFLECTOR REMOTE (921004, 006, 007, 008, 009)

Deflector must stay in selected position while throwing snow.

If deflector does not stay in set position:

1. Tighten nut beneath control panel to increase pressure on deflector control (Figure 27).

If deflector does not follow full range of travel:

1. Push deflector remote all the way forward.
2. Loosen adjusting nuts on cable support bracket underneath the dash panel (Figure 27).
3. To adjust the deflector lower:

   Slide cable down. Tighten bottom nut.

https://truckmanualshub.com/

4. To adjust deflector higher:
   Slide cable up. Tighten top nut.
5. Check travel and repeat adjustment as necessary.

921004, 006, 007, 008, 009

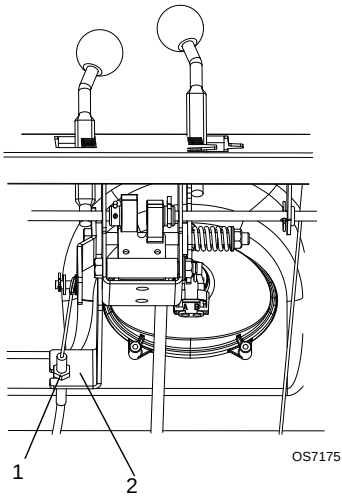

1. Adjusting Nuts
2. Cable Support Bracket

Figure 27

DISCHARGE CHUTE (921004, 006, 007, 008, 009)

If chute does not stay in position while throwing snow or if chute does not rotate freely, adjust the cable under the control panel so the chute lock fingers engage or disengage the locking gear.

If chute does not stay in position:

Loosen the cable by loosening the lower adjustment nut, and then tightening the upper adjustment nut against the bracket (Figure 28).

921004, 006, 007, 008, 009

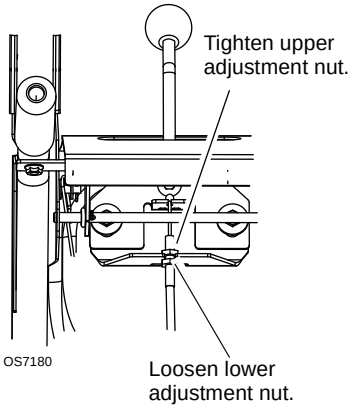

Figure 28

If chute does not rotate freely:

Tighten the cable by loosening the upper adjustment nut, and then tightening the lower adjustment nut against the bracket (Figure 29).

921004, 006, 007, 008, 009

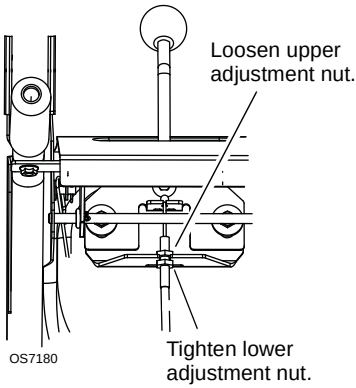

Figure 29

DISCHARGE CHUTE DEFLECTOR (921005)

Deflector must stay in selected position while blowing snow.

To adjust, loosen then retighten hardware to desired deflection drag force (Figure 30).

https://truckmanualshub.com/

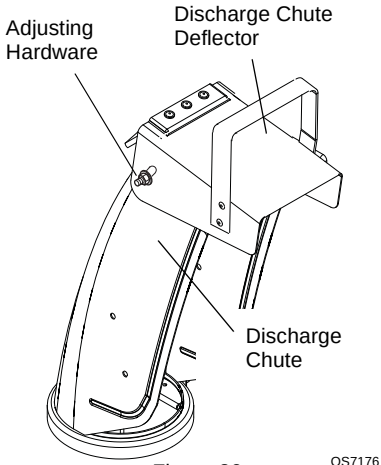

Figure 30

DISCHARGE CHUTE (921005)

If discharge chute does not stay in position while operating, tighten nut on carriage bolt at pivot point to increase tension on spring (Figure 31).

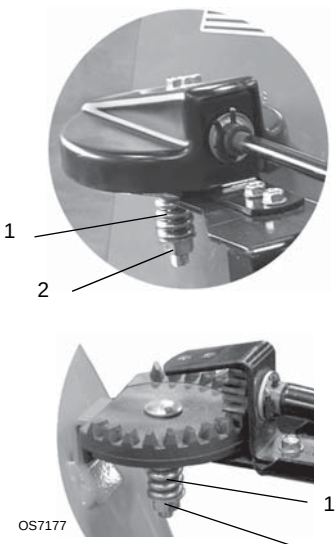

1. Spring
2. Nut

Figure 31

SPEED SELECTOR ADJUSTMENT

To adjust (Figure 32):

1. Disconnect adjustment pivot pin from speed selector lever by removing hair pin.
2. Place the speed selector on the dash in the fastest forward speed position.
3. Turn the speed selector lever straight down towards the ground as far as it will go.
4. Thread the adjustment pivot pin along the shift rod until it aligns with the mating hole on the speed selector lever. Insert the pivot pin into hole.
5. Secure adjustment pivot pin with hairpin.
6. Make sure the speed selector shifts into each speed position.
7. Check forward and reverse speeds:
   a. Start unit.
   b. Shift speed selector into the first forward speed.
   c. Engage the traction clutch. Unit should move forward.
   d. Stop unit.
   e. Shift speed selector into first reverse speed.
   f. Engage the traction clutch. Unit should move backward.
   g. Shut off unit.
8. Adjust pivot pin on the shift rod as necessary so unit travels forward when speed selector is in first forward position and travels backward when speed selector is in first reverse position.
9. Connect the pivot pin to the speed selector arm with the hardware removed in step 1.

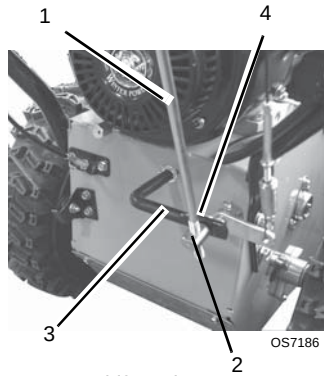

1. Shift Rod
2. Adjustment Pivot Pin
3. Speed Selector Lever
4. Hairpin

Figure 32

https://truckmanualshub.com/

ATTACHMENT CLUTCH/BRAKE ADJUSTMENT

(Figures 33, 34 and 35)

IMPORTANT: IMPROPER ADJUSTMENT could result in unexpected movement of auger and impeller causing death or serious injury. Auger / impeller must stop within 5 seconds when Attachment Clutch/Impeller Brake lever is released.

Remove Attachment Cable Slack

1. Remove the belt cover.
2. Loosen jam nut on cable adjustment barrel, and then turn the adjustment barrel up or down to lengthen or shorten cable and remove all cable slack. See Figure 33.

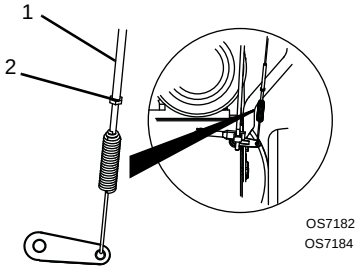

1. Adjustment Barrel
2. Jam Nut

Figure 33

3. With the attachment clutch disengaged, check that the attachment idler arm lightly touches the frame. See Figure 34.

With the attachment clutch disengaged, check the attachment idler arm position here. The attachment idler arm should lightly touch the frame.

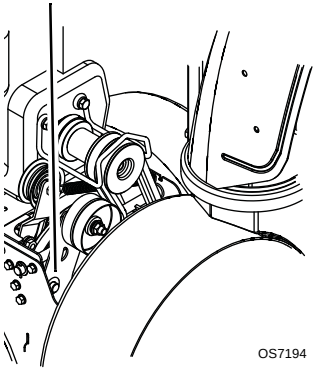

Figure 34

4. Tighten jam nut on the adjustment barrel.

Check Attachment Idler Arm Roller Clearance

1. Place the unit into the service position. Remove the bottom cover.
2. With the clutch lever engaged, check the clearance between the frame and plastic roller on the lower end of the attachment idler arm. See Figure 35.

- If roller is 1/2 –7/8 in. (12.7 – 22.2 mm) from frame, go to *Adjust the Attachment Clutch Cable Spring Extension* on page 29.
- If roller is less than 1/2 in. (12.7 mm) from frame, loosen idler adjustment nut and move idler closer to the belt. Tighten adjustment nut and recheck the roller clearance.
- If roller is more that 7/8 in. (22.2 mm) from frame, loosen idler adjustment nut and move idler away from the belt, tighten adjustment nut and recheck roller clearance.

https://truckmanualshub.com/

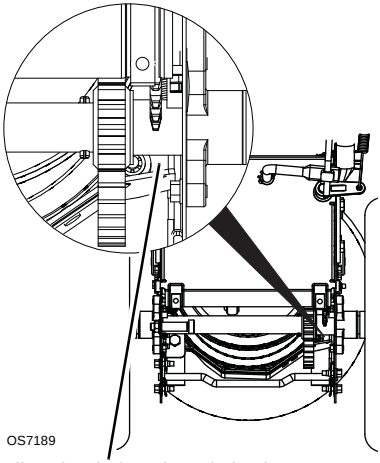

Roller should be 1/2 –7/8 in. (12.7 – 22.2 mm) from the frame when the attachment clutch is engaged.

Figure 35

Adjust the Attachment Clutch Cable Spring Extension

1. Check the attachment clutch cable spring extension.

   Measure the length of the attachment clutch cable spring with the clutch lever disengaged.

   Then measure the attachment clutch spring with the clutch lever engaged. See Figure 36.

- If spring extension is within the specified range, go to *Check Attachment Brake* on page 30.
- If spring extension is outside of specified range, go to step 2.

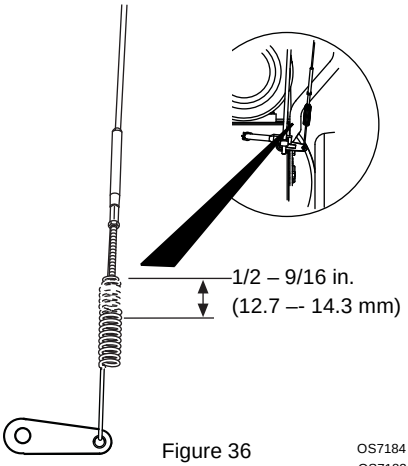

Figure 36

2. Adjust cable length (see Figure 36).
   a. Loosen jam nut on cable.
   b. To increase spring extension adjust barrel down the cable and tighten jam nut.
   c. To decrease spring extension adjust barrel up the cable and tighten jam nut.

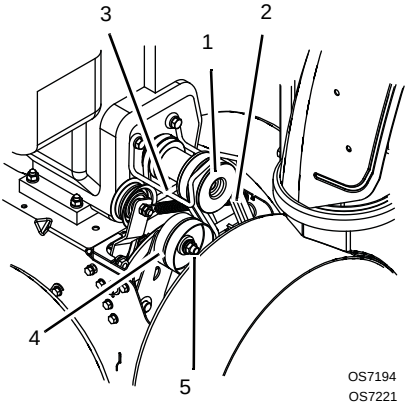

1. Engine Sheave
2. Attachment Drive Belts
3. Belt Finger
4. Attachment Belt Idler
5. Attachment Idler Adjustment Nut

Figure 37

https://truckmanualshub.com/

Check Attachment Brake

See Figure 38.

1. With the clutch lever disengaged, brake pad must contact attachment belts. With clutch lever engaged, brake pad must be more than 1/16 in. (1.6 mm) from belts. If there is more than 1/16 in. (1.6 mm) gap, go to *Check Belt Finger Clearance* on page 30. If there is less than 1/16 in. (1.6 mm) gap, go to Step 2.

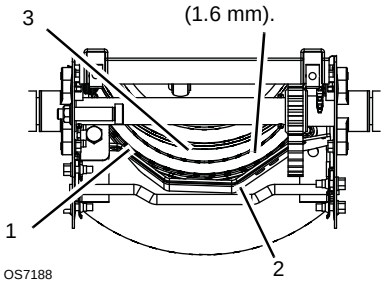

1. Attachment Drive Belt
2. Brake Arm and Pad
3. Attachment Pulley

Figure 38

2. If there is less than 1/16 in. (1.6 mm) gap between brake pad and belts, follow these steps:
   a. To increase brake pad gap, loosen idler adjustment nut, and move idler away from belt. Position idler to achieve a 1/16 in. (1.6 mm) minimum brake pad gap and a 1/2 in. (12.7 mm) minimum gap between the plastic roller and the frame.
   b. Check the clutch cable spring extension and adjust as necessary to achieve a 1/2 – 9/16 in. (12.7 – 14.3 mm) spring extension.
   c. If the cable needed adjustment, recheck gaps described in step 2a. Repeat steps as necessary until brake clearance, roller gap and spring extension are within specified ranges.

IMPORTANT: If adjustments cannot be brought into specified ranges see your Dealer for repairs.

Check Belt Finger Clearance

1. With clutch lever engaged, the belt finger located opposite the belt idler must be less than 1/8 in. (3 mm) from belts, but not touching the belts.

To adjust belt finger, loosen the bolts and move the finger to the proper position. Tighten the bolts and recheck the belt finger clearance.

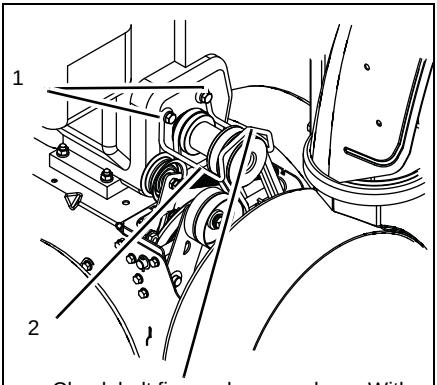

Check belt finger clearance here. With the attachment clutch engaged, there should be less than 1/8 in. (3 mm) clearance between the belts and the belt finger. The belt finger should not touch the belts.

1. Mounting Hardware
2. Belt Finger

Figure 39

OS7194

2. Replace the belt cover.

TRACTION DRIVE CLUTCH ADJUSTMENT

If drive slips, adjust traction clutch to compensate for friction disc wear.

To adjust traction clutch:

1. Place speed selector in first forward speed.
2. With the engine OFF, push unit forward while slowly moving the traction drive clutch lever toward the handlebar.
3. Measure the distance between the lever and handlebar when the wheels begin to brake. The distance should be 7 – 7-1/2 in. (177.8 – 190.5 mm). See Figure 40. If distance is out of range, adjust the traction clutch.

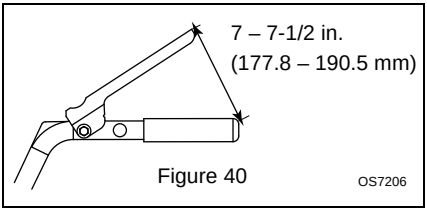

Figure 40

OS7206

4. To adjust traction clutch (Figure 41):

https://truckmanualshub.com/

a. With the traction drive clutch lever disengaged, loosen the jam nut on the cable adjuster.
b. Turn the adjuster body up the cable to decrease the distance between the clutch lever and handlebar.
c. Turn the adjuster body down the cable to increase the distance between the clutch lever and handlebar.

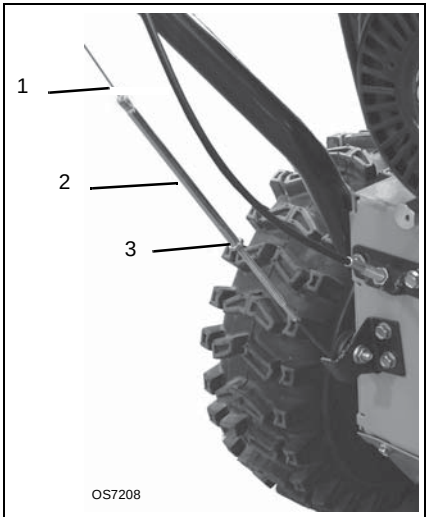

1. Traction Clutch Cable
2. Adjuster Body
3. Jam Nut

Figure 41

5. Check the traction clutch lever distance and repeat adjustment steps if necessary.
6. Tighten the jam nut on the traction cable adjustor body.
7. With the clutch disengaged, check that there is more than 1/32 in. (0.8 mm) clearance between friction disc and drive plate assembly (Figure 42).

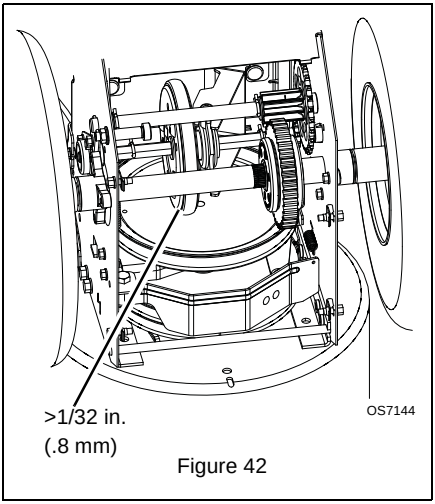

Figure 42

IMPORTANT: If traction clutch cannot be adjusted within specified range, see your Dealer for repairs.

ATTACHMENT DRIVE BELT REPLACEMENT

Remove old attachment drive belts:

1. Shut off engine, remove key, disconnect spark plug wire and allow unit to cool completely.
2. Remove belt cover and chute gear cover (921004, 006, 007, 008, 009) (Figure 43).
3. Rotate discharge chute all the way to the left (as viewed from the operator's position).
4. 921004, 006, 007, 008, 009: Remove hair pin under the control panel connecting the discharge chute rod to the chute rotation lever and slide the discharge chute rod forward.

   921005: Remove spring pin from chute crank and separate.

IMPORTANT: Disconnect chute lock cable and deflector cable, if equipped (921004, 006, 007, 008, 009).

5. Remove belt finger (Figure 39).
6. Remove attachment drive belt from engine sheave (it may be necessary to turn engine sheave using recoil starter handle).

IMPORTANT: To avoid bending bottom cover when tipping unit apart, support handlebars firmly or tip unit up on housing and remove bottom cover by removing six cap screws before separating unit.

7. Support Sno-Thro frame and housing.

https://truckmanualshub.com/

CAUTION: Always support Sno-Thro frame and blower housing when loosening the cap screws holding them together. Never loosen cap screws while unit is in service position.

8. Remove hex bolts securing housing to frame (two on each side). Tip housing and frame apart on pivot pin (Figure 43).
9. Remove attachment drive belts from attachment pulley (hold brake away from belt).

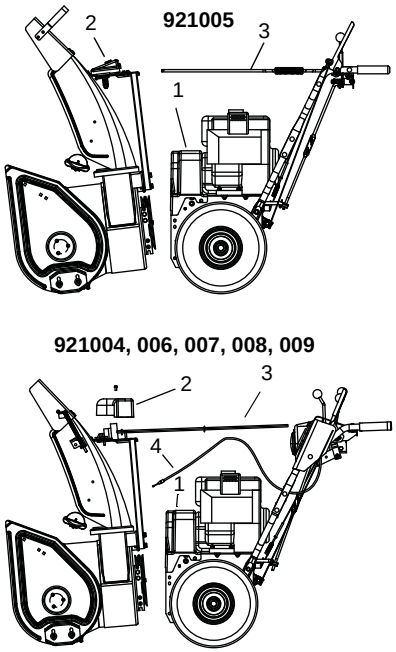

1. Belt Cover
2. Chute Gear Cover
3. Discharge Chute Rod
4. Chute Lock Cable

Figure 43

Install new attachment drive belts:

1. Place new attachment belts onto attachment pulley.

NOTE: Holding down the attachment clutch lever will make it easier to reconnect the housing and frame.

2. Tip housing and frame back together and secure with hex bolts.
3. Place belts onto engine sheave.
4. Reposition and secure belt finger.

IMPORTANT: With clutch lever engaged, belt finger on the side opposite the belt idler should be less than 1/8 in. (3 mm) from belt, but not touching the belt. Adjust belt finger as necessary.

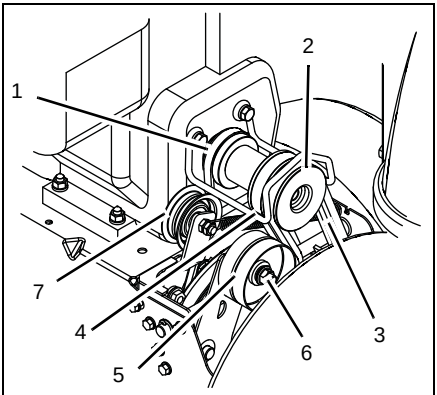

1. Traction Drive Belt
2. Engine Sheave
3. Attachment Drive Belts
4. Belt Finger
5. Attachment Belt Idler
6. Attachment Idler Adjustment Nut
7. Traction Belt Idler

Figure 44

OS7198

5. Check adjustment. *See Attachment Clutch/Brake Adjustment* on page 28

WARNING: AUGER / IMPELLER MUST STOP within 5 seconds when attachment clutch lever is released or unit damage or serious injury may result.

6. Reconnect chute crank and secure with spring clip (921005) or hair pin (921004, 006, 007, 008, 009). Reconnect chute lock cable and deflector cable (921004, 006, 007, 008, 009).
7. Replace belt cover.

TRACTION DRIVE BELT REPLACEMENT

NOTE: Replacement will be easier with housing and frame tipped apart and bottom cover off.

1. Remove attachment drive belts (see *Attachment Drive Belt Replacement* on page 31).

https://truckmanualshub.com/

2. To gain belt clearance, remove swing gate spacer and slide drive plate over so that finger clears stop hole in frame and can swing past it. See Figure 45.

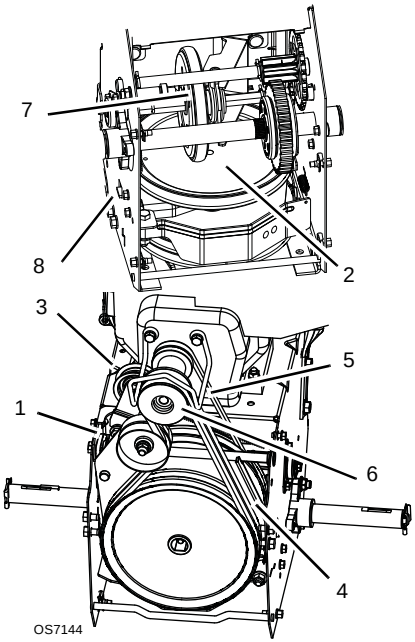

1. Spacer
2. Drive Plate Assembly
3. Traction Belt Idler
4. Attachment Drive Belts
5. Traction Drive Belt
6. Engine Sheave
7. Friction Disc
8. Drive Plate Finger

Figure 45

3. Pull idler away from traction drive belt and remove belt from idler pulley, engine sheave and driven pulley (it may be necessary to turn engine pulley using recoil handle).
4. Install new traction drive belt onto driven pulley and engine sheave.
5. Swing drive plate toward friction disc until finger lines up with stop hole in frame. Slide drive plate over, inserting finger into stop hole. Reinstall drive plate spacer.

NOTE: Make sure the drive plate assembly return spring remains connected to the frame and nylon bushing is in drive plate pivot hole.

6. Replace attachment drive belt (See *Attachment Drive Belt Replacement* on page 31).

FRICTION DISC REPLACEMENT

1. Shut off engine, remove key, disconnect spark plug wire and allow unit to cool completely.
2. Place unit into service position on a level surface.
3. Remove both wheels.
4. Remove bottom cover by removing six hex bolts.
5. Disconnect pivot pin from the speed selector arm. Save the hardware for reinstallation.
6. Remove spring clip pin nearest drive sprocket from hex shaft.
7. Remove left bearing flange from frame.
8. Slide hex shaft to the left to remove spacer, flat washers, pinion sprocket and friction disc assembly from hex shaft.

NOTE: Be sure to save washers between bearing and sliding fork for re-assembly.

9. Remove friction disc assembly from frame.
10. Remove three screws holding friction disc to carrier bearing.
11. Remove old friction disc. Put the new friction disc in place, cup side to carrier bearing.
12. Reinstall three screws onto new friction disc and carrier bearing. Torque to 5 – 6 lbf-ft (22.2 – 26.7 N•m).
13. Insert new friction disc assembly into frame. Install washers onto carrier bearing and slide into speed selector arm.
14. Slide hex shaft through new friction disc assembly. Install pinion sprocket onto hex shaft and slide shaft into right bearing.
15. Install left bearing using hardware removed in step 7.
16. Reinstall clip pin into hex shaft.
17. Connect pivot pin to speed selector arm (see *Speed Selector Adjustment* on page 27).
18. Replace bottom cover.
19. Install wheels.
20. Return unit to upright position.
21. Connect spark plug wire to spark plug.
22. Adjust traction drive clutch (see *Traction Drive Clutch Adjustment* on page 30).

https://truckmanualshub.com/

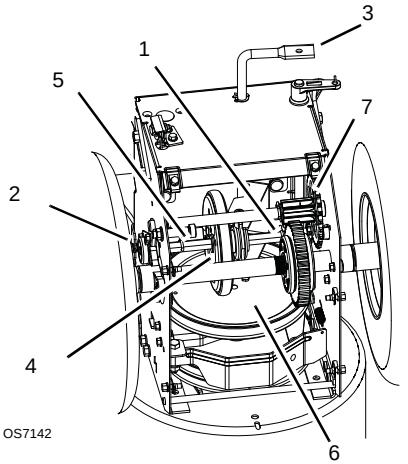

1. Hex Shaft
2. Bearing Flange
3. Speed Selector Arm
4. Friction Disc
5. Spring Clip
6. Drive Plate Assembly
7. Drive Sprocket

Figure 46

TRACK TENSION ADJUSTMENT (921007, 008, 009)

Check the track tension by applying pressure on the track midway between the upper and rear track rollers. Deflection should be approximately 3/8 in. (9.6 mm). See Figure 47.

If deflection is excessive, tighten the track tension.

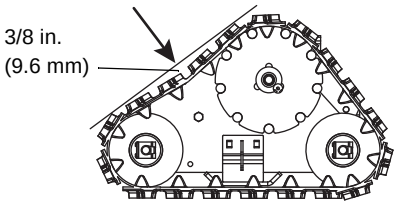

Figure 47 OS7226

If unit pulls to the left or right when a straight path is desired adjust the track tension. If the unit is pulling to the left, tighten the left track adjuster. If the unit is pulling to the right, tighten the right track adjuster.

To adjust (Figure 48):

1. Tighten the adjuster nut to tighten the track tension.
   Loosen the adjuster nut to reduce track tension.
2. Check that unit tracks straight with no pulling to either side.

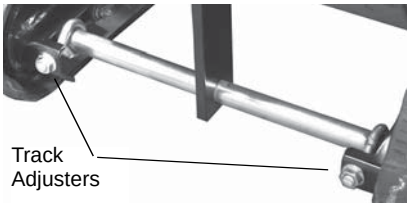

Figure 48 OS7228

HEIGHT ADJUSTER CABLE ADJUSTMENT (921007, 008, 009)

1. Make sure that height adjustment lock finger is fully engaged. See Figure 85.
2. Loosen jam nut on cable adjustment barrel
3. Turn the adjustment barrel to remove all cable slack and bring the overtravel arm until it makes slight contact with the right end of the slot in the height adjuster lock finger.
4. Tighten the jam nuts.

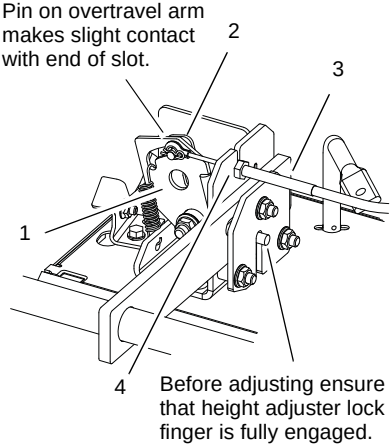

1. Height Adjuster Lock Finger
2. Overtravel Arm
3. Height Adjuster Cable
4. Jam Nuts

Figure 85 OS7230

https://truckmanualshub.com/

STORAGE

WARNING: AVOID INJURY. Read and understand the entire *Safety* section before proceeding.

SHORT TERM

IMPORTANT: NEVER spray unit with high pressure water or store unit outdoors.

Run with attachment clutch engaged a few minutes after each use to free unit of any loose or melting snow.

Close fuel shut-off valve.

Inspect unit for visible signs of wear, breakage or damage.

Keep all nuts, bolts and screws properly tightened and know unit is in safe working condition.

Store unit in a cool, dry protected area.

LONG TERM

Clean unit thoroughly with mild soap and low pressure water and lubricate (see *MAINTENANCE* on page 22). Touch up all scratched painted surfaces.

Remove weight from wheels by putting blocks under frame or axle.

Fuel System

Gasoline left in the fuel system for extended periods without a stabilizer will deteriorate, resulting in gum deposits in the system. These deposits can damage the carburetor and the fuel hoses, filter and tank. Prevent deposits from forming in the fuel system during storage by adding a quality fuel stabilizer to the fuel. Follow the recommended mix ratio found on the fuel stabilizer container.

To treat the fuel system for storage:

1. Add fuel stabilizer (Ariens p/n 00592900) according to manufacturers' instructions.
2. Run engine for at least 10 minutes after adding stabilizer to allow it to reach the carburetor.

NEVER store the engine with fuel in the fuel tank inside of a building with potential sources of ignition.

SERVICE PARTS

Order the following parts through your Dealer:

Part No.	Description
00036800	Ariens Hi-Temp Grease (3, 3 oz. cartridges)
00592900	Fuel Stabilizer 4 oz.
21533400	Spark Plug
07200431	Impeller Belt (2)
07200111	Traction Belt
00170800	Friction Disc
52100100	Shear Bolt Kit

ACCESSORIES

See your authorized Ariens dealer to add the additional accessories available to your Sno-Thro.

Part No.	Description
72406500	Front Weight Kit
72406900	Slicer Bar

https://truckmanualshub.com/

TROUBLESHOOTING

PROBLEM	PROBABLE CAUSE	CORRECTION
Engine will not crank/start.	1. Fuel tank is empty. 2. Fuel shut-off valve closed. 3. Build up of dirt and residue around governor/carburetor. 4. Key Switch not in run position. 5. Electric starter not functioning.	1. Fill fuel tank. 2. Open fuel shut-off valve. 3. Clean area around governor/carburetor. 4. Put Key Switch into run position. 5. Check for a bad starter or connections.
Engine stops.	1. Out of fuel. 2. Fuel shut-off valve closed. 3. Mechanical jam in blower rake or impeller. 4. Polluted fuel supply. 5. Faulty spark plug.	1. Fill fuel tank. 2. Open fuel shut-off valve. 3. Turn off engine, remove key, and wait for all moving parts to stop. Check for and remove obstruction and repair before restart. 4. Replace with clean fuel. 5. Replace or clean spark plug.
Engine problems.	1. See Engine Manual.	
Does not operate in Forward / Reverse.	1. Friction disc not adjusted properly. 2. Traction belt not functioning. 3. Speed selector not adjusted properly.	1. Repair or replace friction disc. *See Friction Disc Replacement* on page 33 2. Repair or replace traction drive belt. *See Traction Drive Belt Replacement* on page 32 3. Adjust speed selector. *See Speed Selector Adjustment* on page 27
Small rubber beads collect in frame	1. Friction disc wear.	1. Normal friction disc wear. Chunks or large pieces of rubber mean friction disc should be checked and replaced as necessary.
Unit throws snow poorly or does not throw snow.	1. Shear bolts broken. 2. Attachment clutch/brake not adjusted properly. 3. Auger is frozen in place. 4. Ice or debris is obstructing auger. 5. Attachment drive belts slipping, worn or damaged.	1. Replace shear bolts *(see Shear Bolts* on page 25). 2. Adjust attachment clutch/brake *(see Attachment Clutch/Brake Adjustment* on page 28). 3. Move unit to a warm place to thaw. 4. With the engine off and auger disengaged, check for obstructions and remove. 5. Adjust or replace attachment drive belts *(see Attachment Drive Belt Replacement* on page 31).

https://truckmanualshub.com/

SPECIFICATIONS

Model Number	921004	921005	921006
Description	ST924DLE	ST927LE	ST1130DLE
Engine -	Tecumseh LH318SA	Tecumseh LH318SA	Tecumseh LH358SA
Power Max - HP (kW)	9.0 (6.71)		11.0 (8.20)
Fast Idle Speed - RPM (min)	3600 ± 150		
Displacement - in. (cc)	19.4 (318)		21.8 (358)
Electric Start	120V		
Fuel			
Tank Capacity - qt (Liters)	4 (3.8)		
Snow Clearing Width - in. (cm)	24 (61.0)	27 (68.6)	30 (76.2)
Chute			
Rotation Angle	200°		
Rotation Control at Handlebar	Yes		
Remote Deflector Control	Yes	No	Yes
Impeller			
Diameter - in. (cm)	14 (35.6)		
Speed - RPM - Max (min)	1156		
Auger			
Diameter - in. (cm)	14 (35.6)		
Speed - RPM - Max (min)	119		
Auger Brake	Yes		
Attachment Clutch	Yes		
Drive	Disc-O-Matic		
Speeds	6 Forward and 2 Reverse		
Lock-Out Differential	Auto Differential Lock	Remote Wheel Lock	Auto Differential Lock
Pneumatic Tires - in. (cm)	15 x 5.00-6 (38.1 x 12.7-15.2)		
Size and Weight			
Length - in. (cm)	57.91 (147.1)		
Height - in. (cm)	44.25 (112.4)		
Width - in. (cm)	26.4 (67.1)	29.4 (74.7)	32.4 (82.3)
Weight - lbs (Kg)	237.4 (107.7)	242 (109.8)	245 (111.1)

https://truckmanualshub.com/

SPECIFICATIONS

Model Number	921007	921008	921009
Description	ST924LET	ST927LET	ST1130LET
Engine -	Tecumseh LH318SA		Tecumseh LH358SA
Power Max - HP (kW)	9.0 (6.71)	9.0 (6.71)	11.0 (8.20)
Fast Idle Speed - RPM (min)	3600 ± 150		
Displacement - in. (cc)	19.4 (318)	19.4 (318)	21.8 (358)
Electric Start	120V		
Fuel			
Tank Capacity - qt (Liters)	4 (3.8)		
Snow Clearing Width - in. (cm)	24 (61.0)	27 (68.6)	30 (76.2)
Chute			
Rotation Angle	200°		
Rotation Control at Handlebar	Yes		
Remote Deflector Control	Yes		
Impeller			
Diameter - in. (cm)	14 (35.6)		
Speed - RPM - Max (min)	1156		
Auger			
Diameter - in. (cm)	14 (35.6)		
Speed - RPM - Max (min)	119		
Auger Brake	Yes		
Attachment Clutch	Yes		
Drive	Disc-O-Matic		
Speeds	6 Forward and 2 Reverse		
Lock Out Differential	N/A		
Pneumatic Tires - in. (cm)	Track		
Size and Weight			
Length - in. (cm)	57.91 (147.1)		
Height - in. (cm)	44.25 (112.4)		
Width - in. (cm)	26.4 (67.1)	29.4 (74.7)	32.4 (82.3)
Weight - lbs (Kg)	281 (127.5)	288 (130.6)	291 (132)

https://truckmanualshub.com/

Three-Year Limited Sno-Thro® Warranty

Ariens Company (Ariens) warrants to the **original purchaser** that Ariens Sno-Thro products will be free from defects in material and workmanship for a period of three years after the date of purchase. An authorized Ariens dealer will repair any defect in material or workmanship, and repair or replace any defective part, subject to the conditions, limitations and exclusions set forth herein. Such repair or replacement will be free of charge to the original purchaser (labor and parts), except as noted below.

The duration of this warranty applies only if the product is put to personal use around a household or residence. If the product is put to any business use, agricultural, commercial, or industrial, then the duration of this warranty shall be 90 days after the date of purchase, or one year after the date of purchase if the product is labeled as a Pro, Professional, or Commercial Product. If any product is rented or leased, then the duration of this warranty shall be 90 days after the date of purchase. It is the owner's responsibility to perform correctly the maintenance and minor adjustments explained in the owner's manual.

Dura-Clean® Auger Limited Lifetime Warranty

Ariens warrants to the **original purchaser** that the rubber components of the DURA- CLEAN Auger on single stage Sno-Thro models manufactured by Ariens and sold after July 1, 1999 will be free from defects in material and workmanship for the life of the unit.
The lifetime limited warranty on the rubber components of the DURA-CLEAN Auger applies only if the product is put to personal use around a household or residence. If the product is put to any business use, agricultural, commercial, or industrial, then the duration of this warranty shall be 90 days after the date of purchase. An authorized Ariens dealer will replace any rubber component of the DURA-CLEAN Auger found upon examination by Ariens to be defective or worn beyond the wear indicator. Replacements will be supplied free of charge. Labor is not included after two years from the date of purchase of the Sno-Thro unit (all repairs must be completed by an authorized Ariens dealer).

Service Parts and Accessories Warranty

- Genuine Ariens or Gravely brand service parts and accessories are warranted to be free from defects in material and workmanship for a period of 90 days after the date of purchase. An authorized Ariens dealer will repair or replace any such part or accessory free of charge, except for labor, during that period.

Exceptions, Limitations, Exclusions

Customer Responsibilities

Register the product immediately at the time of sale. If the dealer does not register the product, the customer must complete the product registration card in the literature package and return it to the Ariens Company, or register the unit online at www.ariens.com or www.gravely.com.
To obtain warranty service, the **original purchaser** must:

- Perform the maintenance and minor adjustments explained in the owner's manual.
- Promptly notify Ariens or an authorized Ariens or Gravely service representative of the need for warranty service.
- Transport the product to and from the place of warranty service.
- Have the warranty service performed by an authorized Ariens or Gravely service representative.

To find an Ariens or Gravely authorized service representative, contact Ariens at:

655 W. Ryan Street
Brillion, WI 54110
(920) 756 - 2141
www.ariens.com
www.gravely.com

https://truckmanualshub.com/

Limitations

- Batteries are warranted only for a period of 12 months after date of purchase, on a prorated basis. For the first 90 days of the warranty period, a defective battery will be replaced free of charge. If the applicable warranty period is more than 90 days, Ariens will cover the prorated cost of any defective battery, for up to 12 months after the date of purchase.
- Friction discs, belts, idlers, cables, and electrical components on Sno-Thro models put to personal use around a household or residence are warranted against defects in materials or workmanship to the **original purchaser** for two years.

Exclusions – Items Not Covered by This Warranty

- Engines and engine accessories are covered only by the engine manufacturer's warranty and are not covered by this warranty.
- Parts that are not genuine Ariens or Gravely service parts are not covered by this warranty.
- Damages resulting from the installation or use of any part, accessory or attachment which is not approved by the Ariens Company for use with product(s) identified herein are not covered by this warranty.
- The following maintenance, service and replacement items are not covered by this warranty unless they are noted in the Limitations section above: lubricants, spark plugs, oil, oil filters, air filters, shoes, runners, scraper blades, shear bolts, headlights, light bulbs.
- Any misuse, alteration, improper assembly, improper adjustment, neglect, or accident which requires repair is not covered by this warranty.
- This warranty applies only to products purchased in the United States (including Puerto Rico) and Canada. In all other countries, contact place of purchase for warranty information.

Disclaimer

Ariens may from time to time change the design of its products. Nothing contained in this warranty shall be construed as obligating Ariens to incorporate such design changes into previously manufactured products, nor shall such changes be construed as an admission that previous designs were defective.

LIMITATION OF REMEDY AND DAMAGES

Ariens Company's liability under this warranty, and under any implied warranty that may exist, is limited to repair of any defect in workmanship, and repair or replacement of any defective part. Ariens shall not be liable for incidental, special, or consequential damages (including lost profits). Some states do not allow the exclusion of incidental or consequential damages, so the above limitation or exclusion may not apply to you.

DISCLAIMER OF FURTHER WARRANTY

Ariens Company makes no warranty, express or implied, other than what is expressly made in this warranty. If the law of your state provides that an implied warranty of merchantability, or an implied warranty of fitness for particular purpose, or any other implied warranty, applies to Ariens Company, then any such implied warranty is limited to the duration of this warranty. Some states do not allow limitations on how long an implied warranty lasts, so the above limitation may not apply to you.

This warranty gives you specific legal rights, and you may also have other rights which vary from state to state.

https://truckmanualshub.com/

https://truckmanualshub.com/

Ariens Company
655 West Ryan Street
Brillion, WI 54110-1072
920-756-2141
Fax 920-756-2407
www.ariens.com

See your local dealer for these useful accessories:

Sno-Thro® Cover
Protect your investment. Available in two sizes.

Drift Cutter Kit
Help your Sno-Thro® tackle drifting and packed snow.

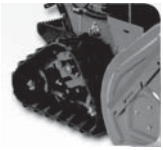

Track Drive Conversion Kit
Convert your Ariens Sno-Thro® into a Track Drive Unit.

Non-Abrasive Skid Shoes
Protect decorative surfaces from scratching and marring.

Please see your local dealer for accessory fit up and installation.
Visit www.ariens.com for more information on all of our great accessories.

⚠ WARNING ⚠

The engine exhaust from this product contains chemicals known to the State of California to cause cancer, birth defects or other reproductive harm.