https://truckmanualshub.com/

TABLE OF CONTENTS

RUNNING STORES
0-0_RUNNING STORES..... 1
LOWER MACHINE
1-1_LOWER MACHINE ASS'Y..... 5
1-2_CRAWLER SHOE ASS'Y..... 7
1-3_CRAWLER SHOE ADJ. DEVICE..... 9
1-4_FRONT IDLER ASS'Y..... 11
1-5_LOWER ROLLER ASS'Y..... 13
1-6_UPPER ROLLER ASS'Y..... 15
1-7_LOWER TRAVEL PIPING ASS'Y..... 17
TURNTABLE
2-1_TURNTABLE & SWING BEARING ASS'Y..... 19
SWING DRIVE DEVICE
3-1_SWING DRIVE DEVICE..... 21
HYDRAULIC PIPING
4-1_RETURN & SUCTION PIPING ASS'Y..... 23
4-2_SWING & TRAVEL PIPING ASS'Y..... 25
4-3_PUMP DISCHARGE & BOOM SWING PIPING ASS'Y..... 27
4-4_CONTROL PIPING ASS'Y..... 29
4-4[A]_CONTROL PIPING ASS'Y (A-D & A, B, G CHANGE)..... 33
4-4[B]_CONTROL PIPING ASS'Y (FOR A, F CHANGE)..... 37
HYDRAULIC INSTRUMENT
5-1_TRAVEL MOTOR ASS'Y..... 41
5-2_SWING MOTOR ASS'Y..... 45
5-3_ROTARY JOINT ASS'Y..... 49
5-4_CONTROL VALVE ASS'Y
5-4_CONTROL VALVE ASS'Y(1/2)..... 51
5-4_CONTROL VALVE ASS'Y(2/2)..... 52
5-5_REMOTE CONTROL VALVE ASS'Y..... 57
5-6_HYDRAULIC OIL TANK ASS'Y..... 59
5-7_OIL PUMP ASS'Y..... 61
5-8_BOOM CYLINDER ASS'Y..... 63
5-9_ARM CYLINDER ASS'Y..... 65
5-10_BUCKET CYLINDER ASS'Y..... 67
5-11_BOOM SWING CYLINDER ASS'Y..... 69
5-12_BLADE CYLINDER ASS'Y..... 71
5-13_PILOT VALVE ASS'Y(TRAVEL)..... 73
5-14_PILOT VALVE ASS'Y..... 75
5-15_MULTIPLE VALVE ASS'Y (FOR A-D CHANGE)..... 77
5-15[B]_MULTIPLE VALVE ASS'Y (FOR A, F CHANGE)..... 79
OPERATING CONTROLS
6-1_TRAVEL LEVER ASS'Y..... 81
6-2_CONTROL LEVER ASS'Y..... 83
6-3_BLADE & BOOM SWING CONTROL ASS'Y..... 87
POWER UNIT
7-1_ENGINE & ACCESSOORIES..... 89
7-2_AIR CLEANER & MUFFLER ASS'Y..... 93
7-3_OIL PUMP DRIVE DEVICE..... 95
7-4_FUEL TANK & PIPING ASS'Y..... 97
CAB & RELATED PARTS
8-1_COVER ASS'Y (1)..... 101
8-2_COVER ASS'Y (2)..... 103
8-3_NOISE ABSORBENT ASS'Y..... 107
8-4_CANOPY ASS'Y (FOR TOPS/ROPS)..... 109
8-4[A]_CANOPY ASS'Y..... 111

https://truckmanualshub.com/

TABLE OF CONTENTS

8-5_OPERATOR SEAT & MAT ASS'Y..... 113
8-6_COUNTER WEIGHT ASS'Y..... 115
8-7_NAME PLATE ASS'Y (FOR JAPANESE)..... 117
8-7[A]_NAME PLATE ASS'Y (FOR ENGLISH)..... 119
8-7[B]_NAME PLATE ASS'Y (FOR DUTCH)..... 121
8-7[C]_NAME PLATE ASS'Y (FOR FRENCH)..... 123
8-7[D]_NAME PLATE ASS'Y(FOR ITALIAN)..... 125
8-7[E]_NAME PLATE ASS'Y(FOR GERMAN)..... 127
8-7[F]_NAME PLATE ASS'Y(FOR DANISH)..... 129
8-7[G]_NAME PLATE ASS'Y (FOR SPANISH)..... 131
ELECTRIC SYSTEM
9-1_ELECTRIC SYSTEM..... 133
9-2_INSTRUMENT PANEL ASS'Y..... 137
TOOLS & ACCESSORIES
10-1_TOOLS & ACCESSORIES..... 141
HOE ATTACHMENT
11-1_HOE ATTACHMENT ASS'Y..... 143
11-2_BOOM SWING ASS'Y..... 147
11-3_HOE BUCKET ASS'Y..... 149
11-4_HOE ATTACHMENT PIPING ASS'Y..... 151
BLADE ATTACHMENT
12-1_BLADE ATTACHMENT ASS'Y..... 155
12-2_BLADE PIPING ASS'Y..... 157
OPTION SPECIFICATION
15-1_FIRST SPARE PIPING ASS'Y..... 159
15-2_SECOND SPARE PIPING ASS'Y..... 163
15-3_THIRD SPARE PIPING ASS'Y..... 165
15-4_ACCUMULATOR ASS'Y..... 169
15-5_OPERATOR ROOM ASS'Y (1)..... 171
15-6_OPERATOR ROOM ASS'Y (2)..... 173
15-7_OPERATOR ROOM ASS'Y (3)..... 177
15-8_OPERATOR ROOM ASS'Y (4)..... 181
15-9_CAR HEATER ASS'Y..... 185
15-10_NAME PLATE ASS'Y (FOR JAPANESE)..... 187
15-10[A]_NAME PLATE ASS'Y(FOR ENGLISH)..... 189
15-10[B]_NAME PLATE ASS'Y (FOR DUTCH)..... 191
15-10[C]_NAME PLATE ASS'Y (FOR FRENCH)..... 193
15-10[D]_NAME PLATE ASS'Y (FOR ITALIAN)..... 195
15-10[E]_NAME PLATE ASS'Y (FOR GERMAN)..... 197
15-10[F]_NAME PLATE ASS'Y (FOR DANISH)..... 199
15-10[G]_NAME PLATE ASS'Y (FOR SPANISH)..... 201
15-11_MIRROR ASS'Y..... 203
15-12_TRAVEL ALARM DEVICE..... 205
15-13_IMMOBILIZER ASS'Y..... 207
15-14_LIGHT ASS'Y..... 209
15-15_AIR CONDITIONER ASS'Y (1)..... 211
15-16_AIR CONDITIONER ASS'Y (2)..... 213
15-17_AIR CONDITIONER PIPING ASS'Y..... 215
CRANE SPECIFICATION
16-1_HYDRAULIC PIPING ASS'Y..... 217
16-2_HOLDING VALVE ASS'Y..... 219
16-3_HOLDING VALVE..... 221
16-4_HOOK BLOCK ASS'Y..... 223
16-5_ANGLE DETECTOR..... 225
16-6_ELECTRIC SYSTEM..... 227
16-7_CONTROLLER ASS'Y..... 229

https://truckmanualshub.com/

TABLE OF CONTENTS

16-8_NAME PLATE ASS'Y..... 231

https://truckmanualshub.com/

LIST OF CONSUMABLES

消耗品リスト

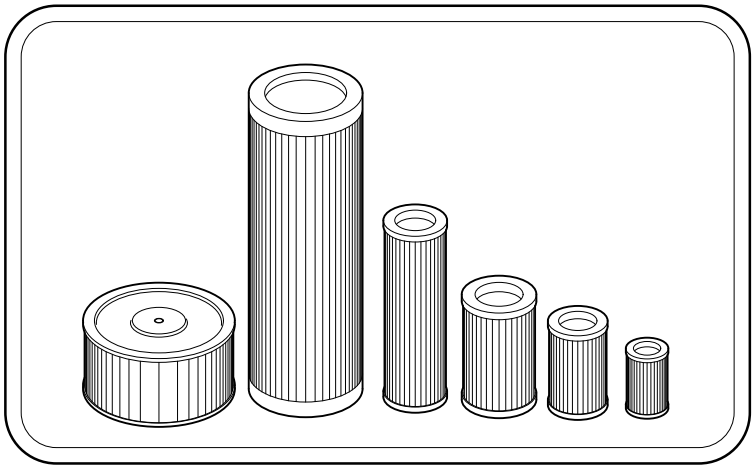

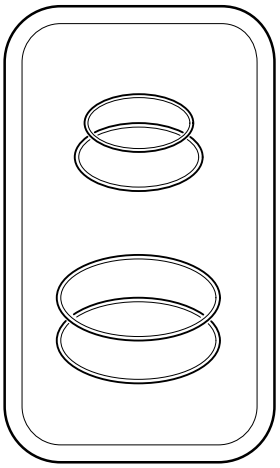

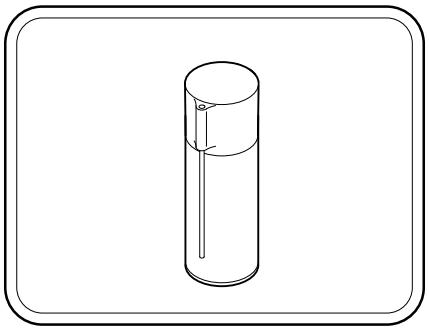

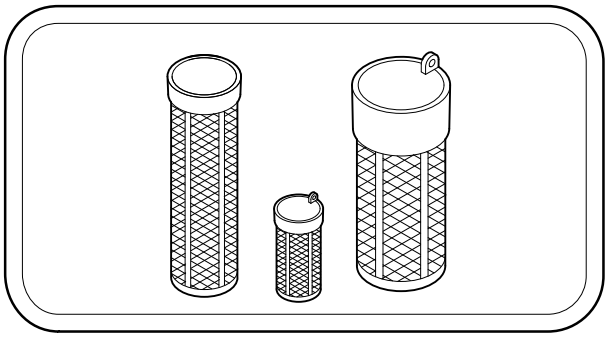

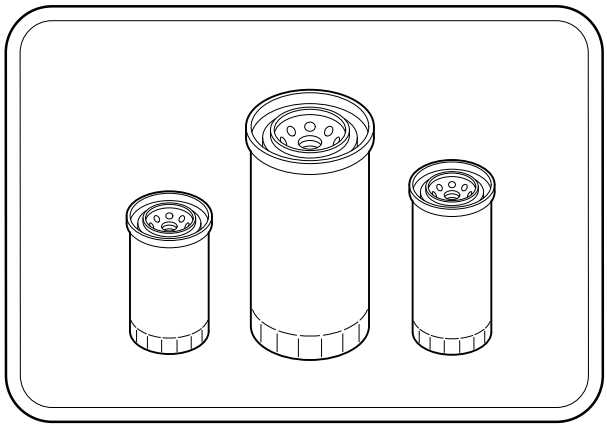

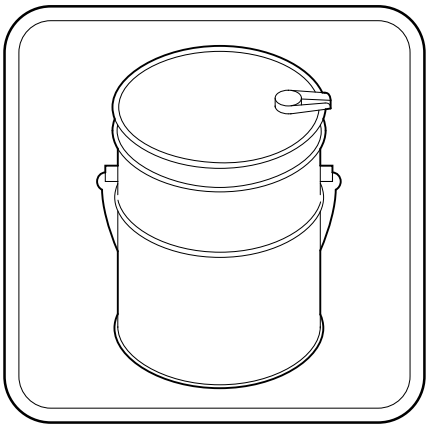

SHALL-000000-1

https://truckmanualshub.com/

KEY No.	SUP.	PART No.	DESCRIPTION	Q'TY	CHAN.	SERIAL No.	REMARKS
		＊＊＊＊＊	RUNNING STORES LIST				
1		0753 265 UA	Vaive, Check (Grease Up)	1		WS010001-	Sh. No. 1-3
2		0755 179 UA	Strainer, Suction	1		WS010001-	Sh. No. 5-6
3		0759 144 01	Cartridge, Return Filter	1		WS010001-	Sh. No. 5-6
4		0775 551 86	Hose, Radiator	1		WS010001-	Sh. No. 7-1
5		0775 551 87	Hose, Radiator	1		WS010001-	Sh. No. 7-1
6		0775 551 85	Hose, Radiator	1		WS010001-	Sh. No. 7-1
7		0745 266 08	Element, Air Cleaner	1		WS010001-	Sh. No. 7-2
8		0745 266 09	Element, Air Cleaner(Inner)	1		WS010001-	Sh. No. 7-2
9		0857 914 11	Element, Water Sedimenter	1		WS010001-	Sh. No. 7-4
10		0729 910 73	Cap, Fuel	1		WS010001-	Sh. No. 7-4
11		0820 215 07	Relay, Flip Flop	1		WS010001-	Sh. No. 9-1
12		0858 306 03	Switch Ass'y, Starter	1		WS010001-	Sh. No. 9-2
13		0820 215 07	Relay	4		WS010001-	Sh. No. 9-2
14		D013 360 00	Pin, Bucket	2		WS010001-	Sh. No. 11-1
15		4511 501 06	Ring, O (For Bucket)	4		WS010001-	Sh. No. 11-1
16		0650 002 04	Tooth, Bucket	AR		WS010001-	18S,Sh. No. 11-3
17		0650 003 03	Pin, Lock	AR		WS010001-	18-20M-PN,Sh. No. 11-3
18		0650 004 02	Pin, Rubber	AR		WS010001-	18-20M-LK,Sh. No. 11-3
19		4123 040 00	Coutter, Side (R.H.)	1		WS010001-	Sh. No. 11-3
20		4123 041 00	Coutter, Side (L.H.)	1		WS010001-	Sh. No. 11-3
21		0555 140 40	Bolt, Treatment	6		WS010001-	Sh. No. 11-3
22		0585 140 00	Nut, Treatment	6		WS010001-	Sh. No. 11-3
23		D006 051 00	Washer, Treatment	6		WS010001-	Sh. No. 11-3
23		＊＊＊＊＊	SEAL KIT				
24		0713 429 91	Rotary Joint	1		WS010001-	Sh. No. 5-3
25		0782 399 91	Boom Cylinder (Head Side)	1		WS010001-	Sh. No. 5-8
26		0782 396 91	Arm Cylinder (Head Side)	1		WS010001-	Sh. No. 5-9
27		0782 367 91	Bucket Cylinder (Head Side)	1		WS010001-	Sh. No. 5-10
28		0782 449 91	Boom Swing Cylinder (Head Side)	1		WS010001-	Sh. No. 5-11
29		0782 397 91	Blade Cylinder (Head Side)	1		WS010001-	Sh. No. 5-12
29		＊＊＊＊＊	ENGINE PARTS (3TNV88-ESIK, 3TNV88F-ESIK)				
30		Y119802 55801	Cartridge, Fuel Filter	1		WS010001-	Sh. No. 7-4
31		Y129150 35153	Filter, Oil	1		WS010001-	Engine P/C
32		Y119225 52102	Pump, Fuel	1		WS010001-	Sh. No. 7-4
33		Y198461 52950	Relay	3		WS010001-	Sh. No. 9-1
34		Y25152 003800	Belt, V	1		WS010001-	Engine P/C A38

https://truckmanualshub.com/

KEY No.	SUP.	PART No.	DESCRIPTION	Q'TY	CHAN.	SERIAL No.	REMARKS
35		Y129155 49801	Thermostat	1		WS010001-	Engine P/C
36		Y121252 39450	Switch, Oil Pressure	1		WS010001-	Engine P/C
37		Y129927 44900	Sensor, Thermo	1		WS010001-	Engine P/C
37		＊＊＊＊＊	＊＊＊＊＊				
38		5988 009 00	＊＊＊＊＊	1		WS010001-	400g × 20
39		5988 004 06	＊＊＊＊＊	1		WS010001-	スプレー
39-1		5988 004 09	＊＊＊＊＊	1		WS010001-	4k 缶
40		5988 004 32	＊＊＊＊＊	1		WS010001-	スプレー
40-1		5988 004 33	＊＊＊＊＊	1		WS010001-	4k 缶
41		ZG10100	＊＊＊＊＊	1		WS010001-	38種-890ヶ
42		5988 022 01	＊＊＊＊＊	1		WS010001-	18S= 1セット 20ヶ
43		ZG00351	＊＊＊＊＊	1		WS010001-	1セット10枚
43-1		ZG00352	＊＊＊＊＊	1		WS010001-	1セット10枚
43-2		ZG00353	＊＊＊＊＊	1		WS010001-	1セット10枚
44		ZG00401	＊＊＊＊＊	1		WS010001-	1セット10枚
44-1		ZG00402	＊＊＊＊＊	1		WS010001-	1セット10枚
44-2		ZG00403	＊＊＊＊＊	1		WS010001-	1セット10枚

https://truckmanualshub.com/

[Memo]

https://truckmanualshub.com/

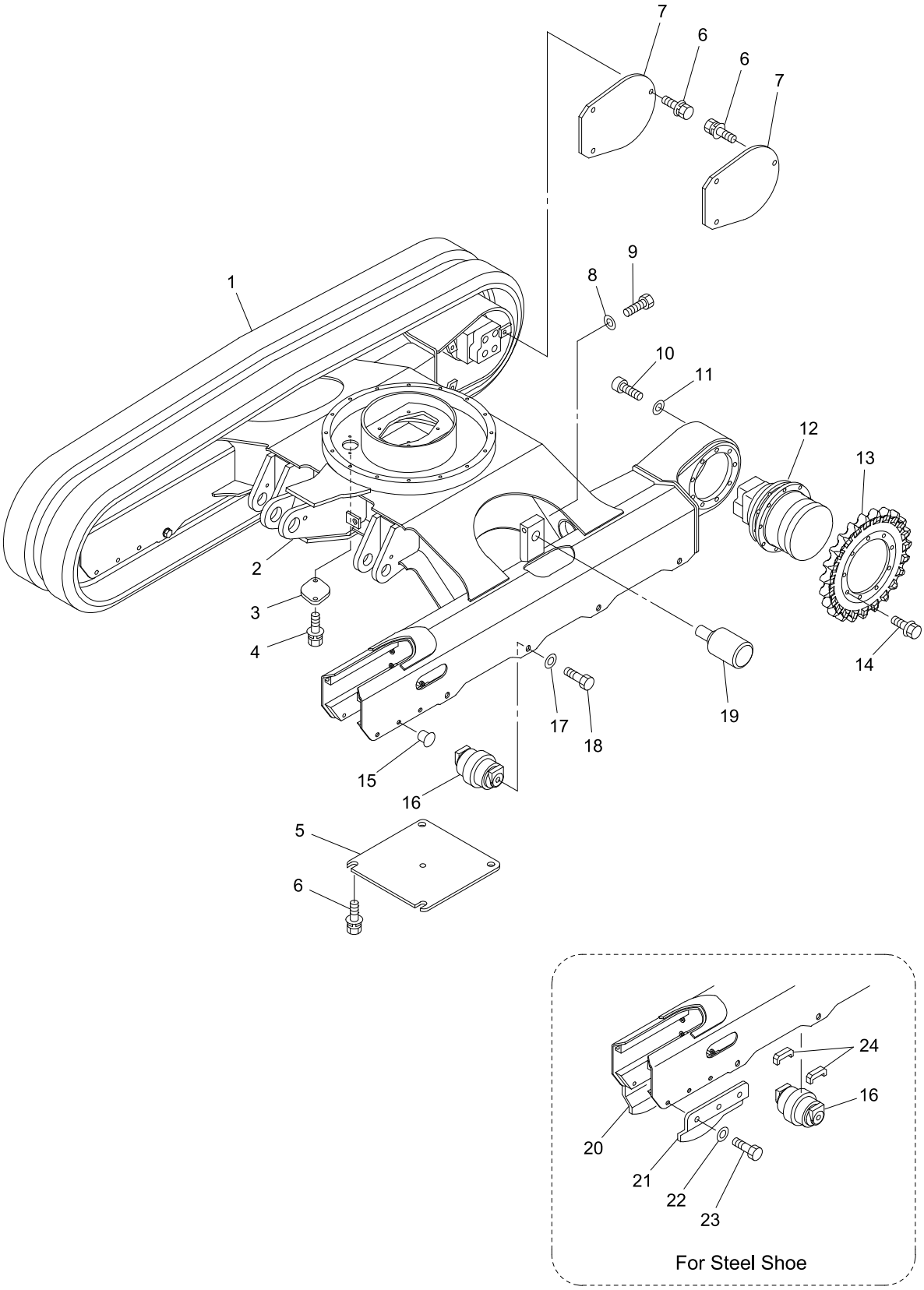

30V4-010100-1

https://truckmanualshub.com/

KEY No.	SUP.	PART No.	DESCRIPTION	Q'TY	CHAN.	SERIAL No.	REMARKS
0	×	**** *** **	Lower Machine Ass'y	1		WS010001-	
1		0653 954 UA	*Shoe, Rubber Crawler	2		WS010001-	
1-1	#	0653 944 UA	*Shoe Ass'y, Crawler (Steel)	2		WS010001-	Sh.No.1-2
2	△	D200 200 00	*Frame, Lower	1		WS010001-	
3		4460 756 00	*Cover	1		WS010001-	
4		0517 080 12	*Bolt, Treatment (W/L.W, F.W)	2		WS010001-	M8X12
5		4461 717 00	*Cover, Under	1		WS010001-	
6		0518 100 20	*Bolt, Treatment (W/L.W, F.W)	10		WS010001-	M10X20 P=1.25
7		D458 194 00	*Cover	2		WS010001-	
8		0595 160 00	*Washer, Treatment	2		WS010001-	M16
9		0555 160 65	*Bolt, Treatment	2		WS010001-	M16X65
10		0562 120 35	*Bolt, Socket Head	18		WS010001-	M12X35
11		0595 120 00	*Washer, Treatment	18		WS010001-	M12
12	#	0781 377 UA	*Motor Ass'y, Travel	2		WS010001-	Sh.No.5-1
13		4234 563 00	*Sprocket, Drive	2		WS010001-	
14		0457 120 30	*Bolt, Treatment (W/Flange)	18		WS010001-	M12X30
15		0690 201 09	*Plug	12		WS010001-	
16	#	F300 223 00	*Roller Ass'y, Lower	8		WS010001-	Sh.No.1-5
17		0595 160 00	*Washer, Treatment	16		WS010001-	M16
18		0555 160 30	*Bolt, Treatment	16		WS010001-	M16X30
19	#	0651 911 UA	*Roller Ass'y, Upper	2		WS010001-	Sh.No.1-6
20		4475 587 00	*Guide, Shoe (R.H.)	2		WS010001-	
21		4475 586 00	*Guide, Shoe (L.H.)	2		WS010001-	
22		0595 120 00	*Washer, Treatment	12		WS010001-	M12
23		0555 120 35	*Bolt, Treatment	12		WS010001-	M12X35
24		D007 126 00	*Shim	16		WS010001-	t=9.0

https://truckmanualshub.com/

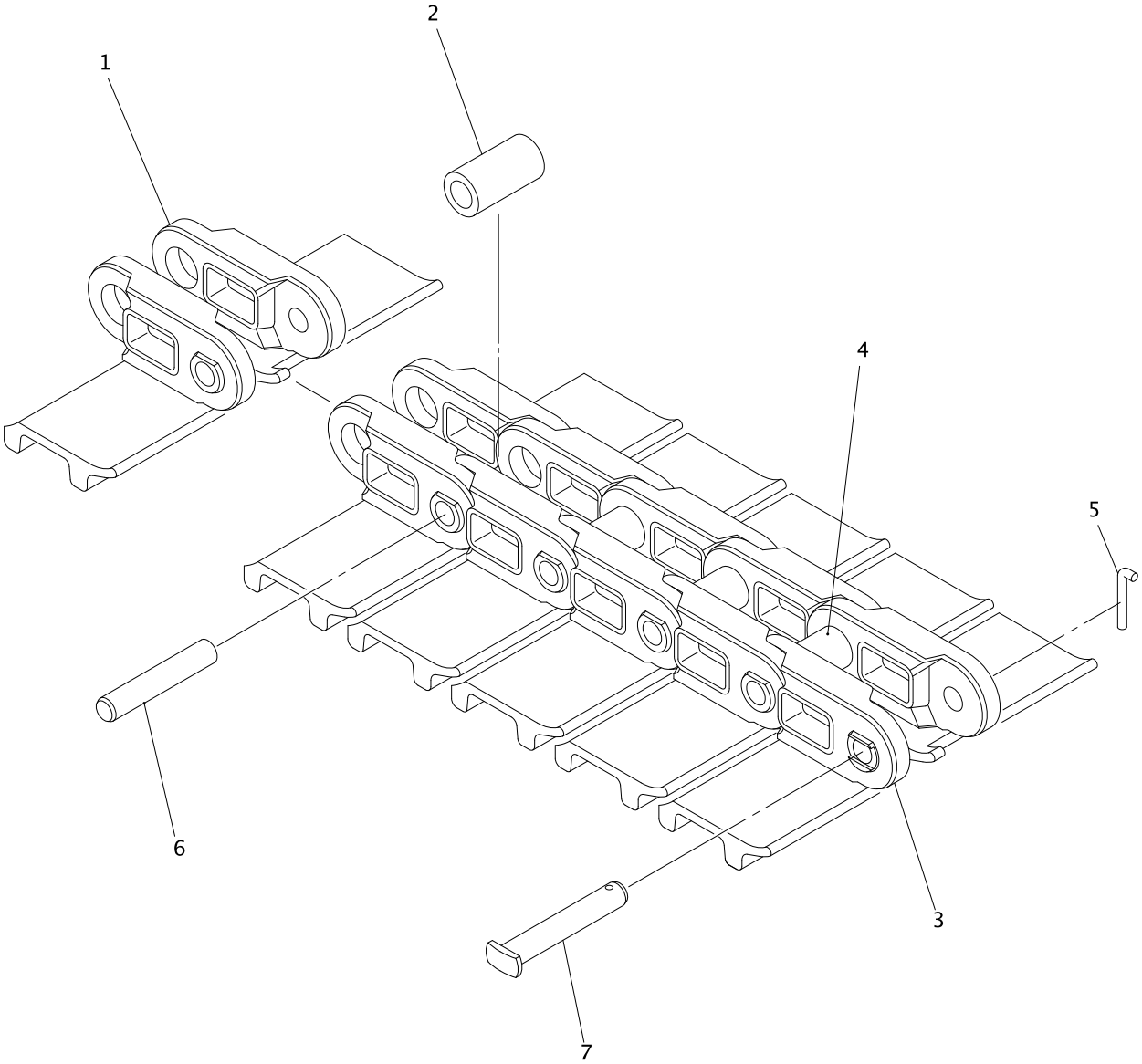

SHALL-010200-1

https://truckmanualshub.com/

KEY No.	SUP.	PART No.	DESCRIPTION	Q'TY	CHAN.	SERIAL No.	REMARKS
0		0653 944 UA	Shoe Ass'y, Crawler	2		WS000001-	L=300mm
1		0653 934 92	*Complete, Track Shoe	42		WS000001-	L=300mm
2		0653 934 02	**Bushing	1		WS000001-	
3		0653 934 93	*Complete, Master Shoe	1		WS000001-	L=300mm
4		0653 934 02	**Bushing	1		WS000001-	
5		0653 934 05	*Pin, Lock	1		WS000001-	
6		0653 934 03	*Pin, Track	42		WS000001-	
7		0653 934 04	*Pin, Master	1		WS000001-	

https://truckmanualshub.com/

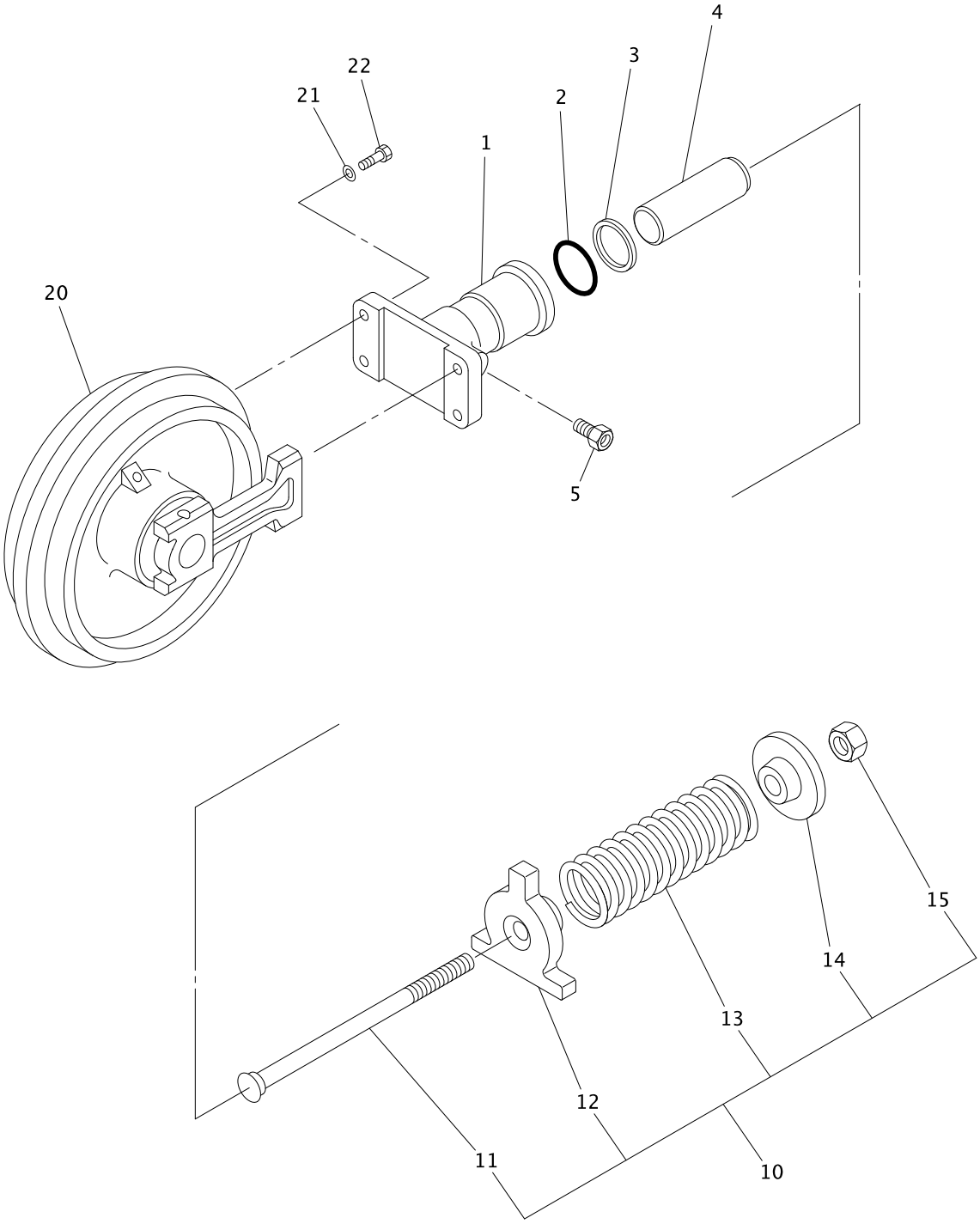

SHALL-010300-1

https://truckmanualshub.com/

KEY No.	SUP.	PART No.	DESCRIPTION	Q'TY	CHAN.	SERIAL No.	REMARKS
0		F300 111 00	Cylinder Ass'y, Grease	2		WS000001-	
1		4514 545 00	*Cylinder, Grease	1		WS000001-	
2		0760 710 42	*Ring, O	1		WS000001-	P40-90B
3		0762 120 42	*Ring, Back-up	1		WS000001-	P40-T2
4		4515 508 00	*Piston	1		WS000001-	
5		0753 265 UA	*Valve, Check	1		WS000001-	
10		F300 380 00	Unit Ass'y, Spring	2		WS000001-	
11		4004 161 00	*Bolt, Adjusting	1		WS000001-	
12		D485 021 00	*Retainer, Spring	1		WS000001-	
13		4170 177 00	*Spring	1		WS000001-	
14		4485 513 00	*Retainer, Spring	1		WS000001-	
15		0580 160 00	*Nut, Hex.	1		WS000001-	M16
20	#	F300 361 00	*Idler Ass'y, Front	2		WS000001-	Sh.No.1-4
21		0595 100 00	*Washer, Treatment	8		WS000001-	M10
22		0513 100 35	*Bolt, Treatment	8		WS000001-	M10X35

https://truckmanualshub.com/

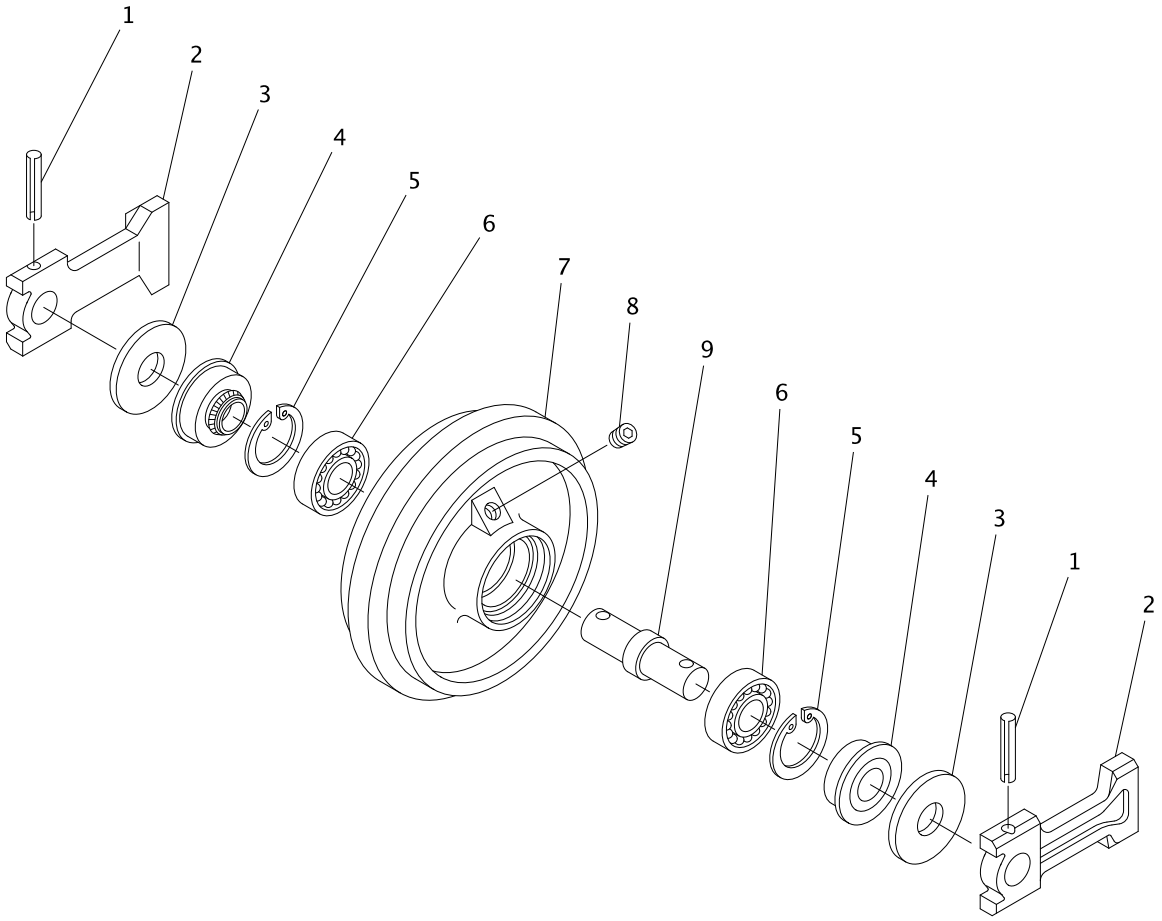

SHALL-010400-1

https://truckmanualshub.com/

KEY No.	SUP.	PART No.	DESCRIPTION	Q'TY	CHAN.	SERIAL No.	REMARKS
0	×	F300 361 00	Idler Ass'y, Front	2		WS000001-	
1		0494 651 70	*Pin, Spring	2		WS000001-	d=10X70
2		4420 732 00	*Block, Bearing	2		WS000001-	
3		4006 276 00	*Washer	2		WS000001-	
4		0761 731 40	*Seal	2		WS000001-	
5		0493 500 80	*Ring, Snap	2		WS000001-	d=80
6		0630 630 70	*Bearing, Ball	2		WS000001-	#6307
7		D236 013 00	*Idler, Front	1		WS000001-	
8		0710 201 01	*Plug	1		WS000001-	ST-PA-1/8
9		4220 516 00	*Shaft	1		WS000001-	

https://truckmanualshub.com/

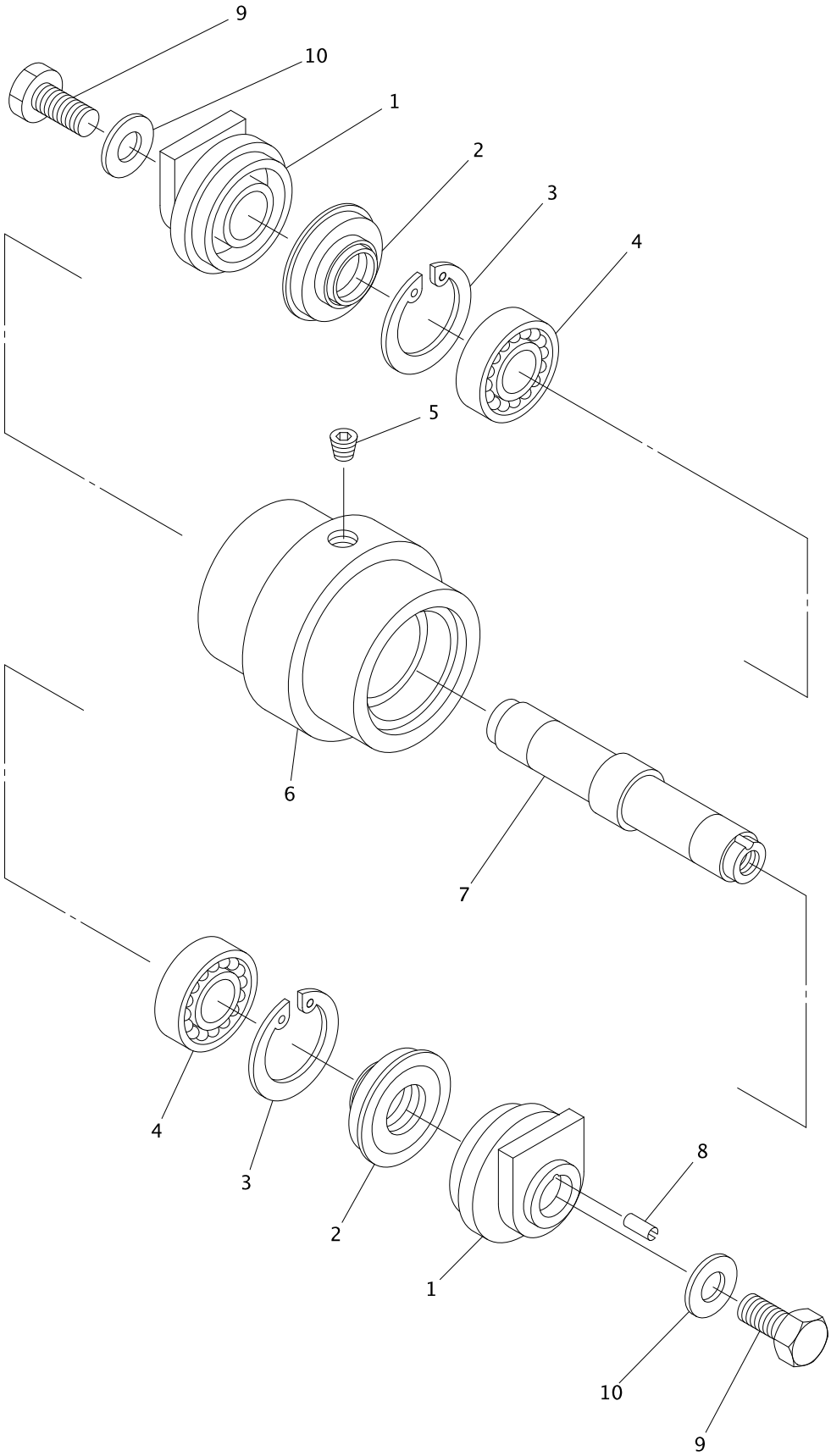

SHALL-010500-1

https://truckmanualshub.com/

KEY No.	SUP.	PART No.	DESCRIPTION	Q'TY	CHAN.	SERIAL No.	REMARKS
0		F300 223 00	Roller Ass'y, Lower	8		WS000001-	
1		4042 204 00	*Collar, Roller	2		WS000001-	
2		0761 730 12	*Seal	2		WS000001-	
3		0493 500 62	*Ring, Snap	2		WS000001-	d=62
4		0630 620 60	*Bearing	2		WS000001-	#6206
5		0710 201 01	*Plug	1		WS000001-	ST-PA-1/8
6		D031 031 00	*Roller, Guide	1		WS000001-	
7		4220 517 00	*Shaft	1		WS000001-	
8		0494 608 10	*Pin, Spring	1		WS000001-	d=5X10
9		0555 160 30	*Bolt, Treatment	2		WS000001-	M16X30
10		0595 160 00	*Washer, Treatment	2		WS000001-	M16

https://truckmanualshub.com/

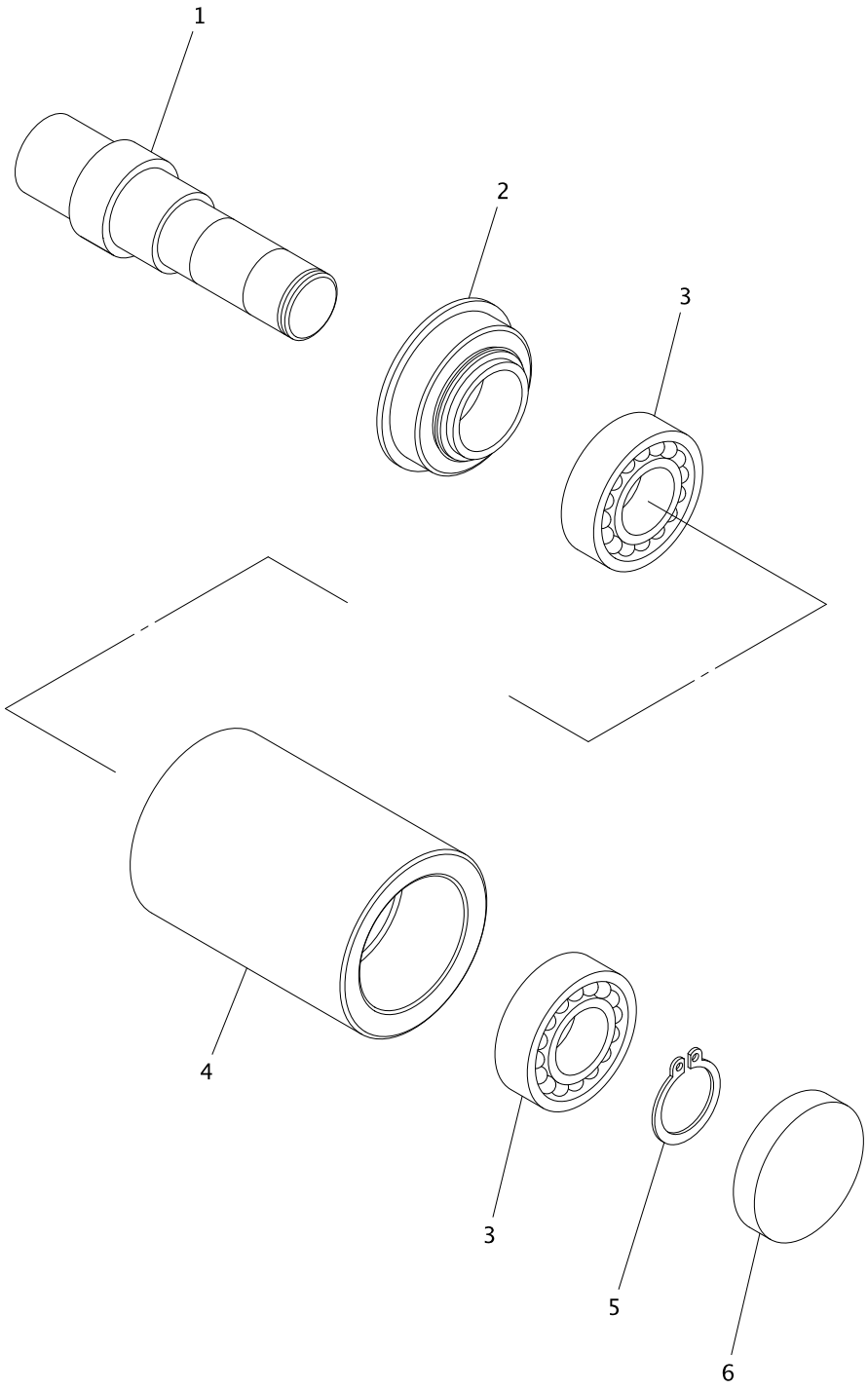

0651911UA-1

https://truckmanualshub.com/

KEY No.	SUP.	PART No.	DESCRIPTION	Q'TY	CHAN.	SERIAL No.	REMARKS
0		0651 911 UA	Roller Ass'y, Upper	2		WS010001-	
1		0651 911 02	*Shaft, Roller	1		WS010001-	
2		0761 691 20	*Seal	1		WS010001-	
3		0630 620 50	*Bearing	2		WS010001-	#6205
4		0651 911 01	*Roller	1		WS010001-	
5		0493 510 25	*Ring, Snap	1		WS010001-	d=25
6		0651 911 04	*Cap	1		WS010001-	

https://truckmanualshub.com/

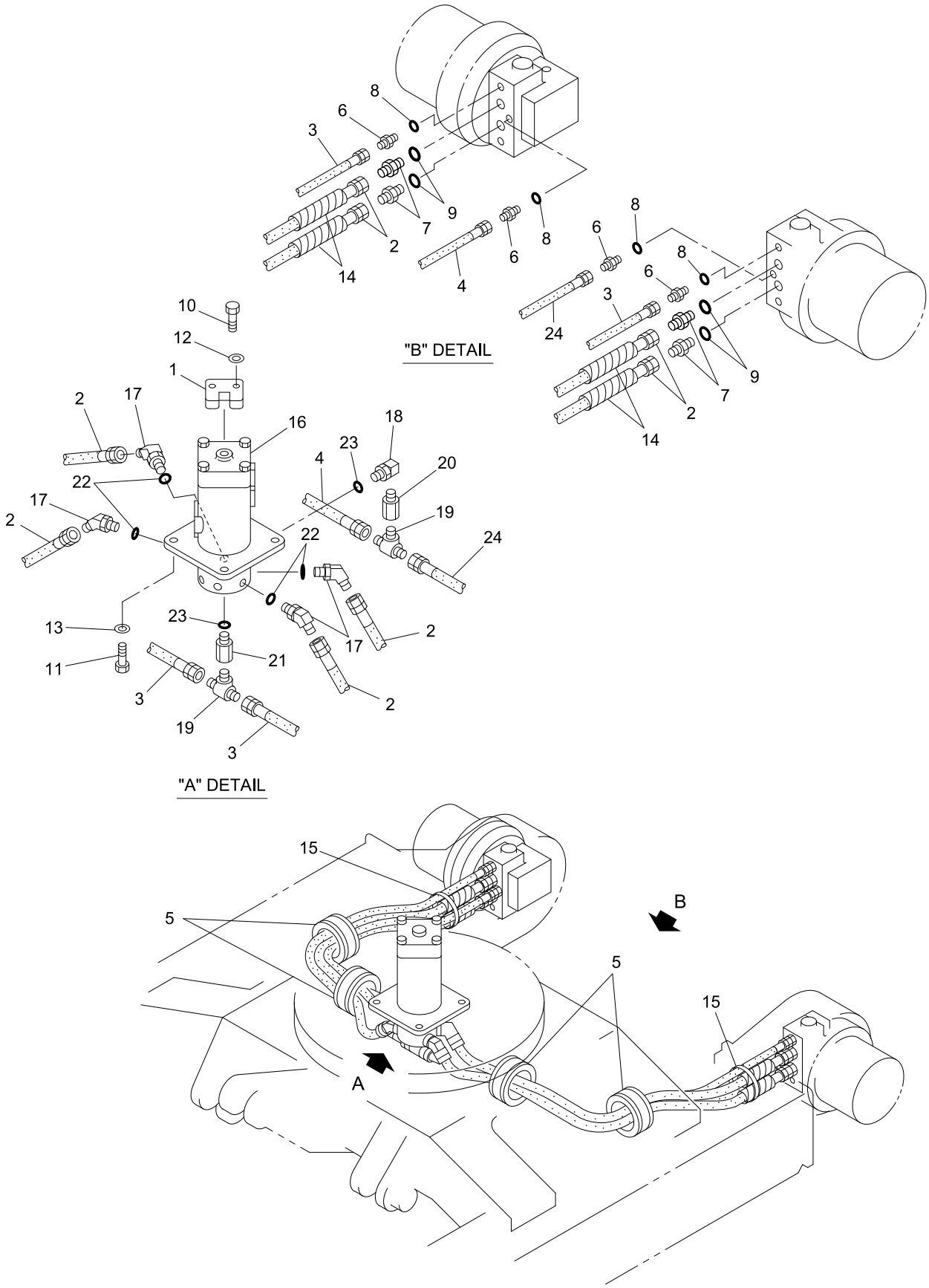

30V4-010700-1

https://truckmanualshub.com/

KEY No.	SUP.	PART No.	DESCRIPTION	Q'TY	CHAN.	SERIAL No.	REMARKS
0	×	F342 644 00	Piping Ass'y, Lower Travel	1		WS010001-	
1		D260 524 00	*Stay	1		WS010001-	
2		D070 461 12	*Hose Ass'y	4		WS010001-	L=1050
3		4070 548 13	*Hose Ass'y	2		WS010001-	L=1100
4		4070 548 13	*Hose Ass'y	1		WS010001-	L=1100
4-1	☆	4405 311 01	*Decal (RP)	2		WS010001-	4405 311 00
5		4580 729 00	*Pad	4		WS010001-	
6		0713 700 02	*Adapter	4		WS010001-	
7		0713 700 04	*Adapter	4		WS010001-	
8		0760 710 12	*Ring, O	4		WS010001-	P11-90B
9		0760 710 19	*Ring, O	4		WS010001-	P18-90B
10		0555 140 40	*Bolt, Treatment	2		WS010001-	M14X40
11		0514 100 25	*Bolt, Treatment	4		WS010001-	M10X25 P=1.25
12		0595 140 00	*Washer, Treatment	2		WS010001-	M14
13		0595 100 00	*Washer, Treatment	4		WS010001-	M10
14		0790 000 04	*Tube, Spiral	M		WS010001-	L=100X4
15		0820 067 09	*Band, Cable	2		WS010001-	
16	#	0713 429 UA	*Joint Ass'y, Rotary	1		WS010001-	Sh.No.5-3
17		0710 114 34	*Elbow, 45 Reducer	4		WS010001-	PF3/8XPF1/2
18		0719 804 UA	*Elbow	1		WS010001-	
19		0710 707 02	*Tee	2		WS010001-	
20		4072 662 03	*Connector	1		WS010001-	
21		0711 402 02	*Adapter	1		WS010001-	
22		0760 710 16	*Ring, O	4		WS010001-	P14-90B
23		0760 710 12	*Ring, O	2		WS010001-	P11-90B
24		4070 548 13	*Hose Ass'y	1		WS010001-	L=1100
24-1	☆	4405 311 02	*Decal (LP)	2		WS010001-	4405 311 00

https://truckmanualshub.com/

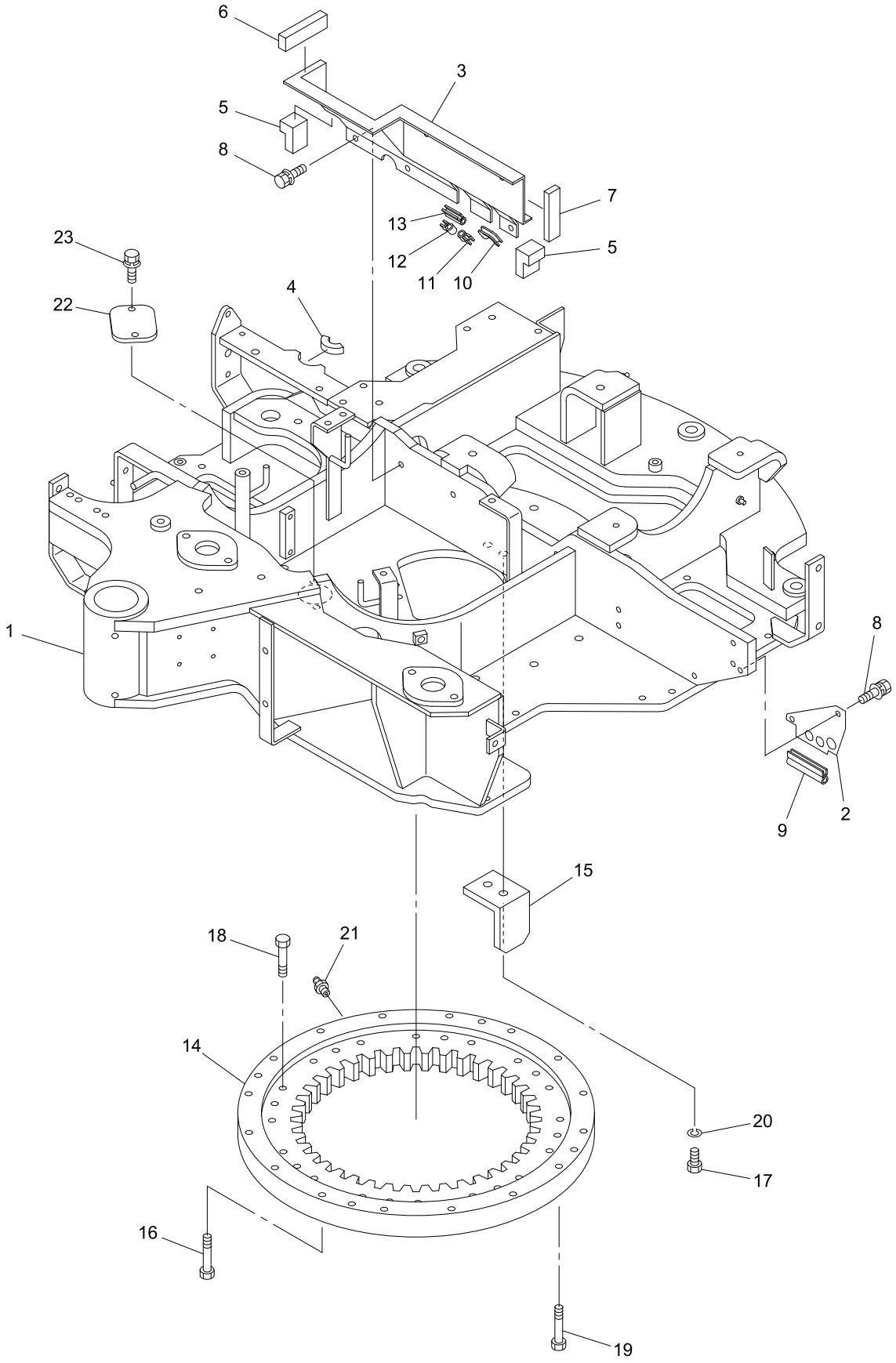

30V4-020100-1

https://truckmanualshub.com/

KEY No.	SUP.	PART No.	DESCRIPTION	Q'TY	CHAN.	SERIAL No.	REMARKS
0	×	F311 357 00	Frame Ass'y, Swing	1		WS010001-	
0-1	×	F320 257 00	Bearing Ass'y, Swing	1		WS010001-	
1	△	D204 360 00	*Frame, Swing	1		WS010001-	
2		D419 280 00	*Bracket	1		WS010001-	
3		D419 278 00	*Bracket	1		WS010001-	
4		D493 537 00	*Panel, Sponge	1		WS010001-	
5		D493 538 00	*Panel, Sponge	2		WS010001-	
6		D493 646 00	*Panel, Sponge	1		WS010001-	
7		D493 540 00	*Panel, Sponge	1		WS010001-	
8		0517 080 20	*Bolt, Treatment (W/L.W, F.W)	5		WS010001-	M8X20
9		0910 870 05	*Seal	M		WS010001-	L=90
10		4550 519 00	*Seal	M		WS010001-	L=60
11		0910 870 05	*Seal	M		WS010001-	L=15
12		0910 870 05	*Seal	M		WS010001-	L=15
13		0910 870 05	*Seal	M		WS010001-	L=35
14		0605 427 UA	*Bearing, Swing	1		WS010001-	
15		D415 525 00	*Bracket	1		WS010001-	
16		D002 001 00	*Bolt, Reamer	1		WS010001-	M12X70
17		0513 120 30	*Bolt, Treatment	2		WS010001-	M12X30
18		0555 120 60	*Bolt, Treatment	24		WS010001-	M12X60
19		0555 120 70	*Bolt, Treatment	19		WS010001-	M12X70
20		0590 120 00	*Washer, Lock	2		WS010001-	M12
21		0728 111 15	*Nipple, Grease	1		WS010001-	PT1/8
22		4460 756 00	*Cover	1		WS010001-	
23		0517 080 20	*Bolt, Treatment (W/L.W, F.W)	2		WS010001-	M8X20

https://truckmanualshub.com/

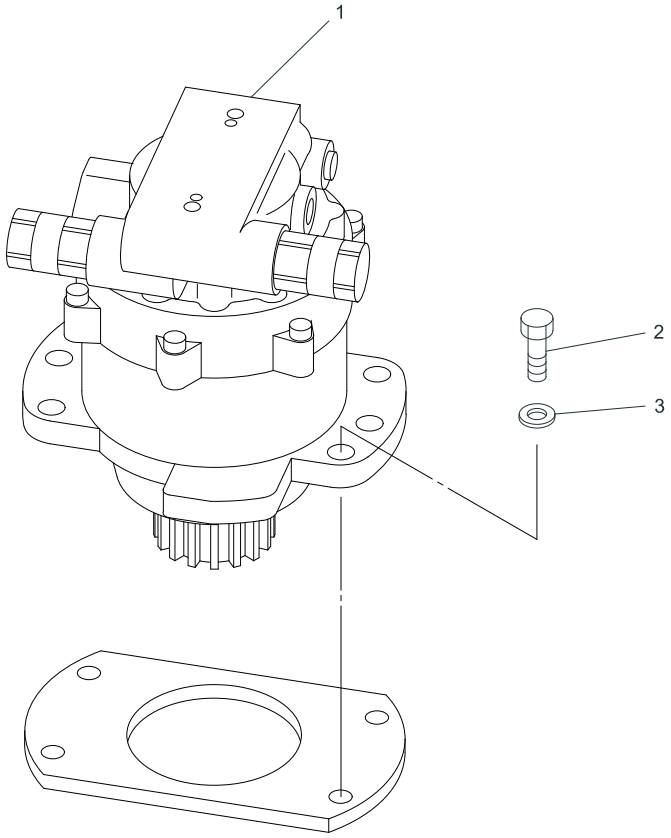

30V4-030100-1

https://truckmanualshub.com/

KEY No.	SUP.	PART No.	DESCRIPTION	Q'TY	CHAN.	SERIAL No.	REMARKS
0	×	F320 253 00	Swing Drive Device	1		WS010001-	
1	#	0781 376 UA	*Motor Ass'y, Swing	1		WS010001-	Sh. No. 5-2
2		0555 160 45	*Bolt, Treatment	6		WS010001-	M16X45
3		0595 160 00	*Washer, Treatment	6		WS010001-	M16

https://truckmanualshub.com/

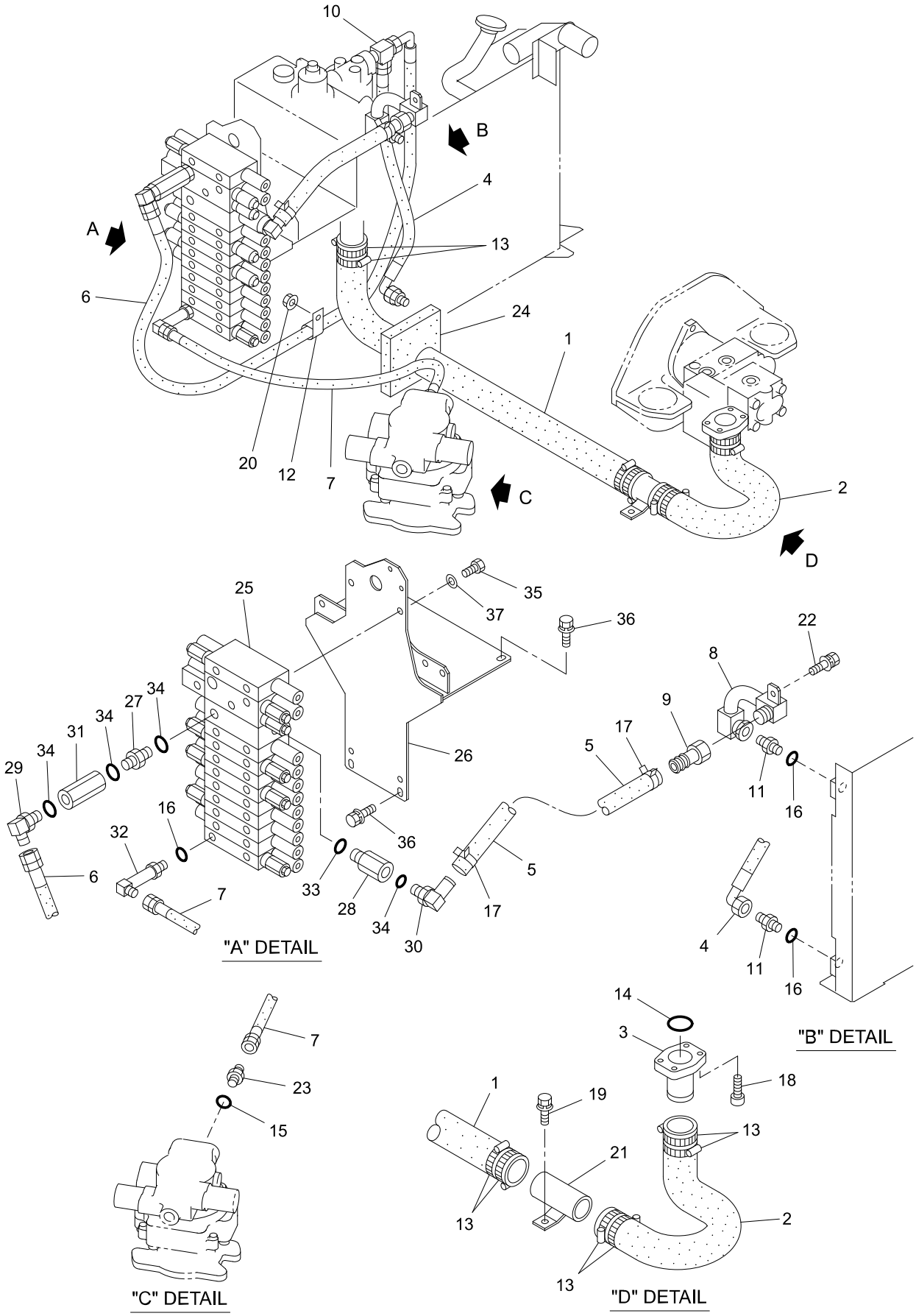

30V4-040100-1

https://truckmanualshub.com/

KEY No.	SUP.	PART No.	DESCRIPTION	Q'TY	CHAN.	SERIAL No.	REMARKS
0	×	F342 635 00	Piping Ass'y, Return & Suction	1		WS010001-	
1		0776 600 07	*Hose	1		WS010001-	
2		0776 600 06	*Hose	1		WS010001-	
3		D286 272 00	*Tube	1		WS010001-	
4		D070 110 15	*Hose Ass'y	1		WS010001-	L=430
5		D070 558 01	*Hose Ass'y	1		WS010001-	L=480
6		D070 110 01	*Hose Ass'y	1		WS010001-	L=1750
7		4070 015 15	*Hose Ass'y	1		WS010001-	L=800
8		D286 279 00	*Tube	1		WS010001-	
9		D060 227 00	*Nipple	1		WS010001-	
10		0710 709 12	*Tee, Special	1		WS010001-	
11		D060 538 00	*Connector, Reducer	2		WS010001-	PF1/2XPF3/4
12		4080 000 06	*Clamp, Hose	1		WS010001-	
13		0690 083 10	*Clamp, Hose	8		WS010001-	
14		0760 312 22	*Ring, O	1		WS010001-	222-90B
15		0760 710 16	*Ring, O	1		WS010001-	P14-90B
16		0760 710 19	*Ring, O	3		WS010001-	P18-90B
17		0690 083 06	*Clamp, Hose	2		WS010001-	
18		0562 100 30	*Bolt, Socket Head	4		WS010001-	M10X30
19		0517 080 20	*Bolt, Treatment (W/L.W, F.W)	1		WS010001-	M8X20
20		0524 100 00	*Nut, Hex. (W/F.W)	1		WS010001-	M10 P=1.25
21		D430 286 00	*Pipe	1		WS010001-	
22		0518 100 20	*Bolt, Treatment (W/L.W, F.W)	1		WS010001-	M10X20 P=1.25
23		0713 700 03	*Adapter	1		WS010001-	
24		D433 510 00	*Plate, Rubber	1		WS010001-	
25	#	0784 108 UA	*Valve Ass'y, Control	1		WS010001-	Sh. No. 5-4
26		D419 287 00	*Bracket	1		WS010001-	
27		D060 514 00	*Connector	1		WS010001-	
28		D060 515 00	*Connector, Reducer	1		WS010001-	PF1XPF3/4
29		0710 113 66	*Elbow	1		WS010001-	
30		0710 127 05	*Elbow	1		WS010001-	
31		0785 947 UA	*Valve, Check	1		WS010001-	
32		0710 117 07	*Elbow, Reducer	1		WS010001-	PF1/2XPF3/8
33		0760 710 30	*Ring, O	1		WS010001-	P29-90B
34		0760 710 24	*Ring, O	4		WS010001-	P22.4-90B
35		0513 100 16	*Bolt, Treatment	4		WS010001-	M10X16
36		0518 100 20	*Bolt, Treatment (W/L.W, F.W)	4		WS010001-	M10X20 P=1.25
37		0595 100 00	*Washer, Treatment	4		WS010001-	M10

https://truckmanualshub.com/

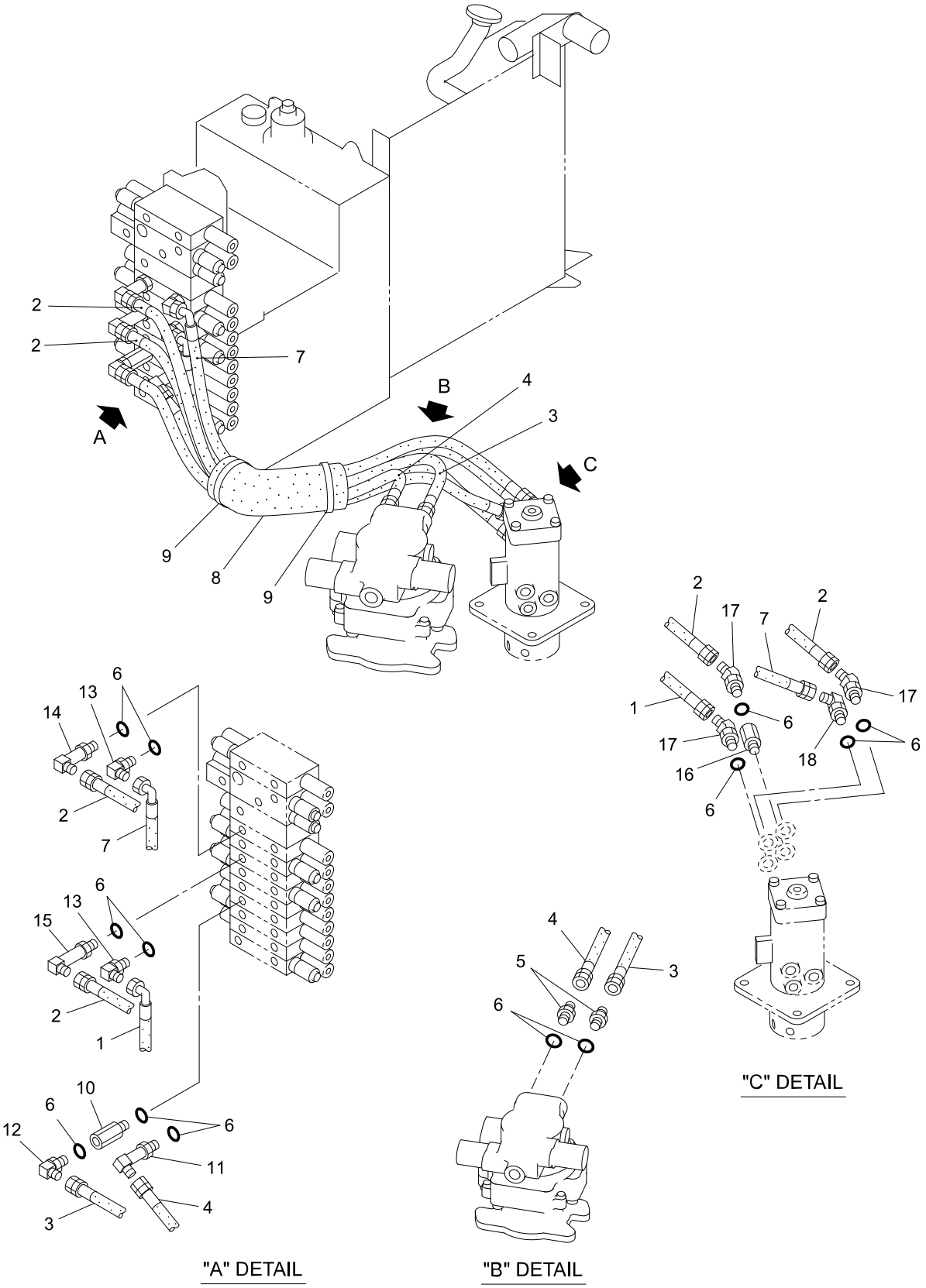

30V4-040200-1

https://truckmanualshub.com/

KEY No.	SUP.	PART No.	DESCRIPTION	Q'TY	CHAN.	SERIAL No.	REMARKS
0	×	F342 635 00	Piping Ass'y, Swing & Travel	1		WS010001-	
1		D070 363 13	*Hose Ass'y	1		WS010001-	L=850
2		D070 461 10	*Hose Ass'y	2		WS010001-	L=930
3		4070 001 09	*Hose Ass'y	1		WS010001-	L=900
4		4070 001 73	*Hose Ass'y	1		WS010001-	L=730
5		0713 700 03	*Adapter	2		WS010001-	
6		0760 710 16	*Ring, O	13		WS010001-	P14-90B
7		D070 363 24	*Hose Ass'y	1		WS010001-	L=760
8		4070 350 03	*Cover, Hose	1		WS010001-	
9		0820 067 09	*Band, Cable	2		WS010001-	
10		D060 483 00	*Connector	1		WS010001-	
11		0710 117 05	*Elbow, Long	1		WS010001-	
12		0710 113 33	*Elbow	1		WS010001-	
13		0710 113 34	*Elbow, Reducer	2		WS010001-	PF3/8XPF1/2
14		4060 051 00	*Elbow, Reducer	1		WS010001-	PF3/8XPF1/2
15		D060 541 00	*Elbow, Reducer	1		WS010001-	PF3/8XPF1/2
16		D060 536 00	*Connector	1		WS010001-	
17		0710 114 34	*Elbow, 45 Reducer	3		WS010001-	PF3/8XPF1/2
18		0710 113 34	*Elbow, Reducer	1		WS010001-	PF3/8XPF1/2

https://truckmanualshub.com/

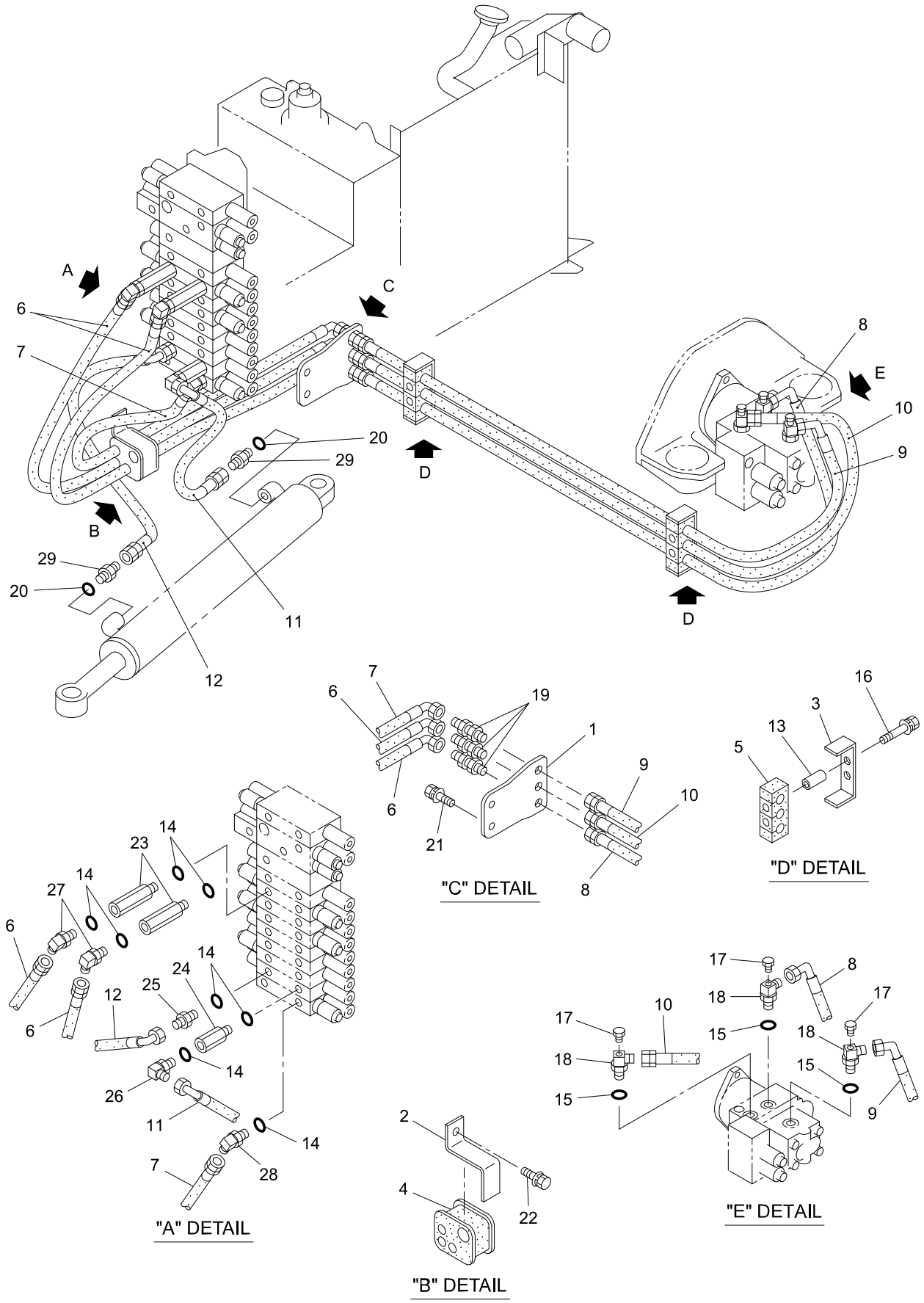

30V4-040300-1

https://truckmanualshub.com/

KEY No.	SUP.	PART No.	DESCRIPTION	Q'TY	CHAN.	SERIAL No.	REMARKS
0	×	F342 635 00	Piping Ass'y, Pump Discharge & Boom Swing	1		WS010001-	
0-1	×	F388 395 00	Piping Ass'y, Pump Discharge & Boom Swing	1		WS010001-	
1		D419 310 00	*Bracket	1		WS010001-	
2		D083 146 00	*Clamp	1		WS010001-	
3		D419 311 00	*Bracket	2		WS010001-	
4		D580 169 00	*Pad	1		WS010001-	
5		D580 183 00	*Pad	2		WS010001-	
6		D070 363 04	*Hose Ass'y	2		WS010001-	L=950
7		D070 363 13	*Hose Ass'y	1		WS010001-	L=850
8		D070 363 26	*Hose Ass'y	1		WS010001-	L=1700
9		D070 363 27	*Hose Ass'y	1		WS010001-	L=1600
10		D070 461 13	*Hose Ass'y	1		WS010001-	L=1700
11		4070 472 25	*Hose Ass'y	1		WS010001-	L=520
12		4070 472 12	*Hose Ass'y	1		WS010001-	L=450
13		D040 218 00	*Spacer	4		WS010001-	
14		0760 710 16	*Ring, O	8		WS010001-	P14-90B
15		0760 710 19	*Ring, O	3		WS010001-	P18-90B
16		0517 080 60	*Bolt, Treatment (W/L.W, F.W)	4		WS010001-	M8X60
17		0710 202 02	*Plug	3		WS010001-	
18		D060 164 00	*Tee	3		WS010001-	
19		D060 451 00	*Connector	3		WS010001-	
20		0760 710 12	*Ring, O	2		WS010001-	P11-90B
21		0518 100 30	*Bolt, Treatment (W/L.W, F.W)	2		WS010001-	M10X30 P=1.25
22		0518 100 20	*Bolt, Treatment (W/L.W, F.W)	1		WS010001-	M10X20 P=1.25
23		D060 482 00	*Connector, Reducer	2		WS010001-	PF3/8XPF1/2
24		D060 483 00	*Connector	1		WS010001-	
25		0713 700 77	*Adapter, Reducer	1		WS010001-	PF3/8XPF1/4
26		0710 113 32	*Elbow, Reducer	1		WS010001-	PF3/8XPF1/4
27		0710 113 44	*Elbow	2		WS010001-	
28		0710 113 34	*Elbow, Reducer	1		WS010001-	PF3/8XPF1/2
29		0713 700 70	*Connector	2		WS010001-	

https://truckmanualshub.com/

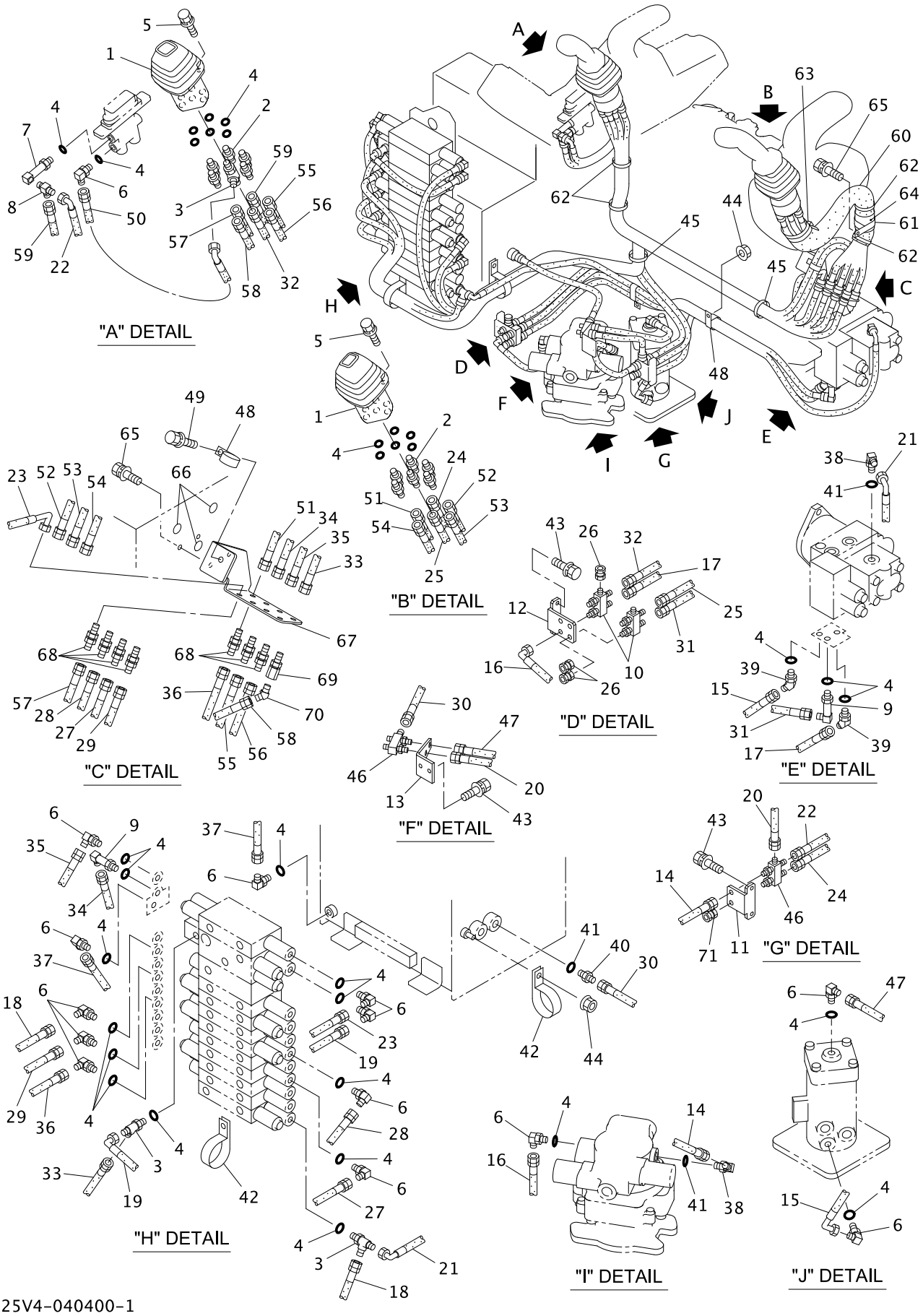

https://truckmanualshub.com/

KEY No.	SUP.	PART No.	DESCRIPTION	Q'TY	CHAN.	SERIAL No.	REMARKS
0	×	F342 660 00	Piping Ass'y, Control	1		WS010001-	
1	#	0783 964 UA	*Valve Assy Remote Control	2		WS010001-	Sh. No. 5-5
2		0713 700 70	*Connector	11		WS010001-	
3		0710 713 09	*Tee	3		WS010001-	
4		0760 710 12	*Ring, O	33		WS010001-	P11-90B
5		0517 060 25	*Bolt, Treatment (W/L.W, F.W)	6		WS010001-	M6X25
6		0710 122 09	*Elbow	14		WS010001-	
7		0719 805 UA	*Elbow	1		WS010001-	
8		0710 709 02	*Tee	1		WS010001-	
9		D060 028 00	*Elbow	2		WS010001-	
10		D065 093 00	*Manifold	2		WS010001-	
11		D418 929 00	*Bracket	1		WS010001-	
12		D418 930 00	*Bracket	1		WS010001-	
13		D419 281 00	*Bracket	1		WS010001-	
14		4070 548 73	*Hose Ass'y	1		WS010001-	L=390
15		4070 551 28	*Hose Ass'y	1		WS010001-	L=830
16		4070 551 14	*Hose Ass'y	1		WS010001-	L=260
17		4070 548 06	*Hose Ass'y	1		WS010001-	L=1200
18		4070 548 15	*Hose Ass'y	1		WS010001-	L=900
19		4070 551 40	*Hose Ass'y	1		WS010001-	L=380
19-1	☆	4405 307 01	*Decal (B1)	2		WS010001-	4405 307 00
20		4070 782 18	*Hose Ass'y	1		WS010001-	L=230
21		4070 551 42	*Hose Ass'y	1		WS010001-	L=1600
22		4070 551 44	*Hose Ass'y	1		WS010001-	L=1120
22-1	☆	D407 818 04	*Decal (BT)	2		WS010001-	D407 818 00
23		4070 551 43	*Hose Ass'y	1		WS010001-	L=2450
23-1	☆	4405 308 01	*Decal (C1)	2		WS010001-	4405 308 00
24		4070 548 01	*Hose Ass'y	1		WS010001-	L=1900
24-1	☆	4405 312 02	*Decal (LT)	2		WS010001-	4405 312 00
25		4070 548 01	*Hose Ass'y	1		WS010001-	L=1900
25-1	☆	4405 311 02	*Decal (LP)	2		WS010001-	4405 311 00
26		0710 303 02	*Plug, Swivel	3		WS010001-	
27		4070 548 04	*Hose Ass'y	1		WS010001-	L=1800
27-1	☆	4405 310 01	*Decal (S1)	2		WS010001-	4405 310 00
28		4070 548 41	*Hose Ass'y	1		WS010001-	L=1850
28-1	☆	4405 309 01	*Decal (A1)	2		WS010001-	4405 309 00
29		4070 548 89	*Hose Ass'y	1		WS010001-	L=2250
29-1	☆	4405 309 02	*Decal (A2)	2		WS010001-	4405 309 00
30		4070 782 19	*Hose Ass'y	1		WS010001-	L=370
31		4070 548 33	*Hose Ass'y	1		WS010001-	L=1150
32		4070 548 33	*Hose Ass'y	1		WS010001-	L=1150
32-1	☆	4405 311 01	*Decal (RP)	2		WS010001-	4405 311 00
33		4070 548 80	*Hose Ass'y	1		WS010001-	L=2450
33-1	☆	4405 307 01	*Decal (B1)	2		WS010001-	4405 307 00
34		4070 548 85	*Hose Ass'y	1		WS010001-	L=2550

https://truckmanualshub.com/

KEY No.	SUP.	PART No.	DESCRIPTION	Q'TY	CHAN.	SERIAL No.	REMARKS
34-1	☆	4405 307 02	*Decal (B2)	2		WS010001-	4405 307 00
35		4070 548 85	*Hose Ass'y	1		WS010001-	L=2550
35-1	☆	4405 308 02	*Decal (C2)	2		WS010001-	4405 308 00
36		4070 548 23	*Hose Ass'y	1		WS010001-	L=2200
36-1	☆	4405 310 02	*Decal (S2)	2		WS010001-	4405 310 00
37		4070 548 82	*Hose Ass'y	1		WS010001-	L=420
38		0710 113 32	*Elbow, Reducer	2		WS010001-	PF3/8XPF1/4
39		0710 121 00	*Elbow, 45	2		WS010001-	
40		0713 700 03	*Adapter	1		WS010001-	
41		0760 710 16	*Ring, O	3		WS010001-	P14-90B
42		4080 000 10	*Clamp, Hose	2		WS010001-	
43		0517 080 20	*Bolt, Treatment (W/L.W, F.W)	6		WS010001-	M8X20
44		0524 100 00	*Nut, Hex. (W/F.W)	2		WS010001-	M10 P=1.25
45		0820 067 05	*Band, Cable	7		WS010001-	
46		D065 094 00	*Manifold	2		WS010001-	
47		4070 548 55	*Hose Ass'y	1		WS010001-	L=350
48		4080 000 11	*Clamp	2		WS010001-	
49		0518 100 20	*Bolt, Treatment (W/L.W, F.W)	1		WS010001-	M10X20 P=1.25
50		4070 551 15	*Hose Ass'y	1		WS010001-	L=350
50-1	☆	D407 818 03	*Decal (BP)	2		WS010001-	D407 818 00
51		4070 548 25	*Hose Ass'y	1		WS010001-	L=700
51-1	☆	4405 309 03	*Decal (L1)	2		WS010001-	4405 309 00
52		4070 548 25	*Hose Ass'y	1		WS010001-	L=700
52-1	☆	4405 310 03	*Decal (L2)	2		WS010001-	4405 310 00
53		4070 548 25	*Hose Ass'y	1		WS010001-	L=700
53-1	☆	4405 309 04	*Decal (L3)	2		WS010001-	4405 309 00
54		4070 548 25	*Hose Ass'y	1		WS010001-	L=700
54-1	☆	4405 310 04	*Decal (L4)	2		WS010001-	4405 310 00
55		4070 548 06	*Hose Ass'y	1		WS010001-	L=1200
55-1	☆	4405 308 03	*Decal (R2)	2		WS010001-	4405 308 00
56		4070 548 06	*Hose Ass'y	1		WS010001-	L=1200
56-1	☆	4405 307 04	*Decal (R3)	2		WS010001-	4405 307 00
57		4070 548 19	*Hose Ass'y	1		WS010001-	L=1250
57-1	☆	4405 307 03	*Decal (R1)	2		WS010001-	4405 307 00
58		4070 548 19	*Hose Ass'y	1		WS010001-	L=1250
58-1	☆	4405 308 04	*Decal (R4)	2		WS010001-	4405 308 00
59		4070 548 08	*Hose Ass'y	1		WS010001-	L=300
59-1	☆	4405 312 01	*Decal (RT)	2		WS010001-	4405 312 00
60		D070 577 01	*Hose	1		WS010001-	
61		4080 000 09	*Clamp, Hose	1		WS010001-	
62		0820 067 09	*Band, Cable	4		WS010001-	
63		0820 067 10	*Band, Cable	1		WS010001-	
64		4580 016 00	*Pad	1		WS010001-	

https://truckmanualshub.com/

KEY No.	SUP.	PART No.	DESCRIPTION	Q'TY	CHAN.	SERIAL No.	REMARKS
65		0518 100 25	*Bolt, Treatment (W/L.W, F.W)	3		WS010001-	M10X25 P=1.25
66		D405 272 00	*Seal	3		WS010001-	
67		D419 122 00	*Bracket	1		WS010001-	
68		D060 137 00	*Adapter	7		WS010001-	
69		0712 325 02	*Adapter	1		WS010001-	
70		0712 310 40	*Elbow, 45	1		WS010001-	
71		0710 303 03	*Plug, Swivel	1		WS010001-	

https://truckmanualshub.com/

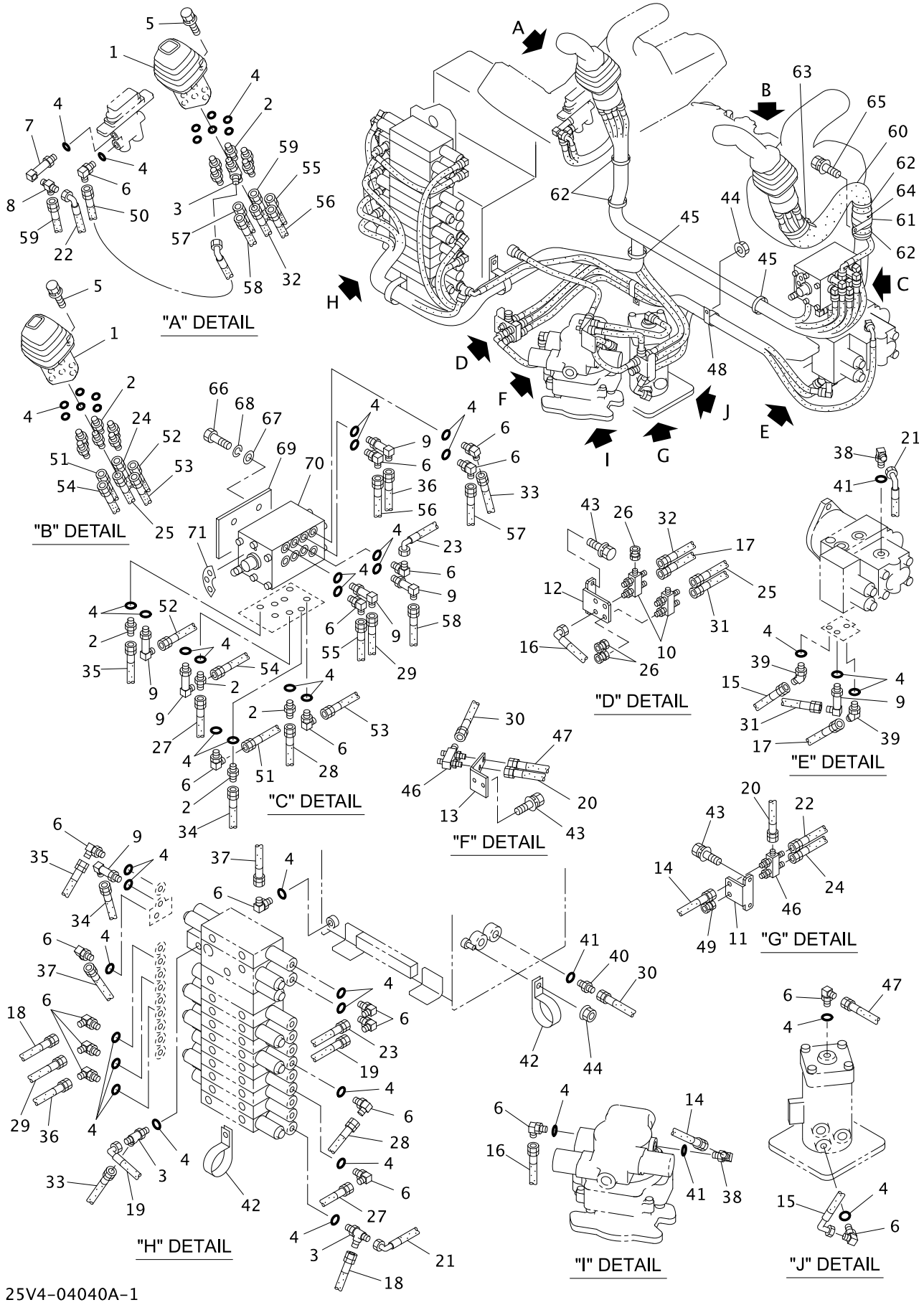

https://truckmanualshub.com/

KEY No.	SUP.	PART No.	DESCRIPTION	Q'TY	CHAN.	SERIAL No.	REMARKS
0	×	F342 660 00	Piping Ass'y, Control	1		WS010001-	
1	#	0783 964 UA	*Valve Assy Remote Control	2		WS010001-	Sh. No. 5-5
2		0713 700 70	*Connector	15		WS010001-	
3		0710 713 09	*Tee	3		WS010001-	
4		0760 710 12	*Ring, O	49		WS010001-	P11-90B
5		0517 060 25	*Bolt, Treatment (W/L.W, F.W)	6		WS010001-	M6X25
6		0710 122 09	*Elbow	21		WS010001-	
7		0719 805 UA	*Elbow	1		WS010001-	
8		0710 709 02	*Tee	1		WS010001-	
9		D060 028 00	*Elbow	7		WS010001-	
10		D065 093 00	*Manifold	2		WS010001-	
11		D418 929 00	*Bracket	1		WS010001-	
12		D418 930 00	*Bracket	1		WS010001-	
13		D419 281 00	*Bracket	1		WS010001-	
14		4070 548 73	*Hose Ass'y	1		WS010001-	L=390
15		4070 551 28	*Hose Ass'y	1		WS010001-	L=830
16		4070 551 14	*Hose Ass'y	1		WS010001-	L=260
17		4070 548 06	*Hose Ass'y	1		WS010001-	L=1200
18		4070 548 15	*Hose Ass'y	1		WS010001-	L=900
19		4070 551 40	*Hose Ass'y	1		WS010001-	L=380
19-1	☆	4405 307 01	*Decal (B1)	2		WS010001-	4405 307 00
20		4070 782 18	*Hose Ass'y	1		WS010001-	L=230
21		4070 551 42	*Hose Ass'y	1		WS010001-	L=1600
22		4070 551 44	*Hose Ass'y	1		WS010001-	L=1120
22-1	☆	D407 818 04	*Decal (BT)	2		WS010001-	D407 818 00
23		4070 551 43	*Hose Ass'y	1		WS010001-	L=2450
23-1	☆	4405 308 01	*Decal (C1)	2		WS010001-	4405 308 00
24		4070 548 01	*Hose Ass'y	1		WS010001-	L=1900
24-1	☆	4405 312 02	*Decal (LT)	2		WS010001-	4405 312 00
25		4070 548 01	*Hose Ass'y	1		WS010001-	L=1900
25-1	☆	4405 311 02	*Decal (LP)	2		WS010001-	4405 311 00
26		0710 303 02	*Plug, Swivel	3		WS010001-	
27		4070 548 04	*Hose Ass'y	1		WS010001-	L=1800
27-1	☆	4405 310 01	*Decal (S1)	2		WS010001-	4405 310 00
28		4070 548 41	*Hose Ass'y	1		WS010001-	L=1850
28-1	☆	4405 309 01	*Decal (A1)	2		WS010001-	4405 309 00
29		4070 548 89	*Hose Ass'y	1		WS010001-	L=2250
29-1	☆	4405 309 02	*Decal (A2)	2		WS010001-	4405 309 00
30		4070 782 19	*Hose Ass'y	1		WS010001-	L=370
31		4070 548 33	*Hose Ass'y	1		WS010001-	L=1150
32		4070 548 33	*Hose Ass'y	1		WS010001-	L=1150
32-1	☆	4405 311 01	*Decal (RP)	2		WS010001-	4405 311 00
33		4070 548 80	*Hose Ass'y	1		WS010001-	L=2450
33-1	☆	4405 307 01	*Decal (B1)	2		WS010001-	4405 307 00
34		4070 548 85	*Hose Ass'y	1		WS010001-	L=2550

https://truckmanualshub.com/

KEY No.	SUP.	PART No.	DESCRIPTION	Q'TY	CHAN.	SERIAL No.	REMARKS
34-1	☆	4405 307 02	*Decal (B2)	2		WS010001-	4405 307 00
35		4070 548 85	*Hose Ass'y	1		WS010001-	L=2550
35-1	☆	4405 308 02	*Decal (C2)	2		WS010001-	4405 308 00
36		4070 548 23	*Hose Ass'y	1		WS010001-	L=2200
36-1	☆	4405 310 02	*Decal (S2)	2		WS010001-	4405 310 00
37		4070 548 82	*Hose Ass'y	1		WS010001-	L=420
38		0710 113 32	*Elbow, Reducer	2		WS010001-	PF3/8XPF1/4
39		0710 121 00	*Elbow, 45	2		WS010001-	
40		0713 700 03	*Adapter	1		WS010001-	
41		0760 710 16	*Ring, O	3		WS010001-	P14-90B
42		4080 000 10	*Clamp, Hose	2		WS010001-	
43		0517 080 20	*Bolt, Treatment (W/L.W, F.W)	6		WS010001-	M8X20
44		0524 100 00	*Nut, Hex. (W/F.W)	2		WS010001-	M10 P=1.25
45		0820 067 05	*Band, Cable	7		WS010001-	
46		D065 094 00	*Manifold	2		WS010001-	
47		4070 548 55	*Hose Ass'y	1		WS010001-	L=350
48		4080 000 11	*Clamp	1		WS010001-	
49		0710 303 03	*Plug, Swivel	1		WS010001-	
50		4070 551 15	*Hose Ass'y	1		WS010001-	L=350
50-1	☆	D407 818 03	*Decal (BP)	2		WS010001-	D407 818 00
51		4070 548 25	*Hose Ass'y	1		WS010001-	L=700
51-1	☆	4405 309 03	*Decal (L1)	2		WS010001-	4405 309 00
52		4070 548 25	*Hose Ass'y	1		WS010001-	L=700
52-1	☆	4405 310 03	*Decal (L2)	2		WS010001-	4405 310 00
53		4070 548 25	*Hose Ass'y	1		WS010001-	L=700
53-1	☆	4405 309 04	*Decal (L3)	2		WS010001-	4405 309 00
54		4070 548 25	*Hose Ass'y	1		WS010001-	L=700
54-1	☆	4405 310 04	*Decal (L4)	2		WS010001-	4405 310 00
55		4070 548 06	*Hose Ass'y	1		WS010001-	L=1200
55-1	☆	4405 308 03	*Decal (R2)	2		WS010001-	4405 308 00
56		4070 548 06	*Hose Ass'y	1		WS010001-	L=1200
56-1	☆	4405 307 04	*Decal (R3)	2		WS010001-	4405 307 00
57		4070 548 19	*Hose Ass'y	1		WS010001-	L=1250
57-1	☆	4405 307 03	*Decal (R1)	2		WS010001-	4405 307 00
58		4070 548 19	*Hose Ass'y	1		WS010001-	L=1250
58-1	☆	4405 308 04	*Decal (R4)	2		WS010001-	4405 308 00
59		4070 548 08	*Hose Ass'y	1		WS010001-	L=300
59-1	☆	4405 312 01	*Decal (RT)	2		WS010001-	4405 312 00
60		D070 577 01	*Hose	1		WS010001-	
61		4080 000 09	*Clamp, Hose	1		WS010001-	
62		0820 067 09	*Band, Cable	4		WS010001-	
63		0820 067 10	*Band, Cable	1		WS010001-	
64		4580 016 00	*Pad	1		WS010001-	
65		0518 100 25	*Bolt, Treatment (W/L.W, F.W)	1		WS010001-	M10X25 P=1.25

https://truckmanualshub.com/

KEY No.	SUP.	PART No.	DESCRIPTION	Q'TY	CHAN.	SERIAL No.	REMARKS
66		0550 120 25	*Bolt, Hex.	3		WS010001-	M12X25
67		0593 120 00	*Washer, Flat	3		WS010001-	M12
68		0590 120 00	*Washer, Lock	3		WS010001-	M12
69		D040 345 00	*Spacer	1		WS010001-	
70	#	0784 112 UA	*Valve Ass'y, Multiple (For A-D)	1		WS010001-	Sh. No. 5-15
70-1		0784 113 UA	*Valve Ass'y, Multiple (For A, B, G)	1		WS010001-	
71		D405 447 00	*Decal (For A-D)	1		WS010001-	
71-1		D405 518 00	*Decal (For A, B, G)	1		WS010001-	

https://truckmanualshub.com/

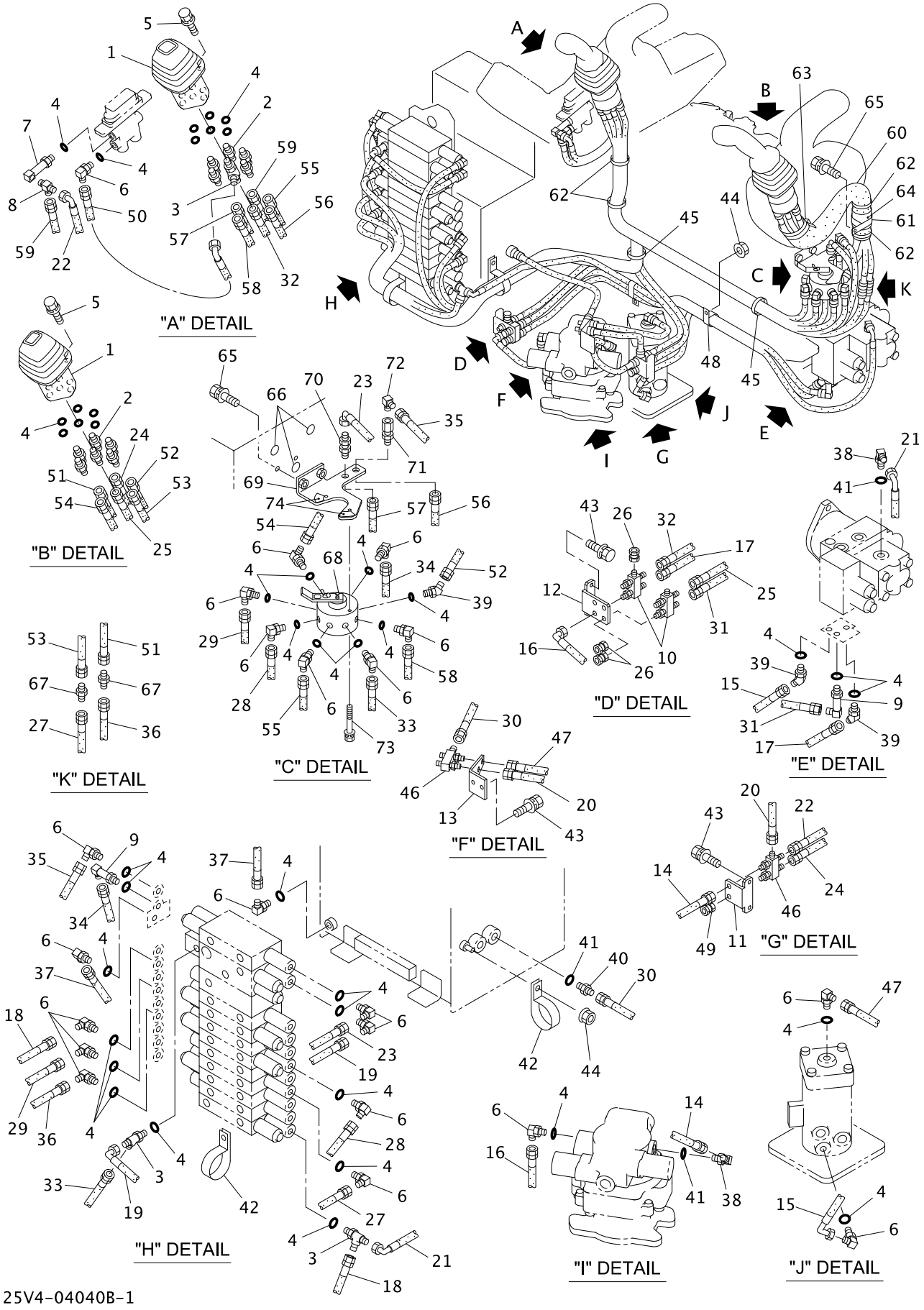

https://truckmanualshub.com/

KEY No.	SUP.	PART No.	DESCRIPTION	Q'TY	CHAN.	SERIAL No.	REMARKS
0	×	F342 660 00	Piping Ass'y, Control	1		WS010001-	
1	#	0783 964 UA	*Valve Assy Remote Control	2		WS010001-	Sh. No. 5-5
2		0713 700 70	*Connector	11		WS010001-	
3		0710 713 09	*Tee	3		WS010001-	
4		0760 710 12	*Ring, O	41		WS010001-	P11-90B
5		0517 060 25	*Bolt, Treatment (W/L.W, F.W)	6		WS010001-	M6X25
6		0710 122 09	*Elbow	21		WS010001-	
7		0719 805 UA	*Elbow	1		WS010001-	
8		0710 709 02	*Tee	1		WS010001-	
9		D060 028 00	*Elbow	2		WS010001-	
10		D065 093 00	*Manifold	2		WS010001-	
11		D418 929 00	*Bracket	1		WS010001-	
12		D418 930 00	*Bracket	1		WS010001-	
13		D419 281 00	*Bracket	1		WS010001-	
14		4070 548 73	*Hose Ass'y	1		WS010001-	L=390
15		4070 551 28	*Hose Ass'y	1		WS010001-	L=830
16		4070 551 14	*Hose Ass'y	1		WS010001-	L=260
17		4070 548 06	*Hose Ass'y	1		WS010001-	L=1200
18		4070 548 15	*Hose Ass'y	1		WS010001-	L=900
19		4070 551 40	*Hose Ass'y	1		WS010001-	L=380
19-1	☆	4405 307 01	*Decal (B1)	2		WS010001-	4405 307 00
20		4070 782 18	*Hose Ass'y	1		WS010001-	L=230
21		4070 551 42	*Hose Ass'y	1		WS010001-	L=1600
22		4070 551 44	*Hose Ass'y	1		WS010001-	L=1120
22-1	☆	D407 818 04	*Decal (BT)	2		WS010001-	D407 818 00
23		4070 551 43	*Hose Ass'y	1		WS010001-	L=2450
23-1	☆	4405 308 01	*Decal (C1)	2		WS010001-	4405 308 00
24		4070 548 01	*Hose Ass'y	1		WS010001-	L=1900
24-1	☆	4405 312 02	*Decal (LT)	2		WS010001-	4405 312 00
25		4070 548 01	*Hose Ass'y	1		WS010001-	L=1900
25-1	☆	4405 311 02	*Decal (LP)	2		WS010001-	4405 311 00
26		0710 303 02	*Plug, Swivel	3		WS010001-	
27		4070 548 04	*Hose Ass'y	1		WS010001-	L=1800
27-1	☆	4405 310 01	*Decal (S1)	2		WS010001-	4405 310 00
28		4070 548 41	*Hose Ass'y	1		WS010001-	L=1850
28-1	☆	4405 309 01	*Decal (A1)	2		WS010001-	4405 309 00
29		4070 548 89	*Hose Ass'y	1		WS010001-	L=2250
29-1	☆	4405 309 02	*Decal (A2)	2		WS010001-	4405 309 00
30		4070 782 19	*Hose Ass'y	1		WS010001-	L=370
31		4070 548 33	*Hose Ass'y	1		WS010001-	L=1150
32		4070 548 33	*Hose Ass'y	1		WS010001-	L=1150
32-1	☆	4405 311 01	*Decal (RP)	2		WS010001-	4405 311 00
33		4070 548 80	*Hose Ass'y	1		WS010001-	L=2450
33-1	☆	4405 307 01	*Decal (B1)	2		WS010001-	4405 307 00
34		4070 548 85	*Hose Ass'y	1		WS010001-	L=2550

https://truckmanualshub.com/

KEY No.	SUP.	PART No.	DESCRIPTION	Q'TY	CHAN.	SERIAL No.	REMARKS
34-1	☆	4405 307 02	*Decal (B2)	2		WS010001-	4405 307 00
35		4070 548 85	*Hose Ass'y	1		WS010001-	L=2550
35-1	☆	4405 308 02	*Decal (C2)	2		WS010001-	4405 308 00
36		4070 548 23	*Hose Ass'y	1		WS010001-	L=2200
36-1	☆	4405 310 02	*Decal (S2)	2		WS010001-	4405 310 00
37		4070 548 82	*Hose Ass'y	1		WS010001-	L=420
38		0710 113 32	*Elbow, Reducer	2		WS010001-	PF3/8XPF1/4
39		0710 121 00	*Elbow, 45	3		WS010001-	
40		0713 700 03	*Adapter	1		WS010001-	
41		0760 710 16	*Ring, O	3		WS010001-	P14-90B
42		4080 000 10	*Clamp, Hose	2		WS010001-	
43		0517 080 20	*Bolt, Treatment (W/L.W, F.W)	6		WS010001-	M8X20
44		0524 100 00	*Nut, Hex. (W/F.W)	2		WS010001-	M10 P=1.25
45		0820 067 05	*Band, Cable	7		WS010001-	
46		D065 094 00	*Manifold	2		WS010001-	
47		4070 548 55	*Hose Ass'y	1		WS010001-	L=350
48		4080 000 11	*Clamp	1		WS010001-	
49		0710 303 03	*Plug, Swivel	1		WS010001-	
50		4070 551 15	*Hose Ass'y	1		WS010001-	L=350
50-1	☆	D407 818 03	*Decal (BP)	2		WS010001-	D407 818 00
51		4070 548 25	*Hose Ass'y	1		WS010001-	L=700
51-1	☆	4405 309 03	*Decal (L1)	2		WS010001-	4405 309 00
52		4070 548 25	*Hose Ass'y	1		WS010001-	L=700
52-1	☆	4405 310 03	*Decal (L2)	2		WS010001-	4405 310 00
53		4070 548 25	*Hose Ass'y	1		WS010001-	L=700
53-1	☆	4405 309 04	*Decal (L3)	2		WS010001-	4405 309 00
54		4070 548 25	*Hose Ass'y	1		WS010001-	L=700
54-1	☆	4405 310 04	*Decal (L4)	2		WS010001-	4405 310 00
55		4070 548 06	*Hose Ass'y	1		WS010001-	L=1200
55-1	☆	4405 308 03	*Decal (R2)	2		WS010001-	4405 308 00
56		4070 548 06	*Hose Ass'y	1		WS010001-	L=1200
56-1	☆	4405 307 04	*Decal (R3)	2		WS010001-	4405 307 00
57		4070 548 19	*Hose Ass'y	1		WS010001-	L=1250
57-1	☆	4405 307 03	*Decal (R1)	2		WS010001-	4405 307 00
58		4070 548 19	*Hose Ass'y	1		WS010001-	L=1250
58-1	☆	4405 308 04	*Decal (R4)	2		WS010001-	4405 308 00
59		4070 548 08	*Hose Ass'y	1		WS010001-	L=300
59-1	☆	4405 312 01	*Decal (RT)	2		WS010001-	4405 312 00
60		D070 577 01	*Hose	1		WS010001-	
61		4080 000 09	*Clamp, Hose	1		WS010001-	
62		0820 067 09	*Band, Cable	4		WS010001-	
63		0820 067 10	*Band, Cable	1		WS010001-	
64		4580 016 00	*Pad	1		WS010001-	
65		0518 100 25	*Bolt, Treatment (W/L.W, F.W)	3		WS010001-	M10X25 P=1.25

https://truckmanualshub.com/

KEY No.	SUP.	PART No.	DESCRIPTION	Q'TY	CHAN.	SERIAL No.	REMARKS
66		D405 272 00	*Seal	3		WS010001-	
67		0712 326 01	*Adapter	2		WS010001-	
68	#	0756 094 UA	*Valve Ass'y, Selector	1		WS010001-	Sh. No. 5-15[B]
69		D418 583 00	*Bracket	1		WS010001-	
70		D060 137 00	*Adapter	1		WS010001-	
71		0712 325 02	*Adapter	1		WS010001-	
72		0712 310 50	*Elbow	1		WS010001-	
73		0517 060 60	*Bolt, Treatment (W/L.W, F.W)	2		WS010001-	M6X60
74		4448 987 00	*Decal (For A, F)	1		WS010001-	

https://truckmanualshub.com/

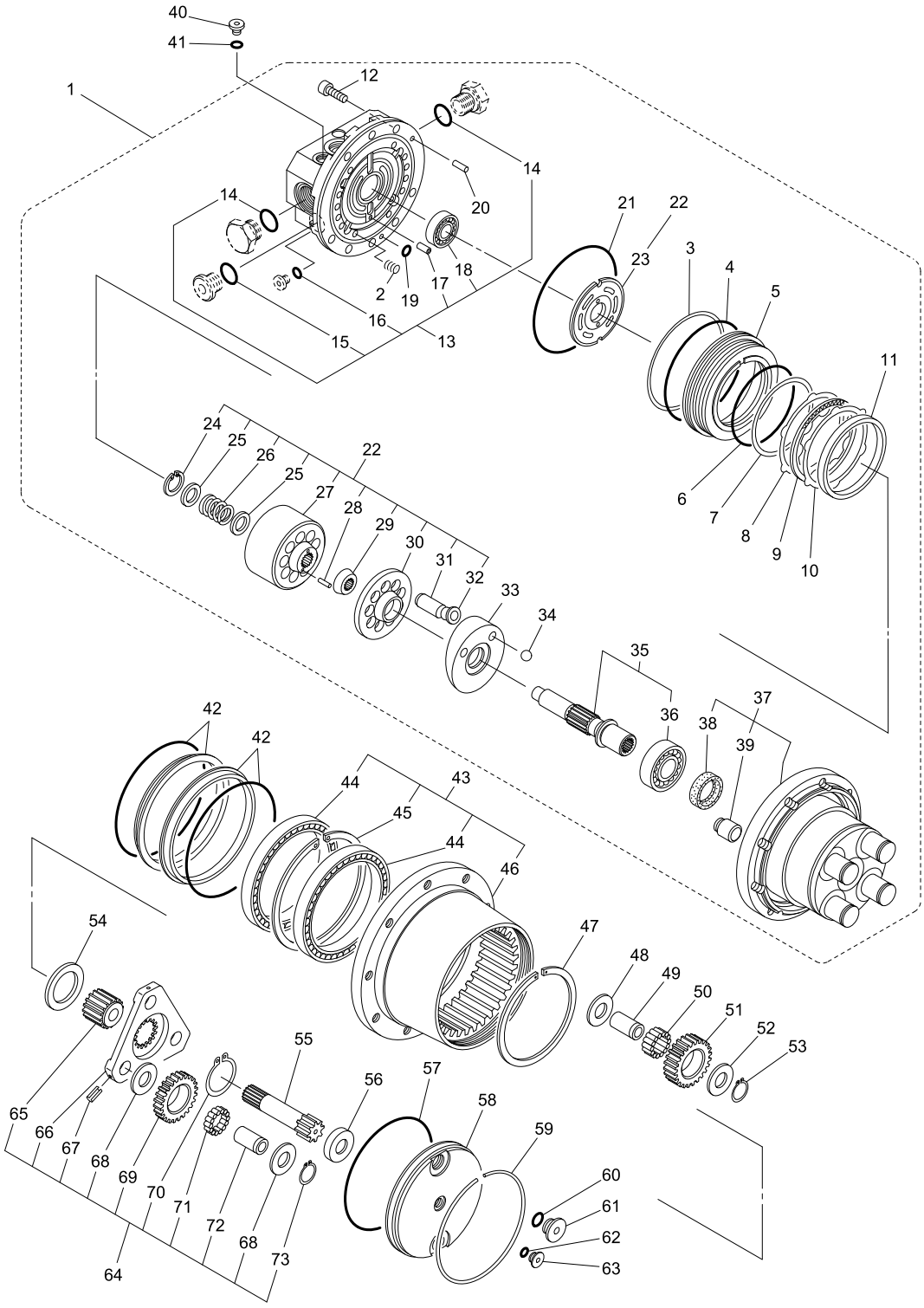

0781377UA-1

https://truckmanualshub.com/

KEY No.	SUP.	PART No.	DESCRIPTION	Q'TY	CHAN.	SERIAL No.	REMARKS
0		0781 377 UA	Motor Ass'y, Travel	2		WS010001-	
1		0781 377 91	*Motor Ass'y	1		WS010001-	
2		0781 377 03	**Spring	10		WS010001-	
3		0762 136 10	**Ring, Back-up	1		WS010001-	G110-T3
4		0760 716 10	**Ring, O	1		WS010001-	G110-90B
5		0781 377 02	**Piston, Brake	1		WS010001-	
6		0760 716 00	**Ring, O	1		WS010001-	G100-90B
7		0762 136 00	**Ring, Back-up	1		WS010001-	G100-T3
8		0781 172 09	**Plate, Steel	1		WS010001-	
9		0781 172 08	**Plate, Disk	1		WS010001-	
10		0781 172 09	**Plate, Steel	1		WS010001-	
11		0781 172 10	**Spacer	1		WS010001-	
12		0562 100 25	**Bolt, Socket Head	7		WS010001-	M10X25
13		0781 377 92	**Casing Ass'y	1		WS010001-	
14		0760 710 26	***Ring, O	2		WS010001-	P25-90B
15		0760 710 16	***Ring, O	2		WS010001-	P14-90B
16		0760 710 08	***Ring, O	2		WS010001-	P8-90B
17	×	**** *** **	***Pin, Spring	1		WS010001-	
18	×	**** *** **	***Bearing	1		WS010001-	
19		0760 710 07	**Ring, O	2		WS010001-	P7-90B
20		0753 747 12	**Pin	1		WS010001-	
21		0760 716 25	**Ring, O	1		WS010001-	G125-90B
22		0781 377 93	**Barrel Ass'y, Cylinder	1		WS010001-	
23	×	**** *** **	***Plate, Valve	1		WS010001-	
24	×	**** *** **	***Ring, Snap	1		WS010001-	d=28
25	×	**** *** **	***Retainer	2		WS010001-	
26	×	**** *** **	***Spring	1		WS010001-	
27	×	**** *** **	***Barrel, Cylinder	1		WS010001-	
28	×	**** *** **	***Pin	3		WS010001-	
29	×	**** *** **	***Holder, Barrel	1		WS010001-	
30	×	**** *** **	***Holder, Shoe	1		WS010001-	
31	×	**** *** **	***Piston	9		WS010001-	
32	×	**** *** **	***Shoe	9		WS010001-	
33		0781 377 01	**Plate, Swash	1		WS010001-	
34		0753 778 43	**Ball, Steel	2		WS010001-	d=5/8
35		0781 281 95	**Shaft Ass'y	1		WS010001-	
36	×	**** *** **	***Bearing	1		WS010001-	
37		0781 377 94	**Casing Ass'y	1		WS010001-	
38	×	**** *** **	***Seal, Oil	1		WS010001-	
39	×	**** *** **	***Piston	1		WS010001-	
40		0750 083 23	*Plug	1		WS010001-	
41		0760 710 12	*Ring, O	1		WS010001-	P11-90B
42		0781 281 01	*Seal, Floating	2		WS010001-	
43		0781 281 92	*Casing Ass'y	1		WS010001-	
44	×	**** *** **	**Bearing	2		WS010001-	

https://truckmanualshub.com/

KEY No.	SUP.	PART No.	DESCRIPTION	Q'TY	CHAN.	SERIAL No.	REMARKS
45	×	**** *** **	**Ring, Snap	1		WS010001-	
46	×	**** *** **	**Casing	1		WS010001-	
47		0781 102 14	*Ring, Snap	1		WS010001-	
48		0781 102 16	*Washer, Thrust	4		WS010001-	
49		0781 102 08	*Ring	4		WS010001-	
50		0781 102 13	*Needle	92		WS010001-	
51		0781 102 04	*Gear	4		WS010001-	
52		0781 102 17	*Washer, Thrust	4		WS010001-	
53		0493 510 28	*Ring, Snap	4		WS010001-	d=28
54		0781 102 09	*Collar	1		WS010001-	
55		0781 102 07	*Gear	1		WS010001-	
56		0781 102 10	*Ring, Slide	1		WS010001-	
57	☆	0760 212 61	*Ring, O (261-70B)	1		WS010001-	0760 312 61
58		0781 102 02	*Cover	1		WS010001-	
59		0753 636 13	*Ring, Snap	1		WS010001-	
60		0760 710 16	*Ring, O	2		WS010001-	P14-90B
61		0759 203 13	*Plug	2		WS010001-	
62		0760 710 08	*Ring, O	1		WS010001-	P8-90B
63		0757 787 20	*Plug	1		WS010001-	
64		0781 102 94	*Carrier Ass'y	1		WS010001-	
65	×	**** *** **	**Gear	1		WS010001-	
66	×	**** *** **	**Carrier	1		WS010001-	
67	×	**** *** **	**Pin, Spring	3		WS010001-	
68	×	**** *** **	**Washer, Thrust	6		WS010001-	
69	×	**** *** **	**Gear	3		WS010001-	
70	×	**** *** **	**Ring, Snap	1		WS010001-	
71	×	**** *** **	**Needle	48		WS010001-	
72	×	**** *** **	**Pin	3		WS010001-	
73	×	**** *** **	**Pin, Snap	3		WS010001-	

https://truckmanualshub.com/

[Memo]

https://truckmanualshub.com/

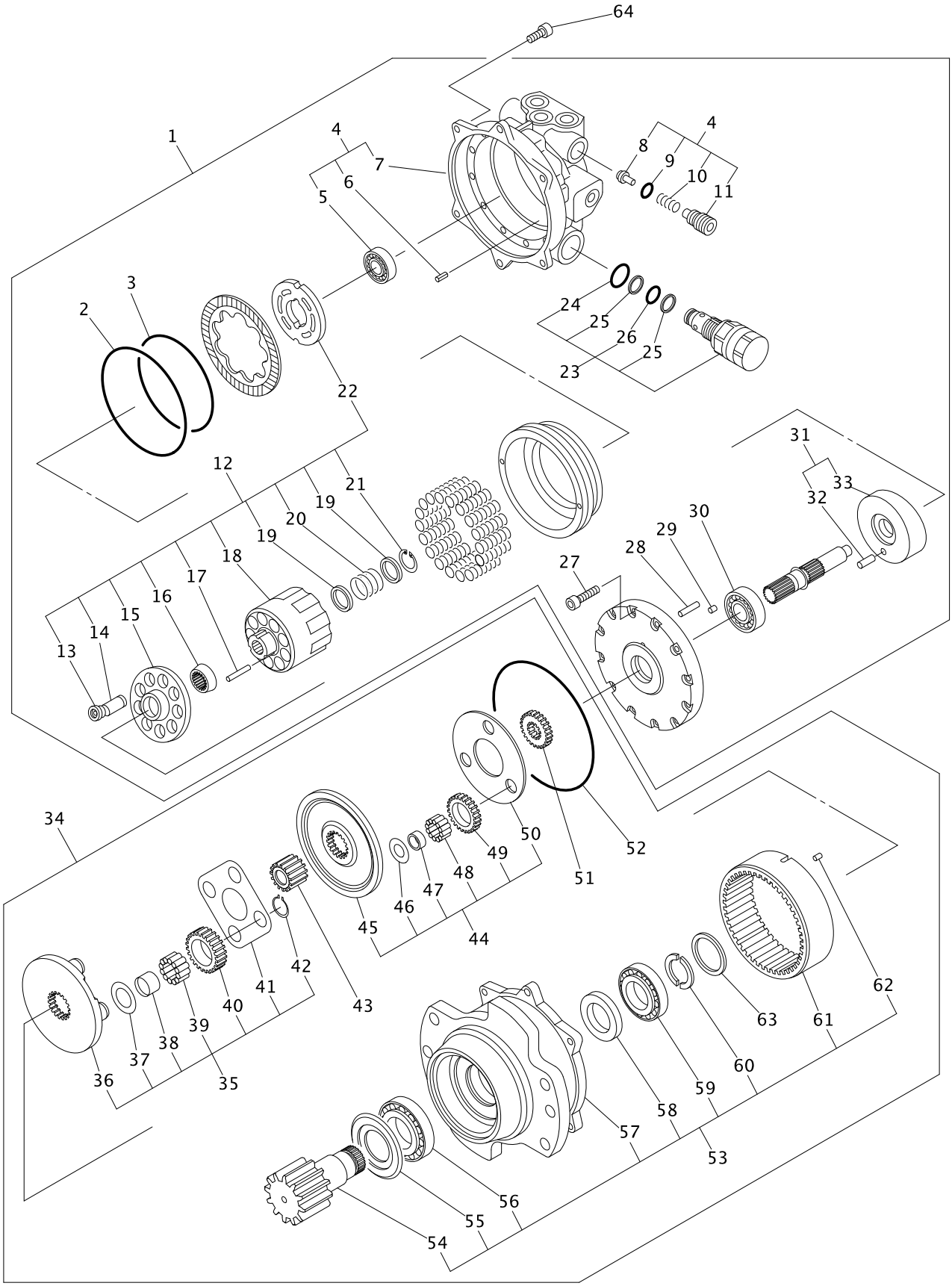

0781376UA-1
0781250UA-1

https://truckmanualshub.com/

KEY No.	SUP.	PART No.	DESCRIPTION	Q'TY	CHAN.	SERIAL No.	REMARKS
0		0781 376 UA	Motor Ass'y, Swing	1		WS010001-	
1		0781 376 91	*Motor Ass'y	1		WS010001-	
2		0760 716 25	**Ring, O	1		WS010001-	G125-90B
3		0760 716 10	**Ring, O	1		WS010001-	G110-90B
4		0781 250 97	**Body Ass'y	1		WS010001-	
5		0630 620 10	***Bearing	1		WS010001-	#6201
6		0494 608 12	***Pin, Spring	1		WS010001-	d=5X12
7	×	**** *** **	***Casing	1		WS010001-	
8	×	**** *** **	***Valve, Check	2		WS010001-	
9		0760 710 12	***Ring, O	2		WS010001-	P11-90B
10	×	**** *** **	***Spring	2		WS010001-	
11	×	**** *** **	***Plug	2		WS010001-	
12		0781 250 98	**Barrel Ass'y, Cylinder	1		WS010001-	
13	×	**** *** **	***Shoe	9		WS010001-	
14	×	**** *** **	***Piston	9		WS010001-	
15	×	**** *** **	***Holder, Shoe	1		WS010001-	
16	×	**** *** **	***Holder, Barrel	1		WS010001-	
17	×	**** *** **	***Pin	3		WS010001-	
18	×	**** *** **	***Barrel, Cylinder	1		WS010001-	
19	×	**** *** **	***Retainer	2		WS010001-	
20	×	**** *** **	***Spring	1		WS010001-	
21		0493 500 28	***Ring, Snap	1		WS010001-	d=28
22	×	**** *** **	***Plate, Valve	1		WS010001-	
23		0781 376 92	**Valve Ass'y, Relief	2		WS010001-	
24		0760 710 22	***Ring, O	1		WS010001-	P22-90B
25		0762 120 16	***Ring, Back-up	2		WS010001-	P14-T2
26		0760 710 16	***Ring, O	1		WS010001-	P14-90B
27		0562 080 25	**Bolt, Socket Head	12		WS010001-	M8X25
28		0753 636 19	**Pin	3		WS010001-	
29		0757 618 20	**Filter	1		WS010001-	
30		0630 600 44	**Bearing	1		WS010001-	#6004Z
31		0781 265 93	**Plate Ass'y, Swash	1		WS010001-	
32	×	**** *** **	***Pin	1		WS010001-	
33	×	**** *** **	***Plate, Swash	1		WS010001-	
34		0781 250 92	*Gear Ass'y, Reduction	1		WS010001-	
35		0781 250 95	**Carrier Ass'y (1)	1		WS010001-	
36	×	**** *** **	***Carrier	1		WS010001-	
37	×	**** *** **	***Washer, Thrust	4		WS010001-	
38	×	**** *** **	***Ring	4		WS010001-	
39	×	**** *** **	***Needle	92		WS010001-	
40	×	**** *** **	***Gear	4		WS010001-	
41	×	**** *** **	***Plate, Thrust	1		WS010001-	
42		0493 510 22	***Ring, Snap	4		WS010001-	d=22
43		0781 250 01	**Gear	1		WS010001-	
44		0781 250 96	**Carrier Ass'y (2)	1		WS010001-	

https://truckmanualshub.com/

KEY No.	SUP.	PART No.	DESCRIPTION	Q'TY	CHAN.	SERIAL No.	REMARKS
45	×	**** *** **	***Carrier	1		WS010001-	
46	×	**** *** **	***Washer, Thrust	3		WS010001-	
47	×	**** *** **	***Ring	3		WS010001-	
48	×	**** *** **	***Needle	72		WS010001-	
49	×	**** *** **	***Gear	3		WS010001-	
50	×	**** *** **	***Plate, Thrust	1		WS010001-	
51		0781 250 02	**Gear	1		WS010001-	
52		0760 311 65	**Ring, O	1		WS010001-	165-90B
53		0781 250 94	**Pinion Ass'y	1		WS010001-	
54	×	**** *** **	***Shaft, Pinion	1		WS010001-	
55	×	**** *** **	***Ring, Seal	1		WS010001-	
56	×	**** *** **	***Bearing	1		WS010001-	
57	×	**** *** **	***Body	1		WS010001-	
58	×	**** *** **	***Seal, Oil	1		WS010001-	
59	×	**** *** **	***Bearing	1		WS010001-	
60	×	**** *** **	***Collar	2		WS010001-	
61	×	**** *** **	***Gear, Internal	1		WS010001-	
62	×	**** *** **	***Pin	2		WS010001-	
63		0781 250 03	**Ring	1		WS010001-	
64		0562 080 25	**Bolt, Socket Head	6		WS010001-	M8X25

https://truckmanualshub.com/

[Memo]

https://truckmanualshub.com/

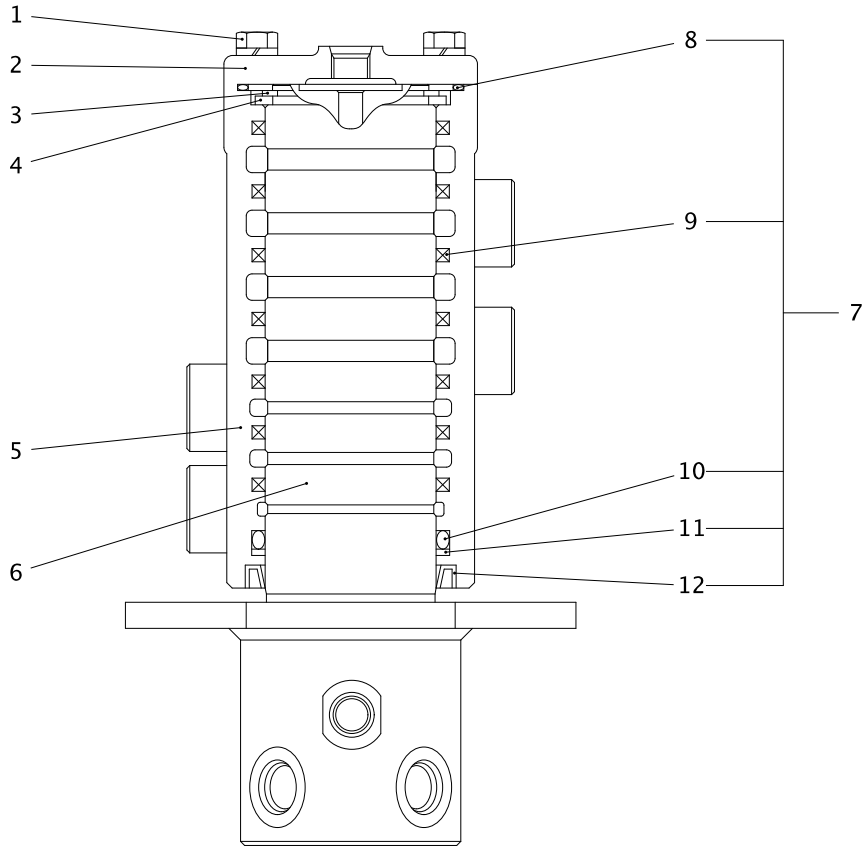

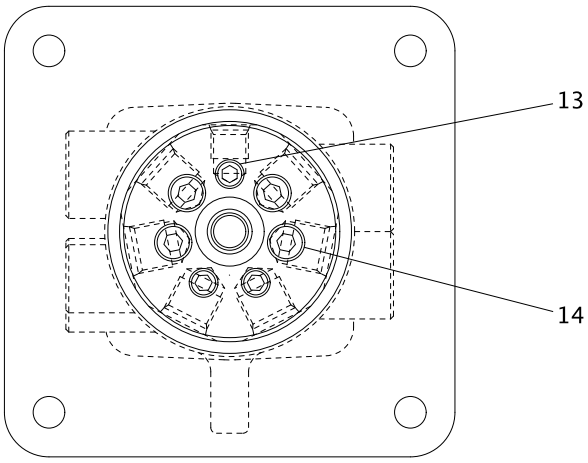

0713429UA-1

https://truckmanualshub.com/

KEY No.	SUP.	PART No.	DESCRIPTION	Q'TY	CHAN.	SERIAL No.	REMARKS
0		0713 429 UA	Joint Ass'y, Rotary	1		WS010001-	
1		0519 080 30	*Bolt, Treatment (W/L.W)	4		WS010001-	M8X30
2		0713 429 04	*Cover	1		WS010001-	
3		0493 510 55	*Ring, Snap	1		WS010001-	d=55
4		0755 821 08	*Washer, Thrust	1		WS010001-	
5		0713 429 02	*Hub	1		WS010001-	
6		0713 429 19	*Shaft	1		WS010001-	
7		0713 429 91	*Seal, Kit	1		WS010001-	
8	×	0760 615 75	**Ring, O	1		WS010001-	G75-70B
9	×	0783 616 04	**Seal, Oil	7		WS010001-	
10	×	0760 710 60	**Ring, O	1		WS010001-	P60-90B
11	×	0762 120 60	**Ring, Back-up	1		WS010001-	P60-T2
12	×	0713 429 13	**Seal, Dust	1		WS010001-	
13		0710 201 01	*Plug	3		WS010001-	PT1/8
14		0710 200 14	*Plug	4		WS010001-	PT1/4

https://truckmanualshub.com/

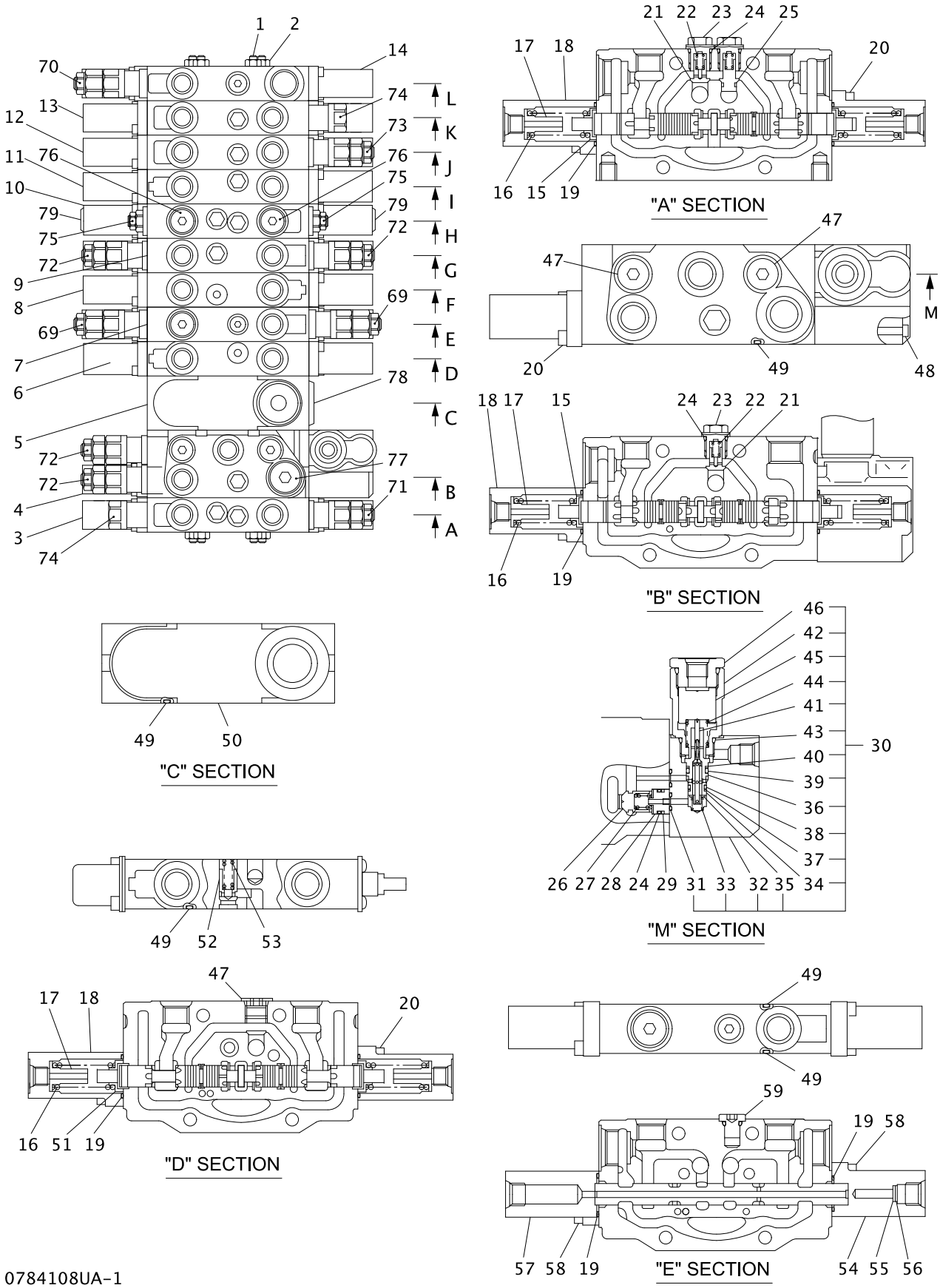

0784108UA-1
0784017UA-1

https://truckmanualshub.com/

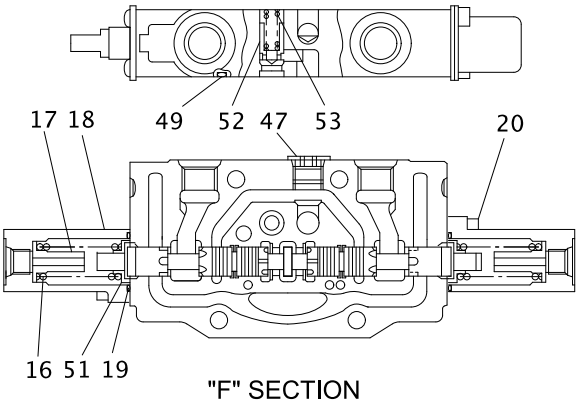

"F" SECTION

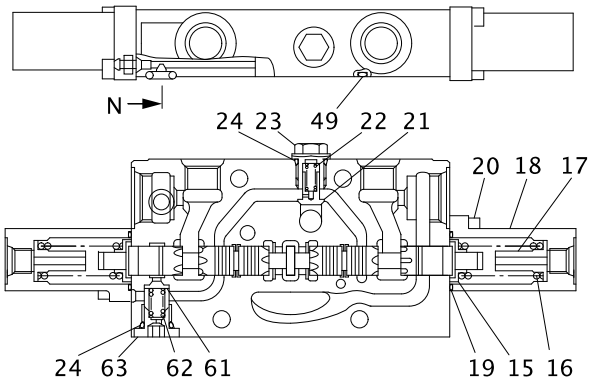

"G" SECTION

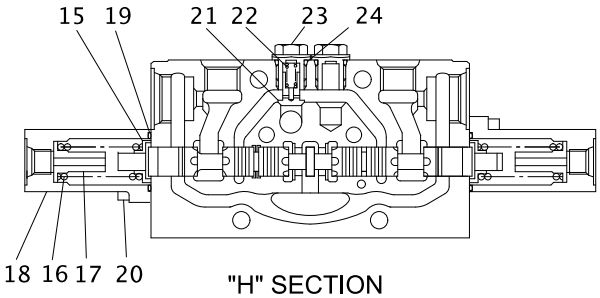

"H" SECTION

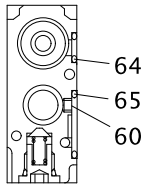

"N" SECTION

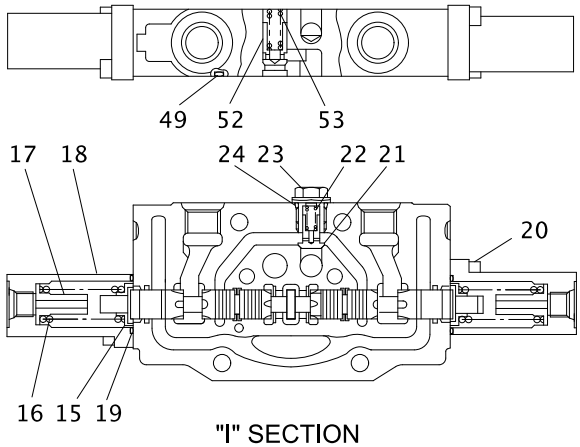

"I" SECTION

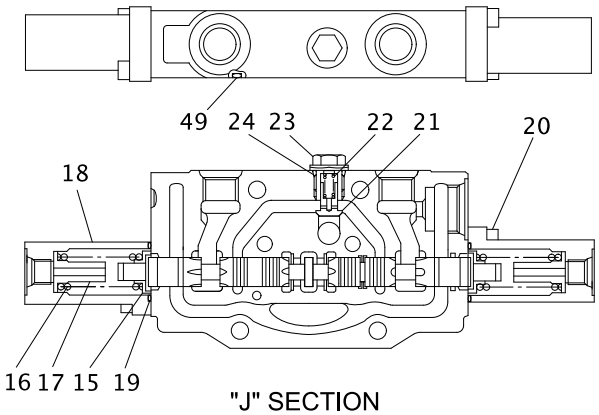

"J" SECTION

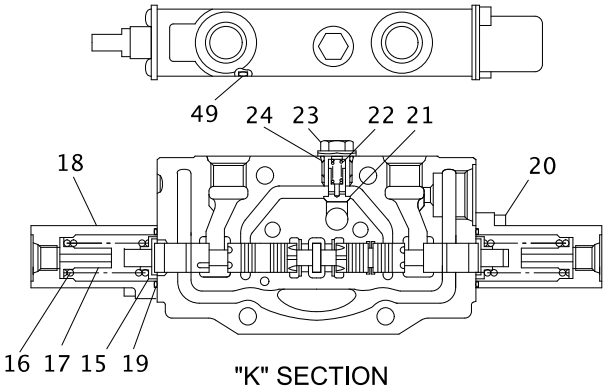

"K" SECTION

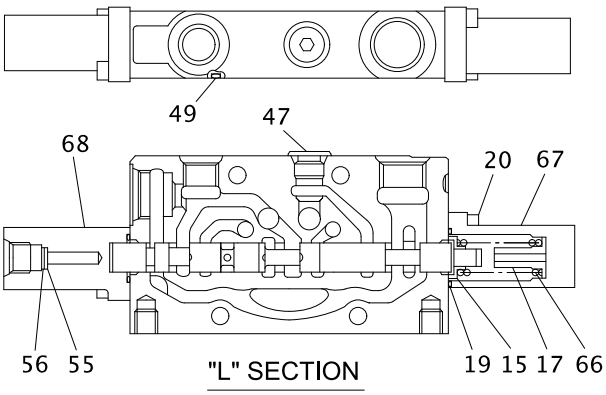

"L" SECTION

0784108UA-2
0784017UA-2

https://truckmanualshub.com/

KEY No.	SUP.	PART No.	DESCRIPTION	Q'TY	CHAN.	SERIAL No.	REMARKS
0		0784 108 UA	Valve Ass'y, Control	1		WS010001-	
1		0784 017 01	*Rod, Tie	4		WS010001-	
2		0580 080 00	*Nut, Hex.	8		WS010001-	M8
3		0784 108 99	*Block Ass'y, Bucket	1		WS010001-	
4		0784 108 98	*Block Ass'y, Boom	1		WS010001-	
5		0783 988 83	*Block Ass'y, Outlet	1		WS010001-	
6		0784 108 97	*Block Ass'y, Traction (R.H.)	1		WS010001-	
7		0784 017 96	*Block Ass'y, Inlet	1		WS010001-	
8		0784 108 96	*Block Ass'y, Traction (L.H.)	1		WS010001-	
9		0783 988 93	*Block Ass'y, Arm	1		WS010001-	
10		0784 017 93	*Block Ass'y, Spare	1		WS010001-	
11		0784 108 95	*Block Ass'y, Swing	1		WS010001-	
12		0784 017 91	*Block Ass'y, Blade	1		WS010001-	
13		0784 108 94	*Block Ass'y, Boom Swing	1		WS010001-	
14		0784 017 89	*Block Ass'y	1		WS010001-	
15		0783 988 01	**Seat, Spring	15		WS010001-	
16		0783 988 02	**Spring	18		WS010001-	
17		0783 988 03	**Seat, Spring	19		WS010001-	
18		0783 988 04	**Cap	17		WS010001-	
19		0783 988 05	**Ring, O	22		WS010001-	
20		0562 050 18	**Bolt, Socket Head	38		WS010001-	M5X18
21		0783 988 06	**Poppet	7		WS010001-	
22		0783 988 07	**Spring	8		WS010001-	
23		0783 988 08	**Plug	9		WS010001-	
24		0760 710 12	**Ring, O	11		WS010001-	P11-90B
25		0784 108 01	**Poppet	1		WS010001-	
26		0783 988 10	**Poppet	1		WS010001-	
27		0783 988 11	**Spring	1		WS010001-	
28		0783 988 12	**Spacer	1		WS010001-	
29		0762 120 12	**Ring, Back-up	1		WS010001-	P11-T2
30		0783 988 83	**Valve Ass'y, Anti Void	1		WS010001-	
31		0760 710 07	***Ring, O	2		WS010001-	P7-90B
32	×	**** *** **	***Body	1		WS010001-	
33		0783 677 29	***Spring	1		WS010001-	
34		0783 677 23	***Poppet	1		WS010001-	
35		0783 677 30	***Seat, Spring	1		WS010001-	
36		0783 677 27	***Sleeve	1		WS010001-	
37		0762 120 09	***Ring, Back-up	1		WS010001-	P9-T2
38		0760 710 09	***Ring, O	1		WS010001-	P9-90B
39		0760 710 11	***Ring, O	1		WS010001-	P10A-90B
40		0762 120 11	***Ring, Back-up	1		WS010001-	P10A-T2
41		0783 677 26	***Spool	1		WS010001-	
42		0783 677 24	***Plug	1		WS010001-	
43		0753 101 09	***Ring, O	1		WS010001-	
44		0783 677 28	***Spring	1		WS010001-	

https://truckmanualshub.com/

KEY No.	SUP.	PART No.	DESCRIPTION	Q'TY	CHAN.	SERIAL No.	REMARKS
45		0783 749 02	***Piston	1		WS010001-	
46		0756 339 80	***Plug Ass'y	1		WS010001-	
47		0783 988 13	**Plug Ass'y	5		WS010001-	
48		0562 060 60	**Bolt, Socket Head	5		WS010001-	M6X60
49		0783 988 14	**Ring, O	11		WS010001-	
50		0783 988 15	**Housing, Outlet	1		WS010001-	
51		0784 017 03	**Seat, Spring	4		WS010001-	
52		0783 988 18	**Poppet	3		WS010001-	
53		0756 865 08	**Spring	3		WS010001-	
54		0784 017 04	**Cap	1		WS010001-	
55		0783 988 26	**Filter	2		WS010001-	
56		0783 988 27	**Washer	2		WS010001-	
57		0783 988 21	**Cap	1		WS010001-	
58		0562 050 18	**Bolt, Socket Head	4		WS010001-	M5X18
59		0783 677 83	**Plug Ass'y	1		WS010001-	
60		0783 988 22	**Plug, Orifice	1		WS010001-	
61		0783 677 13	**Poppet	1		WS010001-	
62		0756 339 17	**Spring	1		WS010001-	
63		0783 677 14	**Plug	1		WS010001-	
64		0760 710 10	**Ring, O	1		WS010001-	P10-90B
65		0760 710 20	**Ring, O	1		WS010001-	P20-90B
66		0783 988 24	**Spring	1		WS010001-	
67		0783 988 20	**Cap	1		WS010001-	
68		0784 017 04	**Cap	1		WS010001-	
69		0783 912 88	*Valve Ass'y, Main Relief	2		WS010001-	
69-1		0760 319 10	**Ring, O	1		WS010001-	910-90B
70		0784 108 93	*Valve Ass'y, Main Relief	1		WS010001-	
70-1		0760 319 10	**Ring, O	1		WS010001-	910-90B
71		0783 846 87	*Valve Ass'y, Relief	1		WS010001-	
71-1		0760 319 10	**Ring, O	1		WS010001-	910-90B
72		0783 846 86	*Valve Ass'y, Relief	4		WS010001-	
72-1		0760 319 10	**Ring, O	1		WS010001-	910-90B
73		0783 677 86	*Valve Ass'y, Relief	1		WS010001-	
73-1		0760 319 10	**Ring, O	1		WS010001-	910-90B
74		0783 846 88	*Valve Ass'y, Anti Void	2		WS010001-	
74-1		0760 319 10	**Ring, O	1		WS010001-	910-90B
75		0783 646 85	*Valve Ass'y, Shut-off	2		WS010001-	
75-1		0785 640 UA	**Valve Ass'y, Relief	2		WS010001-	Option 13.7MPa-50L
75-2		0785 641 UA	**Valve Ass'y, Relief	2		WS010001-	Option 17.2MPa-40L
75-3		0760 319 10	**Ring, O	1		WS010001-	910-90B
76		0783 646 83	*Plug Ass'y	2		WS010001-	
76-1		0760 710 16	**Ring, O	1		WS010001-	P14-90B
77		0783 646 84	*Plug Ass'y	1		WS010001-	

https://truckmanualshub.com/

KEY No.	SUP.	PART No.	DESCRIPTION	Q'TY	CHAN.	SERIAL No.	REMARKS
77-1		0760 710 19	**Ring, O	1		WS010001-	P18-90B
78		0783 988 29	*Plug Ass'y	1		WS010001-	
79		0783 988 13	*Plug Ass'y	2		WS010001-	

https://truckmanualshub.com/

[Memo]

https://truckmanualshub.com/

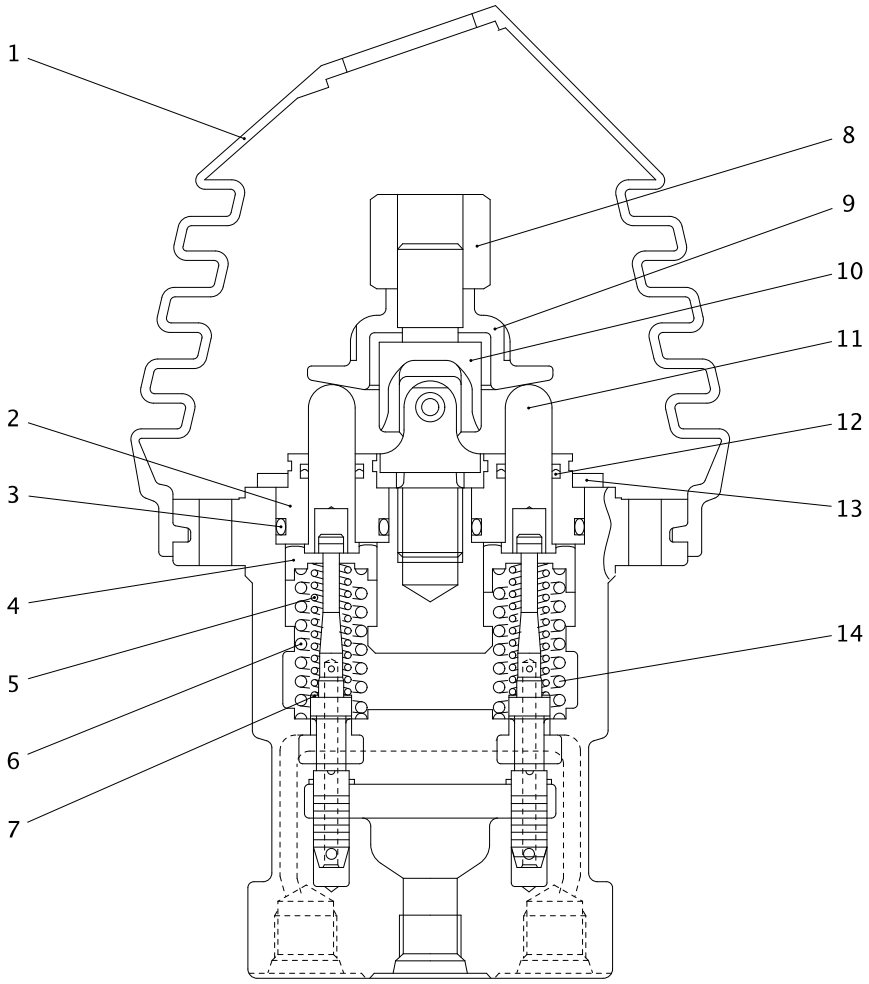

0783964UA-1
0783941UA-1

https://truckmanualshub.com/

KEY No.	SUP.	PART No.	DESCRIPTION	Q'TY	CHAN.	SERIAL No.	REMARKS
0		0783 964 UA	Valve Ass'y, Remote Control	2		WS010001-	
1		0783 771 07	*Boot	1		WS010001-	
2		0756 735 09	*Plug	4		WS010001-	
3		0760 710 20	*Ring, O	4		WS010001-	P20-90B
4		0783 700 08	*Seat, Spring	4		WS010001-	
5		0783 964 01	*Spring	4		WS010001-	
6		0783 700 09	*Spring (No.2, 4, Ports)	2		WS010001-	
7		0756 735 15	*Washer	4		WS010001-	
8		0783 771 03	*Nut, Adjusting	1		WS010001-	
9		0783 700 12	*Plate	1		WS010001-	
10		0756 303 07	*Joint	1		WS010001-	
11		0756 744 11	*Rod, Push	4		WS010001-	
12		0756 611 13	*Seal	4		WS010001-	
13		0783 756 01	*Plate	1		WS010001-	
14		0783 700 10	*Spring (No.1, 3, Ports)	2		WS010001-	

https://truckmanualshub.com/

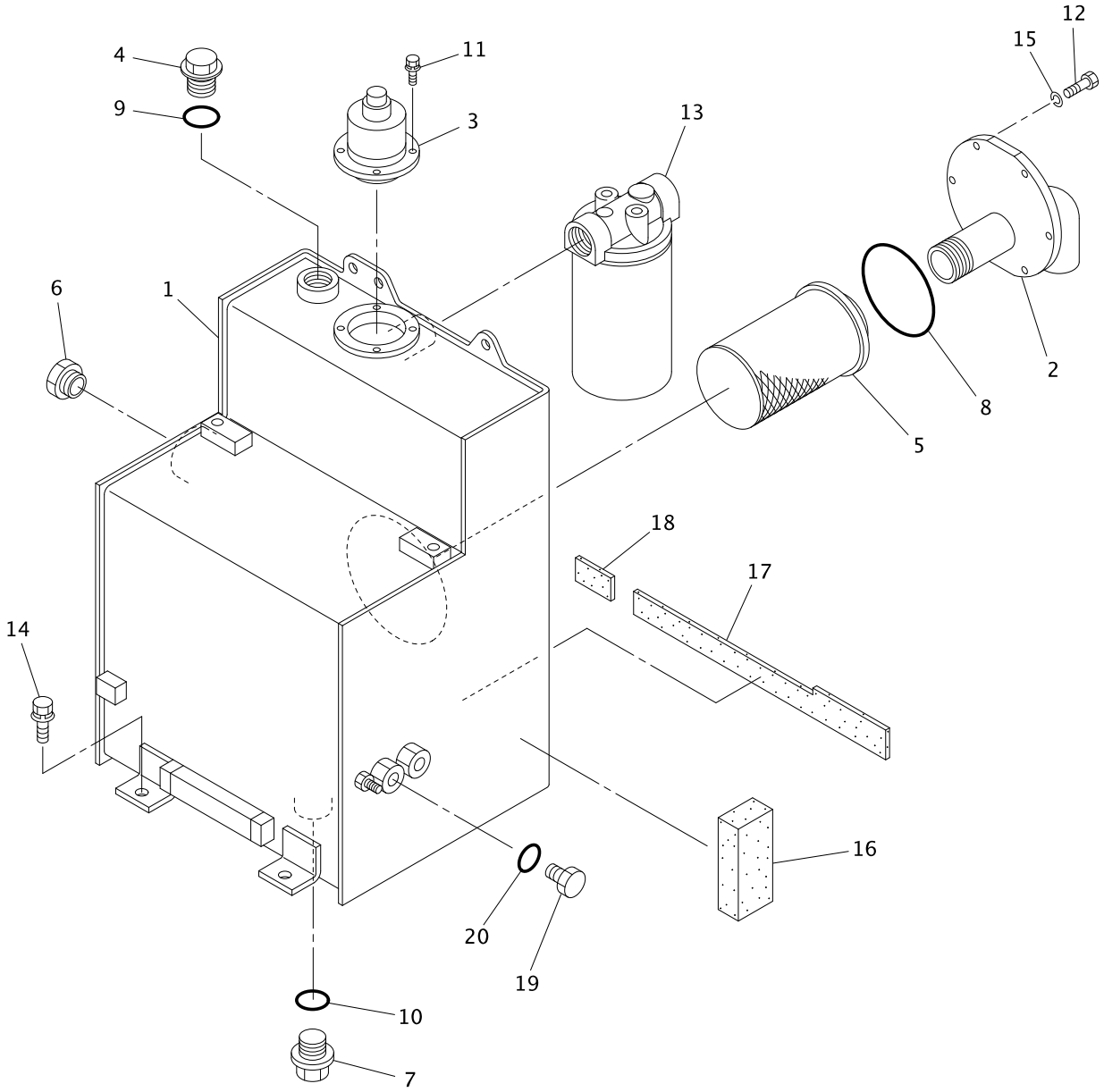

25V4-050600-1

https://truckmanualshub.com/

KEY No.	SUP.	PART No.	DESCRIPTION	Q'TY	CHAN.	SERIAL No.	REMARKS
0	×	F342 638 00	Tank Ass'y, Hydraulic Oil	1		WS010001-	
1	△	D284 240 00	*Tank, Hydraulic Oil	1		WS010001-＊＊＊	
1	△	D284 247 00	*Tank, Hydraulic Oil	1	×	＊＊＊-	
2		D286 252 00	*Tube	1		WS010001-	
3		0787 305 UA	*Breather, Air	1		WS010001-	
4		4072 887 00	*Plug	1		WS010001-	
5		0755 179 UA	*Strainer, Suction	1		WS010001-	
6		4079 027 00	*Gauge, Level	1		WS010001-	
7		4077 036 00	*Plug, Drain	1		WS010001-	
8		0760 711 25	*Ring, O	1		WS010001-	P125-90B
9		0760 710 30	*Ring, O	1		WS010001-	P29-90B
10		0760 312 11	*Ring, O	1		WS010001-	211-90B
11		0517 060 16	*Bolt, Treatment (W/L.W, F.W)	4		WS010001-	M6X16
12		0513 100 20	*Bolt, Treatment	6		WS010001-	M10X20
13		0759 144 UA	*Filter Ass'y, Return	1		WS010001-	
13-1		0759 144 01	**Cartridge Ass'y	1		WS010001-	
14		0518 120 25	*Bolt, Treatment (W/L.W, F.W)	4		WS010001-	M12X25 P=1.25
15		0590 100 00	*Washer, Lock	6		WS010001-	M10
16		D493 551 00	*Panel, Sponge	1		WS010001-	
17		D493 552 00	*Panel, Sponge	1		WS010001-	
18		D493 553 00	*Panel, Sponge	1		WS010001-	
19		0710 212 04	*Plug	1		WS010001-	
20		0760 710 12	*Ring, O	1		WS010001-	P11-90B

https://truckmanualshub.com/

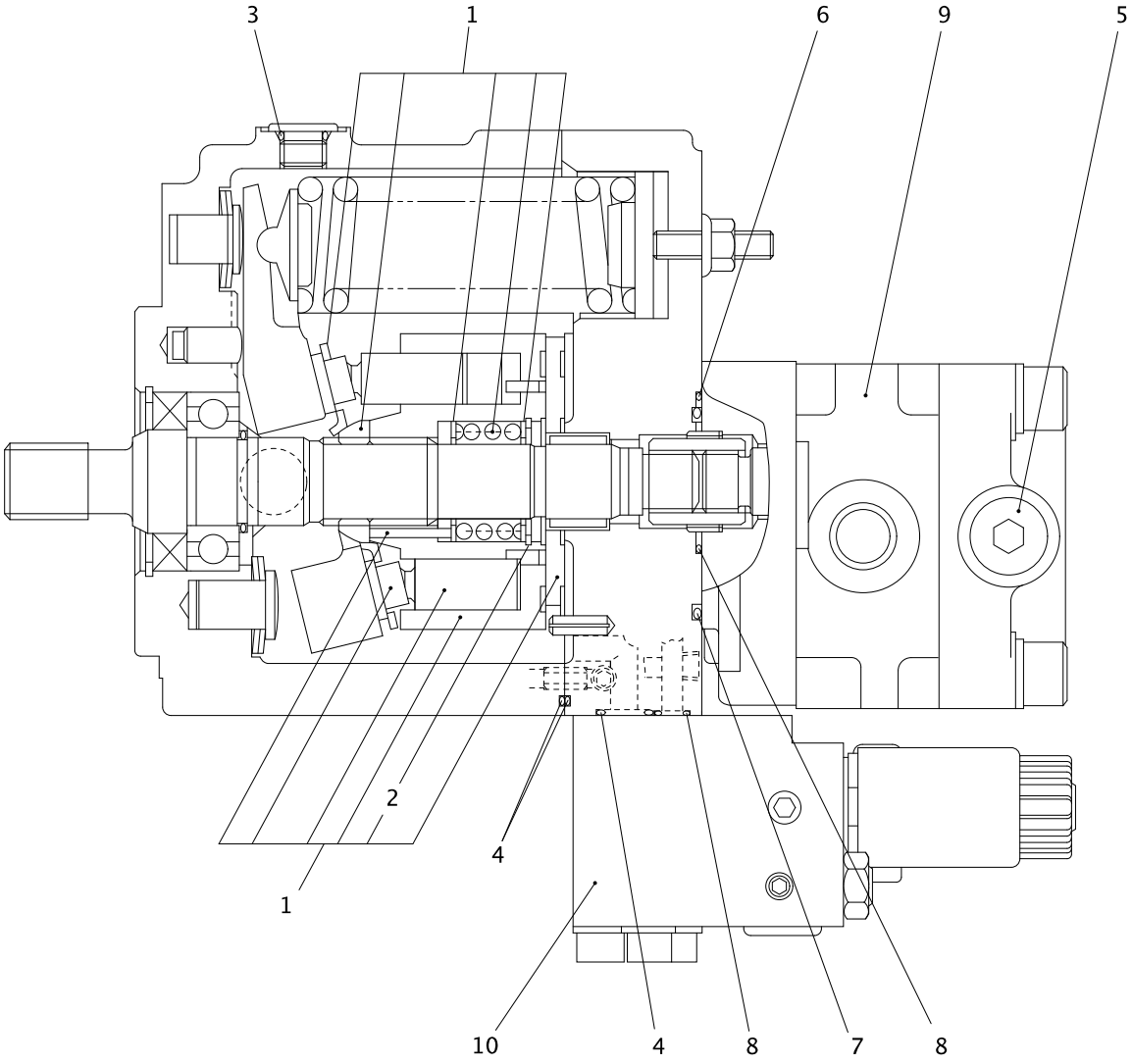

0780164UA-1
0780163UA-1

https://truckmanualshub.com/

KEY No.	SUP.	PART No.	DESCRIPTION	Q'TY	CHAN.	SERIAL No.	REMARKS
0		0780 164 UA	Pump Ass'y, Oil	1		WS010001-	
1		0780 164 91	*Cylinder Ass'y	1		WS010001-	
2		0493 500 35	**Ring, Snap	1		WS010001-	d=35
3		0760 710 12	*Ring, O	1		WS010001-	P11-90B
4		0760 710 14	*Ring, O	3		WS010001-	P12-90B
5		0760 710 16	*Ring, O	1		WS010001-	P14-90B
6		0760 710 07	*Ring, O	1		WS010001-	P7-90B
7		0760 715 55	*Ring, O	1		WS010001-	G55-90B
8		0760 710 08	*Ring, O	2		WS010001-	P8-90B
9		0780 110 91	*Pump Ass'y, Gear	1		WS010001-	
10		0780 163 92	*Valve, Ass'y	1		WS010001-	

https://truckmanualshub.com/

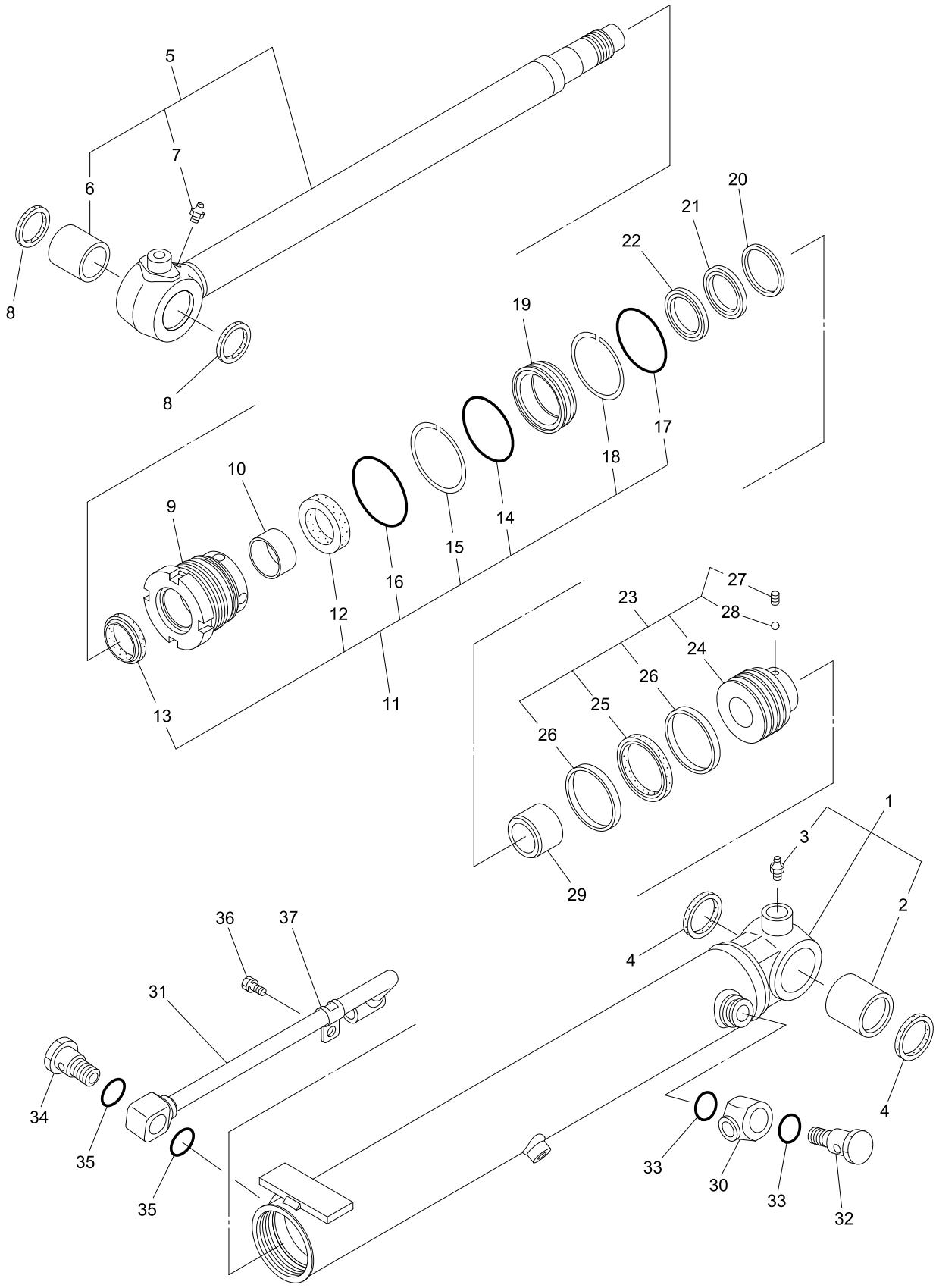

0782618UA-1
0782617UA-1

https://truckmanualshub.com/

KEY No.	SUP.	PART No.	DESCRIPTION	Q'TY	CHAN.	SERIAL No.	REMARKS
0		0782 617 UA	Cylinder Ass'y, Boom	1		WS010001-	
1	×	**** *** **	*Tube Ass'y, Cylinder	1		WS010001-	
2		0782 618 03	**Bushing	1		WS010001-	
3		0728 111 15	**Nipple, Grease	1		WS010001-	PT1/8
4		0751 796 24	*Seal, Dust	2		WS010001-	
5		0782 617 02	*Rod Ass'y, Piston	1		WS010001-	
6		0782 618 05	**Bushing	1		WS010001-	
7		0728 111 15	**Nipple, Grease	1		WS010001-	PT1/8
8		0752 239 24	*Seal, Dust	2		WS010001-	
9		0782 476 03	*Head, Cylinder	1		WS010001-	
10		0782 396 13	*Bushing	1		WS010001-	
11		0782 399 91	*Kit, Seal	1		WS010001-	
12	×	0752 737 05	**Ring, U	1		WS010001-	
13	×	0758 697 06	**Ring, Wiper	1		WS010001-	
14	×	0760 715 75	**Ring, O	1		WS010001-	G75-90B
15	×	0782 399 05	**Ring, Back-up	1		WS010001-	
16	×	0760 715 80	**Ring, O	1		WS010001-	G80-90B
17	×	0760 715 75	**Ring, O	1		WS010001-	G75-90B
18	×	0782 399 10	**Ring, Back-up	1		WS010001-	
19		0782 399 06	*Holder	1		WS010001-	
20		0782 399 07	*Spacer	1		WS010001-	
21		0782 399 08	*Seal, Cushion	1		WS010001-	
22		0782 399 09	*Collar	1		WS010001-	
23		0782 399 93	*Piston Ass'y	1		WS010001-	
24		0782 399 11	**Piston	1		WS010001-	
25		0752 941 06	**Ring Ass'y, Seal	1		WS010001-	
26		0782 399 12	**Ring, Slide	2		WS010001-	
27		0561 080 08	**Screw, Set	1		WS010001-	M8X8
28		0751 901 25	**Ball, Steel	1		WS010001-	d=7/32
29		0782 617 06	*Bearing, Cushion	1		WS010001-	
30		0782 619 06	*Joint	1		WS010001-	
31		0782 618 08	*Pipe	1		WS010001-	
32		0782 491 09	*Plug	1		WS010001-	
33		0760 710 28	*Ring, O	2		WS010001-	P26-90B
34		0782 446 05	*Plug	1		WS010001-	
35		0760 710 23	*Ring, O	2		WS010001-	P22A-90B
36		0782 446 06	*Bolt	1		WS010001-	
37		0782 431 21	*Holder, Pipe	1		WS010001-	

https://truckmanualshub.com/

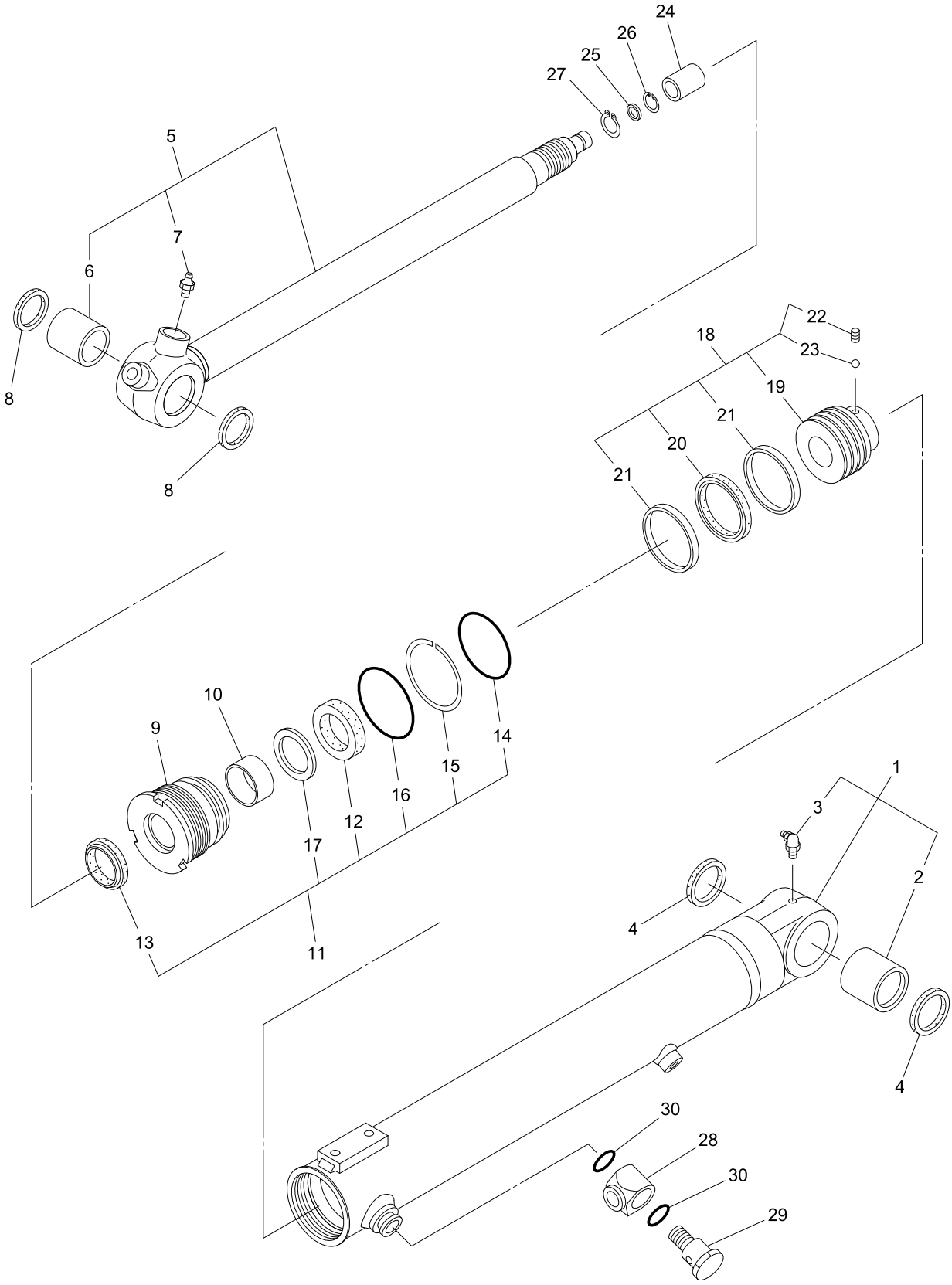

0782619UA-1

https://truckmanualshub.com/

KEY No.	SUP.	PART No.	DESCRIPTION	Q'TY	CHAN.	SERIAL No.	REMARKS
0		0782 619 UA	Cylinder Ass'y, Arm	1		WS010001-	
1	×	**** *** **	*Tube Ass'y, Cylinder	1		WS010001-	
2		0752 239 23	**Bushing	1		WS010001-	
3		0728 111 65	**Nipple, Grease	1		WS010001-	PT1/8X90
4		0752 239 24	*Seal, Dust	2		WS010001-	
5		0782 619 02	*Rod Ass'y, Piston	1		WS010001-	
6		0752 239 23	**Bushing	1		WS010001-	
7		0728 111 15	**Nipple, Grease	1		WS010001-	PT1/8
8		0752 239 24	*Seal, Dust	2		WS010001-	
9		0782 396 03	*Head, Cylinder	1		WS010001-	
10		0782 396 13	*Bushing	1		WS010001-	
11		0782 396 91	*Kit, Seal	1		WS010001-	
12	×	0782 396 04	**Ring, U	1		WS010001-	
13	×	0758 697 06	**Ring, Wiper	1		WS010001-	
14	×	0760 715 65	**Ring, O	1		WS010001-	G65-90B
15	×	0782 396 05	**Ring, Back-up	1		WS010001-	
16	×	0760 715 70	**Ring, O	1		WS010001-	G70-90B
17	×	0782 173 04	**Ring, Back-up	1		WS010001-	
18		0782 396 93	*Piston Ass'y	1		WS010001-	
19		0782 396 06	**Piston	1		WS010001-	
20		0752 928 07	**Ring Ass'y, Seal	1		WS010001-	
21		0782 396 07	**Ring, Slide	2		WS010001-	
22		0561 080 08	**Screw, Set	1		WS010001-	M8X8
23		0751 901 25	**Ball, Steel	1		WS010001-	d=7/32
24		0758 697 18	*Bearing, Cushion	1		WS010001-	
25		0758 697 19	*Seal, Cushion	1		WS010001-	
26		0758 697 21	*Stopper	2		WS010001-	
27		0758 697 20	**Ring, Snap	1		WS010001-	
28		0782 619 06	*Joint	1		WS010001-	
29		0782 491 09	*Plug	1		WS010001-	
30		0760 710 28	*Ring, O	2		WS010001-	P26-90B

https://truckmanualshub.com/

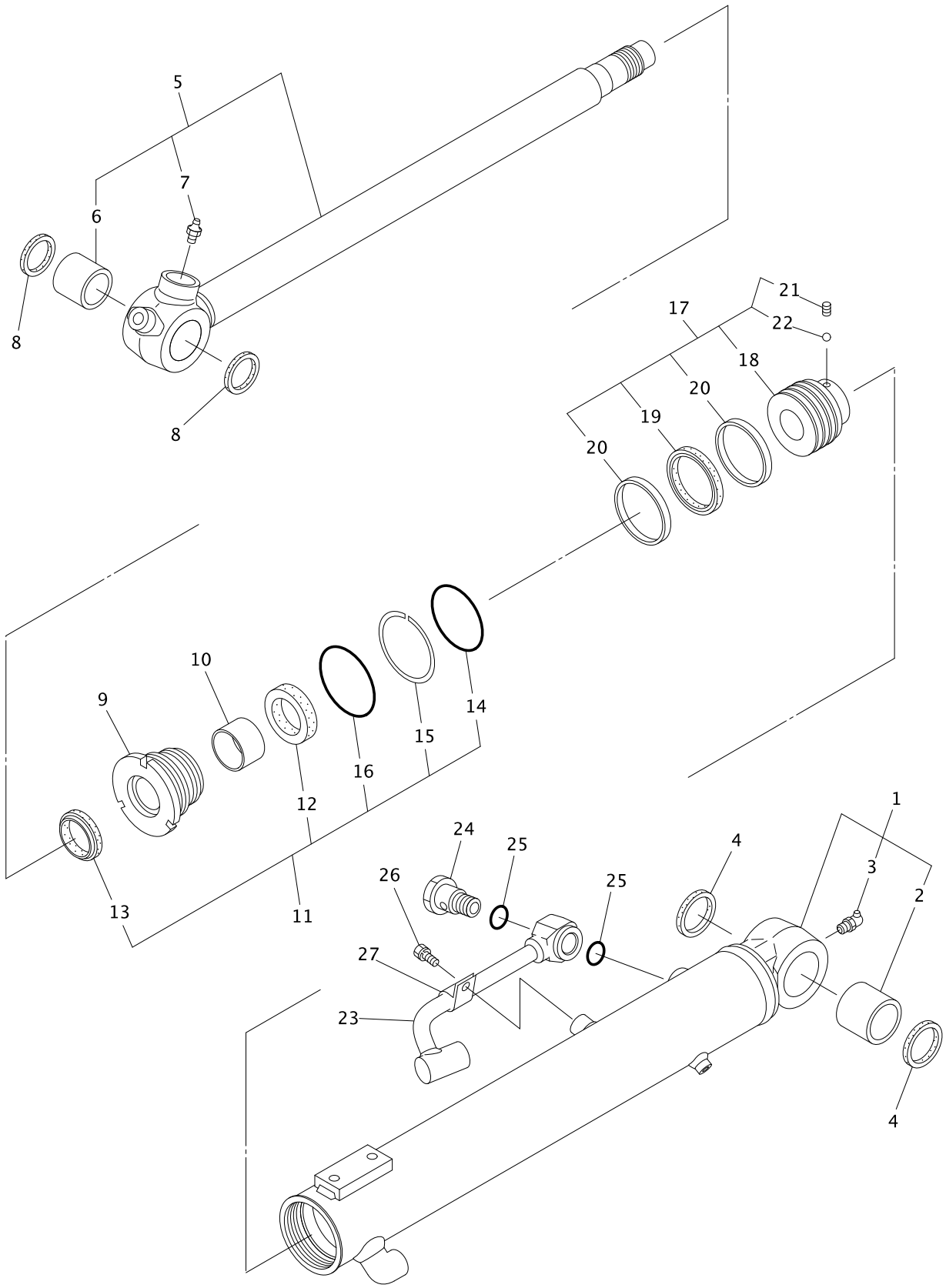

0782614UA-1

https://truckmanualshub.com/

KEY No.	SUP.	PART No.	DESCRIPTION	Q'TY	CHAN.	SERIAL No.	REMARKS
0		0782 614 UA	Cylinder Ass'y, Bucket	1		WS010001-	
1	×	**** *** **	*Tube Ass'y, Cylinder	1		WS010001-	
2		0752 676 25	**Bushing	1		WS010001-	
3		0728 111 65	**Nipple, Grease	1		WS010001-	PT1/8X90
4		0752 239 24	*Seal, Dust	2		WS010001-	
5		0782 614 02	*Rod Ass'y, Piston	1		WS010001-	
6		0752 676 25	**Bushing	1		WS010001-	
7		0728 111 15	**Nipple, Grease	1		WS010001-	PT1/8
8		0752 239 24	*Seal, Dust	2		WS010001-	
9		0782 367 03	*Head, Cylinder	1		WS010001-	
10		0782 367 13	*Bushing	1		WS010001-	
11		0782 367 91	*Kit, Seal	1		WS010001-	
12	×	0752 765 05	**Ring, U	1		WS010001-	
13	×	0758 868 02	**Ring, Wiper	1		WS010001-	
14	×	0760 715 60	**Ring, O	1		WS010001-	G60-90B
15	×	0782 367 05	**Ring, Back-up	1		WS010001-	
16	×	0760 715 65	**Ring, O	1		WS010001-	G65-90B
17		0782 367 93	*Piston Ass'y	1		WS010001-	
18		0782 367 06	**Piston	1		WS010001-	
19		0752 775 13	**Ring Ass'y, Seal	1		WS010001-	
20		0782 367 07	**Ring, Slide	2		WS010001-	
21		0561 080 08	**Screw, Set	1		WS010001-	M8X8
22		0751 901 25	**Ball, Steel	1		WS010001-	d=7/32
23		0782 611 05	*Pipe	1		WS010001-	
24		0782 446 05	*Plug	1		WS010001-	
25		0760 710 23	*Ring, O	2		WS010001-	P22A-90B
26		0782 446 06	*Bolt	1		WS010001-	
27		0782 431 21	*Holder, Pipe	1		WS010001-	

https://truckmanualshub.com/

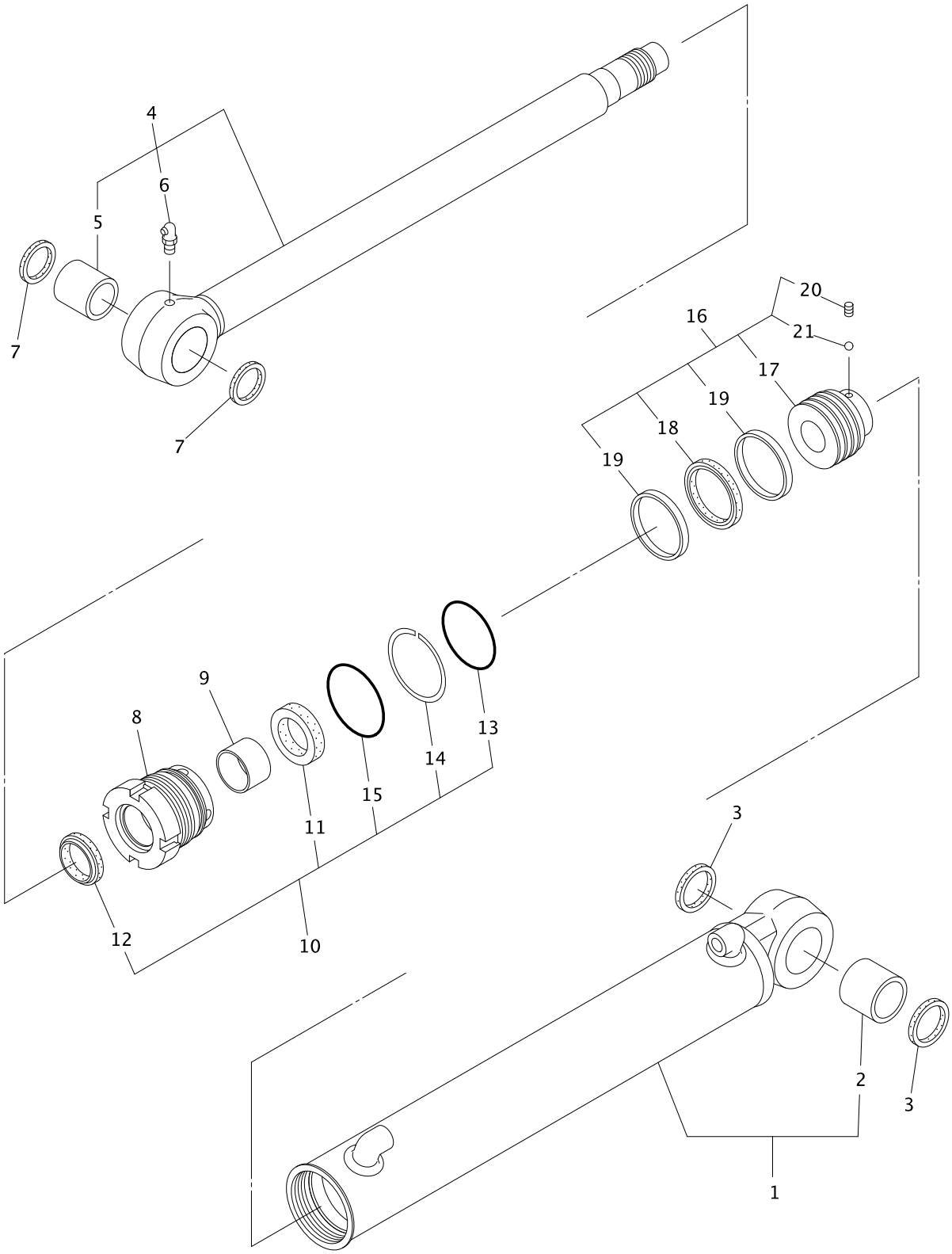

0782615UA-1
0782613UA-1

https://truckmanualshub.com/

KEY No.	SUP.	PART No.	DESCRIPTION	Q'TY	CHAN.	SERIAL No.	REMARKS
0		0782 615 UA	Cylinder Ass'y, Boom Swing	1		WS010001-	
1	×	**** *** **	*Tube Ass'y, Cylinder	1		WS010001-	
2		0752 676 25	**Bushing	1		WS010001-	
3		0752 239 24	*Seal, Dust	2		WS010001-	
4		0782 615 02	*Rod Ass'y, Piston	1		WS010001-	
5		0752 676 25	**Bushing	1		WS010001-	
6		0728 111 65	**Nipple, Grease	1		WS010001-	PT1/8X90
7		0752 239 24	*Seal, Dust	2		WS010001-	
8		0782 449 03	*Head, Cylinder	1		WS010001-	
9		0782 367 13	*Bushing	1		WS010001-	
10		0782 449 91	*Kit, Seal	1		WS010001-	
11	×	0752 765 05	**Ring, U	1		WS010001-	
12	×	0758 858 02	**Ring, Wiper	1		WS010001-	
13	×	0760 715 70	**Ring, O	1		WS010001-	G70-90B
14	×	0782 431 08	**Ring, Back-up	1		WS010001-	
15	×	0760 715 75	**Ring, O	1		WS010001-	G75-90B
16		0782 449 93	*Piston Ass'y	1		WS010001-	
17		0782 449 04	**Piston	1		WS010001-	
18		0752 778 17	**Ring Ass'y, Seal	1		WS010001-	
19		0782 449 05	**Ring, Slide	2		WS010001-	
20		0561 080 08	**Screw, Set	1		WS010001-	M8X8
21		0751 901 25	**Ball, Steel	1		WS010001-	d=7/32

https://truckmanualshub.com/

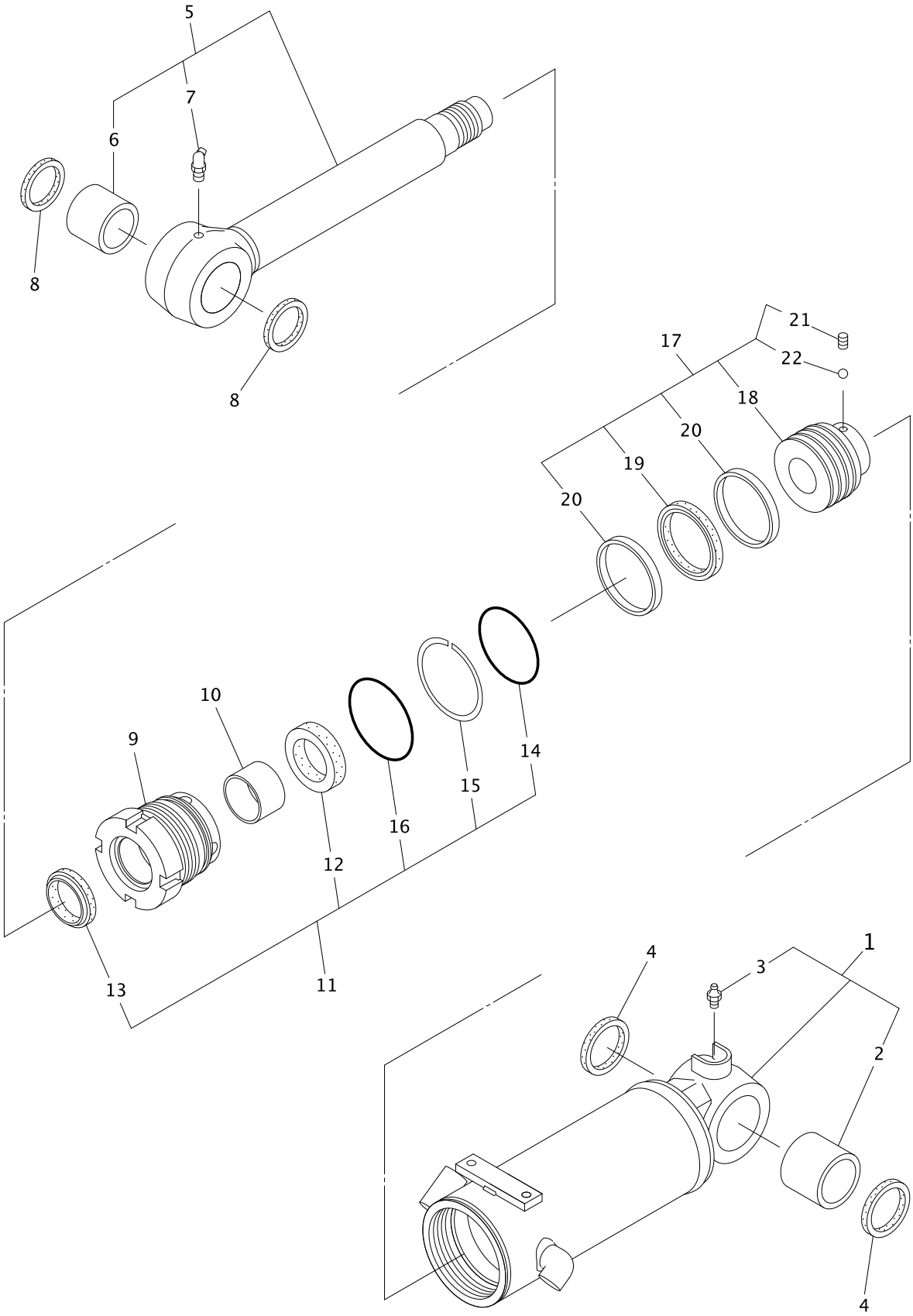

0782609UA-1

https://truckmanualshub.com/

KEY No.	SUP.	PART No.	DESCRIPTION	Q'TY	CHAN.	SERIAL No.	REMARKS
0		0782 609 UA	Cylinder Ass'y, Blade	1		WS010001-	
1	×	**** *** **	*Tube Ass'y, Cylinder	1		WS010001-	
2		0752 284 23	**Bushing	1		WS010001-	
3		0728 111 15	**Nipple, Grease	1		WS010001-	PT1/8
4		0752 118 26	*Seal, Dust	2		WS010001-	
5		0782 609 02	*Rod Ass'y, Piston	1		WS010001-	
6		0752 284 23	**Bushing	1		WS010001-	
7		0728 111 55	**Nipple, Grease	1		WS010001-	PT1/8X67.5
8		0752 118 26	*Seal, Dust	2		WS010001-	
9		0782 397 03	*Head, Cylinder	1		WS010001-	
10		0782 446 03	*Bushing	1		WS010001-	
11		0782 397 91	*Kit, Seal	1		WS010001-	
12	×	0752 756 05	**Ring, U	1		WS010001-	
13	×	0758 698 09	**Ring, Wiper	1		WS010001-	
14	×	0760 715 95	**Ring, O	1		WS010001-	G95-90B
15	×	0782 397 04	**Ring, Back-up	1		WS010001-	
16	×	0760 716 00	**Ring, O	1		WS010001-	G100-90B
17		0782 397 93	*Piston Ass'y	1		WS010001-	
18	×	**** *** **	**Piston	1		WS010001-	
19		0752 184 24	**Ring Ass'y, Seal	1		WS010001-	
20		0782 397 06	**Ring, Slide	2		WS010001-	
21		0561 100 10	**Screw, Set	1		WS010001-	M10X10
22		0609 016 10	**Ball, Steel	1		WS010001-	d=1/4

https://truckmanualshub.com/

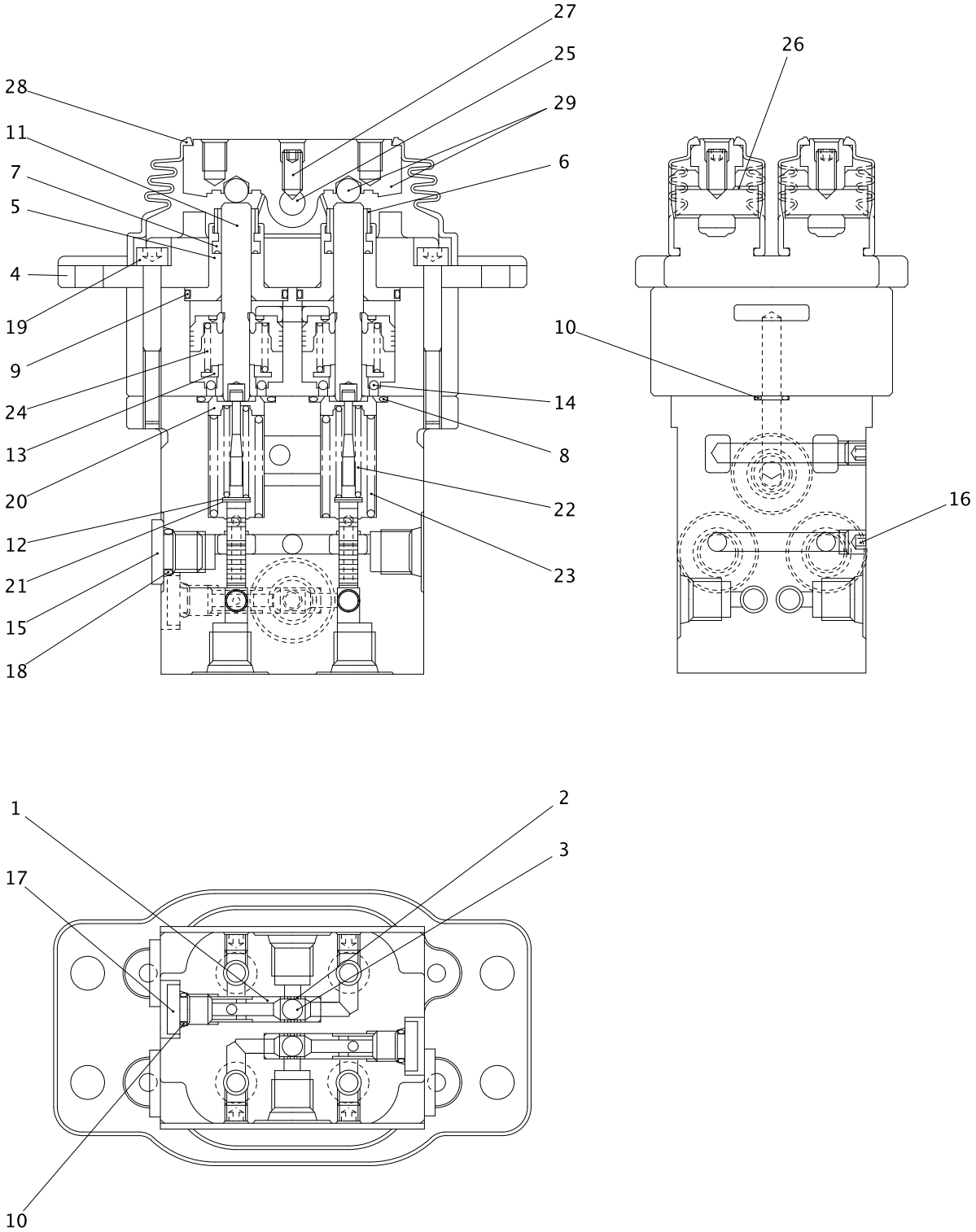

0783995UA-1
0783936UA-1

https://truckmanualshub.com/

KEY No.	SUP.	PART No.	DESCRIPTION	Q'TY	CHAN.	SERIAL No.	REMARKS
0		0783 995 UA	Valve Ass'y, Pilot	1		WS010001-	
1		0783 951 01	*Seat	2		WS010001-	
2		0783 951 02	*Bushing	2		WS010001-	
3		0609 016 10	*Ball, Steel	2		WS010001-	d=1/4
4		0783 951 03	*Cover	2		WS010001-	
5		0783 951 04	*Plug	4		WS010001-	
6		0783 951 05	*Cap, Grease	4		WS010001-	
7		0783 951 06	*Packing	4		WS010001-	
8		0760 310 20	*Ring, O	4		WS010001-	020-90B
9		0760 310 25	*Ring, O	4		WS010001-	025-90B
10		0760 710 08	*Ring, O	4		WS010001-	P8-90B
11		0783 936 01	*Rod, Push	4		WS010001-	
12		0783 951 08	*Shim	4		WS010001-	
13		0783 951 09	*Seat, Spring	4		WS010001-	
14		0751 948 06	*Ball, Steel	12		WS010001-	
15		0756 357 03	*Plug	3		WS010001-	
16		0750 198 15	*Plug	6		WS010001-	
17		0783 920 06	*Plug	2		WS010001-	
18		0760 710 12	*Ring, O	3		WS010001-	P11-90B
19		0562 060 50	*Bolt, Socket Head	4		WS010001-	M6X50
20		0783 951 10	*Seat, Spring	4		WS010001-	
21		0783 951 11	*Washer	4		WS010001-	
22		0783 995 01	*Spring	4		WS010001-	
23		0783 951 13	*Spring	4		WS010001-	
24		0783 951 14	*Spring	4		WS010001-	
25		0783 951 15	*Shaft Cam	2		WS010001-	
26		0783 951 16	*Bushing	4		WS010001-	
27		0783 951 17	*Screw, Set	2		WS010001-	
28		0783 951 18	*Boot	2		WS010001-	
29		0783 951 91	*Cam Ass'y	2		WS010001-	

https://truckmanualshub.com/

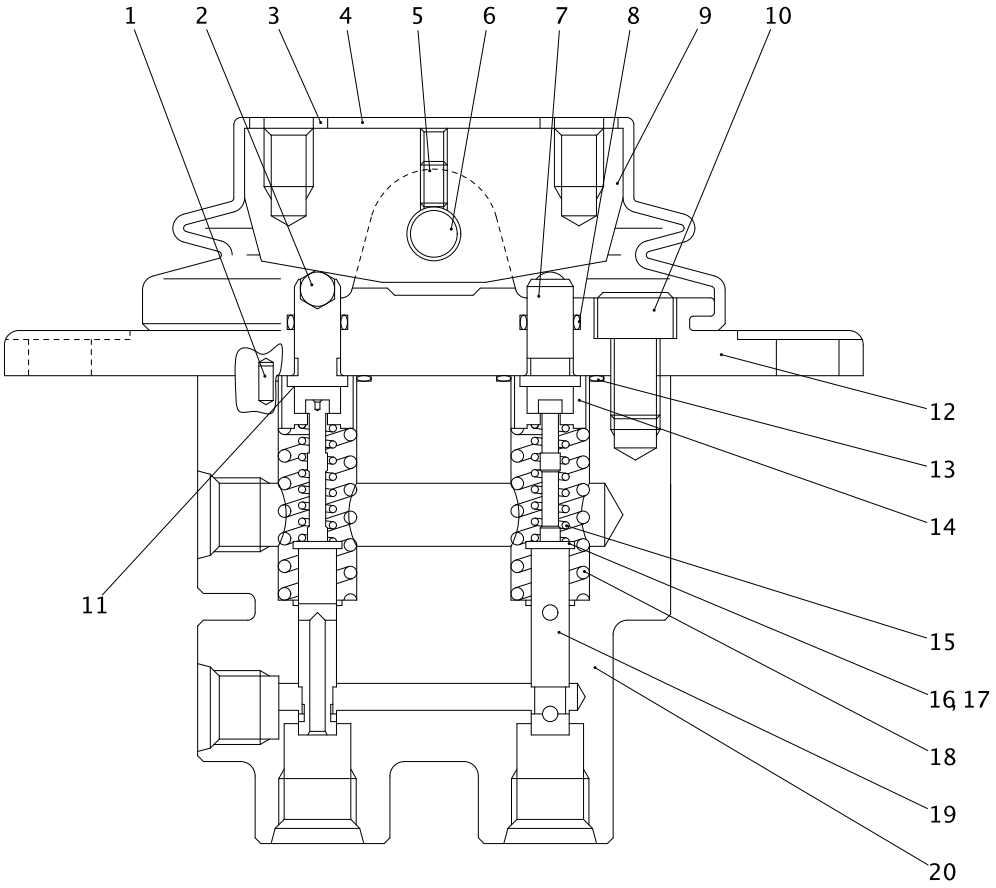

0783965UA-1
0783724UA-1

https://truckmanualshub.com/

KEY No.	SUP.	PART No.	DESCRIPTION	Q'TY	CHAN.	SERIAL No.	REMARKS
0		0783 965 UA	Valve Ass'y, Pilot	1		WS010001-	
1		0756 326 22	*Pin, Spring	2		WS010001-	d=3X6
2		0756 326 23	*Ball, Steel	2		WS010001-	d=6
3		0756 326 20	*Washer, Flat	2		WS010001-	M8
4		0756 326 10	*Boot	1		WS010001-	
5		0567 040 08	*Screw, Set	1		WS010001-	M4X8
6		0756 326 08	*Pin	1		WS010001-	
7		0756 326 04	*Pusher	2		WS010001-	
8		0760 610 08	*Ring, O	2		WS010001-	P8-70B
9		0756 326 07	*Cam	1		WS010001-	
10		0562 080 16	*Bolt, Socket Head	2		WS010001-	M8X16
11		0783 965 02	*Shim	AR		WS010001-	t=0.1
11-1		0783 965 03	*Shim	AR		WS010001-	t=0.2
12		**** *** **	*Cover	1		WS010001-	
13		0756 326 25	*Ring, O	2		WS010001-	S16-90B
14		0756 065 13	*Holder, Spring	2		WS010001-	
15		0783 965 11	*Spring	2		WS010001-	
16		0756 326 19	*Washer, Flat	2		WS010001-	M4
17		0756 326 06	*Shim	AR		WS010001-	t=0.1
17-1		0756 065 11	*Shim	AR		WS010001-	
18		0756 326 09	*Spring	2		WS010001-	
19		0783 965 04	*Spool	2		WS010001-	
20		**** *** **	*Body	1		WS010001-	

https://truckmanualshub.com/

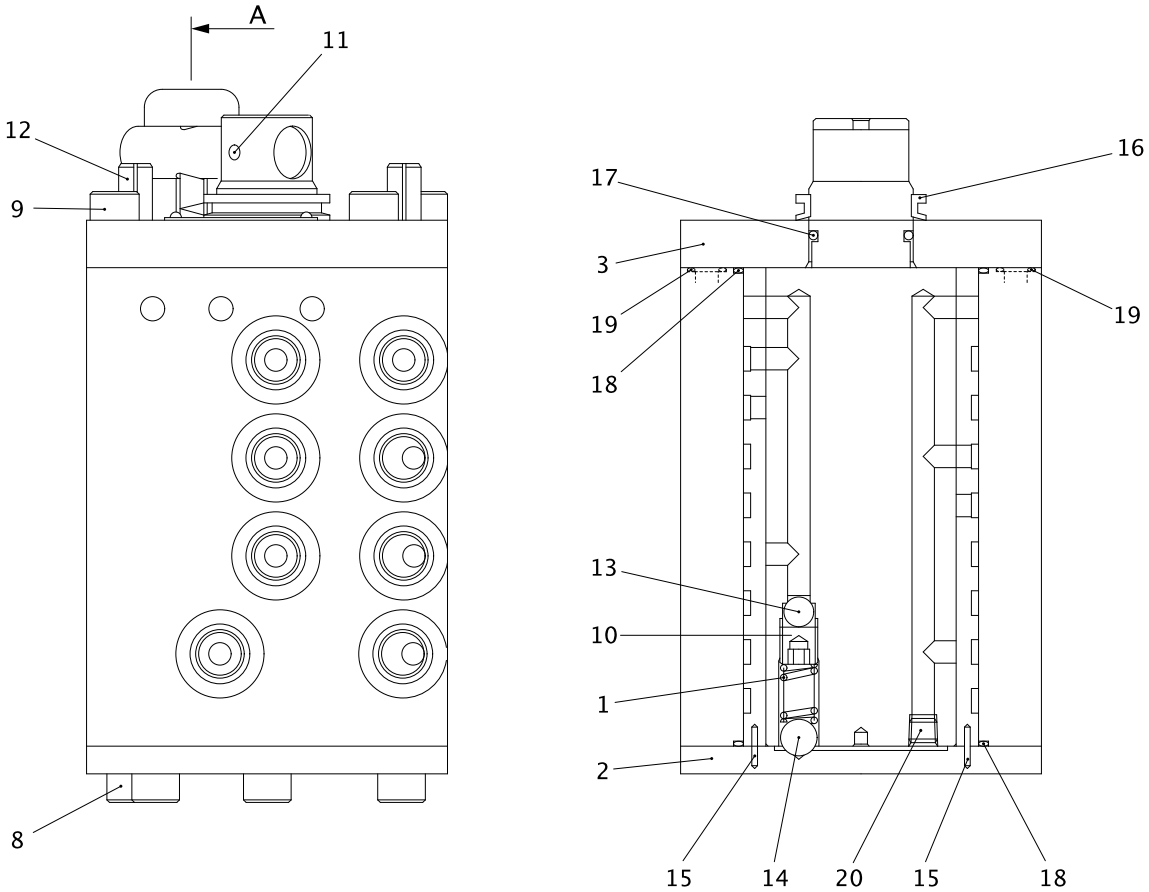

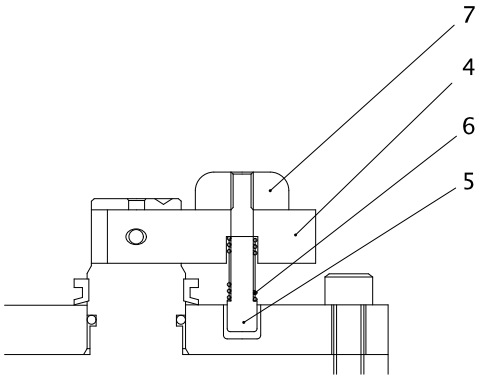

"A" SECTION

0784112UA-1

https://truckmanualshub.com/

KEY No.	SUP.	PART No.	DESCRIPTION	Q'TY	CHAN.	SERIAL No.	REMARKS
0		0784 112 UA	Valve Ass'y, Multiple (A-D Change)	1		WS010001-	
1		0784 112 04	*Spring	1		WS010001-	
2		0784 112 06	*Cover	1		WS010001-	
3		0784 112 07	*Cover	1		WS010001-	
4		0784 112 08	*Lever	1		WS010001-	
5		0784 112 09	*Pin	1		WS010001-	
6		0784 112 10	*Spring	1		WS010001-	
7		0784 112 11	*Grip	1		WS010001-	
8		0562 080 16	*Bolt, Socket Head	6		WS010001-	M8X16
9		0562 080 25	*Bolt, Socket Head	6		WS010001-	M8X25
10		0561 100 10	*Screw, Set	1		WS010001-	M10X10
11		0494 606 25	*Pin, Spring	1		WS010001-	d=4X25
12		0494 610 24	*Pin, Spring	2		WS010001-	d=8X24
13		0756 781 14	*Ball, Steel	1		WS010001-	d=8
14		0784 112 20	*Ball, Steel	1		WS010001-	d=10
15		0783 637 16	*Roller, Needle	4		WS010001-	d=2X9.8
16		0756 863 09	*Seal, Oil	1		WS010001-	
17		0760 211 18	*Ring, O	1		WS010001-	118-70B
18		0783 637 19	*Ring, O	2		WS010001-	S65-70B
19		0783 637 20	*Ring, O	8		WS010001-	S8-70B
20		0754 124 13	*Plug	7		WS010001-	

https://truckmanualshub.com/

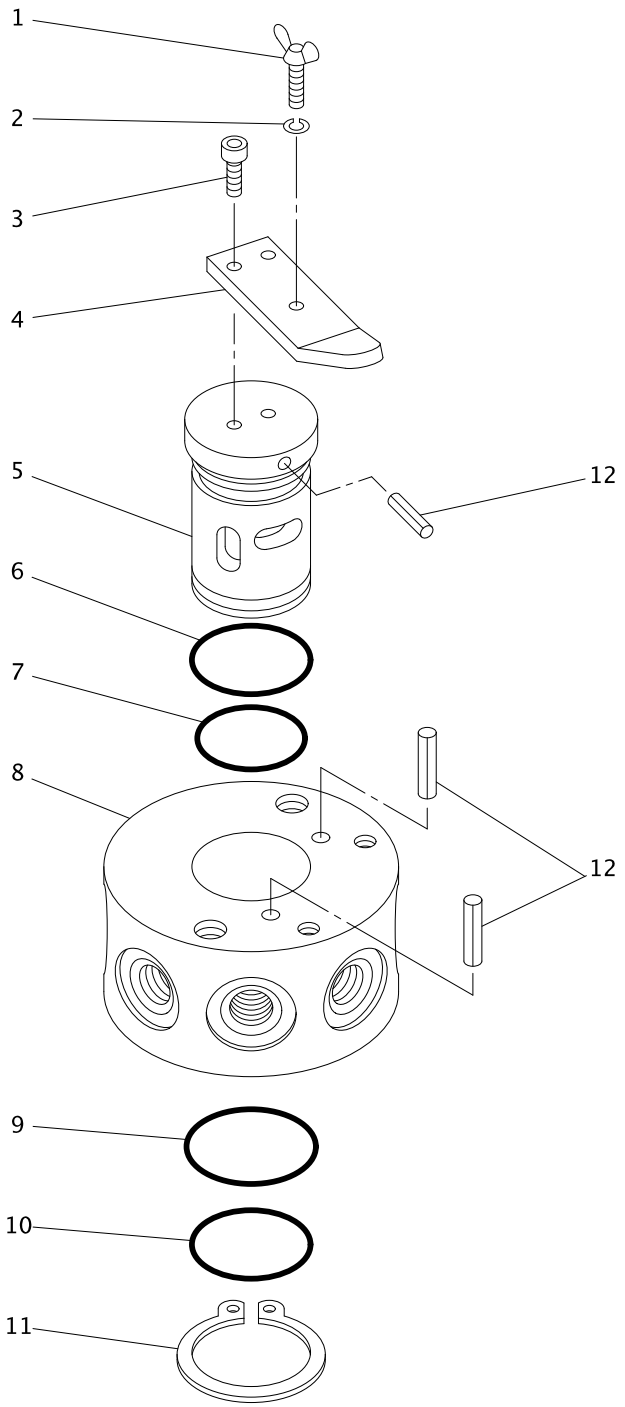

0756094UA-1

https://truckmanualshub.com/

KEY No.	SUP.	PART No.	DESCRIPTION	Q'TY	CHAN.	SERIAL No.	REMARKS
0		0756 094 UA	Valve Ass'y, Selector	1		WS010001-	
1		0756 094 04	*Bolt, Wing	1		WS010001-	
2		0590 050 00	*Washer, Lock	1		WS010001-	M5
3		0562 050 14	*Bolt, Socket Head	2		WS010001-	M5X14
4		0756 094 03	*Lever	1		WS010001-	
5		0756 094 02	*Rotor	1		WS010001-	
6		0756 094 08	*Ring, O	1		WS010001-	
7		0756 094 07	*Ring, O	1		WS010001-	
8		0756 094 01	*Body	1		WS010001-	
9		0756 094 06	*Ring, O	1		WS010001-	
10		0756 094 05	*Ring, O	1		WS010001-	
11		0493 510 30	*Ring, Snap	1		WS010001-	d=30
12		0494 606 12	*Pin, Spring	3		WS010001-	d=4X12

https://truckmanualshub.com/

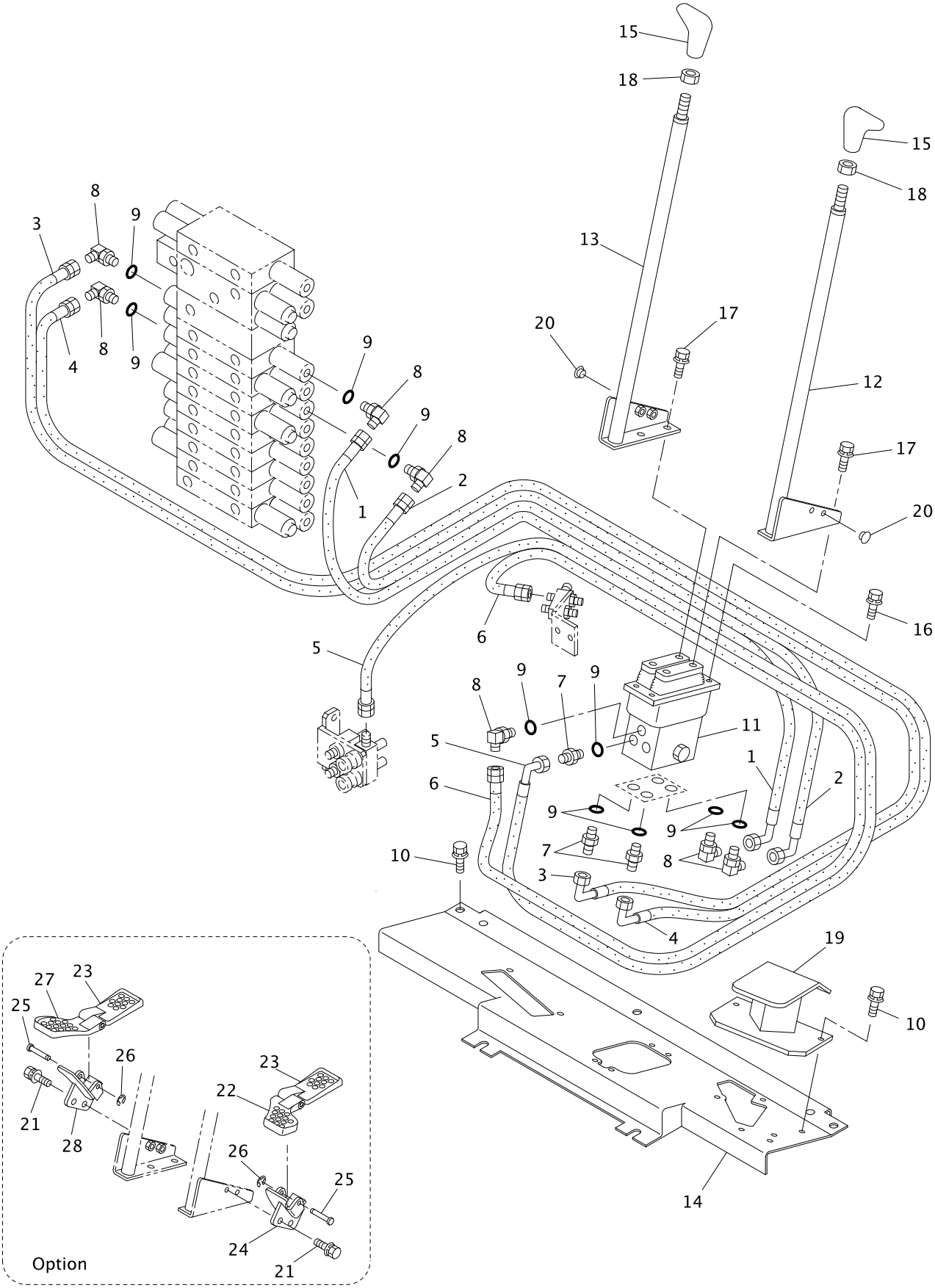

25V4-060100-1

https://truckmanualshub.com/

KEY No.	SUP.	PART No.	DESCRIPTION	Q'TY	CHAN.	SERIAL No.	REMARKS
0	×	F342 660 00	Lever Ass'y, Travel	1		WS010001-	
0-1	×	F361 720 00	Lever Ass'y, Travel	1		WS010001-	
1		4070 551 01	*Hose Ass'y	1		WS010001-	L=1150
1-1	☆	D406 499 01	*Decal (T1)	2		WS010001-	D406 499 00
2		4070 551 01	*Hose Ass'y	1		WS010001-	L=1150
2-1	☆	D406 499 03	*Decal (T3)	2		WS010001-	D406 499 00
3		4070 551 04	*Hose Ass'y	1		WS010001-	L=1480
3-1	☆	D406 499 02	*Decal (T2)	2		WS010001-	D406 499 00
4		4070 551 04	*Hose Ass'y	1		WS010001-	L=1480
4-1	☆	D406 499 04	*Decal (T4)	2		WS010001-	D406 499 00
5		4070 551 13	*Hose Ass'y	1		WS010001-	L=850
6		4070 548 69	*Hose Ass'y	1		WS010001-	L=840
7		0713 700 70	*Connector	3		WS010001-	
8		0710 122 09	*Elbow	7		WS010001-	
9		0760 710 12	*Ring, O	10		WS010001-	P11-90B
10		0518 100 25	*Bolt, Treatment (W/L.W, F.W)	7		WS010001-	M10X25 P=1.25
11	#	0783 995 UA	*Valve Ass'y, Pilot	1		WS010001-	Sh. No. 5-13
12		D495 838 00	*Lever (L.H.)	1		WS010001-	
13		D495 839 00	*Lever (R.H.)	1		WS010001-	
14		D419 360 00	*Bracket	1		WS010001-	
15		0690 283 72	*Grip	2		WS010001-	
16		0517 080 25	*Bolt, Treatment (W/L.W, F.W)	4		WS010001-	M8X25
17		0517 080 16	*Bolt, Treatment (W/L.W, F.W)	4		WS010001-	M8X16
18		0549 140 00	*Nut, Half	2		WS010001-	M14 P=1.5
19		D419 285 00	*Bracket	1		WS010001-	
20		0690 201 05	*Plug, Hole	4		WS010001-	
21		0517 080 25	*Bolt, Treatment (W/L.W, F.W)	4		WS010001-	M8X25
22		D501 057 00	*Pedal	1		WS010001-	Option
23		D501 076 00	*Pedal	2		WS010001-	Option
24		D419 342 00	*Bracket	1		WS010001-	Option
25		D013 384 00	*Pin,Head	2		WS010001-	Option
26		0493 510 08	*Ring, Snap	2		WS010001-	Option
27		D501 058 00	*Pedal	1		WS010001-	Option
28		D419 343 00	*Bracket	1		WS010001-	Option

https://truckmanualshub.com/

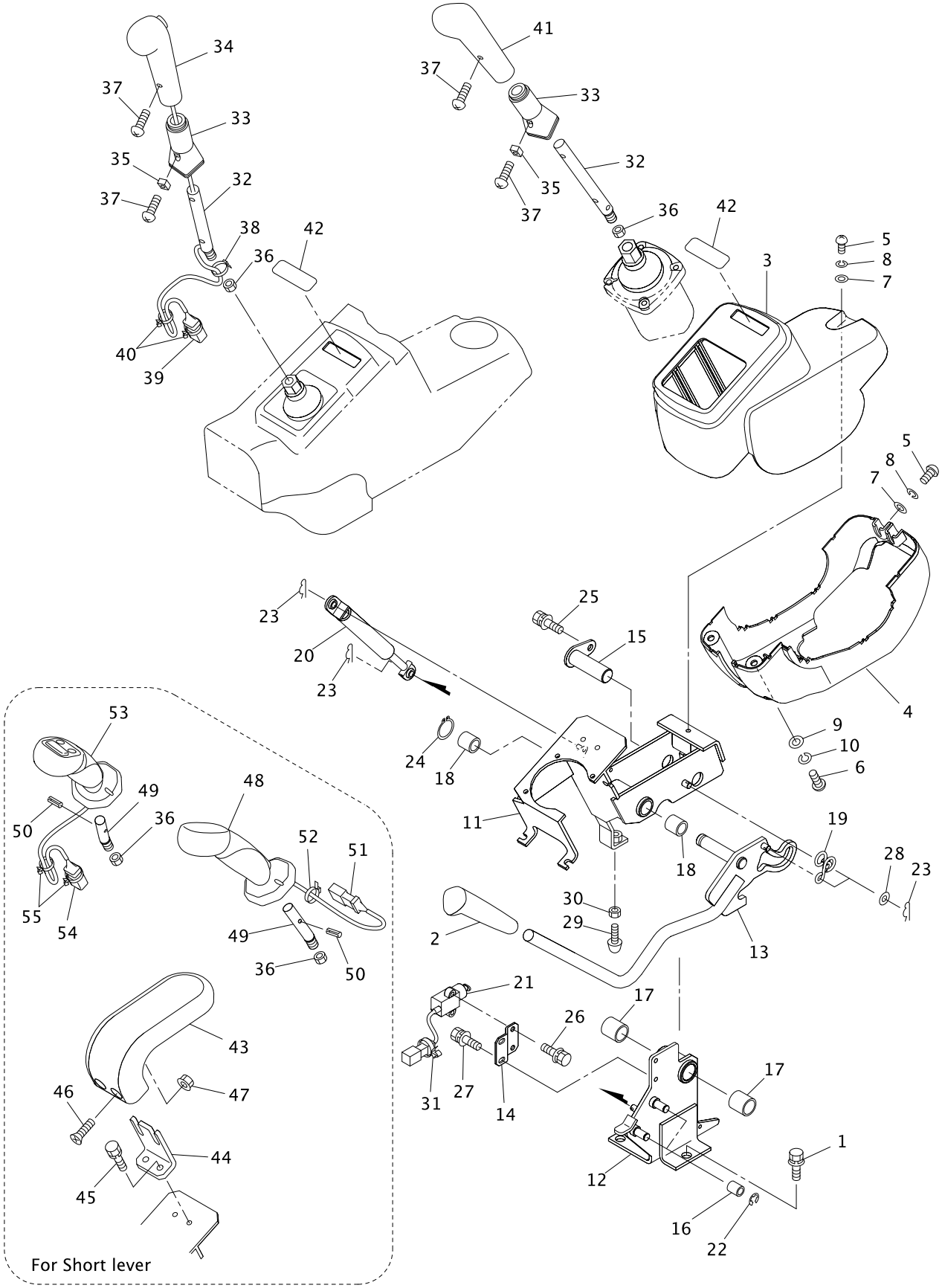

25V4-060200-1

https://truckmanualshub.com/

KEY No.	SUP.	PART No.	DESCRIPTION	Q'TY	CHAN.	SERIAL No.	REMARKS
0	×	F361 720 00	Lever Ass'y, Control	1		WS010001-	
1		0518 100 25	*Bolt, Treatment (W/L.W, F.W)	3		WS010001-	M10X25 P=1.25
2		0690 283 86	*Grip	1		WS010001-	
3		D465 318 00	*Panel	1		WS010001-	
4		D465 319 00	*Panel	1		WS010001-	
5		4004 364 01	*Bolt, Button Head	3		WS010001-	M6X18
6		0565 060 25	*Screw, Pan Head	2		WS010001-	M6X25
7		0594 060 00	*Washer, Flat	3		WS010001-	M6
8		0596 060 00	*Washer, Lock	3		WS010001-	M6
9		0593 060 00	*Washer, Flat	2		WS010001-	M6
10		0590 060 00	*Washer, Lock	2		WS010001-	M6
11		D419 308 00	*Bracket	1		WS010001-	
12		D418 302 00	*Bracket	1		WS010001-	
13		D495 774 00	*Lever	1		WS010001-	
14		D418 190 00	*Bracket	1		WS010001-	
15		D017 225 00	*Pin	1		WS010001-	
16		4040 867 00	*Spacer	2		WS010001-	
17		0618 120 20	*Bushing	2		WS010001-	
18		0618 116 15	*Bushing	2		WS010001-	
19		D170 052 00	*Spring	1		WS010001-	
20		0652 253 UA	*Stay, Dumper	1		WS010001-	
21		0858 314 15	*Switch, Limit	1		WS010001-	
22		0493 560 09	*Ring "E"	2		WS010001-	
23		4016 030 04	*Pin, Snap	4		WS010001-	
24		0493 510 16	*Ring, Snap	1		WS010001-	d=16
25		0517 080 20	*Bolt, Treatment (W/L.W, F.W)	1		WS010001-	M8X20
26		0517 060 16	*Bolt, Treatment (W/L.W, F.W)	2		WS010001-	M6X16
27		0517 060 12	*Bolt, Treatment (W/L.W, F.W)	2		WS010001-	M6X12
28		0593 080 00	*Washer, Flat	2		WS010001-	M8
29		0690 202 50	*Pad, Rubber	1		WS010001-	
30		0548 120 00	*Nut, Half	1		WS010001-	M12
31		0690 082 08	*Band, Cable	1		WS010001-	
32		D495 577 00	*Lever	2		WS010001-	
33		D042 040 00	*Collar	2		WS010001-	
34		0690 283 40	*Grip (W/Switch)	1		WS010001-	
35		D040 178 00	*Spacer	2		WS010001-	
36		0580 140 00	*Nut, Hex.	2		WS010001-	M14
37		0565 040 12	*Screw, Pan Head	4		WS010001-	M4X12
38		0820 067 07	*Band, Cable	1		WS010001-	
39		D592 290 00	*Harness	1		WS010001-	
40		0690 082 08	*Clamp, Hose	2		WS010001-	
41		0690 283 41	*Grip	1		WS010001-	
42		D408 281 00	*Seal	2		WS010001-	
43		D480 009 00	*Rest, Arm	2		WS010001-	

https://truckmanualshub.com/

KEY No.	SUP.	PART No.	DESCRIPTION	Q'TY	CHAN.	SERIAL No.	REMARKS
44		D418 139 00	*Bracket	2		WS010001-	
45		0519 080 20	*Bolt, Treatment (W/L.W)	4		WS010001-	M8X20
46		D004 049 02	*Bolt, Button Head	4		WS010001-	M8X30
47		0521 080 00	*Nut, Hex..(W/F.W)	4		WS010001-	M8
48		0690 283 85	*Grip	1		WS010001-	
49		D495 843 00	*Lever	2		WS010001-	
50		0494 608 40	*Pin, Spring	2		WS010001-	d=5X40
51		0820 514 UA	*Connector	1		WS010001-	
52		0820 067 03	*Band, Cable	1		WS010001-	
53		0690 283 82	*Grip (W/Switch)	1		WS010001-	
54		0820 513 UA	*Connector	1		WS010001-	
55		0690 082 08	*Clamp, Hose	2		WS010001-	

https://truckmanualshub.com/

[Memo]

https://truckmanualshub.com/

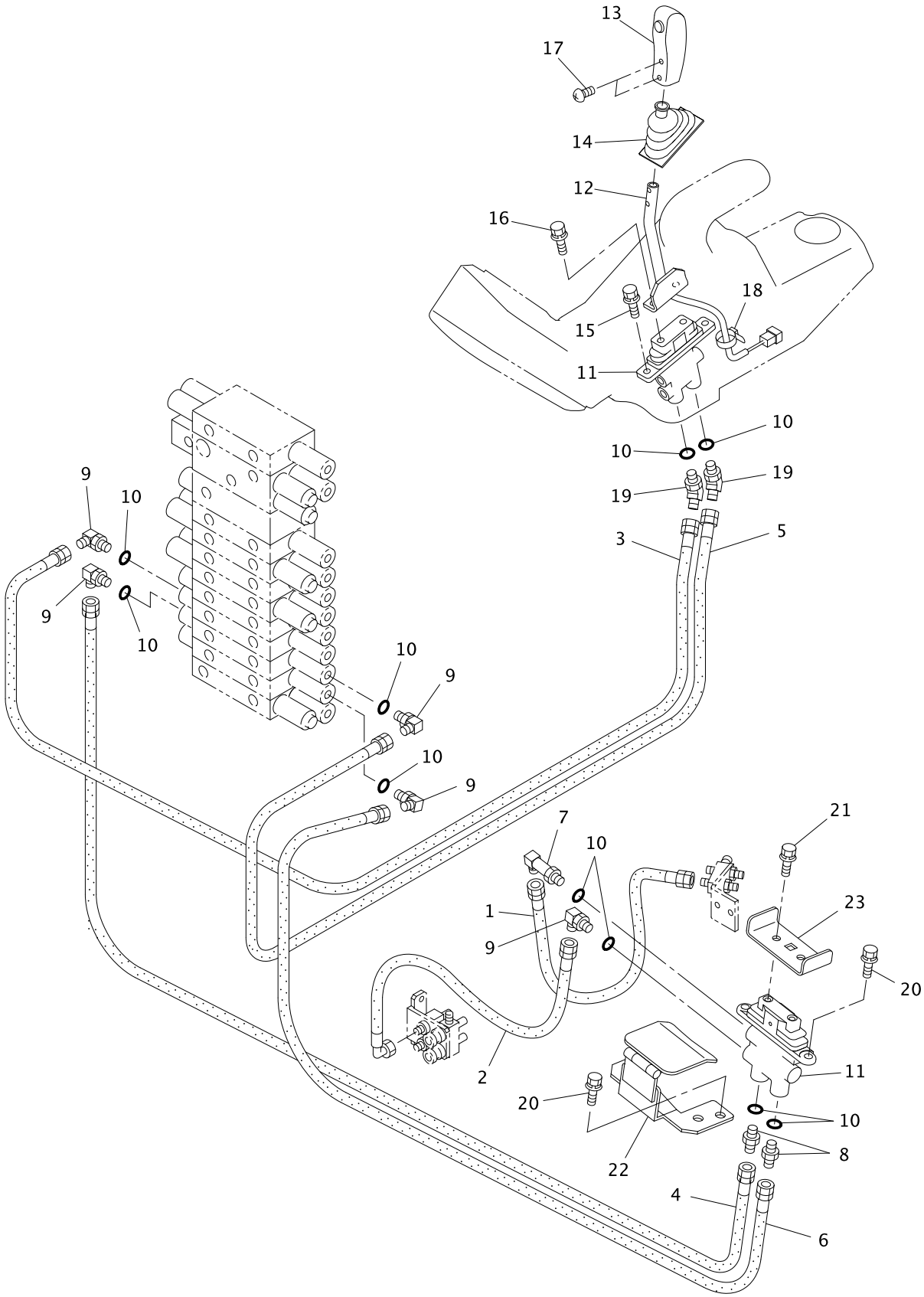

25V4-060300-1

https://truckmanualshub.com/

KEY No.	SUP.	PART No.	DESCRIPTION	Q'TY	CHAN.	SERIAL No.	REMARKS
0	×	F342 660 00	Control Ass'y, Blade & Boom Swing	1		WS010001-	
0-1	×	F361 720 00	Control Ass'y, Blade & Boom Swing	1		WS010001-	
1		4070 548 64	*Hose Ass'y	1		WS010001-	L=270
2		4070 551 20	*Hose Ass'y	1		WS010001-	L=550
3		4070 548 01	*Hose Ass'y	1		WS010001-	L=1900
3-1	☆	D407 818 01	*Decal (BA)	2		WS010001-	D407 818 00
4		4070 548 18	*Hose Ass'y	1		WS010001-	L=1050
5		4070 548 40	*Hose Ass'y	1		WS010001-	L=1650
5-1	☆	D407 818 02	*Decal (BB)	2		WS010001-	D407 818 00
6		4070 548 58	*Hose Ass'y	1		WS010001-	L=880
7		D060 028 00	*Elbow	1		WS010001-	
8		0713 700 70	*Connector	2		WS010001-	
9		0710 122 09	*Elbow	5		WS010001-	
10		0760 710 12	*Ring, O	10		WS010001-	P11-90B
11	#	0783 965 UA	*Valve Ass'y, Pilot	2		WS010001-	Sh. No. 5-14
12		D495 808 00	*Lever	1		WS010001-	
13		0690 283 81	*Grip (W/Switch)	1		WS010001-	
14		D181 002 00	*Boots	1		WS010001-	
15		0517 080 20	*Bolt, Treatment (W/L.W, F.W)	2		WS010001-	M8X20
16		0517 080 16	*Bolt, Treatment (W/L.W, F.W)	2		WS010001-	M8X16
17		0565 040 08	*Screw, Pan Head	2		WS010001-	M4X8
18		0820 067 03	*Band, Cable	1		WS010001-	
19		0710 121 00	*Elbow, 45	2		WS010001-	
20		0518 100 25	*Bolt, Treatment (W/L.W, F.W)	4		WS010001-	M10X25 P=1.25
21		0517 080 16	*Bolt, Treatment (W/L.W, F.W)	2		WS010001-	M8X16
22		D419 286 00	*Bracket	1		WS010001-	
23		D501 075 00	*Pedal	1		WS010001-	

https://truckmanualshub.com/

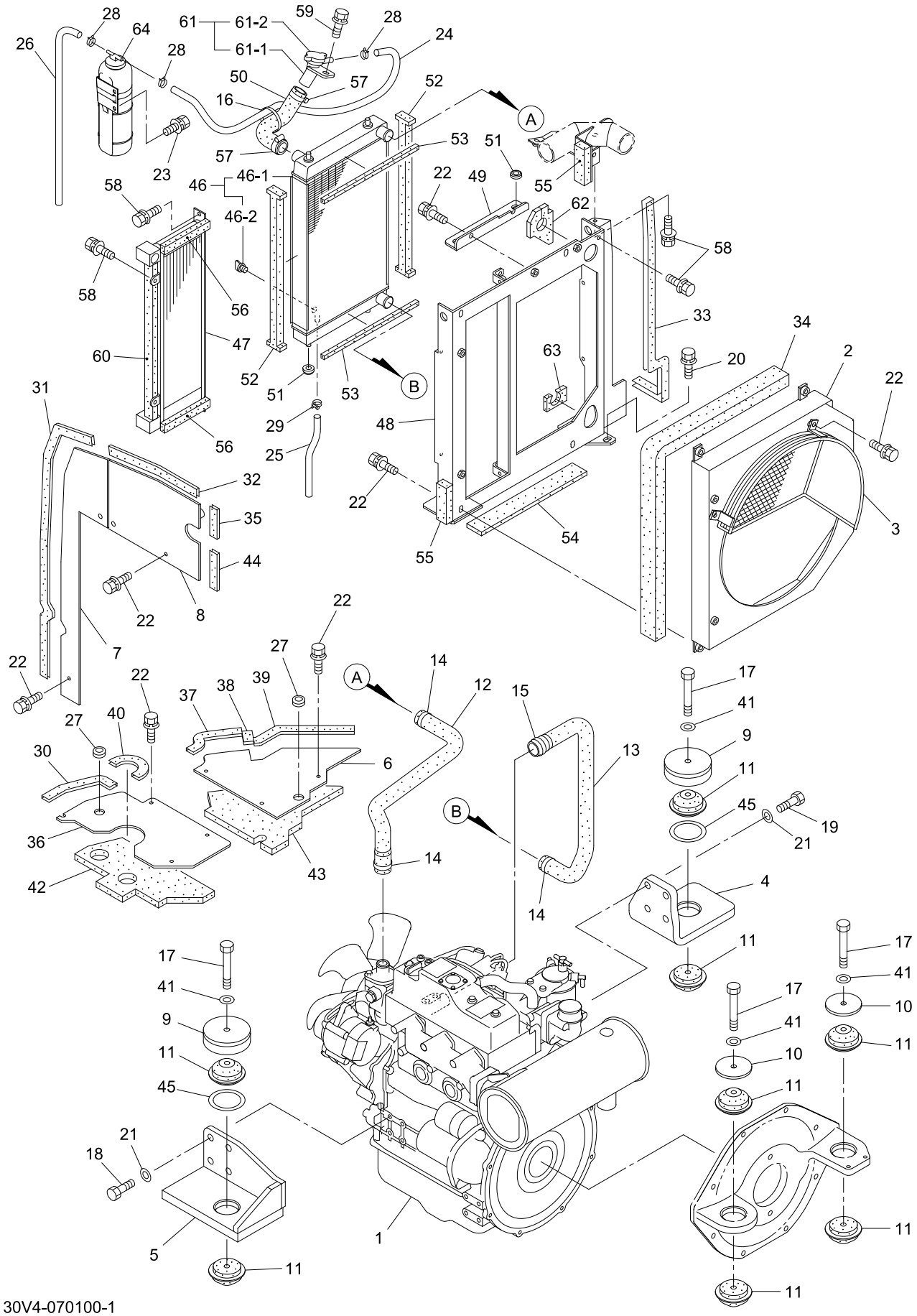

30V4-070100-1

https://truckmanualshub.com/

KEY No.	SUP.	PART No.	DESCRIPTION	Q'TY	CHAN.	SERIAL No.	REMARKS
0	×	F330 682 00	Engine & Accessories	1		WS010001-	
1		0676 255 UA	*Engine Ass'y	1		WS010001-WS020000	3TNV88
1-1		0676 256 UA	*Engine Ass'y (30V4F)	1		WS020001-29999	3TNV88F-ESIK
2		D470 740 00	*Guide, Fan	1		WS010001-	
3		0668 502 19	*Guard, Fan	1		WS010001-	
4		D419 254 00	*Bracket	1		WS010001-	
5		D419 255 00	*Bracket	1		WS010001-	
5-1		D419 518 00	*Bracket (For A/C)	1		WS010001-	
6		D419 141 00	*Bracket	1		WS010001-	
7		D458 456 00	*Cover	1		WS010001-	
8		D458 579 00	*Cover	1		WS010001-	
9		D481 023 00	*Holder	2		WS010001-	
10		D006 132 00	*Washer	2		WS010001-	
11		0910 931 34	*Rubber, Cushion	8		WS010001-	
12		0775 551 86	*Hose, Radiator	1		WS010001-	
13		0775 551 87	*Hose, Radiator	1		WS010001-	
14		0690 083 08	*Clamp, Hose	3		WS010001-	
15		0690 083 09	*Clamp, Hose	1		WS010001-	
16		0820 067 10	*Band, Cable	1		WS010001-	
17		0513 121 00	*Bolt, Treatment	4		WS010001-	M12X100
18		0513 100 25	*Bolt, Treatment	4		WS010001-	M10X25
19		0513 100 30	*Bolt, Treatment	4		WS010001-	M10X30
20		0518 100 20	*Bolt, Treatment (W/L.W, F.W)	4		WS010001-	M10X20 P=1.25
21		0595 100 00	*Washer, Treatment	8		WS010001-	M10
22		0517 080 20	*Bolt, Treatment (W/L.W, F.W)	18		WS010001-	M8X20
23		0517 080 12	*Bolt, Treatment (W/L.W, F.W)	2		WS010001-	M8X12
24		0779 002 97	*Hose	M		WS010001-	L=650
25		0779 002 97	*Hose	M		WS010001-	L=280
26		4070 307 03	*Hose, Fuel	M		WS010001-	L=750
27		0910 941 42	*Grommet	2		WS010001-	
28		0690 081 91	*Clamp, Hose	3		WS010001-	
29		0690 081 56	*Clamp, Hose	1		WS010001-	
30		0910 870 05	*Seal	M		WS010001-	L=175
31		0910 870 05	*Seal	M		WS010001-	L=790
32		0910 870 05	*Seal	M		WS010001-	L=270
33		0910 870 05	*Seal	M		WS010001-	L=670
34		D493 524 00	*Panel, Sponge	1		WS010001-	
35		0910 870 05	*Seal	M		WS010001-	L=70
36		D458 458 00	*Cover	1		WS010001-	
36-1		D419 201 00	*Cover (For A/C)	1		WS010001-	
37		0910 870 05	*Seal	M		WS010001-	L=150
38		0910 870 05	*Seal	M		WS010001-	L=40
39		0910 870 05	*Seal	M		WS010001-	L=230

https://truckmanualshub.com/

KEY No.	SUP.	PART No.	DESCRIPTION	Q'TY	CHAN.	SERIAL No.	REMARKS
40		0910 870 05	*Seal	M		WS010001-	L=140
41		0595 120 00	*Washer, Treatment	4		WS010001-	M12
42		D493 648 00	*Panel, Sponge	1		WS010001-	
42-1		D493 697 00	*Panel, Sponge (For A/C)	1		WS010001-	
43		D493 649 00	*Panel, Sponge	1		WS010001-	
44		0910 870 05	*Seal	M		WS010001-	L=90
45		D007 246 00	*Shim	2		WS010001-	
46		0668 248 UA	*Radiator Ass'y	1		WS010001-	
46-1		0668 248 01	**Radiator	1		WS010001-	
46-2		0668 248 02	**Plug, Drain	1		WS010001-	
47		0667 800 UA	*Cooler Ass'y, Oil	1		WS010001-	
48		D206 870 00	*Frame	1		WS010001-	
49		D418 847 00	*Bracket	1		WS010001-	
50		0775 551 85	*Hose, Radiator	1		WS010001-	
51		D580 182 00	*Pad	4		WS010001-	
52		D493 495 00	*Panel, Sponge	2		WS010001-	
53		D493 488 00	*Panel, Sponge	2		WS010001-	
54		D493 520 00	*Panel, Sponge	1		WS010001-	
55		D493 672 00	*Panel, Sponge	2		WS010001-	
56		D493 525 00	*Panel, Sponge	2		WS010001-	
57		0690 083 08	*Clamp, Hose	2		WS010001-	
58		0517 080 16	*Bolt, Treatment (W/L.W, F.W)	6		WS010001-	M8X16
59		0517 060 16	*Bolt, Treatment (W/L.W, F.W)	1		WS010001-	M6X16
60		D493 726 00	*Panel, Sponge	1		WS010001-	
61		0668 249 UA	*Opering, Filler	1		WS010001-	
61-1		0668 249 01	**Neck, Filler	1		WS010001-	
61-2		0668 249 02	**Radiator, Cap	1		WS010001-	
62		D493 647 00	*Panel, Sponge	1		WS010001-	
63		D493 652 00	*Panel, Sponge	1		WS010001-	
64		Y171064 44510	*Tank, Surge	1		WS010001-	YANMAR
64-1		Y124450 44550	*Clamp	1		WS010001-	YANMAR
64-2		Y121256 44600	*Bracket	1		WS010001-	YANMAR

https://truckmanualshub.com/

[Memo]

https://truckmanualshub.com/

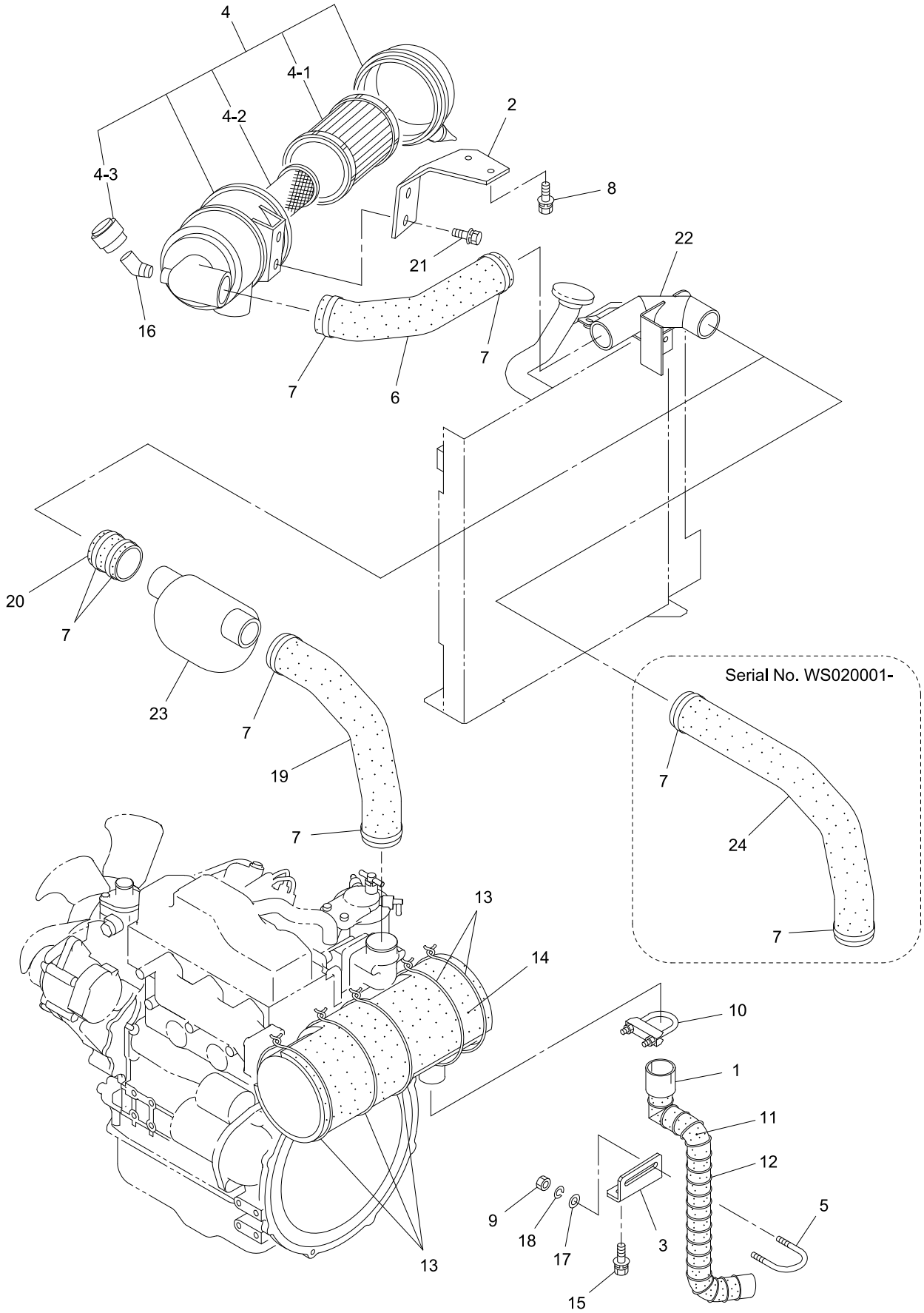

30V4-070200-1

https://truckmanualshub.com/

KEY No.	SUP.	PART No.	DESCRIPTION	Q'TY	CHAN.	SERIAL No.	REMARKS
0	×	F330 682 00	Air Cleaner & Muffler Ass'y	1		WS010001-	
1		D584 143 00	*Pipe, Tail	1		WS010001-	
2		D418 899 00	*Bracket	1		WS010001-	
3		D419 264 00	*Bracket	1		WS010001-	
4		0745 266 UA	*Cleaner, Air	1		WS010001-	
4-1		0745 266 04	**Element Ass'y	1		WS010001-	
4-2		0745 266 05	**Element Ass'y (Inner)	1		WS010001-	
4-3		0745 266 02	**Indicator	1		WS010001-	
5		4003 001 00	*Bolt, U	1		WS010001-	
6		0779 005 32	*Hose, Air Cleaner	1		WS010001-	
7		0690 083 12	*Clamp, Hose	6		WS010001-	
8		0518 100 20	*Bolt, Treatment (W/L.W, F.W)	2		WS010001-	M10X20 P=1.25
9		0580 080 00	*Nut, Hex.	2		WS010001-	M8
10		0690 089 11	*Clamp, Hose	1		WS010001-	
11		4459 598 00	*Tape, Insulating	1		WS010001-	
12		0322 108 99	*Wire	M		WS010001-	L=1000
13		0322 108 99	*Wire	M		WS010001-	L=600X5
14		D468 251 00	*Panel	1		WS010001-	
15		0517 080 20	*Bolt, Treatment (W/L.W, F.W)	2		WS010001-	M8X20
16		0710 124 01	*Elbow, 45	1		WS010001-	
17		0595 080 00	*Washer, Treatment	2		WS010001-	M8
18		0590 080 00	*Washer, Lock	2		WS010001-	M8
19		0779 005 36	*Hose, Air Cleaner	1		WS010001-WS020000	
20		D070 313 00	*Hose	1		WS010001-WS020000	
21		0517 080 25	*Bolt, Treatment (W/L.W, F.W)	2		WS010001-	M8X25
22		D522 280 00	*Duct	1		WS010001-	
23		Y121855 12060	*Resonator	1		WS010001-WS020000	
24		0779 005 34	*Hose, Air Cleaner (EPA Regulation)	1		WS020001-	
		074526604	Air Cleaner Cap				

https://truckmanualshub.com/

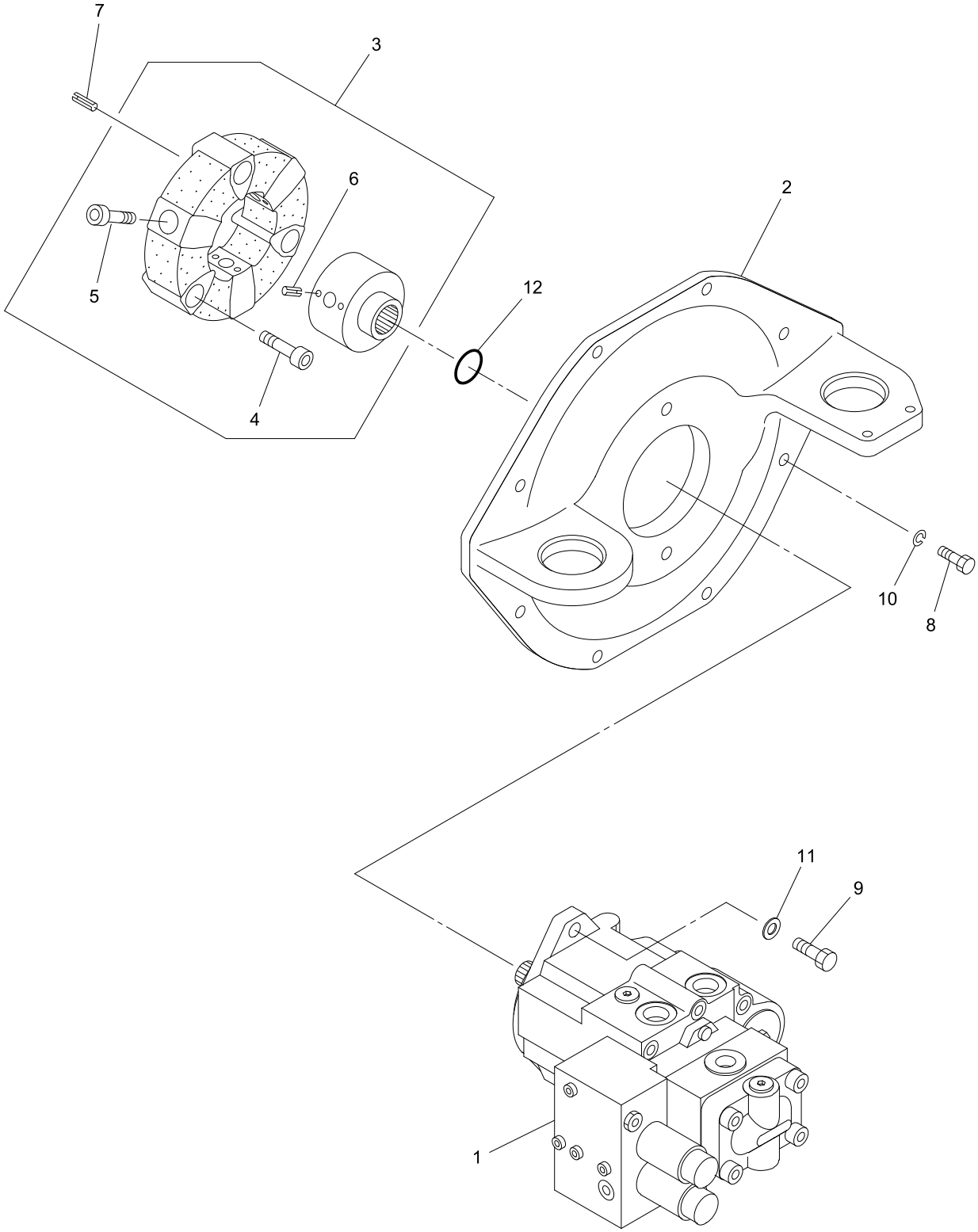

30V4-070300-1

https://truckmanualshub.com/

KEY No.	SUP.	PART No.	DESCRIPTION	Q'TY	CHAN.	SERIAL No.	REMARKS
0	×	F330 680 00	Dribve Device, Oil Pump	1		WS010001-	
1	#	0780 164 UA	*Pump Ass'y, Oil	1		WS010001-	Sh. No. 5-7
2		D230 061 00	*Flange, Pump	1		WS010001-	
3		0651 483 UA	*Coupling Ass'y	1		WS010001-	
4		0562 120 35	**Bolt, Socket Head	3		WQ010001-	M12X35
5		0562 120 40	**Bolt, Socket Head	3		WQ010001-	M12X40
6		0494 606 10	**Pin, Spring	6		WQ010001-	d=5X10
7		0494 608 16	*Pin, Spring	3		WS010001-	d=5X16
8		0513 100 25	*Bolt, Treatment	8		WS010001-	M10X25
9		0513 120 35	*Bolt, Treatment	2		WS010001-	M12X35
10		0590 100 00	*Washer, Lock	8		WS010001-	M10
11		0595 120 00	*Washer, Treatment	2		WS010001-	M12
12		0760 710 19	*Ring, O	1		WS010001-	P18-90B

https://truckmanualshub.com/

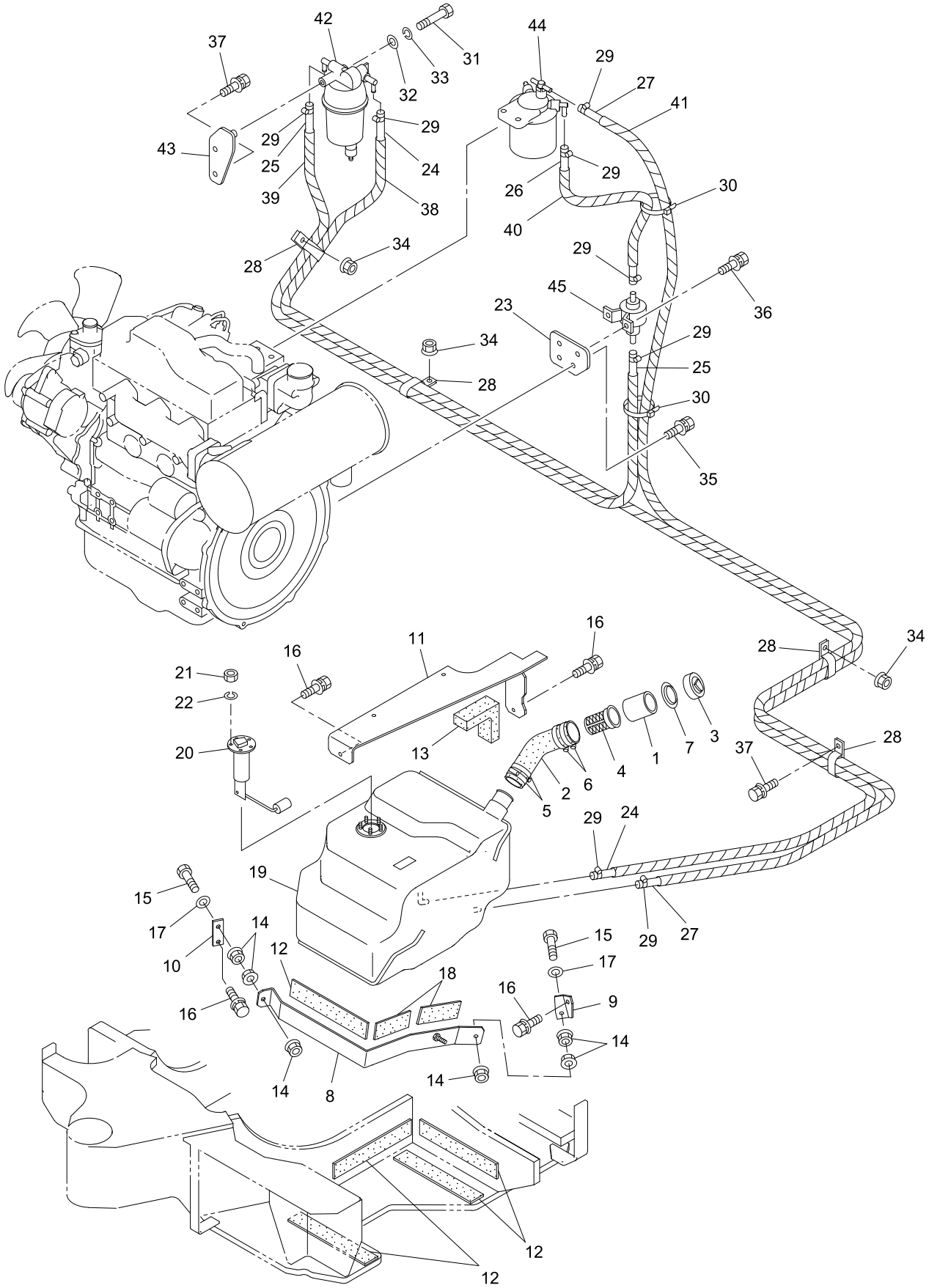

30V4-070400-1

https://truckmanualshub.com/

KEY No.	SUP.	PART No.	DESCRIPTION	Q'TY	CHAN.	SERIAL No.	REMARKS
0	×	F337 317 00	Tank Ass'y, Fuel	1		WS010001-	
0-1	×	F337 320 00	Piping Ass'y, Fuel	1		WS010001-	
1		0729 910 80	*Filter	1		WS010001-	
2		D070 573 00	*Hose	1		WS010001-	
3		0729 910 73	*Cap	1		WS010001-	
4		0729 910 60	*Strainer	1		WS010001-	
5		0690 083 12	*Clamp, Hose	2		WS010001-	
6		0690 083 14	*Clamp, Hose	2		WS010001-	
7		D550 063 00	*Seal	1		WS010001-	
8		D083 153 00	*Clamp	1		WS010001-	
9		D418 836 00	*Bracket	1		WS010001-	
10		D419 218 00	*Bracket	1		WS010001-	
11		D206 872 00	*Frame	1		WS010001-	
12		D433 496 00	*Plate, Rubber	5		WS010001-	
13		D493 651 00	*Panel, Sponge	1		WS010001-	
14		0521 080 00	*Nut, Hex.(W/F.W)	6		WS010001-	M8
15		0551 080 60	*Bolt, Hex.(Full-Thread)	2		WS010001-	M8X60
16		0518 100 20	*Bolt, Treatment (W/L.W, F.W)	4		WS010001-	M10X20 P=1.25
17		0593 080 00	*Washer, Flat	2		WS010001-	M8
18		D433 504 00	*Plate, Rubber	2		WS010001-	
19		D284 220 00	*Tank, Fuel	1		WS010001-	
20		0857 909 UA	*Gauge, Fuel	1		WS010001-	
21		0580 050 00	*Nut, Hex.	5		WS010001-	M5
22		0590 050 00	*Washer, Lock	5		WS010001-	M5
23		D418 867 00	*Bracket	1		WS010001-	
24		4070 245 27	*Hose, Fuel	M		WS010001-	L=2100
25		4070 245 31	*Hose, Fuel	M		WS010001-	L=1250
26		4070 245 53	*Hose, Fuel	M		WS010001-	L=260
27		4070 245 58	*Hose, Fuel	M		WS010001-	L=1350
28		4080 000 29	*Clamp, Hose	4		WS010001-	
29		0690 083 03	*Clamp, Hose	8		WS010001-	
30		0820 067 04	*Band, Cable	2		WS010001-	
31		0550 080 70	*Bolt, Hex.	1		WS010001-	M8X70
32		0593 080 00	*Washer, Flat	1		WS010001-	M8
33		0590 080 00	*Washer, Lock	1		WS010001-	M8
34		0524 100 00	*Nut, Hex. (W/F.W)	3		WS010001-	M10 P=1.25
35		0517 080 20	*Bolt, Treatment (W/L.W, F.W)	2		WS010001-	M8X20
36		0517 060 16	*Bolt, Treatment (W/L.W, F.W)	2		WS010001-	M6X16
37		0518 100 20	*Bolt, Treatment (W/L.W, F.W)	3		WS010001-	M10X20 P=1.25
38		0820 803 04	*Tube, Corrugate	M		WS010001-	L=2000
39		0820 803 04	*Tube, Corrugate	M		WS010001-	L=1150
40		0820 803 04	*Tube, Corrugate	M		WS010001-	L=160
41		0820 803 04	*Tube, Corrugate	M		WS010001-	L=1250

https://truckmanualshub.com/

KEY No.	SUP.	PART No.	DESCRIPTION	Q'TY	CHAN.	SERIAL No.	REMARKS
42		0857 914 UA	*Sedimenter, Water	1		WS010001-	
42-1		0857 914 11	**Element Ass'y	1		WS010001-	
43		D419 026 00	*Bracket	1		WS010001-	
44		Y119802 55801	*Cartridge, Fuel Filter	1		WS010001-	YANMAR
45		Y119225 52102	*Pump, Fuel	1		WS010001-	YANMAR

https://truckmanualshub.com/

[Memo]

https://truckmanualshub.com/

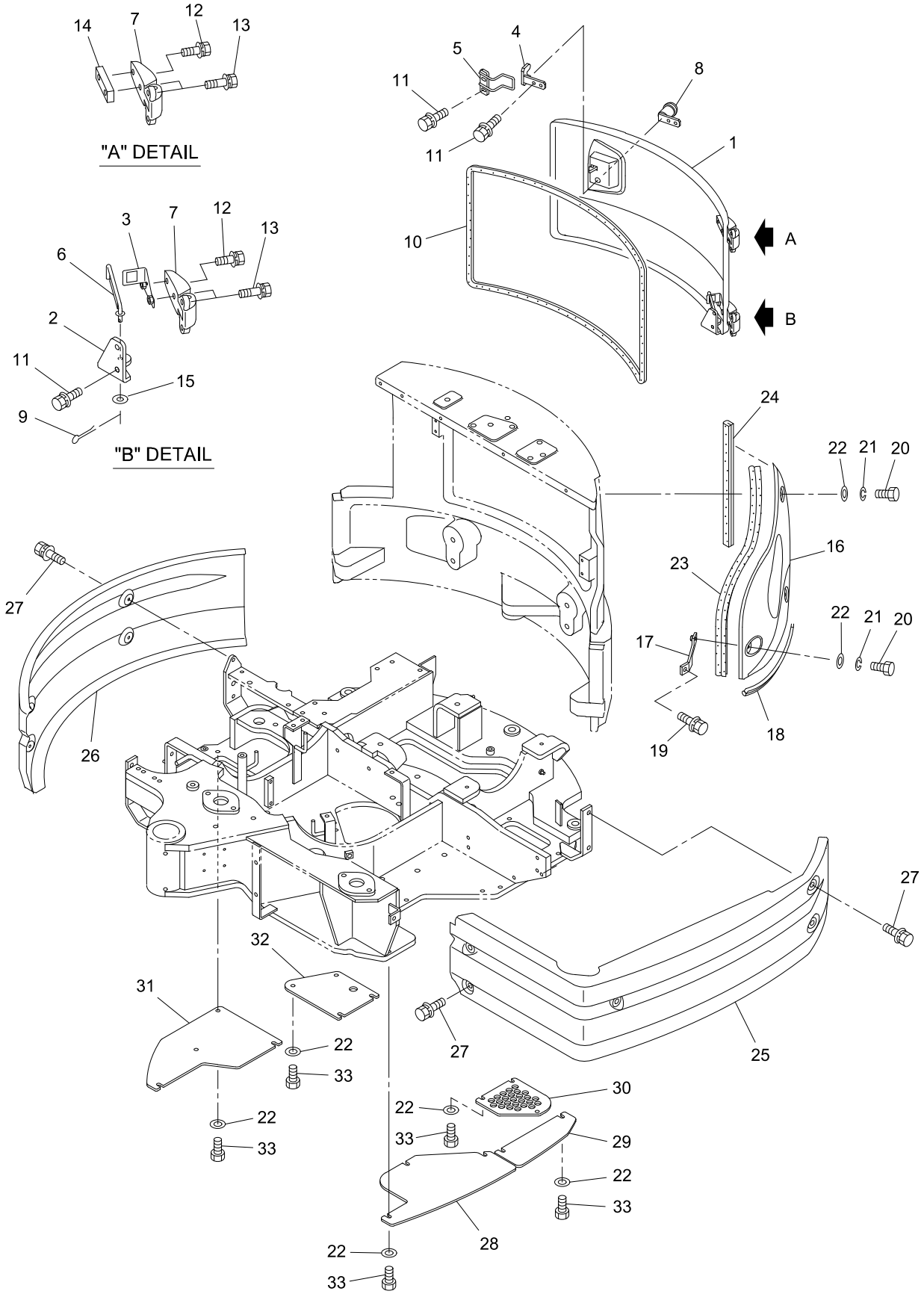

https://truckmanualshub.com/

KEY No.	SUP.	PART No.	DESCRIPTION	Q'TY	CHAN.	SERIAL No.	REMARKS
0	×	F355 195 00	Cover Ass'y	1		WS010001-	
0-1	×	F361 720 00	Cover Ass'y	1		WS010001-	
1		D458 054 00	*Cover	1		WS010001-	
2		D419 542 00	*Bracket	1		WS010001-	
3		D418 908 00	*Bracket	1		WS010001-	
4		D418 909 00	*Bracket	1		WS010001-	
5		D418 910 00	*Bracket	1		WS010001-	
6		D260 552 00	*Stay	1		WS010001-	
7		0690 016 19	*Hinge	2		WS010001-	
8		0690 220 91	*Lock Ass'y	1		WS010001-	
9		0599 010 15	*Pin, Cotter	1		WS010001-	d=1.6X15
10		0910 870 05	*Seal	M		WS010001-	L=2440
11		0517 080 16	*Bolt, Treatment (W/L.W, F.W)	6		WS010001-	M8X16
12		0517 080 30	*Bolt, Treatment (W/L.W, F.W)	2		WS010001-	M8X30
13		0517 080 35	*Bolt, Treatment (W/L.W, F.W)	6		WS010001-	M8X35
14		D400 273 00	*Plate	1		WS010001-	
15		0593 060 00	*Washer, Flat	1		WS010001-	M6
16		D458 195 00	*Cover	1		WS010001-	
17		D418 941 00	*Bracket	1		WS010001-	
18		0910 870 05	*Seal	M		WS010001-	L=465
19		0518 100 25	*Bolt, Treatment (W/L.W, F.W)	1		WS010001-	M10X25 P=1.25
20		0550 100 20	*Bolt, Hex.	3		WS010001-	M10X20
21		0590 100 00	*Washer, Lock	3		WS010001-	M10
22		0593 100 00	*Washer, Flat	19		WS010001-	M10
23		0910 870 05	*Seal	M		WS010001-	L=850
24		4550 519 00	*Seal	M		WS010001-	L=460
25		D458 055 00	*Cover	1		WS010001-	
26		D458 056 00	*Cover	1		WS010001-	
27		0518 100 20	*Bolt, Treatment (W/L.W, F.W)	9		WS010001-	M10X20 P=1.25
28		D458 283 00	*Cover	1		WS010001-	
29		D458 284 00	*Cover	1		WS010001-	
30		D458 301 00	*Cover	1		WS010001-	
31		D458 286 00	*Cover	1		WS010001-	
32		D458 454 00	*Cover	1		WS010001-	
33		0480 100 20	*Bolt, Treatment (W/Flange)	16		WS010001-	M10X20 P=1.25

https://truckmanualshub.com/

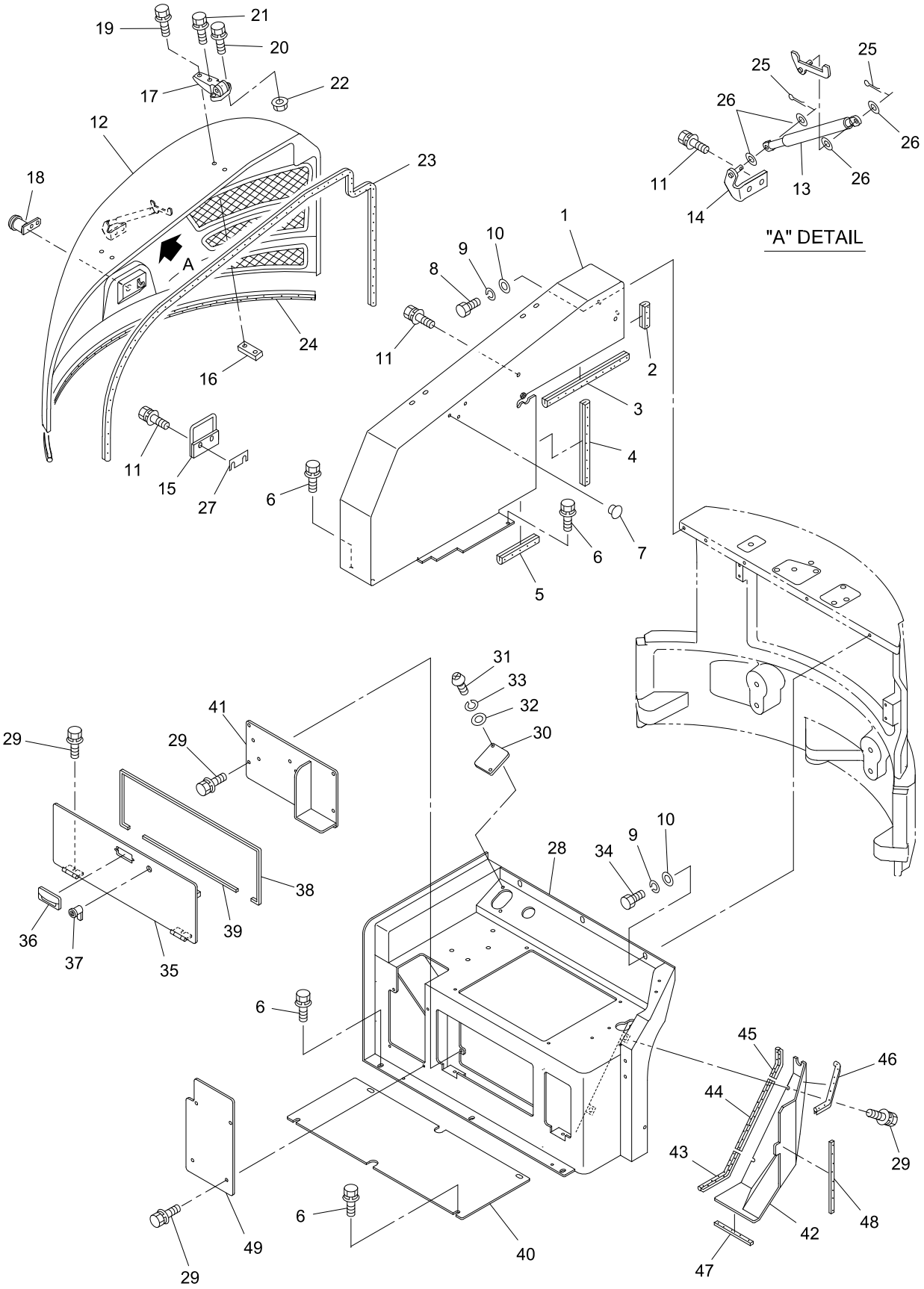

https://truckmanualshub.com/

KEY No.	SUP.	PART No.	DESCRIPTION	Q'TY	CHAN.	SERIAL No.	REMARKS
0	×	F355 195 00	Cover Ass'y	1		WS010001-	
0-1	×	F361 720 00	Cover Ass'y	1		WS010001-	
1		D458 583 00	*Cover	1		WS010001-	
2		4550 519 00	*Seal	M		WS010001-	L=80
3		4550 519 00	*Seal	M		WS010001-	L=375
4		4550 519 00	*Seal	M		WS010001-	L=350
5		4550 519 00	*Seal	M		WS010001-	L=95
6		0518 100 25	*Bolt, Treatment (W/L.W, F.W)	21		WS010001-	M10X25 P=1.25
7		0690 201 08	*Plug, Hole	3		WS010001-	
8		0550 100 25	*Bolt, Hex.	2		WS010001-	M10X25
9		0590 100 00	*Washer, Lock	5		WS010001-	M10
10		0593 100 00	*Washer, Flat	5		WS010001-	M10
11		0518 100 20	*Bolt, Treatment (W/L.W, F.W)	6		WS010001-	M10X20 P=1.25
12		D458 071 00	*Cover	1		WS010001-	
13		0652 271 UA	*Stay, Dumper	1		WS010001-	
14		D418 927 00	*Bracket	1		WS010001-	
15		D419 451 00	*Bracket	1		WS010001-	
16		D400 273 00	*Plate	2		WS010001-	
17		0690 016 19	*Hinge	2		WS010001-	
18		0690 220 91	*Lock Ass'y	1		WS010001-	
19		0517 080 30	*Bolt, Treatment (W/L.W, F.W)	2		WS010001-	M8X30
20		0517 080 35	*Bolt, Treatment (W/L.W, F.W)	4		WS010001-	M8X35
21		0517 080 40	*Bolt, Treatment (W/L.W, F.W)	2		WS010001-	M8X40
22		0521 080 00	*Nut, Hex. (W/F.W)	4		WS010001-	M8
23		4550 726 00	*Seal	M		WS010001-	L=2060
24		0910 870 05	*Seal	M		WS010001-	L=1490
25		4016 030 04	*Pin, Snap	2		WS010001-	
26		0593 080 00	*Washer, Flat	4		WS010001-	M8
27		D007 147 00	*Shim	1		WS010001-	
28		D206 906 00	*Frame	1		WS010001-	
29		0517 080 20	*Bolt, Treatment (W/L.W, F.W)	12		WS010001-	M8X20
30		D418 970 00	*Bracket	1		WS010001-	
31		4004 364 01	*Bolt, Button Head	2		WS010001-	M6X18
32		0594 060 00	*Washer, Flat	2		WS010001-	M6
33		0596 060 00	*Washer, Lock	2		WS010001-	M6
34		0550 100 20	*Bolt, Hex.	3		WS010001-	M10X20
35		D458 236 00	*Cover	1		WS010001-	
36		0690 211 08	*Handle	1		WS010001-	
37		0690 220 92	*Lock Ass'y	1		WS010001-	
38		D551 006 01	*Seal	1		WS010001-	L=1000
39		D551 006 02	*Seal	1		WS010001-	L=410
40		D418 564 00	*Bracket	1		WS010001-	
41		D458 435 00	*Cover	1		WS010001-	

https://truckmanualshub.com/

KEY No.	SUP.	PART No.	DESCRIPTION	Q'TY	CHAN.	SERIAL No.	REMARKS
42		D458 461 00	*Cover	1		WS010001-	
43		0910 870 05	*Seal	M		WS010001-	L=160
44		0910 870 05	*Seal	M		WS010001-	L=225
45		0910 870 05	*Seal	M		WS010001-	L=110
46		0910 870 05	*Seal	M		WS010001-	L=270
47		D551 009 04	*Seal	1		WS010001-	L=160
48		D551 009 05	*Seal	1		WS010001-	L=270
49		D458 514 00	*Cover	1		WS010001-	
49-1		D458 515 00	*Cover	1		WS010001-	For Car Heater

https://truckmanualshub.com/

[Memo]

https://truckmanualshub.com/

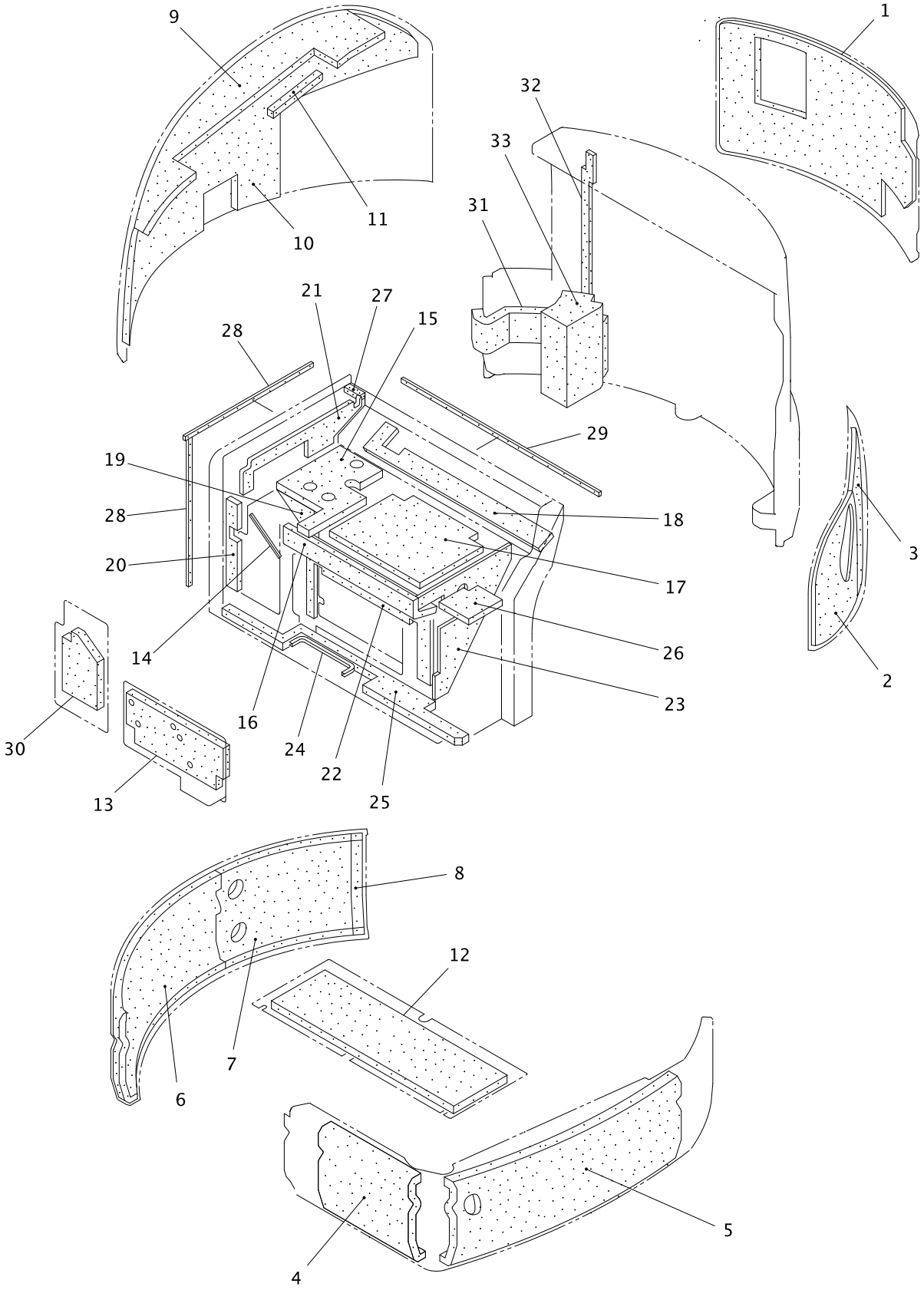

25V4-080300-1

https://truckmanualshub.com/

KEY No.	SUP.	PART No.	DESCRIPTION	Q'TY	CHAN.	SERIAL No.	REMARKS
0	×	F355 195 00	Absorbent Ass'y, Noise	1		WS010001-	
0-1	×	F361 718 00	Absorbent Ass'y, Noise	1		WS010001-	
0-2	×	F373 216 00	Absorbent Ass'y, Noise	1		WS010001-	
1		D493 506 00	*Panel, Sponge	1		WS010001-	
2		D493 671 00	*Panel, Sponge	1		WS010001-	
3		D493 673 00	*Panel, Sponge	1		WS010001-	
4		D493 675 00	*Panel, Sponge	1		WS010001-	
5		D493 511 00	*Panel, Sponge	1		WS010001-	
6		D493 512 00	*Panel, Sponge	1		WS010001-	
7		D493 513 00	*Panel, Sponge	1		WS010001-	
8		D493 514 00	*Panel, Sponge	1		WS010001-	
9		D493 670 00	*Panel, Sponge	1		WS010001-	
10		D493 669 00	*Panel, Sponge	1		WS010001-	
11		D493 674 00	*Panel, Sponge	1		WS010001-	
12		D493 434 00	*Panel, Sponge	1		WS010001-	
13		D493 639 00	*Panel, Sponge	1		WS010001-	
14		D551 007 01	*Seal	1		WS010001-	L=155
15		D493 462 00	*Panel, Sponge	1		WS010001-	
16		D493 463 00	*Panel, Sponge	1		WS010001-	
17		D493 478 00	*Panel, Sponge	1		WS010001-	
18		D493 654 00	*Panel, Sponge	1		WS010001-	
19		D493 480 00	*Panel, Sponge	1		WS010001-	
20		D493 481 00	*Panel, Sponge	1		WS010001-	
21		D493 482 00	*Panel, Sponge	1		WS010001-	
22		D493 483 00	*Panel, Sponge	1		WS010001-	
23		D493 484 00	*Panel, Sponge	1		WS010001-	
24		4550 519 00	*Seal	M		WS010001-	L=250
25		D493 653 00	*Panel, Sponge	1		WS010001-	
26		D493 679 00	*Panel, Sponge	1		WS010001-	
27		D493 680 00	*Panel, Sponge	1		WS010001-	
28		D551 009 06	*Panel, Sponge	2		WS010001-	
29		D551 009 07	*Panel, Sponge	1		WS010001-	
30		D493 721 00	*Panel, Sponge	1		WS010001-	
31		D493 634 00	*Panel, Sponge	1		WS010001-	
32		D493 664 00	*Panel, Sponge	1		WS010001-	
33		D493 666 00	*Panel, Sponge	1		WS010001-	

https://truckmanualshub.com/

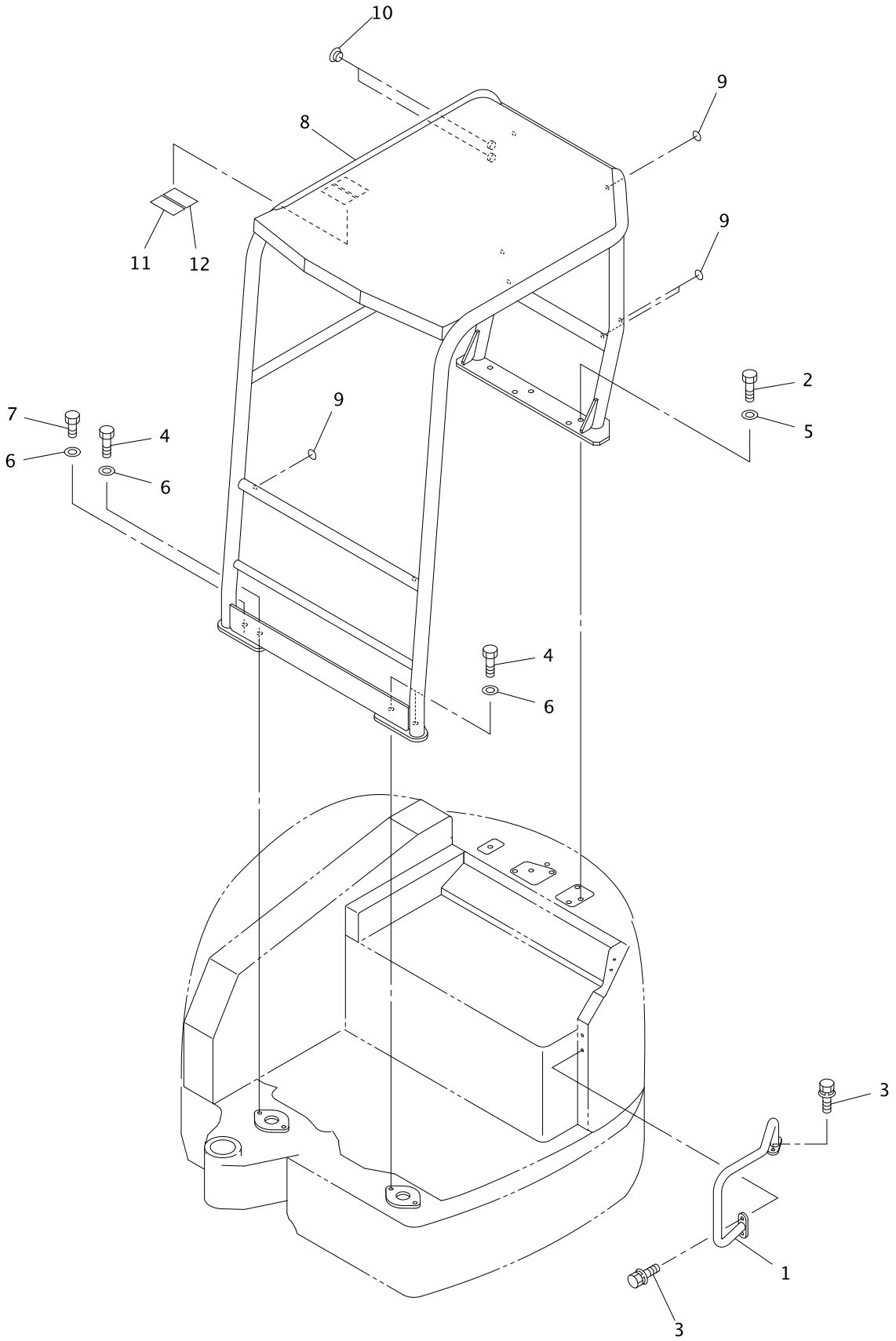

25V4-080400-1

https://truckmanualshub.com/

KEY No.	SUP.	PART No.	DESCRIPTION	Q'TY	CHAN.	SERIAL No.	REMARKS
0	×	F355 211 00	Canopy Ass'y (For Tops/Rops)	1		WS010001-	
0-1	×	F355 221 00	Canopy Ass'y (For Tops/Rops)	1		WS010001-	
1		D470 805 00	*Guard	1		WS010001-	
2		0555 160 50	*Bolt, Treatment	5		WS010001-	M16X50
3		0439 100 25	*Bolt, Treatment (W/L.W, F.W)	4		WS010001-	M10X25 P=1.25
4		0555 120 40	*Bolt, Treatment	3		WS010001-	M12X40
5		0595 160 00	*Washer, Treatment	5		WS010001-	M16
6		0595 120 00	*Washer, Treatment	4		WS010001-	M12
7		0555 120 25	*Bolt, Treatment	1		WS010001-	M12X25
8		D206 875 00	*Frame	1		WS010001-	
9		D405 272 00	*Seal	8		WS010001-	
10		0690 201 08	*Plug, Hole	2		WS010001-	M10
11		D408 376 00	*Decal (For Tops)	1		WS010001-	
12		D408 375 00	*Decal (For Rops)	1		WS010001-	

https://truckmanualshub.com/

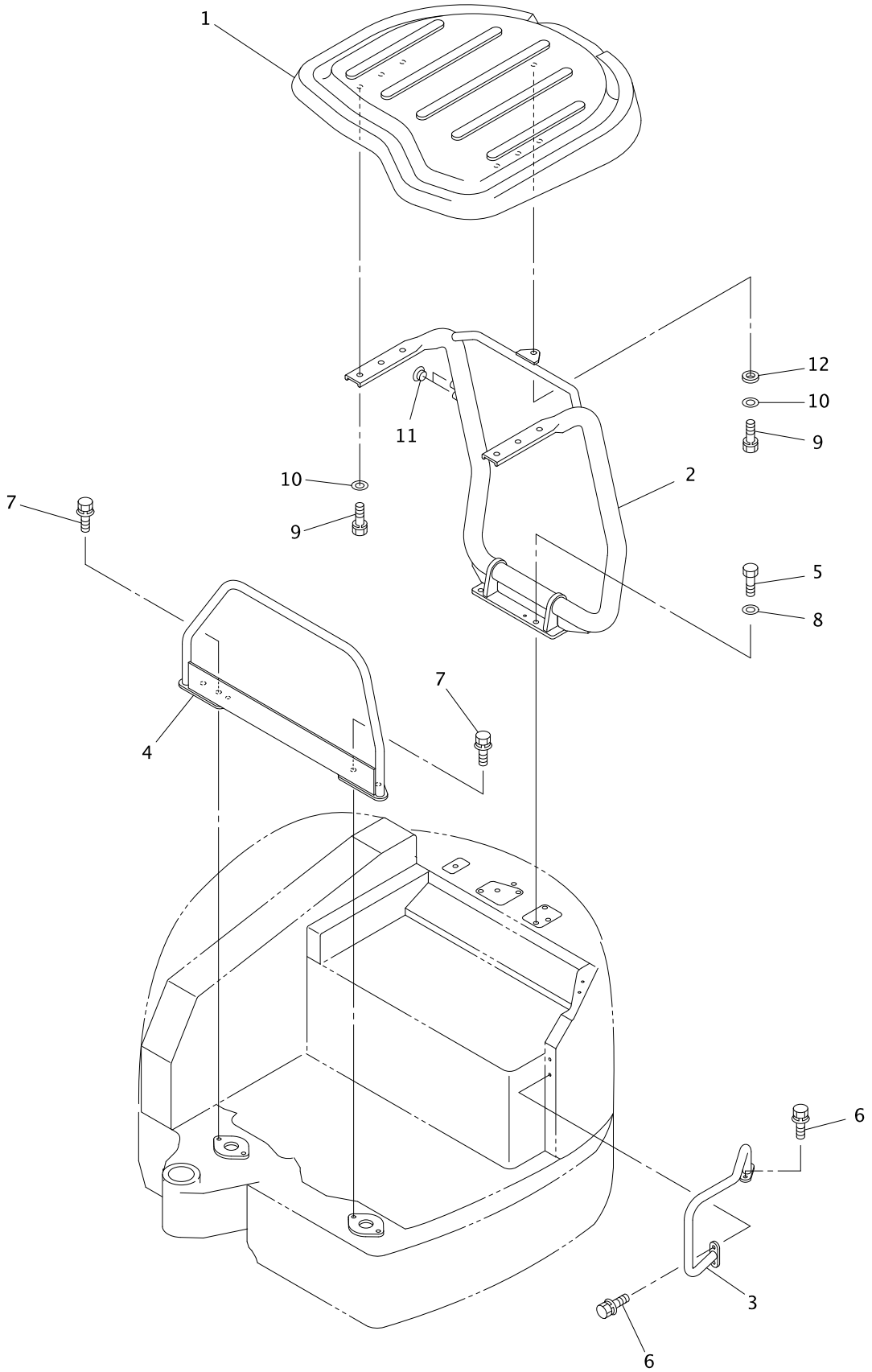

V4ALL-08040A-1

https://truckmanualshub.com/

KEY No.	SUP.	PART No.	DESCRIPTION	Q'TY	CHAN.	SERIAL No.	REMARKS
0	×	F355 197 00	Canopy Ass'y	1		WS010001-	
1		D448 005 00	*Canopy	1		WS010001-	
2		D206 873 00	*Frame	1		WS010001-	
3		D470 805 00	*Guard	1		WS010001-	
4		D470 700 00	*Guard	1		WS010001-	
5		0555 160 50	*Bolt, Treatment	4		WS010001-	M16X50
6		0439 100 25	*Bolt, Treatment (W/L.W, F.W)	4		WS010001-	M10X25 P=1.25
7		0518 120 40	*Bolt, Treatment (W/L.W, F.W)	4		WS010001-	M12X40 P=1.25
8		0595 160 00	*Washer, Treatment	4		WS010001-	M16
9		0519 080 25	*Bolt, Treatment (W/L.W)	7		WS010001-	M8X25
10		4006 119 01	*Washer	7		WS010001-	M8
11		0690 201 08	*Plug	2		WS010001-	M10
12		4006 386 00	*Washer, Rubber	1		WS010001-	

https://truckmanualshub.com/

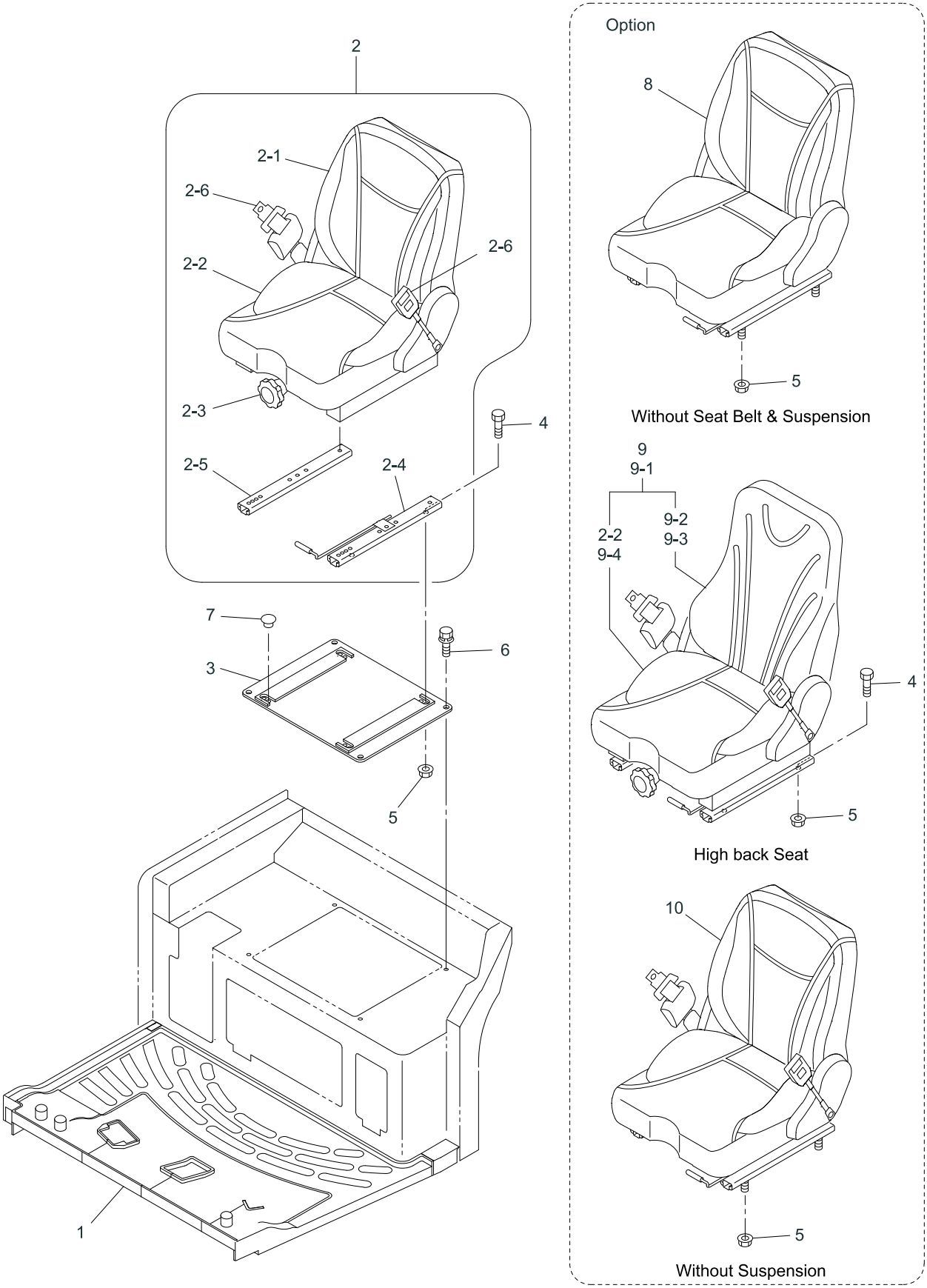

V4ALL-080500-1

https://truckmanualshub.com/

KEY No.	SUP.	PART No.	DESCRIPTION	Q'TY	CHAN.	SERIAL No.	REMARKS
0	×	F355 184 00	Seat Ass'y, Operator (W/Suspension)	1		WS010001-	
0-1	×	F355 183 00	Seat Ass'y, Operator	1		WS010001-	
0-2	×	F355 185 00	Seat Ass'y, Operator	1		WS010001-	
0-3	×	F355 196 00	Seat Ass'y, Operator	1		WS010001-	
0-3	×	F353 206 00	Mat Ass'y	1		WS010001-	
1		D581 191 00	*Mat (For Canopy)	1		WS010001-	STD
1-1		D581 203 00	*Mat (For Canopy, Pedal)	1		WS010001-	
1-2		D581 204 00	*Mat (For Cabin)	1		WS010001-	
1-3		D581 205 00	*Mat (For Cabin, Pedal)	1		WS010001-	
2		0655 563 UA	*Seat, Operator (W/Suspension)	1		WS010001-	W/Seat Belt
2-1		0655 563 01	**Seat Ass'y, Back	1		WS010001-	
2-2		0655 563 02	**Seat Ass'y, Cushion	1		WS010001-	
2-3		0655 563 03	**Suspension Ass'y	1		WS010001-	
2-4		0655 563 04	**Rail Ass'y, Slid (L.H)	1		WS010001-	
2-5		0655 563 05	**Rail Ass'y, Slid (R.H)	1		WS010001-	
2-6		0655 563 10	**Belt Ass'y, Seat	1		WS010001-	
3		D419 344 00	*BRACKET	1		WS010001-	
4		0550 080 20	*Bolt, Hex.	4		WS010001-	M8X20
5		0521 080 00	*Nut, Hex. (W/F.W)	4		WS010001-	M8
6		0439 100 20	*Bolt, Treatment (W/L.W, F.W)	4		WS010001-	M10X20 P=1.25
7		0690 201 09	*Plug	4		WS010001-	
8		0655 567 UA	*Seat, Operator (W/O Seat Belt)	1		WS010001-	
9		0655 568 UA	*Seat, Operator (High Back Seat)	1		WS010001-	Leather
9-1		0655 569 UA	*Seat, Operator (High Back Seat)	1		WS010001-	Fabric
9-2		0655 568 01	**Seat Ass'y, Back	1		WS010001-	Leather
9-3		0655 569 01	**Seat Ass'y, Back	1		WS010001-	Fabric
9-4		0655 569 02	**Seat Ass'y, Cushion	1		WS010001-	Fabric
10		0655 564 UA	*Seat, Operator (Leather)	1		WS010001-	W/O Suspension

https://truckmanualshub.com/

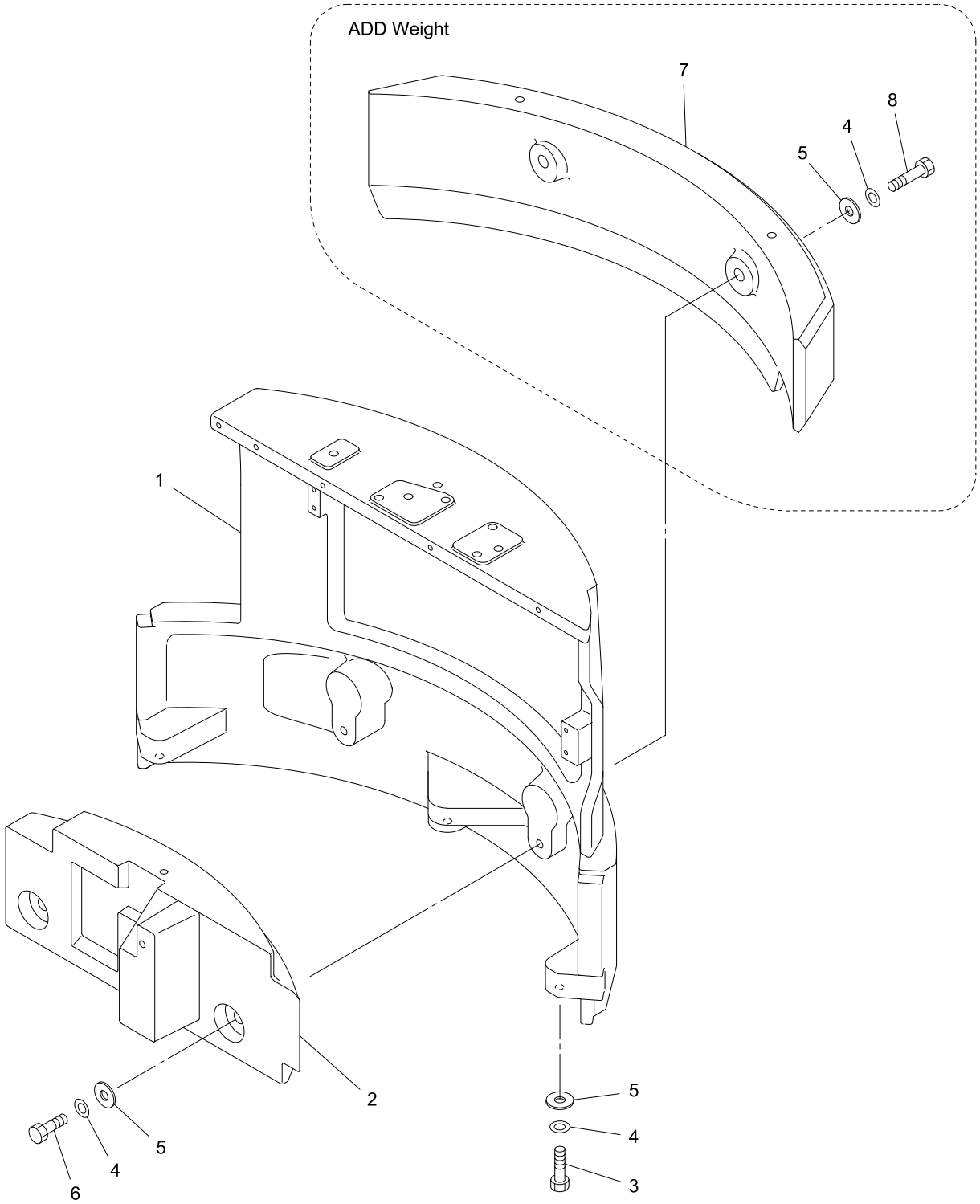

30V4-080600-1

https://truckmanualshub.com/

KEY No.	SUP.	PART No.	DESCRIPTION	Q'TY	CHAN.	SERIAL No.	REMARKS
0	×	F373 216 00	Weight Ass'y, Counter	1		WS010001-	
1		D206 826 00	*Weight, Counter	1		WS010001-	
2		D206 829 00	*Weight, Counter	1		WS010001-	
3		0555 160 70	*Bolt, Treatment	3		WS010001-	M16X70
4		0595 160 00	*Washer, Treatment	7		WS010001-	M16
5		D006 038 00	*Washer	7		WS010001-	
6		0555 160 65	*Bolt, Treatment	2		WS010001-	M16X65
7		D206 830 00	*Weight, Counter	1		WS010001-	
8		0555 161 00	*Bolt, Treatment	2		WS010001-	M16X100

https://truckmanualshub.com/

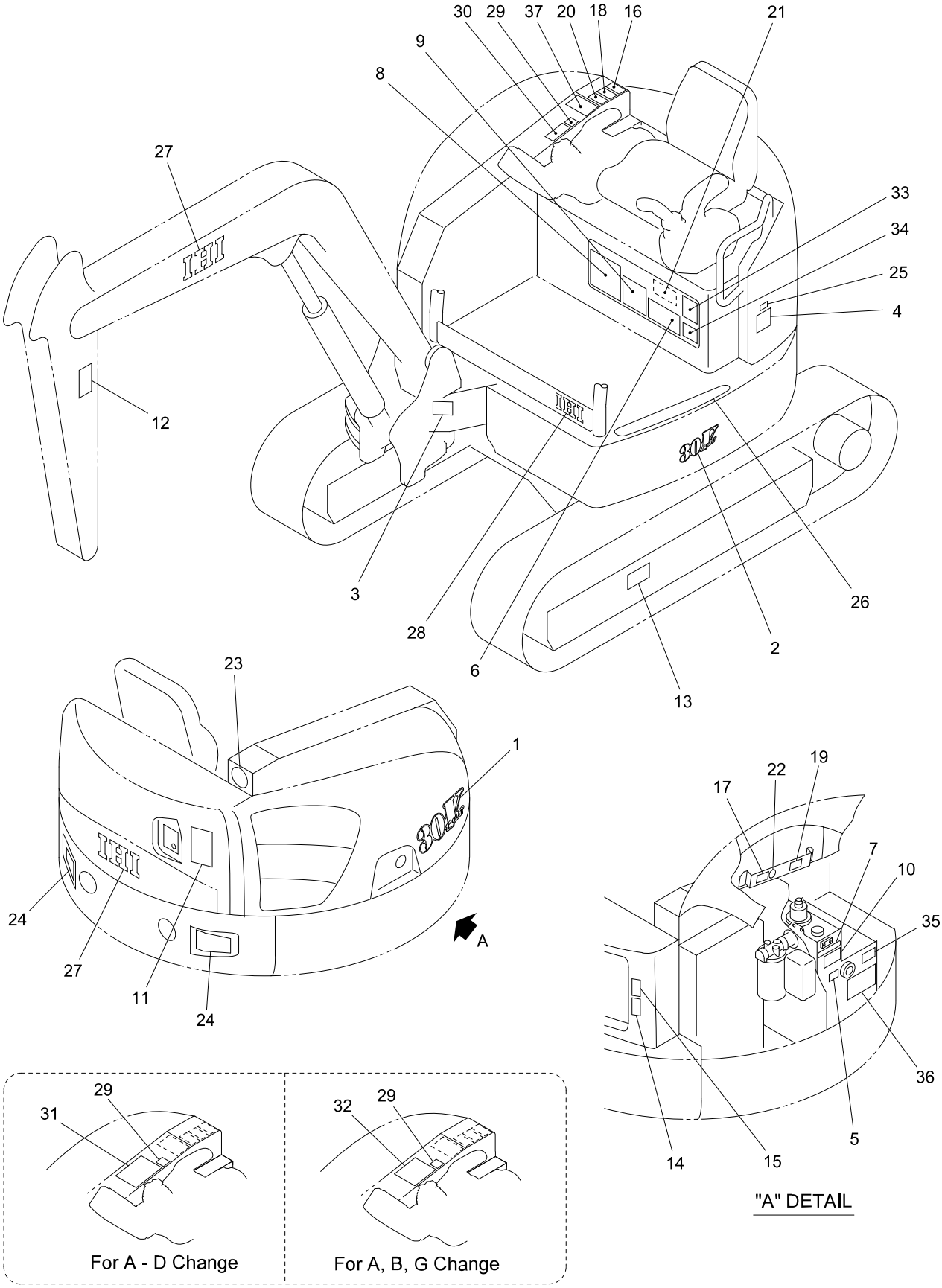

30V4-080700-1

https://truckmanualshub.com/

KEY No.	SUP.	PART No.	DESCRIPTION	Q'TY	CHAN.	SERIAL No.	REMARKS
0	×	F377 841 00	Decal Ass'y	1		WS010001-	
0-1	×	F377 854 00	Decal Ass'y	1		WS010001-	
0-2	×	F377 856 00	Decal Ass'y	1		WS010001-	
1		D408 405 00	*Decal (Model)	1		WS010001-	
2		D408 414 00	*Decal (Model)	1		WS010001-	
3	×	D405 094 00	*Decal (Serial No.)	1		WS010001-	
3-1		0497 035 00	*Screw, Drive	4		WS010001-	d=3
4		D408 324 00	*Decal (Oil)	1		WS010001-	
5		D406 490 00	*Decal (Oil Check)	1		WS010001-	
6		D408 313 00	*Decal (Lub. Chart)	1		WS010001-	
7		4447 479 00	*Decal (Oil)	1		WS010001-	
8		D407 877 00	*Decal (Engine Daily Check)	1		WS010001-	
9		D406 597 00	*Decal (Safety Works)	1		WS010001-	
10		D408 328 00	*Decal (Tank Decompression)	1		WS010001-	
11		D405 450 00	*Decal (Safety Swing)	1		WS010001-	
12		D405 454 00	*Decal (Caution)	2		WS010001-	
13		D405 455 00	*Decal (Caution)	2		WS010001-	
14		D405 424 00	*Decal (Caution)	1		WS010001-	
15		D405 452 00	*Decal (Caution)	1		WS010001-	
16		D405 332 00	*Decal (Caution)	1		WS010001-	
17		D405 462 00	*Decal (Caution)	1		WS010001-	
18		D405 451 00	*Decal (Caution)	1		WS010001-	
19		D405 463 00	*Decal (Caution)	1		WS010001-	
20		D405 449 00	*Decal (Caution)	1		WS010001-	
21		D405 373 00	*Decal (Caution)	1		WS010001-	
22		4407 035 00	*Decal (Anti-Freezing Solution)	1		WS010001-	
23		D406 631 00	*Decal (Environment)	1		WS010001-	
24		D408 371 00	*Decal (Reflector)	2		WS010001-	
25		D407 943 00	*Decal (EPA Regulation)	1		WS010001-	
26		D408 370 00	*Plate, Nonslip	1		WS010001-	
27		D408 402 00	*Decal (IHI)	3		WS010001-	
28		D408 403 00	*Decal (IHI)	1		WS010001-	
29		D406 602 00	*Decal (Blade, Pedal)	1		WS010001-	
30		D406 603 00	*Decal (Control A)	1		WS010001-	
30-1		D406 604 00	*Decal (Control B)	1		WS010001-	
30-2		D406 605 00	*Decal (Control C)	1		WS010001-	
30-3		D406 606 00	*Decal (Control D)	1		WS010001-	
30-4		D406 608 00	*Decal (Control G)	1		WS010001-	
31		D406 609 00	*Decal (Control A-D)	1		WS010001-	
32		D406 610 00	*Decal (Control A, B, G)	1		WS010001-	
33		D408 315 00	*Decal (Specification)	1		WS010001-	
34		D408 225 00	*Decal (Bucket Specification)	1		WS010001-	
35		4447 874 00	*Decal (Spare Piping Change)	1		WS010001-	
36		4447 653 00	*Decal (Breaker Cation)	1		WS010001-	
37		D408 354 00	*Decal (Spare Pedal)	1		WS010001-	

https://truckmanualshub.com/

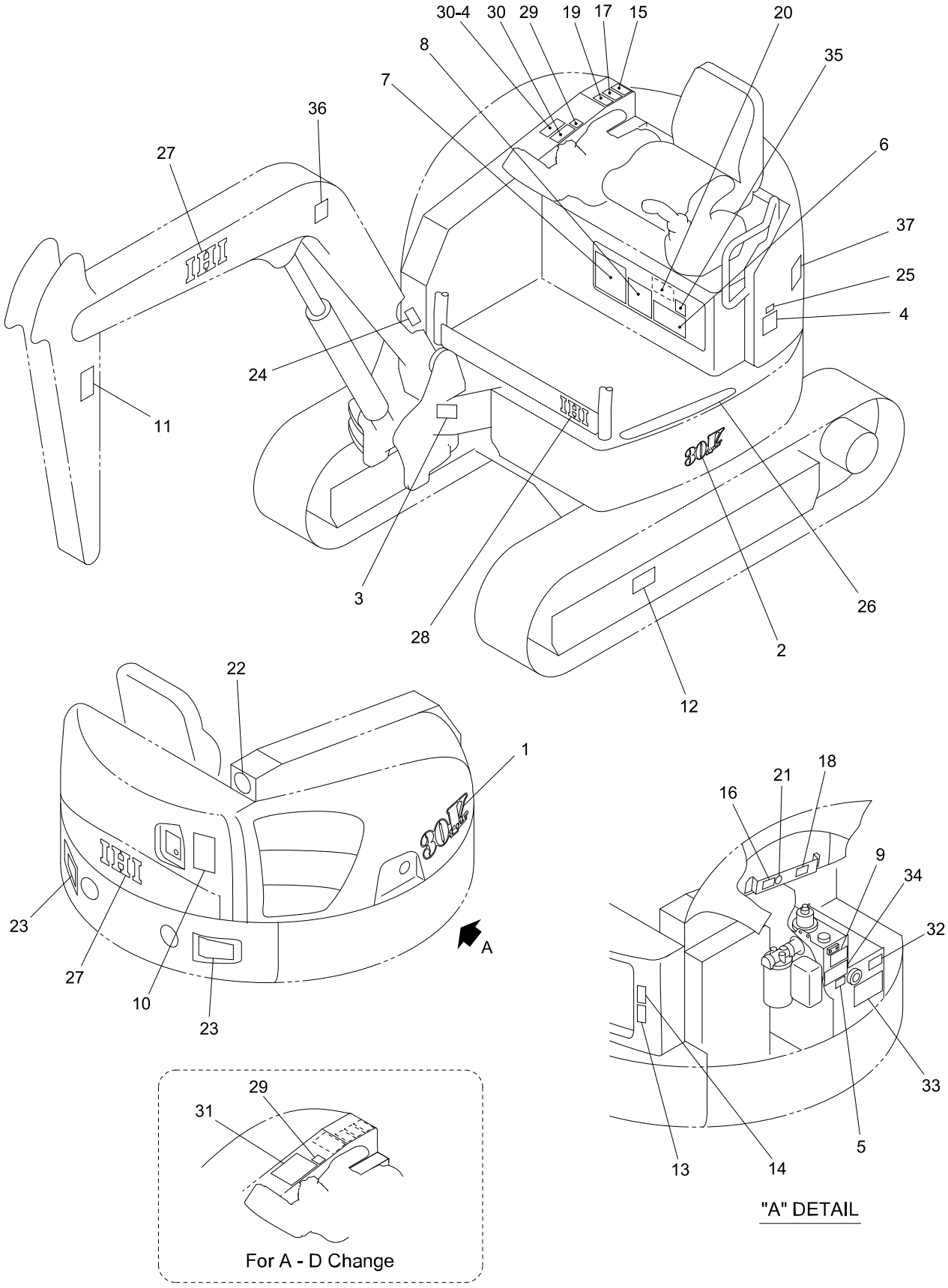

30V4-08070A-1

https://truckmanualshub.com/

KEY No.	SUP.	PART No.	DESCRIPTION	Q'TY	CHAN.	SERIAL No.	REMARKS
0	×	F377 841 00	Decal Ass'y	1		WS010001-	
0-1	×	F377 854 00	Decal Ass'y	1		WS010001-	
1		D408 405 00	*Decal (Model)	1		WS010001-	
2		D408 414 00	*Decal (Model)	1		WS010001-	
3	×	D405 094 00	*Decal (Serial No.)	1		WS010001-	
3-1	×	D405 091 00	*Decal (Serial No.) (CE)	1		WS010001-	
3-2		0497 035 00	*Screw, Drive	4		WS010001-	d=3
4		4407 974 00	*Decal (Oil)	1		WS010001-	
5		D406 504 00	*Decal (Oil Check)	1		WS010001-	
6		D408 355 00	*Decal (Lub. Chart)	1		WS010001-	
7		D407 887 00	*Decal (Engine Daily Check)	1		WS010001-	
8		4406 458 00	*Decal (Safety Works)	1		WS010001-	
9		D408 424 00	*Decal (Tank Decompression)	1		WS010001-	
10		D405 507 00	*Decal (Safety Swing)	1		WS010001-	
11		D405 511 00	*Decal (Caution)	2		WS010001-	
12		D405 505 00	*Decal (Caution)	2		WS010001-	
13		D405 366 00	*Decal (Caution)	1		WS010001-	
14		D405 509 00	*Decal (Caution)	1		WS010001-	
15		D405 359 00	*Decal (Caution)	1		WS010001-	
16		D405 503 00	*Decal (Caution)	1		WS010001-	
17		D405 508 00	*Decal (Caution)	1		WS010001-	
18		D405 504 00	*Decal (Caution)	1		WS010001-	
19		D405 506 00	*Decal (Caution)	1		WS010001-	
20		D405 323 00	*Decal (Caution)	1		WS010001-	
21		4407 035 00	*Decal (Anti-Freezing Solution)	1		WS010001-	
22		D406 783 00	*Decal (Environment)	1		WS010001-	
23		D408 371 00	*Decal (Reflector)	2		WS010001-	
24	×	D405 097 00	*Decal (New Machine)	1		WS010001-	
25		D407 943 00	*Decal (EPA Regulation)	1		WS010001-	
26		D408 370 00	*Plate, Nonslip	1		WS010001-	
27		D408 402 00	*Decal (IHI)	3		WS010001-	
28		D408 403 00	*Decal (IHI)	1		WS010001-	
29		D406 602 00	*Decal (Blade, Pedal)	1		WS010001-	
30		D406 603 00	*Decal (Control A)	1		WS010001-	
30-1		D406 604 00	*Decal (Control B)	1		WS010001-	
30-2		D406 605 00	*Decal (Control C)	1		WS010001-	
30-3		D406 606 00	*Decal (Control D)	1		WS010001-	
30-4		D406 607 00	*Decal (Control F)	1		WS010001-	
31		D406 609 00	*Decal (Control A-D)	1		WS010001-	
32		4448 651 00	*Decal (Spare Piping Change)	1		WS010001-	
33		4447 857 00	*Decal (Breaker Cation)	1		WS010001-	
34		D408 322 00	*Decal (Boom Lowering)(CE)	1		WS010001-	
35		4448 474 00	*Decal (Transport Fix)(CE)	1		WS010001-	
36		D408 340 00	*Decal (Lifting Procedures)(CE)	1		WS010001-	
37		D406 154 00	*Decal (Noise 94)(CE)	1		WS010001-	

https://truckmanualshub.com/

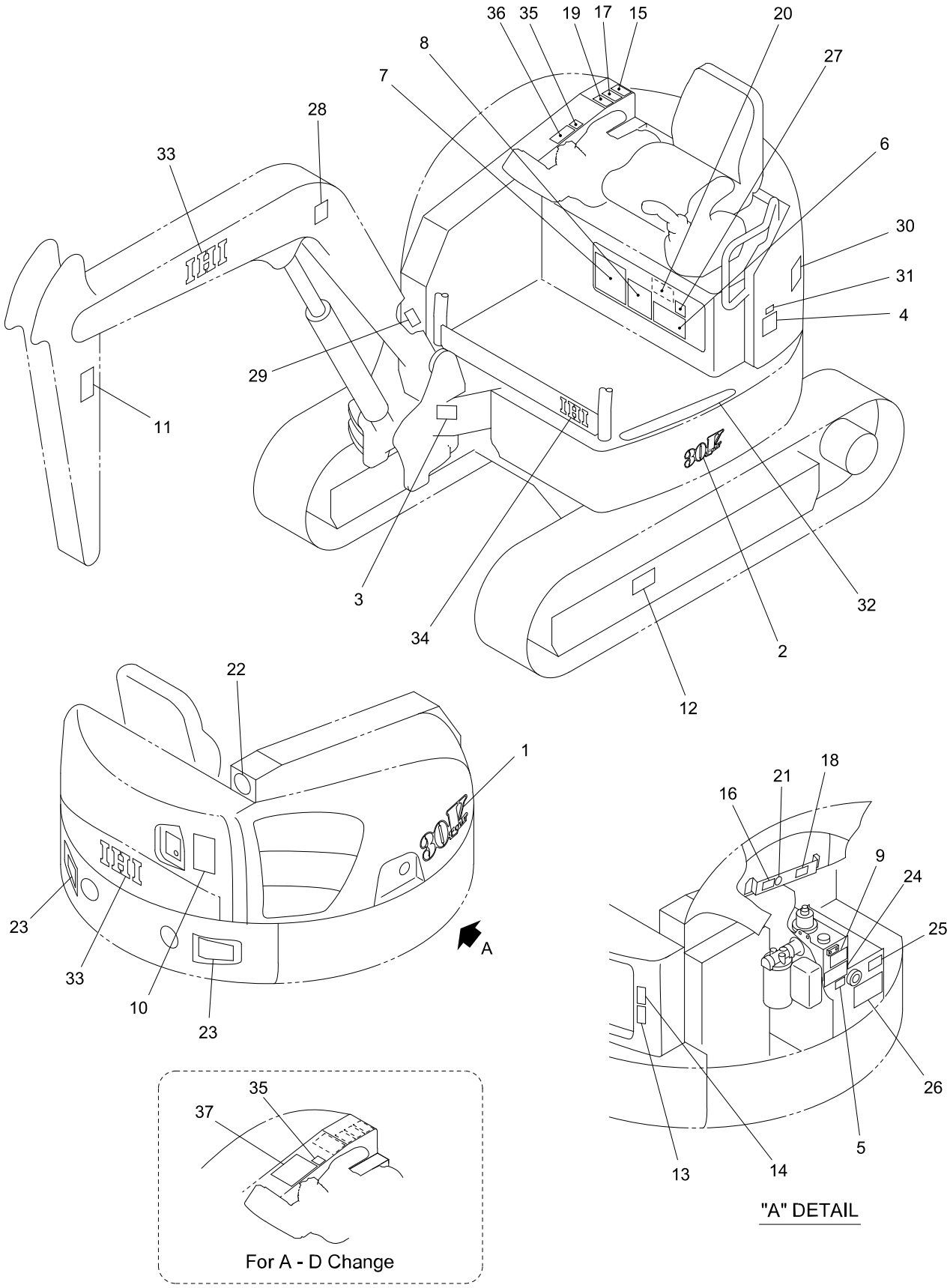

30V4-08070B-1

https://truckmanualshub.com/

KEY No.	SUP.	PART No.	DESCRIPTION	Q'TY	CHAN.	SERIAL No.	REMARKS
0	×	F377 841 00	Decal Ass'y	1		WS010001-	
0-1	×	F377 854 00	Decal Ass'y	1		WS010001-	
1		D408 405 00	*Decal (Model)	1		WS010001-	
2		D408 414 00	*Decal (Model)	1		WS010001-	
3	×	D405 091 00	*Decal (Serial No.)	1		WS010001-	
3-1		0497 035 00	*Screw, Drive	4		WS010001-	d=3
4		4405 457 00	*Decal (Oil)	1		WS010001-	
5		D406 558 00	*Decal (Oil Check)	1		WS010001-	
6		D408 360 00	*Decal (Lub. Chart)	1		WS010001-	
7		D407 891 00	*Decal (Engine Daily Check)	1		WS010001-	
8		4448 584 00	*Decal (Safety Works)	1		WS010001-	
9		D408 429 00	*Decal (Tank Decompression)	1		WS010001-	
10		D405 507 00	*Decal (Safety Swing)	1		WS010001-	
11		D405 511 00	*Decal (Caution)	2		WS010001-	
12		D405 505 00	*Decal (Caution)	2		WS010001-	
13		D405 366 00	*Decal (Caution)	1		WS010001-	
14		D405 509 00	*Decal (Caution)	1		WS010001-	
15		D405 359 00	*Decal (Caution)	1		WS010001-	
16		D405 503 00	*Decal (Caution)	1		WS010001-	
17		D405 508 00	*Decal (Caution)	1		WS010001-	
18		D405 504 00	*Decal (Caution)	1		WS010001-	
19		D405 506 00	*Decal (Caution)	1		WS010001-	
20		D405 559 00	*Decal (Caution)	1		WS010001-	
21		4448 573 00	*Decal (Anti-Freezing Solution)	1		WS010001-	
22		D406 783 00	*Decal (Environment)	1		WS010001-	
23		D408 371 00	*Decal (Reflector)	2		WS010001-	
24		D408 338 00	*Decal (Boom Lowering)	1		WS010001-	
25		4449 003 00	*Decal (Spare Piping Change)	1		WS010001-	
26		4448 587 00	*Decal (Breaker Cation)	1		WS010001-	
27		4448 562 00	*Decal (Transport Fix)	1		WS010001-	
28		D408 345 00	*Decal (Lifting Procedures)	1		WS010001-	
29	×	D405 097 00	*Decal (New Machine)	1		WS010001-	
30		D406 154 00	*Decal (Noise 94)	1		WS010001-	
31		D407 943 00	*Decal (EPA Regulation)	1		WS010001-	
32		D408 370 00	*Plate, Nonslip	1		WS010001-	
33		D408 402 00	*Decal (IHI)	3		WS010001-	
34		D408 403 00	*Decal (IHI)	1		WS010001-	
35		D406 602 00	*Decal (Blade, Pedal)	1		WS010001-	
36		D406 603 00	*Decal (Control A)	1		WS010001-	
36-1		D406 604 00	*Decal (Control B)	1		WS010001-	
36-2		D406 605 00	*Decal (Control C)	1		WS010001-	
36-3		D406 606 00	*Decal (Control D)	1		WS010001-	
37		D406 609 00	*Decal (Control A-D)	1		WS010001-	

https://truckmanualshub.com/

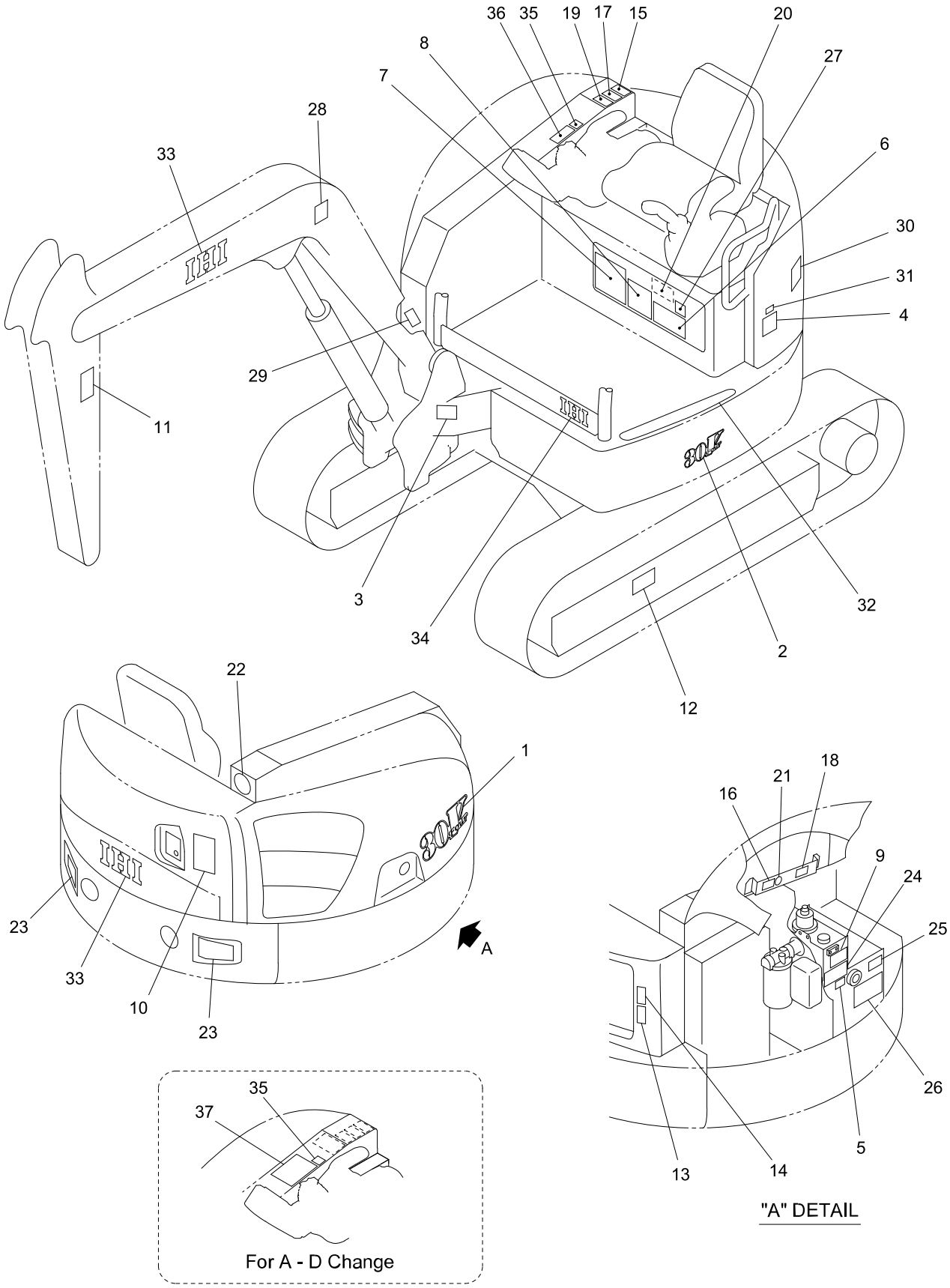

30V4-08070B-1

https://truckmanualshub.com/

KEY No.	SUP.	PART No.	DESCRIPTION	Q'TY	CHAN.	SERIAL No.	REMARKS
0	×	F377 841 00	Decal Ass'y	1		WS010001-	
0-1	×	F377 854 00	Decal Ass'y	1		WS010001-	
1		D408 405 00	*Decal (Model)	1		WS010001-	
2		D408 414 00	*Decal (Model)	1		WS010001-	
3	×	D405 091 00	*Decal (Serial No.)	1		WS010001-	
3-1		0497 035 00	*Screw, Drive	4		WS010001-	d=3
4		4407 974 00	*Decal (Oil)	1		WS010001-	
5		D406 554 00	*Decal (Oil Check)	1		WS010001-	
6		D408 356 00	*Decal (Lub. Chart)	1		WS010001-	
7		D407 889 00	*Decal (Engine Daily Check)	1		WS010001-	
8		4406 714 00	*Decal (Safety Works)	1		WS010001-	
9		D408 425 00	*Decal (Tank Decompression)	1		WS010001-	
10		D405 507 00	*Decal (Safety Swing)	1		WS010001-	
11		D405 511 00	*Decal (Caution)	2		WS010001-	
12		D405 505 00	*Decal (Caution)	2		WS010001-	
13		D405 366 00	*Decal (Caution)	1		WS010001-	
14		D405 509 00	*Decal (Caution)	1		WS010001-	
15		D405 359 00	*Decal (Caution)	1		WS010001-	
16		D405 503 00	*Decal (Caution)	1		WS010001-	
17		D405 508 00	*Decal (Caution)	1		WS010001-	
18		D405 504 00	*Decal (Caution)	1		WS010001-	
19		D405 506 00	*Decal (Caution)	1		WS010001-	
20		D405 575 00	*Decal (Caution)	1		WS010001-	
20-1		D408 433 00	*Decal (Capacities Table)	1		WS010001-	
21		4406 710 00	*Decal (Anti-Freezing Solution)	1		WS010001-	
22		D406 783 00	*Decal (Environment)	1		WS010001-	
23		D408 371 00	*Decal (Reflector)	2		WS010001-	
24		D408 334 00	*Decal (Boom Lowering)	1		WS010001-	
25		4448 687 00	*Decal (Spare Piping Change)	1		WS010001-	
26		4447 996 00	*Decal (Breaker Cation)	1		WS010001-	
27		4448 542 00	*Decal (Transport Fix)	1		WS010001-	
28		D408 341 00	*Decal (Lifting Procedures)	1		WS010001-	
29	×	D405 097 00	*Decal (New Machine)	1		WS010001-	
30		D406 154 00	*Decal (Noise 94)	1		WS010001-	
31		D407 943 00	*Decal (EPA Regulation)	1		WS010001-	
32		D408 370 00	*Plate, Nonslip	1		WS010001-	
33		D408 402 00	*Decal (IHI)	3		WS010001-	
34		D408 403 00	*Decal (IHI)	1		WS010001-	
35		D406 602 00	*Decal (Blade, Pedal)	1		WS010001-	
36		D406 603 00	*Decal (Control A)	1		WS010001-	
36-1		D406 604 00	*Decal (Control B)	1		WS010001-	
36-2		D406 605 00	*Decal (Control C)	1		WS010001-	
36-3		D406 606 00	*Decal (Control D)	1		WS010001-	
37		D406 609 00	*Decal (Control A-D)	1		WS010001-	

https://truckmanualshub.com/

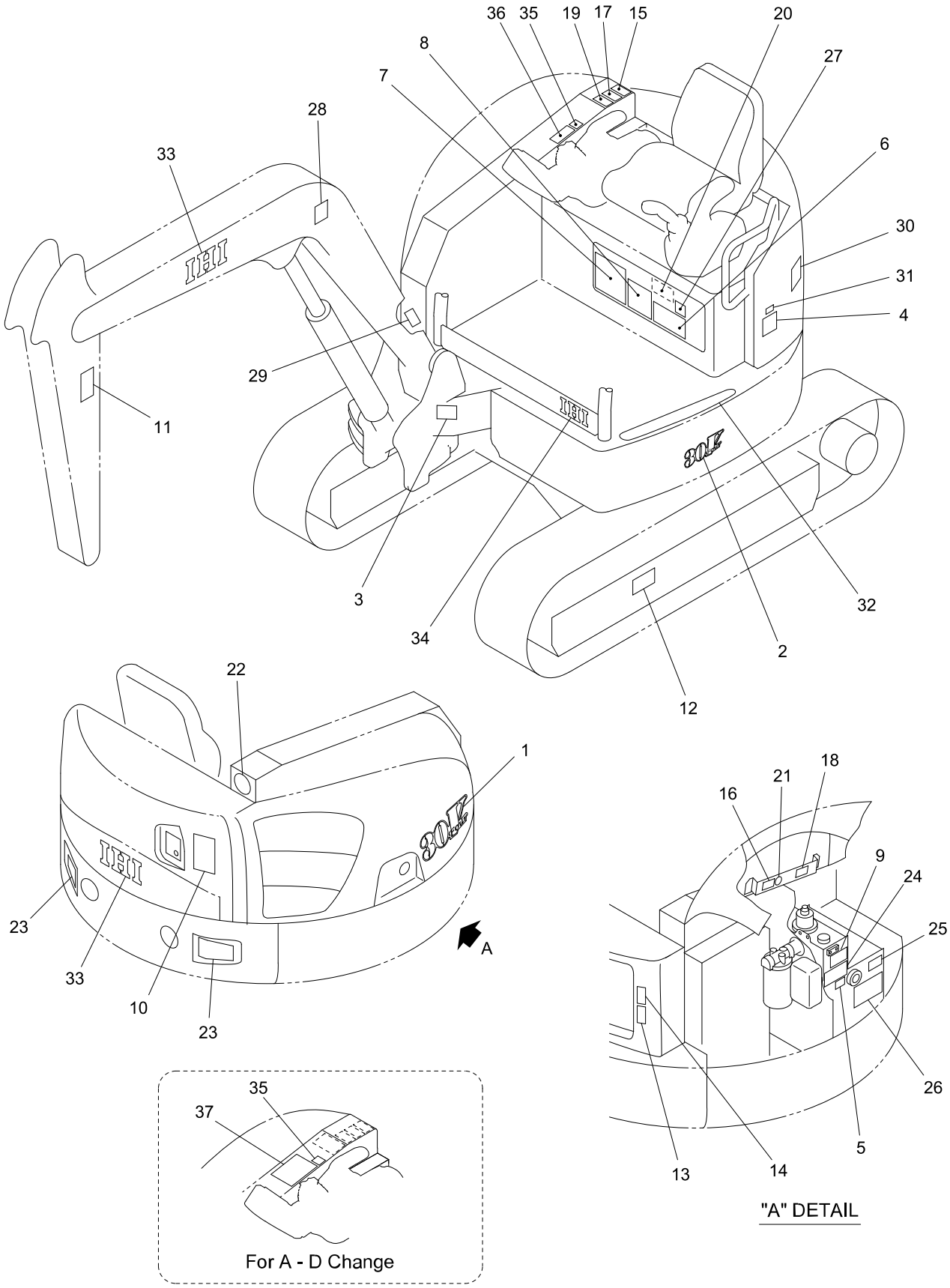

30V4-08070B-1

https://truckmanualshub.com/

KEY No.	SUP.	PART No.	DESCRIPTION	Q'TY	CHAN.	SERIAL No.	REMARKS
0	×	F377 841 00	Decal Ass'y	1		WS010001-	
0-1	×	F377 854 00	Decal Ass'y	1		WS010001-	
1		D408 405 00	*Decal (Model)	1		WS010001-	
2		D408 414 00	*Decal (Model)	1		WS010001-	
3	×	D405 091 00	*Decal (Serial No.)	1		WS010001-	
3-1		0497 035 00	*Screw, Drive	4		WS010001-	d=3
4		4405 457 00	*Decal (Oil)	1		WS010001-	
5		D406 550 00	*Decal (Oil Check)	1		WS010001-	
6		D408 357 00	*Decal (Lub. Chart)	1		WS010001-	
7		D407 917 00	*Decal (Engine Daily Check)	1		WS010001-	
8		D406 795 00	*Decal (Safety Works)	1		WS010001-	
9		D408 426 00	*Decal (Tank Decompression)	1		WS010001-	
10		D405 507 00	*Decal (Safety Swing)	1		WS010001-	
11		D405 511 00	*Decal (Caution)	2		WS010001-	
12		D405 505 00	*Decal (Caution)	2		WS010001-	
13		D405 366 00	*Decal (Caution)	1		WS010001-	
14		D405 509 00	*Decal (Caution)	1		WS010001-	
15		D405 359 00	*Decal (Caution)	1		WS010001-	
16		D405 503 00	*Decal (Caution)	1		WS010001-	
17		D405 508 00	*Decal (Caution)	1		WS010001-	
18		D405 504 00	*Decal (Caution)	1		WS010001-	
19		D405 506 00	*Decal (Caution)	1		WS010001-	
20		D405 571 00	*Decal (Caution)	1		WS010001-	
21		4405 456 00	*Decal (Anti-Freezing Solution)	1		WS010001-	
22		D406 783 00	*Decal (Environment)	1		WS010001-	
23		D408 371 00	*Decal (Reflector)	2		WS010001-	
24		D408 335 00	*Decal (Boom Lowering)	1		WS010001-	
25		4448 944 00	*Decal (Spare Piping Change)	1		WS010001-	
26		4447 925 00	*Decal (Breaker Cation)	1		WS010001-	
27		4448 511 00	*Decal (Transport Fix)	1		WS010001-	
28		D408 342 00	*Decal (Lifting Procedures)	1		WS010001-	
29	×	D405 097 00	*Decal (New Machine)	1		WS010001-	
30		D406 154 00	*Decal (Noise 94)	1		WS010001-	
31		D407 943 00	*Decal (EPA Regulation)	1		WS010001-	
32		D408 370 00	*Plate, Nonslip	1		WS010001-	
33		D408 402 00	*Decal (IHI)	3		WS010001-	
34		D408 403 00	*Decal (IHI)	1		WS010001-	
35		D406 602 00	*Decal (Blade, Pedal)	1		WS010001-	
36		D406 603 00	*Decal (Control A)	1		WS010001-	
36-1		D406 604 00	*Decal (Control B)	1		WS010001-	
36-2		D406 605 00	*Decal (Control C)	1		WS010001-	
36-3		D406 606 00	*Decal (Control D)	1		WS010001-	
37		D406 609 00	*Decal (Control A-D)	1		WS010001-	

https://truckmanualshub.com/

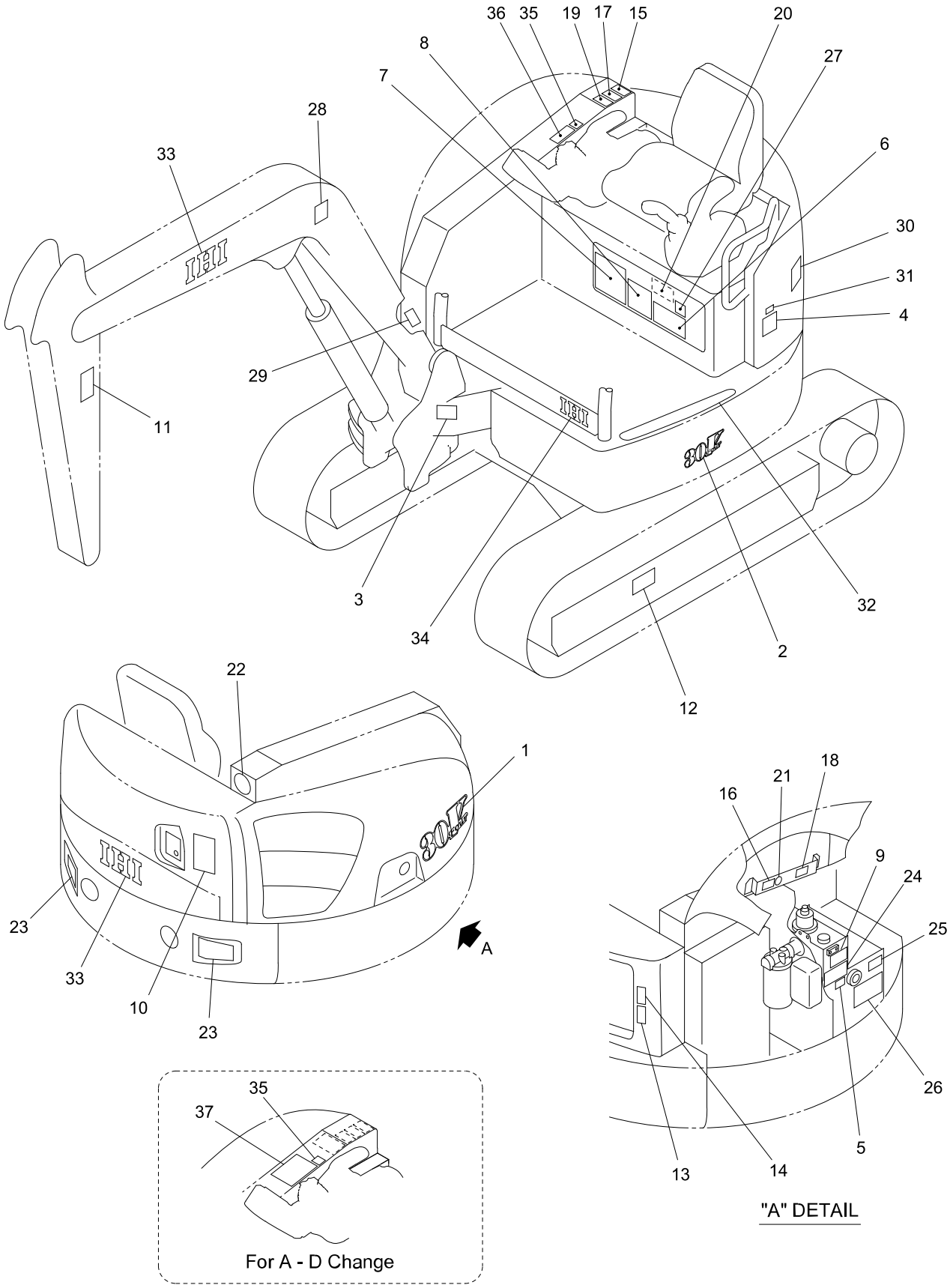

30V4-08070B-1

https://truckmanualshub.com/

KEY No.	SUP.	PART No.	DESCRIPTION	Q'TY	CHAN.	SERIAL No.	REMARKS
0	×	F377 841 00	Decal Ass'y	1		WS010001-	
0-1	×	F377 854 00	Decal Ass'y	1		WS010001-	
1		D408 405 00	*Decal (Model)	1		WS010001-	
2		D408 414 00	*Decal (Model)	1		WS010001-	
3	×	D405 091 00	*Decal (Serial No.)	1		WS010001-	
3-1		0497 035 00	*Screw, Drive	4		WS010001-	d=3
4		4405 457 00	*Decal (Oil)	1		WS010001-	
5		D406 565 00	*Decal (Oil Check)	1		WS010001-	
6		D408 358 00	*Decal (Lub. Chart)	1		WS010001-	
7		D407 906 00	*Decal (Engine Daily Check)	1		WS010001-	
8		4447 882 00	*Decal (Safety Works)	1		WS010001-	
9		D408 427 00	*Decal (Tank Decompression)	1		WS010001-	
10		D405 507 00	*Decal (Safety Swing)	1		WS010001-	
11		D405 511 00	*Decal (Caution)	2		WS010001-	
12		D405 505 00	*Decal (Caution)	2		WS010001-	
13		D405 366 00	*Decal (Caution)	1		WS010001-	
14		D405 509 00	*Decal (Caution)	1		WS010001-	
15		D405 359 00	*Decal (Caution)	1		WS010001-	
16		D405 503 00	*Decal (Caution)	1		WS010001-	
17		D405 508 00	*Decal (Caution)	1		WS010001-	
18		D405 504 00	*Decal (Caution)	1		WS010001-	
19		D405 506 00	*Decal (Caution)	1		WS010001-	
20		D405 587 00	*Decal (Caution)	1		WS010001-	
21		4447 229 00	*Decal (Anti-Freezing Solution)	1		WS010001-	
22		D406 783 00	*Decal (Environment)	1		WS010001-	
23		D408 371 00	*Decal (Reflector)	2		WS010001-	
24		D408 336 00	*Decal (Boom Lowering)	1		WS010001-	
25		D405 256 00	*Decal (Spare Piping Change)	1		WS010001-	
26		4448 350 00	*Decal (Breaker Cation)	1		WS010001-	
27		D405 059 00	*Decal (Transport Fix)	1		WS010001-	
28		D408 343 00	*Decal (Lifting Procedures)	1		WS010001-	
29	×	D405 097 00	*Decal (New Machine)	1		WS010001-	
30		D406 154 00	*Decal (Noise 94)	1		WS010001-	
31		D407 943 00	*Decal (EPA Regulation)	1		WS010001-	
32		D408 370 00	*Plate, Nonslip	1		WS010001-	
33		D408 402 00	*Decal (IHI)	3		WS010001-	
34		D408 403 00	*Decal (IHI)	1		WS010001-	
35		D406 602 00	*Decal (Blade, Pedal)	1		WS010001-	
36		D406 603 00	*Decal (Control A)	1		WS010001-	
36-1		D406 604 00	*Decal (Control B)	1		WS010001-	
36-2		D406 605 00	*Decal (Control C)	1		WS010001-	
36-3		D406 606 00	*Decal (Control D)	1		WS010001-	
37		D406 609 00	*Decal (Control A-D)	1		WS010001-	

https://truckmanualshub.com/

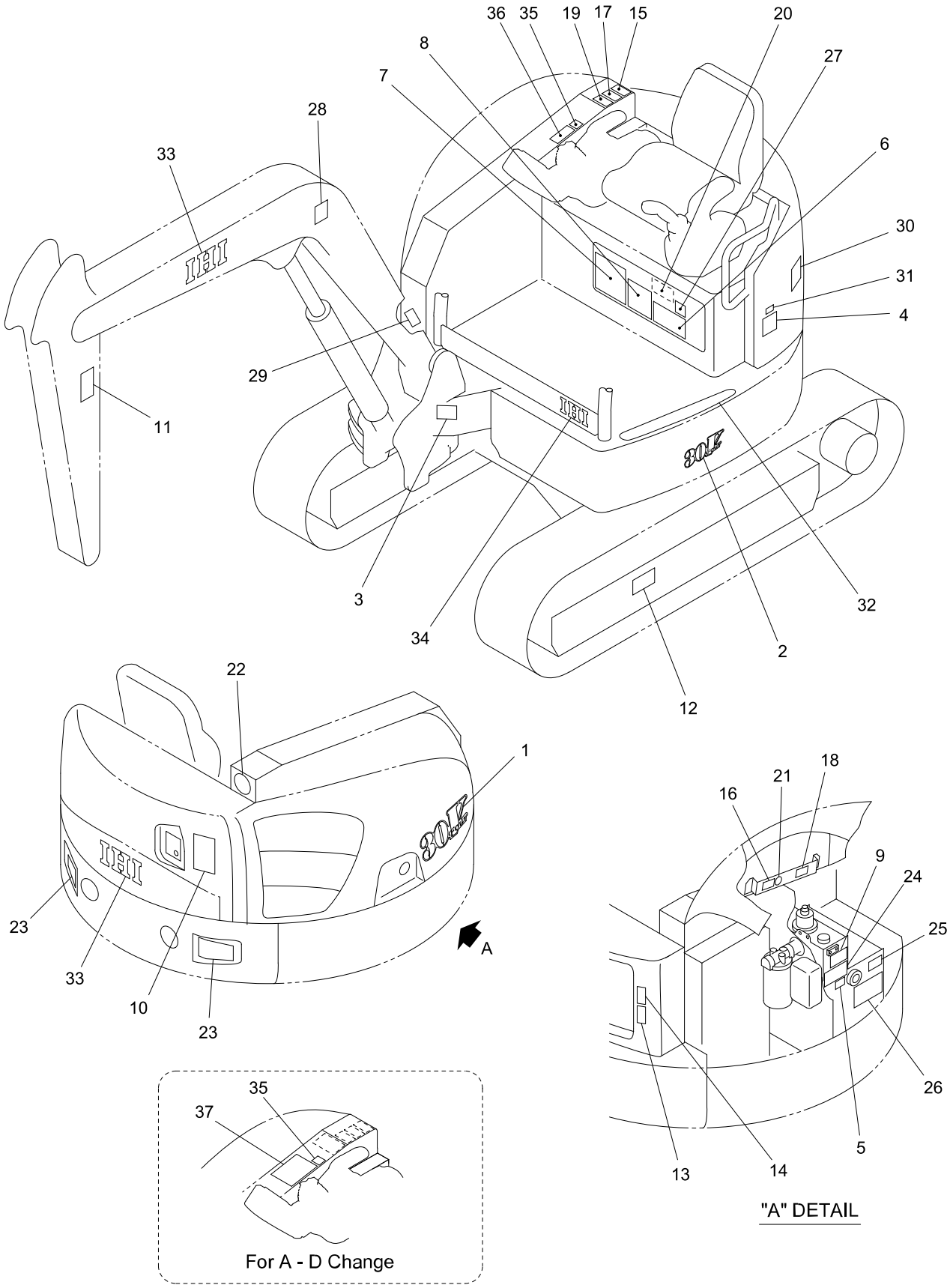

30V4-08070B-1

https://truckmanualshub.com/

KEY No.	SUP.	PART No.	DESCRIPTION	Q'TY	CHAN.	SERIAL No.	REMARKS
0	×	F377 841 00	Decal Ass'y	1		WS010001-	
0-1	×	F377 854 00	Decal Ass'y	1		WS010001-	
1		D408 405 00	*Decal (Model)	1		WS010001-	
2		D408 414 00	*Decal (Model)	1		WS010001-	
3	×	D405 091 00	*Decal (Serial No.)	1		WS010001-	
3-1		0497 035 00	*Screw, Drive	4		WS010001-	d=3
4		4405 457 00	*Decal (Oil)	1		WS010001-	
5		D406 562 00	*Decal (Oil Check)	1		WS010001-	
6		D408 359 00	*Decal (Lub. Chart)	1		WS010001-	
7		D407 912 00	*Decal (Engine Daily Check)	1		WS010001-	
8		4448 603 00	*Decal (Safety Works)	1		WS010001-	
9		D408 428 00	*Decal (Tank Decompression)	1		WS010001-	
10		D405 507 00	*Decal (Safety Swing)	1		WS010001-	
11		D405 511 00	*Decal (Caution)	2		WS010001-	
12		D405 505 00	*Decal (Caution)	2		WS010001-	
13		D405 366 00	*Decal (Caution)	1		WS010001-	
14		D405 509 00	*Decal (Caution)	1		WS010001-	
15		D405 359 00	*Decal (Caution)	1		WS010001-	
16		D405 503 00	*Decal (Caution)	1		WS010001-	
17		D405 508 00	*Decal (Caution)	1		WS010001-	
18		D405 504 00	*Decal (Caution)	1		WS010001-	
19		D405 506 00	*Decal (Caution)	1		WS010001-	
20		D405 594 00	*Decal (Caution)	1		WS010001-	
21		4448 598 00	*Decal (Anti-Freezing Solution)	1		WS010001-	
22		D406 783 00	*Decal (Environment)	1		WS010001-	
23		D408 371 00	*Decal (Reflector)	2		WS010001-	
24		D408 337 00	*Decal (Boom Lowering)	1		WS010001-	
25		4449 406 00	*Decal (Spare Piping Change)	1		WS010001-	
26		4448 607 00	*Decal (Breaker Cation)	1		WS010001-	
27		4448 619 00	*Decal (Transport Fix)	1		WS010001-	
28		D408 344 00	*Decal (Lifting Procedures)	1		WS010001-	
29	×	D405 097 00	*Decal (New Machine)	1		WS010001-	
30		D406 154 00	*Decal (Noise 94)	1		WS010001-	
31		D407 943 00	*Decal (EPA Regulation)	1		WS010001-	
32		D408 370 00	*Plate, Nonslip	1		WS010001-	
33		D408 402 00	*Decal (IHI)	3		WS010001-	
34		D408 403 00	*Decal (IHI)	1		WS010001-	
35		D406 602 00	*Decal (Blade, Pedal)	1		WS010001-	
36		D406 603 00	*Decal (Control A)	1		WS010001-	
36-1		D406 604 00	*Decal (Control B)	1		WS010001-	
36-2		D406 605 00	*Decal (Control C)	1		WS010001-	
36-3		D406 606 00	*Decal (Control D)	1		WS010001-	
37		D406 609 00	*Decal (Control A-D)	1		WS010001-	

https://truckmanualshub.com/

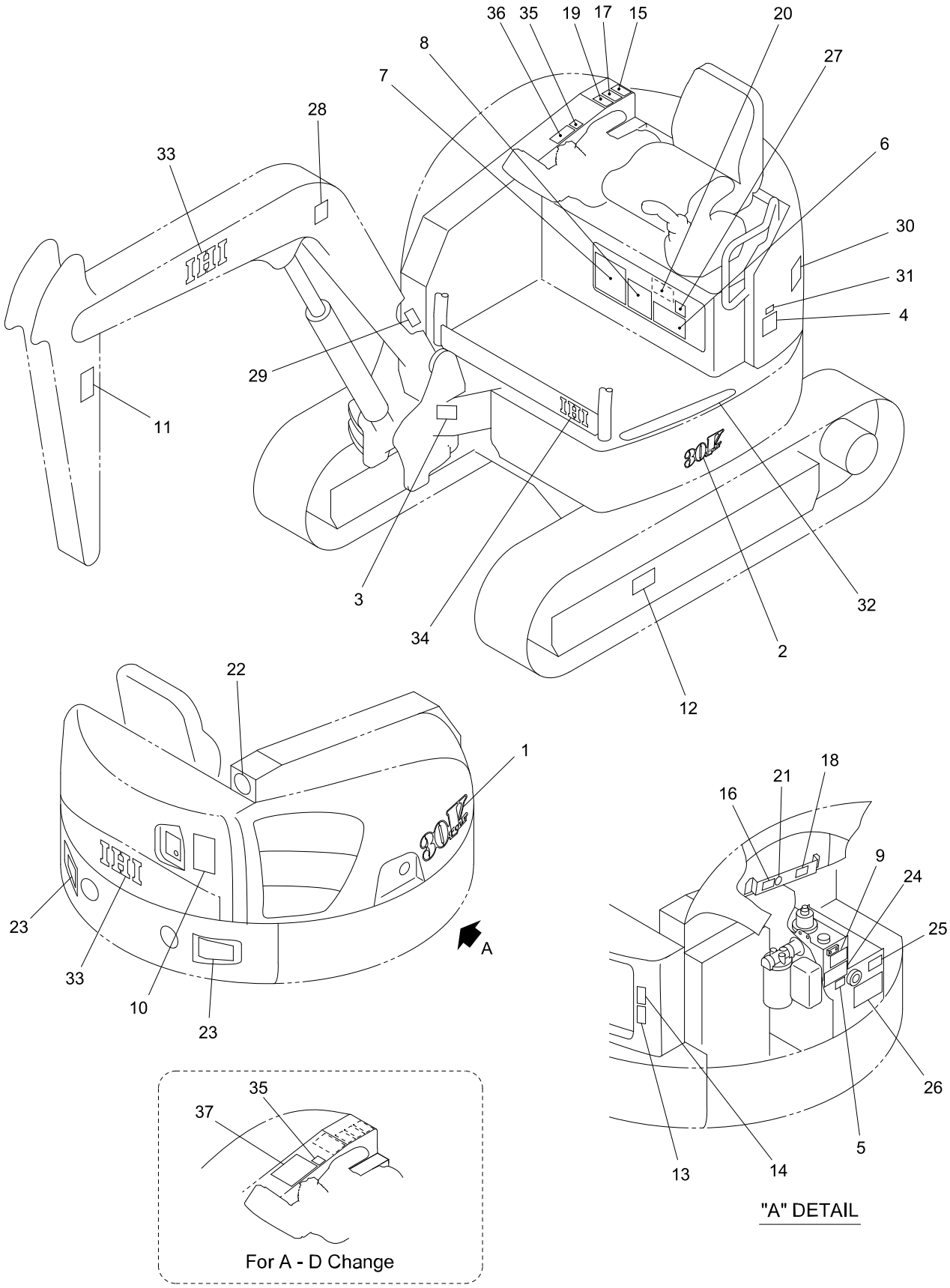

30V4-08070B-1

https://truckmanualshub.com/

KEY No.	SUP.	PART No.	DESCRIPTION	Q'TY	CHAN.	SERIAL No.	REMARKS
0	×	F377 841 00	Decal Ass'y	1		WS010001-	
0-1	×	F377 854 00	Decal Ass'y	1		WS010001-	
1		D408 405 00	*Decal (Model)	1		WS010001-	
2		D408 414 00	*Decal (Model)	1		WS010001-	
3	×	D405 091 00	*Decal (Serial No.)	1		WS010001-	
3-1		0497 035 00	*Screw, Drive	4		WS010001-	d=3
4		D406 000 00	*Decal (Oil)	1		WS010001-	
5		D406 811 00	*Decal (Oil Check)	1		WS010001-	
6		D408 361 00	*Decal (Lub. Chart)	1		WS010001-	
7		D407 908 00	*Decal (Engine Daily Check)	1		WS010001-	
8		D407 016 00	*Decal (Safety Works)	1		WS010001-	
9		D408 430 00	*Decal (Tank Decompression)	1		WS010001-	
10		D405 507 00	*Decal (Safety Swing)	1		WS010001-	
11		D405 511 00	*Decal (Caution)	2		WS010001-	
12		D405 505 00	*Decal (Caution)	2		WS010001-	
13		D405 366 00	*Decal (Caution)	1		WS010001-	
14		D405 509 00	*Decal (Caution)	1		WS010001-	
15		D405 359 00	*Decal (Caution)	1		WS010001-	
16		D405 503 00	*Decal (Caution)	1		WS010001-	
17		D405 508 00	*Decal (Caution)	1		WS010001-	
18		D405 504 00	*Decal (Caution)	1		WS010001-	
19		D405 506 00	*Decal (Caution)	1		WS010001-	
20		D406 005 00	*Decal (Caution)	1		WS010001-	
21		D406 012 00	*Decal (Anti-Freezing Solution)	1		WS010001-	
22		D406 783 00	*Decal (Environment)	1		WS010001-	
23		D408 371 00	*Decal (Reflector)	2		WS010001-	
24		D408 339 00	*Decal (Boom Lowering)	1		WS010001-	
25		D406 720 00	*Decal (Spare Piping Change)	1		WS010001-	
26		D406 002 00	*Decal (Breaker Cation)	1		WS010001-	
27		D406 007 00	*Decal (Transport Fix)	1		WS010001-	
28		D408 346 00	*Decal (Lifting Procedures)	1		WS010001-	
29	×	D405 097 00	*Decal (New Machine)	1		WS010001-	
30		D406 154 00	*Decal (Noise 94)	1		WS010001-	
31		D407 943 00	*Decal (EPA Regulation)	1		WS010001-	
32		D408 370 00	*Plate, Nonslip	1		WS010001-	
33		D408 402 00	*Decal (IHI)	3		WS010001-	
34		D408 403 00	*Decal (IHI)	1		WS010001-	
35		D406 602 00	*Decal (Blade, Pedal)	1		WS010001-	
36		D406 603 00	*Decal (Control A)	1		WS010001-	
36-1		D406 604 00	*Decal (Control B)	1		WS010001-	
36-2		D406 605 00	*Decal (Control C)	1		WS010001-	
36-3		D406 606 00	*Decal (Control D)	1		WS010001-	
37		D406 609 00	*Decal (Control A-D)	1		WS010001-	

https://truckmanualshub.com/

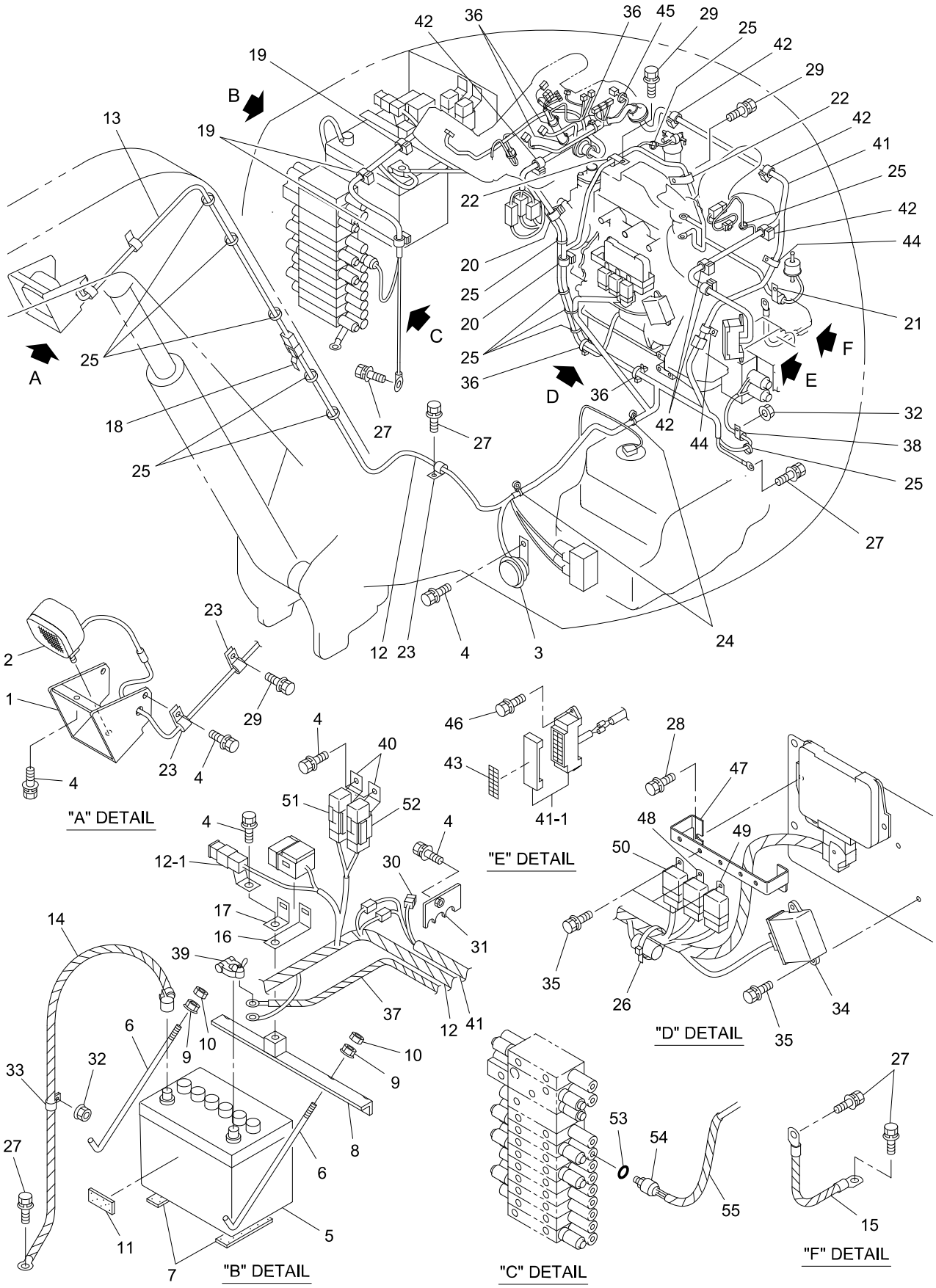

https://truckmanualshub.com/

KEY No.	SUP.	PART No.	DESCRIPTION	Q'TY	CHAN.	SERIAL No.	REMARKS
0	×	F366 891 00	Electrical System	1		WS010001-	
0-1	×	F355 103 00	Accessories Ass'y	1		WS010001-	
0-2	×	F366 887 00	Battery Ass'y	1		WS010001-	
1		D458 270 00	*Cover	1		WS010001-	
2		0854 529 UA	*Light Ass'y	1		WS010001-	
2-1		0854 529 05	**Bulb	1		WS010001-	
2-2		0854 529 01	**Lens	1		WS010001-	
2-3		0552 080 20	**Bolt, Hex.	1		WS010001-	M8X20
2-4		0521 080 00	**Nut, Hex.(W/F.W)	1		WS010001-	M8
3		0861 001 02	*Horn	1		WS010001-	
4		0517 080 16	*Bolt, Treatment (W/L.W, F.W)	8		WS010001-	M8X16
5		0851 000 04	*Battery	1		WS010001-	
5-1		0851 000 01	*Battery (For Cold District)	1		WS010001-	
6		4004 022 17	*Bolt, Hook	2		WS010001-	M6X270
7		4409 625 09	*Plate, Rubber	2		WS010001-	
8		D419 288 00	*Bracket	1		WS010001-	
9		0521 060 00	*Nut, Hex. (W/F.W)	2		WS010001-	M6
10		0544 060 00	*Nut, Hex.	2		WS010001-	M6
11		4409 625 10	*Plate, Rubber	1		WS010001-	
12		D592 287 00	*Harness, Main	1		WS010001-	
12-1		0830 291 01	**Link, Fusible	1		WS010001-	65A
13		0879 551 78	*Harness	1		WS010001-	
14		D592 194 03	*Cable, Battery	1		WS010001-	
15		D591 717 03	*Band, Earth	1		WS010001-	
16		D417 821 00	*Bracket	1		WS010001-	
17		D417 822 00	*Bracket	1		WS010001-	
18		0690 081 92	*Clamp	1		WS010001-	
19		0690 082 03	*Clamp, Hose	3		WS010001-	
20		0690 082 05	*Clamp, Hose	2		WS010001-	
21		4080 000 38	*Clamp, Hose	1		WS010001-	
22		4080 000 04	*Clamp, Hose	2		WS010001-	
23		4080 000 02	*Clamp, Hose	3		WS010001-	
24		0820 067 31	*Band, Cable	2		WS010001-	
25		0820 067 03	*Band, Cable	14		WS010001-	
26		0820 067 28	*Band, Cable	1		WS010001-	
27		0518 100 16	*Bolt, Treatment (W/L.W, F.W)	6		WS010001-	M10X16 P=1.25
28		0517 080 30	*Bolt, Treatment (W/L.W, F.W)	3		WS010001-	M8X30
29		0517 080 12	*Bolt, Treatment (W/L.W, F.W)	3		WS010001-	M8X12
30		0820 658 01	*Cap	1		WS010001-	
31		D419 446 00	*Bracket	1		WS010001-	
32		0524 100 00	*Nut, Hex. (W/F.W)	2		WS010001-	M10 P=1.25
33		4080 000 03	*Clamp, Hose	1		WS010001-	
34		0820 215 10	*Relay, Flip-Flop	1		WS010001-	
35		0517 060 16	*Bolt, Treatment (W/L.W, F.W)	5		WS010001-	M6X16

https://truckmanualshub.com/

KEY No.	SUP.	PART No.	DESCRIPTION	Q'TY	CHAN.	SERIAL No.	REMARKS
36		0690 082 08	*Clamp, Hose	6		WS010001-	
37		4591 982 11	*Cable, Battery	1		WS010001-	
38		4080 000 23	*Clamp, Hose	1		WS010001-	
39		0852 119 22	*Terminal	1		WS010001-	
40		0690 081 89	*Clamp	3		WS010001-	
41		D592 285 00	*Harness	1		WS010001-	
41-1		0858 140 01	**Box, Fuse	1		WS010001-	
41-2		0830 107 10	**Fuse	2		WS010001-	30A
41-3		0830 107 09	**Fuse	1		WS010001-	25A
41-4		0830 107 08	**Fuse	2		WS010001-	20A
41-5		0830 107 07	**Fuse	1		WS010001-	15A
41-6		0830 107 06	**Fuse	8		WS010001-	10A
41-7		0830 107 12	**Fuse	1		WS010001-	5A
41-8		0830 107 11	**Fuse	1		WS010001-	2A
42		0690 082 05	*Clamp, Hose	6		WS010001-	d=19
43		D408 292 00	*Decal	1		WS010001-	
44		4080 000 05	*Clamp, Hose	2		WS010001-	d=22
45		0820 067 04	*Band, Cable	1		WS010001-	
46		0517 060 20	*Bolt, Treatment (W/L.W, F.W)	2		WS010001-	M6X20
47		D419 315 00	*Bracket	1		WS010001-	
48		Y198461 52950	*Relay, Sub	1		WS010001-	YANMAR
49		Y198461 52950	*Relay, Rack Actuator	1		WS010001-	YANMAR
50		Y198461 52950	*Relay, Main	1		WS010001-	YANMAR
51		Y129927 77930	*Relay, Glow	1		WS010001-	YANMAR
52		Y129927 77920	*Relay, Starter	1		WS010001-	YANMAR
53		0760 710 12	*Ring, O	1		WS010001-	P11-90B
54		0858 501 16	*Switch, Oil Pressure	1		WS010001-	
55		0820 803 01	*Tube, Corugate	M		WS010001-	L=300

https://truckmanualshub.com/

[Memo]

https://truckmanualshub.com/

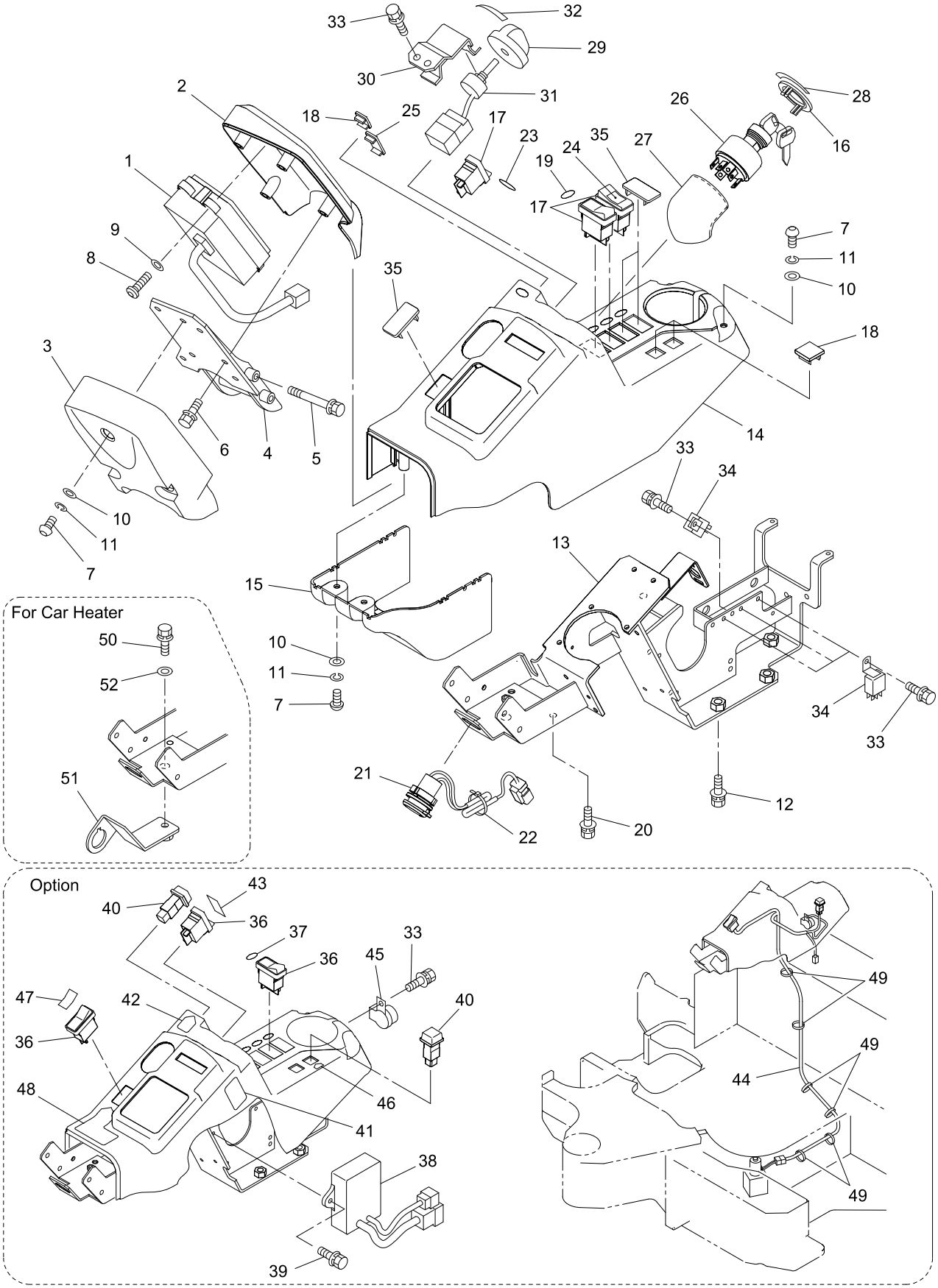

30V4-090200-1

https://truckmanualshub.com/

KEY No.	SUP.	PART No.	DESCRIPTION	Q'TY	CHAN.	SERIAL No.	REMARKS
0	×	F361 706 00	Panel Ass'y, Instrument	1		WS010001-	
0-1	×	F361 707 00	Panel Ass'y, Instrument	1		WS010001-	
1		0881 509 UA	*Monitor, OK	1		WS010001-	
2		D465 380 00	*Panel	1		WS010001-	
3		D465 381 00	*Panel	1		WS010001-	
4		D419 230 00	*Bracket	1		WS010001-	
5		0517 081 15	*Bolt, Treatment (W/L.W, F.W)	2		WS010001-	M8X115
6		0517 060 20	*Bolt, Treatment (W/L.W, F.W)	4		WS010001-	M6X20
7		4004 364 01	*Bolt, Button Head	7		WS010001-	M6X18
8		0454 400 20	*Screw, Tapping	4		WS010001-	M4X20
9		0593 040 00	*Washer, Flat	4		WS010001-	M4
10		0594 060 00	*Washer, Flat	7		WS010001-	M6
11		0596 060 00	*Washer, Lock	7		WS010001-	M6
12		0518 100 25	*Bolt, Treatment (W/L.W, F.W)	4		WS010001-	M10X25 P=1.25
13		D419 229 00	*Bracket	1		WS010001-	
14		D465 313 00	*Panel	1		WS010001-	
15		D465 314 00	*Panel	1		WS010001-	
16		0690 203 44	*Cover	1		WS010001-	
17		0858 314 33	*Switch Assy	3		WS010001-	
18		D528 006 00	*Cap	AR		WS010001-	
19		D407 819 00	*Decal (Light)	1		WS010001-	
20		0517 060 16	*Bolt, Treatment (W/L.W, F.W)	2		WS010001-	M6X16
21		0830 406 02	*Socket	1		WS010001-	
22		0820 067 05	*Band, Cable	1		WS010001-	
23		D408 280 00	*Decal	1		WS010001-	
24		D408 447 00	*Decal	1		WS010001-	
25		D528 005 00	*Cap	1		WS010001-	
26		0858 306 03	*Switch Assy Starter	1		WS010001-	
26-1		0858 306 04	*Switch Assy Starter	1		WS010001-	Option 5080
26-2		0690 270 29	**Key	2		WS010001-	#5080
27		4457 535 00	*Cover (Starter Switch)	1		WS010001-	
28		D407 823 00	*Decal	1		WS010001-	
29		0690 211 05	*Throttle, Dial	1		WS010001-	
30		D418 304 00	*Bracket	1		WS010001-	
31		0858 614 05	*Meter, Potention	1		WS010001-	
32		D407 829 00	*Plate, Name (Throttle)	1		WS010001-	
33		0517 060 12	*Bolt, Treatment (W/L.W, F.W)	7		WS010001-	M6X12
34		0820 215 07	*Relay	4		WS010001-	
35		D528 005 00	*Cap	AR		WS010001-	
36		0858 314 33	*Switch Assy	AR		WS010001-	
37		D407 965 00	*Decal	1		WS010001-	
38		0893 509 UA	*Controller Ass'y	1		WS010001-	
39		0517 060 20	*Bolt, Treatment (W/L.W, F.W)	2		WS010001-	M6X20
40		0858 314 35	*Switch Assy	AR		WS010001-	

https://truckmanualshub.com/

KEY No.	SUP.	PART No.	DESCRIPTION	Q'TY	CHAN.	SERIAL No.	REMARKS
41		D408 285 00	*Decal	1		WS010001-	
42		D407 963 00	*Decal	1		WS010001-	
43		D407 964 00	*Decal	1		WS010001-	
44		D592 206 00	*Harness	1		WS010001-	
45		0857 011 57	*Buzzer	1		WS010001-	
46		D407 966 00	*Decal	1		WS010001-	
47		D407 967 00	*Decal	1		WS010001-	
48		D407 968 00	*Decal	1		WS010001-	
49		0820 067 09	*Band, Cable	6		WS010001-	
50		0518 100 20	*Bolt, Treatment (W/L.W, F.W)	1		WS010001-	M10X20 P=1.25
51		D419 477 00	*Bracket	1		WS010001-	
52		4006 119 02	*Washer	1		WS010001-	M10

https://truckmanualshub.com/

[Memo]

https://truckmanualshub.com/

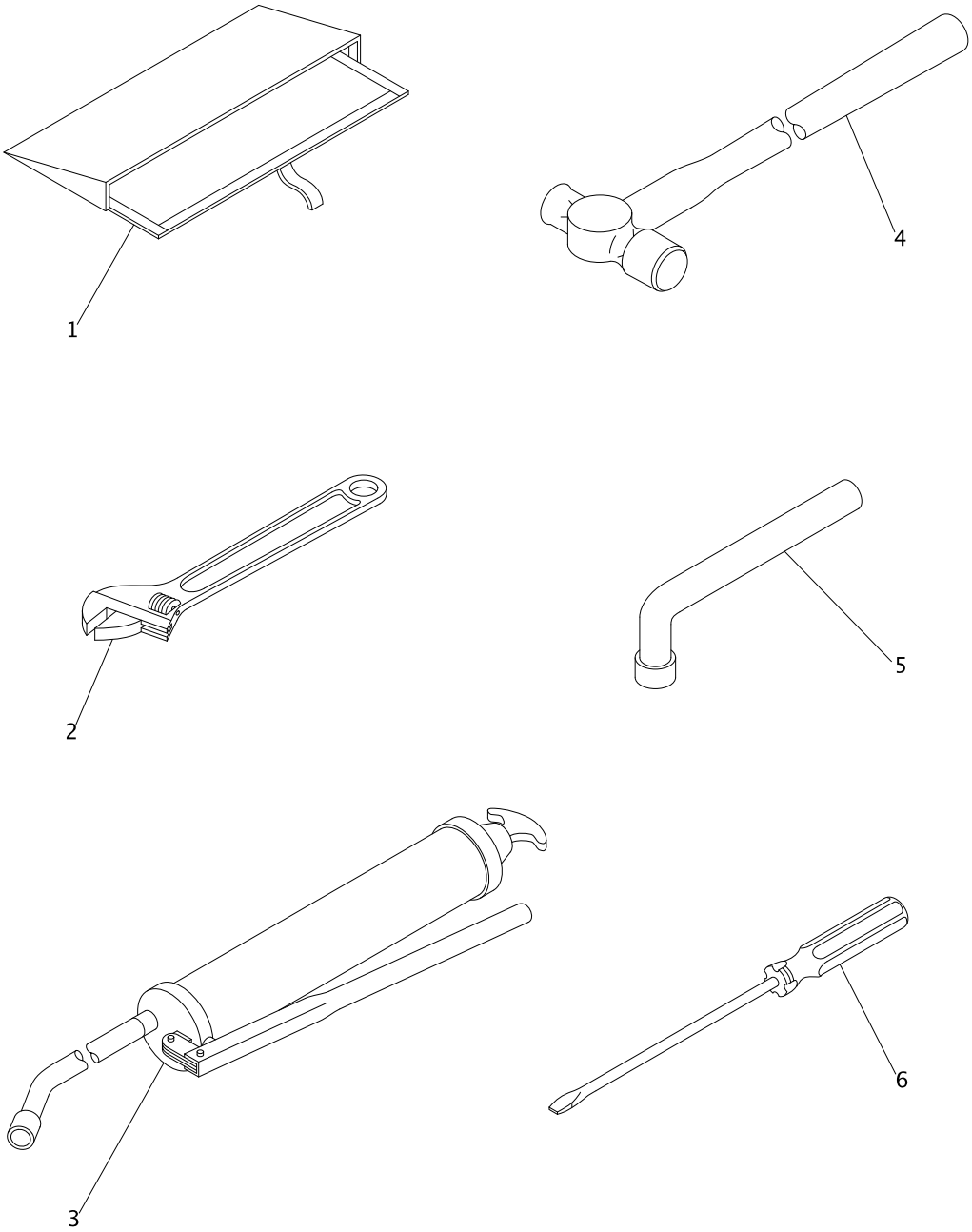

SHALL-100100-1

https://truckmanualshub.com/

KEY No.	SUP.	PART No.	DESCRIPTION	Q'TY	CHAN.	SERIAL No.	REMARKS
0	×	5388 510 00	Tools Set	1		WS010001-	
1		4450 505 00	*Case, Tools	1		WS010001-	
2	△	0931 109 25	*Wrench, Adjustable	1		WS010001-	250mm
3		0931 370 11	*Gun, Grease	1		WS010001-	
3-1		0931 370 10	*Gun, Grease	1		WS010001-	For Export
3-2	☆	0931 371 01	**Hose, Grease	1		WS010001-	48190-20540
4	△	0931 331 10	*Hammer	1		WS010001-	
5	△	0931 070 24	*Wrench, L	1		WS010001-	24mm
6	△	0931 301 04	*Driver (-)	1		WS010001-	100mm

https://truckmanualshub.com/

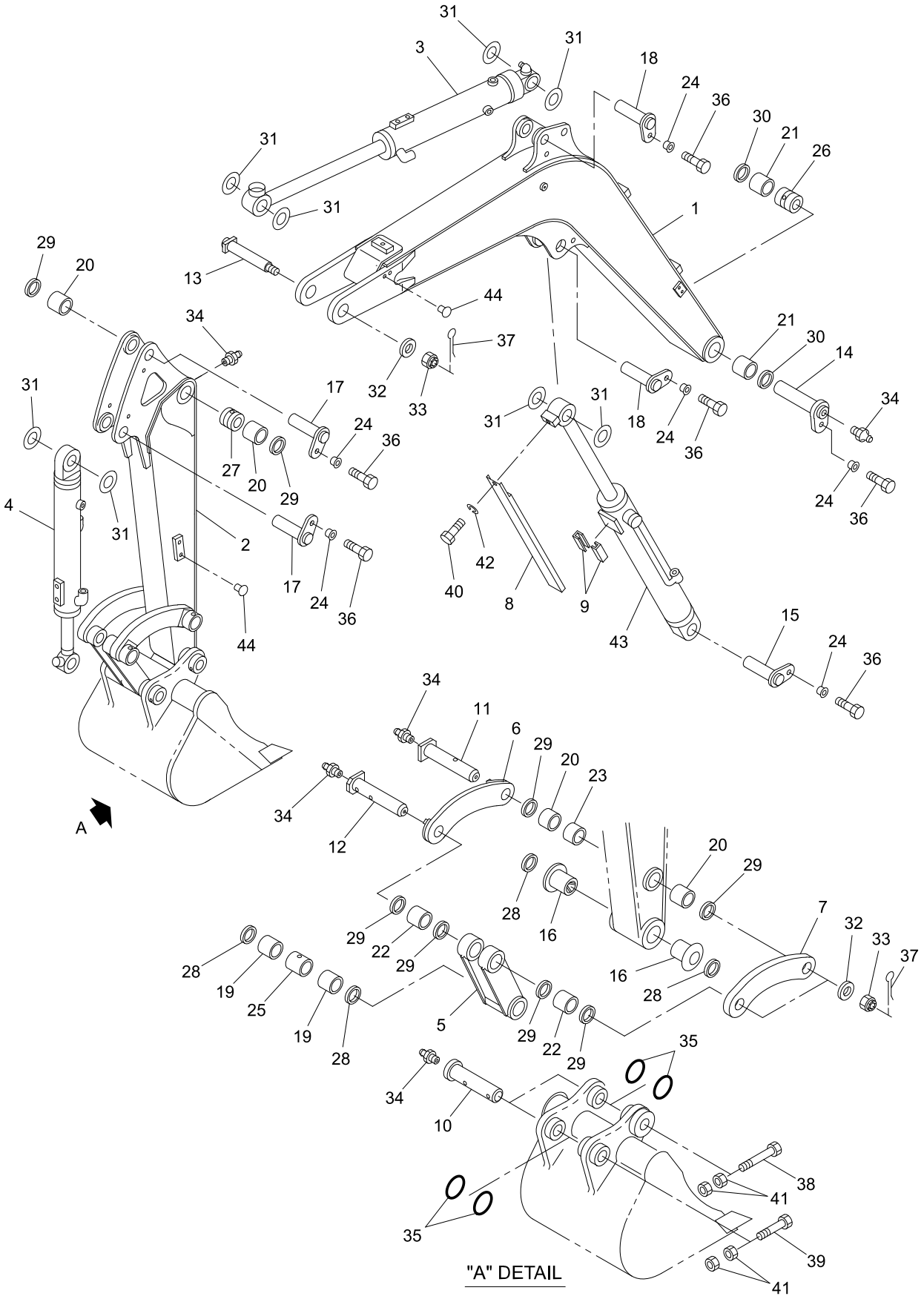

30V4-110100-1

https://truckmanualshub.com/

KEY No.	SUP.	PART No.	DESCRIPTION	Q'TY	CHAN.	SERIAL No.	REMARKS
0	×	F388 397 00	Attachment Ass'y, Hoe	1		WS010001-	
1		D210 143 00	*Boom	1		WS010001-	
2		D215 219 00	*Arm Ass'y	1		WS010001-	
2-1		D215 233 00	*Arm Ass'y, Long	1		WS010001-	
3	#	0782 619 UA	*Cylinder Ass'y, Arm	1		WS010001-	Sh. No. 5-9
4	#	0782 614 UA	*Cylinder Ass'y, Bucket	1		WS010001-	Sh. No. 5-10
5		D490 369 00	*Link, Bucket	1		WS010001-	
6		D490 370 00	*Link, Arm (R.H.)	1		WS010001-	
7		D490 371 00	*Link, Arm (L.H.)	1		WS010001-	
8		D458 438 00	*Cover	1		WS010001-	
9		D475 052 00	*Guide	2		WS010001-	
10		D013 360 00	*Pin, Head	2		WS010001-	
11		D013 397 00	*Pin, Head	1		WS010001-	
12		D013 402 00	*Pin, Head	1		WS010001-	
13		D013 396 01	*Pin, Head	1		WS010001-	
14		D017 248 00	*Pin	1		WS010001-	
15		D017 237 03	*Pin	1		WS010001-	
16		D043 111 00	*Bushing	2		WS010001-	
17		D017 233 03	*Pin	2		WS010001-	
18		D017 233 02	*Pin	2		WS010001-	
19		4043 229 09	*Bushing	2		WS010001-	
20		4043 229 10	*Bushing	4		WS010001-	
21		D043 086 00	*Bushing	2		WS010001-	
22		4043 231 01	*Bushing	2		WS010001-	
23		4040 468 07	*Spacer	1		WS010001-	
24		D047 058 00	*Bushing	6		WS010001-	
25		4040 468 13	*Spacer	1		WS010001-	
26		4040 468 04	*Spacer	1		WS010001-	
27		4040 469 05	*Spacer	1		WS010001-	
28		0765 033 33	*Seal, Dust	4		WS010001-	
29		0765 033 29	*Seal, Dust	8		WS010001-	
30		0765 033 28	*Seal, Dust	2		WS010001-	
31		4006 540 46	*Shim	AR		WS010001-	d=40, t=1.0
31-1		4006 540 47	*Shim	AR		WS010001-	d=40, t=2.0
32		4006 557 00	*Washer, Flat	3		WS010001-	
33		0587 300 00	*Nut, Castle	3		WS010001-	M30
34		0728 111 15	*Nipple, Grease	6		WS010001-	PT1/8
35		4511 501 06	*Ring, O	4		WS010001-	
36		0555 160 30	*Bolt, Treatment	6		WS010001-	M16X30
37		0599 060 50	*Pin, Cotter	3		WS010001-	d=6X50
38		0514 121 10	*Bolt, Treatment	1		WS010001-	M12X110 P=1.25
39		0514 120 80	*Bolt, Treatment	1		WS010001-	M12X80 P=1.25
40		0555 120 20	*Bolt, Treatment	1		WS010001-	M12X20

https://truckmanualshub.com/

KEY No.	SUP.	PART No.	DESCRIPTION	Q'TY	CHAN.	SERIAL No.	REMARKS
41		0535 120 00	*Nut, Treatment	4		WS010001-	M12 P=1.25
42		0590 120 00	*Washer, Lock	1		WS010001-	M12
43	#	0782 617 UA	*Cylinder Ass'y, Boom	1		WS010001-	Sh. No. 5-8
44		0910 911 00	*Plug	8		WS010001-	

https://truckmanualshub.com/

[Memo]

https://truckmanualshub.com/

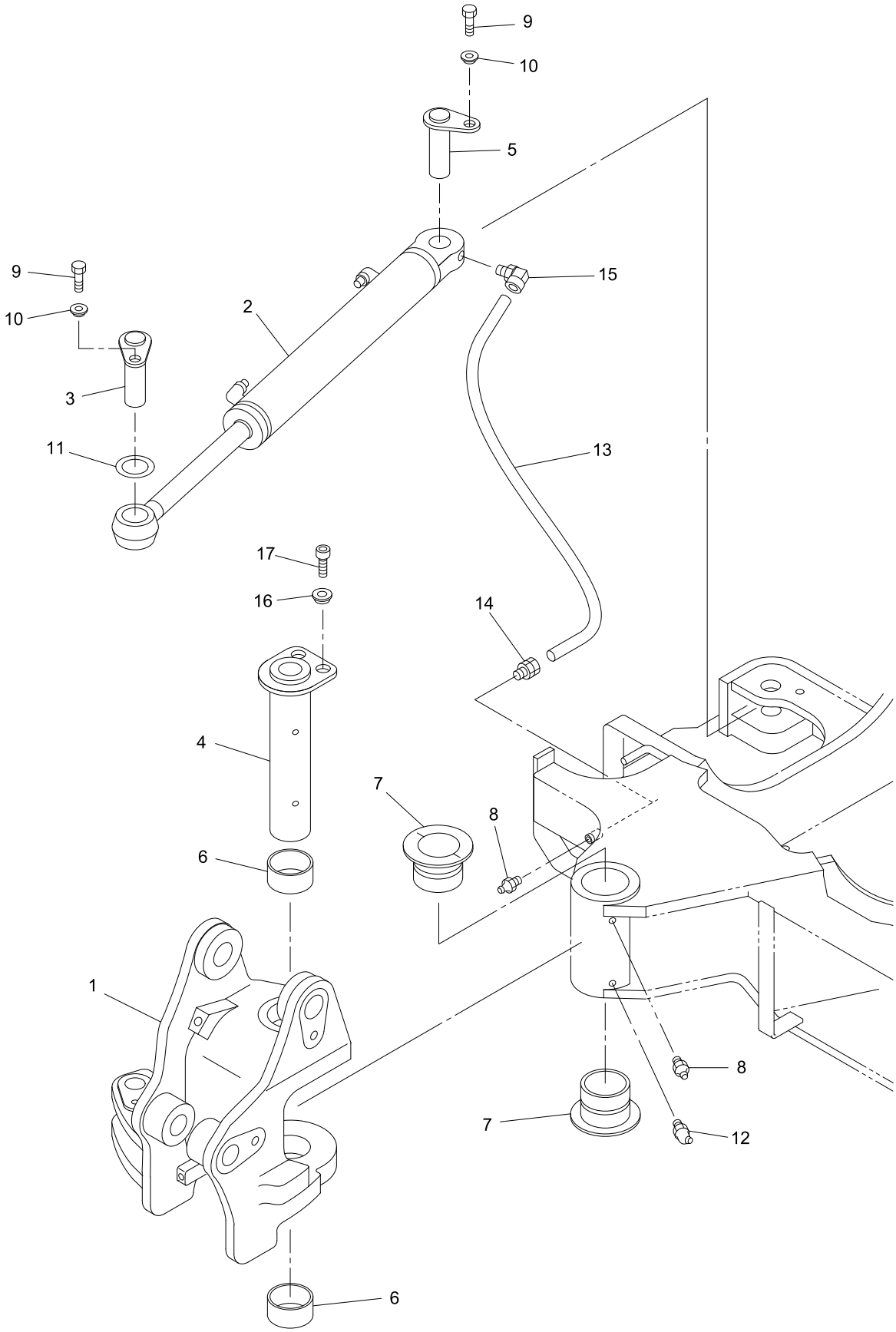

30V4-110200-1

https://truckmanualshub.com/

KEY No.	SUP.	PART No.	DESCRIPTION	Q'TY	CHAN.	SERIAL No.	REMARKS
0	×	F388 395 00	Swing Ass'y, Boom	1		WS010001-	
1		D418 573 00	*Bracket, Boom Swing	1		WS010001-	
2	#	0782 615 UA	*Cylinder Ass'y, Boom Swing	1		WS010001-	Sh. No. 5-11
3		D017 233 01	*Pin	1		WS010001-	
4		D017 257 00	*Pin	1		WS010001-	
5		D017 233 05	*Pin	1		WS010001-	
6		D043 096 00	*Bushing	2		WS010001-	
7		D043 118 00	*Bushing	2		WS010001-	
8		0728 111 15	*Nipple, Grease	2		WS010001-	PT1/8
9		0555 160 30	*Bolt, Treatment	2		WS010001-	M16X30
10		D047 058 00	*Bushing	2		WS010001-	
11		4006 540 41	*Shim	AR		WS010001-	t=1.0
11-1		4006 540 42	*Shim	AR		WS010001-	t=2.0
12		0728 111 55	*Nipple, Grease	1		WS010001-	PT1/8X67.5
13		0779 000 88	*Tube, Synflex	M		WS010001-	L=800
14		0710 106 27	*Connector	1		WS010001-	
14-1		0713 100 02	**Sleeve	1		WS010001-	
15		0710 107 27	*Elbow	1		WS010001-	
15-1		0713 100 02	**Sleeve	1		WS010001-	
16		D047 003 00	*Bushing	2		WS010001-	
17		0555 160 35	*Bolt, Treatment	2		WS010001-	M16X35

https://truckmanualshub.com/

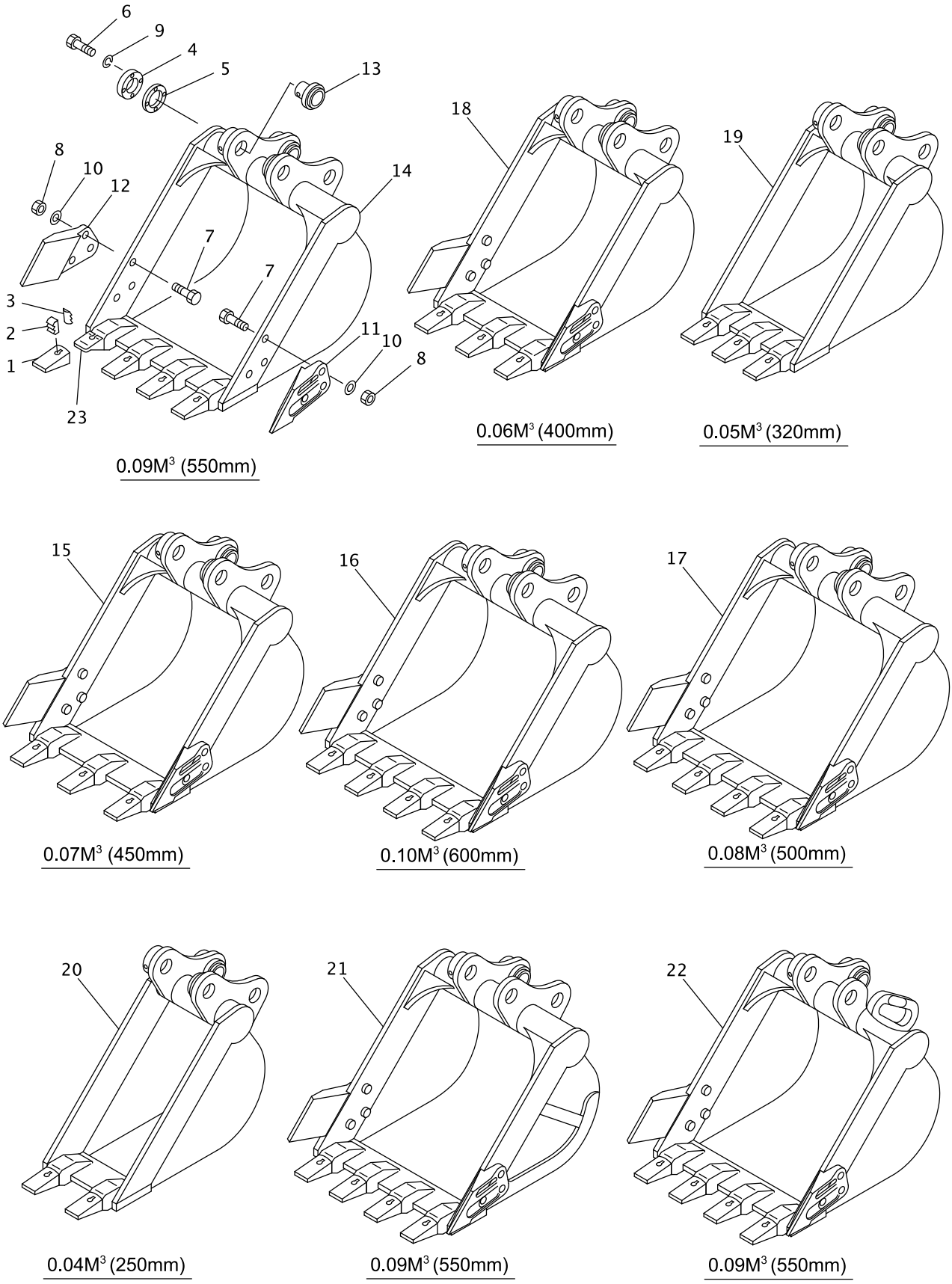

30VX-110300-1

https://truckmanualshub.com/

KEY No.	SUP.	PART No.	DESCRIPTION	Q'TY	CHAN.	SERIAL No.	REMARKS
0		F388 176 01	Bucket Ass'y, Hoe (0.09m3)	1		WS000001-	Std.
0-1		F388 176 02	Bucket Ass'y, Hoe (0.07m3)	1		WS000001-	
0-2		F388 176 03	Bucket Ass'y, Hoe (0.10m3)	1		WS000001-	
0-3		F388 176 04	Bucket Ass'y, Hoe (0.08m3)	1		WS000001-	
0-4		F388 176 05	Bucket Ass'y, Hoe (0.06m3)	1		WS000001-	
0-5		F388 199 01	Bucket Ass'y, Hoe (0.05m3)	1		WS000001-	
0-6		F388 199 02	Bucket Ass'y, Hoe (0.04m3)	1		WS000001-	
0-7		F388 209 01	Bucket Ass'y, Hoe (Reinforced, 0.09m3)	1		WS000001-	
0-8		F388 210 01	Bucket Ass'y, Hoe (0.09m3 W/Hook)	1		WS000001-	
1		0650 002 04	*Tooth	AR		WS000001-	18S
2		0650 003 03	*Pin, Lock	AR		WS000001-	18-20M-PN
3		0650 004 02	*Pin, Rubber	AR		WS000001-	18-20M-LK
4		4435 634 00	*Flange	1		WS000001-	
5		4007 306 00	*Shim	AR		WS000001-	
6		0513 100 30	*Bolt, Treatment	4		WS000001-	M10X30
7		0555 140 40	*Bolt, Treatment	6		WS000001-	M14X40
8		0585 140 00	*Nut, Treatment	6		WS000001-	M14
9		0590 100 00	*Washer, Lock	4		WS000001-	M10
10		D006 051 00	*Washer, Treatment	6		WS000001-	M14
11		4123 040 00	*Cutter, Side	1		WS000001-	
12		4123 041 00	*Cutter, Side	1		WS000001-	
13		D131 028 00	*Boss	1		WS000001-	
14	×	D270 099 00	*Bucket, Hoe (0.09m3, 550mm)	1		WS000001-	
15	×	D270 100 00	*Bucket, Hoe (0.07m3, 450mm)	1		WS000001-	
16	×	D270 101 00	*Bucket, Hoe (0.10m3, 600mm)	1		WS000001-	
17	×	D270 102 00	*Bucket, Hoe (0.08m3, 500mm)	1		WS000001-	
18	×	D270 103 00	*Bucket, Hoe (0.06m3, 400mm)	1		WS000001-	
19	×	D270 104 00	*Bucket, Hoe (0.05m3, 320mm)	1		WS000001-	
20	×	D270 105 00	*Bucket, Hoe (0.04m3, 250mm)	1		WS000001-	
21	×	D270 112 00	*Bucket, Hoe (0.09m3, 550mm)	1		WS000001-	
22	×	D270 113 00	*Bucket, Hoe (0.09m3, 550mm)	1		WS000001-	
23		0650 001 07	**Adapter, Tooth	AR		WS000001-	

https://truckmanualshub.com/

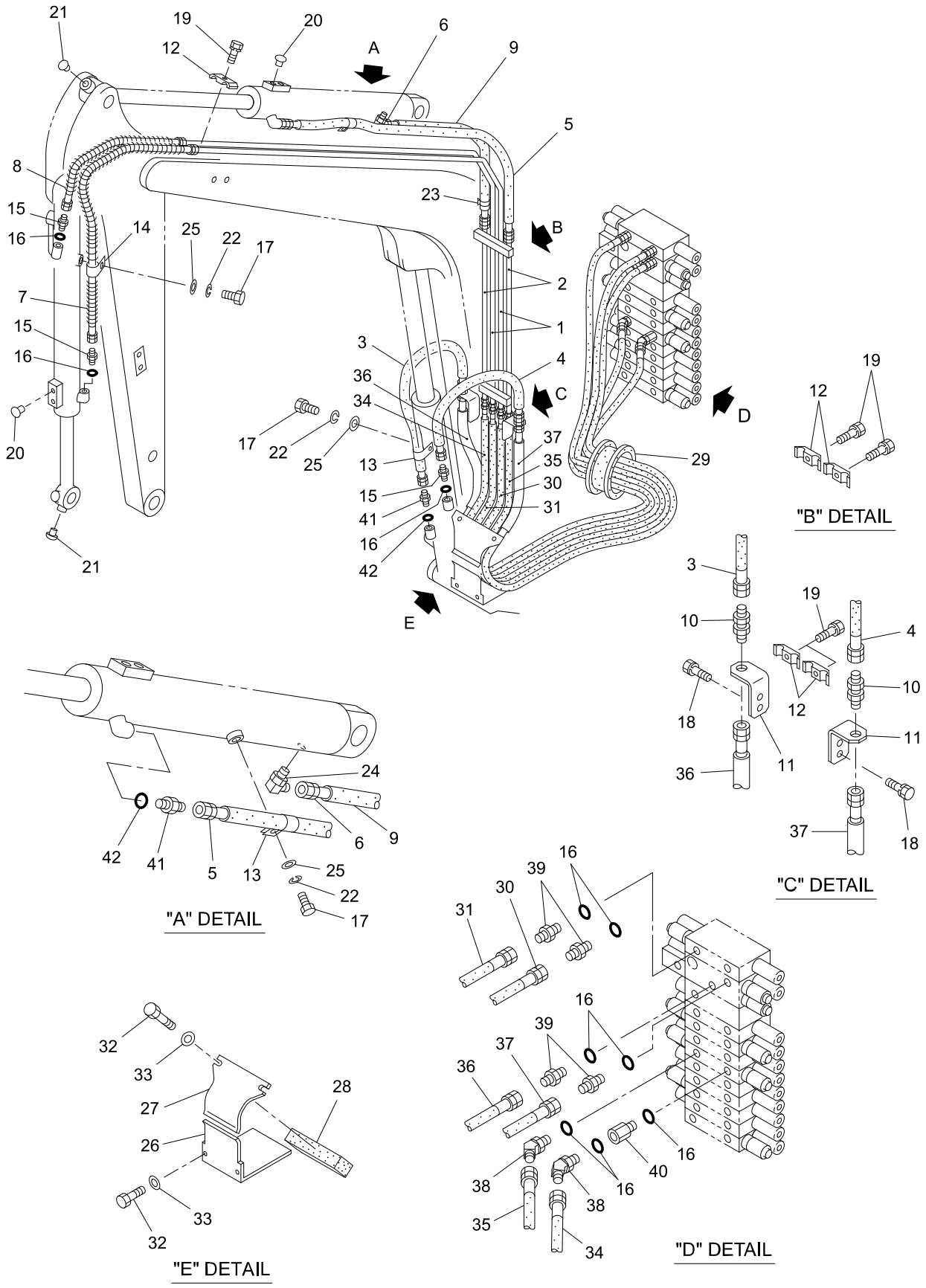

30V4-110400-1

https://truckmanualshub.com/

KEY No.	SUP.	PART No.	DESCRIPTION	Q'TY	CHAN.	SERIAL No.	REMARKS
0	×	F342 505 00	Piping Ass'y, Hoe Attachment	1		WS010001-	
0-1	×	F342 635 00	Piping Ass'y, Hoe Attachment	1		WS010001-	
1		D286 311 00	*Tube	2		WS010001-	
2		D286 309 00	*Tube	2		WS010001-	
3		D070 543 01	*Hose Ass'y	1		WS010001-	L=1120
4		D070 543 02	*Hose Ass'y	1		WS010001-	L=800
5		D070 543 05	*Hose Ass'y	1		WS010001-	L=1200
6		D070 365 12	*Hose Ass'y	1		WS010001-	L=530
7		D070 351 04	*Hose Ass'y	1		WS010001-	L=1130
7-1		D070 351 01	*Hose Ass'y (For Long Arm)	1		WS010001-	L=1450
8		D070 351 11	*Hose Ass'y	1		WS010001-	L=740
8-1		D070 351 16	*Hose Ass'y (For Long Arm)	1		WS010001-	L=1070
9		4070 853 03	*Cover, Hose	M		WS010001-	L=470
10		D060 032 00	*Adapter	2		WS010001-	
11		D418 453 00	*Bracket	2		WS010001-	
12		4081 189 00	*Clamp, Tube	5		WS010001-	
13		4080 000 05	*Clamp, Hose	2		WS010001-	
14		4080 000 14	*Clamp, Hose	1		WS010001-	
15		0713 700 03	*Adapter	3		WS010001-	
16		0760 710 16	*Ring, O	10		WS010001-	P14-90B
17		0513 100 16	*Bolt, Treatment	3		WS010001-	M10X16
18		0520 100 20	*Bolt, Treatment (W/L.W)	4		WS010001-	M10X20 P=1.25
19		0520 100 35	*Bolt, Treatment (W/L.W)	5		WS010001-	M10X35 P=1.25
20		0690 201 08	*Plug	4		WS010001-	
21		0690 201 09	*Plug	2		WS010001-	
22		0590 100 00	*Washer, Lock	3		WS010001-	M10
23		0820 067 04	*Band, Cable	1		WS010001-	
24		0710 122 10	*Elbow	1		WS010001-	
25		0593 100 00	*Washer, Flat	3		WS010001-	M10
26		D458 437 00	*Cover	1		WS010001-	
27		D458 443 00	*Cover	1		WS010001-	
28		D580 160 00	*Pad	1		WS010001-	
29		4580 730 00	*Pad	1		WS010001-	
30		D070 460 12	*Hose Ass'y	1		WS010001-	L=2350
30-1	☆	4405 319 01	*Decal (CA)	2		WS010001-	4405 319 00
31		D070 460 13	*Hose Ass'y	1		WS010001-	L=2400
31-1	☆	4405 319 02	*Decal (CB)	2		WS010001-	4405 319 00
32		0513 120 25	*Bolt, Treatment	4		WS010001-	M12X25
33		0595 120 00	*Washer, Treatment	4		WS010001-	M12
34		D070 460 14	*Hose Ass'y	1		WS010001-	L=2270
34-1	☆	4405 320 01	*Decal (AA)	2		WS010001-	4405 320 00
35		D070 460 15	*Hose Ass'y	1		WS010001-	L=2320
35-1	☆	4405 320 02	*Decal (AB)	2		WS010001-	4405 320 00

https://truckmanualshub.com/

KEY No.	SUP.	PART No.	DESCRIPTION	Q'TY	CHAN.	SERIAL No.	REMARKS
36		D070 460 18	*Hose Ass'y	1		WS010001-	L=2550
36-1	☆	4405 318 01	*Decal (BA)	2		WS010001-	4405 318 00
37		D070 460 19	*Hose Ass'y	1		WS010001-	L=2600
37-1	☆	4405 318 02	*Decal (BB)	2		WS010001-	4405 318 00
38		0710 114 33	*Elbow, 45	2		WS010001-	
39		0713 700 71	*Adapter	4		WS010001-	
40		D060 536 00	*Connector	1		WS010001-	
41		0713 700 78	*Adapter	2		WS010001-	
42		0760 710 19	*Ring, O	2		WS010001-	P18-90B

https://truckmanualshub.com/

[Memo]

https://truckmanualshub.com/

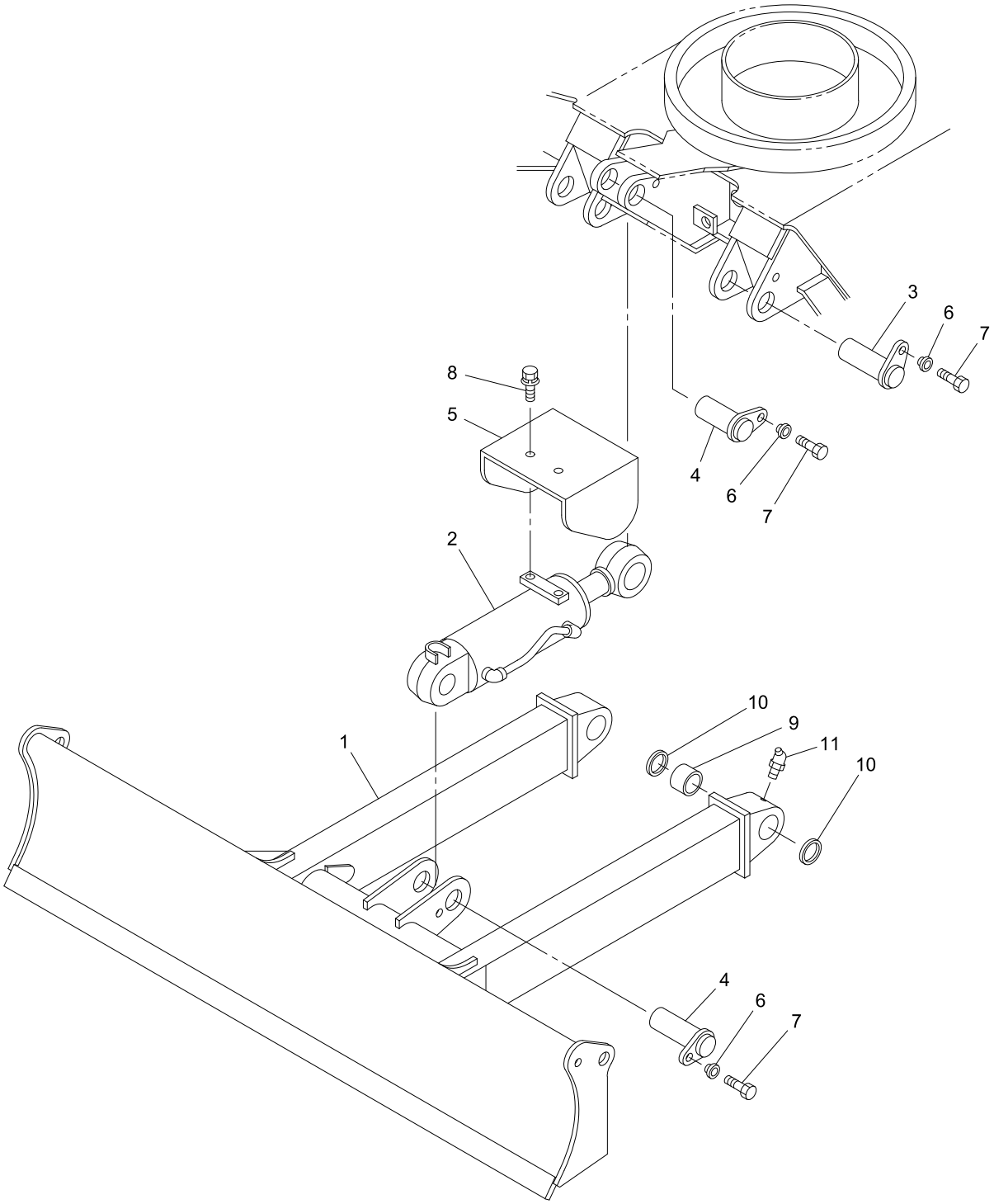

30V4-120100-1

https://truckmanualshub.com/

KEY No.	SUP.	PART No.	DESCRIPTION	Q'TY	CHAN.	SERIAL No.	REMARKS
0	×	F301 021 00	Attachment Ass'y, Blade	1		WS010001-	
1		D257 108 00	*Blade	1		WS010001-	
2	#	0782 609 UA	*Cylinder Ass'y, Blade	1		WS010001-	Sh.No.5-12
3		D017 233 01	*Pin	2		WS010001-	
4		D017 234 01	*Pin	2		WS010001-	
5		D455 372 00	*Cover	1		WS010001-	
6		D047 058 00	*Bushing	4		WS010001-	
7		0555 160 30	*Bolt, Treatment	4		WS010001-	M16X30
8		0518 100 20	*Bolt, Treatment (W/L.W, F.W)	2		WS010001-	M10X20 P=1.25
9		4043 358 03	*Bushing	2		WS010001-	
10		0765 033 29	*Seal, Dust	4		WS010001-	
11		0728 111 55	*Nipple, Grease	2		WS010001-	PT1/8X67.5

https://truckmanualshub.com/

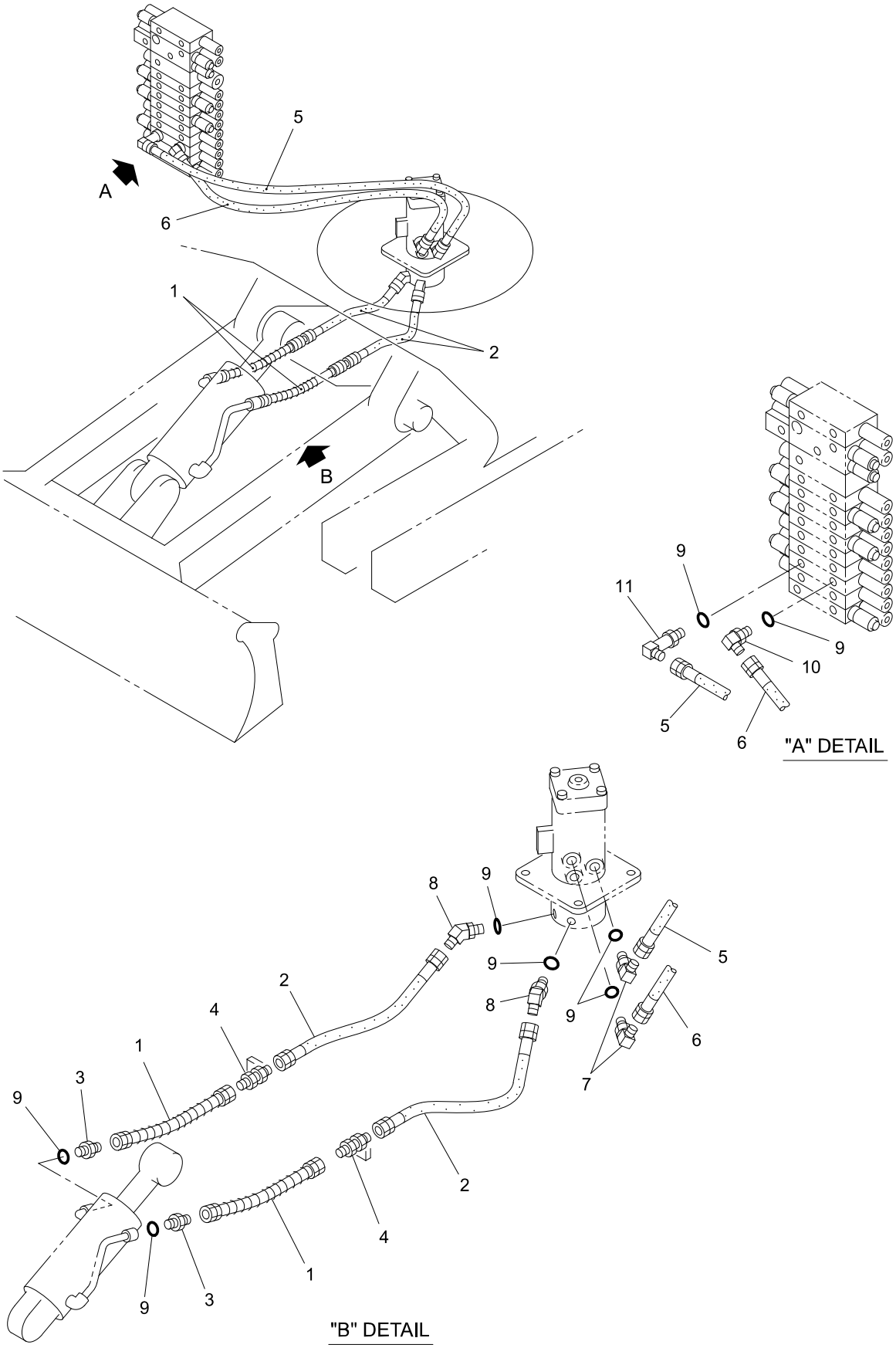

30V4-120200-1

https://truckmanualshub.com/

KEY No.	SUP.	PART No.	DESCRIPTION	Q'TY	CHAN.	SERIAL No.	REMARKS
0	×	F342 644 00	Piping Ass'y, Blade	1		WS010001-	
0-1	×	F342 635 00	Piping Ass'y, Blade	1		WS010001-	
1		4070 659 16	*Hose Ass'y	2		WS010001-	L=400
2		4070 001 90	*Hose Ass'y	2		WS010001-	L=270
3		0713 700 03	*Adapter	2		WS010001-	
4		D060 032 00	*Adapter	2		WS010001-	
5		4070 000 56	*Hose Ass'y	1		WS010001-	L=950
6		4070 000 05	*Hose Ass'y	1		WS010001-	L=850
7		0710 113 32	*Elbow, Reducer	2		WS010001-	PF3/8XPF1/4
8		0710 114 33	*Elbow, 45	2		WS010001-	
9		0760 710 16	*Ring, O	8		WS010001-	P14-90B
10		0710 113 32	*Elbow, Reducer	1		WS010001-	PF3/8XPF1/4
11		0710 117 04	*Elbow, Reducer	1		WS010001-	PF3/8XPF1/4

https://truckmanualshub.com/

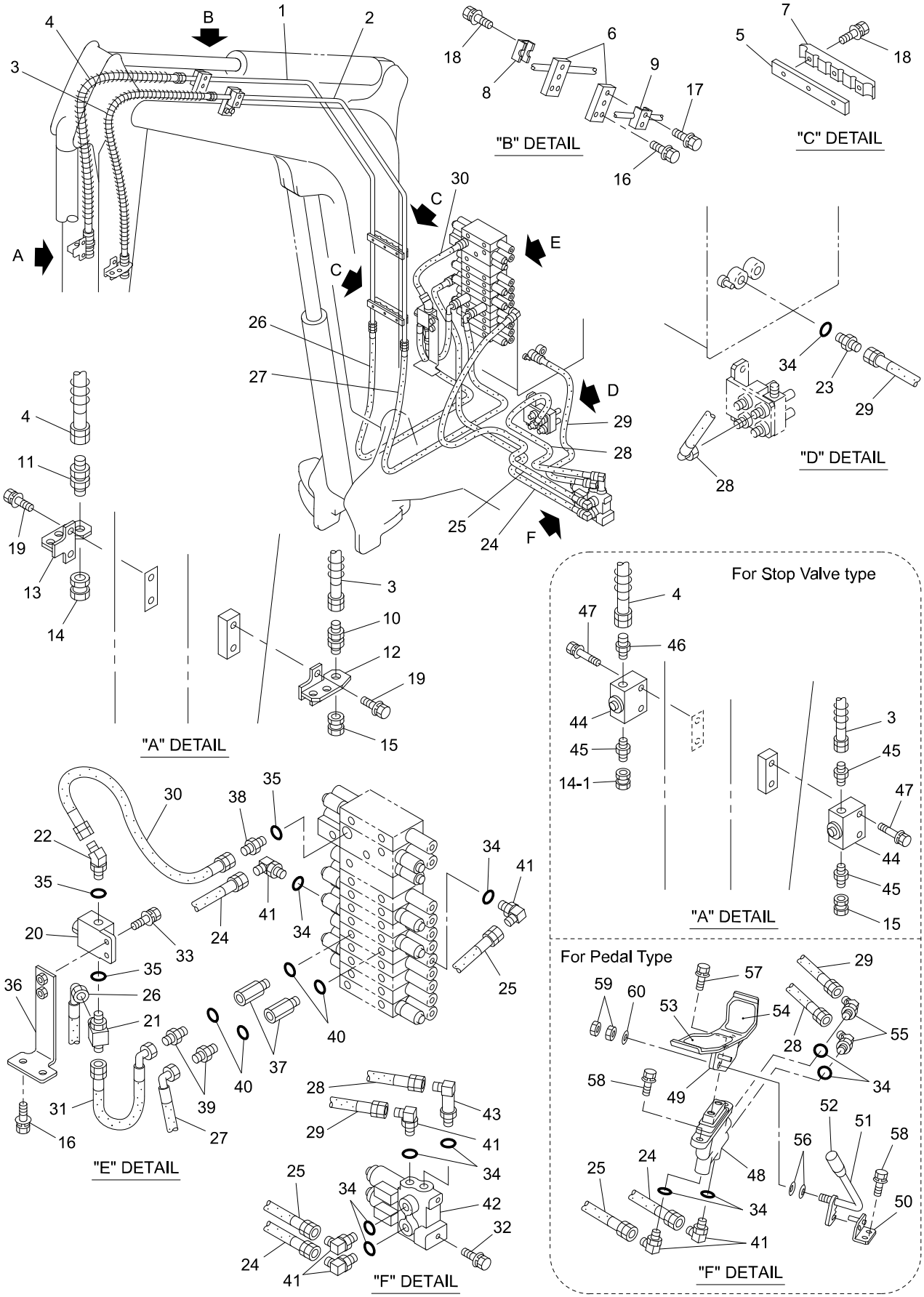

30V4-150100-1

https://truckmanualshub.com/

KEY No.	SUP.	PART No.	DESCRIPTION	Q'TY	CHAN.	SERIAL No.	REMARKS
0	×	F342 654 00	Piping Ass'y, First Spare	1		WS010001-	
1		D286 319 00	*Tube	1		WS010001-	
2		D286 320 00	*Tube	1		WS010001-	
3		D070 371 01	*Hose Ass'y	1		WS010001-	L=900
4		D070 372 01	*Hose Ass'y	1		WS010001-	L=900
5		D082 107 00	*Seat, Clamp	2		WS010001-	
6		D082 111 00	*Seat, Clamp	2		WS010001-	
7		D081 194 00	*Clamp, Tube	2		WS010001-	
8		D081 023 00	*Clamp, Tube	1		WS010001-	
9		D081 192 00	*Clamp, Tube	1		WS010001-	
10		D060 451 00	*Connector	1		WS010001-	
11		D060 500 00	*Connector	1		WS010001-	
12		D418 812 00	*Bracket	1		WS010001-	
13		D418 813 00	*Bracket	1		WS010001-	
14		0710 303 06	*Plug, Swivel	1		WS010001-	
14-1		0710 303 04	*Plug, Swivel	1		WS010001-	For Valve Type
15		0710 303 04	*Plug, Swivel	1		WS010001-	
16		0518 100 25	*Bolt, Treatment (W/L.W, F.W)	6		WS010001-	M10X25 P=1.25
17		0518 100 40	*Bolt, Treatment (W/L.W, F.W)	2		WS010001-	M10X40 P=1.25
18		0518 100 45	*Bolt, Treatment (W/L.W, F.W)	8		WS010001-	M10X45 P=1.25
19		0518 100 20	*Bolt, Treatment (W/L.W, F.W)	4		WS010001-	M10X20 P=1.25
20		0725 005 UA	*Valve, Stop	1		WS010001-	
21		0710 713 11	*Tee, Special	1		WS010001-	
22		0710 114 44	*Elbow, 45	1		WS010001-	
23		0713 700 70	*Connector	1		WS010001-	
24		4070 548 42	*Hose Ass'y	1		WS010001-	L=1670
25		4070 548 43	*Hose Ass'y	1		WS010001-	L=1370
26		D070 367 12	*Hose Ass'y	1		WS010001-	L=2130
26-1	☆	4405 307 03	*Decal (R1)	2		WS010001-	4405 307 00
27		D070 367 13	*Hose Ass'y	1		WS010001-	L=2180
27-1	☆	4405 309 03	*Decal (L1)	2		WS010001-	4405 309 00
28		4070 551 13	*Hose Ass'y	1		WS010001-	L=850
29		4070 548 72	*Hose Ass'y	1		WS010001-	L=930
30		4070 783 28	*Hose Ass'y	1		WS010001-	L=320
31		D070 363 20	*Hose Ass'y	1		WS010001-	L=450
32		0517 080 25	*Bolt, Treatment (W/L.W, F.W)	2		WS010001-	M8X25
33		0518 100 30	*Bolt, Treatment (W/L.W, F.W)	2		WS010001-	M10X30 P=1.25
34		0760 710 12	*Ring, O	10		WS010001-	P11-90B
35		0760 710 19	*Ring, O	3		WS010001-	P18-90B
36		D419 133 00	*Bracket	1		WS010001-	
37		D060 483 00	*Connector	2		WS010001-	

https://truckmanualshub.com/

KEY No.	SUP.	PART No.	DESCRIPTION	Q'TY	CHAN.	SERIAL No.	REMARKS
38		0713 700 72	*Adapter	1		WS010001-	
39		0713 700 94	*Adapter, Reducer	2		WS010001-	PF3/8XPF1/2
40		0760 710 16	*Ring, O	4		WS010001-	P14-90B
41		0710 122 09	*Elbow	7		WS010001-	
42		0785 169 UA	*Valve, Solenoid	1		WS010001-	
43		D060 028 00	*Elbow	1		WS010001-	
44		0754 804 UA	*Cock	2		WS010001-	
45		0712 310 32	*Adapter	3		WS010001-	
46		0712 311 37	*Adapter, Reducer	1		WS010001-	PF3/4XPT1/2
47		0518 100 60	*Bolt, Treatment (W/L.W, F.W)	4		WS010001-	M10X60 P=1.25
48	#	0783 965 UA	*Valve Ass'y, Pilot	1		WS010001-	Sh. No. 5-14
49		D501 059 00	*Pedal	1		WS010001-	
50		D416 915 00	*Bracket	1		WS010001-	
51		4497 989 00	*Lever	1		WS010001-	
52		4096 033 00	*Grip	1		WS010001-	
53		D406 930 00	*Pad, Rubber	1		WS010001-	
54		D406 931 00	*Pad, Rubber	1		WS010001-	
55		0710 121 00	*Elbow, 45	2		WS010001-	
56		0591 080 00	*Washer, Conical Spring	2		WS010001-	
57		0517 080 16	*Bolt, Treatment (W/L.W, F.W)	2		WS010001-	M8X16
58		0517 080 20	*Bolt, Treatment (W/L.W, F.W)	4		WS010001-	M8X20
59		0544 080 00	*Nut, Hex.	2		WS010001-	M8
60		0593 080 00	*Washer, Flat	1		WS010001-	M8

https://truckmanualshub.com/

[Memo]

https://truckmanualshub.com/

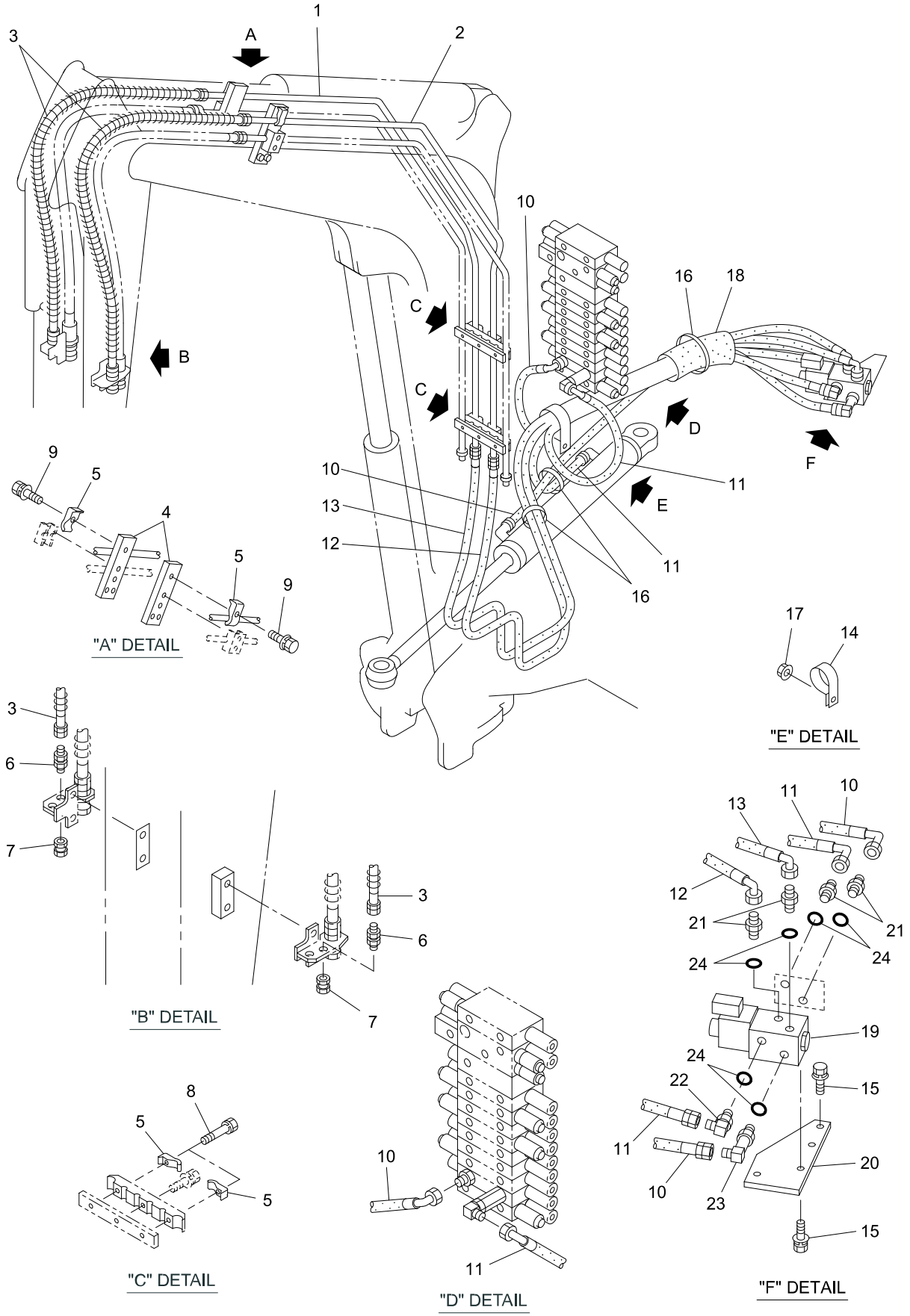

30V4-150200-1

https://truckmanualshub.com/

KEY No.	SUP.	PART No.	DESCRIPTION	Q'TY	CHAN.	SERIAL No.	REMARKS
0	×	F342 654 00	Piping Ass'y, Second Spare	1		WS010001-	
1		D286 321 00	*Tube	1		WS010001-	
2		D286 322 00	*Tube	1		WS010001-	
3		4070 642 10	*Hose Ass'y	2		WS010001-	L=950
4		D082 109 00	*Seat, Clamp	2		WS010001-	
5		4081 118 00	*Clamp, Tube	6		WS010001-	
6		D060 137 00	*Adapter	2		WS010001-	
7		0710 303 02	*Plug, Swivel	2		WS010001-	
8		0520 100 65	*Bolt, Treatment (W/L.W)	4		WS010001-	M10X65 P=1.25
9		0518 100 40	*Bolt, Treatment (W/L.W, F.W)	2		WS010001-	M10X40 P=1.25
10		4070 472 27	*Hose Ass'y	2		WS010001-	L=1080
11		4070 472 26	*Hose Ass'y	2		WS010001-	L=1170
12		4070 860 56	*Hose Ass'y	1		WS010001-	L=2940
12-1	☆	4405 310 03	*Decal (L2)	2		WS010001-	4405 310 00
13		4070 860 56	*Hose Ass'y	1		WS010001-	L=2940
13-1	☆	4405 308 03	*Decal (R2)	2		WS010001-	4405 308 00
14		4080 000 09	*Clamp, Hose	1		WS010001-	
15		0517 080 16	*Bolt, Treatment (W/L.W, F.W)	4		WS010001-	M8X16
16		0820 067 05	*Band, Cable	3		WS010001-	
17		0524 100 00	*Nut, Hex. (W/F.W)	1		WS010001-	M10 P=1.25
18		4070 504 02	*Cover, Hose	1		WS010001-	L=120
19		0787 045 UA	*Valve, Solenoid	1		WS010001-	
20		D419 547 00	*Bracket	1		WS010001-	
21		0713 700 70	*Connector	4		WS010001-	
22		0710 122 09	*Elbow	1		WS010001-	
23		D060 028 00	*Elbow	1		WS010001-	
24		0760 710 12	*Ring, O	6		WS010001-	P11-90B

https://truckmanualshub.com/

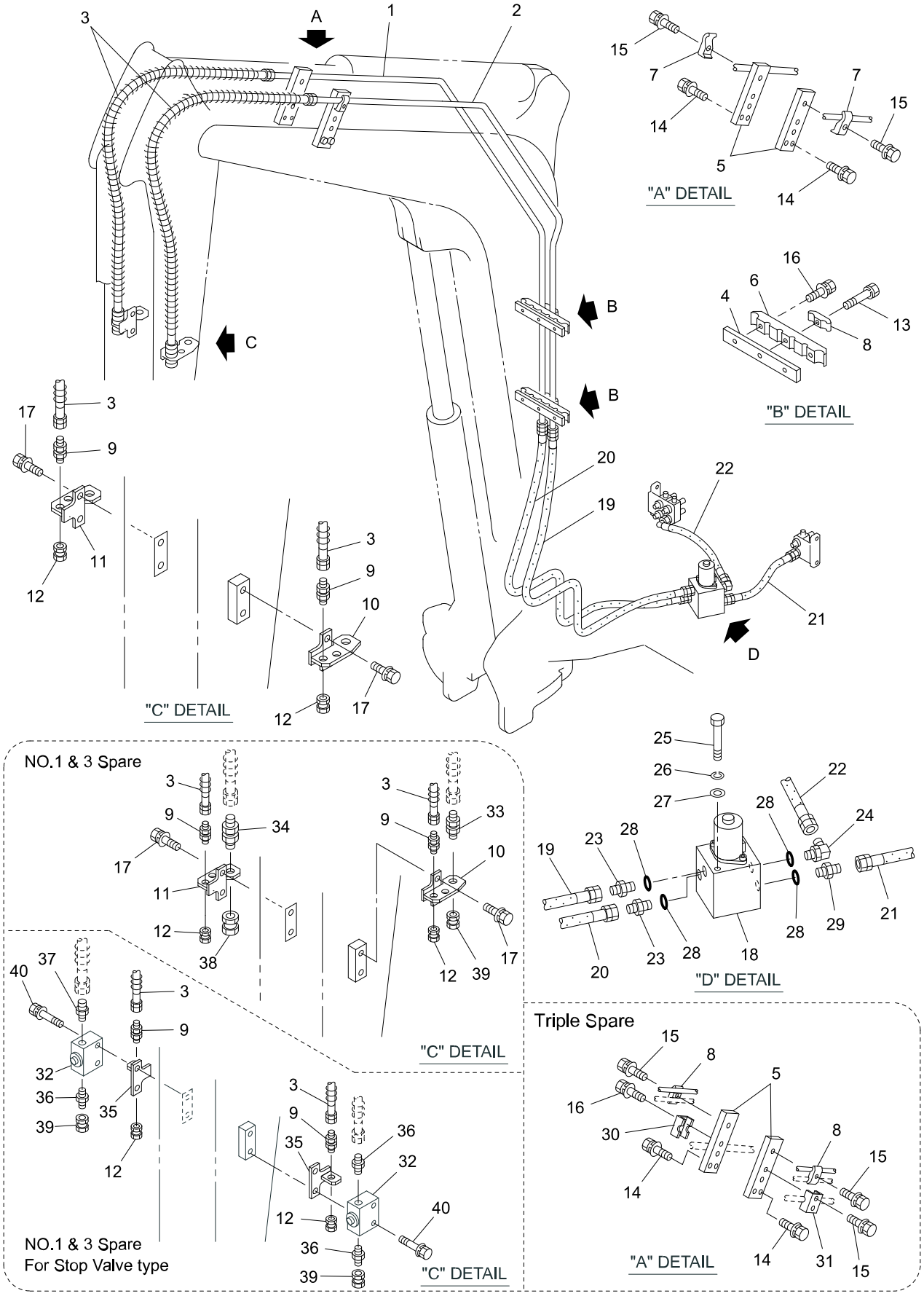

30V4-150300-1

https://truckmanualshub.com/

KEY No.	SUP.	PART No.	DESCRIPTION	Q'TY	CHAN.	SERIAL No.	REMARKS
0	×	F342 654 00	Piping Ass'y, Third Spare	1		WS010001-	
1		D286 323 00	*Tube	1		WS010001-	
2		D286 324 00	*Tube	1		WS010001-	
3		4070 642 11	*Hose Ass'y	2		WS010001-	L=1050
4		D082 107 00	*Seat, Clamp	2		WS010001-	
5		D082 109 00	*Seat, Clamp	2		WS010001-	
6		D081 194 00	*Clamp, Tube	2		WS010001-	
7		4081 118 00	*Clamp, Tube	2		WS010001-	
8		4081 189 00	*Clamp, Tube	4		WS010001-	
9		D060 137 00	*Adapter	4		WS010001-	
10		D418 812 00	*Bracket	1		WS010001-	
11		D418 813 00	*Bracket	1		WS010001-	
12		0710 303 02	*Plug, Swivel	2		WS010001-	PF1/4
13		0520 100 65	*Bolt, Treatment (W/L.W)	2		WS010001-	M10X65 P=1.25
14		0518 100 25	*Bolt, Treatment (W/L.W, F.W)	4		WS010001-	M10X25 P=1.25
15		0518 100 40	*Bolt, Treatment (W/L.W, F.W)	4		WS010001-	M10X40 P=1.25
16		0518 100 45	*Bolt, Treatment (W/L.W, F.W)	6		WS010001-	M10X45 P=1.25
17		0518 100 20	*Bolt, Treatment (W/L.W, F.W)	4		WS010001-	M10X20 P=1.25
18		0785 171 UA	*Valve Ass'y, Solenoid	1		WS010001-	
19		D070 195 23	*Hose Ass'y	1		WS010001-	L=1500
19-1	☆	4405 309 04	*Decal (L3)	2		WS010001-	4405 309 00
20		D070 195 23	*Hose Ass'y	1		WS010001-	L=1500
20-1	☆	4405 307 04	*Decal (R3)	2		WS010001-	4405 307 00
21		4070 056 47	*Hose Ass'y	1		WS010001-	L=250
22		4070 551 11	*Hose Ass'y	1		WS010001-	L=300
23		0713 700 70	*Connector	2		WS010001-	
24		0710 122 09	*Elbow	1		WS010001-	
25		0513 080 90	*Bolt, Treatment	2		WS010001-	M8X90
26		0590 080 00	*Washer, Lock	2		WS010001-	M8
27		0593 080 00	*Washer, Flat	2		WS010001-	M8
28		0760 710 12	*Ring, O	4		WS010001-	P11-90B
29		0713 700 93	*Adapter, Reducer	1		WS010001-	PF1/4XPF3/8
30		D081 023 00	*Clamp, Tube	1		WS010001-	
31		D081 192 00	*Clamp, Tube	1		WS010001-	
32		0754 804 UA	*Cock	2		WS010001-	
33		D060 451 00	*Connector	1		WS010001-	
34		D060 500 00	*Connector	1		WS010001-	
35		D418 815 00	*Bracket	2		WS010001-	
36		0712 310 32	*Adapter	3		WS010001-	
37		0712 311 37	*Adapter, Reducer	1		WS010001-	PF3/4XPT1/2
38		0710 303 06	*Plug, Swivel	1		WS010001-	

https://truckmanualshub.com/

KEY No.	SUP.	PART No.	DESCRIPTION	Q'TY	CHAN.	SERIAL No.	REMARKS
39		0710 303 04	*Plug, Swivel	2		WS010001-	
40		0518 100 60	*Bolt, Treatment (W/L.W, F.W)	4		WS010001-	M10X60 P=1.25

https://truckmanualshub.com/

[Memo]

https://truckmanualshub.com/

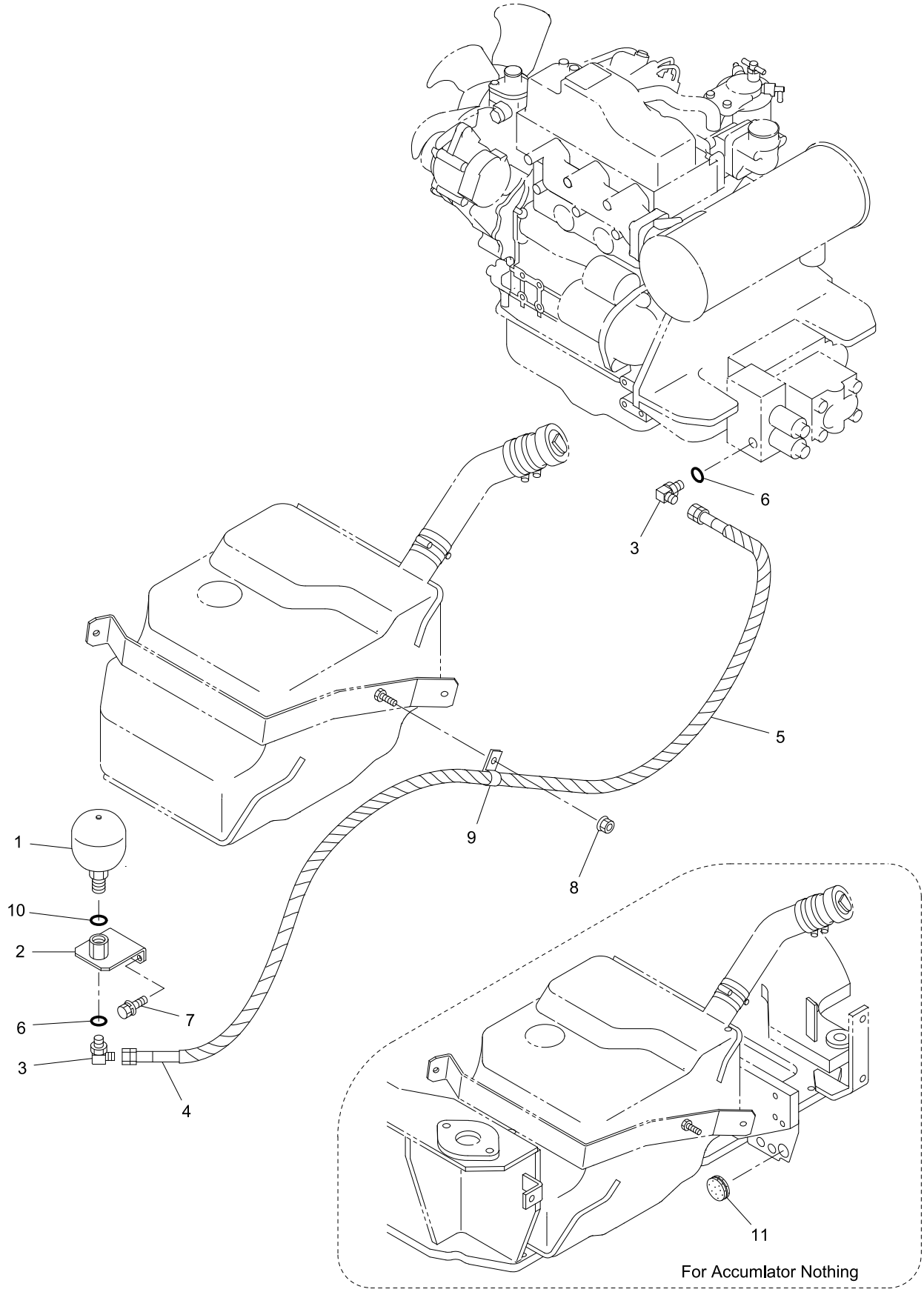

30V4-150400-1

https://truckmanualshub.com/

KEY No.	SUP.	PART No.	DESCRIPTION	Q'TY	CHAN.	SERIAL No.	REMARKS
0	×	F342 675 00	Accumulator Ass'y	0		WS010001-	
1		0759 301 UA	*Accumulator	1		WS010001-	
2		D060 518 00	*Connector	1		WS010001-	
3		0710 122 10	*Elbow	2		WS010001-	
4		4070 056 40	*Hose Ass'y	1		WS010001-	L=1150
5		0820 803 05	*Tube, Corrugate	M		WS010001-	L=1050
6		0760 710 16	*Ring, O	2		WS010001-	P14-90B
7		0518 100 20	*Bolt, Treatment (W/L.W, F.W)	2		WS010001-	M10X20 P=1.25
8		0524 100 00	*Nut, Hex. (W/F.W)	1		WS010001-	M10 P=1.25
9		4080 000 04	*Clamp, Hose	1		WS010001-	
10		0760 710 19	*Ring, O	1		WS010001-	P18-90B
11		0910 940 26	*Grommet	1		WS010001-	

https://truckmanualshub.com/

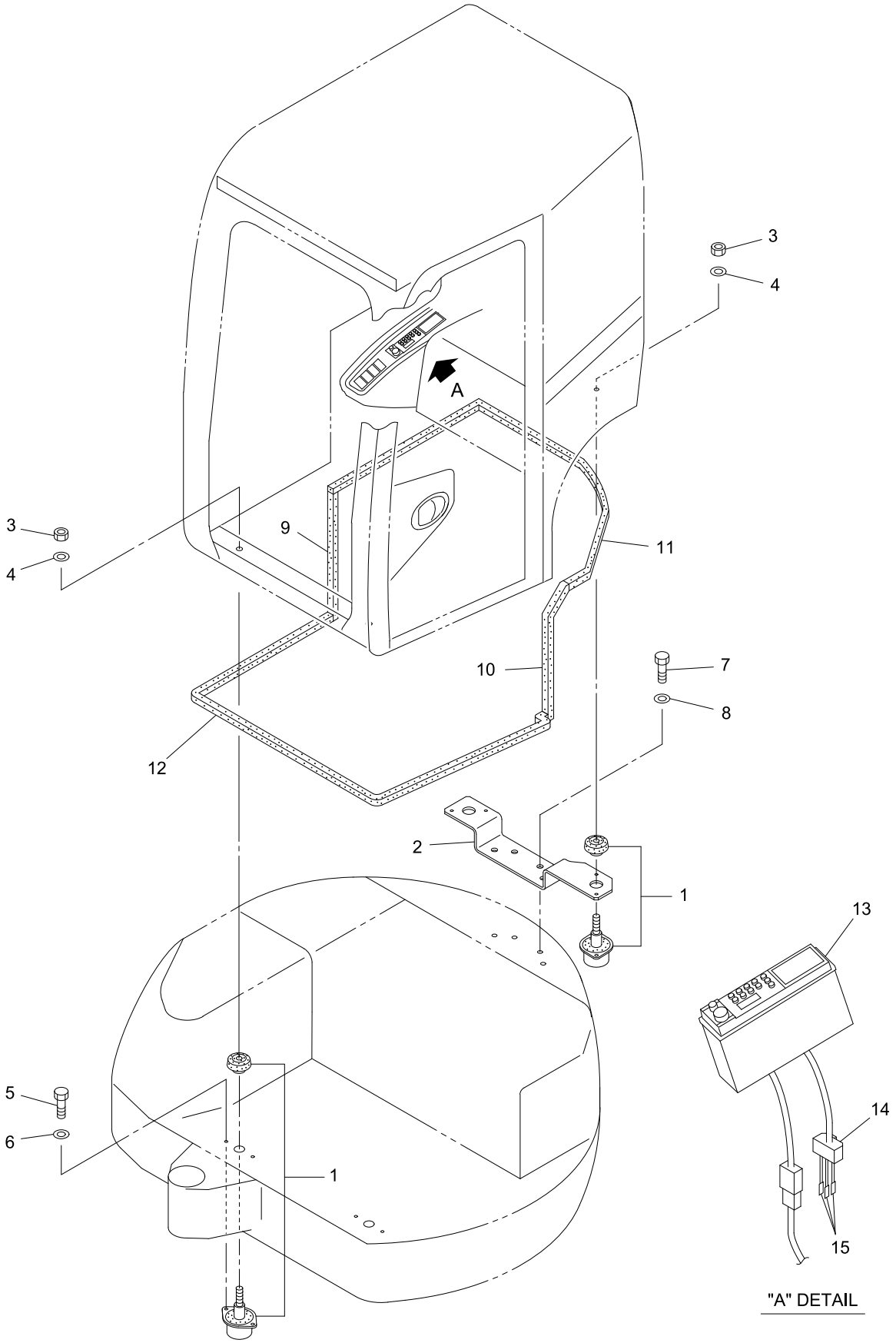

V4ALL-150500-1

https://truckmanualshub.com/

KEY No.	SUP.	PART No.	DESCRIPTION	Q'TY	CHAN.	SERIAL No.	REMARKS
0	×	F355 182 00	Room Ass'y, Operator	1		WS010001-	
1		0690 203 15	*Mount, Cab	4		WS010001-	
2		D418 455 00	*Bracket	1		WS010001-	
3		0585 200 00	*Nut, Treatment	4		WS010001-	M20, M20
4		0595 200 00	*Washer, Treatment	4		WS010001-	M20, M20
5		0555 100 40	*Bolt, Treatment	8		WS010001-	M10X40, M10X40
6		0595 100 00	*Washer, Treatment	8		WS010001-	M10, M10
7		0555 160 50	*Bolt, Treatment	4		WS010001-	M16X50, M16X50
8		0595 160 00	*Washer, Treatment	4		WS010001-	M16, M16
9		4550 906 23	*Seal, Sponge	1		WS010001-	L=500
10		4550 906 24	*Seal, Sponge	1		WS010001-	L=550
11		4550 906 25	*Seal, Sponge	1		WS010001-	L=1900
12		4550 906 26	*Seal, Sponge	1		WS010001-	L=2250
13		0850 500 10	*Radio	1		WS010001-	For Japanese
14		0830 408 00	*Housing	1		WS010001-	
15		0820 657 08	*Terminal	3		WS010001-	

https://truckmanualshub.com/

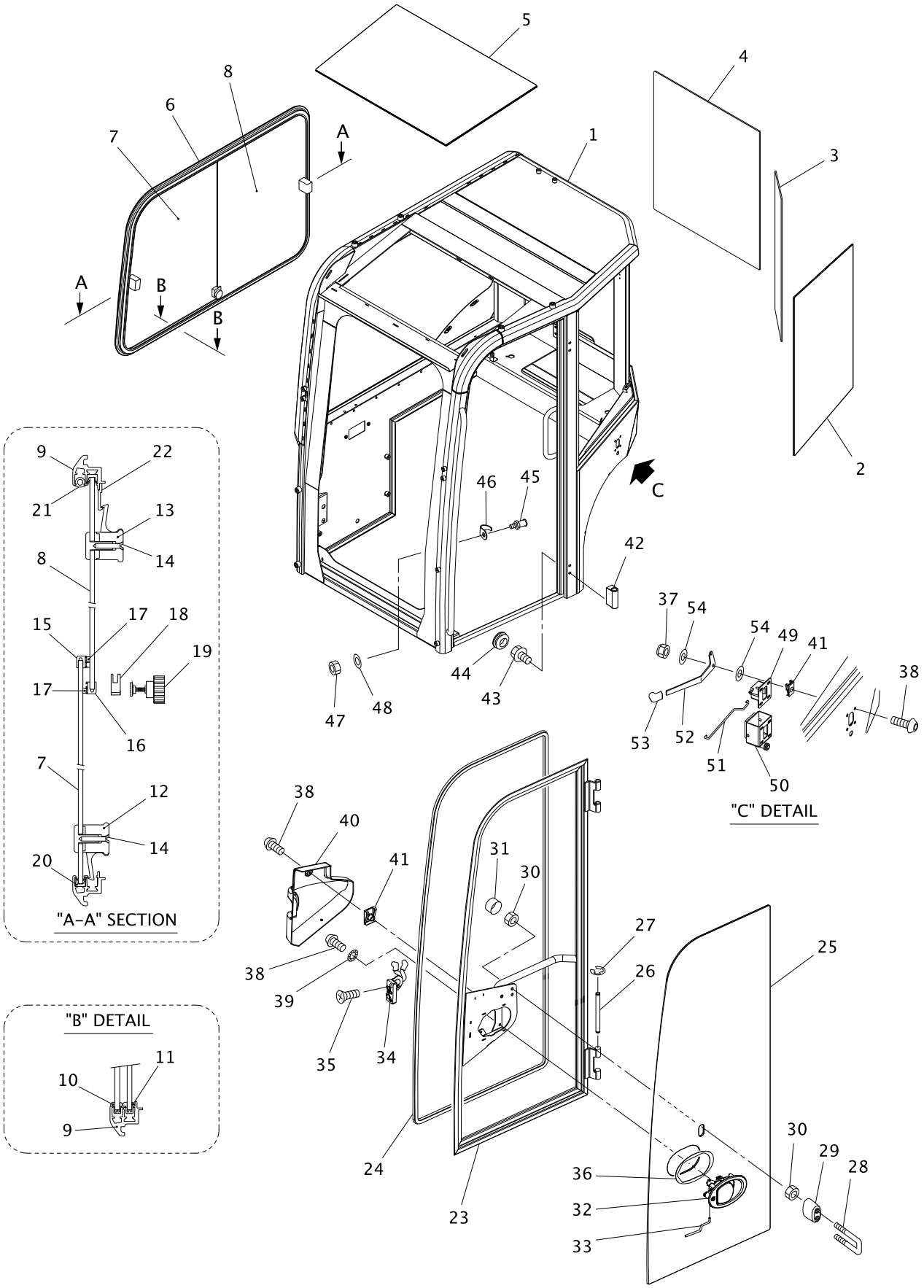

https://truckmanualshub.com/

KEY No.	SUP.	PART No.	DESCRIPTION	Q'TY	CHAN.	SERIAL No.	REMARKS
0	×	3034212018	Cabin Ass'y (Dark Grey)	1		WS010001-	
0-1	×	3034212019	Cabin Ass'y (Light Grey)	1		WS010001-	
1		F354 810 00	*Cabin (Dark Grey)	1		WS010001-	
1-1		5290105300	*Cabin (Light Grey)	1		WS010001-	
2		4016000000	*Glass (L.H.)	1		WS010001-	
3		4016000001	*Glass (Rear Side)	1		WS010001-	
4		4016000002	*Glass (Rear)	1		WS010001-	
5		4016000003	*Glass (Roof)	1		WS010001-	
6		4016000004	*Window Ass'y, Side	1		WS010001-	
7		4016000005	**Glass (Front)	1		WS010001-	
8		4016000006	**Glass (Rear)	1		WS010001-	
9		4016000007	**Frame, Glass	1		WS010001-	
10		4016000008	**Shoe (Front)	1		WS010001-	
11		4016000009	**Shoe (Rear)	1		WS010001-	
12		4016000010	**Handle, Sliding (Front)	1		WS010001-	
13		4016000011	**Handle, Sliding (Rear)	1		WS010001-	
14		4016000012	**Bolt	4		WS010001-	4.8X32
15		4016000013	**Support, Brush (Front)	1		WS010001-	
16		4016000014	**Support, Brush (Rear)	2		WS010001-	
17		4016000015	**Brush	3		WS010001-	
18		4016000016	**Glass Blocking	1		WS010001-	
19		4016000017	**Handle, Glass Blocking	1		WS010001-	
20		4016000018	**Support, Sliding	2		WS010001-	
21		4016000019	**Gasket	2		WS010001-	
22		4016000020	**Handle, Stop	1		WS010001-	
23		4016000021	*Frame, Door (Dark Grey)	1		WS010001-	
23-1		4016000022	*Frame, Door (Light Grey)	1		WS010001-	
24		4016000023	*Gasket	1		WS010001-	L=4050
25		4016000024	*Glass (Door)	1		WS010001-	
26		4015000088	*Pin, Hinge	2		WS010001-	
27		4015000092	*Ring, Elastic	4		WS010001-	d=10
28		4016000025	*Hook, Door Stop	1		WS010001-	L=94
28-1		4016000026	*Hook, Door Stop	1		WS010001-	L=120
29		4016000027	*Absorber, Shock	1		WS010001-	H=50
29-1		4016000028	*Absorber, Shock	1		WS010001-	H=77
30		4016000029	*Nut, Special	4		WS010001-	M8
31		4012000206	*Cap	2		WS010001-	M8
32		4016000030	*Handle Ass'y	1		WS010001-	
33		4016000031	*Rod	1		WS010001-	
34		4013001426	*Lock, Door	1		WS010001-	
35		3442505	*Bolt	1		WS010001-	M8X40
36		4012000390	*Gasket	1		WS010001-	
37		4015000091	*Nut	1		WS010001-	M8
38		4016000033	*Bolt	10		WS010001-	M6X16
39		4012000185	*Washer Toothed	4		WS010001-	M6

https://truckmanualshub.com/

KEY No.	SUP.	PART No.	DESCRIPTION	Q'TY	CHAN.	SERIAL No.	REMARKS
40		4016000034	*Cover	1		WS010001-	
41		4016000035	*Clip	6		WS010001-	M6
42		4016000036	*Hinge	2		WS010001-	
43		4016000037	*Bolt	4		WS010001-	M8X16
44		4016000038	*Cap	4		WS010001-	d=20
45		4013001417	*Block	1		WS010001-	
46		4013001418	*Block, Security	1		WS010001-	
47		4012000260	*Nut	1		WS010001-	M12X1
48		4015000109	*Washer Flat	1		WS010001-	12.5X28
49		4012000138	*Door Stop	1		WS010001-	
50		4012000257	*Bracket	1		WS010001-	
51		4016000039	*Rod, Tie	1		WS010001-	
52		4016000040	*Lever	1		WS010001-	
53		4012000259	*Handle	1		WS010001-	
54		4016000041	*Washer Flat	2		WS010001-	8.5X24

https://truckmanualshub.com/

[Memo]

https://truckmanualshub.com/

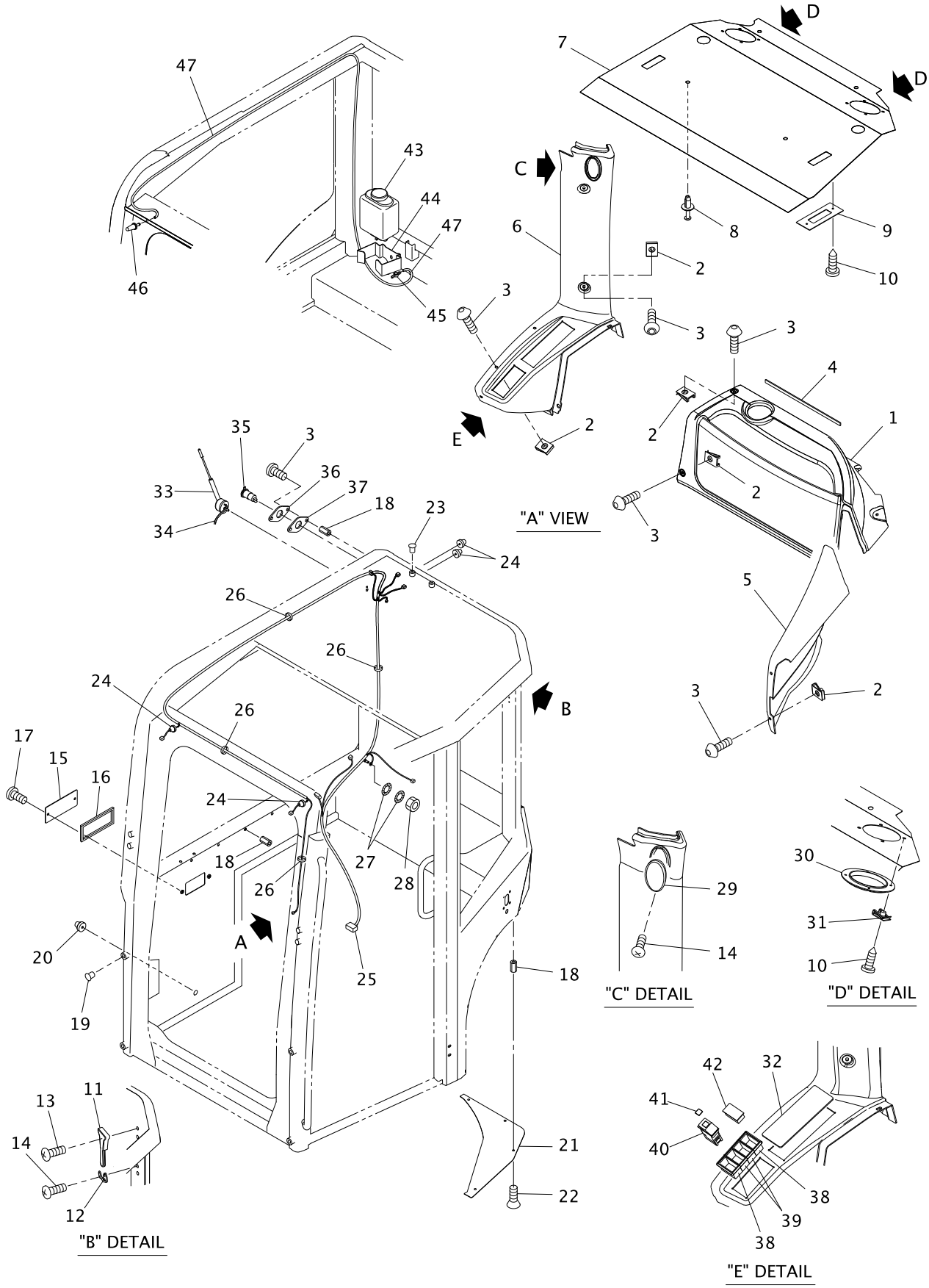

V4ALL-150700-1

https://truckmanualshub.com/

KEY No.	SUP.	PART No.	DESCRIPTION	Q'TY	CHAN.	SERIAL No.	REMARKS
0	×	3034212018	Cabin Ass'y (Dark Grey)	1		WS010001-	
0-1	×	3034212019	Cabin Ass'y (Light Grey)	1		WS010001-	
1		4016000042	*Cover (Rear)	1		WS010001-	
2		4016000035	*Clip	12		WS010001-	M6
3		4016000033	*Bolt	12		WS010001-	M6X16
4		4016000043	*Gasket	1		WS010001-	L=325
5		4016000044	*Cover (Left)	1		WS010001-	
6		4016000045	*Cover (Right Upright)	1		WS010001-	
7		4016000046	*Roof Coating	1		WS010001-	
8		4016000047	*Clip	4		WS010001-	d=8
9		4016000048	*Bracket	2		WS010001-	
10		4016000049	*Bolt	8		WS010001-	4.2X22
11		4016000050	*Hammer, Emergency	1		WS010001-	
12		4012000239	*Hook	1		WS010001-	
13		4012000291	*Bolt	2		WS010001-	3.5X16
14		4016000051	*Bolt	4		WS010001-	4.2X13
15		4016000052	*Bracket	1		WS010001-	
16		4016000053	*Gasket	1		WS010001-	L=470
17		4016000054	*Bolt	2		WS010001-	M6X12
18		4012000356	*Nut	11		WS010001-	M6
19		4016000055	*Plug	8		WS010001-	d=13X11
20		4012000297	*Plug, Rubber	1		WS010001-	
21		4016000056	*Plate (Lower)	1		WS010001-	
22		4016000057	*Bolt	4		WS010001-	M6X16
23		4016000058	*Plug	8		WS010001-	d=12X11.5
24		4012000367	*Plug, Rubber	4		WS010001-	
25		4016000059	*Harness	1		WS010001-	
26		4016000060	*Band, Cable	6		WS010001-	4.8X200
27		4012000185	*Washer Toothed	2		WS010001-	M6
28		4012000303	*Nut	1		WS010001-	M6
29		4016000061	*Light	1		WS010001-	
30		4016000062	*Cover, Audio	1		WS010001-	
31		4016000063	*Clip	4		WS010001-	
32		4012000274	*Cover	1		WS010001-	
33		4012000314	*Antenna	1		WS010001-	
34		4012000316	*Cable, Antenna	1		WS010001-	L=2300
35		4016000064	*Plug	1		WS010001-	
36		4016000065	*Bracket	1		WS010001-	
37		4016000066	*Gasket	1		WS010001-	
38		4012000251	*Frame, Side Switch	2		WS010001-	
39		4012000252	*Frame, Central Switch	2		WS010001-	
40		4012000250	*Switch, Wiper	1		WS010001-	
41		4012000254	*Label	1		WS010001-	
42		4012000255	*Cap	3		WS010001-	
43		4012000256	*Tank	1		WS010001-	

https://truckmanualshub.com/

KEY No.	SUP.	PART No.	DESCRIPTION	Q'TY	CHAN.	SERIAL No.	REMARKS
44		4016000067	*Bracket	1		WS010001-	
45		4012000216	*Valve, Connection	1		WS010001-	
46		4012000245	*Atomizer	1		WS010001-	
47		4016000068	*Pipe	1		WS010001-	L=2550

https://truckmanualshub.com/

[Memo]

https://truckmanualshub.com/

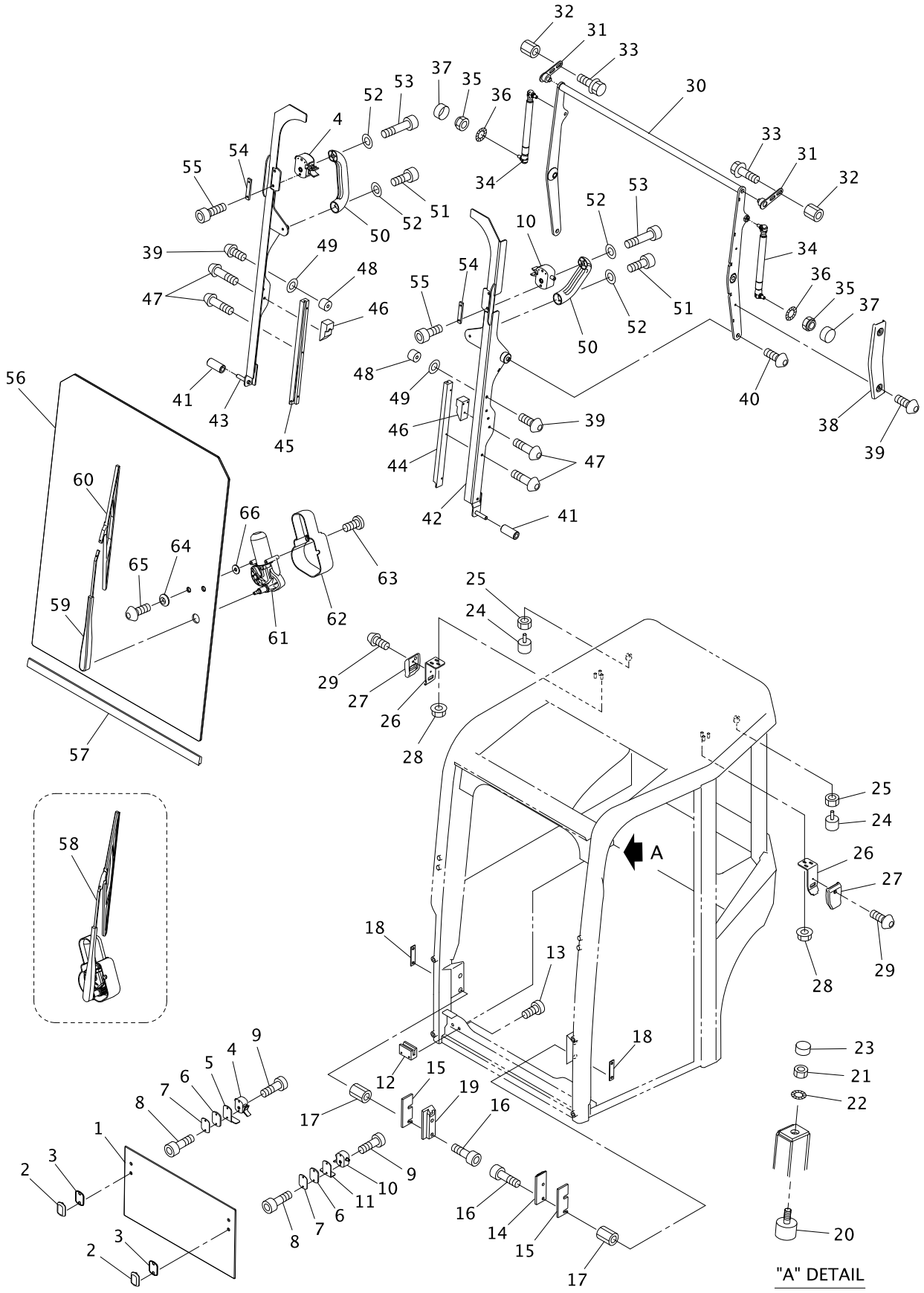

V4ALL-150800-1

https://truckmanualshub.com/

KEY No.	SUP.	PART No.	DESCRIPTION	Q'TY	CHAN.	SERIAL No.	REMARKS
0	×	3034212018	Cabin Ass'y (Dark Grey)	1		WS010001-	
0-1	×	3034212019	Cabin Ass'y (Light Grey)	1		WS010001-	
1		4016000069	*Glass	1		WS010001-	
2		4016000070	*Lock, Cover	2		WS010001-	
3		4016000071	*Gasket	2		WS010001-	
4		4016000072	*Lock (R.H.)	2		WS010001-	
5		4016000073	*Handle (R.H.)	1		WS010001-	
6		4016000074	*Spacer	2		WS010001-	
7		4016000075	*Gasket	2		WS010001-	
8		4016000076	*Bolt	4		WS010001-	M6X25
9		4016000077	*Bolt	2		WS010001-	M8X25
10		4016000078	*Lock (L.H.)	2		WS010001-	
11		4016000079	*Handle (L.H.)	1		WS010001-	
12		4016000080	*Shoe (Lower)	2		WS010001-	
13		4016000081	*Bolt	4		WS010001-	M8X20
14		4016000082	*Shoe (L.H.)	1		WS010001-	
15		4016000083	*Spacer	2		WS010001-	
16		4016000084	*Bolt	4		WS010001-	M8X35
17		4012000370	*Nut	4		WS010001-	M8
18		4016000085	*Bracket	2		WS010001-	
19		4016000086	*Shoe (R.H.)	1		WS010001-	
20		4016000087	*Stopper, Rubber	2		WS010001-	M6X15 H=15
21		4012000186	*Nut	2		WS010001-	M6
22		4012000185	*Washer Toothed	2		WS010001-	M6
23		4012000240	*Cap	2		WS010001-	M6
24		4016000088	*Stopper, Rubber	2		WS010001-	M6X18 H=20
25		4016000089	*Nut, Lock	2		WS010001-	M6
26		4016000090	*Bracket	2		WS010001-	
27		4016000091	*Protection, Door	2		WS010001-	
28		4016000029	*Nut, Special	6		WS010001-	M8
29		4016000033	*Bolt	2		WS010001-	M6X16
30		4016000092	*Frame, Door	1		WS010001-	
31		4016000093	*Bracket	2		WS010001-	
32		4016000094	*Nut	4		WS010001-	M8
33		4016000095	*Bolt	4		WS010001-	M8X20
34		4016000096	*Spring, Gas	2		WS010001-	400N-M8
35		4015000091	*Nut, Lock	2		WS010001-	M8
36		4012000428	*Washer, Special	4		WS010001-	M8
37		4012000206	*Cap	2		WS010001-	M8
38		4016000097	*Cover	1		WS010001-	
39		4016000054	*Bolt	4		WS010001-	M6X12
40		4016000098	*Bolt	2		WS010001-	M8X25
41		4016000099	*Bushing	2		WS010001-	
42		4016000100	*Frame (L.H.)	1		WS010001-	
43		4016000101	*Frame (R.H.)	1		WS010001-	

https://truckmanualshub.com/

KEY No.	SUP.	PART No.	DESCRIPTION	Q'TY	CHAN.	SERIAL No.	REMARKS
44		4016000102	*Guide (L.H.)	1		WS010001-	
45		4016000103	*Guide (R.H.)	1		WS010001-	
46		4016000104	*Shoe	2		WS010001-	
47		4013001450	*Bolt	10		WS010001-	M5X16
48		4016000105	*Stopper, Rubber	2		WS010001-	M6 H=15
49		4012000215	*Washer Flat	2		WS010001-	
50		4016000106	*Handle	2		WS010001-	
51		4016000107	*Bolt	2		WS010001-	M8X20
52		4012000189	*Washer Flat	4		WS010001-	M8
53		4016000108	*Bolt	2		WS010001-	M8X40
54		4016000109	*Bracket	2		WS010001-	
55		4016000110	*Bolt	4		WS010001-	M6X14
56		4016000111	*Glass	1		WS010001-	
57		4016000112	*Gasket	1		WS010001-	L=775
58		4016000113	*Wiper	1		WS010001-	
59		4013001438	**Arm, Wiper	1		WS010001-	
60		4013001437	**Blade, Wiper	1		WS010001-	L=400
61		4016000114	**Motor, Wiper	1		WS010001-	
62		4012000352	**Cover, Motor	1		WS010001-	
63		4016000033	*Bolt	2		WS010001-	M6X16
64		4012000210	*Washer, Nylon	2		WS010001-	d=19.5
65		4016000115	*Bolt	2		WS010001-	M6X25
66		4016000116	*Washer, Special	2		WS010001-	d=6.5X18

https://truckmanualshub.com/

[Memo]

https://truckmanualshub.com/

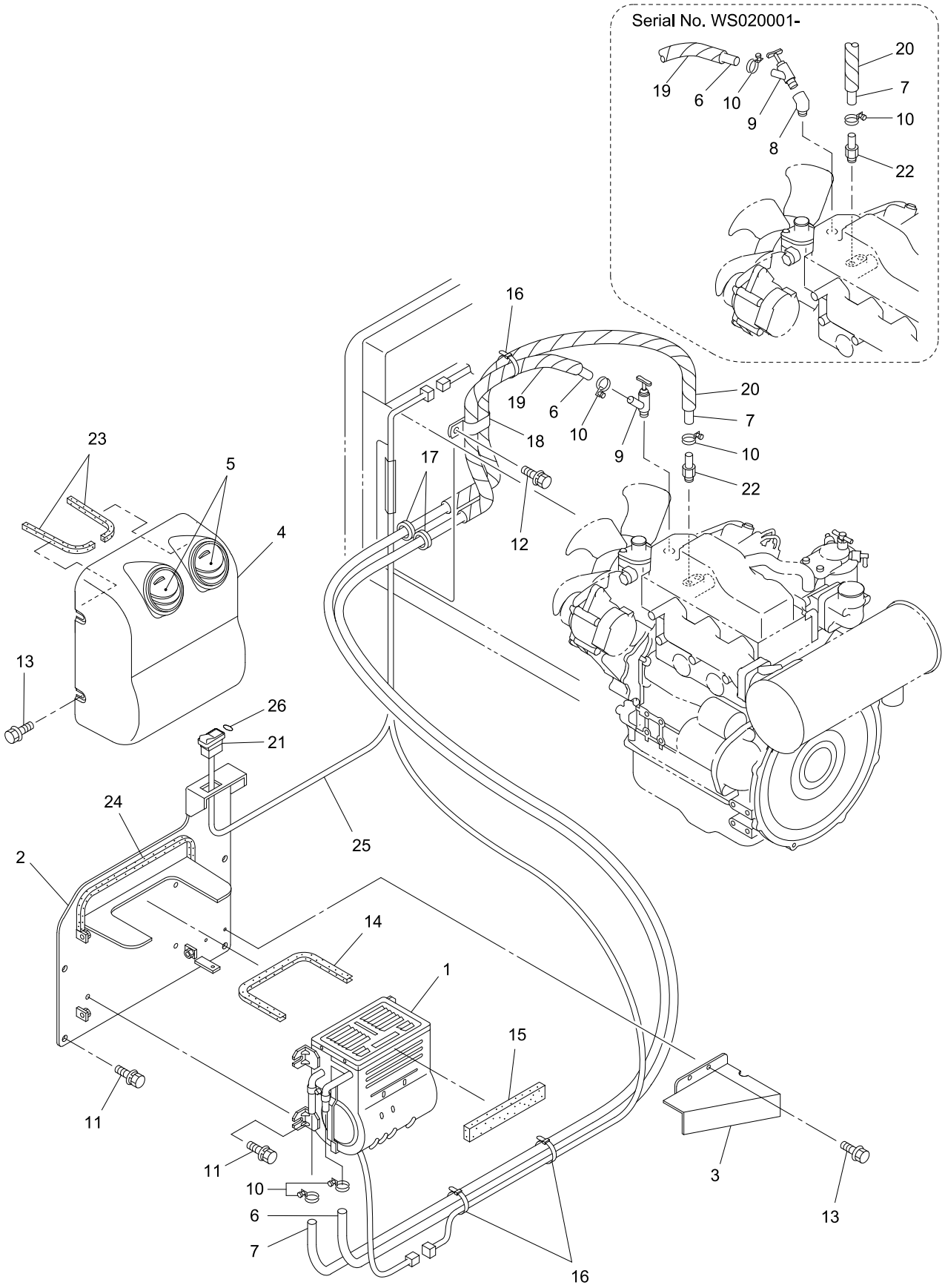

30V4-150900-1

https://truckmanualshub.com/

KEY No.	SUP.	PART No.	DESCRIPTION	Q'TY	CHAN.	SERIAL No.	REMARKS
0	×	F355 230 00	Heater Ass'y, Car	1		WS010001-	
1		0857 056 03	*Heater, Car	1		WS010001-	
2		D419 472 00	*Bracket	1		WS010001-	
3		D458 149 00	*Cover	1		WS010001-	
4		D465 358 00	*Panel	1		WS010001-	
5		0820 023 16	*Duct	2		WS010001-	
6		4070 102 29	*Hose, Water	M		WS010001-	L=1150
7		4070 102 17	*Hose, Water	M		WS010001-	L=1300
8		0710 124 07	*Elbow, 45	1		WS020001-	
9		0729 910 35	*Valve	1		WS010001-	
10		0690 083 05	*Clamp, Hose	4		WS010001-	
11		0518 100 20	*Bolt, Treatment (W/L.W, F.W)	8		WS010001-	M10X20 P=1.25
12		0517 080 20	*Bolt, Treatment (W/L.W, F.W)	1		WS010001-	M8X20
13		0438 060 16	*Bolt, Treatment (W/L.W, F.W)	6		WS010001-	M6X16
14		4550 726 00	*Seal	M		WS010001-	L=400
15		D493 439 01	*Panel, Sponge	1		WS010001-	
16		0820 067 05	*Band, Cable	3		WS010001-	
17		0910 942 02	*Grommet	2		WS010001-	
18		4080 000 25	*Clamp, Hose	1		WS010001-	
19		0820 803 06	*Tube, Corrugate	M		WS010001-	L=300
20		0820 803 06	*Tube, Corrugate	M		WS010001-	L=500
21		0858 314 34	*Switch Ass'y, Heater	1		WS010001-	
22		4072 220 00	*Nipple	1		WS010001-	
23		D493 626 00	*Panel, Sponge	2		WS010001-	
24		D493 732 00	*Panel, Sponge	1		WS010001-	
25		D592 309 00	*Harness	1		WS010001-	
26		D407 820 00	*Decal	1		WS010001-	

https://truckmanualshub.com/

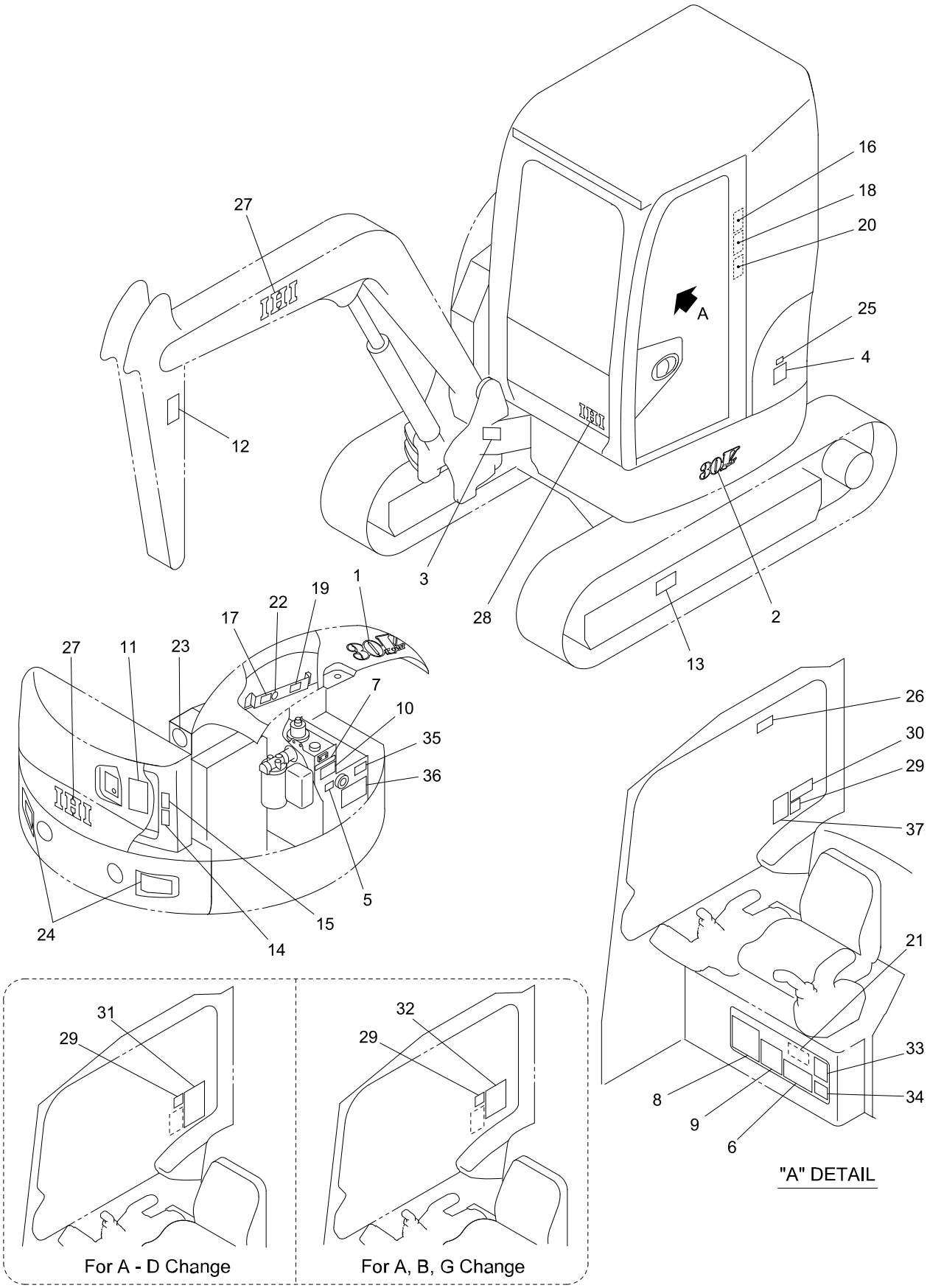

30V4-151000-1

https://truckmanualshub.com/

KEY No.	SUP.	PART No.	DESCRIPTION	Q'TY	CHAN.	SERIAL No.	REMARKS
0	×	F377 842 00	Decal Ass'y	1		WS010001-	
0-1	×	F377 855 00	Decal Ass'y	1		WS010001-	
0-2	×	F377 856 00	Decal Ass'y	1		WS010001-	
1		D408 405 00	*Decal (Model)	1		WS010001-	
2		D408 414 00	*Decal (Model)	1		WS010001-	
3	×	D405 094 00	*Decal (Serial No.)	1		WS010001-	
3-1		0497 035 00	*Screw, Drive	4		WS010001-	d=3
4		D408 324 00	*Decal (Oil)	1		WS010001-	
5		D406 490 00	*Decal (Oil Check)	1		WS010001-	
6		D408 313 00	*Decal (Lub. Chart)	1		WS010001-	
7		4447 479 00	*Decal (Oil)	1		WS010001-	
8		D407 877 00	*Decal (Engine Daily Check)	1		WS010001-	
9		D406 597 00	*Decal (Safety Works)	1		WS010001-	
10		D408 328 00	*Decal (Tank Decompression)	1		WS010001-	
11		D405 450 00	*Decal (Safety Swing)	1		WS010001-	
12		D405 454 00	*Decal (Caution)	2		WS010001-	
13		D405 455 00	*Decal (Caution)	2		WS010001-	
14		D405 424 00	*Decal (Caution)	1		WS010001-	
15		D405 452 00	*Decal (Caution)	1		WS010001-	
16		D405 332 00	*Decal (Caution)	1		WS010001-	
17		D405 462 00	*Decal (Caution)	1		WS010001-	
18		D405 451 00	*Decal (Caution)	1		WS010001-	
19		D405 463 00	*Decal (Caution)	1		WS010001-	
20		D405 449 00	*Decal (Caution)	1		WS010001-	
21		D405 373 00	*Decal (Caution)	1		WS010001-	
22		4407 035 00	*Decal (Anti-Freezing Solution)	1		WS010001-	
23		D406 631 00	*Decal (Environment)	1		WS010001-	
24		D408 371 00	*Decal (Reflector)	2		WS010001-	
25		D407 943 00	*Decal (EPA Regulation)	1		WS010001-	
26		D405 453 00	*Decal (Caution)	1		WS010001-	
27		D408 402 00	*Decal (IHI)	3		WS010001-	
28		D408 403 00	*Decal (IHI)	1		WS010001-	
29		D406 630 00	*Decal (Blade, Pedal)	1		WS010001-	
30		D406 622 00	*Decal (Control A)	1		WS010001-	
30-1		D406 623 00	*Decal (Control B)	1		WS010001-	
30-2		D406 624 00	*Decal (Control C)	1		WS010001-	
30-3		D406 625 00	*Decal (Control D)	1		WS010001-	
30-4		D406 627 00	*Decal (Control G)	1		WS010001-	
31		D406 628 00	*Decal (Control A-D)	1		WS010001-	
32		D406 629 00	*Decal (Control A, B, G)	1		WS010001-	
33		D408 315 00	*Decal (Specification)	1		WS010001-	
34		D408 225 00	*Decal (Bucket Specification)	1		WS010001-	
35		4447 874 00	*Decal (Spare Piping Change)	1		WS010001-	
36		4447 653 00	*Decal (Breaker Cation)	1		WS010001-	
37		D407 056 00	*Decal (Spare Pedal)	1		WS010001-	

https://truckmanualshub.com/

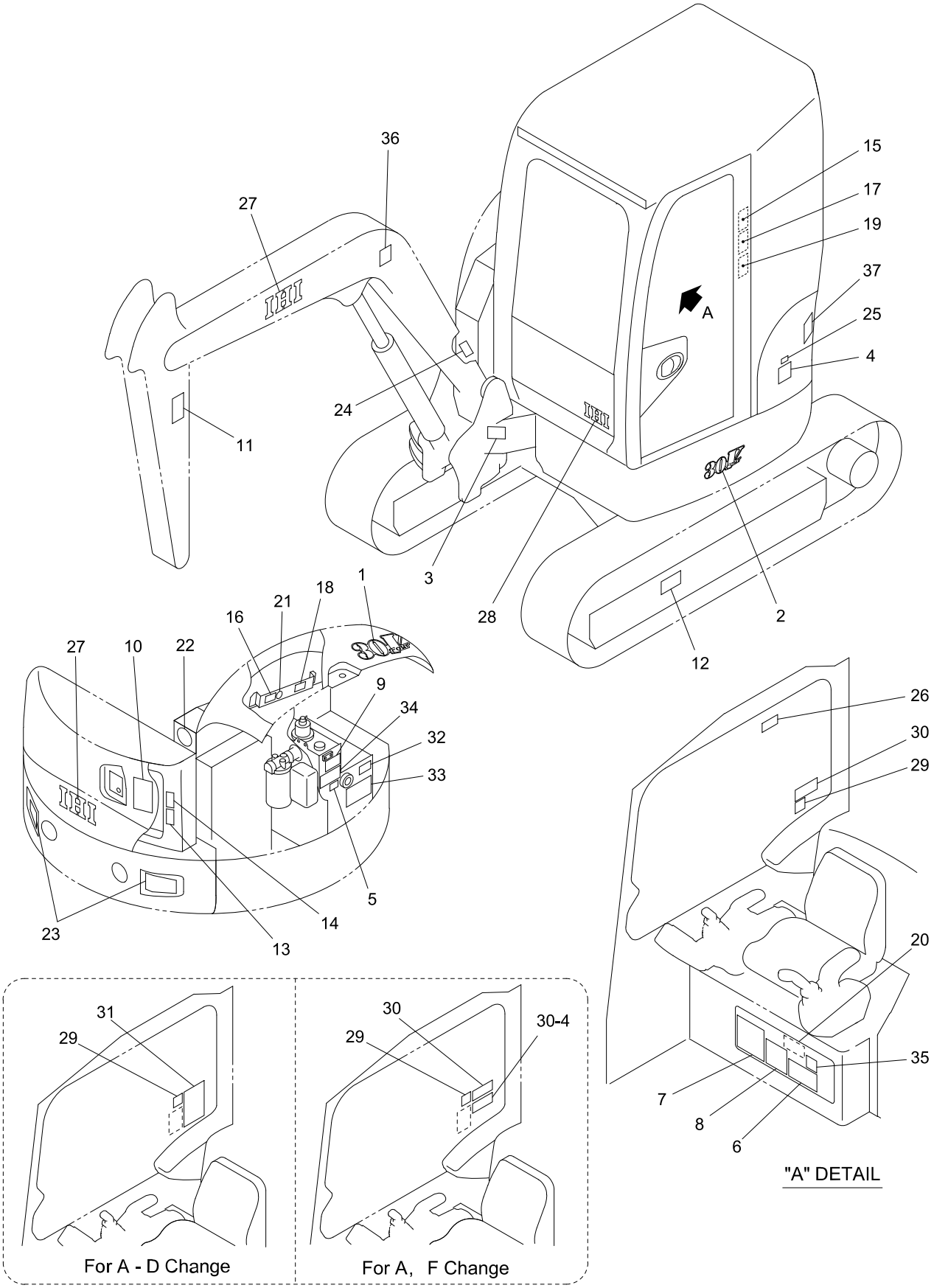

30V4-15100A-1

https://truckmanualshub.com/

KEY No.	SUP.	PART No.	DESCRIPTION	Q'TY	CHAN.	SERIAL No.	REMARKS
0	×	F377 842 00	Decal Ass'y	1		WS010001-	
0-1	×	F377 855 00	Decal Ass'y	1		WS010001-	
1		D408 405 00	*Decal (Model)	1		WS010001-	
2		D408 414 00	*Decal (Model)	1		WS010001-	
3	×	D405 094 00	*Decal (Serial No.)	1		WS010001-	
3-1	×	D405 091 00	*Decal (Serial No.) (CE)	1		WS010001-	
3-2		0497 035 00	*Screw, Drive	4		WS010001-	d=3
4		4407 974 00	*Decal (Oil)	1		WS010001-	
5		D406 504 00	*Decal (Oil Check)	1		WS010001-	
6		D408 355 00	*Decal (Lub. Chart)	1		WS010001-	
7		D407 887 00	*Decal (Engine Daily Check)	1		WS010001-	
8		4406 458 00	*Decal (Safety Works)	1		WS010001-	
9		D408 424 00	*Decal (Tank Decompression)	1		WS010001-	
10		D405 507 00	*Decal (Safety Swing)	1		WS010001-	
11		D405 511 00	*Decal (Caution)	2		WS010001-	
12		D405 505 00	*Decal (Caution)	2		WS010001-	
13		D405 366 00	*Decal (Caution)	1		WS010001-	
14		D405 509 00	*Decal (Caution)	1		WS010001-	
15		D405 359 00	*Decal (Caution)	1		WS010001-	
16		D405 503 00	*Decal (Caution)	1		WS010001-	
17		D405 508 00	*Decal (Caution)	1		WS010001-	
18		D405 504 00	*Decal (Caution)	1		WS010001-	
19		D405 506 00	*Decal (Caution)	1		WS010001-	
20		D405 323 00	*Decal (Caution)	1		WS010001-	
21		4407 035 00	*Decal (Anti-Freezing Solution)	1		WS010001-	
22		D406 783 00	*Decal (Environment)	1		WS010001-	
23		D408 371 00	*Decal (Reflector)	2		WS010001-	
24	×	D405 097 00	*Decal (New Machine)	1		WS010001-	
25		D407 943 00	*Decal (EPA Regulation)	1		WS010001-	
26		D405 510 00	*Decal (Caution)	1		WS010001-	
27		D408 402 00	*Decal (IHI)	3		WS010001-	
28		D408 403 00	*Decal (IHI)	1		WS010001-	
29		D406 630 00	*Decal (Blade, Pedal)	1		WS010001-	
30		D406 622 00	*Decal (Control A)	1		WS010001-	
30-1		D406 623 00	*Decal (Control B)	1		WS010001-	
30-2		D406 624 00	*Decal (Control C)	1		WS010001-	
30-3		D406 625 00	*Decal (Control D)	1		WS010001-	
30-4		D406 626 00	*Decal (Control F)	1		WS010001-	
31		D406 628 00	*Decal (Control A-D)	1		WS010001-	
32		4448 651 00	*Decal (Spare Piping Change)	1		WS010001-	
33		4447 857 00	*Decal (Breaker Cation)	1		WS010001-	
34		D408 322 00	*Decal (Boom Lowering)(CE)	1		WS010001-	
35		4448 474 00	*Decal (Transport Fix)(CE)	1		WS010001-	
36		D408 340 00	*Decal (Lifting Procedures)(CE)	1		WS010001-	
37		D406 154 00	*Decal (Noise 94)(CE)	1		WS010001-	

https://truckmanualshub.com/

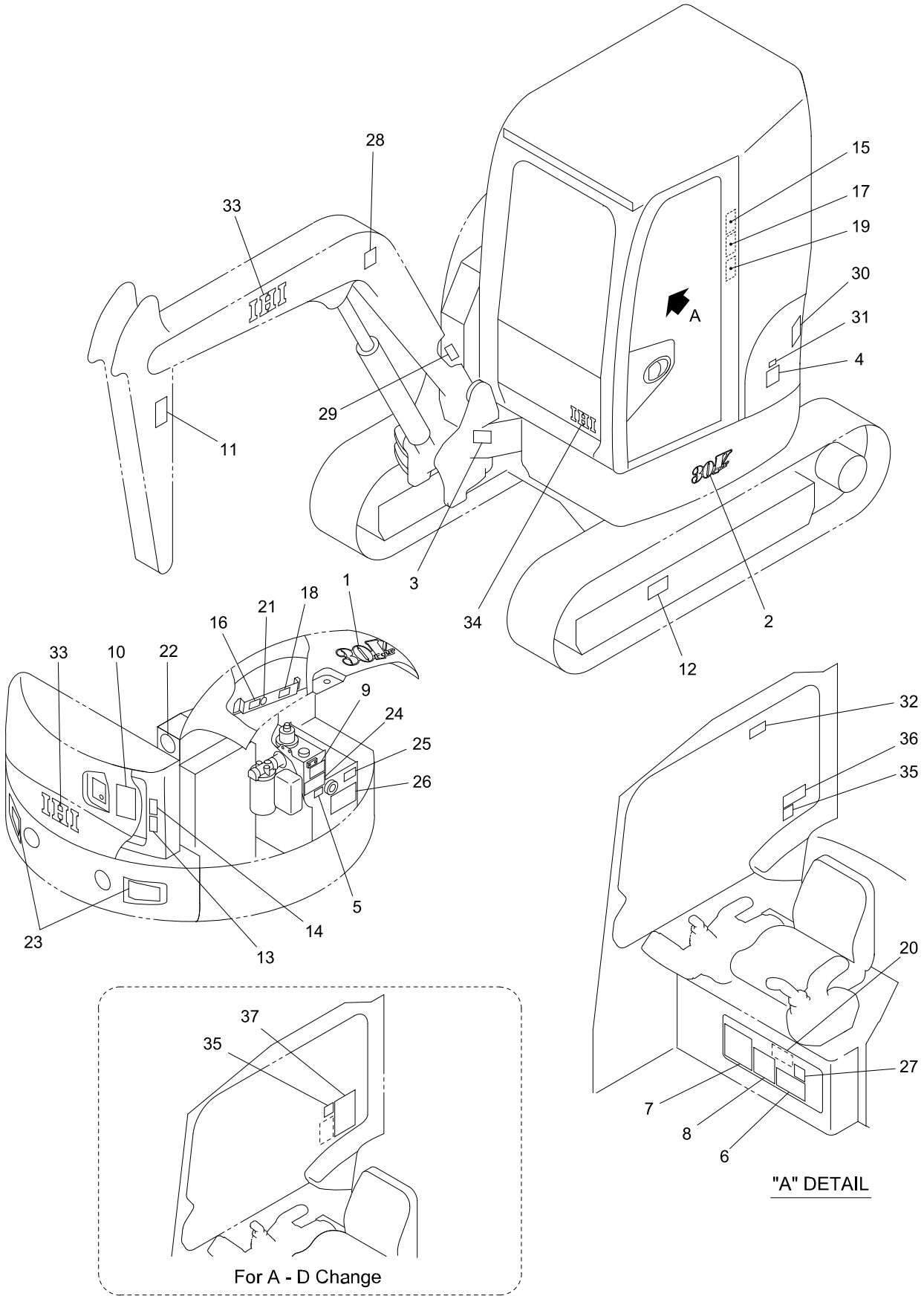

30V4-15100B-1

https://truckmanualshub.com/

KEY No.	SUP.	PART No.	DESCRIPTION	Q'TY	CHAN.	SERIAL No.	REMARKS
0	×	F377 842 00	Decal Ass'y	1		WS010001-	
0-1	×	F377 855 00	Decal Ass'y	1		WS010001-	
1		D408 405 00	*Decal (Model)	1		WS010001-	
2		D408 414 00	*Decal (Model)	1		WS010001-	
3	×	D405 091 00	*Decal (Serial No.)	1		WS010001-	
3-1		0497 035 00	*Screw, Drive	4		WS010001-	d=3
4		4405 457 00	*Decal (Oil)	1		WS010001-	
5		D406 558 00	*Decal (Oil Check)	1		WS010001-	
6		D408 360 00	*Decal (Lub. Chart)	1		WS010001-	
7		D407 891 00	*Decal (Engine Daily Check)	1		WS010001-	
8		4448 584 00	*Decal (Safety Works)	1		WS010001-	
9		D408 429 00	*Decal (Tank Decompression)	1		WS010001-	
10		D405 507 00	*Decal (Safety Swing)	1		WS010001-	
11		D405 511 00	*Decal (Caution)	2		WS010001-	
12		D405 505 00	*Decal (Caution)	2		WS010001-	
13		D405 366 00	*Decal (Caution)	1		WS010001-	
14		D405 509 00	*Decal (Caution)	1		WS010001-	
15		D405 359 00	*Decal (Caution)	1		WS010001-	
16		D405 503 00	*Decal (Caution)	1		WS010001-	
17		D405 508 00	*Decal (Caution)	1		WS010001-	
18		D405 504 00	*Decal (Caution)	1		WS010001-	
19		D405 506 00	*Decal (Caution)	1		WS010001-	
20		D405 559 00	*Decal (Caution)	1		WS010001-	
21		4448 573 00	*Decal (Anti-Freezing Solution)	1		WS010001-	
22		D406 783 00	*Decal (Environment)	1		WS010001-	
23		D408 371 00	*Decal (Reflector)	2		WS010001-	
24		D408 338 00	*Decal (Boom Lowering)	1		WS010001-	
25		4449 003 00	*Decal (Spare Piping Change)	1		WS010001-	
26		4448 587 00	*Decal (Breaker Cation)	1		WS010001-	
27		4448 562 00	*Decal (Transport Fix)	1		WS010001-	
28		D408 345 00	*Decal (Lifting Procedures)	1		WS010001-	
29	×	D405 097 00	*Decal (New Machine)	1		WS010001-	
30		D406 154 00	*Decal (Noise 94)	1		WS010001-	
31		D407 943 00	*Decal (EPA Regulation)	1		WS010001-	
32		D405 510 00	*Decal (Caution)	1		WS010001-	
33		D408 402 00	*Decal (IHI)	3		WS010001-	
34		D408 403 00	*Decal (IHI)	1		WS010001-	
35		D406 630 00	*Decal (Blade, Pedal)	1		WS010001-	
36		D406 622 00	*Decal (Control A)	1		WS010001-	
36-1		D406 623 00	*Decal (Control B)	1		WS010001-	
36-2		D406 624 00	*Decal (Control C)	1		WS010001-	
36-3		D406 625 00	*Decal (Control D)	1		WS010001-	
37		D406 628 00	*Decal (Control A-D)	1		WS010001-	

https://truckmanualshub.com/

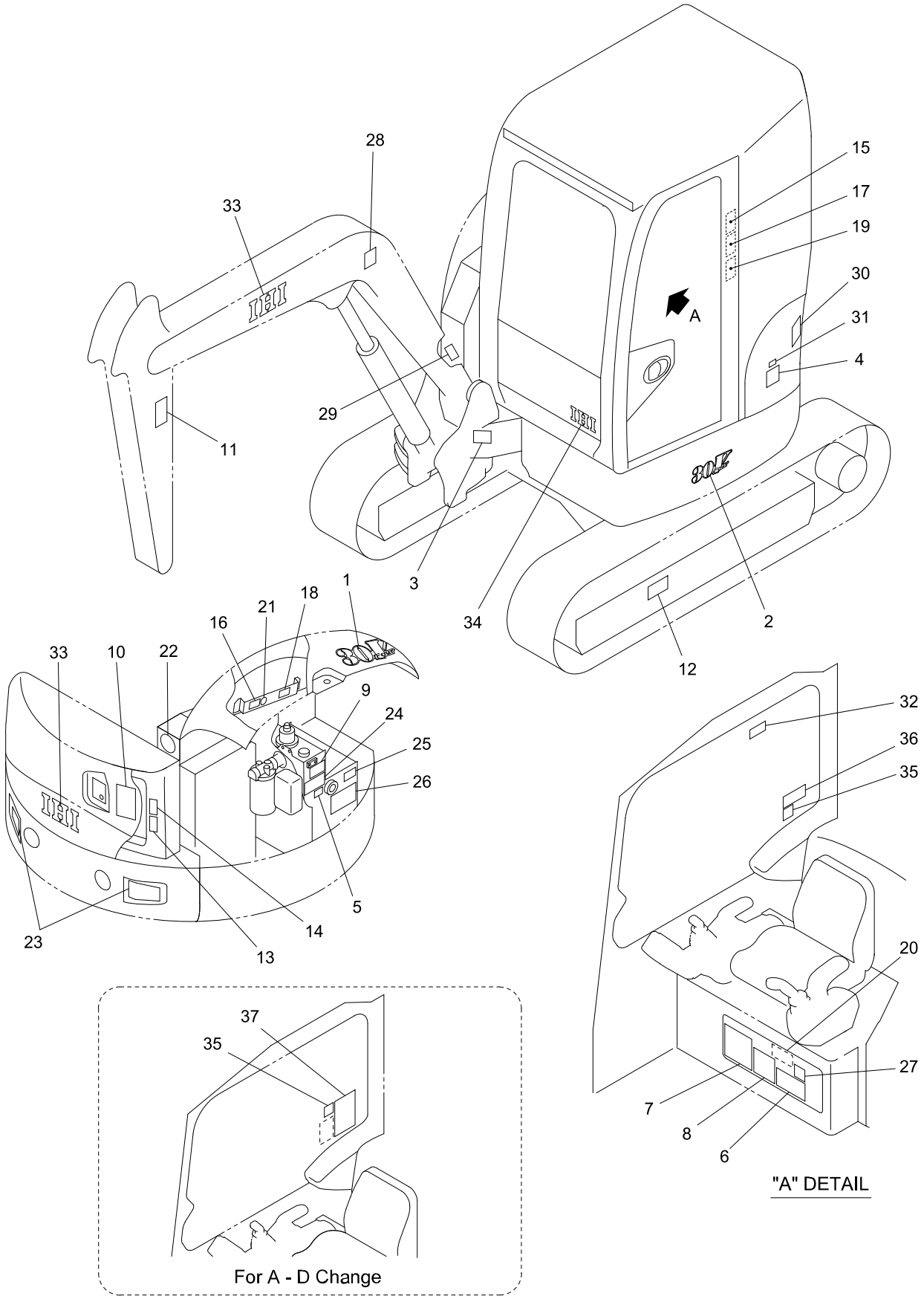

30V4-15100B-1

https://truckmanualshub.com/

KEY No.	SUP.	PART No.	DESCRIPTION	Q'TY	CHAN.	SERIAL No.	REMARKS
0	×	F377 842 00	Decal Ass'y	1		WS010001-	
0-1	×	F377 855 00	Decal Ass'y	1		WS010001-	
1		D408 405 00	*Decal (Model)	1		WS010001-	
2		D408 414 00	*Decal (Model)	1		WS010001-	
3	×	D405 091 00	*Decal (Serial No.)	1		WS010001-	
3-1		0497 035 00	*Screw, Drive	4		WS010001-	d=3
4		4407 974 00	*Decal (Oil)	1		WS010001-	
5		D406 554 00	*Decal (Oil Check)	1		WS010001-	
6		D408 356 00	*Decal (Lub. Chart)	1		WS010001-	
7		D407 889 00	*Decal (Engine Daily Check)	1		WS010001-	
8		4406 714 00	*Decal (Safety Works)	1		WS010001-	
9		D408 425 00	*Decal (Tank Decompression)	1		WS010001-	
10		D405 507 00	*Decal (Safety Swing)	1		WS010001-	
11		D405 511 00	*Decal (Caution)	2		WS010001-	
12		D405 505 00	*Decal (Caution)	2		WS010001-	
13		D405 366 00	*Decal (Caution)	1		WS010001-	
14		D405 509 00	*Decal (Caution)	1		WS010001-	
15		D405 359 00	*Decal (Caution)	1		WS010001-	
16		D405 503 00	*Decal (Caution)	1		WS010001-	
17		D405 508 00	*Decal (Caution)	1		WS010001-	
18		D405 504 00	*Decal (Caution)	1		WS010001-	
19		D405 506 00	*Decal (Caution)	1		WS010001-	
20		D405 575 00	*Decal (Caution)	1		WS010001-	
20-1		D408 433 00	*Decal (Capacities Table)	1		WS010001-	
21		4406 710 00	*Decal (Anti-Freezing Solution)	1		WS010001-	
22		D406 783 00	*Decal (Environment)	1		WS010001-	
23		D408 371 00	*Decal (Reflector)	2		WS010001-	
24		D408 334 00	*Decal (Boom Lowering)	1		WS010001-	
25		4448 687 00	*Decal (Spare Piping Change)	1		WS010001-	
26		4447 996 00	*Decal (Breaker Cation)	1		WS010001-	
27		4448 542 00	*Decal (Transport Fix)	1		WS010001-	
28		D408 341 00	*Decal (Lifting Procedures)	1		WS010001-	
29	×	D405 097 00	*Decal (New Machine)	1		WS010001-	
30		D406 154 00	*Decal (Noise 94)	1		WS010001-	
31		D407 943 00	*Decal (EPA Regulation)	1		WS010001-	
32		D405 510 00	*Decal (Caution)	1		WS010001-	
33		D408 402 00	*Decal (IHI)	3		WS010001-	
34		D408 403 00	*Decal (IHI)	1		WS010001-	
35		D406 630 00	*Decal (Blade, Pedal)	1		WS010001-	
36		D406 622 00	*Decal (Control A)	1		WS010001-	
36-1		D406 623 00	*Decal (Control B)	1		WS010001-	
36-2		D406 624 00	*Decal (Control C)	1		WS010001-	
36-3		D406 625 00	*Decal (Control D)	1		WS010001-	
37		D406 628 00	*Decal (Control A-D)	1		WS010001-	

https://truckmanualshub.com/

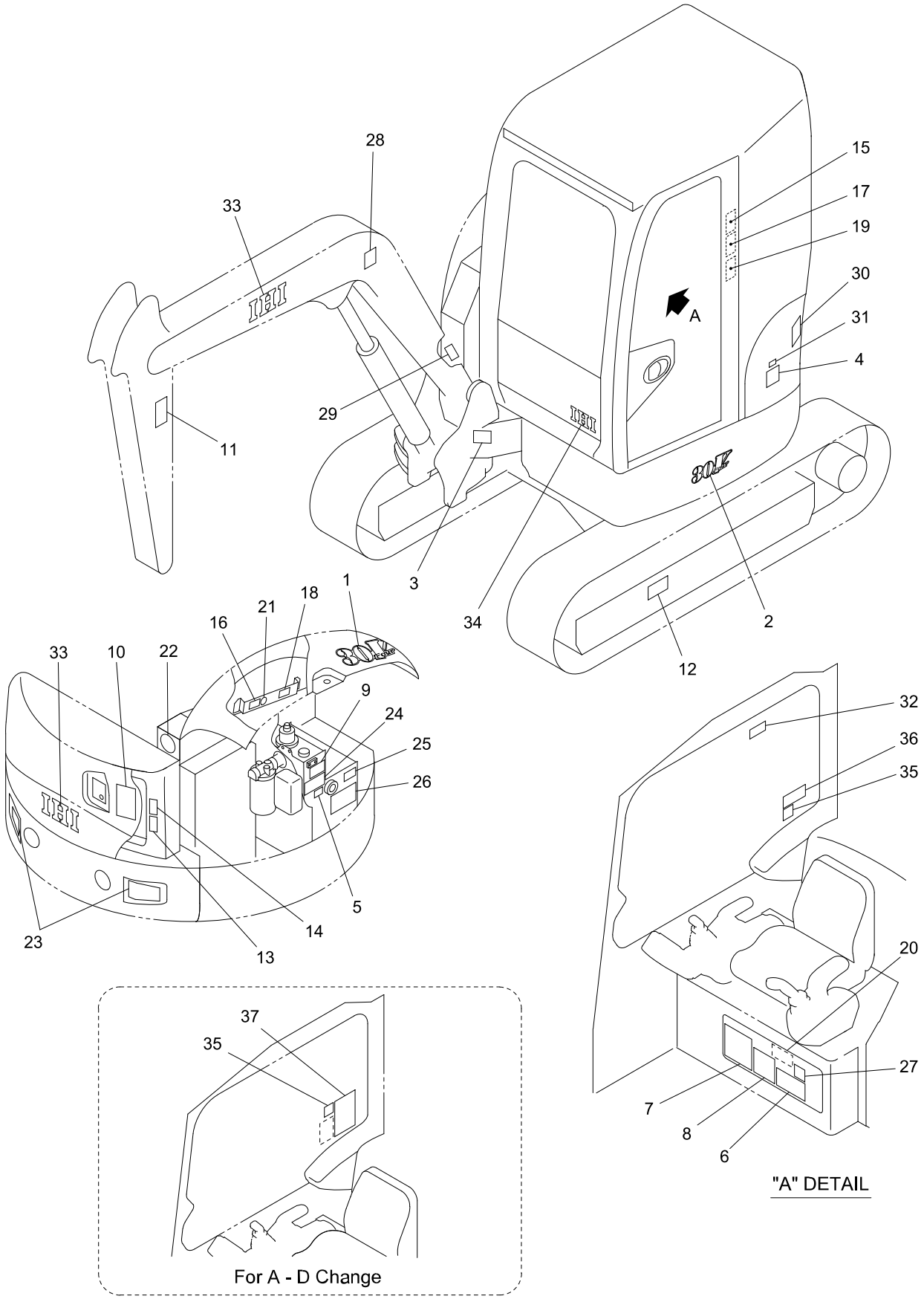

30V4-15100B-1

https://truckmanualshub.com/

KEY No.	SUP.	PART No.	DESCRIPTION	Q'TY	CHAN.	SERIAL No.	REMARKS
0	×	F377 842 00	Decal Ass'y	1		WS010001-	
0-1	×	F377 855 00	Decal Ass'y	1		WS010001-	
1		D408 405 00	*Decal (Model)	1		WS010001-	
2		D408 414 00	*Decal (Model)	1		WS010001-	
3	×	D405 091 00	*Decal (Serial No.)	1		WS010001-	
3-1		0497 035 00	*Screw, Drive	4		WS010001-	d=3
4		4405 457 00	*Decal (Oil)	1		WS010001-	
5		D406 550 00	*Decal (Oil Check)	1		WS010001-	
6		D408 357 00	*Decal (Lub. Chart)	1		WS010001-	
7		D407 917 00	*Decal (Engine Daily Check)	1		WS010001-	
8		D406 795 00	*Decal (Safety Works)	1		WS010001-	
9		D408 426 00	*Decal (Tank Decompression)	1		WS010001-	
10		D405 507 00	*Decal (Safety Swing)	1		WS010001-	
11		D405 511 00	*Decal (Caution)	2		WS010001-	
12		D405 505 00	*Decal (Caution)	2		WS010001-	
13		D405 366 00	*Decal (Caution)	1		WS010001-	
14		D405 509 00	*Decal (Caution)	1		WS010001-	
15		D405 359 00	*Decal (Caution)	1		WS010001-	
16		D405 503 00	*Decal (Caution)	1		WS010001-	
17		D405 508 00	*Decal (Caution)	1		WS010001-	
18		D405 504 00	*Decal (Caution)	1		WS010001-	
19		D405 506 00	*Decal (Caution)	1		WS010001-	
20		D405 571 00	*Decal (Caution)	1		WS010001-	
21		4405 456 00	*Decal (Anti-Freezing Solution)	1		WS010001-	
22		D406 783 00	*Decal (Environment)	1		WS010001-	
23		D408 371 00	*Decal (Reflector)	2		WS010001-	
24		D408 335 00	*Decal (Boom Lowering)	1		WS010001-	
25		4448 944 00	*Decal (Spare Piping Change)	1		WS010001-	
26		4447 925 00	*Decal (Breaker Cation)	1		WS010001-	
27		4448 511 00	*Decal (Transport Fix)	1		WS010001-	
28		D408 342 00	*Decal (Lifting Procedures)	1		WS010001-	
29	×	D405 097 00	*Decal (New Machine)	1		WS010001-	
30		D406 154 00	*Decal (Noise 94)	1		WS010001-	
31		D407 943 00	*Decal (EPA Regulation)	1		WS010001-	
32		D405 510 00	*Decal (Caution)	1		WS010001-	
33		D408 402 00	*Decal (IHI)	3		WS010001-	
34		D408 403 00	*Decal (IHI)	1		WS010001-	
35		D406 630 00	*Decal (Blade, Pedal)	1		WS010001-	
36		D406 622 00	*Decal (Control A)	1		WS010001-	
36-1		D406 623 00	*Decal (Control B)	1		WS010001-	
36-2		D406 624 00	*Decal (Control C)	1		WS010001-	
36-3		D406 625 00	*Decal (Control D)	1		WS010001-	
37		D406 628 00	*Decal (Control A-D)	1		WS010001-	

https://truckmanualshub.com/

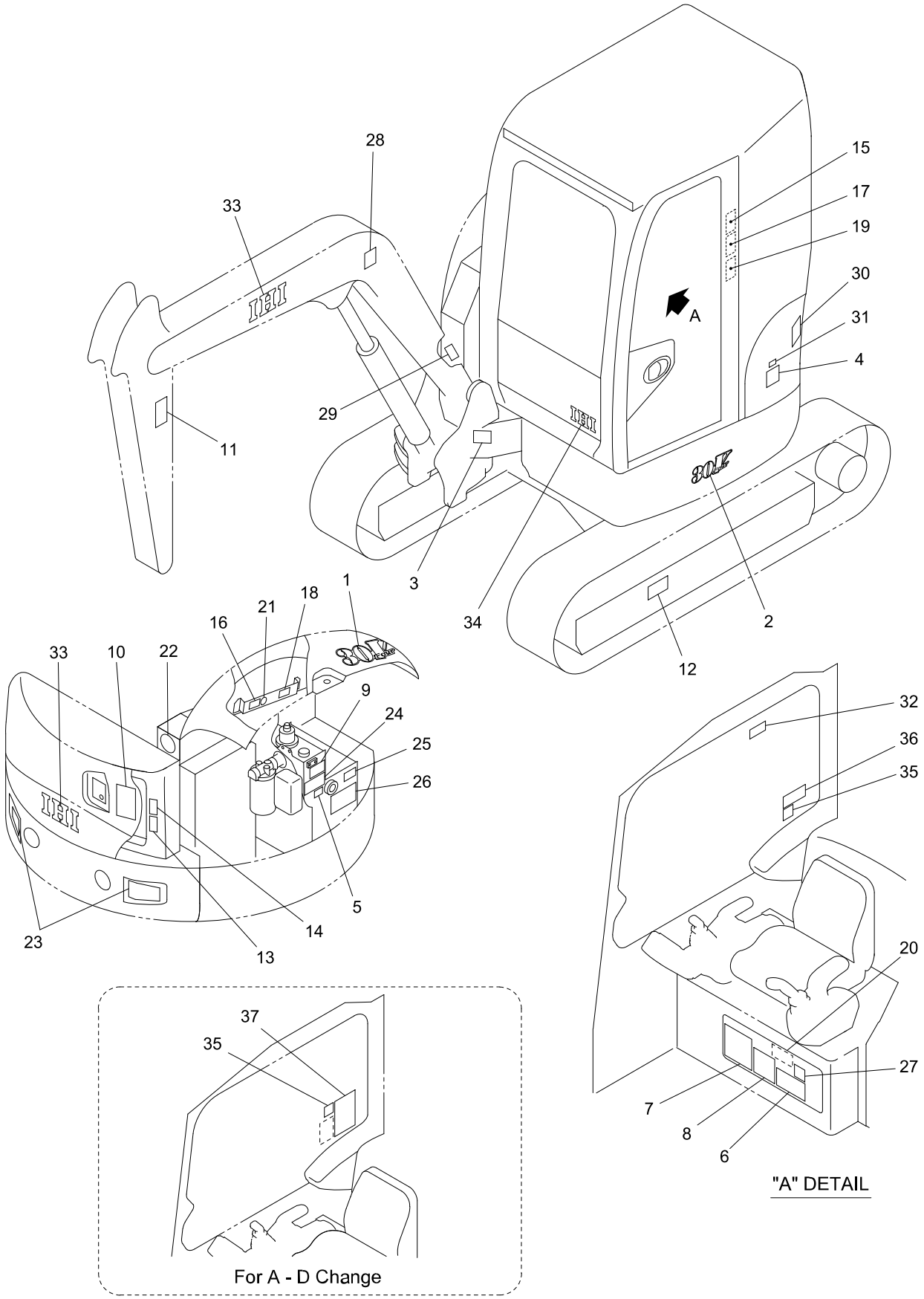

30V4-15100B-1

https://truckmanualshub.com/

KEY No.	SUP.	PART No.	DESCRIPTION	Q'TY	CHAN.	SERIAL No.	REMARKS
0	×	F377 842 00	Decal Ass'y	1		WS010001-	
0-1	×	F377 855 00	Decal Ass'y	1		WS010001-	
1		D408 405 00	*Decal (Model)	1		WS010001-	
2		D408 414 00	*Decal (Model)	1		WS010001-	
3	×	D405 091 00	*Decal (Serial No.)	1		WS010001-	
3-1		0497 035 00	*Screw, Drive	4		WS010001-	d=3
4		4405 457 00	*Decal (Oil)	1		WS010001-	
5		D406 565 00	*Decal (Oil Check)	1		WS010001-	
6		D408 358 00	*Decal (Lub. Chart)	1		WS010001-	
7		D407 906 00	*Decal (Engine Daily Check)	1		WS010001-	
8		4447 882 00	*Decal (Safety Works)	1		WS010001-	
9		D408 427 00	*Decal (Tank Decompression)	1		WS010001-	
10		D405 507 00	*Decal (Safety Swing)	1		WS010001-	
11		D405 511 00	*Decal (Caution)	2		WS010001-	
12		D405 505 00	*Decal (Caution)	2		WS010001-	
13		D405 366 00	*Decal (Caution)	1		WS010001-	
14		D405 509 00	*Decal (Caution)	1		WS010001-	
15		D405 359 00	*Decal (Caution)	1		WS010001-	
16		D405 503 00	*Decal (Caution)	1		WS010001-	
17		D405 508 00	*Decal (Caution)	1		WS010001-	
18		D405 504 00	*Decal (Caution)	1		WS010001-	
19		D405 506 00	*Decal (Caution)	1		WS010001-	
20		D405 587 00	*Decal (Caution)	1		WS010001-	
21		4447 229 00	*Decal (Anti-Freezing Solution)	1		WS010001-	
22		D406 783 00	*Decal (Environment)	1		WS010001-	
23		D408 371 00	*Decal (Reflector)	2		WS010001-	
24		D408 336 00	*Decal (Boom Lowering)	1		WS010001-	
25		D405 256 00	*Decal (Spare Piping Change)	1		WS010001-	
26		4448 350 00	*Decal (Breaker Cation)	1		WS010001-	
27		D405 059 00	*Decal (Transport Fix)	1		WS010001-	
28		D408 343 00	*Decal (Lifting Procedures)	1		WS010001-	
29	×	D405 097 00	*Decal (New Machine)	1		WS010001-	
30		D406 154 00	*Decal (Noise 94)	1		WS010001-	
31		D407 943 00	*Decal (EPA Regulation)	1		WS010001-	
32		D405 510 00	*Decal (Caution)	1		WS010001-	
33		D408 402 00	*Decal (IHI)	3		WS010001-	
34		D408 403 00	*Decal (IHI)	1		WS010001-	
35		D406 630 00	*Decal (Blade, Pedal)	1		WS010001-	
36		D406 622 00	*Decal (Control A)	1		WS010001-	
36-1		D406 623 00	*Decal (Control B)	1		WS010001-	
36-2		D406 624 00	*Decal (Control C)	1		WS010001-	
36-3		D406 625 00	*Decal (Control D)	1		WS010001-	
37		D406 628 00	*Decal (Control A-D)	1		WS010001-	

https://truckmanualshub.com/

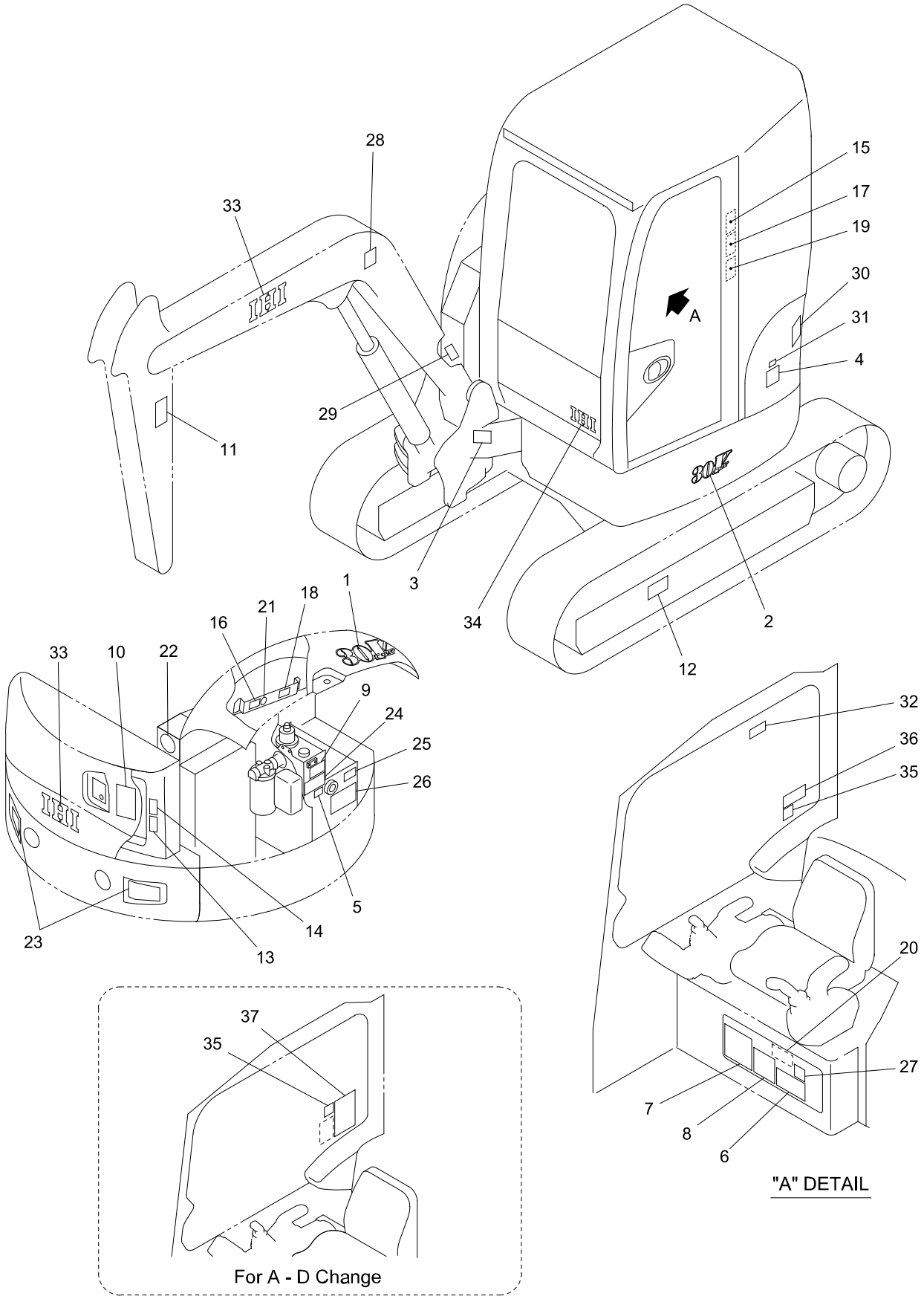

30V4-15100B-1

https://truckmanualshub.com/

KEY No.	SUP.	PART No.	DESCRIPTION	Q'TY	CHAN.	SERIAL No.	REMARKS
0	×	F377 842 00	Decal Ass'y	1		WS010001-	
0-1	×	F377 855 00	Decal Ass'y	1		WS010001-	
1		D408 405 00	*Decal (Model)	1		WS010001-	
2		D408 414 00	*Decal (Model)	1		WS010001-	
3	×	D405 091 00	*Decal (Serial No.)	1		WS010001-	
3-1		0497 035 00	*Screw, Drive	4		WS010001-	d=3
4		4405 457 00	*Decal (Oil)	1		WS010001-	
5		D406 562 00	*Decal (Oil Check)	1		WS010001-	
6		D408 359 00	*Decal (Lub. Chart)	1		WS010001-	
7		D407 912 00	*Decal (Engine Daily Check)	1		WS010001-	
8		4448 603 00	*Decal (Safety Works)	1		WS010001-	
9		D408 428 00	*Decal (Tank Decompression)	1		WS010001-	
10		D405 507 00	*Decal (Safety Swing)	1		WS010001-	
11		D405 511 00	*Decal (Caution)	2		WS010001-	
12		D405 505 00	*Decal (Caution)	2		WS010001-	
13		D405 366 00	*Decal (Caution)	1		WS010001-	
14		D405 509 00	*Decal (Caution)	1		WS010001-	
15		D405 359 00	*Decal (Caution)	1		WS010001-	
16		D405 503 00	*Decal (Caution)	1		WS010001-	
17		D405 508 00	*Decal (Caution)	1		WS010001-	
18		D405 504 00	*Decal (Caution)	1		WS010001-	
19		D405 506 00	*Decal (Caution)	1		WS010001-	
20		D405 594 00	*Decal (Caution)	1		WS010001-	
21		4448 598 00	*Decal (Anti-Freezing Solution)	1		WS010001-	
22		D406 783 00	*Decal (Environment)	1		WS010001-	
23		D408 371 00	*Decal (Reflector)	2		WS010001-	
24		D408 337 00	*Decal (Boom Lowering)	1		WS010001-	
25		4449 406 00	*Decal (Spare Piping Change)	1		WS010001-	
26		4448 607 00	*Decal (Breaker Cation)	1		WS010001-	
27		4448 619 00	*Decal (Transport Fix)	1		WS010001-	
28		D408 344 00	*Decal (Lifting Procedures)	1		WS010001-	
29	×	D405 097 00	*Decal (New Machine)	1		WS010001-	
30		D406 154 00	*Decal (Noise 94)	1		WS010001-	
31		D407 943 00	*Decal (EPA Regulation)	1		WS010001-	
32		D405 510 00	*Decal (Caution)	1		WS010001-	
33		D408 402 00	*Decal (IHI)	3		WS010001-	
34		D408 403 00	*Decal (IHI)	1		WS010001-	
35		D406 630 00	*Decal (Blade, Pedal)	1		WS010001-	
36		D406 622 00	*Decal (Control A)	1		WS010001-	
36-1		D406 623 00	*Decal (Control B)	1		WS010001-	
36-2		D406 624 00	*Decal (Control C)	1		WS010001-	
36-3		D406 625 00	*Decal (Control D)	1		WS010001-	
37		D406 628 00	*Decal (Control A-D)	1		WS010001-	

https://truckmanualshub.com/

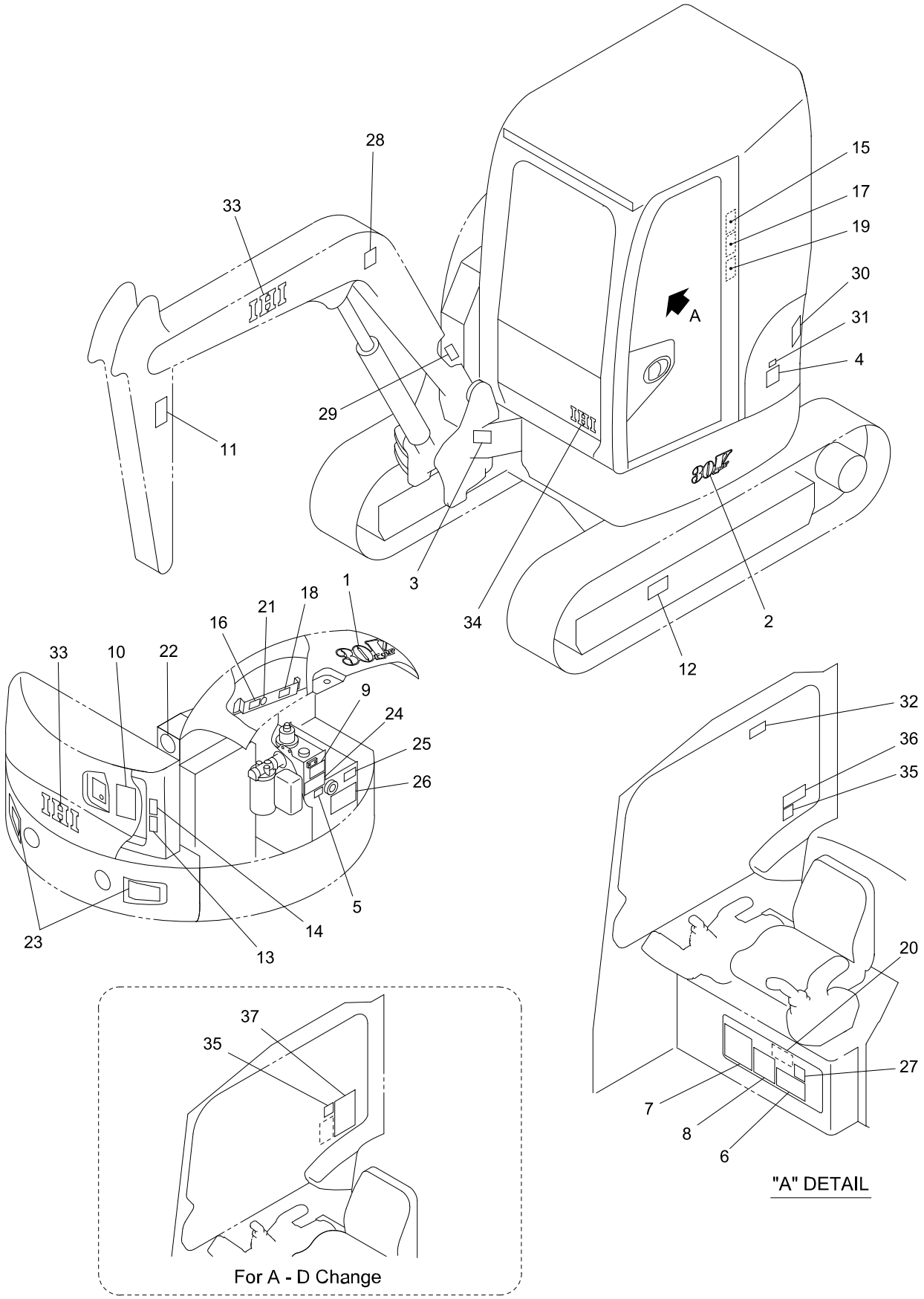

30V4-15100B-1

https://truckmanualshub.com/

KEY No.	SUP.	PART No.	DESCRIPTION	Q'TY	CHAN.	SERIAL No.	REMARKS
0	×	F377 842 00	Decal Ass'y	1		WS010001-	
0-1	×	F377 855 00	Decal Ass'y	1		WS010001-	
1		D408 405 00	*Decal (Model)	1		WS010001-	
2		D408 414 00	*Decal (Model)	1		WS010001-	
3	×	D405 091 00	*Decal (Serial No.)	1		WS010001-	
3-1		0497 035 00	*Screw, Drive	4		WS010001-	d=3
4		D406 000 00	*Decal (Oil)	1		WS010001-	
5		D406 811 00	*Decal (Oil Check)	1		WS010001-	
6		D408 361 00	*Decal (Lub. Chart)	1		WS010001-	
7		D407 908 00	*Decal (Engine Daily Check)	1		WS010001-	
8		D407 016 00	*Decal (Safety Works)	1		WS010001-	
9		D408 430 00	*Decal (Tank Decompression)	1		WS010001-	
10		D405 507 00	*Decal (Safety Swing)	1		WS010001-	
11		D405 511 00	*Decal (Caution)	2		WS010001-	
12		D405 505 00	*Decal (Caution)	2		WS010001-	
13		D405 366 00	*Decal (Caution)	1		WS010001-	
14		D405 509 00	*Decal (Caution)	1		WS010001-	
15		D405 359 00	*Decal (Caution)	1		WS010001-	
16		D405 503 00	*Decal (Caution)	1		WS010001-	
17		D405 508 00	*Decal (Caution)	1		WS010001-	
18		D405 504 00	*Decal (Caution)	1		WS010001-	
19		D405 506 00	*Decal (Caution)	1		WS010001-	
20		D406 005 00	*Decal (Caution)	1		WS010001-	
21		D406 012 00	*Decal (Anti-Freezing Solution)	1		WS010001-	
22		D406 783 00	*Decal (Environment)	1		WS010001-	
23		D408 371 00	*Decal (Reflector)	2		WS010001-	
24		D408 339 00	*Decal (Boom Lowering)	1		WS010001-	
25		D406 720 00	*Decal (Spare Piping Change)	1		WS010001-	
26		D406 002 00	*Decal (Breaker Cation)	1		WS010001-	
27		D406 007 00	*Decal (Transport Fix)	1		WS010001-	
28		D408 346 00	*Decal (Lifting Procedures)	1		WS010001-	
29	×	D405 097 00	*Decal (New Machine)	1		WS010001-	
30		D406 154 00	*Decal (Noise 94)	1		WS010001-	
31		D407 943 00	*Decal (EPA Regulation)	1		WS010001-	
32		D405 510 00	*Decal (Caution)	1		WS010001-	
33		D408 402 00	*Decal (IHI)	3		WS010001-	
34		D408 403 00	*Decal (IHI)	1		WS010001-	
35		D406 630 00	*Decal (Blade, Pedal)	1		WS010001-	
36		D406 622 00	*Decal (Control A)	1		WS010001-	
36-1		D406 623 00	*Decal (Control B)	1		WS010001-	
36-2		D406 624 00	*Decal (Control C)	1		WS010001-	
36-3		D406 625 00	*Decal (Control D)	1		WS010001-	
37		D406 628 00	*Decal (Control A-D)	1		WS010001-	

https://truckmanualshub.com/

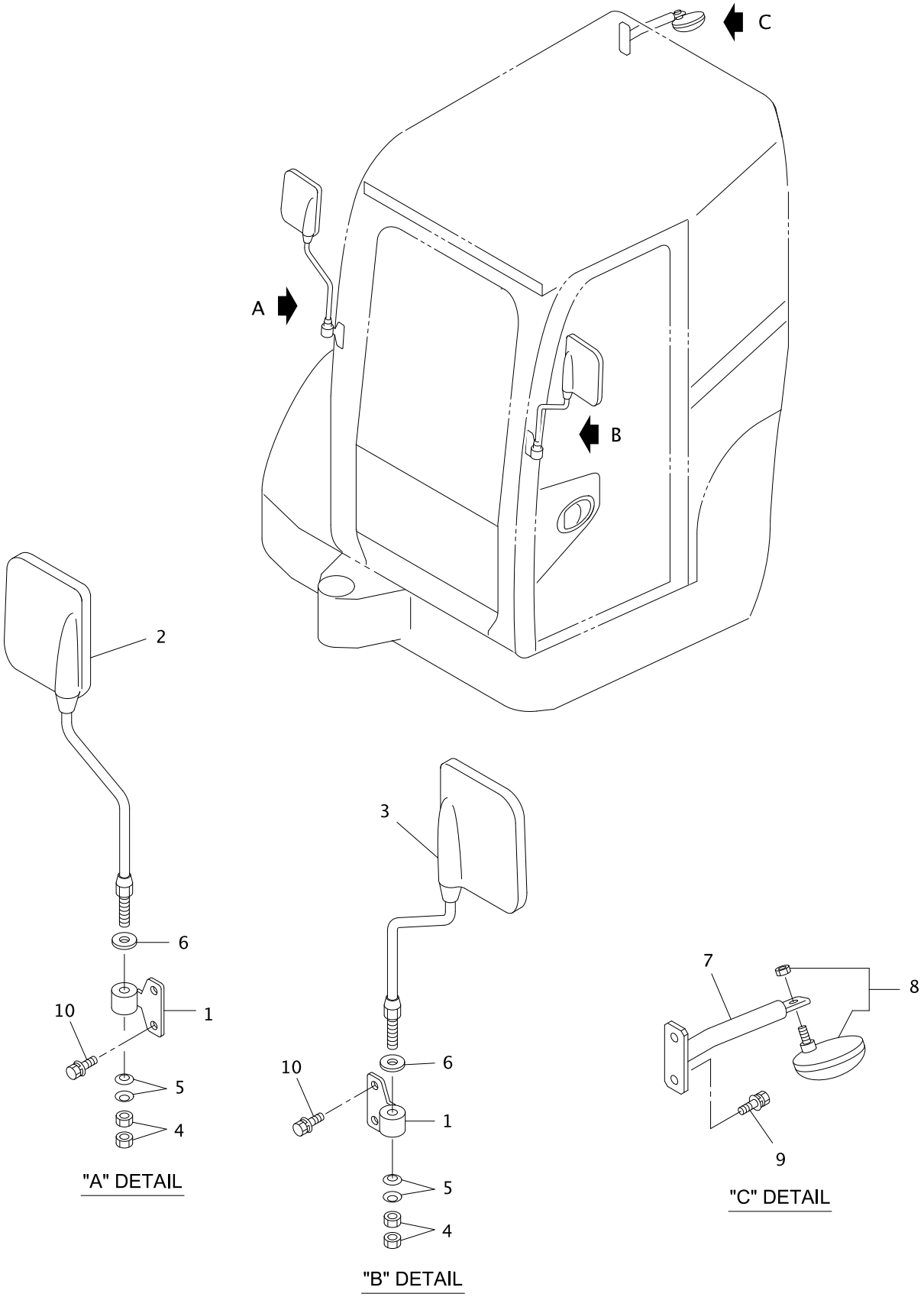

V4ALL-151100-1

https://truckmanualshub.com/

KEY No.	SUP.	PART No.	DESCRIPTION	Q'TY	CHAN.	SERIAL No.	REMARKS
0	×	F355 037 00	Mirror Ass'y	1		WS010001-	
1		D416 701 00	*Bracket	2		WS010001-	
2		0699 901 12	*Mirror, Back	1		WS010001-	
3		0699 901 13	*Mirror, Back	1		WS010001-	
4		0580 120 00	*Nut, Hex.	4		WS010001-	M12
5		0491 800 12	*Washer, Conical Spring	4		WS010001-	M12
6		0593 120 00	*Washer, Flat	2		WS010001-	M12
7		D260 381 00	*Stay	1		WS010001-	
8		0690 203 08	*Mirror, Under	1		WS010001-	
9		0439 100 25	*Bolt, Treatment (W/L.W,F.W)	2		WS010001-	M10X25 P=1.25
10		0439 100 20	*Bolt, Treatment (W/L.W,F.W)	4		WS010001-	M10X20 P=1.25

https://truckmanualshub.com/

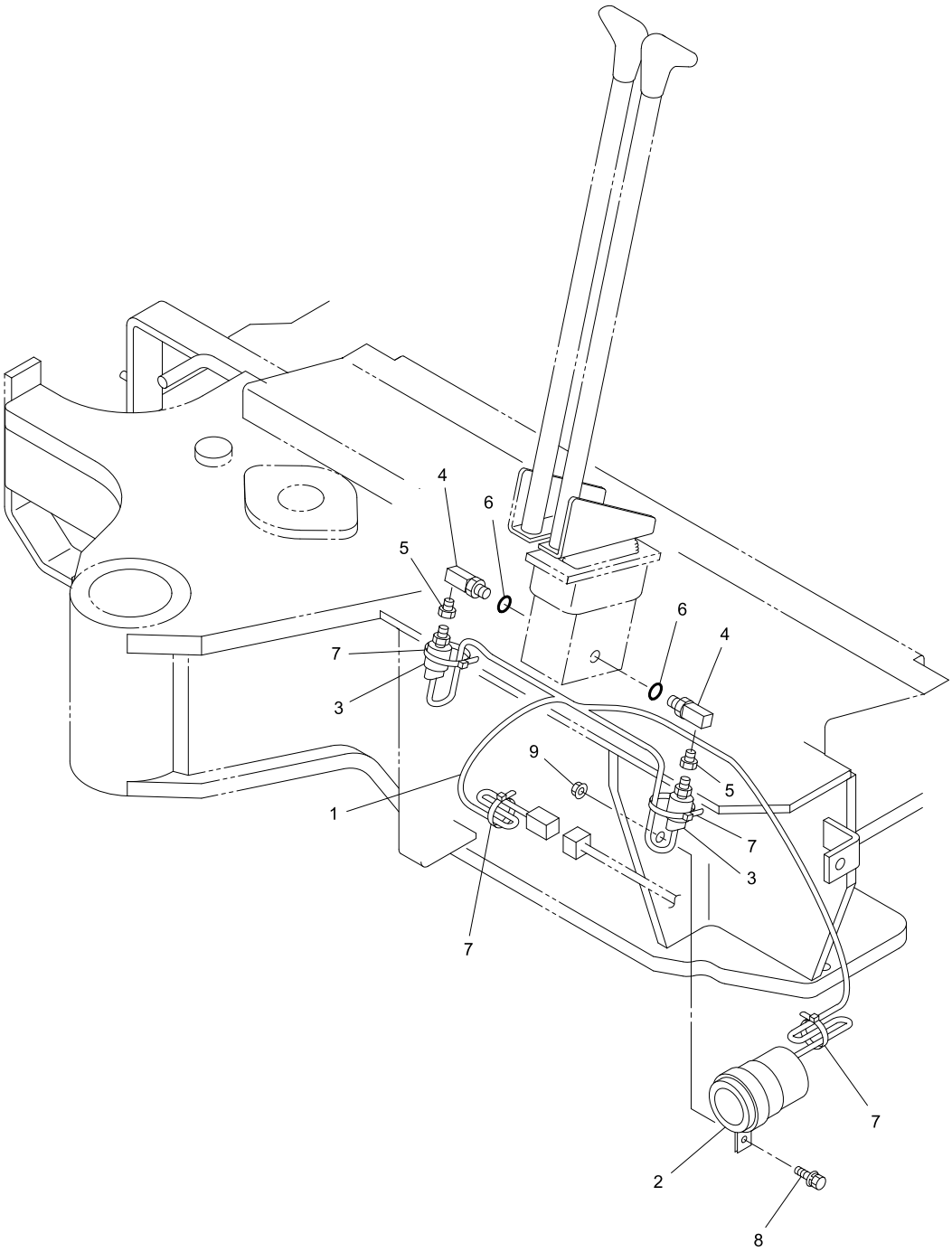

25V4-151200-1

https://truckmanualshub.com/

KEY No.	SUP.	PART No.	DESCRIPTION	Q'TY	CHAN.	SERIAL No.	REMARKS
0	×	F432 277 00	Alarm Device, Travvel	1		WS010001-	
1		D592 161 00	*Harness	1		WS010001-	
2		0857 011 48	*Horn, Back	1		WS010001-	
3		0858 180 10	*Switch, Pressure	2		WS010001-	
4		0719 804 UA	*Elbow	2		WS010001-	
5		0710 400 24	*Bush, Reducer	2		WS010001-	PT1/4XPT1/8
6		0760 710 12	*Ring, O	2		WS010001-	P11-90B
7		0820 067 04	*Band, Cable	4		WS010001-	
8		0517 080 30	*Bolt, Treatment (W/L.W, F.W)	1		WS010001-	M8X30
9		0521 080 00	*Nut, Hex. (W/F.W)	1		WS010001-	M8

https://truckmanualshub.com/

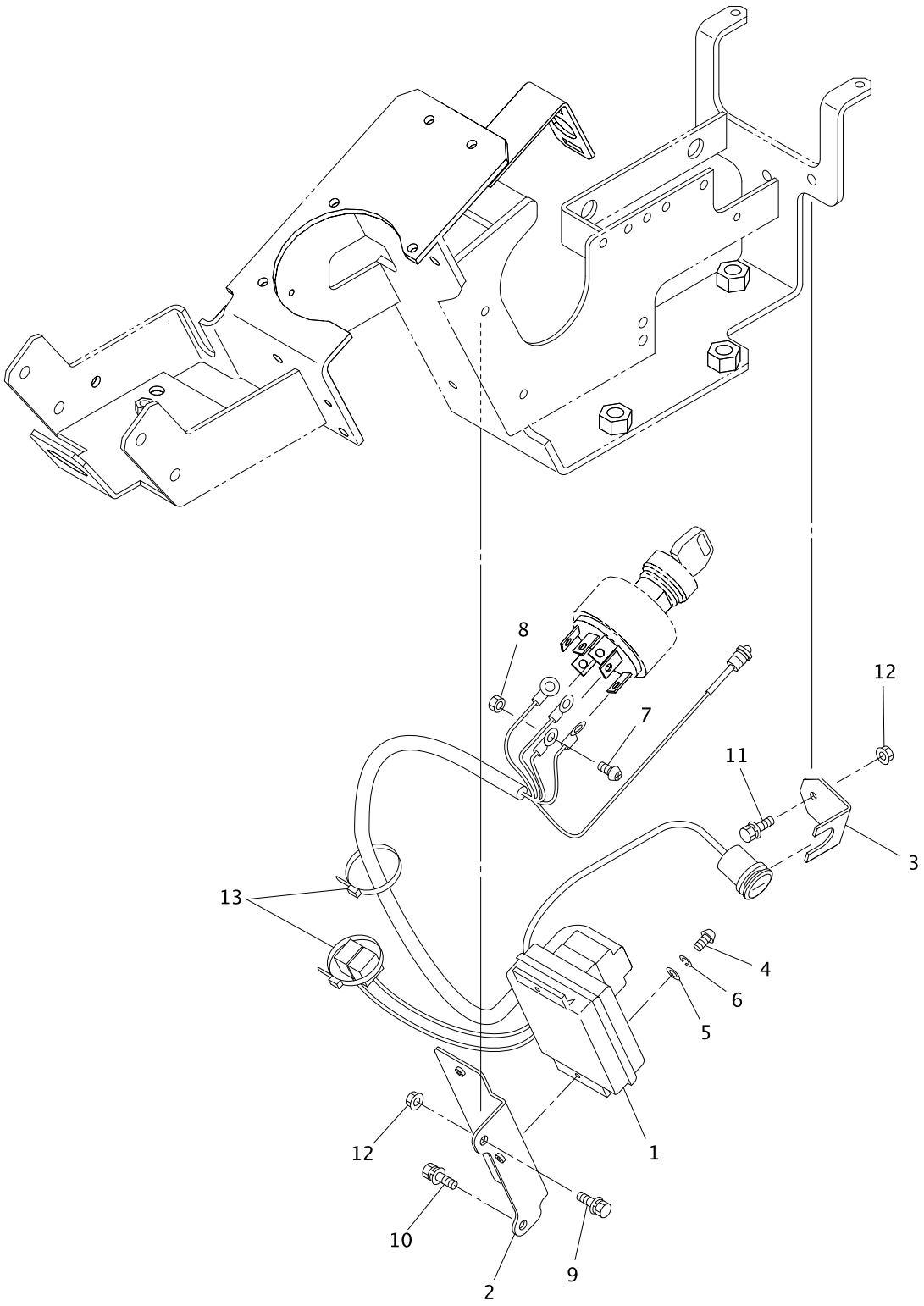

V4ALL-151300-1

https://truckmanualshub.com/

KEY No.	SUP.	PART No.	DESCRIPTION	Q'TY	CHAN.	SERIAL No.	REMARKS
0	×	F366 792 00	Immobilizer Ass'y	1		WS010001-	
1		0893 508 UA	*Controller Ass'y	1		WS010001-	
2		D418 688 00	*Bracket	1		WS010001-	
3		D418 689 00	*Bracket	1		WS010001-	
4		0565 040 10	*Screw, Pan Head	2		WS010001-	M4X10
5		0593 040 00	*Washer, Flat	2		WS010001-	M4
6		0590 040 00	*Washer, Lock	2		WS010001-	M4
7		0565 050 10	*Screw, Pan Head	1		WS010001-	M5X10
8		0580 050 00	*Nut, Hex.	1		WS010001-	M5
9		0517 060 25	*Bolt, Treatment (W/L.W, F.W)	1		WS010001-	M6X25
10		0517 060 12	*Bolt, Treatment (W/L.W, F.W)	1		WS010001-	M6X12
11		0517 060 16	*Bolt, Treatment (W/L.W, F.W)	1		WS010001-	M6X16
12		0521 060 00	*Nut, Hex. (W/F.W)	2		WS010001-	M6
13		0820 067 03	*Band, Cable	2		WS010001-	

https://truckmanualshub.com/

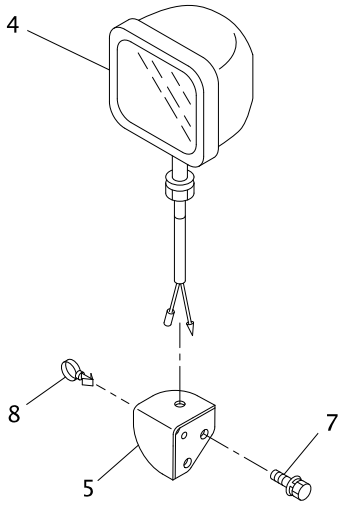

"A" DETAIL

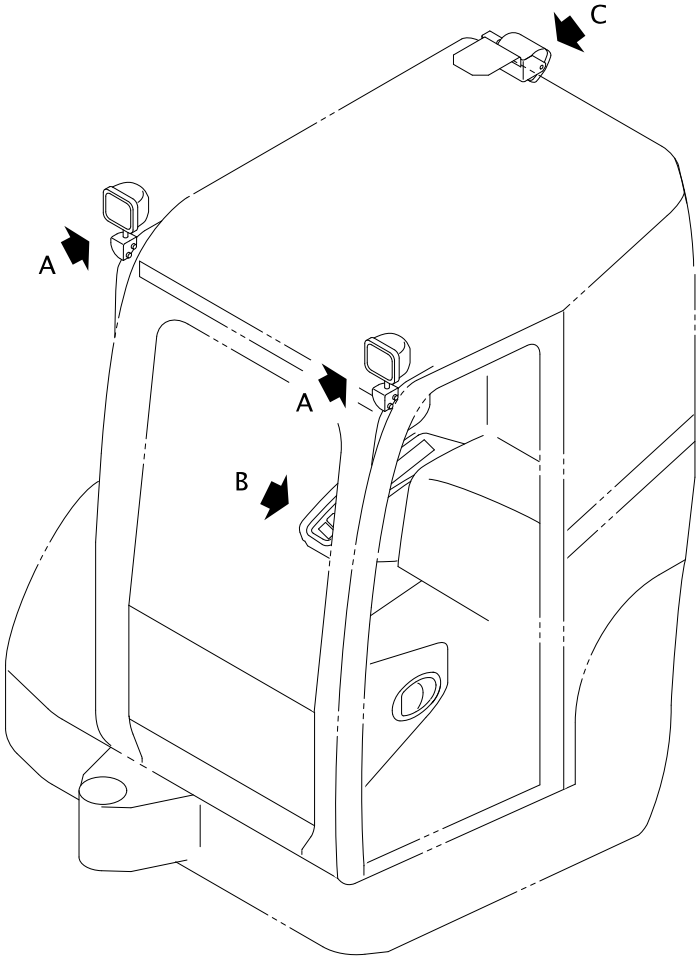

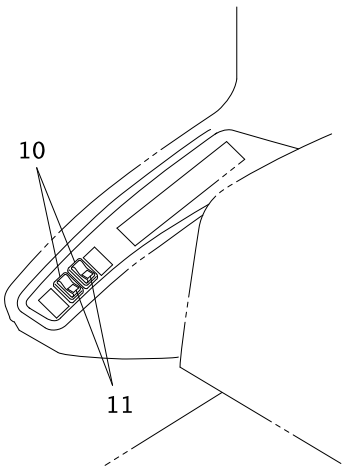

"B" DETAIL

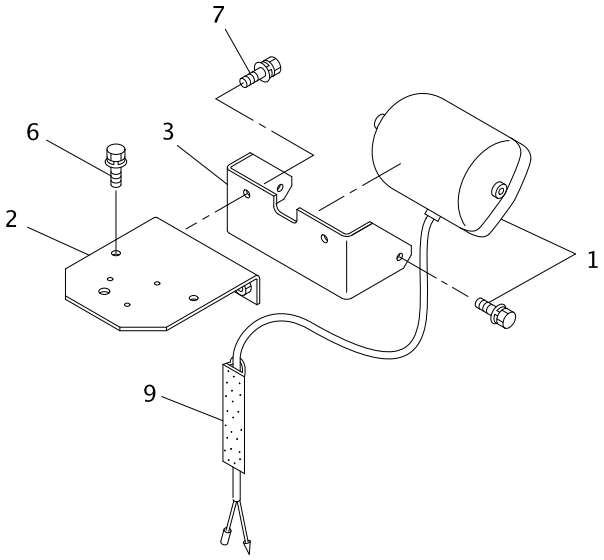

"C" DETAIL

V4ALL-151400-1

https://truckmanualshub.com/

KEY No.	SUP.	PART No.	DESCRIPTION	Q'TY	CHAN.	SERIAL No.	REMARKS
0	×	F385 402 00	Light Ass'y	1		WS010001-	
1		0854 536 UA	*Lamp Ass'y	1		WS010001-	
1-1		0854 536 01	**Lens	1		WS010001-	
1-2		0854 536 11	**Bulb	1		WS010001-	
2		D418 632 00	*Bracket	1		WS010001-	
3		D418 630 00	*Bracket	1		WS010001-	
4		0854 523 UA	*Light Ass'y	2		WS010001-	
4-1		0854 523 01	**Lens	1		WS010001-	
4-2		0854 523 06	**Bulb	1		WS010001-	
5		D419 161 00	*Bracket	2		WS010001-	
6		0439 100 20	*Bolt, Treatment (W/L.W, F.W)	2		WS010001-	M10X20 P=1.25
7		0439 100 25	*Bolt, Treatment (W/L.W, F.W)	6		WS010001-	M10X25 P=1.25
8		0690 082 08	*Clamp, Hose	2		WS010001-	
9		4522 707 01	*Duct	1		WS010001-	
10		0858 314 11	*Switch Ass'y, Light	2		WS010001-	
11		0858 314 12	*Decal	2		WS010001-	

https://truckmanualshub.com/

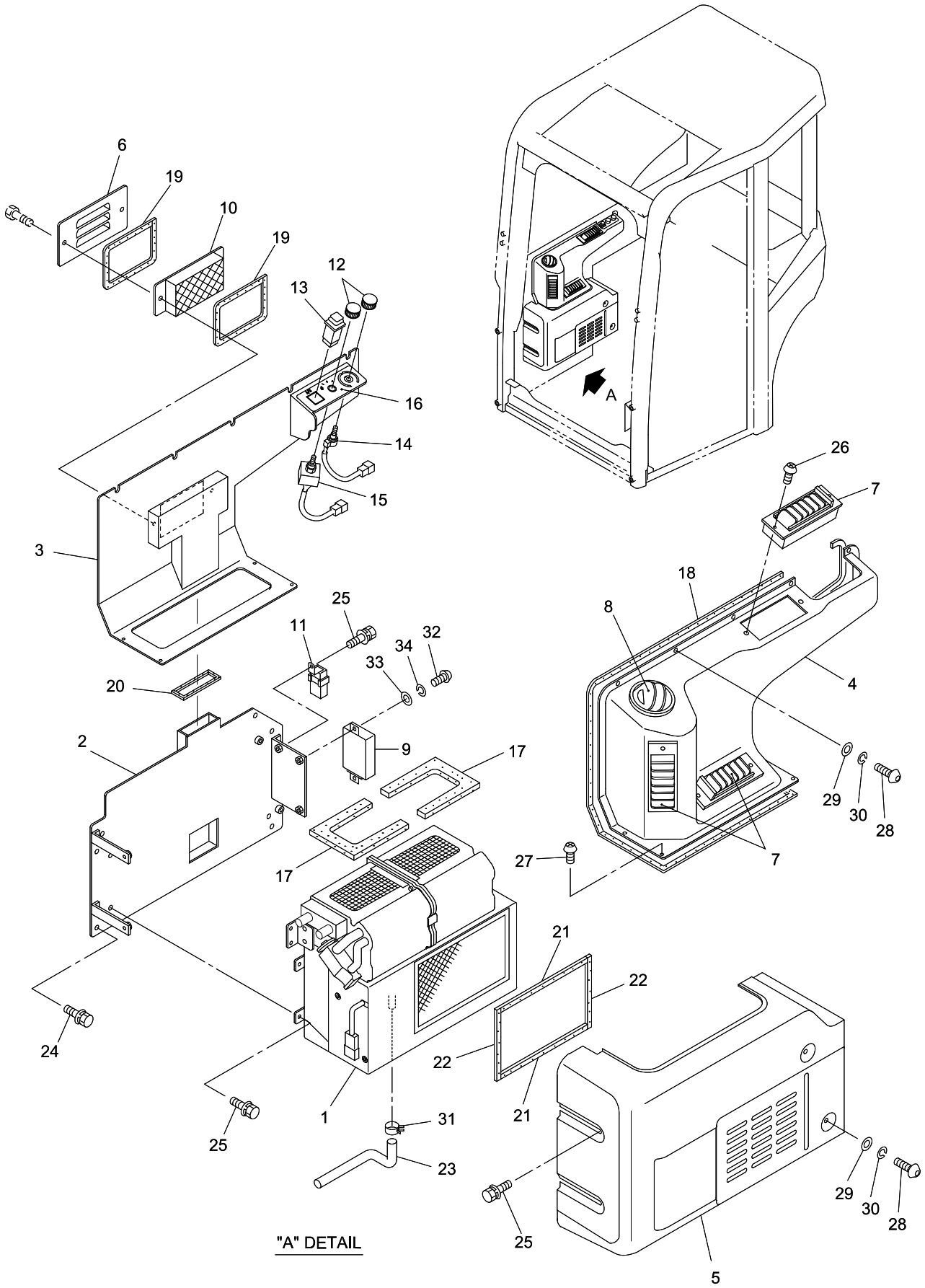

30V4-151500-1

https://truckmanualshub.com/

KEY No.	SUP.	PART No.	DESCRIPTION	Q'TY	CHAN.	SERIAL No.	REMARKS
0	×	F385 396 00	Air Conditioner Ass'y (1)	1		WS010001-	
1		0892 270 UA	*Air Conditioner Ass'y	1		WS010001-	
2		D419 359 00	*Bracket	1		WS010001-	
3		D452 207 00	*Bracket	1		WS010001-	
4		D465 382 00	*Duct	1		WS010001-	
5		D465 383 00	*Panel	1		WS010001-	
6		D458 508 00	*Cover	1		WS010001-	
7		0820 023 19	*Louver	3		WS010001-	
8		0820 023 18	*Louver	1		WS010001-	
9		0898 000 02	*Amplifier	1		WS010001-	
10		0745 142 UA	*Filter, Air	1		WS010001-	
11		0820 215 07	*Relay	1		WS010001-	
12		0690 210 86	*Knob	2		WS010001-	
13		0898 000 05	*Switch	1		WS010001-	
14		0898 000 03	*Volume, Thermodtat	1		WS010001-	
15		0898 000 04	*Switch Ass'y, Blower	1		WS010001-	
16		D408 205 00	*Decal	1		WS010001-	
17		D493 694 00	*Seal, Sponge	2		WS010001-	
18		D551 009 01	*Seal, Sponge	2		WS010001-	L=1000
19		D551 009 02	*Seal, Sponge	2		WS010001-	L=430
20		D551 009 03	*Seal, Sponge	1		WS010001-	L=230
21		D551 010 01	*Seal, Sponge	2		WS010001-	L=210
22		D551 010 02	*Seal, Sponge	2		WS010001-	L=150
23		4070 740 01	*Hose, Fuel	1		WS010001-	L=390
24		0518 100 20	*Bolt, Treatment (W/L.W, F.W)	4		WS010001-	M10X20 P=1.25
25		0517 060 16	*Bolt, Treatment (W/L.W, F.W)	9		WS010001-	M6X16
26		0454 300 12	*Screw, Tapping	6		WS010001-	M3X12
27		0454 600 12	*Screw, Tapping	4		WS010001-	M6X12
28		4004 280 01	*Bolt, Button Head	7		WS010001-	M6X16
29		0593 060 00	*Washer, Flat	7		WS010001-	M6
30		0590 060 00	*Washer, Lock	7		WS010001-	M6
31		0690 082 07	*Clamp	1		WS010001-	
32		0565 040 12	*Screw, Pan Head	2		WS010001-	M4X12
33		0593 040 00	*Washer, Flat	2		WS010001-	M4
34		0590 040 00	*Washer, Lock	2		WS010001-	M4

https://truckmanualshub.com/

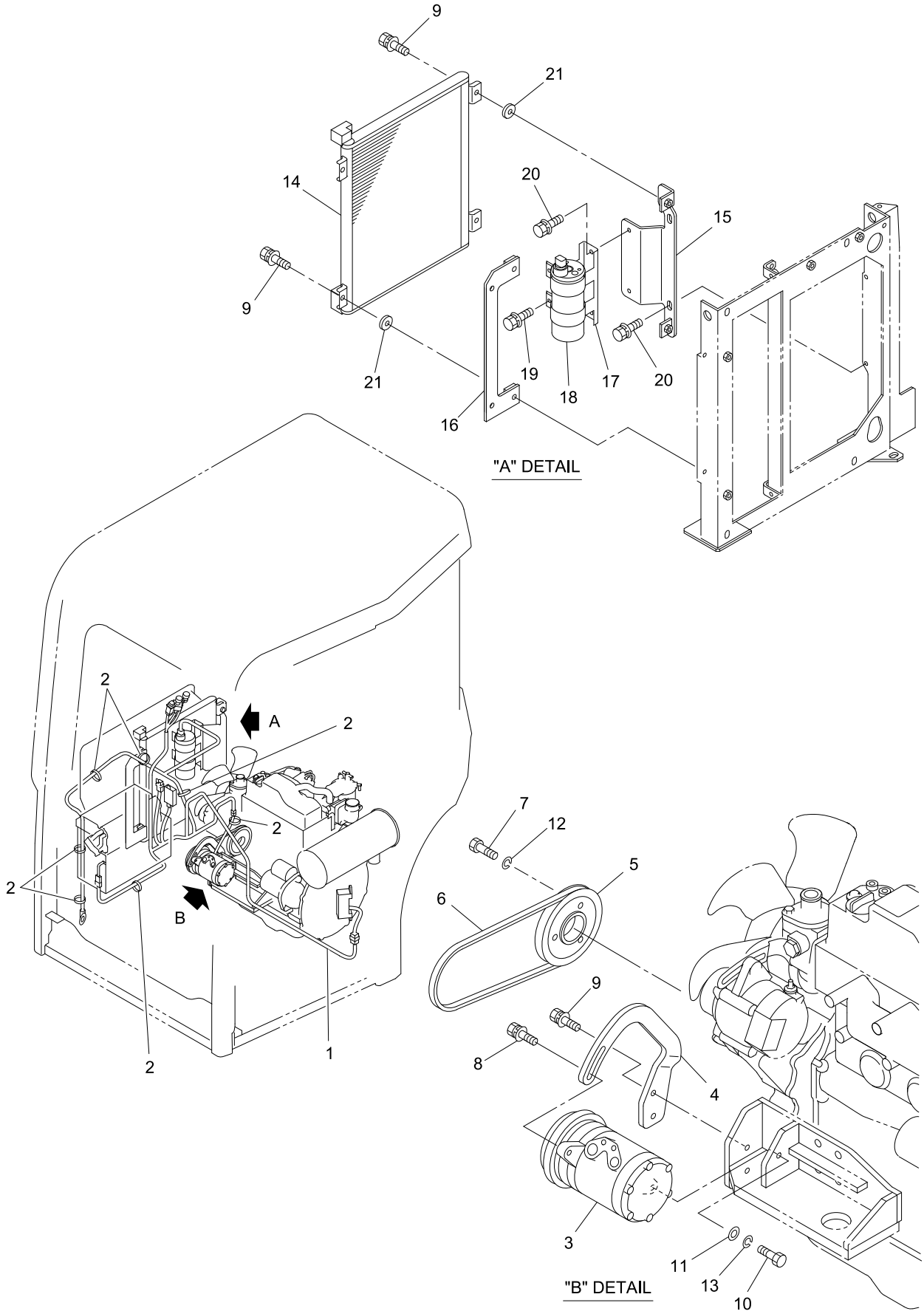

30V4-151600-1

https://truckmanualshub.com/

KEY No.	SUP.	PART No.	DESCRIPTION	Q'TY	CHAN.	SERIAL No.	REMARKS
0	×	F385 399 00	Air Conditioner Ass'y (2)	1		WS010001-	
1		D592 306 00	*Harness	1		WS010001-	
2		0820 067 04	*Band, Cable	7		WS010001-	
3		0897 018 UA	*Compressor Ass'y	1		WS010001-	
4		D260 513 00	*Stay	1		WS010001-	
5		D032 015 00	*Pully	1		WS010001-	
6		0910 101 17	*Belt	1		WS010001-	L=813
7		0513 100 20	*Bolt, Teratment	3		WS010001-	M10X20
8		0517 080 30	*Bolt, Treatment (W/L.W, F.W)	2		WS010001-	M8X30
9		0517 080 25	*Bolt, Treatment (W/L.W, F.W)	6		WS010001-	M8X25
10		0513 080 40	*Bolt, Treatment	1		WS010001-	M8X40
11		0593 080 00	*Washer, Flat	1		WS010001-	M8
12		0590 100 00	*Washer, Lock	3		WS010001-	M10
13		0590 080 00	*Washer, Lock	1		WS010001-	M8
14		0897 019 UA	*Condenser	1		WS010001-	
15		D419 361 00	*Bracket	1		WS010001-	
16		D419 362 00	*Bracket	1		WS010001-	
17		0898 000 01	*Bracket	1		WS010001-	
18		0897 002 UA	*Dryer, Recerver	1		WS010001-	
19		0517 060 20	*Bolt, Treatment (W/L.W, F.W)	2		WS010001-	M6X20
20		0517 080 20	*Bolt, Treatment (W/L.W, F.W)	6		WS010001-	M8X20
21		F771 315 00	*Washer, Rubber	4		WS010001-	

https://truckmanualshub.com/

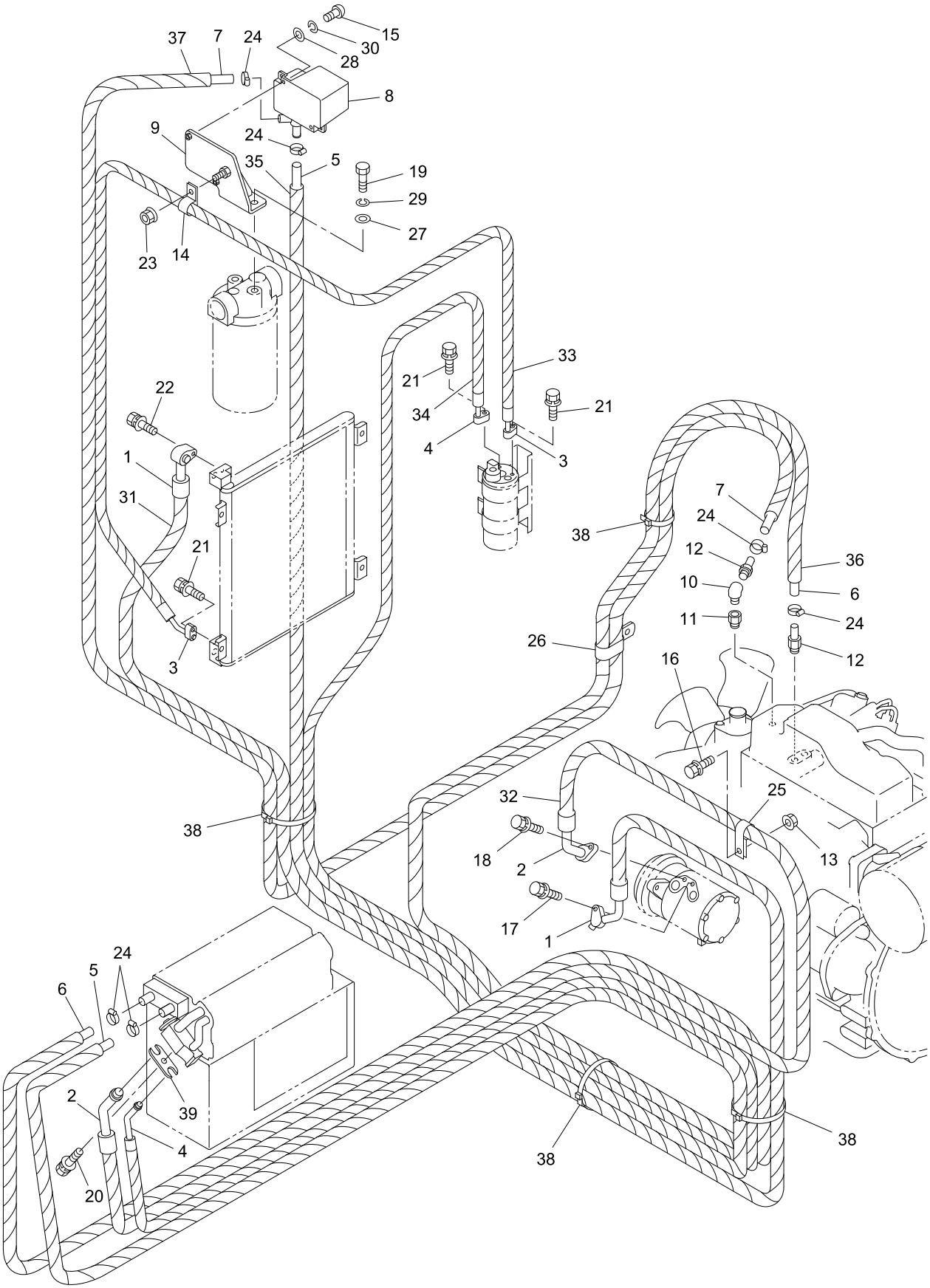

30V4-151700-1

https://truckmanualshub.com/

KEY No.	SUP.	PART No.	DESCRIPTION	Q'TY	CHAN.	SERIAL No.	REMARKS
0	×	F385 395 00	Piping, Ass'y Air Conditioner	1		WS010001-	
0-1	×	F385 399 00	Piping, Ass'y Air Conditioner	1		WS010001-	
1		0898 000 64	*Hose	1		WS010001-	
2		0898 000 65	*Hose	1		WS010001-	
3		0898 000 66	*Hose	1		WS010001-	
4		0898 000 67	*Hose	1		WS010001-	
5		4070 102 42	*Hose, Water	M		WS010001-	L=2800
6		4070 102 03	*Hose, Water	M		WS010001-	L=3300
7		4070 102 43	*Hose, Water	M		WS010001-	L=2250
8		0898 000 00	*Valve, Water	1		WS010001-	
9		D419 205 00	*Bracket	1		WS010001-	
10		0710 100 29	*Elbow	1		WS010001-	
11		0710 503 03	*Socket	1		WS010001-	
12		4072 220 00	*Nipple	2		WS010001-	
13		0521 080 00	*Nut, Hex. (W/F.W)	1		WS010001-	M8
14		4080 000 07	*Clamp	1		WS010001-	
15		0565 050 10	*Screw, Pan Head	2		WS010001-	M5X10
16		0517 080 30	*Bolt, Treatment (W/L.W, F.W)	1		WS010001-	M8X30
17		0517 080 35	*Bolt, Treatment (W/L.W, F.W)	1		WS010001-	M8X35
18		0517 080 25	*Bolt, Treatment (W/L.W, F.W)	1		WS010001-	M8X25
19		0550 120 25	*Bolt, Hex.	2		WS010001-	M12X25
20		0517 060 20	*Bolt, Treatment (W/L.W, F.W)	1		WS010001-	M6X20
21		0517 060 25	*Bolt, Treatment (W/L.W, F.W)	3		WS010001-	M6X25
22		0517 060 40	*Bolt, Treatment (W/L.W, F.W)	1		WS010001-	M6X40
23		0524 100 00	*Nut, Hex. (W/F.W)	1		WS010001-	M10 P=1.25
24		0690 083 04	*Clamp, Hose	6		WS010001-	
25		4080 000 12	*Clamp, Hose	1		WS010001-	
26		4080 000 26	*Clamp, Hose	1		WS010001-	
27		0593 120 00	*Washer, Flat	2		WS010001-	M12
28		0593 050 00	*Washer, Flat	2		WS010001-	M5
29		0590 120 00	*Washer, Lock	2		WS010001-	M12
30		0590 050 00	*Washer, Lock	2		WS010001-	M5
31		0820 803 05	*Tube, Corrugate	M		WS010001-	L=1530
32		0820 803 06	*Tube, Corrugate	M		WS010001-	L=1500
33		0820 803 04	*Tube, Corrugate	M		WS010001-	L=950
34		0820 803 04	*Tube, Corrugate	M		WS010001-	L=2500
35		0820 803 06	*Tube, Corrugate	M		WS010001-	L=2700
36		0820 803 06	*Tube, Corrugate	M		WS010001-	L=3200
37		0820 803 06	*Tube, Corrugate	M		WS010001-	L=2150
38		0820 067 04	*Band, Cable	4		WS010001-	
39		**** *** **	*Plate, Flange	1		WS010001-	

https://truckmanualshub.com/

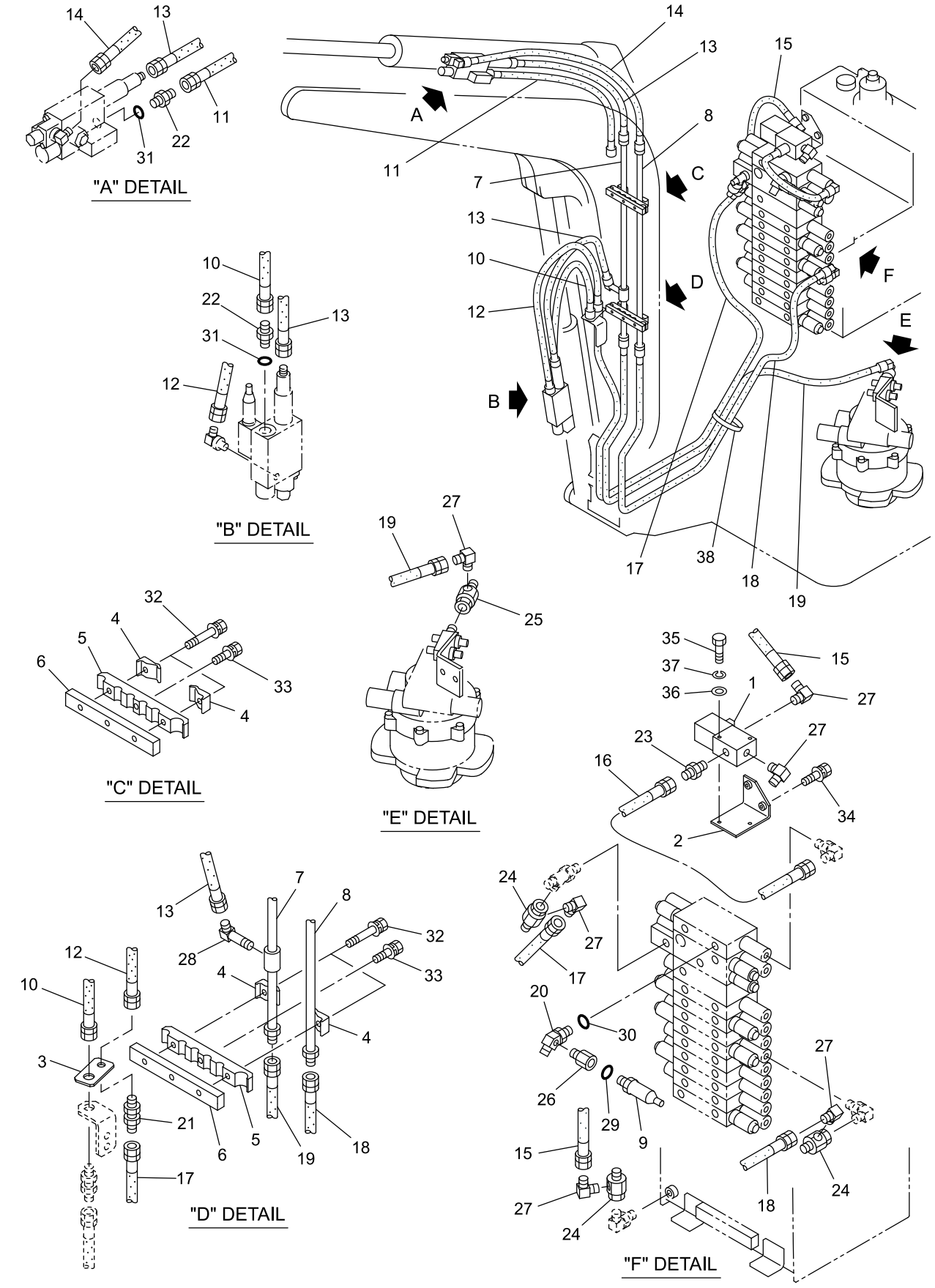

https://truckmanualshub.com/

KEY No.	SUP.	PART No.	DESCRIPTION	Q'TY	CHAN.	SERIAL No.	REMARKS
0	×	F342 626 00	Piping Ass'y, Hydraulic	1		WS010001-	
1		0785 118 UA	*Valve, Solenoid	1		WS010001-	
2		D419 186 00	*Bracket	1		WS010001-	
3		D419 194 00	*Bracket	1		WS010001-	
4		4081 118 00	*Clamp, Tube	4		WS010001-	
5		D081 194 00	*Clamp, Tube	2		WS010001-	
6		D082 107 00	*Clamp, Seat	2		WS010001-	
7		D286 338 00	*Tube	1		WS010001-	
8		D286 337 00	*Tube	1		WS010001-	
9		0858 601 16	*Sensor, Pressure	1		WS010001-	
10		D070 543 07	*Hose Ass'y	1		WS010001-	L=1050
11		D070 543 08	*Hose Ass'y	1		WS010001-	L=900
12		4070 842 01	*Hose Ass'y	1		WS010001-	L=1200
13		4070 842 27	*Hose Ass'y	2		WS010001-	L=850
14		4070 842 28	*Hose Ass'y	1		WS010001-	L=1050
15		4070 548 25	*Hose Ass'y	1		WS010001-	L=700
16		4070 548 55	*Hose Ass'y	1		WS010001-	L=350
17		D070 195 20	*Hose Ass'y	1		WS010001-	L=2600
18		D070 195 03	*Hose Ass'y	1		WS010001-	L=2450
19		D070 195 06	*Hose Ass'y	1		WS010001-	L=1900
20		D060 111 00	*Adapter	1		WS010001-	
21		D060 137 00	*Adapter	1		WS010001-	
22		0713 700 78	*Adapter, Reducer	2		WS010001-	PF1/2XPF3/8
23		0712 310 30	*Adapter	1		WS010001-	
24		4072 930 01	*Adapter, Union	3		WS010001-	
25		4072 930 02	*Adapter, Union	1		WS010001-	
26		0713 705 02	*Adapter	1		WS010001-	
27		0712 310 50	*Elbow	6		WS010001-	
28		4072 866 02	*Elbow, Long	1		WS010001-	
29		0760 710 12	*Ring, O	1		WS010001-	P11-90B
30		0760 710 16	*Ring, O	1		WS010001-	P14-90B
31		0760 710 19	*Ring, O	2		WS010001-	P18-90B
32		0520 100 65	*Bolt, Treatment (W/L.W)	4		WS010001-	M10X65 P=1.25
33		0518 100 45	*Bolt, Treatment (W/L.W, F.W)	2		WS010001-	M10X45 P=1.25
34		0517 060 20	*Bolt, Treatment (W/L.W, F.W)	2		WS010001-	M6X20
35		0550 060 50	*Bolt, Hex.	2		WS010001-	M6X50
36		0593 060 00	*Washer, Flat	2		WS010001-	M6
37		0590 060 00	*Washer, Lock	2		WS010001-	M6
38		0820 067 05	*Band, Cable	1		WS010001-	

https://truckmanualshub.com/

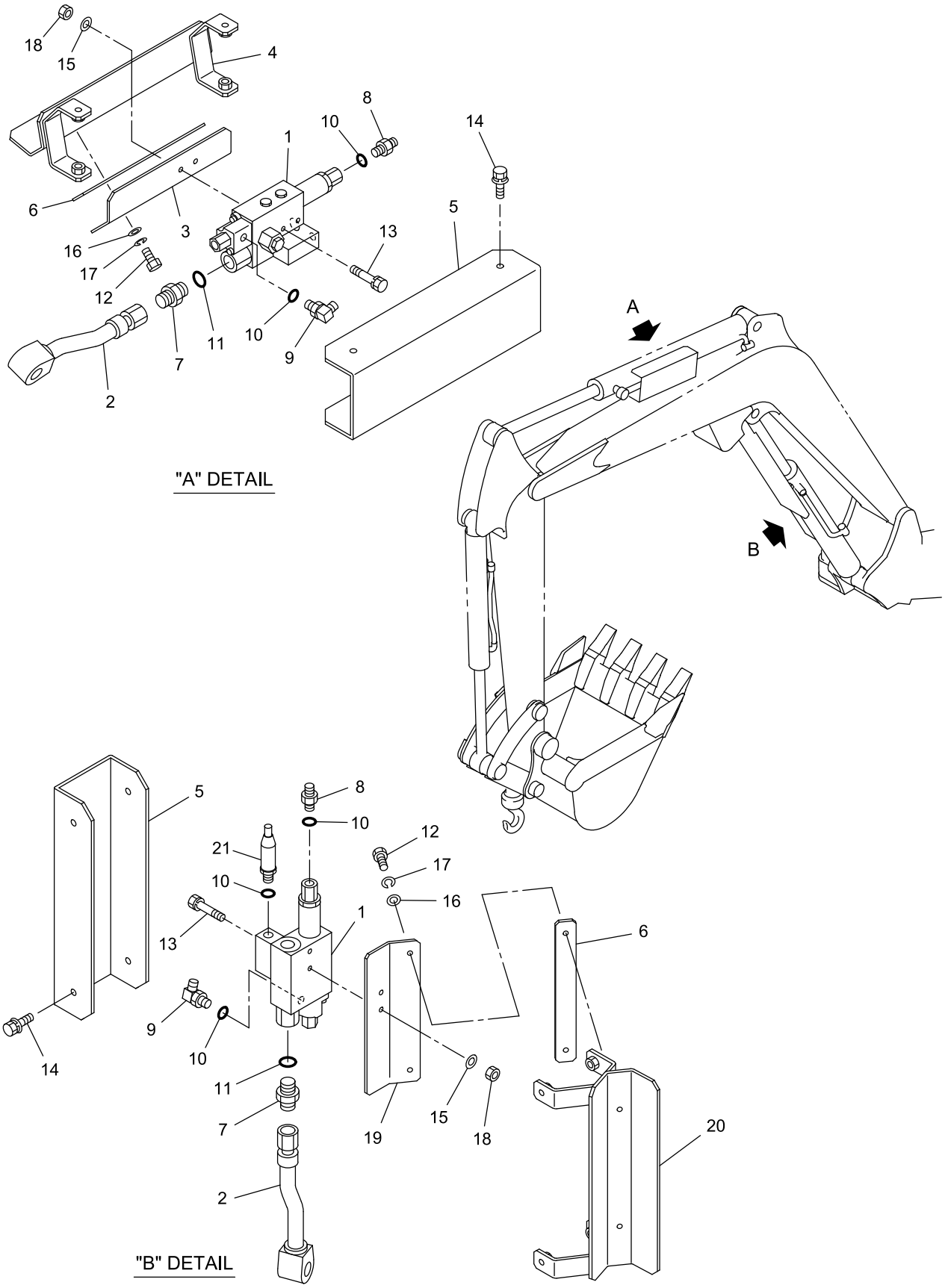

V4ALL-160200-1

https://truckmanualshub.com/

KEY No.	SUP.	PART No.	DESCRIPTION	Q'TY	CHAN.	SERIAL No.	REMARKS
0	×	F342 625 00	Valve Ass'y, Holding	1		WS010001-	
0-1	×	F342 624 00	Valve Ass'y, Holding	1		WS010001-	
1	#	0787 047 UA	*Valve, Holding	2		WS010001-	Sh.No.16-3
2		D286 339 00	*Tube	2		WS010001-	
3		D419 204 00	*Bracket	1		WS010001-	
4		D419 208 00	*Bracket	1		WS010001-	
5		D458 413 00	*Cover	2		WS010001-	
6		D007 244 01	*Shim	AR		WS010001-	t=1.6
6-1		D007 244 02	*Shim	AR		WS010001-	t=4.5
6-2		D007 244 03	*Shim	AR		WS010001-	t=6.0
7		0713 700 04	*Adapter	2		WS010001-	
8		0713 700 02	*Adapter	2		WS010001-	
9		0710 122 09	*Elbow	2		WS010001-	
10		0760 710 12	*Ring, O	5		WS010001-	P11-90B
11		0760 710 19	*Ring, O	2		WS010001-	P18-90B
12		0550 100 20	*Bolt, Hex.	4		WS010001-	M10X20
13		0519 080 55	*Bolt, Treatment (W/L.W)	4		WS010001-	M8X55
14		0517 080 16	*Bolt, Treatment (W/L.W, F.W)	8		WS010001-	M8X16
15		0593 080 00	*Washer, Flat	4		WS010001-	M8
16		0593 100 00	*Washer, Flat	4		WS010001-	M10
17		0590 100 00	*Washer, Lock	4		WS010001-	M10
18		0521 080 00	*Nut, Hex. (W/F.W)	4		WS010001-	M8
19		D419 203 00	*Bracket	1		WS010001-	
20		D419 207 00	*Bracket	1		WS010001-	
21		0858 601 16	*Sensor, Pressure	1		WS010001-	

https://truckmanualshub.com/

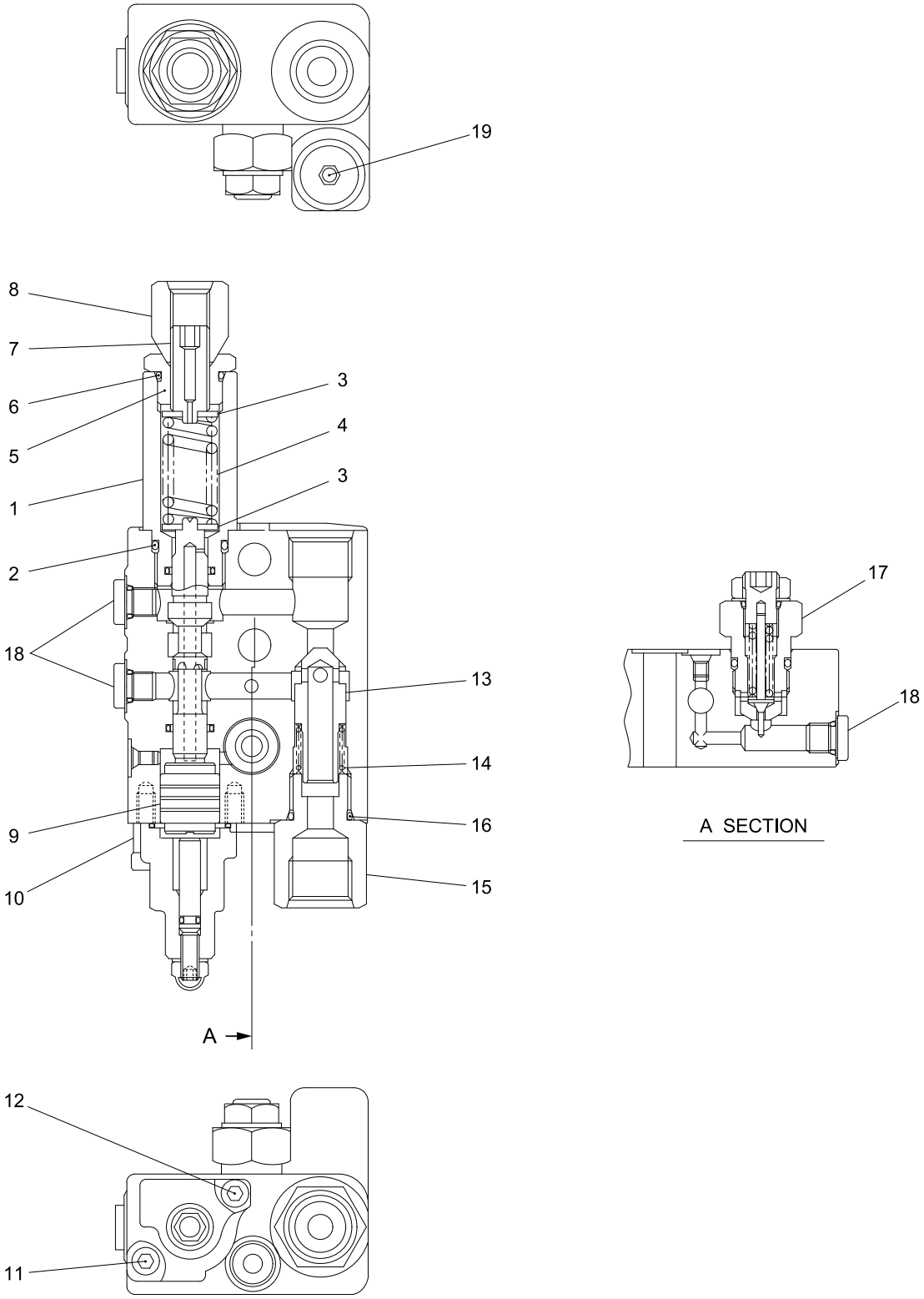

V4ALL-160300-1

https://truckmanualshub.com/

KEY No.	SUP.	PART No.	DESCRIPTION	Q'TY	CHAN.	SERIAL No.	REMARKS
0		0787 047 UA	Valve Ass'y, Holding	1		WS010001-	
1		0787 047 04	*Plug	1		WS010001-	
2		0760 710 22	*Ring, O	1		WS010001-	P22-90B
3		0784 047 06	*Seat, Spring	2		WS010001-	
4		0784 047 07	*Spring	1		WS010001-	
5		0787 047 08	*Plug	1		WS010001-	
6		0760 710 20	*Ring, O	1		WS010001-	P20-90B
7		0784 047 10	*Adjuster	1		WS010001-	
8		0784 047 11	*Nut, Hex.	1		WS010001-	
9		0784 047 12	*Piston	1		WS010001-	
10		0784 047 13	*Cap	1		WS010001-	
11		0562 060 16	*Bolt, Socket Head	1		WS010001-	M6X16
12		0562 060 35	*Bolt, Socket Head	1		WS010001-	M6X35
13		0787 047 16	*Poppet	1		WS010001-	
14		0787 047 17	*Spring	1		WS010001-	
15		0787 047 18	*Plug	1		WS010001-	
16		0760 710 19	*Ring, O	1		WS010001-	P18-90B
17		0787 047 91	*Valve, Relief	1		WS010001-	
18		0783 677 83	*Plug	3		WS010001-	
19		0783 846 85	*Plug	1		WS010001-	

https://truckmanualshub.com/

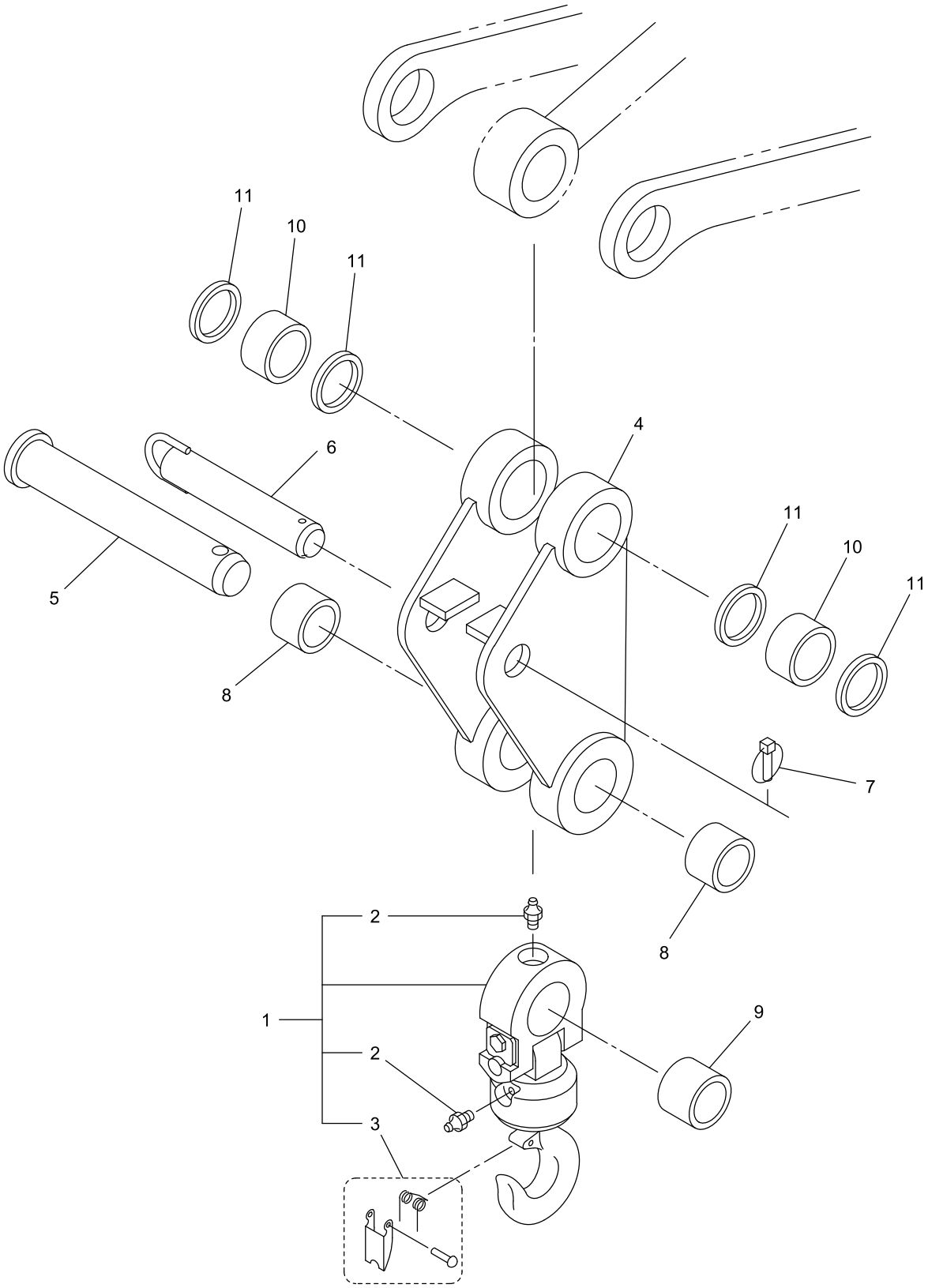

30V4-160400-1

https://truckmanualshub.com/

KEY No.	SUP.	PART No.	DESCRIPTION	Q'TY	CHAN.	SERIAL No.	REMARKS
0	×	F418 126 00	Block Ass'y, Hook	1		WS010001-	
1		0652 964 UA	*Hook	1		WS010001-	
2		0728 131 11	**Nipple, Grease	2		WS010001-	M6
3		0652 923 UA	**Ratch Ass'y	1		WS010001-	
4		D490 441 00	*Link, Backet	1		WS010001-	
5		D013 442 00	*Pin, Head	1		WS010001-	
6		D013 190 00	*Pin, Head	1		WS010001-	
7		4017 233 03	*Pin, Ring	1		WS010001-	
8		D043 078 00	*Bushing	2		WS010001-	
9		D043 079 01	*Bushing	1		WS010001-	
10		4043 231 01	*Bushing	2		WS010001-	
11		0765 033 29	*Seal, Dust	4		WS010001-	

https://truckmanualshub.com/

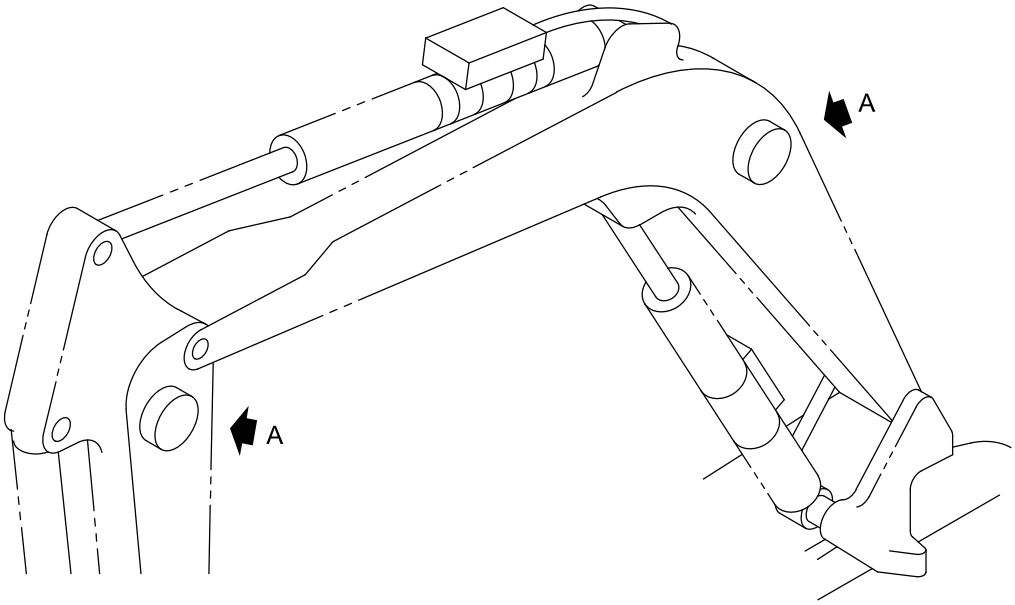

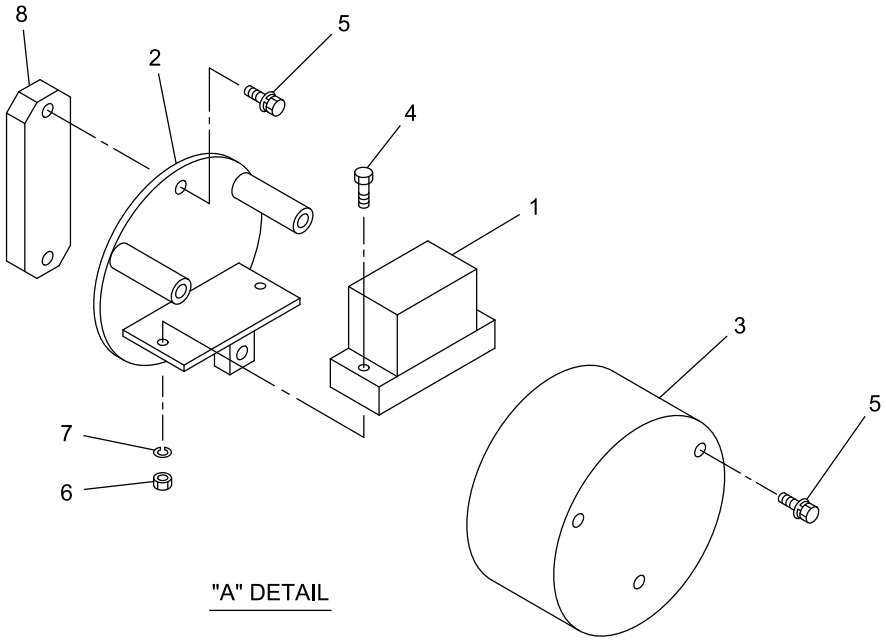

"A" DETAIL

V4ALL-160500-1

https://truckmanualshub.com/

KEY No.	SUP.	PART No.	DESCRIPTION	Q'TY	CHAN.	SERIAL No.	REMARKS
0	×	F370 340 00	Angle Detector	1		WS010001-	
1		0881 100 UA	*Detector, Angle	2		WS010001-	
2		D414 314 00	*Bracket	2		WS010001-	
3		D455 737 00	*Cover	2		WS010001-	
4		0550 060 30	*Bolt, Hex.	4		WS010001-	M6X30
5		0518 100 20	*Bolt, Treatment (W/L.W, F.W)	10		WS010001-	M10X20 P=1.25
6		0580 060 00	*Nut, Hex.	4		WS010001-	M6
7		0590 060 00	*Washer, Lock	4		WS010001-	M6
8		D260 329 00	*Stay	2		WS010001-	

https://truckmanualshub.com/

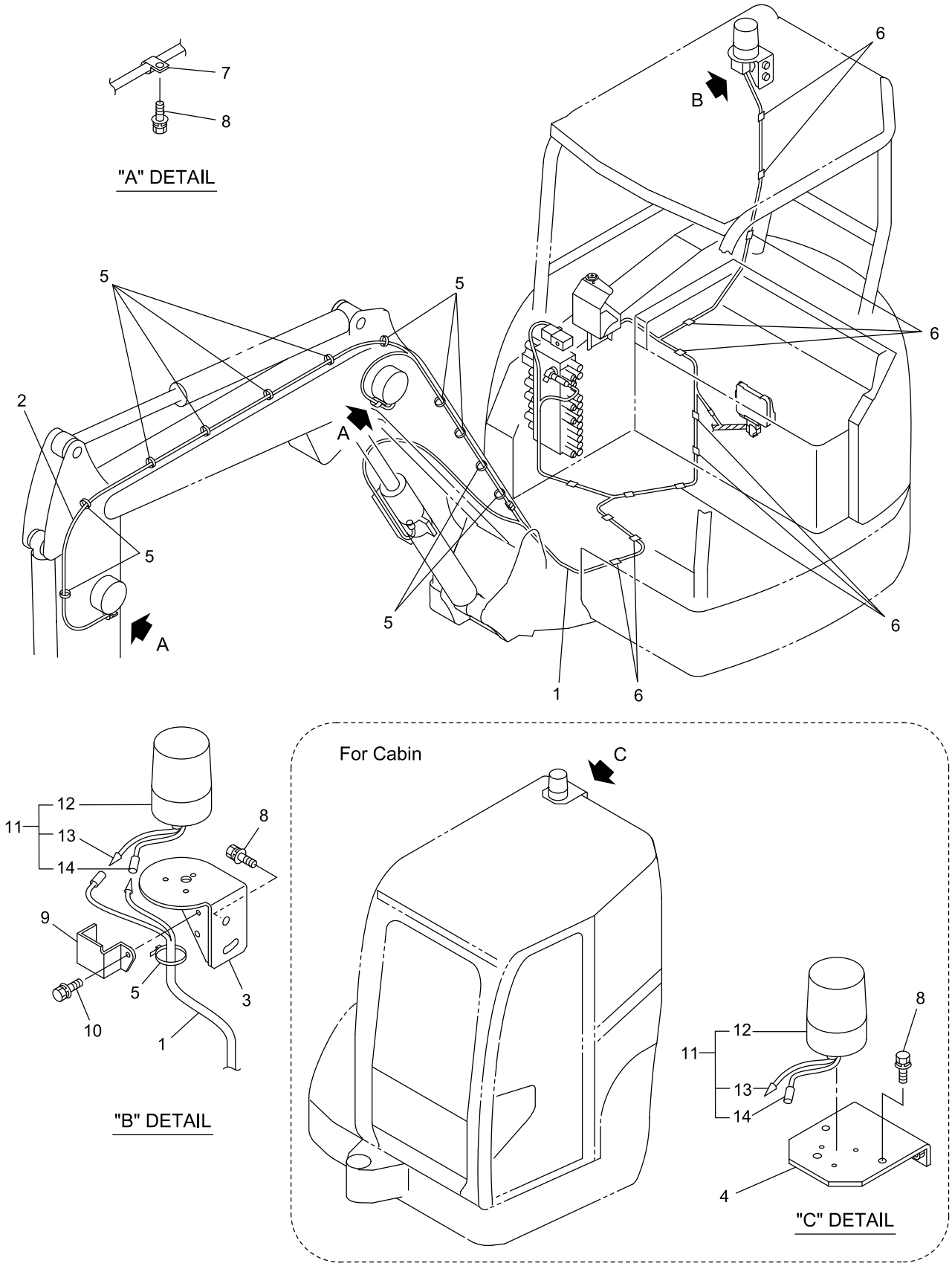

30V4-160600-1

https://truckmanualshub.com/

KEY No.	SUP.	PART No.	DESCRIPTION	Q'TY	CHAN.	SERIAL No.	REMARKS
0	×	F366 880 00	Electrical System	1		WS010001-	
1		D592 304 00	*Harness	1		WS010001-	
2		D592 305 00	*Harness	1		WS010001-	
3		D418 456 00	*Bracket	1		WS010001-	
4		D418 632 00	*Bracket	1		WS010001-	
5		0820 067 04	*Band, Cable	AR		WS010001-	
6		0820 069 03	*Sticker	AR		WS010001-	
7		4080 000 02	*Clamp	2		WS010001-	
8		0518 100 20	*Bolt, Treatment (W/L.W, F.W)	4		WS010001-	M10X20 P=1.25
9		D457 127 00	*Cover	1		WS010001-	
10		0517 080 16	*Bolt, Treatment (W/L.W, F.W)	1		WS010001-	M8X16
11		F366 201 00	*Light Ass'y, Revolving	1		WS010001-	
12		0854 060 01	**Light, Rotary	1		WS010001-	
13		0820 650 20	**Terminal	1		WS010001-	
13-1		0820 651 20	**Sleeve	1		WS010001-	
14		0820 650 21	**Terminal	1		WS010001-	
14-1		0820 651 21	**Sleeve	1		WS010001-	

https://truckmanualshub.com/

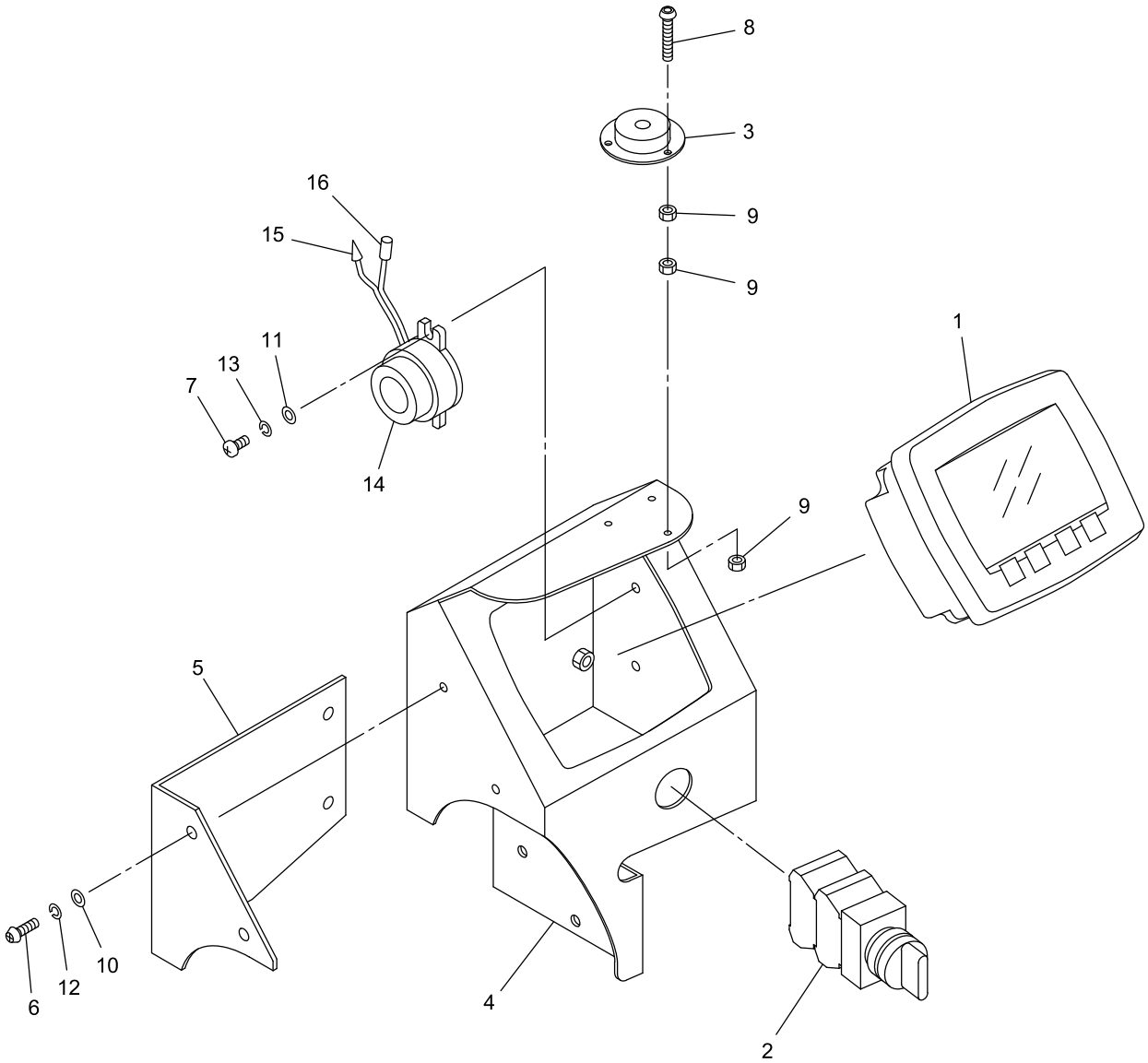

V4ALL-160700-1

https://truckmanualshub.com/

KEY No.	SUP.	PART No.	DESCRIPTION	Q'TY	CHAN.	SERIAL No.	REMARKS
0	×	F370 342 00	Controller Ass'y	1		WS010001-	
1		0877 900 11	*Display	1		WS010001-	
2		0858 308 23	*Switch, Select	1		WS010001-	
3		0933 054 UA	*Gauge, Level	1		WS010001-	
4		D419 357 00	*Bracket	1		WS010001-	For Canopy
4-1		D419 355 00	*Bracket	1		WS010001-	For Cabin
5		D458 497 00	*Cover	1		WS010001-	
6		4004 364 01	*Bolt, Button Head	4		WS010001-	M6X18
7		0565 040 08	*Screw, Pan Head	2		WS010001-	M4X8
8		0565 030 20	*Screw, Pan Head	3		WS010001-	M3X20
9		0580 030 00	*Nut, Hex.	9		WS010001-	M3
10		0594 060 00	*Washer, Flat	4		WS010001-	M6
11		0593 040 00	*Washer, Flat	2		WS010001-	M4
12		0596 060 00	*Washer, Lock	4		WS010001-	M6
13		0590 040 00	*Washer, Lock	2		WS010001-	M4
14		0860 504 02	*Buzzer	1		WS010001-	
15		0820 650 20	*Terminal	1		WS010001-	
15-1		0820 651 20	*Sleeve	1		WS010001-	
16		0820 650 21	*Terminal	1		WS010001-	
16-1		0820 651 21	*Sleeve	1		WS010001-	

https://truckmanualshub.com/

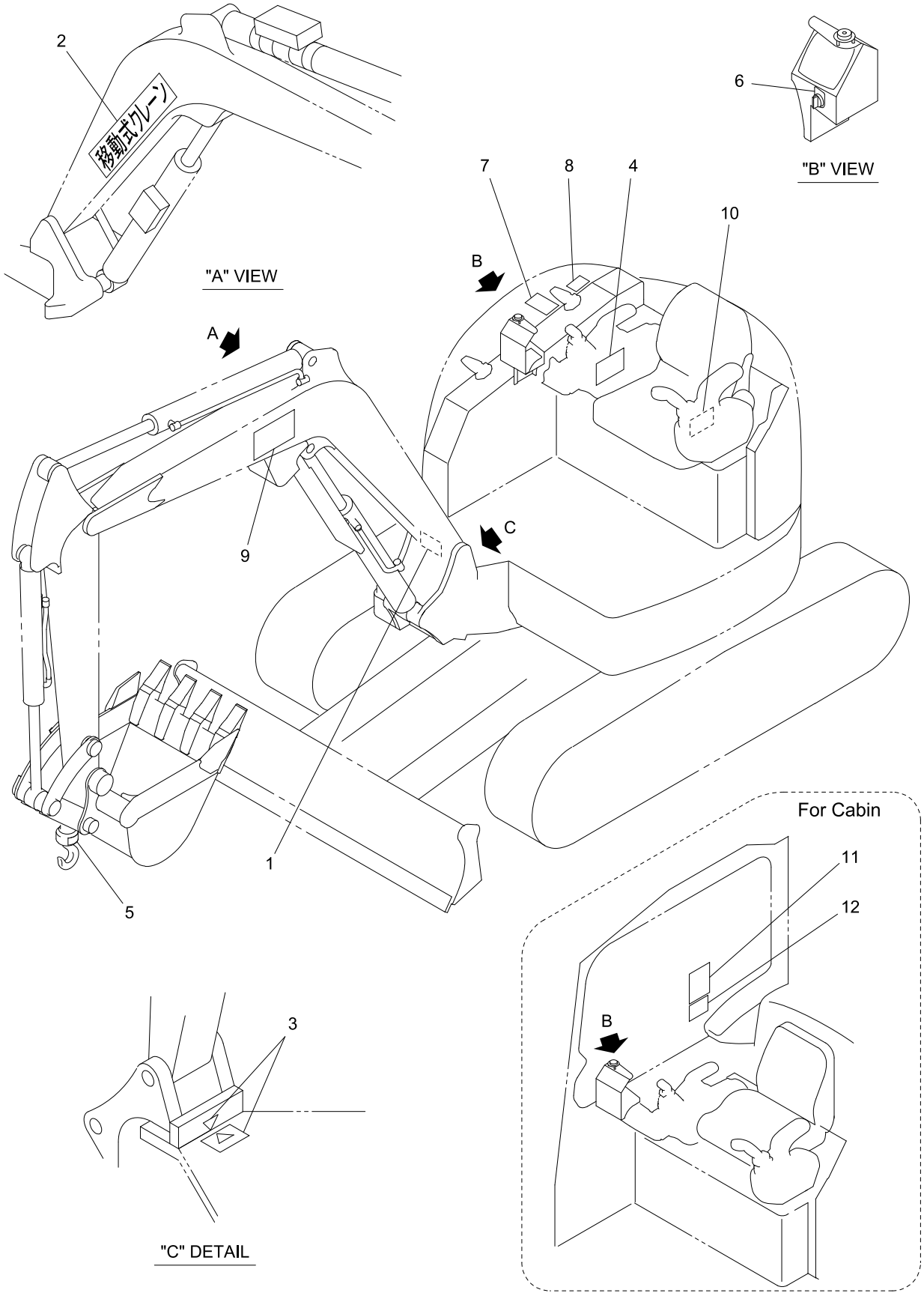

30V4-160800-1

https://truckmanualshub.com/

KEY No.	SUP.	PART No.	DESCRIPTION	Q'TY	CHAN.	SERIAL No.	REMARKS
0	×	F377 861 00	Decal Ass'y	1		WS010001-	
1		D405 857 00	*Decal	1		WS010001-	
1-1		0497 035 00	*Screw, Drive	4		WS010001-	d=3
2		D405 859 00	*Decal	1		WS010001-	
3		D405 867 00	*Decal	1		WS010001-	
4		D408 396 00	*Decal	1		WS010001-	
5		D405 868 00	*Decal	1		WS010001-	
6		D408 637 00	*Decal	1		WS010001-	
7		D408 021 00	*Decal	1		WS010001-	
8		D408 020 00	*Decal	1		WS010001-	
9		D408 379 01	*Decal	1		WS010001-	0.2t
9-1		D408 379 02	*Decal	1		WS010001-	ADD, 0.3t
10		D408 380 00	*Decal	1		WS010001-	Canopy
10-1		D408 382 00	*Decal	1		WS010001-	Canopy, ADD
10-2		D408 381 00	*Decal	1		WS010001-	Cabin
10-3		D408 383 00	*Decal	1		WS010001-	Cabin, ADD
11		D408 038 00	*Decal	1		WS010001-	
12		D406 827 00	*Decal	1		WS010001-	

https://truckmanualshub.com/

ALPHABETICAL INDEX

Parts Name	P/N	Page *1	Item
* * * * *	*****	2	37
ENGINE PARTS (3TNV88-ESIK, 3TNV88F-ESIK)	*****	2	29
RUNNING STORES LIST	*****	2	
SEAL KIT	*****	2	23
Barrel, Cylinder	*********	42	27
Barrel, Cylinder	*********	46	18
Bearing	*********	42	18
Bearing	*********	42	36
Bearing	*********	42	44
Bearing	*********	46	56
Bearing	*********	46	59
Body	*********	46	57
Body	*********	53	32
Body	*********	76	20
Carrier	*********	42	66
Carrier	*********	46	36
Carrier	*********	46	45
Casing	*********	42	46
Casing	*********	46	7
Collar	*********	46	60
Cover	*********	76	12
Gear	*********	42	65
Gear	*********	42	69
Gear	*********	46	40
Gear	*********	46	49
Gear, Internal	*********	46	61
Holder, Barrel	*********	42	29
Holder, Barrel	*********	46	16
Holder, Shoe	*********	42	30
Holder, Shoe	*********	46	15
Lower Machine Ass'y	*********	6	0
Needle	*********	42	71
Needle	*********	46	39
Needle	*********	46	48
Pin	*********	42	28
Pin	*********	42	72
Pin	*********	46	17
Pin	*********	46	32
Pin	*********	46	62
Pin, Snap	*********	42	73
Pin, Spring	*********	42	17
Pin, Spring	*********	42	67
Piston	*********	42	31
Piston	*********	42	39
Piston	*********	46	14
Piston	*********	72	18
Plate, Flange	*********	216	39
Plate, Swash	*********	46	33
Plate, Thrust	*********	46	41
Plate, Thrust	*********	46	50
Plate, Valve	*********	42	23

*1 Note

https://truckmanualshub.com/

ALPHABETICAL INDEX

Parts Name	P/N	Page *1	Item
Plate, Valve	*********	46	22
Plug	*********	46	11
Retainer	*********	42	25
Retainer	*********	46	19
Ring	*********	46	38
Ring	*********	46	47
Ring, Seal	*********	46	55
Ring, Snap	*********	42	24
Ring, Snap	*********	42	45
Ring, Snap	*********	42	70
Seal, Oil	*********	42	38
Seal, Oil	*********	46	58
Shaft, Pinion	*********	46	54
Shoe	*********	42	32
Shoe	*********	46	13
Spring	*********	42	26
Spring	*********	46	10
Spring	*********	46	20
Tube Ass'y, Cylinder	*********	64	1
Tube Ass'y, Cylinder	*********	66	1
Tube Ass'y, Cylinder	*********	68	1
Tube Ass'y, Cylinder	*********	70	1
Tube Ass'y, Cylinder	*********	72	1
Valve, Check	*********	46	8
Washer, Thrust	*********	42	68
Washer, Thrust	*********	46	37
Washer, Thrust	*********	46	46
Wire	032210899	94	12
Wire	032210899	94	13
Bolt, Treatment (W/L.W, F.W)	043806016	186	13
Bolt, Treatment (W/L.W, F.W)	043910020	114	6
Bolt, Treatment (W/L.W, F.W)	043910020	210	6
Bolt, Treatment (W/L.W,F.W)	043910020	204	10
Bolt, Treatment (W/L.W, F.W)	043910025	110	3
Bolt, Treatment (W/L.W, F.W)	043910025	112	6
Bolt, Treatment (W/L.W, F.W)	043910025	210	7
Bolt, Treatment (W/L.W,F.W)	043910025	204	9
Screw, Tapping	045430012	212	26
Screw, Tapping	045440020	138	8
Screw, Tapping	045460012	212	27
Bolt, Treatment (W/Flange)	045712030	6	14
Bolt, Treatment (W/Flange)	048010020	102	33
Washer, Conical Spring	049180012	204	5
Ring, Snap	049350028	46	21
Ring, Snap	049350035	62	2
Ring, Snap	049350062	14	3

*1 Note

https://truckmanualshub.com/

ALPHABETICAL INDEX

Parts Name	P/N	Page *1	Item
Ring, Snap	049350080	12	5
Ring, Snap	049351008	82	26
Ring, Snap	049351016	84	24
Ring, Snap	049351022	46	42
Ring, Snap	049351025	16	5
Ring, Snap	049351028	42	53
Ring, Snap	049351030	80	11
Ring, Snap	049351055	50	3
Ring "E	049356009	84	22
Pin, Spring	049460610	96	6
Pin, Spring	049460612	80	12
Pin, Spring	049460625	78	11
Pin, Spring	049460810	14	8
Pin, Spring	049460812	46	6
Pin, Spring	049460816	96	7
Pin, Spring	049460840	84	50
Pin, Spring	049461024	78	12
Pin, Spring	049465170	12	1
Screw, Drive	049703500	118	3-1
Screw, Drive	049703500	120	3-2
Screw, Drive	049703500	122	3-1
Screw, Drive	049703500	124	3-1
Screw, Drive	049703500	126	3-1
Screw, Drive	049703500	128	3-1
Screw, Drive	049703500	130	3-1
Screw, Drive	049703500	132	3-1
Screw, Drive	049703500	188	3-1
Screw, Drive	049703500	190	3-2
Screw, Drive	049703500	192	3-1
Screw, Drive	049703500	194	3-1
Screw, Drive	049703500	196	3-1
Screw, Drive	049703500	198	3-1
Screw, Drive	049703500	200	3-1
Screw, Drive	049703500	202	3-1
Screw, Drive	049703500	232	1-1
Bolt, Treatment	051308040	214	10
Bolt, Treatment	051308090	166	25
Bolt, Treatment	051310016	24	35
Bolt, Treatment	051310016	152	17
Bolt, Teratment	051310020	214	7
Bolt, Treatment	051310020	60	12
Bolt, Treatment	051310025	90	18
Bolt, Treatment	051310025	96	8
Bolt, Treatment	051310030	90	19
Bolt, Treatment	051310030	150	6
Bolt, Treatment	051310035	10	22
Bolt, Treatment	051312025	152	32
Bolt, Treatment	051312030	20	17
Bolt, Treatment	051312035	96	9
Bolt, Treatment	051312100	90	17
Bolt, Treatment	051410025	18	11
Bolt, Treatment	051412080	144	39

*1 Note

https://truckmanualshub.com/

ALPHABETICAL INDEX

Parts Name	P/N	Page *1	Item
Bolt, Treatment	051412110	144	38
Bolt, Treatment (W/L.W, F.W)	051706012	84	27
Bolt, Treatment (W/L.W, F.W)	051706012	138	33
Bolt, Treatment (W/L.W, F.W)	051706012	208	10
Bolt, Treatment (W/L.W, F.W)	051706016	60	11
Bolt, Treatment (W/L.W, F.W)	051706016	84	26
Bolt, Treatment (W/L.W, F.W)	051706016	90	59
Bolt, Treatment (W/L.W, F.W)	051706016	98	36
Bolt, Treatment (W/L.W, F.W)	051706016	134	35
Bolt, Treatment (W/L.W, F.W)	051706016	138	20
Bolt, Treatment (W/L.W, F.W)	051706016	208	11
Bolt, Treatment (W/L.W, F.W)	051706016	212	25
Bolt, Treatment (W/L.W, F.W)	051706020	134	46
Bolt, Treatment (W/L.W, F.W)	051706020	138	6
Bolt, Treatment (W/L.W, F.W)	051706020	138	39
Bolt, Treatment (W/L.W, F.W)	051706020	214	19
Bolt, Treatment (W/L.W, F.W)	051706020	216	20
Bolt, Treatment (W/L.W, F.W)	051706020	218	34
Bolt, Treatment (W/L.W, F.W)	051706025	30	5
Bolt, Treatment (W/L.W, F.W)	051706025	34	5
Bolt, Treatment (W/L.W, F.W)	051706025	38	5
Bolt, Treatment (W/L.W, F.W)	051706025	208	9
Bolt, Treatment (W/L.W, F.W)	051706025	216	21
Bolt, Treatment (W/L.W, F.W)	051706040	216	22
Bolt, Treatment (W/L.W, F.W)	051706060	38	73
Bolt, Treatment (W/L.W, F.W)	051708012	6	4
Bolt, Treatment (W/L.W, F.W)	051708012	90	23

*1 Note

https://truckmanualshub.com/

ALPHABETICAL INDEX

Parts Name	P/N	Page *1	Item
Bolt, Treatment (W/L.W, F.W)	051708012	134	29
Bolt, Treatment (W/L.W, F.W)	051708016	82	17
Bolt, Treatment (W/L.W, F.W)	051708016	88	16
Bolt, Treatment (W/L.W, F.W)	051708016	88	21
Bolt, Treatment (W/L.W, F.W)	051708016	90	58
Bolt, Treatment (W/L.W, F.W)	051708016	102	11
Bolt, Treatment (W/L.W, F.W)	051708016	134	4
Bolt, Treatment (W/L.W, F.W)	051708016	160	57
Bolt, Treatment (W/L.W, F.W)	051708016	164	15
Bolt, Treatment (W/L.W, F.W)	051708016	220	14
Bolt, Treatment (W/L.W, F.W)	051708016	228	10
Bolt, Treatment (W/L.W, F.W)	051708020	20	8
Bolt, Treatment (W/L.W, F.W)	051708020	20	23
Bolt, Treatment (W/L.W, F.W)	051708020	24	19
Bolt, Treatment (W/L.W, F.W)	051708020	30	43
Bolt, Treatment (W/L.W, F.W)	051708020	34	43
Bolt, Treatment (W/L.W, F.W)	051708020	38	43
Bolt, Treatment (W/L.W, F.W)	051708020	84	25
Bolt, Treatment (W/L.W, F.W)	051708020	88	15
Bolt, Treatment (W/L.W, F.W)	051708020	90	22
Bolt, Treatment (W/L.W, F.W)	051708020	94	15
Bolt, Treatment (W/L.W, F.W)	051708020	98	35
Bolt, Treatment (W/L.W, F.W)	051708020	104	29
Bolt, Treatment (W/L.W, F.W)	051708020	160	58
Bolt, Treatment (W/L.W, F.W)	051708020	186	12
Bolt, Treatment (W/L.W, F.W)	051708020	214	20
Bolt, Treatment (W/L.W,	051708025	82	16

*1 Note

https://truckmanualshub.com/

ALPHABETICAL INDEX

Parts Name	P/N	Page *1	Item
F.W)			
Bolt, Treatment (W/L.W, F.W)	051708025	82	21
Bolt, Treatment (W/L.W, F.W)	051708025	94	21
Bolt, Treatment (W/L.W, F.W)	051708025	160	32
Bolt, Treatment (W/L.W, F.W)	051708025	214	9
Bolt, Treatment (W/L.W, F.W)	051708025	216	18
Bolt, Treatment (W/L.W, F.W)	051708030	102	12
Bolt, Treatment (W/L.W, F.W)	051708030	104	19
Bolt, Treatment (W/L.W, F.W)	051708030	134	28
Bolt, Treatment (W/L.W, F.W)	051708030	206	8
Bolt, Treatment (W/L.W, F.W)	051708030	214	8
Bolt, Treatment (W/L.W, F.W)	051708030	216	16
Bolt, Treatment (W/L.W, F.W)	051708035	102	13
Bolt, Treatment (W/L.W, F.W)	051708035	104	20
Bolt, Treatment (W/L.W, F.W)	051708035	216	17
Bolt, Treatment (W/L.W, F.W)	051708040	104	21
Bolt, Treatment (W/L.W, F.W)	051708060	28	16
Bolt, Treatment (W/L.W, F.W)	051708115	138	5
Bolt, Treatment (W/L.W, F.W)	051810016	134	27
Bolt, Treatment (W/L.W, F.W)	051810020	6	6
Bolt, Treatment (W/L.W, F.W)	051810020	24	22
Bolt, Treatment (W/L.W, F.W)	051810020	24	36
Bolt, Treatment (W/L.W, F.W)	051810020	28	22
Bolt, Treatment (W/L.W, F.W)	051810020	30	49
Bolt, Treatment (W/L.W, F.W)	051810020	90	20
Bolt, Treatment (W/L.W, F.W)	051810020	94	8
Bolt, Treatment (W/L.W, F.W)	051810020	98	16

*1 Note

https://truckmanualshub.com/

ALPHABETICAL INDEX

Parts Name	P/N	Page *1	Item
Bolt, Treatment (W/L.W, F.W)	051810020	98	37
Bolt, Treatment (W/L.W, F.W)	051810020	102	27
Bolt, Treatment (W/L.W, F.W)	051810020	104	11
Bolt, Treatment (W/L.W, F.W)	051810020	138	50
Bolt, Treatment (W/L.W, F.W)	051810020	156	8
Bolt, Treatment (W/L.W, F.W)	051810020	160	19
Bolt, Treatment (W/L.W, F.W)	051810020	166	17
Bolt, Treatment (W/L.W, F.W)	051810020	170	7
Bolt, Treatment (W/L.W, F.W)	051810020	186	11
Bolt, Treatment (W/L.W, F.W)	051810020	212	24
Bolt, Treatment (W/L.W, F.W)	051810020	226	5
Bolt, Treatment (W/L.W, F.W)	051810020	228	8
Bolt, Treatment (W/L.W, F.W)	051810025	30	65
Bolt, Treatment (W/L.W, F.W)	051810025	34	65
Bolt, Treatment (W/L.W, F.W)	051810025	38	65
Bolt, Treatment (W/L.W, F.W)	051810025	82	10
Bolt, Treatment (W/L.W, F.W)	051810025	84	1
Bolt, Treatment (W/L.W, F.W)	051810025	88	20
Bolt, Treatment (W/L.W, F.W)	051810025	102	19
Bolt, Treatment (W/L.W, F.W)	051810025	104	6
Bolt, Treatment (W/L.W, F.W)	051810025	138	12
Bolt, Treatment (W/L.W, F.W)	051810025	160	16
Bolt, Treatment (W/L.W, F.W)	051810025	166	14
Bolt, Treatment (W/L.W, F.W)	051810030	28	21
Bolt, Treatment (W/L.W, F.W)	051810030	160	33
Bolt, Treatment (W/L.W, F.W)	051810040	160	17
Bolt, Treatment (W/L.W,	051810040	164	9

*1 Note

https://truckmanualshub.com/

ALPHABETICAL INDEX

Parts Name	P/N	Page *1	Item
F.W)			
Bolt, Treatment (W/L.W, F.W)	051810040	166	15
Bolt, Treatment (W/L.W, F.W)	051810045	160	18
Bolt, Treatment (W/L.W, F.W)	051810045	166	16
Bolt, Treatment (W/L.W, F.W)	051810045	218	33
Bolt, Treatment (W/L.W, F.W)	051810060	160	47
Bolt, Treatment (W/L.W, F.W)	051810060	166	40
Bolt, Treatment (W/L.W, F.W)	051812025	60	14
Bolt, Treatment (W/L.W, F.W)	051812040	112	7
Bolt, Treatment (W/L.W)	051908020	84	45
Bolt, Treatment (W/L.W)	051908025	112	9
Bolt, Treatment (W/L.W)	051908030	50	1
Bolt, Treatment (W/L.W)	051908055	220	13
Bolt, Treatment (W/L.W)	052010020	152	18
Bolt, Treatment (W/L.W)	052010035	152	19
Bolt, Treatment (W/L.W)	052010065	164	8
Bolt, Treatment (W/L.W)	052010065	166	13
Bolt, Treatment (W/L.W)	052010065	218	32
Nut, Hex. (W/F.W)	052106000	134	9
Nut, Hex. (W/F.W)	052106000	208	12
Nut, Hex. (W/F.W)	052108000	104	22
Nut, Hex. (W/F.W)	052108000	114	5
Nut, Hex. (W/F.W)	052108000	206	9
Nut, Hex. (W/F.W)	052108000	216	13
Nut, Hex. (W/F.W)	052108000	220	18
Nut, Hex.(W/F.W)	052108000	98	14
Nut, Hex.(W/F.W)	052108000	134	2-4
Nut, Hex..(W/F.W)	052108000	84	47
Nut, Hex. (W/F.W)	052410000	24	20
Nut, Hex. (W/F.W)	052410000	30	44
Nut, Hex. (W/F.W)	052410000	34	44
Nut, Hex. (W/F.W)	052410000	38	44
Nut, Hex. (W/F.W)	052410000	98	34
Nut, Hex. (W/F.W)	052410000	134	32
Nut, Hex. (W/F.W)	052410000	164	17
Nut, Hex. (W/F.W)	052410000	170	8
Nut, Hex. (W/F.W)	052410000	216	23
Nut, Treatment	053512000	144	41
Nut, Hex.	054406000	134	10
Nut, Hex.	054408000	160	59
Nut, Half	054812000	84	30
Nut, Half	054914000	82	18
Bolt, Hex.	055006030	226	4
Bolt, Hex.	055006050	218	35
Bolt, Hex.	055008020	114	4

*1 Note

https://truckmanualshub.com/

ALPHABETICAL INDEX

Parts Name	P/N	Page *1	Item
Bolt, Hex.	055008070	98	31
Bolt, Hex.	055010020	102	20
Bolt, Hex.	055010020	104	34
Bolt, Hex.	055010020	220	12
Bolt, Hex.	055010025	104	8
Bolt, Hex.	055012025	34	66
Bolt, Hex.	055012025	216	19
Bolt, Hex.(Full-Thread)	055108060	98	15
Bolt, Hex.	055208020	134	2-3
Bolt, Treatment	055510040	172	5
Bolt, Treatment	055512020	144	40
Bolt, Treatment	055512025	110	7
Bolt, Treatment	055512035	6	23
Bolt, Treatment	055512040	110	4
Bolt, Treatment	055512060	20	18
Bolt, Treatment	055512070	20	19
Bolt, Treatment	055514040	2	21
Bolt, Treatment	055514040	18	10
Bolt, Treatment	055514040	150	7
Bolt, Treatment	055516030	6	18
Bolt, Treatment	055516030	144	36
Bolt, Treatment	055516030	148	9
Bolt, Treatment	055516030	156	7
Bolt, Treatment	055516030	14	9
Bolt, Treatment	055516035	148	17
Bolt, Treatment	055516045	22	2
Bolt, Treatment	055516050	110	2
Bolt, Treatment	055516050	112	5
Bolt, Treatment	055516050	172	7
Bolt, Treatment	055516065	6	9
Bolt, Treatment	055516065	116	6
Bolt, Treatment	055516070	116	3
Bolt, Treatment	055516100	116	8
Screw, Set	056108008	64	27
Screw, Set	056108008	66	22
Screw, Set	056108008	68	21
Screw, Set	056108008	70	20
Screw, Set	056110010	72	21
Screw, Set	056110010	78	10
Bolt, Socket Head	056205014	80	3
Bolt, Socket Head	056205018	53	20
Bolt, Socket Head	056205018	53	58
Bolt, Socket Head	056205018	53	20
Bolt, Socket Head	056206016	222	11
Bolt, Socket Head	056206035	222	12
Bolt, Socket Head	056206050	74	19
Bolt, Socket Head	056206060	53	48
Bolt, Socket Head	056208016	76	10
Bolt, Socket Head	056208016	78	8
Bolt, Socket Head	056208025	46	27
Bolt, Socket Head	056208025	46	64
Bolt, Socket Head	056208025	78	9

*1 Note

https://truckmanualshub.com/

ALPHABETICAL INDEX

Parts Name	P/N	Page *1	Item
Bolt, Socket Head	056210025	42	12
Bolt, Socket Head	056210030	24	18
Bolt, Socket Head	056212035	6	10
Bolt, Socket Head	056212035	96	4
Bolt, Socket Head	056212040	96	5
Screw, Pan Head	056503020	230	8
Screw, Pan Head	056504008	88	17
Screw, Pan Head	056504008	230	7
Screw, Pan Head	056504010	208	4
Screw, Pan Head	056504012	84	37
Screw, Pan Head	056504012	212	32
Screw, Pan Head	056505010	208	7
Screw, Pan Head	056505010	216	15
Screw, Pan Head	056506025	84	6
Screw, Set	056704008	76	5
Nut, Hex.	058003000	230	9
Nut, Hex.	058005000	98	21
Nut, Hex.	058005000	208	8
Nut, Hex.	058006000	226	6
Nut, Hex.	058008000	53	2
Nut, Hex.	058008000	94	9
Nut, Hex.	058012000	204	4
Nut, Hex.	058014000	84	36
Nut, Hex.	058016000	10	15
Nut, Treatment	058514000	2	22
Nut, Treatment	058514000	150	8
Nut, Treatment	058520000	172	3
Nut, Castle	058730000	144	33
Washer, Lock	059004000	208	6
Washer, Lock	059004000	212	34
Washer, Lock	059004000	230	13
Washer, Lock	059005000	80	2
Washer, Lock	059005000	98	22
Washer, Lock	059005000	216	30
Washer, Lock	059006000	84	10
Washer, Lock	059006000	212	30
Washer, Lock	059006000	218	37
Washer, Lock	059006000	226	7
Washer, Lock	059008000	94	18
Washer, Lock	059008000	98	33
Washer, Lock	059008000	166	26
Washer, Lock	059008000	214	13
Washer, Lock	059010000	60	15
Washer, Lock	059010000	96	10
Washer, Lock	059010000	102	21
Washer, Lock	059010000	104	9
Washer, Lock	059010000	152	22
Washer, Lock	059010000	214	12
Washer, Lock	059010000	220	17
Washer, Lock	059010000	150	9
Washer, Lock	059012000	20	20
Washer, Lock	059012000	34	68

*1 Note

https://truckmanualshub.com/

ALPHABETICAL INDEX

Parts Name	P/N	Page *1	Item
Washer, Lock	059012000	144	42
Washer, Lock	059012000	216	29
Washer, Conical Spring	059108000	160	56
Washer, Flat	059304000	138	9
Washer, Flat	059304000	208	5
Washer, Flat	059304000	212	33
Washer, Flat	059304000	230	11
Washer, Flat	059305000	216	28
Washer, Flat	059306000	84	9
Washer, Flat	059306000	102	15
Washer, Flat	059306000	212	29
Washer, Flat	059306000	218	36
Washer, Flat	059308000	84	28
Washer, Flat	059308000	98	17
Washer, Flat	059308000	98	32
Washer, Flat	059308000	104	26
Washer, Flat	059308000	160	60
Washer, Flat	059308000	166	27
Washer, Flat	059308000	214	11
Washer, Flat	059308000	220	15
Washer, Flat	059310000	102	22
Washer, Flat	059310000	104	10
Washer, Flat	059310000	152	25
Washer, Flat	059310000	220	16
Washer, Flat	059312000	34	67
Washer, Flat	059312000	204	6
Washer, Flat	059312000	216	27
Washer, Flat	059406000	84	7
Washer, Flat	059406000	104	32
Washer, Flat	059406000	138	10
Washer, Flat	059406000	230	10
Washer, Treatment	059508000	94	17
Washer, Treatment	059510000	18	13
Washer, Treatment	059510000	24	37
Washer, Treatment	059510000	90	21
Washer, Treatment	059510000	172	6
Washer, Treatment	059510000	10	21
Washer, Treatment	059512000	6	11
Washer, Treatment	059512000	6	22
Washer, Treatment	059512000	90	41
Washer, Treatment	059512000	96	11
Washer, Treatment	059512000	110	6
Washer, Treatment	059512000	152	33
Washer, Treatment	059514000	18	12
Washer, Treatment	059516000	6	8
Washer, Treatment	059516000	6	17
Washer, Treatment	059516000	22	3
Washer, Treatment	059516000	110	5
Washer, Treatment	059516000	112	8
Washer, Treatment	059516000	116	4
Washer, Treatment	059516000	172	8
Washer, Treatment	059516000	14	10

*1 Note

https://truckmanualshub.com/

ALPHABETICAL INDEX

Parts Name	P/N	Page *1	Item
Washer, Treatment	059520000	172	4
Washer, Lock	059606000	84	8
Washer, Lock	059606000	104	33
Washer, Lock	059606000	138	11
Washer, Lock	059606000	230	12
Pin, Cotter	059901015	102	9
Pin, Cotter	059906050	144	37
Bearing, Swing	0605427UA	20	14
Ball, Steel	060901610	72	22
Ball, Steel	060901610	74	3
Bushing	061811615	84	18
Bushing	061812020	84	17
Bearing	063060044	46	30
Bearing	063062010	46	5
Bearing	063062050	16	3
Bearing	063062060	14	4
Bearing, Ball	063063070	12	6
Adapter, Tooth	065000107	150	23
Tooth	065000204	150	1
Tooth, Bucket	065000204	2	16
Pin, Lock	065000303	2	17
Pin, Lock	065000303	150	2
Pin, Rubber	065000402	2	18
Pin, Rubber	065000402	150	3
Coupling Ass'y	0651483UA	96	3
Roller	065191101	16	4
Shaft, Roller	065191102	16	1
Cap	065191104	16	6
Roller Ass'y, Upper	0651911UA	6	19
Roller Ass'y, Upper	0651911UA	16	0
Stay, Dumper	0652253UA	84	20
Stay, Dumper	0652271UA	104	13
Ratch Ass'y	0652923UA	224	3
Hook	0652964UA	224	1
Bushing	065393402	8	2
Bushing	065393402	8	4
Pin, Track	065393403	8	6
Pin, Master	065393404	8	7
Pin, Lock	065393405	8	5
Complete, Track Shoe	065393492	8	1
Complete, Master Shoe	065393493	8	3
Shoe Ass'y, Crawler	0653944UA	8	0
Shoe Ass'y, Crawler (Steel)	0653944UA	6	1-1
Shoe, Rubber Crawler	0653954UA	6	1
Seat Ass'y, Back	065556301	114	2-1
Seat Ass'y, Cushion	065556302	114	2-2
Suspension Ass'y	065556303	114	2-3
Rail Ass'y, Slid (L.H)	065556304	114	2-4
Rail Ass'y, Slid (R.H)	065556305	114	2-5
Belt Ass'y, Seat	065556310	114	2-6
Seat, Operator (W/Suspension)	0655563UA	114	2

*1 Note

https://truckmanualshub.com/

ALPHABETICAL INDEX

Parts Name	P/N	Page *1	Item
Seat, Operator (Leather)	0655564UA	114	10
Seat, Operator (W/O Seat Belt)	0655567UA	114	8
Seat Ass'y, Back	065556801	114	9-2
Seat, Operator (High Back Seat)	0655568UA	114	9
Seat Ass'y, Back	065556901	114	9-3
Seat Ass'y, Cushion	065556902	114	9-4
Seat, Operator (High Back Seat)	0655569UA	114	9-1
Cooler Ass'y, Oil	0667800UA	90	47
Radiator	066824801	90	46-1
Plug, Drain	066824802	90	46-2
Radiator Ass'y	0668248UA	90	46
Neck, Filler	066824901	90	61-1
Radiator, Cap	066824902	90	61-2
Opering, Filler	0668249UA	90	61
Guard, Fan	066850219	90	3
Engine Ass'y	0676255UA	90	1
Engine Ass'y	0676256UA	90	1-1
Hinge	069001619	102	7
Hinge	069001619	104	17
Clamp, Hose	069008156	90	29
Clamp	069008189	134	40
Clamp, Hose	069008191	90	28
Clamp	069008192	134	18
Clamp, Hose	069008203	134	19
Clamp, Hose	069008205	134	20
Clamp, Hose	069008205	134	42
Clamp	069008207	212	31
Band, Cable	069008208	84	31
Clamp, Hose	069008208	84	40
Clamp, Hose	069008208	84	55
Clamp, Hose	069008208	134	36
Clamp, Hose	069008208	210	8
Clamp, Hose	069008303	98	29
Clamp, Hose	069008304	216	24
Clamp, Hose	069008305	186	10
Clamp, Hose	069008306	24	17
Clamp, Hose	069008308	90	14
Clamp, Hose	069008308	90	57
Clamp, Hose	069008309	90	15
Clamp, Hose	069008310	24	13
Clamp, Hose	069008312	94	7
Clamp, Hose	069008312	98	5
Clamp, Hose	069008314	98	6
Clamp, Hose	069008911	94	10
Plug, Hole	069020105	82	20
Plug	069020108	112	11
Plug	069020108	152	20
Plug, Hole	069020108	104	7
Plug, Hole	069020108	110	10

*1 Note

https://truckmanualshub.com/

ALPHABETICAL INDEX

Parts Name	P/N	Page *1	Item
Plug	069020109	6	15
Plug	069020109	114	7
Plug	069020109	152	21
Pad, Rubber	069020250	84	29
Mirror, Under	069020308	204	8
Mount, Cab	069020315	172	1
Cover	069020344	138	16
Knob	069021086	212	12
Throttle, Dial	069021105	138	29
Handle	069021108	104	36
Lock Ass'y	069022091	102	8
Lock Ass'y	069022091	104	18
Lock Ass'y	069022092	104	37
Key	069027029	138	26-2
Grip (W/Switch)	069028340	84	34
Grip	069028341	84	41
Grip	069028372	82	15
Grip (W/Switch)	069028381	88	13
Grip (W/Switch)	069028382	84	53
Grip	069028385	84	48
Grip	069028386	84	2
Mirror, Back	069990112	204	2
Mirror, Back	069990113	204	3
Elbow	071010029	216	10
Connector	071010627	148	14
Elbow	071010727	148	15
Elbow, Reducer	071011332	28	26
Elbow, Reducer	071011332	30	38
Elbow, Reducer	071011332	34	38
Elbow, Reducer	071011332	38	38
Elbow, Reducer	071011332	158	7
Elbow, Reducer	071011332	158	10
Elbow	071011333	26	12
Elbow, Reducer	071011334	26	13
Elbow, Reducer	071011334	26	18
Elbow, Reducer	071011334	28	28
Elbow	071011344	28	27
Elbow	071011366	24	29
Elbow, 45	071011433	152	38
Elbow, 45	071011433	158	8
Elbow, 45 Reducer	071011434	18	17
Elbow, 45 Reducer	071011434	26	17
Elbow, 45	071011444	160	22
Elbow, Reducer	071011704	158	11
Elbow, Long	071011705	26	11
Elbow, Reducer	071011707	24	32
Elbow, 45	071012100	30	39
Elbow, 45	071012100	34	39
Elbow, 45	071012100	38	39
Elbow, 45	071012100	88	19
Elbow, 45	071012100	160	55
Elbow	071012209	30	6

*1 Note

https://truckmanualshub.com/

ALPHABETICAL INDEX

Parts Name	P/N	Page *1	Item
Elbow	071012209	34	6
Elbow	071012209	38	6
Elbow	071012209	82	8
Elbow	071012209	88	9
Elbow	071012209	160	41
Elbow	071012209	164	22
Elbow	071012209	166	24
Elbow	071012209	220	9
Elbow	071012210	152	24
Elbow	071012210	170	3
Elbow, 45	071012401	94	16
Elbow, 45	071012407	186	8
Elbow	071012705	24	30
Plug	071020014	50	14
Plug	071020101	50	13
Plug	071020101	12	8
Plug	071020101	14	5
Plug	071020202	28	17
Plug	071021204	60	19
Plug, Swivel	071030302	30	26
Plug, Swivel	071030302	34	26
Plug, Swivel	071030302	38	26
Plug, Swivel	071030302	164	7
Plug, Swivel	071030302	166	12
Plug, Swivel	071030303	30	71
Plug, Swivel	071030303	34	49
Plug, Swivel	071030303	38	49
Plug, Swivel	071030304	160	14-1
Plug, Swivel	071030304	160	15
Plug, Swivel	071030304	166	39
Plug, Swivel	071030306	160	14
Plug, Swivel	071030306	166	38
Bush, Reducer	071040024	206	5
Socket	071050303	216	11
Tee	071070702	18	19
Tee	071070902	30	8
Tee	071070902	34	8
Tee	071070902	38	8
Tee, Special	071070912	24	10
Tee	071071309	30	3
Tee	071071309	34	3
Tee	071071309	38	3
Tee, Special	071071311	160	21
Adapter	071140202	18	21
Adapter	071231030	218	23
Adapter	071231032	160	45
Adapter	071231032	166	36
Elbow, 45	071231040	30	70
Elbow	071231050	38	72
Elbow	071231050	218	27
Adapter, Reducer	071231137	160	46
Adapter, Reducer	071231137	166	37

*1 Note

https://truckmanualshub.com/

ALPHABETICAL INDEX

Parts Name	P/N	Page *1	Item
Adapter	071232502	30	69
Adapter	071232502	38	71
Adapter	071232601	38	67
Sleeve	071310002	148	14-1
Sleeve	071310002	148	15-1
Hub	071342902	50	5
Cover	071342904	50	2
Seal, Dust	071342913	50	12
Shaft	071342919	50	6
Rotary Joint	071342991	2	24
Seal, Kit	071342991	50	7
Joint Ass'y, Rotary	0713429UA	18	16
Joint Ass'y, Rotary	0713429UA	50	0
Adapter	071370002	18	6
Adapter	071370002	220	8
Adapter	071370003	24	23
Adapter	071370003	26	5
Adapter	071370003	30	40
Adapter	071370003	34	40
Adapter	071370003	38	40
Adapter	071370003	152	15
Adapter	071370003	158	3
Adapter	071370004	18	7
Adapter	071370004	220	7
Connector	071370070	28	29
Connector	071370070	30	2
Connector	071370070	34	2
Connector	071370070	38	2
Connector	071370070	82	7
Connector	071370070	88	8
Connector	071370070	160	23
Connector	071370070	164	21
Connector	071370070	166	23
Adapter	071370071	152	39
Adapter	071370072	160	38
Adapter, Reducer	071370077	28	25
Adapter	071370078	152	41
Adapter, Reducer	071370078	218	22
Adapter, Reducer	071370093	166	29
Adapter, Reducer	071370094	160	39
Adapter	071370502	218	26
Elbow	0719804UA	18	18
Elbow	0719804UA	206	4
Elbow	0719805UA	30	7
Elbow	0719805UA	34	7
Elbow	0719805UA	38	7
Valve, Stop	0725005UA	160	20
Nipple, Grease	072811115	20	21
Nipple, Grease	072811115	64	3
Nipple, Grease	072811115	64	7
Nipple, Grease	072811115	66	7
Nipple, Grease	072811115	68	7

*1 Note

https://truckmanualshub.com/

ALPHABETICAL INDEX

Parts Name	P/N	Page *1	Item
Nipple, Grease	072811115	72	3
Nipple, Grease	072811115	144	34
Nipple, Grease	072811115	148	8
Nipple, Grease	072811155	72	7
Nipple, Grease	072811155	148	12
Nipple, Grease	072811155	156	11
Nipple, Grease	072811165	66	3
Nipple, Grease	072811165	68	3
Nipple, Grease	072811165	70	6
Nipple, Grease	072813111	224	2
Valve	072991035	186	9
Strainer	072991060	98	4
Cap	072991073	98	3
Cap, Fuel	072991073	2	10
Filter	072991080	98	1
Filter, Air	0745142UA	212	10
Indicator	074526602	94	4-3
Element Ass'y	074526604	94	4-1
Element Ass'y (Inner)	074526605	94	4-2
Element, Air Cleaner	074526608	2	7
Element, Air Cleaner(Inner)	074526609	2	8
Cleaner, Air	0745266UA	94	4
Plug	075008323	42	40
Plug	075019815	74	16
Seal, Dust	075179624	64	4
Ball, Steel	075190125	64	28
Ball, Steel	075190125	66	23
Ball, Steel	075190125	68	22
Ball, Steel	075190125	70	21
Ball, Steel	075194806	74	14
Seal, Dust	075211826	72	4
Seal, Dust	075211826	72	8
Ring Ass'y, Seal	075218424	72	19
Bushing	075223923	66	2
Bushing	075223923	66	6
Seal, Dust	075223924	64	8
Seal, Dust	075223924	66	4
Seal, Dust	075223924	66	8
Seal, Dust	075223924	68	4
Seal, Dust	075223924	68	8
Seal, Dust	075223924	70	3
Seal, Dust	075223924	70	7
Bushing	075228423	72	2
Bushing	075228423	72	6
Bushing	075267625	68	2
Bushing	075267625	68	6
Bushing	075267625	70	2
Bushing	075267625	70	5
Ring, U	075273705	64	12
Ring, U	075275605	72	12
Ring, U	075276505	68	12
Ring, U	075276505	70	11

*1 Note

https://truckmanualshub.com/

ALPHABETICAL INDEX

Parts Name	P/N	Page *1	Item
Ring Ass'y, Seal	075277513	68	19
Ring Ass'y, Seal	075277817	70	18
Ring Ass'y, Seal	075292807	66	20
Ring Ass'y, Seal	075294106	64	25
Ring, O	075310109	53	43
Vaive, Check (Grease Up)	0753265UA	2	1
Valve, Check	0753265UA	10	5
Ring, Snap	075363613	42	59
Pin	075363619	46	28
Pin	075374712	42	20
Ball, Steel	075377843	42	34
Plug	075412413	78	20
Cock	0754804UA	160	44
Cock	0754804UA	166	32
Strainer, Suction	0755179UA	2	2
Strainer, Suction	0755179UA	60	5
Washer, Thrust	075582108	50	4
Shim	075606511	76	17-1
Holder, Spring	075606513	76	14
Body	075609401	80	8
Rotor	075609402	80	5
Lever	075609403	80	4
Bolt, Wing	075609404	80	1
Ring, O	075609405	80	10
Ring, O	075609406	80	9
Ring, O	075609407	80	7
Ring, O	075609408	80	6
Valve Ass'y, Selector	0756094UA	38	68
Valve Ass'y, Selector	0756094UA	80	0
Joint	075630307	58	10
Pusher	075632604	76	7
Shim	075632606	76	17
Cam	075632607	76	9
Pin	075632608	76	6
Spring	075632609	76	18
Boot	075632610	76	4
Washer, Flat	075632619	76	16
Washer, Flat	075632620	76	3
Pin, Spring	075632622	76	1
Ball, Steel	075632623	76	2
Ring, O	075632625	76	13
Spring	075633917	53	62
Plug Ass'y	075633980	53	46
Plug	075635703	74	15
Seal	075661113	58	12
Plug	075673509	58	2
Washer	075673515	58	7
Rod, Push	075674411	58	11
Ball, Steel	075678114	78	13
Seal, Oil	075686309	78	16
Spring	075686508	53	53
Filter	075761820	46	29

*1 Note

https://truckmanualshub.com/

ALPHABETICAL INDEX

Parts Name	P/N	Page *1	Item
Plug	075778720	42	63
Ring, Wiper	075869706	64	13
Ring, Wiper	075869706	66	13
Bearing, Cushion	075869718	66	24
Seal, Cushion	075869719	66	25
Ring, Snap	075869720	66	27
Stopper	075869721	66	26
Ring, Wiper	075869809	72	13
Ring, Wiper	075885802	70	12
Ring, Wiper	075886802	68	13
Cartridge Ass'y	075914401	60	13-1
Cartridge, Return Filter	075914401	2	3
Filter Ass'y, Return	0759144UA	60	13
Plug	075920313	42	61
Accumulator	0759301UA	170	1
Ring, O	076021118	78	17
Ring, O (261-70B)	076021261	42	57
Ring, O	076031020	74	8
Ring, O	076031025	74	9
Ring, O	076031165	46	52
Ring, O	076031211	60	10
Ring, O	076031222	24	14
Ring, O	076031910	53	69-1
Ring, O	076031910	53	70-1
Ring, O	076031910	53	71-1
Ring, O	076031910	53	72-1
Ring, O	076031910	53	73-1
Ring, O	076031910	53	74-1
Ring, O	076031910	53	75-3
Ring, O	076031910	53	69-1
Ring, O	076031910	53	70-1
Ring, O	076031910	53	71-1
Ring, O	076031910	53	72-1
Ring, O	076031910	53	73-1
Ring, O	076031910	53	74-1
Ring, O	076031910	53	75-3
Ring, O	076061008	76	8
Ring, O	076061575	50	8
Ring, O	076071007	42	19
Ring, O	076071007	53	31
Ring, O	076071007	62	6
Ring, O	076071008	42	16
Ring, O	076071008	42	62
Ring, O	076071008	62	8
Ring, O	076071008	74	10
Ring, O	076071009	53	38
Ring, O	076071010	53	64
Ring, O	076071011	53	39
Ring, O	076071012	18	8
Ring, O	076071012	18	23
Ring, O	076071012	28	20
Ring, O	076071012	30	4

*1 Note

https://truckmanualshub.com/

ALPHABETICAL INDEX

Parts Name	P/N	Page *1	Item
Ring, O	076071012	34	4
Ring, O	076071012	38	4
Ring, O	076071012	42	41
Ring, O	076071012	46	9
Ring, O	076071012	53	24
Ring, O	076071012	60	20
Ring, O	076071012	62	3
Ring, O	076071012	74	18
Ring, O	076071012	82	9
Ring, O	076071012	88	10
Ring, O	076071012	134	53
Ring, O	076071012	160	34
Ring, O	076071012	164	24
Ring, O	076071012	166	28
Ring, O	076071012	206	6
Ring, O	076071012	218	29
Ring, O	076071012	220	10
Ring, O	076071014	62	4
Ring, O	076071016	18	22
Ring, O	076071016	24	15
Ring, O	076071016	26	6
Ring, O	076071016	28	14
Ring, O	076071016	30	41
Ring, O	076071016	34	41
Ring, O	076071016	38	41
Ring, O	076071016	42	15
Ring, O	076071016	42	60
Ring, O	076071016	46	26
Ring, O	076071016	53	76-1
Ring, O	076071016	62	5
Ring, O	076071016	152	16
Ring, O	076071016	158	9
Ring, O	076071016	160	40
Ring, O	076071016	170	6
Ring, O	076071016	218	30
Ring, O	076071019	18	9
Ring, O	076071019	24	16
Ring, O	076071019	28	15
Ring, O	076071019	53	77-1
Ring, O	076071019	96	12
Ring, O	076071019	152	42
Ring, O	076071019	160	35
Ring, O	076071019	170	10
Ring, O	076071019	218	31
Ring, O	076071019	220	11
Ring, O	076071019	222	16
Ring, O	076071020	53	65
Ring, O	076071020	58	3
Ring, O	076071020	222	6
Ring, O	076071022	46	24
Ring, O	076071022	222	2
Ring, O	076071023	64	35

*1 Note

https://truckmanualshub.com/

ALPHABETICAL INDEX

Parts Name	P/N	Page *1	Item
Ring, O	076071023	68	25
Ring, O	076071024	24	34
Ring, O	076071026	42	14
Ring, O	076071028	64	33
Ring, O	076071028	66	30
Ring, O	076071030	24	33
Ring, O	076071030	60	9
Ring, O	076071042	10	2
Ring, O	076071060	50	10
Ring, O	076071125	60	8
Ring, O	076071555	62	7
Ring, O	076071560	68	14
Ring, O	076071565	66	14
Ring, O	076071565	68	16
Ring, O	076071570	66	16
Ring, O	076071570	70	13
Ring, O	076071575	64	14
Ring, O	076071575	64	17
Ring, O	076071575	70	15
Ring, O	076071580	64	16
Ring, O	076071595	72	14
Ring, O	076071600	42	6
Ring, O	076071600	72	16
Ring, O	076071610	42	4
Ring, O	076071610	46	3
Ring, O	076071625	42	21
Ring, O	076071625	46	2
Seal	076169120	16	2
Seal	076173012	14	2
Seal	076173140	12	4
Ring, Back-up	076212009	53	37
Ring, Back-up	076212011	53	40
Ring, Back-up	076212012	53	29
Ring, Back-up	076212016	46	25
Ring, Back-up	076212042	10	3
Ring, Back-up	076212060	50	11
Ring, Back-up	076213600	42	7
Ring, Back-up	076213610	42	3
Seal, Dust	076503328	144	30
Seal, Dust	076503329	144	29
Seal, Dust	076503329	156	10
Seal, Dust	076503329	224	11
Seal, Dust	076503333	144	28
Hose, Radiator	077555185	2	6
Hose, Radiator	077555185	90	50
Hose, Radiator	077555186	2	4
Hose, Radiator	077555186	90	12
Hose, Radiator	077555187	2	5
Hose, Radiator	077555187	90	13
Hose	077660006	24	2
Hose	077660007	24	1
Tube, Synflex	077900088	148	13

*1 Note

https://truckmanualshub.com/

ALPHABETICAL INDEX

Parts Name	P/N	Page *1	Item
Hose	077900297	90	24
Hose	077900297	90	25
Hose, Air Cleaner	077900532	94	6
Hose, Air Cleaner (EPA Regulation)	077900534	94	24
Hose, Air Cleaner	077900536	94	19
Pump Ass'y, Gear	078011091	62	9
Valve, Ass'y	078016392	62	10
Cylinder Ass'y	078016491	62	1
Pump Ass'y, Oil	0780164UA	62	0
Pump Ass'y, Oil	0780164UA	96	1
Cover	078110202	42	58
Gear	078110204	42	51
Gear	078110207	42	55
Ring	078110208	42	49
Collar	078110209	42	54
Ring, Slide	078110210	42	56
Needle	078110213	42	50
Ring, Snap	078110214	42	47
Washer, Thrust	078110216	42	48
Washer, Thrust	078110217	42	52
Carrier Ass'y	078110294	42	64
Plate, Disk	078117208	42	9
Plate, Steel	078117209	42	8
Plate, Steel	078117209	42	10
Spacer	078117210	42	11
Gear	078125001	46	43
Gear	078125002	46	51
Ring	078125003	46	63
Gear Ass'y, Reduction	078125092	46	34
Pinion Ass'y	078125094	46	53
Carrier Ass'y (1)	078125095	46	35
Carrier Ass'y (2)	078125096	46	44
Body Ass'y	078125097	46	4
Barrel Ass'y, Cylinder	078125098	46	12
Plate Ass'y, Swash	078126593	46	31
Seal, Floating	078128101	42	42
Casing Ass'y	078128192	42	43
Shaft Ass'y	078128195	42	35
Motor Ass'y	078137691	46	1
Valve Ass'y, Relief	078137692	46	23
Motor Ass'y, Swing	0781376UA	22	1
Motor Ass'y, Swing	0781376UA	46	0
Plate, Swash	078137701	42	33
Piston, Brake	078137702	42	5
Spring	078137703	42	2
Motor Ass'y	078137791	42	1
Casing Ass'y	078137792	42	13
Barrel Ass'y, Cylinder	078137793	42	22
Casing Ass'y	078137794	42	37
Motor Ass'y, Travel	0781377UA	6	12
Motor Ass'y, Travel	0781377UA	42	0

*1 Note

https://truckmanualshub.com/

ALPHABETICAL INDEX

Parts Name	P/N	Page *1	Item
Ring, Back-up	078217304	66	17
Head, Cylinder	078236703	68	9
Ring, Back-up	078236705	68	15
Piston	078236706	68	18
Ring, Slide	078236707	68	20
Bushing	078236713	68	10
Bushing	078236713	70	9
Bucket Cylinder (Head Side)	078236791	2	27
Kit, Seal	078236791	68	11
Piston Ass'y	078236793	68	17
Head, Cylinder	078239603	66	9
Ring, U	078239604	66	12
Ring, Back-up	078239605	66	15
Piston	078239606	66	19
Ring, Slide	078239607	66	21
Bushing	078239613	64	10
Bushing	078239613	66	10
Arm Cylinder (Head Side)	078239691	2	26
Kit, Seal	078239691	66	11
Piston Ass'y	078239693	66	18
Head, Cylinder	078239703	72	9
Ring, Back-up	078239704	72	15
Ring, Slide	078239706	72	20
Blade Cylinder (Head Side)	078239791	2	29
Kit, Seal	078239791	72	11
Piston Ass'y	078239793	72	17
Ring, Back-up	078239905	64	15
Holder	078239906	64	19
Spacer	078239907	64	20
Seal, Cushion	078239908	64	21
Collar	078239909	64	22
Ring, Back-up	078239910	64	18
Piston	078239911	64	24
Ring, Slide	078239912	64	26
Boom Cylinder (Head Side)	078239991	2	25
Kit, Seal	078239991	64	11
Piston Ass'y	078239993	64	23
Ring, Back-up	078243108	70	14
Holder, Pipe	078243121	64	37
Holder, Pipe	078243121	68	27
Bushing	078244603	72	10
Plug	078244605	64	34
Plug	078244605	68	24
Bolt	078244606	64	36
Bolt	078244606	68	26
Head, Cylinder	078244903	70	8
Piston	078244904	70	17
Ring, Slide	078244905	70	19
Boom Swing Cylinder (Head Side)	078244991	2	28
Kit, Seal	078244991	70	10
Piston Ass'y	078244993	70	16

*1 Note

https://truckmanualshub.com/

ALPHABETICAL INDEX

Parts Name	P/N	Page *1	Item
Head, Cylinder	078247603	64	9
Plug	078249109	64	32
Plug	078249109	66	29
Rod Ass'y, Piston	078260902	72	5
Cylinder Ass'y, Blade	0782609UA	72	0
Cylinder Ass'y, Blade	0782609UA	156	2
Pipe	078261105	68	23
Rod Ass'y, Piston	078261402	68	5
Cylinder Ass'y, Bucket	0782614UA	68	0
Cylinder Ass'y, Bucket	0782614UA	144	4
Rod Ass'y, Piston	078261502	70	4
Cylinder Ass'y, Boom Swing	0782615UA	70	0
Cylinder Ass'y, Boom Swing	0782615UA	148	2
Rod Ass'y, Piston	078261702	64	5
Bearing, Cushion	078261706	64	29
Cylinder Ass'y, Boom	0782617UA	64	0
Cylinder Ass'y, Boom	0782617UA	144	43
Bushing	078261803	64	2
Bushing	078261805	64	6
Pipe	078261808	64	31
Rod Ass'y, Piston	078261902	66	5
Joint	078261906	64	30
Joint	078261906	66	28
Cylinder Ass'y, Arm	0782619UA	66	0
Cylinder Ass'y, Arm	0782619UA	144	3
Seal, Oil	078361604	50	9
Roller, Needle	078363716	78	15
Ring, O	078363719	78	18
Ring, O	078363720	78	19
Plug Ass'y	078364683	53	76
Plug Ass'y	078364684	53	77
Valve Ass'y, Shut-off	078364685	53	75
Poppet	078367713	53	61
Plug	078367714	53	63
Poppet	078367723	53	34
Plug	078367724	53	42
Spool	078367726	53	41
Sleeve	078367727	53	36
Spring	078367728	53	44
Spring	078367729	53	33
Seat, Spring	078367730	53	35
Plug	078367783	222	18
Plug Ass'y	078367783	53	59
Valve Ass'y, Relief	078367786	53	73
Seat, Spring	078370008	58	4
Spring (No.2, 4, Ports)	078370009	58	6
Spring (No.1, 3, Ports)	078370010	58	14
Plate	078370012	58	9
Piston	078374902	53	45
Plate	078375601	58	13
Nut, Adjusting	078377103	58	8
Boot	078377107	58	1

*1 Note

https://truckmanualshub.com/

ALPHABETICAL INDEX

Parts Name	P/N	Page *1	Item
Plug	078384685	222	19
Valve Ass'y, Relief	078384686	53	72
Valve Ass'y, Relief	078384687	53	71
Valve Ass'y, Anti Void	078384688	53	74
Valve Ass'y, Main Relief	078391288	53	69
Plug	078392006	74	17
Rod, Push	078393601	74	11
Seat	078395101	74	1
Bushing	078395102	74	2
Cover	078395103	74	4
Plug	078395104	74	5
Cap, Grease	078395105	74	6
Packing	078395106	74	7
Shim	078395108	74	12
Seat, Spring	078395109	74	13
Seat, Spring	078395110	74	20
Washer	078395111	74	21
Spring	078395113	74	23
Spring	078395114	74	24
Shaft Cam	078395115	74	25
Bushing	078395116	74	26
Screw, Set	078395117	74	27
Boot	078395118	74	28
Cam Ass'y	078395191	74	29
Spring	078396401	58	5
Valve Ass'y, Remote Control	0783964UA	58	0
Valve Assy Remote Control	0783964UA	30	1
Valve Assy Remote Control	0783964UA	34	1
Valve Assy Remote Control	0783964UA	38	1
Shim	078396502	76	11
Shim	078396503	76	11-1
Spool	078396504	76	19
Spring	078396511	76	15
Valve Ass'y, Pilot	0783965UA	76	0
Valve Ass'y, Pilot	0783965UA	88	11
Valve Ass'y, Pilot	0783965UA	160	48
Seat, Spring	078398801	53	15
Spring	078398802	53	16
Seat, Spring	078398803	53	17
Cap	078398804	53	18
Ring, O	078398805	53	19
Poppet	078398806	53	21
Spring	078398807	53	22
Plug	078398808	53	23
Poppet	078398810	53	26
Spring	078398811	53	27
Spacer	078398812	53	28
Plug Ass'y	078398813	53	47
Plug Ass'y	078398813	53	79
Plug Ass'y	078398813	53	47
Ring, O	078398814	53	49
Housing, Outlet	078398815	53	50

*1 Note

https://truckmanualshub.com/

ALPHABETICAL INDEX

Parts Name	P/N	Page *1	Item
Poppet	078398818	53	52
Cap	078398820	53	67
Cap	078398821	53	57
Plug, Orifice	078398822	53	60
Spring	078398824	53	66
Filter	078398826	53	55
Washer	078398827	53	56
Plug Ass'y	078398829	53	78
Block Ass'y, Outlet	078398883	53	5
Valve Ass'y, Anti Void	078398883	53	30
Block Ass'y, Arm	078398893	53	9
Spring	078399501	74	22
Valve Ass'y, Pilot	0783995UA	74	0
Valve Ass'y, Pilot	0783995UA	82	11
Rod, Tie	078401701	53	1
Seat, Spring	078401703	53	51
Cap	078401704	53	54
Cap	078401704	53	68
Block Ass'y	078401789	53	14
Block Ass'y, Blade	078401791	53	12
Block Ass'y, Spare	078401793	53	10
Block Ass'y, Inlet	078401796	53	7
Seat, Spring	078404706	222	3
Spring	078404707	222	4
Adjuster	078404710	222	7
Nut, Hex.	078404711	222	8
Piston	078404712	222	9
Cap	078404713	222	10
Poppet	078410801	53	25
Valve Ass'y, Main Relief	078410893	53	70
Block Ass'y, Boom Swing	078410894	53	13
Block Ass'y, Swing	078410895	53	11
Block Ass'y, Traction (L.H.)	078410896	53	8
Block Ass'y, Traction (R.H.)	078410897	53	6
Block Ass'y, Boom	078410898	53	4
Block Ass'y, Bucket	078410899	53	3
Valve Ass'y, Control	0784108UA	24	25
Valve Ass'y, Control	0784108UA	53	0
Spring	078411204	78	1
Cover	078411206	78	2
Cover	078411207	78	3
Lever	078411208	78	4
Pin	078411209	78	5
Spring	078411210	78	6
Grip	078411211	78	7
Ball, Steel	078411220	78	14
Valve Ass'y, Multiple (A-D Change)	0784112UA	78	0
Valve Ass'y, Multiple (For A-D)	0784112UA	34	70

*1 Note

https://truckmanualshub.com/

ALPHABETICAL INDEX

Parts Name	P/N	Page *1	Item
Valve Ass'y, Multiple (For A, B, G)	0784113UA	34	70-1
Valve, Solenoid	0785118UA	218	1
Valve, Solenoid	0785169UA	160	42
Valve Ass'y, Solenoid	0785171UA	166	18
Valve Ass'y, Relief	0785640UA	53	75-1
Valve Ass'y, Relief	0785641UA	53	75-2
Valve, Check	0785947UA	24	31
Valve, Solenoid	0787045UA	164	19
Plug	078704704	222	1
Plug	078704708	222	5
Poppet	078704716	222	13
Spring	078704717	222	14
Plug	078704718	222	15
Valve, Relief	078704791	222	17
Valve Ass'y, Holding	0787047UA	222	0
Valve, Holding	0787047UA	220	1
Breather, Air	0787305UA	60	3
Tube, Spiral	079000004	18	14
Duct	082002316	186	5
Louver	082002318	212	8
Louver	082002319	212	7
Band, Cable	082006703	84	52
Band, Cable	082006703	88	18
Band, Cable	082006703	134	25
Band, Cable	082006703	208	13
Band, Cable	082006704	98	30
Band, Cable	082006704	134	45
Band, Cable	082006704	152	23
Band, Cable	082006704	206	7
Band, Cable	082006704	214	2
Band, Cable	082006704	216	38
Band, Cable	082006704	228	5
Band, Cable	082006705	30	45
Band, Cable	082006705	34	45
Band, Cable	082006705	38	45
Band, Cable	082006705	138	22
Band, Cable	082006705	164	16
Band, Cable	082006705	186	16
Band, Cable	082006705	218	38
Band, Cable	082006707	84	38
Band, Cable	082006709	18	15
Band, Cable	082006709	26	9
Band, Cable	082006709	30	62
Band, Cable	082006709	34	62
Band, Cable	082006709	38	62
Band, Cable	082006709	138	49
Band, Cable	082006710	30	63
Band, Cable	082006710	34	63
Band, Cable	082006710	38	63
Band, Cable	082006710	90	16
Band, Cable	082006728	134	26

*1 Note

https://truckmanualshub.com/

ALPHABETICAL INDEX

Parts Name	P/N	Page *1	Item
Band, Cable	082006731	134	24
Sticker	082006903	228	6
Relay	082021507	2	13
Relay	082021507	138	34
Relay	082021507	212	11
Relay, Flip Flop	082021507	2	11
Relay, Flip-Flop	082021510	134	34
Connector	0820513UA	84	54
Connector	0820514UA	84	51
Terminal	082065020	228	13
Terminal	082065020	230	15
Terminal	082065021	228	14
Terminal	082065021	230	16
Sleeve	082065120	228	13-1
Sleeve	082065120	230	15-1
Sleeve	082065121	228	14-1
Sleeve	082065121	230	16-1
Terminal	082065708	172	15
Cap	082065801	134	30
Tube, Corugate	082080301	134	55
Tube, Corrugate	082080304	98	38
Tube, Corrugate	082080304	98	39
Tube, Corrugate	082080304	98	40
Tube, Corrugate	082080304	98	41
Tube, Corrugate	082080304	216	33
Tube, Corrugate	082080304	216	34
Tube, Corrugate	082080305	170	5
Tube, Corrugate	082080305	216	31
Tube, Corrugate	082080306	186	19
Tube, Corrugate	082080306	186	20
Tube, Corrugate	082080306	216	32
Tube, Corrugate	082080306	216	35
Tube, Corrugate	082080306	216	36
Tube, Corrugate	082080306	216	37
Fuse	083010706	134	41-6
Fuse	083010707	134	41-5
Fuse	083010708	134	41-4
Fuse	083010709	134	41-3
Fuse	083010710	134	41-2
Fuse	083010711	134	41-8
Fuse	083010712	134	41-7
Link, Fusible	083029101	134	12-1
Socket	083040602	138	21
Housing	083040800	172	14
Radio	085050010	172	13
Battery (For Cold District)	085100001	134	5-1
Battery	085100004	134	5
Terminal	085211922	134	39
Light, Rotary	085406001	228	12
Lens	085452301	210	4-1
Bulb	085452306	210	4-2
Light Ass'y	0854523UA	210	4

*1 Note

https://truckmanualshub.com/

ALPHABETICAL INDEX

Parts Name	P/N	Page *1	Item
Lens	085452901	134	2-2
Bulb	085452905	134	2-1
Light Ass'y	0854529UA	134	2
Lens	085453601	210	1-1
Bulb	085453611	210	1-2
Lamp Ass'y	0854536UA	210	1
Horn, Back	085701148	206	2
Buzzer	085701157	138	45
Heater, Car	085705603	186	1
Gauge, Fuel	0857909UA	98	20
Element Ass'y	085791411	98	42-1
Element, Water Sedimenter	085791411	2	9
Sedimenter, Water	0857914UA	98	42
Box, Fuse	085814001	134	41-1
Switch, Pressure	085818010	206	3
Switch Ass'y, Starter	085830603	2	12
Switch Assy Starter	085830603	138	26
Switch Assy Starter	085830604	138	26-1
Switch, Select	085830823	230	2
Switch Ass'y, Light	085831411	210	10
Decal	085831412	210	11
Switch, Limit	085831415	84	21
Switch Assy	085831433	138	17
Switch Assy	085831433	138	36
Switch Ass'y, Heater	085831434	186	21
Switch Assy	085831435	138	40
Switch, Oil Pressure	085850116	134	54
Sensor, Pressure	085860116	218	9
Sensor, Pressure	085860116	220	21
Meter, Potention	085861405	138	31
Buzzer	086050402	230	14
Horn	086100102	134	3
Display	087790011	230	1
Harness	087955178	134	13
Detector, Angle	0881100UA	226	1
Monitor, OK	0881509UA	138	1
Air Conditioner Ass'y	0892270UA	212	1
Controller Ass'y	0893508UA	208	1
Controller Ass'y	0893509UA	138	38
Dryer, Recerver	0897002UA	214	18
Compressor Ass'y	0897018UA	214	3
Condenser	0897019UA	214	14
Valve, Water	089800000	216	8
Bracket	089800001	214	17
Amplifier	089800002	212	9
Volume, Thermodtat	089800003	212	14
Switch Ass'y, Blower	089800004	212	15
Switch	089800005	212	13
Hose	089800064	216	1
Hose	089800065	216	2
Hose	089800066	216	3
Hose	089800067	216	4

*1 Note

https://truckmanualshub.com/

ALPHABETICAL INDEX

Parts Name	P/N	Page *1	Item
Belt	091010117	214	6
Seal	091087005	20	9
Seal	091087005	20	11
Seal	091087005	20	12
Seal	091087005	20	13
Seal	091087005	90	30
Seal	091087005	90	31
Seal	091087005	90	32
Seal	091087005	90	33
Seal	091087005	90	35
Seal	091087005	90	37
Seal	091087005	90	38
Seal	091087005	90	39
Seal	091087005	90	40
Seal	091087005	90	44
Seal	091087005	102	10
Seal	091087005	102	18
Seal	091087005	102	23
Seal	091087005	104	24
Seal	091087005	104	43
Seal	091087005	104	44
Seal	091087005	104	45
Seal	091087005	104	46
Plug	091091100	144	44
Rubber, Cushion	091093134	90	11
Grommet	091094026	170	11
Grommet	091094142	90	27
Grommet	091094202	186	17
Wrench, L	093107024	142	5
Wrench, Adjustable	093110925	142	2
Driver (-)	093130104	142	6
Hammer	093133110	142	4
Gun, Grease	093137010	142	3-1
Gun, Grease	093137011	142	3
Hose, Grease	093137101	142	3-2
Gauge, Level	0933054UA	230	3
Cabin Ass'y (Dark Grey)	3034212018	174	0
Cabin Ass'y (Dark Grey)	3034212018	178	0
Cabin Ass'y (Dark Grey)	3034212018	182	0
Cabin Ass'y (Light Grey)	3034212019	174	0-1
Cabin Ass'y (Light Grey)	3034212019	178	0-1
Cabin Ass'y (Light Grey)	3034212019	182	0-1
Bolt	3442505	174	35
Bolt, U	400300100	94	5
Bolt, Hook	400402217	134	6
Bolt, Adjusting	400416100	10	11
Bolt, Button Head	400428001	212	28
Bolt, Button Head	400436401	84	5
Bolt, Button Head	400436401	104	31
Bolt, Button Head	400436401	138	7
Bolt, Button Head	400436401	230	6
Washer	400611901	112	10

*1 Note

https://truckmanualshub.com/

ALPHABETICAL INDEX

Parts Name	P/N	Page *1	Item
Washer	400611902	138	52
Washer	400627600	12	3
Washer, Rubber	400638600	112	12
Shim	400654041	148	11
Shim	400654042	148	11-1
Shim	400654046	144	31
Shim	400654047	144	31-1
Washer, Flat	400655700	144	32
Shim	400730600	150	5
Door Stop	4012000138	174	49
Washer Toothed	4012000185	174	39
Washer Toothed	4012000185	178	27
Washer Toothed	4012000185	182	22
Nut	4012000186	182	21
Washer Flat	4012000189	182	52
Cap	4012000206	174	31
Cap	4012000206	182	37
Washer, Nylon	4012000210	182	64
Washer Flat	4012000215	182	49
Valve, Connection	4012000216	178	45
Hook	4012000239	178	12
Cap	4012000240	182	23
Atomizer	4012000245	178	46
Switch, Wiper	4012000250	178	40
Frame, Side Switch	4012000251	178	38
Frame, Central Switch	4012000252	178	39
Label	4012000254	178	41
Cap	4012000255	178	42
Tank	4012000256	178	43
Bracket	4012000257	174	50
Handle	4012000259	174	53
Nut	4012000260	174	47
Cover	4012000274	178	32
Bolt	4012000291	178	13
Plug, Rubber	4012000297	178	20
Nut	4012000303	178	28
Antenna	4012000314	178	33
Cable, Antenna	4012000316	178	34
Cover, Motor	4012000352	182	62
Nut	4012000356	178	18
Plug, Rubber	4012000367	178	24
Nut	4012000370	182	17
Gasket	4012000390	174	36
Washer, Special	4012000428	182	36
Block	4013001417	174	45
Block, Security	4013001418	174	46
Lock, Door	4013001426	174	34
Blade, Wiper	4013001437	182	60
Arm, Wiper	4013001438	182	59
Bolt	4013001450	182	47
Pin, Hinge	4015000088	174	26
Nut	4015000091	174	37

*1 Note

https://truckmanualshub.com/

ALPHABETICAL INDEX

Parts Name	P/N	Page *1	Item
Nut, Lock	4015000091	182	35
Ring, Elastic	4015000092	174	27
Washer Flat	4015000109	174	48
Glass (L.H.)	4016000000	174	2
Glass (Rear Side)	4016000001	174	3
Glass (Rear)	4016000002	174	4
Glass (Roof)	4016000003	174	5
Window Ass'y, Side	4016000004	174	6
Glass (Front)	4016000005	174	7
Glass (Rear)	4016000006	174	8
Frame, Glass	4016000007	174	9
Shoe (Front)	4016000008	174	10
Shoe (Rear)	4016000009	174	11
Handle, Sliding (Front)	4016000010	174	12
Handle, Sliding (Rear)	4016000011	174	13
Bolt	4016000012	174	14
Support, Brush (Front)	4016000013	174	15
Support, Brush (Rear)	4016000014	174	16
Brush	4016000015	174	17
Glass Blocking	4016000016	174	18
Handle, Glass Blocking	4016000017	174	19
Support, Sliding	4016000018	174	20
Gasket	4016000019	174	21
Handle, Stop	4016000020	174	22
Frame, Door (Dark Grey)	4016000021	174	23
Frame, Door (Light Grey)	4016000022	174	23-1
Gasket	4016000023	174	24
Glass (Door)	4016000024	174	25
Hook, Door Stop	4016000025	174	28
Hook, Door Stop	4016000026	174	28-1
Absorber, Shock	4016000027	174	29
Absorber, Shock	4016000028	174	29-1
Nut, Special	4016000029	174	30
Nut, Special	4016000029	182	28
Handle Ass'y	4016000030	174	32
Rod	4016000031	174	33
Bolt	4016000033	174	38
Bolt	4016000033	178	3
Bolt	4016000033	182	29
Bolt	4016000033	182	63
Cover	4016000034	174	40
Clip	4016000035	174	41
Clip	4016000035	178	2
Hinge	4016000036	174	42
Bolt	4016000037	174	43
Cap	4016000038	174	44
Rod, Tie	4016000039	174	51
Lever	4016000040	174	52
Washer Flat	4016000041	174	54
Cover (Rear)	4016000042	178	1
Gasket	4016000043	178	4
Cover (Left)	4016000044	178	5

*1 Note

https://truckmanualshub.com/

ALPHABETICAL INDEX

Parts Name	P/N	Page *1	Item
Cover (Right Upright)	4016000045	178	6
Roof Coating	4016000046	178	7
Clip	4016000047	178	8
Bracket	4016000048	178	9
Bolt	4016000049	178	10
Hammer, Emergency	4016000050	178	11
Bolt	4016000051	178	14
Bracket	4016000052	178	15
Gasket	4016000053	178	16
Bolt	4016000054	178	17
Bolt	4016000054	182	39
Plug	4016000055	178	19
Plate (Lower)	4016000056	178	21
Bolt	4016000057	178	22
Plug	4016000058	178	23
Harness	4016000059	178	25
Band, Cable	4016000060	178	26
Light	4016000061	178	29
Cover, Audio	4016000062	178	30
Clip	4016000063	178	31
Plug	4016000064	178	35
Bracket	4016000065	178	36
Gasket	4016000066	178	37
Bracket	4016000067	178	44
Pipe	4016000068	178	47
Glass	4016000069	182	1
Lock, Cover	4016000070	182	2
Gasket	4016000071	182	3
Lock (R.H.)	4016000072	182	4
Handle (R.H.)	4016000073	182	5
Spacer	4016000074	182	6
Gasket	4016000075	182	7
Bolt	4016000076	182	8
Bolt	4016000077	182	9
Lock (L.H.)	4016000078	182	10
Handle (L.H.)	4016000079	182	11
Shoe (Lower)	4016000080	182	12
Bolt	4016000081	182	13
Shoe (L.H.)	4016000082	182	14
Spacer	4016000083	182	15
Bolt	4016000084	182	16
Bracket	4016000085	182	18
Shoe (R.H.)	4016000086	182	19
Stopper, Rubber	4016000087	182	20
Stopper, Rubber	4016000088	182	24
Nut, Lock	4016000089	182	25
Bracket	4016000090	182	26
Protection, Door	4016000091	182	27
Frame, Door	4016000092	182	30
Bracket	4016000093	182	31
Nut	4016000094	182	32
Bolt	4016000095	182	33

*1 Note

https://truckmanualshub.com/

ALPHABETICAL INDEX

Parts Name	P/N	Page *1	Item
Spring, Gas	4016000096	182	34
Cover	4016000097	182	38
Bolt	4016000098	182	40
Bushing	4016000099	182	41
Frame (L.H.)	4016000100	182	42
Frame (R.H.)	4016000101	182	43
Guide (L.H.)	4016000102	182	44
Guide (R.H.)	4016000103	182	45
Shoe	4016000104	182	46
Stopper, Rubber	4016000105	182	48
Handle	4016000106	182	50
Bolt	4016000107	182	51
Bolt	4016000108	182	53
Bracket	4016000109	182	54
Bolt	4016000110	182	55
Glass	4016000111	182	56
Gasket	4016000112	182	57
Wiper	4016000113	182	58
Motor, Wiper	4016000114	182	61
Bolt	4016000115	182	65
Washer, Special	4016000116	182	66
Pin, Snap	401603004	84	23
Pin, Snap	401603004	104	25
Pin, Ring	401723303	224	7
Spacer	404046804	144	26
Spacer	404046807	144	23
Spacer	404046813	144	25
Spacer	404046905	144	27
Spacer	404086700	84	16
Collar, Roller	404220400	14	1
Bushing	404322909	144	19
Bushing	404322910	144	20
Bushing	404323101	144	22
Bushing	404323101	224	10
Bushing	404335803	156	9
Elbow, Reducer	406005100	26	14
Hose Ass'y	407000005	158	6
Hose Ass'y	407000056	158	5
Hose Ass'y	407000109	26	3
Hose Ass'y	407000173	26	4
Hose Ass'y	407000190	158	2
Hose Ass'y	407001515	24	7
Hose Ass'y	407005640	170	4
Hose Ass'y	407005647	166	21
Hose, Water	407010203	216	6
Hose, Water	407010217	186	7
Hose, Water	407010229	186	6
Hose, Water	407010242	216	5
Hose, Water	407010243	216	7
Hose, Fuel	407024527	98	24
Hose, Fuel	407024531	98	25
Hose, Fuel	407024553	98	26

*1 Note

https://truckmanualshub.com/

ALPHABETICAL INDEX

Parts Name	P/N	Page *1	Item
Hose, Fuel	407024558	98	27
Hose, Fuel	407030703	90	26
Cover, Hose	407035003	26	8
Hose Ass'y	407047212	28	12
Hose Ass'y	407047225	28	11
Hose Ass'y	407047226	164	11
Hose Ass'y	407047227	164	10
Cover, Hose	407050402	164	18
Hose Ass'y	407054801	30	24
Hose Ass'y	407054801	30	25
Hose Ass'y	407054801	34	24
Hose Ass'y	407054801	34	25
Hose Ass'y	407054801	38	24
Hose Ass'y	407054801	38	25
Hose Ass'y	407054801	88	3
Hose Ass'y	407054804	30	27
Hose Ass'y	407054804	34	27
Hose Ass'y	407054804	38	27
Hose Ass'y	407054806	30	17
Hose Ass'y	407054806	30	55
Hose Ass'y	407054806	30	56
Hose Ass'y	407054806	34	17
Hose Ass'y	407054806	34	55
Hose Ass'y	407054806	34	56
Hose Ass'y	407054806	38	17
Hose Ass'y	407054806	38	55
Hose Ass'y	407054806	38	56
Hose Ass'y	407054808	30	59
Hose Ass'y	407054808	34	59
Hose Ass'y	407054808	38	59
Hose Ass'y	407054813	18	3
Hose Ass'y	407054813	18	4
Hose Ass'y	407054813	18	24
Hose Ass'y	407054815	30	18
Hose Ass'y	407054815	34	18
Hose Ass'y	407054815	38	18
Hose Ass'y	407054818	88	4
Hose Ass'y	407054819	30	57
Hose Ass'y	407054819	30	58
Hose Ass'y	407054819	34	57
Hose Ass'y	407054819	34	58
Hose Ass'y	407054819	38	57
Hose Ass'y	407054819	38	58
Hose Ass'y	407054823	30	36
Hose Ass'y	407054823	34	36
Hose Ass'y	407054823	38	36
Hose Ass'y	407054825	30	51
Hose Ass'y	407054825	30	52
Hose Ass'y	407054825	30	53
Hose Ass'y	407054825	30	54
Hose Ass'y	407054825	34	51
Hose Ass'y	407054825	34	52

*1 Note

https://truckmanualshub.com/

ALPHABETICAL INDEX

Parts Name	P/N	Page *1	Item
Hose Ass'y	407054825	34	53
Hose Ass'y	407054825	34	54
Hose Ass'y	407054825	38	51
Hose Ass'y	407054825	38	52
Hose Ass'y	407054825	38	53
Hose Ass'y	407054825	38	54
Hose Ass'y	407054825	218	15
Hose Ass'y	407054833	30	31
Hose Ass'y	407054833	30	32
Hose Ass'y	407054833	34	31
Hose Ass'y	407054833	34	32
Hose Ass'y	407054833	38	31
Hose Ass'y	407054833	38	32
Hose Ass'y	407054840	88	5
Hose Ass'y	407054841	30	28
Hose Ass'y	407054841	34	28
Hose Ass'y	407054841	38	28
Hose Ass'y	407054842	160	24
Hose Ass'y	407054843	160	25
Hose Ass'y	407054855	30	47
Hose Ass'y	407054855	34	47
Hose Ass'y	407054855	38	47
Hose Ass'y	407054855	218	16
Hose Ass'y	407054858	88	6
Hose Ass'y	407054864	88	1
Hose Ass'y	407054869	82	6
Hose Ass'y	407054872	160	29
Hose Ass'y	407054873	30	14
Hose Ass'y	407054873	34	14
Hose Ass'y	407054873	38	14
Hose Ass'y	407054880	30	33
Hose Ass'y	407054880	34	33
Hose Ass'y	407054880	38	33
Hose Ass'y	407054882	30	37
Hose Ass'y	407054882	34	37
Hose Ass'y	407054882	38	37
Hose Ass'y	407054885	30	34
Hose Ass'y	407054885	30	35
Hose Ass'y	407054885	34	34
Hose Ass'y	407054885	34	35
Hose Ass'y	407054885	38	34
Hose Ass'y	407054885	38	35
Hose Ass'y	407054889	30	29
Hose Ass'y	407054889	34	29
Hose Ass'y	407054889	38	29
Hose Ass'y	407055101	82	1
Hose Ass'y	407055101	82	2
Hose Ass'y	407055104	82	3
Hose Ass'y	407055104	82	4
Hose Ass'y	407055111	166	22
Hose Ass'y	407055113	82	5
Hose Ass'y	407055113	160	28

*1 Note

https://truckmanualshub.com/

ALPHABETICAL INDEX

Parts Name	P/N	Page *1	Item
Hose Ass'y	407055114	30	16
Hose Ass'y	407055114	34	16
Hose Ass'y	407055114	38	16
Hose Ass'y	407055115	30	50
Hose Ass'y	407055115	34	50
Hose Ass'y	407055115	38	50
Hose Ass'y	407055120	88	2
Hose Ass'y	407055128	30	15
Hose Ass'y	407055128	34	15
Hose Ass'y	407055128	38	15
Hose Ass'y	407055140	30	19
Hose Ass'y	407055140	34	19
Hose Ass'y	407055140	38	19
Hose Ass'y	407055142	30	21
Hose Ass'y	407055142	34	21
Hose Ass'y	407055142	38	21
Hose Ass'y	407055143	30	23
Hose Ass'y	407055143	34	23
Hose Ass'y	407055143	38	23
Hose Ass'y	407055144	30	22
Hose Ass'y	407055144	34	22
Hose Ass'y	407055144	38	22
Hose Ass'y	407064210	164	3
Hose Ass'y	407064211	166	3
Hose Ass'y	407065916	158	1
Hose, Fuel	407074001	212	23
Hose Ass'y	407078218	30	20
Hose Ass'y	407078218	34	20
Hose Ass'y	407078218	38	20
Hose Ass'y	407078219	30	30
Hose Ass'y	407078219	34	30
Hose Ass'y	407078219	38	30
Hose Ass'y	407078328	160	30
Hose Ass'y	407084201	218	12
Hose Ass'y	407084227	218	13
Hose Ass'y	407084228	218	14
Cover, Hose	407085303	152	9
Hose Ass'y	407086056	164	12
Hose Ass'y	407086056	164	13
Nipple	407222000	186	22
Nipple	407222000	216	12
Connector	407266203	18	20
Elbow, Long	407286602	218	28
Plug	407288700	60	4
Adapter, Union	407293001	218	24
Adapter, Union	407293002	218	25
Plug, Drain	407703600	60	7
Gauge, Level	407902700	60	6
Clamp	408000002	228	7
Clamp, Hose	408000002	134	23
Clamp, Hose	408000003	134	33
Clamp, Hose	408000004	134	22

*1 Note

https://truckmanualshub.com/

ALPHABETICAL INDEX

Parts Name	P/N	Page *1	Item
Clamp, Hose	408000004	170	9
Clamp, Hose	408000005	134	44
Clamp, Hose	408000005	152	13
Clamp, Hose	408000006	24	12
Clamp	408000007	216	14
Clamp, Hose	408000009	30	61
Clamp, Hose	408000009	34	61
Clamp, Hose	408000009	38	61
Clamp, Hose	408000009	164	14
Clamp, Hose	408000010	30	42
Clamp, Hose	408000010	34	42
Clamp, Hose	408000010	38	42
Clamp	408000011	30	48
Clamp	408000011	34	48
Clamp	408000011	38	48
Clamp, Hose	408000012	216	25
Clamp, Hose	408000014	152	14
Clamp, Hose	408000023	134	38
Clamp, Hose	408000025	186	18
Clamp, Hose	408000026	216	26
Clamp, Hose	408000029	98	28
Clamp, Hose	408000038	134	21
Clamp, Tube	408111800	164	5
Clamp, Tube	408111800	166	7
Clamp, Tube	408111800	218	4
Clamp, Tube	408118900	152	12
Clamp, Tube	408118900	166	8
Grip	409603300	160	52
Coutter, Side (R.H.)	412304000	2	19
Cutter, Side	412304000	150	11
Coutter, Side (L.H.)	412304100	2	20
Cutter, Side	412304100	150	12
Spring	417017700	10	13
Shaft	422051600	12	9
Shaft	422051700	14	7
Sprocket, Drive	423456300	6	13
Decal (B1)	440530701	30	19-1
Decal (B1)	440530701	30	33-1
Decal (B1)	440530701	34	19-1
Decal (B1)	440530701	34	33-1
Decal (B1)	440530701	38	19-1
Decal (B1)	440530701	38	33-1
Decal (B2)	440530702	30	34-1
Decal (B2)	440530702	34	34-1
Decal (B2)	440530702	38	34-1
Decal (R1)	440530703	30	57-1
Decal (R1)	440530703	34	57-1
Decal (R1)	440530703	38	57-1
Decal (R1)	440530703	160	26-1
Decal (R3)	440530704	30	56-1
Decal (R3)	440530704	34	56-1
Decal (R3)	440530704	38	56-1

*1 Note

https://truckmanualshub.com/

ALPHABETICAL INDEX

Parts Name	P/N	Page *1	Item
Decal (R3)	440530704	166	20-1
Decal (C1)	440530801	30	23-1
Decal (C1)	440530801	34	23-1
Decal (C1)	440530801	38	23-1
Decal (C2)	440530802	30	35-1
Decal (C2)	440530802	34	35-1
Decal (C2)	440530802	38	35-1
Decal (R2)	440530803	30	55-1
Decal (R2)	440530803	34	55-1
Decal (R2)	440530803	38	55-1
Decal (R2)	440530803	164	13-1
Decal (R4)	440530804	30	58-1
Decal (R4)	440530804	34	58-1
Decal (R4)	440530804	38	58-1
Decal (A1)	440530901	30	28-1
Decal (A1)	440530901	34	28-1
Decal (A1)	440530901	38	28-1
Decal (A2)	440530902	30	29-1
Decal (A2)	440530902	34	29-1
Decal (A2)	440530902	38	29-1
Decal (L1)	440530903	30	51-1
Decal (L1)	440530903	34	51-1
Decal (L1)	440530903	38	51-1
Decal (L1)	440530903	160	27-1
Decal (L3)	440530904	30	53-1
Decal (L3)	440530904	34	53-1
Decal (L3)	440530904	38	53-1
Decal (L3)	440530904	166	19-1
Decal (S1)	440531001	30	27-1
Decal (S1)	440531001	34	27-1
Decal (S1)	440531001	38	27-1
Decal (S2)	440531002	30	36-1
Decal (S2)	440531002	34	36-1
Decal (S2)	440531002	38	36-1
Decal (L2)	440531003	30	52-1
Decal (L2)	440531003	34	52-1
Decal (L2)	440531003	38	52-1
Decal (L2)	440531003	164	12-1
Decal (L4)	440531004	30	54-1
Decal (L4)	440531004	34	54-1
Decal (L4)	440531004	38	54-1
Decal (RP)	440531101	18	4-1
Decal (RP)	440531101	30	32-1
Decal (RP)	440531101	34	32-1
Decal (RP)	440531101	38	32-1
Decal (LP)	440531102	18	24-1
Decal (LP)	440531102	30	25-1
Decal (LP)	440531102	34	25-1
Decal (LP)	440531102	38	25-1
Decal (RT)	440531201	30	59-1
Decal (RT)	440531201	34	59-1
Decal (RT)	440531201	38	59-1

*1 Note

https://truckmanualshub.com/

ALPHABETICAL INDEX

Parts Name	P/N	Page *1	Item
Decal (LT)	440531202	30	24-1
Decal (LT)	440531202	34	24-1
Decal (LT)	440531202	38	24-1
Decal (BA)	440531801	152	36-1
Decal (BB)	440531802	152	37-1
Decal (CA)	440531901	152	30-1
Decal (CB)	440531902	152	31-1
Decal (AA)	440532001	152	34-1
Decal (AB)	440532002	152	35-1
Decal (Anti-Freezing Solution)	440545600	126	21
Decal (Anti-Freezing Solution)	440545600	196	21
Decal (Oil)	440545700	122	4
Decal (Oil)	440545700	126	4
Decal (Oil)	440545700	128	4
Decal (Oil)	440545700	130	4
Decal (Oil)	440545700	192	4
Decal (Oil)	440545700	196	4
Decal (Oil)	440545700	198	4
Decal (Oil)	440545700	200	4
Decal (Safety Works)	440645800	120	8
Decal (Safety Works)	440645800	190	8
Decal (Anti-Freezing Solution)	440671000	124	21
Decal (Anti-Freezing Solution)	440671000	194	21
Decal (Safety Works)	440671400	124	8
Decal (Safety Works)	440671400	194	8
Decal (Anti-Freezing Solution)	440703500	118	22
Decal (Anti-Freezing Solution)	440703500	120	21
Decal (Anti-Freezing Solution)	440703500	188	22
Decal (Anti-Freezing Solution)	440703500	190	21
Decal (Oil)	440797400	120	4
Decal (Oil)	440797400	124	4
Decal (Oil)	440797400	190	4
Decal (Oil)	440797400	194	4
Plate, Rubber	440962509	134	7
Plate, Rubber	440962510	134	11
Block, Bearing	442073200	12	2
Flange	443563400	150	4
Decal (Anti-Freezing Solution)	444722900	128	21
Decal (Anti-Freezing Solution)	444722900	198	21
Decal (Oil)	444747900	118	7
Decal (Oil)	444747900	188	7
Decal (Breaker Cation)	444765300	118	36
Decal (Breaker Cation)	444765300	188	36

*1 Note

https://truckmanualshub.com/

ALPHABETICAL INDEX

Parts Name	P/N	Page *1	Item
Decal (Breaker Cation)	444785700	120	33
Decal (Breaker Cation)	444785700	190	33
Decal (Spare Piping Change)	444787400	118	35
Decal (Spare Piping Change)	444787400	188	35
Decal (Safety Works)	444788200	128	8
Decal (Safety Works)	444788200	198	8
Decal (Breaker Cation)	444792500	126	26
Decal (Breaker Cation)	444792500	196	26
Decal (Breaker Cation)	444799600	124	26
Decal (Breaker Cation)	444799600	194	26
Decal (Breaker Cation)	444835000	128	26
Decal (Breaker Cation)	444835000	198	26
Decal (Transport Fix)(CE)	444847400	120	35
Decal (Transport Fix)(CE)	444847400	190	35
Decal (Transport Fix)	444851100	126	27
Decal (Transport Fix)	444851100	196	27
Decal (Transport Fix)	444854200	124	27
Decal (Transport Fix)	444854200	194	27
Decal (Transport Fix)	444856200	122	27
Decal (Transport Fix)	444856200	192	27
Decal (Anti-Freezing Solution)	444857300	122	21
Decal (Anti-Freezing Solution)	444857300	192	21
Decal (Safety Works)	444858400	122	8
Decal (Safety Works)	444858400	192	8
Decal (Breaker Cation)	444858700	122	26
Decal (Breaker Cation)	444858700	192	26
Decal (Anti-Freezing Solution)	444859800	130	21
Decal (Anti-Freezing Solution)	444859800	200	21
Decal (Safety Works)	444860300	130	8
Decal (Safety Works)	444860300	200	8
Decal (Breaker Cation)	444860700	130	26
Decal (Breaker Cation)	444860700	200	26
Decal (Transport Fix)	444861900	130	27
Decal (Transport Fix)	444861900	200	27
Decal (Spare Piping Change)	444865100	120	32
Decal (Spare Piping Change)	444865100	190	32
Decal (Spare Piping Change)	444868700	124	25
Decal (Spare Piping Change)	444868700	194	25
Decal (Spare Piping Change)	444894400	126	25
Decal (Spare Piping Change)	444894400	196	25
Decal (For A, F)	444898700	38	74
Decal (Spare Piping Change)	444900300	122	25
Decal (Spare Piping Change)	444900300	192	25
Decal (Spare Piping Change)	444940600	130	25
Decal (Spare Piping Change)	444940600	200	25
Case, Tools	445050500	142	1
Cover (Starter Switch)	445753500	138	27
Tape, Insulating	445959800	94	11

*1 Note

https://truckmanualshub.com/

ALPHABETICAL INDEX

Parts Name	P/N	Page *1	Item
Cover	446075600	6	3
Cover	446075600	20	22
Cover, Under	446171700	6	5
Guide, Shoe (L.H.)	447558600	6	21
Guide, Shoe (R.H.)	447558700	6	20
Retainer, Spring	448551300	10	14
Lever	449798900	160	51
Ring, O	451150106	144	35
Ring, O (For Bucket)	451150106	2	15
Cylinder, Grease	451454500	10	1
Piston	451550800	10	4
Duct	452270701	210	9
Seal	455051900	20	10
Seal	455051900	102	24
Seal	455051900	104	2
Seal	455051900	104	3
Seal	455051900	104	4
Seal	455051900	104	5
Seal	455051900	108	24
Seal	455072600	104	23
Seal	455072600	186	14
Seal, Sponge	455090623	172	9
Seal, Sponge	455090624	172	10
Seal, Sponge	455090625	172	11
Seal, Sponge	455090626	172	12
Pad	458001600	30	64
Pad	458001600	34	64
Pad	458001600	38	64
Pad	458072900	18	5
Pad	458073000	152	29
Cable, Battery	459198211	134	37
Cabin (Light Grey)	5290105300	174	1-1
Tools Set	538851000	142	0
＊＊＊＊＊	598800406	2	39
＊＊＊＊＊	598800409	2	39-1
＊＊＊＊＊	598800432	2	40
＊＊＊＊＊	598800433	2	40-1
＊＊＊＊＊	598800900	2	38
＊＊＊＊＊	598802201	2	42
Bolt, Reamer	D00200100	20	16
Bolt, Button Head	D00404902	84	46
Washer	D00603800	116	5
Washer, Treatment	D00605100	2	23
Washer, Treatment	D00605100	150	10
Washer	D00613200	90	10
Shim	D00712600	6	24
Shim	D00714700	104	27
Shim	D00724401	220	6
Shim	D00724402	220	6-1
Shim	D00724403	220	6-2
Shim	D00724600	90	45
Pin, Head	D01319000	224	6

*1 Note

https://truckmanualshub.com/

ALPHABETICAL INDEX

Parts Name	P/N	Page *1	Item
Pin, Bucket	D01336000	2	14
Pin, Head	D01336000	144	10
Pin,Head	D01338400	82	25
Pin, Head	D01339601	144	13
Pin, Head	D01339700	144	11
Pin, Head	D01340200	144	12
Pin, Head	D01344200	224	5
Pin	D01722500	84	15
Pin	D01723301	148	3
Pin	D01723301	156	3
Pin	D01723302	144	18
Pin	D01723303	144	17
Pin	D01723305	148	5
Pin	D01723401	156	4
Pin	D01723703	144	15
Pin	D01724800	144	14
Pin	D01725700	148	4
Roller, Guide	D03103100	14	6
Pully	D03201500	214	5
Spacer	D04017800	84	35
Spacer	D04021800	28	13
Spacer	D04034500	34	69
Collar	D04204000	84	33
Bushing	D04307800	224	8
Bushing	D04307901	224	9
Bushing	D04308600	144	21
Bushing	D04309600	148	6
Bushing	D04311100	144	16
Bushing	D04311800	148	7
Bushing	D04700300	148	16
Bushing	D04705800	144	24
Bushing	D04705800	148	10
Bushing	D04705800	156	6
Elbow	D06002800	30	9
Elbow	D06002800	34	9
Elbow	D06002800	38	9
Elbow	D06002800	88	7
Elbow	D06002800	160	43
Elbow	D06002800	164	23
Adapter	D06003200	152	10
Adapter	D06003200	158	4
Adapter	D06011100	218	20
Adapter	D06013700	30	68
Adapter	D06013700	38	70
Adapter	D06013700	164	6
Adapter	D06013700	166	9
Adapter	D06013700	218	21
Tee	D06016400	28	18
Nipple	D06022700	24	9
Connector	D06045100	28	19
Connector	D06045100	160	10
Connector	D06045100	166	33

*1 Note

https://truckmanualshub.com/

ALPHABETICAL INDEX

Parts Name	P/N	Page *1	Item
Connector, Reducer	D06048200	28	23
Connector	D06048300	26	10
Connector	D06048300	28	24
Connector	D06048300	160	37
Connector	D06050000	160	11
Connector	D06050000	166	34
Connector	D06051400	24	27
Connector, Reducer	D06051500	24	28
Connector	D06051800	170	2
Connector	D06053600	26	16
Connector	D06053600	152	40
Connector, Reducer	D06053800	24	11
Elbow, Reducer	D06054100	26	15
Manifold	D06509300	30	10
Manifold	D06509300	34	10
Manifold	D06509300	38	10
Manifold	D06509400	30	46
Manifold	D06509400	34	46
Manifold	D06509400	38	46
Hose Ass'y	D07011001	24	6
Hose Ass'y	D07011015	24	4
Hose Ass'y	D07019503	218	18
Hose Ass'y	D07019506	218	19
Hose Ass'y	D07019520	218	17
Hose Ass'y	D07019523	166	19
Hose Ass'y	D07019523	166	20
Hose	D07031300	94	20
Hose Ass'y (For Long Arm)	D07035101	152	7-1
Hose Ass'y	D07035104	152	7
Hose Ass'y	D07035111	152	8
Hose Ass'y (For Long Arm)	D07035116	152	8-1
Hose Ass'y	D07036304	28	6
Hose Ass'y	D07036313	26	1
Hose Ass'y	D07036313	28	7
Hose Ass'y	D07036320	160	31
Hose Ass'y	D07036324	26	7
Hose Ass'y	D07036326	28	8
Hose Ass'y	D07036327	28	9
Hose Ass'y	D07036512	152	6
Hose Ass'y	D07036712	160	26
Hose Ass'y	D07036713	160	27
Hose Ass'y	D07037101	160	3
Hose Ass'y	D07037201	160	4
Hose Ass'y	D07046012	152	30
Hose Ass'y	D07046013	152	31
Hose Ass'y	D07046014	152	34
Hose Ass'y	D07046015	152	35
Hose Ass'y	D07046018	152	36
Hose Ass'y	D07046019	152	37
Hose Ass'y	D07046110	26	2
Hose Ass'y	D07046112	18	2
Hose Ass'y	D07046113	28	10

*1 Note

https://truckmanualshub.com/

ALPHABETICAL INDEX

Parts Name	P/N	Page *1	Item
Hose Ass'y	D07054301	152	3
Hose Ass'y	D07054302	152	4
Hose Ass'y	D07054305	152	5
Hose Ass'y	D07054307	218	10
Hose Ass'y	D07054308	218	11
Hose Ass'y	D07055801	24	5
Hose	D07057300	98	2
Hose	D07057701	30	60
Hose	D07057701	34	60
Hose	D07057701	38	60
Clamp, Tube	D08102300	160	8
Clamp, Tube	D08102300	166	30
Clamp, Tube	D08119200	160	9
Clamp, Tube	D08119200	166	31
Clamp, Tube	D08119400	160	7
Clamp, Tube	D08119400	166	6
Clamp, Tube	D08119400	218	5
Clamp, Seat	D08210700	218	6
Seat, Clamp	D08210700	160	5
Seat, Clamp	D08210700	166	4
Seat, Clamp	D08210900	164	4
Seat, Clamp	D08210900	166	5
Seat, Clamp	D08211100	160	6
Clamp	D08314600	28	2
Clamp	D08315300	98	8
Boss	D13102800	150	13
Spring	D17005200	84	19
Boots	D18100200	88	14
Frame, Lower	D20020000	6	2
Frame, Swing	D20436000	20	1
Weight, Counter	D20682600	116	1
Weight, Counter	D20682900	116	2
Weight, Counter	D20683000	116	7
Frame	D20687000	90	48
Frame	D20687200	98	11
Frame	D20687300	112	2
Frame	D20687500	110	8
Frame	D20690600	104	28
Boom	D21014300	144	1
Arm Ass'y	D21521900	144	2
Arm Ass'y, Long	D21523300	144	2-1
Flange, Pump	D23006100	96	2
Idler, Front	D23601300	12	7
Blade	D25710800	156	1
Stay	D26032900	226	8
Stay	D26038100	204	7
Stay	D26051300	214	4
Stay	D26052400	18	1
Stay	D26055200	102	6
Bucket, Hoe (0.09m3, 550mm)	D27009900	150	14
Bucket, Hoe (0.07m3, 450mm)	D27010000	150	15
Bucket, Hoe (0.10m3, 600mm)	D27010100	150	16

*1 Note

https://truckmanualshub.com/

ALPHABETICAL INDEX

Parts Name	P/N	Page *1	Item
Bucket, Hoe (0.08m3, 500mm)	D27010200	150	17
Bucket, Hoe (0.06m3, 400mm)	D27010300	150	18
Bucket, Hoe (0.05m3, 320mm)	D27010400	150	19
Bucket, Hoe (0.04m3, 250mm)	D27010500	150	20
Bucket, Hoe (0.09m3, 550mm)	D27011200	150	21
Bucket, Hoe (0.09m3, 550mm)	D27011300	150	22
Tank, Fuel	D28422000	98	19
Tank, Hydraulic Oil	D28424000	60	1
Tank, Hydraulic Oil	D28424700	60	1
Tube	D28625200	60	2
Tube	D28627200	24	3
Tube	D28627900	24	8
Tube	D28630900	152	2
Tube	D28631100	152	1
Tube	D28631900	160	1
Tube	D28632000	160	2
Tube	D28632100	164	1
Tube	D28632200	164	2
Tube	D28632300	166	1
Tube	D28632400	166	2
Tube	D28633700	218	8
Tube	D28633800	218	7
Tube	D28633900	220	2
Plate	D40027300	102	14
Plate	D40027300	104	16
Decal (Transport Fix)	D40505900	128	27
Decal (Transport Fix)	D40505900	198	27
Decal (Serial No.)	D40509100	122	3
Decal (Serial No.)	D40509100	124	3
Decal (Serial No.)	D40509100	126	3
Decal (Serial No.)	D40509100	128	3
Decal (Serial No.)	D40509100	130	3
Decal (Serial No.)	D40509100	132	3
Decal (Serial No.)	D40509100	192	3
Decal (Serial No.)	D40509100	194	3
Decal (Serial No.)	D40509100	196	3
Decal (Serial No.)	D40509100	198	3
Decal (Serial No.)	D40509100	200	3
Decal (Serial No.)	D40509100	202	3
Decal (Serial No.) (CE)	D40509100	120	3-1
Decal (Serial No.) (CE)	D40509100	190	3-1
Decal (Serial No.)	D40509400	118	3
Decal (Serial No.)	D40509400	120	3
Decal (Serial No.)	D40509400	188	3
Decal (Serial No.)	D40509400	190	3
Decal (New Machine)	D40509700	120	24
Decal (New Machine)	D40509700	122	29
Decal (New Machine)	D40509700	124	29
Decal (New Machine)	D40509700	126	29
Decal (New Machine)	D40509700	128	29
Decal (New Machine)	D40509700	130	29
Decal (New Machine)	D40509700	132	29

*1 Note

https://truckmanualshub.com/

ALPHABETICAL INDEX

Parts Name	P/N	Page *1	Item
Decal (New Machine)	D40509700	190	24
Decal (New Machine)	D40509700	192	29
Decal (New Machine)	D40509700	194	29
Decal (New Machine)	D40509700	196	29
Decal (New Machine)	D40509700	198	29
Decal (New Machine)	D40509700	200	29
Decal (New Machine)	D40509700	202	29
Decal (Spare Piping Change)	D40525600	128	25
Decal (Spare Piping Change)	D40525600	198	25
Seal	D40527200	30	66
Seal	D40527200	38	66
Seal	D40527200	110	9
Decal (Caution)	D40532300	120	20
Decal (Caution)	D40532300	190	20
Decal (Caution)	D40533200	118	16
Decal (Caution)	D40533200	188	16
Decal (Caution)	D40535900	120	15
Decal (Caution)	D40535900	122	15
Decal (Caution)	D40535900	124	15
Decal (Caution)	D40535900	126	15
Decal (Caution)	D40535900	128	15
Decal (Caution)	D40535900	130	15
Decal (Caution)	D40535900	132	15
Decal (Caution)	D40535900	190	15
Decal (Caution)	D40535900	192	15
Decal (Caution)	D40535900	194	15
Decal (Caution)	D40535900	196	15
Decal (Caution)	D40535900	198	15
Decal (Caution)	D40535900	200	15
Decal (Caution)	D40535900	202	15
Decal (Caution)	D40536600	120	13
Decal (Caution)	D40536600	122	13
Decal (Caution)	D40536600	124	13
Decal (Caution)	D40536600	126	13
Decal (Caution)	D40536600	128	13
Decal (Caution)	D40536600	130	13
Decal (Caution)	D40536600	132	13
Decal (Caution)	D40536600	190	13
Decal (Caution)	D40536600	192	13
Decal (Caution)	D40536600	194	13
Decal (Caution)	D40536600	196	13
Decal (Caution)	D40536600	198	13
Decal (Caution)	D40536600	200	13
Decal (Caution)	D40536600	202	13
Decal (Caution)	D40537300	118	21
Decal (Caution)	D40537300	188	21
Decal (Caution)	D40542400	118	14
Decal (Caution)	D40542400	188	14
Decal (For A-D)	D40544700	34	71
Decal (Caution)	D40544900	118	20
Decal (Caution)	D40544900	188	20
Decal (Safety Swing)	D40545000	118	11

*1 Note

https://truckmanualshub.com/

ALPHABETICAL INDEX

Parts Name	P/N	Page *1	Item
Decal (Safety Swing)	D40545000	188	11
Decal (Caution)	D40545100	118	18
Decal (Caution)	D40545100	188	18
Decal (Caution)	D40545200	118	15
Decal (Caution)	D40545200	188	15
Decal (Caution)	D40545300	188	26
Decal (Caution)	D40545400	118	12
Decal (Caution)	D40545400	188	12
Decal (Caution)	D40545500	118	13
Decal (Caution)	D40545500	188	13
Decal (Caution)	D40546200	118	17
Decal (Caution)	D40546200	188	17
Decal (Caution)	D40546300	118	19
Decal (Caution)	D40546300	188	19
Decal (Caution)	D40550300	120	16
Decal (Caution)	D40550300	122	16
Decal (Caution)	D40550300	124	16
Decal (Caution)	D40550300	126	16
Decal (Caution)	D40550300	128	16
Decal (Caution)	D40550300	130	16
Decal (Caution)	D40550300	132	16
Decal (Caution)	D40550300	190	16
Decal (Caution)	D40550300	192	16
Decal (Caution)	D40550300	194	16
Decal (Caution)	D40550300	196	16
Decal (Caution)	D40550300	198	16
Decal (Caution)	D40550300	200	16
Decal (Caution)	D40550300	202	16
Decal (Caution)	D40550400	120	18
Decal (Caution)	D40550400	122	18
Decal (Caution)	D40550400	124	18
Decal (Caution)	D40550400	126	18
Decal (Caution)	D40550400	128	18
Decal (Caution)	D40550400	130	18
Decal (Caution)	D40550400	132	18
Decal (Caution)	D40550400	190	18
Decal (Caution)	D40550400	192	18
Decal (Caution)	D40550400	194	18
Decal (Caution)	D40550400	196	18
Decal (Caution)	D40550400	198	18
Decal (Caution)	D40550400	200	18
Decal (Caution)	D40550400	202	18
Decal (Caution)	D40550500	120	12
Decal (Caution)	D40550500	122	12
Decal (Caution)	D40550500	124	12
Decal (Caution)	D40550500	126	12
Decal (Caution)	D40550500	128	12
Decal (Caution)	D40550500	130	12
Decal (Caution)	D40550500	132	12
Decal (Caution)	D40550500	190	12
Decal (Caution)	D40550500	192	12
Decal (Caution)	D40550500	194	12

*1 Note

https://truckmanualshub.com/

ALPHABETICAL INDEX

Parts Name	P/N	Page *1	Item
Decal (Caution)	D40550500	196	12
Decal (Caution)	D40550500	198	12
Decal (Caution)	D40550500	200	12
Decal (Caution)	D40550500	202	12
Decal (Caution)	D40550600	120	19
Decal (Caution)	D40550600	122	19
Decal (Caution)	D40550600	124	19
Decal (Caution)	D40550600	126	19
Decal (Caution)	D40550600	128	19
Decal (Caution)	D40550600	130	19
Decal (Caution)	D40550600	132	19
Decal (Caution)	D40550600	190	19
Decal (Caution)	D40550600	192	19
Decal (Caution)	D40550600	194	19
Decal (Caution)	D40550600	196	19
Decal (Caution)	D40550600	198	19
Decal (Caution)	D40550600	200	19
Decal (Caution)	D40550600	202	19
Decal (Safety Swing)	D40550700	120	10
Decal (Safety Swing)	D40550700	122	10
Decal (Safety Swing)	D40550700	124	10
Decal (Safety Swing)	D40550700	126	10
Decal (Safety Swing)	D40550700	128	10
Decal (Safety Swing)	D40550700	130	10
Decal (Safety Swing)	D40550700	132	10
Decal (Safety Swing)	D40550700	190	10
Decal (Safety Swing)	D40550700	192	10
Decal (Safety Swing)	D40550700	194	10
Decal (Safety Swing)	D40550700	196	10
Decal (Safety Swing)	D40550700	198	10
Decal (Safety Swing)	D40550700	200	10
Decal (Safety Swing)	D40550700	202	10
Decal (Caution)	D40550800	120	17
Decal (Caution)	D40550800	122	17
Decal (Caution)	D40550800	124	17
Decal (Caution)	D40550800	126	17
Decal (Caution)	D40550800	128	17
Decal (Caution)	D40550800	130	17
Decal (Caution)	D40550800	132	17
Decal (Caution)	D40550800	190	17
Decal (Caution)	D40550800	192	17
Decal (Caution)	D40550800	194	17
Decal (Caution)	D40550800	196	17
Decal (Caution)	D40550800	198	17
Decal (Caution)	D40550800	200	17
Decal (Caution)	D40550800	202	17
Decal (Caution)	D40550900	120	14
Decal (Caution)	D40550900	122	14
Decal (Caution)	D40550900	124	14
Decal (Caution)	D40550900	126	14
Decal (Caution)	D40550900	128	14
Decal (Caution)	D40550900	130	14

*1 Note

https://truckmanualshub.com/

ALPHABETICAL INDEX

Parts Name	P/N	Page *1	Item
Decal (Caution)	D40550900	132	14
Decal (Caution)	D40550900	190	14
Decal (Caution)	D40550900	192	14
Decal (Caution)	D40550900	194	14
Decal (Caution)	D40550900	196	14
Decal (Caution)	D40550900	198	14
Decal (Caution)	D40550900	200	14
Decal (Caution)	D40550900	202	14
Decal (Caution)	D40551000	190	26
Decal (Caution)	D40551000	192	32
Decal (Caution)	D40551000	194	32
Decal (Caution)	D40551000	196	32
Decal (Caution)	D40551000	198	32
Decal (Caution)	D40551000	200	32
Decal (Caution)	D40551000	202	32
Decal (Caution)	D40551100	120	11
Decal (Caution)	D40551100	122	11
Decal (Caution)	D40551100	124	11
Decal (Caution)	D40551100	126	11
Decal (Caution)	D40551100	128	11
Decal (Caution)	D40551100	130	11
Decal (Caution)	D40551100	132	11
Decal (Caution)	D40551100	190	11
Decal (Caution)	D40551100	192	11
Decal (Caution)	D40551100	194	11
Decal (Caution)	D40551100	196	11
Decal (Caution)	D40551100	198	11
Decal (Caution)	D40551100	200	11
Decal (Caution)	D40551100	202	11
Decal (For A, B, G)	D40551800	34	71-1
Decal (Caution)	D40555900	122	20
Decal (Caution)	D40555900	192	20
Decal (Caution)	D40557100	126	20
Decal (Caution)	D40557100	196	20
Decal (Caution)	D40557500	124	20
Decal (Caution)	D40557500	194	20
Decal (Caution)	D40558700	128	20
Decal (Caution)	D40558700	198	20
Decal (Caution)	D40559400	130	20
Decal (Caution)	D40559400	200	20
Decal	D40585700	232	1
Decal	D40585900	232	2
Decal	D40586700	232	3
Decal	D40586800	232	5
Decal (Oil)	D40600000	132	4
Decal (Oil)	D40600000	202	4
Decal (Breaker Cation)	D40600200	132	26
Decal (Breaker Cation)	D40600200	202	26
Decal (Caution)	D40600500	132	20
Decal (Caution)	D40600500	202	20
Decal (Transport Fix)	D40600700	132	27
Decal (Transport Fix)	D40600700	202	27

*1 Note

https://truckmanualshub.com/

ALPHABETICAL INDEX

Parts Name	P/N	Page *1	Item
Decal (Anti-Freezing Solution)	D40601200	132	21
Decal (Anti-Freezing Solution)	D40601200	202	21
Decal (Noise 94)	D40615400	122	30
Decal (Noise 94)	D40615400	124	30
Decal (Noise 94)	D40615400	126	30
Decal (Noise 94)	D40615400	128	30
Decal (Noise 94)	D40615400	130	30
Decal (Noise 94)	D40615400	132	30
Decal (Noise 94)	D40615400	192	30
Decal (Noise 94)	D40615400	194	30
Decal (Noise 94)	D40615400	196	30
Decal (Noise 94)	D40615400	198	30
Decal (Noise 94)	D40615400	200	30
Decal (Noise 94)	D40615400	202	30
Decal (Noise 94)(CE)	D40615400	120	37
Decal (Noise 94)(CE)	D40615400	190	37
Decal (Oil Check)	D40649000	118	5
Decal (Oil Check)	D40649000	188	5
Decal (T1)	D40649901	82	1-1
Decal (T2)	D40649902	82	3-1
Decal (T3)	D40649903	82	2-1
Decal (T4)	D40649904	82	4-1
Decal (Oil Check)	D40650400	120	5
Decal (Oil Check)	D40650400	190	5
Decal (Oil Check)	D40655000	126	5
Decal (Oil Check)	D40655000	196	5
Decal (Oil Check)	D40655400	124	5
Decal (Oil Check)	D40655400	194	5
Decal (Oil Check)	D40655800	122	5
Decal (Oil Check)	D40655800	192	5
Decal (Oil Check)	D40656200	130	5
Decal (Oil Check)	D40656200	200	5
Decal (Oil Check)	D40656500	128	5
Decal (Oil Check)	D40656500	198	5
Decal (Safety Works)	D40659700	118	9
Decal (Safety Works)	D40659700	188	9
Decal (Blade, Pedal)	D40660200	118	29
Decal (Blade, Pedal)	D40660200	120	29
Decal (Blade, Pedal)	D40660200	122	35
Decal (Blade, Pedal)	D40660200	124	35
Decal (Blade, Pedal)	D40660200	126	35
Decal (Blade, Pedal)	D40660200	128	35
Decal (Blade, Pedal)	D40660200	130	35
Decal (Blade, Pedal)	D40660200	132	35
Decal (Control A)	D40660300	118	30
Decal (Control A)	D40660300	120	30
Decal (Control A)	D40660300	122	36
Decal (Control A)	D40660300	124	36
Decal (Control A)	D40660300	126	36
Decal (Control A)	D40660300	128	36

*1 Note

https://truckmanualshub.com/

ALPHABETICAL INDEX

Parts Name	P/N	Page *1	Item
Decal (Control A)	D40660300	130	36
Decal (Control A)	D40660300	132	36
Decal (Control B)	D40660400	118	30-1
Decal (Control B)	D40660400	120	30-1
Decal (Control B)	D40660400	122	36-1
Decal (Control B)	D40660400	124	36-1
Decal (Control B)	D40660400	126	36-1
Decal (Control B)	D40660400	128	36-1
Decal (Control B)	D40660400	130	36-1
Decal (Control B)	D40660400	132	36-1
Decal (Control C)	D40660500	118	30-2
Decal (Control C)	D40660500	120	30-2
Decal (Control C)	D40660500	122	36-2
Decal (Control C)	D40660500	124	36-2
Decal (Control C)	D40660500	126	36-2
Decal (Control C)	D40660500	128	36-2
Decal (Control C)	D40660500	130	36-2
Decal (Control C)	D40660500	132	36-2
Decal (Control D)	D40660600	118	30-3
Decal (Control D)	D40660600	120	30-3
Decal (Control D)	D40660600	122	36-3
Decal (Control D)	D40660600	124	36-3
Decal (Control D)	D40660600	126	36-3
Decal (Control D)	D40660600	128	36-3
Decal (Control D)	D40660600	130	36-3
Decal (Control D)	D40660600	132	36-3
Decal (Control F)	D40660700	120	30-4
Decal (Control G)	D40660800	118	30-4
Decal (Control A-D)	D40660900	118	31
Decal (Control A-D)	D40660900	120	31
Decal (Control A-D)	D40660900	122	37
Decal (Control A-D)	D40660900	124	37
Decal (Control A-D)	D40660900	126	37
Decal (Control A-D)	D40660900	128	37
Decal (Control A-D)	D40660900	130	37
Decal (Control A-D)	D40660900	132	37
Decal (Control A, B, G)	D40661000	118	32
Decal (Control A)	D40662200	188	30
Decal (Control A)	D40662200	190	30
Decal (Control A)	D40662200	192	36
Decal (Control A)	D40662200	194	36
Decal (Control A)	D40662200	196	36
Decal (Control A)	D40662200	198	36
Decal (Control A)	D40662200	200	36
Decal (Control A)	D40662200	202	36
Decal (Control B)	D40662300	188	30-1
Decal (Control B)	D40662300	190	30-1
Decal (Control B)	D40662300	192	36-1
Decal (Control B)	D40662300	194	36-1
Decal (Control B)	D40662300	196	36-1
Decal (Control B)	D40662300	198	36-1
Decal (Control B)	D40662300	200	36-1

*1 Note

https://truckmanualshub.com/

ALPHABETICAL INDEX

Parts Name	P/N	Page *1	Item
Decal (Control B)	D40662300	202	36-1
Decal (Control C)	D40662400	188	30-2
Decal (Control C)	D40662400	190	30-2
Decal (Control C)	D40662400	192	36-2
Decal (Control C)	D40662400	194	36-2
Decal (Control C)	D40662400	196	36-2
Decal (Control C)	D40662400	198	36-2
Decal (Control C)	D40662400	200	36-2
Decal (Control C)	D40662400	202	36-2
Decal (Control D)	D40662500	188	30-3
Decal (Control D)	D40662500	190	30-3
Decal (Control D)	D40662500	192	36-3
Decal (Control D)	D40662500	194	36-3
Decal (Control D)	D40662500	196	36-3
Decal (Control D)	D40662500	198	36-3
Decal (Control D)	D40662500	200	36-3
Decal (Control D)	D40662500	202	36-3
Decal (Control F)	D40662600	190	30-4
Decal (Control G)	D40662700	188	30-4
Decal (Control A-D)	D40662800	188	31
Decal (Control A-D)	D40662800	190	31
Decal (Control A-D)	D40662800	192	37
Decal (Control A-D)	D40662800	194	37
Decal (Control A-D)	D40662800	196	37
Decal (Control A-D)	D40662800	198	37
Decal (Control A-D)	D40662800	200	37
Decal (Control A-D)	D40662800	202	37
Decal (Control A, B, G)	D40662900	188	32
Decal (Blade, Pedal)	D40663000	188	29
Decal (Blade, Pedal)	D40663000	190	29
Decal (Blade, Pedal)	D40663000	192	35
Decal (Blade, Pedal)	D40663000	194	35
Decal (Blade, Pedal)	D40663000	196	35
Decal (Blade, Pedal)	D40663000	198	35
Decal (Blade, Pedal)	D40663000	200	35
Decal (Blade, Pedal)	D40663000	202	35
Decal (Environment)	D40663100	118	23
Decal (Environment)	D40663100	188	23
Decal (Spare Piping Change)	D40672000	132	25
Decal (Spare Piping Change)	D40672000	202	25
Decal (Environment)	D40678300	120	22
Decal (Environment)	D40678300	122	22
Decal (Environment)	D40678300	124	22
Decal (Environment)	D40678300	126	22
Decal (Environment)	D40678300	128	22
Decal (Environment)	D40678300	130	22
Decal (Environment)	D40678300	132	22
Decal (Environment)	D40678300	190	22
Decal (Environment)	D40678300	192	22
Decal (Environment)	D40678300	194	22
Decal (Environment)	D40678300	196	22
Decal (Environment)	D40678300	198	22

*1 Note

https://truckmanualshub.com/

ALPHABETICAL INDEX

Parts Name	P/N	Page *1	Item
Decal (Environment)	D40678300	200	22
Decal (Environment)	D40678300	202	22
Decal (Safety Works)	D40679500	126	8
Decal (Safety Works)	D40679500	196	8
Decal (Oil Check)	D40681100	132	5
Decal (Oil Check)	D40681100	202	5
Decal	D40682700	232	12
Pad, Rubber	D40693000	160	53
Pad, Rubber	D40693100	160	54
Decal (Safety Works)	D40701600	132	8
Decal (Safety Works)	D40701600	202	8
Decal (Spare Pedal)	D40705600	188	37
Decal (BA)	D40781801	88	3-1
Decal (BB)	D40781802	88	5-1
Decal (BP)	D40781803	30	50-1
Decal (BP)	D40781803	34	50-1
Decal (BP)	D40781803	38	50-1
Decal (BT)	D40781804	30	22-1
Decal (BT)	D40781804	34	22-1
Decal (BT)	D40781804	38	22-1
Decal (Light)	D40781900	138	19
Decal	D40782000	186	26
Decal	D40782300	138	28
Plate, Name (Throttle)	D40782900	138	32
Decal (Engine Daily Check)	D40787700	118	8
Decal (Engine Daily Check)	D40787700	188	8
Decal (Engine Daily Check)	D40788700	120	7
Decal (Engine Daily Check)	D40788700	190	7
Decal (Engine Daily Check)	D40788900	124	7
Decal (Engine Daily Check)	D40788900	194	7
Decal (Engine Daily Check)	D40789100	122	7
Decal (Engine Daily Check)	D40789100	192	7
Decal (Engine Daily Check)	D40790600	128	7
Decal (Engine Daily Check)	D40790600	198	7
Decal (Engine Daily Check)	D40790800	132	7
Decal (Engine Daily Check)	D40790800	202	7
Decal (Engine Daily Check)	D40791200	130	7
Decal (Engine Daily Check)	D40791200	200	7
Decal (Engine Daily Check)	D40791700	126	7
Decal (Engine Daily Check)	D40791700	196	7
Decal (EPA Regulation)	D40794300	118	25
Decal (EPA Regulation)	D40794300	120	25
Decal (EPA Regulation)	D40794300	122	31
Decal (EPA Regulation)	D40794300	124	31
Decal (EPA Regulation)	D40794300	126	31
Decal (EPA Regulation)	D40794300	128	31
Decal (EPA Regulation)	D40794300	130	31
Decal (EPA Regulation)	D40794300	132	31
Decal (EPA Regulation)	D40794300	188	25
Decal (EPA Regulation)	D40794300	190	25
Decal (EPA Regulation)	D40794300	192	31
Decal (EPA Regulation)	D40794300	194	31

*1 Note

https://truckmanualshub.com/

ALPHABETICAL INDEX

Parts Name	P/N	Page *1	Item
Decal (EPA Regulation)	D40794300	196	31
Decal (EPA Regulation)	D40794300	198	31
Decal (EPA Regulation)	D40794300	200	31
Decal (EPA Regulation)	D40794300	202	31
Decal	D40796300	138	42
Decal	D40796400	138	43
Decal	D40796500	138	37
Decal	D40796600	138	46
Decal	D40796700	138	47
Decal	D40796800	138	48
Decal	D40802000	232	8
Decal	D40802100	232	7
Decal	D40803800	232	11
Decal	D40820500	212	16
Decal (Bucket Specification)	D40822500	118	34
Decal (Bucket Specification)	D40822500	188	34
Decal	D40828000	138	23
Seal	D40828100	84	42
Decal	D40828500	138	41
Decal	D40829200	134	43
Decal (Lub. Chart)	D40831300	118	6
Decal (Lub. Chart)	D40831300	188	6
Decal (Specification)	D40831500	118	33
Decal (Specification)	D40831500	188	33
Decal (Boom Lowering)(CE)	D40832200	120	34
Decal (Boom Lowering)(CE)	D40832200	190	34
Decal (Oil)	D40832400	118	4
Decal (Oil)	D40832400	188	4
Decal (Tank Decompression)	D40832800	118	10
Decal (Tank Decompression)	D40832800	188	10
Decal (Boom Lowering)	D40833400	124	24
Decal (Boom Lowering)	D40833400	194	24
Decal (Boom Lowering)	D40833500	126	24
Decal (Boom Lowering)	D40833500	196	24
Decal (Boom Lowering)	D40833600	128	24
Decal (Boom Lowering)	D40833600	198	24
Decal (Boom Lowering)	D40833700	130	24
Decal (Boom Lowering)	D40833700	200	24
Decal (Boom Lowering)	D40833800	122	24
Decal (Boom Lowering)	D40833800	192	24
Decal (Boom Lowering)	D40833900	132	24
Decal (Boom Lowering)	D40833900	202	24
Decal (Lifting Procedures)(CE)	D40834000	120	36
Decal (Lifting Procedures)(CE)	D40834000	190	36
Decal (Lifting Procedures)	D40834100	124	28
Decal (Lifting Procedures)	D40834100	194	28
Decal (Lifting Procedures)	D40834200	126	28
Decal (Lifting Procedures)	D40834200	196	28

*1 Note

https://truckmanualshub.com/

ALPHABETICAL INDEX

Parts Name	P/N	Page *1	Item
Decal (Lifting Procedures)	D40834300	128	28
Decal (Lifting Procedures)	D40834300	198	28
Decal (Lifting Procedures)	D40834400	130	28
Decal (Lifting Procedures)	D40834400	200	28
Decal (Lifting Procedures)	D40834500	122	28
Decal (Lifting Procedures)	D40834500	192	28
Decal (Lifting Procedures)	D40834600	132	28
Decal (Lifting Procedures)	D40834600	202	28
Decal (Spare Pedal)	D40835400	118	37
Decal (Lub. Chart)	D40835500	120	6
Decal (Lub. Chart)	D40835500	190	6
Decal (Lub. Chart)	D40835600	124	6
Decal (Lub. Chart)	D40835600	194	6
Decal (Lub. Chart)	D40835700	126	6
Decal (Lub. Chart)	D40835700	196	6
Decal (Lub. Chart)	D40835800	128	6
Decal (Lub. Chart)	D40835800	198	6
Decal (Lub. Chart)	D40835900	130	6
Decal (Lub. Chart)	D40835900	200	6
Decal (Lub. Chart)	D40836000	122	6
Decal (Lub. Chart)	D40836000	192	6
Decal (Lub. Chart)	D40836100	132	6
Decal (Lub. Chart)	D40836100	202	6
Plate, Nonslip	D40837000	118	26
Plate, Nonslip	D40837000	120	26
Plate, Nonslip	D40837000	122	32
Plate, Nonslip	D40837000	124	32
Plate, Nonslip	D40837000	126	32
Plate, Nonslip	D40837000	128	32
Plate, Nonslip	D40837000	130	32
Plate, Nonslip	D40837000	132	32
Decal (Reflector)	D40837100	118	24
Decal (Reflector)	D40837100	120	23
Decal (Reflector)	D40837100	122	23
Decal (Reflector)	D40837100	124	23
Decal (Reflector)	D40837100	126	23
Decal (Reflector)	D40837100	128	23
Decal (Reflector)	D40837100	130	23
Decal (Reflector)	D40837100	132	23
Decal (Reflector)	D40837100	188	24
Decal (Reflector)	D40837100	190	23
Decal (Reflector)	D40837100	192	23
Decal (Reflector)	D40837100	194	23
Decal (Reflector)	D40837100	196	23
Decal (Reflector)	D40837100	198	23
Decal (Reflector)	D40837100	200	23
Decal (Reflector)	D40837100	202	23
Decal (For Rops)	D40837500	110	12
Decal (For Tops)	D40837600	110	11
Decal	D40837901	232	9
Decal	D40837902	232	9-1
Decal	D40838000	232	10

*1 Note

https://truckmanualshub.com/

ALPHABETICAL INDEX

Parts Name	P/N	Page *1	Item
Decal	D40838100	232	10-2
Decal	D40838200	232	10-1
Decal	D40838300	232	10-3
Decal	D40839600	232	4
Decal (IHI)	D40840200	118	27
Decal (IHI)	D40840200	120	27
Decal (IHI)	D40840200	122	33
Decal (IHI)	D40840200	124	33
Decal (IHI)	D40840200	126	33
Decal (IHI)	D40840200	128	33
Decal (IHI)	D40840200	130	33
Decal (IHI)	D40840200	132	33
Decal (IHI)	D40840200	188	27
Decal (IHI)	D40840200	190	27
Decal (IHI)	D40840200	192	33
Decal (IHI)	D40840200	194	33
Decal (IHI)	D40840200	196	33
Decal (IHI)	D40840200	198	33
Decal (IHI)	D40840200	200	33
Decal (IHI)	D40840200	202	33
Decal (IHI)	D40840300	118	28
Decal (IHI)	D40840300	120	28
Decal (IHI)	D40840300	122	34
Decal (IHI)	D40840300	124	34
Decal (IHI)	D40840300	126	34
Decal (IHI)	D40840300	128	34
Decal (IHI)	D40840300	130	34
Decal (IHI)	D40840300	132	34
Decal (IHI)	D40840300	188	28
Decal (IHI)	D40840300	190	28
Decal (IHI)	D40840300	192	34
Decal (IHI)	D40840300	194	34
Decal (IHI)	D40840300	196	34
Decal (IHI)	D40840300	198	34
Decal (IHI)	D40840300	200	34
Decal (IHI)	D40840300	202	34
Decal (Model)	D40840500	118	1
Decal (Model)	D40840500	120	1
Decal (Model)	D40840500	122	1
Decal (Model)	D40840500	124	1
Decal (Model)	D40840500	126	1
Decal (Model)	D40840500	128	1
Decal (Model)	D40840500	130	1
Decal (Model)	D40840500	132	1
Decal (Model)	D40840500	188	1
Decal (Model)	D40840500	190	1
Decal (Model)	D40840500	192	1
Decal (Model)	D40840500	194	1
Decal (Model)	D40840500	196	1
Decal (Model)	D40840500	198	1
Decal (Model)	D40840500	200	1
Decal (Model)	D40840500	202	1

*1 Note

https://truckmanualshub.com/

ALPHABETICAL INDEX

Parts Name	P/N	Page *1	Item
Decal (Model)	D40841400	118	2
Decal (Model)	D40841400	120	2
Decal (Model)	D40841400	122	2
Decal (Model)	D40841400	124	2
Decal (Model)	D40841400	126	2
Decal (Model)	D40841400	128	2
Decal (Model)	D40841400	130	2
Decal (Model)	D40841400	132	2
Decal (Model)	D40841400	188	2
Decal (Model)	D40841400	190	2
Decal (Model)	D40841400	192	2
Decal (Model)	D40841400	194	2
Decal (Model)	D40841400	196	2
Decal (Model)	D40841400	198	2
Decal (Model)	D40841400	200	2
Decal (Model)	D40841400	202	2
Decal (Tank Decompression)	D40842400	120	9
Decal (Tank Decompression)	D40842400	190	9
Decal (Tank Decompression)	D40842500	124	9
Decal (Tank Decompression)	D40842500	194	9
Decal (Tank Decompression)	D40842600	126	9
Decal (Tank Decompression)	D40842600	196	9
Decal (Tank Decompression)	D40842700	128	9
Decal (Tank Decompression)	D40842700	198	9
Decal (Tank Decompression)	D40842800	130	9
Decal (Tank Decompression)	D40842800	200	9
Decal (Tank Decompression)	D40842900	122	9
Decal (Tank Decompression)	D40842900	192	9
Decal (Tank Decompression)	D40843000	132	9
Decal (Tank Decompression)	D40843000	202	9
Decal (Capacities Table)	D40843300	124	20-1
Decal (Capacities Table)	D40843300	194	20-1
Decal	D40844700	138	24
Decal	D40863700	232	6
Bracket	D41431400	226	2
Bracket	D41552500	20	15
Bracket	D41670100	204	1
Bracket	D41691500	160	50
Bracket	D41782100	134	16
Bracket	D41782200	134	17
Bracket	D41813900	84	44
Bracket	D41819000	84	14
Bracket	D41830200	84	12
Bracket	D41830400	138	30
Bracket	D41845300	152	11
Bracket	D41845500	172	2
Bracket	D41845600	228	3
Bracket	D41856400	104	40
Bracket, Boom Swing	D41857300	148	1
Bracket	D41858300	38	69
Bracket	D41863000	210	3
Bracket	D41863200	210	2

*1 Note

https://truckmanualshub.com/

ALPHABETICAL INDEX

Parts Name	P/N	Page *1	Item
Bracket	D41863200	228	4
Bracket	D41868800	208	2
Bracket	D41868900	208	3
Bracket	D41881200	160	12
Bracket	D41881200	166	10
Bracket	D41881300	160	13
Bracket	D41881300	166	11
Bracket	D41881500	166	35
Bracket	D41883600	98	9
Bracket	D41884700	90	49
Bracket	D41886700	98	23
Bracket	D41889900	94	2
Bracket	D41890800	102	3
Bracket	D41890900	102	4
Bracket	D41891000	102	5
Bracket	D41892700	104	14
Bracket	D41892900	30	11
Bracket	D41892900	34	11
Bracket	D41892900	38	11
Bracket	D41893000	30	12
Bracket	D41893000	34	12
Bracket	D41893000	38	12
Bracket	D41894100	102	17
Bracket	D41897000	104	30
Bracket	D41902600	98	43
Bracket	D41912200	30	67
Bracket	D41913300	160	36
Bracket	D41914100	90	6
Bracket	D41916100	210	5
Bracket	D41918600	218	2
Bracket	D41919400	218	3
Cover (For A/C)	D41920100	90	36-1
Bracket	D41920300	220	19
Bracket	D41920400	220	3
Bracket	D41920500	216	9
Bracket	D41920700	220	20
Bracket	D41920800	220	4
Bracket	D41921800	98	10
Bracket	D41922900	138	13
Bracket	D41923000	138	4
Bracket	D41925400	90	4
Bracket	D41925500	90	5
Bracket	D41926400	94	3
Bracket	D41927800	20	3
Bracket	D41928000	20	2
Bracket	D41928100	30	13
Bracket	D41928100	34	13
Bracket	D41928100	38	13
Bracket	D41928500	82	19
Bracket	D41928600	88	22
Bracket	D41928700	24	26
Bracket	D41928800	134	8

*1 Note

https://truckmanualshub.com/

ALPHABETICAL INDEX

Parts Name	P/N	Page *1	Item
Bracket	D41930800	84	11
Bracket	D41931000	28	1
Bracket	D41931100	28	3
Bracket	D41931500	134	47
Bracket	D41934200	82	24
Bracket	D41934300	82	28
BRACKET	D41934400	114	3
Bracket	D41935500	230	4-1
Bracket	D41935700	230	4
Bracket	D41935900	212	2
Bracket	D41936000	82	14
Bracket	D41936100	214	15
Bracket	D41936200	214	16
Bracket	D41944600	134	31
Bracket	D41945100	104	15
Bracket	D41947200	186	2
Bracket	D41947700	138	51
Bracket (For A/C)	D41951800	90	5-1
Bracket	D41954200	102	2
Bracket	D41954700	164	20
Pipe	D43028600	24	21
Plate, Rubber	D43349600	98	12
Plate, Rubber	D43350400	98	18
Plate, Rubber	D43351000	24	24
Canopy	D44800500	112	1
Bracket	D45220700	212	3
Cover	D45537200	156	5
Cover	D45573700	226	3
Cover	D45712700	228	9
Cover	D45805400	102	1
Cover	D45805500	102	25
Cover	D45805600	102	26
Cover	D45807100	104	12
Cover	D45814900	186	3
Cover	D45819400	6	7
Cover	D45819500	102	16
Cover	D45823600	104	35
Cover	D45827000	134	1
Cover	D45828300	102	28
Cover	D45828400	102	29
Cover	D45828600	102	31
Cover	D45830100	102	30
Cover	D45841300	220	5
Cover	D45843500	104	41
Cover	D45843700	152	26
Cover	D45843800	144	8
Cover	D45844300	152	27
Cover	D45845400	102	32
Cover	D45845600	90	7
Cover	D45845800	90	36
Cover	D45846100	104	42
Cover	D45849700	230	5

*1 Note

https://truckmanualshub.com/

ALPHABETICAL INDEX

Parts Name	P/N	Page *1	Item
Cover	D45850800	212	6
Cover	D45851400	104	49
Cover	D45851500	104	49-1
Cover	D45857900	90	8
Cover	D45858300	104	1
Panel	D46531300	138	14
Panel	D46531400	138	15
Panel	D46531800	84	3
Panel	D46531900	84	4
Panel	D46535800	186	4
Panel	D46538000	138	2
Panel	D46538100	138	3
Duct	D46538200	212	4
Panel	D46538300	212	5
Panel	D46825100	94	14
Guard	D47070000	112	4
Guide, Fan	D47074000	90	2
Guard	D47080500	110	1
Guard	D47080500	112	3
Guide	D47505200	144	9
Rest, Arm	D48000900	84	43
Holder	D48102300	90	9
Retainer, Spring	D48502100	10	12
Link, Bucket	D49036900	144	5
Link, Arm (R.H.)	D49037000	144	6
Link, Arm (L.H.)	D49037100	144	7
Link, Backet	D49044100	224	4
Panel, Sponge	D49343400	108	12
Panel, Sponge	D49343901	186	15
Panel, Sponge	D49346200	108	15
Panel, Sponge	D49346300	108	16
Panel, Sponge	D49347800	108	17
Panel, Sponge	D49348000	108	19
Panel, Sponge	D49348100	108	20
Panel, Sponge	D49348200	108	21
Panel, Sponge	D49348300	108	22
Panel, Sponge	D49348400	108	23
Panel, Sponge	D49348800	90	53
Panel, Sponge	D49349500	90	52
Panel, Sponge	D49350600	108	1
Panel, Sponge	D49351100	108	5
Panel, Sponge	D49351200	108	6
Panel, Sponge	D49351300	108	7
Panel, Sponge	D49351400	108	8
Panel, Sponge	D49352000	90	54
Panel, Sponge	D49352400	90	34
Panel, Sponge	D49352500	90	56
Panel, Sponge	D49353700	20	4
Panel, Sponge	D49353800	20	5
Panel, Sponge	D49354000	20	7
Panel, Sponge	D49355100	60	16
Panel, Sponge	D49355200	60	17

*1 Note

https://truckmanualshub.com/

ALPHABETICAL INDEX

Parts Name	P/N	Page *1	Item
Panel, Sponge	D49355300	60	18
Panel, Sponge	D49362600	186	23
Panel, Sponge	D49363400	108	31
Panel, Sponge	D49363900	108	13
Panel, Sponge	D49364600	20	6
Panel, Sponge	D49364700	90	62
Panel, Sponge	D49364800	90	42
Panel, Sponge	D49364900	90	43
Panel, Sponge	D49365100	98	13
Panel, Sponge	D49365200	90	63
Panel, Sponge	D49365300	108	25
Panel, Sponge	D49365400	108	18
Panel, Sponge	D49366400	108	32
Panel, Sponge	D49366600	108	33
Panel, Sponge	D49366900	108	10
Panel, Sponge	D49367000	108	9
Panel, Sponge	D49367100	108	2
Panel, Sponge	D49367200	90	55
Panel, Sponge	D49367300	108	3
Panel, Sponge	D49367400	108	11
Panel, Sponge	D49367500	108	4
Panel, Sponge	D49367900	108	26
Panel, Sponge	D49368000	108	27
Seal, Sponge	D49369400	212	17
Panel, Sponge (For A/C)	D49369700	90	42-1
Panel, Sponge	D49372100	108	30
Panel, Sponge	D49372600	90	60
Panel, Sponge	D49373200	186	24
Lever	D49557700	84	32
Lever	D49577400	84	13
Lever	D49580800	88	12
Lever (L.H.)	D49583800	82	12
Lever (R.H.)	D49583900	82	13
Lever	D49584300	84	49
Pedal	D50105700	82	22
Pedal	D50105800	82	27
Pedal	D50105900	160	49
Pedal	D50107500	88	23
Pedal	D50107600	82	23
Duct	D52228000	94	22
Cap	D52800500	138	25
Cap	D52800500	138	35
Cap	D52800600	138	18
Seal	D55006300	98	7
Seal	D55100601	104	38
Seal	D55100602	104	39
Seal	D55100701	108	14
Seal, Sponge	D55100901	212	18
Seal, Sponge	D55100902	212	19
Seal, Sponge	D55100903	212	20
Seal	D55100904	104	47
Seal	D55100905	104	48

*1 Note

https://truckmanualshub.com/

ALPHABETICAL INDEX

Parts Name	P/N	Page *1	Item
Panel, Sponge	D55100906	108	28
Panel, Sponge	D55100907	108	29
Seal, Sponge	D55101001	212	21
Seal, Sponge	D55101002	212	22
Pad	D58016000	152	28
Pad	D58016900	28	4
Pad	D58018200	90	51
Pad	D58018300	28	5
Mat (For Canopy)	D58119100	114	1
Mat (For Canopy, Pedal)	D58120300	114	1-1
Mat (For Cabin)	D58120400	114	1-2
Mat (For Cabin, Pedal)	D58120500	114	1-3
Pipe, Tail	D58414300	94	1
Band, Earth	D59171703	134	15
Harness	D59216100	206	1
Cable, Battery	D59219403	134	14
Harness	D59220600	138	44
Harness	D59228500	134	41
Harness, Main	D59228700	134	12
Harness	D59229000	84	39
Harness	D59230400	228	1
Harness	D59230500	228	2
Harness	D59230600	214	1
Harness	D59230900	186	25
Cylinder Ass'y, Grease	F30011100	10	0
Roller Ass'y, Lower	F30022300	6	16
Roller Ass'y, Lower	F30022300	14	0
Idler Ass'y, Front	F30036100	10	20
Idler Ass'y, Front	F30036100	12	0
Unit Ass'y, Spring	F30038000	10	10
Attachment Ass'y, Blade	F30102100	156	0
Frame Ass'y, Swing	F31135700	20	0
Swing Drive Device	F32025300	22	0
Bearing Ass'y, Swing	F32025700	20	0-1
Dribve Device, Oil Pump	F33068000	96	0
Air Cleaner & Muffler Ass'y	F33068200	94	0
Engine & Accessories	F33068200	90	0
Tank Ass'y, Fuel	F33731700	98	0
Piping Ass'y, Fuel	F33732000	98	0-1
Piping Ass'y, Hoe Attachment	F34250500	152	0
Valve Ass'y, Holding	F34262400	220	0-1
Valve Ass'y, Holding	F34262500	220	0
Piping Ass'y, Hydraulic	F34262600	218	0
Piping Ass'y, Blade	F34263500	158	0-1
Piping Ass'y, Hoe Attachment	F34263500	152	0-1
Piping Ass'y, Pump Discharge & Boom Swing	F34263500	28	0
Piping Ass'y, Return & Suction	F34263500	24	0
Piping Ass'y, Swing &	F34263500	26	0

*1 Note

https://truckmanualshub.com/

ALPHABETICAL INDEX

Parts Name	P/N	Page *1	Item
Travel			
Tank Ass'y, Hydraulic Oil	F34263800	60	0
Piping Ass'y, Blade	F34264400	158	0
Piping Ass'y, Lower Travel	F34264400	18	0
Piping Ass'y, First Spare	F34265400	160	0
Piping Ass'y, Second Spare	F34265400	164	0
Piping Ass'y, Third Spare	F34265400	166	0
Control Ass'y, Blade & Boom Swing	F34266000	88	0
Lever Ass'y, Travel	F34266000	82	0
Piping Ass'y, Control	F34266000	30	0
Piping Ass'y, Control	F34266000	34	0
Piping Ass'y, Control	F34266000	38	0
Accumulator Ass'y	F34267500	170	0
Mat Ass'y	F35320600	114	0-3
Cabin (Dark Grey)	F35481000	174	1
Mirror Ass'y	F35503700	204	0
Accessories Ass'y	F35510300	134	0-1
Room Ass'y, Operator	F35518200	172	0
Seat Ass'y, Operator	F35518300	114	0-1
Seat Ass'y, Operator (W/Suspension)	F35518400	114	0
Seat Ass'y, Operator	F35518500	114	0-2
Absorbent Ass'y, Noise	F35519500	108	0
Cover Ass'y	F35519500	102	0
Cover Ass'y	F35519500	104	0
Seat Ass'y, Operator	F35519600	114	0-3
Canopy Ass'y	F35519700	112	0
Canopy Ass'y (For Tops/Rops)	F35521100	110	0
Canopy Ass'y (For Tops/Rops)	F35522100	110	0-1
Heater Ass'y, Car	F35523000	186	0
Panel Ass'y, Instrument	F36170600	138	0
Panel Ass'y, Instrument	F36170700	138	0-1
Absorbent Ass'y, Noise	F36171800	108	0-1
Control Ass'y, Blade & Boom Swing	F36172000	88	0-1
Cover Ass'y	F36172000	102	0-1
Cover Ass'y	F36172000	104	0-1
Lever Ass'y, Control	F36172000	84	0
Lever Ass'y, Travel	F36172000	82	0-1
Light Ass'y, Revolving	F36620100	228	11
Immobilizer Ass'y	F36679200	208	0
Electrical System	F36688000	228	0
Battery Ass'y	F36688700	134	0-2
Electrical System	F36689100	134	0
Angle Detector	F37034000	226	0
Controller Ass'y	F37034200	230	0
Absorbent Ass'y, Noise	F37321600	108	0-2
Weight Ass'y, Counter	F37321600	116	0
Decal Ass'y	F37784100	118	0

*1 Note

https://truckmanualshub.com/

ALPHABETICAL INDEX

Parts Name	P/N	Page *1	Item
Decal Ass'y	F37784100	120	0
Decal Ass'y	F37784100	122	0
Decal Ass'y	F37784100	124	0
Decal Ass'y	F37784100	126	0
Decal Ass'y	F37784100	128	0
Decal Ass'y	F37784100	130	0
Decal Ass'y	F37784100	132	0
Decal Ass'y	F37784200	188	0
Decal Ass'y	F37784200	190	0
Decal Ass'y	F37784200	192	0
Decal Ass'y	F37784200	194	0
Decal Ass'y	F37784200	196	0
Decal Ass'y	F37784200	198	0
Decal Ass'y	F37784200	200	0
Decal Ass'y	F37784200	202	0
Decal Ass'y	F37785400	118	0-1
Decal Ass'y	F37785400	120	0-1
Decal Ass'y	F37785400	122	0-1
Decal Ass'y	F37785400	124	0-1
Decal Ass'y	F37785400	126	0-1
Decal Ass'y	F37785400	128	0-1
Decal Ass'y	F37785400	130	0-1
Decal Ass'y	F37785400	132	0-1
Decal Ass'y	F37785500	188	0-1
Decal Ass'y	F37785500	190	0-1
Decal Ass'y	F37785500	192	0-1
Decal Ass'y	F37785500	194	0-1
Decal Ass'y	F37785500	196	0-1
Decal Ass'y	F37785500	198	0-1
Decal Ass'y	F37785500	200	0-1
Decal Ass'y	F37785500	202	0-1
Decal Ass'y	F37785600	118	0-2
Decal Ass'y	F37785600	188	0-2
Decal Ass'y	F37786100	232	0
Piping, Ass'y Air Conditioner	F38539500	216	0
Air Conditioner Ass'y (1)	F38539600	212	0
Air Conditioner Ass'y (2)	F38539900	214	0
Piping, Ass'y Air Conditioner	F38539900	216	0-1
Light Ass'y	F38540200	210	0
Bucket Ass'y, Hoe (0.09m3)	F38817601	150	0
Bucket Ass'y, Hoe (0.07m3)	F38817602	150	0-1
Bucket Ass'y, Hoe (0.10m3)	F38817603	150	0-2
Bucket Ass'y, Hoe (0.08m3)	F38817604	150	0-3
Bucket Ass'y, Hoe (0.06m3)	F38817605	150	0-4
Bucket Ass'y, Hoe (0.05m3)	F38819901	150	0-5
Bucket Ass'y, Hoe (0.04m3)	F38819902	150	0-6
Bucket Ass'y, Hoe (Reinforced, 0.09m3)	F38820901	150	0-7
Bucket Ass'y, Hoe (0.09m3 W/Hook)	F38821001	150	0-8

*1 Note

https://truckmanualshub.com/

ALPHABETICAL INDEX

Parts Name	P/N	Page *1	Item
Piping Ass'y, Pump Discharge & Boom Swing	F38839500	28	0-1
Swing Ass'y, Boom	F38839500	148	0
Attachment Ass'y, Hoe	F38839700	144	0
Block Ass'y, Hook	F41812600	224	0
Alarm Device, Travvel	F43227700	206	0
Washer, Rubber	F77131500	214	21
Pump, Fuel	Y11922552102	2	32
Pump, Fuel	Y11922552102	98	45
Cartridge, Fuel Filter	Y11980255801	2	30
Cartridge, Fuel Filter	Y11980255801	98	44
Switch, Oil Pressure	Y12125239450	2	36
Bracket	Y12125644600	90	64-2
Resonator	Y12185512060	94	23
Clamp	Y12445044550	90	64-1
Filter, Oil	Y12915035153	2	31
Thermostat	Y12915549801	2	35
Sensor, Thermo	Y12992744900	2	37
Relay, Starter	Y12992777920	134	52
Relay, Glow	Y12992777930	134	51
Tank, Surge	Y17106444510	90	64
Relay	Y19846152950	2	33
Relay, Main	Y19846152950	134	50
Relay, Rack Actuator	Y19846152950	134	49
Relay, Sub	Y19846152950	134	48
Belt, V	Y25152003800	2	34
＊＊＊＊＊	ZG00351	2	43
＊＊＊＊＊	ZG00352	2	43-1
＊＊＊＊＊	ZG00353	2	43-2
＊＊＊＊＊	ZG00401	2	44
＊＊＊＊＊	ZG00402	2	44-1
＊＊＊＊＊	ZG00403	2	44-2
＊＊＊＊＊	ZG10100	2	41

*1 Note

https://truckmanualshub.com/

[Memo]

https://truckmanualshub.com/

初版発行

不許複製

Published,

30V4

パーツカタログ
PARTS CATALOG

編集及び発行所

IHI建機株式会社　設計部　技術管理Ｇ

Editing & Publishing Office

IHI Construction Machinery Limited
Design Department

〒236-8611　神奈川県横浜市金沢区昭和町 3174
3174 Syowa-machi, Kanazawa-ku, Yokohama, Kanagawa, 236-8611, Japan

https://truckmanualshub.com/