https://truckmanualshub.com/

OPERATION AND MAINTENANCE MANUAL

8024404

FORK LIFT

CER10·13
CER14·15·18
CER20·25

https://truckmanualshub.com/

https://truckmanualshub.com/

CONTENTS

1. PREFACE ..... 0 – 5

2. SAFETY ..... 0 – 6

3. GENERAL
3.1 DESIGNATED WORKS ..... 0 – 7
3.2 CHARACTERISTICS OF THE MACHINE ..... 0 – 8

4. DRIVING LICENSE ..... 0 – 9

5. NAME PLATE
5.1 LOCATION OF NAME PLATES ..... 0 – 10
5.2 LOCATION OF MARKING PLATE ..... 0 – 10
5.3 NAME PLATE ..... 0 – 11

[SAFETY]

6. BASIC PRECAUTIONS ..... 1 – 1

7. SAFETY TRAVELING ..... 1 – 6

8. HOW TO USE THE BATTERY AND CAUTIONS FOR CHARGING ..... 1 – 10

9. CAUTIONS WHEN OPERATING THE MACHINE ..... 1 – 12

10. TRANSPOTATION
10.1 REACH CYLINDER PIN ..... 1 – 13
10.2 MAIN LIFT & TILT & RETURN HOSE ..... 1 – 13
10.3 FORK & LOAD BACKREST ..... 1 – 13

11. ATTACHED POSITION OF SAFETY DECALS

11.1 ATTACHED POSITION OF SAFETY DECALS ..... 1 – 14
11.2 CONTENTS OF SAFETY DECALS ..... 1 – 15

[OPERATION]

12. GENERAL LOCATIONS ..... 2 – 1

13. DRIVING AND OPERATION

13.1 LCD DISPLAY PANEL AND CONTROLLER ..... 2 – 2
13.2 OPERATING ..... 2 – 14

14. BATTERY CHARGING

14.1 NORMAL CHARGING ..... 2 – 16
14.2 EQUAL CHARGING ..... 2 – 17
14.3 SUPPLEMENTARY CHARGING ..... 2 – 18
14.4 CHARGING FOR LONG TERM STORAGE ..... 2 – 18
14.5 CHARGING METHOD ..... 2 – 18

15. STATIONARY BATTERY

15.1 CHARGING METHOD (NORMAL CHARGING) ..... 2 – 19

16. BATTERY REPLACEMENT ..... 2 – 20

17. LEVEL OF BATTERY ELECTROLYTE AND TEADING GRAVIMETER

17.1 LEVEL OF BATTERY ELECTROLYTE ..... 2 – 21
17.2 HOW TO READ THE GRAVIMETER ..... 2 – 21
17.3 SPECIFIC GRAVITY OF ELECTORLYTE AND CONVERSION TABLE OF TEMPERATURE COMPENSATION ..... 2 – 22

18. SOUND INFORMATION ..... 2 – 23

18.1 SOUND LEVEL ..... 2 – 23

19. CHECK BEFORE WORKING

19.1 CHECKING POINTS ..... 2 – 24
19.2 CHECKING METHODS BEFORE STARTING OPERATION ..... 2 – 25

20. LOAE AND STABILITY OF MACHINE

20.1 STANDARD LOAD CENTER AND LOAD CURVE ..... 2 – 28
20.2 STABILITY OF MACHINE ..... 2 – 29

21. OPERATING AND UNLOADING

21.1 PREPARATION FOR STARTING ..... 2 – 31
21.2 OPERATING ..... 2 – 31
21.3 LOADING ..... 2 – 32
21.4 UNLOADING ..... 2 – 33

[INSPECTION AND MAINTENANCE]

22. INSPECTION AND MAINTENANCE

22.1 GENERAL CAUTIONS FOR INSPECTION AND MAINTENANCE ..... 3 – 1
22.2 INSPECTION EVERY WEEK (50HR) ..... 3 – 1
22.3 MEASURING SPECIFIC GRAVITY ..... 3 – 3
22.4 CLEANING BATTERY ..... 3 – 4
22.5 INSPECTION EVERY MONTH (200HR) ..... 3 – 5
22.6 INSPECTION EVERY 2 MONTHS (400HR) ..... 3 – 8
22.7 INSPECTION EVERY 3 MONTHS (600HR) ..... 3 – 8
22.8 INSPECTION OF CARBON BRUSH ..... 3 – 8

23. LUBRICATION CHART

23.1 LUBRICATING POINT ..... 3 – 9
23.2 SPECIFIED LUBRICATION CHART ..... 3 – 10

24. GUIDE TO REPLACE AND REPAIR PARTS

24.1 HOW TO REPLACE THE CONTACTOR ..... 3 – 12
24.2 HOW TO ADJUST THE BRAKE ..... 3 – 14

25. REFRIGERATING SPECIFIED VEHICLE

25.1 COUNTERMEASURE FOR ANTICORROSION ..... 3 – 15
25.2 COUNTERMEASURE FOR LOW TEMPERATURE ..... 3 – 16
25.3 USAGE OF NO SLIP TIRE ..... 3 – 16

26. SPECIFICATIONS

26.1 DIMENSIONS ..... 4 – 1
26.2 TRUCK SPECIFICATION ..... 4 – 2
26.3 BATTERY SPECIFICATION ..... 4 – 3
26.4 TIGHTENING TORQUE OF EACH PART ..... 4 – 4

https://truckmanualshub.com/

This manual contains basic safety and operating and maintenance instructions. Please read this manual carefully prior to operation.
Always pay strict attention to safe operation to prevent personal injury.

WARNING

Abnormal operation may result in serious injury or death.
Please read this manual carefully prior to operation and maintenance.
Be sure to keep this manual in the cab so that all the personnel can read it.

- Never operate the machine prior to reading and understanding this manual fully.
- Read this manual repeatedly.
- Please contact your local CLARK dealer in the event that this manual is missing or damaged.
- Transfer this manual with the machine.
- The safety, operation, maintenance and repair information described in this manual are applied to limit the machine to specified usage

Some photographs or illustrations in this publication show details or attachments that can be different from your machine. Guards and covers may have been removed for illustrative purposes.

Continuing improvement and advancement of product design may have caused changes to your machine which are not included in this publication.

This manual is copyrighted with all rights reserved.
No part of this manual may be copied, in whole or in part, without written consent from CLARK.

https://truckmanualshub.com/

2. SAFETY

Most accidents are the result of abnormal operation, inspection or maintenance.

Always pay strict attention to safe operation to prevent personal injury.
Please read this manual carefully prior to operation, inspection and maintenance.

Note the caution nameplates provided on this machine.
Following safety symbols are used.

Safety symbol	Contents
⚠ **DANGER**	Imminent danger resulting in death or serious injury.
⚠ **WARNING**	Latent danger resulting in death or serious injury.
⚠ **CAUTION**	Latent danger resulting in less serious injury or equipment damage.
IMPORTANT	Matters which are important in the correct handling of this machine are indicated with an “IMPORTANT”.

This manual contains the outlines of operation, inspection and maintenance. But all of the information can not be described.
Therefore it is the responsibility of the operator to make sure that he operate, inspect and maintain the equipment safely for the works not described in this manual.

https://truckmanualshub.com/

3.1 DESIGNATED WORKS

This fork lift truck is electric reach type. The main working purposes are as follows.

- Llifting the load materials
- Piling the load materials
- Carrying the load materials in a short distance

For details of operation, refer to “21. OPERATING AND UNLOADING”.

The cautions for operation, inspection and maintenance depicted in this manual are limited to the designated works.

It is the responsibility of the operator to make sure that he operates, inspects and maintain the equipment safely for the works not described in this manual.

Do not perform the works prohibited in this operator’s manual.

https://truckmanualshub.com/

3.2 CHARACTERISTICS OF THE MACHINE

- It is possible to reduce the cost for maintenance through imporved working performance and less usage of contactors as SEM(Separately Excited Motor) type travel motor is used.
- Excellent working performance by installing high-output and high-efficient motor, and geatly improved durability by installing Traveling and hydraulic motor with H type of insulating class.
- The position and descriptions of the troubles are displayed in characters and codes at the same time by using various self-diagnostic functions, which make the process of maintenance and inspection simple. The controller can limit and reduce the functions automatically according to the condition of troubles to improve machine safety.
- The complex control function of travel and hydraulic prevents the instant over discharging in order to achieve the maximization of service time.
- Suspension system with impact absorption springs is installed in order to reduce operator’s fatigue and to improve durability of machine.
- Big LCD display panel with high brightness is installed in order to check almost all contents related to the machine conditions.
- Operators can fix a certain speed in advance, and can travel under static speed traveling mode in order to carry the important load safely.
- The working performance of mast is improved by increasing free lift height with helps of free bar system.

https://truckmanualshub.com/

The operator must obtain the driving license for the fork lift operation according to the related regulations.

https://truckmanualshub.com/

5. NAME PLATE

5.1 LOCATION OF NAME PLATES

The name plates are located on the upper part of left side on the frame.

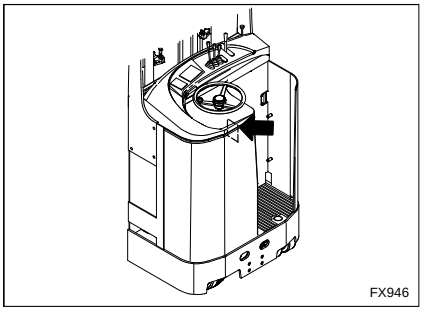

5.2 LOCATION OF MARKING PLATE

Serial No. :	
Service center :	
Address :	Tel No. :
Serviceman in charge :	

Remarks _____

_____

_____

https://truckmanualshub.com/

5.3 Name plate

What you should know about your forklift-truck:

1. The location of the model name.
2. The location of the serial number.
3. The description of the additional attachments (if any). Take note of the additional capacity load plate.
4. Which tire type (dimension, ply-rating) to be used.

   The type of tire (pneumatic/elastic) influences the static stability of the forklift-truck.

   For this reason only the tire types approved by the manufacturer may be used. Column 4 shows the tire types which are approved by the manufacturer.

   Tire code:

   E = cushion
   L = pneumatic
   S = super elastic
   Z = twin tires
   R = radial

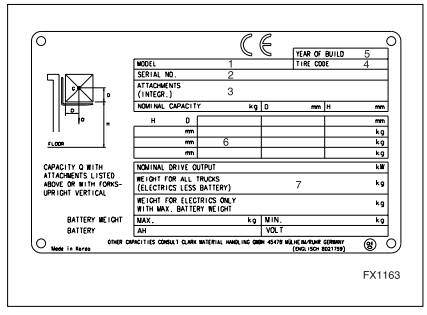

FX1163

5. The year of build.
6. The capacity of the forklift-truck with forks.

   In this space the capacity, the load centre and the lift height are stated. The specified maximum values must not be exceeded.

Attention:

For additional attachments there must be mounted an additional load capacity plate beside the type plate, which gives the permissible load capacity of your forklift-truck for a CENTRAL LOAD in conjunction with additional attachments. These load capacities must not be exceeded.

The subsequent mounting (not supplied by the manufacturer) of one or more additional attachments requires immediate mounting of a new capacity plate for the combination forklift-truck /additional attachments. The customer must obtain this from the manufacturer or local dealer.

7. The forklift-truck weight less battery.

A damaged type plate or capacity plate must to be replaced.

https://truckmanualshub.com/

https://truckmanualshub.com/

SAFETY

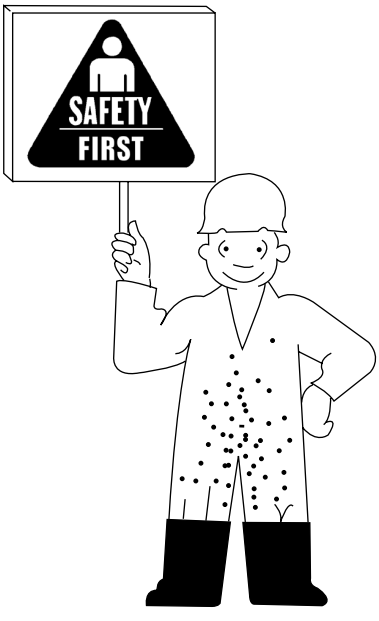

EX396

WARNING

Read the safety cautions carefully and observe them.
Serious injury may result if not followed.

https://truckmanualshub.com/

https://truckmanualshub.com/

OBSERVE USER'S MANUAL AND SAFETY DECAL

- Please read this manual and all safety decals on this machine carefully. Abnormal operation can result in physical personnel injury or damage.
- Understand the operating and maintenance methos for safety operation.
- Keep this manual and the safety decals in a legible state. Please contact our local dealer in the event that this manual or any safety decal is missing or damaged.

  For safety decal, refer to "10. Attached position of safety decals".

OPERATING QUALIFICATION

- Only qualified operators are permitted to operate this machine. (Refer to "4. Driving license".)
- Operators under 18 years old are not permitted to operate this machine.
- Be sure to carry your fork lift driver's licence.
- Abnormal operation can result in injury to the operator or other personnel. Therefore, read this manual carefully prior to operation or maintenance.
- Have hard practice to be familiar with the machine.

  Be sure to operate carefully after being trained.

  Otherwise, personnel injury or physical damage can result.
- Rudimentary drivers shall be trained in the operating and unloading methods by experienced and trained personnel.
- When an operator operates multi-machines, the operator shall grasp each machine characteristics such as brake, accelerator or unloading device. Specially make sure to know the braking effort.
- The operator shall be trained for this machine by experienced and trained personnel, although the operator has experience operating other machines.
- The operator shall be specifically trained for high place working.

https://truckmanualshub.com/

6. BASIC PRECAUTIONS

CLOTHING

- Do not wear a loose clothing when you operate this machine. These items may be caught by levers or pedals, so severe injury could result.
- Wear a helmet and safety shoes.
- Wear other safety equipment appropriate to the job.

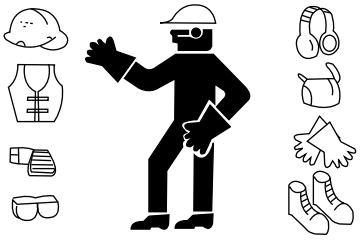

EX048

OVERHEAD GUARD

- Do not operate the machine which is not mounted with overhead guard and load backrest. (∗The best suitable overhead guard for the machine is mounted at shipment.)

NEVER MODIFY

- Unauthorized modification is not permitted without prior notice in writing. Additional counterweight or the other modification can affect safety and stability.
- Do not attach obstacles that obstruct the view of the operator.

INSPECTION AND MAINTENANCE

- Be sure to perform the inspectin before working and periodic inspection (once a month).
- Never operate the machine if the recommend inspections are not performed.

https://truckmanualshub.com/

PREPARE FOR EMERGENCIES

- Park the machine in a safe place and notify the supervisor when the machine has any abnormality or malfunction.
- Insure a fire extinguisher is installed and know how to use it.
- Always be prepared for emergencies.
- Note the telephone numbers of the nearest hospital, first-aid station, ambulance service and related facilities.
- Keep a first-aid kit on a specified place.
- Be sure to engage the parking brake, lower the forks to the ground and remove the start key when you get off the machine.

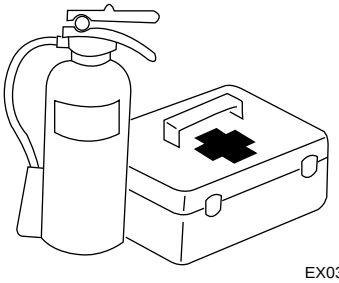

EX036

SAFETY RULES

- Do not operate the machine when in poor physical condition or under the influence of alcohol, drugs or medicine.
- Always obey safety rules, procedures or precautions when the machine is operated, inspected or maintained.
- Always pay strict attention to safety when operating this machine.

SAFETY DEVICE

- The overhead guard protects the operator from falling objects. However it is not designed to withstand the impact of heavy object.
  Pay strict attention to the danger falling objects

https://truckmanualshub.com/

6. BASIC PRECAUTIONS

ACCIDENT PREVENTION

- Always keep the working area level, and remove all spilled grease, oil or other materials.
- Avoid operating the machine near criffs, platforms or docks.
  Use safety blocks if it is unavoidable to work in that place.
- Use “KEEP AWAY” signs in dangerous areas.
- Travel the fork lift only on the specified road.
- Use “NO THOROUGHFARE” signs to keep unauthorized vehicles out of the unloading area.
- lluminate the work area to improve visibility.

CLEAR OPERATOR’S SEAT

- Always keep the around of operator’s seat clean. Spilled oil or mud can cause wrong operationg of the machine to result in personnel injury.
- Do not place parts, tools or other objects near the operator’s seat. They could hinder or prevent the safe operation of the machine.

SAFETY PLAN

- Prepare a suitable working plan according to the conditon of work area, machinr type and capacity, and load type and shape.
- Use a signal person when operating the machine in a narrow area.

https://truckmanualshub.com/

REDUCTION OF ALLOWABLE LOAD FOR MACHINE WITH ATTACHMENTS

- Allowable load of the machine with any attachments is reduced against the standard machine.
  Reason 1) Load is reduced due to attachment weight.
  2) The center of gravity is moved forward due to attachment weight.
- Do not allow any load in excess of the allowable load table. (Attached to the machine or attachment.)

https://truckmanualshub.com/

7. SAFETY TRAVELING

Operator must read and observe the followings for safety

- For driving fork lift above 1 ton, the operator must be a trained and authorized person or fork lift. For driving fork lift below 1 ton, the person who had a special training coursefor fork lift can operate the machine. The person who are under 18 years old must not operate the machine
- Wear safety caps, work clothing with neat sleeves and skirts, and protective shoes.
  Pay attention to safety working.
- Inspect the machine before operating.

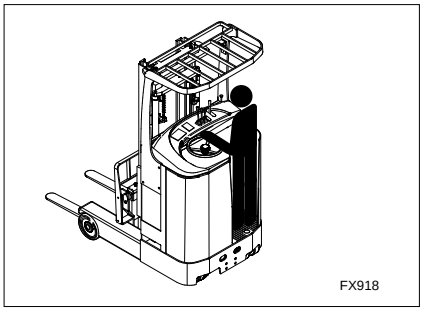

- No one except operator can be on the machine.
- Do not put a person on the fork or pallet.

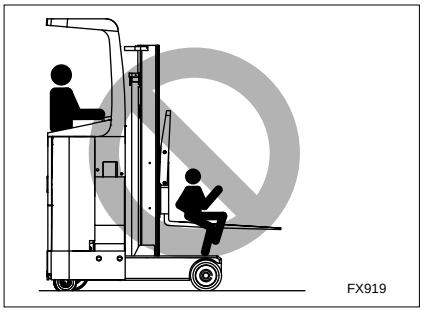

- Check the weight of load and center position in advance. Be careful not to exceed max. weight of load and the limit weight of the load.
  < Never overload > Never unload the overload material even when there are enough places for the load.

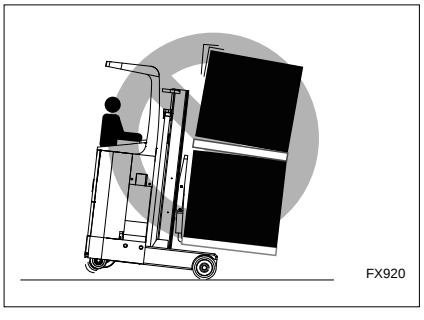

- Use appropriate pallets and attachments.

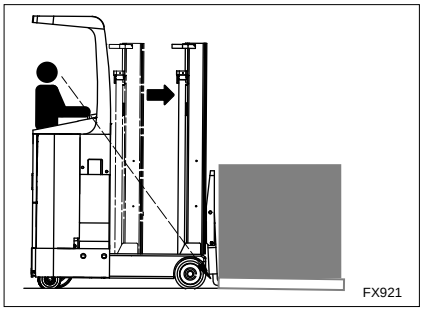

https://truckmanualshub.com/

⚠ Before carrying the load, make sure that the load is on the pallet safely.

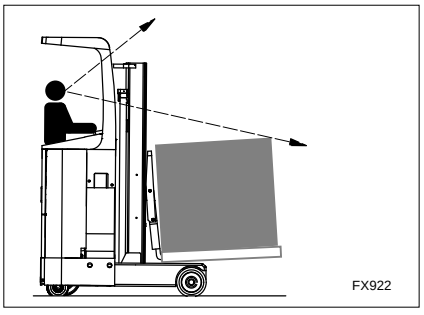

⚠ Follow specified ways to put in and out the fork. Do not load unevenly.

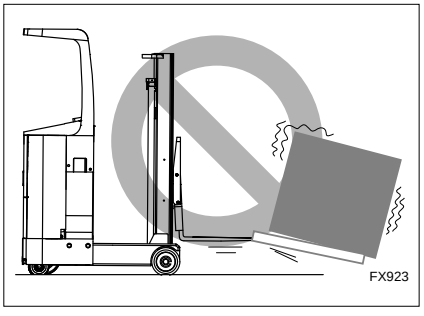

⚠ When lifting up the load, must stop traveling. When starting the machine, operate the lever slowly.

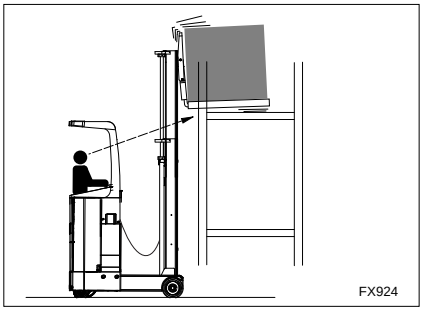

⚠ Avoid a sudden start, stop or turn, ohterwise it may cause overturn.

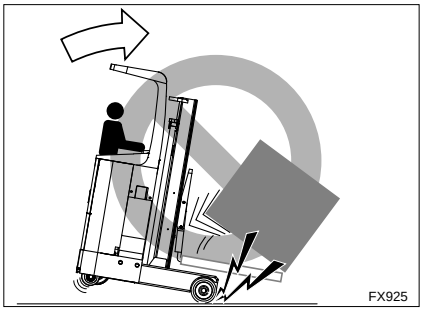

https://truckmanualshub.com/

7. SAFETY TRAVELING

- While unloading, do not stop the machine suddenly, otherwise it may cause overturn.
- Pay attention to the conditions of the ground. If the machine is tilted, do not lift up the load. Do not unload on the slope.
- Do not let a person be under the lifted load. Do not let the person go under the fork.

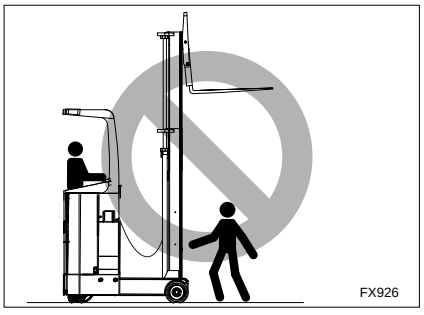

- When Travelin3g the machine with load, lift up the load 5~10m from straddle legs with the mast back tilted. Do not contact the fork on the ground.

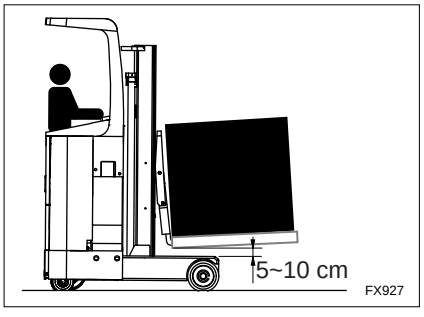

- When carrying a big load, drive in reverse or use a lead man.
- When turning, pay attention to operator's behind and operate the machine slowly.

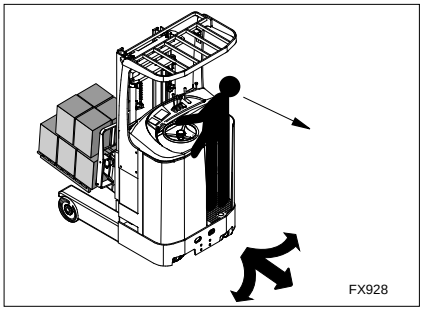

https://truckmanualshub.com/

⚠ When ascending on the slope with load, drive forward slowly, and when descending from the slope, drive in reverse slowly.

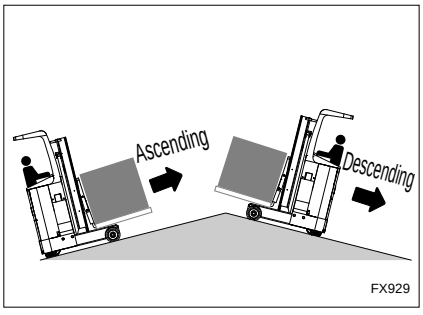

On the contrary, when ascending on the slope without load, drive in reverse, and when descending from the slope, drive forward.

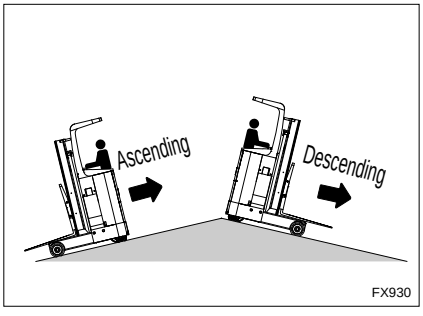

⚠ Do not travel in parallel or change the direction on the slope.

⚠ Do not travel over the wood strips or others on the road.

⚠ Pay attention to the distance between the mast and the obstacles in the entrance or the roofs of the building.

⚠ When leaving the machine, pull down the mast, lower the fork, remove the start key and set the parking brake.

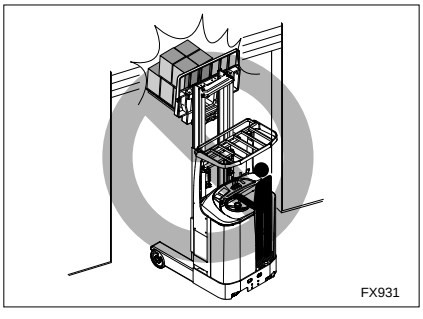

Do not park on the slope. For unavoidable case, insert wood block under the wheels.

⚠ If a trouble is occurred, repair it immediately. Never drive it before completely repaired.

https://truckmanualshub.com/

Do not over discharge.

If the equipment is used until it is not moving, the battery life is shortened. Charge immediately when the green lamp in the volumeter is off and the red lamp flickers.

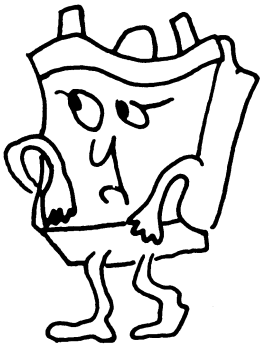

Read the specific gravity of electrolyte before charging. According to the difference of specific gravity after charging, the abnormality inside of the battery is found and an accident can be prevented in advance.

The charging place must be covered from the rain and well ventilated.

Do not let the battery be out of electrolyte.

When charging, the moisture of electrolyte (diluted lactic acid) decreases. Therefore, surely fill up water to the max. level before charging.

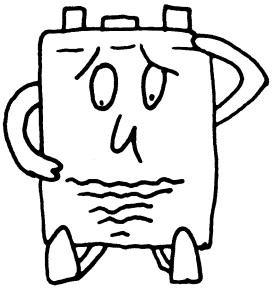

Note

When filling up water in the electrolyte, use only distilled water or refined water.

Before charging, surely check if there is any slackened part in the plug or terminal.

Keep clean.

Specially keep the top surface of battery clean and dry. Also, close the cover surely.

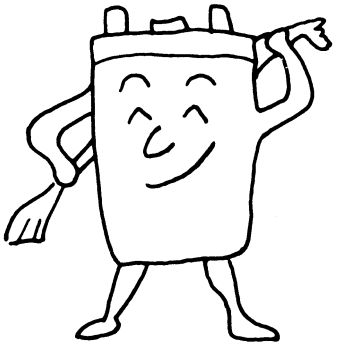

https://truckmanualshub.com/

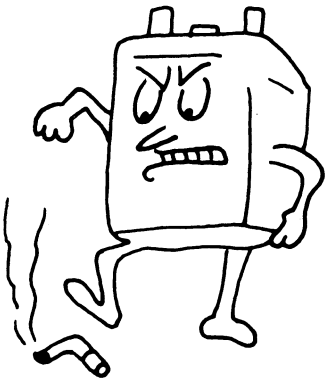

Keep away from flammable.

Around the battery, never put any flammable (because explosive gas is generated).

Avoid overcharging.

Charge according to the instructive manual of charger.

Do not disconnect the plug while charging.

If you have to disconnect the plug while charging, surely push the stop button and pull out the plug body after the charging lamp is off.

Turn off the starting switch while charging.

Be careful not to suffer damage the cord of charging plug or battery cord.

https://truckmanualshub.com/

9. CAUTIONS WHEN OPERATING THE MACHINE

a Do not overdischarge.
b Do not lift up or push the load with the fork tip.
c Do not load the fork lift over capacity limit (allowable load).
d Avoid a sudden start, stop, or turn.
e Do not operate the valve suddenly with the mast raised and the luggage loaded.
f Before leaving the machine, remove the start key, make sure that the machine doesn't move by pressing the accelerator, and put down the fork on the ground.
g If you do not lift up the folk to the max. height while working, lift up the fork to the max. height several times before finishing the daily work.
(If you keep working at low height, it may cause the rust in the inside of lift cylinder.)
h When inspecting the electric system, disconnect tje battery plugs.
i When having a pause or charging, remove the start key.
j Clean the electric systems with compressed air.
k Do not use a charger instead of a battery or other kinds of batteries except the battery installed. Otherwise it may cause a trouble.

https://truckmanualshub.com/

When a truck can't be loaded in a container because of a high-MAST.
The MAST shall be disassembled.
•Disassembly method is following below.

10.1 REACH CYLINDER PIN

No	Part name	Qty	Remarks
1	Pin	1	
2	Washer	1	
3	Pin split	1	

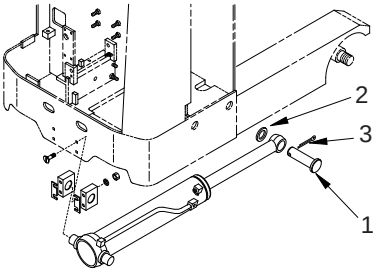

FX1169

10.2 MAIN LIFT & TILT & RETURN HOSE

No	Part name	Qty	Remarks
1	Cover	1	
2	Bolt	2	6.5 ±0.5kgf·m
3	Washer plain	2	
4	Washer spring	2	
5	Lift hose	1	6 ±0.5kgf·m
6	Tilt hose	2	5 ±0.5kgf·m
7	Return hose	1	5 ±0.5kgf·m

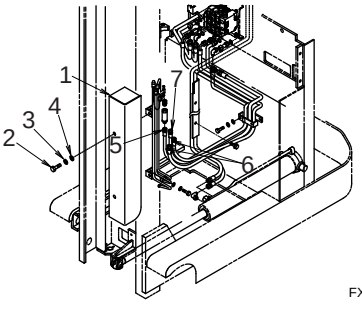

FX1170

10.3 FORK & LOAD BACKREST

No	Part name	Qty	Remarks
1	Pin assy fork	2	
2	Cover	2	
3	Bolt	4	3.3 ±0.3 kgf·m
4	Washer spring	4	
5	Bolt lbr mtg	4	11.3 ±1.1 kgf·m
6	Washer spring	2	

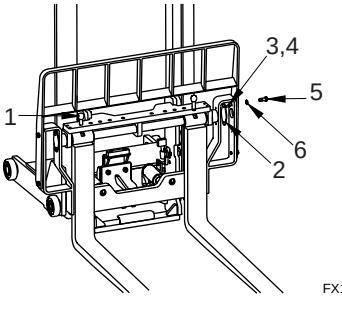

FX1171

•Assembly is reverse of the disassembly

https://truckmanualshub.com/

11. ATTACHED POSITION OF SAFETY DECALS

Always keep safety decals clean, if the decals are damaged or lost, replace it. Several decals except for the followings are attached on the machine, treat them in the same way as the following one

11.1 ATTACHED POSITION OF SAFETY DECALS

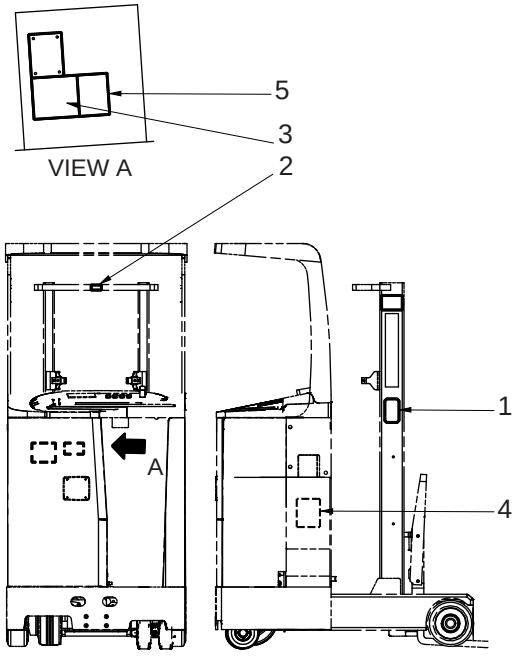

FX942

1. Safety cautions for forks
2. Safety warning for hands
3. Warning for safety
4. Safety cautions for battery
5. Warning for the refrigerating type machine (Options)

https://truckmanualshub.com/

11.2 CONTENTS OF SAFETY DECALS

1 Safety cautions for forks

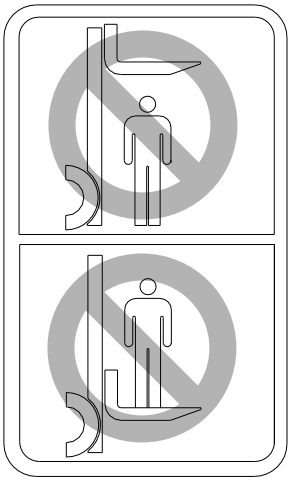

FX060

2 Safety warning for hands

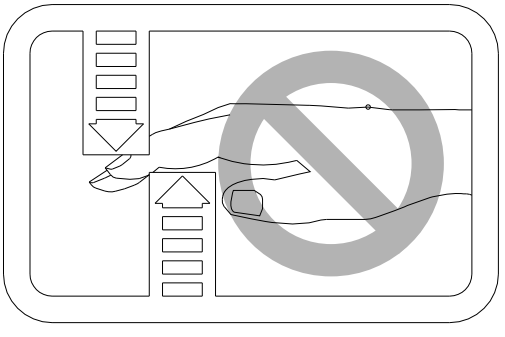

FX059

3 Warning for safety

WARNING

Serious or fatal injury may result to yourself or others if not followed

- This fork lift should not be operated by anyone who is not authorized and properly trained.
  Read the Operator's manual carefully and make sure yourself familiar with your fork lift.
- Do not operate a faulty or damaged fork lift.
  Repair work should be done by authorized and trained persons only.
- Keep a careful lookout for people, obstructions and the falling objects on the path of travel.
  If the loads obstruct your view, drive in reverse except climbing a slope.
- If the fork lift is improperly operated, lateral turnover can occur.
  Slow down before turning.
  Do not turn while on a slope.
  Drive carefully, keeping the forks and attachments as low as possible and fully tilted back.
- If the forks or attachments are improperly adjusted or maintained, abrupt dropping may occur. Do not lift any person on the forks.
- Make sure that protective devices against falling objects are equipped. The over head guard and the load backrest must be in appropriate location.
- Do not load fork lift over capacity limit designated on the load chart.
- Use the fuses with appropriate capacity. If the battery capacity signal lamp blinks, replenish the battery.
  Replenish it with distilled water every week.
- Before handling the electric parts, make sure the battery connector is removed, and check the poles (positive/negative) of electric parts.

FX943

https://truckmanualshub.com/

4 Safety caution for battery

CAUTIONS

- **Check the electrolyte level. If it is lack, replenish immediately.**
  (Refer to Operator's manual for inspection and replenishment.)
- **Make sure to use distilled water for replenishment.**
  (Diluted sulfuric acid may suffer damage to battery.)

FX944

5 Warning for the machine for refrigerating specified vehicle

WARNING

Refrigerating type machine (for the refrigerator warehouse)

It is for the refrigerator warehouse to -35°....

The working ratio of inside and outside of refrigerator warehouse must be almost the same. The continuous working time inside of the refrigerator warehouse at one time must be within 30 minutes.

Do not leave the machine in the refrigerator warehouse.

When the machine goes in and out the refrigerator warehouse, the body gets water drops by the difference of temperature and easily gets the rust. Therefore pay attention to anticorrosion. If you need recoating caused by corrosion, contact to your local dealer.

Charge the machine outside of the refrigerator warehouse.

Follow the above directions, otherwise CLARK doesn't take any responsibility.

P/NO.6592-00210

FX945

https://truckmanualshub.com/

OPERATION

WARNING

The most important thing is safety.
Concentrate on your operation only.

https://truckmanualshub.com/

https://truckmanualshub.com/

12. GENERAL LOCATIONS

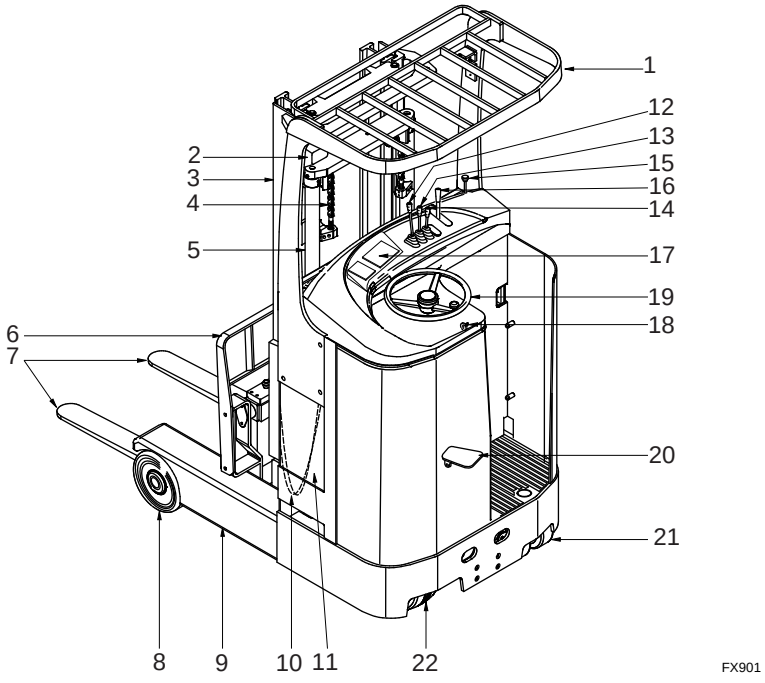

1. Overhead guard
2. Head light
3. Mast
4. Lift Chain
5. Lift cylinder
6. Load backrest
7. Fork
8. Load wheel
9. Straddle leg
10. High pressure hose
11. Hydraulic tank
12. Lift lever
13. Tilt lever
14. Reach lever
15. Emergency lever
16. Travel control lever
17. LCD display panel
18. Key switch
19. Steering wheel
20. Brake pedal
21. Caster wheel
22. Drive wheel

https://truckmanualshub.com/

13.1 LCD DISPLAY PANEL AND CONTROLLER

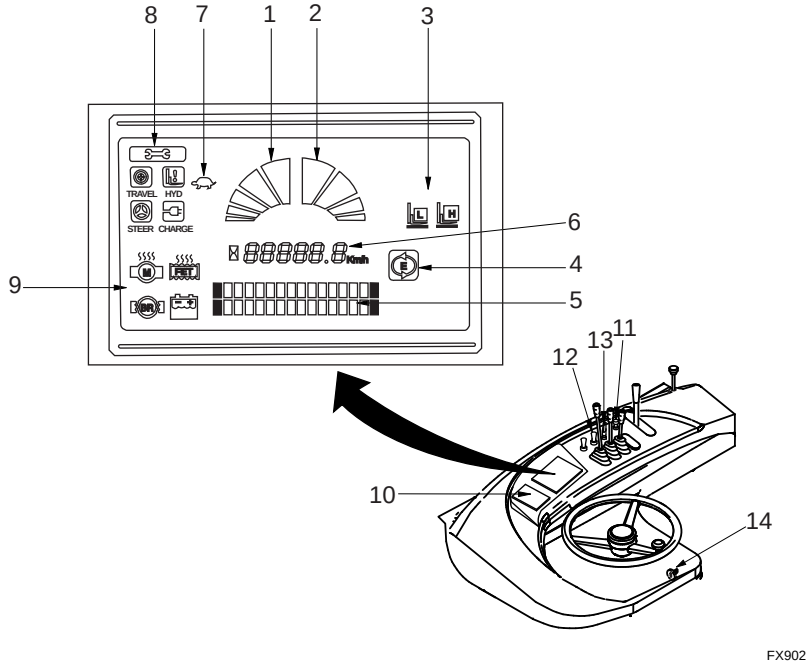

1. Battery level display
2. Travel power display
3. Hydraulic power display
4. Regenerative braking display
5. Letter information display
6. Total service hour/speed display
7. Fixed travel speed display
8. Trouble display
9. Safety monitor
10. Function selection switch
11. Horn button
12. Head light switch
13. Turn signal lamp
14. Key switch

CAUTION

The display may be fadeout temporarily when you put the truck under the direct sunlight. So, Please avoid putting the truck under the direct sunlight for a long time.

https://truckmanualshub.com/

13.1.1 BATTERY LEVEL DISPLAY

It displays the status of charging. When the key is ON, the status of battery level is displayed according to the charging condition. When charging is completed, all lamps light up, and according to the degree of discharging, lamps are distinguished downwards from the top. When the last lamp remained On, the lamp begins to flicker. When the last lamp is distinguished, all the lamps on the battery level display flicker, and charging message is displayed on the letter information display. At that time, start to charging the battery. This machine is intended to limit traveling work and hydraulic work automatically to prevent overdischarge nd to lengthen the battery life, if the battery goes below a certain electric pressure. Therefore charge at the right time, otherwise the machine will stop.

13.1.2 TRAVEL POWER DISPLAY

It displays the status of power of the traveling system. When the key is ON, the display is ON and set to 100%. It is intended to save energy by reducing 10% of power whenever each lamp is distinguished. At that time, mobility and gradeability are reduced but service hour of this machine is increased. If the machine is operated on the unlevelled ground or it is overloaded, operate it with 100% of power mode. If the machine is operated on the level ground or it is lightly loaded, reduce the power appropriately in order to work more effectively. The travel power can be controlled with “Power Up” and “Power Down” of Function selection switch.

13.1.3 HYDRAULIC POWER DISPLAY

It displays the status of power of the hydraulic system. When the key is ON H, Power is set. If power mode is selected and lift level is pulled down fully. If power mode is released L, the certain amount of power is reduced in operating. If you select and adjust hydraulic power according to loading status, you can use the machine more effectively. Control switch of hydraulic power is controlled with “Hydraulic power” of Function selection switch freely.

https://truckmanualshub.com/

13.1.4 REGENERATIVE BRAKING DISPLAY

The system that increase service hour of the machine by recharging the battery with electric energy, which is produced when electric braking is applied. When the battery is recharged with the energy successfully, main display lamp lights up. When the charging is completed, the lamp is distinguished automatically, therefore the status of recharging is notified immediately.

13.1.5 LETTER INFORMATION DISPLAY

It displays the current status of the machine. When the key is ON, the status of all parts of the machine, such as traveling system, hydraulic system, and steering system are inspected by the controller and displayed on this display. If the machine is in normal condition, “READY OK” and model name are displayed. Before operating the machine, make sure that “READY OK” is displayed.

13.1.6 TOTAL SERVICE HOUR/ TRAVEL DISTANCE/TRAVEL SPEED DISPLAY

It displays total service hour, travel speed, total travel distance, and fixed travel distance. When the key is ON, firstly total service hours are displayed, After traveling, current travel speed is displayed instead of total service hours. When the key is back to neutral position, total service hours are displayed automatically. Travel distance is displayed by operating function selection switch. For display of travel distance, there are total travel distance display and temporal distance display that specified distance is calculated since the operator set. Temporal travel distance is reset anytime according to operator’s selection, so it makes operator check the working distance for certain period.

https://truckmanualshub.com/

13.1.7 FIXED TRAVEL SPEED DISPLAY

This machine has the function to travel at the fixed speed in advance.
There are 5 steps, such as 3, 4, 5, 6, 7km/hr, selectable. This function is displayed by operating Function selection switch. If this function is selected, the turtle mark is displayed, correspond speed is displayed on letter information display. Therefore, if travel level is ON after designating fixed speed, the machine will travel with only fixed speed. This function can limit speed while the machine is carrying important load, so that the change of travel speed occurred by improper operation can be minimized.

13.1.8 TROUBLE DISPLAY

It displays the contents of trouble. If a trouble occurs, relevant lamps in all parts of the machine, such as travel system TRAVEL, hydraulic system HYD, steering system STEER, are intended to be lightened. If the relevant lamps are lighted up, stop working and take measures for the trouble before operating the machine.

13.1.9 SAFETY MONITOR

There are safety warning lamps, such as overheat of travel motor M, overheat of travel/hydraulic FET FET, abrasion of travel motor brush BR, and
etc. These lamps are lighted with warning description on the letter information display. When motor overheat lamp and FET overheat lamp are lighted up, the output of power will be limited. If the machine is kept running continuously after the lamps are lightyed up, it may cause fatigue to relevant parts. Therefore stop the machine for 20~30minutes and use the machine after the temperature goes down.
When brush wear warning lamp BR is lighted up, check the status of travel motor and replace it.

https://truckmanualshub.com/

13.1.10 FUNCTION SELECTION SWITCH

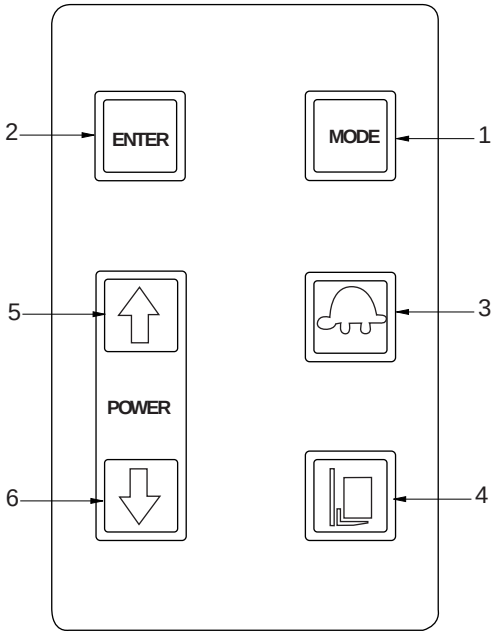

FX912

1. Mode selection switch
2. Enter switch
3. Travel speed set switch
4. Hydraulic power switch
5. Travel power-up switch
6. Travel power-down switch

https://truckmanualshub.com/

1) Mode selection switch

The switch is to shift onto the LCD screen which operator desires. The mode switch usage is as follows. Each time the mode switch is pressed, the mode moves to the arrow directions as shown below.

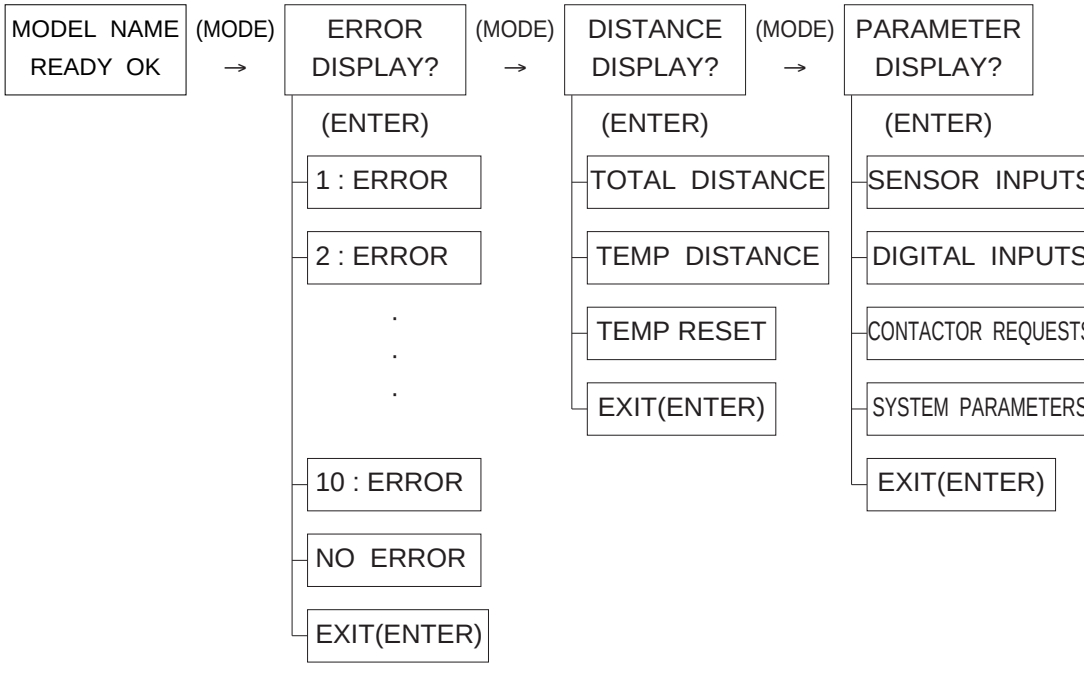

As shown in the above, all LCD screens except “Model name READY OK” have their lower level modes. Press “ENTER” switch in the pertinent mode to move into the lower level mode. To move into the lower level mode, press the mode switch again. To move into the higher level mode, press “ENTER” in “EXIT(ENTER)” mode at the bottom of screen. If another lower level mode exists in the lower level mode, use “ENTER” switch like the above procedure to move, and press “ENTER” switch in “EXIT(ENTER)” mode to move into the higher level mode.

https://truckmanualshub.com/

(1) MODEL NAME & READY OK

These characters are displayed when the machine runs in the normal condition. In case that an abnormal condition occurs while running, the trouble message appears immediately. When the trouble message is shown on the screen, immediately stop operating and solve the problem, and then run equipment again.

(2) ERROR DISPLAY?

This mode indicates the trouble message of the machine. In case that a trouble occurs while equipment is running, No.1 mode displayes only one message, the highest trouble message. According to the working conditions, however the trouble may happen compositely from several parts, so that this mode displays upto 10 messages at maximum. Therefore, in case a trouble occurs in No. 1, be sure to check if additional trouble message exists in this mode before troubleshooting.

(3) DISTANCE DISPLAY?

This mode indicates the travel distance of the machine. The travel distance consists of two distances; the total travel distance up to now from the machine starting and the temporal travel distance upto now from the operator setting. The mode switch usage is as follows; Press “ENTER” in (DISTANCE DISPLAY?) mode to move into the lower level mode. Each time the mode switch is pressed again, the mode shifts in the order of (TOTAL DISTANCE DISPLAY?: total travel distance), (TEMP DISTANCE DISPLAY?: temporal travel distance), (TEMP DISTANCE RESET?: temporal travel distance initialization), and (EXIT[ENTER]: move to the higher level mode). If you want to check the total travel distance, press “ENTER” in the mode, and the total travel distance will be displayed on LCD screen. The temporal travel distance checking is available in the same manner with the total travel distance checking. TEMP DISTANCE RESET? (Temporal travel distance initialization) increases the temporal travel distance up to now starting from “0km”. This mode is helpful for operator to check daily or weekly traveling distance of the machine.

https://truckmanualshub.com/

(4) PARAMETER DISPLAY?

This mode confirms the basic control parameters of equipment as well as input and output of each part.

If pressing the Enter key at (PARAMETER DISPLAY?), it moves to the lower mode. Then, whenever press the mode switch it moves as follows: (SENSOR INPUTS [ENTER]) → (DIGITAL INPUTS [ENTER]) → (CONTRACTOR REQUESTS [ENTER]) → (SYSTEM PARAMETERS [ENTER]) → (EXIT [ENTER])

To move the lower mode in each mode, press the ENTER key.

1 SENSOR INPUTS: It shows the ADC input values.

1. BATTERY VOLTAGE: It shows to the battery voltage.
2. DRIVE SENSOR INPUTS: It shows the input value of driving ADC. (It contains lower modes)
   i. DRIVE VOLTAGE : It indicates the driving voltage.
   ii. DRIVE CURRENT : It indicates the driving current.
   iii. DRIVE TEMPERATURE : It indicates the driving temperature.
   iv. SPEED SENSOR : - (Reserved)
   v. DRIVE ACCEL VOLTS : It indicates the voltage of driving acceleration.
   vi. DRIVE ACCEL PERCENT : It indicates the driving acceleration as percentages.
   vii. BDI CHATGE REMAINING : It indicates the remaining level of voltage on battery
   viii. EXIT (ENTER) : It moves to the higher mode.
3. HYD SENSOR INPUTS: It shows the input values of hydraulic ADC. (It contains lower modes)
   i. HYD VOLTAGE : It shows the hydraulic voltage.
   ii. HYD CURRENT : It shows the hydraulic current.
   iii. HYD TEMPERATURE : It shows the hydraulic temperature.
   iv. HYD ACCEL VOLTS : It indicates the voltage of hydraulic acceleration
   v. HYD ACCEL PERCENTAGES : It indicates the hydraulic acceleration as percentages.
   vi. EXIT (ENTER) : It moves to the higher mode.
4. EXIT (ENTER) : It moves to the higher mode.

https://truckmanualshub.com/

2 DIGITAL INPUTS : It shows the digital input values.

1. DRIVE DIGITAL INPUTS. It indicates the driving ON/OFF.(It contains lower modes)
   i. FORWARD : It indicates the forward ON/OFF.
   ii. REVERSE : It indicates the reverse ON/OFF.
   iii. FSI : It indicates the Foot switch ON/OFF.
   iv. SPEED CUT BACK 1 : It indicates the speed limit ON/OFF.
   v. BYPASS : It indicates the BYPASS ON/OFF.
   vi. EXIT (ENTER) : It moves to the higher mode.
2. HYD DIGITAL INPUTS : It indicates the hydraulic ON/OFF. (It contains lower modes)
   i. TILT : It indicates the TILT ON/OFF.
   ii. REACH : It indicates the REACH ON/OFF.
   iii. OPTIONAL : It indicates the OPTIONAL ON/OFF.
   iv. EXIT (ENTER) : It moves to the higher mode.
3. EXIT (ENTER) : It moves to the higher mode.

3 CONTACTOR REQUESTS : It indicates the input signal of contactor

1. FORWARD CONTACTOR : It indicates the input signal of forward contactor.
2. REVERSE CPNTACTOR : It indicates the input signal of reverse contactor.
3. REGEN CONTACTOR : It indicates the input signal of regenerative contactor.
4. DRIVE BYPASS CONTACTOR : It indicates the input signal of drive bypass contactor.
5. HYD BYPASS CONTACTOR : It indicates the input signal of hydraulic bypass contractor.
6. EXIT (ENTER) : It moves to the higher mode.

https://truckmanualshub.com/

4 SYSTEM PARAMETERS: It shows all the parameters set on the controller.

1. VEHICLE PARAMETERS : It shows the parameters set on the vehicle.
   i. VEHICLE MAX SPEED : It indicates the maximum speed of vehicle.
   ii. BDI WARNING LEVERL : It indicates the warning value of battery.
   iii. BDI CUTOUT LEVER : It indicates the value on each level of battery.
   iv. EXIT (ENTER) : It moves to the higher mode.
2. DRIVE PARAMETERS : It shows all the drive parameters. (It contains lower modes)
   i. DRIVE CURRENT LIMIT : It indicates the driving current limit.
   ii. DRIVE CUTBACK 1 SPEED : It indicates the driving speed limit.
   iii. ACCELERATOR DELAY : It indicates the accelerator delay.
   iv. EXIT (ENTER) : It moves to the higher mode
3. HYD PARAMETERS: It shows all the hydraulic parameters.
   i. HYD CURRENT LIMIT : It indicates the hydraulic current limit.
   ii. HYD TILT SPEED LIMIT : It indicates the hydraulic tilt speed limit.
   iii. HYD REACH SPEED LIMIT : It indicates the hydraulic reach speed limit.
   iv. HYD OPTIONAL SPEED LIMIT : It indicates the hydraulic optional speed limit.
   v. EXIT (ENTER) : It moves to the higher mode.
4. HOURS: It shows all the set hours. (It contains lower modes)
   i. WORK HOURS : It indicates the work hours.
   ii. DRIVE HOURS : It indicates the drive hours.
   iii. HYD HOURS : It indicates the hydraulic hours.
   iv. KEY HOURS : It indicates the key ON hours.
   v. EXIT (ENTER) : It moves to the higher mode.
5. EXIT (ENTER) : It moves to the higher mode.

5 EXIT (ENTER) : It moves to the higher mode.

https://truckmanualshub.com/

2) ENTER SWITCH
This switch is to select a mode that operator desires.
Refer to “1) Mode switch” for usage.

3) TRAVEL SPEED SET SWITCH
The switch is to travel constantly at a preset speed, which consists of 5 levels; 3, 4, 5, 6, 7km/hr. If pressing this switch. a turtle mark is displayed on LCD and the corresponding speed is shown on the letter display panel. Each time the switch is pressed, the display shifts in order of 3km/hr – 4km/hr – 5km/hr – 6km/hr – 7km/hr, and EXIT[ENTER]. Accordingly when operator turns the travel lever “ON” after stopping at the setup speed, the machine travels only at the constant speed. If operator wants to release the function while setting the Traveling speed, keep pressing the switch until “EXIT[ENTER]” comes out and then press “ENTER” switch. The turtle mark on LCD will disappear and the machine will return to the normal traveling mode.

4) HYDRAULIC POWER SWITCH
The switch is to set/release the hydraulic power mode. It is set to power ON mode when the key switch is “ON”. Each time the switch is pressed, the power mode ON/OFF is selected alternatively. In power ON mode, hydraulic bypass connector works and the output of hydraulic system reaches the maximum of setup value, so that the power mode is suitable for overload working. In power release mode, the hydraulic bypass connector doesn’t work and the output of hydraulic system goes down, so that this mode is to save energy from over-consumption and also increase the running time when the machine is operated in light loaded works.

5), 6) TRAVEL POWER UP/DOWN SWITCH
The switch is to adjust the power of Traveling system. It is adjustable by 4 levels and the maximum output, the 4th level is set when the key switch is “ON”. If pressing the power down switch, the power is decreased as 10% step. Proper power adjustment under certain working conditions enables the machine running time increased.

https://truckmanualshub.com/

13.1.11 HORN BUTTON

If this button is pressed, the horn will sound and then stop automatically when it released.

13.1.12 HEAD LIGHTS SWITCH

When this switch is in lower part, it is OFF. If it is moved upwards, it will be ON.

13.1.13 TURN SIGNAL SWITCH

When this switch is in neutral part, it is OFF. If it is moved upwards, the left turn signal lamp will be ON, and if downwards, the right one will be ON.

13.1.14 KEY SWITCH

When this key is turned to right, it will be ON to start the machine. If it is turned left in that condition, it will be OFF and all the operation will stop.

https://truckmanualshub.com/

13.2 OPERATING

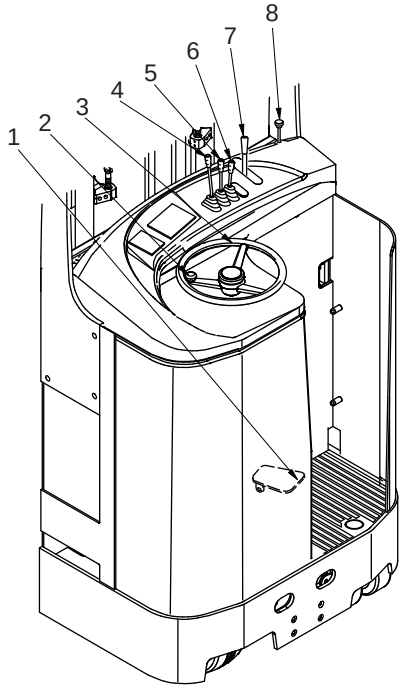

FX913

1. Brake pedal
2. Steering wheel knob
3. Steering wheel
4. Lift Lever
5. Tilt Lever
6. Reach Lever
7. Travel Control Lever
8. Emergency Lever

13.2.1 BRAKE PEDAL

When depressing the brake pedal, brake is set and travel circuit is connected. When taking off your foot from the pedal, the pedal is returned to the original position, the brake is set and travel circuit is disconnected at the same time.

https://truckmanualshub.com/

13.2.2 STEERING WHEEL KNOB, 13.2.3 STEERING WHEEL

When operating the steering wheel, hold the steering wheel knob with your left hand (Standard machine with electric power steering)

13.2.4 LIFT LEVER

When you pull this lever backward, the fork goes up and push forward, the fork goes down. You can have a proper lifting speed by controlling this lever.

13.2.5 TILT LEVER

When you pull this lever backward, the fork tilts backward and push forward, the fork tilts forward. You can have a proper tilting speed by controlling this lever.

13.2.6 REACH LEVER

When you push this lever forward, the mast goes forward and pull backward, the mast comes backward. You can have a proper reaching speed by controlling this lever.

13.2.7 TRAVEL CONTROL LEVER

When you push this lever forward, the machine goes forward, pull backward, the machine goes backward. You can have a proper traveling speed by controlling this lever. If you release this lever, it returns to neutral position automatically.

13.2.8 EMERGENCY LEVER (IN EMERGENCY)

If you want to disconnect battery, push this lever. In emergency if you push this lever, the power is OFF.

⚠ CAUTIONS

In case of the machine installed with power steering, if you pull out this lever, steering wheel becomes heavy. Ttherefore, pay attention to operate this lever while traveling.

https://truckmanualshub.com/

14. BATTERY DHARGING

14.1 NORMAL CHARGING

Note

This is all about battery charger designated by CMHA. if you want to use a different charger, please refer to the operation manual of the charger which is included the charger.

It depends on the discharging condition or capacity of battery, but generally it takes 8 or 10 hours continuously to charge. Charger has a stationary automatic charging system. Push the button in order to start charging. When the charging is completed, it stops automatically.

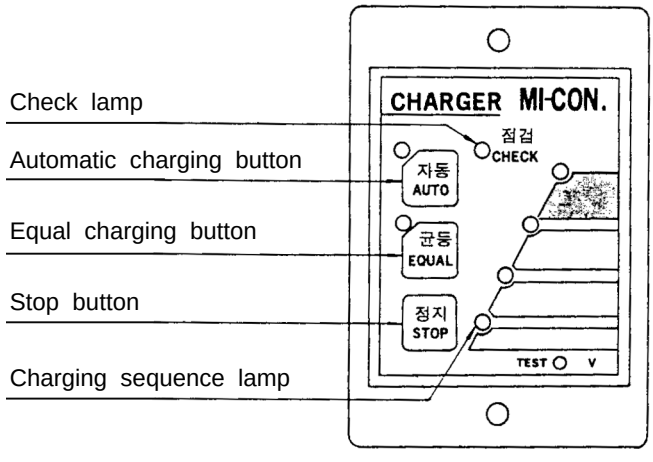

⚠ When the red lamp flikers while traveling or when you finish daily working, charge as the directions below.

1 The charging place must be covered from the rain and well ventilated. There must be no flammable around the charger.
2 Turn the key switch to OFF.
3 Connect a charging plug to a plug in the machine.
4 Insert a power plug into a plug socket.
5 Make sure that the power plug is inserted properly. If the connection is proper, automatic charging lamo and equal charging lamp light up.
6 If push automatic charging button, automatic charging lamp is constantly ON and equal charging lamp is OFF. At the same time, charging starts.

https://truckmanualshub.com/

7 Never pull the plug out while charging. If you want to plug out while charging, press stop button first, and then pull out the plug while holding the body.
8 When charging is completed, the lamp on the top of charging sequence display will light up.

Note
Never use the charger in order to control traveling and hydraulic.

14.2 EQUAL CHARGING

If you keep using the battery for a certain period, separation material may be produced. It is notified from the differences of gravimeter scale readings, immediately. In this case, equal charging will be required. Perform as follow procedures at every 2 weeks.

1 Push the equal charging button as like the way to handle normal charging.
2 If Equal charging lamp is ON constantly, charging starts.
3 If the gravimeter scale indicates 1.2~1.28 for each cell equally after charging, the battery is charged properly.

Note 1) If you pull out battery plug in order to fill up distilled water, the required hours for automatic equal charging become longer, therefore perform equal charging manually.

Note 2) In case of the stationary battery, you can’t perform automatic equal charging. Therefore, perform periodic equal charging manually.

Note 3) If you want to perform automatic charging for keeping the battery warm after a long break time in cold season, automatic charging lamp flickers.

https://truckmanualshub.com/

14.3 SUPPLEMENTARY CHARGING

If it is impossible to complete the day's work by charging once, carry out supplementary charging during the break time. The supplementary charging method is the same with the normal charging. When you want to stop charging, push the stop button.

14.4 CHARGING FOR LONG TERM STORAGE

If the machine is kept more than 2 weeks without running, perform the equal charging before storing in garage. If it kept for a quite long time, perform the equal charging at least every 15~30 day.

14.5 CHARGING METHOD

Charging type	Pressing Button Switch	Charging time
Normal charging	Atuomatic	After daily working
Equal charging	Equal	Once every 2 weeks. Check level of battery electrolyte and the gravimeter scale.
Supplementary	Automatic	During break time
Charging for long term storage	Equal	Perform equal charging before storing. If kept for a long time, perform the equal charging at least every 15~30 day.

https://truckmanualshub.com/

Install the charger in the place that is well ventilated and covers the rain. There must be no flammable around the charger.

15.1 CHARGING METHOD (NORMAL CHARGING)

The charger has an automatic charging system. The charging method is as follows.

1 Turn the key switch to OFF and pull out the battery plug.
2 Insert the charging plug of charger into the battery plug. (Never fail to insert it in the battery side)
3 Connect the plug in power (AC) side of charger to the power plug socket.
4 Make sure that the plug is insertedproperly. When the connection is proper, automatic charging lamp and equal charging lamp light up.
5 Push the automatic charging button, and automatic charging lamp is constantly ON and equal charging lamp is OFF, at the same time, charging starts.
6 Never pull the plug out while charging. If you want to plug out while charging, press stop button first. After charging lamp is OFF, pull the plug out while holding the body.
7 When charging is completed, the lamp on the top of charging sequence display will light up.

https://truckmanualshub.com/

16. BATTERY REPLACEMENT

When using the machine continuously by turns, replace with the charged battery during break. Immediately charge the battery which is taken off.

★ Conform to the following method.

1 Disconnect the battery plug.
2 Open the battery cover and fix with the stopper.
3 When lifting up the battery box, be careful not to be damaged by hitting the body.
4 After installing the charged battery, insert the plug firmly.

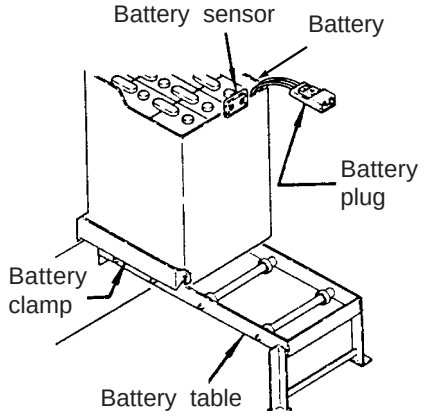

https://truckmanualshub.com/

17.1 LEVEL OF BATTERY ELECTROLYTE

Check the level of electrolyte. If the level is low, replenish with distilled water. When checking the lever of electrolyte, inspect the float condition through the electrolyte cover from outside. If the float isn't seen, replenish with distilled water.

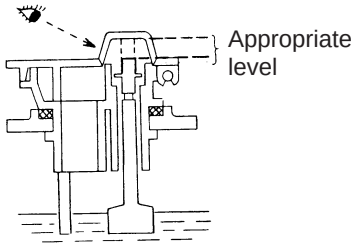

Appropriate
(Float is seen.)

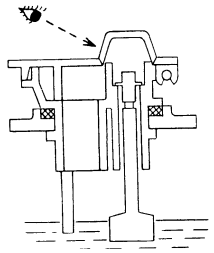

Lack
(Float isn't seen.)

17.2 HOW TO READ THE GRAVIMETER

- Specific gravity for charging : 1.280 (20°C)
- Specific gravity for discharging : 1.180 (20°C)

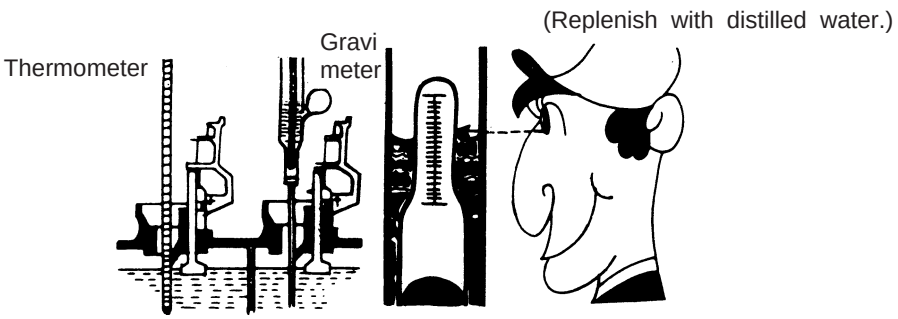

⚠ If the specific gravity is under 1.180 (20°C), perform the equal charging.

https://truckmanualshub.com/

17.3 SPECIFIC GRAVITY OF ELECTROLYTE AND CONVERSION TABLE OF TEMPERATURE COMPENSATION

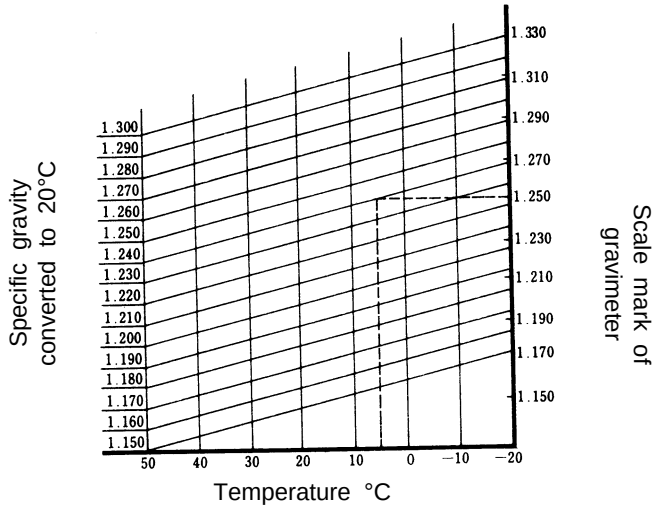

Ex) When the scale mark is 1.250 at 5°C, it will be 1.240 (20°C).

https://truckmanualshub.com/

18.1 SOUND LEVEL

The sound pressure level (LpA) at the operator's ear emitted by this machine is 66.7dB (A).

The above measurements are obtained on a representative machine, by applying the procedures described in the standard of prEN12053.

This figure can be changed as the condition of the road and tire.

https://truckmanualshub.com/

19. CHECK BEFORE WORKING

The operator never fail to inspect the following items before the day's working for safe operation and optimum performance of the fork lift.

19.1 CHECKING POINTS

Class.	No.	Item	Check contents
Brake system	1	Brake pedal	Operating distance of pedal, performance of brake
Steeringl system	2	Clearance of steering wheel	Loose, rattle, gap
		Power steering	Operating condition (the machine attached with EPS)
Attachments and hydraulic system	3	Operation of each part	Operating condition, breakage, oil leakage
	4	Pipes	Oil leakage
	5	Hydraulic oil	Oil level
	6	Lift chain	Chain tension on right/left
Axle	7	Tires	Abnormal wear, damage
	8	Bolt	Loose, damage
Battery	9	Charging condition	Battery volumeter lamp after key switch "ON"
Lamp, Warning device	10	Turn signal lamp, horn, head lights, tail lights, back lights	Light condition, horn sound
Safety monitor	11	Operating condition	<System check> after key switch "ON"
Others	12	Overhead guard, back rest	Loose tightening bolt, nut, and damage
	13	Others	Abnormality

https://truckmanualshub.com/

19.2 CHECKING METHODS BEFORE STARTING OPERATION

1 Checking brake pedal

- Check the operating distance of brake pedal (about 7cm from the floor plate).
- When pressing brake pedal, check that micro switch is operated at 1.5~2cm from the floor plate.
- When releasing brake pedal, check that it is operated normally.
- Check mechanical conditions of brake.

  CER10~13 ..... below 1.2m
  CER15~18 ..... below 1.5m
  CER20~25 ..... below 1.8m

  If braking distance is over the above figures, adjust it.
  (Refer to <GUIDE TO REPLACE AND REPAIR PARTS>)

2 Checking the clearance of steering wheel and power steering

Turn the steering wheel to the right and left to check the clearance.

The appropriate clearance of steering wheel is 5~10cm.

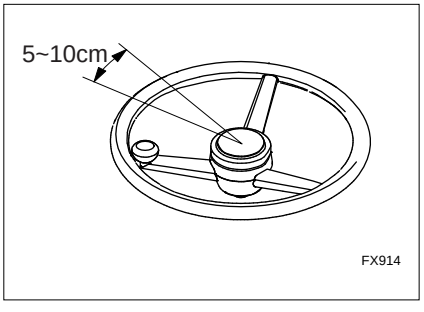

3 Checkting the operation of each part

Operate the fork up and down, tilt the mast forward and backward, and insert and pull out the mast. Inspect if they are operated smoothly.

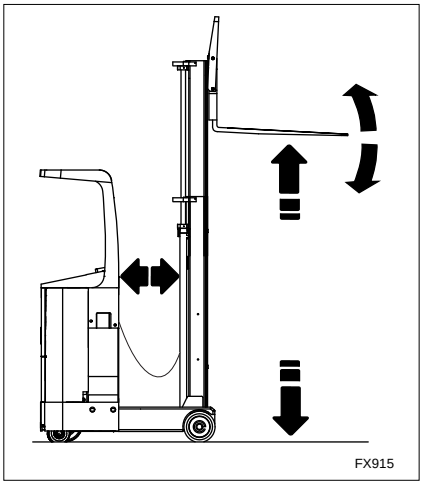

https://truckmanualshub.com/

4 Checking the pipes

Check if there is any leakage from the cylinders or pipes.

5 Checking the hydraulic oil level

Completely lower down the fork on a firm and even ground, and tilt the mast backward, and check the oil level through the oil level gauge in oil tank. In case of CER10-CER18, Check if you see the surface of the oil

In case of CER20-CER25, Check the oil level with a deep stick.

The proper level of the hydraulic oil is between “H” and “L” mark.

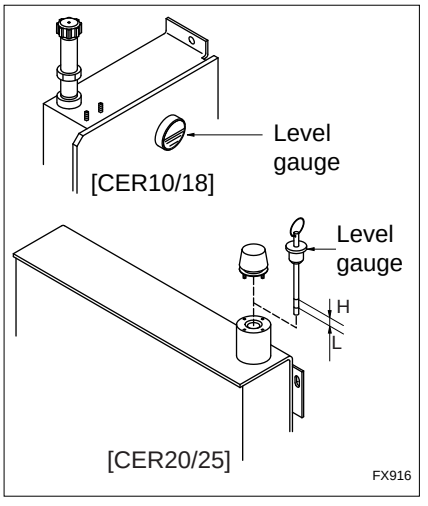

6 Checking and adjusting the tension of lift chain

Lift up the fork about 20 or 30cm and push the chain one by one to check that the tension of right and left is equal. Also, check if the pin cover is inclined to one side or not. If the tension of chain is not equal, adjust the chain anchor bolt. After adjusting, tighten the lock nut firmly.

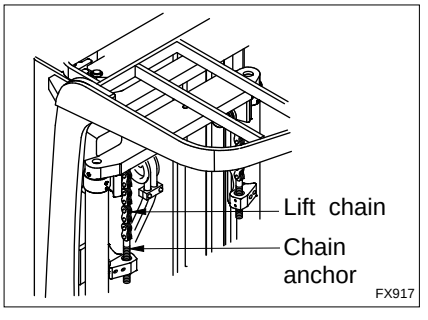

7 Checking tires

Check if there are damage or abnormal worn parts for each tire (drive, caster, load).

8 Checking bolts on the tires

Check if there is loosed bolts on the tires.

9 Checking charging condition

Measure the gravity of battery electrolyte with the gravimeter. If the gravimeter indicates 1.260~1.280 at 20°C, charging is completed.

https://truckmanualshub.com/

10 Operate the switches for headlight, back light and tail light (option), and turn signal light (option) in order to check that the lamp is ON and OFF. Press the horn button to check that it is sounds.

11 Checking Monitor
In normal operating condition, when the key switch is ON, <System check> is displayed for a few seconds.

12 Checking overhead guard and load backrest
Inspect that the installation bolts and nuts are loose or there are any damaged places.

13 Others
Check that there are any abnormal places and special noises. When checking electric system, disconnect the battery plug.

https://truckmanualshub.com/

20. LOAD AND STABILITY OF MACHINE

The fork lift can be regarded as a seesaw where the front wheels act as a fulcrum upon which the counter weight load on the rear wheels is counterbalanced by the load on the forks. Loads that exceed the specified allowable limits will cause the rear wheels to float, reduce steering performance, and can tip over the fork lift.

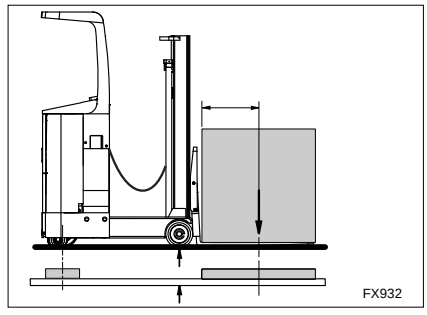

20.1 STANDARD LOAD CENTER AND LOAD CURVE

The distance between the front of fork and the center of the load is called the load center. The chart shown here represent the relation between the load center and the allowable load weight.

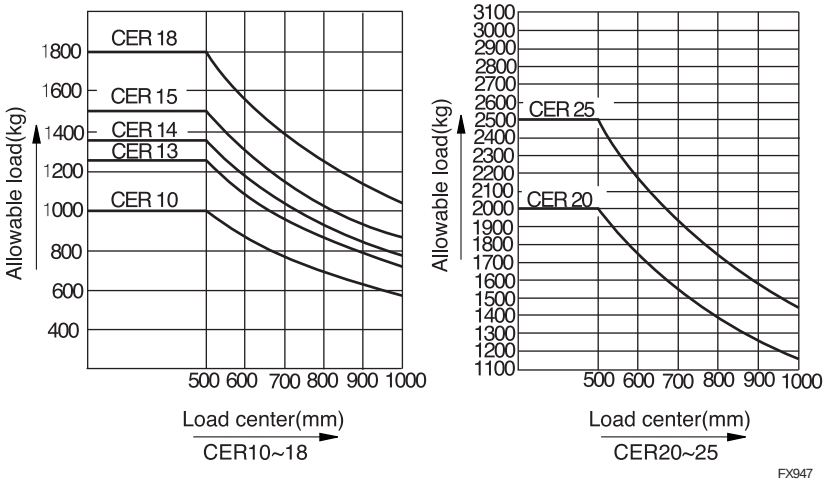

When traveling with load, lift up the load about 5~10cm from the top of straddle leg by pulling the mast backward, and tilt the fork backward. The drive wheel (rear wheel) has both brake function and steering function. Therefore if you keep traveling while the mast forward tilted and raised, the efficiency of brake or steering reduced and the load center may be changed. It can cause the overturn of machine.

https://truckmanualshub.com/

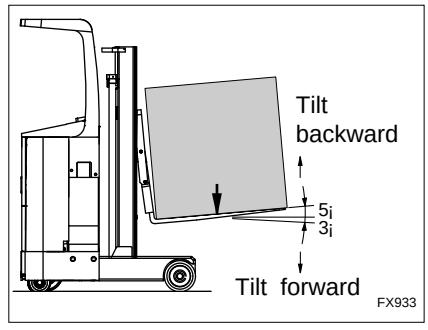

1 Push the load so as that the load is surely loaded inside of the fork.
2 If the load is too much leaned to the front of fork even under max. load, unexpected force is applied to the mast or fork and the machine can be damaged.
3 If the load is laterally leaned to one side, unexpected force is applied to the machine and the load can be slided to one side while traveling. Therefore, avoid the eccentric load of right and left.
4 When loading, give attention to the operation of valve lever.
5 Specially if you tilt the mast forward suddenly, strong impact is occurred and it can cause the overturn of machine.

20.2 STABILITY OF MACHINE

The stability of forklift is generally regulated but this is assured under the extremely limited working conditions only. Therefore, there is no guarantee for stability of machine under various working conditions.
Followings are the limited working conditions.
1 The machine must be used in the place where even and firm ground or floor.
2 When Traveling, travel in standard load or standard non load condition.
3 When loading or unloading, put the mast vertically and do not tilt any more. When unloading, operate the machine at the low speed. To obtain the stability, the machine must be kept in good maintenance condition.

Note 1) Standard non load condition when traveling
Condition when the top of fork is lifted up 30cm from the ground and the mast is tilted backward to the utmost.

Note 2) Standard load condition when traveling
Condition when the max. load is loaded in the standard load center, the top of fork is lifted up 5~10cm from the surface of the staddle leg and the fork is tilted backward to the utmost.

https://truckmanualshub.com/

a Do not overdischarge
b Do not lift up or pull the load with the tip end of the fork.
c Do not load fork lift over capacity limit(allowable load).
d Avoid a sudden start, stop, or turn, otherwise it may cause dangers.
f Do not operate the valve suddenly when the mast is raised with load.
g Before leaving the machine, remove the start key, make sure that the machine doesn't move by pressing an accelerator, and put down the fork to the ground.
h If you do not lift up the folk to the max. height while working, lift up the fork to the max. height before finishing daily working. (If you keep working at the low height, it may cause the rust in the inside of lift cylinder.)
i When checking the electric system, disconnect battery plugs.
j When having a pause or charging, remove the start key.
k Clean electric devices with compressed air
l Do not use a charger instead of a battery, or other kinds of batteries except the battery installed. Otherwise it may cause a trouble.

https://truckmanualshub.com/

Check the safety around the machine and sit down on the operator's seat.

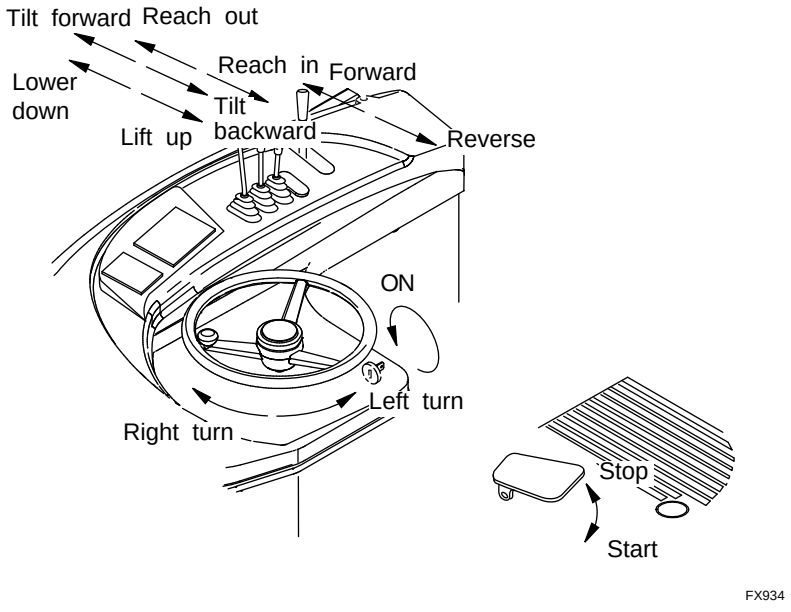

21.1 PREPARATION FOR STARTING

a Hold the steering wheel knob lightly with your left hand and turn the start switch to ON position.

b Pull the lift lever in order to lift the fork about 20~30cm from the ground, pull the reach lever backward in order to pull the mast, and pull the tilt lever backward so that the forks are tilted backward.

21.2 OPERATING

21.2.1 START

Depress the brake pedal and operate the traveling control lever slowly in order to start. The speed of the machine depends on the control of the lever.

https://truckmanualshub.com/

- You must decelerate in following cases.
- When turning suddenly, or approaching the load and pallet (without load)
- When approaching the place to unload (with load)
- When driving a place where excessively narrow, or uneven road

21.2.2 TURNING

The forklift has rear wheel steering system apart from other general vehicles. Therefore, slow down in advance before turning. Move the machine to the turning direction and turn the steering wheel slightly first and then make a turn as giving special attention to the backside.

21.2.3 STOPPING

Put the travel control lever to the original position, and release the brake pedal slowly.

21.2.4 PARKING

When leaving the operator’s seat, pull the mast backward, tilt the mast forward and lower down the fork to the ground. Also, remove the start switch.

21.3 LOADING

When loading, carry out in following orders.

a When the machine approaches near to the loading place, slow down to the safe speed.
b When the machine arrives at the loading place, stop.
c Check the safety of loading place.
d Tilt the mast to the horizontal position (tilting forward) and lift up slightly higher than the loading position.
e Surely check the loading position and slowly stop the machine at the proper position.
f Pull the load to the unloaded place by reach operating.
g After checking that the load is on the loading position, slowly lower down and make sure that the load is loaded safely.

https://truckmanualshub.com/

* If the loading position is bad because the size of pallet or load is not fitted well, carry out in the following method. Control the reach operation in order to pull out the fork about 1/4 of the length and lift up again (5~10cm) to insert to the safe loading position and then lower down.

h After checking the backside safety, move the machine backward. At this time, be careful of reach operating so that the fork is not approached in the pallet or the load.

i Make sure that the end of fork is taken out of the pallet or load, and lower down the fork to the traveling position (about 15~20cm from the ground).

j Tilt the fork backward.

21.4 UNLOADING

When unloading, carry out in following orders.

a When the machine reaches to the load, slow down to the safe speed.

b When the machine arrives in front of the load to be unloaded (the distance from the load to the end of fork is 30cm), stop.

c Check that the load is not falling down and safe.

d Tilt the mast to the horizontal position (titling forward) and lift up the fork to the pallet or skit position.

e After checking the position where the fork is inserted, move forward straightly, and insert to the inside of fork.

f Insert the fork fully by reach operating.

* When it is impossible to insert the fork fully, carry out in following method. Insert the fork about 3/4 in length and lift up slightly (5~10cm). Then, pull the pallet or skit 10~20cm forward and lower down again. Move the machine forward to insert the fork fully.

g When the fork is inserted, lift up slightly (5cm to 10cm). Pull the mast toward the operator’s seat by reach operating.

h Check the backside safety and slowly move backward to the position where the load can be unloaded safely.

i When the load is slowly lowered down to the height of 5~10cm from the straddle leg, tilt the fork backward to the utmost and move the load to the unloading place.

https://truckmanualshub.com/

https://truckmanualshub.com/

INSPECTION·MAINTENANCE

WARNING

- When inspecting or maintaining, make sure to disconnect the battery plug.

https://truckmanualshub.com/

https://truckmanualshub.com/

If the inspecting and maintenance is surely carried out, an accident can be prevented and the life of machine becomes long. Even if you are busy, fix the date and carry out the periodic inspection so as to increase the working ratio of machine and to reduce the maintenance cost of machine. Also, the hour written in the inspection item is based on 8hours of a day and 200hours of a month. At actual inspecting, make out the schedule in the unit of day and date, etc. Before starting operation, check the periodic inspection schedule, and when that inspection time comes to, check the checking points.

22.1 GENERAL CAUTIONS FOR INSPECTION AND MAINTENANCE

a Use the genuine part of our company to replace a part.
b Use the recommended oil, especially hydraulic oil, must be the recommended domestic supply oil.
c To supply oil, clean up the grease on the oiling inlet with brush or cloth at first.
d To supply or drain oil and to check the oil level, stop the machine on an even ground and carry out.
e To inspect the electric system, disconnect the battery plug and carry out.

22.2 INSPECTION EVERY WEEK (50HR)

1) Inspecting electrolyte
For inspecting the level of electrolyte, check the condition of battery and float from outside. If the float lowers down, fill up the electrolyte immediately. To fill up the distilled water, open the cover completely. When the float goes up and the white line is to be seen, stop filling up the distilled water.

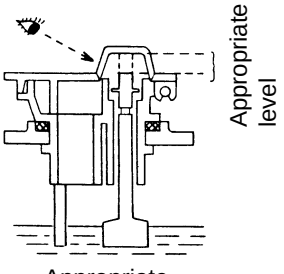

Appropriate
(Float is seen.)

https://truckmanualshub.com/

After filling up, close the electrolyte cover completely. Be careful when filling up the electrolyte because if the electrolyte is excessively filled up, it can overflow.

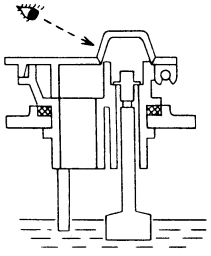

Lack
(Float isn't seen.)
(Replenish with water)

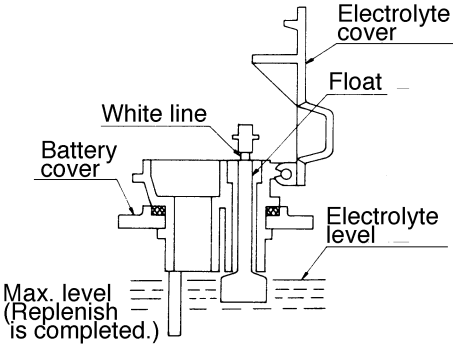

2) How to feed distilled water

a Put the container filled with distilled water on the place higher than the battery position.

b Remove the cap and put the cap fixed hose into the container deeply and then close the cap.

c Open the electrolyte cover and insert the hose with pinch cork attached.

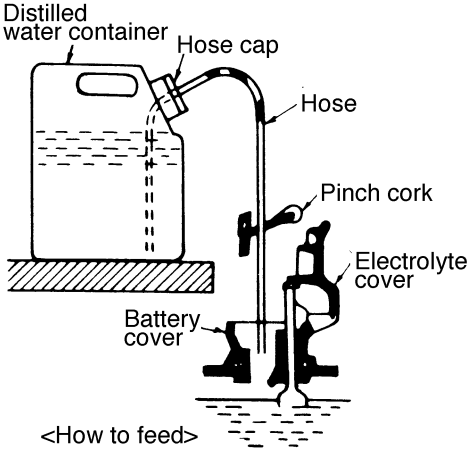

<How to feed>

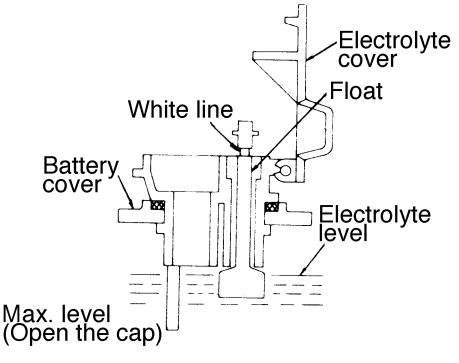

https://truckmanualshub.com/

d When starting to fill up distilled water, loosen the pinch cork and push the center of distilled water container with your hand several times to make distilled water come out by syphon action.

e When the red float goes up and you see the white line, close the pinch cork immediately.

f After filling up distilled water, close the distilled water container and completely close the electrolyte cover.

g Clean up the top of battery with wet towel, etc.

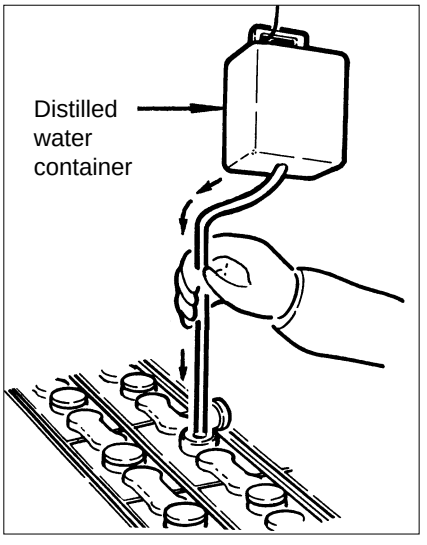

22.3 MEASURING SPECIFIC GRAVITY

Measure the specific gravity and temperature of all cells. If the specific gravity converted into 20°… is almost the same with the specific gravity of whole cell, it is good. If there is a cell whose specific gravity is 0.05 or lower than the average value, it is abnormal. At this time, make contact your local dealer. For how to see the specific gravity, refer to <level of battery electrolyte and reading gravimeter>.

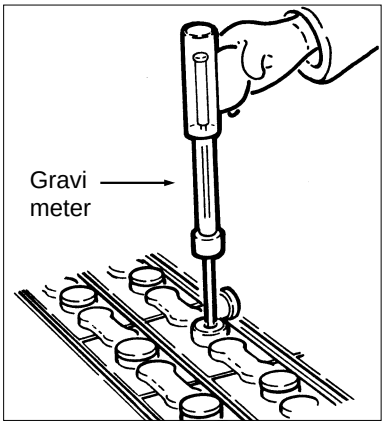

https://truckmanualshub.com/

22.4 CLEANING BATTERY

a To prevent the connecting part of battery and the environs from rusting, clean up with wet towel and keep those parts always dry.

b The inside of the electrolyte cover can get dirty easily. Therefore, clean it with neutral detergent sometimes so that it is easy to see the float. To clean it, open the cover counterclockwise and take out from the battery cover. To insert, do it reversely and check that the battery cover and the electrolyte cover are adhered closely.

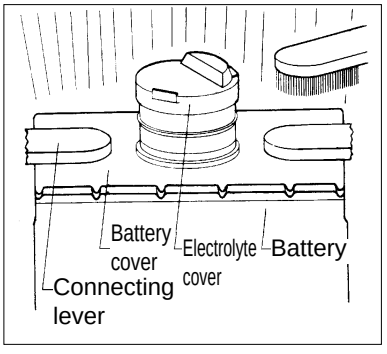

https://truckmanualshub.com/

22.5 INSPECTION EVERY MONTH (200HR)

Inspect the following items addition to the items to be inspected before working. (Report the inspecting results.) If there are items to require adjusting or replacing, contact to your local dealer.

	Item and content			Check
External appearance	1	The whole machine	Disformation,crack, abnormal noises	
	2	Warning device	Sound	
	3	Accessory (head light, turn signal lamp)		
Battery charging	4	Battery electrolyte	Gravity, level, leakage	
	5	Terminal plug	Damage, contaminant	
	6	Battery plug, coat, plug	Loose, breakage	
	7	Electronic contactor	Light	
	8	Pilot lamp	Light	
	9	Key switch	Light	
	10	Contactor	Light	
	11	Micro switch	Contact, operation	
	12	Control device	Operation	
	13	Traveling motor (brush, commutator)	Worn part, spring tension	
	14	Hydraulic motor (brush, commutator)	Worn part, spring tension	
	15	Power steering motor (brush, commutator)	Worn part, spring tension	
Electric system	16	Fuse (main)	Loose, volume	
	18	Fuse (accessory)	Loose, volume	
	19	Wiring, terminal	Damage, loose	

https://truckmanualshub.com/

	Item and content			Check
Check Drive system • Steering system • Unloading System • Control system	20	Steering wheel	Clearance, operation	
	21	Steering joint	Vibration, noise	
	22	Gear case	Volume, leakage, abnormal noise	
	23	Hub bolt of drive wheel	Loose	
	24	Drive wheel, caster wheel, load wheel	Damage, worn part	
	25	Upper spring	Damage	
	26	Cast spring	Damage	
	27	Lift chain	Oil filling, tension	
	28	Sylinder load guide pin/nut	Loose, damage	
	29	Lift bracket	Control, oil filling, inspecting, deformation	
	30	Fork	Crack, deformation	
	31	Lift roller	Control, oil filling	
	32	Mast roller	Control, oil filling	
	33	Outer mast, inner mast	Vibration, noise	
	34	Reach carriage	Vibration, noise	
	35	Carriage roller	Vibration, noise	
	36	Lift sylinder	Leakage	
	37	Tilt sylinder	Leakage	
	38	Reach sylinder	Leakage	
	39	Control Valve	Operation, leakage	
	40	Hydraulic tank	Oil level, leakage	
	41	High pressure hose	Leakage, deformation	
	42	Overhead guard, Backrest	Damage, crack, deformation	
	43	Brake linkage	Oil filling, operation	
	44	Bolt and nut of each part	Loose	
	45	Power steering	Operating	
	46	Brake cam, adjustment bolt	Operating, oil filling	

https://truckmanualshub.com/

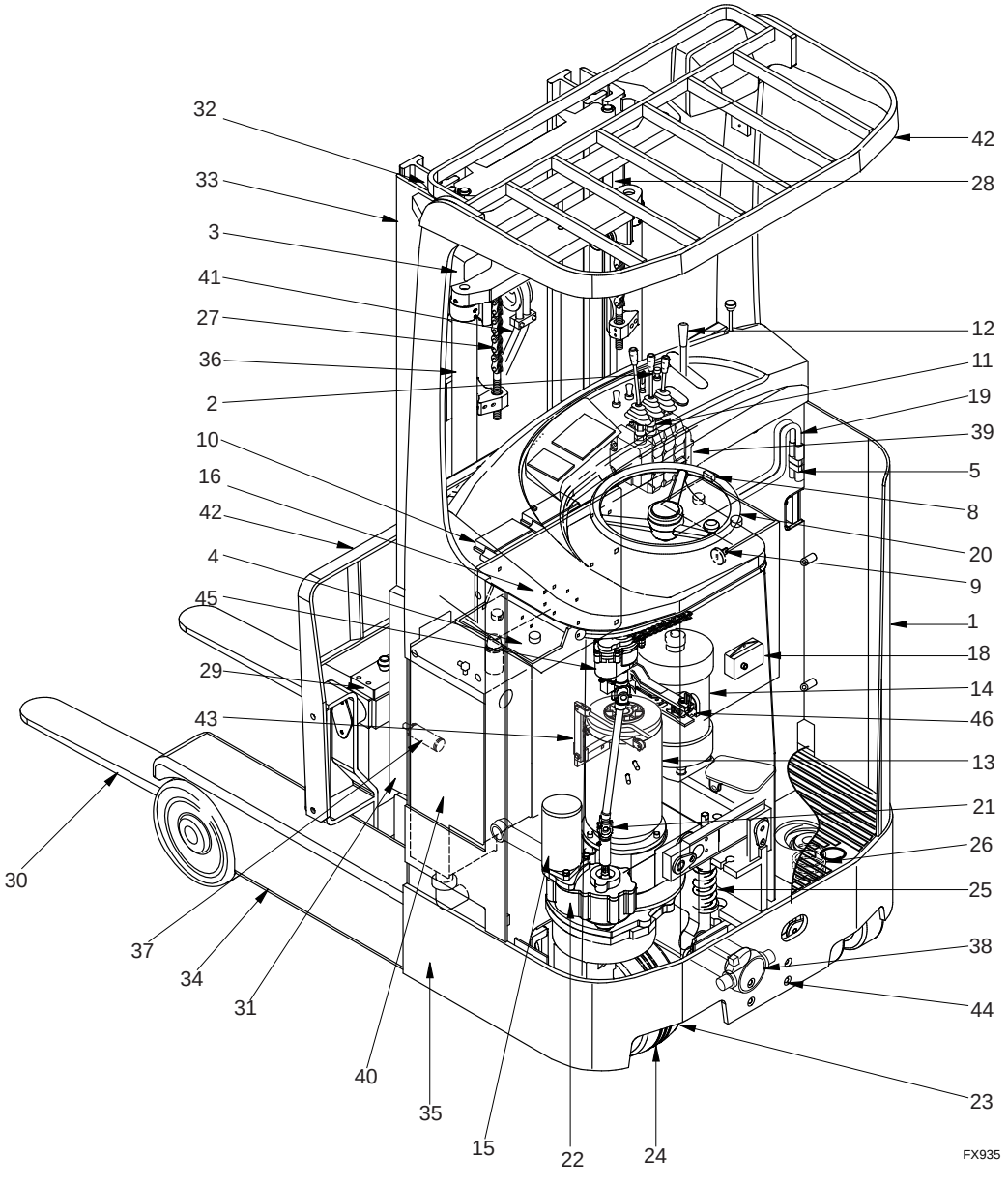

https://truckmanualshub.com/

22.6 INSPECTION EVERY 2 MONTHS (400 HR)

Inspecting the contactor
When inspecting the contact points, if there are damages, repair and replace the items according to the degree of damage. (For details, refer to “21 GUIDE TO REPLACE AND REPAIR PARTS”)

22.7 INSPECTON EVERY 3 MONTHS (600 HR)

Inspect the following items addition to the items to be inspected per every month (200hr) and every 3 months (600hr). If there are items to require adjusting or replacing, contact to your local dealer.

3 months	6 months	Items	Contents
v	v	Contractor	If the contact point is excessively rough, replace it
v	v	Motor	Check the worn part of carbon brush
	v	Drive case	Replace gear oil
	v	Hydraulic oil	Check the contaminated oil and replace them
	v	Oil filter	Clean oil filter

22.8 INSPECTION OF CARBON BRUSH

Lift up the oil spring and pull out the carbon brush to inspect. Inspect the roughness of commutator. If the brush reaches to the wear limit, the brush wear lamp on the LCD is lighted up. (option specification)

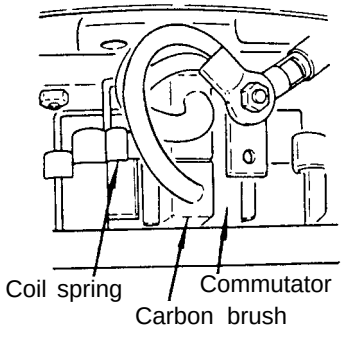

https://truckmanualshub.com/

23.1 LUBRICATING POINT

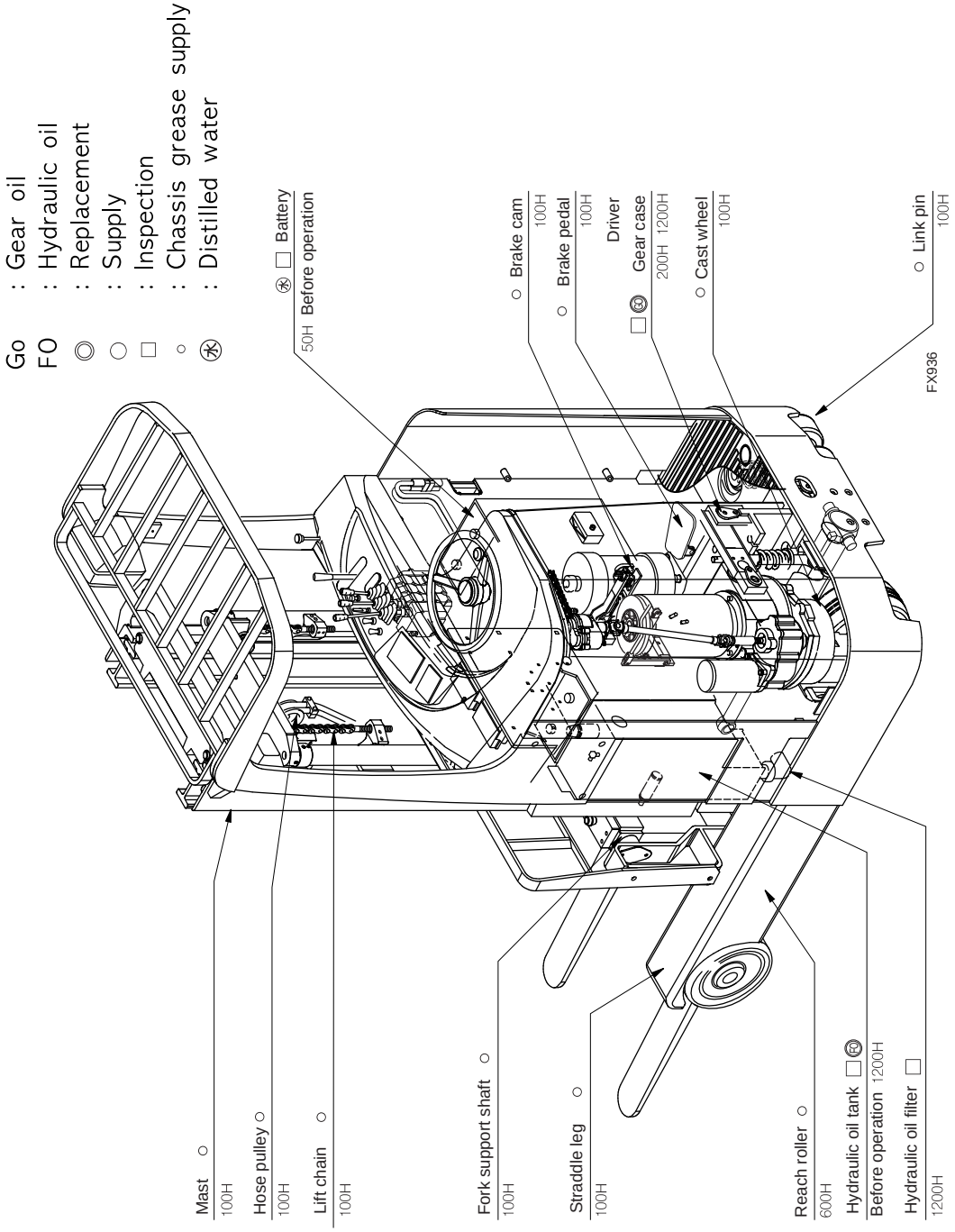

https://truckmanualshub.com/

23.2 SPECIFIED LUBRICATION CHART

• Recommened specification and oil filling capacity

(Unit : liter)

Division	Ambient temperature	Filling capacity		
	–22 –4 14 32 50 68 86 104 122°F –30 –20 –10 0 10 20 30 40 50°C	CER10-13	CER14-18	CER20-25
Hydraulic oil	ISO VG22 ou VG15 ISO VG32 ISO VG46	9.4	13.5	15.6
Gear oil	SAE 80W–90 SAE 5W–30	1.6	1.6	1.6
Steering Gear oil	SAE 80W–90 SAE 5W–30	0.3	0.3	0.3

ASTM : American Society of Testing and Material
SAE : Society of Automotive Engineers
API : American Petroleum Institute
ISO : International Standardization Organization

https://truckmanualshub.com/

If following failures occur while using the machine, check according to the checking point. (If there are any problems, make contact to your local dealer.)
When checking, surely turn off the start switch and disconnect the battery plug.

Failure	Checking items
LCD is not turned on and the machine is not operated	1. Make sure that the battery plug is connected properly. 2. Make sure that the fuse of key switch in fuse box is normal. 3. Make sure that connector of LCD is connected.
The machine is not operated	1. Check if there is abnormality on LCD. 2. If there is no abnormal part on LCD, depress the brake pedal, and make sure that micro switch is operated normally.
Attachments (hydraulic) are not operated	1. Check if there is abnormality on LCD. 2. If there is no abnormal part on LCD, pull the hydraulic lever, and make sure that micro switch is operated normally
Steering isn't performed	1. Check if there is abnormality on LCD. 2. Make sure that the EPS fuse in fuse box is normal.
Lamps, horn, or back alarms aren't operated	1. Make sure that the convert fuses (CER15/25) in fuse box are normal. 2. Make sure that relevant fuse in fuse box is normal
Charging isn't performed	1. Check if the plug of charging code is disconnected or loose. 2. Make sure that the charger fuses for AC or DC are normal. 3. Check the input power of the charger
Other abnormal parts in the machine	1. Check if there are abnormal parts on LCD. (Contact to your local dealer.)

https://truckmanualshub.com/

24.1 HOW TO REPLACE THE CONTACTOR

WARNING

Surely disconnect the battery plug and then replace it.

When replacing the whole of contactor assembly, dissemble the relevant connector and put a new contactor in the original position. The followings are how to replace the contact points of contactor. Disassemble the contactor firstly, and check the degree of wear of contact points with naked eyes. If the contact point of contactor isn't worn much and only the surface is damaged, finish the surface with sandpaper. But if the damage are serious, replace the contactor as following orders.

1) Replacing the contact point of line
   a Separate the installating bolt from the contactor assembly.
   b Pull the contact points and the coils of contactor with hands in order to separate.
   c Remove the relevant contact point from the contact point of contactor, and replace it with new one.
   d Mount the contactor to the machine after assembling as original condition.

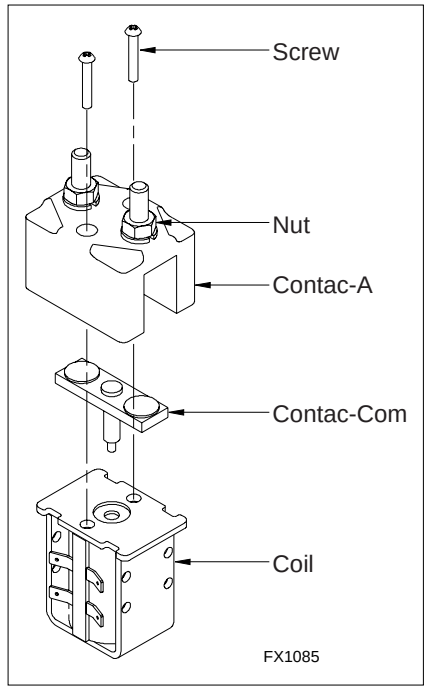

https://truckmanualshub.com/

2) Replacing contact point of steering EPS contactor

a Separate the contactor installation bolt from the contactor assembly.

b Pull the contact points and the coils of contactor with hands in order to separate.

c Remove the relevant contact point from the contact point of contactor, and replace it with new one.

d Mount the contactor to the the machine after assembling as original condition.

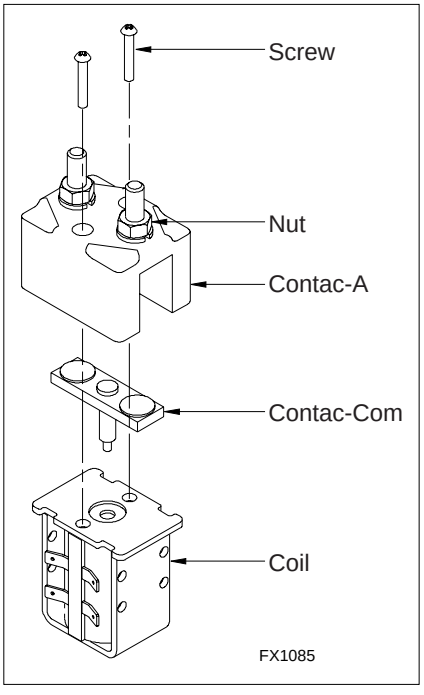

https://truckmanualshub.com/

24.2 HOW TO ADJUST THE BRAKE

If the functions of the brake is bad, adjust the items in following picture.

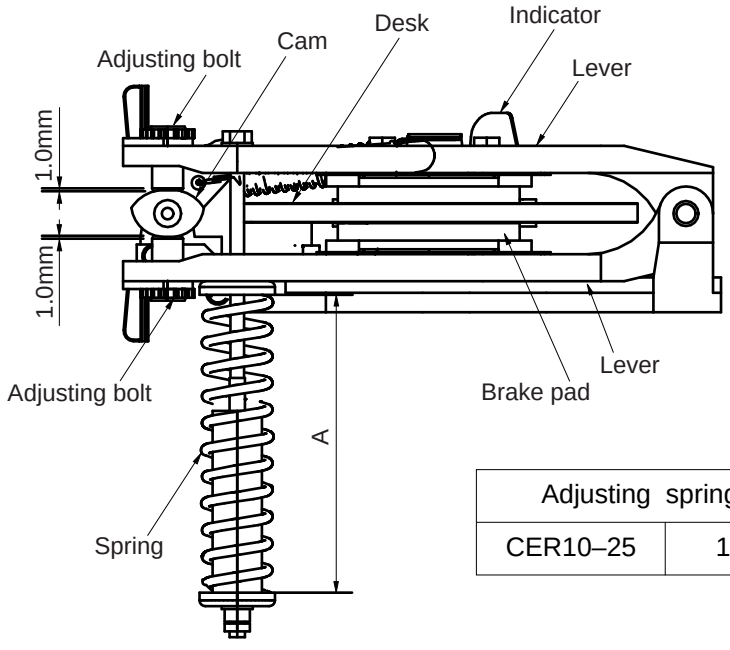

Adjusting spring (A)	
CER10–25	115mm

FX941

<How to adjust>

a Adjust the gap between the adjusting bolt and the cam to be 1.5mm

b Adjust to meet the indicated numbers in the above table by loosening the nuts for adjusting brake spring.

* Check if the lever is set horizontally with the cam.

c The pad wear indicator is attached in this machine.If the pad is worn, the indicator contacts with the disk and starts to make metal contacting sound. At this time, replace it with a new one.

https://truckmanualshub.com/

25. REFRIGERATING SPECIFIED VEHICLE

This machine is the type of refrigerating specified vehicle. Therefore, it is a counter balance battery type forklift designed and manufactured to load and unload in the refrigerator warehouse with hard condition. The refrigerating specified vehicle can be used in the refrigerator warehouse of -35°C.

a CS type

It is for the refrigerator warehouse in the -35°C class and possible to work inside and outside of the refrigerator warehouse. The working ratio of inside and outside of refrigerator warehouse must be almost the same, and the continuous working time inside of the refrigerator warehouse at one time must be within 30 minutes.

b Never leave the machine in the refrigerator warehouse.

Also, use this operator's manual for the countermeasures for anticorrosion and low temperature, and oiling, inspecting and maintaining for the parts other than electric devices of the refrigerating specified vehicle.

25.1 COUNTERMEASURE FOR ANTICORROSION

When the machine goes in and out the refrigerator warehouse, the body gets water drops by the difference of temperature, therefore, it is easy to have the rust. For the body, the mast, and parts which are easily to get the rust, special anticorrosive paint is applied to prevent the rust. Therefore, surely apply the anticorrosive paint after replacing or checking electric parts and wires.

https://truckmanualshub.com/

25.2 COUNTERMEASURE FOR LOW TEMPERATURE

1) Hydraulic oil and grease
For hydraulic oil, the oil with excellent performance in low temperature is used. Therefore, use the oil in the following table when changing oil. Also, the grease which has high performance of filling in low temperature is used. Therefore, use the grease in the following table when filling it up.

Classification table of oil used in refrigerating specified vehicle

Symbol	Kinds of oil	Remarks	Remarks
FO	Hydraulic oil	RANDO HD CZ(CALTEX) RANDO HD Z46(CHEVELLON,TEXACO)	ISO VG 46 Grade oil

2) Oiling device
To prevent abnormal wearing or rusting due to the lack of oil in low temperature, the oiling device is installed in the main sliding part.
3) Electric parts
For switches and horn buttons, the waterproof and anticorrosive parts are used so as to have good performance in low temperature.

25.3 USAGE OF NO SLIP TIRE

It is easy to slip because there are frozen parts and oiled part on the surface of the refrigerator, therefore, use no slip tire to prevent slip

WARNING

When charging the refrigerating specified vehicle, carry out outside of the refrigerator warehouse.

https://truckmanualshub.com/

SPECIFICATIONS

https://truckmanualshub.com/

https://truckmanualshub.com/

26.1 DIMENSIONS

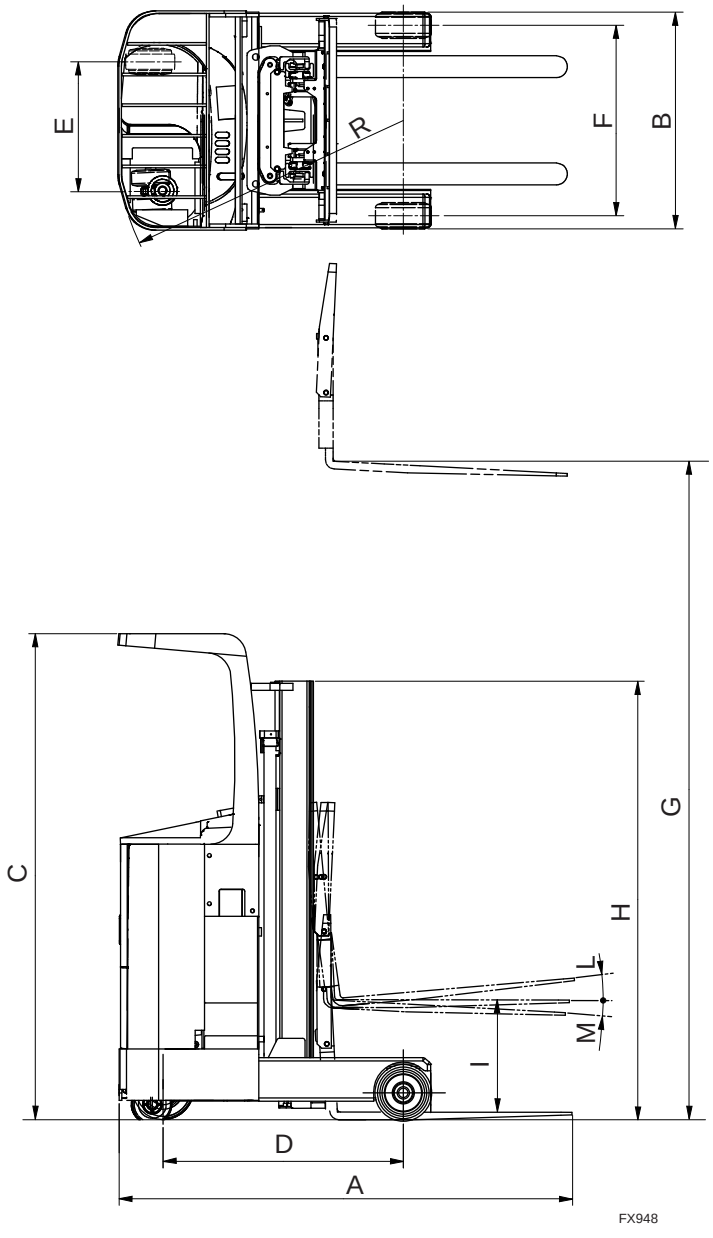

⚠ The specifications are subject to change without any advance notice to improve the quality.

https://truckmanualshub.com/

26.2 TRUCK SPECIFICATIONS

	Item	Unit	CER10	CER13	CER14	CER15	CER18	CER20	CER25	Symbol
Perfor-mance	max. load	kg	1000	1250	1350	1500	1750	2000	2500	
	Load center	mm	500							
	max. lift height	mm	3000							G
	Free lift height	mm	405							I
	Fork lifting speed (Loaded/Unloaded)	mm/sec	250/400	220/400	300/460	290/460	280/460	260/420	240/420	
	Tilt angle (Front/Back)	deg	3/5							M/L
	Traveling speed (Loaded/Unloaded)	km/hm	7.5/8.5	7.3/8.5	9.0/9.8	8.8/9.7	8.5/9.4	8.7/9.9	9.0/9.8	
	min. turn radius	mm	1360	1495	1520	1610	1750	1785	1970	R
General specifica-tion	Overall Length (Reach in)	mm	1900		2070	2070	2075	2335		A
	Overall width	mm	1000		1100	1111		1185	1230	B
	Overall height (Overhead guard height)	mm	2240		2260			2320		C
	Wheelbase	mm	1100		1250	1350	1500		1700	D
	Wheel tread (Front/Back)	mm	870/545		980/685			1030/686	1095/686	F/E
	Weight	kg	1880	1900	2180	2240	2270	2950	3010	
Tire	Front tire (LOAD)	–	ϕ250 × 120		ϕ254 × 114			ϕ267× 114	ϕ267× 135	
	Rear tire (DRIVE) (CASTER)	–	ϕ280 × 135 ϕ178 × 73		ϕ315 × 145 ϕ178 × 73			ϕ380 × 165 ϕ204 × 76		
Motor	Traveling	kW	2.4		5.0					
	Hydraulic	kW	5.0		8.5					
	Steering	kW	0.15		0.3					
	Battery	v/AH	24/400		48/210	48/280		48/335		

https://truckmanualshub.com/

26.3 BATTERY SPECIFICATIONS

Unit : mm

Model	Battery capacity	Weight	Size (L × W × H)	
			Battery box	Battery component
CER10/13	24V 400AH/ 5H	350kg	964 × 235 × 545	966 × 242 × 603
CER14/18	48V 280AH/ 5H	480kg	956 × 375 × 555	1066 × 380 × 603
CER20/25	48V 335AH/ 5H	577kg	1125 × 373 × 555	1141 × 380 × 603

Note) The above specifications are all about the battery designated by CMHA.
If you want to use a different battery, you must get the permiggion from our representative or authorized person.

https://truckmanualshub.com/

26.4 TIGHTENING TORQUE OF EACH PART

Item	Unit	Specification per model						
		CER10	CER13	CER14	CER15	CER18	CER20	CER25
Driving motor tightening bolt	kg·m	6.5~7.5						
Driving wheel bolt	kg·m	9~12						
Caster wheel nut	kg·m	10~13						
Load wheel tightening nut	kg·m	13~15		15~17				
Steering wheel tightening bolt	kg·m	8.5 ± 0.8						
EPS motor tightening Bolt	kg·m	3.3~3.6						
Tilt cylinder tightening bolt	kg·m	26.7 ± 2.7						
Pump coupling tightening nut	kg·m	4.5 ± 0.5						