https://truckmanualshub.com/

Volvo Truck Quality Manual

1 Introduction

2 Parking

3 General requirements

4 Loading / unloading operation

5 Transport by jockeys

6 Securing / lashing / support onboard carrier

7 Loading / unloading operation Lo/Lo

8 Damages

9 Quality audits

https://truckmanualshub.com/

Table of contents

1	Introduction	4
2	Parking	5
2.1	Parking requirements	5
2.2	Parking routines	5
2.3	Distances between parked vehicles	6
2.4	Slippery prevention	6
2.5	Snow & ice	6
3	General requirements	7
	Trucks related	
3.1	Tow / jump start	7
3.2	Starting with starting cables	8
3.3	Mechanical problems	10
3.4	Start the engine	10
3.5	Batteries	13
3.6	Central locking	15
3.7	Gearboxes	17
3.8	Ad Blue (Urea solution)	19
3.9	Air suspension	21
3.10	Airbag	22
Driver related		
3.11	Clothing	22
3.12	Drawing / marking / attaching	22
3.13	Miscellaneous	24
3.14	Some driving advice	25
4	Loading / unloading operation Ro/Ro	26
4.1	Distances between stowed trucks	26
4.2	Preparation of ship / trailer	26
4.3	Driving behaviour in port area or terminal	27
4.4	Driving behaviour onboard ship	27
4.5	Parking routines onboard ship	28
4.6	Stowing onboard ship	28
4.7	Lashing / unlashing routine	29
4.8	General condition	29
4.9	Ramps and loading platform	29
4.10	Lashing equipment	30
4.11	Attachment of lashing sling	31
4.12	Lashing of trucks	31
5	Transport by jockeys	33
5.1	General	33
5.2	Driving behaviour	33
5.3	Mechanical problems	33

https://truckmanualshub.com/

6	Securing / lashing / support onboard carrier	34
6.1	Introduction to this chapter	34
6.2	Wheel chocks	34
6.3	Wheel lashings	34
6.4	Lashing on tyres	35
6.5	Lashing on rims	35
6.6	Lashing around the axles	35
6.7	Lashing around the rear stabilizer	34
6.8	Use of supports	34
6.9	Securing carrier ramps	37
6.10	Lashing	37
6.11	Dismounting of parts	38
7	Loading / unloading operation Lo/Lo	43
7.1	Introduction to this chapter	43
7.2	Lifting instructions	43
7.3	Lashing methods for trucks piggyback	45
8	Damages	46
9	Quality audits	46

https://truckmanualshub.com/

1 INTRODUCTION

These requirements are valid for all kind of distribution activities of Volvo Trucks including loading/unloading as well as other types of handling performed in ports, stopovers or terminals. The instruction applies to all Volvo Logistics contracted parties.

These requirements also apply for all other brands which are handled under the responsibility of Risk Management Department.

These requirements are Volvo's minimum demands.
Each transport company can issue their own requirements, but must be in accordance with Volvo's. If any kind of handling instruction are issued a copy must be sent to Volvo Logistics Risk Management Dept.

Please note that these requirements do not in any way supersede the regulations stipulated by various authorities.

Random inspections and planned audits will be made continuously within all areas, terminals, ports, carriers, and vessels.
Detected remarks will be reported to the responsible persons at the contracted party.

The contracted party is responsible for ensuring that all involved personnel is notified and aware of these requirements.

All product training for personnel should be stated in writing.
Training records must be maintained and updated, and to be handed over to Volvo Logistics upon request.

The handling instruction provided by VLC will be updated on an ongoing basis. Always search at Volvo Logistics website for the latest edition available

VOLVO LOGISTICS CORPORATION
Risk Management Department
http://www.volvo.com/logistics/global/en-gb

https://truckmanualshub.com/

2 Parking

2.1 Parking requirements

All parking areas and roadways:

- must be well separated from other activities
- must be free from any object that may damage the vehicles
- must be cleaned up regularly
- must be covered with hard surface, asphalt or similar
- must be well drained
- must be fenced, guarded and well litt
- must be equipped with an efficient drive-through protection to prevent theft
- must have alarm system or camera surveillance
- must be pot hole free
- all vegetation must be systematically removed from the compounds and their immediate surroundings
- must be divided into separate areas dedicated to :
  Truck storage and truck loading / unloading

The trucks should be parked away from sources of emission that could contaminate them.

When parking in loadlines we recommend that all trucks are parked with the driver side wheels on the marked line in order to get straight rows.

2.2 Parking routines

Make sure that;

- parking brake is in on-position
- transmission is in N position
- all windows, doors etc. are closed
- wiper blades are in rest position
- ignition and all electric devices are switched off
- electric main switch is in off-position
- key in ignition or according to respective yards routine

https://truckmanualshub.com/

2.3 Distances between parked vehicles

Minimum distances between parked trucks :
- Between sides 1 metre (40 inches)
- Between vehicles lengthwise minimum 30 cm (12 inches)

Driver's door must be opened into an open space.

2.4 Slippery prevention

Avoid using stone chips for slippery prevention. Salt to be used with caution, avoid salt at parking areas. Ports located in areas, requiring slippery prevention, must have valid and updated routines for this. Used slippery prevention material such as sand must be cleaned up as soon as the weather allows it.

2.5 Snow and ice

Snow on parking areas must be removed before the vehicles are parked. Snow to be taken away with proper equipment. Rotating brushes or snow throwers are not to be used close to the vehicles.

https://truckmanualshub.com/

3 General requirements

3.1 Tow/jump start

It is absolutely forbidden to use trucks aimed for distribution for towing or to jump-start a non-starter. If the battery is low, use help-batteries or battery from a service car.
Non-starter should only be handled by authorized personnel and follow instructions.

https://truckmanualshub.com/

3.2 Starting with starting cables

1 Turn the ignition key to 0 position.
2 Make sure that the help start battery has 24 V total voltage or 24 V system voltage.
3 Switch the engine of the “assisting vehicle” off, and make sure that the vehicles do not touch one another.
4 Connect one of the clamps on the red cable to the positive terminal on the help battery. The positive pole is marked in red, P or +.
5 Connect the other clamp on the red cable to the positive terminal on the battery of the vehicle that needs help. The positive pole is marked in red, P or +.
6 Connect one clamp on the black cable to the negative terminal of the help battery marked in blue, N or -.
7 Connect the other clamp on the black cable to a place - an earth - some distance from the battery of the vehicle which needs help.
8 Start the engine of the “assisting vehicle”. Let the engine run for some minutes at a higher idle speed than normal (about 1000 rpm).
9 Start the engine on the other vehicle.
10 Remove the clamp on the black cable from the earth point.
11 Remove the clamp on the black cable from the negative terminal on the help battery.
12 Remove the red cable.

CAUTION

Do not use a start help unit as these can supply extremely high voltages which can damage control units

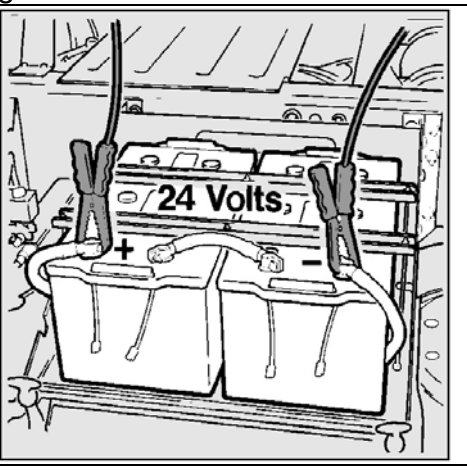

Note: After the truck has been started by using starting cables, the batteries should be charged using a battery charger. It takes about 20 hours to fully charge a battery. An alternator can never charge the battery to 100%; in favourable circumstances a maximum level of 90% can be achieved. Refer to the “Electrical system” section in the “Driver’s Manual, maintenance” for more information.

https://truckmanualshub.com/

Starting with starting cables, battery box at the rear
Always use another vehicle or other batteries to help start the engine

The starting cables should be able to handle 1000 A for at least 30 seconds.

1 Turn the ignition key to 0 position.
2 Make sure that the help start battery has 24 V total voltage or 24 V system voltage.
3 Switch the engine of the “assisting vehicle” off, and make sure that the vehicles do not touch one another.
4 Connect one of the clamps on the red cable to the positive terminal on the help battery. The positive pole is marked in red, P or +.
5 Connect the other clamp on the red cable to the positive terminal on the battery of the vehicle that needs help. The positive pole is marked in red, P or +.
6 Connect one clamp on the black cable to the negative terminal of the help battery marked in blue, N or -.
7 Connect the other clamp on the black cable to a place - an earth - some distance from the battery of the vehicle which needs help.
8 Start the engine of the “assisting vehicle”. Let the engine run for some minutes at a higher idle speed than normal (about 1000 rpm).
9 Start the engine on the other vehicle.
10 Remove the clamp on the black cable from the earth point.
11 Remove the clamp on the black cable from the negative terminal on the help battery.
12 Remove the red cable.

Note: After the truck has been started by using starting cables, the batteries should be charged using a battery charger. It takes about 20 hours to fully charge a battery. An alternator can never charge the battery to 100%; in favourable circumstances a maximum level of 90% can be achieved. Refer to the “Electrical system” section in the “Driver’s Manual, maintenance” for more information.

CAUTION

Do not use a start help unit as these can supply extremely high voltages which can damage control units.

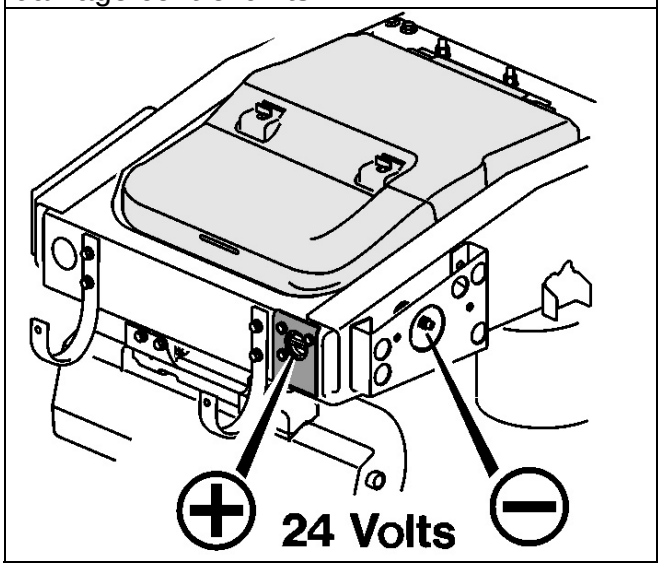

WARNING

Batteries contain oxyhydrogen gas which is very explosive. A spark, which can ignite if you connect the starting cables incorrectly, or if they are moved around during the starting procedure, is sufficient
for the battery to explode and cause serious damage and injury. Batteries contain sulphuric acid, which can cause serious corrosion damage. If the acid gets
in your eyes, skin or clothes, rinse with large amounts of water. If the acid gets in
your eyes, get medical attention at once. Do not lean over the batteries.

https://truckmanualshub.com/

3.3 Mechanical problems

If a mechanical problem occurs during distribution at harbour or terminal contact Volvo Action Service.

3.4 Start the engine

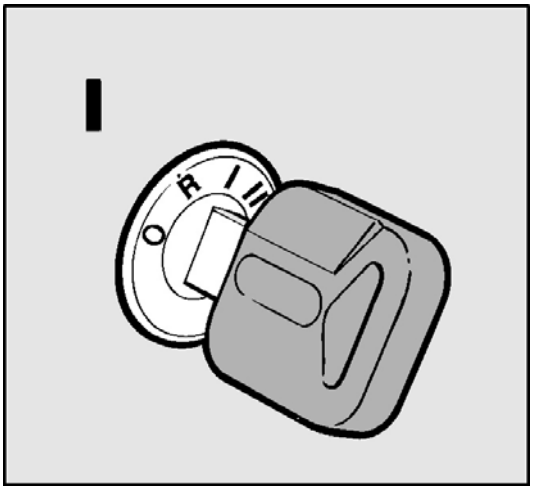

1 Turn on the main switch.

2 Check that
- the parking brake is applied
- the gearbox is in neutral
- the auxiliary brake is in position 0

3 Turn the starter key to the drive position

Note: If the key is turned straight from the off position to the start position on trucks with D13 engines, there is a delay of about one second before the starter motor is activated. During this time the starter motor shows no response as it is activated via EMS. When the key is turned from ignition position to start, there is no delay.

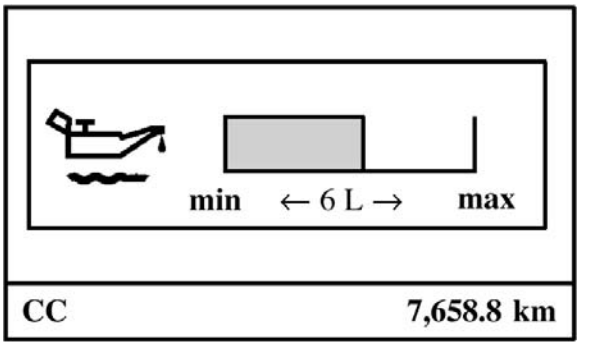

4 The display shows the engine oil level. If the engine has been running during the last 20 minutes, nothing is shown. The value shown under the graph is the difference between the engine max and min oil volumes.

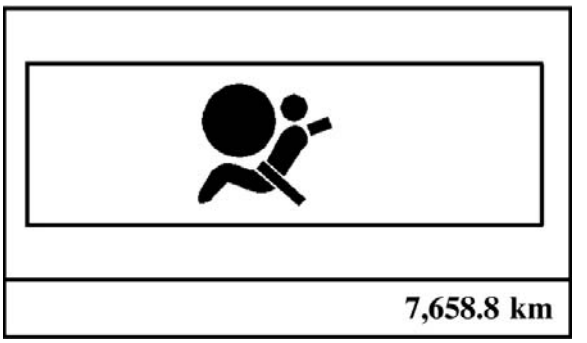

5 If the truck has air bags, the symbol for this is shown on the display.

6 Check that all the instrument panel lamps are working

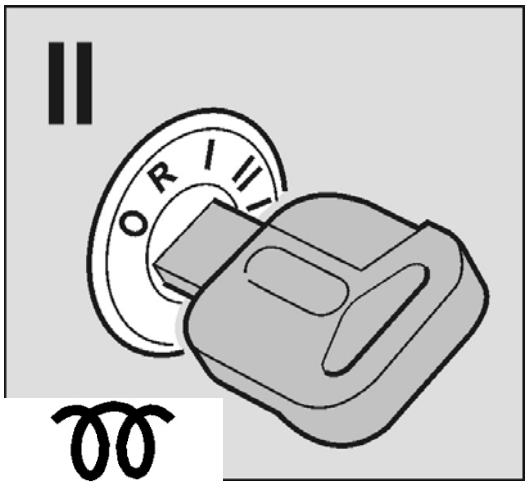

7 If the engine has pre-heating, turn the start key to pre-heating position and release the key

8 Wait until the pre-heating symbol goes out.

9 Start the engine
Run the starter motor by holding the key in the start position for a maximum of 30 seconds. If the engine has not started within 30 seconds: Turn the key to the radio position and wait for 15 seconds before trying to start again.

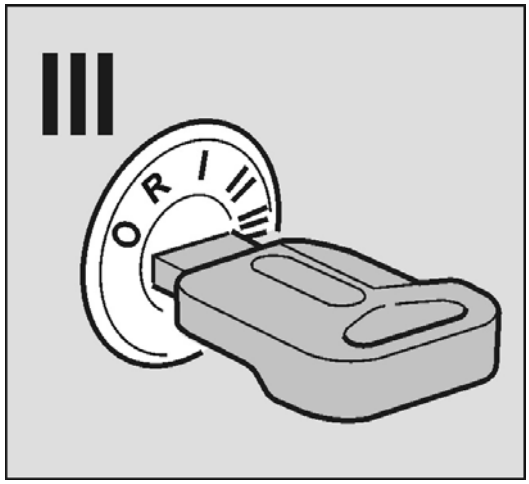

The following applies for D13: Run the starter motor by holding the key in the start position. If the engine does not start, the starting attempt will be automatically shut off after 15 seconds. A new attempt can be made by turning the key back to 0 position and then again to start position.

Note: The starter motors on the D12 and D13 engines have automatic overheating protection.

If the overheating protection cuts in on trucks with a D12 engine, the starter motor must cool down for 3 -15 minutes before a new attempt can be made.

If the overheating protection cuts in on trucks with a D13 engine, a message is displayed to verify this. The message shows how long the starter motor must be allowed to cool before it will be possible to try to start the truck again, usually 10–15 minutes.

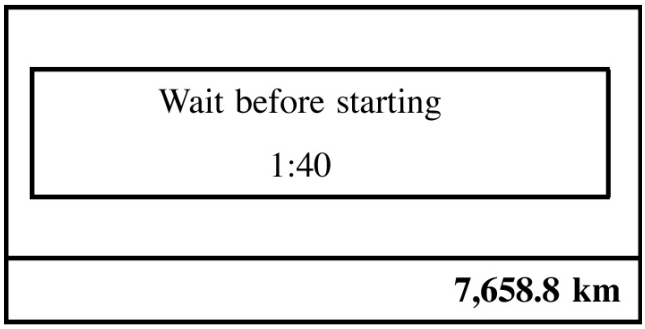

https://truckmanualshub.com/

10 Hold down the brake pedal for a few seconds to enable the cruise control
The air suspension is activated first after the parking brake is released or if the air suspension control box is used.

If the temperature of the coolant is below 50 C when the engine is switched on, the engine speed will be limited to 1000 rpm for 15 seconds

WARNING

Do not use start gas. An explosion can cause considerable damage.

Warming up

Warm the engine up by driving with low engine speed rather than running the engine while stationary. Avoid revving up excessively and high engine speed.

After starting let the clutch out in order to warm up the gearbox. The oil pump in the gearbox will begin working and will quickly attain working temperature.
Note: It is especially important that the gearbox is warmed up if the outside temperature is below 0 C.

Blocking valve

If the pressure in the braking system is too low, for example if the truck has been parked for a long period of time, the blocking valve must be pushed in for the parking brake to be released. Before the blocking valve can be pushed in the pressure in the braking system must exceed about 5 bar.

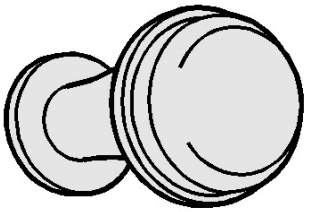

https://truckmanualshub.com/

3.5 Batteries

Before start the vehicle = reconnect the batteries

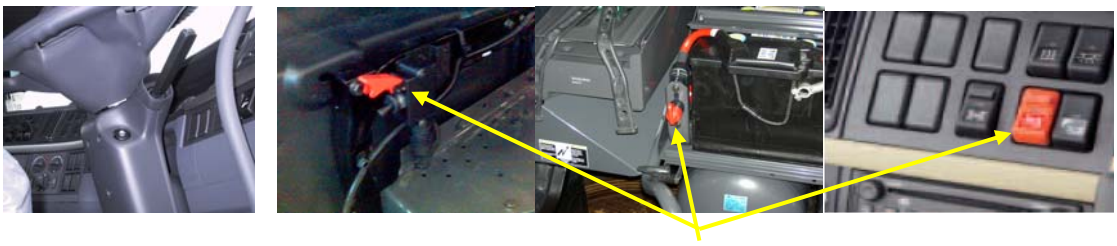

Verify that ignition and main switches are placed in off mode before re-connecting batteries

Battery boxes found at side of the frame or rear end of frame. Re-connect Press down to bottom

Important!! Press down the cable Lock secure Correct position

Always disconnect the electrical main switch when parking the truck

Disconnect the quick-lock at battery if the truck is parked/stored/stowed/transported more then 36 hours

https://truckmanualshub.com/

NOTE For Euro 4/5 trucks!
The UREA pump in the after-treatment system needs 90 seconds to empty the UREA hoses!
This is needed to avoid that the UREA is freezing and consequently damages the system!
Wait 90 seconds = UREA pump stops → then disconnect the battery cable!

ADR Remote control El main switch manual main switch

1. Ignition OFF 2. Switch OFF the main switch (ADR inside the cab) lock the doors with remote or key. (If equipped with main-switch)

3. Open cap lock switch 4. Put cable in between the batteries, put on the battery box cover

Incorrect position **Correct position**

5. Do NOT leave the cap lock open!!! 6. Cable is fixed between the batteries

3.6 Central locking

Unlock with the sender

Unlock the driver's door

Press the symbol for UNLOCK
The indicators will flash

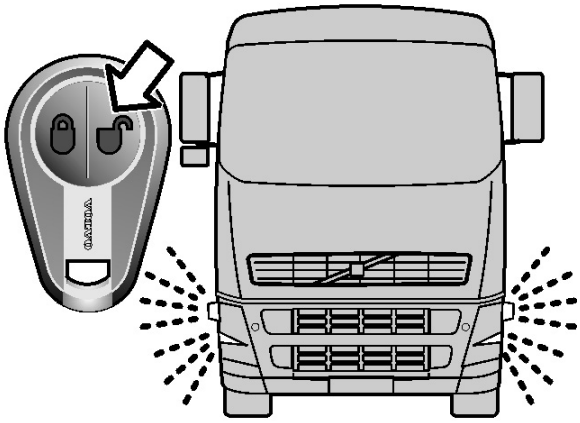

Unlock the passenger door

1 Unlock the driver's door using UNLOCK
  The indicators will flash
2 Press the symbol for UNLOCK again
  The indicators will flash

Lock with the sender

Press the symbol for LOCK
The flashers light up

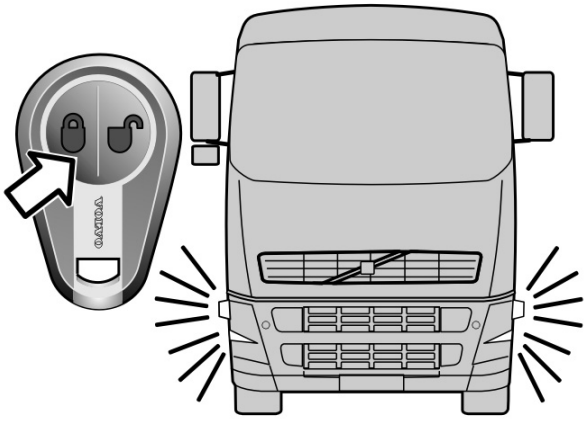

Unlock with the key

1 Unlock
  A door is unlocked
2 Lock
3 Unlock again
  Both doors are unlocked

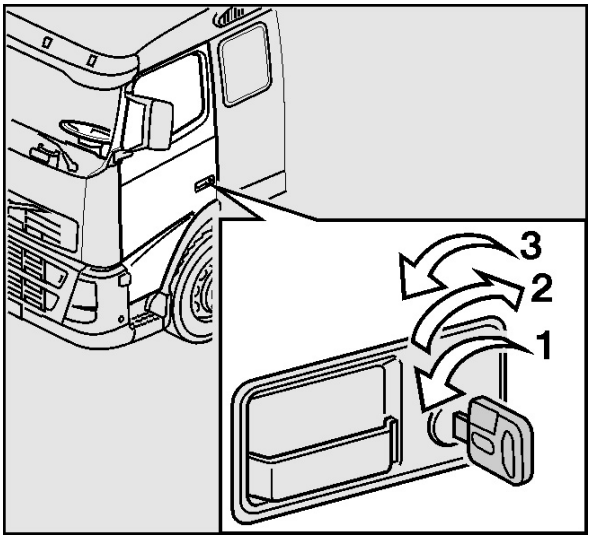

https://truckmanualshub.com/

Main switch at key unit

Turn on the main switch

Press the symbol for UNLOCK

or

Set the key at start position

Note: This only applies to trucks with electrically-controlled main switches.

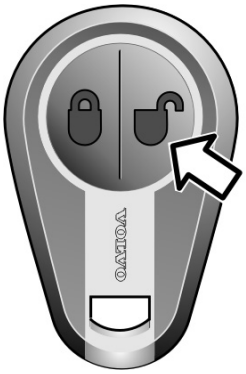

Switch off the main supply

1 Lock the door, press the symbol for LOCK
2 Press the symbol for LOCK twice consecutively
The main supply is switched off

Note: This only applies to trucks with electrically-controlled main switches.

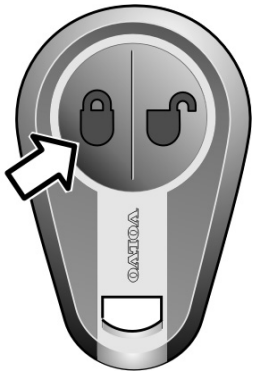

https://truckmanualshub.com/

3.7 Gearboxes

1. The engine can only be started with the gear in N-position.
2. Switch on the ignition key. Wait until the gear display on the instrument panel turns on.
3. Start the engine. Wait until the red warning light for the air pressure turns out.
4. Press the brake pedal and release the parking brake.
5. Select D-position for forward driving or R for reverse.
   If it is a ZF-model, keep the brake pedal depressed while selecting D or R.
6. Press down the accelerator pedal gently.
   The gear will only be in operation when pressing down the accelerator. This is important when starting up or down hills.
7. The gear must be in neutral position when ignition key is switched to “0”.

Gear selector

The gear selector is fixed to the seat and the gear lever can be tilted to allow the driver to move freely around the cab without being hindered by the lever.

Starting instructions

Information lamp

Icon for low air pressure to gear-box

Put the gear lever in neutral or tilted position or the engine will not start.
When the air pressure to the gearbox is too low, a warning will be displayed automatically. An icon will appear on the display at the same time as the information lamp comes on. Wait until the lamp has gone out
before driving off.

Stopping the vehicle

When the vehicle is stationary:

- Apply the parking brake.
- Move the gear lever to N, neutral.
- Stop the engine.

Note! The parking brake must always be applied when the vehicle is parked or if the driver leaves the driver’s seat for any other reason.

https://truckmanualshub.com/

In case of gearbox malfunction

If a gearbox malfunction occurs that prevents you from driving the vehicle, activate limp-home mode and drive on.

Note! The limp-home function should only be used for short distances.

The function is activated by pressing button L on the gear selector housing and moving the gear lever to A at the same time.

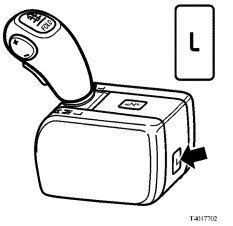

The following functions are affected:

- automatic mode is not available

The following gears can be used:

- reverse 1
- forward 1, 3 and 5

To engage reverse gear, move the lever to R. Move the lever back to A again to drive forwards. It is not necessary to press the L button again. The limp-home function will be disengaged when the ignition is turned off.

https://truckmanualshub.com/

3.8 AdBlue (Urea solution)

The engines are fitted with an exhaust gas cleaning system which cleans the exhaust using AdBlue urea solution. AdBlue is injected into the exhaust system at a point between the turbocharger and the silencer, which has an inbuilt SCR catalytic converter. The catalytic converter is used to reduce emissions of nitrogen oxides and particulates.

Urea solution is sold under the trademark AdBlue. It is a colourless liquid consisting of a mixture of urea and distilled water. It may have a slight smell of ammonia. The concentration of urea in AdBlue is 32.5%. AdBlue follows DIN standard 70070 and is **the only urea solution approved by Volvo** for use in Volvo trucks with Euro 4 engines. AdBlue may also be sold and marketed under other brand names, depending on the distributor, and can be used as long as it meets DIN standard 70070.

CAUTION

AdBlue is highly corrosive and can damage electrical connectors. If AdBlue gets into electrical connectors or wiring, they must be replaced. Cleaning electrical items is not enough.

AdBlue is not toxic but it should be handled with care. If AdBlue is accidentally spilled on the truck, rinse the area with water and dry off with paper or a rag. The solution can be aggressive when warm and can therefore damage, for example, nearby electrical connectors, electrical wiring and hoses if spilled. AdBlue freezes at approx. -11 C, but this is not a problem, as the SCR system is heated. The truck can be started and driven normally.

Trucks with ADR

Bear in mind that the ADR switch is only for use in emergencies. When the engine is switched off, a process begins to pump clean the AdBlue nozzle and supply lines. This process takes about 90 seconds and during this time the ADR switch must be switched on. It is especially important to do this in cold weather as there is a risk of the solution freezing. The cleaning process is not carried out if the ADR switch is used before or during the process.

CAUTION

AdBlue that has been modified or replaced by another liquid that does not comply with DIN 70070 will lose its intended cleaning effect on the exhaust gases and may damage the SCR system.

https://truckmanualshub.com/

Idling

To safeguard the power supply, trucks with Euro 4 engines have a faster idling speed in cold weather. The engine electronic control system determines when the increased idling speed needs to be applied; it cannot be activated manually by the driver. Because of this, if the truck is equipped with I-shift, it is especially important, when idling, to engage neutral while the truck is stationary with the engine running. This is to prevent overloading the clutch and gearbox.

CAUTION

Never put AdBlue into the fuel tank. This can damage the engine and the fuel system..

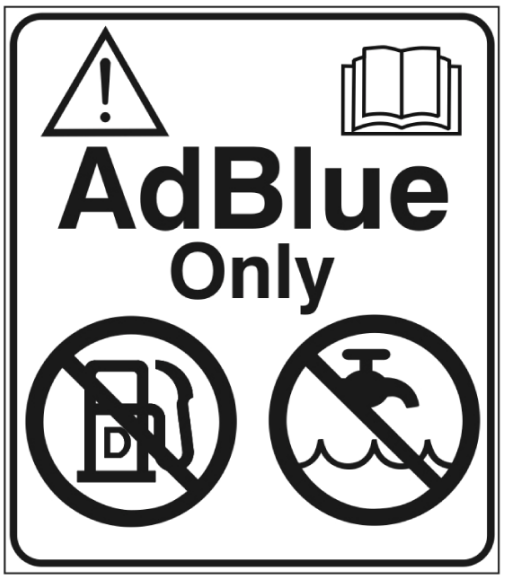

https://truckmanualshub.com/

3.9 Air suspension

If there is a problem with ground clearence for trucks , see how to increase ground clearence with air suspension.

There are three different types of air suspensions

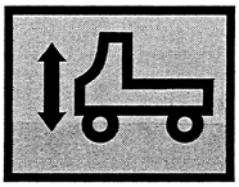

- Fixed level (not possible to adjust)
- Automatic level (possible to adjust)
- Manual level (only rear axle, not to be used)

All three types, warning lights for air pressure must be off before driving.

Automatic level

If the warning light on the instrument panel for air suspension still is on, despite correct air pressure, check the control box, located behind the driver seat.

- Switch 1 always to be in driving position.

It is possible to increase the height of the chassis. This is only to be done just before passing critical ramps and similar where there is low ground clearance.
No driving in port area with air suspension in high position.

1. Put switch 1 on the control box to high position.

2. Switch 2 always in centre position (only some types).

3. Press button 3 until the truck reach highest position.

Do not forget to restore switch 1 to driving position after passing critical low ground clearance point. Maximum speed 10 km/h

https://truckmanualshub.com/

3.10 Airbag

Some trucks are equipped with airbags. If so, than the centre of the steering wheel will be marked with “SRS”.
Always use the safety belts when driving an Volvo truck. The use of saftey belts are mandatory when driving trucks equipped with airbags.

3.11 Clothing

Clothes, gloves and shoes must be clean to avoid dirtying the trucks interior. All buttons and zippers must be covered. No tools or similar in pockets.

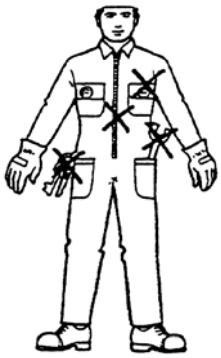

3.12 Drawing / marking / attaching

Writing on the trucks with any material is forbidden, as well as attaching stickers to the trucks painted surfaces apart from rapguard. Required sticker may be applied with care to the front window but not in the range of vision.

No rubber bands, metal hooks, wires or other material to be attached directly to the trucks.

https://truckmanualshub.com/

Rubber bands are only allowed to attach the lengthplate

https://truckmanualshub.com/

3.13 Miscellaneous

Eating, drinking and smoking inside or next to the trucks is not allowed. Passengers are not allowed inside the truck.
Do not open the sunroof and do not turn on radio equipment.
It's not allowed to remove any protection from the trucks. It's not allowed using cellphones during loading/unloading operation.

When folding the mirrors this must be done with care. The folded mirror may not be in contact with the door.

When entering and leaving the truck do not cause damages to painted parts close to the footstep.

https://truckmanualshub.com/

3.14 Some driving advice

1 Check after starting, and occasionally when driving, that the instruments show normal values. If a warning lamp lights up when driving, stop and check the reason.

2 **Always** use 1st gear to pull away or alt. Crawl gear with as low engine speed as possible (700–800 rpm).

3 Never race a cold engine! Avoid long periods of idling.

4 **Never cover the radiator!** Check the coolant level regularly and always use the correct coolant. Also check the hoses and belt tension. Do not drive with a leaking radiator or heating system.

5 **Never drive away until the brake system warning lamps have gone out.** Do not forget to release the parking brake.

6 Try not to turn when the front wheels are impeded by a kerb or such like. The power steering and the tyres can be damaged.

7 **Do not rest your foot on the clutch pedal.** Do not slip the clutch unnecessarily. Using a too high gear can cause unnecessary clutch wear.

8 **Do not change gear when the power take-off is engaged**. (Applies to gearbox mounted power take-offs on manual gearboxes.)

9 The reverse gear is unsynchronized. Shift to LOW range before engaging reverse. In good driving conditions it is possible to reverse with HIGH range engaged.

Note: Changing between HIGH and LOW range when reversing is not permissible. First select HIGH or LOW range and then select reverse.

10 **Use the engine brake when decending hills and during gentle braking**. Avoid having the engine brake constantly applied on slippery roads.

11 **Use the differential lock on slippery roads.**

WARNING

Do not turn corners on firm roads with the differential lock engaged.

12 **Let the engine idle for at least 1 minute after hard driving, before switching it off.** This avoids heat stress in the engine and involuntary coolant loss.

13 Check the function of the air drier by draining the primary tank or one of the circuit tanks every week.

14 Always use the correct fuel and the correct oil.

15 Close the rear shelf hatches before driving off.

16 The lid on the tachograph should always be closed.

https://truckmanualshub.com/

4 LOADING/UNLOADING OPERATION

It's forbidden to transport trucks with mounted roofspoiler in backward position

4.1 Distances between stowed trucks

Minimum distances

- Between vehicles lengthwise 10 cm or 4 inches.

- Between lowest part of the truck and carrier superstructure minimum 6 cm or 2.4 inches.

The driver must always be able to open the driver's door into an open space.

Make sure no deformations are made to the loaded truck.

<u>Unacceptable</u>

4.2 Preparation of ship / trailer

- All roadways, ramps and decks should be free from lashings and other material that could cause damage to the vehicles.

- All ramps and loading platforms must be adjusted to fit the measurements of the vehicles

https://truckmanualshub.com/

4.3 Driving behaviour in port area or terminal

Maximum speed limit in port, terminal, loading and unloading area 30 km/hour or 20 miles/hour.

Maximum speed limit when using sand or stone chips for slippery prevention 20 km/hour or 10 miles/hour.

Keep extra long distance between vehicles to avoid stone chipping.

4.4 Driving behaviour onboard ship

When driving on ramps and decks all vehicles must be driven at a low speed and according to respective shipping lines' regulations.

The speed should always be reduced at the beginning and end of ramps. Decks and ramps can be slippery. Keep a safe distance to other vehicles.

https://truckmanualshub.com/

LASHING/STOWING ONBOARD SHIP

4.5 Parking routines onboard ship

Make sure that;

- parking brake is in on-position
- transmission is in N position
- all windows, doors etc. are closed
- wiper blades are in rest position
- door mirrors are folded inwards
- ignition and all electric devices are switched off
- electric main switch is in off-position
- key in ignition or according to respective shipping line's routine
  Battery disconnected if according to 3.5

4.6 Stowing onboard ship

No vehicles to be parked on the ship's weatherdeck.

Stowing should be done according to shipping lines procedure and be performed in a way that makes unloading as easy as possible.
No vehicles should be reversed during unloading.

Vehicles always to be separated from other cargo. No vehicles parked between or under trailers, machinery etc.

The driver must always be able to open the drivers door into an open space. Never park vehicles with their wheels upon floor chains, fixed lashing eyelets or any other objects.

Note: Minimum distance when stowing piggybacked trucks is 40 cm (16 inches) between sides and 50 cm (20 inches) lengthwise.

https://truckmanualshub.com/

4.7 Lashing/unlashing routine

Lashing/unlashing must always be done by a separate gang.
Lashing operations must be done simultaneously with the loading.
No lashing to be done afterwards. Lashing material to be moved between parked vehicles below bumper or spoiler level.
Do not lean against the vehicles and do not use bumpers as support when rising.

4.8 General condition

Decks and ramps must be regularly cleaned. Leakage from hydraulic equipment will not be accepted. Loose lashing material, trailer bars and other equipment must be removed and secured.

4.9 Ramps and loading platforms

Ramps and decks must be constructed in such a way that there is no risk of damaging the vehicles.
All ramps must have rounded and soft approach and be at an angle of no more than 8 degrees.

All pillars and other obstacles located close to vehicles must be covered with protective material or marked with zebra tape.
Transverse open space, over which the wheels of the truck are to pass, should never exceed 15 cm or 6 inches, respective 5 cm or 2 inches in height.

Small ramps must be used to avoid below problems.

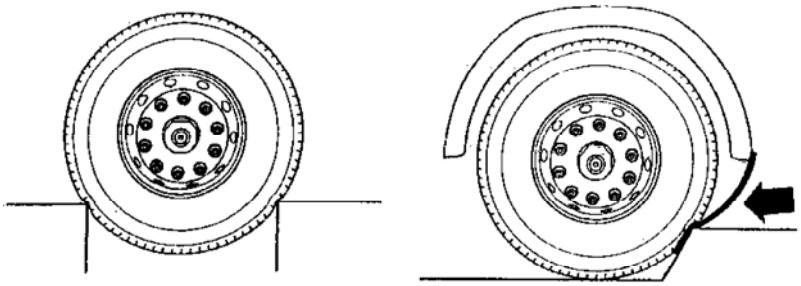

https://truckmanualshub.com/

4.10 Lashing equipment

Only special lashing equipment for securing heavy vehicles may be used. All straps, tensioners and hooks should be intact.
Damaged or worn out lashing equipment must be replaced.

Example of a recommended lashing sling for trucks.

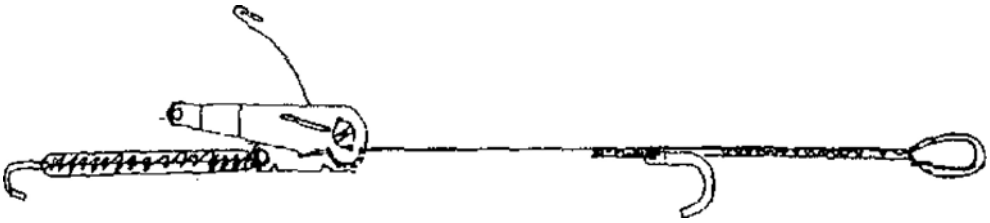

It is only allowed to use torsion bars and chains for lashing trucks. Hooks are never to be attached directly into the chassis. Soft sling must be used around the chassis axle or the chain must be protected with a fibre tube when in contact with the chassis.

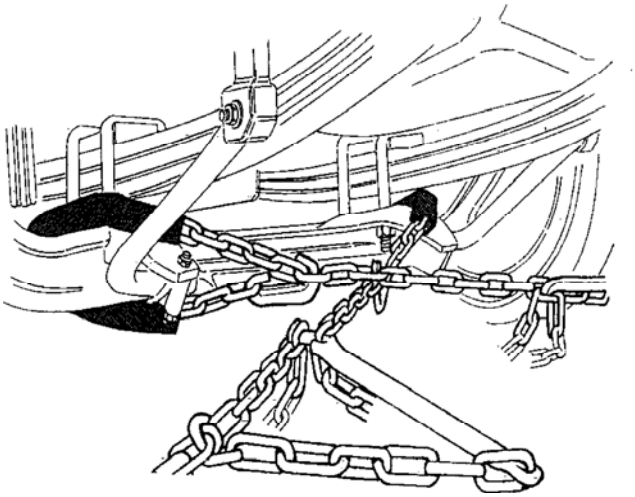

Fixed lashing equipment, such as floor chains and eyelets, should be designed and attached in such a way that they do not damage tyres and rims.

Not permanently fixed lashing equipment, such as loose chains, must be removed before operation starts.

https://truckmanualshub.com/

4.11 Attachment of lashing sling

Always try to get an angle of 45 degrees measured horizontally from the lashingpoint and an angle of 30 degrees measured vertically from the lashingpoint. Lashing never to be in contact with the truck so it can cause damages.

4.12 Lashing of trucks

All lashings must be done in such a way that the vehicle is not damaged. Precautions must be taken, not to lash around steering parallel stay, tubes or electrical cables or any other not approved lashing point.

No chains around axles, use soft slings or protect the chain with fibre tubes.

Lashing methods for single trucks
Lash around axles according to figure.

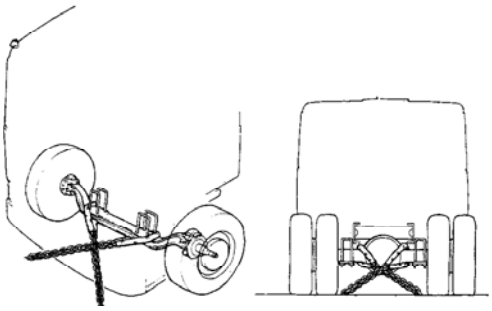

Trucks may also be lashed around rear stabilizer as shown below.

Note: Lashings as above must regularly be checked/tightened during the voyage. Possible air leakage from air suspension will lower the chassis and the lashing will slack.

https://truckmanualshub.com/

Lashing methods for trucks on flats:

If there is a need to lash the trucks to the ships deck, it must be done according to “lashing methods for trucks and “lashing methods for piggybacked trucks”.

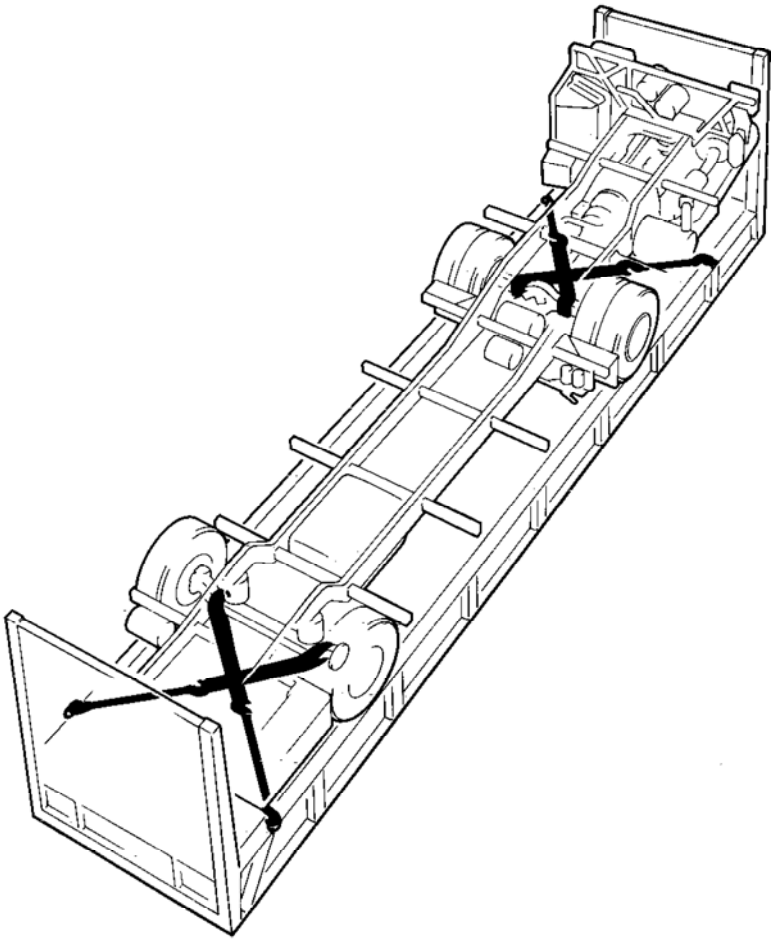

https://truckmanualshub.com/

5 TRANSPORT BY JOCKEYS

5.1 General

Follow Volvo's requirements in this instruction as well as reading the truck instruction booklet.
It's not allowed to bring passengers during transport.
Smoking is not accepeted inside the trucks.
Plastic protection for driver´s seat may be removed during driving.
Replace plastic protection upon delivery.

5.2 Driving behaviour

Drive with care and follow the driving instructions.
Note a truck without superstructure has a very low rear axle pressure, which will affect brake distance and stability.
In case of work deviations, please drive slowly to avoid chippings.
Behave like a gentleman; remember that you are representing Volvo.
Avoid driving in convoy, if impossible always use sufficient distance.

5.3 Mechanical problems

If a mechanical problem occurs during transport, contact the receiver for instructions.
When impossible to reach the receiver contact Volvo Action Service.

https://truckmanualshub.com/

6 SECURING / LASHING / SUPPORT ONBOARD CARRIER

6.1 Introduction to this chapter

There are different regulations depending on the country in which the transport takes place. The general rule is that all vehicles must be secured on the carrier. The securing must be done by a combination of wheel chocks and lashings.

It is the transporters´ responsibility to make sure that each countries legal regulations are followed and that loaded vehicles can not move during transport.

Avoid spinning wheels during loading and unloading operation.

6.2 Wheel chocks

Each chassis must be secured with at least 2 or 4 wheel chocks, depending upon local regulations. The wheel chocks must be properly fixed to the loading platform. Design and size of the wheel chock must be appropriate for trucks.

6.3 Wheel lashings

All lashings must be done in such a way that the vehicle is not damaged. Precautions must be taken, not to lash around steering parallel stay, tubes or electrical cables or any other not approved lashing point. Thighterners should be placed/used in such a way that no damages occurs. Lashings must be maintained and replaced on a regular basis.

Chains or unprotected hooks never to be attached or in contact with the vehicle.

https://truckmanualshub.com/

https://truckmanualshub.com/

6.4 Lashing on tyres

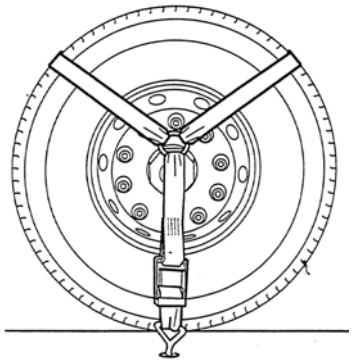

6.5 Lashing on rims

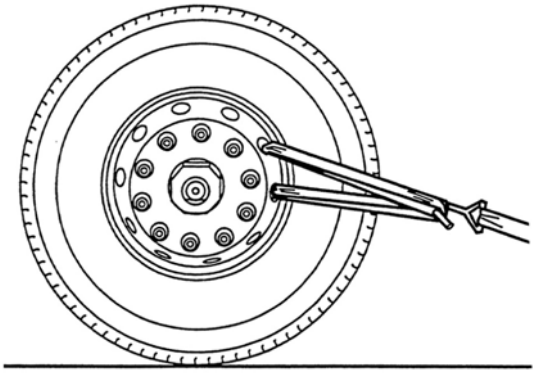

(Note: Not allowed on alloy wheels.)

6.6 Lashing around the axles

https://truckmanualshub.com/

6.7 Lashing around the rear stabilizer

For trucks with air suspension it is also allowed to lash around the rear stabilizer. It´s not allowed to lash in the rear crossmember.

Note: Lashings as above must regularly be checked/tightened during the transport. Possible air leakage from air suspension will lower the chassis and the lashing will slack.

6.8 Use of supports

All supports must be covered with rubber or wood surface. Steel to steel contact between support and truck is not accepted.

If no sufficient distance remains after lowering the truck with air suspension it is allowed to place supports underneath axles or stabilizer.

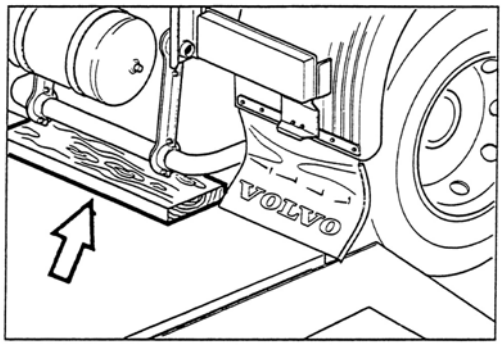

https://truckmanualshub.com/

6.9 Securing carrier ramps

If there is a need to secure the carrier upper ramp/deck, it is allowed to place support between this ramp/deck upon the chassis on the truck underneath.

Approved locations for supports are fifth wheel, upon tyres or frame. A rubber mat should be used as protection.

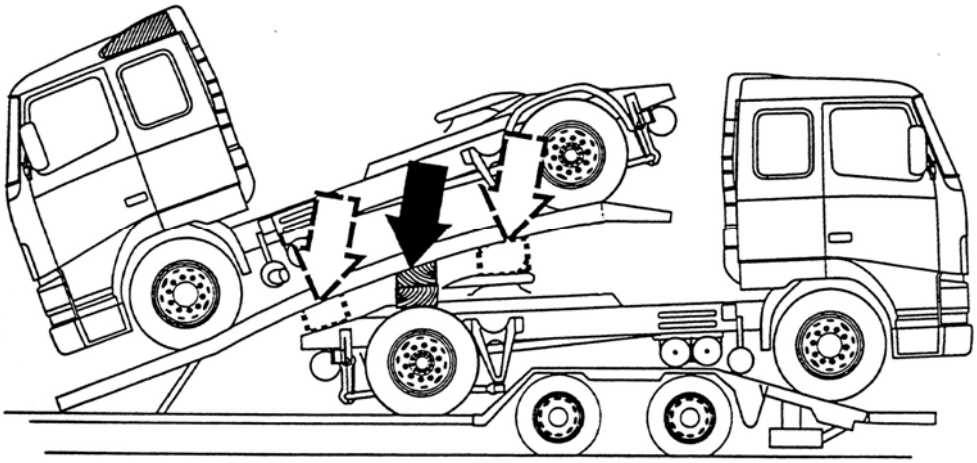

6.10 Lashing

Lashing of ramps must be done to the carrier itself.

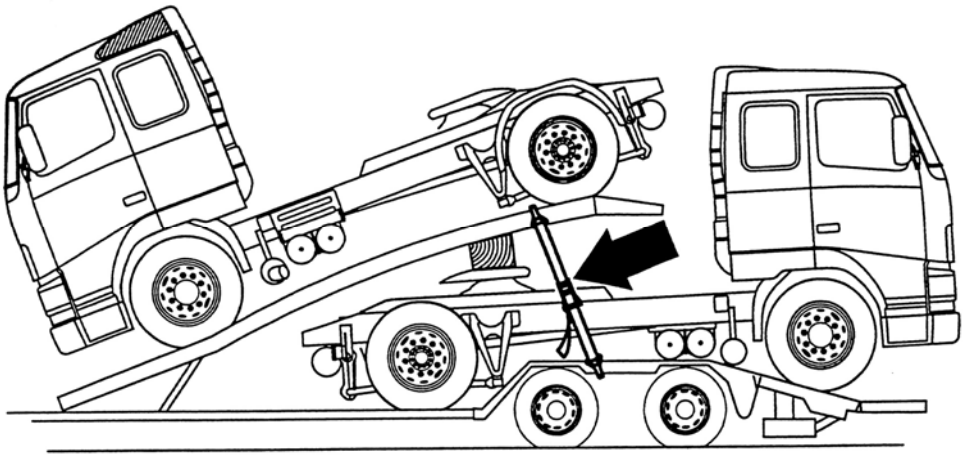

https://truckmanualshub.com/

6.11 Dismounting of parts

Following items are allowed to dismount:
- Spare wheel
- Spoiler transport mounted on the chassis
- Rear light including console
- Roof section for air inlet
- Antennas
- Rear fenders
- Under run protections
- Wheel housing including console
- Upper part vertical exhaust pipe

Dismounting of other parts only after approval from Risk Management Department.

When dismounting parts, never climb/stand upon fuel, airtanks or painted surfaces on the cab.
Always use tools with correct dimensions, no adjustable spanners.
When dismounting consoles fixed with bolts in threaded holes, always remount the bolts. This to protect the threads.

Small parts to be stored on the passenger side.

All parts to be packed in a proper way to avoid damages, both on the part itself and the cab interior.

Bigger parts to be mounted/secured on the chassis.

This is to be done in such a way that the parts or the chassis will not be damaged. It is also important that all parts are secured on the chassis in a safe way to avoid losing parts during transport.

Always use soft lashings for securing. Use plastic/cardboard/rubber mats between parts and the chassis. Scraped off paint or scratches on the part or the chassis is not accepted. When moving transport mounted roof spoiler, there must be two persons for lifting to avoid damages.
It is not allowed to remove transport protections from inside the cab.

https://truckmanualshub.com/

Dismounting & remounting mudguards

PICTURES	INFORMATIONS
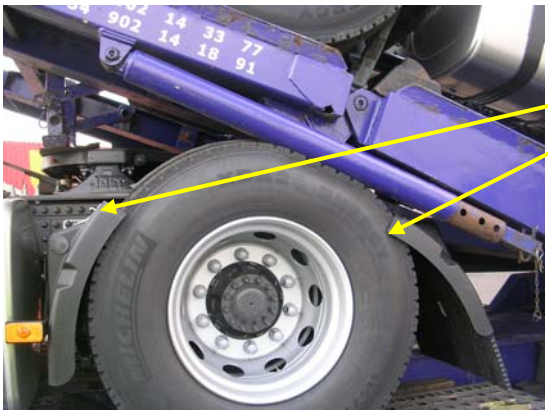	<u>Dismounting</u> : • joint can be loosened with a wrench key <u>Remounting</u> : • joint is tightened at140Nm with a standard angle nut runner.

https://truckmanualshub.com/

Dismounting & remounting air intake

PICTURES	INFORMATIONS
	Upper air intake part
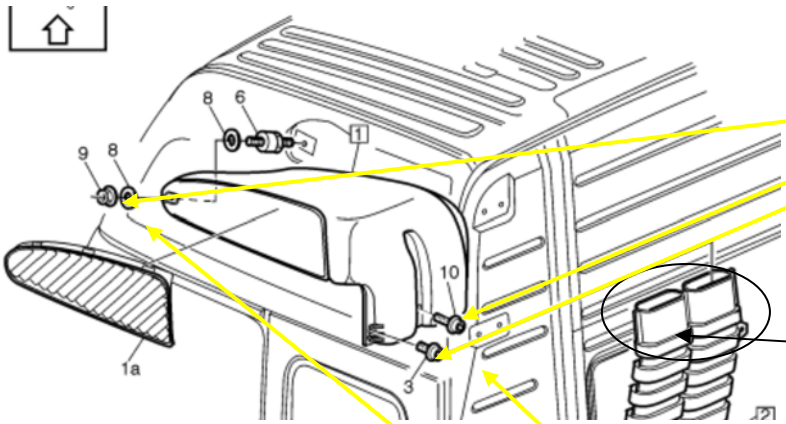 Angle nutrunner	<u>Dismounting</u> : • Hardware can be loosened with an angle nutrunner : a. Qty 1 (Nut M8x9,4) b. Qty 1 (Screw PT6*35) c. Qty 4 (Screws PT6*25/ 2 on each side) • Drain for evacuating water from snow / rain is present inside 2 pipes. No further protection is required. **<u>Remounting</u>** : • Caution when remounting parts: i. Electrical tools may damage threads ii. Ensure parts are properly connected prior to be tighten • Tight parts with an angle nutrunner a. Qty 1 (Screw PT6*35) : 3 Nm b. Qty 4 (Screws PT6*25/ 2 on each side) : 3 Nm c. Qty 1 (Nut M8x9,4) : 24 Nm

https://truckmanualshub.com/

Dismounting & remounting rear bumper

PICTURES	INFORMATIONS
	Dismounting : • joint can be loosened with a pistol grip impact nutrunner or – a standard angle nut runner
	Remounting : • joint is tightened at140Nm with a standard angle nut runner.

https://truckmanualshub.com/

Dismounting & remounting rear light brackets

PICTURES	INFORMATIONS
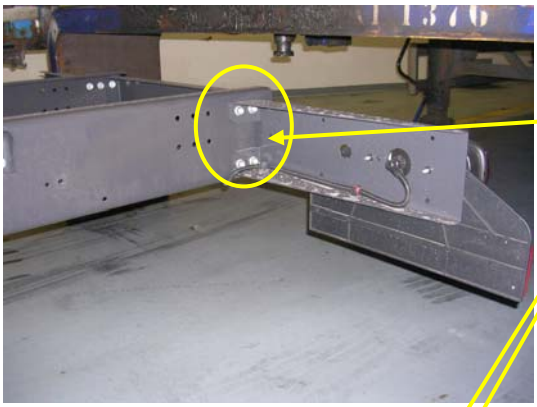	**<u>Dismounting</u> :** • joint can be loosened with a pistol grip impact nutrunner or a standard angle nut runner
	• when dismounting rear lamp, protect connectors from corrosion or else. For example, lamp connectors P/N 1079283 can be used.
	<u>Remounting</u> : • joint is tightened at140Nm with a standard angle nut runner.

https://truckmanualshub.com/

7 LOADING/UNLOADING OPERATION LO/LO

7.1 Introduction to this chapter.

It is the shipping lines responsibility to make sure that wires etc. used for lifting operations have the right strength.

Lifting is to be done with lifting devices attached to the front wheels. See figure below (lifting devices to be mounted by the factories).

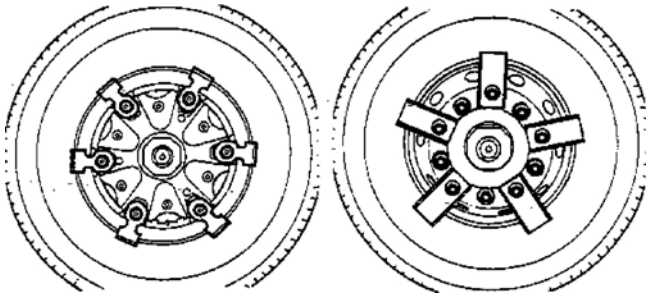

7.2 Lifting instructions

Spreader must always be used. Wires never to be in contact with the truck cab or the truck superstructure. Wires around frame work to be protected with a soft fibre tube. Do not damage electrical wires and pneumatic tubes.

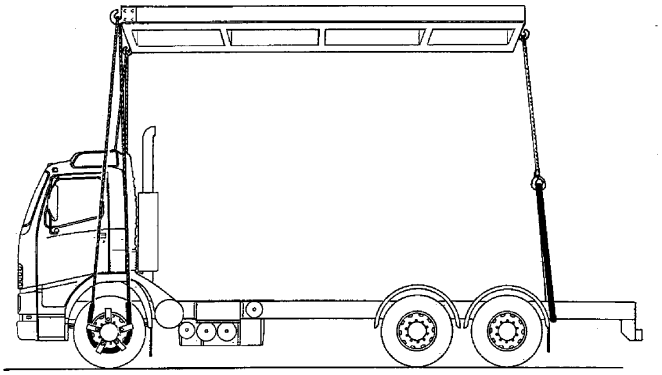

https://truckmanualshub.com/

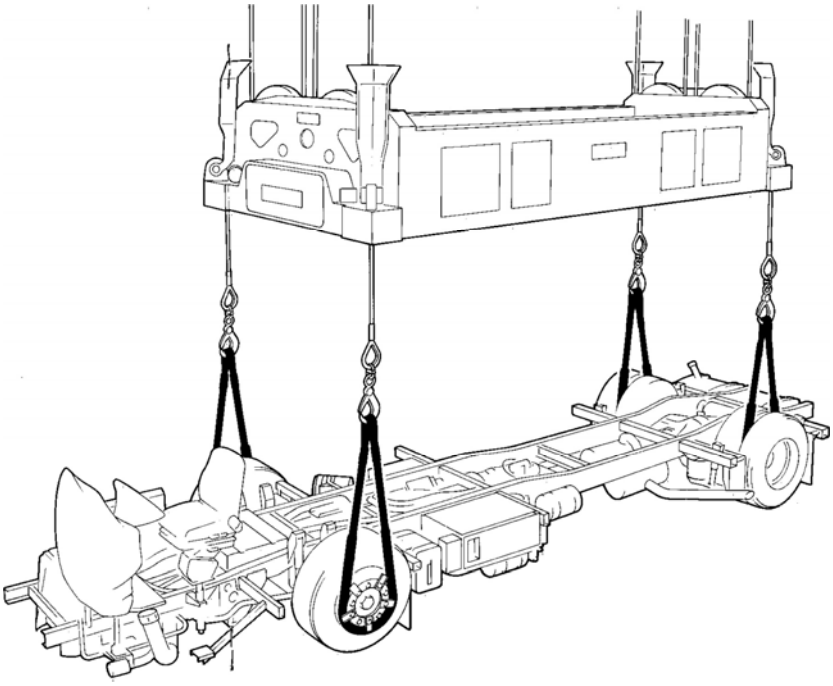

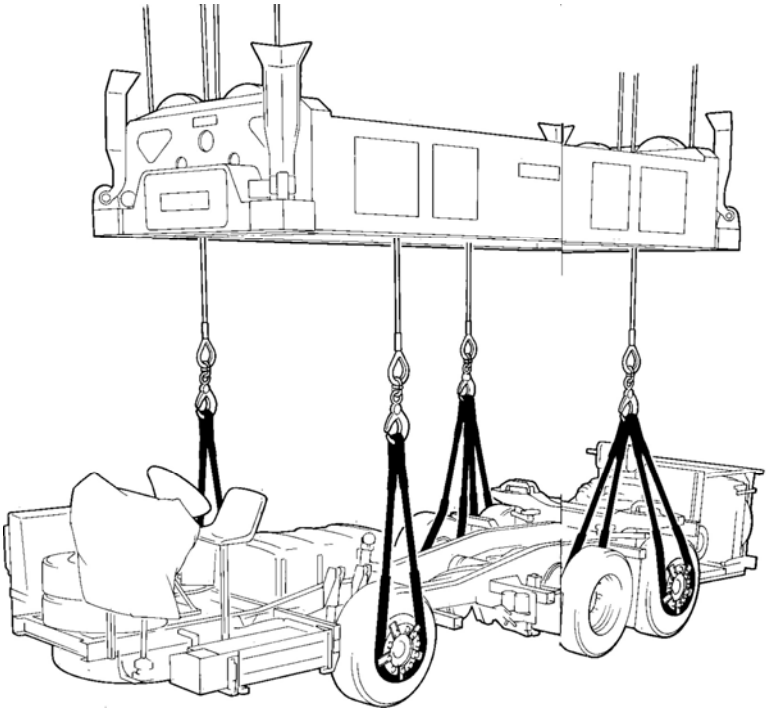

https://truckmanualshub.com/

Lashing methods for trucks piggyback:

Lash around front and rear axle according to figure below.

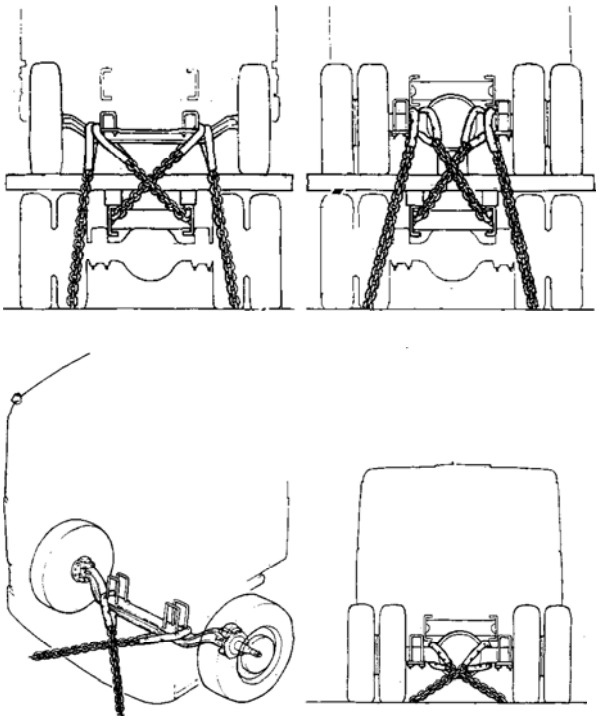

It is allowed to attach lashing (not hooks/chains) to the rims on the upper chassis. Use soft sling or protect the hook/chain with fibre tubes. This method is only to be used if it is impossible to reach the axles.

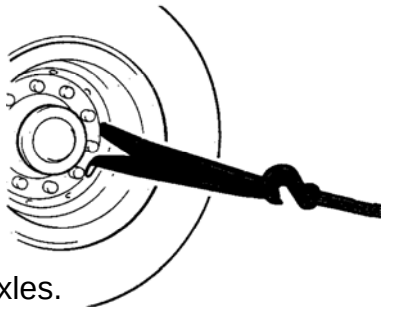

Note: All lashing from upper trucks must be regularly checked/tightened during the voyage. Possible air leakage from suspension will lower the chassis

https://truckmanualshub.com/

8 DAMAGES

All vehicles must be checked before entering the vehicles.
If a transit damage is found, a Vehicle Condition Report must be filled out.
Instructions for assessment of transit damages can be find at
Volvo Logistics / Risk Management Department website.

Major damages such as transport accidents, total loss or other severe damage, theft, fire, vandalism etc. must be reported immediately to Risk Management Department at Volvo Logistics. This in order for VLC to decide if the vehicle should continue it's voyage to final destination or be returned to the place of loading.

In case of broken windscreens and/or flat tyres the transport company must take action to avoid further damage, i.e. cover broken windscreens and replace flat tyres.

9 Quality audits

Volvo Logistics reserves the right to audit all operations, at any time, to check that the handling instructions provided by Volvo Logistics are followed.

Anyone with contract to Volvo Logistics that uses a subcontractor are responsible for that the handling instruction are followed. Audit regarding a subcontractor will be turned to contract holder or responsible person at company audited.

When an audit result is considered not approved, VLC will request an actionplan.

The result from audits / inspections will be registred and statistics will be performed and are available from Risk Management Department at Volvo Logistics.