https://truckmanualshub.com/

NICHIYU

OPERATOR'S MANUAL

FBT9P/10P/13P/15P/16P(B)/18P(B)/20P(B)N-80 Series

NICHIYU

ELECTRIC LIFT TRUCK

OPERATOR'S MANUAL

80 SERIES

FBT9P
FBT10P
FBT13P
FBT15P
FBT16P(B)
FBT18P(B)
FBT20P(B)N

⚠ WARNING

Unsafe use of this lift truck may cause serious injury or death. Operators and maintenance personnel must read this manual and be sure that they understand its contents before operating, inspecting or carrying out maintenance on this lift truck. This manual should be kept near the lift truck for reference and periodically reviewed by all operators and maintenance personnel who come in contact with it.

NICHIYU
Nippon Yusoki Co., Ltd.
1-1, 2-Chome, Higashikotari, Nagaokakyo-shi, Kyoto 617-8585 JAPAN
Tel: +81-(0)75-956-8690 Fax: +81-(0)75-955-0584 URL: http://www.nichiyunet.co.jp/en

Printed in Japan
Pub No. OP-12-001
200/1203
Copy rights

https://forklift-manuals.jimdofree.com

Downloaded from www.Manualslib.com manuals search engine

https://truckmanualshub.com/

ELECTRIC LIFT TRUCKS

OPERATOR'S MANUAL

NICHIYU

https://forklift-manuals.jimdofree.com
Downloaded from www.Manualslib.com manuals search engine

https://truckmanualshub.com/

https://forklift-manuals.jimdofree.com

Downloaded from www.Manualslib.com manuals search engine

https://truckmanualshub.com/

INTRODUCTION

The operator must read and understand the instruction of safe operation contained in this manual.

- This operator's manual provides for the proper operation, easy maintenance and periodical inspection.
- Prior to operation, read this manual carefully for safe and efficient operation.
- Specifications and equipment in this manual are subject to change without any notice by the manufacturer for further improvement and modifications.
- Make sure these important instructions in this manual are available for the operator on each delivery or transfer of the truck. Keep this manual after reading.
- If you have any questions, please feel free to contact your local NICHIYU dealer.

☞ and ⚠ are very important for you and others for safety. Follow these instructions.

	DANGER	Indicates an exteremely hazardous situation which, if not avoided, will result in death or serious injury. You must follow this instruction.
	WARNING	Indicates a potentially hazardous situation which, if not avoided, could result in death or serious injury. You must follow this instruction.
	CAUTION	Indicates a potentially hazardous situation which, if not avoided, may result in minor or moderate injury. You must follow this instruction.
	NOTE	Indicates suggestions, tips and hints related to the safety of an operator and maintenance of a truck.
	GENERAL PROHIBITION	If the prohibition is not kept, serious accidents can be caused.

https://forklift-manuals.jimdofree.com

Downloaded from www.Manualslib.com manuals search engine

https://truckmanualshub.com/

CONTENTS

1 . SAFE OPERATION 1

Safety decals and name plates 1
Information for safety operation 4
How to survive in a tip over 18

2 . PART NAME AND FUNCTION 19

Name of part 19
Driving equipment 19
Indicator panel 20
Indication of display 21
Function of display 22
Various kinds of mode selection 28
Operating equipment 35
Laser pointer (Option) 41

3 . DRIVING AND OPERATION 46

Preparation of start 46
Traveling 47
Stacking operation 48
Picking operation 49

4 . BATTERY AND CHARGER 51

Battery 51
Precautions for charging the battery 54
Charger 56
How to charge the battery (By stationary charger) 58
How to charge the battery (By built-in charger) 62
Exchanging battery 74
Level of electrolyte and specific gravity 76

5 . INSPECTION PRIOR TO OPERATION 78

Check point and contents 78
Inspection procedure 79

6 . INSPECTION AFTER OPERATION 83

Inspection after working 83

7 . PERIODIC SERVICING 84

Precautions of maintenance 84
Weekly (50-hour) servicing 87
Monthly (200-hour) servicing 89
Lubrication points and recommended oil 90
Every three-month (600-hour) servicing 91
Semiannually (1200-hour) servicing 91
Replacing parts and trouble shooting 92

8 . QUICK FAULT FINDING 93

9 . PERIODICAL REPLACING PARTS 94

10. STABILITY OF FORKLIFT TRUCK 95

Load center and capacity 95
Stability of the forklift truck 96

11. SPECIFICATIONS 97

12. COLD STORAGE TYPE FORKLIFT TRUCK (CS type) 99

Protection from rust and corrosion 99
Protection from low temperature 99

13. SIDESHIFT ATTACHMENT 100

Sideshift attachment 100
Safe operation 101
Part name and function 102
Materials handling 104
Periodical inspection and service 107
Periodical replacing parts 110

https://forklift-manuals.jimdofree.com

Downloaded from www.Manualslib.com manuals search engine

https://truckmanualshub.com/

To know about specification of forklift

[11] SPECIFICATIONS [P97]

OPTIONS

LASER POINTER [P41]
[12] COLD STORAGE TYPE FORKLIFT TRUCK (CS type) [P99]
[13] SIDE SHIFT ATTACHMENT [P100]

To know about safe operation

[1] SAFE OPERATION [P1]

[10] STABILITY OF FORKLIFT TRUCK [P95]

To know about procedure of countermeasure for break down

[8] QUICK FAULT FINDING [P93]

To know about procedure of operation

[2] PART NAME AND FUNCTION [P19]

[3] DRIVING AND OPERATION [P46]

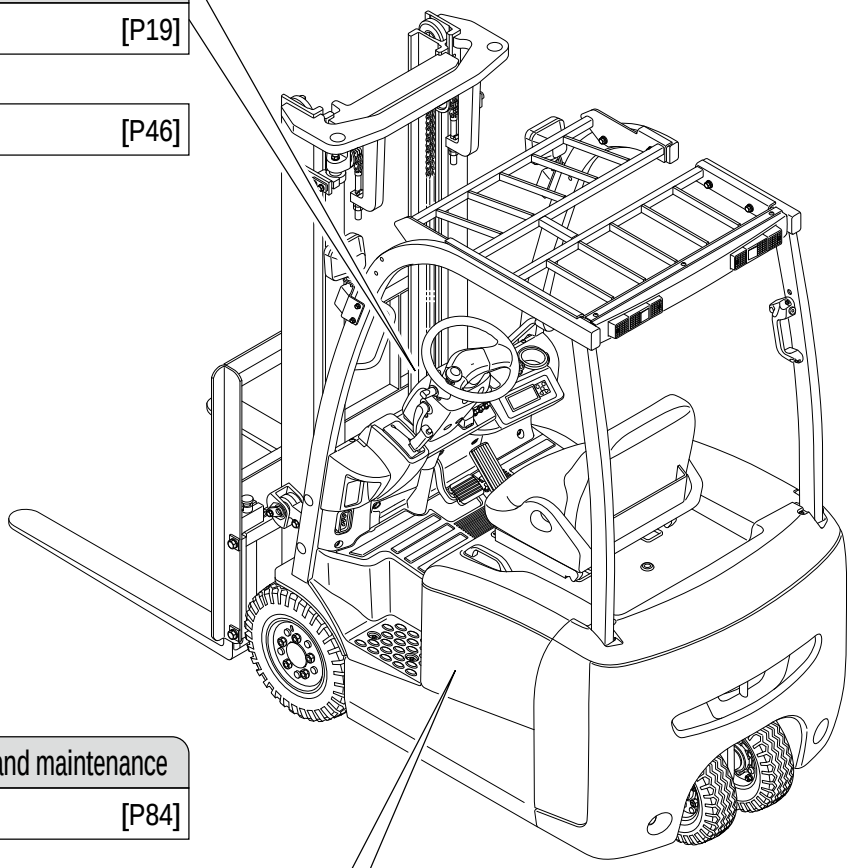

To know about periodical inspection and maintenance

[7] PERIODIC SERVICING [P84]

[5] INSPECTION PRIOR TO OPERATION [P78]

[6] INSPECTION AFTER OPERATION [P83]

[9] PERIODICAL REPLACING PARTS [P94]

To know about battery and charger

[4] BATTERY AND CHARGER [P51]

https://forklift-manuals.jimdofree.com

Downloaded from www.Manualslib.com manuals search engine

https://truckmanualshub.com/

https://forklift-manuals.jimdofree.com

Downloaded from www.Manualslib.com manuals search engine

https://truckmanualshub.com/

1 SAFE OPERATION

Safety decals and name plates

Safety decals and name plates are installed on the forklift truck to give information about possible hazards.

If you find that the decals and name plates are removed and/or unreadable, contact your local NICHIYU dealer for replacement.

Indication of direction (Right side / Left side)

The following illustration shows the direction of this forklift truck from the operator's compartment.

A : Front
B : Rear
C : Left
D : Right

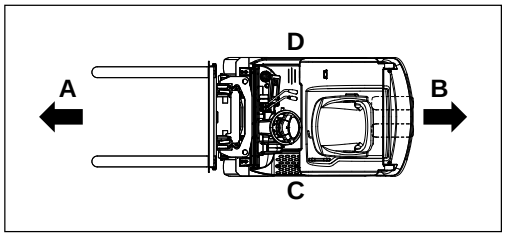

Decals and Name Plates

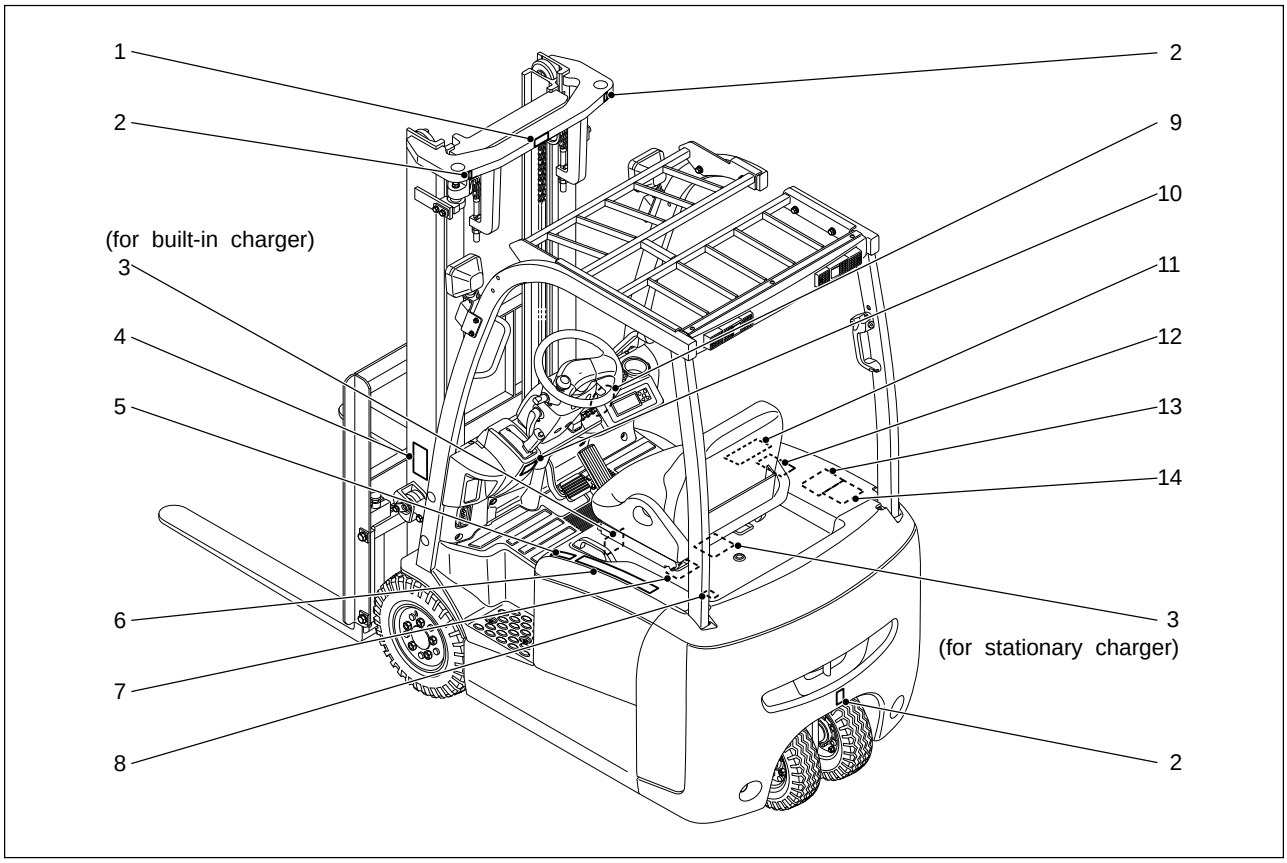

https://forklift-manuals.jimdofree.com

Downloaded from www.Manualslib.com manuals search engine

https://truckmanualshub.com/

1

2

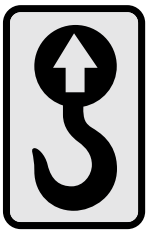

3

CAUTION

SAFETY PRECAUTIONS FOR CHARGING BATTERY

1. Charge the battery only in approved and well ventilated area without smpking, flames and / or sparks. (Flammable gas will be generated by the battery while charging.)
2. Open the battery cover fully when charging the battery.
3. Inspect any damages on the charger cable before charging the battery.
4. Do not use the cable if any damages or transformation are found.
5. Grab the plug itself when connecting or disconnecting the cable. Do not pull the cable when disconnecting to avoid damages.
6. Insert the plug completely to the end of the receptacle. Improper connection may cause overheating or burning while charging the battery.
7. Do not disconnect the plug while charging. it may create sparks.
8. Push the "STOP" button when interrupting to charge before.
9. If any abnormalities are found on the cable or plug such as abnormal heating, electric shocks, loosing connection, any transformations disconnecting the plug. or damage of parts, stop charging immediately and repair them.

50008-34910-0

4

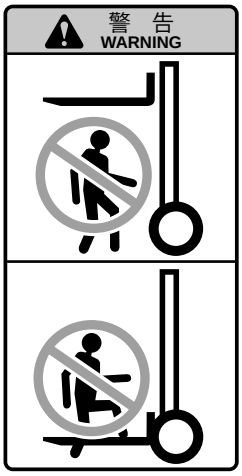

5

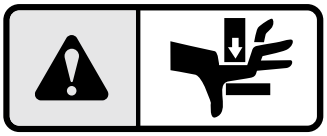

6

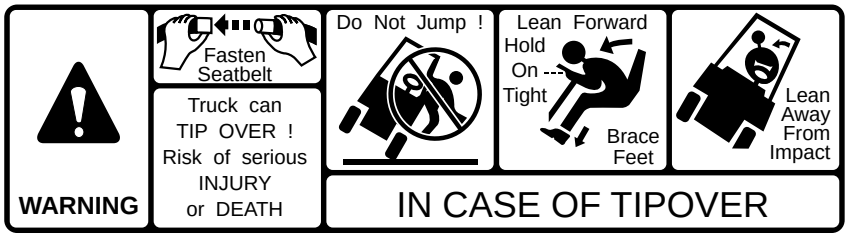

FOR SAFETY NOTICE FOLLOWING WARNINGS

1. Lateral tipover can occur when unloaded if the combination of speed and sharpness of turn produces an overturning moment which exceeds the stability of the truck.
2. Lateral tipover can occur if overloaded or loaded within capacity and the load is elevated and if turning and/or braking when traveling rearward or if turning and/or accelerating when traveling forward produces an overturning moment which exceeds the stability of the truck. Rearward tilt and/or off-center positioning of the load and/or uneven ground conditions will further aggravate the above conditions.
3. Longitudinal tipover can occur if overloaded or when loaded within capacity and the load is elevated if forward tilt. braking in forward travel. or commencing rearward travel produces an overturning moment which exceeds the stability of the truck.
4. Serious injury or death can occur to the operator if he/she is trapped between the truck and the ground.

IN CASE OF TIPOVER

1. The operator should stay with the truck if lateral or longitudinal tipover occurs. The operator should hold on firmiy and lean away from the point of impact.
2. The operator should stay with the truck if it falles off a loading dock or ramp. There are other situations where the environment of the landing area presents a severe hazard. In those incidents. it may be prudent for the operator to leave the truck.

24700-04830

7

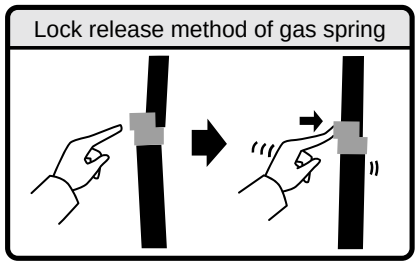

8

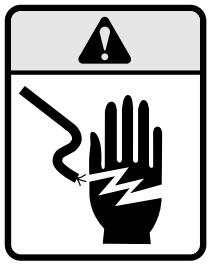

9

10

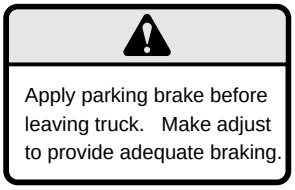

https://forklift-manuals.jimdofree.com
Downloaded from www.Manualslib.com manuals search engine

https://truckmanualshub.com/

11

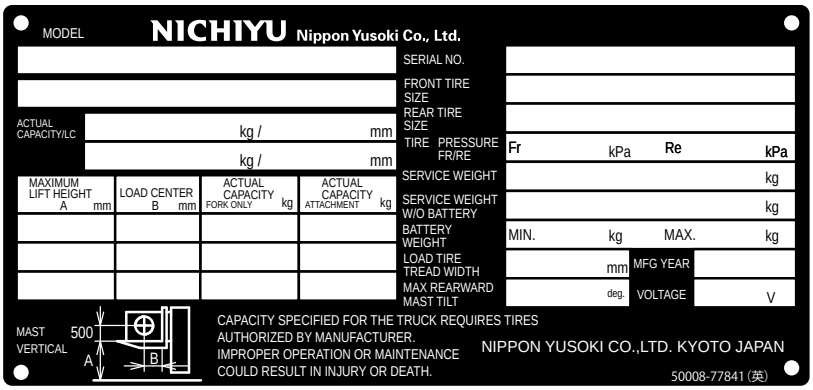

12

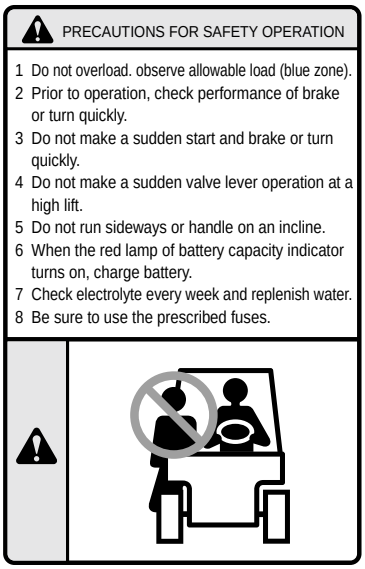

13

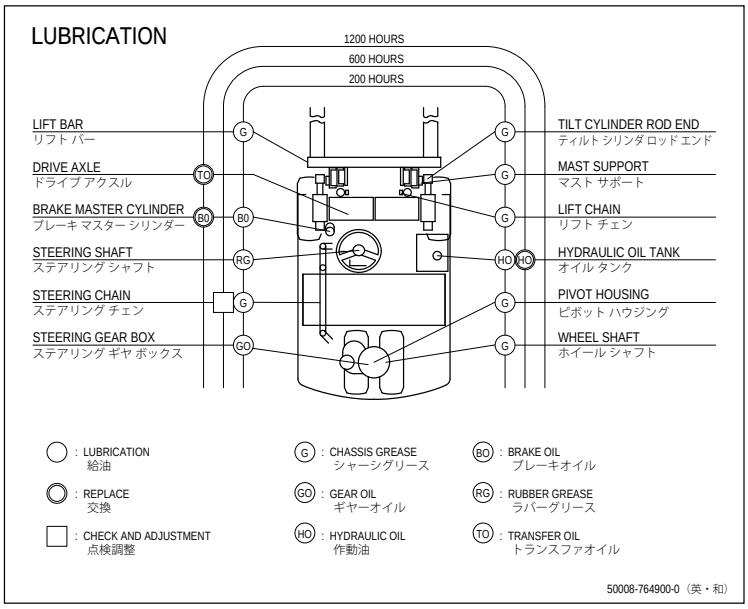

14 (with japanese battery only)

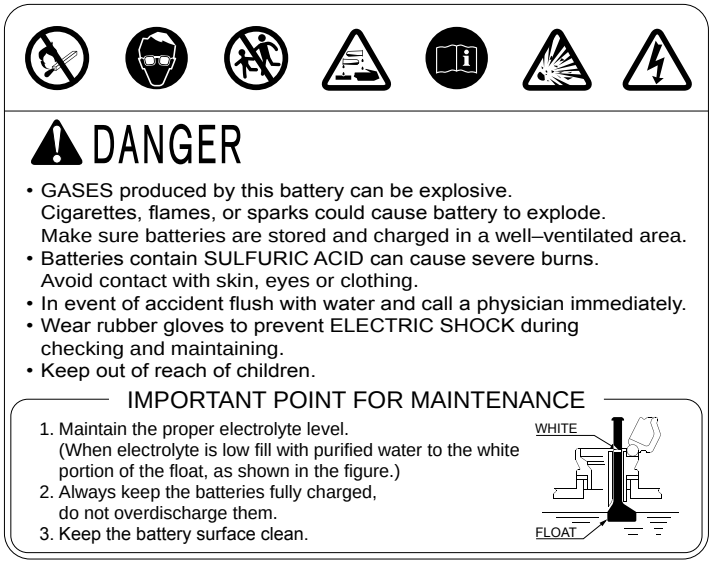

https://forklift-manuals.jimdofree.com

Downloaded from www.Manualslib.com manuals search engine

https://truckmanualshub.com/

Information for safety operation

Do not operate forklift truck while taking drugs and/or alcohol; otherwise, an accident may occur which can cause serious injury or death.

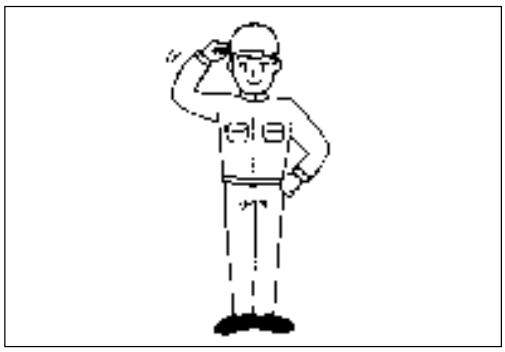

Only a trained and authorized operator shall operate the forklift truck.

The operator is recommended to wear a helmet, safety shoes and working clothes.

Do not use a forklift truck in the following circumstances.
Where the explosive gas (thinner, gasoline etc.) may exist.
When using a forklift truck in the following area, consult your local NICHIYU dealer before operation.
1. Where the explosive materials such as gunpowder are exist.
2. The dusty place.

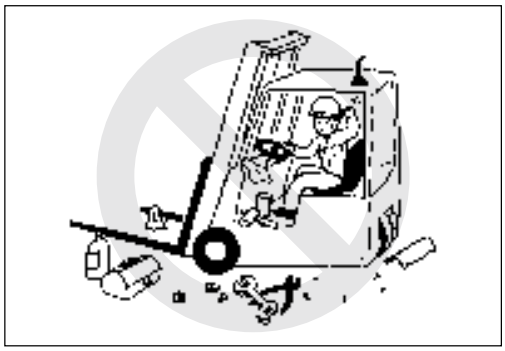

Keep the operator's compartment clean at all times.

Do not operate the forklift truck with greasy or wet hands.

NICHIYU forklift trucks are equipped with an overhead guard and load backrest extension.

- These designed features are incorporated to protect the operator from falling loads.
- Make sure they are in place and in good condition.
- Precautions still should be exercised by the operator for possible falling objects or impacts.

Do not modify the forklift truck.

- Modifications and additions shall not be performed without the written approval of NICHIYU. Contact your local NICHIYU dealer for details.
- Do not install any parts blocking visibility from operating position.

https://forklift-manuals.jimdofree.com
Downloaded from www.Manualslib.com manuals search engine

https://truckmanualshub.com/

Carry out the daily inspection before operation.

- **Stop operation and report immediately for any damage or faults on the forklift truck.**
- **Do not operate the forklift truck until it is repaired completely.**

Do not overload. Failure to observe the rated capacity can cause the forklift truck to tip over.

- Refer to the load chart and make sure that the weight and the load center are within the capacity of your forklift truck before handling. If the attachment is installed on the forklift truck, the maximum capacity should be reduced. Read the instruction manual of the attachment before operation.

Use proper size pallet with enough strength for the load.

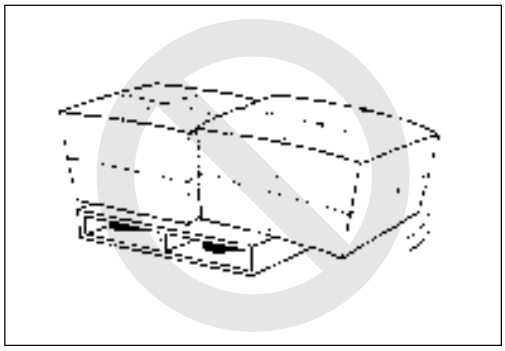

https://forklift-manuals.jimdofree.com

Downloaded from www.Manualslib.com manuals search engine

https://truckmanualshub.com/

Make sure that the load is palletized securely in a proper shape. If a load is unstable, it can easily shift and fall on someone.

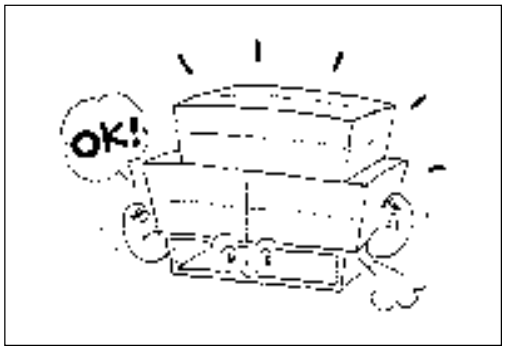

Look all around the forklift truck before moving.

- Make sure no person is around the forklift truck before starting.

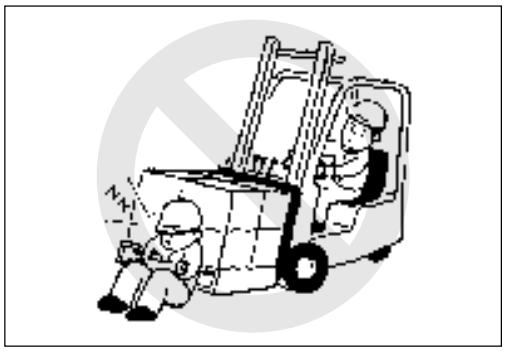

Travel in backward if forward visibility is blocked.

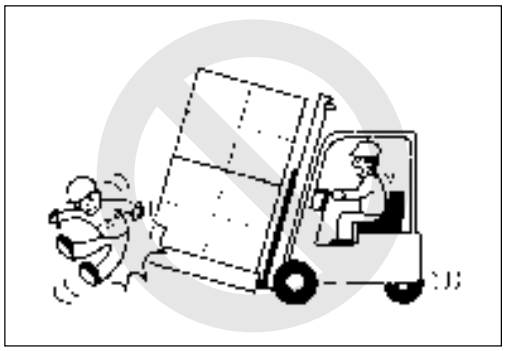

Make sure no person is around the forklift truck when traveling in backward. Look around behind the forklift truck and sound the horn before moving.

- If the load blocks your view, or when you travel down a grade with a load, drive backward. Always look in the direction of travel. A look-out helper may be required if your visibility is obstructed.

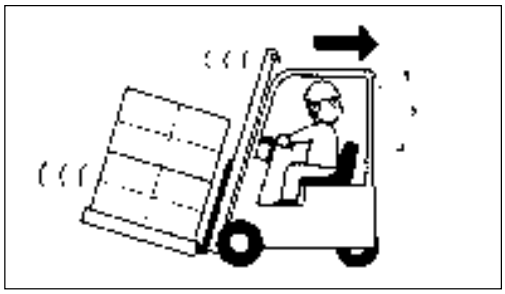

Stop at blind corner and/or intersection.

- If you cannot see where you are going, don't move! Travel slowly around corners.
- Sound the horn at cross aisles and other areas where you cannot see clearly or where visibility is restricted.

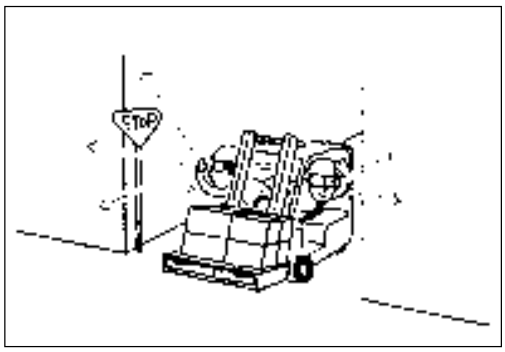

https://forklift-manuals.jimdofree.com

Downloaded from www.Manualslib.com manuals search engine

https://truckmanualshub.com/

Always look in the direction of travel!

- Always be aware of people near your forklift truck. Do not proceed near them until they are aware of you.

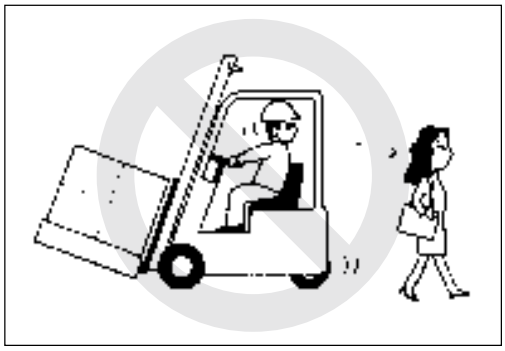

Be aware of tail swing.

- Always make sure that the tail swing area is clear before turning.
- When turning in aisles, especially narrow aisles, keep as far away as possible from stock and racks. Be extra cautious near people.
- Failure to observe the tail swing area when making a turn can injure or kill someone.

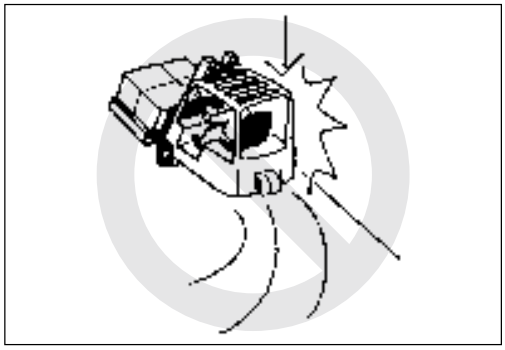

Do not make a sudden start, stop or turn.

- A sudden start or braking can cause the load to fall.
- A sharp turn while traveling can cause the forklift truck to tip over.

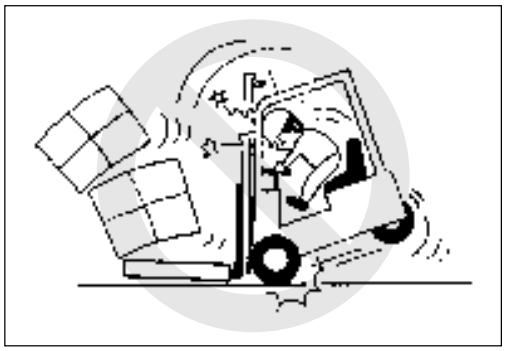

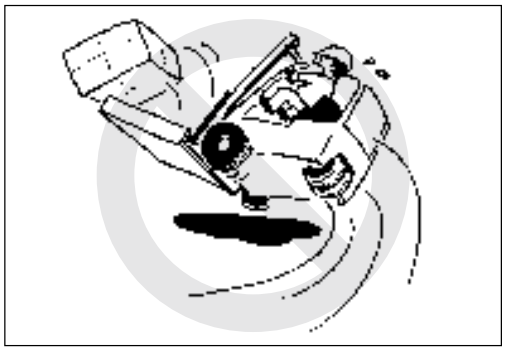

https://forklift-manuals.jimdofree.com

Downloaded from www.Manualslib.com manuals search engine

https://truckmanualshub.com/

Do not go over obstacles, curbs, ditches, ridges and railroad trucks.

- Avoid bumps, holes, spill spots and loose materials that may cause the forklift truck to swerve or tip. If unavoidable, slow down, and proceed with caution.

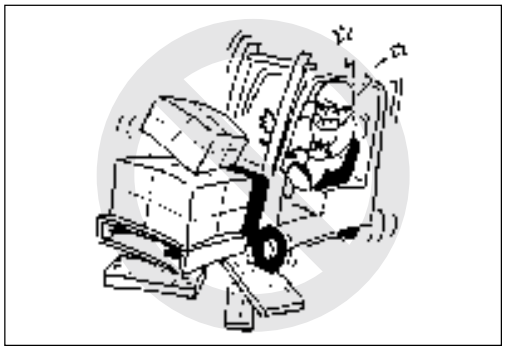

Always check road surface, and stay away from soft or uneven ground to avoid a tip over.

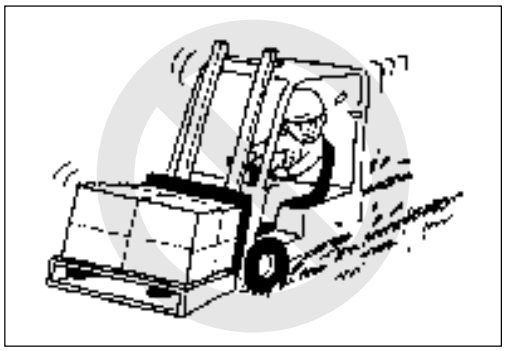

Avoid slippery surface.

- Water, sand, gravel, ice or mud can cause a tipover. If unavoidable, slow down.
- Do not go into a flooded or water covered area.

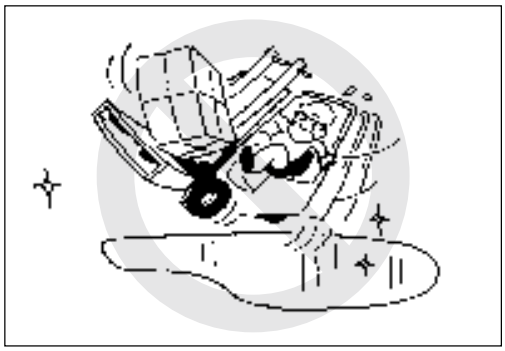

Keep enough clearance.

- Serious accidents can be caused by hitting pipes and beams near the ceiling with mast or overhead guard. Make sure there is enough clearance for ceiling and height limit of the entrance.

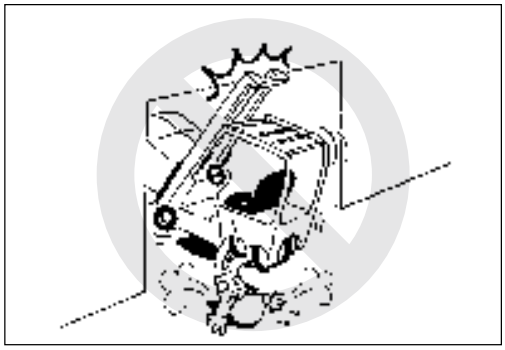

Do not exceed the limitation of the floor strength.

- A forklift truck is very heavy. Check the condition of the driving surface. Make sure the floor, bridge and/or elevator will support the weight of the forklift truck and the load.

https://forklift-manuals.jimdofree.com

Downloaded from www.Manualslib.com manuals search engine

https://truckmanualshub.com/

Do not travel while the forks are in the raised position.

- Traveling while lifting the forks can cause the unstable condition to tip the forklift truck over.
- The fork height should be about 200mm from the ground and the mast (fork) should be tilted back while traveling.

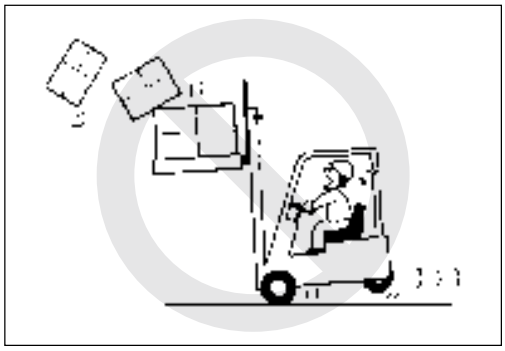

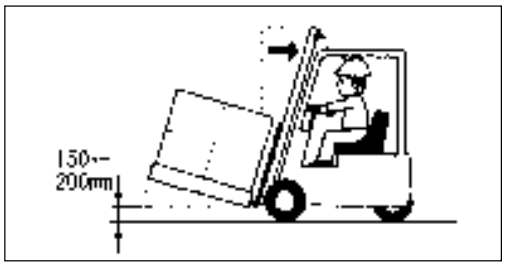

Do not push or drag the load.

- Do not lift the load by the tip of the forks.
- Misuse can damage the loads as well as the forklift truck.

Do not drag any loads with rope by the lift carriage or load backrest.

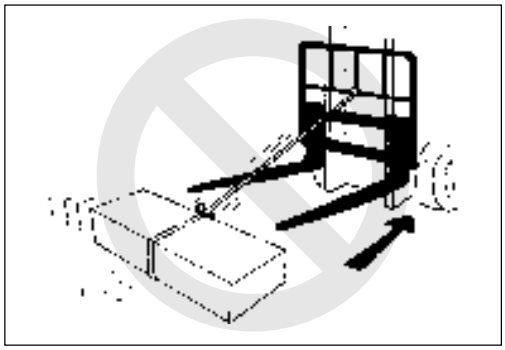

https://forklift-manuals.jimdofree.com

Downloaded from www.Manualslib.com manuals search engine

https://truckmanualshub.com/

Never allow anyone to walk or stand under raised forks.

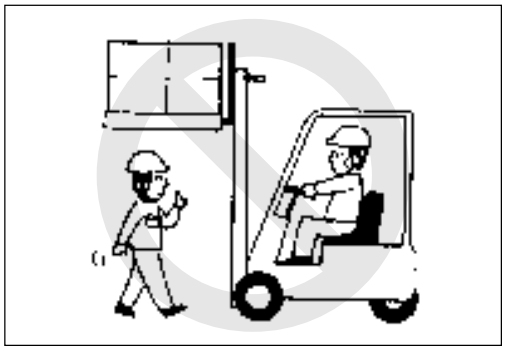

- **Never allow anyone to ride on forklift truck other than operator.**
- **At no time shall anyone be allowed to ride on forks of forklift truck.**

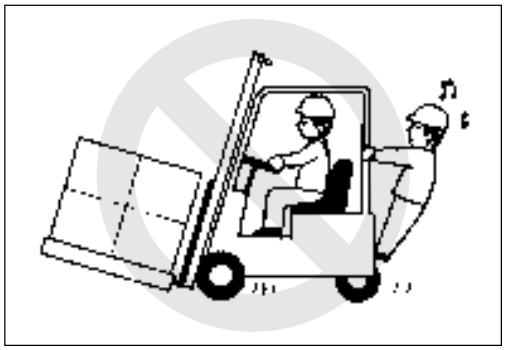

Keep enough distance from the edge of docks, ramps and platforms.

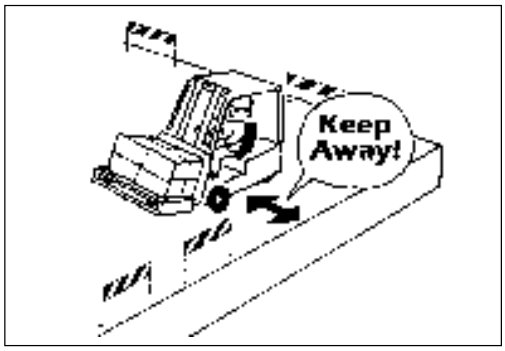

https://forklift-manuals.jimdofree.com
Downloaded from www.Manualslib.com manuals search engine

https://truckmanualshub.com/

Travel carefully on grades when loading.

- When traveling up or down the grades, keep the load upside to maintain control.
- Travel down with foot or plugging brake if necessary.

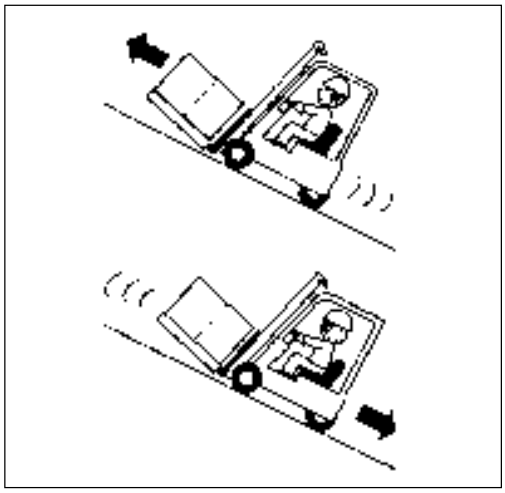

Do not turn on, or angle across an incline.

- Failure to observe this rule can cause the forklift truck to tip over.

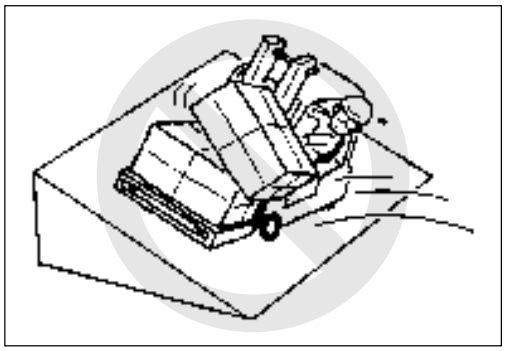

Do not handle an off-center load.

- If the weight of the load is not centered between the forks, the load can fall from the forks when you turn a corner or hit a bump.
- An off centered load will increase the possibility of the forklift truck tipping over to the side.

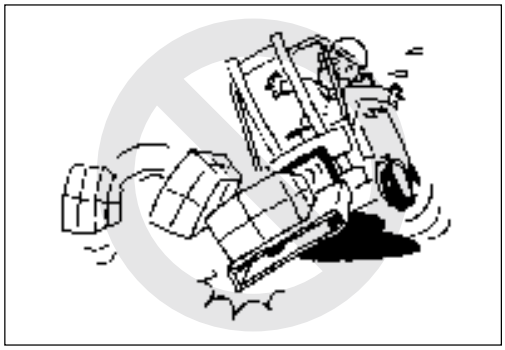

Never put any parts of your body into mast structure or between mast and fork-lift truck.
Do not climb on the mast or overhead guard.

Operate all levers and switches from the driv-er's compartment.

https://forklift-manuals.jimdofree.com

Downloaded from www.Manualslib.com manuals search engine

https://truckmanualshub.com/

Do not put any part of your body outside operator's compartment of forklift truck.

- Keep hands and feet inside the operator's compartment.

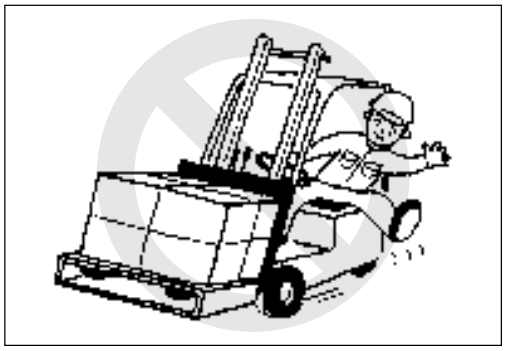

Operate hydraulic control levers slowly when loading or unloading.

Do not lower and stop the load suddenly.

- Failure to observe this instruction, can cause the forklift truck to tip over.

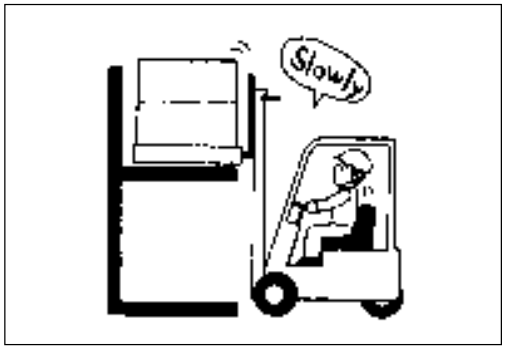

Do not lift-up, down and travel on tilting the mast (fork) down when loading.

- Tilt the mast (fork) up enough to stabilize the load.

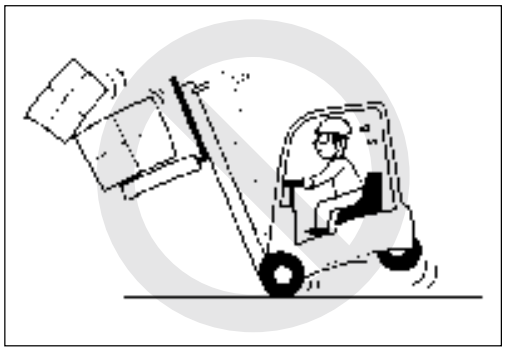

Pay attention to keep enough clearance for the mast and overhead guard when going into the container.

Drive into a trailer carefully.

- Make sure the trailer brakes are set and the wheels are blocked while loading or unloading.

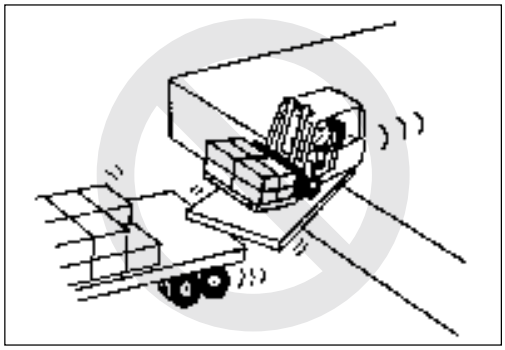

https://forklift-manuals.jimdofree.com

Downloaded from www.Manualslib.com manuals search engine

https://truckmanualshub.com/

Do not jump on or off the forklift truck.

- Do not grasp the steering wheel or hydraulic levers to ride forklift truck.

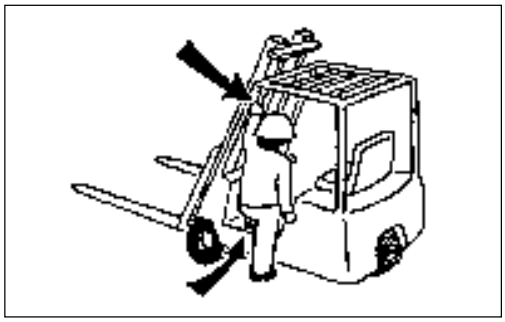

Do not pick the loads up beyond the backrest extension height.

- When handling double stack loads, fasten together with a band to prevent the load from falling.

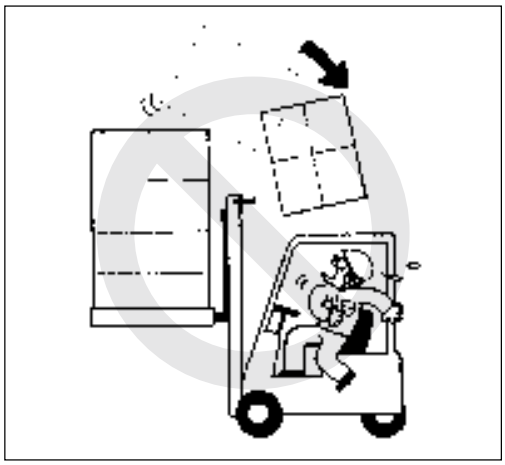

Do not pull the forks out from a pallet if chains and hoses are loosen.

- It is dangerous to have chains and hoses that are loose. It can cause the load to catch, racking by the forks or falling loads.

When chains and hoses are loosen :

- Lift the forks a little until correcting chains and hoses.
- After correcting chains and hoses, pull the forks out from a pallet.

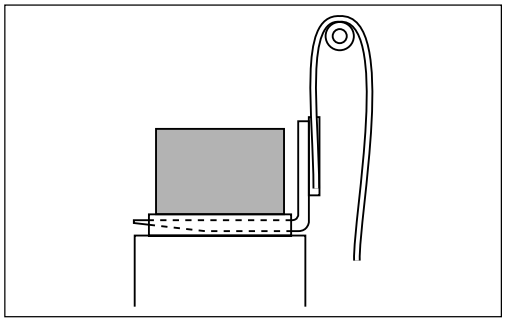

Do not abuse forks.

- Misuse can cause an accident as well as property damage.

https://forklift-manuals.jimdofree.com

Downloaded from www.Manualslib.com manuals search engine

https://truckmanualshub.com/

Do not tow anything by draw-bar pin.

- The draw-bar pin is equipped for towing the truck by another tractor if any problems are occurred.

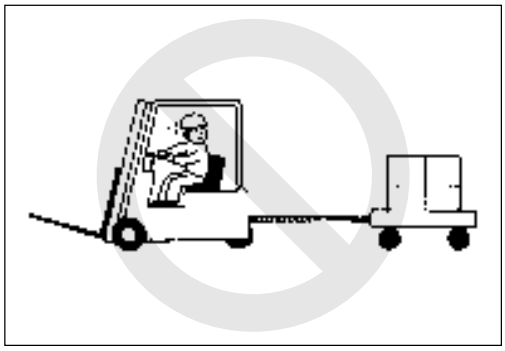

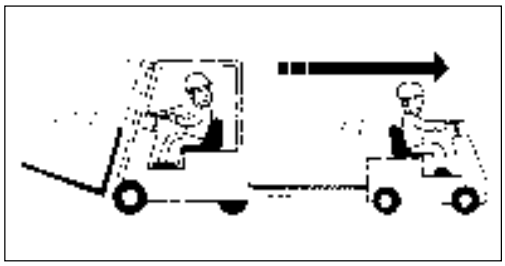

Set the position of forks to meet the pallet size properly.

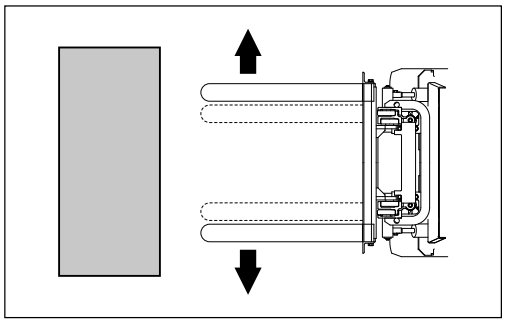

The adjustment procedure of fork set position

1. Lift up the forks about 400mm from the ground.
2. Rotate the set pin 90 degrees while pulling.
3. Move the forks to the required set position while holding the horizontal portion.
4. Put the set pin back into place.

Lubricate the lift bar (the contacting face between the fork and the lift bar) periodically.

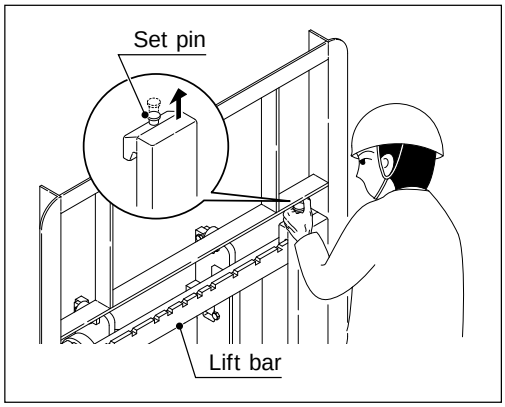

https://forklift-manuals.jimdofree.com
Downloaded from www.Manualslib.com manuals search engine

https://truckmanualshub.com/

Do not hold the vertical portion of the fork.

- There is the danger of the worker being injured.

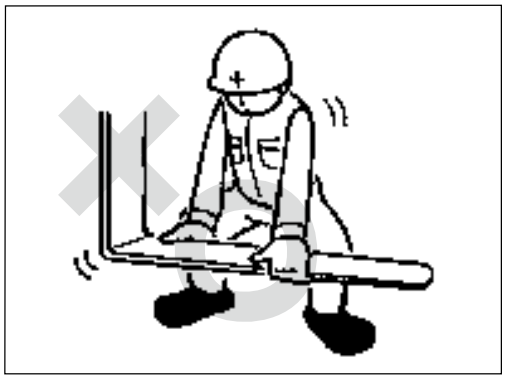

Please mind your hand not to injure when adjusting the set position of forks.

- Make sure to check if the set pin is fixed after adjusting the set position of forks.
- In case the forks are not fixed by the set pin, there is the danger of the load being unpiled and fallen down.

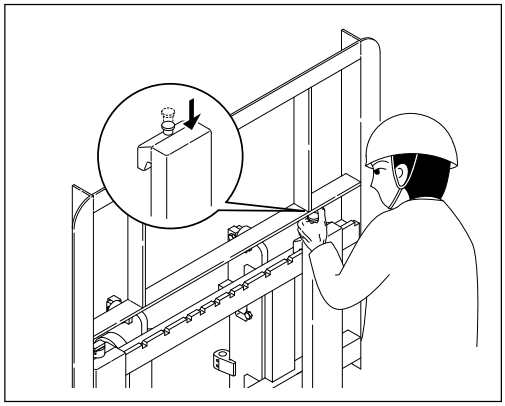

Travel carefully when handling with a long or wide load.

- Be careful when handling a load. The load should be handled at a low lifting position.
- Lifting and lowering should be done slowly.

When carrying a wide load, the suitable wide bar should be mounted. (Option)

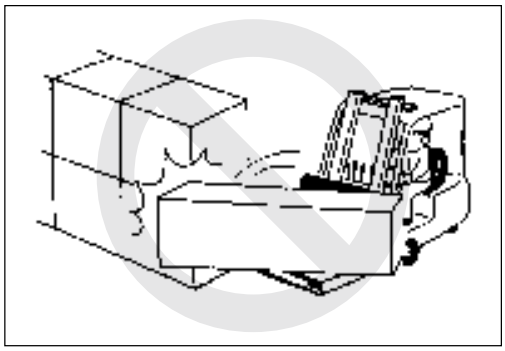

Never allow anyone to hold or pick loads off while traveling or lifting.

- Failure to observe this rule can cause serious personal injury.

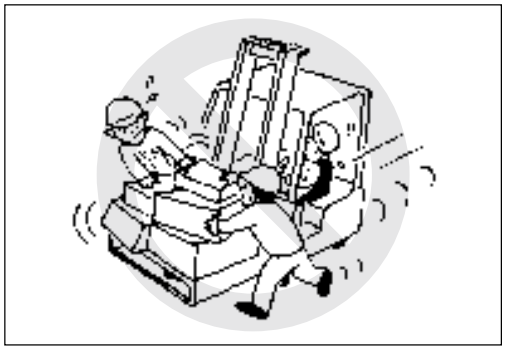

Do not use damaged pallets.

- Make sure pallets and skids are sturdy and in safe operating condition.

https://forklift-manuals.jimdofree.com

Downloaded from www.Manualslib.com manuals search engine

https://truckmanualshub.com/

OUT OF ORDER FORKLIFT TRUCK

- When parking a forklift truck requiring repair, a warning or “out-of-order” sign shall be placed on the forklift truck and the key removed.
- When the forks cannot be lowered because of a fault, place a large sign or marker on the forks. This procedure will caution other forklift trucks and pedestrians.

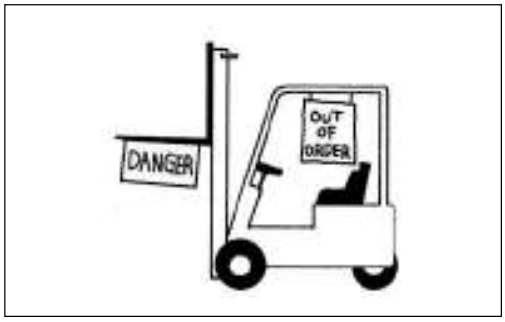

When parking the forklift truck:
- **Tilt the forks down and lower on the ground.**
- **Apply the parking brake.**
- **Turn off the key switch and remove the key before leaving the forklift truck.**

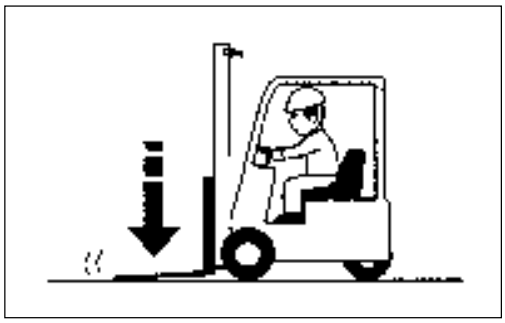

Parking place :

- Park the forklift truck at the reserved place.
- Do not park on or near flammable objects.

Do not park the forklift truck on a slope.

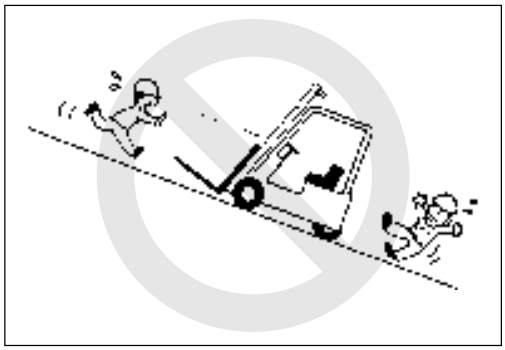

Lift-up the mast to maxium height.

- To prevent the inside of lift cylinders from getting rusty, raise forks to the maximum lifting height several times in case that the usual operation is used only lower height or the forklift truck is not in use for long term.

- **Do not wash the forklift truck by hosing water.**
- **In case that you have no choice but to wash by water, be careful not to splash water to electric components.**

- Water or moisture may affect electric components to be broken down. Turn off the key switch, disconnect the battery plug and cover all electric components to protect from splashing water.
- In case that water is splashed to the electric components, do not connect the battery plug and do not turn on the key switch until the forklift truck will be dried completely.

https://forklift-manuals.jimdofree.com
Downloaded from www.Manualslib.com manuals search engine

https://truckmanualshub.com/

Fasten seat belt while operation.

- Adjust the seat position before turning on the key switch. After adjusting, jiggle the seat to make sure if it is properly locked.
- Adjust the seat and steering handle positions before operation for safety.

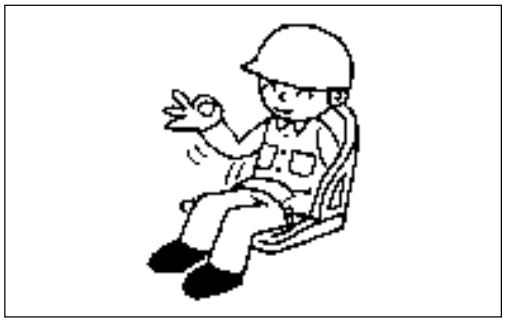

Do not adjust the seat while truck is in motion.

○ **How to fasten the seat belt**

Grip the tang **(A)** of the belt and pull it from the retractor. Then insert the plate into the slot of the buckle **(B)** until a snap is heard. Make sure the belt is not twisted.

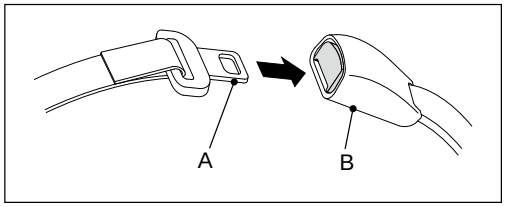

○ **How to release the seat belt**

Push the button **(C)** of the buckle to release the belt. The belt will automatically retract when release. Hold the plate of the belt and allow it to slowly retract.

- Be sure to fasten the belt across your hips, not across your abdomen.

If you fasten the belt across your abdomen, the belt may tug your abdomen in the event of an accident.

- It is not necessary to adjust the belt length. The belt is designed to fit any size.

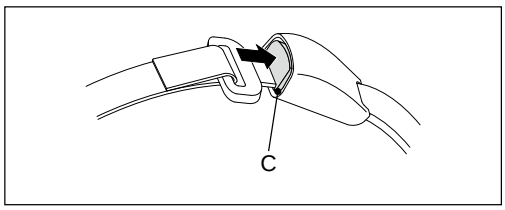

The seat belt would “jackknife” the operator. That is, the upper body would bend at the waist. If you are pregnant or have suffered from some abdomen disease, consult a physician before using the seat belt.

If the seat belt is torn, or damaged in an accident, replace it immediately.

- Contact your local NICHIYU dealer for replacement.

Use neutral detergent or water to clean the belt. Do not use any solvent such as gasoline.

https://forklift-manuals.jimdofree.com
Downloaded from www.Manualslib.com manuals search engine

https://truckmanualshub.com/

How to survive in a tip over

Safety notice for tip over

- Lateral tipover can occur when unloaded if the combination of speed and sharpness of turn produces an overturning moment which exceeds the stability of the forklift truck.
- Lateral tipover can occur if overloaded or loaded within capacity and the load is elevated and if turning and /or braking when traveling backward or if turning and/or accelerating when traveling forward produces an overturning moment which exceeds the stability of the forklift truck.
  Backward tilt and/or off-center positioning of the load and/or uneven ground conditions will further aggravate the above conditions.
- Longitudinal tipover can occur if overloaded or when loaded within capacity and the load is elevated if forward tilt, braking in forward travel, or commencing backward travel produces an overturning moment which exceeds the stability of the forklift truck.
- Serious injury or death can occur to the operator if he/she is trapped between the forklift truck and ground.

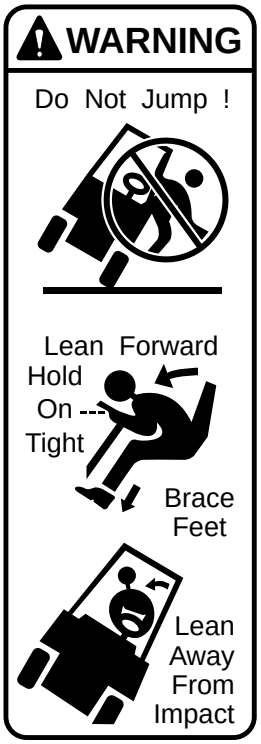

In case of tip over

- The operator should stay with the forklift truck if lateral or longitudinal tipover occurs. The operator should hold on firmly to the steering wheel, brace feet, lean forward and lean away from the point of impact.
- The operator should stay with the forklift truck if it falls off a loading dock or ramp. There are other situations where the environment of the landing area presents a severe hazard. In those incidents, it may be prudent for the operator to leave the forklift truck.

In case of tip over:
- **Do not jump off.**
- **Hold on tight to steering wheel.**
- **Brace your feet.**
- **Lean away from impact.**

- Fasten seat belt while operation.

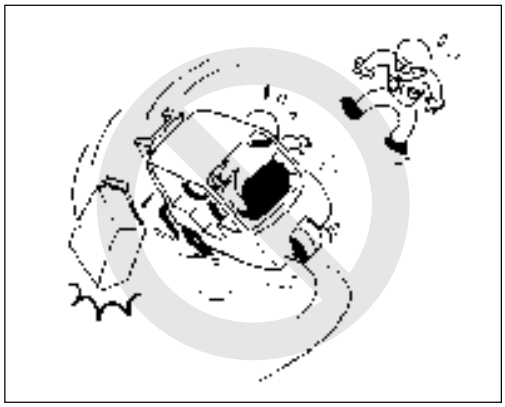

https://forklift-manuals.jimdofree.com
Downloaded from www.Manualslib.com manuals search engine

https://truckmanualshub.com/

2 PART NAME AND FUNCTION

Name of part

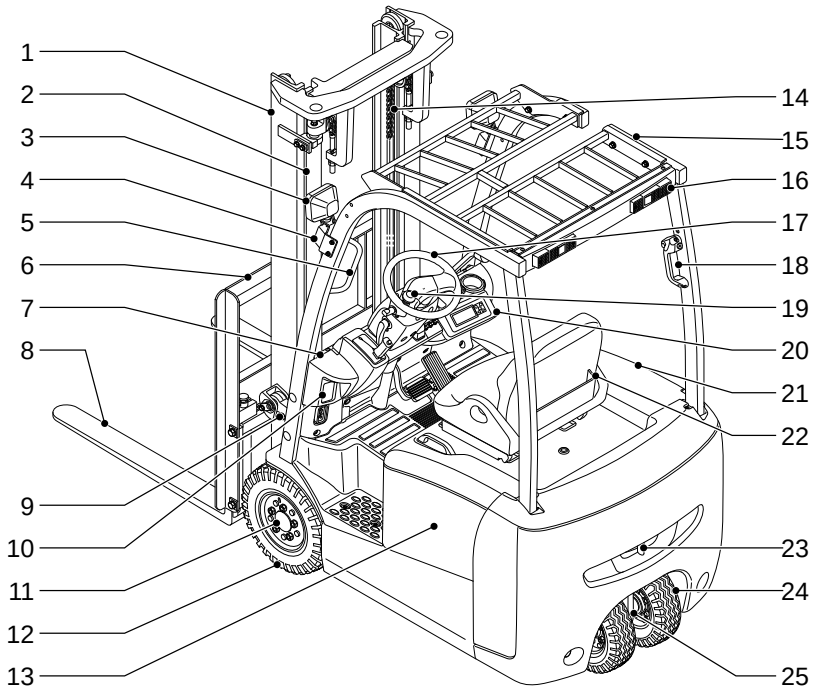

1. Mast
2. Lift cylinder
3. Head lamp
4. Turn signal lamp
5. Grip
6. Load backrest
7. Front panel
8. Forks
9. Tilt cylinder
10. Built-in charger (Option)
11. Drive axle
12. Front wheel
13. Side battery cover
14. Lift chain
15. Overhead guard
16. Rear combination lamp
17. Steering wheel
18. Rear assist grip
19. Steering wheel knob
20. Indicator panel
21. Battery cover
22. Seat
23. Draw-bar pin
24. Rear wheel
25. Rear axle

Driving equipment

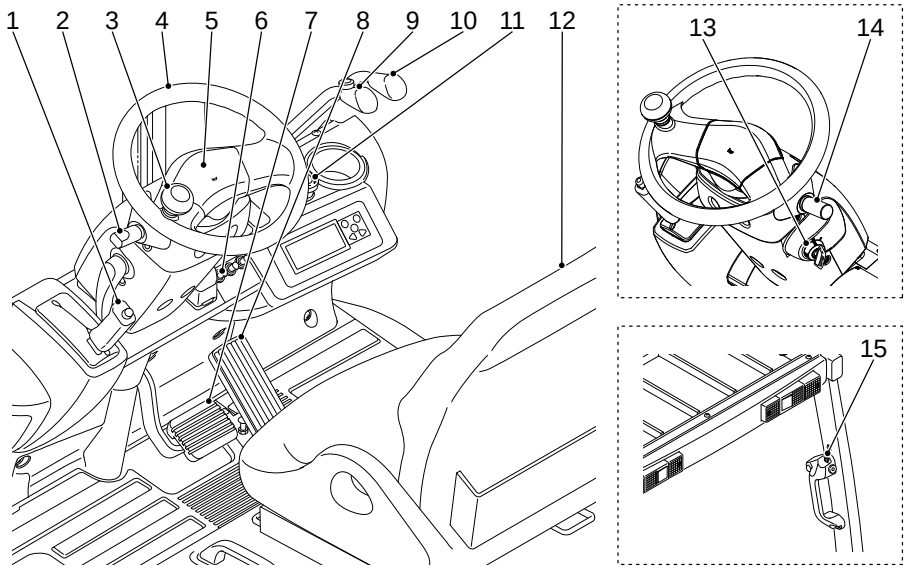

1. Parking brake lever
2. Turn signal switch / Head lamp switch
3. Steering wheel knob
4. Steering wheel
5. Center horn
6. Switch for the laser pointer (Option)
7. Brake pedal
8. Accelerator pedal
9. Lift lever
10. Tilt lever
11. Emergency stop switch
12. Seat
13. Key switch
14. Directional switch
15. Rear assist grip (w/horn switch)

(This illustration shows the directional switch of right side location, head lamp/turn signal lamp switch of left side location.)

https://forklift-manuals.jimdofree.com

Downloaded from www.Manualslib.com manuals search engine

https://truckmanualshub.com/

Indicator panel

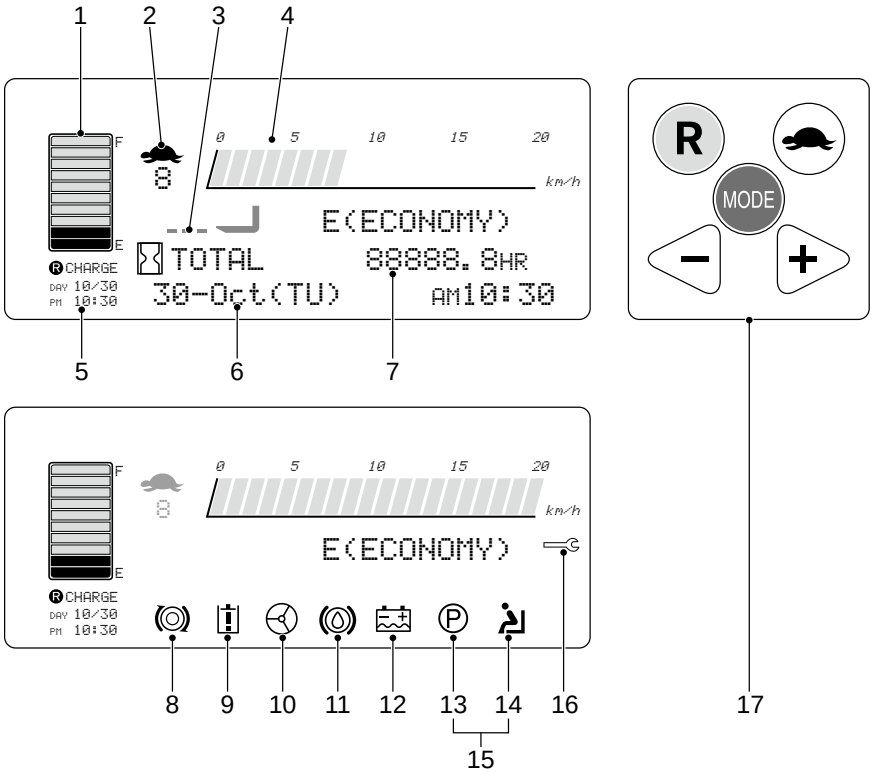

1. Battery indicator
2. Slow speed mode monitor (Turtle mark)
3. Fork horizontal indicator (Option)
4. Travel speed meter
5. Battery charge reservation indicator (Only for built-in charger)
6. Calendar and clock
7. Hour meter
8. Safety monitor for traction circuit
9. Safety monitor for hydraulic circuit
10. Safety monitor for power steering circuit
11. Safety monitor for brake fluid
12. Safety monitor for battery electrolyte level (Option)
13. Safety monitor for parking brake
14. Safety monitor for operation interlock system
15. Safety monitor for parking brake alert
16. Service (spanner) mark
17. Mode select button

Icons of 8 to 16 shown in the illustration are displayed for the explanation. They are displayed only when abnormalities are occurred.

https://forklift-manuals.jimdofree.com
Downloaded from www.Manualslib.com manuals search engine

https://truckmanualshub.com/

Indication of display

When the key switch is turned on, the self-diagnosis function checks the control system and display "MONITORING OK" when no problems are found. Icons of "Read operator's manual" are flashed three times for warning to the operator.

After 2 or 3 seconds, the normal screen is displayed.
If any abnormalities are detected, the error message is displayed. If the long message is displayed or some messages are displayed, they are scrolled from right to left alternatively.

If traveling or hydraulic operation is done while this (within 3 or 4 seconds), the normal screen is displayed after finishing the initial monitoring function.

Contact your local NICHIYU dealer if the error message is displayed.

When the key switch is turned on.

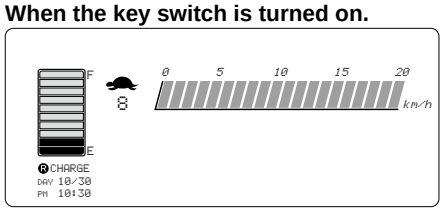

After 0.5 seconds

After 2 or 3 seconds

Normal screen

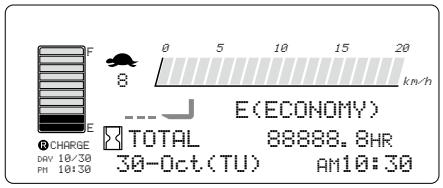

Mode select button

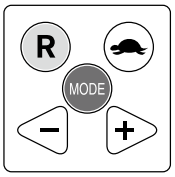

Mode selection

Push Ⓡ button. ➡ **Reserve charge screen**
- Set the starting time of battery charge.

••• Refer the page 65 and the section of the reserve charging.

(This screen is displayed if the optional built-in charger is equipped.)

Push one of ◁. ➡ **Electricity consumption meter**
(Only for built-in charger)
Hour meter screen
- Indication of electricity rate, eliminated amount of CO2
- Three hour meters of traction, hydraulic and the total hour are displayed.

••• Refer the page 24, 30 for details.

Push MODE button.
(Release within 3 seconds.) ➡ **Mode select screen**
- Slow speed mode setting
- Travel mode setting
- Hour meter / odometer selection
- Display mode setting
- Coast mode setting
- Pitching mode setting

••• Refer to each setting section.

Push MODE button.
for more than 3 seconds. ➡ **Date / time setting screen**
- For setting of date and time.

••• Refer the page 33 for details.

https://forklift-manuals.jimdofree.com
Downloaded from www.Manualslib.com manuals search engine

https://truckmanualshub.com/

Function of display

This forklift truck has the self-diagnosis function.

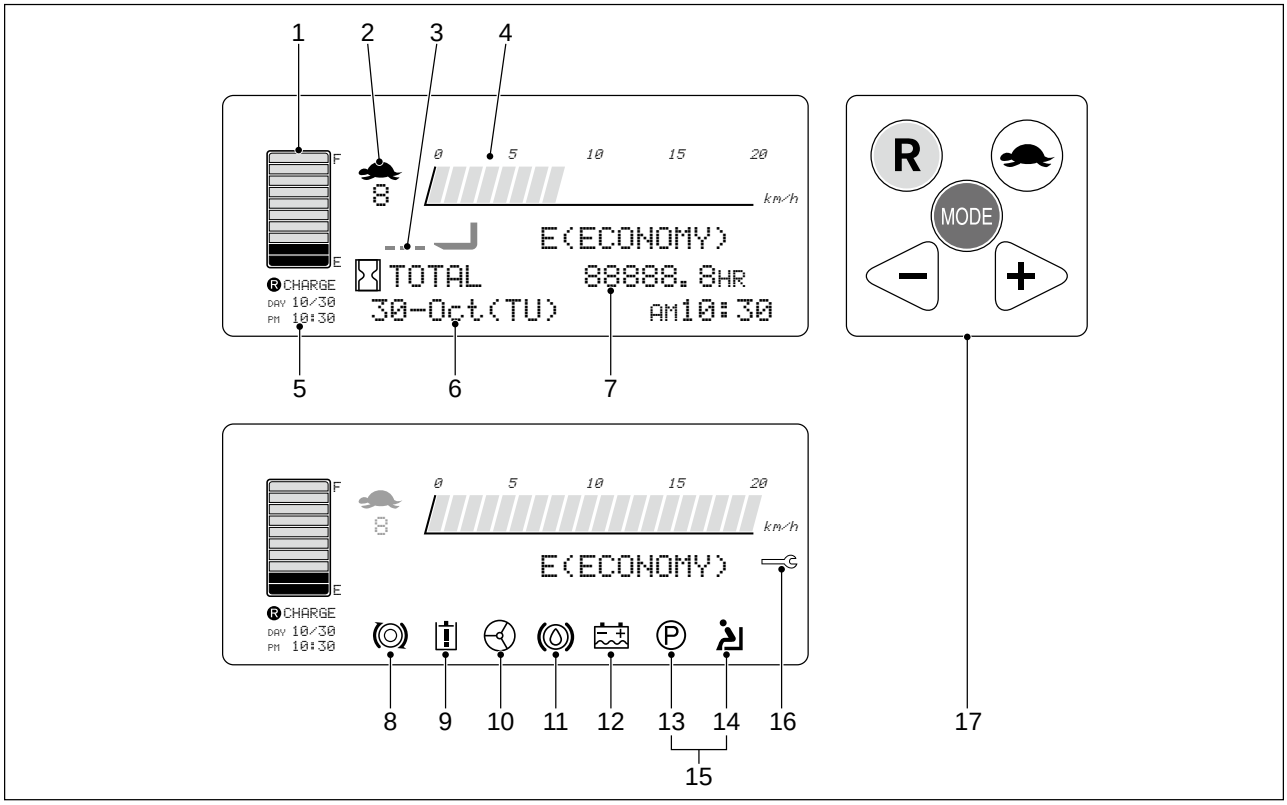

Icons of 8 to 16 shown in the illustration are displayed for the explanation. They are displayed only when abnormalities are occurred.

1. Battery indicator

The battery indicator shows the discharged condition of the battery.

If the forklift truck is used after discharging the battery more than 80%, the lifetime of the battery will be shortened. Then, stop to operate the forklift truck and charge the battery immediately.

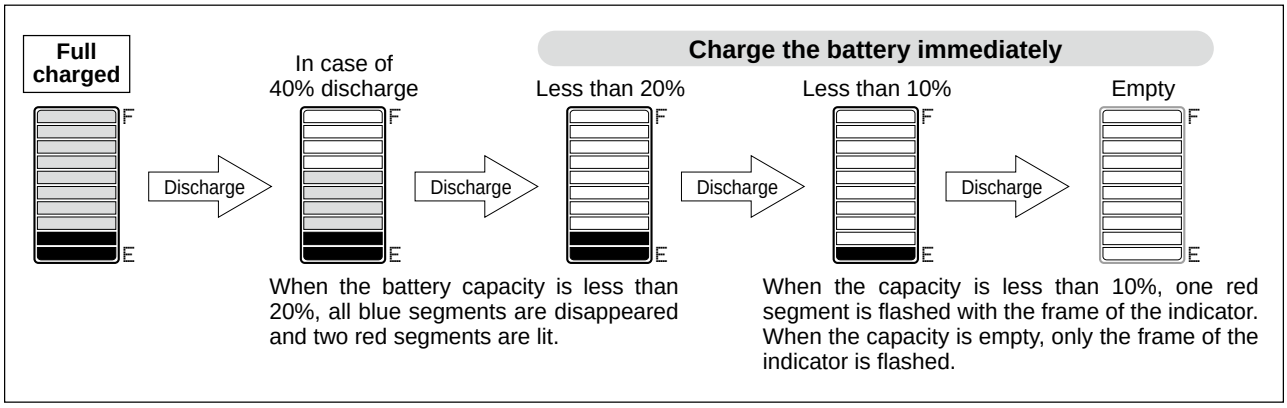

https://forklift-manuals.jimdofree.com
Downloaded from www.Manualslib.com manuals search engine

https://truckmanualshub.com/

● Lift interrupt

When all green segments are disappeared and two red segments are lit, the lift speed is reduced by half. At the same time, "*CHARGE THE BATTERY*" message appears on the screen. When the truck is continued to use, only one red segment is started to flash and the lift function is interrupted.

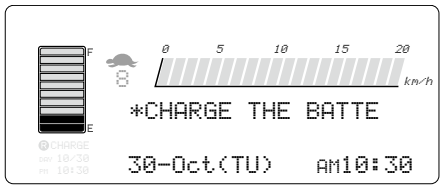

Two red segments are lit.

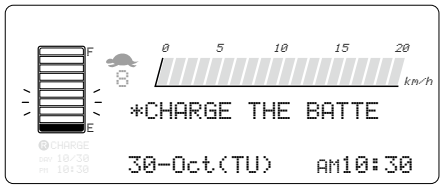

One red segment is started to flash.

2. Slow speed mode monitor (Turtle mark)

When the turtle button is pushed, the turtle mark is indicated on the screen with the preset speed.

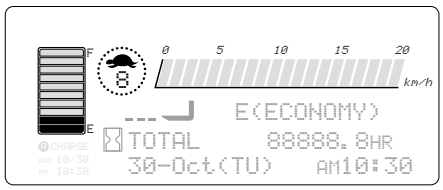

3. Fork horizontal indicator (Option)

This mark is indicated when the fork is horizontal and possible to use the laser pointer.

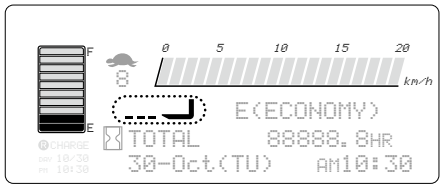

4. Speedometer

The traveling speed is displayed on the screen.

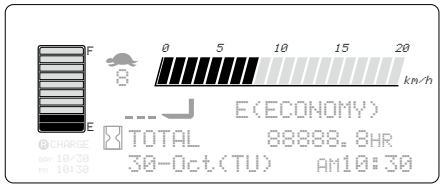

5. Reserve charge indication (Only for built-in charger)

The reserved date and time to start charging the battery is displayed. Refer the section of "Battery and charger" for details.

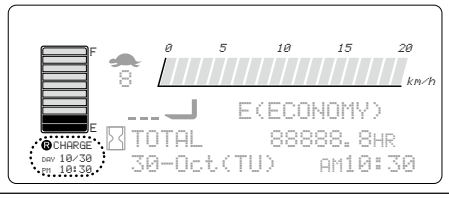

6. Date and time (Calendar and clock)

The current date and time are displayed. If the MODE button is pushed for more than 3 seconds, the display is changed to the setting screen. Refer the page 33 for details.

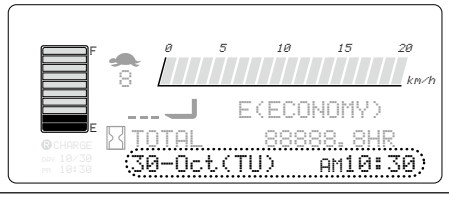

https://forklift-manuals.jimdofree.com
Downloaded from www.Manualslib.com manuals search engine

https://truckmanualshub.com/

7. Hour meter

The hour meter shows the total hours of turning on the key switch.
(The actual operating hours can be displayed as option.)
It is useful to know the total operating hours for the daily job management and scheduling of the periodical inspection.

When pushing ◁ button on the normal screen and pushing Ⓡ button 3 times, the confirmation screen of hour meter is shown.

After 5 seconds, the normal screen is displayed.

Odometer or load weight can be displayed instead of the hour meter.
Refer the meter mode setting in the setting mode section.

Hour meter screen

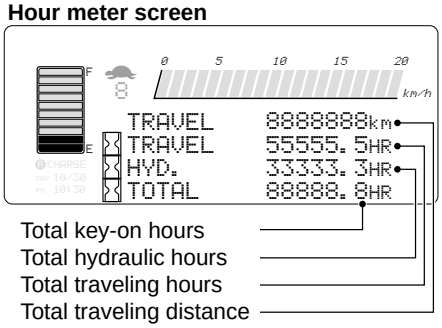

- **The normal screen is displayed automatically after 5 seconds from coming up the above any screen state.**
- **By pushing ◁ or ▷ button, the above any screen state is normal screen immediately.**

- When the screen displays the odometer, the word of “TRAVEL” is flashed while traveling.

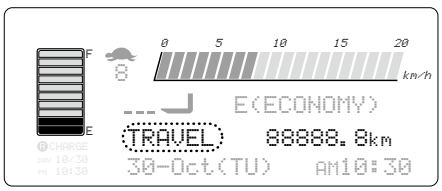

- When the load weight is indicated, “LOAD” message is displayed on the screen. When the weight is measured, “LOAD” message flashes for 5 seconds after hydraulic operation. When flashing “LOAD” message, the indicated weight may be changed. After stopping to flash, the correct weight is indicated.

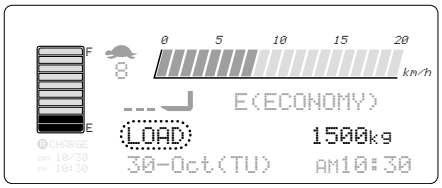

8. Safety monitor (for travel circuit)

When fault is detected in the travel circuit, the travel icon flashes and the presumed defective part name is displayed.

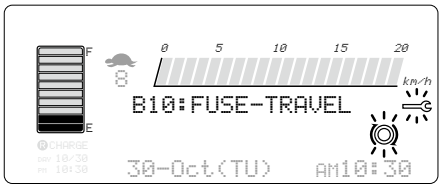

9. Safety monitor (for hydraulic circuit)

When fault is detected in the hydraulic circuit, the hydraulic icon flashes and the presumed defective part name is displayed.

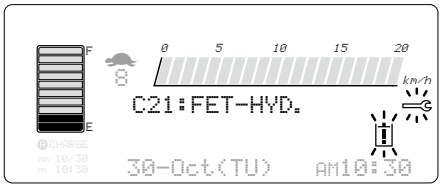

https://forklift-manuals.jimdofree.com
Downloaded from www.Manualslib.com manuals search engine

https://truckmanualshub.com/

10. Safety monitor (for steering circuit)

When fault is detected in the power steering circuit, the steering icon flashes and the presumed defective part name is displayed.

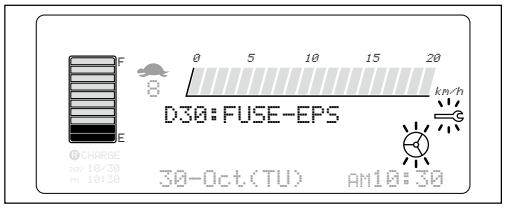

11. Safety monitor (for brake fluid level)

When the brake fluid level is low, the brake icon flashes and "*REFILL BRAKE OIL*" message is displayed.

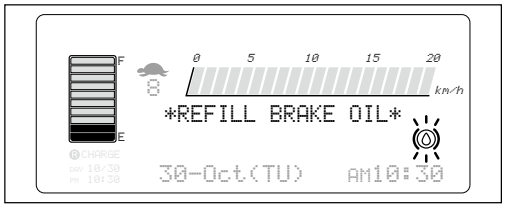

If the error message of parts or "*REFILL HYD. OIL*" is displayed, contact your local NICHIYU dealer to check the truck.

12. Safety monitor (for battery electrolyte level) (Option)

When the electrolyte level is lower than the specific level, the battery icon flashes and "*REPRENISH REFINED WATER FOR BATTERY*" message is displayed.

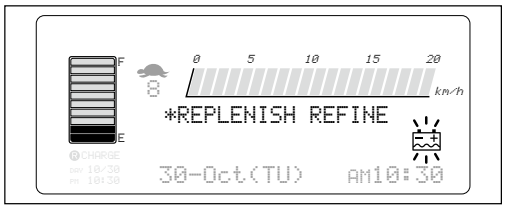

13. Safety monitor (for parking brake)

When the parking brake lever is pulled, the parking brake icon flashes. When the operator starts traveling without releasing the parking brake lever, the warning buzzer beeps and "*RELEASE PARKING BRAKE*" message is displayed.

14. Safety monitor (Operation Interlock System [OIS])

The system will interrupt traveling and hydraulic functions if the operator does not sit on the operator's seat correctly.
If the operator leaves the seat when operating the truck, the OIS icon flashes to warn to the operator, firstly. If that situation continues for more than 2 seconds, the buzzer beeps and traveling and hydraulic functions are interrupted. If the operator sits on the seat correctly within 2 seconds, the system does not work.
When traveling and hydraulic functions are interrupted, quit operation once and start again after sitting on the operator's seat correctly.

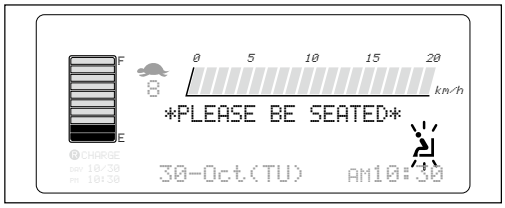

The operation interlock system interrupt the current flow to the traction motor but does not apply the mechanical brake. So, if the interlock system activates while traveling, the forklift truck may keep moving by inertia.

After activating the interlock system, it is not reset when the directional lever is in the forward or reverse position even if the operator sits on the seat correctly. Once, move the directional lever to the neutral position to reset the system.

https://forklift-manuals.jimdofree.com
Downloaded from www.Manualslib.com manuals search engine

https://truckmanualshub.com/

15. Safety monitor (for parking brake alert)

When the operator leaves the seat without applying the parking brake, both the OIS icon and the parking brake icon flash. Also, "*PLEASE BE SEATED*" and "*APPLY PARKING BRAKE*" message are displayed and the warning buzzer beeps.
This function works even if the key switch is turned off except for disconnecting the battery plug or applying the emergency stop switch.

[How to reset the alert]
When the key switch is turned on ;
Sit on the operator's seat correctly, or apply the parking brake. (pull the parking brake lever.)

When the key switch is turned off ;
Apply the parking brake. (pull the parking brake lever.) or Sit on the operator's seat correctly.

16. Service icon

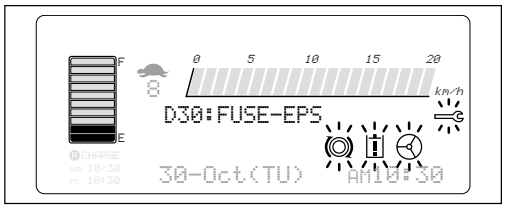

The service icon warns the fault of the forklift truck to an operator. If any faults are detected, the spanner mark is flashed and the presumed defective part name is displayed. If some problems are occurred at the same time, each part name is scrolled alternatively for every 5 seconds.

- **If the next fault is detected, all traveling, hydraulic and power steering functions are interrupted.**
  B11 : FET-TRAVEL
  B12 : SENSOR-CURRENT TRAVEL
  C21 : FET-HYD.
  C22 : SENSOR-CURRENT HYD.
  E40 : TR-AOS
  FAIL CURRENT-TRAVEL
  FAIL CURRENT-HYD
  FAIL VOLTAGE-TRAVEL
  FAIL VOLTAGE-HYD
- **All MODE, R, ◁, ▷ buttons are invalid while displaying these messages.**

https://forklift-manuals.jimdofree.com
Downloaded from www.Manualslib.com manuals search engine

https://truckmanualshub.com/

17. Mode select button

Change the screen to each mode by pushing these buttons.

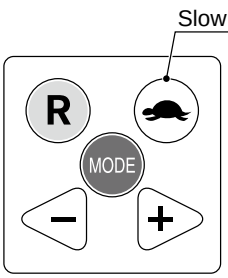

Mode select button

Slow speed mode button

The slow speed mode is activates by pushing this button.

Normal traveling mode

When the slow speed mode is off, the turtle mark is not displayed.

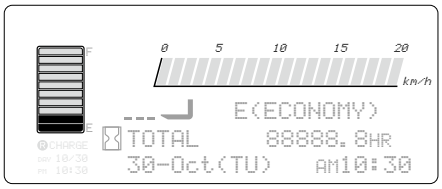

When the slow speed button is off
(Turtle mark is not displayed)

Slow speed mode

When the slow speed mode is activated, the turtle mark and preset speed are displayed on the screen.

- The maximum travel speed (normal mode) and preset speed (turtle mode) can be changed by pushing the turtle button.

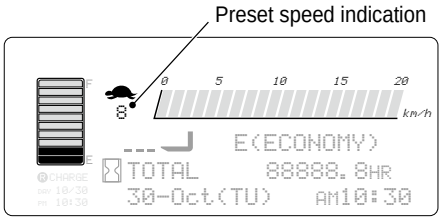

When the slow speed button is on
(Turtle mark is displayed)

https://forklift-manuals.jimdofree.com
Downloaded from www.Manualslib.com manuals search engine

https://truckmanualshub.com/

Various kinds of mode selection

[1] Slow speed setting
[2] Travel mode setting
[3] Meter mode setting
[4] Display mode setting
[5] Coast mode setting
[6] Pitching mode setting
[7] How to set the date and time

- **These settings are invalid while traveling or depressing the brake pedal.**
- **If traveling or hydraulic operation is done while setting, the display is returned to the normal screen immediately.**

When pushing the MODE button, the mode selection screen is displayed. If pushing the MODE button again, the normal screen is displayed again.

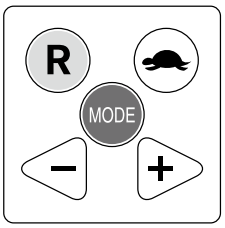

When setting the mode of next [1] to [6], each button works as below.
- ◁ and ▷ buttons : Move the cursor to select the value.
- Ⓡ button : Move the cursor to the next item.
- MODE button : Back the cursor to the previous item.

[1] Slow speed setting

This mode sets the limited maximum traveling speed under the slow speed mode.

Make sure the turtle button is pushed and the turtle icon is flashed. Then, push ◁ or ▷ button to set the speed.
The maximum speed can be set to 8 steps of 2, 3, 4, 5, 6, 8, 10 and 12km/h.
After setting, push Ⓡ button to move the cursor to the travel mode setting.
If push the MODE button, the normal screen is displayed.

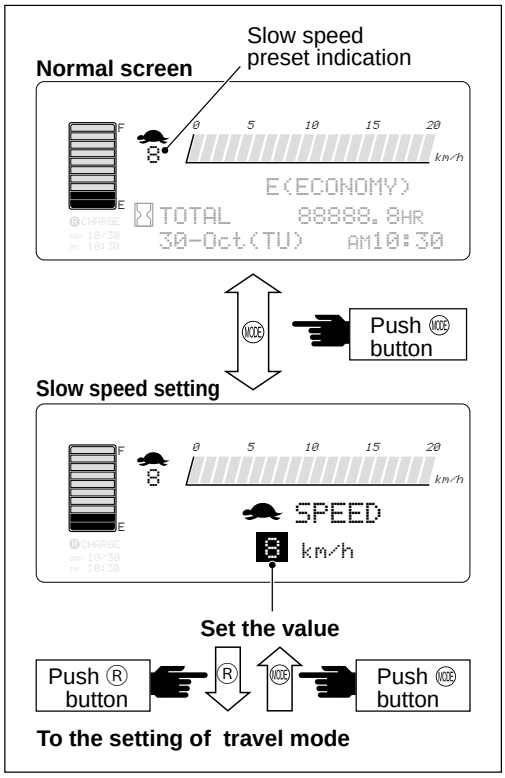

https://forklift-manuals.jimdofree.com
Downloaded from www.Manualslib.com manuals search engine

https://truckmanualshub.com/

[2] Travel mode setting

This screen is used to set the travel mode.

Make sure that the current traveling mode indication is flashed. Push ◁ or ▷ to select the mode.
After selection, push Ⓡ button to move the cursor to the meter mode setting.
If pushing the MODE button, the cursor is moved to the slow speed mode setting.
The traveling mode can be set to the next three modes.

E (ECONOMY)
This mode is convenient for the slow speed inching. This mode saves the battery energy consumption also.

N (NORMAL)
This is the normal traveling mode. The quick acceleration and smooth inching can be realized.

P (POWER)
This is the most powerful mode for acceleration.

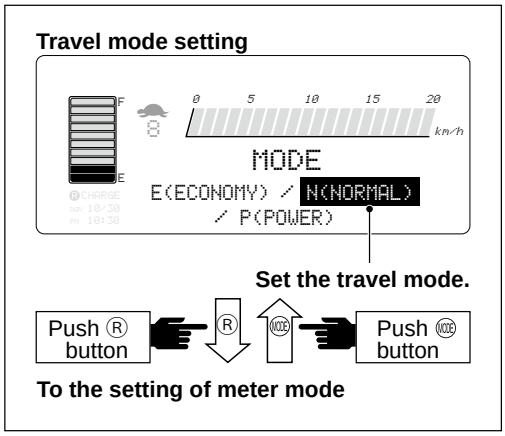

[3] Meter mode setting

The hour meter, odometer or load weight can be displayed on the normal screen.

When the cursor is located on the meter mode, press ◁ or ▷ button to select HR (hour meter), km (odometer) or kg (load weight : LARGE/NORMAL).
After selection, press Ⓡ button go to the next step [4]. To return to the previous step [2], press MODE button.

> When setting "kg (LARGE)", the traveling mode "E (ECONOMY)", "N (NORMAL)", "P (POWER)" is not shown on the display.

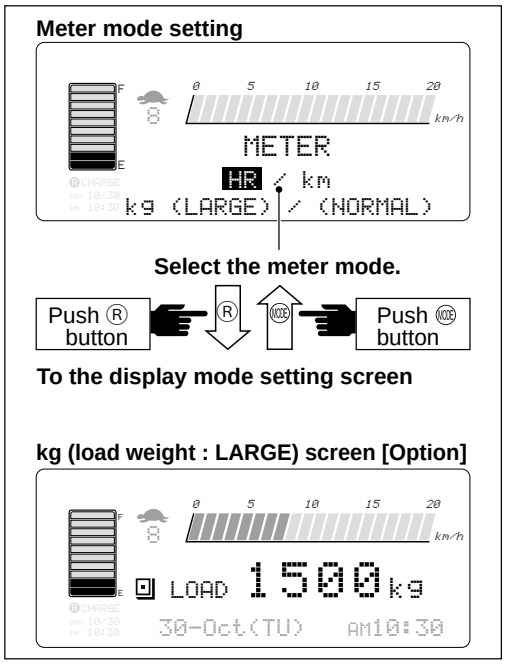

https://forklift-manuals.jimdofree.com
Downloaded from www.Manualslib.com manuals search engine

https://truckmanualshub.com/

○ Load weight indication

- **The load weight indicator is equipped for safe operation, however, the indicated value should be used as reference.**
- **The weight must be measured after raising the fork about 500 mm from the floor and stop hydraulic and traveling operation.**
- **This function cannot be used as the formal weight scale.**

Select "kg" mode.
Raise the fork about 500 mm from the floor.
After releasing the hydraulic lever, "LOAD" message flashes for 5 seconds because the hydraulic pressure is fluctuated while hydraulic operation.
Read the weight after "LOAD" message is fixed.

- If the loading weight is more than 110% of the loading capacity on the name plate, the "LOAD" message is changed to "OVER". This "OVER" message flashes and the warning buzzer is also beeped.
- The setting of overload can be changed. Contact your local NICHIYU dealer for details.

Zero adjustment (for net weight)
If you want to deduct the pallet weight to get the net weight of the load, press button. Then the zero adjust icon is indicated and the indicated weight is changed to 0 (zero) kg.
By pressing the button again, this function is turned off.
This function cannot be changed when "LOAD" message is flashed.

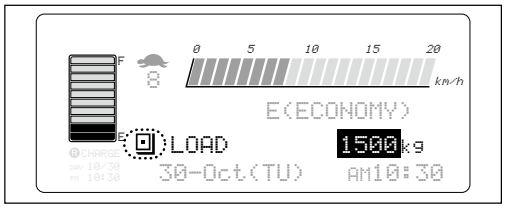

○ Electricity consumption meter (Only for built-in charger)

Date [Month/Day], Consumed amount of electricity [kWh] and Electricity rate [Japanese Yen] (or Eliminated amount of CO2 [kg]) can be shown on the display while charging the battery.

- The standard screen setting is "Electricity rate", As for the change of screen setting, please contact your local NICHIYU dealer.
- Only Japanese Yen can be shown in the screen of electricity rate, The default is 10 Yen/kWh. As for the change of value setting, please contact your local NICHIYU dealer.
- As the backup function, there are data both for last 7 days and for last 2 months.

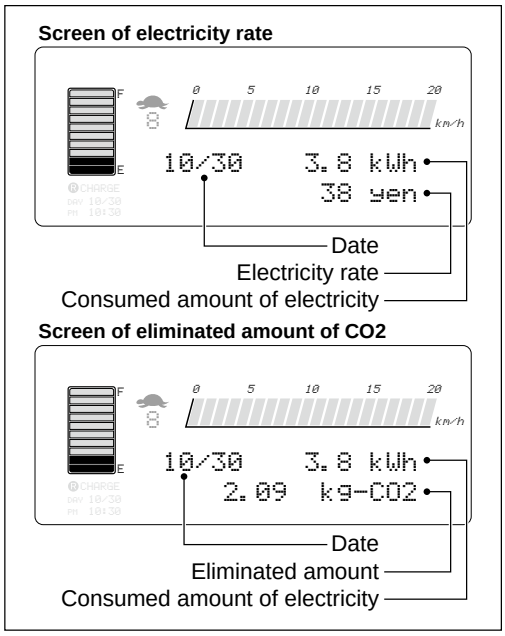

https://forklift-manuals.jimdofree.com
Downloaded from www.Manualslib.com manuals search engine

https://truckmanualshub.com/

Normal screen and meter mode screen

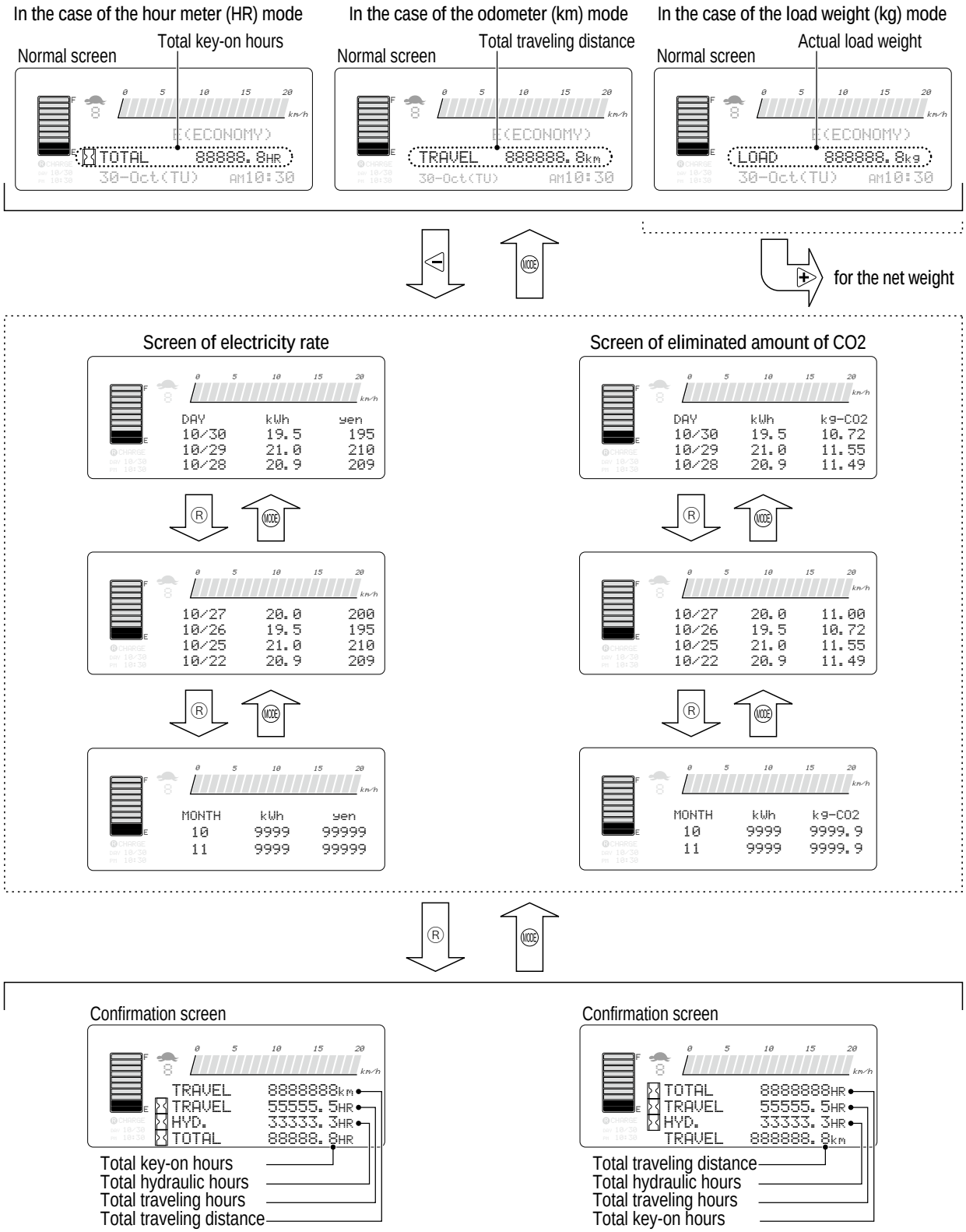

*** The normal screen is displayed automatically after 5 seconds from coming up the above any screen state. Also, by pushing ◁ or ▷ button, the above any screen state is returned to the normal screen immediately.**

https://forklift-manuals.jimdofree.com

Downloaded from www.Manualslib.com manuals search engine

https://truckmanualshub.com/

[4] Display mode setting

This mode sets the brightness of the screen.

Make sure that the cursor is located on the brightness setting area. Push the ◁ or ▷ button to select the brightness for the best. It can be selected 8 steps (from 0 to 7).
After selection, press Ⓡ button to go to the next step [5]. To return to the previous step [3], press Ⓜ button.

Refer the table below for the brightness settings.

BRIGHTNESS (Intensity of back light)		
0 Dark	⟷	7 Bright

Display mode setting screen

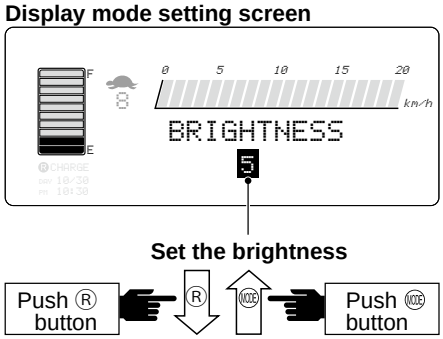

To the setting mode of regeneration (coast mode)

[5] Coast mode setting

This mode can set the regenerative braking force when releasing the accelerator pedal while traveling.

Make sure that the REGEN(NEUTRAL) mode screen is displayed. Then push ◁ or ▷ button to select the strength.
The braking strength can be set to 4 steps of "NON" (No braking), "LOW", "MID" (Middle) and "HIGH".
After selection, press Ⓡ button to go to the next step [6]. To return to the previous step [4], press Ⓜ button.

Setting mode of regeneration (coast mode)

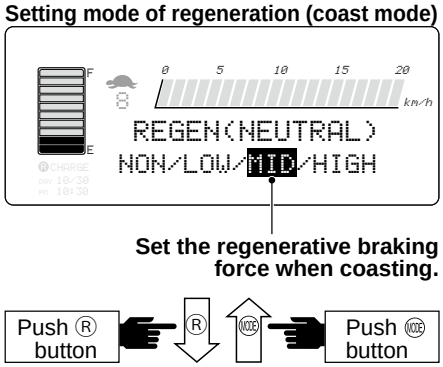

To the setting of pitching control (pitching mode)

[6] Pitching mode setting

This function will suppress forward and backward vibration of loads while traveling. The effect of this function may vary by the condition of the floor, traveling speed and/or weight of loads.
To activate this function, choose "ON" in the pitching mode setting screen by pressing the ▷ button.
After selection, press Ⓡ button to return the normal screen.
If the Ⓜ button is pressed, the screen return to the previous step [5].

- This function does not suppress the vibration of overall the forklift truck.
- This function has some level for suppressing the vibration. As for the change of the level, please contact your local NICHIYU dealer.
- In case that the feeling is not good remarkably while traveling, choose the better setting by changing the level or changing the setting ON/OFF.

Pitching mode setting screen

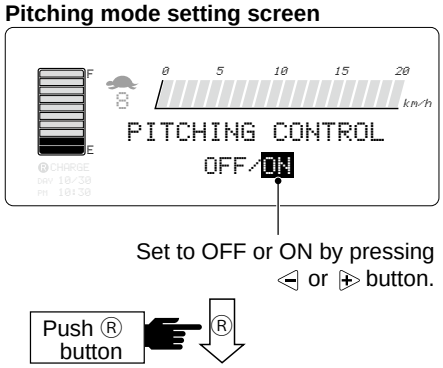

Return to the normal screen.

https://forklift-manuals.jimdofree.com
Downloaded from www.Manualslib.com manuals search engine

https://truckmanualshub.com/

[7] How to set the date and time

When the MODE button is pushed for more than 3 seconds, the date and time setting screen is displayed.
Push MODE button to return to the normal screen.

If traveling or hydraulic operation is done while setting, the display is returned to the normal screen immediately.

When setting the mode of next **1** to **6**, each button works as below.

- ◁ and ▷ buttons : Move the cursor to select the value.
- Ⓡ button : Move the cursor to the next item.
- MODE button : Back the cursor to the previous item.

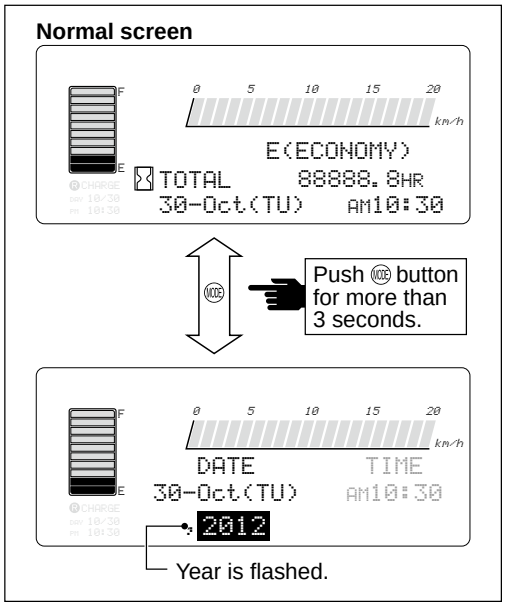

1. Set the year
Make sure the cursor is located on the year area. Push ◁ or ▷ button to set the year. The year can be set from 2000 to 2999.
After setting, push the Ⓡ button to move the cursor to the month area.
If push the MODE button, the normal screen is displayed.

2. Set the month
Make sure the cursor is located on the month area. Push ◁ or ▷ button to set the month. the month can be selected from 1 to 12.
After setting, push Ⓡ button for the date setting.
If pushing MODE button, the cursor is returned to the year area.

3. Set the date
Make sure the cursor is located on the date area. push ◁ or ▷ button to set the date. The date can be set from 1 to 31. When setting the date, the day of the week is set automatically.
After setting, push the Ⓡ button to move the cursor to the AM/PM area.
If pushing MODE button, the cursor is returned to the month area.

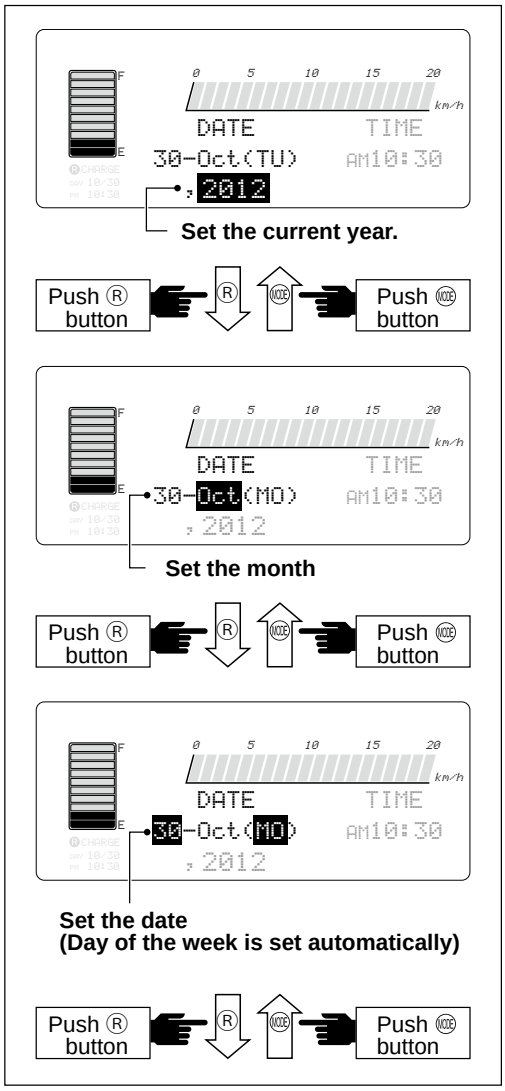

https://forklift-manuals.jimdofree.com
Downloaded from www.Manualslib.com manuals search engine

https://truckmanualshub.com/

4. Set the AM or PM
Push the ◁ or ▷ button to select the AM or PM. After setting, push the Ⓡ button to move the cursor to the hour area.
If pushing MODE button, the cursor is returned to the data area.

5. Set the hour
Push the ◁ or ▷ button to set the hour. The hour can be set from 1 to 12.
After setting, push the Ⓡ button to move the cursor to the minute area.
If pushing MODE button, the cursor is returned to the AM or PM area.

6. Set the minute
Push the ◁ or ▷ button to set the minute. The minute can be set from 00 to 59.
After setting, push the Ⓡ button.
Then "COMPLETE" message is flashed three times. In any cases, push MODE button to get the previous step.

- **When pushing the ◁ or ▷ button, the second is set to "00".**
- **After setting the minute and push the Ⓡ button, the second is set to "00".**
- **If set the date and time, the reserve charge setting is also renewed.**

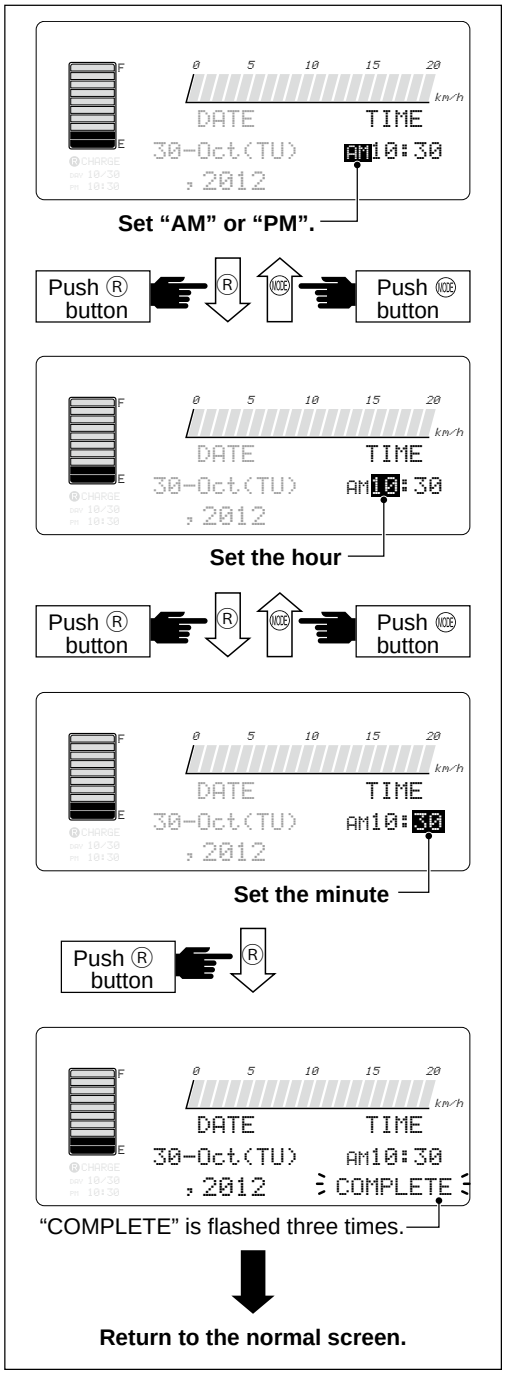

https://forklift-manuals.jimdofree.com
Downloaded from www.Manualslib.com manuals search engine

https://truckmanualshub.com/

Operating equipment

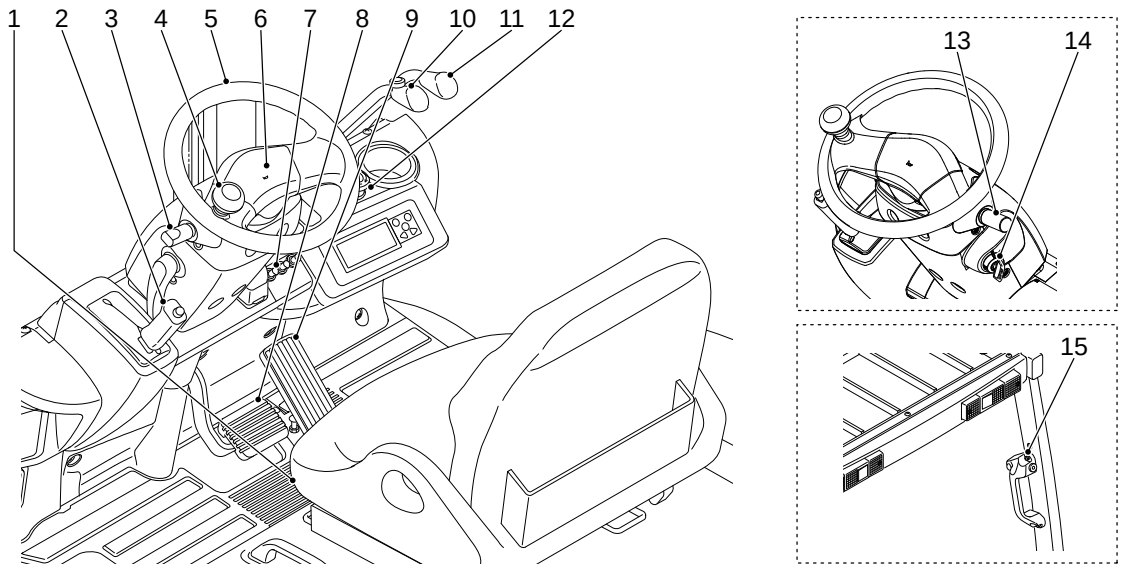

(This illustration shows the directional switch of right side location, head lamp/turn signal lamp switch of left side location.)

1. Seat

The operator's seat is adjustable for the best position to forward or backward by moving the lever **(A)** under the seat.
Adjustment range is 75 mm each for forward and backward.
When releasing the lever, the seat is fixed. (After adjustment, shake the seat to forward and reverse for a couple of times to make sure it is fixed completely.)
Use reclining lever **(B)** to adjust the back.
The operator's manual can be stored in the box behind the back of the seat.

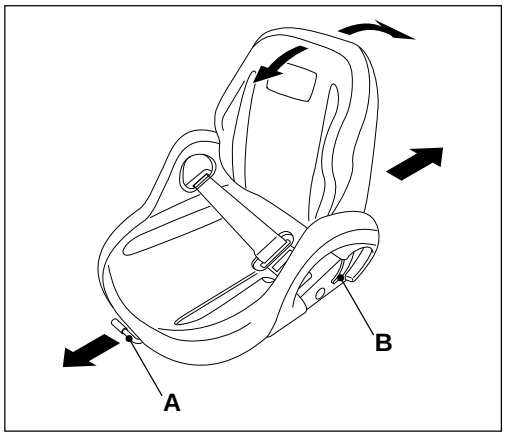

○ **How to fasten the seat belt**

Grip the tang **(C)** of the belt and pull it from the retractor. Then insert the plate into the slot of the buckle **(D)** until a snap is heard. Make sure the belt is not twisted.

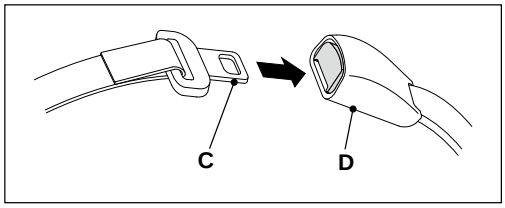

○ **How to release the seat belt**

Push the button **(E)** of the buckle to release the belt. The belt will automatically retract when release. Hold the plate of the belt and allow it to slowly retract.

● Be sure to fasten the belt across your hips, not across your abdomen.

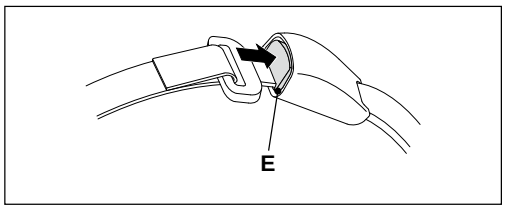

https://forklift-manuals.jimdofree.com

Downloaded from www.Manualslib.com manuals search engine

https://truckmanualshub.com/

2. Parking brake lever

When parking the lift truck, pull the lever fully to apply the parking brake. To release the brake, push the top button **(A)** and push the lever forward.
When the parking brake lever is pulled, the parking brake icon flashes. When the operator starts traveling without releasing the parking brake lever, the warning buzzer beeps and "*RELEASE PARKING BRAKE*" message is displayed.

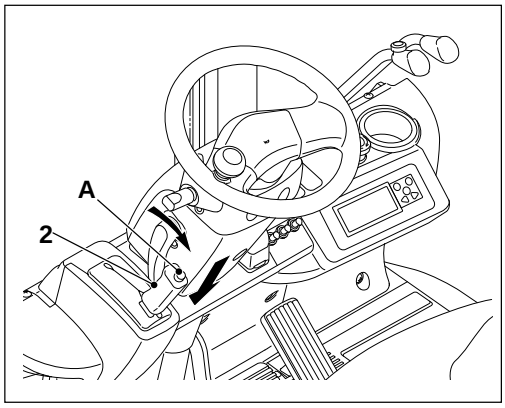

- **When parking the lift truck, lower the forks on the floor and pull the parking brake lever fully.**
- **When leaving the lift truck, turn the key switch off and remove the key.**
- **When operating the parking brake lever, make sure to depress the brake pedal.**

Parking brake alert :
When the operator leaves the seat without applying the parking brake, both the OIS icon and the parking brake icon flash. Also, "*PLEASE BE SEATED*" and "*APPLY PARKING BRAKE*" message are displayed and the warning buzzer beeps.
This function works even if the key switch is turned off except for disconnecting the battery plug or applying the emergency stop switch.

[How to reset the alert]
When the key switch is turned on ;
Sit on the operator's seat correctly, or apply the parking brake. (pull the parking brake lever.)

When the key switch is turned off ;
Apply the parking brake. (pull the parking brake lever.) or Sit on the operator's seat correctly.

3. Switch for turn signal lamp

Use turn signal lamp when turning.

[the turn signal lamp switch of left side location]
For forward **(A)** :
The right signal lamp is flashed for the right turn.
For backward **(B)** :
The left signal lamp is flashed for the left turn.

[the turn signal lamp switch of right side location]
For forward **(A)** :
The left signal lamp is flashed for the left turn.
For backward **(B)** :
The right signal lamp is flashed for the right turn.

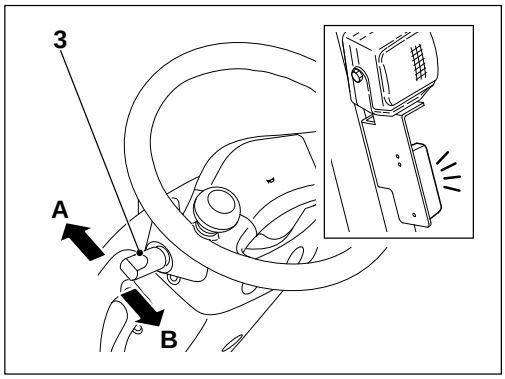

(This illustration shows the turn signal lamp switch of left side location.)

The turn signal lamp switch returns to the neutral position and the lamp turns off automatically by rotating the steering wheel to opposite direction.

https://forklift-manuals.jimdofree.com
Downloaded from www.Manualslib.com manuals search engine

https://truckmanualshub.com/

Switch for head lamps

This is the switch for the head lamps
Turn the knob forward to light up.
Turn the knob backward to switch off.

(Right side location or left side location is exactly the same usage.)

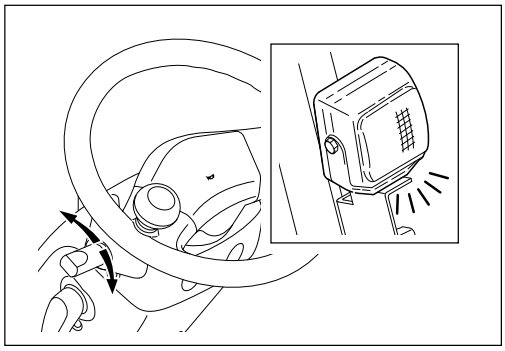

(This illustration shows the head lamp switch of left side location.)

4. Steering wheel knob, 5. Steering wheel

Grasp the steering wheel knob by the left hand. The right hand should hold the hydraulic levers lightly or put on the steering wheel.

- The electric power steering (EPS) and tilt steering column is the standard equipment.

Adjust the steering wheel for your best operating position by the tilt steering lever **(A)**.

After adjusting the steering tilt angle, tighten the tilt steering lever securely.

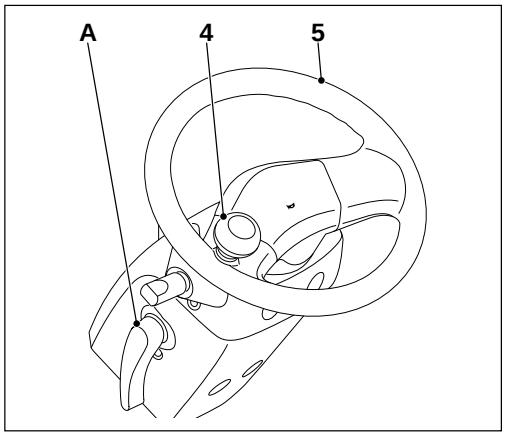

6. Horn button

Horn button is located on the center of the steering wheel and the tilt lever. Press the button to operate the horn.

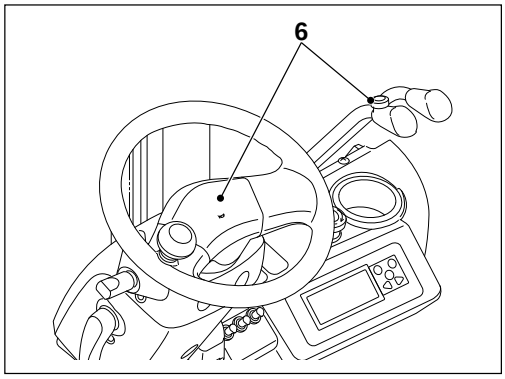

7. Switch for the laser pointer (Option) (Refer to the page 41 for details.)

To power on the laser pointer, turn the switch lever up.
When the fork is leveled, the laser pointer irradiates the laser beam and the fork leveling indicator lamp is lit.

To power off, turn the lever down.

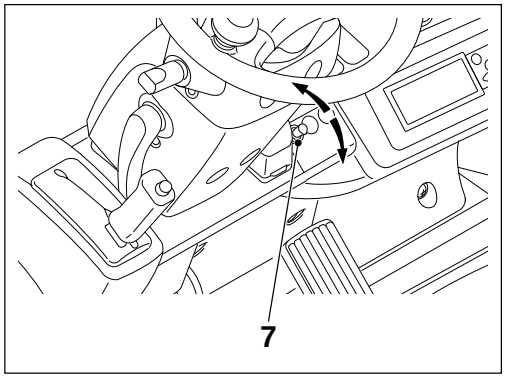

https://forklift-manuals.jimdofree.com

Downloaded from www.Manualslib.com manuals search engine

https://truckmanualshub.com/

8. Brake pedal, 9. Accelerator pedal

Depress the accelerator pedal gradually. Travel speed can be adjusted by depressing angle of the pedal.

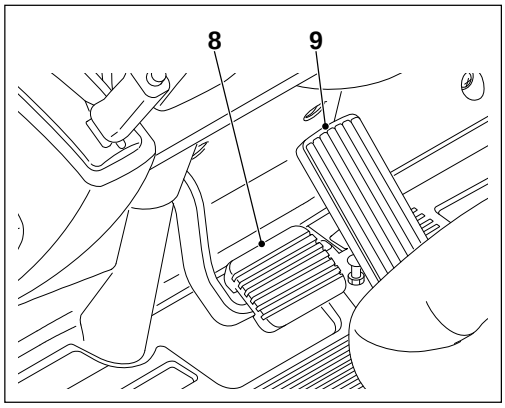

Do not depress the accelerator pedal and brake pedal at the same time. The traction motor may be damaged if this occurs.

10. Lift lever

Lifting up the forks : Pull the lift lever backward.
Lowering the forks : Push the lift lever forward.

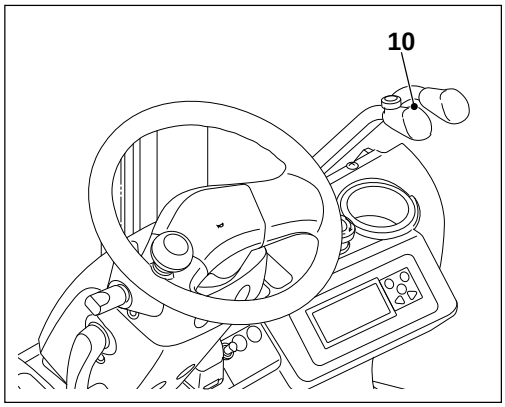

Lifting and lowering speed can be controlled by stroke of the lift lever. Do not operate it roughly.
The lift function will not activate if the lift lever is operated before turning on the key switch.

Do not stop lifting or lowering suddenly.

11. Tilt lever

Tilting backward : Pull the tilt lever backward.
Tilting forward : Push the tilt lever forward.

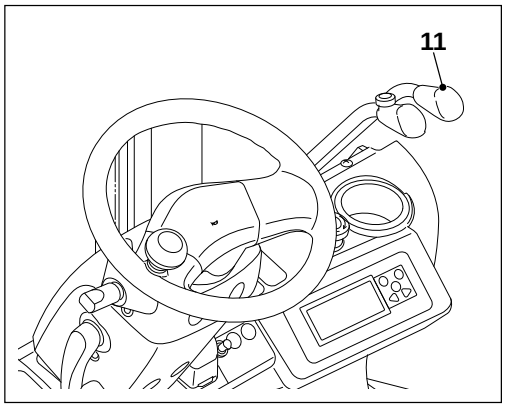

Tilt speed can be controlled by stroke of the tilt lever. Do not operate it roughly.
The tile function will not activate if the tilt lever is operated before turning on the key switch.

Operate hydraulic levers with sitting on the operator's seat.

12. Emergency stop switch

In case of emergency, press the emergency stop switch. The power supply is shut off and all functions are stopped. By turning the switch knob clockwise or pulling the switch knob, the truck can be powered on again.

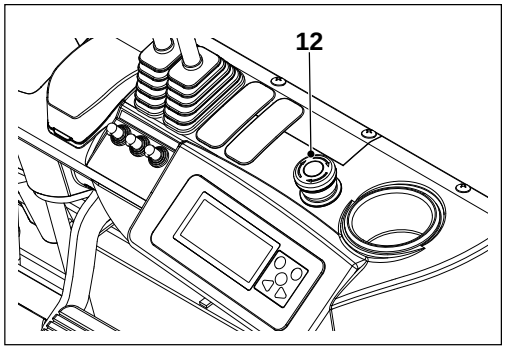

- **Except the emergency case, do not use the emergency stop switch.**
- **As the steering operaton also doesn't work at the same time as pressing the switch, it may cause serious accidents in case the switch is pressed during the traveling operation.**

https://forklift-manuals.jimdofree.com
Downloaded from www.Manualslib.com manuals search engine

https://truckmanualshub.com/

13. Directional switch

This switch is used to change the direction of traveling.

For forward **(A)** : Turn on the switch forward and depress the accelerator pedal.

For backward **(B)** : Turn on the switch backward and depress the accelerator pedal.

(Right side location or left side location is exactly the same usage.)

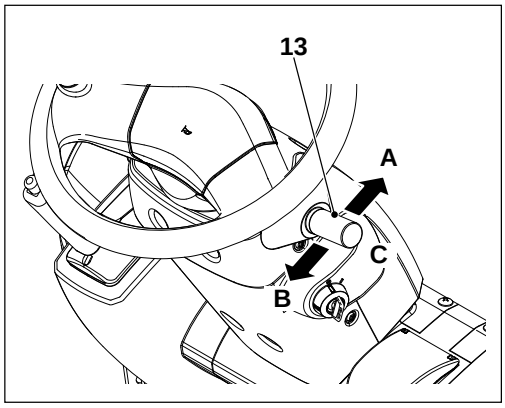

(This illustration shows the directional switch of right side location.)

Travel speed is changed by depressing angle of the accelerator pedal.

Do not flip the directional switch when changing the direction.

- It is dangerous because the directional switch is flipped back to unexpected direction.

Avoid fast start and sudden movements. This can cause the lift truck to tip over. Such movements can cause people to be hurt or killed and material can also be damaged.

Return the directional switch to the neutral position "C" when not traveling.

When the key switch is turned on with depressing the accelerator pedal and with turning on the directional switch forward or backward, the error message is appeared on the screen and all functions do not work. After moving the directional switch to the neutral position and releasing the accelerator pedal, turn on the key switch again to start operation.

14. Key switch

OFF **(A)** : This position turns off all electric circuit except some accessories and the key can be put in or taken off.

ON **(B)** : After turning on all electric circuit, the key switch is held in this [ON] position.

START **(C)**: This [START] position connects all electric circuit to allow the operation of the forklift truck and monitor display is turned on.
The key is returned to [ON] position automatically by releasing.

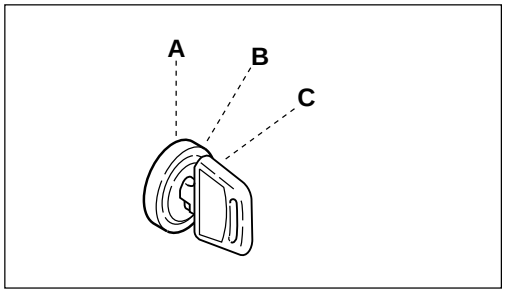

Automatic power off function :
Suspending the travel and hydraulic operation for 15 minutes, electric circuits are turned off automatically. Turn the key switch into the [START] position to turn the power on again.

https://forklift-manuals.jimdofree.com
Downloaded from www.Manualslib.com manuals search engine

https://truckmanualshub.com/

15. Rear assist grip (w/horn switch)

The operator can hold the body when traveling backward by grasping this grip. The push button **(A)** is a horn switch.
The operator can beep the horn with grasping the grip when traveling backward.

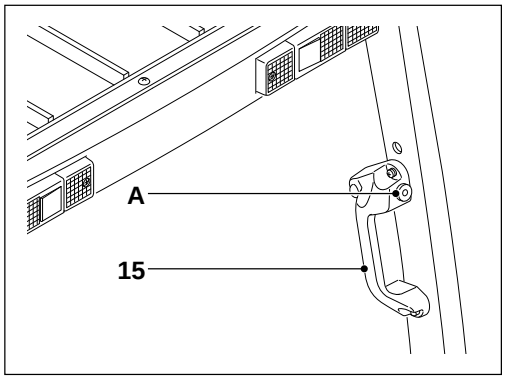

https://forklift-manuals.jimdofree.com
Downloaded from www.Manualslib.com manuals search engine

https://truckmanualshub.com/

Laser pointer (Option)

Function

The laser pointer is the laser-pointing device for a pallet to find the fork inserting position easily.

Specification

Voltage of power supply :
3 volts D.C. (supplied from the power circuit of a forklift truck)
Length of beam (Line type) :
Approximately 500 mm long at 1 m ahead
Width of beam (Line type) : 1 through 3 mm wide
Diameter of beam (Point type) : 2 through 5 mm dia.
Lighting power : Less than 1 mw
Laser class : 2

Features

● The laser beam

Line type (Standard)

The light beam is a line and easy to find out on a pallet.

► It is suitable for a bright colored pallet or using in a dark warehouse.

Point type (Option)

The light beam is the dot. It is brighter than the line type but it may not be easy to find the dot.

► It is suitable for the dark-colored pallet or using in a well-lighted warehouse.

● Fork leveling indicator lamp (set option with the laser pointer)

When the fork is leveled, the fork icon is appeared on the display with beeping the buzzer.
Another indicator lamp on the lift cylinder is also illuminated.
Operator can make sure the fork is leveled not only for picking the pallet but for pulling the fork out also from the pallet when stacking.

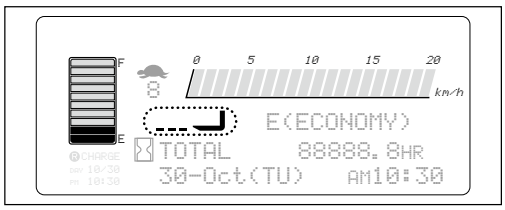

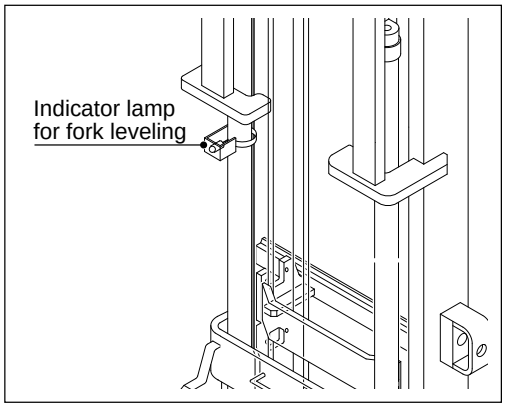

The fork level indicator lamp indicates that the fork is leveled when unloading. When loaded, the fork may not be leveled even the indicator lamp is lit because of the flexion of forks.

https://forklift-manuals.jimdofree.com
Downloaded from www.Manualslib.com manuals search engine

https://truckmanualshub.com/

For safe operation of laser pointer

Read and understand following cautions.

Check the focus of the laser beam before operation. If it is out of focus, contact your local NICHIYU dealer for adjustment.

Do not sprinkle water to the laser pointer.

Do not use the laser pointer on a slope. Then, it cannot detect the correct position.

Explain precautions about the laser beam to people who work around the forklift truck.

The laser beam is just a reference. Operator has to make sure visibly when inserting forks into a pallet.

The laser light is dangerous when eyes are exposed directly. Do not see the beam directly. Do not see the reflected beam by mirror also.

Do not disassemble or modify the laser unit.

Do not use this device in the place where any abnormality or incorrect activation of machines have experienced or expected by the laser beam.

https://forklift-manuals.jimdofree.com

Downloaded from www.Manualslib.com manuals search engine

https://truckmanualshub.com/

Name of each part

Switch for the laser pointer

To power on the laser pointer, turn the switch lever up.
When the fork is leveled, the laser pointer irradiates the laser beam and the fork leveling indicator lamp is lit.

To power off, turn the lever down.

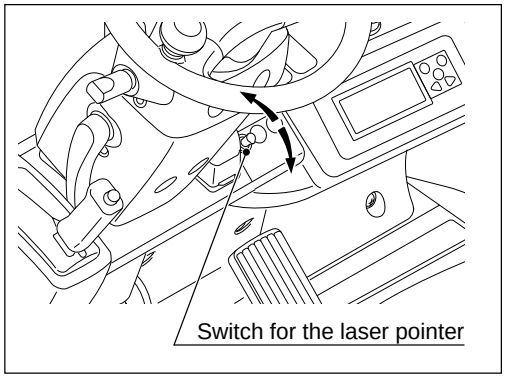

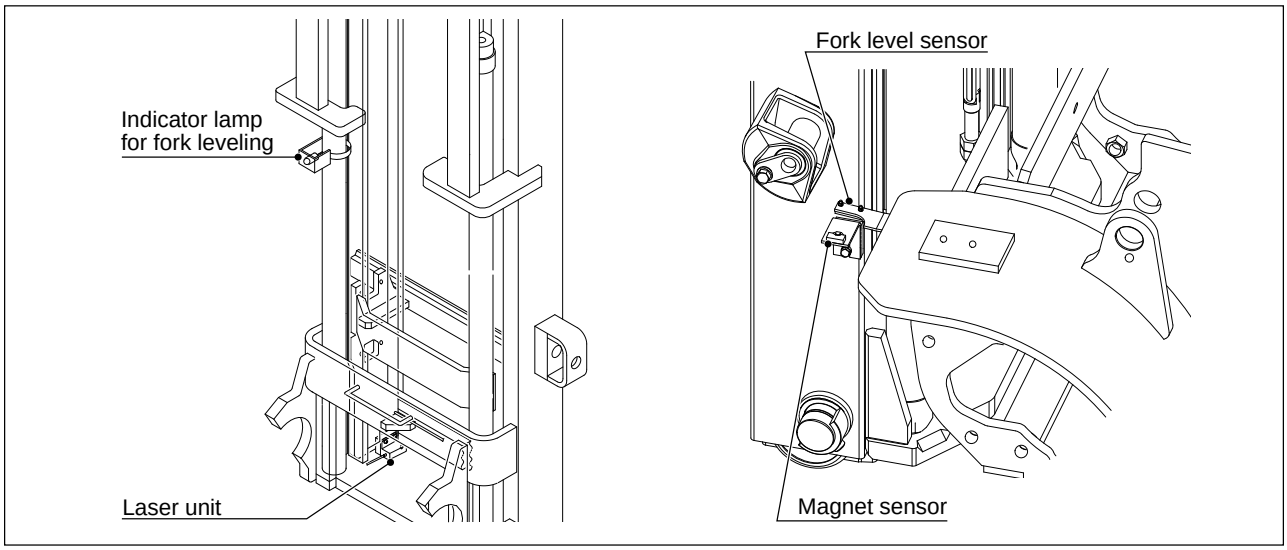

https://forklift-manuals.jimdofree.com
Downloaded from www.Manualslib.com manuals search engine

https://truckmanualshub.com/

General information for the laser pointer

The LASER POINTER has the laser unit (semiconductor laser) in it.
The laser is classified by the output power of the beam. Observe the following precautions.

The laser beam is very danger when it is irradiated to eyes.
- **Do not irradiate the beam to eyes directly.**
- **Do not irradiate the beam to animals.**
- **Do not see the beam even reflected.**

If saw the laser beam directly, avert eyes from it immediately.
The category of the laser unit in the LASER POINTER is Class 2.
Under this laser class, eyes are protected by winking several times.

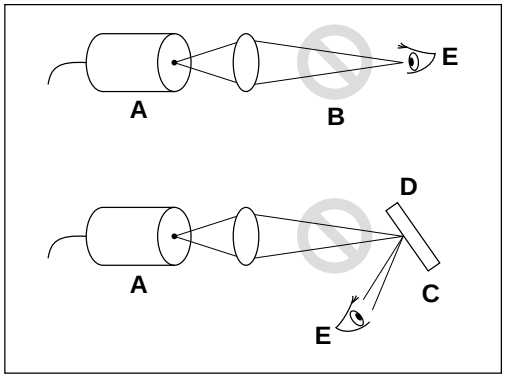

Classification of laser
The laser unit is classified by output power for evaluation of risk.
The classification is as follows.

Classification	Evaluation for danger
Class 1	No effect on human body.
Class 2	Eyes are protected by repugnant reaction such as winking.
Class 3A	Eyes are protected by repugnant reaction such as winking, but direct watching of the laser beam by an optical way is dangerous.
Class 3B	Direct watching of the laser beam is dangerous.
Class 4	High risk is expected for eyes to damage by the laser beam even diffused reflected. Skin damage or source of ignition also may be possible.

The category of the laser unit in the LASER POINTER is Class 2.

https://forklift-manuals.jimdofree.com
Downloaded from www.Manualslib.com manuals search engine

https://truckmanualshub.com/

Regarding to affections from or to the LASER POINTER with other equipment

(1) Affection to equipment that uses infrared rays
The wave length of the LASER POINTER (semiconductor laser) is 650 nm, and the general infrared rays are around 800 nm. So, it may not affect each other.

(2) Affection to wireless equipment, OA equipment and/or AGV (Automatic Guided Vehicle)
The laser beam is a lay of light which does not produce electromagnetic noise. So, it does not affect for radio waves.

(3) Affection to LASER POINTER from high-tension line or strong electric noise.
The weak point of the semiconductor laser is the surge (abnormal voltage) that is created by its high-speed response, and high temperature. The LASER POINTER is designed to protect from such circumstances. However, the arc-welding and/or induction noise from a high-tension line is bad for the LASER POINTER, and it may be affected under these circumstances. Therefore, the using place should be made sure not to affect to it. Leaving under direct sunshine in summer is caused high temperature and may shorten the lifetime or damage the laser unit.

The safety precautions of the laser beam shall be explained to operators and other workers around a forklift truck.

Do not use this device in the place where any abnormality or incorrect activation of machines have experienced or expected by the laser beam.

Modification prohibited
- **Do not disassemble, modify and/or adjust a potentiometer of the LASER POINTER. They are very dangerous.**
- **Do not watch a source of light even if not irradiated the beam.**
- **Do not replace with other similar device for the LASER POINTER.**

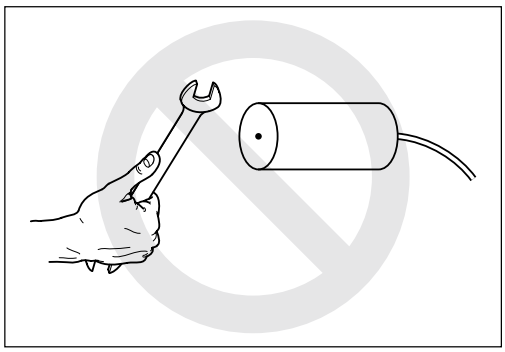

https://forklift-manuals.jimdofree.com

Downloaded from www.Manualslib.com manuals search engine

https://truckmanualshub.com/

3 DRIVING AND OPERATION

- **Do not operate the forklift truck prior to daily inspection.**
- **Inspect the forklift truck before you operate it to be sure that it is properly maintained and in good working order.**

Preparation of start

1) Check the directional switch (A) is in the neutral position (B) and the parking brake (C) is applied.

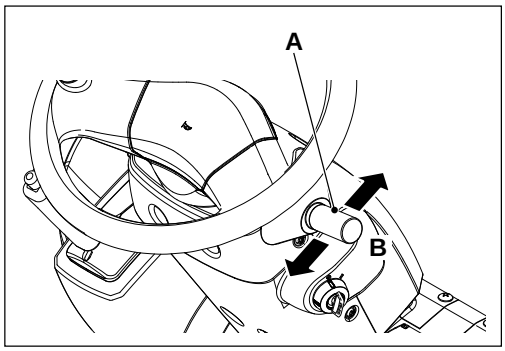

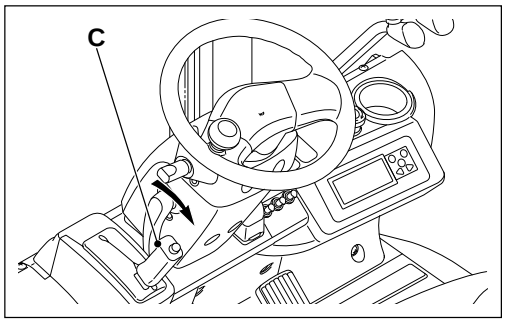

2) Turn on the key switch

Grasp the steering wheel knob and then turn on the key switch.

OFF : **D**
START : **E**
ON : **F**

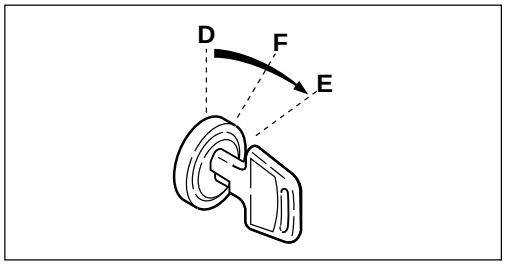

3) Tilting back the mast ass'y.

- Raise the forks about 150 to 200mm from the floor by the lift lever **(G)**.
- Tilt back the mast ass'y by the tilt lever **(H)**.

- The hydraulic speed is adjustable by operating angle of levers.
- If the hydraulic lever is operated when the key switch is turned on, the error message is appeared on the screen and all function are locked. Release all hydraulic levers and turn on the key switch again to start operation.

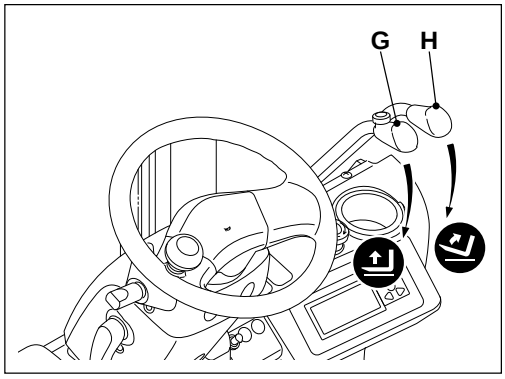

https://forklift-manuals.jimdofree.com
Downloaded from www.Manualslib.com manuals search engine

https://truckmanualshub.com/

4) Operation of the directional switch (A)

Operate the directional switch to the direction of traveling.

Forward **(B)** : Turn on the switch forward.

Backward **(C)** : Turn on the switch backward.

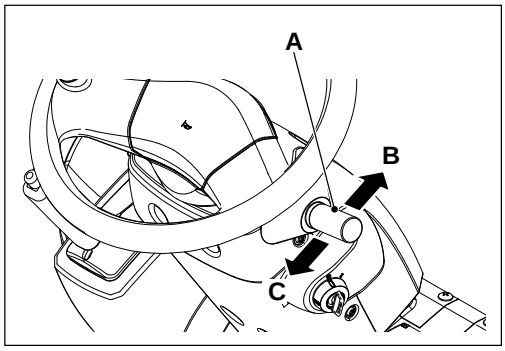

5) Release the parking brake

Depress the brake pedal.

Push the top button and brake lever forward fully to release the parking brake.

Grasp the steering wheel knob by the left hand, put the right hand lightly on the steering wheel.

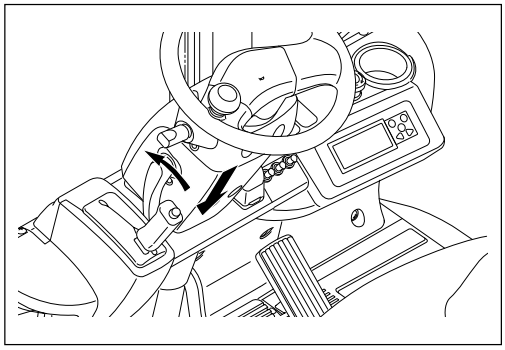

Traveling

1) Start

Release the brake pedal **(D)** and depress the accelerator pedal **(E)** gradually, then the lift truck will begin to move.

Acceleration varies in accordance with the depressing of the accelerator pedal.

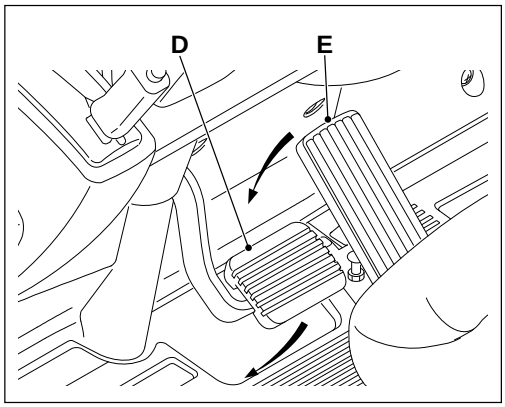

Do not start or stop the lift truck suddenly.

2) Turning

Slow down and operate steering wheel carefully and check to make sure the tail swing area is clear before turning.

3) Electrical brake (Plugging brake)

While traveling, if the directional switch is shifted in opposite position, the electrical brake should be activated.

Braking force varies in accordance with the depressing of the accelerator pedal.

https://forklift-manuals.jimdofree.com

Downloaded from www.Manualslib.com manuals search engine

https://truckmanualshub.com/

4) Stop

Slow down and apply the brake gradually. Do not apply brake suddenly.

Do not apply brake suddenly.

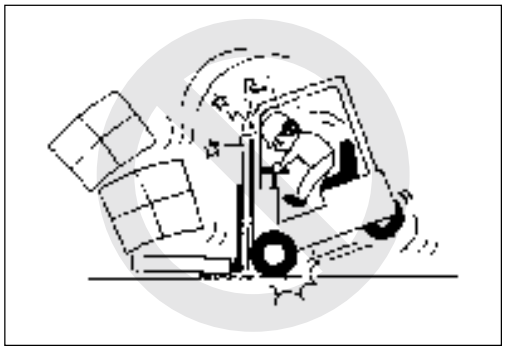

5) Parking

When parking the lift truck,

- When getting off the lift truck, correctly apply the parking brake.
- Tilt the mast to forward and lower the forks on the floor.
- Do not park the lift truck on a slope.
- When leave the lift truck, remove the key.

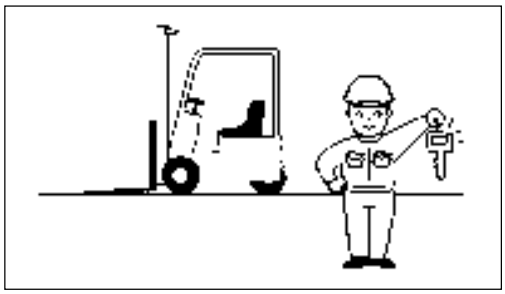

Stacking operation

Check the following items before operating forklift truck.
- **Make sure there is no load falling or damage of load at loading area.**
- **Make sure there is no foreign object in the stacking area.**

When stacking a load, observe the following procedures.

1. Reduce travel speed and stop in front of the stacking area.
2. Make sure it is safe around the stacking area.
3. Face the truck to the stacking position correctly.
4. Tilt the forks to horizontal position and raise the forks above the stacking position.

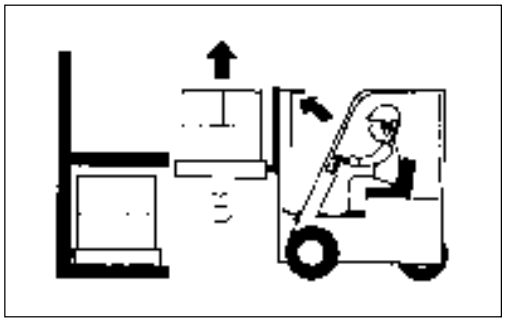

5. After making sure the stacking position and the pallet position again, travel forward slowly until the load, pallet, mast and truck do not touch around the stacking area.

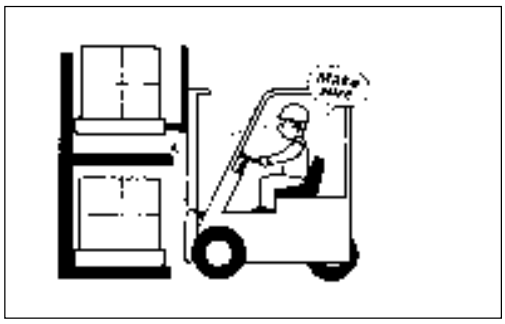

https://forklift-manuals.jimdofree.com

Downloaded from www.Manualslib.com manuals search engine

https://truckmanualshub.com/

6. Lower the forks slowly and make sure the load is placed on the stacking position correctly.

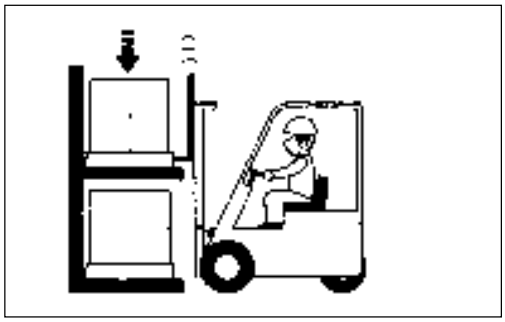

When the load is not aligned at the front or the rear, adjust such non-alignment according to the following procedures:
1) Lower the forks until the load is placed on the stacking position and the forks become free.
2) Travel backward slowly about 1/4 length of the forks.
3) Lift (50-100mm) the forks again and travel forward slowly to align the load. Lower the forks slowly in the proper stacking position.

7. Travel backward slowly until the forks do not touch the load and pallet.
8. Make sure the tips of the forks are off the load or pallet, and lower the forks to the traveling position (150-200mm from the ground).

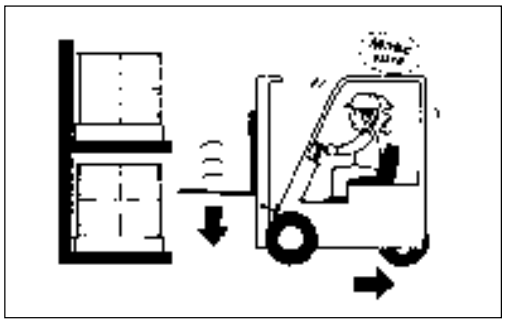

Picking operation

When picking a load, observe the following procedures:
1. Reduce travel speed and stop in front of the picking area. (about 300mm between the load and the tips of the forks.)
2. Face the truck to the picking position correctly.
3. Make sure the load is stable on the pallet.
4. Tilt the forks to horizontal position and raise the forks to the inserting position of the pallet.

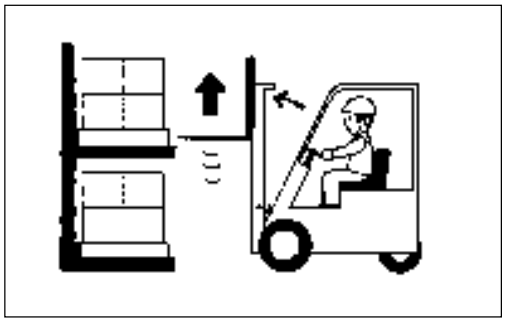

5. After making sure the inserting position of the pallet again, travel forward slowly until the forks are fully inserted into the pallet.

When it is difficult to fully insert the forks into the pallet:
1) Insert about 3/4 length of the forks and raise the forks a little (50-100mm).
2) Travel backward slowly about 100-200mm and lower the forks (place the pallet).
3) Insert the forks into the pallet fully with traveling forward.

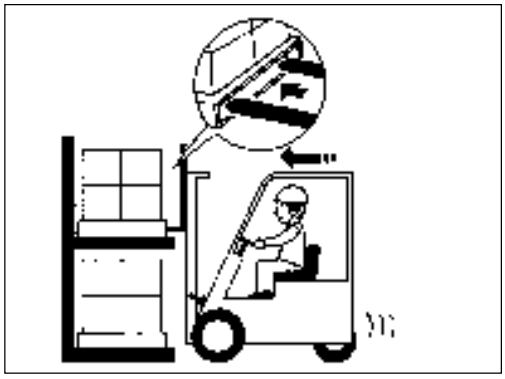

https://forklift-manuals.jimdofree.com

Downloaded from www.Manualslib.com manuals search engine

https://truckmanualshub.com/

6. After inserting, raise the forks (50-100mm).
7. Travel backward slowly until the load and pallet do not touch around the picking area.

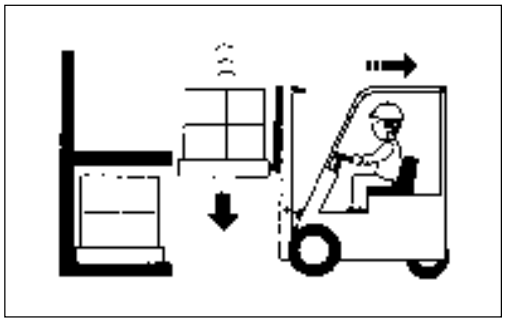

8. Make sure the load is completely out from the picking area. Lower the forks to the traveling position (150-200mm from the ground).
9. Tilt the forks up.

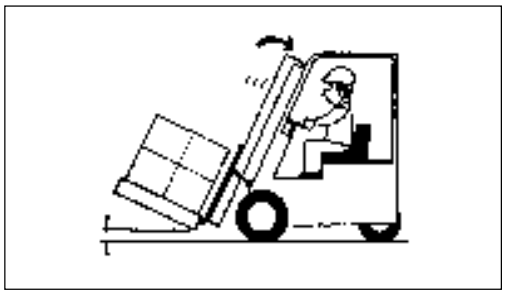

10. Carry the load to its destination.

https://forklift-manuals.jimdofree.com
Downloaded from www.Manualslib.com manuals search engine

https://truckmanualshub.com/

4 BATTERY AND CHARGER

Battery

- This section explains NICHIYU's genuine battery and charger.
- When the lift truck is equipped with another type battery and/or charger, please follow the instructions provided by that manufacturer.

Keep fire away

Do not make any short circuit and spark near the battery.
Also, do not bring any fire like a cigarette close to the battery.

Both while charging and discharging, the explosive gas is produced.
Smoking, flames or sparks can cause battery explosions.

Pay attention to an electric shock

Do not touch the conductive part at the time of installation and maintenance.
The battery has high voltage and power.

When servicing the battery, wear the safety goggles, rubber gloves and boots.

Connect correctly

Do not swap the positive and negative terminals.

- It can cause sparking, burning and/or explosion.

Keep tools away

Keep tools away from terminals to avoid sparks or shorting.

https://forklift-manuals.jimdofree.com

Downloaded from www.Manualslib.com manuals search engine

https://truckmanualshub.com/

Do not over-discharge

The battery life can be shortened by over-discharging.
For details, refer to the page 22.

Keep clean

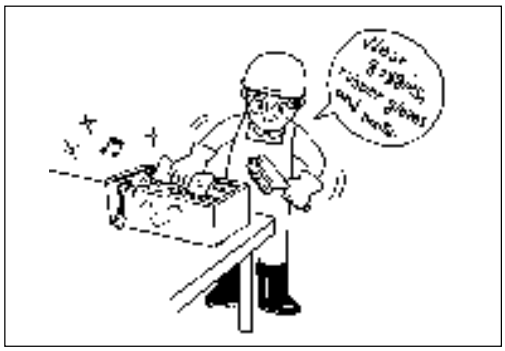

- **Keep the upper surface of the battery clean.**
- **Do not use a dry cloth when cleaning, as it may produce static electricity.**
- **Wear the safety goggles, rubber gloves and boots.**

Clean the battery before charging.

Wear safety clothes

Wear safety goggles, rubber gloves and boots to protect yourself.

Be careful the electrolyte

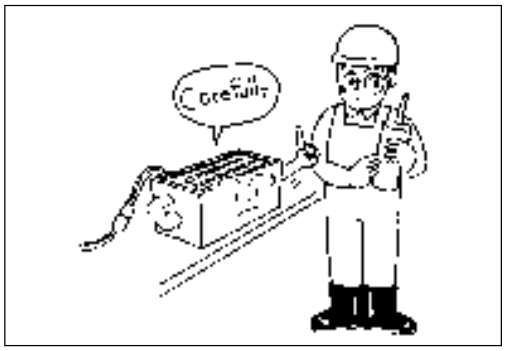

Be careful the electrolyte does not touch the skin.

- Electrolyte of the battery is sulfuric acid.

https://forklift-manuals.jimdofree.com
Downloaded from www.Manualslib.com manuals search engine

https://truckmanualshub.com/

Emergency first aid

The battery contains sulfuric acid which causes severe burns if touched.
If an accident occurs, receive emergency first aid and consult your physician immediately.

- **Spilled on skin:**
  Wash down with water for 10 to 15 minutes.
- **Splashed in eye:**
  Wash down with water for 10 to 15 minutes.
- **Swallowed:**
  Drink large amounts of milk or water.
- **Splashed on clothes:**
  Take off clothes immediately.

If you do not follow these instructions, you will be seriously injured or killed.

Close vent caps securely

Make sure all vent caps are closed securely. Failure to close the caps can cause leaking of electrolyte.

Washing

Do not wash the battery on the forklift truck. It causes damage to the truck.

Abnormal battery

If the battery shows the following situation, contact your local NICHIYU dealer.

- **The battery stinks.**
- **The electrolyte is muddy.**
- **The electrolyte decreases fast.**
- **The temperature of electrolyte is too high.**

Do not disassemble the battery.

Do not drain the electrolyte, disassemble and repair the battery.

https://forklift-manuals.jimdofree.com

Downloaded from www.Manualslib.com manuals search engine