https://truckmanualshub.com/

STEINER®

OWNER/OPERATOR'S MANUAL & ILLUSTRATED PARTS LIST

MODEL:

75-70710 TRACTOR CAB 420/430 CB420

WARNING: If incorrectly used this machine can cause severe injury. Those who use and maintain this machine should be trained in its proper use, warned of its dangers and should read the entire manual before attempting to set up, operate, adjust or service the machine.

JACOBSEN
A Textron Company

09-156 REV A

https://truckmanualshub.com/

CALIFORNIA
Proposition 65 Warning

Diesel engine exhaust and some of its constituents are known to the State of California to cause cancer, birth defects and other reproductive harm.

WARNING

The engine exhaust from this product contains chemicals known to the State of California to cause cancer, birth defects or other reproductive harm.

Californie Proposition 65
Avertissement

Les échappements des moteurs diesel et certains de leurs composés sont reconnus par l'Etat de Californie pour être cancérigènes, provoquer des défauts congénitaux et d'autres dangers en matière de reproduction.

AVERTISSEMENT

L'émission du moteur de ce matériel contient des produits chimiques que l'Etat de Californie considère être cancérigènes, provoquer des défauts congénitaux et d'autres dangers en matière de reproduction.

California Advertencia
de la Proposicion 65

El estado de California hace saber que los gases de escape de los motores diesel y algunos de sus componentes producen cáncer, defectos de nacimiento y otros daños en el proceso de reproducción humana.

ADVERTENCIA

El estado de California hace saber que los gases de escape de este producto contienen productos quÍmicos que producen cáncer, defectos de nacimiento y otros daños en el proceso de reproducción humana.

© 2003, TEXTRON INC

https://truckmanualshub.com/

TRACTOR CAB

IMPORTANT MESSAGE

Thank you for purchasing this Jacobsen product. You have purchased a world class product, one of the best designed and built anywhere.

This product comes with an Owner/Operator's Manual. The useful life and good service you receive from this product depends to a large extent on how well you read and understand this manual. Treat this product properly and adjust it as instructed, and it will give you many years of reliable service.

See a Jacobsen dealer for any service or parts needed. Jacobsen service ensures that you continue to receive the best results possible from Jacobsen products. You can trust Jacobsen replacement parts because they are manufactured with the same high precision and quality as the original parts.

Jacobsen designs and builds its equipment to serve many years in a safe and productive manner. For longest life, use this product only as directed in the manual, keep it in good repair and follow safety warnings and instructions. You'll always be glad you did.

Jacobsen, a Textron Company
One Bob Cat Lane
Johnson Creek, WI 53038-0469

TABLE OF CONTENTS **FIGURES** **PAGE**

INTRODUCTION 2
SPECIFICATIONS 3
SAFETY 4, 5
ASSEMBLY INSTRUCTIONS 6-9
INSTALLATION 10
REMOVAL 11
CAB PARTS ..... FIGURE 1 ..... 12, 13

https://truckmanualshub.com/

DESCRIPTION

The sturdy CB420 cab is carefully designed to fit the model 420 and 430 tractor equipped with a ROPS rollbar. It is extremely useful in cold weather when operating a snowblower, V-blade, or a power angle blade. Exceptional features include ease of entry from either side, full glass windshield and back window, and lightweight removable doors. Supported by the ROPS rollbar and equipped with a seat belt, the operator has added comfort and safety protection. There are a few limitations, however, with the cab installed. Overall visibility is good, but portions of the cab create blind spots.

A windshield wiper is standard equipment. Additional lights and safety lights may be added as desired by the owner.

NOTE: The CB420 cab cannot be used with the front end loader, vertical auger or boom mower attachments when the mounting shaft is in place.

https://truckmanualshub.com/

SPECIFICATIONS

Overall Height - Installed	68"
Overall Width	45"
Cab Length	48"
Head Room	40"
Inside Roof Width	30"
Roof Length	42"
Roof Width (outside)	35"

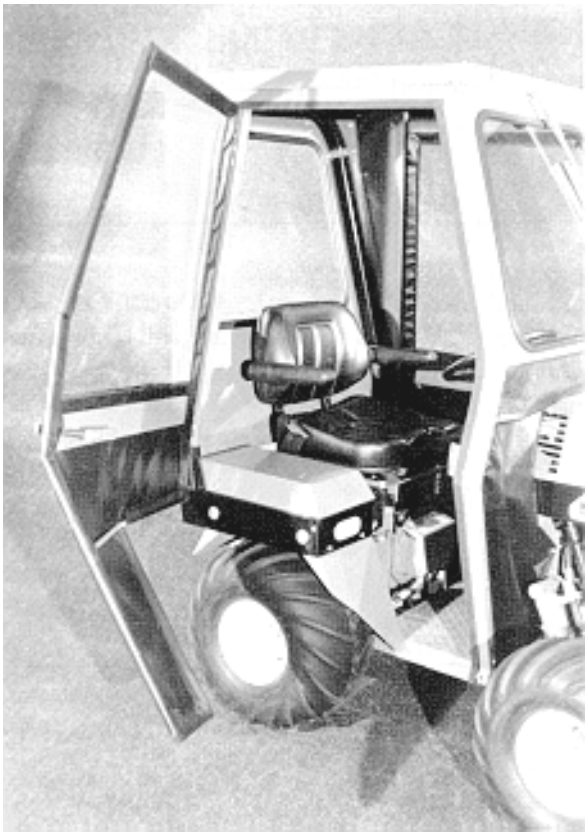

https://truckmanualshub.com/

NOTICE !!!

Unauthorized modifications may present **extreme** safety hazards to operators and bystanders and could also result in product damage.

Jacobsen, a Textron Company strongly warns against, rejects and disclaims any modifications, add-on accessories or product alterations that are not designed, developed, tested and approved by Jacobsen Engineering Department. Any Jacobsen product that is altered, modified or changed in any manner not specifically authorized after original manufacture–including the addition of "after-market" accessories or component parts not specifically approved by Jacobsen–will result in the Jacobsen Warranty being voided.

Any and all liability for personal injury and/or property damage caused by any unauthorized modifications, add-on accessories or products not approved by Jacobsen will be considered the responsibility of the individual(s) or company designing and/or making such changes. Jacobsen will vigorously pursue full indemnification and costs from any party responsible for such unauthorized post-manufacture modifications and/or accessories should personal injury and/or property damage result.

This symbol means:
ATTENTION!
BECOME ALERT!

Your safety and the safety of others is involved.

Signal word definitions:

The signal words below are used to identify levels of hazard seriousness. These words appear in this manual and on the safety labels attached to Jacobsen machines. For your safety and the safety of others, read and follow the information given with these signal words and/or the symbol shown above.

⚠DANGER

DANGER indicates an imminently hazardous situation which, if not avoided, **WILL** result in death or serious injury.

⚠WARNING

WARNING indicates a potentially hazardous situation which, if not avoided, **COULD** result in death or serious injury.

⚠CAUTION

CAUTION indicates a potentially hazardous situation which, if not avoided, **MAY** result in minor or moderate injury. It may also be used to alert against unsafe practices or property damage.

CAUTION

CAUTION used without the safety alert symbol indicates a potentially hazardous situation which, if not avoided, **MAY** result in property damage

MODEL NUMBER: This number appears on sales literature, technical manuals and price lists.

SERIAL NUMBER: This number appears only on your mower. It contains the model number followed consecutively by the serial number. Use this number when ordering parts or seeking warranty information.

https://truckmanualshub.com/

GENERAL SAFETY

1. Read and understand the Owner's Manual before attempting to operate this machine.
2. Operate all controls from the operator's seat. **NO RIDERS**.
3. Keep all shields in place and safety switches adjusted properly.
4. Do not leave equipment unattended. STOP the engine and remove the key.
5. Do not allow minors or the inexperienced to operate this machine.
6. Keep people and pets a safe distance away from machine using power driven attachments. Injury could result from flying debris.

OPERATING SAFETY

1. **DO NOT attempt to work on unit or any attachments with the engine running. STOP ENGINE!**
2. Before leaving operator's seat:
   - **Lower attachments**
   - **Stop PTO driven units**
   - **Set PARKING brake**
   - **Stop engine.**

https://truckmanualshub.com/

1. Have a ROPS approved roll bar and seat belt mounted to your tractor, using the roll bar instructions.

NOTE: If you have a canopy on the roll bar, it needs to be removed.

2. (420 only, if applicable) Move steering cylinder mount on the treadplate to the outside hole. THIS IS VERY IMPORTANT! (See Drawing A)

3. Open the hardware package and sort the bolts and nuts according to size.

4. Slide the rear panel over the roll bar and fasten with (4) “W” shaped clamps **A** and (8) 5/16 X 1" bolts. Leave bolts loose at this time.

5. Lay the roof panel in place and bolt to the rear panel with (9) 5/16 X 3/4" bolts.

NOTE: The rear panel may need to be moved to fit roof panel as shown in Photo 3 Page 7.

6. Drill (2) 11/32" holes in the front corners of the tread plate as shown in Drawing A.

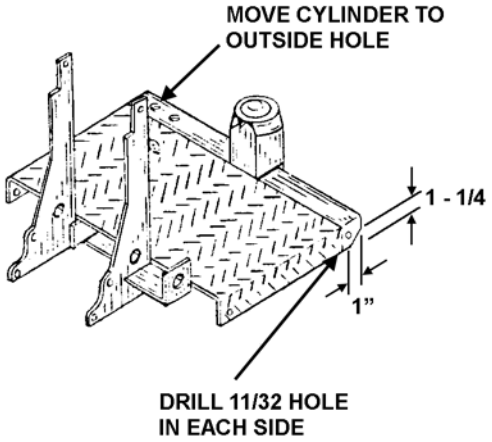

Drawing A

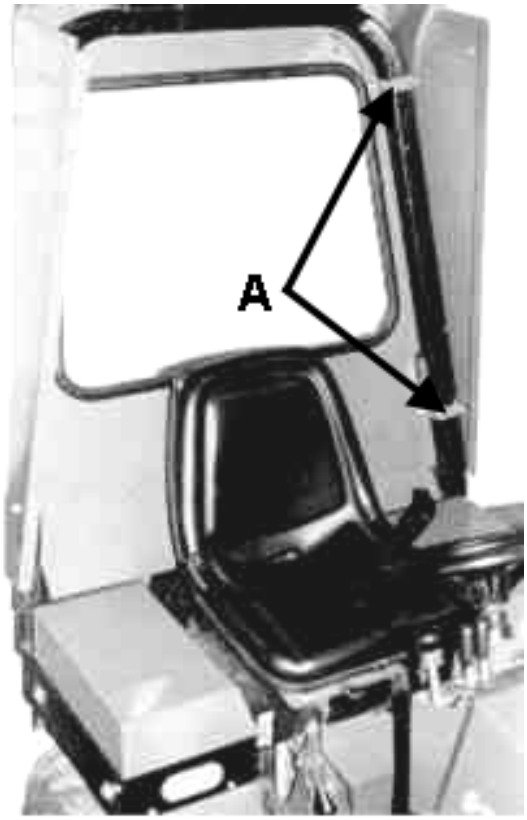

Photo 1

https://truckmanualshub.com/

7. Set the front panel on the tractor and insert two 5/16 X 1" bolts through the frame and treadplate. Next, bolt the top of the front panel to the front of the roof panel as shown.

8. Bolt the four hinges to the rear panel with (8) 5/16 X 3/4" bolts as shown in Photo 3.

9. Tighten all bolts that have been installed at this time. Install weatherstrip around the door opening along the top and front sides as shown in Photo 3.

10. Attach striker plate to cab frame as shown in Drawing B. Install door on hinges. Assemble latch to door as shown in Drawing B. Adjust striker plate forward or back to provide the inside handle to catch approximately 1/2". Adjust the tightness of the latch by adjusting the 3/8" and 1/4" nuts in or out. In a few cases the striker plate may need to be bent slightly.

NOTE: Doors may require bending slightly for best fit.

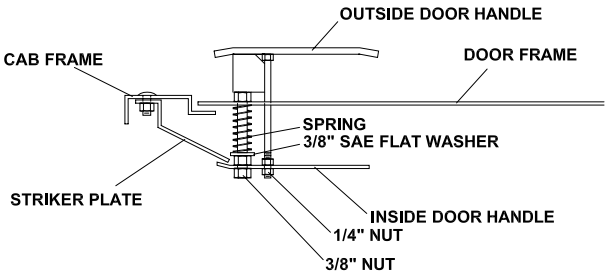

Drawing B

Photo 2

Photo 3

https://truckmanualshub.com/

11. From the left side of the tractor, install the “S” hook on the top edge of the pump mount plate as shown in Drawing C.

12. Stretch each top elastic cord from the fabric panel across the front panel to the extended bolts. Pull the middle elastic cord through the tractor above the drive shaft. Loop the elastic cord over the “S” hook to prevent rubbing the driveshaft. Take the bottom elastic cord through to the other side in front of the frame pivot as shown Photo 4.

13. Mount the wiper above the windshield according to the wiper instructions. Mount the wiper blade on the wiper arm with the short end of the blade away from the wiper motor. Check the wiper blade path so that it does not contact the rubber moulding. Fasten the inline fuse to the auxiliary side of the circuit breaker and route the wire to the wiper.

14. On Kubota engine models, install the air intake tube guard on the left rear of the black side panel. The guard bolts to the same holes that the side panel does and uses the existing hardware. The guard is to prevent the cab fabric from plugging the air intake tube and stalling the engine.

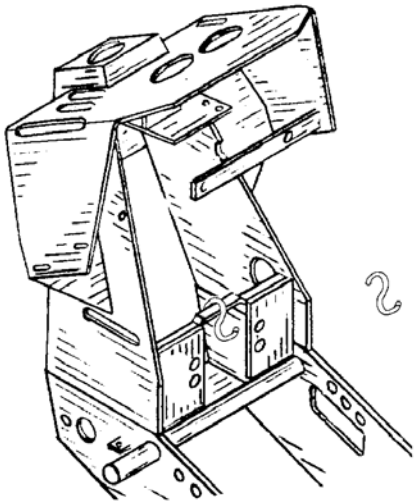

Drawing C
(420 is shown.....430 is similar)

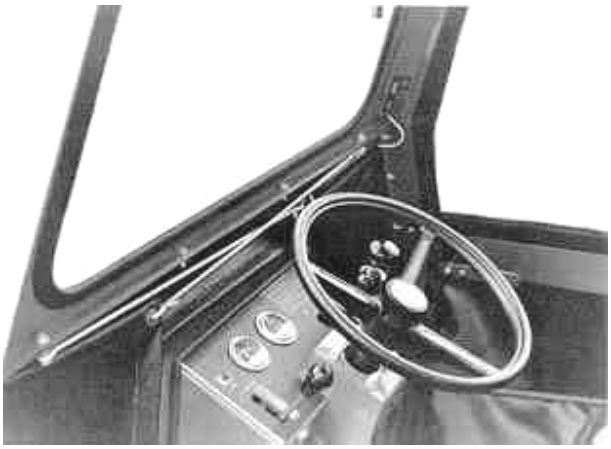

Photo 4

https://truckmanualshub.com/

WWF WINDSHIELD WIPER INSTALLATION
(Except 1000 Series)

1. Locate mounting position of wiper assembly.

2. Determine whether adequate space is available.

3. Locate approximate stud position on header. See that blade will wipe the desired area of windshield.

4. Should a change of wiping angle be needed:

   a. Remove gear case cover.
   b. Remove spring clip on pivot shaft arm.
   c. Lift link and install in desired degrees on gear.
   d. Reverse the above procedure to reassemble.

Wiping angles available are 85, 100, 110, and 120 degrees.

5. Distance between stud hole and bracket hole should be 6.25 inches.

6. Drill tower stud hole first using a 5/8" drill.

7. Drill mounting bracket hole for a No. 10 screw.

8. Place the wiper in position and install the mounting stud attaching nut and washers. Tighten to 30-50 in. lbs.

9. Wiring - See diagram. On applications where mounting is of wood, fiber, glass etc., a separate ground wire must be attached to the motor and connected to a battery ground point. A no.14 wire is recommended.

NOTE: Blade and arm should be mounted approximately 1" minimum away from windshield molding. Make certain the wiper blade does not strike at either end of the wiping stroke. If blade strikes at both ends, it will be necessary to shorten the arm and blade length or reduce the wiping angle of the wiper. (Refer to Step 4.)

MAXIMUM ARM AND BLADE RECOMMENDATION
1 - 15" Arm
1 - 15" Blade

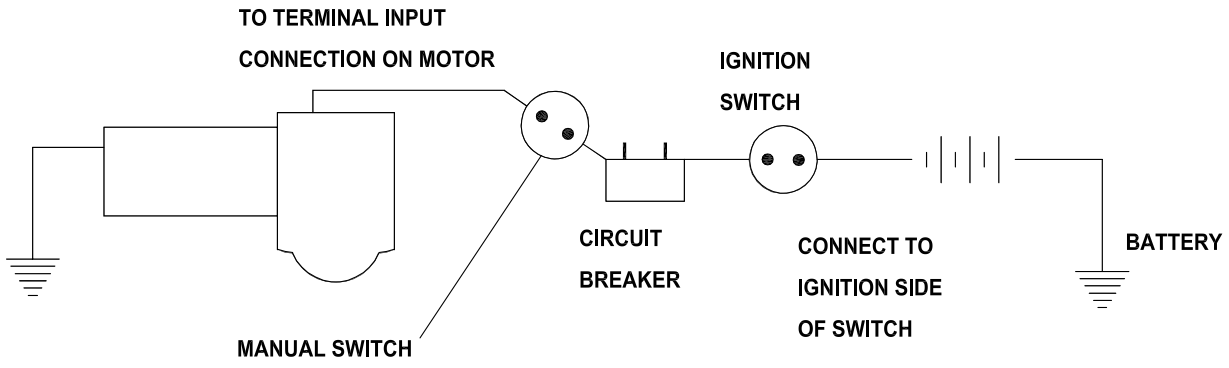

Wiring Diagram for WWF Single Speed

https://truckmanualshub.com/

INSTRUCTIONS FOR MOUNTING ASSEMBLED CAB ON TRACTOR

1. Tractor must be equipped with a rollbar.
2. With the cab doors removed, position the assembled cab into position around the rollbar.
3. Fasten the cab to the rollbar with the “W” clamps and 5/16 X 1 bolts.
4. Fasten the lower front cab frame to the front corners of the tread plate with 5/16 X 1 bolts.
5. Install the cab doors and check for proper latch closure. Adjust latches as needed.
   See Page 7 Step 10 for adjustments.
6. Attach the elastic cords to position the front fabric panels around the tractor. Loop the elastic cord over the “S” hook to prevent rubbing the driveshaft.
7. Connect wiring for the wiper motor.
8. IMPORTANT! (420 tractors only, if applicable) Check steering cylinder mounting to be certain it is mounted in the outside hole of the tread plate to limit turning radius.

https://truckmanualshub.com/

INSTRUCTIONS FOR REMOVING ASSEMBLED CAB FROM TRACTOR

1. Disconnect wiring to wiper motor.
2. Detach the elastic cords which position the front fabric panels around the tractor.
3. Remove the doors.
4. Remove the bolts at the front corners of the tread plate and cab frame.
5. Remove the “W” clamps which clamp the cab to the rollbar.
6. Get an assistant to help and carefully lift the cab up and away from the rollbar.
7. The rollbar may remain on the tractor.
8. (420 tractors only, if applicable) The steering cylinder may be returned to the original inner hole.

https://truckmanualshub.com/

FIGURE 1

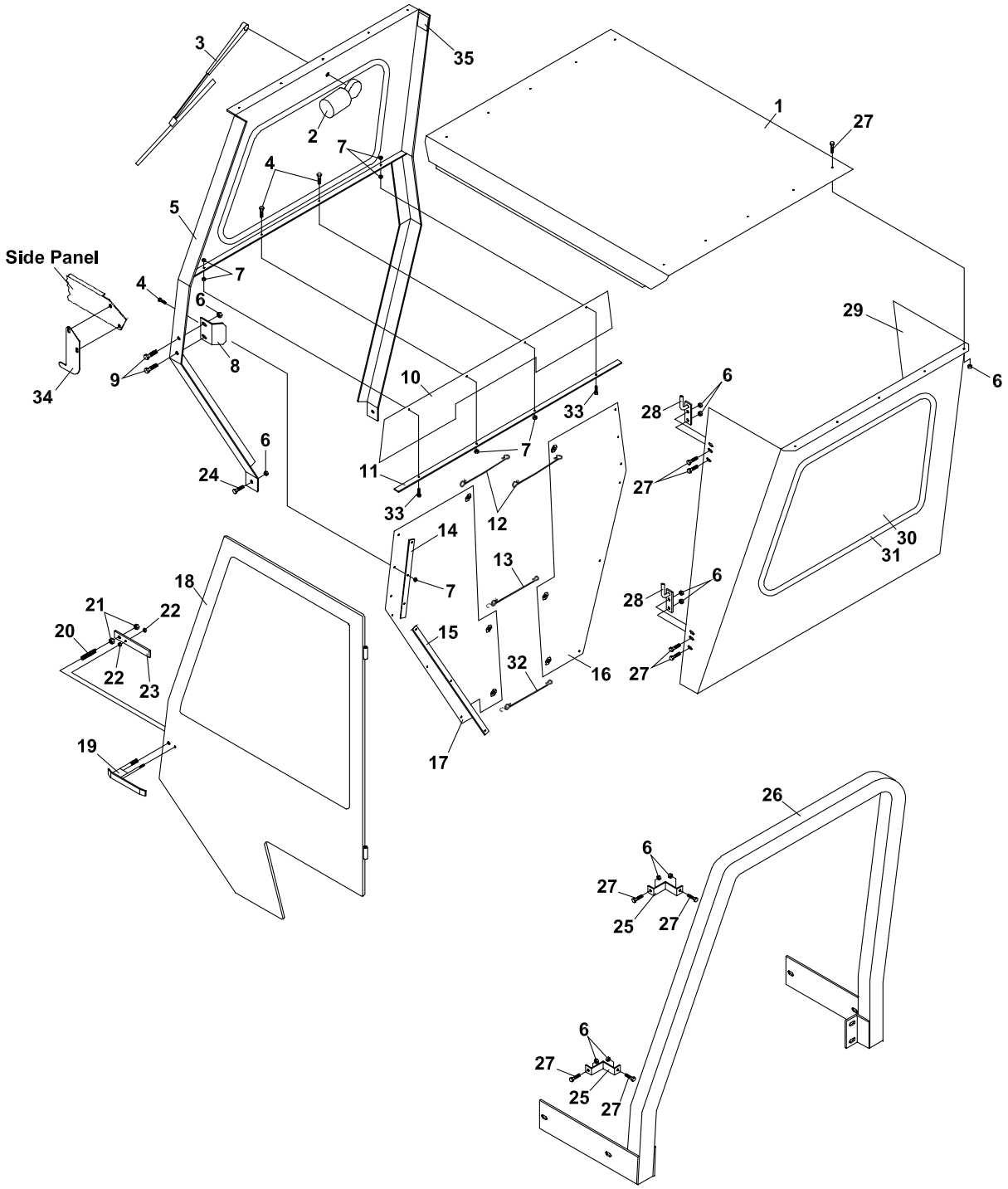

https://truckmanualshub.com/

TRACTOR CAB

FIGURE 1

ITEM	PART NO.	DESCRIPTION	QTY
1-1	60-365.17	ROOF PANEL	1
	44-133	HEADLINER	1
1-2	35-053	MOTOR-WINDSHIELD WIPR	1
1-3	35-054	WINDSHIELD WIPR ARM	1
1-4	64139-04	BOLT-WLF 1/4-20X3/4	14
1-5	62-556	PANEL-FRONT WINDOW	1
	(SN 1001 - 1410)		
	62-845.17	PANEL-FRONT WINDOW	1
	(SN 1411 -)		
1-6	64141-6	NUT, 5/16-18	52
1-7	64141-2	NUT-WLF 1/4-20	18
1-8	64-343.7	STRIKER PLATE	2
1-9	99-K20	BOLT, 5/16-18 X 3/4	4
1-10	44-083	FABRIC-CENTER PANEL	1
	(420 ONLY)		
	44-144	FABRIC-CENTER PANEL	1
	(430 ONLY)		
1-11	64-357.7	RETAINER STRAP-36"	1
1-12	56-049-24	CORD-ELASTIC 24"	2
	45-039	HOOK-"S"	2
1-13	56-049-14	CORD-ELASTIC 14"	1
	45-039	HOOK-"S"	1
1-14	64-356.7	RETAINER STRAP-9"	2
1-15	64-355.7	RETAINER STRAP-23"	2
1-16	44-084	FABRIC-RT SIDE PANEL	1
1-17	44-085	FABRIC-LFT SIDE PANEL	1
1-18	62-558.7	DOOR-RIGHT CAB	1
	62-559.7	DOOR-LEFT CAB	1
1-19	64-342.7	LATCH-OUTER DOOR	2
1-20	41-021	SPRING	2
1-21	64025-05	NUT-3/8-16 HEX	4
1-22	64025-01	NUT-1/4-20 HEX	4
1-23	64-468.7	HANDLE-INNER DOOR	2
1-24	99-K02	BOLT, FLANGE 5/16-18 X 1	2
1-25	64-341.7	CLAMP, TR CAB	4
1-26	71-004	ROLL BAR-ROPS	1
1-27	64139-08	BOLT-5/16-18X3/4	42
1-28	64-340.7	HINGE-CAB DOOR	4
1-29	62-557.17	PANEL-REAR WINDOW	1
1-30	06-021	GLASS-WINDSHIELD	2
	(FRONT & REAR)		
1-31	57-009-99	MOULDING	2
	(WINDSHIELD 99-1/4")		
1-32	56-049-10	CORD-ELASTIC 10"	1
	45-039	HOOK-"S"	1
1-33	97-0410	CARRIAGE BOLT-1/4X1-1/4	2
1-34	60-689.7	GUARD	1
	(KUBOTA AIR INTAKE TUBE SN 1701 -)		
*	56-027	TRIM-TRIM-LOC 4-1/2"	1
	(SN 1701 -)		
1-35	4116761	LABEL-MADE IN USA	1

*** NOT ILLUSTRATED**

https://truckmanualshub.com/

World Class Quality, Performance And Support

Equipment from Jacobsen, a Textron company, is built to exacting standards ensured by ISO 9001 and ISO 14001 registration at all our manufacturing locations.

A worldwide dealer network and factory-trained technicians backed by Textron Parts Xpress provide reliable, high-quality product support.

JACOBSEN
A Textron Company

BOB-CAT BROUWER BUNTON CUSHMAN RYAN STEINER