https://truckmanualshub.com/


U.S.A. : **KUBOTA TRACTOR CORPORATION**
3401 Del Amo Blvd., Torrance, CA 90503, U.S.A.
Telephone : (310)370-3370
Western Division : 1175 S. Guild Avc., Lodi, CA 95240
Telephone : (209)334-9910
Central Division : 14855 FAA Blvd., Fort Worth, TX 76155
Telephone : (817)571-0900
Northern Division : 6300 at One Kubota Way, Groveport, OH 43125
Telephone : (614)835-1100
Southeast Division : 1025 Northbrook Parkway, Suwanee, GA 30024
Telephone : (770)995-8855
Canada : **KUBOTA CANADA LTD.**
5900 14th Avenue, Markham, Ontario, L3S 4K4, Canada
Telephone : (905)294-7477
France : **KUBOTA EUROPE S.A.S**
19-25, Rue Jules Vercruysse, Z.I. BP88, 95101 Argenteuil Cedex, France
Telephone : (33)1-3426-3434
Italy : **KUBOTA EUROPE S.A.S Italy Branch**
Via Grandi, 29 20068 Peschiera Borrome (MI) Italy
Telephone : (39)02-51650377
Germany : **KUBOTA (DEUTSCHLAND) GmbH**
Senefelder Str. 3-5 63110 Rodgau /Nieder-Roden, Germany
Telephone : (49)6106-873-0
U.K. : **KUBOTA (U.K.) LTD.**
Dormer Road, Thame, Oxfordshire, OX9 3UN, U.K.
Telephone : (44)1844-214500
Spain : **KUBOTA ESPAÑA S.A.**
Avenida Recomba No.5, Poligno Industrial la Laguna, Leganes, 28914 (Madrid) Spain
Telephone : (34)91-508-6442
Australia : **KUBOTA TRACTOR AUSTRALIA PTY LTD.**
25-29 Permas Way, Truganina, VIC 3029, Australia
Telephone : (61)-3-9394-4400
Malaysia : **SIME KUBOTA SDN. BHD.**
No.3 Jalan Sepadu 25/123 Taman Perindustrian Axis,
Seksyen 25, 40400 Shah Alam, Selangor Darul Ehsan Malaysia
Telephone : (60)3-736-1388
Philippines : **KUBOTA PHILIPPINES, INC.**
232 Quirino Highway, Baesa, Quezon City 1106, Philippines
Telephone : (63)2-422-3500
Taiwan : **SHIN TAIWAN AGRICULTURAL MACHINERY CO., LTD.**
16, Fengping 2nd Rd, Taliao Shiang Kaohsiung 83107, Taiwan R.O.C.
Telephone : (886)7-702-2333
Indonesia : **PT KUBOTA MACHINERY INDONESIA**
Tower A at EightyEight@Kasablanka Lantai 16
Jalan Raya Casablanka Kav. 88, Jakarta 12870 Indonesia
Telephone : (62)-21-29568-720
Thailand : **SIAM KUBOTA CORPORATION CO., LTD.**
101/19-24 Moo 20, Navanakorn Industrial Estate, Tambon Khlongnueng, Amphur Khlongluang,
Pathumthani 12120, THAILAND
Telephone : (66)2-909-0300
Korea : **KUBOTA KOREA CO., LTD.**
41-27, Jayumuyeok-gil, Baeksan-myeon, Gimje-si, Jeollabuk-do, Korea
Telephone : (82)-63-544-5822
India : **KUBOTA AGRICULTURAL MACHINERY INDIA PVT. LTD.**
No.15, Medavakkam Road, Sholinganallur, Chennai-600119, T.N., India
Telephone : (91)44-6104-1500
Vietnam : **KUBOTA VIETNAM CO., LTD.**
Lot B-3A2-CN, My Phuoc 3 Industrial Park, Ben Cat District, Binh Duong Province, Vietnam
Telephone : (84)-650-3577-507

KUBOTA Corporation



English (U.S.A.)
Code No. TD350-7956-2


L3560.L4060.L4760.L5460.L6060

# OPERATOR'S MANUAL

# KUBOTA TRACTOR

**MODELS L3560·L4060·L4760 L5460·L6060**

1AGAXAAAP043A

*READ AND SAVE THIS MANUAL*

PRINTED IN JAPAN

© KUBOTA Corporation 2012

https://truckmanualshub.com/

# ABBREVIATION LIST

| Abbreviations | Definitions |
|---|---|
| 2WD | 2 Wheel Drive |
| 4WD | 4 Wheel Drive |
| API | American Petroleum Institute |
| ASABE | American Society of Agricultural and Biological Engineers, USA |
| ASTM | American Society for Testing and Materials, USA |
| DIN | Deutsches Institut für Normung, GERMANY |
| DT | Dual Traction [4WD] |
| fpm | Feet Per Minute |
| GST | Glide Shift Transmission |
| Hi-Lo | High Speed-Low Speed |
| HST | Hydrostatic Transmission |
| m/s | Meters Per Second |
| PTO | Power Take Off |
| RH/LH | Right-hand and left-hand sides are determined by facing in the direction of forward travel |
| ROPS | Roll-Over Protective Structures |
| rpm | Revolutions Per Minute |
| r/s | Revolutions Per Second |
| SAE | Society of Automotive Engineers, USA |
| SMV | Slow Moving Vehicle |

California Proposition 65

**⚠ WARNING ⚠**

Engine exhaust, some of its constituents, certain vehicle components and fluids, contain or emit chemicals known to the State of California to cause cancer and birth defects or other reproductive harm.

## KUBOTA Corporation is ···

Since its inception in 1890, KUBOTA Corporation has grown to rank as one of the major firms in Japan.

To achieve this status, the company has through the years diversified the range of its products and services to a remarkable extent, until today, 19 plants and 16,000 employees produce over 1,000 different items, large and small.

All these products and all the services which accompany them, however, are unified by one central commitment.
KUBOTA makes products which, taken on a national scale, are basic necessities. Products which are indispensable, products intended to help individuals and nations fulfill the potential inherent in their environment. For KUBOTA is the Basic Necessities Giant.

This potential includes water supply, food from the soil and from the sea, industrial development, architecture and construction, transportation.

Thousands of people depend on KUBOTA's know-how, technology, experience and customer service. You too can depend on KUBOTA.

L3560·L4060·L4760
L5460·L6060
AT . F . 5 - 8 . 12 . AK

https://truckmanualshub.com/

# FOREWORD

Thank you very much for choosing the L series tractor with CAB.
This operator's manual covers the operation, inspection and preventive maintenance instructions that are specific to the L series CAB models. For other information and instructions, refer to the separately issued operator's manual for their sister models.
Please read this manual carefully along with the tractor operator's manual, to operate the machine properly and safely.
Proper daily inspection, servicing and lubrication keeps your machine in good condition.

# SAFETY FIRST

This symbol, the industry's "Safety Alert Symbol", is used throughout this manual and on labels on the machine itself to warn of the possibility of personal injury. Read these instructions carefully. It is essential that you read the instructions and safety regulations before you attempt to assemble or use this unit.

**DANGER :** Indicates an imminently hazardous situation which, if not avoided, will result in death or serious injury.

**WARNING :** Indicates a potentially hazardous situation which, if not avoided, could result in death or serious injury.

**CAUTION :** Indicates a potentially hazardous situation which, if not avoided, could result in minor or moderate injury.

**IMPORTANT :** Indicates that equipment or property damage could result if instructions are not followed.

**NOTE :** Gives helpful information.

https://truckmanualshub.com/

# CONTENTS

⚠SAFE OPERATION ..... ⚠-1

SPECIFICATIONS ..... 1
SPECIFICATION TABLE ..... 1

CAB OPERATION ..... 3
DOOR AND WINDOW ..... 3
Locking and Unlocking the Door ..... 3
Opening the Door ..... 3
Rear Window ..... 3
Side Window ..... 4
Emergency Exit ..... 4
DOME LIGHT ..... 4
Dome Light ..... 4
WORK LIGHT ..... 4
Work Light Switch ..... 4
Front Work Light ..... 4
Rear Work Light (if equipped) ..... 5
WIPER ..... 5
Front Wiper / Washer Switch ..... 5
Rear Wiper / Washer Switch (if equipped) ..... 5
Using the Wipers in Cold Season ..... 5
AIR CONDITIONER ..... 5
Airflow ..... 5
Air Control Vent ..... 6
Control Panel ..... 7
Operation ..... 8
REAR / SIDE DEFOGGER WITH TIMER (if equipped) ..... 10
ELECTRICAL OUTLET ..... 10
Electrical Outlet ..... 10

MAINTENANCE ..... 11
SERVICE INTERVALS ..... 11

PERIODIC SERVICE ..... 12
DAILY CHECK ..... 12
Cleaning Air Conditioner Condenser Screen ..... 12
EVERY 200 HOURS ..... 12
Cleaning Inner Air Filter ..... 12
Cleaning Fresh Air Filter ..... 12
Checking Air Conditioner Condenser ..... 13
Adjusting Air-Conditioner Belt Tension ..... 13
EVERY 1 YEAR ..... 13
Checking Air-Conditioner Pipe and Hose ..... 13
Checking CAB Isolation Cushion ..... 13
EVERY 4 YEARS ..... 13
Replacing Air Conditioner Hose ..... 13
SERVICE AS REQUIRED ..... 14
Lubricating Points ..... 14

https://truckmanualshub.com/

Adding Washer Liquid..... 14
Checking the Amount of Refrigerant (gas) ..... 14
APPENDICES..... 15
INDEX ..... 15

https://truckmanualshub.com/



# ⚠ SAFE OPERATION

Careful operation is your best insurance against an accident.

**Read and understand carefully this section of the separately issued operator's manual before operating the tractor.**

## ■ DANGER, WARNING AND CAUTION LABELS

(1) Part No. TD170-4933-1

1AGAMAOAP079E

(2) Part No. TA040-4902-1

1AGAMAOAP0780

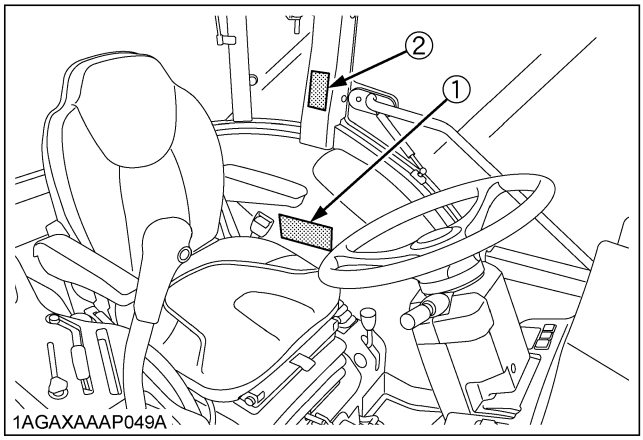


1AGAXAAAP091A

https://truckmanualshub.com/



(1) Part No. TD170-4938-1

**⚠ CAUTION**

**TO AVOID PERSONAL INJURY:**

1. Read and understand the operator's manual before operation.
2. Before starting the engine, make sure that everyone is at a safe distance from the tractor and that the PTO is OFF.
3. Do not allow passengers on the tractor at any time.
4. Before allowing other people to use the tractor, have them read the operator's manual.
5. Check the tightness of all nuts and bolts regularly.
6. Keep all shields in place and stay away from all moving parts.
7. Lock the two brake pedals together before driving on the road.
8. Slow down for turns, or rough roads, or when applying individual brakes.
9. On public roads use SMV emblem and hazard lights, if required by local traffic and safety regulations.
10. Pull only from the drawbar.
11. Before dismounting, lower the implement to the ground, set the parking brake, stop the engine and remove the key.
12. Securely support tractor and implements before working underneath.

1AGAMAOAP0800

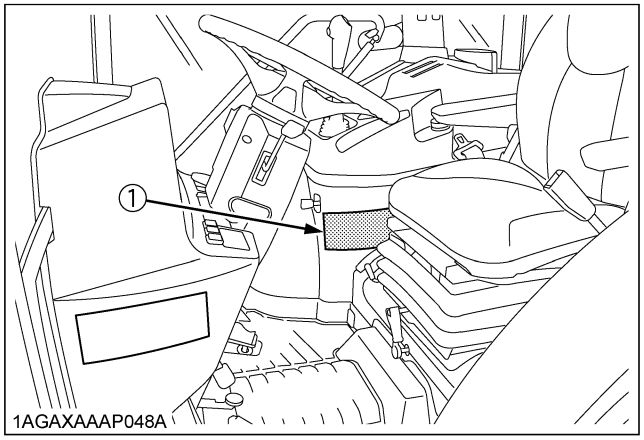


1AGAXAAAP092A

## ■ CARE OF DANGER, WARNING AND CAUTION LABELS

1. Keep danger, warning and caution labels clean and free from obstructing material.
2. Clean danger, warning and caution labels with soap and water, dry with a soft cloth.
3. Replace damaged or missing danger, warning and caution labels with new labels from your local KUBOTA Dealer.
4. If a component with danger, warning and caution label (s) affixed is replaced with new part, make sure new label (s) is (are) attached in the same location (s) as the replaced component.
5. Mount new danger, warning and caution labels by applying on a clean dry surface and pressing any bubbles to outside edge.

https://truckmanualshub.com/



# SPECIFICATIONS

## SPECIFICATION TABLE

| Model | | | | L3560 | L4060 | L4760 | L5460 | L6060 |
|---|---|---|---|---|---|---|---|---|
| | | | | 4WD | | | | |
| Engine | Model | | | D1803-CR-E4 | V2403-CR-E4 | | V2403-CR-TE4 | |
| | Type | | | Direct injection vertical, water-cooled, 4-cycle diesel | | | | |
| | Number of cylinders | | | 3 | 4 | | | |
| | Total displacement | | L (cu. in.) | 1.826 (111.4) | 2.434 (148.5) | | | |
| | Bore and stroke | | mm (in.) | 87 x 102.4 (3.4 x 4.0) | | | | |
| | Rated revolution | | rpm | 2600 | | | | |
| | Low idling revolution | | rpm | 800 | | | | |
| | Net power* | | kW (HP) | 26.1 (35.0) | 29.8 (40.0) | 35.1 (47.0) | 40.3 (54.0) | 44.8 (60.0) |
| | PTO power* (factory observed) | | kW (HP)/ rpm | 20.9 (28.0)/ 2600 | 24.2 (32.5)/ 2600 | 29.5 (39.5)/ 2600 | 34.7 (46.5)/ 2600 | 39.5 (53.0)/ 2600 |
| | Maximum torque | | N-m (ft-lbs.) | 114.1 (84.2) | 133.5 (98.5) | 157.4 (116.1) | 182.6 (134.7) | 195.6 (144.3) |
| | Battery capacity | | | 12V, RC: 133 min, CCA: 582A | | | | |
| Capacities | Fuel tank | | L (U.S.gals.) | 51 (13.5) | | | | |
| | Engine crankcase (with filter) | | L (U.S.qts.) | 6.7 (7.1) | 8.2 (8.7) | | 9.4 (9.9) | |
| | Engine coolant | | L (U.S.qts.) | 7.5 (7.9) | | 8.2 (8.7) | | |
| | Transmission case | | L (U.S.gals.) | 42 (11.1) | 43 (11.4) | | 45 (11.9) | |
| Dimensions | Overall length (without 3p) | | mm (in.) | 2920 (115.0) | 3085 (121.5) | | 3210 (126.4) | |
| | Overall width (min. tread) | | mm (in.) | 1520 (59.8) | 1690 (66.5) | | 1710 (67.3) | |
| | Overall height | | mm (in.) | 2300 (90.6) | 2315 (91.1) | | 2350 (92.5) | |
| | Wheel base | | mm (in.) | 1805 (71.1) | 1895 (74.6) | | 1915 (75.4) | |
| | Min. ground clearance | | mm (in.) | 342 (13.5) | 360 (14.2) | | 392 (15.4) | |
| | Tread | Front | mm (in.) | 1155 (45.5) | | 1300 (51.2) | 1340 (52.8) | |
| | | Rear | mm (in.) | 1200 (47.2)<br>1300 (51.2)<br>1385 (54.5)<br>1480 (58.3) | 1285 (50.6)<br>1435 (56.5)<br>1530 (60.2) | | 1325 (52.2)<br>1430 (56.3) | |
| Weight (with CAB) | | | kg (lbs.) | 1760 (3880) | 1875 (4134) | 1915 (4222) | 1980 (4365) | |

https://truckmanualshub.com/



| Model | | | | L3560 | L4060 | L4760 | L5460 | L6060 |
|---|---|---|---|---|---|---|---|---|
| | | | | 4WD | | | | |
| Traveling system | Standard tire size | Front | | 7-16 | 8.3-16 | | 9.5-16 | |
| | | Rear | | 12.4-24 | 14.9-24 | | 14.9-26 | |
| | Clutch | | | --- | | | | |
| | Steering | | | Hydrostatic power steering | | | | |
| | Transmission | | | Hydrostatic transmission (3 speeds) | | | | |
| | Braking system | | | Wet disk type | | | | |
| | Min. turning radius (with brake) | | m (feet) | 2.7 (8.9) | | | 2.8 (9.2) | |
| Hydraulic unit | Hydraulic control system | | | Position control | | | | |
| | Pump capacity | | L (U.S.gals)/ min. | 30.4 (8.0) | 35.6 (9.4) | | | |
| | 3-point hitch | | | SAE category 1 | | | SAE category 1, 2 | |
| | Max. lift force | At lift points | kg (lbs.) | 1700 (3750) | 1750 (3860) | | | |
| | | 24 in. behind lift points | kg (lbs.) | 1200 (2650) | 1250 (2760) | | 1350 (2980) | |
| | System pressure | | MPa ($kgf/cm^2$) | 17.7 (180) | | | | |
| PTO | Rear PTO | | | SAE 1-3/8, 6 splines | | | | |
| | | PTO/ Engine speed | rpm | 540/2426 | 540/2476 | | 540/2403 | |
| | MID-PTO (if equipped) | | | USA No.5 (KUBOTA 10-tooth) involute spline | | | | |
| | | PTO/ Engine speed | rpm | 2000/2451 | 2000/2502 | | 2000/2429 | |

**NOTE :** *Manufacturer's estimate

The company reserve the right to change the specifications without notice.

https://truckmanualshub.com/



# CAB OPERATION

## DOOR AND WINDOW

### ■Locking and Unlocking the Door

From the outside ..... Insert the key into the door lock. Turn the key clockwise to unlock the door. To lock the door, turn the key in the opposite direction. The key can be removed when it is in the vertical direction.

From the inside ..... Push down the lock knob to lock the door.
Pull up the lock knob to unlock the door.

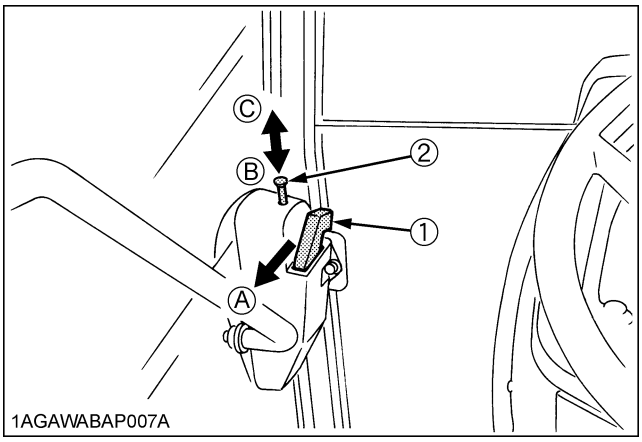


*(1) Inner door handle*
*(2) Lock knob*
*(A) "PULL"*
*(B) "PUSH" (Lock)*
*(C) "PULL" (Unlock)*

### ■Opening the Door

From the outside ..... Unlock the door, and pull the outer door handle.

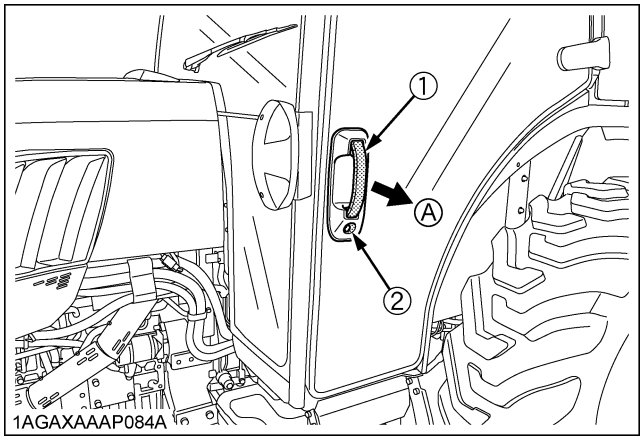


*(1) Outer door handle*
*(2) Door lock*
*(A) "PULL"*

From the inside ..... Unlock the door and pull the inner door handle.

### ■Rear Window

Turn the rear window handle clockwise to the vertical position and push the handle. The rear window is opened by the gas spring cylinder.

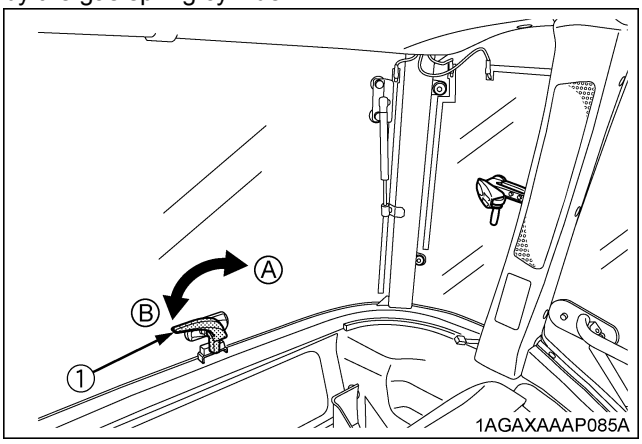


*(1) Rear window handle*
*(A) "OPEN"*
*(B) "CLOSE"*

https://truckmanualshub.com/


### ■Side Window

Pull the side window handle and push the side window to open the window.

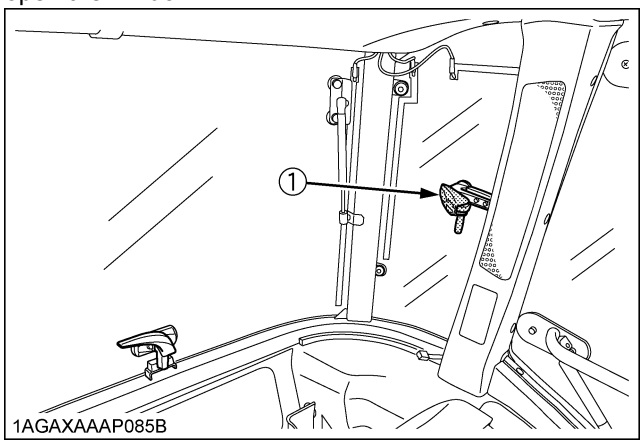


*(1) Side window handle*

### ■Emergency Exit

1. Open the right door of the cab if the left door is blocked, and vice versa in an emergency situation.
2. Exit through rear window if CAB doors are blocked in an emergency situation.

## DOME LIGHT

### ■Dome Light

Sliding the dome light switch will give the following light condition:

| | |
|---|---|
| OFF ..... | The light does not turn on when the door is opened. |
| ON ..... | The light remains on regardless of the door position. |

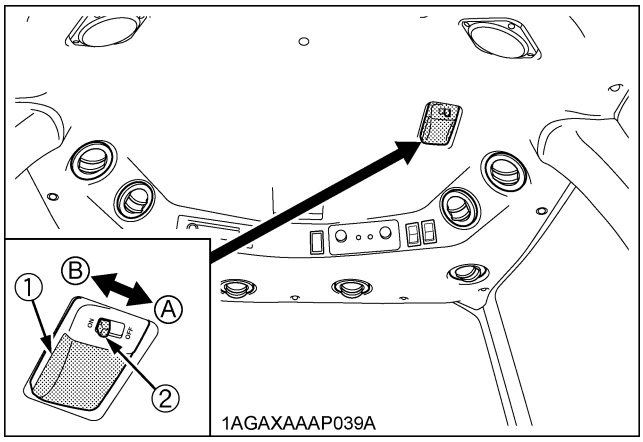


*(1) Dome light*
*(2) Dome light switch*
*(A) "OFF"*
*(B) "ON"*

## WORK LIGHT

### ■Work Light Switch

Turn on the key switch and press the top half of the work light switch. The work light and the switch's indicator light up. Press the bottom half of the work light switch to turn off the light and indicator.

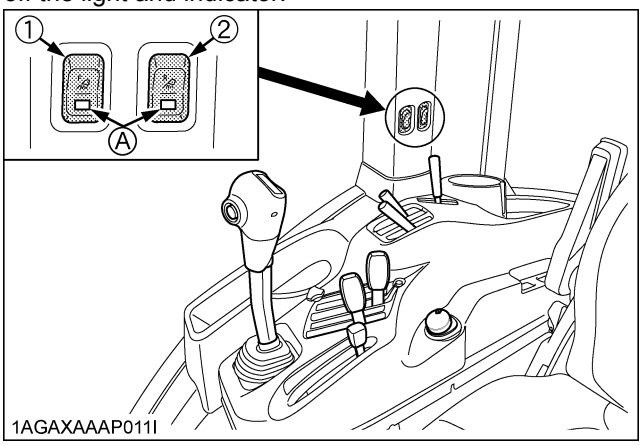


*(1) Front work light switch*
*(2) Rear work light switch (if equipped)*
*(A) Indicator for work lights*

### ■Front Work Light

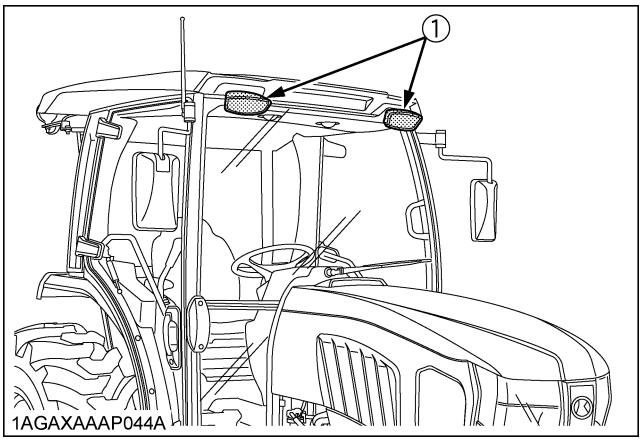


*(1) Front work light*

https://truckmanualshub.com/



### ■Rear Work Light (if equipped)

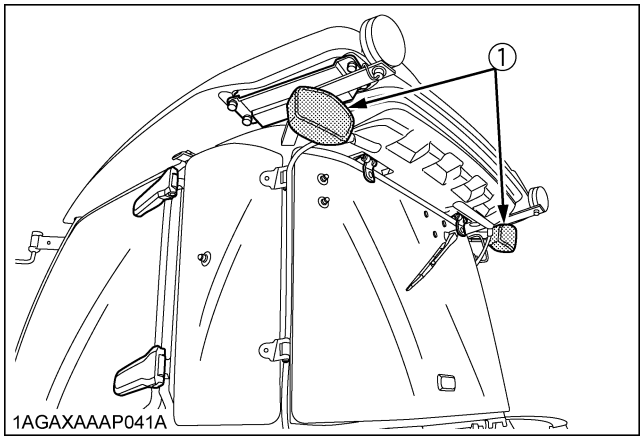


*(1) Rear work light*

## WIPER

### ■Front Wiper / Washer Switch

1. Turn on the key switch and press the top half of the wiper switch to the first step, and the wiper is activated. When the switch is pressed further to the second step, washer liquid jets out.
   The jetting continues while the switch is pressed and the wiper is activated continuously.
2. Press the bottom half of the wiper / washer switch, washer liquid only jets out.

### ■Rear Wiper / Washer Switch (if equipped)

See "Front wiper / Washer switch" section, for instructions to use this switch.

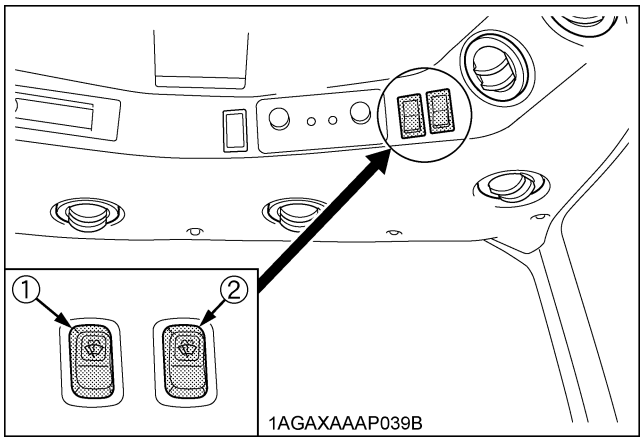


*(1) Front wiper / washer switch*
*(2) Rear wiper / washer switch*

**IMPORTANT :**

- Do not activate the wipers when the windows are dry, they may be scratched.
  Be sure to jet washer liquid first and then activate the wipers.

### ■Using the Wipers in Cold Season

1. While not used in cold season, keep the wiper blades off the windshield to prevent them from being stuck with ice.
2. If the windshield is covered with snow, scrape it off the windshield before using the wipers.
3. If the wiper blades are stuck on the windshield with ice and fail to move, be sure to turn the main key switch to "OFF" and remove the ice off the blades. Then place the main key switch back to "ON".
4. When commercially available cold-season wiper blades are used, make sure their size is the same as or smaller than that of the standard ones.

**IMPORTANT :**

- In cold season, the wiper blades and the wiper motor might get overloaded causing damage. To avoid this, be sure to take the above precautions.

## AIR CONDITIONER

### ■Airflow

Air in the CAB and fresh air introduced into the CAB flow as shown below. Adjust the eight air ports to obtain the desired condition.

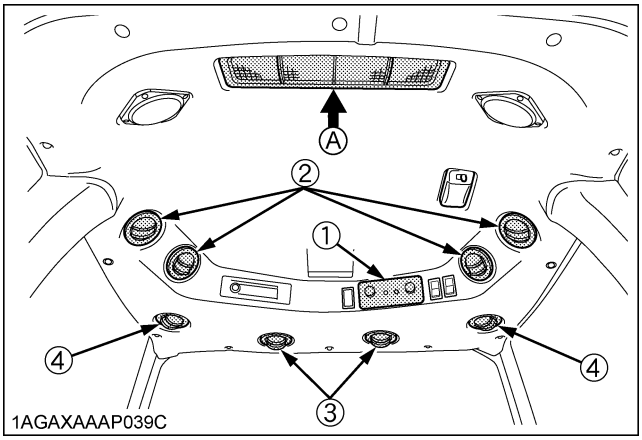


*(1) Control panel*
*(2) Side air outlet (face area)*
*(3) Front air outlet*
*(4) Door air outlet*
*(A) Inner air recirculation*

https://truckmanualshub.com/


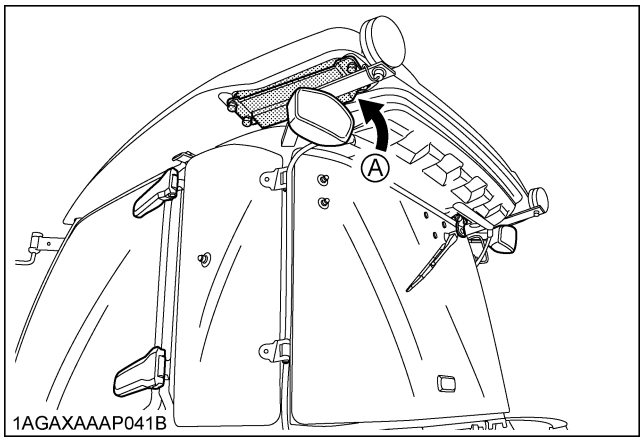


*(A) Fresh air inlet*

## ■Air Control Vent

### ◆ Front air outlet

The front air outlets can be independently adjusted as required. To defrost the windshield, rotate the outlets toward the windshield.

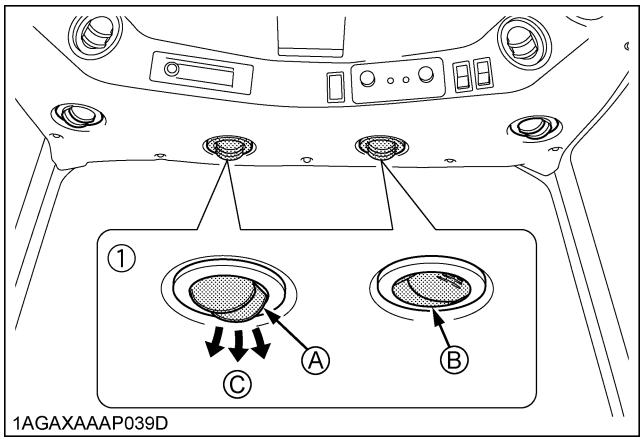


*(1) Front air outlet*

*(A) "OPEN"*
*(B) "CLOSED"*
*(C) "WINDSHIELD"*

### ◆ Side air outlet and door air outlet

The side and door air outlets can be adjusted to direct air on to the operator, door window or the rear of the CAB.

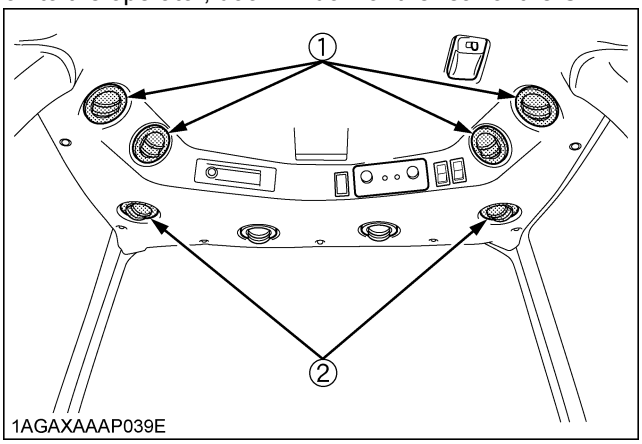


*(1) Side air outlet*
*(2) Door air outlet*

**NOTE :**

- If the airflow rate at the face is too low, close the door air outlet.

## ⚠ CAUTION

**To avoid personal injury;**

- **Replace the water hoses every 2 years.**
- **Daily inspection**
  **Have the tractor repaired immediately if any of the following defects are discovered.**
  **(Such defects may cause burns or injury. They may also cause engine seizure or other serious failure.)**
  - **Scratches, cracks or swelling in water hoses.**
  - **Water leakage at water hose joints.**
  - **Missing or damaged water hose protective wrap or grommets.**
  - **Loose mounting bolts, damaged brackets.**
- **Do not touch the water hoses and the heater with your hand. You may get burned.**
- **If the window fails to defrost in extreme conditions or becomes cloudy when dehumidifying the CAB, wipe off moisture with a soft cloth.**
- **Do not block all the air outlets of the air conditioner. A problem could occur.**

https://truckmanualshub.com/



## ■Control Panel

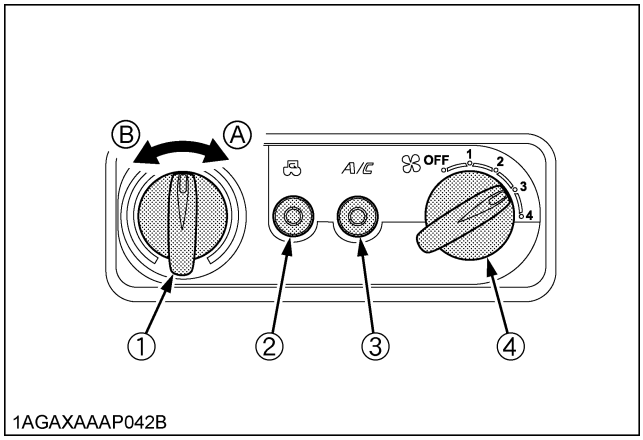


*(1) Temperature control dial*
*(2) Recirculation / fresh air selection switch with indicator light*
*(3) Air conditioner switch with indicator light*
*(4) Blower switch*

*(A) "WARM"*
*(B) "COOL"*

### ◆ Temperature Control Dial

Set this dial at the desired position to obtain the optimum air temperature. Turn the dial in the "WARM" direction to obtain warmer air. Turn it in the "COOL" direction to obtain cooler air.

### ◆ Blower Switch

Air volume can be changed in 4 steps. At the "4" position, the largest air volume is obtained.

### ◆ Air Conditioner Switch

Push this switch to activate the air conditioner. An indicator light will light up when the switch is set to "ON". Push the switch again to turn the air conditioner off, in which case the indicator light will be off.

**NOTE :**

- With the blower switch at the "OFF" position, the indicator light will not light up even when the air conditioner switch is set to "ON".

**IMPORTANT :**

- To operate the air conditioner after the tractor has not been used for one week or longer, run the engine at idling speed first and then set the air conditioner switch to "ON". Keep this for one minute or so.
  If the air conditioner switch is set to "ON" with the engine running at high rpm, the compressor may get in trouble.

### ◆ Recirculation / fresh air selection switch

Each time the switch is pressed, the air flow position changes for "RECIRCULATION" or "FRESH AIR". An indicator light will light up when the switch is set to "RECIRCULATION". And the indicator light will be off when the switch is set to "FRESH AIR".

| | |
|---|---|
| FRESH AIR:<br>(Indicator: OFF) | Fresh air will flow into the CAB. This is helpful when you work in dusty conditions or if the glass windows get foggy. |
| RECIRCULATION:<br>(Indicator: ON) | In-CAB air will be recirculated. This is useful for cooling or heating the CAB quickly or keeping it extra cool or warm. |

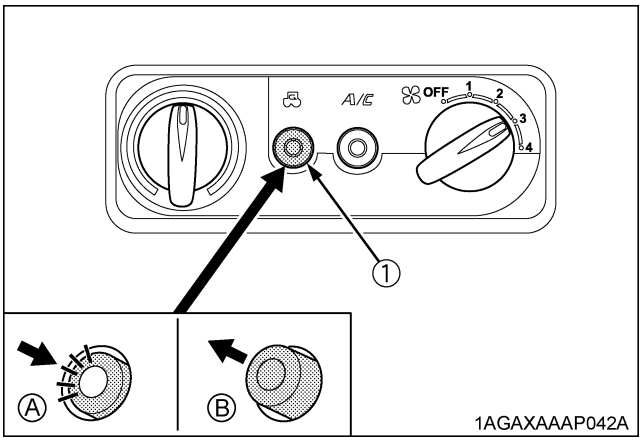


*(1) Recirculation / fresh air selection switch with indicator light*

*(A) "RECIRCULATION"*
*(B) "FRESH AIR"*

**NOTE :**

- When heating, do not keep the switch at the "RECIRCULATION" position for a long time. The windshield easily gets foggy.
- While working in a dusty conditions, keep the switch at the "FRESH AIR" position. This increases the pressure in the CAB, which helps prevent dust from coming into the CAB.

https://truckmanualshub.com/


## ■Operation

### ◆ Heating

1. Set the recirculation / fresh air selection switch to the "FRESH AIR" position. To raise the temperature in the CAB quickly, set this switch to the "RECIRCULATION" position.
2. Adjust the blower switch and the temperature control dial to achieve a comfortable temperature level.

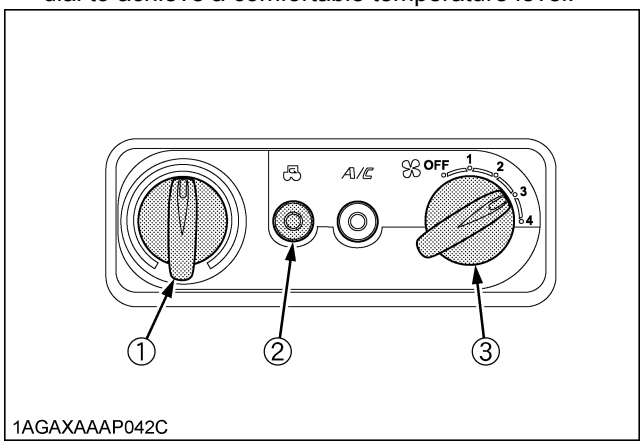

1AGAXAAAP042C

*(1) Temperature control dial*
*(2) Recirculation / fresh air selection switch with indicator light*
*(3) Blower switch*

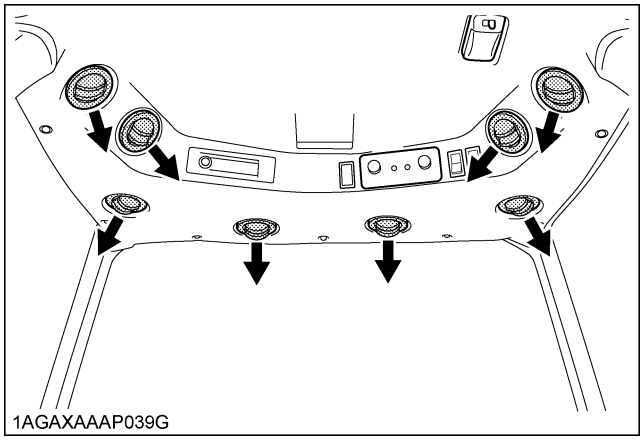
1AGAXAAAP039G

### ◆ Cooling or dehumidifying-heating

1. Set the recirculation / fresh air selection switch to the "FRESH AIR" position. To lower the temperature in the CAB quickly, set this switch to the "RECIRCULATION" position.
2. Press and turn on the air-conditioner switch with indicator.
3. Turn on the blower switch.
4. Adjust the temperature control dial to the "COOL" or an intermediate position to achieve a comfortable temperature level.

**NOTE :**

- In summer when the heater is not used, keep the temperature control dial at the max "COOL" (end of counterclockwise) position. Otherwise, hot air will raise the temperature in the CAB.

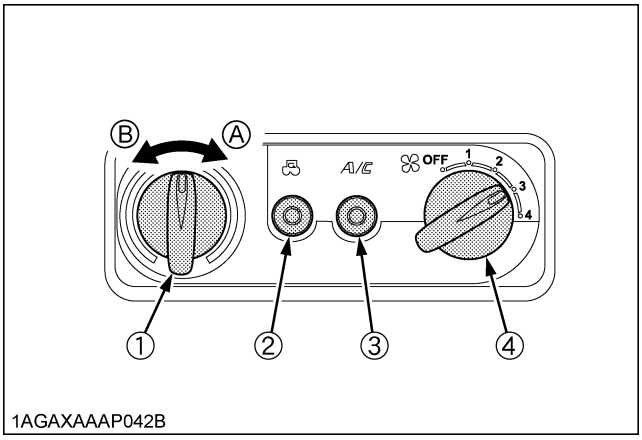

1AGAXAAAP042B

*(1) Temperature control dial*
*(2) Recirculation / fresh air selection switch with indicator light*
*(3) Air conditioner switch with indicator light*
*(4) Blower switch*

*(A) "WARM"*
*(B) "COOL"*

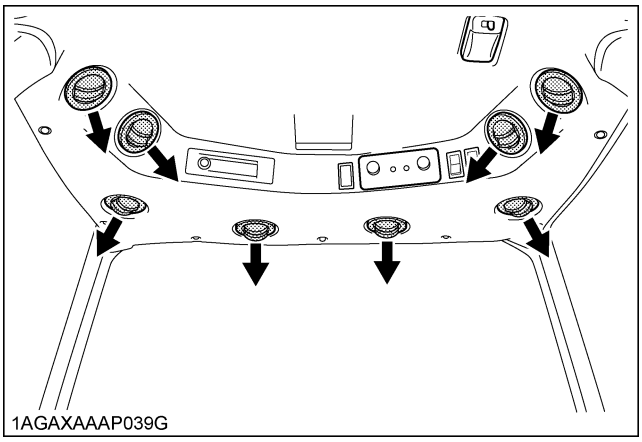
1AGAXAAAP039G

https://truckmanualshub.com/



### ◆ Foot warming and head cooling

1. In the cooling or dehumidifying-heating mode, set the temperature control dial at the center position area.
2. Open the front air outlet and the door air outlet direct it to your feet. Close the side air outlet.
3. You can feel your head cool and your feet warm.

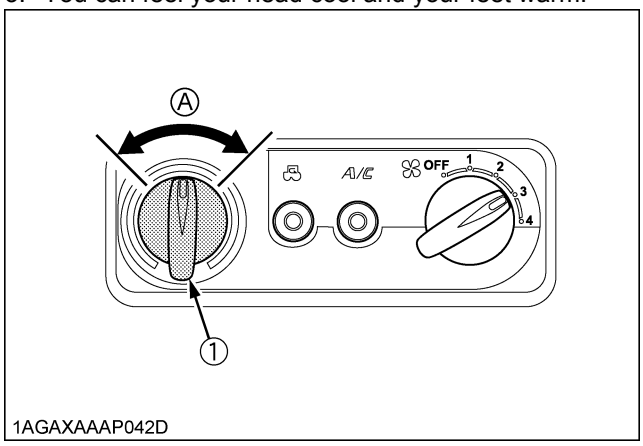


*(1) Temperature control dial (A) Center position area*

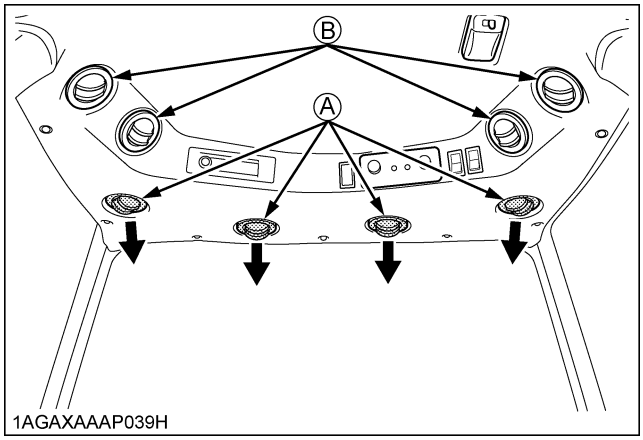


*(A) "OPEN"*
*(B) "CLOSED"*

### ◆ Defrosting or demisting

To defrost or demist the windshield, take the following steps.

1. Open the front air outlet and the door air outlet direct it to the windshield. Close the side air outlet.
2. Set the recirculation / fresh air selection switch to the "FRESH AIR" position.
3. Set the blower switch and the temperature control dial to the "4" and max "WARM" (end of clockwise) positions, respectively.

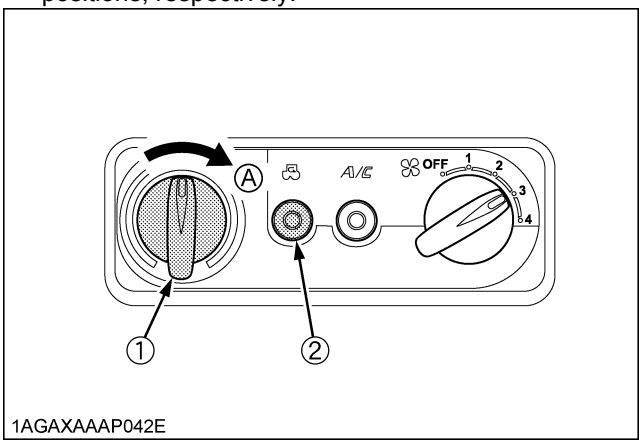


*(1) Temperature control dial (A) "WARM"*
*(2) Recirculation / fresh air selection switch with indicator light*

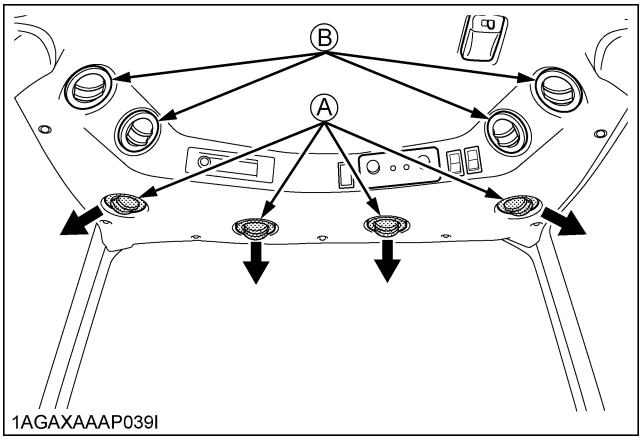


*(A) "OPEN"*
*(B) "CLOSED"*

https://truckmanualshub.com/


# REAR / SIDE DEFOGGER WITH TIMER (if equipped)

To activate the rear / side window defoggers, press the switch marked while the key switch is in the "ON" position. Then, the yellow light on the switch turns on. After about 15 minutes, the defoggers automatically turn off as well as the yellow light. To turn the defogger off, press the switch once more.

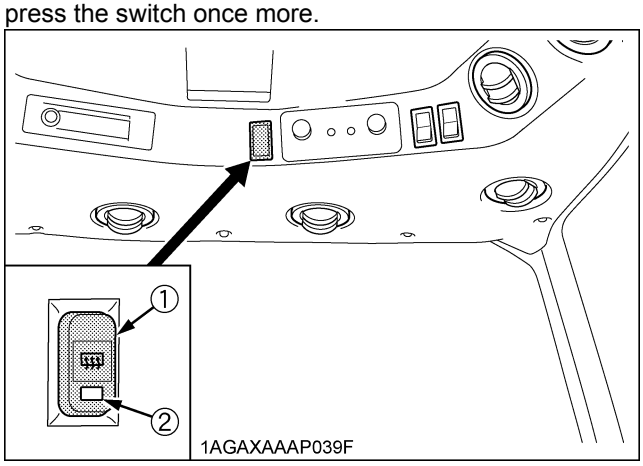


*(1) Defogger switch*
*(2) Yellow light*

**IMPORTANT :**

- The battery will discharge if the defogger and the key switch remain in the "ON" or "ACC" positions with the engine stopped.
  Always use the defogger with the engine running.

# ELECTRICAL OUTLET

## ■Electrical Outlet

A electrical outlet is supplied for use with implement.

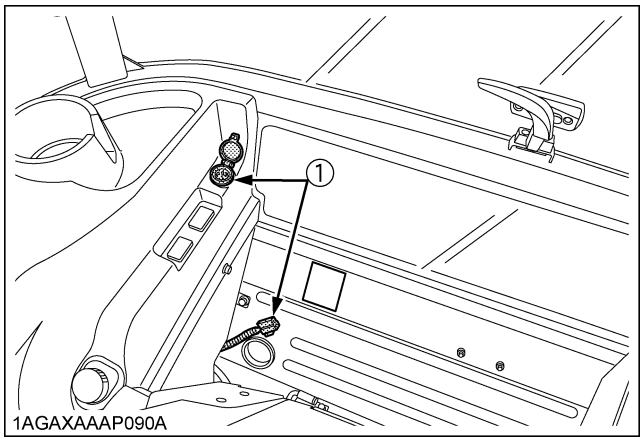


*(1) Accessory electrical outlet (Total 20 A)*

https://truckmanualshub.com/



# MAINTENANCE

## SERVICE INTERVALS

(Only the Check Points for Tractors with CAB)

| No. | Items | | Daily | Indication on hour meter | | | | | | | | Interval | Ref. page |
|---|---|---|---|---|---|---|---|---|---|---|---|---|---|
| | | | | 100 | 200 | 300 | 400 | 500 | 600 | 700 | 800 | | |
| 1 | Clogging of air conditioner condenser screen | Clean | ○ | | | | | | | | | | 12 |
| 2 | Tension of air conditioner drive belt | Adjust | | | ○ | | ○ | | ○ | | ○ | every 200 Hr | 13 |
| 3 | Clogging of inner air filter | Clean | | | ○ | | ○ | | ○ | | ○ | every 200 Hr | 12 |
| 4 | Clogging of fresh air filter | Clean | | | ○ | | ○ | | ○ | | ○ | every 200 Hr | 12 |
| 5 | Clogging of air conditioner condenser | Check | | | ○ | | ○ | | ○ | | ○ | every 200 Hr | 13 |
| 6 | Air conditioner pipes and hoses | Check | | | | | | | | | | every 1 year | 13 |
| | | Replace | | | | | | | | | | every 4 years | 13 |
| 7 | CAB isolation cushion | Check | | | | | | | | | | every 1 year | 13 |
| 8 | Washer liquid | Check | | | | | | | | | | service as required | 14 |
| 9 | Amount of refrigerant (gas) | Check | | | | | | | | | | service as required | 14 |

https://truckmanualshub.com/


# PERIODIC SERVICE

## DAILY CHECK

### ■Cleaning Air Conditioner Condenser Screen

**WARNING**

**To avoid personal injury or death:**

- **Be sure to stop the engine before removing the screen.**
- **The condenser and receiver become hot while the air conditioner is running. Before checking or cleaning them, wait enough until they cool down.**

1. Detach the air conditioner condenser screen and remove all foreign materials.

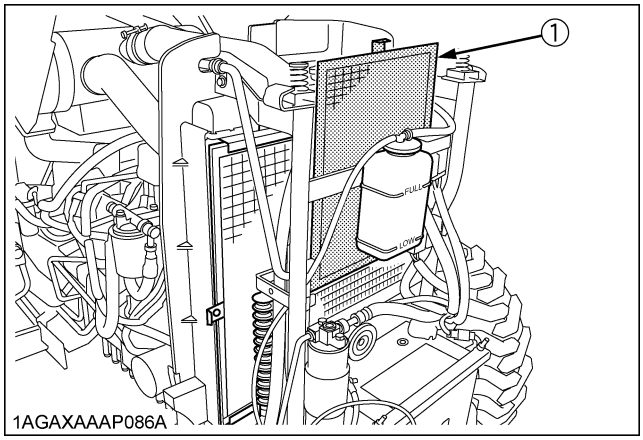


*(1) Air conditioner condenser screen*

**IMPORTANT :**

- Grill and screen must be clean from debris to prevent engine from overheating and to allow good air intake for air cleaner.

## EVERY 200 HOURS

### ■Cleaning Inner Air Filter

Press the inner air filter in the arrow-marked directions to unlock it and remove the inner filter, and blow air from the direction opposite to the filter's normal air flow.

Pressure of compressed air must be under 205 kPa (2.1 kgf/cm$^2$, 30 psi).

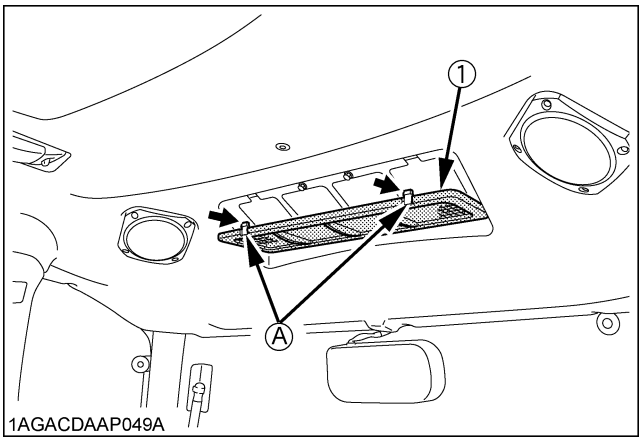


*(1) Inner air filter* *(A) "PUSH"*

### ■Cleaning Fresh Air Filter

Remove the knob bolts and pull out filter.

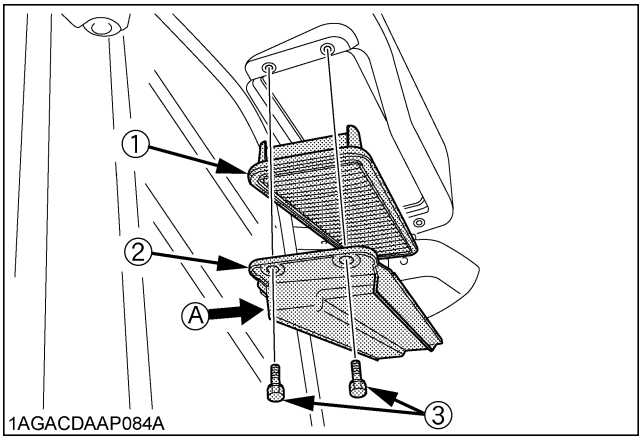


*(1) Fresh air filter* *(A) Air inlet port*
*(2) Cover*
*(3) Knob bolt*

**NOTE :**

- Attach the filter and cover as the illustration above.

https://truckmanualshub.com/


◆ **Cleaning the air filter**

- Normal use
  Blow air from the opposite direction to the filter's normal air flow.
  Pressure of compressed air must be under 205 kPa (2.1 kgf/cm$^2$, 30 psi).

**IMPORTANT :**

- Do not hit the filter. If the filter becomes deformed, dust may enter into the air-conditioner, which may cause damage and malfunction.

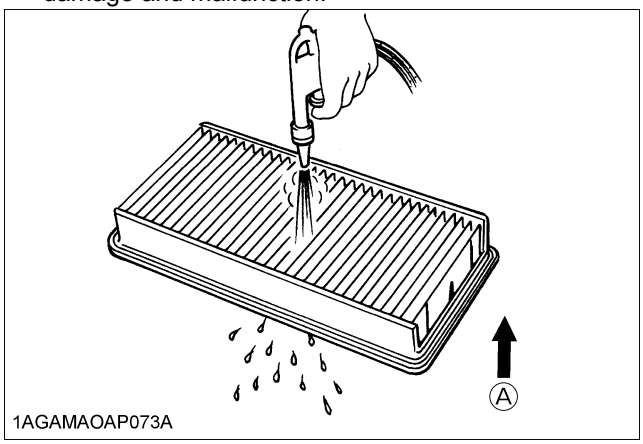


*(A) "AIR CONDITIONER AIRFLOW"*

**NOTE :**

- If the filter is very dirty:
  Dip the filter in lukewarm water with mild dish washing detergent.
  Move it up and down as well as left and right to loosen dirt. Rinse the filter with clean water and let it air-dry.

**IMPORTANT :**

- Do not use gasoline, thinner or similar chemicals to clean the filter as damage to the filter may occur.
- It may also cause an unpleasant odor in the CAB when the system is used next.

## ■Checking Air Conditioner Condenser

Check air conditioner condenser to be sure it is clean of debris.

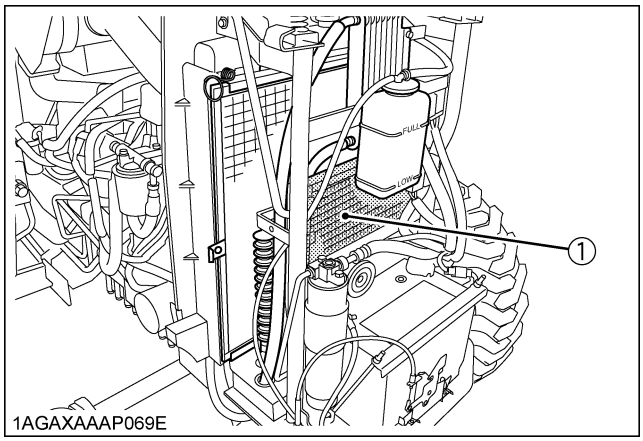


*(1) Air conditioner condenser*

## ■Adjusting Air-Conditioner Belt Tension

**WARNING**

**To avoid personal injury or death:**

- **Be sure to stop the engine before checking belt tension.**

| | |
|---|---|
| Proper air-conditioner belt tension | A deflection of between 10 to 12 mm (0.4 to 0.48 in.) when the belt is pressed (98 N [10 kgf, 22.1 lbs.]) in the middle of the span. |

1. Stop the engine and remove the key.
2. Apply moderate thumb pressure to belt between pulleys.
3. If tension is incorrect, loosen the tension pulley mounting nut and turn the adjusting bolt to adjust the belt tension within acceptable limits.
4. Replace air-conditioner belt if it is damaged.

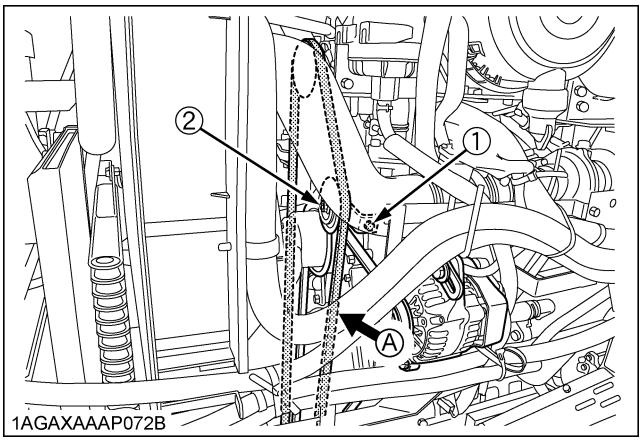


*(1) Adjusting bolt* *(A) Check the belt tension*
*(2) Tension pulley mounting nut*

# EVERY 1 YEAR

## ■Checking Air-Conditioner Pipe and Hose

1. Check to see that all lines and hose clamps are tight and not damaged.
2. If hoses and clamps are found worn or damaged, consult your local KUBOTA Dealer for this service.

## ■Checking CAB Isolation Cushion

Check the cushion for any breakage or fatigue. Replace them if they are deteriorated.

# EVERY 4 YEARS

## ■Replacing Air Conditioner Hose

Consult your local KUBOTA Dealer for this service.

https://truckmanualshub.com/


# SERVICE AS REQUIRED

## ■Lubricating Points

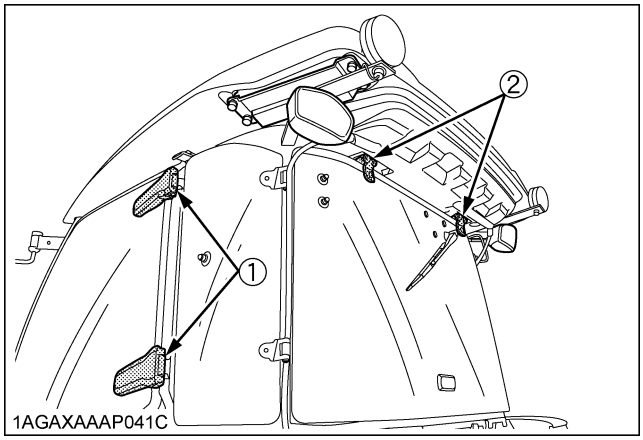


*(1) Door hinge*
*(2) Rear window hinge*

## ■Adding Washer Liquid

Add a proper amount of automobile washer liquid.

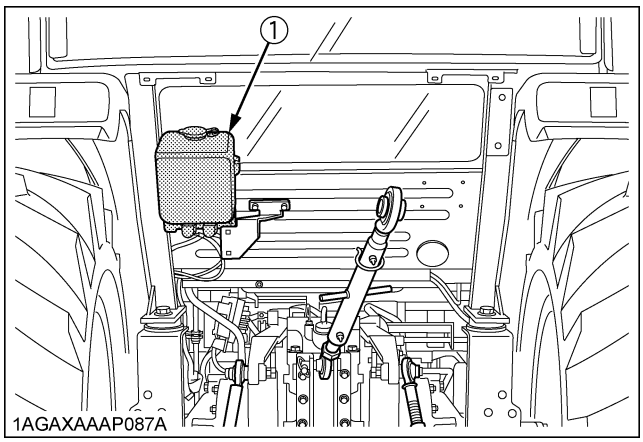


*(1) Washer liquid tank*

| | |
|---|---|
| Washer tank capacity | 2.0 L (2.1 U.S.qts.) |

## ■Checking the Amount of Refrigerant (gas)

**WARNING**

**To avoid personal injury or death:**

- **Liquid contact with eyes or skin may cause frostbite.**
- **In the event of a leakage, wear safety goggles. Escaping refrigerant can cause severe injuries to eyes.**
- **In contact with a flame, R134a refrigerant gives a toxic gas.**
- **Do not disconnect any part of the refrigeration circuit of the air conditioning system. Consult your local KUBOTA Dealer for assistance and service.**

A shortage of refrigerant impairs the air-conditioner performance. Check the following points. If it is indicated that the amount of refrigerant is extremely low, ask your dealer to inspect and charge.

◆ **Checking procedure**

1. Run the air-conditioner in the following conditions.

- Engine speed: About 1500 rpm
- Temperature control dial: Maximum cooling position
- Fan switch: Highest blow (HI)
- Air-conditioner switch: ON

2. Look into the sight glass to see if the refrigerant is flowing through its circuit.

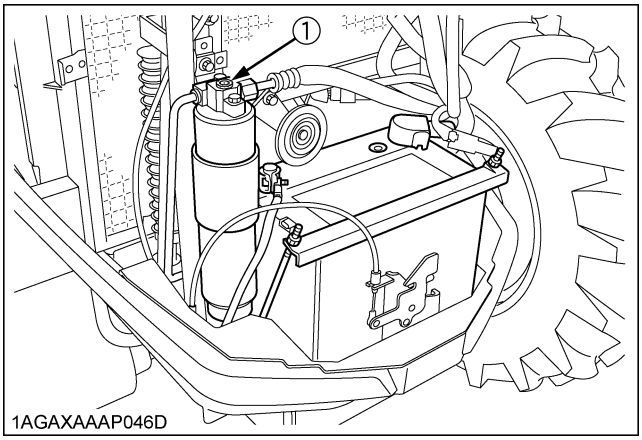


*(1) Sight glass*

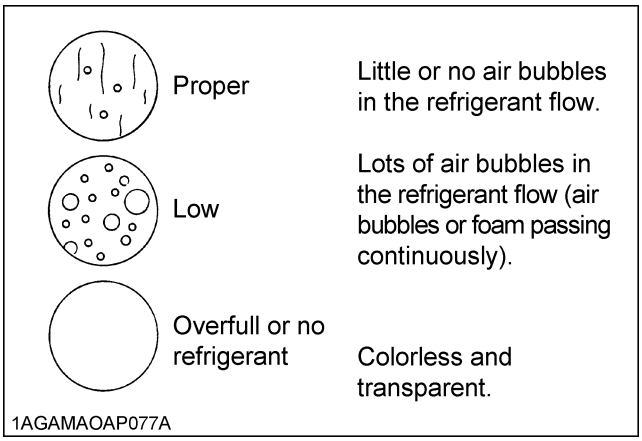


**IMPORTANT :**

- Charge only with R134a not R12 refrigerant (gas).

https://truckmanualshub.com/


# APPENDICES

## INDEX

Air Conditioner Condenser ..... 13
Air Conditioner Condenser Screen..... 12
Air Conditioner Hose ..... 13
Air Control Vent ..... 6
Air-Conditioner Belt Tension ..... 13
Air-Conditioner Pipe and Hose..... 13
Airflow..... 5
CAB Isolation Cushion ..... 13
Control Panel..... 7
Dome Light ..... 4
Door..... 3
Door..... 3
Electrical Outlet ..... 10
Emergency Exit ..... 4
Fresh Air Filter..... 12
Front Wiper / Washer Switch..... 5
Front Work Light..... 4
Inner Air Filter..... 12
Lubricating Points..... 14
Operation..... 8
Rear Window..... 3
Rear Wiper / Washer Switch (if equipped) ..... 5
Rear Work Light (if equipped) ..... 5
Refrigerant (gas) ..... 14
Side Window ..... 4
Washer Liquid ..... 14
Wipers in Cold Season..... 5
Work Light Switch..... 4