https://truckmanualshub.com/

Simplicity® MASSEY FERGUSON LAWN & GARDEN EQUIPMENT AGCO LAWN & GARDEN EQUIPMENT SNAPPER

OPERATOR'S MANUAL

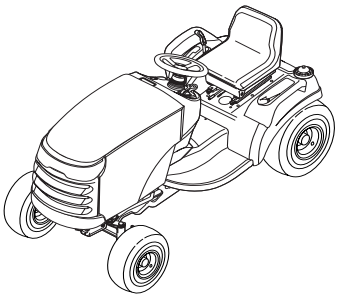

Broadmoor / 300 / 1600 / 2600 Series

18HP Hydro Tractors

Mfg. No.	Description
1694629	Broadmoor, 18HP
1694630	Broadmoor, 18HP
1694631	Broadmoor, 18HP (CE)
1694683	Broadmoor, 18HP (CE)
1694807	2618H, 18HP (CE)
1694808	LT1840, 18HP (CE)
1694844	2618H, 18HP (CE)
2690273	Broadmoor, 18HP & 44" Mower
2690274	Broadmoor, 18HP & 38" Mower
2690277	Broadmoor, 18HP & 40" Mower (CE)
2690276	Broadmoor, 18HP & 44" Mower (CE)
2690400	2618H, 18HP & 44" Mower (CE)
2690404	LT1840, 18HP & 40" Mower (CE)
2690430	2618H, 18HP & 40" Mower (CE)

20HP Hydro Tractors

Mfg. No.	Description
1694632	Broadmoor, 20HP
1694633	1620H, 20HP
1694634	1620H, 20HP
1694635	2620H, 20HP
1694636	2620H, 20HP
1694637	LT2044, 20HP
1694682	Broadmoor, 20HP
2690248	Broadmoor, 20HP& 50" Mower
2690279	1620H, 20HP & 44" Mower
2690280	1620H, 20HP & 50" Mower
2690424	2620H, 20HP & 44" Mower
2690481	2620H, 20HP & 44" Mower
2690282	2620H, 20HP & 50" Mower
2690283	LT2044, 20HP & 44" Mower
2690275	Broadmoor, 20HP & 44" Mower
2690278	Broadmoor, 20HP & 50" Mower
2690281	2620H, 20HP & 44" Mower
2690488	Broadmoor, 20HP & 44" Mower (CE)
2690489	Broadmoor, 20HP & 40" Mower (CE)
2690490	2620H, 20HP & 44" Mower (CE)
2690491	2620H, 20HP & 40" Mower (CE)
2690500	LT2040, 20HP & 40" Mower (CE)

38" Mower Decks

Mfg. No.	Description
1694036	38" Mower Deck
1694042	38" Mower Deck
1694453	38" Mower Deck (CE)

40" Mower Decks

Mfg. No.	Description
1694339	40" Mower Deck
1694340	40" Mower Deck
1694341	40" Mower Deck (CE)
1694815	40" Mower Deck (CE)
1694821	40" Mower Deck (CE)
1695030	40" Mower Deck (CE)
1695034	40" Mower Deck (CE)
1695052	40" Mower Deck (CE)

44" Mower Decks

Mfg. No.	Description
1694037	44" Mower Deck
1694043	44" Mower Deck
1694178	44" Mower Deck (CE)
1694687	44" Mower Deck
1694822	44" Mower Deck (CE)
1695028	44" Mower Deck (CE)
1695038	44" Mower Deck (CE)

50" Mower Decks

Mfg. No.	Description
1694473	50" Mower Deck
1694474	50" Mower Deck

1732286
Revision 00
Rev. Date 11/2005
TP 100-4247-00-BM-SMAN

Downloaded from www.Manualslib.com manuals search engine

https://truckmanualshub.com/

Downloaded from www.Manualslib.com manuals search engine

https://truckmanualshub.com/

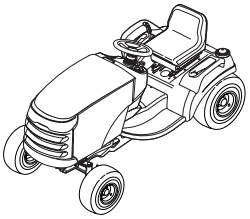

Table of Contents

Safety Rules & Information.....2
Identification Numbers.....7
Safety Decals 8
Safety Icons 9
Features & Controls 10
Control Functions.....10
Parking Brake Function.....12
Hourmeter 13
12 Volt Power Adapter 13
Automatic Controlled Traction.....12
Operating the Tractor 13
Safety Interlock System 13
General Operating Safety 13
Adding Fuel.....13
Starting the Engine 14
Stopping the Tractor & Engine.....14
Driving the Tractor 14
Mowing.....14
Mowing in Reverse 15
Attachment Operation in Reverse.....15
Pushing the Tractor by Hand 15
Adjusting Mower Cutting Height -
38” 44” 50” Decks 16
Adjusting Mower Cutting Height - 40” Decks 16
Lift Variations When Using Attachments.....17
Attaching a Trailer.....17
Mower Deck Removal & Installation 18
Storage 20
Lawn Care & Mowing Information.....21
How and When to Water Fertilize & Aerate 21
How High to Mow the Grass 21
When and How Often to Mow 22
Proper Mowing Speed 22
Using a Mulching Mower.....23
Benefits of Proper Mulching.....23
Limitations of Mulching Decks 23
Correct ground Speed & Engine Speed.....23
Correct Cutting Height 23
Using the Side Discharge Deflector.....23
Regular Maintenance 24
Maintenance Schedule 24
Safety Interlock System Check.....25
Blade Brake Check 25
Checking Tire Pressures.....25
PTO Clutch Adjustment Check 25
Engine Maintenance 25
Battery Maintenance 26
Lubricate Rear Axes 26
Lubrication 27
Servicing the Mower Blades 28
Check Mower Blade Timing.....29
Transmission Identification 30
Transmission Maintenance.....30
Troubleshooting, Adjustment & Service ...32
Troubleshooting the Tractor.....32
Troubleshooting the Mower 33
Battery Charging 34
Seat Adjustment.....34
Steering Wheel Adjustment 35
Steering Gear Adjustment.....35
Brake Adjustment.....35
PTO Clutch Adjustment 36
Mower Adjustments 37
Gauge Wheels (Select Models) 37
Transport Height & Ground
Following Adjustment (Select Models).....37
Leveling the Mower.....38
Mower Belt Replacement.....39
44” & 50” PTO Belt Replacement 39
44” & 50” Arbor Drive Belt Replacement.....40
40” Mower PTO Belt Replacement 41
40” Mower Arbor Drive Belt Replacement 42
38” Mower Drive Belt Replacement 43
Specifications 44
Parts & Accessories.....45

NOTE: In this manual, “left” and “right” are referred to as seen from the operating position.

Downloaded from www.Manualslib.com manuals search engine

https://truckmanualshub.com/

Operating Safety

Congratulations on purchasing a superior-quality piece of lawn and garden equipment. Our products are designed and manufactured to meet or exceed all industry standards for safety.

Power equipment is only as safe as the operator. If it is misused, or not properly maintained, it can be dangerous! Remember, you are responsible for your safety and that of those around you.

Use common sense, and think through what you are doing. If you are not sure that the task you are about to perform can be safely done with the equipment you have chosen, ask a professional: contact your local authorized dealer.

Read the Manual

The operator's manual contains important safety information you need to be aware of BEFORE you operate your unit as well as DURING operation.

Safe operating techniques, an explanation of the product's features and controls, and maintenance information is included to help you get the most out of your equipment investment.

Be sure to completely read the Safety Rules and Information found on the following pages. Also completely read the Operation section.

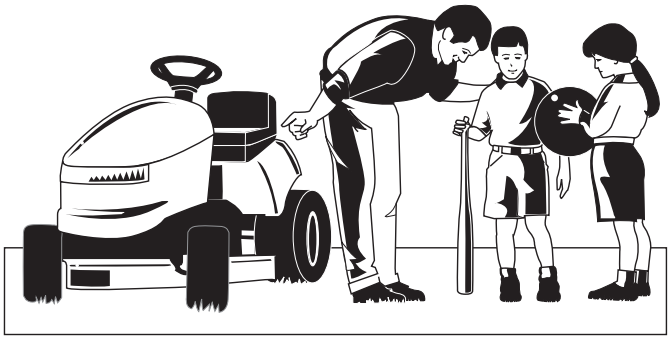

Children

Tragic accidents can occur with children. Do not allow them anywhere near the area of operation. Children are often attracted to the unit and mowing activity. Never assume that children will remain where you last saw them. If there is a risk that children may enter the area where you are mowing, have another responsible adult watch them.

DO NOT GIVE CHILDREN RIDES ON THIS UNIT! This encourages them to come near the unit in the future while it is running, and they could be seriously hurt. They may then approach the unit for a ride when you are not expecting it, and you may run over them.

Reverse

Do not mow in reverse unless absolutely necessary. Always look down and behind before and while traveling in reverse even with the mower blades disengaged.

Downloaded from www.Manualslib.com manuals search engine

https://truckmanualshub.com/

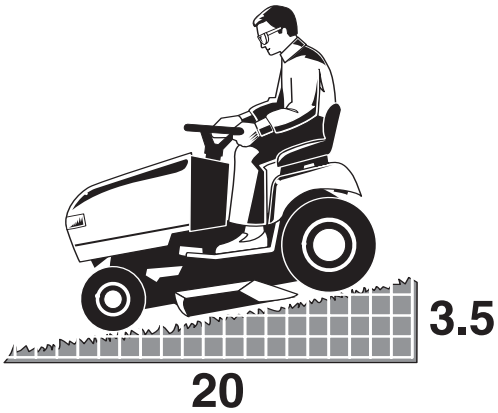

Slope Operation

You could be seriously injured or even killed if you use this unit on too steep an incline. Using the unit on a slope that is too steep or where you don't have adequate traction can cause you to lose control or roll over.

A good rule of thumb is to not operate on any slope you cannot back up (in 2-wheel drive mode). You should not operate on inclines with a slope greater than a 3.5 foot rise over a 20 foot length. Always drive up and down slopes: never cross the face.

Also note that the surface you are driving on can greatly impact stability and control. Wet grass or icy pavement can seriously affect your ability to control the unit.

If you feel unsure about operating the unit on an incline, don't do it. It's not worth the risk.

Moving Parts

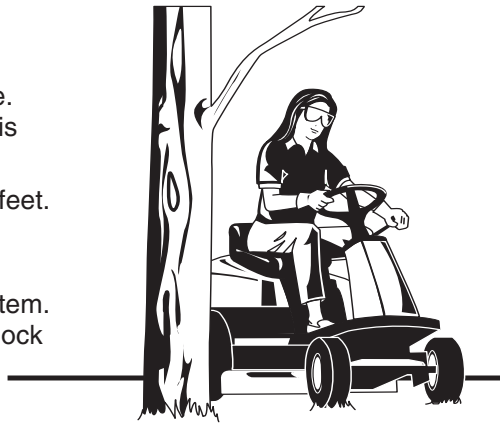

This equipment has many moving parts that can injure you or someone else. However, if you are seated in the seat properly, and follow all the rules in this book, the unit is safe to operate.

The mower deck has spinning mower blades that can amputate hands and feet. Do not allow anyone near the equipment while it is running!

To help you, the operator, use this equipment safely, it is equipped with an operator-present safety system. Do NOT attempt to alter or bypass the system. See your dealer immediately if the system does not pass all the safety interlock system tests found in this manual.

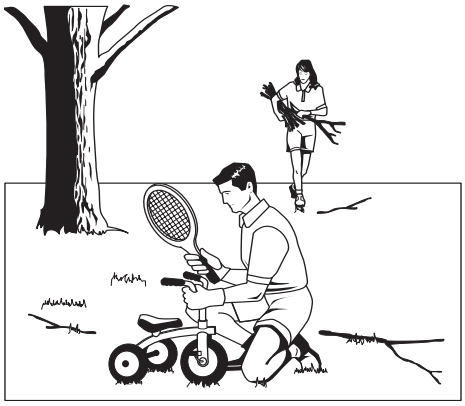

Thrown Objects

This unit has spinning mower blades. These blades can pick up and throw debris that could seriously injure a bystander. Be sure to clean up the area to be mowed BEFORE you start mowing.

Do not operate this unit without the entire grass catcher or discharge guard (deflector) in place.

Also, do not allow anyone in the area while the unit is running! If someone does enter the area, shut the unit off immediately until they leave.

Fuel and Maintenance

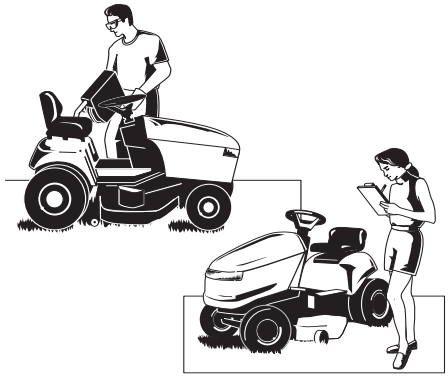

Gasoline is extremely flammable. Its vapors are also extremely flammable and can travel to distant ignition sources. Gasoline must only be used as a fuel, not as a solvent or cleaner. It should never be stored any place where its vapors can build up or travel to an ignition source like a pilot light. Fuel belongs in an approved, plastic, sealed gas can, or in the tractor fuel tank with the cap securely closed. Spilled fuel needs to be cleaned up immediately.

Proper maintenance is critical to the safety and performance of your unit. Be sure to perform the maintenance procedures listed in this manual, especially periodically testing the safety system.

Downloaded from www.Manualslib.com manuals search engine

https://truckmanualshub.com/

Safety Rules & Information

Read these safety rules and follow them closely. Failure to obey these rules could result in loss of control of unit, severe personal injury or death to you, or bystanders, or damage to property or equipment.
This mowing deck is capable of amputating hands and feet and throwing objects.
The triangle ⚠ in text signifies important cautions or warnings which must be followed.

GENERAL OPERATION

1. Read, understand, and follow all instructions in the manual and on the unit before starting.
2. Do not put hands or feet near rotating parts or under the machine. Keep clear of the discharge opening at all times.
3. Only allow responsible adults, who are familiar with the instructions, to operate the unit (local regulations can restrict operator age).
4. Clear the area of objects such as rocks, toys, wire, etc., which could be picked up and thrown by the blade(s).
5. Be sure the area is clear of other people before mowing. Stop the unit if anyone enters the area.
6. Never carry passengers.
7. Do not mow in reverse unless absolutely necessary. Always look down and behind before and while travelling in reverse.
8. Never direct discharge material toward anyone. Avoid discharging material against a wall or obstruction. Material may ricochet back toward the operator. Stop the blade(s) when crossing gravel surfaces.
9. Do not operate the machine without the entire grass catcher, discharge guard (deflector), or other safety devices in place.
10. Slow down before turning.
11. Never leave a running unit unattended. Always disengage the PTO, set parking brake, stop engine, and remove keys before dismounting.
12. Disengage blades (PTO) when not mowing. Shut off engine and wait for all parts to come to a complete stop before cleaning the machine, removing the grass catcher, or unclogging the discharge guard.
13. Operate the machine only in daylight or good artificial light.
14. Do not operate the unit while under the influence of alcohol or drugs.
15 Watch for traffic when operating near or crossing roadways.
16. Use extra care when loading or unloading the unit into a trailer or truck.
17. Always wear eye protection when operating this unit.
18. Data indicates that operators, age 60 years and above, are involved in a large percentage of power equipment-related injuries. These operators should evaluate their ability to operate the equipment safely enough to protect themselves and others from injury.
19. Follow the manufacturer's recommendations for wheel weights or counterweights.
20. Keep in mind the operator is responsible for accidents occurring to other people or property.
21. All drivers should seek and obtain professional and practical instruction.
22. Always wear substantial footwear and trousers. Never operate when barefoot or wearing sandals.
23. Before using, always visually check that the blades and blade hardware are present, intact, and secure. Replace worn or damaged parts.
24. Disengage attachments before: refueling, removing an attachment, making adjustments (unless the adjustment can be made from the operator's position).
25. When the machine is parked, stored, or left unattended, lower the cutting means unless a positive mechanical lock is used.
26. Before leaving the operator's position for any reason, engage the parking brake (if equipped), disengage the PTO, stop the engine, and remove the key.
27. To reduce fire hazard, keep the unit free of grass, leaves, & excess oil. Do not stop or park over dry leaves, grass, or combustible materials.
28. It is a violation of California Public Resource Code Section 4442 to use or operate the engine on or near any forest-covered, brush-covered, or grass-covered land unless the exhaust system is equipped with a spark arrester meeting any applicable local or state laws. Other states or federal areas may have similar laws.

TRANSPORTING AND STORAGE

1. When transporting the unit on an open trailer, make sure it is facing forward, in the direction of travel. If the unit is facing backwards, wind lift could damage the unit.
2. Always observe safe refueling and fuel handling practices when refueling the unit after transportation or storage.
3. Never store the unit (with fuel) in an enclosed poorly ventilated structure. Fuel vapors can travel to an ignition source (such as a furnace, water heater, etc.) and cause an explosion. Fuel vapor is also toxic to humans and animals.
4. Always follow the engine manual instructions for storage preparations before storing the unit for both short and long term periods.
5. Always follow the engine manual instructions for proper start-up procedures when returning the unit to service.
6. Never store the unit or fuel container inside where there is an open flame or pilot light, such as in a water heater. Allow unit to cool before storing.

Downloaded from www.Manualslib.com manuals search engine

https://truckmanualshub.com/

SLOPE OPERATION

Slopes are a major factor related to loss-of-control and tip-over accidents, which can result in severe injury or death. Operation on all slopes requires extra caution. If you cannot back up the slope or if you feel uneasy on it, do not operate on it.

Control of a walk-behind or ride-on machine sliding on a slope will not be regained by the application of the brake. The main reasons for loss of control are: insufficient tire grip on the ground, speed too fast, inadequate braking, the type of machine is unsuitable for its task, lack of awareness of the ground conditions, incorrect hitching and load distribution.

1. Mow up and down slopes, not across.
2. Watch for holes, ruts, or bumps. Uneven terrain could overturn the unit. Tall grass can hide obstacles.
3. Choose a slow speed so that you will not have to stop or change speeds while on the slope.
4. Do not mow on wet grass. Tires may loose traction.
5. Always keep unit in gear especially when traveling down slopes. Do not shift to neutral and coast downhill.
6. Avoid starting, stopping, or turning on a slope. If tires lose traction, disengage the blade(s) and proceed slowly straight down the slope.
7. Keep all movement on slopes slow and gradual. Do not make sudden changes in speed or direction, which could cause the machine to rollover.
8. Use extra care while operating machines with grass catchers or other attachments; they can affect the stability of the unit. Do not use on steeps slopes.
9. Do not try to stabilize the machine by putting your foot on the ground (ride-on units).
10. Do not mow near drop-offs, ditches, or embankments. The mower could suddenly turn over if a wheel is over the edge of a cliff or ditch, or if an edge caves in.
11. Do not use grass catchers on steep slopes.
12. Do not mow slopes you cannot back up them.
13. See your authorized dealer/retailer for recommendations of wheel weights or counterweights to improve stability.
14. Remove obstacles such as rocks, tree limbs, etc.
15. Use slow speed. Tires may lose traction on slopes even through the brakes are functioning properly.
16. Do not turn on slopes unless necessary, and then, turn slowly and gradually downhill, if possible.

TOWED EQUIPMENT (RIDE-ON UNITS)

1. Tow only with a machine that has a hitch designed for towing. Do not attach towed equipment except at the hitch point.
2. Follow the manufacturer's recommendations for weight limit for towed equipment and towing on slopes.
3. Never allow children or others in or on towed equipment.
4. On slopes, the weight of the towed equipment may cause loss of traction and loss of control.
5. Travel slowly and allow extra distance to stop.
6. Do not shift to neutral and coast down hill.

⚠ WARNING

Never operate on slopes greater than 17.6 percent (10°) which is a rise of 3-1/2 feet (106 cm) vertically in 20 feet (607 cm) horizontally.

When operating on slopes use additional wheel weights or counterweights. See your dealer/retailer to determine which weights are available and appropriate for your unit.

Select slow ground speed before driving onto slope. In addition to front weights, use extra caution when operating on slopes with rear-mounted grass catchers.

Mow UP and DOWN the slope, never across the face, use caution when changing directions and DO NOT START OR STOP ON SLOPE.

CHILDREN

Tragic accidents can occur if the operator is not alert to the presence of children. Children are often attracted to the unit and the mowing activity. Never assume that children will remain where you last saw them.

1. Keep children out of the mowing area and under the watchful care of another responsible adult.
2. Be alert and turn unit off if children enter the area.
3. Before and during reverse operation, look behind and down for small children.
4. Never carry children, even with the blade(s) off. They may fall off and be seriously injured or interfere with safe unit operation. Children who have been given rides in the past may suddenly appear in the mowing area for another ride and be run over or backed over by the machine.
5. Never allow children to operate the unit.
6. Use extra care when approaching blind corners, shrubs, trees, or other objects that may obscure vision.

EMISSIONS

1. Engine exhaust from this product contains chemicals known, in certain quantities, to cause cancer, birth defects, or other reproductive harm.
2. Look for the relevant Emissions Durability Period and Air Index information on the engine emissions label.

IGNITION SYSTEM

1. This spark ignition system complies with Canadian ICES-002.

Downloaded from www.Manualslib.com manuals search engine

https://truckmanualshub.com/

SERVICE AND MAINTENANCE

Safe Handling of Gasoline

1. Extinguish all cigarettes, cigars, pipes, and other sources of ignition.
2. Use only approved gasoline containers.
3. Never remove the gas cap or add fuel with the engine running. Allow the engine to cool before refueling.
4. Never fuel the machine indoors.
5. Never store the machine or fuel container where there is an open flame, spark, or pilot light such as near a water heater or other appliance.
6. Never fill containers inside a vehicle or on a truck bed with a plastic bed liner. Always place containers on the ground away from your vehicle before filling.
7. Remove gas-powered equipment from the truck or trailer and refuel it on the ground. If this is not possible, then refuel such equipment on a trailer with a portable container, rather than from a gasoline dispenser nozzle.
8. Keep nozzle in contact with the rim of the fuel tank or container opening at all times until fueling is complete. Do not use a nozzle lock-open device.
9. If fuel is spilled on clothing, change clothing immediately.
10. Never over-fill the fuel tank. Replace gas cap and tighten securely.
11. Use extra care in handling gasoline and other fuels. They are flammable and vapors are explosive.
12. If fuel is spilled, do not attempt to start the engine but move the machine away from the area of spillage and avoid creating any source of ignition until fuel vapors have dissipated.
13. Replace all fuel tank caps and fuel container caps securely.

Service & Maintenance

1. Never run the unit in an enclosed area where carbon monoxide fumes may collect.
2. Keep nuts and bolts, especially blade attachment bolts, tight and keep equipment in good condition.
3. Never tamper with safety devices. Check their proper operation regularly and make necessary repairs if they are not functioning properly.
4. Keep unit free of grass, leaves, or other debris build-up. Clean up oil or fuel spillage. and remove any fuel-soaked debris. Allow machine to cool before storage.
5. If you strike an object, stop and inspect the machine. Repair, if necessary, before restarting.
6. Never make adjustments or repairs with the engine running.
7. Check grass catcher components and the discharge guard frequently and replace with manufacturer's recommended parts, when necessary.
8. Mower blades are sharp. Wrap the blade or wear gloves, and use extra caution when servicing them.
9. Check brake operation frequently. Adjust and service as required.
10. Maintain or replace safety and instructions labels, as necessary.
11. Do not remove the fuel filter when the engine is hot as spilled gasoline may ignite. Do not spread fuel line clamps further than necessary. Ensure clamps grip hoses firmly over the filter after installation.
12. Do not use gasoline containing METHANOL, gasohol containing more than 10% ETHANOL, gasoline additives, or white gas because engine/fuel system damage could result.
13. If the fuel tank must be drained, it should be drained outdoors.
14. Replace faulty silencers/mufflers.
15. Maintain or replace safety and instruction labels as necessary.
16. Use only factory authorized replacement parts when making repairs.
17. Always comply with factory specifications on all settings and adjustments.
18. Only authorized service locations should be utilized for major service and repair requirements.
19. Never attempt to make major repairs on this unit unless you have been properly trained. Improper service procedures can result in hazardous operation, equipment damage and voiding of manufacturer's warranty.
20. On multiple blade mowers, take care as rotating one blade can cause other blades to rotate.
21. Do not change engine governor settings or over-speed the engine. Operating the engine at excessive speed can increase the hazard of personal injury.
22. Disengage drive attachments, stop the engine, remove the key, and disconnect the spark plug wire(s) before: clearing attachment blockages and chutes, performing service work, striking an object, or if the unit vibrates abnormally. After striking an object, inspect the machine for damage and make repairs before restarting and operating the equipment.
23. Never place hands near the moving parts, such as a hydro pump cooling fan, when the tractor is running. (Hydro pump cooling fans are typically located on top of the transaxle).
24. Units with hydraulic pumps, hoses, or motors: WARNING: Hydraulic fluid escaping under pressure may have sufficient force to penetrate skin and cause serious injury. If foreign fluid is injected into the skin it must be surgically removed within a few hours by a doctor familiar with this form of injury or gangrene may result. Keep body and hands away from pin holes or nozzles that eject hydraulic fluid under high pressure. Use paper or cardboard, and not hands, to search for leaks. Make sure all hydraulic fluid connections are tight and all hydraulic hoses and lines are in good condition before applying pressure to the system. If leaks occur, have the unit serviced immediately by your authorized dealer.
25. WARNING: Stored energy device. Improper release of springs can result in serious personal injury. Springs should be removed by an authorized technician.
26. Models equipped with an engine radiator: WARNING: Stored energy device. To prevent serious bodily injury from hot coolant or steam blow-out, never attempt to remove the radiator cap while the engine is running. Stop the engine and wait until it is cool. Even then, use extreme care when removing the cap.

Downloaded from www.Manualslib.com manuals search engine

https://truckmanualshub.com/

North American / CE Models

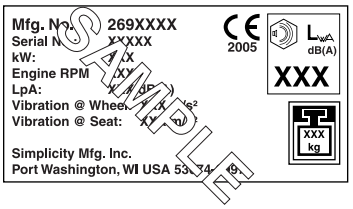

CE Models (Only)

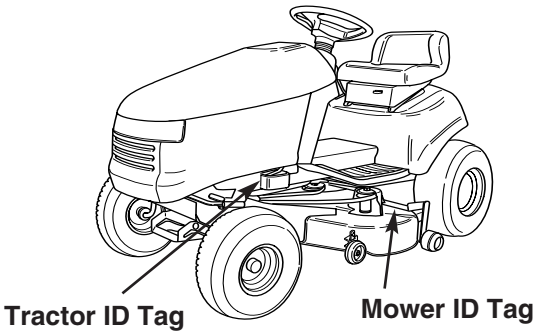

When contacting your authorized dealer for replacement parts, service, or information you MUST have these numbers.

Record your model name/number, manufacturer's identification numbers, and engine serial numbers in the space provided for easy access. These numbers can be found in the locations shown.

NOTE: For location of engine identification numbers, refer to the engine owner's manual.

CE Models: Place the extra copy of the identification tag in the manual

PRODUCT REFERENCE DATA	
Model Description Name/Number	
Unit MFG Number	Unit SERIAL Number
Mower Deck MFG Number	Mower Deck SERIAL Number
Dealer Name	Date Purchased
ENGINE REFERENCE DATA	
Engine Make	Engine Model
Engine Type/Spec	Engine Code/Serial Number

CE Identification Tag Markings

A. Manufacturer's Identification Number
B. Manufacturer's Serial Number
C. Power Rating in Kilowatts
D. Maximum Engine Speed in Rotations per Minute
E. Manufacturer's Address
F. Year of Manufacture
G. CE Compliance Logo
H. Mass of Unit in Kilograms
I. Sound Power in Decibels ***
J. Sound Pressure at Operator's Position in Decibels **
K. Vibration at the Steering Wheel *
L. Vibration at the Seat *

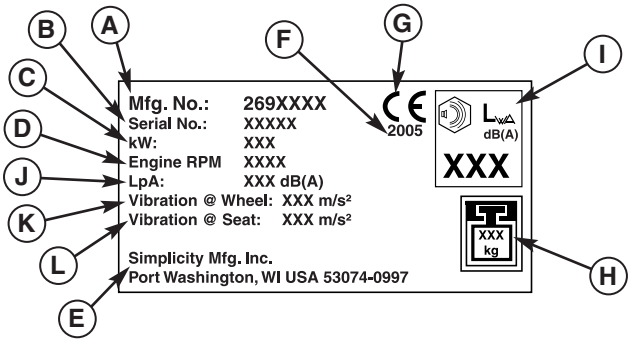

This unit complies with European Harmonized Lawn Mower Standard EN 836, European Machinery Directive 98/37/EC, and European EMC Directive 89/336/EC

* Tested according to EN 836:1997/A2:2001, EN 1032: 1996, EN 1033:1995

** Tested according to EN836:1997/A2:2001

*** Tested according to 2000/14/EC

CE Models: Place copy of Identification Tag here.

Downloaded from www.Manualslib.com manuals search engine

https://truckmanualshub.com/

Safety Decals

This unit has been designed and manufactured to provide you with the safety and reliability you would expect from an industry leader in outdoor power equipment manufacturing.

Although reading this manual and the safety instructions it contains will provide you with the necessary basic knowledge to operate this equipment safely and effectively, we have placed several safety labels on the unit to remind you of this important information while you are operating your unit.

All DANGER, WARNING, CAUTION and instructional messages on your rider and mower should be carefully read and obeyed. Personal bodily injury can result when these instructions are not followed. The information is for your safety and it is important! The safety decals below are on your rider and mower.

If any of these decals are lost or damaged, replace them at once. See your local dealer for replacements.

These labels are easily applied and will act as a constant visual reminder to you, and others who may use the equipment, to follow the safety instructions necessary for safe, effective operation.

North American Models

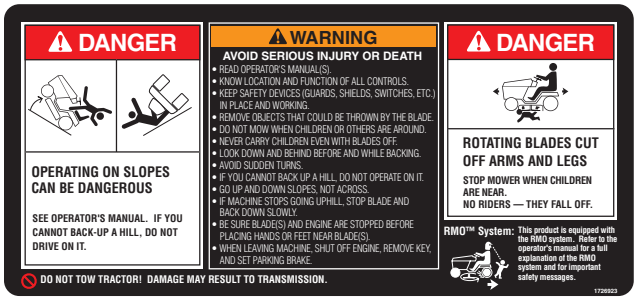

Decal - Operating Instructions, North American Models, Part No. 1726923

Decal - Danger, Side-Discharge Models Part No. 1704276

Decal - Danger, Side Discharge Models Part No. 1704277

Decal - Danger, Mulching Models Part No. 1720660

CE Models

Decal - Operating Instructions, CE Models, Part No. 1723175

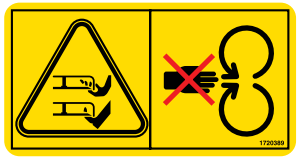

Decal - Danger, Rotating Blades Part No. 1720389

All Models

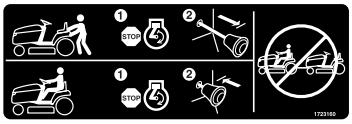

Decal - Transmission Release Part No. 1723160

Decal - Ignition Switch Positions Part No. 1722806

Decal - Cutting Height Part No. 1723470

Decal - Cutting Height Part No. 1723847

Downloaded from www.Manualslib.com manuals search engine

https://truckmanualshub.com/

Safety Icons

Warning: Read Operator's Manual.

Read and understand the Operator's Manual before using this machine.

Danger: Machine Rollover.

Do not use this machine on slopes greater than 10°.

Danger: Thrown Objects.

This machine is capable of throwing objects and debris. Keep bystanders away.

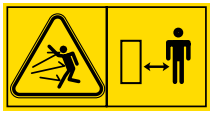

Danger: Dismemberment.

This machine can amputate limbs. Keep bystanders and children away when engine is running.

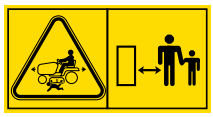

Warning: Remove Key Before Servicing.

Remove the key and consult technical literature before performing repairs or maintenance.

Danger: Dismemberment.

This mower deck can amputate limbs. Keep hands and feet away from blades.

Downloaded from www.Manualslib.com manuals search engine

https://truckmanualshub.com/

Features & Controls

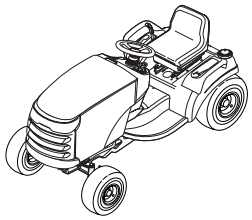

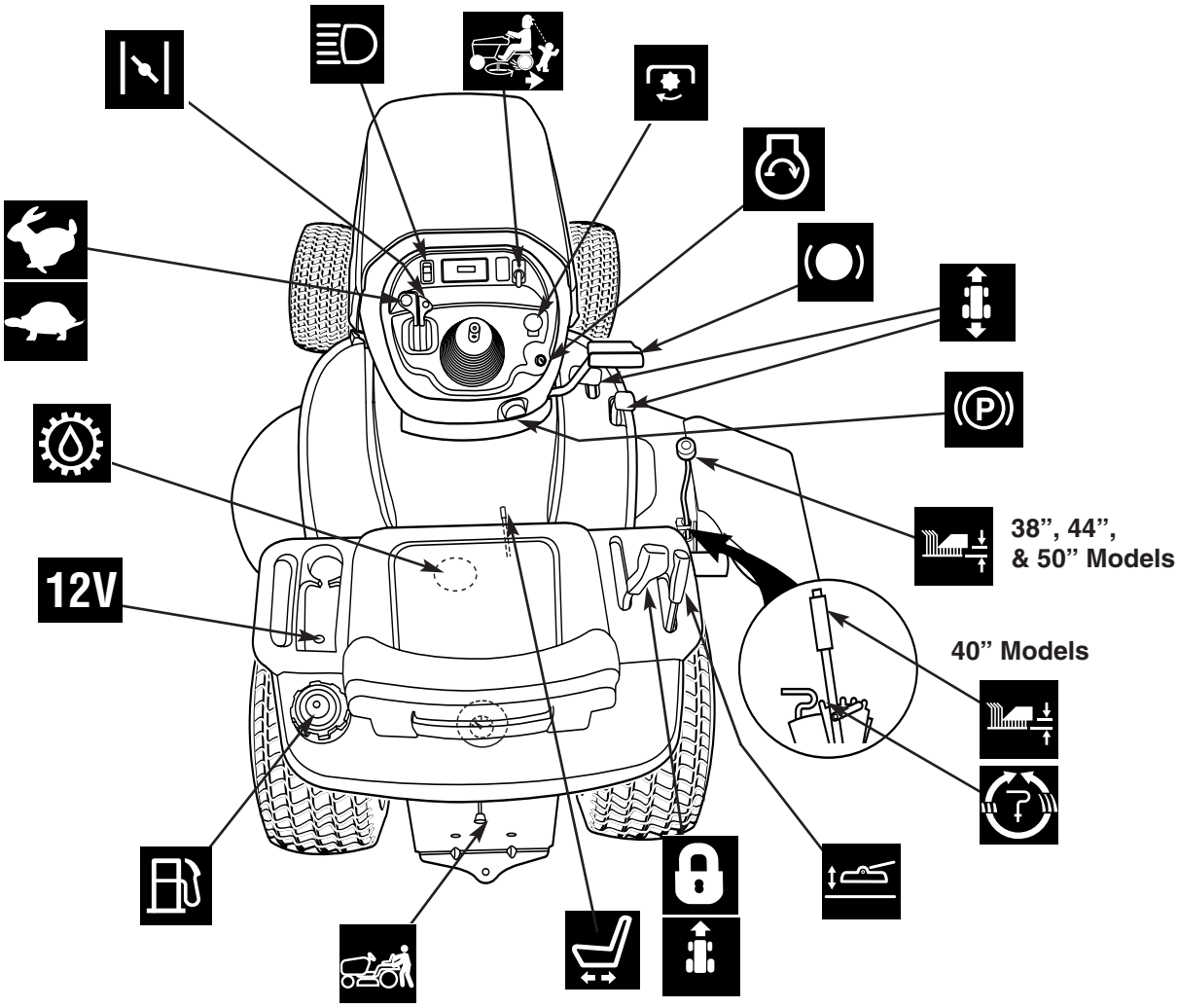

Figure 1. Controls

Control Functions

The information below briefly describes the function of individual controls. Starting, stopping, driving, and mowing require the combined use of several controls applied in specific sequences. To learn what combination and sequence of controls to use for various tasks see the OPERATION section.

Throttle Control

The throttle controls engine speed. Move the throttle forward to increase engine speed and back to decrease engine speed. Always operate at FULL throttle.

Choke

Close the choke for cold starting. Open the choke once the engine starts. A warm engine may not require choking. Move the lever forward to close the choke.

Headlights

The light switch turns the tractor headlights on and off.

Reverse Mowing Option (RMO)

The Reverse Mowing Option allows for mowing (or use of other PTO driven attachments) while traveling in reverse. If you choose to mow or operate another attachment in reverse, turn the RMO key after the PTO is engaged. The L.E.D. light will illuminate, and the operator can then mow in reverse. Each time the PTO is disengaged the RMO needs to be reactivated if desired.

Downloaded from www.Manualslib.com manuals search engine

https://truckmanualshub.com/

PTO Switch

The PTO (Power Take-Off) switch engages and disengages attachments that use the PTO. To engage the PTO, pull UP on the switch. Push DOWN to disengage. *Note that the operator must be seated firmly in the tractor seat for the PTO to function.*

Ignition Switch

The ignition switch starts and stops the engine, it has three positions:

OFF	Stops the engine and shuts off the electrical system.
RUN	Allows the engine to run and powers the electrical system.
START	Cranks the engine for starting.

NOTE: Never leave the ignition switch in the RUN position with the engine stopped–this drains the battery.

Brake Pedal

Depressing the brake pedal applies the tractor brake.

Ground Speed Pedals

The tractor's forward ground speed is controlled by the forward ground speed control pedal. The tractor's reverse ground speed is controlled by the reverse ground speed control pedal.

Depressing either pedal will increase ground speed. Note that the further down the pedal is depressed, the faster the tractor will travel.

Parking Brake

The parking brake knob is used to lock the parking brake when the tractor is stopped. Fully depressing the brake pedal and pulling up on the knob engages the parking brake. Refer to page 10 for a full explanation of parking brake functions.

Mower Height of Cut Adjustment

38", 44" & 50" MOWER DECKS

The cutting height adjustment knob controls the mower cutting height. The cutting height is infinitely adjustable between 1" and 3-5/8."

40" MOWER DECKS

The cutting height adjustment lever controls the mower cutting height. Push down on the button to release the lever, move to the desired cutting height, and release the button to lock. The cutting height is infinitely adjustable between 1" and 3-5/8."

Cutting Height Fine Tuning Adjustment (40" Mower Decks Only)

The cutting height fine tuning adjustment is used to set the mower cutting height between two of the preset cutting positions.

Attachment Lift Control Lever

When using the mower deck, lift the deck off the ground while transporting to and from the job site. **DO NOT** cut with the mower in the raised, transport position.

The attachment lift control lever raises and lowers attachments that utilize the tractor's manual lift linkage. To lower an attachment: pull the lever back slightly, depress the release button, and push the lever forward until it locks in the lowered position. To raise an attachment: push the lever forward slightly, depress the release button, then pull the lever back until it locks in the raised position.

Cruise Control (Select Models)

The cruise control is used to lock the ground speed control in forward. Move the lever forward until the desired ground speed is reached. To disengage the cruise control move the lever back. In the event you need to stop quickly, depressing the brake pedal will also return the cruise control to neutral.

Seat Adjustment Lever

The seat can be adjusted forward and back. Move the lever, position the seat as desired, and release the lever to lock the seat into position.

Transmission Release Valve Lever

The transmission release valve lever deactivates the transmission so that the tractor can be pushed by hand. See PUSHING THE TRACTOR BY HAND for operational information.

Fuel Tank

To remove the cap, turn counterclockwise. On models with a dashboard display, the fuel gauge is part of the dashboard. Models without a dashboard display have a fuel gauge located under the seat.

Power Outlet (Select Models)

The power outlet is 12V-DC. Accessory must be rated at 14 amps or less.

Downloaded from www.Manualslib.com manuals search engine

https://truckmanualshub.com/

Parking Brake Function

Applying the Parking Brake - See Figure 2. To lock the parking brake, release the ground speed pedals (A), fully depress the brake pedal (B), pull UP on the parking brake knob (C), and then release brake pedal.

Releasing the Parking Brake - See Figure 2. To release the parking brake, fully depress the brake pedal (B) and push the parking brake knob (C) DOWN.

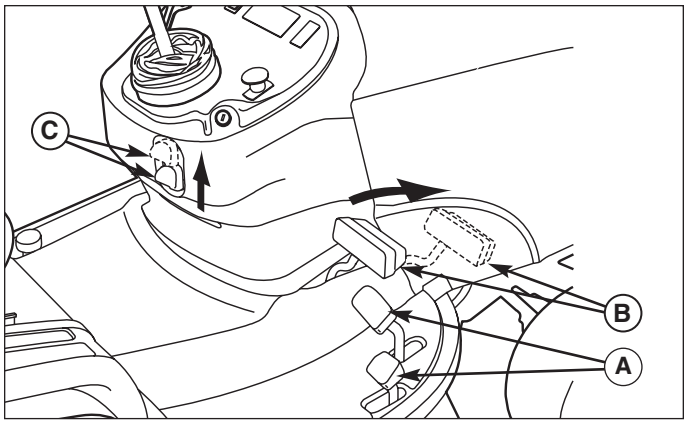

Figure 2. Engaging the Parking Brake
A. Ground Speed Pedals
B. Brake Pedal
C. Parking Brake Knob

Hourmeter

The hour meter measures the number of hours the key has been in the RUN position. The hour meter will flash an initial oil change indicator at 5 hours, and a lubrication reminder every 50 hours. These reminders display for approximately two hours and will automatically reset themselves.

Note: The hour meter will register the passage of time when the key is in the RUN position, even if the engine is not running. The hour meter has a self contained power source so the total hours are always visible.

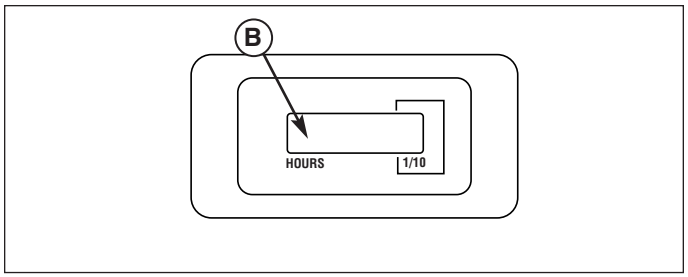

Figure 3. Hourmeter - Select Models

12 Volt Power Outlet

(Select Models)

⚠ CAUTION

Avoid Injury. Safe operation requires your full attention. Do not wear radio or music headphones while operating machine.

The 12-volt accessory plug is located in the left side pod (D, Figure 1). It can be used to power small electronic devices. The accessory must be rated at 9 amps or less.

Note: Operating a 12-volt accessory, especially with the engine at idle, may cause battery discharge. When not using the accessory plug it must be covered with the rubber plug to prevent moisture from causing a short circuit. Entrance of water into plug can cause a short circuit.

Automatic Controlled Traction

What is Automatic Controlled Traction?

Automatic Controlled Traction (ACT) is an exclusive feature of our transmissions that provides improved traction. ACT applies a preset amount of torque to both rear wheels even if one starts slipping (a transmission without ACT will lose traction completely if one rear wheel starts slipping). This preset torque is just enough to provide additional traction, and still allow the wheels to turn at different speeds in a tight turn without damaging the lawn.

What to Expect from Your ACT Tractor

For the most part, while using your tractor you will not notice ACT working, and you will simply become accustomed to increased traction an ACT transmission provides.

Under certain circumstances the ACT system limit can be exceeded, and one of the rear wheels may slip (for instance if trying to turn up a hill while accelerating). This is normal. If you start to lose traction, do not speed up. Instead, slow to a stop, straighten the steering wheel, and slowly accelerate. Stopping the tractor allows the transmission to regain more traction.

Downloaded from www.Manualslib.com manuals search engine

https://truckmanualshub.com/

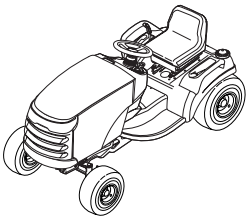

Operating the Tractor

Safety Interlock System Tests

This unit is equipped with safety interlock switches and other safety devices. These safety systems are present for your safety: do not attempt to bypass safety switches, and never tamper with safety devices. Check their operation regularly.

Operational SAFETY Checks

Your unit is equipped with a seat switch safety system. Check the seat switch operation every fall and spring with the following tests.

Test 1 — Engine should NOT crank if:

- PTO switch is ON, OR
- Brake pedal is NOT fully depressed (parking brake OFF), OR
- The cruise control lever is NOT in NEUTRAL.

Test 2 — Engine SHOULD crank if:

- PTO switch is OFF, AND
- Brake pedal is fully depressed (parking brake ON), AND
- The cruise control lever is in NEUTRAL.

Test 3 — Engine should SHUT OFF if:

- Operator rises off seat with PTO engaged, OR
- Operator rises off seat with brake pedal NOT fully depressed (parking brake OFF).

Test 4 — Blade Brake Check

Mower blades and mower drive belt should come to a complete stop within five seconds after electric PTO switch is turned OFF (or operator rises off seat). If mower drive belt does not stop within five seconds, readjust the PTO clutch as described in the ADJUSTMENTS section or see your dealer.

Test 5 — Reverse Mow Option (RMO) Check

- Engine should shut off if reverse travel is attempted if the PTO has been switched on and RMO has not been activated.
- RMO light should illuminate when RMO has been activated.

NOTE: Once the engine has stopped, the PTO switch must be turned off after the operator returns to the seat in order to start the engine.

WARNING

If the unit does not pass a safety test, do not operate it. See your authorized dealer. Under no circumstance should you attempt to defeat the purpose of the safety interlock system.

General Operating Safety

Be sure to read all information in the Safety and Operation sections before attempting to operate this unit. Become familiar with all of the controls and how to stop the unit.

Adding Fuel

To add fuel:

1. Remove the fuel cap (A, Figure 4).
2. Fill the tank. Do not overfill. Leave room in the tank for fuel expansion. Refer to your engine manual for specific fuel recommendations.
3. Install and hand tighten the fuel cap.

Do not use gasoline containing METHANOL, gasohol containing more than 10% ETHANOL, gasoline additives, or white gas because engine/fuel system damage could result.

WARNING

Gasoline is highly flammable and must be handled with care. Never fill the tank when the engine is still hot from recent operation. Do not allow open flame, smoking or matches in the area. Avoid over-filling and wipe up any spills.

Downloaded from www.Manualslib.com manuals search engine

https://truckmanualshub.com/

Starting the Engine

1. While sitting in the operator's seat, fully depress the brake pedal or set the parking brake.
2. Make sure that your feet are not depressing the ground speed control pedals and that the cruise control lever is in neutral.
3. Disengage the PTO clutch.
4. Set the throttle to FULL.
5. Close the choke.

NOTE: A warm engine may not require choking.

6. Insert the ignition key and turn it to START.
7. After the engine starts, move the engine throttle control to SLOW. Warm up the engine by running it for at least a minute.
8. Set throttle to FULL.

NOTE: In the event of an emergency the engine can be stopped by simply turning the ignition switch to STOP. Use this method only in emergency situations. For normal engine shut down follow the procedure given in STOPPING THE TRACTOR.

Stopping the Tractor & Engine

1. Return the ground speed control(s) to neutral.
2. Disengage the PTO and wait for all moving parts to stop.
3. Place the throttle control in the position specified in the engine owner's manual provided in the operator's packet shipped with your tractor. Follow any recommended stopping procedures.
4. Turn the ignition switch to OFF. Remove the key.

Driving The Tractor

1. Sit in the seat and adjust the seat so that you can comfortably reach all the controls and see the dashboard display.
2. Engage the parking brake.
3. Make sure the PTO switch is disengaged.
4. Start the engine (see STARTING THE ENGINE).
5. Disengage the parking brake and release the brake pedal.
6. Depress the forward ground speed control pedal to travel forward. Release the pedal to stop. Note that the further down the pedal is depressed the faster the tractor will travel.
7. Stop the tractor by releasing the ground speed control pedals, setting the parking brake, and stopping the engine (see STOPPING THE TRACTOR AND ENGINE).

Mowing

1. Set the mower cutting height to the desired level and set the gauge wheels to the appropriate position (if equipped).
2. Engage the parking brake. Make sure the PTO switch is disengaged.
3. Start the engine (see STARTING THE ENGINE).
4. Fully lower the mower using the attachment lift lever.
5. Set the throttle to FULL.
6. Engage the PTO (Mower Deck).
7. Begin mowing. See Section LC for tips on mowing patterns, lawn care, and troubleshooting information.
8. When finished, shut off the PTO and raise the mower using the attachment lift control lever.
9. Stop the engine (see STOPPING THE TRACTOR AND ENGINE).

Downloaded from www.Manualslib.com manuals search engine

https://truckmanualshub.com/

⚠ WARNING

The engine will shut off if the reverse ground speed pedal is depressed while the PTO is on and the RMO has not been activated. The operator should always turn the PTO off prior to driving across on roads, paths or any area that maybe used by other vehicles. Sudden loss of drive could create a hazard.

⚠ WARNING

Mowing in reverse can be hazardous to bystanders. Tragic accidents can occur if the operator is not alert to the presence of children. Never activate RMO if children are present. Children are often attracted to the unit and the mowing activity.

Mowing in Reverse

If an operator chooses to mow in reverse, the RMO system can be used. To use the Reverse Mowing Option (RMO) turn the RMO key after the PTO is engaged. The L.E.D. light will illuminate, and the operator can then mow in reverse. Each time the PTO is disengaged the RMO needs to be reactivated if desired. The key should be removed to restrict access to the RMO feature.

Attachment Operation in Reverse

If an operator chooses to operate a PTO driven attachment in reverse, the RMO system can be used. To use the Reverse Mowing Option (RMO) turn the RMO key after the PTO is engaged. The L.E.D. light will illuminate, and the operator can then operate the attachment in reverse. Each time the PTO is disengaged the RMO needs to be reactivated if desired. The key should be removed to restrict access to the RMO feature.

Pushing the Tractor by Hand

1. Disengage the PTO and turn the engine off.
2. Pull the transmission release (B, Figure 4) back approximately 2-1/2” (6 cm) to lock into released position.
3. The tractor can now be pushed by hand.

DO NOT TOW TRACTOR
Towing the unit will cause transmission damage. • Do not use another vehicle to push or pull this unit. • Do not actuate the transmission release valve lever while the engine is running.

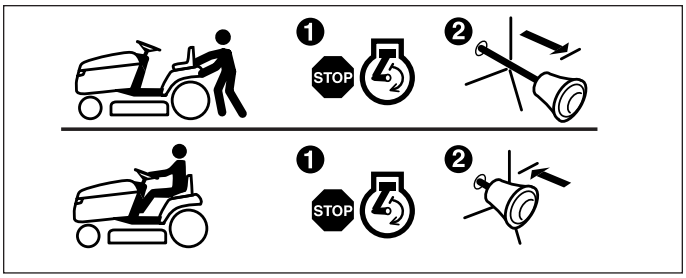

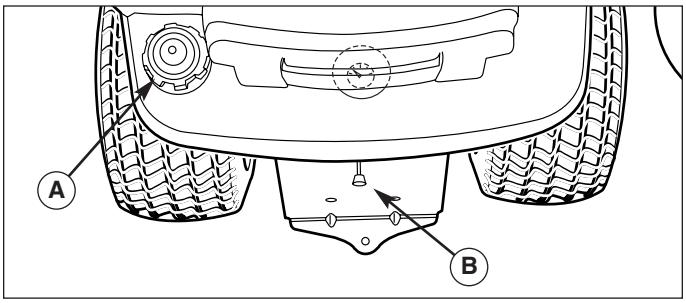

Figure 4. Transmission Release Lever & Fuel Tank
A. Fuel Tank Cap.
B. Transmission Release Lever

Downloaded from www.Manualslib.com manuals search engine

https://truckmanualshub.com/

Adjusting Mower Cutting Height - 38”, 44” & 50” Mower Decks

The cutting height adjustment knob (B, Figure 5) controls the mower cutting height. The cutting height is infinitely adjustable between approximately 1” and 3-5/8” (2,5-9,2cm). Turn the knob clockwise to raise the deck and counterclockwise to lower it.

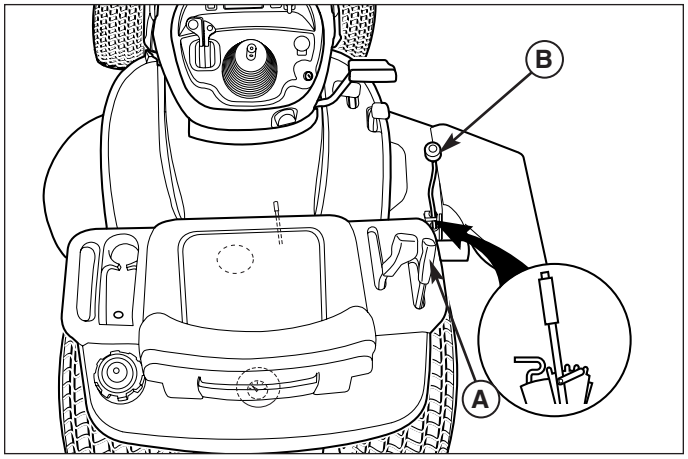

Figure 5. Raising & Lowering Mower - 38”, 44” & 50” Mowers
A. Mower Lift Lever
B. Mower Height Adjuster

Adjusting Mower Cutting Height - 40” Mower Decks

The cutting height adjustment lever (A, Figure 6) controls the mower cutting height and has five positions. The highest cutting position should be used when transporting to and from the work site (do not cut with the lever in the highest position). The lower four positions are used when mowing.

Set this lever so that the deck is cutting off 1/3 the height of the grass or less.

If the desired cutting height falls between two notches, use the cutting height fine tuning adjuster (B) to achieve the correct height.

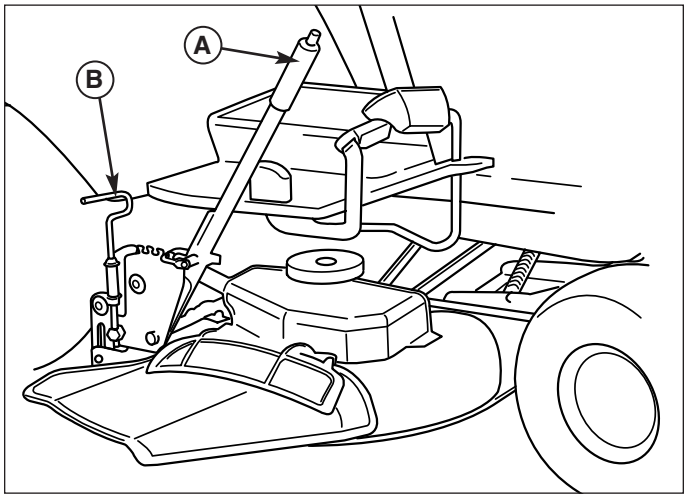

Figure 6. Cutting Height Adjustment - 40” Mowers
A. Cutting Height Lever
B. Fine Tuning Adjustment

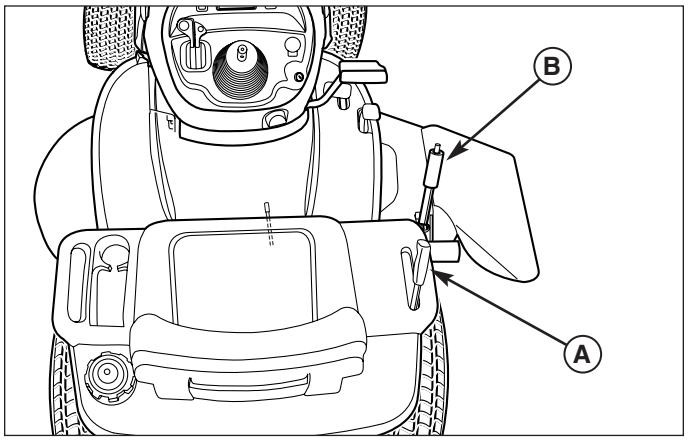

Figure 7. Raising & Lowering Mower - 40” Mowers
A. Mower Lift Lever
B. Mower Height Adjuster

Downloaded from www.Manualslib.com manuals search engine

https://truckmanualshub.com/

Lift Variations When Using Attachments

When a front-mounted attachment such as a snowthrower or dozer blade is used with the tractor, the lift mechanism must be locked to provide downward force. When the mower is reinstalled the downward pressure lock must be released so that the mower can float.

Manual Lift Models

NOTE: These instructions apply to Broadmoor / 300 / 1600 / 2600 Series tractors equipped with a lift lever kit.

The lift link is installed differently depending on what attachment is being used. Refer to Figure 8 for link installation information.

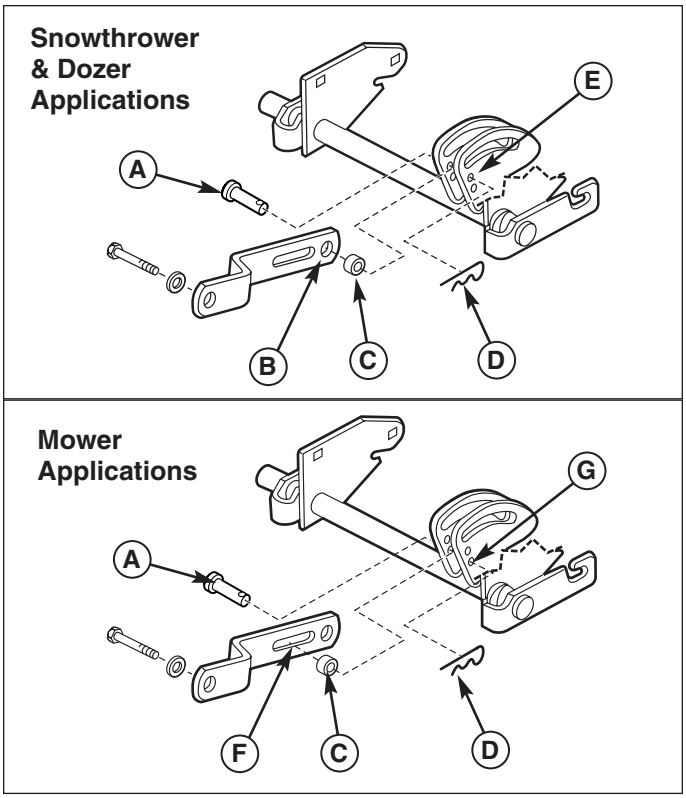

Figure 8. Lift Link - Manual Lift Models
A. Pin
B. Rear Hole of Lift Bar (Snowthrower Applications)
C. Spacer
D. Hair Pin Clip
E. Upper Hole (Snowthrower Applications)
F. Slot of Lift Link (Mower Applications)
G. Lower Hole (Mower Applications)

Attaching a Trailer

The maximum horizontal drawbar force allowed is 444 Newton. The maximum vertical drawbar force is 222 Newton. This equates to a 396 lbs (180 kg) trailer on a 10 degree hill. Secure the trailer with an appropriately sized clevis pin (A, Figure 9) and clip (B).

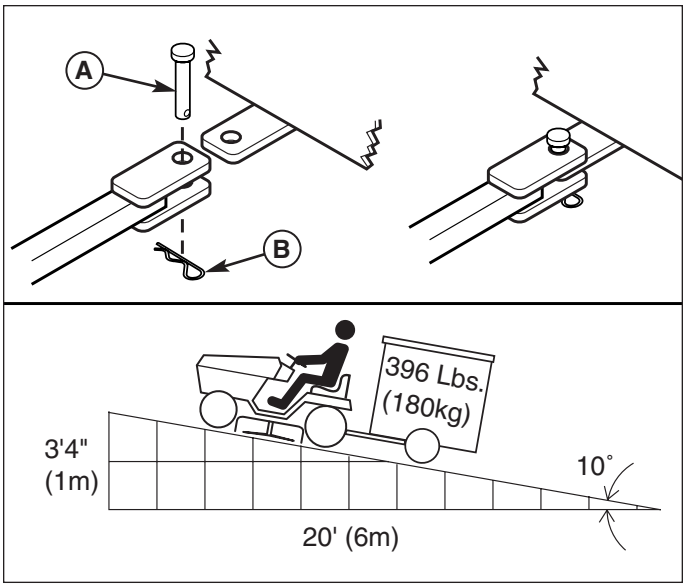

Figure 9. Trailer Weight Recommendations
A. Clevis Pin
B. Clip

Downloaded from www.Manualslib.com manuals search engine

https://truckmanualshub.com/

Mower Deck Removal & Installation

Simplicity, Massey Ferguson or AGCO Models

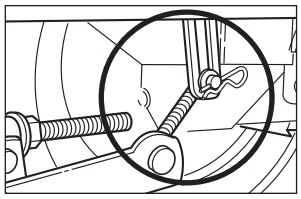

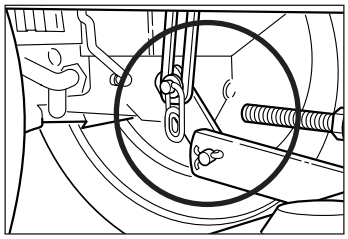

WARNING

Engage parking brake, disengage PTO, stop engine and remove key before attempting to install or remove the mower.

Removing the Mower Deck

1. Park tractor on a hard, level surface such as a concrete floor. Turn off PTO switch and engine, remove the key and apply parking brake.
2. Place mower in the lowest cutting position using the mower height adjuster.
3. Place the attachment lift in the lowest position.
4. Disconnect the mower lift arm (A, Figure 10) from the tractor lift arm (B). Re-install washer (C) and safety clip (D).
5. Remove belt from PTO pulley (B, Figure 11).

CAUTION

The muffler and surrounding areas may be hot.

6. Turn wheels straight ahead. Pull back on spring-loaded lever (B, Figure 12) and lift mower hitch off of the tractor brackets.
7. Turn wheels fully left, and slide mower deck out right side of tractor.

Installing the Mower Deck

1. Park tractor, shut off PTO and engine, remove the key and apply parking brake. Turn the wheels fully to the left.
2. Place mower height adjuster (B, Figures 5-7) in the lowest cutting position. Place the mower lift lever in the lowest position, also. Slide mower deck under right side of tractor so that mower hitch is aligned with the front tractor hitch.
3. See Figure 12. Turn wheels straight. Pull back on the spring-loaded lever (B) while lifting up on the mower hitch. Install mower hitch onto tractor hitch brackets (A). When properly installed, the spring-loaded lever should seat fully underneath the brackets.

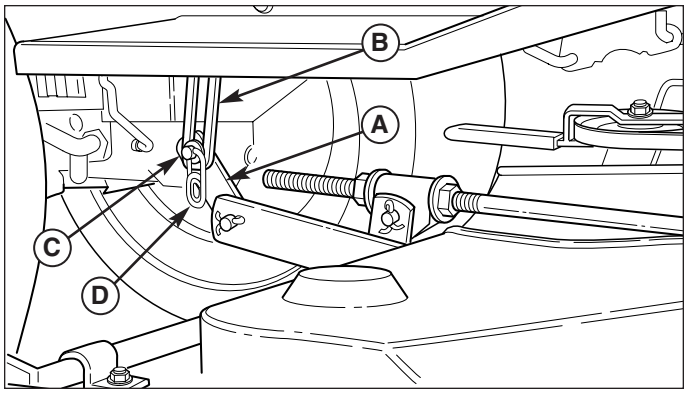

Figure 10. Lift Arms
(Viewed from underneath right side of tractor)
A. Mower Lift Arm
B. Tractor Lift Arm
C. Flat Washer
D. Safety Clip

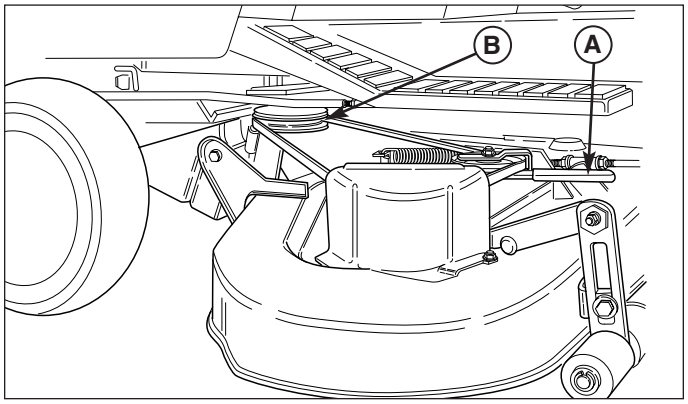

Figure 11. Removing & Installing Belt
A. Idler Arm
B. PTO Pulley

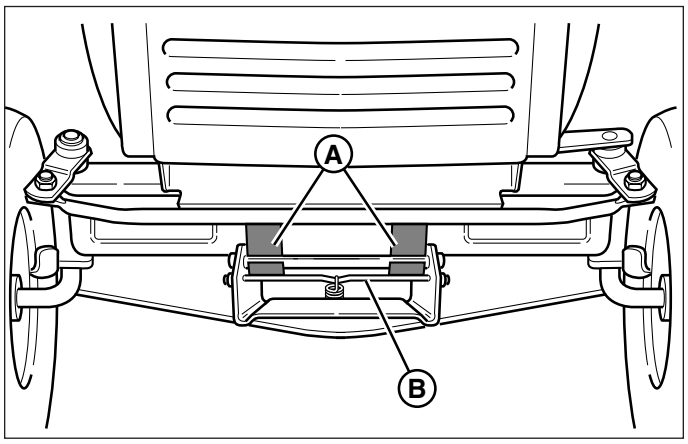

Figure 12. Mower Hitch
A. Tractor Hitch Brackets
B. Spring-Loaded Lever

4. See Figure 10. Connect the mower lift arm (A) to the tractor lift arm (B) using the flat washer (C) and safety clip (D).
5. See Figure 11. Move idler arm (A) to relieve belt tension. Install belt onto the PTO pulley (B).

Downloaded from www.Manualslib.com manuals search engine

https://truckmanualshub.com/

Mower Deck Removal & Installation

Snapper Models

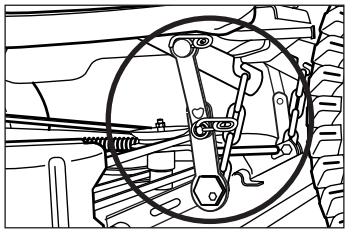

WARNING

Engage parking brake, disengage PTO, stop engine and remove key before attempting to install or remove the mower.

Removing the Mower Deck

1. Park tractor on a hard, level surface such as a concrete floor. Turn off PTO switch and engine, remove the key and apply parking brake.
2. Place mower in the lowest cutting position using the mower height adjuster.
3. Place the attachment lift in the highest position.
4. Disconnect the safety clips (A & H, Figure 13) and washer (G) from the lower hanger (E). Remove upper hanger (B) from lift post (F). Connect upper hanger (B) to lower hanger (E) using safety clip (A) to prevent misplacing or losing parts. Repeat on other side.
5. Place the attachment lift in the lowest position.
6. Remove lift chain (D) from lift hook (C). Repeat on other side.

CAUTION

The muffler and surrounding areas may be hot.

7. Remove belt from PTO pulley (B, Figure 11).
8. Turn wheels straight ahead. Pull back on spring-loaded lever (B, Figure 12) and lift mower hitch off of the tractor brackets.
9. Turn wheels fully left, and slide mower deck out right side of tractor.

Installing the Mower Deck

1. Park tractor, shut off PTO and engine, remove the key and apply parking brake. Turn the wheels fully to the left.
2. Place mower height adjuster (B, Figures 5-7) in the lowest cutting position. Place the mower lift lever in the lowest position, also. Slide mower deck under right side of tractor so that mower hitch is aligned with the front tractor hitch.

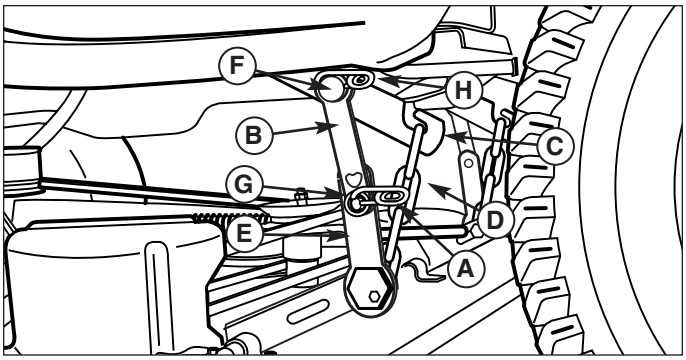

Figure 13. Lift Arms
(Viewed from underneath left side of tractor)

A. Safety Clip	**E. Lower Hanger**
B. Upper Hanger	**F. Post on Lift Hook**
C. Lift Hook	**G. Washer**
D. Lift Chain	**H. Safety Clip (Some Models)**

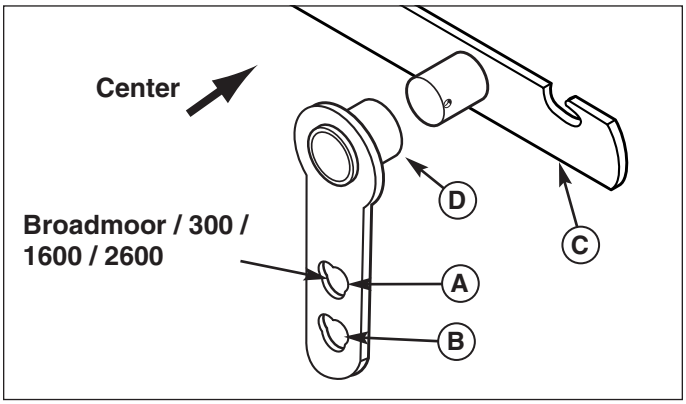

Figure 14. Upper Hanger

A. Upper Hole	**C. Lift Hook**
B. Lower Hole	**D. Long Hub**

3. See Figure 12. Turn wheels straight. Pull back on the spring-loaded lever (B) while lifting up on the mower hitch. Install mower hitch onto tractor hitch brackets (A). When properly installed, the spring-loaded lever should seat fully underneath the brackets.
4. See Figure 13. Connect the lift chain (D) to the lift hook (C). Repeat on other side.
5. Place the attachment lift in the highest position.
6. Disconnect the safety clip (A & H, Figure 13) from the upper hanger (B) and lower hanger (E) if still connected from storage. Slide upper hanger (B) over post on lift hook (F). The long hub (D, Figure 14) on the upper hanger must face toward center. Connect hole on upper hanger (B, Figure 13) to post on lower hanger (D). Secure with washer (G) and safety clip (A & H). Repeat on other side.

Note: Use upper hole for Broadmoor / 300 / 1600 / 2600 as shown in figure 14.

7. See Figure 11. Move idler arm (A) to relieve belt tension. Install belt onto the PTO pulley (B).

Downloaded from www.Manualslib.com manuals search engine

https://truckmanualshub.com/

⚠ WARNING

Never store the unit (with fuel) in an enclosed, poorly ventilated structure. Fuel vapors can travel to an ignition source (such as a furnace, water heater, etc.) and cause an explosion.

Fuel vapor is also toxic to humans and animals.

Storage

Before you store your unit for the off-season, read the Maintenance and Storage instructions in the Safety Rules section, then perform the following steps:

- Disengage the PTO, set the parking brake, & remove the key.
- Perform engine maintenance and storage measures listed in the engine owner's manual. This includes draining the fuel system, or adding stabilizer to the fuel (do not store a fueled unit in an enclosed structure - see warning).
- Battery life will be increased if it is removed, put in a cool, dry place and fully charged about once a month. If the battery is left in the unit, disconnect the negative cable.

Before starting the unit after it has been stored:

- Check all fluid levels. Check all maintenance items.
- Perform all recommended checks and procedures found in the engine owner's manual.
- Allow the engine to warm up for several minutes before use.

Downloaded from www.Manualslib.com manuals search engine

https://truckmanualshub.com/

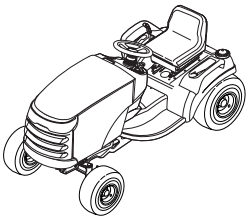

Lawn Care & Mowing Information

How and When to Water, Fertilize & Aerate

Most lawns are watered too often, but with too little water. However too much water can allow development of diseases with your lawn. **It is best to water the lawn only when necessary, and then to water it slowly, evenly, and deeply—imitating a slow, soaking rain.**

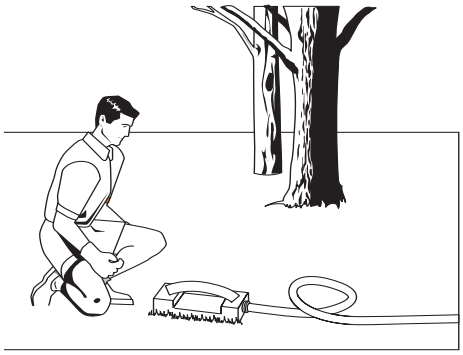

WHEN TO WATER YOUR LAWN

When the lawn begins to wilt, the grass's color dulls, or footprints stay compressed for more than a few seconds, the lawn is beginning to dry out, and needs additional moisture. The best time to water is early morning to allow the water to soak deeply into the lawn and reduce the amount that evaporates in the hot afternoon sun.

HOW TO WATER YOUR LAWN

The best method of watering a lawn is to imitate a slow, soaking rain, applying about 1 inch of water.

HOW TO FERTILIZE YOUR LAWN

Fertilizing with a slow-release fertilizer provides missing nutrients which help create slow, even growth. Remember that over-fertilizing can cause harm, and that most fertilizing should be applied in the spring so that it will release into the lawn through the summer.

AERATING YOUR LAWN

Consider aerating your lawn in spring. Using an aerator to remove cores of soil from the lawn increases the speed of clipping decomposition and encourages deeper root growth by opening up the soil and permitting greater movement of water, fertilizer and air.

How High To Mow the Grass

Cutting the grass too short causes weak, thin grass plants, which are easily damaged by dry periods and pests.

Letting grass grow a bit longer—especially when it is hot and dry—reduces heat build-up, preserves needed moisture and protects the grass from heat damage and other problems.

Cutting off too much at one time shocks the plant's growth system and weakens the grass plants. **A good rule of thumb is the 1/3 rule: to cut no more than one third of the grass height, and never more than 1 inch at a time.**

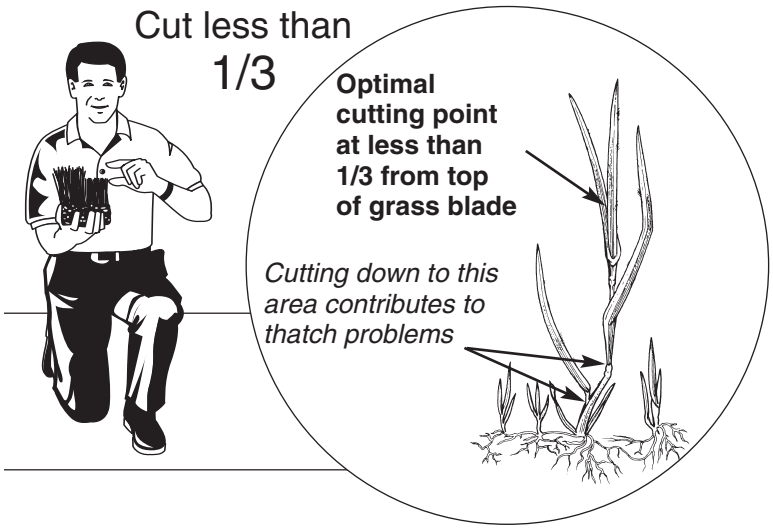

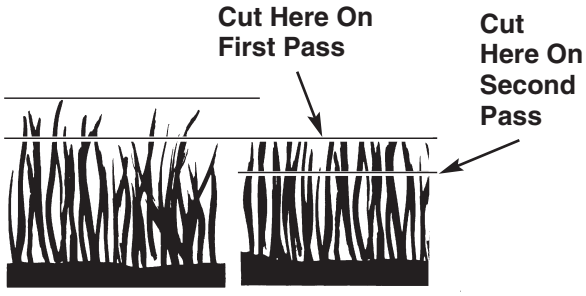

Tall Grass Requires Incremental Cutting

For extremely tall grass, set the cutting height at maximum for the first pass, and then reset it to the desired height and mow a second or third time.

Don't cover the grass surface with a heavy layer of clippings.

Downloaded from www.Manualslib.com manuals search engine

https://truckmanualshub.com/

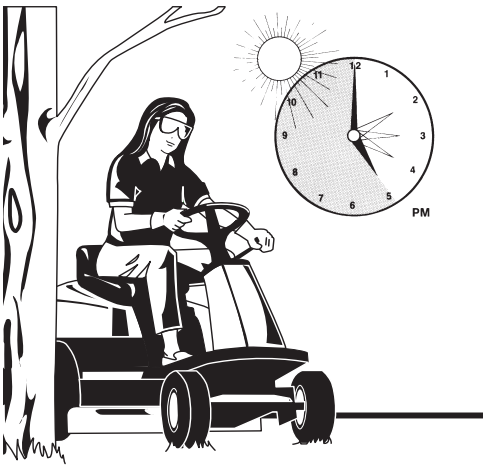

When and How Often to Mow

The time of day and condition of the grass greatly affect the results you'll get when mowing. For the best results, follow these guidelines:

- Mow when the grass is between 3"-4" (7,5-10 cm) high.
- Mow with sharp blades. Short clippings of grass one inch or shorter decompose more quickly than longer blades. Sharp mower blades cut grass cleanly and efficiently, preventing frayed edges which harm the grass.
- Mow at time of day when the grass is cool and dry. Late afternoon or early evening often provide these ideal mowing conditions.
- Avoid mowing after rain or even heavy dew, and never mulch when the grass is wet (moist grass does not mulch well, and clumps beneath the mower deck).

Note: Always operate the engine at full throttle when mowing.

Proper Mowing Speed

ENGINE SPEED & GROUND SPEED

Always operate the engine at full throttle when mowing. If you hear the engine slowing down, you are mowing too fast—maintaining a slower ground speed will improve the cutting efficiency of the blades and prevents many common cutting problems.

Select an appropriate ground speed for the thickness and height of the grass you are cutting (3rd gear or slower for manual gear models, or mid-range or slower for hydro models). If you hear the engine slowing down you are mowing too fast, use a slower ground speed.

HOW MUCH GRASS TO CUT OFF

Mow when the grass is 3"-4" inches (7,5-10cm) long. Do not cut off more that 1" (2.5cm) of grass in a single pass.

Downloaded from www.Manualslib.com manuals search engine

https://truckmanualshub.com/

Using a Mulching Mower

Benefits of Proper Mulching

Mulching consists of a mower deck which cuts and recuts clippings into tiny particles and then blows them down into the lawn. These tiny particles decompose rapidly into by-products that your lawn can use. Under proper conditions your mulching mower virtually eliminate noticeable clippings on the lawn surface.

Limitations of Mulching Decks

Mulching mowers cannot function properly if the grass is wet, or if the grass is simply too high. Even more than normal mowing, mulching requires that the grass be dry and that no more than 1/3 of the height is cut.

Do not use the mower as a mulching mower during the first two or three cuttings in the spring. The long grass blades, quick growth, and often wetter conditions are more suitable for broadcasting (side-discharging).

Correct Ground Speed & Engine Speed

Use full engine throttle to maximize mower blade tip speed matched with a slow ground speed so that clippings will be finely cut. Ground speed while mulching should be half the speed used when broadcasting (side-discharging) under similar conditions. Since mulching requires more horse power than broadcasting, using a proper ground speed is vitally important for good mulching operation.

Correct Cutting Height

Cutting off too much at one time shocks the plant's growth system and weakens the grass. A good rule of thumb is the 1/3 rule: to cut no more than one third of the grass height, and never more than 1 inch (2,5cm) at a time.

The best mulching action typically results from cutting only the top 1/2" to 3/4" (1,25 - 2cm) of the grass blade. This provides short clippings which decompose properly (much more quickly than longer clippings). The ideal cutting height will vary with climate, time of year, and quality of your lawn. We recommend that you experiment with both the cutting height and ground speed to achieve the best cut. Start with a high cutting height and use progressively lower heights until you find a cutting height that is matched to your mowing conditions and preferences. For best results, overlapping is recommended.

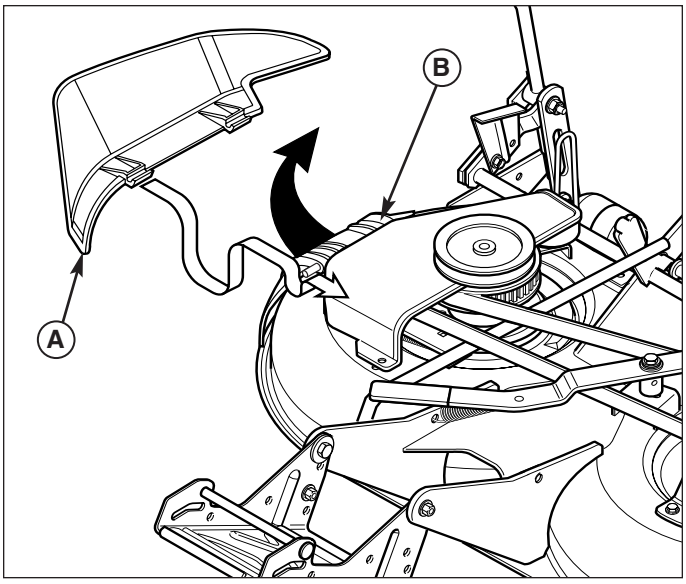

Figure 15. Installing the Side Discharge Deflector
A. Side Discharge Deflector
B. Mulching Cover

Using the Side Discharge Deflector

When to use the side discharge deflector: If you've been on vacation or missed a mowing and the grass has gotten very long, do not try to mulch at your normal cutting height. To handle these situations your mulching mower is equipped with a side discharge deflector. Installing the side discharge deflector allows you to broadcast clippings. Broadcasting, or side-discharging, disperses fine clippings evenly over the entire lawn. Always operate the engine at full throttle. Use an appropriate ground speed for the thickness and height of grass you are cutting. If you hear the engine slowing down, you are mowing too fast, use a slower ground speed. Mow when the grass is 3"-5" (7,6-12,7cm) long. Do not cut off more than 1" (2,5cm) in a single pass.

⚠ WARNING

Never operate the mower deck without either the discharge chute or mulching deflector in place.

To install the side discharge chute:

1. Lift up the mulching cover (B, Figure 15).
2. Install the side discharge deflector (A) under the mulching cover. The side discharge deflector hooks onto the mulching cover hinge rod, and is held in place by the mulching cover.
3. Release the mulching cover.

Downloaded from www.Manualslib.com manuals search engine

https://truckmanualshub.com/

Regular Maintenance

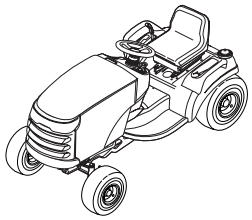

MAINTENANCE SCHEDULE & PROCEDURES

The following schedule should be followed for normal care of your tractor and mower.

SAFETY ITEMS	Before Each Use	Every 5 Hours	Every 25 Hours	Every 100 Hours	Every 250 Hours	Spring & Fall
Check Safety Interlock System						•
Check Tractor Brakes						•
Check Mower Blade Stopping Time				•		•
TRACTOR MAINTENANCE ITEMS	**Before Each Use**	**Every 5 Hours**	**Every 25 Hours**	**Every 100 Hours**	**Every 250 Hours**	**Spring & Fall**
Check Tractor/Mower for loose hardware		•				
Check / Clean Radiator (If Equipped) **	•	•				
Check / Clean Oil Cooler (If Equipped) **			•			
Check / Clean Cooling Fins (If Equipped)				•		
Check / Adjust PTO Clutch					•	
Lubricate Tractor & Mower **			•			
Lubricate Rear Axle Shafts						Yearly
Clean Battery & Cables				•		
Check Tire Pressure			•			
Clean Deck & Check/Replace Mower Blades**				•		
Perform Transmission Maint. (Varies by Model)					***	
Change Hydraulic System Filter (If Equipped)					**	
Check Mower Blade Timing (40” Mower)						Yearly
Check Arbor Drive Belt Tension (40” Mower)						Yearly
ENGINE MAINTENANCE ITEMS	**Before Each Use**	**Every 5 Hours**	**Every 25 Hours**	**Every 100 Hours**	**Every 250 Hours**	**Spring & Fall**
Check Engine Oil Level	•					
Check / Change Engine Air Filter *						
Change Engine Oil & Filter *						
Inspect Spark Plug(s) *						
Check / Replace Fuel Filter *						

* Refer to engine owner’s manual. Change original engine oil after initial break-in period.
** More often in hot (over 85° F: 30° C) weather or dusty operating conditions.
*** Service after the first 50 hours of operation, then every 250 hours of operation.

Downloaded from www.Manualslib.com manuals search engine

https://truckmanualshub.com/

Safety Interlock System Check

Service Interval: Every Fall & Spring

Check the function of the safety interlock system using the test procedure found on page 12 of this manual. If the tractor fails any of the tests, see your dealer.

Blade Brake Check

Service Interval: Every 100 Hours or Fall & Spring

Mower blades and mower drive belt should come to a complete stop within five seconds after electric PTO switch is turned off.

1. With tractor in neutral, PTO disengaged and operator in seat, start the engine.
2. Look over the left-hand footrest at the mower drive belt. Engage the PTO and wait several seconds. Disengage the PTO and check the amount of time it takes for the mower drive belt to stop.
3. If mower drive belt does not stop within five seconds, re-adjust the clutch or see your dealer.

Check Tire Pressures

Service Interval: Every 25 Hours

Tire Pressure should be checked periodically, and maintained at the levels shown in the chart. Note that these pressures may differ slightly from the “Max Inflation” stamped on the side-wall of the tires. The pressures shown provide proper traction, improve cut quality, and extend tire life.

PTO Clutch Adjustment Check

Service Interval: Every 250 Hrs

Check the PTO clutch adjustment after every 250 hours of operation–or if the clutch starts slipping or will not engage. Check and adjust the clutch using the procedure outlined in the Adjustments section of this manual.

Engine Maintenance

Refer to the engine owner’s manual for all engine maintenance procedures and recommendations.

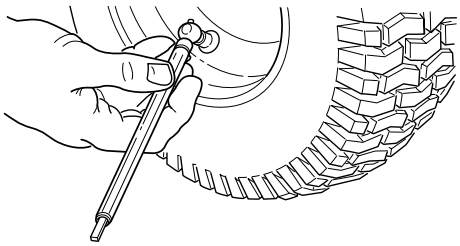

Size	PSI	bar
22 x 10.0-8	6-8	,41-,55
15 x 6.00-6	12-15	,68-,82

Figure 16. Tire Pressure

Downloaded from www.Manualslib.com manuals search engine

https://truckmanualshub.com/

Battery Maintenance

⚠ WARNING

When removing or installing battery cables, disconnect the negative cable FIRST and reconnect it LAST. If not done in this order, the positive terminal can be shorted to the frame by a tool.

Cleaning the Battery and Cables

Service Interval: Every 100 Hours

1. Disconnect the cables from the battery, negative cable first (A, Figure 17).
2. Remove the battery hold-down (C) and battery.
3. Clean the battery compartment with a solution of baking soda and water.
4. Clean the battery terminals and cable ends with a wire brush and battery terminal cleaner until shiny.
5. Reinstall the battery in the battery compartment, and secure with the battery hold-down (C).
6. Reattach the battery cables, positive cable first (B).
7. Coat the cable ends and battery terminals with petroleum jelly or non-conducting grease.

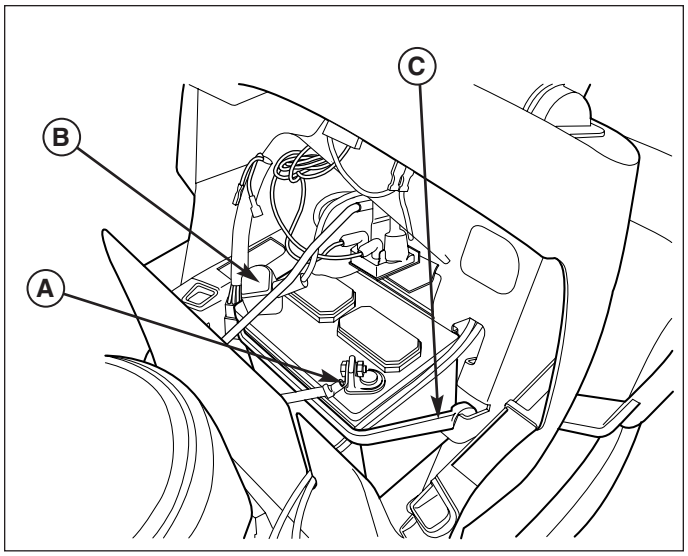

Figure 17. Battery
A. Negative Cable
B. Positive Cable & Cover
C. Rubber Hold-Down Strap

Lubricate Rear Axle Shafts

Service Interval: Yearly

We recommend removing the rear wheel hubs and lubricating the axle shafts yearly. This prevents the wheel hubs from seizing onto the axle shaft and makes future service easier.

1. Turn off the ignition, turn off the PTO, engage the parking brake, and block the front tires.
2. Using a jack or chain hoist positioned at the center of the rear frame, carefully jack the unit up until the rear tires are approximately 1" - 2" (2.5-5cm) off the ground.

NOTE: For overall unit stability during service, do not jack rear end higher than required for wheel removal.

3. Support the rear of the unit on jackstands positioned under the rear frame.

NOTE: Your axle assembly may differ slightly from the assembly pictured: the quantity of washers is adjusted on a tractor by tractor basis during assembly to allow a small amount of axle end-play.

4. Remove the hardware retaining the wheel assembly to the axle and lubricate the axle shaft using anti-seize compound or lithium grease.
5. Reinstall the components in reverse order of disassembly and lower the unit. Be sure the key (A, Figure 18) is in place in the axle keyway.

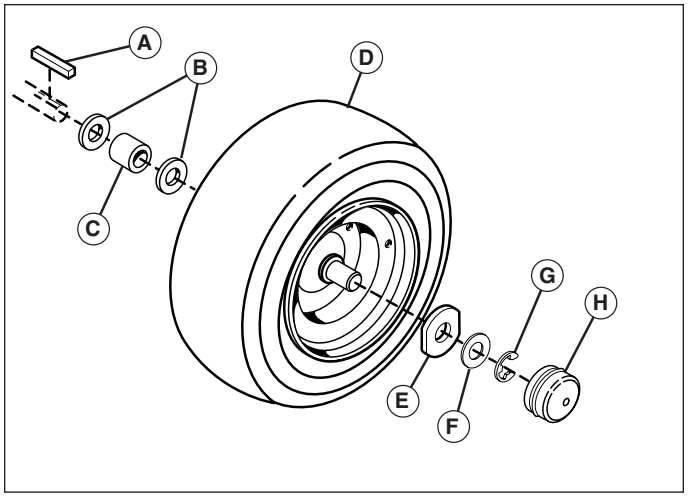

Figure 18. Rear Axle Hardware
A. Key
B. Stationary Washer / Washer
C. Spacer
D. Wheel & Hub
E. Axle Cap Retainer
F. Small Washer
G. Retaining Ring
H. Axle Cap
I. Large Washer

Downloaded from www.Manualslib.com manuals search engine

https://truckmanualshub.com/

Lubrication

Service Interval: Every 25 Hours

Lubricate the unit at the locations shown in Figures 19-23 as well as the lubrication points listed. Generally, all moving metal parts should be oiled where contact is made with other parts. Keep oil and grease off belts and pulleys. Wipe surfaces clean before and after lubrication.

Grease:

- steering linkage
- foot pedal
- mower linkage
- transmission idler assembly pivot
- rear axle shafts (remove wheel hubs)
- front axle where it contacts the frame

Use grease fittings when present. Automotive lithium grease is recommended.

Oil:

- control linkage
- seat adjustment assembly
- brake linkage
- mower deck height adjustment linkage
- manual lift lever

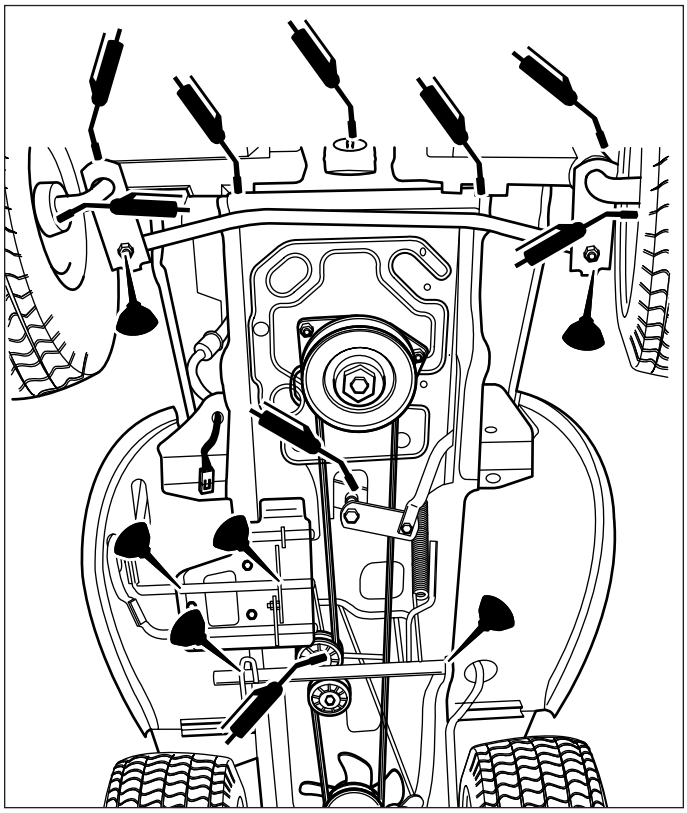

Figure 19. Lubricating the Tractor

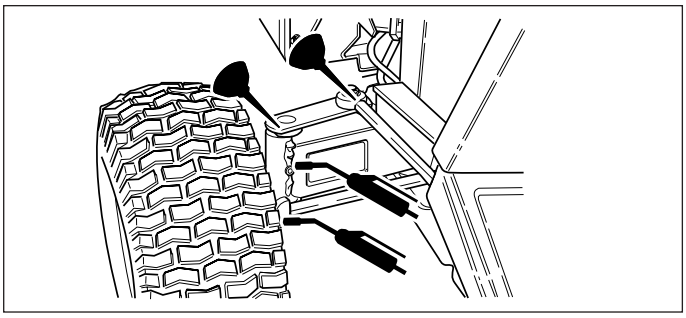

Figure 20. Lubricate Steering Linkage

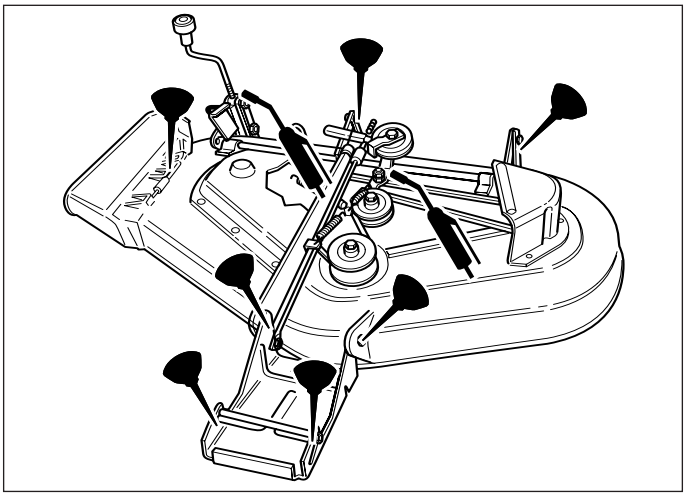

Figure 21. Mower Lubrication Points

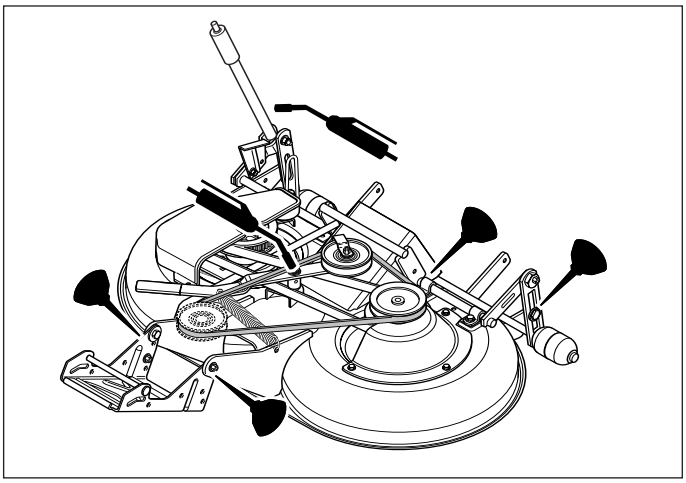

Figure 22. Mower Lubrication Points

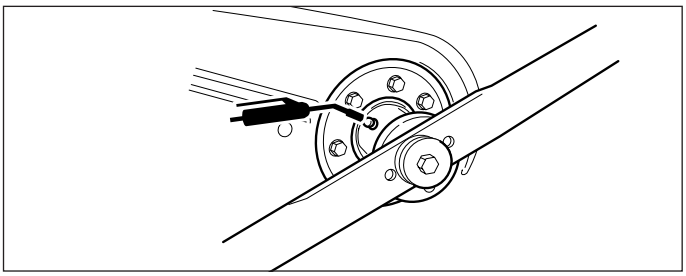

Figure 23. Arbor Lubrication Point

Downloaded from www.Manualslib.com manuals search engine

https://truckmanualshub.com/

⚠ WARNING

For your personal safety, do not handle the sharp mower blades with bare hands. Careless or improper handling of blades may result in serious injury.

⚠ WARNING

For your personal safety, blade mounting capscrews must each be installed with a hex/spline washer and spring washer, then securely tightened. Torque blade mounting capscrew to 45 - 55 ft. lbs. (61 - 75 N.m.)

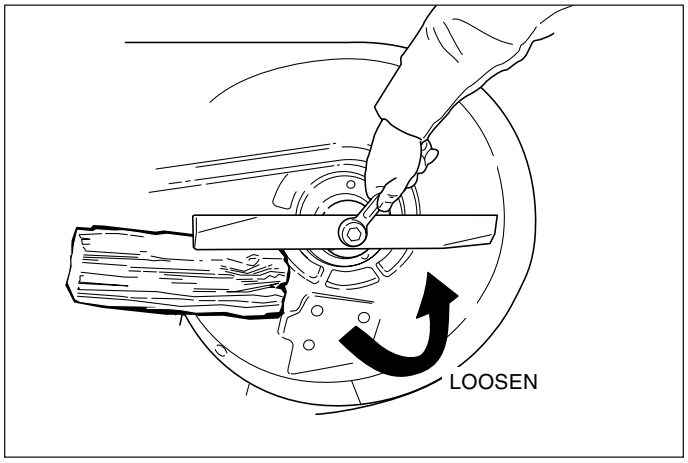

Figure 24. Blade Removal

Servicing the Mower Blades

Service Interval: Every 100 Hours or As Required

NOTE: Mower blades must be timed perpendicular to each other.

1. Remove mower deck (see “Mower Deck Removal”).
2. See Figure 24. To remove blade for sharpening, use a block of wood to prevent blade rotation while loosening the capscrew.
3. **38”, 44”, & 50” Mowers:** Remove the capscrew (D, Figure 25), spring washer (C), hex washer (B), and blade.

   40” Mowers: Remove the capscrew (A, Figure 27), spring washer (F), spline washer (G), alignment pin (E) and blade (D). Do not remove the blade adapter (C).
4. Use a file to sharpen blade to a fine edge. If blade is damaged, it must be replaced.
5. Balance the blade as shown in Figure 25. Center the blade’s hole on a nail lubricated with a drop of oil. A balanced blade will remain level.
6. Reinstall the blade (Figures 26) with the tabs pointing up toward the mower deck as shown. Reinstall the alignment pin (E).
7. **38”, 44”, & 50” Mowers:** Reinstall the hex washer (B, Figure 26), spring washer (C) and capscrew (D). Use a wooden block (A) to prevent blade rotation while tightening the capscrew (D) to 61-75 N.m (45-55 ft. lbs.).

   40” Mowers: Be sure the blades are positioned perpendicular to each other as shown in Figure 37. If not, perform the Mower Blade Timing procedure found in this section. Reinstall the spline washer (G, Figure 27), spring washer (F) and capscrew (A). Use a wooden block (B) to prevent blade rotation while tightening the capscrew (A) to 61-75 N.m (45-55 ft. lbs.).

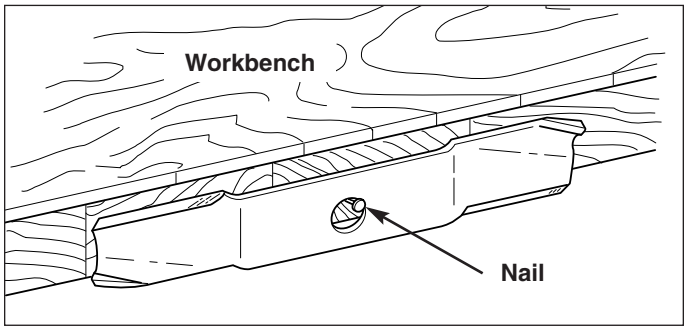

Figure 25. Balancing The Blade

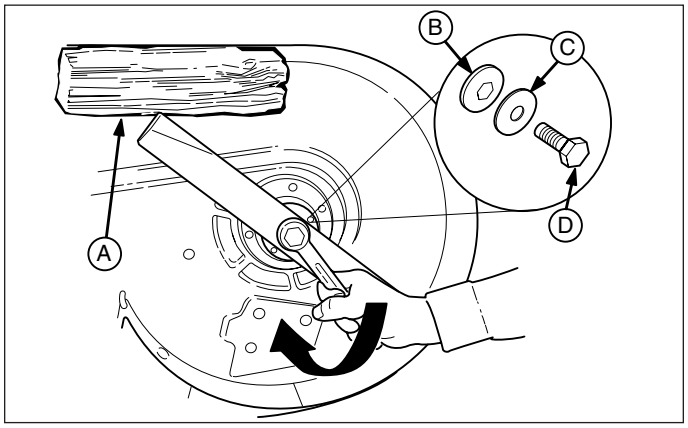

Figure 26. Blade Installation - 38”, 44”, 50” Mowers
A. 4x4 Wood Block
B. Hex Washer
C. Spring Washer
D. Blade Bolt

Downloaded from www.Manualslib.com manuals search engine

https://truckmanualshub.com/

Check Mower Blade Timing - 40” Mowers

Service Interval: Yearly

1. Turn the PTO OFF, engage the parking brake, turn the engine off, and remove the key. Remove the mower deck (see “Mower deck removal”).
2. Turn the mower deck over and check the position of the blades. The blades must be positioned perpendicular to each other as shown in Figure 28. If not, proceed to step 3.
3. Use a block of wood (B, Figure 24) to prevent blade rotation while loosening the capscrew.
4. Remove the capscrew (A, Figure 27), spring washer (F), and spline washer (G).
5. Remove the alignment pin (E, Figure 27). Rotate the blade (D) manually until the blades are perpendicular to each other as shown in Figure 28. It may be necessary to remove and rotate the blade adapter (C) to align the blade hole and adapter hole.
6. Reinstall the alignment pin (E), spline washer (G), spring washer (F) and capscrew (A). Use a wooden block (B, Figure 27) to prevent blade rotation while tightening the capscrew (A) to 61-75 N.m (45-55 ft. lbs.).

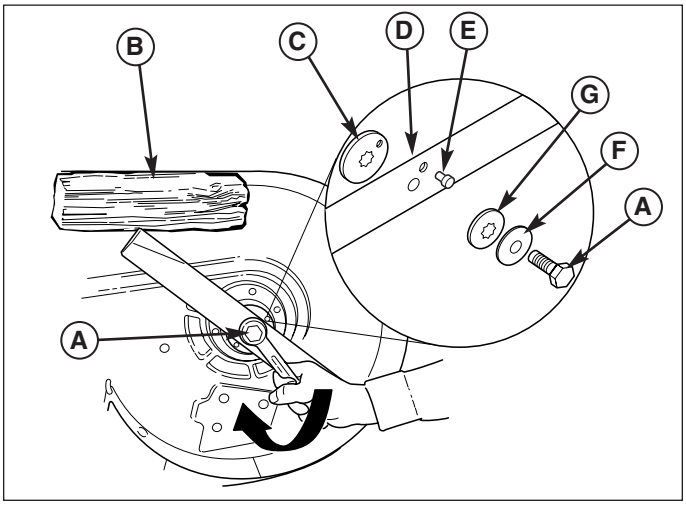

Figure 27. Blade Installation - 40” Mowers
A. Blade Mounting Capscrew
B. 4x4 Wood Block
C. Blade Adapter
D. Blade
E. Alignment Pin
F. Spring Washer
G. Spline Washer

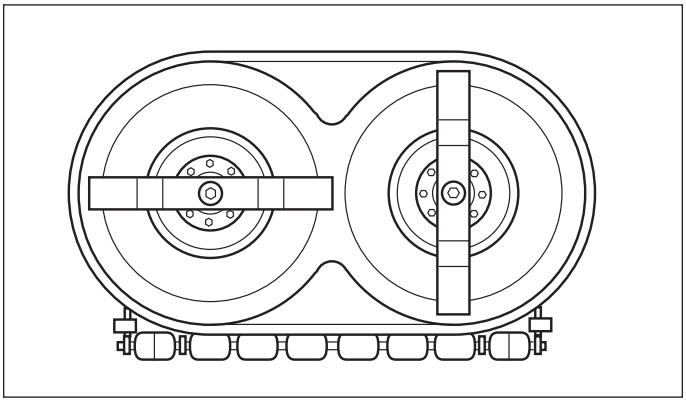

Figure 28. Check Blade Timing

Downloaded from www.Manualslib.com manuals search engine

https://truckmanualshub.com/

Transmission Identification

Several service procedures within this book are identified by, and vary by, transmission type. To determine what transmission is in your tractor, check the identification tag attached to the axle of the transmission (Figure 29), or check your tractor's parts book.

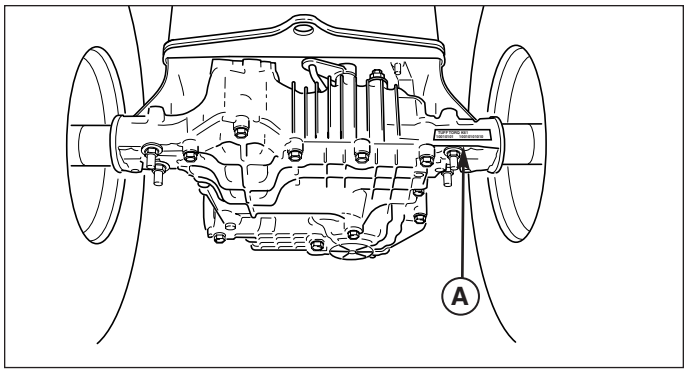

Figure 29. Transmission ID Tag Location
A. ID Tag

Transmission Maintenance

Do not allow dirt, water, or other debris to enter the expansion chamber or transmission. Even a small amount of dirt can damage the transmission

K57 Maintenance

The K57 is a sealed unit and does not require regular maintenance. If the transmission lacks drive or is excessive noisy, it may need to be purged. See your Dealer for this procedure.

Downloaded from www.Manualslib.com manuals search engine

https://truckmanualshub.com/

Maintenance Records

Downloaded from www.Manualslib.com manuals search engine

https://truckmanualshub.com/

Troubleshooting, Adjustment, & Service

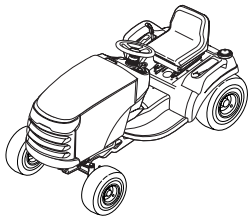

Troubleshooting

While normal care and regular maintenance will extend the life of your equipment, prolonged or constant use may eventually require that service be performed to allow it to continue operating properly.

The troubleshooting guide below lists the most common problems, their causes, and remedies.

See the information on the following pages for instructions on how to perform most of these minor adjustments and service repairs yourself. If you prefer, all of these procedures can be performed for you by your local authorized dealer.

⚠ WARNING

To avoid serious injury, perform maintenance on the tractor or mower only when the engine is stopped and the parking brake engaged.

Always remove the ignition key, disconnect the spark plug wire and fasten it away from the plug before beginning the maintenance, to prevent accidental starting of the engine.

TROUBLESHOOTING THE TRACTOR

PROBLEM	CAUSE	REMEDY
Engine will not turnover or start.	1. Brake pedal not depressed.	Fully depress brake pedal.
	2. PTO (electric clutch) switch in ON position.	Place in OFF position.
	3. Cruise control engaged.	Move lever to Neutral position.
	4. Out of fuel.	If engine is hot, allow it to cool, then refill the fuel tank.
	5. Engine flooded.	Disengage choke.
	6. Circuit breaker tripped.	Wait one minute for automatic reset. Replace if defective.
	7. Battery terminals require cleaning.	See Battery Maintenance Section.
	8. Battery discharged or dead.	Recharge or replace.
	9. Wiring loose or broken.	Visually check wiring & replace broken or frayed wires. Tighten loose connections.
	10. Solenoid or starter motor faulty.	See your dealer.
	11. Safety interlock switch faulty	See your dealer.
	12. Spark plug(s) faulty, fouled or incorrectly gapped.	Clean and gap or replace. See engine manual.
	13. Water in fuel.	Drain fuel & refill with fresh fuel. Replace fuel filter.
	14. Gas is old or stale.	Drain fuel & refill with fresh fuel. Replace fuel filter.
Engine starts hard or runs poorly.	1. Fuel mixture too rich.	Clean air filter. Check choke adjustment
	2. Spark plug(s) faulty, fouled, or incorrectly gapped.	Clean and gap or replace. See engine manual.
Engine knocks.	1. Low oil level.	Check/add oil as required.
	2. Using wrong grade oil.	See engine manual.
Excessive oil consumption.	1. Engine running too hot.	Clean engine fins, blower screen and air cleaner. Clean radiator screen.
	2. Using wrong weight oil.	See engine manual.
	3. Too much oil in crankcase.	Drain excess oil.
Engine exhaust is black.	1. Dirty air filter.	Replace air filter. See engine manual.
	2. Choke closed.	Open choke.
Engine runs, but tractor will not drive.	1. Ground speed control pedals not depressed.	Depress pedals.
	2. Transmission release lever in “push” position.	Move into drive position.
	3. Drive belt is broken.	See Drive Belt Replacement.
	4. Drive belt slips.	See cause and remedy below.
	5. Parking brake is engaged.	Disengage parking brake.

Downloaded from www.Manualslib.com manuals search engine

https://truckmanualshub.com/

Tractor Troubleshooting Cont.

Tractor drive belt slips.	1.	Clutch/brake is out of adjustment.	See Adjustments Section.
	2.	Pulleys or belt greasy or oily.	Clean as required.
	3.	Belt stretched or worn.	Replace with new belt.
	4.	Idler pulley pivot bracket "frozen" in declutched position.	Remove idler pulley bracket, clean and lubricate.
Brake will not hold.	1.	Brake is incorrectly adjusted.	See Brake Adjustment.
	2.	Internal brake worn.	See your dealer.
Tractor steers hard or handles poorly.	1.	Steering linkage is loose.	Check and tighten any loose connections. See Steering Gear Adjustment.
	2.	Improper tire inflation.	Check and correct.
	3.	Front wheel spindle bearings dry.	Grease spindles. See Lubricating the Tractor.

TROUBLESHOOTING THE MOWER

PROBLEM	CAUSE		REMEDY
Mower will not raise.	1.	Lift linkage not properly attached or damaged.	Attach or repair.
Mower cut is uneven.	1.	Mower not leveled properly.	See Mower Adjustment.
	2.	Tractor tires not inflated equally or properly.	See Maintenance Section.
Mower cut is rough looking.	1.	Engine speed too slow.	Set to full throttle.
	2.	Ground speed too fast.	Slow down.
	3.	Blades are dull.	Sharpen or replace blades. See Mower Blade Service.
	4.	Mower drive belt slipping because it is oily or worn.	Clean or replace belt as necessary.
	5.	Check PTO (Electric Clutch) Adjustment.	See Adjustments Section.
	6.	Blades not properly fastened to arbors.	See Servicing the Mower Blades.
Engine stalls easily with mower engaged.	1.	Engine speed too slow.	Set to full throttle.
	2.	Ground speed too fast.	Slow down.
	3.	Carburetor improperly adjusted.	See Engine Manual.
	4.	Cutting height set too low.	Cut tall grass at maximum cutting height during first pass.
	5.	Discharge chute jamming with cut grass.	Cut grass with discharge pointing toward previously cut area.
	6.	Engine not up to operating temperature.	Run engine for several minutes to warm-up.
	7.	Starting mower in tall grass.	Start the mower in a cleared area.
Excessive mower vibration.	1.	Blade mounting screws are loose.	Tighten to 45-55 ft.lbs. (61-75 N.m.).
	2.	Mower blades, arbors, or pulleys are bent.	Check and replace as necessary.
	3.	Mower blades are out of balance.	Remove, sharpen, and balance blades. See Servicing the Mower Blades.
	4.	Belt installed incorrectly.	Reinstall Correctly.
Excessive belt wear or breakage.	1.	Bent or rough pulleys.	Repair or replace.
	2.	Using incorrect belt.	Replace with correct belt.
Mower drive belt slips or fails to drive.	1.	Idler pulley spring broken or not properly attached.	Repair or replace as needed.
	2.	Belt stops out of adjustment.	Check belt stops.
	3.	Mower drive belt broken.	Replace drive belt.
	4.	PTO clutch out of adjustment.	Adjust PTO clutch.
Mower blades collide (40" Mower).	1.	Blade shear pin broken.	Replace shear pin.

Downloaded from www.Manualslib.com manuals search engine

https://truckmanualshub.com/

Seat Adjustment

Pitch Adjustment

The pitch of the seat can be adjusted to one of three positions. To adjust, remove the carriage bolts, spacers, washers, and nuts (B, Figure 30) from the hinge and reinstall them in the desired holes.

Seat Slide Adjustment

The seat can also be adjusted forward and back. Move the lever (A, Figure 30), position the seat as desired, and release the lever to lock the seat into position.

Seat Spring Adjustment

The seat springs (C, Figure 30) can be adjusted to provide a softer or firmer ride. Tilt the seat forward and slide the spring assembly (C) forward for a softer ride, and back for a firmer ride.

⚠ WARNING

Keep open flames and sparks away from the battery; the gasses coming from it are highly explosive. Ventilate the battery well during charging.

Battery Charging

A dead battery or one too weak to start the engine may be the result of a defect in the charging system or other electrical component. If there is any doubt about the cause of the problem, see your dealer. If you need to replace the battery, follow the steps under Cleaning the Battery & Cables in the Regular Maintenance Section.

To charge the battery, follow the instructions provided by the battery charger manufacturer as well as all warnings included in the safety rules sections of this book. Charge the battery until fully charged (until the specific gravity of the electrolyte is 1.250 or higher and the electrolyte temperature is at least 60° F). Do not charge at a rate higher than 10 amps.

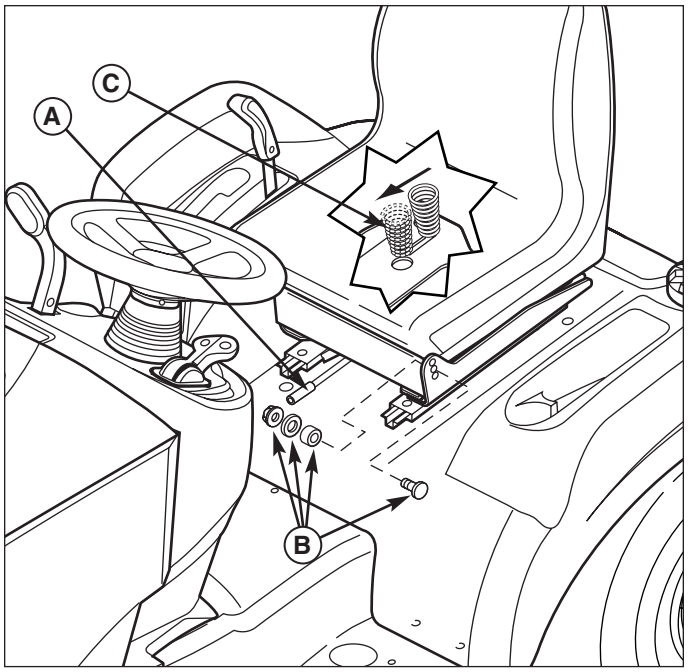

Figure 30. Seat Adjustment
A. Seat Adjustment Lever
B. Carriage Bolt, Spacer, Washer, & Nut
C. Seat Spring

Downloaded from www.Manualslib.com manuals search engine

https://truckmanualshub.com/

Steering Wheel Adjustment

NOTE: The steering wheel on Snapper models is not adjustable.

1. Use a suitable punch to remove the roll pin at the base of the steering wheel (B, Figure 31).
2. Pull down on the rubber boot to expose the two holes in the steering shaft (A).
3. Align the hole in the steering wheel with the appropriate steering shaft hole and install the roll pin.

NOTE: Steering wheel is factory installed with the roll pin in the bottom hole.

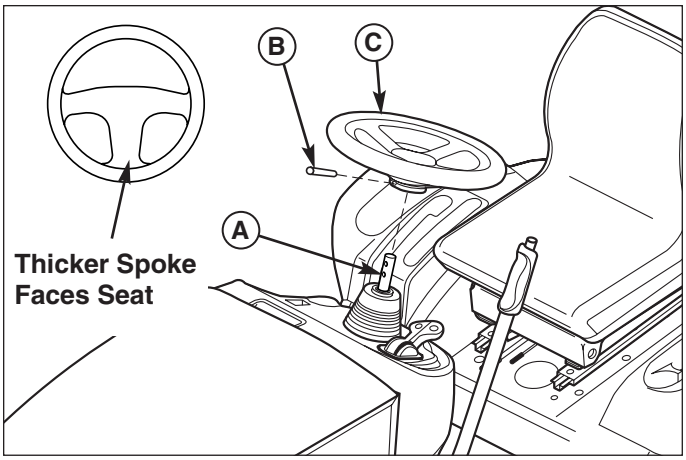

Figure 31. Steering Wheel Components
A. Steering Shaft
B. Roll Pin
C. Steering Wheel

Steering Gear Adjustment

If there is excessive slack in the steering system, the steering gear backlash can be removed.

1. See Figure 32. Locate the steering gear assembly on the underside of the tractor. Loosen the two nuts and adjust the bracket so the gear teeth are closely meshed.
2. Tighten nuts (A, Figure 32) to 36-44 ft. lbs. (49-59 Nm) after adjustment.

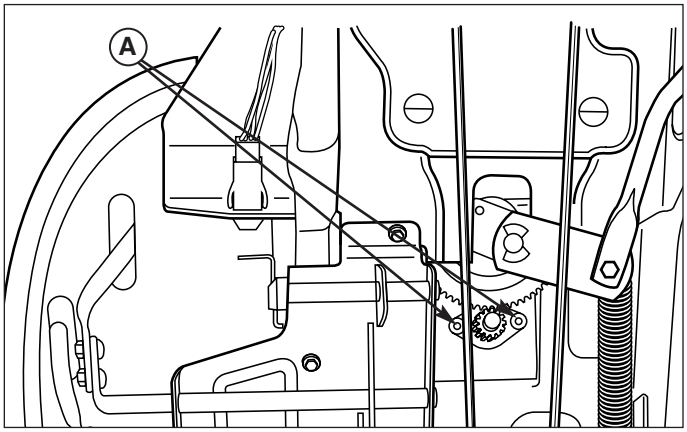

Figure 32. Steering Gear Adjustment
A. Nuts

Brake Adjustment

1. Disengage the PTO, stop the engine, block the wheels, remove the ignition key, and engage the parking brake.
2. Remove the mower deck (see Mower Deck Removal).
3. Locate the brake spring (A, Figure 33) and adjustment nut (B).
4. With the parking brake engaged, measure the compressed spring length. The spring should be 2-1/2” (6,4 cm) when compressed.

   If the spring is not within this range, turn the adjustment nut (B, Figure 33) to compress or release the spring.

   If this adjustment does not correct a braking problem, see your dealer.

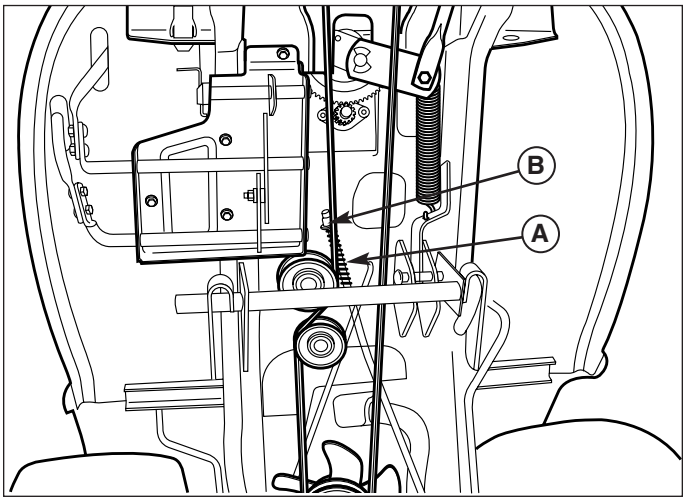

Figure 33. Brake Spring Adjustment
A. Brake Spring
B. Adjustment Nut

Downloaded from www.Manualslib.com manuals search engine

https://truckmanualshub.com/

PTO clutch adjustment

⚠ WARNING

To avoid serious injury, perform adjustments only with engine stopped, key removed and tractor on level ground.

Check the PTO clutch adjustment after every 250 hours of operation. Also perform the following procedure if the clutch is slipping or will not engage, or if a new clutch has been installed.

1. Remove key from ignition switch and disconnect spark plug wires to prevent the possibility of accidental starting while the PTO is being adjusted.
2. See Figure 34. Note the position of the 3 adjustment windows (A) in the side of the brake plate and the nylock adjustment nuts (B).
3. Insert a .012”-.015” (2,5-4mm) feeler gauge (C) through each window, positioning the gauge between the rotor face and the armature face as shown in Figure 35.
4. Alternately tighten the adjustment nuts (B, Figure 34) until the rotor face and armature face just contacts the gauge.
5. Check the windows for an equal amount of tension when the gauge is inserted and removed, and make any necessary adjustments by tightening or loosening the adjustment nuts.

NOTE: The actual air gap between the rotor and armature may vary even after performing the adjustment procedure. This is due to dimensional variations on component parts, and is an acceptable condition.

6. Check the mower blade stopping time. The mower blades and mower drive belt should come to a complete stop within five seconds after the electric PTO switch is turned off.
7. Perform the BLADE BRAKE CHECK found in the MAINTENANCE Section. Mower blades and mower drive belt should come to a complete stop within five seconds after electric PTO switch is turned off.

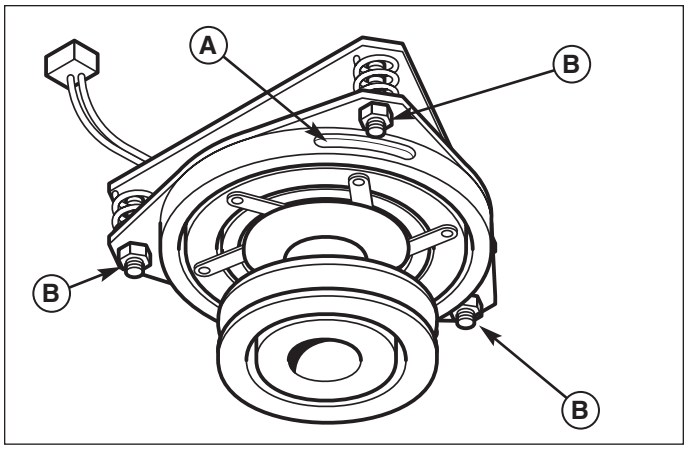

Figure 34. PTO Clutch Adjustment
A. Adjustment Window (Qty. 3, one shown)
B. Adjustment Nut

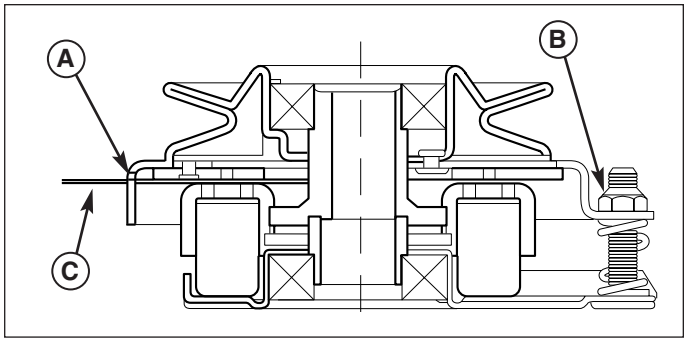

Figure 35. Adjust PTO Clutch
A. Window
B. Adjustment Nut
C. Feeler Gauge

Downloaded from www.Manualslib.com manuals search engine

https://truckmanualshub.com/

⚠ WARNING

Before checking mower, shut off PTO and engine, remove the key, and allow all moving parts to stop.

⚠ CAUTION

DO NOT remove the mower deck baffles. The baffles help prevent grass clippings from becoming airborne and plugging up the engine cooling fins.

Mower Adjustments

Gauge Wheels (Select Models)

The mower gauge wheels can be placed in several positions depending on the height of cut. When using higher cutting heights, set the wheels in the lower position. When using lower cutting heights, set the wheels in the upper position. To adjust:

1. Remove the locknut (B, Figure 36), gauge wheel (C), washers (D), and shoulder bolt (E). Change position of gauge wheel to desired height.
2. Insert shoulder bolt (E) through washers (D) gauge wheel (C), and gauge wheel bracket (A). Secure with locknut (B). Repeat steps 1 & 2 for all gauge wheels.

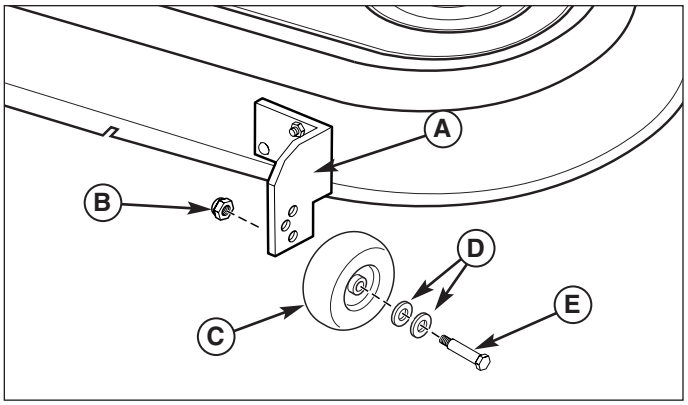

Figure 36. Fixed Bracket Gauge Wheel Adjustment
A. Gauge Wheel Bracket
B. Locknut
C. Gauge Wheel
D. Washers
E. Shoulder Bolt

Transport Height & Ground Following Adjustment (Select Models)

The transport height and ground following ability can be adjusted. Raising the trunnion (C, Figure 37) on the j-hook (A) will adjust the deck into the greatest ground following ability and the lowest transport position, when the deck is lowered. Lowering the trunnion on the j-hook will give the highest transport position and decrease the deck's ground following ability, when the deck is lowered.

1. Loosen jam nut (B, Figure 37).
2. Remove the hair pin (F) and washer (E) from trunnion (C).
3. Remove the trunnion (C), j-hook (A) and jam nut (B) from tractor lift arm (D).
4. Turn trunnion (C) up or down to adjust height.
5. Place trunnion (C), j-hook (A) and jam nut (B) in tractor lift arm (D). Install washer (E) and hair pin (F). Tighten jam nut (B).

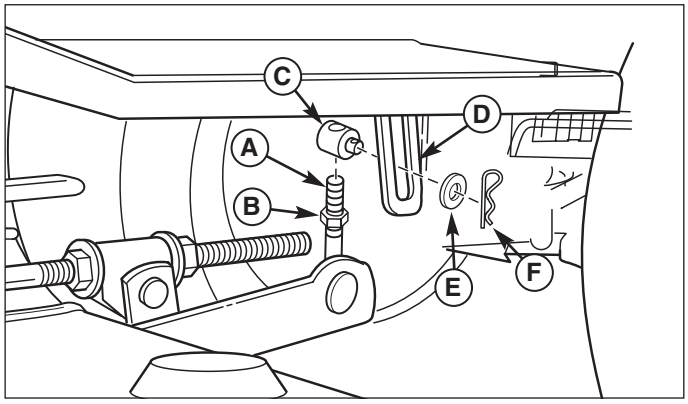

Figure 37. Cutting Height Adjustment
A. J-Hook
B. Jam Nut
C. Trunnion
D. Tractor Lift Arm
E. Washer
F. Hair Pin

Downloaded from www.Manualslib.com manuals search engine

https://truckmanualshub.com/

Leveling The Mower

If the cut is uneven, the mower may need leveling. Unequal or improper tire pressure may also cause an uneven cut. Make sure tire pressure is correct as specified in Checking Tire Pressure.

SIDE-TO-SIDE LEVELING

1. With the mower installed, place the tractor on a smooth, level surface such as a concrete floor. Turn the front wheels straight forward.
2. Check for bent blades and replace if necessary.
3. Place the mower in mid-cut position. Arrange the outside mower blades so that they are pointing from side-to-side.
4. Measure the distance between the outside tips of each blade and the ground. If there is more than 1/8" (3mm) difference between the measurements on each side, proceed to step 5. If the difference is 1/8" (3mm) or less, proceed to step 6.

ECCENTRIC NUT MODELS

5. See Figure 38. Loosen the outside nut (A). Turn the eccentric nut (B) to raise or lower left-hand side of mower. When mower is level, hold the eccentric nut while tightening the outside nut.

J-HOOK MODELS

5. See Figure 39. Hold J-Hook (A) turn locknut (B). Turn the locknut (B) to raise or lower left-hand side of mower.

NOTE: 44" & 50" Mowers. When using a turbo collection system, raise the discharge side of the mower approximately 1/4" (6mm) to compensate for turbo assembly weight. Check the level of the cut grass and adjust the 1/4" (6mm) measurement as necessary for a smooth, even cut.

FRONT-TO-BACK LEVELING

6. Arrange the blades so they face front-to-back.
7. Measure the distance from the ground to the front tip of the center blade, and from the ground to rear tips of left-hand and right-hand blades.

   Front tip of the center blade should be 1/4" (6mm) higher than rear tips of left-hand and right-hand blades. If not, proceed with steps 8 - 9.
8. To raise front of mower deck, loosen front nut (B) and turn rear nut (A, Figure 40) against bracket. To lower front of mower deck, loosen rear nut (A) and the bracket will move backwards to lengthen rod.
9. Re-check the blade measurement then tighten the front nut (B) against the bracket to secure.

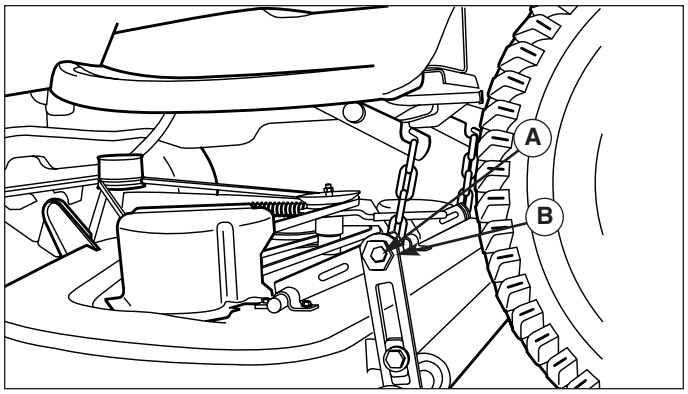

Figure 38. Leveling The Mower Side-to-Side Eccentric Nut Models
A. Outside Nut
B. Eccentric Nut

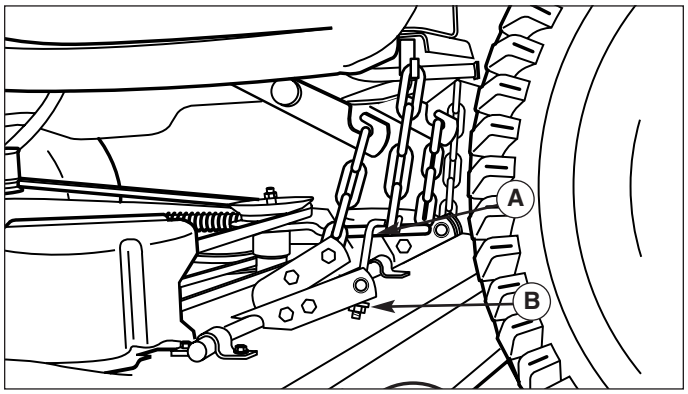

Figure 39. Leveling The Mower Side-to-Side, J-Hook Models
A. J-Hook
B. Locknut

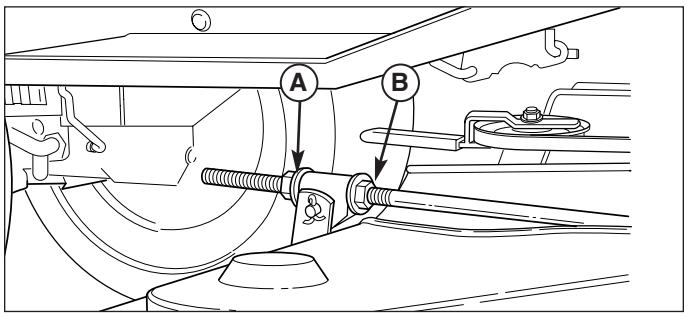

Figure 40. Front to Back Leveling
A. Rear Nut **B. Front Nut**

Downloaded from www.Manualslib.com manuals search engine

https://truckmanualshub.com/

Mower Belt Replacement

To avoid damaging belts, DO NOT PRY BELTS OVER PULLEYS.

44” & 50” PTO Belt Replacement

1. Park the tractor on a smooth, level surface such as a concrete floor. Disengage the PTO, turn off the engine and lock the parking brake. Remove the key. Remove the mower or place in the lowest cutting position.
2. Move the idler arm (A, Figure 41) to relieve belt tension. Drop the belt from the PTO (electric clutch) pulley.

IMPORTANT: Note the position of all belt guides relative to the belt and pulleys before loosening.

3. Loosen the nut and lockwasher securing the idler pulley belt guide (C, Figure 41).
4. See Figure 42. Remove three capscrews securing left-hand arbor cover (D).
5. Remove the old belt and replace with a new one. Make sure the belt is seated in the pulley grooves.
6. See Figure 41. Position the idler pulley belt stop (C) in its original position so that there is a 1/8" (3mm) gap between the pulley and belt stop.
7. See Figure 42. Reinstall the left-hand arbor cover (D). Reinstall the mower deck if removed.
8. Run the mower under a no-load condition for about 5 minutes.

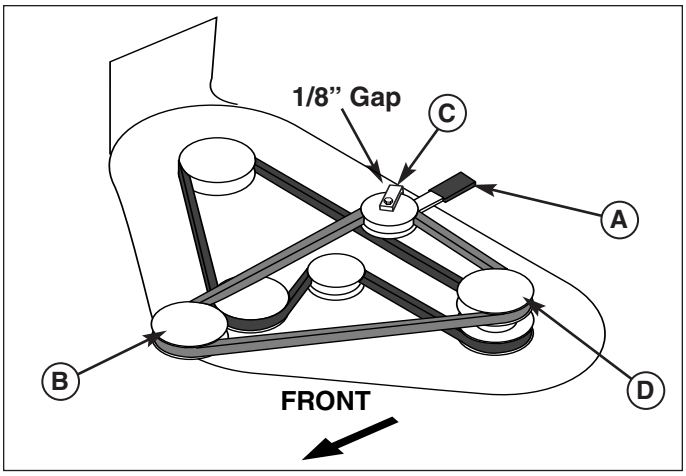

Figure 41. Mower Belt Routing
A. Idler Pulley Arm
B. PTO Clutch Pulley
C. Belt Guide (44” & 50”)
D. Arbor Drive Pulley

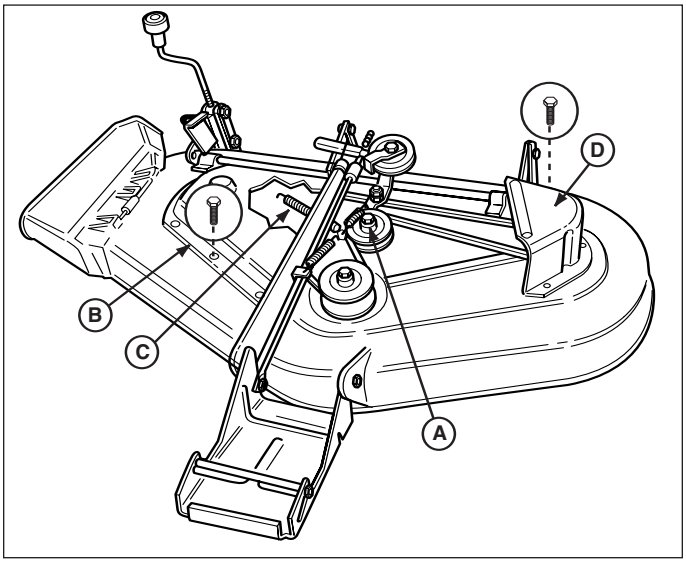

Figure 42. Mower Deck - 44" & 50” Mowers
A. Capscrew
B. Right-hand Arbor Cover
C. Spring
D. Left-hand Arbor Cover

Downloaded from www.Manualslib.com manuals search engine

https://truckmanualshub.com/

Arbor Drive Belt Replacement - 44” & 50” Mowers

NOTE: Be sure to use only genuine Simplicity replacement parts.

1. Park the tractor on a smooth, level surface such as a concrete floor. Disengage the PTO, turn off the engine and lock the parking brake. Remove the key.
2. Remove the mower from the tractor. See Mower Removal in the Operation section.
3. Remove the capscrews securing the right-hand arbor cover (B, Figure 43). Remove three capscrews securing left-hand arbor cover (D).
4. Using a pair of locking pliers or a spring puller, remove the idler pulley spring (C, Figures 43) from slot in deck.
5. Loosen capscrew (A, Figure 43) securing the idler pulley to the bracket. The belt can now be slipped between the pulley and idler bracket hub.
6. Install a new belt as shown in Figure 44. Make sure that V-side of belt runs in arbor pulley (A) grooves and flat side of belt runs against idler pulley (B).
7. Tighten the capscrew (A, Figure 43).
8. Reinstall spring (C, Figures 43) into its slot in mower deck.
9. Reinstall the left and right arbor covers (B and D, Figures 43).
10. Install the mower onto the tractor.

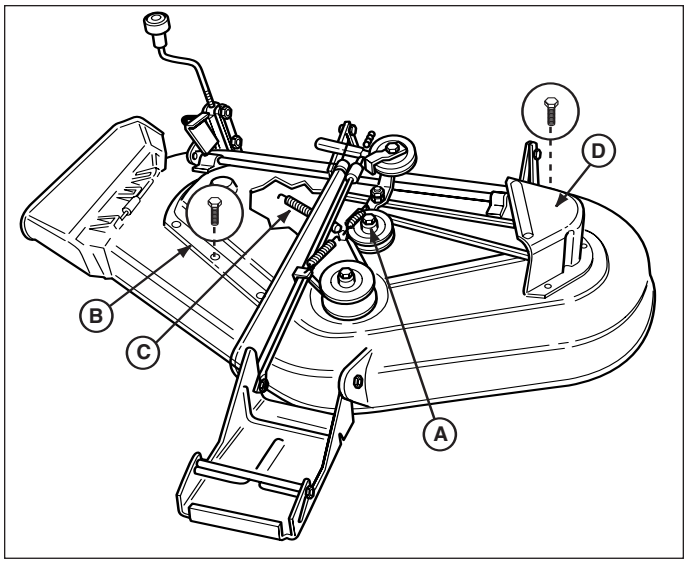

Figure 43. Mower Deck - 44" & 50” Mowers
A. Capscrew
B. Right-hand Arbor Cover
C. Spring
D. Left-hand Arbor Cover

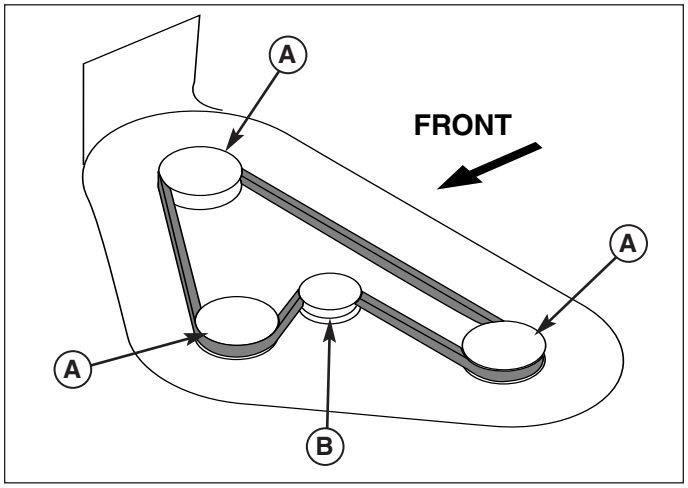

Figure 44. Mower Deck Drive Belt Routing All Models
A. Arbor Drive Pulley (V-sided)
B. Idler Pulley (Flat-sided)

Downloaded from www.Manualslib.com manuals search engine

https://truckmanualshub.com/

40” Mower PTO Belt Replacement

1. With the mower deck installed, park the tractor on a smooth, level surface such as a concrete floor. Disengage the PTO, engage the parking brake, shut the engine off, and remove the key.
2. Remove the mower deck (see “Mower deck removal”). Remove the belt covers.
3. Note the position of the idler pulley belt guides (E & F, Figure 45) when installed. Loosen the idler pulley capscrews and remove the belt from the idler pulleys (D & G).
4. Install the new belt (B) as shown. When the mower deck is installed on the tractor, the belt wraps around the PTO clutch pulley (A), backside idler pulley (D), mower deck drive pulley (C), and v-idler pulley (G) .
5. Return the idler pulley belt guides (E & F) to their original positions and tighten the idler pulley capscrews.

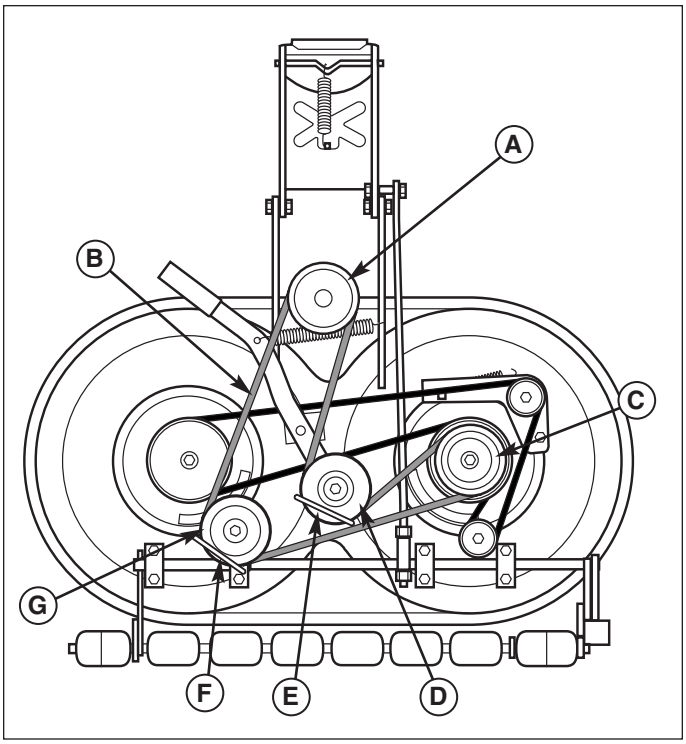

Figure 45. PTO Belt Replacement
A. Engine PTO Clutch Pulley
B. PTO Belt
C. Mower Deck Drive Pulley
D. Backside Idler Pulley
E. Belt Guide
F. Belt Guide
G. V-Idler Pulley

Downloaded from www.Manualslib.com manuals search engine

https://truckmanualshub.com/

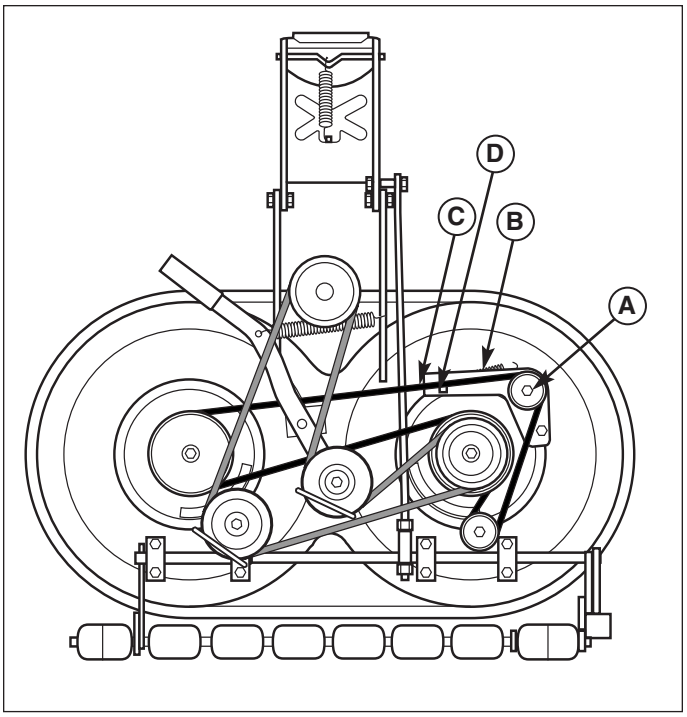

Figure 46. Mulching Deck (Belt Covers Removed)
A. Idler Assembly Capscrew
B. Spring-Loaded Idler Assembly
C. Belt
D. Square Hole

40” Mower Arbor Drive Belt Replacement

1. With the mower deck installed, park the tractor on a smooth, level surface such as a concrete floor. Disengage the PTO, engage the parking brake, shut the engine off, and remove the key.
2. Remove the mower deck (see “Mower Deck Removal”). Remove the belt covers.
3. Loosen the idler assembly capscrew (A, Figure 46).
4. Using a ratchet (A, Figure 47), insert the end of the extension into the square hole (D, Figure 46) and move the idler assembly (B, Figure 46) to relieve tension on the belt (C).
5. Remove the belt (C).
6. Install a new belt (C) on the pulleys as shown. Releasing the idler assembly (A) allows the spring to automatically tension the cogged belt.
7. Tighten the idler assembly capscrew (A). Reinstall the belt covers.
8. Check that the blades are positioned perpendicular to each other (see Figure 48). If not, perform the mower blade timing procedure found in the Regular Maintenance section.

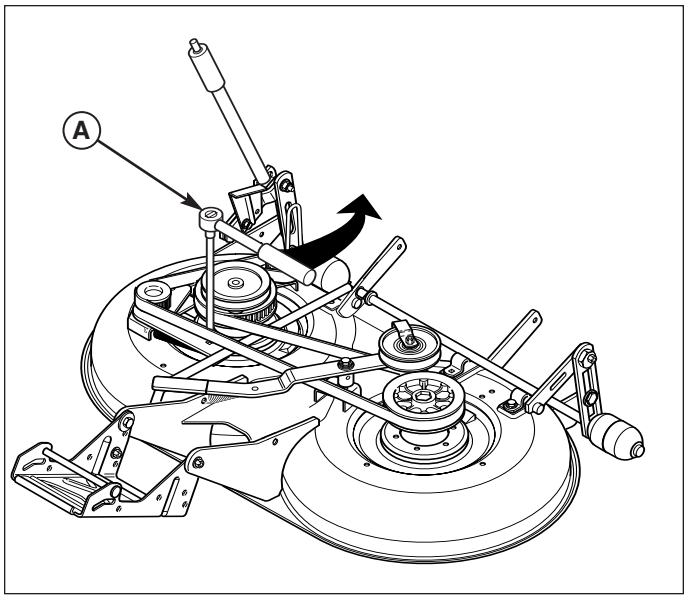

Figure 47. Release Cogged Belt Tension
A. 3/8” Ratchet and Extension

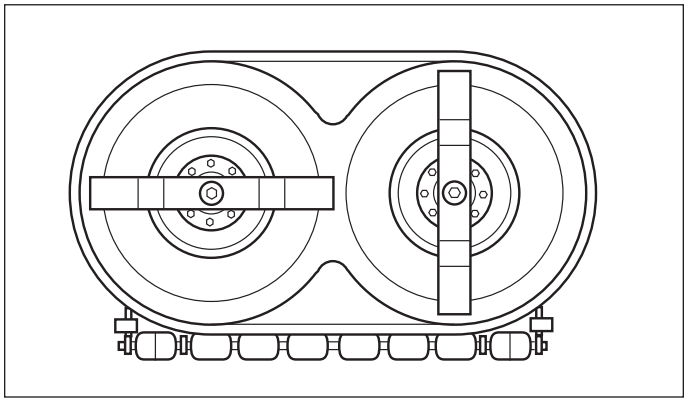

Figure 48. Mower Blade Timing

Downloaded from www.Manualslib.com manuals search engine

https://truckmanualshub.com/

38” Mower Drive Belt Replacement

NOTE: Be sure to use only genuine Simplicity replacement parts. Check the back of this manual or the decal under the hood for common replacement part numbers.

Note: It is not necessary to remove the mower to install a new belt. However, for easier access mower can be removed. See Mower Removal in the Operation section.

1. Park the tractor on a smooth, level surface such as a concrete floor. Disengage the PTO, turn off the engine and lock the parking brake. Remove the key.
2. If mower is not removed, lower the mower lift and place the mower in the lowest cutting position.
3. Push the idler arm (A, Figure 49) away from you to relieve belt tension. Drop the belt from the PTO (electric clutch) pulley.

IMPORTANT: Note the position of all belt guides relative to the belt and pulleys before loosening.

4. Loosen the two belt stop brackets (C) and idler pulley belt guide (D).
5. Remove the old belt and replace with a new belt. Make sure V-side of belt runs in arbor pulley grooves and the flat backside runs against the idler pulley.
6. Position the belt stop brackets (C) in their original positions. There must be 1/8” clearance between the belt stop and the pulleys.
7. Position the idler pulley belt guide (D) in its original position up against arm (A) so that there is a 1/8" gap between the pulley and belt guide.
8. Install mower on tractor if it was removed. See Operation section.
9. Run the mower under no-load condition for about 5 minutes.

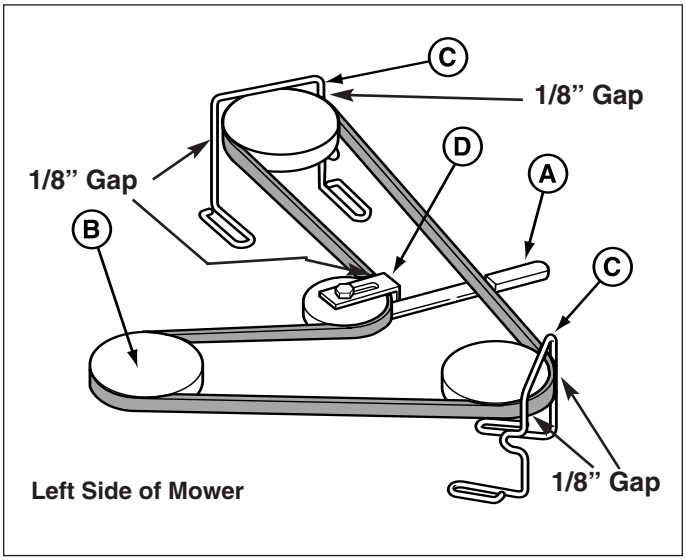

Figure 49. Mower Belt Routing - 38" Mower Deck
A. Idler Pulley Arm **C. Belt Stop Bracket**
B. PTO Pulley **D. Idler Pulley Belt Guide**

Downloaded from www.Manualslib.com manuals search engine

https://truckmanualshub.com/

Specifications

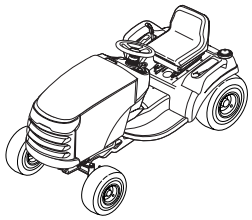

NOTE: Specifications are correct at time of printing and are subject to change without notice.
** Actual sustained equipment horsepower will likely be lower due to operating limitations and environmental factors.*

ENGINE:

20 HP* Briggs & Stratton

Make	Briggs & Stratton
Model	Vanguard
Horsepower	20 @ 3600 rpm
Displacement	34.8 Cu. in (570 cc)
Electrical System	12 Volt, 16 amp. Alternator, Battery: 340 CCA
Oil Capacity	48 Oz. (1.4 L)

18 HP* Briggs & Stratton

Make	Briggs & Stratton
Model	Vanguard
Horsepower	18 @ 3600 rpm
Displacement	34.8 Cu. in (570 cc)
Electrical System	12 Volt, 16 amp. Alternator, Battery: 340 CCA
Oil Capacity	48 Oz. (1.4 L)

CHASSIS:

Broadmoor / 300 / 1600 / 2600 Series

Fuel Tank Cap.	Capacity: 4.0 Gallons (15 L)
Rear Wheels	Tire Size: 22 x 10.00 -10 Inflation Pressure: 6-8 psi (,41-,55 bar)
Front Wheels	Tire Size: 15 x 6.00-6 Inflation Press.: 12-15 psi (,8-1 bar)

TRANSMISSIONS:

K57

Type	Hydrostatic Tuff Torq K57
Hydraulic Fluid	10w 30 Premium Engine Oil
Capacity	2.1 qt (2,0 L)
Speeds @ 3400 rpm	Forward: 5.5 MPH (8,9 km/h) Reverse: 3.5 MPH (5,6 km/h)
Continuous Torque Output	159 ft. lbs. (216 Nm)
Drawbar Rating	440 lbs. (200 Kg)
Maximum Weight on Axle	674 lbs. (306 Kg)

DIMENSIONS:

Broadmoor / 300 / 1600 / 2600 / Series

Overall Length	74” (187 cm)
Overall Width	42” (107 cm)
Height	At Top of Seat: 43” (109 cm)
Weight	
Broadmoor / 1600 / 2600 Series Tractor	477 lbs. (217 kg)
50” Mower Deck	125 lbs. (57 kg)
44” Mower Deck	112 lbs. (51 kg)
40” Mower Deck	121 lbs. (55 kg)

Downloaded from www.Manualslib.com manuals search engine

https://truckmanualshub.com/

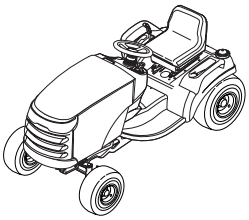

Parts & Accessories

Replacement Parts

Replacement parts are available from your authorized dealer. Always use genuine Simplicity Service Parts.

Maintenance Items

Many convenient and helpful service and maintenance items are available from you authorized dealer. Some of these items include:

Engine Oil
Touch-Up Paint
Grease Gun Kit
8 oz. Grease Tube
Tire Sealant
Degrimer/Degreaser
Gas Stabilizer

Optional Accessories

Snowthrower Cab
Snowthrower Attachments
42" Dozer/Snow Blade
Rear Wheel Weights
Tire Chains
Twin Bag Grass Catcher
Dump Cart
Hour Meter Kit
Gas Cans
Rear Weight Carrier
Front Weight Carrier
Triple Bag Collector
Turbo Collector
Tiller

Technical Manuals

Additional copies of this manual are available, as well as fully illustrated parts lists. These manuals show all of the product's components in exploded views (3D illustrations which show the relationship of parts and how they go together) as well as part numbers and quantities used. Important assembly notes and and torque values are also included.

For applicable manuals currently available for your model, contact our Customer Publications Department at 262-284-8519 (Simplicity) / 866-313-6682 (Snapper). Have the information listed in the box below available when phoning in your request. Technical manuals can be downloaded from

www.simplicitymfg.com

www.snapper.com

Model: _____

Mfg. No.: _____

Your Name: _____

Address: _____

City, State, Zip: _____

Visa/Mastercard No.: _____

Card Expiration Date: _____

Downloaded from www.Manualslib.com manuals search engine

https://truckmanualshub.com/

Simplicity®
MANUFACTURING, INC.
500 N Spring Street / PO Box 997
Port Washington, WI 53074-0997

www.SimplicityMfg.com

SNAPPER®
PRODUCTS
535 Macon Street
McDonough, GA 30253

www.Snapper.com

MASSEY FERGUSON
LAWN & GARDEN EQUIPMENT
500 N Spring Street / PO Box 997
Port Washington, WI 53074-0997

www.MasseyLawn.com

AGCO
LAWN & GARDEN EQUIPMENT
500 N Spring Street / PO Box 997
Port Washington, WI 53074-0997

AGCOLawn.com

© Copyright 2005 Simplicity Manufacturing, Inc.
All Rights Reserved. Printed in USA.

CE

Downloaded from www.Manualslib.com manuals search engine