https://truckmanualshub.com/

Genie®
A TEREX BRAND

Service Manual

Serial Number Range

S-80	from S8008-8000 to S8013-11875
S-85	from S8508-8001 to S8513-11875
S-80X	from S80X10-8500 to S80X13-11875

Part No. 122985
Rev D1
September 2015

https://truckmanualshub.com/

Introduction

Important

Read, understand and obey the safety rules and operating instructions in the appropriate operator's manual on your machine before attempting any maintenance or repair procedure.

This manual provides detailed scheduled maintenance information for the machine owner and user. It also provides troubleshooting fault codes and repair procedures for qualified service professionals.

Basic mechanical, hydraulic and electrical skills are required to perform most procedures. However, several procedures require specialized skills, tools, lifting equipment and a suitable workshop. In these instances, we strongly recommend that maintenance and repair be performed at an authorized Genie dealer service center.

Compliance

Machine Classification
Group B/Type 3 as defined by ISO 16368

Machine Design Life
Unrestricted with proper operation, inspection and scheduled maintenance.

Technical Publications

Genie has endeavored to deliver the highest degree of accuracy possible. However, continuous improvement of our products is a Genie policy. Therefore, product specifications are subject to change without notice.

Readers are encouraged to notify Genie of errors and send in suggestions for improvement. All communications will be carefully considered for future printings of this and all other manuals.

Contact Us:

http://www.genielift.com
e-mail: awp.techpub@terex.com

Serial Number Information

Genie offers the following Service Manuals for these models:

Title	Part No.
Genie S-80 and S-85 Service Manual (from serial number 101 to 785)	34032
Genie S-80 and S-85 Service Manual (from serial number 786 to 965)	52270
Genie S-80 and S-85 Service Manual (from serial number 966 to 3081)	72062
Genie S-80 and S-85 Service Manual (from serial number 3082 to 3737)	77832
Genie S-80 and S-85 Service Manual (from serial number 3738 to 5380)	111165
Genie S-80 and S-85 Service Manual (from serial number 5381 to 7999)	122149

Copyright © 2011 Terex Corporation

122985 Rev D February 2012
Seventh Edition, Fourth Printing

"Genie" and "S" are registered trademarks of Terex South Dakota, Inc. in the USA and many other countries.

Printed on recycled paper

Printed in U.S.A.

https://truckmanualshub.com/

Revision History

Revision	Date	Section	Procedure / Schematic Page / Description
D	2/2012	2 - Spec.	2-1
		3 - Maint.	3-1, 3-51
		4 - Repair	4-3 to 4-6, 4-18
D1	9/2015	3 - Maint.	E-4

REFERENCE EXAMPLES:

2-1_Section 2_Specifications Page #.
3-3_Section 3_Maintenance Procedure Page #.
4-48_Section 4_Repair Procedure Page #.
Fault Codes_Section 5.
6-5_Section 6_Schematic Page #.

Electronic Version

Click on any procedure or page number highlighted in blue to view the update.

https://truckmanualshub.com/

REVISION HISTORY, CONTINUED

Revision	Date	Section	Procedure / Schematic Page / Description

REFERENCE EXAMPLES:

2-1_Section 2_Specifications Page #.
3-3_Section 3_Maintenance Procedure Page #.
4-48_Section 4_Repair Procedure Page #.
Fault Codes_Section 5.
6-5_Section 6_Schematic Page #.

Electronic Version

Click on any procedure or page number highlighted in blue to view the update.

https://truckmanualshub.com/

Serial Number Legend

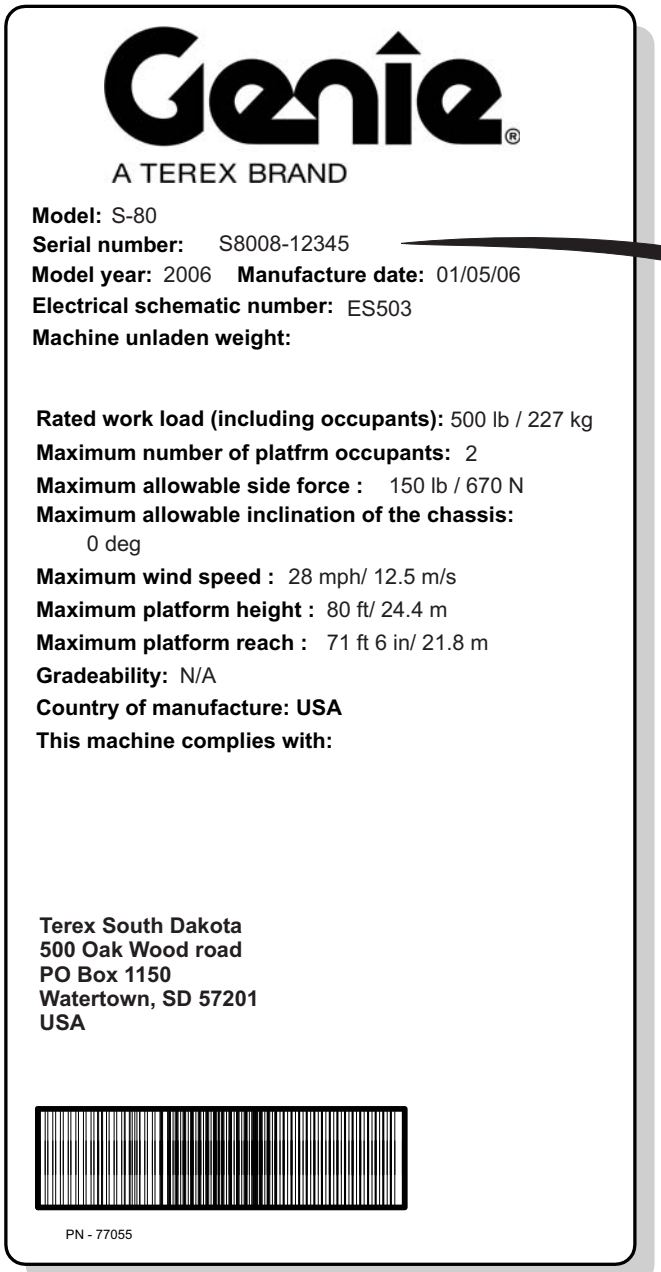

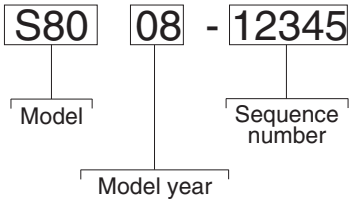

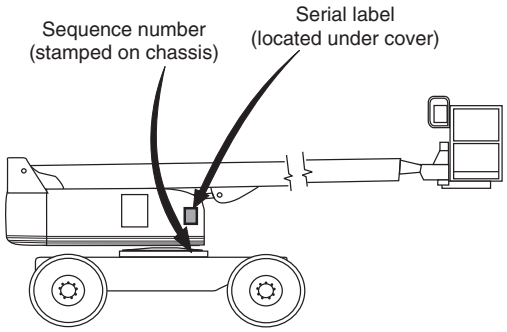

https://truckmanualshub.com/

This page intentionally left blank.

https://truckmanualshub.com/

Safety Rules

Danger

Failure to obey the instructions and safety rules in this manual, and the *Genie S-80 and Genie S-85 Operator's Manual* will result in death or serious injury.

Many of the hazards identified in the operator's manual are also safety hazards when maintenance and repair procedures are performed.

Do Not Perform Maintenance Unless:

☑ You are trained and qualified to perform maintenance on this machine.

☑ You read, understand and obey:
- manufacturer's instructions and safety rules
- employer's safety rules and worksite regulations
- applicable governmental regulations

☑ You have the appropriate tools, lifting equipment and a suitable workshop.

https://truckmanualshub.com/

SAFETY RULES

Personal Safety

Any person working on or around a machine must be aware of all known safety hazards. Personal safety and the continued safe operation of the machine should be your top priority.

Read each procedure thoroughly. This manual and the decals on the machine use signal words to identify the following:

Safety alert symbol—used to alert personnel to potential personal injury hazards. Obey all safety messages that follow this symbol to avoid possible injury or death.

DANGER Used to indicate the presence of an imminently hazardous situation which, if not avoided, will result in death or serious injury.

WARNING Used to indicate the presence of a potentially hazardous situation which, if not avoided, could result in death or serious injury.

CAUTION With safety alert symbol—used to indicate the presence of a potentially hazardous situation which, if not avoided, may result in minor or moderate injury.

NOTICE Used to indicate the presence of a potentially hazardous situation which, if not avoided, may result in property damage.

Note: Used to indicate operation or maintenance information.

Be sure to wear protective eye wear and other protective clothing if the situation warrants it.

Be aware of potential crushing hazards such as moving parts, free swinging or unsecured components when lifting or placing loads. Always wear approved steel-toed shoes.

Workplace Safety

Be sure to keep sparks, flames and lighted tobacco away from flammable and combustible materials like battery gases and engine fuels. Always have an approved fire extinguisher within easy reach.

Be sure that all tools and working areas are properly maintained and ready for use. Keep work surfaces clean and free of debris that could get into machine components and cause damage.

Be sure any forklift, overhead crane or other lifting or supporting device is fully capable of supporting and stabilizing the weight to be lifted. Use only chains or straps that are in good condition and of ample capacity.

Be sure that fasteners intended for one time use (i.e., cotter pins and self-locking nuts) are not reused. These components may fail if they are used a second time.

Be sure to properly dispose of old oil or other fluids. Use an approved container. Please be environmentally safe.

Be sure that your workshop or work area is properly ventilated and well lit.

https://truckmanualshub.com/

Table of Contents

Introduction

Important Information ..... *ii*
Serial Number Information ..... *ii*
Serial Number Legend ..... *iii*

Section 1 **Safety Rules**

General Safety Rules ..... *v*

Section 2 **Rev** **Specifications**

Machine Specifications ..... 2 - 1
Performance Specifications ..... 2 - 2
Hydraulic Oil Specifications ..... 2 - 2
Hydraulic Component Specifications ..... 2 - 3
Valve Coil Resistance Specifications ..... 2 - 4
Continental TME27 Engine Specifications ..... 2 - 5
Deutz TD2011L04i Engine Specifications ..... 2 - 6
Perkins 804D-33 Engine Specifications ..... 2 - 7
Machine Torque Specifications ..... 2 - 8
Manifold Component Specifications ..... 2 - 8
Hydraulic Hose and Fitting Torque Specifications ..... 2 - 9
SAE and Metric Torque Specifications ..... 2 - 10

https://truckmanualshub.com/

TABLE OF CONTENTS

Section 3 Rev Scheduled Maintenance Procedures

Introduction ..... 3 - 1

Pre-Delivery Preparation ..... 3 - 3

Maintenance Inspection Report ..... 3 - 5

Checklist A Procedures

A-1 Inspect the Manuals and Decals ..... 3 - 7

A-2 Perform Pre-operation Inspection ..... 3 - 8

A-3 Perform Engine Maintenance ..... 3 - 8

A-4 Perform Function Tests ..... 3 - 9

A-5 Test the Oscillate Axle ..... 3 - 9

A-6 Check the High Pressure Hydraulic Filter Condition Indicator ..... 3 - 10

A-7 Perform 30 Day Service ..... 3 - 10

A-8 Perform Engine Maintenance - Deutz and Continental Models ..... 3 - 11

A-9 Inspect the Fuel Filter/Water Separator - Diesel Models ..... 3 - 11

A-10 Grease the Turntable Rotation Bearing and Rotate Gear ..... 3 - 13

A-11 Perform Engine Maintenance ..... 3 - 14

A-12 Replace the Drive Hub Oil ..... 3 - 15

A-13 Perform Engine Maintenance - Perkins Models ..... 3 - 17

Checklist B Procedures

B-1 Inspect the Battery(s) ..... 3 - 18

B-2 Inspect the Electrical Wiring ..... 3 - 19

B-3 Test the Key Switch ..... 3 - 21

B-4 Check the Exhaust System ..... 3 - 21

https://truckmanualshub.com/

TABLE OF CONTENTS

Section 3 **Rev** **Scheduled Maintenance Procedures**, continued

B-5 Inspect the Engine Air Filter ..... 3 - 22
B-6 Check the Oil Cooler and Cooling Fins - Deutz Models ..... 3 - 23
B-7 Confirm the Proper Brake Configuration ..... 3 - 24
B-8 Inspect the Tires, Wheels and Lug Nut Torque ..... 3 - 24
B-9 Check the Drive Hub Oil Level and Fastener Torque ..... 3 - 25
B-10 Check and Adjust the Engine RPM ..... 3 - 26
B-11 Perform Engine Maintenance ..... 3 - 28
B-12 Check the Oscillate Directional Valve Linkage ..... 3 - 28
B-13 Test the Ground Control Override ..... 3 - 29
B-14 Test the Platform Self-leveling ..... 3 - 29
B-15 Test the Engine Idle Select Operation ..... 3 - 30
B-16 Test the Fuel Select Operation - Gasoline/LPG Models ..... 3 - 31
B-17 Test the Drive Enable System ..... 3 - 32
B-18 Test the Drive Brakes ..... 3 - 33
B-19 Test the Drive Speed - Stowed Position ..... 3 - 33
B-20 Test the Drive Speed - Raised or Extended Position ..... 3 - 34
B-21 Test the Alarm Package (if equipped) and the Descent Alarm ..... 3 - 35
B-22 Inspect the Fuel and Hydraulic Tank Cap Venting Systems ..... 3 - 36
B-23 Perform Hydraulic Oil Analysis ..... 3 - 37
B-24 Inspect the Boom Extend/Retract Cables ..... 3 - 37

Checklist C Procedures

C-1 Perform Engine Maintenance - Deutz and Perkins Models ..... 3 - 39
C-2 Grease the Platform Overload Mechanism (if equipped) ..... 3 - 39
C-3 Test the Platform Overload System (if equipped) ..... 3 - 40
C-4 Replace the Engine Air Filter Element - Deutz and Perkins Models ..... 3 - 43
C-5 Replace the Fuel Filter/ Water Separator Element - Diesel Models ..... 3 - 43
C-6 Check the Safety Envelope Limit Switches and Angle Sensor, S-80X ..... 3 - 45

https://truckmanualshub.com/

TABLE OF CONTENTS

Section 3 **Rev** **Scheduled Maintenance Procedures**, continued

Checklist D Procedures

D-1 Check the Boom Wear Pads ..... 3 - 48

D-2 Check the Free-wheel Configuration ..... 3 - 49

D-3 Check the Turntable Rotation Bearing Bolts ..... 3 - 50

D-4 Inspect the Turntable Bearing Wear ..... 3 - 51

D-5 Perform Engine Maintenance ..... 3 - 53

D-6 Replace the Hydraulic Filter Elements ..... 3 - 53

D-7 Replace the Drive Hub Oil ..... 3 - 54

D-8 Perform Engine Maintenance - Deutz Models ..... 3 - 56

A **Checklist E Procedures**

E-1 Test or Replace the Hydraulic Oil ..... 3 - 57

E-2 Perform Engine Maintenance - Perkins Models ..... 3 - 59

E-3 Perform Engine Maintenance - Deutz and Perkins Models ..... 3 - 59

E-4 Remove and Replace the Boom Extend/Retract Cables ..... 3 - 60

Section 4 **Rev** **Repair Procedures**

Introduction ..... 4 - 1

Platform Controls

1-1 ALC-500 Circuit Board ..... 4 - 2

1-2 Joysticks ..... 4 - 3

Platform Components

2-1 Platform ..... 4 - 9

2-2 Platform Leveling Slave Cylinder ..... 4 - 10

https://truckmanualshub.com/

TABLE OF CONTENTS

Section 4 **Rev** **Repair Procedures**, continued

2-3 Platform Rotator ..... 4 - 11

2-4 Calibrate the Platform Overload System ..... 4 - 13

Jib Boom Components, S-85

3-1 Jib Boom ..... 4 - 16

3-3 Jib Boom Lift Cylinder ..... 4 - 17

Boom Components

4-1 Cable Track ..... 4 - 18

4-2 Boom ..... 4 - 21

4-3 Boom Lift Cylinder ..... 4 - 24

4-4 Boom Extension Cylinders ..... 4 - 25

4-5 Boom Extend/Retract Cables ..... 4 - 28

4-6 Platform Leveling Master Cylinder ..... 4 - 32

Engines

5-1 RPM Adjustment ..... 4 - 33

5-2 Flex Plate ..... 4 - 33

Ground Controls

6-1 Control Relays ..... 4 - 38

Hydraulic Pumps

7-1 Function Pump ..... 4 - 39

7-2 Drive Pump ..... 4 - 40

https://truckmanualshub.com/

TABLE OF CONTENTS

Section 4 **Rev** **Repair Procedures**, continued

Manifolds

8-1 Function Manifold Components ..... 4 - 42
8-2 Valve Adjustments - Function Manifold ..... 4 - 44
8-3 Brake/Two-speed Manifold Components ..... 4 - 46
8-4 Turntable Rotation Manifold Components ..... 4 - 47
8-5 Platform Rotate Manifold Components ..... 4 - 48
8-6 Platform Manifold Components, S-80 ..... 4 - 49
8-7 Platform Manifold Components, S-85 ..... 4 - 50
8-8 2WD Traction Manifold Components ..... 4 - 51
8-9 4WD Traction Manifold Components (before serial number 8581) ..... 4 - 53
8-10 4WD Traction Manifold Components (after serial number 8580) ..... 4 - 55
8-11 Drive Oil Diverter Manifold Components (welder option) ..... 4 - 57
8-12 Valve Adjustments - Traction Manifold ..... 4 - 58
8-13 Valve Coils ..... 4 - 59

Fuel and Hydraulic Tanks

9-1 Fuel Tank ..... 4 - 61
9-2 Hydraulic Tank ..... 4 - 62

Turntable Rotation Components

10-1 Turntable Rotation Drive Hub Assembly ..... 4 - 64

2WD Steer Axle Components

11-1 Yoke and Hub ..... 4 - 67
11-2 Steer Cylinder ..... 4 - 68

https://truckmanualshub.com/

TABLE OF CONTENTS

Section 4 **Rev** **Repair Procedures**, continued

4WD Steer Axle Components

12-1 Yoke and Drive Hub ..... 4 - 69

12-2 Drive Motor ..... 4 - 70

12-3 Drive Hub ..... 4 - 70

12-4 Steer Cylinders ..... 4 - 71

Non-steer Axle Components

13-1 Drive Motor ..... 4 - 72

13-2 Drive Hub ..... 4 - 72

Oscillating Axle Components

14-1 Oscillate Axle Cylinders ..... 4 - 73

14-2 Oscillate Directional Valve ..... 4 - 74

Section 5 **Rev** **Fault Codes**

Introduction ..... 5 - 1

Fault Codes - Control System ..... 5 - 2

Engine Fault Codes - Continental Models ..... 5 - 7

Section 6 **Rev** **Schematics**

Introduction ..... 6 - 1

Electrical Symbols Legend ..... 6 - 2

Hydraulic Symbols Legend ..... 6 - 3

Connector Pin Legend - View 1 ..... 6 - 6

Connector Pin Legend - View 2 ..... 6 - 7

https://truckmanualshub.com/

TABLE OF CONTENTS

Section 6 **Rev** **Schematics**, continued

Electrical Schematic, S-80 and S-85 (ANSI / CSA / AS), Deutz TD2011L04i Models ..... 6 - 10

Ground Control Box Terminal Strip Wiring Diagram, S-80 and S-85 (ANSI / CSA / AS), Deutz TD2011L04i Models ..... 6 - 14

Ground Control Box Switch Panel Wiring Diagram, S-80 and S-85 (ANSI / CSA / AS), Deutz TD2011L04i Models ..... 6 - 15

Platform Control Box Wiring Diagram, S-80 and S-85 (ANSI / CSA / AS), Deutz TD2011L04i Models ..... 6 - 18

Platform Control Box Switch Panel Wiring Diagram, S-80 and S-85 (ANSI / CSA / AS), Deutz TD2011L04i Models ..... 6 - 19

Electrical Schematic, S-80 and S-85 (CE), Deutz TD2011L04i Models (before serial number 8111) ..... 6 - 22

Ground Control Box Terminal Strip Wiring Diagram, S-80 and S-85 (CE), Deutz TD2011L04i Models (before serial number 8111) ..... 6 - 26

Ground Control Box Switch Panel Wiring Diagram, S-80 and S-85 (CE), Deutz TD2011L04i Models (before serial number 8111) ..... 6 - 27

Platform Control Box Wiring Diagram, S-80 and S-85 (CE), Deutz TD2011L04i Models (before serial number 8111) ..... 6 - 30

Platform Control Box Switch Panel Wiring Diagram, S-80 and S-85 (CE), Deutz TD2011L04i Models (before serial number 8111) ..... 6 - 31

Electrical Schematic, S-80 and S-85 (CE), Deutz TD2011L04i Models (after serial number 8110) ..... 6 - 34

Ground Control Box Terminal Strip Wiring Diagram, S-80 and S-85 (CE), Deutz TD2011L04i Models (after serial number 8110) ..... 6 - 38

Ground Control Box Switch Panel Wiring Diagram, S-80 and S-85 (CE), Deutz TD2011L04i Models (after serial number 8110) ..... 6 - 39

https://truckmanualshub.com/

TABLE OF CONTENTS

Section 6 **Rev** **Schematics**, continued

Platform Control Box Wiring Diagram, S-80 and S-85 (CE),
Deutz TD2011L04i Models (after serial number 8110) ..... 6 - 42

Platform Control Box Switch Panel Wiring Diagram, S-80 and S-85 (CE),
Deutz TD2011L04i Models (after serial number 8110) ..... 6 - 43

Electrical Schematic, S-80X
Deutz TD2011L04i Models ..... 6 - 46

Ground Control Box Terminal Strip Wiring Diagram, S-80X,
Deutz TD2011L04i Models ..... 6 - 50

Ground Control Box Switch panel Wiring Diagram, S-80X,
Deutz TD2011L04i Models ..... 6 - 51

Platform Control Box Wiring Diagram, S-80X,
Deutz TD2011L04i Models ..... 6 - 54

Platform Control Box Switch Panel Wiring Diagram, S-80X,
Deutz TD2011L04i Models ..... 6 - 55

Electrical Schematic, S-80 and S-85 (ANSI / CSA / AS),
Perkins 804D-33 Models ..... 6 - 58

Ground Control Box Terminal Strip Wiring Diagram,
S-80 and S-85 (ANSI / CSA / AS), Perkins 804D-33 Models ..... 6 - 62

Ground Control Box Switch Panel Wiring Diagram,
S-80 and S-85 (ANSI / CSA / AS), Perkins 804D-33 Models ..... 6 - 63

Platform Control Box Wiring Diagram, S-80 and S-85 (ANSI / CSA / AS),
Perkins 804D-33 Models ..... 6 - 66

Platform Control Box Switch Panel Wiring Diagram,
S-80 and S-85 (ANSI / CSA / AS), Perkins 804D-33 Models ..... 6 - 67

Electrical Schematic, S-80 and S-85 (CE),
Perkins 804D-33 Models (before serial number 8111) ..... 6 - 70

https://truckmanualshub.com/

TABLE OF CONTENTS

Section 6 **Rev** **Schematics**, continued

Ground Control Box Terminal Strip Wiring Diagram, S-80 and S-85 (CE), Perkins 804D-33 Models (before serial number 8111) ..... 6 - 74

Ground Control Box Switch Panel Wiring Diagram, S-80 and S-85 (CE), Perkins 804D-33 Models (before serial number 8111) ..... 6 - 75

Platform Control Box Wiring Diagram, S-80 and S-85 (CE), Perkins 804D-33 Models (before serial number 8111) ..... 6 - 78

Platform Control Box Switch Panel Wiring Diagram, S-80 and S-85 (CE), Perkins 804D-33 Models (before serial number 8111) ..... 6 - 79

Electrical Schematic, S-80 and S-85 (CE), Perkins 804D-33 Models (after serial number 8110) ..... 6 - 82

Ground Control Box Terminal Strip Wiring Diagram, S-80 and S-85 (CE), Perkins 804D-33 Models (after serial number 8110) ..... 6 - 86

Ground Control Box Switch Panel Wiring Diagram, S-80 and S-85 (CE), Perkins 804D-33 Models (after serial number 8110) ..... 6 - 87

Platform Control Box Wiring Diagram, S-80 and S-85 (CE), Perkins 804D-33 Models (after serial number 8110) ..... 6 - 90

Platform Control Box Switch Panel Wiring Diagram, S-80 and S-85 (CE), Perkins 804D-33 Models (after serial number 8110) ..... 6 - 91

Electrical Schematic, S-80X, Perkins 804D-33 Models ..... 6 - 94

Ground Control Box Terminal Strip Wiring Diagram, S-80X, Perkins 804D-33 Models ..... 6 - 98

Ground Control Box Switch Panel Wiring Diagram, S-80X, Perkins 804D-33 Models ..... 6 - 99

Platform Control Box Wiring Diagram, S80X, Perkins 804D-33 Models ..... 6 - 102

Platform Control Box Switch Panel Wiring Diagram, S80X, Perkins 804D-33 Models ..... 6 - 103

https://truckmanualshub.com/

TABLE OF CONTENTS

Section 6 **Rev** **Schematics**, continued

Electrical Schematic, S-80 and S-85 (ANSI / CSA / AS), Continental TME27 Models ..... 6 - 106

Ground Control Box Terminal Strip Wiring Diagram S-80 and S-85 (ANSI / CSA / AS), Continental TME27 Models ..... 6 - 110

Ground Control Box Switch Panel Wiring Diagram, S-80 and S-85 (ANSI / CSA / AS), Continental TME27 Models ..... 6 - 111

Platform Control Box Wiring Diagram, S-80 and S-85 (ANSI / CSA / AS), Continental TME27 Models ..... 6 - 114

Platform Control Box Switch Panel Wiring Diagram, S-80 and S-85 (ANSI / CSA / AS), Continental TME27 Models ..... 6 - 115

Electrical Schematic, S-80 and S-85 (CE), Continental TME27 Models (before serial number 8111) ..... 6 - 118

Ground Control Box Terminal Strip Wiring Diagram, S-80 and S-85 (CE), Continental TME27 Models (before serial number 8111) ..... 6 - 122

Ground Control Box Switch Panel Wiring Diagram, S-80 and S-85 (CE), Continental TME27 Models (before serial number 8111) ..... 6 - 123

Platform Control Box Wiring Diagram, S-80 and S-85 (CE), Continental TME27 Models (before serial number 8111) ..... 6 - 126

Platform Control Box Switch Panel Wiring Diagram, S-80 and S-85 (CE), Continental TME27 Models (before serial number 8111) ..... 6 - 127

Electrical Schematic, S-80 and S-85 (CE), Continental TME27 Models (after serial number 8110) ..... 6 - 130

Ground Control Box Terminal Strip Wiring Diagram, S-80 and S-85 (CE), Continental TME27 Models (after serial number 8110) ..... 6 - 134

Ground Control Box Switch Panel Wiring Diagram, S-80 and S-85 (CE), Continental TME27 Models (after serial number 8110) ..... 6 - 135

https://truckmanualshub.com/

TABLE OF CONTENTS

Section 6 **Rev** **Schematics**, continued .....

Platform Control Box Wiring Diagram, S-80 and S-85 (CE), Continental TME27 Models (after serial number 8110) ..... 6 - 138

Platform Control Box Switch Panel Wiring Diagram, S-80 and S-85 (CE), Continental TME27 Models (after serial number 8110) ..... 6 - 139

Electrical Schematic, S-80X, Continental TME27 Models ..... 6 - 142

Ground Control Box Terminal Strip Wiring Diagram, S-80X, Continental TME27 Models ..... 6 - 146

Ground Control Box Switch Panel Wiring Diagram, S-80X, Continental TME27 Models ..... 6 - 147

Platform Control Box Wiring Diagram, S-80X, Continental TME27 Models ..... 6 - 150

Platform Control Box Switch Panel Wiring Diagram, S-80X, Continental TME27 Models ..... 6 - 151

Continental TME27 Engine Harness ..... 6 - 154

Platform Level Cutout, CTE Option ..... 6 - 155

Continental Options Schematic ..... 6 - 158

Deutz and Perkins Options Schematic ..... 6 - 159

12 kW Hydraulic Generator Wiring Diagram ..... 6 - 162

12 kW Hydraulic Generator Electrical Schematic ..... 6 - 163

Belt Driven Generator Option ..... 6 - 166

Relay and Fuse Panel Legend ..... 6 - 167

Hydraulic Schematic, 2WD Models ..... 6 - 170

Hydraulic Schematic, 4WD Models ..... 6 - 171

12 kW Hydraulic Generator Hydraulic Schematic ..... 6 - 173

https://truckmanualshub.com/

Specifications

Machine Specifications

Rough Terrain and Non Marking Tires and Wheels	
Tire size	18-625 FF
Tire ply rating	16
Overall tire diameter	40.7 in 103.3 cm
Tire pressure	Foam filled
Wheel diameter	24.5 in 62.2 cm
Wheel width	15 in 38.1 cm
Tire weight, new foam-filled (minimum)	622 lbs 282 kg

High Floatation Tires and Wheels	
Tire size	41/18LLx22.5
Tire ply rating	14
Tire pressure	70 psi 4.8 bar
Wheel diameter	22.5 in 57 cm
Wheel width	14 in 35.6 cm

Lugs and Lug Nut Torque	
Wheel lugs	10 @ 3/4 -16
Lug nut torque, dry	420 ft-lbs 569 Nm
Lug nut torque, lubricated	320 ft-lbs 434 Nm

Fluid capacities	
Fuel tank, (Deutz and Perkins models)	35 gallons 132.5 liters
(Continental models)	30 gallons 113.5 liters
LPG tank	33.5 pounds 15.2 kg
Hydraulic tank	40 gallons 151.4 liters
Hydraulic system (including tank)	50 gallons 189.3 liters
Turntable rotation drive hub (single fill port) Turntable rotation drive hub (Dual fill ports)	40 fl oz 1.2 liters 43 fl oz 1.3 liters
Four wheel drive hubs	30.5 fl oz 0.90 liters
Two wheel drive hubs	23 fl oz 0.68 liters

Drive hub oil type:
SAE 90 multipurpose hypoid gear oil
API service classification GL5

For operational specifications, refer to the Operator's Manual.

https://truckmanualshub.com/

SPECIFICATIONS

Performance Specifications

Drive speed, maximum	
Stowed position RT Tires	40 ft / 7.9-8.5 sec 12.2 m / 7.9-8.5 sec
Stowed position Flotation Tires	40 ft / 11-13 sec 12.2 m / 11-13 sec
Raised or extended position	40 ft / 40-45 sec 12.2 m / 40-45 sec
Braking distance, maximum	
High range on paved surface	3 ft 90 cm
Gradeability	Refer to the Operator's Manual
Boom function speeds, maximum from platform controls	
Jib boom up (S-85)	25 to 35 seconds
Jib boom down (S-85)	15 to 25 seconds
Boom up (ANSI, CSA, AS models)	57 to 65 seconds
Boom up (CE models)	75 to 83 seconds
Boom down (ANSI, CSA, AS models)	61 to 69 seconds
Boom down (CE models)	75 to 83 seconds
Boom extend	59 to 67 seconds
Boom retract	57 to 65 seconds
Turntable rotate, 360° boom fully stowed	95 to 103 seconds
Turntable rotate, 360° boom raised or extended	210 to 250 seconds
Platform rotate, 160°	8 to 12 seconds
Platform level up	50 to 60 seconds
Platform level down	40 to 50 seconds

Hydraulic Oil Specifications

Hydraulic Oil Specifications	
Hydraulic oil type	Chevron Rando HD MV equivalent
Viscosity grade	Multi-viscosity
Viscosity index	200
Cleanliness level, minimum	15/13
Water content, maximum	200 ppm

Chevron Rando HD MV oil is fully compatible and mixable with Shell Donax TG (Dexron III) oils.
Genie specifications require hydraulic oils which are designed to give maximum protection to hydraulic systems, have the ability to perform over a wide temperature range, and the viscosity index should exceed 140. They should provide excellent antiwear, oxidation, corrosion inhibition, seal conditioning, and foam and aeration suppression properties.

Optional fluids	
Biodegradable	Petro Canada Environ MV46 Statoil Hydra Way Bio Pa 32 BP Biohyd SE-S
Fire resistant	UCON Hydrolube HP-5046 Quintolubric 822
Mineral based	Shell Tellus T32 Shell Tellus T46 Chevron Aviation A

https://truckmanualshub.com/

SPECIFICATIONS

NOTICE Continued use of Chevron Aviation A hydraulic oil when ambient temperatures are consistently above 32°F / 0°C may result in component damage.

Note: Use Chevron Aviation A hydraulic oil when ambient temperatures are consistently below 0°F / -18°C.

Note: Use Shell Tellus T46 hydraulic oil when oil temperatures consistently exceed 205°F / 96°C.

Note: Genie specifications require additional equipment and special installation instructions for the approved optional fluids. Consult the Genie Industries Service Department before use.

Hydraulic Component Specifications

Drive pump	
Type: bi-directional variable displacement piston pump	
Displacement	0 to 2.8 cu in 0 to 46 cc
Flow rate @ 2300 rpm	0 to 30.3 gpm 0 to 114.7 L/min
Drive pressure, maximum	3750 psi 259 bar
Charge pump	
Type:	gerotor
Displacement	0.85 cu in 13.9 cc
Flow rate @ 2300 rpm	9 gpm 34.1 L/min
Charge pressure @ 2300 rpm Neutral position	310 psi 21.4 bar
Function pump	
Type:	variable displacement piston pump
Displacement	0 to 2.3 cu in 0 to 38 cc
Flow rate @ 2300 rpm	0 to 23 gpm 0 to 87 L/min
Auxiliary pump	
Type:	fixed displacement gear pump
Displacement - static	0.151 cu in 2.47 cc

https://truckmanualshub.com/

SPECIFICATIONS

Function manifold	
System relief pressure (measured at PTEST port)	3200 psi 221 bar
Boom down relief pressure (measured at PTEST port)	2400 psi 165 bar
Boom extend relief pressure (measured at PTEST port)	2400 psi 165 bar
Steer/axle extend flow regulator	3.5 gpm 13.2 L/min
Oscillate relief pressure	950 psi 65.5 bar
Drive manifold	
Hot oil relief pressure	280 psi 19.3 bar
Brake release pressure	
Wheel drive hubs	240 psi 16.5 bar
Drive motors	
Displacement per revolution, variable (2 speed motor)	0.9 to 2.7 cu in 14.7 to 45 cc
Hydraulic filters	
High pressure filter	Beta 3 ≥ 200
High pressure filter bypass pressure	102 psi 7 bar
Medium pressure filter	Beta 3 ≥ 200
Medium pressure filter bypass pressure	51 psi 3.5 bar
Hydraulic tank return filter	10 micron with 25 psi / 1.7 bar bypass

Valve Coil Resistance Specifications

Note: The following coil resistance specifications are at an ambient temperature of 68°F / 20°C. As valve coil resistance is sensitive to changes in air temperature, the coil resistance will typically increase or decrease by 4% for each 18°F / -7.8°C that your air temperature increases or decreases from 68°F / 20°C.

Valve coil resistance specifications	
Proportional solenoid valve (schematic items SE)	3.7 Ω
Proportional solenoid valve (schematic items SR and SF)	4.8 Ω
2 position 3 way solenoid valve (schematic items SJ)	4.1 Ω
2 position 3 way solenoid valve (schematic items SK)	9 Ω
3 position 4 way solenoid valve (schematic items SI and SL)	7.2 Ω
Solenoid valve, NO, Poppet (schematic items SP and SQ)	5.6 Ω

https://truckmanualshub.com/

SPECIFICATIONS

Continental TME27 Engine

Displacement	164 cu in 2.68 liters
Number of cylinders	4
Bore and stroke	3.58 x 4.06 inches 91 x 103.2 mm
Horsepower	59.03 @ 2500 rpm 44 kW @ 2500 rpm
Firing order	1 - 3 - 4 - 2
Compression ratio	8.2:1

Compression pressure
Pressure (psi or bar) of the lowest cylinder must be at least 75% of the highest cylinder.

Low idle - computer controlled Frequency	1600 rpm 53.33 Hz
High idle - computer controlled Frequency	2500 rpm 83.33 Hz

Valve clearance, warm	
Intake	0.014 in 0.36 mm
Exhaust	0.018 in 0.46 mm

Lubrication system	
Oil pressure	40-60 psi 2.8-4.1 bar
Oil capacity (including filter)	7 quarts 6.65 liters

Oil viscosity requirements

Units ship with 15W-40.
Extreme operating temperatures my require the use of alternative engine oils. For oil requirements, refer to the Engine Operator Handbook on your machine.

Fuel Requirement

For fuel requirements, refer to the engine Operator's Manual on your machine.

Electronic fuel pump	
Fuel pressure, static	55 psi 3.8 bar
Fuel flow rate	0.42 gpm 1.59 L/min

Batteries	
Type	12V DC
Group	31
Quantity	1
Cold cranking ampere	1000A
Reserve capacity @ 25A rate	200 minutes
Alternator output	65A @ 13.8V DC
Fan belt deflection	1/2 inch 12 mm

https://truckmanualshub.com/

SPECIFICATIONS

Deutz TD2011L04i Engine

Displacement	189.6 cu in 3.1 liters
Number of cylinders	4
Bore and stroke	3.7 x 4.409 inches 94 x 112 mm
Horsepower	
Continuous	69.1 @ 2500 rpm
Net intermittent	72.8 @ 2500 rpm
Continuous	51.5 KW @ 2500 rpm
Net intermittent	54.3 KW @ 2500 rpm
Firing order	1 - 3 - 4 - 2
Low idle	1300 rpm
Frequency	331.5 Hz
High idle	2350 rpm
Frequency	599.3 Hz
Compression ratio	17.5:1

Compression pressure
Pressure (psi or bar) of the lowest cylinder must be at least 75% of the highest cylinder.

Governor	centrifugal mechanical
Valve clearance, cold	
Intake	0.012 in 0.3 mm
Exhaust	0.020 in 0.5 mm
Lubrication system	
Minimum oil pressure, hot (at 1300 rpm)	21.8 psi 1.5 bar
Oil capacity (including filter)	12.8 quarts 12.1 liters

Oil viscosity requirements

Units ship with 15W-40.
Extreme operating temperatures my require the use of alternative engine oils. For oil requirements, refer to the Engine Operator Handbook on your machine.

Oil temperature switch	
Oil temperature switch point	284°F 140°C
Oil pressure switch	
Oil pressure switch point	22 psi 1.5 bar
Fuel injection system	
Injection pump make	Bosch
Injection pump pressure, maximum	15,000 psi/1034 bar
Injector opening pressure	3046 psi 210 bar

Fuel Requirement

For fuel requirements, refer to the engine Operator's Manual on your machine.

Batteries	
Type	12V DC
Group	31
Quantity	1
Cold cranking ampere	1000A
Reserve capacity @ 25A rate	200 minutes
Alternator output	80A @ 14V DC
Fan belt deflection	3/8 to 1/2 inch 9 to 12 mm

https://truckmanualshub.com/

SPECIFICATIONS

Perkins 804D-33 Engine

Displacement	201 cu in 3.3 liters
Number of cylinders	4
Bore and stroke	3.70 x 4.72 inches 94 x 120 mm
Horsepower	63 @ 2600 rpm 47 KW @ 2600 rpm
Firing order	1 - 3 - 4 - 2
Compression ratio	22:1
Compression pressure	300 to 500 psi 20.7 to 34.5 bar

Pressure (psi or bar) of lowest cylinder must be within 50 psi / 3.45 bar of highest cylinder

Low idle	1650 rpm
Frequency	335.5 Hz
High idle	2300 rpm
Frequency	467.7 Hz
Governor	mechanical all speed

Valve clearance, cold	
Intake	0.0098 in 0.25 mm
Exhaust	0.0098 in 0.25 mm

Lubrication system	
Oil pressure @ 2000 rpm	40-60 psi 2.8-4.1 bar
Oil capacity (including filter)	10.6 quarts 10 liters

Oil viscosity requirements

Units ship with 15W-40.
Extreme operating temperatures my require the use of alternative engine oils. For oil requirements, refer to the Engine Operator Handbook on your machine.

Injection system	
Injection pump make	Zexel
Injection pump pressure	1707 to 1849 psi 117.7 to 127.5 bar
Injector opening pressure	~2000 psi ~138 bar

Fuel Requirement

For fuel requirements, refer to the engine Operator's Manual on your machine.

Engine coolant	
Capacity	12.5 quarts 11.8 liters

Batteries	
Type	12V DC
Group	31
Quantity	1
Cold cranking ampere	1000A
Reserve capacity @ 25A rate	200 minutes
Alternator output	90A, 12V DC
Fan belt deflection	3/8 to 1/2 in 9 to 12 mm

https://truckmanualshub.com/

SPECIFICATIONS

Machine Torque Specifications

Platform rotator	
1-8 center bolt, GR 5, lubricated	480 ft-lbs 651 Nm
3/8 -16 bolts, GR 8 *(use blue thread locking compound)	35 ft-lbs* 47 Nm*
Turntable rotate assembly	
Rotate bearing mounting bolts, lubricated	180 ft-lbs 244 Nm
Rotate drive hub mounting bolts, lubricated	80 ft-lbs 108 Nm
Backlash plate mounting bolts, lubricated	280 ft-lbs 379 Nm
Drive motor and hubs	
Drive hub mounting bolts, dry	210 ft-lbs 284 Nm
Drive hub mounting bolts, lubricated *(use blue thread locking compound)	160 ft-lbs* 217 Nm
Drive motor mounting bolts, dry	110 ft-lbs 149 Nm
Drive motor mounting bolts, lubricated *(use blue thread locking compound)	80 ft-lbs* 108 Nm
Drive hub oil plug, O-ring seal	13 ft-lbs 18 Nm

Manifold Component Specifications

Plug torque	
SAE No. 2	50 in-lbs / 6 Nm
SAE No. 4	14 ft-lbs / 18.9 Nm
SAE No. 6	23 ft-lbs / 31.2 Nm
SAE No. 8	36 ft-lbs / 48.8 Nm
SAE No. 10	62 ft-lbs / 84.1 Nm
SAE No. 12	84 ft-lbs / 113.9 Nm

https://truckmanualshub.com/

SPECIFICATIONS

Hydraulic Hose and Fitting Torque Specifications

Your machine is equipped with Parker Seal-Lok® fittings and hose ends. Genie specifications require that fittings and hose ends be torqued to specification when they are removed and installed or when new hoses or fittings are installed.

SAE O-ring Boss Port
(tube fitting - installed into Aluminum)

SAE Dash size	Torque
-4	14 ft-lbs / 18.9 Nm
-6	23 ft-lbs / 31.2 Nm
-8	36 ft-lbs / 48.8 Nm
-10	62 ft-lbs / 84.1 Nm
-12	84 ft-lbs / 113.9 Nm
-16	125 ft-lbs / 169.5 Nm
-20	151 ft-lbs / 204.7 Nm
-24	184 ft-lbs / 250 Nm

Seal-Lok® fittings

1 Replace the O-ring. The O-ring must be replaced anytime the seal has been broken. The O-ring cannot be re-used if the fitting or hose end has been tightened beyond finger tight.

Note: The O-rings used in the Parker Seal Lok® fittings and hose ends are custom-size O-rings. They are not standard SAE size O-rings. They are available in the O-ring field service kit (Genie part number 49612).

2 Lubricate the O-ring before installation.

3 Be sure that the face seal O-ring is seated and retained properly.

4 Position the tube and nut squarely on the face seal end of the fitting and tighten the nut finger tight.

5 Tighten the nut or fitting to the appropriate torque per given size as shown in the table.

6 Operate all machine functions and inspect the hoses and fittings and related components to confirm that there are no leaks.

SAE O-ring Boss Port
(tube fitting - installed into Steel)

SAE Dash size	Torque
-4	15 ft-lbs / 20.3 Nm
-6	35 ft-lbs / 47.5 Nm
-8	60 ft-lbs / 81.3 Nm
-10	100 ft-lbs / 135.6 Nm
-12	135 ft-lbs / 183 Nm
-16	200 ft-lbs / 271 Nm
-20	250 ft-lbs / 334 Nm
-24	305 ft-lbs / 414 Nm

Seal-Lok® Fittings
(hose end)

SAE Dash size	Torque
-4	18 ft-lbs / 24.4 Nm
-6	30 ft-lbs / 40 Nm
-8	40 ft-lbs / 55 Nm
-10	60 ft-lbs / 80 Nm
-12	85 ft-lbs / 115 Nm
-16	110 ft-lbs / 150 Nm
-20	140 ft-lbs / 190 Nm
-24	180 ft-lbs / 245 Nm

https://truckmanualshub.com/

SPECIFICATIONS

SAE FASTENER TORQUE CHART

• This chart is to be used as a guide only unless noted elsewhere in this manual •

SIZE	THREAD	Grade 5				Grade 8				A574 High Strength Black Oxide Bolts	
		LUBED		DRY		LUBED		DRY		LUBED	
		in-lbs	Nm	in-lbs	Nm	in-lbs	Nm	in-lbs	Nm	in-lbs	Nm
1/4	20	80	9	100	11.3	110	12.4	140	15.8	130	14.7
	28	90	10.1	120	13.5	120	13.5	160	18	140	15.8
		LUBED		DRY		LUBED		DRY		LUBED	
		ft-lbs	Nm	ft-lbs	Nm	ft-lbs	Nm	ft-lbs	Nm	ft-lbs	Nm
5/16	18	13	17.6	17	23	18	24	25	33.9	21	28.4
	24	14	19	19	25.7	20	27.1	27	36.6	24	32.5
3/8	16	23	31.2	31	42	33	44.7	44	59.6	38	51.5
	24	26	35.2	35	47.4	37	50.1	49	66.4	43	58.3
7/16	14	37	50.1	49	66.4	50	67.8	70	94.7	61	82.7
	20	41	55.5	55	74.5	60	81.3	80	108.4	68	92.1
1/2	13	57	77.3	75	101.6	80	108.4	110	149	93	126
	20	64	86.7	85	115	90	122	120	162	105	142
9/16	12	80	108.4	110	149	120	162	150	203	130	176
	18	90	122	120	162	130	176	170	230	140	189
5/8	11	110	149	150	203	160	217	210	284	180	244
	18	130	176	170	230	180	244	240	325	200	271
3/4	10	200	271	270	366	280	379	380	515	320	433
	16	220	298	300	406	310	420	420	569	350	474
7/8	9	320	433	430	583	450	610	610	827	510	691
	14	350	474	470	637	500	678	670	908	560	759
1	8	480	650	640	867	680	922	910	1233	770	1044
	12	530	718	710	962	750	1016	990	1342	840	1139
1 1/8	7	590	800	790	1071	970	1315	1290	1749	1090	1477
	12	670	908	890	1206	1080	1464	1440	1952	1220	1654
1 1/4	7	840	1138	1120	1518	1360	1844	1820	2467	1530	2074
	12	930	1260	1240	1681	1510	2047	2010	2725	1700	2304
1 1/2	6	1460	1979	1950	2643	2370	3213	3160	4284	2670	3620
	12	1640	2223	2190	2969	2670	3620	3560	4826	3000	4067

METRIC FASTENER TORQUE CHART

• This chart is to be used as a guide only unless noted elsewhere in this manual •

Size	Class 4.6				Class 8.8				Class 10.9				Class 12.9			
(mm)	LUBED		DRY		LUBED		DRY		LUBED		DRY		LUBED		DRY	
	in-lbs	Nm	in-lbs	Nm	in-lbs	Nm	in-lbs	Nm	in-lbs	Nm	in-lbs	Nm	in-lbs	Nm	in-lbs	Nm
5	16	1.8	21	2.4	41	4.63	54	6.18	58	6.63	78	8.84	68	7.75	91	10.3
6	19	3.05	36	4.07	69	7.87	93	10.5	100	11.3	132	15	116	13.2	155	17.6
7	45	5.12	60	6.83	116	13.2	155	17.6	167	18.9	223	25.2	1.95	22.1	260	29.4
	LUBED		DRY		LUBED		DRY		LUBED		DRY		LUBED		DRY	
	ft-lbs	Nm	ft-lbs	Nm	ft-lbs	Nm	ft-lbs	Nm	ft-lbs	Nm	ft-lbs	Nm	ft-lbs	Nm	ft-lbs	Nm
8	5.4	7.41	7.2	9.88	14	19.1	18.8	25.5	20.1	27.3	26.9	36.5	23.6	32	31.4	42.6
10	10.8	14.7	14.4	19.6	27.9	37.8	37.2	50.5	39.9	54.1	53.2	72.2	46.7	63.3	62.3	84.4
12	18.9	25.6	25.1	34.1	48.6	66	64.9	88	69.7	94.5	92.2	125	81	110	108	147
14	30.1	40.8	40	54.3	77.4	105	103	140	110	150	147	200	129	175	172	234
16	46.9	63.6	62.5	84.8	125	170	166	226	173	235	230	313	202	274	269	365
18	64.5	87.5	86.2	117	171	233	229	311	238	323	317	430	278	377	371	503
20	91	124	121	165	243	330	325	441	337	458	450	610	394	535	525	713
22	124	169	166	225	331	450	442	600	458	622	612	830	536	727	715	970
24	157	214	210	285	420	570	562	762	583	791	778	1055	682	925	909	1233

https://truckmanualshub.com/

Scheduled Maintenance Procedures

Observe and Obey:

- ☑ Maintenance inspections shall be completed by a person trained and qualified on the maintenance of this machine.
- ☑ Scheduled maintenance inspections shall be completed daily, quarterly, six months, annually and every two years as specified on the *Maintenance Inspection Report.* The frequency and extent of periodic examinations and tests may also depend on national regulations.

WARNING Failure to perform each procedure as presented and scheduled could result in death, serious injury or substantial machine damage.

- ☑ Immediately tag and remove from service a damaged or malfunctioning machine.
- ☑ Repair any machine damage or malfunction before operating machine.
- ☑ Use only Genie approved replacement parts.
- ☑ Machines that have been out of service for a period longer than three months must complete the quarterly inspection.
- ☑ Unless otherwise specified, perform each procedure with the machine in the following configuration:
  - Machine parked on a firm, level surface
  - Boom in the stowed position
  - Turntable rotated with the boom between the non-steer (yellow arrow) wheels
  - Turntable secured with the turntable rotation lock pin
  - Key switch in the off position with the key removed
  - Wheels chocked
  - All external AC power supply disconnected from the machine

About This Section

This section contains detailed procedures for each scheduled maintenance inspection.

Each procedure includes a description, safety warnings and step-by-step instructions.

Symbols Legend

Safety alert symbol—used to alert personnel to potential personal injury hazards. Obey all safety messages that follow this symbol to avoid possible injury or death.

DANGER Used to indicate the presence of an imminently hazardous situation which, if not avoided, will result in death or serious injury.

WARNING Used to indicate the presence of a potentially hazardous situation which, if not avoided, could result in death or serious injury.

CAUTION With safety alert symbol—used to indicate the presence of a potentially hazardous situation which, if not avoided, may result in minor or moderate injury.

NOTICE Used to indicate the presence of a potentially hazardous situation which, if not avoided, may result in property damage.

Note: Used to indicate operation or maintenance information.

⊙ Indicates that a specific result is expected after performing a series of steps.

☒ Indicates that an incorrect result has occurred after performing a series of steps.

https://truckmanualshub.com/

SCHEDULED MAINTENANCE PROCEDURES

Maintenance Symbols Legend

Note: The following symbols have been used in this manual to help communicate the intent of the instructions. When one or more of the symbols appear at the beginning of a maintenance procedure, it conveys the meaning below.

Indicates that tools will be required to perform this procedure.

Indicates that new parts will be required to perform this procedure.

Indicates that a cold engine will be required to perform this procedure.

Indicates that a warm engine will be required to perform this procedure.

Indicates that dealer service is required to perform this procedure.

Pre-delivery Preparation Report

The pre-delivery preparation report contains checklists for each type of scheduled inspection.

Make copies of the *Pre-delivery Preparation Report* to use for each inspection. Store completed forms as required.

Maintenance Schedule

There are five types of maintenance inspections that must be performed according to a schedule—daily, quarterly, six months, annual, and two year. To account for repeated procedures, the *Scheduled Maintenance Procedures Section* and the *Maintenance Inspection Report* have been divided into five subsections—A, B, C, D and E. Use the following chart to determine which group(s) of procedures are required to perform a scheduled inspection.

Inspection	Checklist
Daily or every 8 hours	A
Quarterly or every 250 hours	A + B
Six month or every 500 hours	A + B + C
Annual or every 1000 hours	A + B + C + D
Two year or every 2000 hours	A + B + C + D + E

Maintenance Inspection Report

The maintenance inspection report contains checklists for each type of scheduled inspection.

Make copies of the *Maintenance Inspection Report* to use for each inspection. Maintain completed forms for a minimum of four years or in compliance with employer, jobsite and governmental regulations and requirements.

https://truckmanualshub.com/

Pre-Delivery Preparation

Fundamentals

It is the responsibility of the dealer to perform the Pre-delivery Preparation.

The Pre-delivery Preparation is performed prior to each delivery. The inspection is designed to discover if anything is apparently wrong with a machine before it is put into service.

A damaged or modified machine must never be used. If damage or any variation from factory delivered condition is discovered, the machine must be tagged and removed from service.

Repairs to the machine may only be made by a qualified service technician, according to the manufacturer's specifications.

Scheduled maintenance inspections shall be performed by qualified service technicians, according to the manufacturer's specifications and the requirements listed in the responsibilities manual.

Instructions

Use the operator's manual on your machine.

The Pre-delivery Preparation consists of completing the Pre-operation Inspection, the Maintenance items and the Function Tests.

Use this form to record the results. Place a check in the appropriate box after each part is completed. Follow the instructions in the operator's manual.

If any inspection receives an N, remove the machine from service, repair and reinspect it. After repair, place a check in the R box.

Legend

Y = yes, completed
N = no, unable to complete
R = repaired

Comments

Pre-Delivery Preparation	Y	N	R
Pre-operation inspection completed			
Maintenance items completed			
Function tests completed			

Model

Serial number

Date

Machine owner

Inspected by (print)

Inspector signature

Inspector title

Inspector company

Genie®
A TEREX BRAND

Terex South Dakota, Inc USA
500 Oak Wood Road
PO Box 1150
Watertown, SD 57201-6150
(605) 882-4000

Genie UK
The Maltings, Wharf Road
Grantham, Lincolnshire
NG31- 6BH England
(44) 1476-584333

Copyright © 2011 Terex Corporation. Genie® is a registered trademark of Terex South Dakota, Inc. 133192 Rev D

https://truckmanualshub.com/

This page intentionally left blank.

https://truckmanualshub.com/

Maintenance Inspection Report

Model

Serial number

Date

Hour meter

Machine owner

Inspected by (print)

Inspector signature

Inspector title

Inspector company

Instructions

- Make copies of this report to use for each inspection.
- Select the appropriate checklist(s) for the type of inspection to be performed.

☐	**Daily or 8 hour Inspection:**	**A**
☐	**Quarterly or 250 hour Inspection:**	**A+B**
☐	**Six Month or 500 hour Inspection:**	**A+B+C**
☐	**Annual or 1000 hour Inspection:**	**A+B+C+D**
☐	**2 Year or 2000 hour Inspection:**	**A+B+C+D+E**

- Place a check in the appropriate box after each inspection procedure is completed.
- Use the step-by-step procedures in this section to learn how to perform these inspections.
- If any inspection receives an “N”, tag and remove the machine from service, repair and re-inspect it. After repair, place a check in the “R” box.

Legend

Y = yes, acceptable

N = no, remove from service

R = repaired

Checklist A		**Y**	**N**	**R**
A-1	Inspect the manuals and decals			
A-2	Pre-operation inspection			
A-3	Engine maintenance			
A-4	Function tests			
A-5	Oscillate axle			
A-6	Filter condition indicator			
Perform after 40 hours:				
A-7	30 day service			
Perform after 50 hours:				
A-8	Engine maintenance - Deutz and Continental models			
Perform every 100 hours:				
A-9	Inspect filter/separator - Diesel models			
A-10	Grease rotation bearing			
A-11	Engine maintenance			
Perform after 150 hours:				
A-12	Replace Drive Hub oil			
Perform every 200 hours:				
A-13	Engine maintenance - Perkins models			

Checklist B		**Y**	**N**	**R**
B-1	Battery(s)			
B-2	Electrical wiring			
B-3	Key switch			
B-4	Exhaust system			
B-5	Engine air filter			
B-6	Oil cooler and fins-Deutz models			
B-7	Brake configuration			
B-8	Tires, wheels and lug nut torque			
B-9	Drive hub maintenance			
B-10	Engine RPM			
B-11	Engine maintenance			
B-12	Oscillate directional Control			
B-13	Ground control override			
B-14	Platform self-leveling			
B-15	Engine idle select			
B-16	Fuel select operation			
B-17	Drive enable system			
B-18	Drive brakes			
B-19	Drive speed-stowed			
B-20	Drive speed-raised or extended			
B-21	Alarm package and descent alarm			
B-22	Fuel and hydraulic tank venting systems			
B-23	Hydraulic oil analysis			
B-24	Inspect the Boom Extend/Retract Cables			

Comments

https://truckmanualshub.com/

MAINTENANCE INSPECTION REPORT

Model

Serial number

Date

Hour meter

Machine owner

Inspected by (print)

Inspector signature

Inspector title

Inspector company

Instructions

- Make copies of this report to use for each inspection.
- Select the appropriate checklist(s) for the type of inspection to be performed.

☐	**Daily or 8 hour Inspection:**	**A**
☐	**Quarterly or 250 hour Inspection:**	**A+B**
☐	**Six Month or 500 hour Inspection:**	**A+B+C**
☐	**Annual or 1000 hour Inspection:**	**A+B+C+D**
☐	**2 Year or 2000 hour Inspection:**	**A+B+C+D+E**

- Place a check in the appropriate box after each inspection procedure is completed.
- Use the step-by-step procedures in this section to learn how to perform these inspections.
- If any inspection receives an “N”, tag and remove the machine from service, repair and re-inspect it. After repair, place a check in the “R” box.

Legend

Y = yes, acceptable
N = no, remove from service
R = repaired

Checklist C		**Y**	**N**	**R**
C-1	Engine maintenance			
C-2	Grease platform overload (if equipped)			
C-3	Test the platform overload (if equipped)			
C-4	Air filter element			
C-5	Replace filter/separator Deutz and Perkins models			
C-6	Safety envelope S-80X			

Checklist D		**Y**	**N**	**R**
D-1	Boom wear pads			
D-2	Free-wheel configuration			
D-3	Turntable rotation bearing bolts			
D-4	Turntable bearing wear			
D-5	Engine maintenance			
D-6	Replace hydraulic filters			
D-7	Drive hub oil			
Perform every 1500 hours:				
D-8	Engine maintenance - Deutz models			

Checklist E		**Y**	**N**	**R**
E-1	Hydraulic oil			
E-2	Engine maintenance - Perkins models			
Perform every 3000 hours:				
E-3	Engine maintenance - Deutz and Perkins models			
Perform every 10 years:				
E-4	Replace the Boom Extend/Retract Cables			

Comments

https://truckmanualshub.com/

Checklist A Procedures

A-1
Inspect the Manuals and Decals

Genie specifications require that this procedure be performed daily.

Maintaining the operator’s and safety manuals in good condition is essential to safe machine operation. Manuals are included with each machine and should be stored in the container provided in the platform. An illegible or missing manual will not provide safety and operational information necessary for a safe operating condition.

In addition, maintaining all of the safety and instructional decals in good condition is mandatory for safe machine operation. Decals alert operators and personnel to the many possible hazards associated with using this machine. They also provide users with operation and maintenance information. An illegible decal will fail to alert personnel of a procedure or hazard and could result in unsafe operating conditions.

1 Check to make sure that the operator's and safety manuals are present and complete in the storage container on the platform.

2 Examine the pages of each manual to be sure that they are legible and in good condition.

Result: The operator's manual is appropriate for the machine and all manuals are legible and in good condition.

Result: The operator's manual is not appropriate for the machine or all manuals are not in good condition or is illegible. Remove the machine from service until the manual is replaced.

3 Open the operator's manual to the decals inspection section. Carefully and thoroughly inspect all decals on the machine for legibility and damage.

Result: The machine is equipped with all required decals, and all decals are legible and in good condition.

Result: The machine is not equipped with all required decals, or one or more decals are illegible or in poor condition. Remove the machine from service until the decals are replaced.

4 Always return the manuals to the storage container after use.

Note: Contact your authorized Genie distributor or Genie Industries if replacement manuals or decals are needed.

https://truckmanualshub.com/

CHECKLIST A PROCEDURES

A-2
Perform Pre-operation Inspection

Genie specifications require that this procedure be performed daily.

Completing a pre-operation inspection is essential to safe machine operation. The pre-operation inspection is a visual inspection performed by the operator prior to each work shift. The inspection is designed to discover if anything is apparently wrong with a machine before the operator performs the function tests. The pre-operation inspection also serves to determine if routine maintenance procedures are required.

Complete information to perform this procedure is available in the appropriate operator's manual. Refer to the Operator's Manual on your machine.

A-3
Perform Engine Maintenance

Engine specifications require that this procedure be performed daily or every 8 hours, whichever comes first.

Proper engine maintenance, following the engine manufacturer's maintenance schedule, is essential to good engine performance and service life. Failure to perform the maintenance procedures can lead to poor engine performance and component damage.

Required maintenance procedures and additional engine information are available in the:

Deutz TD2011 Operation Manual	
Genie part number	139320
Perkins 804D-33 Operation and Maintenance Manual	
Genie part number	111332
Continental TME27 Owner's Manual	
Genie part number	111901

To access the engine:

1 Remove the engine tray retaining fastener located under the engine tray. Swing the engine tray out away from the machine and secure it from moving.

WARNING Crushing hazard. Failure to install the fastener into the engine tray anchor hole to secure the engine tray from moving could result in death or serious injury.

https://truckmanualshub.com/

A-4
Perform Function Tests

Genie specifications require that this procedure be performed daily.

Completing the function tests is essential to safe machine operation. Function tests are designed to discover any malfunctions before the machine is put into service. A malfunctioning machine must never be used. If malfunctions are discovered, the machine must be tagged and removed from service.

Complete information to perform this procedure is available in the appropriate operator's manual. Refer to the Operator's Manual on your machine.

A-5
Test the Oscillate Axle

Genie specifications require that this procedure be performed daily.

Proper axle oscillation is essential to safe machine operation. If the axle oscillation system is not operating correctly, the stability of the machine is compromised and it may tip over.

DANGER Tip-over hazard. Failure to perform this procedure on a firm, level surface will compromise the stability of the machine and could result in the machine tipping over.

1 Start the engine from the platform controls.

2 Drive the right steer tire up onto a 6 inch / 15 cm block or curb.

⊙ Result: The three remaining tires should stay in firm contact with the ground and the chassis should remain level at all times.

3 Drive the left steer tire up onto a 6 inch / 15 cm block or curb.

⊙ Result: The three remaining tires should stay in firm contact with the ground and the chassis should remain level at all times.

4 Drive both steer tires up onto a 6 inch / 15 cm block or curb.

⊙ Result: The non-steer tires should stay in firm contact with the ground.

Note: If the chassis does not remain level during the test, refer to Repair Procedure 14-2, *How to Set Up the Directional Valve Linkage.*

https://truckmanualshub.com/

CHECKLIST A PROCEDURES

A-6
Check the High Pressure Hydraulic Filter Condition Indicator

Genie specifications require that this procedure be performed daily or every 8 hours, whichever comes first.

Maintaining the high pressure hydraulic filter in good condition is essential to good system performance and safe machine operation. The filter condition indicator will show when the hydraulic flow is bypassing a clogged filter. If the filter is not frequently checked and replaced, impurities will remain in the hydraulic system and cause component damage.

1 Open the engine side turntable cover.

2 Start the engine from the ground controls.

3 Change the engine idle to high rpm (rabbit symbol).

4 Visually inspect the filter condition indicator.

⊙ Result: The filter condition indicator should be operating with the plunger in the green area.

⊠ Result: If the indicator displays the plunger in the red area, this indicates that the hydraulic filter is being bypassed and the filter should be replaced. See D-6, *Replace the Hydraulic Filters.*

A-7
Perform 30 Day Service

The 30 day maintenance procedure is a one time sequence of procedures to be performed after the first 30 days or 40 hours of usage, whichever comes first. After this interval, refer to the maintenance tables for continued scheduled maintenance.

1 Perform the following maintenance procedures:

- A-10 Grease the Turntable Rotation Bearing and Rotate Gear
- B-8 Inspect the Tires, Wheels and Lug Nut Torque
- B-9 Check the Drive Hub Oil Level and Fastener Torque
- B-24 Inspect the Boom Extend/Retract Cables
- D-4 Check the Turnable Rotation Bearing Bolts
- D-7 Replace the Hydraulic Filter Elements

https://truckmanualshub.com/

CHECKLIST A PROCEDURES

A-8
Perform Engine Maintenance - Deutz and Continental Models

Engine specifications require that this one-time procedure be performed after the first 50 hours of operation.

Proper engine maintenance, following the engine manufacturer's maintenance schedule, is essential to good engine performance and service life. Failure to perform the maintenance procedures can lead to poor engine performance and component damage.

Required maintenance procedures for commissioning new and overhauled engines and additional engine information are available in the:

Deutz TD2011 Operation Manual	
Genie part number	139320
Continental TME27 Owner's Manual	
Genie part number	111901

To access the engine:

1 Remove the engine tray retaining fastener located under the engine tray. Swing the engine tray out away from the machine and secure it from moving.

WARNING Crushing hazard. Failure to install the fastener into the engine tray anchor hole to secure the engine tray from moving could result in death or serious injury.

A-9
Inspect the Fuel Filter/Water Separator - Diesel Models

Genie specifications require that this procedure be performed every 100 hours or monthly, whichever comes first.

Proper maintenance of the fuel filter/water separator is essential for good engine performance. Failure to perform this procedure can lead to poor engine performance and/or hard starting, and continued use may result in component damge. Extremely dirty conditions may require this procedure be performed more often.

DANGER Explosion and fire hazard. Engine fuels are combustible. Perform this procedure in an open, well-ventilated area away from heaters, sparks, flames and lighted tobacco. Always have an approved fire extinguisher within easy reach.

Note: Perform this procedure with the engine off.

Perkins Models:

1 Put on protective clothing and eye wear.

2 Open the engine side turntable cover and locate the fuel filter/water separator next to the hydraulic return filter on the bulkhead.

3 Inspect the filter bowl for water buildup.

⊙ Result: If water is present in the filter bowl continue with steps 4 through 8.

https://truckmanualshub.com/

CHECKLIST A PROCEDURES

4 Loosen the vent plug located on the fuel filter/ water separator head.

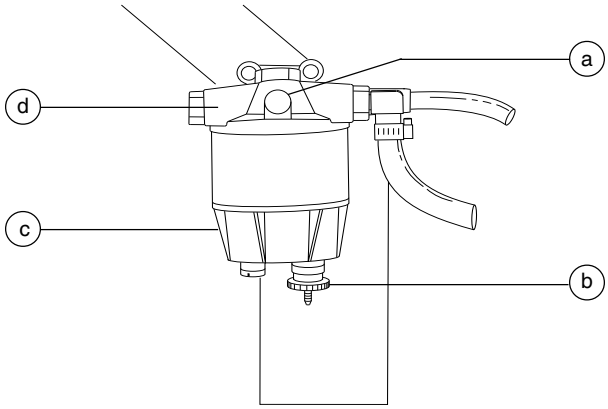

a vent plug
b drain plug
c filter bowl
d separator head

5 Loosen the drain plug located at the bottom of the bowl. Allow the water to drain into a suitable container until fuel starts to come out. Immediately tighten the drain plug.

6 Tighten the vent plug.

Note: If the fuel filter/water separator is completely drained, you must prime the fuel filter/water separator before starting the engine. See C-6, *Replace The Fuel Filter/Water Separator Element - Perkins Models,* for instructions on how to prime the fuel filter/water separator.

7 Clean up any fuel that may have spilled.

8 Start the engine from the ground controls and check the fuel filter/water separator and vent plug for leaks.

DANGER Explosion and fire hazard. If a fuel leak is discovered, keep any additional personnel from entering the area and do not operate the machine. Repair the leak immediately.

Deutz Models:

1 Put on protective clothing and eye wear.

2 Remove the engine tray retaining fastener located under the engine tray. Swing the engine tray out and away from the machine.

3 Install the fastener that was just removed through the engine tray and into the engine tray anchor hole in the turntable.

WARNING Crushing hazard. Failure to install the fastener into the engine tray anchor hole to secure the engine tray from moving could result in death or serious injury.

4 Locate the fuel filter/water separator next to the oil filter.

https://truckmanualshub.com/

5 Loosen the drain plug located at the bottom of the filter. Allow the water to drain into a suitable container until fuel starts to come out. Immediately tighten the drain plug.

Note: Do not completely drain the filter.

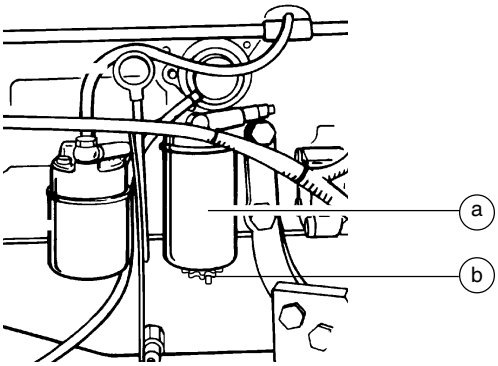

a fuel filter/water separator
b drain valve

6 Clean up any fuel that may have spilled.

7 Start the engine from the ground controls and check the fuel filter/water separator for leaks.

DANGER Explosion and fire hazard. If a fuel leak is discovered, keep any additional personnel from entering the area and do not operate the machine. Repair the leak immediately.

8 Swing the engine back to its original position and install the engine pivot plate retaining fastener.

A-10
Grease the Turntable Rotation Bearing and Rotate Gear

Genie specifications require that this procedure be performed every 100 hours of operation. Perform this procedure more often if dusty conditions exist.

Frequent application of lubrication to the turntable bearing and rotate gear is essential to good machine performance and service life. Continued use of an improperly greased bearing and gear will result in component damage.

1 Locate the grease fitting on the platform end of the tank side bulkhead.

2 Pump grease into the turntable rotation bearing. Rotate the turntable in increments of 4 to 5 inches / 10 to 13 cm at a time and repeat this step until the entire bearing has been greased.

3 Apply grease to each tooth of the drive gear, located under the turntable.

Grease Specification
Chevron Ultra-duty grease, EP NLGI 2 (lithium based) or equivalent

https://truckmanualshub.com/

CHECKLIST A PROCEDURES

A-11
Perform Engine Maintenance

Engine specifications require that this procedure be performed every 100 hours.

Proper engine maintenance, following the engine manufacturer's maintenance schedule, is essential to good engine performance and service life. Failure to perform the maintenance procedures can lead to poor engine performance and component damage.

Required maintenance procedures and additional engine information are available in the:

Deutz TD2011 Operation Manual	
Genie part number	139320
Perkins 804D-33 Operation and Maintenance Manual	
Genie part number	111332
Continental TME27 Owner's Manual	
Genie part number	111901

To access the engine:

1 Remove the engine tray retaining fastener located under the engine tray. Swing the engine tray out away from the machine and secure it from moving.

WARNING Crushing hazard. Failure to install the fastener into the engine tray anchor hole to secure the engine tray from moving could result in death or serious injury.

https://truckmanualshub.com/

A-12
Replace the Drive Hub Oil

Manufacturer specifications require that this one-time procedure be performed after the first 150 hours.

Replacing the drive hub oil is essential for good machine performance and service life. Failure to replace the drive hub oil after the initial 150 hours of use may cause the machine to perform poorly and continued use may cause component damage.

Drive hubs:

1 Select the drive hub to be serviced. Drive the machine until one of the two plugs is at the lowest point.

2 Remove both plugs and drain the oil into a suitable container.

3 Drive the machine until one plug is at the top and the other is at 90 degrees.

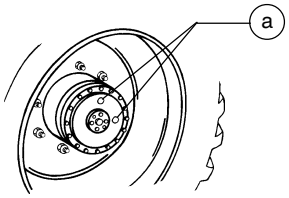

a. models with o-ring plugs

4 Fill the hub with oil from the top hole until the oil level is even with the bottom of the side plug hole. Install the plugs.

5 Install the plugs into the drive hub. Torque to Specification. Refer to Section 2, *Specifications*.

6 Repeat steps 1 through 4 for the other drive hub.

7 Check the torque of the drive hub mounting bolts. Refer to Section 2, *Specifications*.

Turntable rotate drive hub:

Note: When removing a hose assembly or fitting, the O-ring on the fitting and/or hose end must be replaced and then torqued to specification during installation. Refer to Section 2, *Hydraulic Hose and Fitting Torque Specifications.*

1 Secure the turntable from rotating with the turntable rotation lock pin.

Note: The turntable rotation lock pin is located next to the boom rest pad.

2 Tag, disconnect and plug the hydraulic hoses from the turntable rotate drive motor. Cap the fittings on the drive motor.

3 Attach a suitable lifting device to the lifting eyes located near the drive motor.

https://truckmanualshub.com/

CHECKLIST A PROCEDURES

4 Remove the drive hub mounting bolts. Carefully remove the turntable rotate drive hub assembly from the machine.

⚠WARNING Crushing hazard. The turntable rotate drive hub assembly could become unbalanced and fall if not properly supported by the lifting device.

5 Remove the plug the drive hub. Drain the oil from the hub into a suitable container.

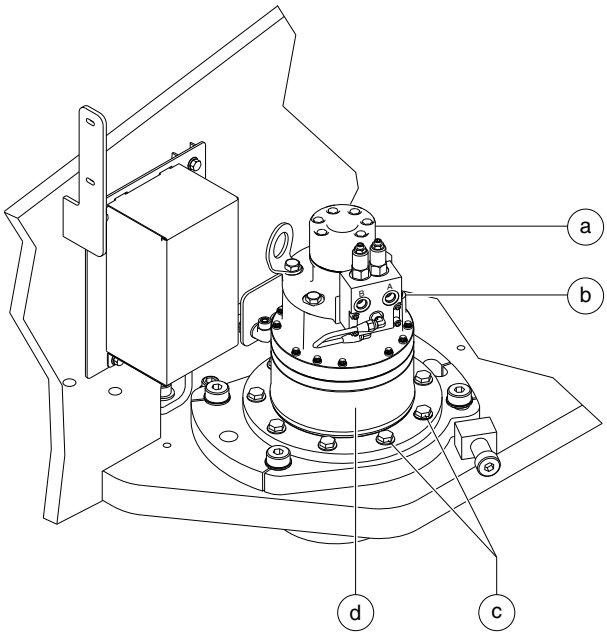

Single fill port rotator
a motor
b fill port
c drive hub mounting bolts
d drive hub

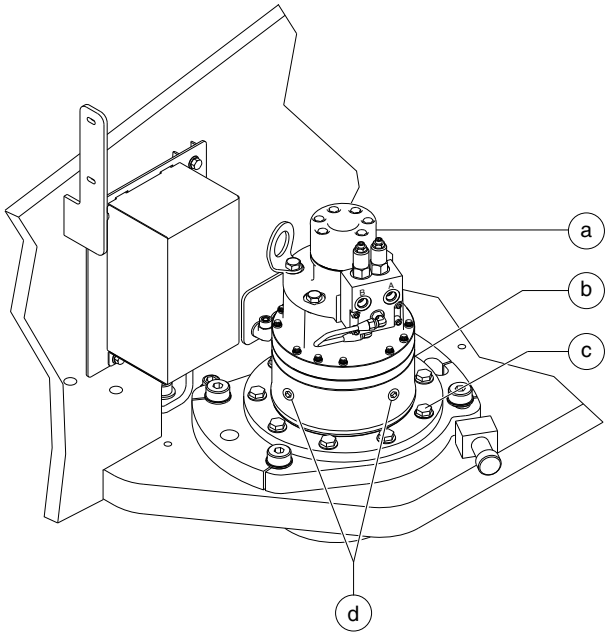

Dual fill port rotator
a motor
b drive hub
c drive hub mounting bolts
d fill ports

6 Install the drive hub assembly onto the machine. Torque the drive hub mounting bolts to specification. Refer to Section 2, *Specifications.*

7 Fill the drive hub with oil. Refer to Section 2, *Specifications.* Apply pipe thread sealant to the plug. Install the plug.

8 Adjust turntable rotation gear backlash. Refer to Repair Procedure 10-1, *How to Adjust the Turntable Rotation Gear Backlash.*

https://truckmanualshub.com/

A-13
Perform Engine Maintenance - Perkins Models

Engine specifications require that this procedure be performed every 200 hours.

Proper engine maintenance, following the engine manufacturer's maintenance schedule, is essential to good engine performance and service life. Failure to perform the maintenance procedures can lead to poor engine performance and component damage.

Required maintenance procedures and additional engine information are available in the:

Perkins 804D-33 Operation and Maintenance Manual Genie part number

To access the engine:

1 Remove the engine tray retaining fastener located under the engine tray. Swing the engine tray out away from the machine and secure it from moving.

WARNING Crushing hazard. Failure to install the fastener into the engine tray anchor hole to secure the engine tray from moving could result in death or serious injury.

https://truckmanualshub.com/

Checklist B Procedures

B-1
Inspect the Battery(s)

Genie specifications require that this procedure be performed every 250 hours or quarterly, whichever comes first.

Proper battery condition is essential to good engine performance and operational safety. Improper fluid levels or damaged cables and connections can result in engine component damage and hazardous conditions. A single battery configuraton is standard. A dual battery option is available, where one battery is used to start the engine and the other is used to power the control system and auxiliary power unit. The two batteries are charged by the alternator through a battery separator.

WARNING Electrocution/burn hazard. Contact with hot or live circuits could result in death or serious injury. Remove all rings, watches and other jewelry.

WARNING Bodily injury hazard. Batteries contain acid. Avoid spilling or contacting battery acid. Neutralize battery acid spills with baking soda and water.

1 Put on protective clothing and eye wear.

2 Be sure that the battery cable connections are free of corrosion.

Note: Adding terminal protectors and a corrosion preventative sealant will help eliminate corrosion on the battery terminals and cables.

3 Be sure that the battery hold downs and cable connections are tight.

4 Be sure that the battery separator wire connections are tight (if equipped).

5 Fully charge the battery(s) and allow the battery(s) to rest at least 6 hours.

6 Remove the battery vent caps and check the specific gravity of each battery cell with a hydrometer. Note the results.

7 Check the ambient air temperature and adjust the specific gravity reading for each cell as follows:

- Add 0.004 to the reading of each cell for every 10° / 5.5° C above 80° F / 26.7° C.
- Subtract 0.004 from the reading of each cell for every 10° / 5.5° C below 80° F / 26.7° C.

Result: All battery cells display an adjusted specific gravity of 1.277 or higher. The battery is fully charged. Proceed to step 11.

Result: One or more battery cells display a specific gravity of 1.217 or below. Proceed to step 8.

8 Perform an equalizing charge, OR fully charge the battery(s) and allow the battery(s) to rest at least 6 hours.

9 Remove the battery vent caps and check the specific gravity of each battery cell with a hydrometer. Note the results.

https://truckmanualshub.com/

10 Check the ambient air temperature and adjust the specific gravity reading for each cell as follows:

- Add 0.004 to the reading of each cell for every 10° / 5.5° C above 80° F / 26.7° C.
- Subtract 0.004 from the reading of each cell for every 10° / 5.5° C below 80° F / 26.7° C.

Result: All battery cells display a specific gravity of 1.277 or greater. The battery is fully charged. Proceed to step 11.

Result: The difference in specific gravity readings between cells is greater than 0.1 OR the specific gravity of one or more cells is less than 1.177. Replace the battery.

11 Check the battery acid level. If needed, replenish with distilled water to 1/8 inch / 3 mm below the bottom of the battery fill tube. Do not overfill.

12 Install the vent caps and neutralize any electrolyte that may have spilled.

B-2
Inspect the Electrical Wiring

Genie specifications require that this procedure be performed every 250 hours or quarterly, whichever comes first.

Maintaining electrical wiring in good condition is essential to safe operation and good machine performance. Failure to find and replace burnt, chafed, corroded or pinched wires could result in unsafe operating conditions and may cause component damage.

WARNING Electrocution/ burn hazard. Contact with hot or live circuits could result in death or serious injury. Remove all rings, watches and other jewelry.

1 Open the turntable cover at the engine side of the machine.

2 Remove the engine tray retaining fastener. Swing the engine tray out away from the machine.

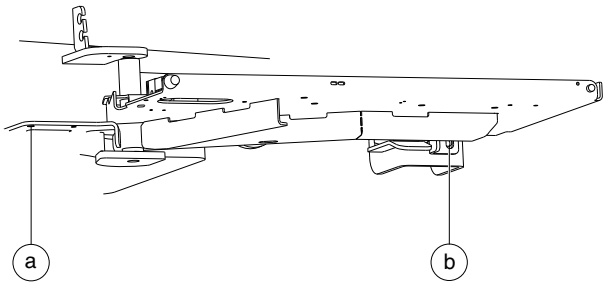

a engine tray anchor hole
b engine tray retaining fastener

https://truckmanualshub.com/

CHECKLIST B PROCEDURES

3 Locate the engine tray anchor hole on the turntable.

4 Install the bolt that was just removed into the anchor hole to secure the engine tray from moving.

⚠WARNING Crushing hazard. Failure to install the bolt into the engine pivot plate to secure it from moving could result in death or serious injury.

5 Inspect the following areas for burnt, chafed, corroded, pinched and loose wires:

- Engine wiring harness

6 Open the turntable cover at the ground controls side of the machine.

7 Inspect the following areas for burnt, chafed, corroded, pinched and loose wires:

- Battery area wiring
- Inside the ground control box
- Hydraulic manifold wiring
- Hydraulic oil cooler wiring

8 Inspect for a liberal coating of dielectric grease in the following locations:

- All wire harness connectors to ground control box

9 Start the engine from the ground controls and raise the boom above the turntable covers.

10 Inspect the turntable area for burnt, chafed and pinched cables.

11 Lower the boom to the stowed position and turn the engine off.

12 Inspect the following areas for burnt, chafed, corroded, pinched and loose wires:

- Cable track on the boom
- Cables on the boom and jib boom
- Jib, rotate, level manifold
- Inside of the platform control box

13 Inspect for a liberal coating of dielectric grease in the following location:

- All wire harness connectors to platform control box

14 Remove the engine tray retaining fastener from the engine tray anchor hole at the pivot end of the engine tray.

15 Swing the engine tray in towards the machine.

16 Install the engine tray retaining fasteners.

⚠WARNING Crushing hazard. Failure to install the bolt into the engine pivot plate to secure it from moving could result in death or serious injury.

https://truckmanualshub.com/

B-3
Test the Key Switch

Genie specifications require that this procedure be performed every 250 hours or quarterly, whichever comes first.

Proper key switch action and response is essential to safe machine operation. The machine can be operated from the ground or platform controls and the activation of one or the other is accomplished with the key switch. Failure of the key switch to activate the appropriate control panel could cause a hazardous operating situation.

1 Pull out the red Emergency Stop button to the on position at both the ground and platform controls.

2 Turn the key switch to ground control, start the engine and then turn the key switch to **platform control**.

3 Check all machine function from the **ground controls**.

⊙ Result: All machine functions should **not** operate.

4 Turn the key switch to ground control.

5 Check all machine function from the **platform controls**.

⊙ Result: All machine functions should **not** operate.

6 Turn the key switch to the off position.

⊙ Result: The engine should stop and no functions should operate.

B-4
Check the Exhaust System

Genie specifications require that this procedure be performed every 250 hours or quarterly, whichever comes first.

Maintaining the exhaust system is essential to good engine performance and service life. Running the engine with a damaged or leaking exhaust system can cause component damage and unsafe operating conditions.

WARNING Bodily injury hazard. Do not inspect while the engine is running. Remove the key to secure from operation.

CAUTION Burn hazard. Beware of hot engine components. Contact with hot engine components may result in severe burns.

To access the engine:

1 Remove the engine tray retaining fastener located under the engine tray. Swing the engine tray out away from the machine and secure it from moving.

WARNING Crushing hazard. Failure to install the fastener into the engine tray anchor hole to secure the engine tray from moving could result in death or serious injury.

https://truckmanualshub.com/

CHECKLIST B PROCEDURES

2 Be sure that all nuts and bolts are tight.

3 Inspect all welds for cracks.

4 Inspect for exhaust leaks; i.e., carbon buildup around seams and joints.

5 Swing the engine pivot plate in towards the machine.

6 Install the bolts that were just removed into the original holes to secure the engine pivot plate.

WARNING Crushing hazard. Failure to install the bolts into the engine pivot plate to secure it from moving could result in death or serious injury.

B-5
Inspect the Engine Air Filter - Continental, Deutz and Perkins Models

Genie specifications require that this procedure be performed every 250 hours or quarterly, whichever comes first.

Maintaining the engine air filter in good condition is essential to good engine performance and service life. Failure to perform this procedure can lead to poor engine performance and component damage.

Note: Perform this procedure with the engine off.

1 Locate the engine air filter assembly.

2 Release the latches from the air cleaner canister end cap. Remove the end cap.

3 Remove the filter element.

4 Clean the inside of the canister and the end cap with a damp cloth.

5 Inspect the air filter element. If needed, blow from the inside out using low pressure dry compressed air, or carefully tap out dust. Replace the filter if needed.

6 Install the filter element.

7 Install the air filter canister end cap and secure the end cap latches.

Note: Be sure the discharge valve is pointing down when the cap is instaled.

https://truckmanualshub.com/

B-6
Check the Oil Cooler and Cooling Fins - Deutz Models

Genie specifications require that this procedure be performed every 250 hours or quarterly, whichever comes first.

Maintaining the oil cooler in good condition is essential for good engine performance. Operating a machine with a damaged oil cooler may result in engine damage. Also, restricting air flow through the oil cooler will affect the performance of the cooling system.

WARNING Bodily injury hazard. Do not inspect while the engine is running. Remove the key to secure from operation.

CAUTION Burn hazard. Beware of hot engine components. Contact with hot engine components may result in severe burns.

Oil cooler:

1 Remove the engine tray retaining fastener located under the engine tray. Swing the engine tray out and away from the machine.

2 Install the fastener that was just removed through the engine tray and into the engine tray anchor hole in the turntable.

WARNING Crushing hazard. Failure to install the fastener into the engine tray anchor hole to secure the engine tray from moving could result in death or serious injury.

3 Remove the fasteners from the engine side cover, then remove the cover.

4 Inspect the oil cooler for leaks and physical damage.

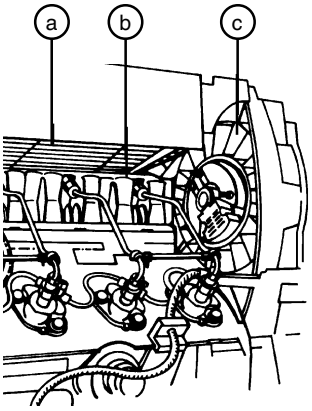

a oil cooler
b cylinder head cooling fins
c fan blower fins

5 Clean the oil cooler of debris and foreign material.

Cooling and fan blower fins:

6 Inspect the fan blower fins for physical damage.

7 Clean the fan blower fins of debris and foreign material.

8 Inspect the head cooling passages and fins for physical damage or foreign material, using a flashlight.

9 Clean the cylinder head cooling passages of debris and foreign material.

10 Install the engine side cover.

11 Swing the engine back to its original position and install the engine pivot plate retaining fastener.

https://truckmanualshub.com/

CHECKLIST B PROCEDURES

B-7
Confirm the Proper Brake Configuration

Genie specifications require that this procedure be performed every 250 hours or quarterly, whichever comes first.

Proper brake configuration is essential to safe operation and good machine performance. Hydrostatic brakes and hydraulically-released, spring-applied individual wheel brakes can appear to operate normally when they are actually not fully operational.

1 Check each drive hub disconnect cap to be sure it is in the engaged position.

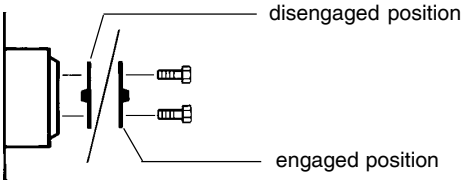

B-8
Inspect the Tires, Wheels and Lug Nut Torque

Genie specifications require that this procedure be performed every 250 hours or quarterly, whichever comes first.

Maintaining the tires and wheels in good condition, including proper wheel fastener torque, is essential to safe operation and good performance. Tire and/or wheel failure could result in a machine tip-over. Component damage may also result if problems are not discovered and repaired in a timely fashion.

WARNING Bodily injury hazard. An over-inflated tire can explode and could result in death or serious injury.

WARNING Tip-over hazard. Do not use temporary flat tire repair products.

Note: The tires on some machines are foam filled and do not need air added to them.

1 Check all tire treads and sidewalls for cuts, cracks, punctures and unusual wear.

2 Check each wheel for damage, bends and cracked welds.

3 Check each lug nut for proper torque. Refer to Section 2, *Specifications*.

4 Check the pressure in each air-filled tire. Add air as necessary. Refer to Section 2, *Specifications*.

https://truckmanualshub.com/

B-9
Check Drive Hub Oil Level and Fastener Torque

Genie specifications require that this procedure be performed every 250 hours.

Failure to maintain proper drive hub oil levels may cause the machine to perform poorly and continued use may cause component damage.

Drive hubs:

1 Drive the machine to rotate the hub until one of the plugs is located on top and the other one is at 90 degrees.

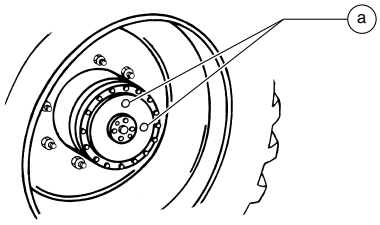

a models with o-ring plugs

2 Remove the plug located at 90 degrees and check the oil level.

⊙ Result: The oil level should be even with the bottom of the side plug hole.

3 If necessary, remove the top plug and add oil until the oil level is even with the bottom of the side plug hole.

4 Install the plugs into the drive hub. Torque to Specification. Refer to Section 2, *Specifications*.

5 Check the torque of the drive hub mounting fasteners. Refer to Section 2, *Specifications*.

6 Repeat steps 1 through 5 for the other drive hubs.

Turntable rotate drive hub:

Single fill port rotator:

1 Remove the plug located on the top of the hub and check the oil level.

⊙ Result: The oil level should be visible below the bottom of the fill port.

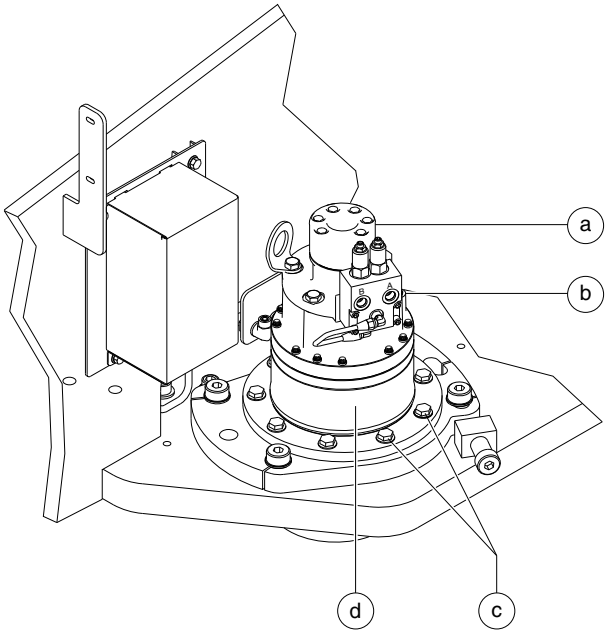

Single fill port rotator
a motor
b fill port
c drive hub mounting bolts
d drive hub

https://truckmanualshub.com/

CHECKLIST B PROCEDURES

Dual fill port rotator:

2 Remove one of the plugs located on the side of the hub and check the oil level.

⊙ Result: The oil level should be even with the bottom of the plug hole.

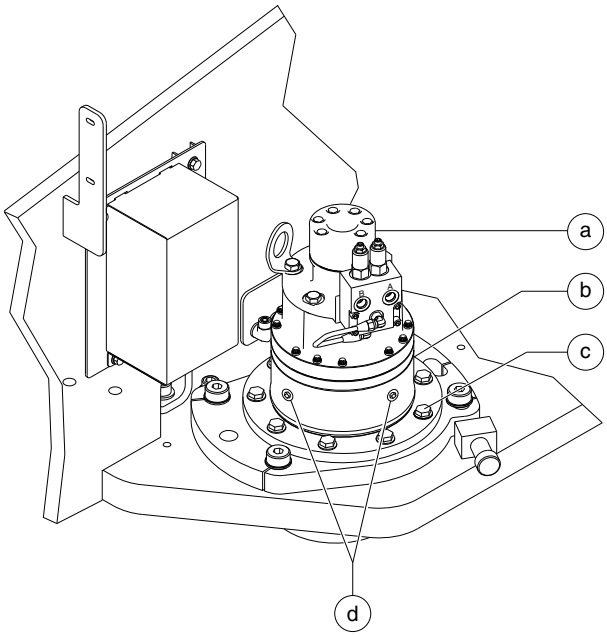

Dual fill port rotator
a motor
b drive hub
c drive hub mounting bolts
d fill ports

3 If necessary, add oil. Refer to Section 2, *Specifications*.

4 Apply pipe thread sealant to the plug, and install the plug in the drive hub.

5 Check the torque of the turntable rotate drive hub mounting fasteners. Refer to Section 2, *Specifications*.

B-10 Check and Adjust the Engine RPM

Maintaining the engine rpm at the proper setting for both low and high idle is essential to good engine performance and service life. The machine will not operate properly if the rpm is incorrect and continued use may cause component damage.

Continental models:

Note: The engine rpm is controlled by the ECM and can only be adjusted by re-programming the ECM. If rpm adjustment or service is required, please contact the Genie Industries Service Department.

Deutz TD2011L04i models:

1 Connect a tachometer to the engine. Start the engine from the ground controls and check the rpm. Refer to Section 2, *Specifications.*

https://truckmanualshub.com/

CHECKLIST B PROCEDURES

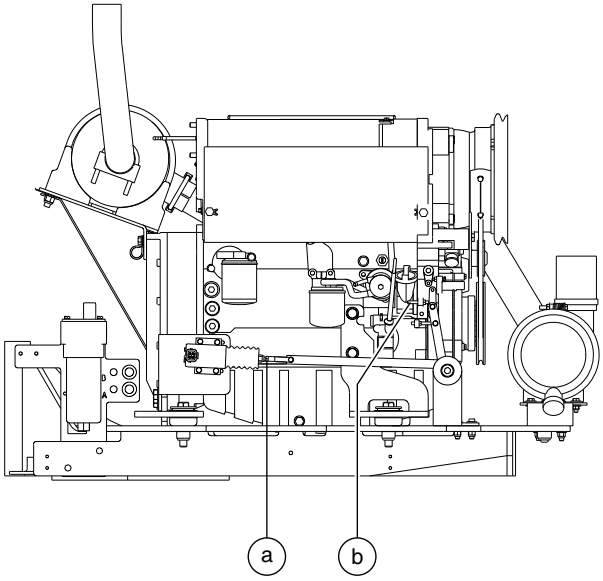

Deutz models
a high idle adjustment
b low idle adjustment

Skip to step 4 if the low idle rpm is correct.

2 Loosen the locknut on the low idle adjustment screw.

3 Adjust the low idle adjustment screw until low idle meets specification. Tighten the locknut.

4 Push and hold the function enable/high speed button. Note the engine rpm on the display. Refer to Section 2, *Specifications.*

If the high idle is correct, disregard adjustment step 5.

5 Loosen the yoke lock nut. Turn the high idle adjustment nut and solenoid boot counterclockwise to increase the rpm or clockwise to decrease the rpm. Tighten the yoke lock nut and recheck the rpm.

Note: Be sure the solenoid fully retracts when activating high idle.

Perkins models:

1 Connect a tachometer to the engine. Start the engine from the ground controls and check the rpm. Refer to Section 2, *Specifications*.

Skip to step 3 if the low idle rpm is correct.

2 Loosen the low idle lock nut. Turn the low idle adjustment screw clockwise to increase the rpm or counterclockwise to decrease the rpm. Tighten the low idle lock nut and confirm the rpm.

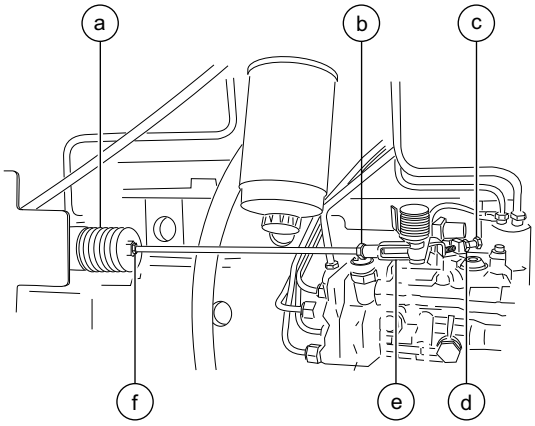

Perkins models
a solenoid boot
b yoke lock nut
c low idle adjustment screw
d low idle lock nut
e yoke
f high idle adjustment nut

3 Move the function enable/rpm select toggle switch to the high idle (rabbit symbol) position. Refer to Section 2, *Specifications.*

If high idle rpm is correct, disregard adjustment step 4.

4 Loosen the yoke lock nut. Turn the high idle adjustment nut and solenoid boot counterclockwise to increase the rpm or clockwise to decrease the rpm. Tighten the yoke lock nut and recheck the rpm.

Note: Be sure the solenoid fully retracts when activating high idle.

https://truckmanualshub.com/

CHECKLIST B PROCEDURES

B-11
Perform Engine Maintenance

Engine specifications require that this procedure be performed every 250 hours or quarterly, whichever comes first.

Proper engine maintenance, following the engine manufacturer's maintenance schedule, is essential to good engine performance and service life. Failure to perform the maintenance procedures can lead to poor engine performance and component damage.

Required maintenance procedures and additional engine information are available in the:

Deutz TD2011 Operation Manual	
Genie part number	139320
Perkins 804D-33 Operation and Maintenance Manual	
Genie part number	111332
Continental TME27 Owner's Manual	
Genie part number	111901

To access the engine:

1 Remove the engine tray retaining fastener located under the engine tray. Swing the engine tray out away from the machine and secure it from moving.

WARNING Crushing hazard. Failure to install the fastener into the engine tray anchor hole to secure the engine tray from moving could result in death or serious injury.

B-12
Check the Oscillate Directional Valve Linkage

Genie specifications require that this procedure be performed every 250 hours or quarterly, whichever comes first.

Proper axle oscillation is essential to safe machine operation. If the oscillate directional valve linkage is not operating correctly, the stability of the machine is compromised and it may tip over.

1 Remove the drive chassis cover from the non-steer end of the machine.

2 Locate the oscillate directional valve inside of the non-steer axle and inspect the linkage for the following:

- Lock nut is tight against yoke
- Yoke clevis pins are installed
- Cotter pins are installed through clevis pins
- Linkage is properly attached to directional valve

https://truckmanualshub.com/

B-13
Test the Ground Control Override

Genie specifications require that this procedure be performed every 250 hours or quarterly, whichever comes first.

A properly functioning ground control override is essential to safe machine operation. The ground control override function is intended to allow ground personnel to operate the machine from the ground controls whether or not the red Emergency Stop button at the platform controls is in the on or off position. This function is particularly useful if the operator at the platform controls cannot return the boom to the stowed position.

1 Push in the red Emergency Stop button at the platform controls to the off position.

2 Start the engine from the ground controls.

3 At the ground controls, operate each boom function through a partial cycle.

⊙ Result: All boom functions should operate.

B-14
Test the Platform Self-leveling

Genie specifications require that this procedure be performed every 250 hours or quarterly, whichever comes first.

Automatic platform self-leveling throughout the full cycle of boom raising and lowering is essential for safe machine operation. The platform is maintained at level by the platform leveling slave cylinder which operates in a closed loop hydraulic circuit with the master cylinder located at the base of the boom.
A platform self-leveling failure creates an unsafe working condition for platform and ground personnel.

1 Start the engine from the ground controls.

2 Hold the function enable toggle switch to either side and adjust the platform to a level position using the platform level toggle switch.

3 Raise and lower the boom through a full cycle.

⊙ Result: The platform should remain level at all times to within ±5 degrees.

https://truckmanualshub.com/

CHECKLIST B PROCEDURES

B-15
Test the Engine Idle Select Operation

Genie specifications require that this procedure be performed every 250 hours or quarterly, whichever comes first.

A properly operating engine idle select switch is essential to good engine performance and safe machine operation. There are three settings.

Low idle (turtle symbol) allows the operator to control individual boom functions only.

Functon enable button high idle (rabbit symbol) allows the operator to control multiple boom functions simultaneously. This setting maintains a consistent high idle.

Foot switch activated high idle (rabbit and foot switch symbols) should be used for normal machine operation. This setting activates high idle only when the foot switch is pressed down.

1 Turn the key switch to ground control.

2 Pull out the red Emergency Stop button to the on position at both the ground and platform controls.

3 Start the engine from the ground controls.

4 Move and hold the function button in and move the idle switch to the high idle (rabbit symbol) position.

⊙ Result: The engine rpm should change to high idle.

5 Release the function enable button.

⊙ Result: The engine rpm should change to low idle.

6 Turn the key switch to platform controls.

7 Move the engine idle select toggle switch to low idle (turtle symbol).

⊙ Result: The engine rpm should remain at low idle.

8 Move the engine idle select toggle switch to foot switch activated high idle (rabbit and foot switch symbol).

⊙ Result: The engine rpm should **not** change to high idle.

9 Press down the foot switch.

⊙ Result: The engine rpm should change to high idle.

high idle.

10 Press down the foot switch.

⊙ Result: The engine rpm should change to high idle.

https://truckmanualshub.com/

B-16
Test the Fuel Select Operation - Gasoline/LPG Models

Genie specifications require that this procedure be performed every 250 hours or quarterly, whichever comes first.

The ability to select and switch between gasoline and LPG fuels as needed is essential to safe machine operation. A fuel selection can be made whether the engine is running or not. Switching malfunctions and/or the failure of the engine to start and run properly in both fuel modes and through all idle speeds can indicate fuel system problems that could develop into a hazardous situation.

Note: Perform this test after checking the gasoline and LPG fuel levels, and warming the engine to normal operating temperature.

1 Move the fuel select toggle switch to gasoline and then move the engine idle select switch to foot switch activated high idle (rabbit and foot switch symbol).

2 Start the engine from the platform controls and allow it to run at low idle.

3 Press down the foot switch to allow the engine to run at high idle.

⊙ Result: The engine should start promptly and operate smoothly in low and high idle.

4 Release the foot switch and shut the engine off by pushing the red Emergency Stop button in to the off position.

5 Move the fuel select toggle switch to LPG.

6 Start the engine and allow it to run at low idle.

7 Press down the foot switch to allow the engine to run at high idle.

⊙ Result: The engine should start promptly and operate smoothly in low and high idle.

Note: The engine may hesitate momentarily and then continue to run on the selected fuel if the fuel source is switched while the engine is running.

https://truckmanualshub.com/

B-17
Test the Drive Enable System

Genie specifications require that this procedure be performed every 250 hours or quarterly, whichever comes first.

Proper drive enable system operation is essential to safe machine operation. When the boom is past the non-steering wheels, drive movement is stopped and the indicator light turns on. The drive enable switch must be held to either side to reactivate the drive function and should alert the operator that the machine may move in the opposite direction that the drive and steer controls are moved. An improperly functioning drive enable system may allow the machine to be moved into an unsafe position.

Note: Perform this procedure with the boom in the stowed position.

1 Start the engine from the platform controls.

2 Press down the foot switch.

3 Rotate the turntable until the boom moves past one of the the non-steer wheels.

⊙ Result: The drive enable indicator light should turn on and remain on while the boom is anywhere in the range shown.

4 Slowly move the drive control handle off center.

⊙ Result: The drive function should not operate.

5 Rotate the turntable until the boom moves past the other non-steer wheel.

⊙ Result: The drive enable indicator light should come on and remain on while the boom is anywhere in the range shown.

6 Move and hold the drive enable toggle switch to either side and slowly move the drive control handle off center.

⊙ Result: The drive function should operate.

WARNING Collision hazard. Always use the color-coded direction arrows on the platform controls and the drive chassis to identify the direction of travel.

Note: When the drive enable system is in use, the machine may drive in the opposite direction that the drive and steer control handle is moved.

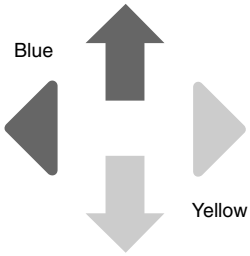

https://truckmanualshub.com/

B-18
Test the Drive Brakes

Genie specifications require that this procedure be performed every 250 hours or quarterly, whichever comes first.

Proper brake action is essential to safe machine operation. The drive brake function should operate smoothly, free of hesitation, jerking and unusual noise. Hydraulically-released individual wheel brakes can appear to operate normally when they are actually not fully operational.

WARNING Collision hazard. Be sure that the machine is not in free-wheel or partial free-wheel configuration. See B-7, *Confirm the Proper Brake Configuration*.

Note: Select a test area that is firm, level and free of obstructions.

Note; Perform this procedure with the boom in the stowed position.

1 Mark a test line on the ground for reference.

2 Start the engine from the platform controls.

3 Choose a point on the machine (i.e., contact patch of a tire) as a visual reference for use when crossing the test line.

4 Bring the machine to top drive speed before reaching the test line. Release the drive controller when your reference point on the machine crosses the test line.

5 Measure the distance between the test line and your machine reference point. Refer to Section 2, *Specifications*.

Note: The brakes must be able to hold the machine on any slope it is able to climb.

B-19
Test the Drive Speed - Stowed Position

Genie specifications require that this procedure be performed every 250 hours or quarterly, whichever comes first.

Proper drive function movement is essential to safe machine operation. The drive function should respond quickly and smoothly to operator control. Drive performance should also be free of hesitation, jerking and unusual noise over the entire proportionally controlled speed range.

Note: Select a test area that is firm, level and free of obstructions.

Note: Perform this procedure with the boom in the stowed position.

1 Create start and finish lines by marking two lines on the ground 40 feet / 12.2 m apart.

2 Start the engine from the platform controls.

3 Choose a point on the machine (i.e., contact patch of a tire) as a visual reference for use when crossing the start and finish lines.

4 Bring the machine to top drive speed before reaching the start line. Begin timing when your reference point on the machine crosses the start line.

5 Continue at full speed and note the time when the machine reference point crosses the finish line. Refer to Section 2, *Performance Specifications*.

Note: To adjust the speed, refer to Repair procedure 1-2, *How to Adjust the Joystick Max-out Setting.*

https://truckmanualshub.com/

CHECKLIST B PROCEDURES

B-20
Test the Drive Speed - Raised or Extended Position

Genie specifications require that this procedure be performed every 250 hours or quarterly, whichever comes first.

Proper drive function movement is essential to safe machine operation. The drive function should respond quickly and smoothly to operator control. Drive performance should also be free of hesitation, jerking and unusual noise over the entire proportionally controlled speed range.

Select a test area that is firm, level and free of obstructions.

1 Create start and finish lines by marking two lines on the ground 40 feet / 12.2 m apart.

2 Start the engine from the platform controls.

3 Move the engine idle select toggle switch to foot switch activated high idle (rabbit and foot switch symbol).

4 Press down the foot switch and raise the boom 10° above horizontal.

5 Choose a point on the machine (i.e. contact patch of a tire), as a visual reference for use when crossing the start and finish lines.

6 Bring the machine to top drive speed before reaching the start line. Begin timing when your reference point on the machine crosses the start line.

7 Continue at full speed and note the time when the machine reference point crosses the finish line. Refer to Section 2, *Performance Specifications*.

Note: To adjust the speed, refer to Repair procedure 1-2, *How to Adjust the Joystick Max-out Setting.*

8 Press down the foot switch and lower the boom to the stowed position.

9 Extend the boom 3 feet / 90 cm.

10 Choose a point on the machine (i.e., contact patch of a tire), as a visual reference for use when crossing the start and finish lines.

11 Bring the machine to top drive speed before reaching the start line. Begin timing when your reference point on the machine crosses the start line.

12 Continue at top speed and note the time when the machine reference point crosses the finish line. Refer to Section 2, *Performance Specifications*.

Note: To adjust the speed, refer to Repair procedure 1-2, *How to Adjust the Joystick Max-out Setting.*

https://truckmanualshub.com/

B-21
Test the Alarm Package (if equipped) and the Descent Alarm

Genie specifications require that this procedure be performed every 250 hours or quarterly, whichever comes first.

The alarm package includes:

- Travel alarm
- Flashing beacons

Alarms and beacons are installed to alert operators and ground personnel of machine proximity and motion. The alarm package is installed on the turntable rear cover. Beacons are installed on both turntable covers.

Note: The alarms and beacons will operate with the engine running or not running.

1 Turn the key switch to ground controls and pull out the red Emergency Stop button to the on position at both the ground and platform controls.

⊙ Result: Both flashing beacons should be on and flashing.

2 Move and hold the function enable button to either side and activate the boom toggle switch in the down position, hold for a moment and then release it.

⊙ Result: The descent alarm should sound when the toggle switch is held down.

3 Turn the key switch to platform controls.

⊙ Result: The flashing beacons should be on and flashing.

4 Press down the foot switch. Move the boom controller to the down position, hold for a moment and then release it.

⊙ Result: The descent alarm should sound when the controller is held down.

5 Press down the foot switch. Move the drive controller off center, hold for a moment and then release it. Move the drive controller off center in the opposite direction, hold for a moment and then release it.

⊙ Result: The travel alarm should sound when the drive controller is moved off center in either direction.

https://truckmanualshub.com/

CHECKLIST B PROCEDURES

B-22
Inspect the Fuel and Hydraulic Tank Cap Venting Systems

Genie specifications require that this procedure be performed every 250 hours or quarterly, whichever comes first. Perform this procedure more often if dusty conditions exist.

Free-breathing fuel and hydraulic tank caps are essential for good machine performance and service life. A dirty or clogged tank cap may cause the machine to perform poorly and continued use may cause component damage. Extremely dirty conditions may require that the caps be inspected more often.

DANGER Explosion and fire hazard. Engine fuels are combustible. Perform this procedure in an open, well-ventilated area away from heaters, sparks, flames and lighted tobacco. Always have an approved fire extinguisher within easy reach.

Note: Perform this procedure with the engine off.

Note: This procedure applies to diesel equipped machines only.

1 Remove the cap from the fuel tank.

2 Check for proper venting.

Result: Air passes through the fuel tank cap. Procced to step 4.

Result: If air does not pass through the cap, clean or replace the cap. Proceed to step 3.

When checking for positive tank cap venting, air should pass freely through the cap.

3 Using a mild solvent, carefully wash the cap venting system. Dry using low pressure compressed air. Repeat this procedure beginning with step 2.

4 Install the fuel tank cap onto the fuel tank.

5 Remove the breather cap from the hydraulic tank.

6 Check for proper venting.

Result: Air passes through the hydraulic tank cap. Procced to step 8.

Result: If air does not pass through the cap, clean or replace the cap. Proceed to step 7.

Note: When checking for positive tank cap venting, air should pass freely through the cap.

7 Using a mild solvent, carefully wash the cap venting system. Dry using low pressure compressed air. Repeat this procedure beginning with step 6.

8 Install the breather cap onto the hydraulic tank.

https://truckmanualshub.com/

B-23
Perform Hydraulic Oil Analysis

Genie specifications require that this procedure be performed every 250 hours or quarterly, whichever comes first.

Replacement or testing of the hydraulic oil is essential for good machine performance and service life. Dirty oil and suction strainers may cause the machine to perform poorly and continued use may cause component damage. Extremely dirty conditions may require oil changes to be performed more frequently.

Note: Before replacing the hydraulic oil, the oil may be tested by an oil distributor for specific levels of contamination to verify that changing the oil is necessary. **If the hydraulic oil is not replaced at the two year inspection, test the oil quarterly. Replace the oil when it fails the test.**

B-24
Inspect the Boom Extend/Retract Cables

Genie specifications require that this procedure be performed every 250 hours or quarterly, whichever comes first.

The boom extend/retract cables are responsible for the extension and retraction of the number 3 boom tube. Inspecting for foreign objects, damage and/or improper adjustment of the boom extend/retract cables and related components on a regular basis is essential to good machine performance and safe machine operation. The boom extend and retract functions should operate smoothly and be free of hesitation, jerking and unusual noise.

1 Raise the boom to horizontal and fully extend the boom.

2 After the boom is fully extended, lower the boom until the platform is at chest height. Turn the machine off.

3 Remove the boom end cover retaining fasteners and remove the cover.

4 Remove the retaining fasteners from the access covers located on the side of the boom at the platform end of the machine. Remove the covers.

https://truckmanualshub.com/

CHECKLIST B PROCEDURES

5 Visually inspect the cables and components through both inspection holes for the following:

- Frayed or broken wire strands
- Kinks in the cables
- Corrosion
- Paint or foreign materials on the cable
- Split or cracked cable ends
- Cables are on all pulleys
- Extend cable break limit switch arm is centered in the pivot plate
- Cables have equal tension
- Cables at end of adjustment range
- No broken or damaged pulleys
- No unusual or excessive pulley wear
- All fasteners in place and secure

Note: A flashlight and inspection mirror may be necessary to thoroughly inspect the above items.

Note: A pulley groove gauge should be used to check the condition of the pulleys.

6 Install the cover at the pivot end of the boom.

7 Install the access panels on the sides of the boom.

8 Start the engine from the ground controls and fully retract and lower the boom to the stowed position.

9 Turn the key switch to the platform controls.

10 Extend the boom approximately 2 feet / 0.6 m.

11 Retract the boom. While retracting the boom, visually inspect the number 2 and number 3 boom tubes.

⊙ Result: The number 2 boom tube should not move more than 1/2 inch / 13 mm before the number 3 boom tube begins to retract.

Note: If the number 2 boom tube moves more than 1/2 inch / 13 mm before the number 3 boom tube begins to retract, the boom extend/retract cables need to be adjusted. See Repair Procedure **4-5**, *How to Adjust the Boom Extend/Retract Cables.*

https://truckmanualshub.com/

Checklist C Procedures

C-1
Perform Engine Maintenance

Engine specifications require that this procedure be performed every 500 hours.

Proper engine maintenance, following the engine manufacturer's maintenance schedule, is essential to good engine performance and service life. Failure to perform the maintenance procedures can lead to poor engine performance and component damage.

Required maintenance procedures and additional engine information are available in the:

Deutz TD2011 Operation Manual	
Genie part number	139320
Perkins 804D-33 Operation and Maintenance Manual	
Genie part number	111332
Continental TME27 Owner's Manual	
Genie part number	111901

To access the engine:

1 Remove the engine tray retaining fastener located under the engine tray. Swing the engine tray out away from the machine and secure it from moving.

WARNING Crushing hazard. Failure to install the fastener into the engine tray anchor hole to secure the engine tray from moving could result in death or serious injury.

C-2
Grease the Platform Overload Mechanism (if equipped)

Genie specifications require that this procedure be performed every 500 hours or six months, whichever comes first. Perform this procedure more often if dusty conditions exist.

Application of lubrication to the platform overload mechanism is essential to safe machine operation. Continued use of an improperly greased platform overload mechanism could result in the system not sensing an overloaded platform condition and will result in component damage.

1 Locate the grease fittings on each pivot pin of the platform overload assembly.

2 Thoroughly pump grease into each grease fitting.

Grease Specification
Chevron Ultra-duty grease, EP NLGI 2 (lithium based) or equivalent

https://truckmanualshub.com/

CHECKLIST C PROCEDURES

C-3
Test the Platform Overload System (if equipped)

Genie specifications require that this procedure be performed every 500 hours or six months, whichever comes first.

Testing the platform overload system regularly is essential to safe machine operation. Continued use of an improperly operating platform overload system could result in the system not sensing an overloaded platform condition. Machine stablity could be compromised resulting in the machine tipping over.

Note: Perform this procedure with the machine on a firm, level surface.

1 Turn the key switch to platform control. Start the engine and level the platform.

2 Determine the maximum platform capacity. Refer to the machine serial plate.

3 Remove all weight, tools and accessories from the platform.

Note: Failure to remove all weight, tools and accessories from the platform will result in an inaccurate test.

4 Using a suitable lifting device, place a test weight equal to that of the available capacity at one of the locations shown. Refer to Illustration 1.

Result: The platform overload indicator lights should be off at both the ground and platform controls and the alarm should not sound.

Result: The platform overload indicator lights are on and the alarm is sounding. Calibrate the platform overload system. Refer to Repair Procedure 2-4, *How to Calibrate the Platform Overload System (if equipped).*

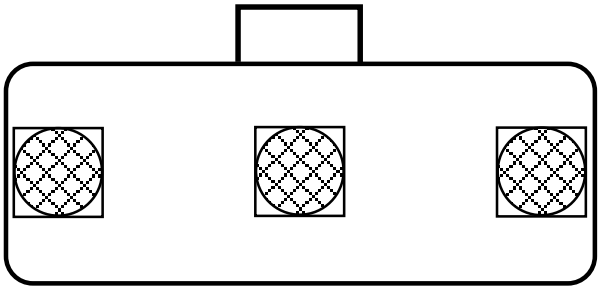

Illustration 1

5 Carefully move the test weight to each remaining location. Refer to Illustration 1.

Result: The platform overload indicator lights should be off at both the ground and platform controls and the alarm should not sound.

Result: The platform overload indicator lights are on and the alarm is sounding. Calibrate the platform overload system. Refer to Repair Procedure 2-4, *How to Calibrate the Platform Overload System (if equipped).*

6 Using a suitable lifting device, place an additional 50 lbs / 23 kg of weight onto the platform.

Result: The alarm should sound and the engine should shut off. The platform overload indicator lights should be flashing at both the ground and platform controls.

Result: The alarm does not sound, the engine does not shut off and the platform overload indicator lights are not flashing. Calibrate the platform overload system. Refer to Repair Procedure 2-4, *How to Calibrate the Platform Overload System (if equipped).*

Note: There may be a 2 second delay before the overload indicator lights flash, the alarm sounds and the engine shuts off.

https://truckmanualshub.com/

CHECKLIST C PROCEDURES

7 Using a suitable lifting device, remove the test weights, restart the engine and carefully move the test weights to each remaining location on the platform. Refer to Illustration 1.

⊙ Result: The alarm should sound, the engine should shut off and the platform overload indicator lights should be flashing at both the ground and platform controls.

⊠ Result: The alarm does not sound and the platform overload indicator lights are not flashing. Calibrate the platform overload system. Refer to Repair Procedure 2-4, *How to Calibrate the Platform Overload System (if equipped).*

Note: There may be a 2 second delay before the overload indicator lights flash, the alarm sounds and the engine shuts off.

8 Test all machine functions from the platform controls.

⊙ Result: All platform control functions should not operate.

9 Turn the key switch to ground control.

10 Test all machine functions from the ground controls.

⊙ Result: All ground control functions should not operate.

11 Activate the auxiliary power toggle switch.

12 Using auxiliary power, test all machine functions from the ground controls.

⊙ Result: All ground control functions should operate.

13 Using a suitable lifting device, lift the additional test weight from the platform.

⊙ Result: The platform overload indicator lights should turn off at both the ground and platform controls and the alarm should not sound.

14 Start the engine and test all machine functions from the ground controls.

⊙ Result: All ground control functions should operate normally.

15 Turn the key switch to platform control.

16 Test all machine functions from the platform controls.

⊙ Result: All platform control functions should operate.

Note: If the platform overload system is not operating properly, Refer to Repair Procedure 2-4, *How to Calibrate the Platform Overload System (if equipped).*

17 Push in the red Emergency stop button at the platform to shut off engine.

18 Using a suitable lifting device, remove all test weights from the platform.

19 Pull out the red Emergency stop button to the on position at the platform controls.

20 Remove the fasteners securing the lid to the platform controls. Using Illustration 2 as a guide, locate the timer relay inside the platform control box. Tag and disconnect the red wire from terminal 5 on the timer relay.

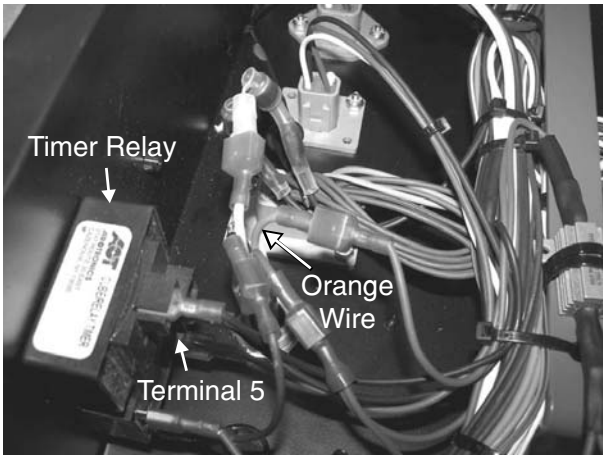

Illustration 2

https://truckmanualshub.com/

CHECKLIST C PROCEDURES

21 Using Illustration 3 as a guide, locate D31 Valve Power LED on the ALC500 printed circuit board.

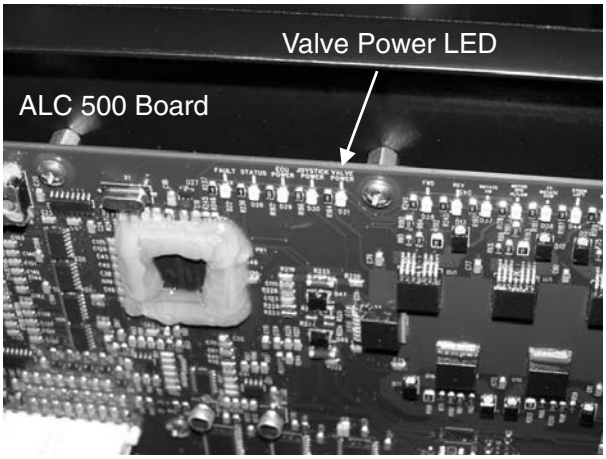

Illustration 3

22 Step on the footswitch at the platform.

⊙ Result: The Valve Power LED should not illuminate.

⊠ Result: The Valve Power LED is illuminated. Remove the machine from service and contact the Genie Service Department.

23 Securely install the red wire, disconnected in step 20, onto terminal 5 of the relay timer.

24 Step on the footswitch at the platform.

⊙ Result: The Valve Power LED should illuminate.

⊠ Result: The Valve Power LED is not illuminated. Remove the machine from service and contact the Genie Service Department.

25 Using a suitable lifting device, place a test weight equal to that of the available capacity at the center location shown in Illustration 1.

26 Using a suitable lifting device, place an additional 50 lbs / 23 kg of weight onto the platform.

⊙ Result: The alarm should sound and the Valve Power LED should not light. The platform overload indicator lights should be flashing at both the ground and platform controls.

27 Working from outside the platform and standing next to the platform rotator, locate the orange wire, which enters into the base of the platform control box from the load sense switch and locate the wire terminal at the end of the wire. Tag and disconnect the connectors. Refer to Illustration 2.

28 Using a multimeter set to read resistance (ohms), securely install a lead from the multimeter to the connector on the orange wire, and securely connect the other multimeter lead to a ground point in the control box.

⊙ Result: The readout on the multimeter should indicate zero resistance.

⊠ Result: The readout on the multimeter shows resistance. Remove the machine from service and contact the Genie Service Department.

29 Using a suitable lifting device, remove all weight from the platform. Note the result on the multimeter.

⊙ Result: The readout on the multimeter should indicate infinite resistance.

⊠ Result: The readout on the multimeter shows zero resistance. Remove the machine from service and contact the Genie Service Department.

31 Turn off the multimeter and remove the leads from the machine. Securely connect the wires disconnected in step 27.

32 Close the platform control box. Install and securely tighten the fasteners. Do not overtighten.

https://truckmanualshub.com/

C-4
Replace the Engine Air Filter Element

Engine specifications require that this procedure be performed every 500 hours or six months, whichever comes first.

Maintaining the engine air filter in good condition is essential to good engine performance and service life. Failure to perform this procedure can lead to poor engine performance and component damage.

Note: Perform this procedure with the engine off.

1 Release the latches on the air cleaner cap. Remove the end cap from the air cleaner canister.

2 Remove the filter element.

3 Use a damp cloth to wipe the filter sealing surface and the inside of the outlet tube. Make sure that all contaminant is removed before the filter is inserted.

4 Check new filter element gasket for damage before installing.

5 Install the new filter element.

6 Install the end cap on the canister and secure.

Note: Be sure the discharge slot is pointing down.

C-5
Replace the Fuel Filter/Water Separator Element - Diesel Models

Note: Genie specifications require that this procedure be performed every 500 hours or six months, whichever comes first.

Regular replacement of the fuel filter/water separator is essential for good engine performance. Failure to perform this procedure can lead to poor engine performance and/or hard starting, and continued use may result in component damge. Extremely dirty conditions may require this procedure be performed more often.

DANGER Explosion and fire hazard. Engine fuels are combustible. Perform this procedure in an open, well-ventilated area away from heaters, sparks, flames and lighted tobacco. Always have an approved fire extinguisher within easy reach.

Note: Perform this procedure with the engine off.

Perkins Models:

1 Put on protective clothing and eye wear.

2 Open the engine side turntable cover and locate the fuel filter/water separator next to the hydraulic return filter on the bulkhead.

3 Inspect the filter bowl for water buildup.

⊙ Result: If water is present in the filter bowl continue with steps 4 through 8.

https://truckmanualshub.com/

CHECKLIST C PROCEDURES

4 Loosen the vent plug located on the fuel filter/ water separator head.

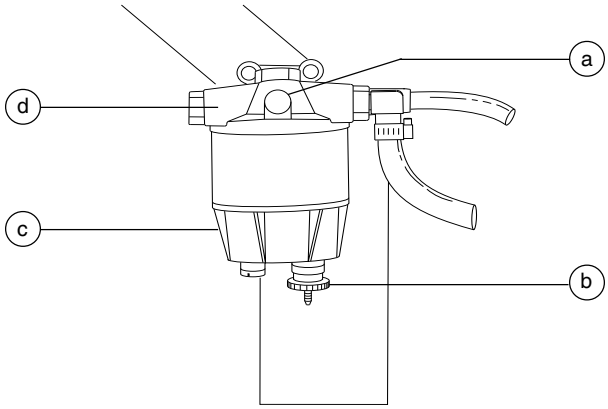

a vent plug
b drain plug
c filter bowl
d separator head

5 Loosen the drain plug located at the bottom of the bowl. Allow the water to drain into a suitable container until fuel starts to come out. Immediately tighten the drain plug.

6 Tighten the vent plug.

Note: If the fuel filter/water separator is completely drained, you must prime the fuel filter/water separator before starting the engine. See C-6, *Replace The Fuel Filter/Water Separator Element - Perkins Models,* for instructions on how to prime the fuel filter/water separator.

7 Clean up any fuel that may have spilled.

8 Start the engine from the ground controls and check the fuel filter/water separator and vent plug for leaks.

DANGER Explosion and fire hazard. If a fuel leak is discovered, keep any additional personnel from entering the area and do not operate the machine. Repair the leak immediately.

Deutz Models:

1 Put on protective clothing and eye wear.

2 Remove the engine tray retaining fastener located under the engine tray. Swing the engine tray out and away from the machine.

3 Install the fastener that was just removed through the engine tray and into the engine tray anchor hole in the turntable.

WARNING Crushing hazard. Failure to install the fastener into the engine tray anchor hole to secure the engine tray from moving could result in death or serious injury.

4 Locate the fuel filter/water separator next to the oil filter. for leaks.

https://truckmanualshub.com/

5 Loosen the drain plug located at the bottom of the filter. Allow the water to drain into a suitable container until fuel starts to come out. Immediately tighten the drain plug.

Note: Do not completely drain the filter.

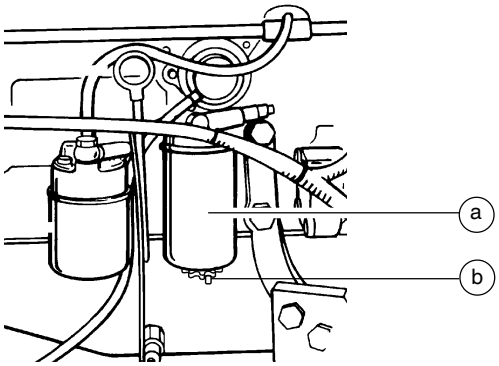

a fuel filter/water separator
b drain valve

6 Clean up any fuel that may have spilled.

7 Start the engine from the ground controls and check the fuel filter/water separator for leaks.

DANGER Explosion and fire hazard. If a fuel leak is discovered, keep any additional personnel from entering the area and do not operate the machine. Repair the leak immediately.

8 Swing the engine back to its original position and install the engine pivot plate retaining fastener.

C-6
Check the Safety Envelope Limit Switches and Angle Sensor, S-80X

Note: Genie specifications require that this procedure be performed every 500 hours or six months, whichever comes first.

Testing the safety envelope system regularly is essential to safe machine operation. Continued use of an improperly operating safety envelope could result in the system not restricting the range of motion. Machine stablity could be compromised resulting in the machine tipping over.

Note: Perform this procedure with the machine on a firm, level surface with all weight, tools and equipment removed from the platform.

Note: Start this procedure with the boom fully retracted and in the stowed position.

Ground controls:

1 Turn the key switch to ground control and pull out the red Emergency Stop button to the on position.

2 Start the engine from the ground controls.

https://truckmanualshub.com/

CHECKLIST C PROCEDURES

3 Turn and hold the function enable switch to the restricted maximum platform capacity and raise the primary boom until it is fully elevated.

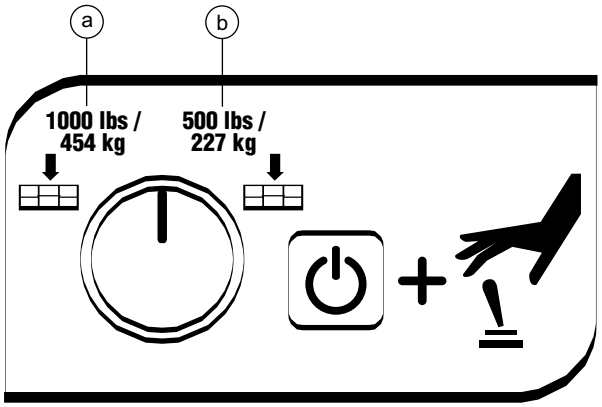

a restricted maximum platform capacity
b unrestricted maximum platform capacity

4 Extend the primary boom until it is fully extended.

5 Lower the primary boom until it stops.

⊙ Result: The boom will automatically stop after 10 degrees.

⊠ Result: The primary boom does not stop after 10 degrees. Check limit switches LST3O and LST3S.

6 Turn the key switch to the off position and push in the red Emergency Stop button.

Note: The follwing step can be done using a measuring tape or a digital protractor (Genie part number 58377).

7 **Measuring Tape:**

Measure the distance between the center of the pivot pins as shown, 201.75 inches / 512 cm ± 2.0 inch / 5 cm.

Digital Protractor:

Place the digital protractor on the turntable chassis and reset the protractor to 0°. Place the protractor on top of the primary boom. The protractor should display 58° ± 2°.

⊠ Result: The primary boom angle is not within specifications.Consult Genie Industries Service Department.

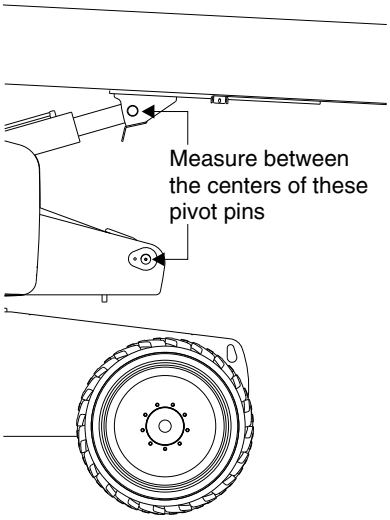

https://truckmanualshub.com/

CHECKLIST C PROCEDURES

Platform controls:

Note: Start this procedure with the boom fully retracted and in the stowed position.

1 Pull out the red Emergency Stop button to the on position and start the engine.

2 Select the restricted maximum platform capacity with the toggle switch.

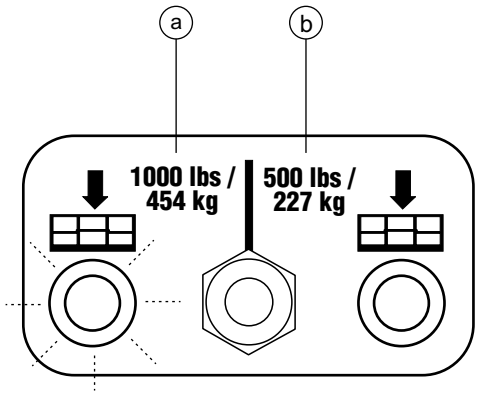

a restricted maximum platform capacity
b unrestricted maximum platform capacity

3 Raise the primary boom until it is fully elevated.

4 Extend the primary boom until it is fully extended.

5 Lower the primary boom until it stops.

⊙ Result: The boom will automatically stop after 10 degrees and the unrestricted platform capacity light will flash.

⊠ Result: The primary boom does not stop after 10 degrees. Calibrate the boom angle sensor. Refer to Repair Procedure 1-2, *How to Calibrate the Boom angle Sensor.*

6 Move the primary boom down joystick off center and retract the primary boom until the unrestricted platform capacity light stops flashing.

⊙ Result: Primary boom down should return to normal operation.

7 Lower the primary boom 5 feet / 1.5 m and activate primary boom extend.

⊙ Result: Primary boom extend will stop and the unrestricated platform capacity light will start flashing.

8 Activate primary boom extend and raise the primary boom until the unrestricated platform capacity light stops flashing.

⊙ Result: Primary boom extend should return to normal operation.

9 Return the machine to the fully stowed position.

https://truckmanualshub.com/

Checklist D Procedures

D-1
Check the Boom Wear Pads

Genie specifications require that this procedure be performed every 1000 hours or annually, whichever comes first.

Maintaining the boom wear pads in good condition is essential to safe machine operation. Wear pads are placed on boom tube surfaces to provide a low friction, replaceable wear pad between moving parts. Improperly shimmed wear pads or continued use of extremely worn wear pads may result in component damage and unsafe operating conditions.

Note: If the wear pads are still within specification, refer to Repair Procedure 4-2, *How to Shim the Boom.*

1 Start the engine from the ground controls.

2 Raise the end of the boom to a comfortable working height (chest high), then extend the boom 1 foot / 30 cm.

3 Measure each wear pad. Replace the wear pad if it is less than specification. If the wear pad is still within specification, shim as necessary to obtain zero clearance and zero drag.

4 Extend and retract the boom through the entire range of motion to check for tight spots that may cause binding or scraping of the boom.

Note: Always maintain squareness between the outer and inner boom tubes.

Boom wear pad specifications	Minimum
Boom number one	
Bottom wear pads (extension end of boom)	1/2 inch 12.7 mm
Top and side wear pads (extension end of boom)	5/8 inch 15.9 mm
Boom number two	
Top, bottom and side wear pads (extension end of boom)	1/2 inch 12.7 mm
Bottom wear pads (pivot end of boom)	1/2 inch 12.7 mm
Top and side wear pads (pivot end of boom)	5/8 inch 15.9 mm
Boom number three	
Top, bottom and side wear pads (pivot end of boom)	1/2 inch 12.7 mm

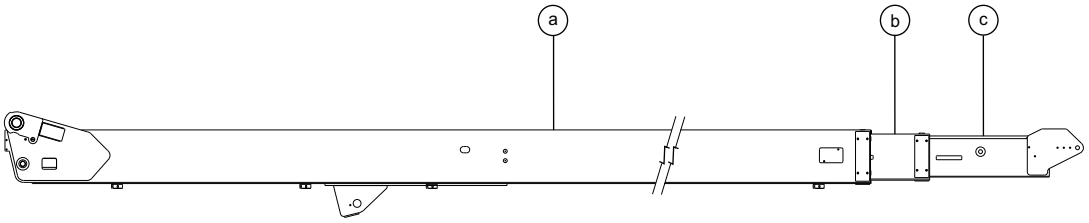

a boom 1
b boom 2
c boom 3

https://truckmanualshub.com/

D-2
Check the Free-wheel Configuration

Genie specifications require that this procedure be performed every 1000 hours or annually, whichever comes first.

Proper use of the free-wheel configuration is essential to safe machine operation. The free-wheel configuration is used primarily for towing. A machine configured to free-wheel without operator knowledge could result in death or serious injury and property damage.

WARNING Collision hazard. Select a work site that is firm and level.

NOTICE Component damage hazard. If the machine must be towed, do not exceed 2 mph / 3.2 km/h.

Non-steer wheels: All models

1 Chock the steer wheels to prevent the machine from rolling.

2 Center a lifting jack of ample capacity (20,000 lbs / 10,000 kg) under the drive chassis between the non-steer wheels.

3 Lift the wheels off the ground and place blocks under the drive chassis for support.

4 Disengage the drive hubs by turning over the drive hub disconnect caps on each non-steer wheel hub.

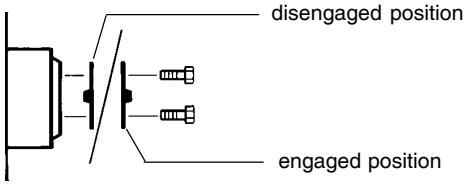

5 Manually rotate each non-steer wheel.

⊙ Result: Each non-steer wheel should rotate with minimum effort.

6 Re-engage the drive hubs by turning over the hub disconnect caps. Rotate each wheel to check for engagement. Lift the machine and remove the blocks.

WARNING Collision hazard. Failure to re-engage the drive hubs could result in death or serious injury and property damage.

Steer wheels: 4WD models

7 Chock the non-steer wheels to prevent the machine from rolling.

8 Center a lifting jack of ample capacity (20,000 lbs / 10,000 kg) under the drive chassis between the steer wheels.

9 Lift the wheels off the ground and then place blocks under the drive chassis for support.

10 Disengage the drive hubs by turning over the drive hub disconnect caps on each steer wheel hub.

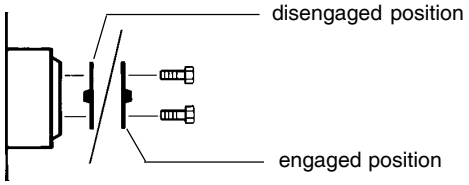

https://truckmanualshub.com/

CHECKLIST D PROCEDURES

11 Manually rotate each steer wheel.

⊙ Result: Each steer wheel should rotate with minimum effort.

12 Re-engage the drive hubs by turning over the drive hub disconnect caps. Rotate each wheel to check for engagement. Lift the machine and remove the blocks.

⚠WARNING Collision hazard. Failure to re-engage the drive hubs could result in death or serious injury and property damage.

All models:

13 Turn the valve in a clockwise direction to be sure it is fully closed.

Note: The free-wheel valve is located on the bottom of the drive pump, and should always remain closed.

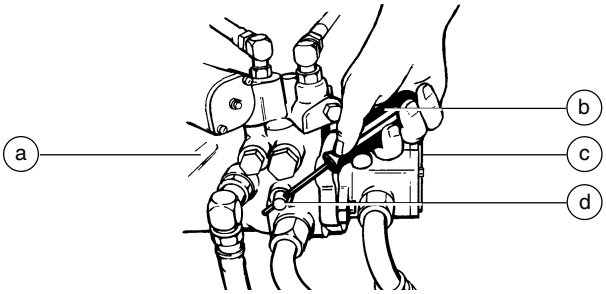

a drive pump
b screwdriver
c lift pump
d free-wheel valve

D-3
Check the Turntable Rotation Bearing Bolts

Genie specifications require that this procedure be performed every 1000 hours or annually, whichever comes first.

Maintaining proper torque on the turntable bearing bolts is essential to safe machine operation. Improper bolt torque could result in an unsafe operating condition and component damage.

1 Start the engine from the platform controls and extend the axles.

2 Turn the key switch to ground controls.

3 Raise the boom and place a safety chock on the lift cylinder rod. Carefully lower the boom onto the lift cylinder safety chock.

⚠WARNING Crushing hazard. Keep hands away from cylinder and all moving parts when lowering the boom.

Note: The lift cylinder safety chock is available through Genie Service Parts.

4 Remove the center turntable cover retaining fasteners. Remove the cover.

https://truckmanualshub.com/

5 Confirm that each turntable mounting bolt is torqued in sequence to specification. Refer to Section 2, *Specifications.*

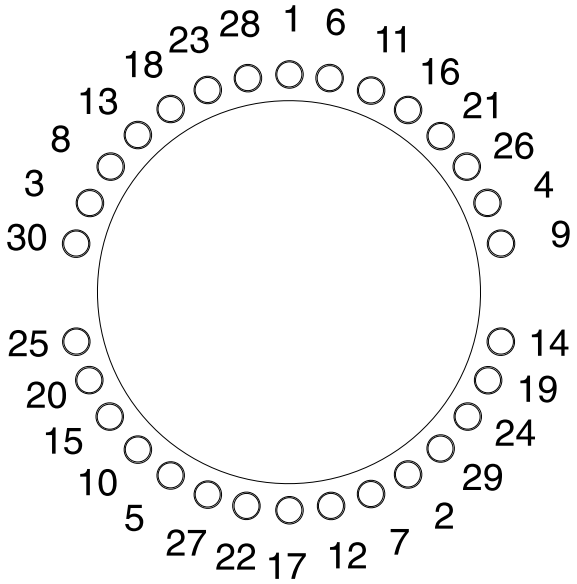

Bolt torque sequence

6 Install the center turntable cover and tighten the retaining fasteners.

7 Raise the boom and remove the safety chock.

8 Lower the boom to the stowed position.

9 Confirm that each bearing mounting bolt under the drive chassis is torqued in sequence to specification. Refer to Section 2, *Specifications*.

D-4
Inspect for Turntable Bearing Wear

Genie specifications require that this procedure be performed every 1000 hours or annually, whichever comes first.

Periodic inspection of turntable bearing wear is essential to safe machine operation, good machine performance and service life. Continued use of a worn turntable bearing could create an unsafe operating condition, resulting in death or serious injury and component damage.

Note: Perform this procedure with the machine on a firm, level surface and the boom in the stowed position.

1 Grease the turntable bearing. See A-12, *Grease the Turntable Rotation Bearing and Rotate Gear.*

2 Torque the turntable bearing bolts to specification. See D-4, *Check the Turntable Rotation Bearing Bolts.*

3 Start the machine from the ground controls and raise the boom to full height. Do not extend the boom.

https://truckmanualshub.com/

CHECKLIST D PROCEDURES

4 Place a dial indicator between the drive chassis and the turntable at a point that is directly under, or inline with, the boom and no more than 1 inch / 2.5 cm from the bearing.

Note: To obtain an accurate measurement, place the dial indicator no more than 1 inch / 2.5 cm from the turntable rotation bearing.

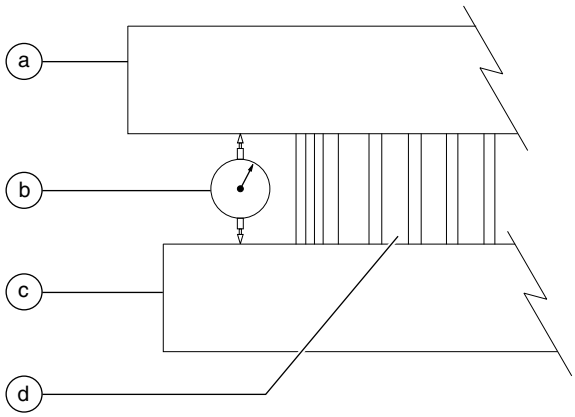

a turntable
b dial indicator
c drive chassis
d turntable rotation bearing

5 At the dial indicator, adjust it to "zero" the indicator.

6 Fully extend the boom and lower to a horizontal position.

7 Note the reading on the dial indicator.

⊙ Result: The measurement is less than 0.063 inch / 1.6 mm. The bearing is good.

⊠ Result: The measurement is more than 0.063 inch / 1.6 mm. The bearing is worn and needs to be replaced.

8 Fully retract the boom and raise the boom to full height. Visually inspect the the dial indicator to be sure the needle returns to the "zero" position.

9 Remove the dial indicator and rotate the turntable 90°.

10 Repeat steps 4 through 9 until the rotation bearing has been checked in at least four equally spaced areas 90° apart.

11 Lower the boom to the stowed position and turn the machine off.

12 Remove the dial indicator from the machine.

https://truckmanualshub.com/

CHECKLIST D PROCEDURES

D-5
Perform Engine Maintenance

Engine specifications require that this procedure be performed every 1000 hours.

Proper engine maintenance, following the engine manufacturer's maintenance schedule, is essential to good engine performance and service life. Failure to perform the maintenance procedures can lead to poor engine performance and component damage.

Required maintenance procedures and additional engine information are available in the:

Deutz TD2011 Operation Manual	
Genie part number	139320
Perkins 804D-33 Operation and Maintenance Manual	
Genie part number	111332
Continental TME27 Owner's Manual	
Genie part number	111901

To access the engine:

1 Remove the engine tray retaining fastener located under the engine tray. Swing the engine tray out away from the machine and secure it from moving.

WARNING Crushing hazard. Failure to install the fastener into the engine tray anchor hole to secure the engine tray from moving could result in death or serious injury.

D-6
Replace the Hydraulic Filters

Genie requires that this procedure be performed every 1000 hours or annually, whichever comes first. Perform this procedure more often if dusty conditions exist.

Replacement of the hydraulic filters is essential for good machine performance and service life. A dirty or clogged filter may cause the machine to perform poorly and continued use may cause component damage. Extremely dirty conditions may require that the filters be replaced more often.

CAUTION Bodily injury hazard. Beware of hot oil. Contact with hot oil may cause severe burns.

Note: Perform this procedure with the engine off.

Hydraulic return filter:

1 Open the ground controls side turntable cover and locate the hydraulic return filter housing on top of the hydraulic tank.

2 Remove the cap from the filter housing.

3 Lift the handle on the filter element and rotate the element counterclockwise to release the element from the housing.

4 Remove the filter element from the filter housing.

5 Install the new filter element into the filter housing.

6 Push the filter element down to be sure the O-ring on the element is fully seated into the housing.

7 Rotate the filter element clockwise to lock it in place.

https://truckmanualshub.com/

CHECKLIST D PROCEDURES

8 Install the filter housing cap.

9 Use a permanent ink marker to write the date and number of hours from the hour meter on the oil filter housing.

Medium and high pressure filters:

Note: The medium pressure filter is for the charge pump and the high pressure filter is for all machine functions except the drive circuit and oscillating axle circuit.

10 Open the engine side turntable cover and locate the two filters.

Note: The high pressure filter is located toward the bulkhead with a condition indicator. The medium pressure filter is located nearest the operator.

11 Place a suitable container under the filters.

12 Remove the filter housing by using a wrench on the nut provided on the bottom of the housings.

13 Remove the filter element from the housings.

14 Inspect the housing seals and replace them if necessary.

15 Install the new medium and high pressure filter elements into the housings and tighten them securely.

16 Clean up any oil that may have spilled during the installation procedure.

17 Use a permanent ink marker to write the date and number of hours from the hour meter on the oil filter housings.

18 Start the engine from the ground controls.

19 Inspect the filter housings and related components to be sure that there are no leaks.

D-7
Replace the Drive Hub Oil

Genie specifications require that this procedure be performed every 1000 hours or annually, whichever comes first.

Replacing the drive hub oil is essential for good machine performance and service life. Failure to replace the drive hub oil at yearly intervals may cause the machine to perform poorly and continued use may cause component damage.

Drive hubs:

1 Select the drive hub to be serviced. Drive the machine until one of the two plugs is at the lowest point.

2 Remove both plugs and drain the oil into a suitable container.

3 Drive the machine until one plug is at the top and the other is at 90 degrees.

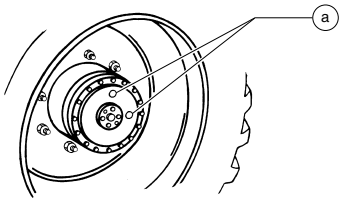

a. models with o-ring plugs

4 Fill the hub with oil from the top hole until the oil level is even with the bottom of the side plug hole. Install the plugs.

5 Install the plugs into the drive hub. Torque to Specification. Refer to Section 2, *Specifications*.

https://truckmanualshub.com/

6 Repeat steps 1 through 4 for the other drive hub.

7 Check the torque of the drive hub mounting bolts. Refer to Section 2, *Specifications*.

Turntable rotate drive hub:

Note: When removing a hose assembly or fitting, the O-ring on the fitting and/or hose end must be replaced and then torqued to specification during installation. Refer to Section 2, *Hydraulic Hose and Fitting Torque Specifications.*

1 Secure the turntable from rotating with the turntable rotation lock pin.

Note: The turntable rotation lock pin is located next to the boom rest pad.

2 Tag, disconnect and plug the hydraulic hoses from the turntable rotate drive motor. Cap the fittings on the drive motor.

3 Attach a suitable lifting device to the lifting eyes located near the drive motor.

4 Remove the drive hub mounting bolts. Carefully remove the turntable rotate drive hub assembly from the machine.

⚠WARNING Crushing hazard. The turntable rotate drive hub assembly could become unbalanced and fall if not properly supported by the lifting device.

5 Remove the plug the drive hub. Drain the oil from the hub into a suitable container.

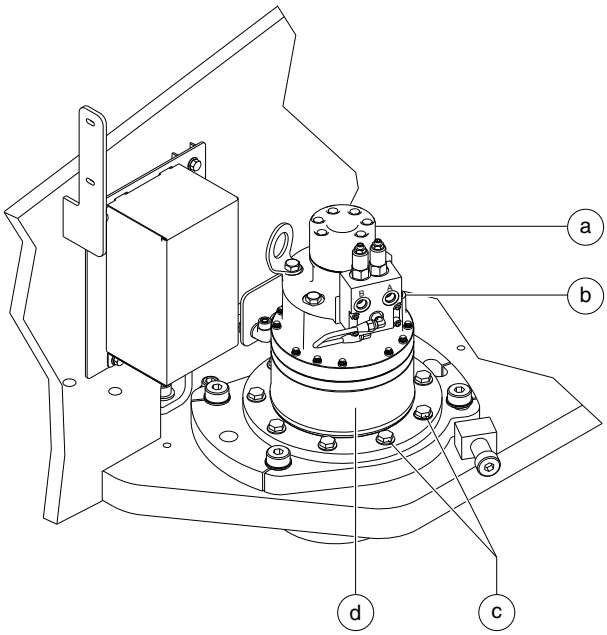

Single fill port rotator
a motor
b fill port
c drive hub mounting bolts
d drive hub

https://truckmanualshub.com/

CHECKLIST D PROCEDURES

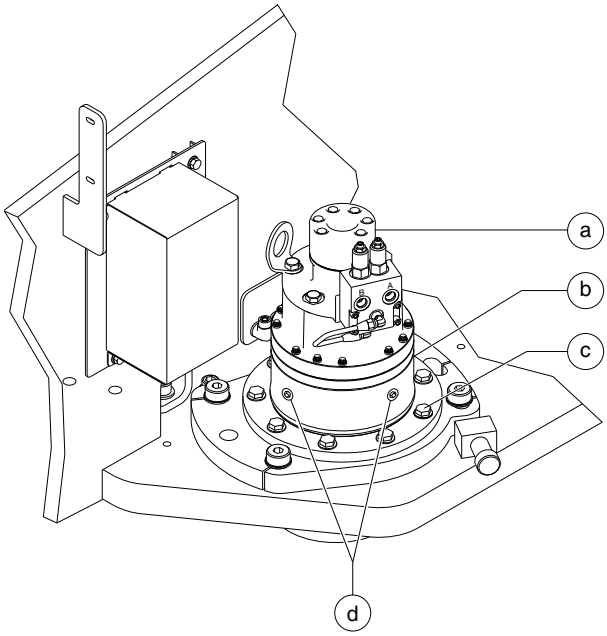

Dual fill port rotator
a motor
b drive hub
c drive hub mounting bolts
d fill ports

6 Install the drive hub assembly onto the machine. Torque the drive hub mounting bolts to specification. Refer to Section 2, *Specifications.*

7 Fill the drive hub with oil. Refer to Section 2, *Specifications.* Apply pipe thread sealant to the plug. Install the plug.

8 Adjust turntable rotation gear backlash. Refer to Repair Procedure 10-1, *How to Adjust the Turntable Rotation Gear Backlash.*

D-8
Perform Engine Maintenance - Deutz Models

Engine specifications require that this procedure be performed every 1500 hours of operation.

Proper engine maintenance, following the engine manufacturer's maintenance schedule, is essential to good engine performance and service life. Failure to perform the maintenance procedures can lead to poor engine performance and component damage.

Required maintenance procedures and additional engine information are available in the:

Deutz TD2011 Operation Manual	
Genie part number	139320

To access the engine:

1 Remove the engine tray retaining fastener located under the engine tray. Swing the engine tray out away from the machine and secure.

WARNING Crushing hazard. Failure to install the fastener into the engine tray anchor hole to secure the engine tray from moving could result in death or serious injury.

https://truckmanualshub.com/

Checklist E Procedures

E-1
Test or Replace the Hydraulic Oil

Genie specifications require that this procedure be performed every 2000 hours or every two years, whichever comes first.

Replacement or testing of the hydraulic oil is essential for good machine performance and service life. Dirty oil and suction strainers may cause the machine to perform poorly and continued use may cause component damage. Extremely dirty conditions may require oil changes to be performed more frequently.

Note: Before replacing the hydraulic oil, the oil may be tested by an oil distributor for specific levels of contamination to verify that changing the oil is necessary. **If the hydraulic oil is not replaced at the two year inspection, test the oil quarterly. Replace the oil when it fails the test.**

Note: Perform this procedure with the boom in the stowed position.

Note: When removing a hose assembly or fitting, the O-ring (if equipped) on the fitting and/or the hose end must be replaced. All connections must be torqued to specification during installation. Refer to Section 2, *Hydraulic Hose and Fitting Torque Specifications*.

1 Remove the fuel tank. Refer to Repair Procedure 9-1, *How to Remove the Fuel Tank.*

2 **Models without hydraulic tank shutoff valves:** Remove the drain plug from the hydraulic tank and completely drain the tank into a suitable container. Refer to Section 2, *Specifications*.

Models with hydraulic tank shutoff valves: Close the two hydraulic tank valves located at the hydraulic tank.

NOTICE Component damage hazard. The engine must not be started with the hydraulic tank shutoff valves in the CLOSED position or component damage will occur. If the tank valves are closed, remove the key from the key switch and tag the machine to inform personnel of the condition.

3 Remove the drain plug from the hydraulic tank

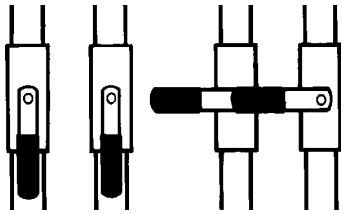

and completely drain the tank into a suitable container. Refer to Section 2, *Specifications.*

4 Tag, disconnect and plug the two suction hoses that are attached to the hydraulic tank shutoff valves.

5 Disconnect and plug the T-fitting located at the return filter with the two hoses connected to it. Cap the fitting on the return filter housing.

6 Disconnect and plug the supply hose for the auxiliary power unit. Cap the fitting on the hydraulic tank.

https://truckmanualshub.com/

CHECKLIST E PROCEDURES

7 Remove the retaining fasteners from the hydraulic tank hold down straps. Remove the hold down straps from the hydraulic tank.

8 Support the hydraulic tank with 2 lifting straps. Place one lifting strap at each end of the tank and attach the lifting straps to an appropriate lifting device.

9 Remove the hydraulic tank from the machine.

⚠WARNING Crushing hazard. The hydraulic tank may become unbalanced and fall if it is not properly supported and secured to the lifting device.

10 Remove the suction strainers from the tank and clean them using a mild solvent.

11 Rinse out the inside of the tank using a mild solvent.

12 Install the suction strainers using pipe thread sealant on the threads.

13 Install the drain plug using pipe thread sealant on the threads.

14 Install the hydraulic tank onto the machine.

15 Install the two suction hoses and the supply hose for the auxiliary power unit.

16 Fill the tank with hydraulic oil until the level is within the top 2 inches / 5 cm of the sight gauge. Do not overfill.

17 Clean up any oil that may have spilled.

18 Open the hydraulic tank shutoff valves (if equipped).

NOTICE Component damage hazard. Be sure to open the two hydraulic tank shutoff valves and prime the pump after installing the hydraulic tank. Refer to Repair Procedure 7-2, *How to Prime the Pump*.

Note: Always use pipe thread sealant when installing the drain plug and strainers.

19 Operate all machine functions through a full cycle and check for leaks.

Note: Genie specifications require additional equipment and special installation instructions for the approved optional fluids. Consult the Genie Industries Service Department before use.

https://truckmanualshub.com/

CHECKLIST E PROCEDURES

E-2
Perform Engine Maintenance - Perkins Models

Engine specifications require that this procedure be performed every 2000 hours.

Proper engine maintenance, following the engine manufacturer's maintenance schedule, is essential to good engine performance and service life. Failure to perform the maintenance procedures can lead to poor engine performance and component damage.

Required maintenance procedures and additional engine information are available in the:

Perkins 804D-33 Operation and Maintenance Manual	
Genie part number	111332

To access the engine:

1 Remove the engine tray retaining fastener located under the engine tray. Swing the engine tray out away from the machine and secure it from moving.

WARNING Crushing hazard. Failure to install the fastener into the engine tray anchor hole to secure the engine tray from moving could result in death or serious injury.

E-3
Perform Engine Maintenance - Deutz and Perkins Models

Engine specifications require that this procedure be performed every 3000 hours.

Proper engine maintenance, following the engine manufacturer's maintenance schedule, is essential to good engine performance and service life. Failure to perform the maintenance procedures can lead to poor engine performance and component damage.

Required maintenance procedures and additional engine information are available in the:

Deutz TD2011 Operation Manual	
Genie part number	139320
Perkins 804D-33 Operation and Maintenance Manual	
Genie part number	111332

To access the engine:

1 Remove the engine tray retaining fastener located under the engine tray. Swing the engine tray out away from the machine and secure it from moving.

WARNING Crushing hazard. Failure to install the fastener into the engine tray anchor hole to secure the engine tray from moving could result in death or serious injury.

https://truckmanualshub.com/

CHECKLIST E PROCEDURES

E-4
Replace the Boom Extend/ Retract Cables

Genie specifications require that this procedure be performed every 10 years.

The boom extend/retract cables are responsible for the extension and retraction of the number 3 boom tube. Replacement of the boom extend/retract cables is essential to good machine performance and safe machine operation. The boom extend/ retract functions should operate smoothly and be free of hesitation, jerking and unusual noise.

1 Replace the boom extend/retract cables. See Repair Procedure 4-5, *How to Replace the Boom Extend/Retract Cables.*

https://truckmanualshub.com/

Repair Procedures

Observe and Obey:

- ☑ Repair procedures shall be completed by a person trained and qualified on the repair of this machine.
- ☑ Immediately tag and remove from service a damaged or malfunctioning machine.
- ☑ Repair any machine damage or malfunction before operating the machine.

Before Repairs Start:

- ☑ Read, understand and obey the safety rules and operating instructions in the appropriate operator's manual on your machine before attempting any maintenance or repair procedure.
- ☑ Be sure that all necessary tools and parts are available and ready for use.
- ☑ Use only Genie approved replacement parts.
- ☑ Read each procedure completely and adhere to the instructions. Attempting shortcuts may produce hazardous conditions.
- ☑ Unless otherwise specified, perform each repair procedure with the machine in the following configuration:
  - Machine parked on a firm, level surface
  - Boom in the stowed position
  - Turntable rotated with the boom between the non-steering wheels
  - Turntable secured with the turntable rotation lock pin
  - Key switch in the off position with the key removed
  - Wheels chocked
  - All external AC power supply disconnected from the machine

About This Section

Most of the procedures in this section should only be performed by a trained service professional in a suitably equipped workshop. Select the appropriate repair procedure after troubleshooting the problem.

Perform disassembly procedures to the point where repairs can be completed. Then to re-assemble, perform the disassembly steps in reverse order.

Symbols Legend

Safety alert symbol—used to alert personnel to potential personal injury hazards. Obey all safety messages that follow this symbol to avoid possible injury or death.

DANGER Used to indicate the presence of an imminently hazardous situation which, if not avoided, will result in death or serious injury.

WARNING Used to indicate the presence of a potentially hazardous situation which, if not avoided, could result in death or serious injury.

CAUTION With safety alert symbol—used to indicate the presence of a potentially hazardous situation which, if not avoided, may result in minor or moderate injury.

NOTICE Used to indicate the presence of a potentially hazardous situation which, if not avoided, may result in property damage.

Note: Used to indicate operation or maintenance information.

⊙ Indicates that a specific result is expected after performing a series of steps.

⊗ Indicates that an incorrect result has occurred after performing a series of steps.

https://truckmanualshub.com/

Platform Controls

The platform control box contains one printed circuit board. The ALC-500 circuit board inside the platform control box controls all proportional machine functions from the platform. The joystick controllers at the platform controls utilize Hall Effect technology and require no adjustment. The operating parameters of the joysticks are stored in memory at the ECM circuit board at the platform controls. If a joystick error occurs or if a joystick is replaced, it will need to be calibrated before that particular machine function will operate. See 1-2, *How to Calibrate a Joystick.*

Each joystick controller should operate smoothly and provide proportional speed control over its entire range of motion.

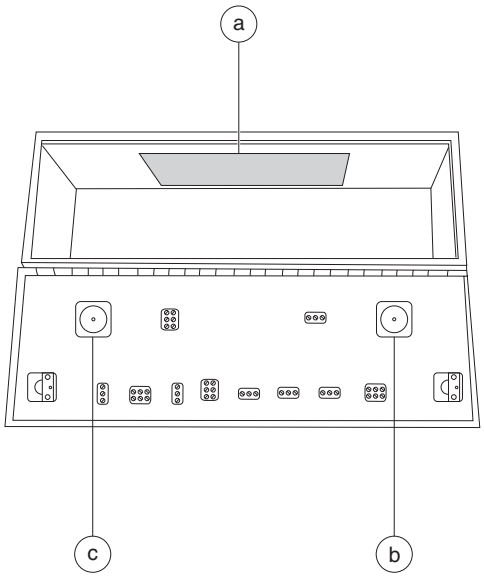

a ALC-500 circuit board
b drive/steer joystick controller
c primary boom up/down, extend/retract and turntable rotate right/left joystick controller

1-1 ALC-500 Circuit Board

Note: When the ALC-500 circuit board is replaced, the joystick controllers will need to be calibrated. See 1-2, *How to Calibrate a Joystick.*

How to Remove the ALC-500 Circuit Board

1 Push in the Emergency Stop button to the off position at both the ground and platform controls.

2 Remove the platform control box lid retaining fasteners. Open the control box lid.

3 Locate the ALC-500 circuit board mounted to the inside of the platform control box.

WARNING Electrocution/burn hazard. Contact with electrically charged circuits could result in death or serious injury. Remove all rings, watches and other jewelry.

4 Attach a grounded wrist strap to the ground screw inside the platform control box.

NOTICE Component damage hazard. Electrostatic discharge (ESD) can damage printed circuit board components. Maintain firm contact with a metal part of the machine that is grounded at all times when handling printed circuit boards OR use a grounded wrist strap.

5 Carefully disconnect the wire connectors from the circuit board.

6 Remove the ALC-500 circuit board mounting fasteners.

7 Carefully remove the ALC-500 circuit board from the platform control box.

https://truckmanualshub.com/

1-2 Joysticks

How to Calibrate a Joystick

The joysticks on this machine utilize digital Hall Effect technology for proportional control. If a joystick is disconnected or replaced, it must be calibrated before that particular machine function will operate.

Note: The joystick must be calibrated before the threshold, max-out or ramping can be set.

Note: Perform this procedure with the engine off.

1 Open the platform control box.

2 Pull out the red Emergency Stop button to the on position at both the ground and platform controls.

3 Turn the key switch to platform control. Do not start the engine.

4 Select a joystick to calibrate.

5 Disconnect the wire harness connector from the joystick for approximately 10 seconds or until the alarm sounds. Connect the wire harness connector to the joystick.

6 Move the joystick full stroke in either direction and hold for 5 seconds.

7 Return the joystick to the neutral position, pause for a moment, then move the joystick full stroke in the opposite direction. Hold for 5 seconds.

⊙ Result: The alarm should sound indicating successful joystick calibration.

⊠ Result: The alarm does not sound. Check the electrical connections or replace the joystick.

8 Repeat this procedure for each joystick controlled machine function including the thumb rocker steer switch.

Note: No machine fuction should operate while performing the joystick calibration procedure.

How to Adjust the Joystick Max-out Setting

The max-out setting of a joystick controls the maximum speed of a joystick-controlled machine function. Whenever a hydraulic cylinder, drive motor or hydraulic pump is replaced, the max-out setting should be adjusted to maintain optimum performance. The max-out settings on the joystick can be changed to compensate for hydraulic pump wear to maintain peak performance from the machine.

Note: Perform this procedure with the boom in the stowed position.

1 Pull out the red Emergency Stop button to the on position at both the ground and platform controls.

2 Turn the key switch to platform control. Do not start the engine.

3 Push in the platform controls red Emergency Stop button to the off position.

4 Do not press down the foot switch.

5 Move and hold the drive enable toggle switch in the right position and pull out the red Emergency Stop button to the on position.

6 When the alarm sounds, release the drive enable toggle switch.

https://truckmanualshub.com/

PLATFORM CONTROLS

7 Momentarily activate the drive enable toggle switch in the right direction 4 times.

⊙ Result: There should be a pause and the alarm should sound 4 times indicating that the machine is in max-out calibration mode.

Result: The alarm does not sound. Repeat steps 3 through 7.

8 Start the engine from the platform controls and press down the foot switch.

9 Start a timer and activate the machine function that needs to be adjusted. Record the time it takes for that function to complete a full cycle (ie; boom up).

10 Compare the machine function time with the function times listed in Section 2, *Specifications.* Determine whether the function time needs to increase or decrease.

11 While the joystick is activated, adjust the max-out setting to achieve the proper function cycle time. Momentarily move the drive enable toggle switch in the right direction to increase the function speed or momentarily move the drive enable toggle switch in the left direction to decrease the function speed.

Note: Each time the drive enable toggle switch is momentarily moved, the function speed will change in 2% increments.

12 Repeat steps 9 through 11 for each joystick controlled machine function.

13 Return the joystick to the neutral position and wait for approximately 10 seconds to allow the settings to be saved.

⊙ Result: The alarm should sound indicating that the settings have been saved in memory.

Result: The alarm does not sound. The minimum or maximum adjustment has been obtained. No changes can be saved.

Note: Do not operate any machine function during the 10 second waiting time.

14 Cycle the red Emergency Stop button off, then back on.

How to Adjust the Joystick Ramp Rate Setting

The ramp rate setting of a joystick controls the time at which it takes for the joystick to reach maximum output, when moved out of the neutral position. The ramp rate settings of a joystick can be changed to compensate for hydraulic pump wear to maintain peak performance from the machine.

Note: Perform this procedure with the boom in the stowed position.

1 Pull out the red Emergency Stop button to the on position at both the ground and platform controls.

2 Turn the key switch to platform control. Do not start the engine.

3 Push in the platform controls red Emergency Stop button to the off position.

https://truckmanualshub.com/

PLATFORM CONTROLS

4 Do not press down the foot switch.

5 Move and hold the drive enable toggle switch in the right position and pull out the red Emergency Stop button to the on position.

6 When the alarm sounds, release the drive enable toggle switch.

7 Momentarily activate the drive enable toggle switch in the right direction 6 times.

⊙ Result: There should be a pause and the alarm should sound 6 times indicating that the machine is in ramp rate calibration mode.

⊠ Result: The alarm does not sound. Repeat steps 3 through 7.

8 Start the engine from the platform controls and press down the foot switch.

9 Start a timer and simultaneously move the joystick in either direction full stroke. Note how long it takes the function to reach maximum speed. This is the ramp rate.

10 Compare the function ramp rate time with the table below and determine whether the ramp rate time needs to increase or decrease.

11 Release the foot switch.

12 While the joystick is activated, set the ramp rate. Momentarily move the drive enable toggle switch in the right direction to increase the time or momentarily move the drive enable toggle switch in the left direction to decrease the time.

Note: Each time the drive enable toggle switch is momentarily moved, the time will change in 5% increments.

13 Repeat steps 9 through 11 for each joystick controlled machine function.

14 Return the joystick to the neutral position and wait for approximately 10 seconds to allow the settings to be saved.

⊙ Result: The alarm should sound indicating that the settings have been saved in memory.

Note: Do not operate any machine function during the 10 second waiting time.

15 Cycle the red Emergency Stop button off, then back on.

Ramp rate (factory settings)	
Turntable rotate	
accelerate	3 seconds
decelerate	2 second
Boom up/down	
accelerate	3 seconds
decelerate	1 second
Boom extend/retract	
accelerate	2.5 seconds
decelerate	1 second
Drive	
accelerate	4 seconds
decelerate to neutral	0.5 second
decelerate, change of direction	0.75 second
decelerate, coasting	1 second
decelerate, braking	1 second
decelerate, shift from low to high speed	1 second
decelerate, shift from high to low speed	4 seconds

https://truckmanualshub.com/

PLATFORM CONTROLS

How to Adjust the Joystick Threshold Setting

The threshold setting of a joystick is the minimum output at which a function proportional valve can open and allow the function to operate.

Note: Perform this procedure with the boom in the stowed position.

1 Pull out the red Emergency Stop button to the on position at both the ground and platform controls.

2 Turn the key switch to platform control. Do not start the engine.

3 Push in the red Emergency Stop button to the off position at the platform controls.

4 Do not press down the foot switch.

5 Move and hold the drive enable toggle switch in the right position and pull out the red Emergency Stop button to the on position.

6 When the alarm sounds, release the drive enable toggle switch.

7 Momentarily activate the drive enable toggle switch in the right direction 8 times.

⊙ Result: There should be a pause and the alarm should sound 8 times indicating that the machine is in threshold calibration mode.

⊠ Result: The alarm does not sound. Repeat steps 3 through 7.

8 Start the engine from the platform controls and press down the foot switch.

9 Select a boom function joystick to set the threshold.

10 Slowly move the joystick off center in either direction just until the function begins to move.

11 Slowly move the joystick back to the neutral position. Just before the function stops moving, move the drive enable toggle switch to either side to set the threshold.

⊙ Result: The alarm should sound indicating a successful calibration.

12 Repeat steps 9 through 11 for each boom joystick-controlled machine function (boom up/down, boom extend/retract and turntable rotate).

13 Return the joystick to the neutral position and wait for approximately 10 seconds.

⊙ Result: The alarm should sound indicating that the settings have been saved in memory.

Note: Do not operate any machine function during the 10 second waiting time.

14 Cycle the red Emergency Stop button off, then back on.

Function speeds (factory settings)	
Boom up	89 to 93 seconds
Boom down	90 to 94 seconds
Boom extend	73 to 79 seconds
Boom retract	79 to 84 seconds
Turntable rotate, 360° boom fully stowed	95 to 103 seconds
Drive speeds (factory settings)	
Stowed- high speed	7.9 to 8.5 seconds
Non-stowed	40 to 45 seconds

https://truckmanualshub.com/

How to Calibrate the Boom Angle Sensor

The boom angle sensor controls the maximum angle that the boom can attain.

Note: Perform this procedure with the boom in the stowed position.

1 Pull out the red Emergency Stop button to the on position at the ground controls.

2 Turn the key switch to platform controls.

3 Move and hold the drive enable toggle switch to the right and pull out the red Emergency Stop button to the on position.

4 When the alarm sounds, release the drive enable toggle switch.

5 Momentarily activate the drive enable toggle switch to the right 12 times.

⊙ Result: There should be a pause and the alarm should sound 12 times indicating that the machine is in Angle Sensor calibration mode.

6 Start the engine from the platform controls and press down the foot switch.

7 Momentarily activate the drive enable toggle switch to the right 1 time to set the stowed position.

Note: The alarm will not sound indicating the setting.

8 Raise the primary boom to the fully elevated position.

Note: Manually reduce the boom speed as it reaches the fully elevated position.

9 Momentarily activate the drive enable toggle switch to the right 1 time to set the elevated position.

⊙ Result: The alarm will sound indicating that the angle sensor has been calibrated.

10 Release the joystick and the foot switch and wait for 10 seconds.

⊙ Result: The alarm will sound indicating that the settings have been saved and is leaving calibration mode.

11 Cycle the red Emergency Stop button off, then back on. Start the machine and return to the stowed position.

https://truckmanualshub.com/

This page intentionally left blank.

https://truckmanualshub.com/

Platform Components

2-1 Platform

How to Remove the Platform

1 Remove the cable clamp from the top of the platform mounting weldment.

2 Remove the mounting fasteners from the power to platform outlet box bracket. Lay the outlet box and bracket assembly off to the side. Do not disconnect the wiring.

3 Remove the foot switch mounting fasteners.

4 Remove the cover plate from the bottom of the foot switch to access the foot switch wire terminals.

5 Tag and disconnect the foot switch wiring from the foot switch. Remove the cable from the back of the platform.

⚠WARNING Electrocution/burn hazard. Contact with electrically charged circuits could result in death or serious injury. Remove all rings, watches and other jewelry.

6 Remove the platform control box mounting fasteners. Lower the control box and set it aside.

NOTICE Component damage hazard. Cables can be damaged if they are kinked or pinched.

Note: If your machine is equipped with an airline to platform option, the airline must be disconnected from the platform before removal.

7 Support and secure the platform to an appropriate lifting device.

8 Remove the platform mounting fasteners and remove the platform from the machine.

⚠WARNING Crushing hazard. The platform could become unstable and fall when it is removed from the machine if not properly supported.

https://truckmanualshub.com/

PLATFORM COMPONENTS

2-2
Platform Leveling Slave Cylinder

The slave cylinder and the rotator pivot are the two primary supports for the platform. The slave cylinder keeps the platform level through the entire range of boom motion. It operates in a closed-circuit hydraulic loop with the master cylinder. The slave cylinder is equipped with counterbalance valves to prevent movement in the event of a hydraulic line failure.

How to Remove the Platform Leveling Slave Cylinder

Note: Before cylinder removal is considered, bleed the slave cylinder to be sure there is no air in the closed loop.

Note: When removing a hose assembly or fitting, the O-ring (if equipped) on the fitting and/or the hose end must be replaced. All connections must be torqued to specification during installation. Refer to Section 2, *Hydraulic Hose and Fitting Torque Specifications*.

1 Extend the primary boom until the slave cylinder barrel-end pivot pin is accessible.

2 Raise the primary boom slightly and place blocks under the platform for support.

3 Lower the primary boom until the platform is resting on the blocks just enough to support the platform.

Note: Do not rest the entire weight of the boom on the blocks.

4 Remove the pin retaining fastener from the slave cylinder rod-end pivot pin. Use a soft metal drift to drive the rod-end pivot pin out.

WARNING Crushing hazard. The jib boom could fall when the slave cylinder rod-end pivot pin is removed if not properly supported.

5 Remove the external snap rings from the barrel-end pivot pin.

6 Use a soft metal drift to drive the barrel-end pivot pin out.

7 Carefully pull the cylinder out of the primary boom to access the hydraulic hoses.

8 Tag, disconnect and plug the hydraulic hoses from the slave cylinder. Cap the fittings on the cylinder.

WARNING Bodily injury hazard. Spraying hydraulic oil can penetrate and burn skin. Loosen hydraulic connections very slowly to allow the oil pressure to dissipate gradually. Do not allow oil to squirt or spray.

How to Bleed the Slave Cylinder

Note: Do not start the engine. Use auxiliary power for this procedure.

1 Raise the primary boom to a horizontal position.

2 Move the platform level toggle switch up and down through two platform leveling cycles to remove any air that might be in the system.

https://truckmanualshub.com/

2-3 Platform Rotator

The platform rotator is a hydraulically activated helical gear assembly used to rotate the platform 160 degrees.

How to Remove the Platform Rotator

NOTICE Component damage hazard. Mark the platform mounting weldment and the rotator flange before removing the platform mounting weldment. The platform mounting weldment must be replaced in the exact same position on the rotator flange as it was before removal. If a new rotator is installed or the rotator is disassembled, proper alignment can be achieved by rotating the rotator all the way to the left and then installing the platform mounting weldment all the way in the left position.

Note: When removing a hose assembly or fitting, the O-ring (if equipped) on the fitting and/or the hose end must be replaced. All connections must be torqued to specification during installation. Refer to Section 2, *Hydraulic Hose and Fitting Torque Specifications*.

1 Remove the platform. See 2-1, *How to Remove the Platform*.

2 Tag, disconnect and plug the hydraulic hoses from the platform rotator manifold. Cap the fittings on the rotator.

⚠WARNING Bodily injury hazard. Spraying hydraulic oil can penetrate and burn skin. Loosen hydraulic connections very slowly to allow the oil pressure to dissipate gradually. Do not allow oil to squirt or spray.

3 **S-85:** Support the jib boom leveling arms and the platform mounting weldment with an appropriate lifting device. Do not apply any lifting pressure.

4 Remove the mounting bolts from the platform mounting weldment. Remove the center bolt and slide the platform mounting weldment off of the platform rotator.

⚠WARNING Crushing hazard. The platform mounting weldment could become unbalanced and fall if not properly supported when removed from the machine.

5 Support the platform rotator with an appropriate lifting device. Do not apply any lifting pressure.

S-80:

6 Support the rod end of the platform leveling slave cylinder. Protect the cylinder rod from damage.

7 Remove the pivot pin retaining fasteners from both the slave cylinder rod-end pivot pin and the rotator pivot pin.

https://truckmanualshub.com/

PLATFORM COMPONENTS

8 Use a soft metal drift to remove both pivot pins. Remove the platform rotator from the machine.

⚠CAUTION Crushing hazard. The platform rotator may become unbalanced and fall if not properly supported.

Note: When installing the platform rotator fasteners, torque the fasteners to specifications. Refer to Section 2, *Specifications.*

S-85:

9 Remove the pin retaining fasteners from the jib boom and jib boom leveling arms to platform rotator pivot pins. Do not remove the pins.

10 Support the jib boom leveling arms.

11 Use a soft metal drift to drive both pins out, then remove the platform rotator from the machine.

⚠CAUTION Bodily injury hazard. The jib boom leveling arms may fall if not properly supported.

12 Lower the jib boom leveling arms.

⚠CAUTION Crushing hazard. The platform rotator may become unbalanced and fall if not properly supported.

Note: When installing the platform rotator fasteners, torque the fasteners to specifications. Refer to Section 2, *Specifications*.

How to Bleed the Platform Rotator

Note: This procedure will require two people. Do not start the engine. Use auxiliary power for this procedure.

1 Move the function enable toggle switch to either side and activate the platform rotate toggle switch to the right then the left through two platform rotation cycles, then hold the switch to the right position until the platform is fully rotated to the right.

2 Place a suitable container underneath the platform rotator.

3 Open the top bleed screw on the rotator, but do not remove it.

⚠WARNING Bodily injury hazard. Spraying hydraulic oil can penetrate and burn skin. Loosen hydraulic connections very slowly to allow the oil pressure to dissipate gradually. Do not allow oil to squirt or spray.

https://truckmanualshub.com/

4 Move the function enable button to either side and hold the platform rotate toggle switch to the left position until the platform is fully rotated to the left. Continue holding the toggle switch until air stops coming out of the bleed screw. Close the bleed screw.

WARNING Crushing hazard. Keep clear of the platform during rotation.

5 Open the bottom bleed screw on the rotator, but do not remove it.

WARNING Bodily injury hazard. Spraying hydraulic oil can penetrate and burn skin. Loosen hydraulic connections very slowly to allow the oil pressure to dissipate gradually. Do not allow oil to squirt or spray.

6 Move the function enable toggle switch to either side and hold the platform rotate toggle switch to the right position until the platform is fully rotated to the right. Continue holding the toggle switch until air stops coming out of the bleed screw. Close the bleed screw.

WARNING Crushing hazard. Keep clear of the platform during rotation.

7 Clean up any hydraulic oil that may have spilled.

8 Rotate the platform fully in both directions and inspect the bleed screws for leaks.

2-4 Platform Overload System

How to Calibrate the Platform Overload System (if equipped)

Calibration of the platform overload system is essential to safe machine operation. Continued use of an improperly calibrated platform overload system could result in the system failing to sense an overloaded platform. The stability of the machine is compromised and it could tip over.

Note: Perform this procedure with the machine on a firm, level surface.

1 Turn the key switch to platform control. Start the engine and level the platform.

2 Determine the maximum platform capacity. Refer to the machine serial plate.

3 Remove all weight, tools and accessories from the platform.

Note: Failure to remove all weight, tools and accessories from the platform will result in an incorrect calibration.

4 Using a suitable lifting device, place a test weight equal to the maximum platform capacity at the center of the platform floor.

https://truckmanualshub.com/

PLATFORM COMPONENTS

5 Move the platform up and down by hand, so it bounces approximately 2.5 to 5 cm / 1 to 2 inches. Allow the platform to settle.

Result: The overload indicator lights are off and the alarm does not sound. Proceed to step 6.

Result: The overload indicator lights are flashing at the platform and ground controls, and the alarm is sounding. Slowly tighten the load spring adjustment nut in a clockwise direction in 10° increments until the overload indicator light turns off, and the alarm does not sound. Proceed to step 8.

Note: The platform will need to be moved up and down and allowed to settle between each adjustment.

Note: There may be a 2 second delay before the platform overload indicator light and alarm responds.

6 Move the platform up and down by hand, so it bounces approximately 2.5 to 5 cm / 1 to 2 inches. Allow the platform to settle.

Result: The overload indicator lights are off at the platform and ground controls, and the alarm does not sound. Slowly loosen the load spring adjustment nut in a counterclockwise direction in 10° increments until the overload indicator light flashes at both the platform and ground controls, and the alarm sounds.
Proceed to step 7.

Result: The overload indicator lights are flashing at the platform and ground controls, and the alarm is sounding. Repeat this procedure beginning with step 5.

Note: The platform will need to be moved up and down and allowed to settle between each adjustment.

Note: There may be a 2 second delay before the platform overload indicator lights and alarm responds.

7 Move the platform up and down by hand, so it bounces approximately 2.5 to 5 cm / 1 to 2 inches. Allow the platform to settle.

Result: The overload indicator lights are off and the alarm does not sound. Proceed to step 8.

Result: The overload indicator lights are flashing at the platform and ground controls, and the alarm is sounding. Repeat this procedure beginning with step 5.

Note: There may be a 2 second delay before the platform overload indicator light and alarm responds.

8 Add an additional 10 lb / 4.5 kg test weight to the platform.

Result: The overload indicator light is flashing at both the ground and platform controls, and the alarm is sounding. Proceed to step 9.

Result: The overload indicator light is off at both the ground and platform controls, and the alarm does not sound. Remove the additional 10 lb / 4.5 kg test weight. Repeat this procedure beginning with step 6.

Note: There may be a 2 second delay before the platform overload indicator light and alarm responds.

9 Test all machine functions from the platform controls.

Result: All platform control functions should not operate.

https://truckmanualshub.com/

10 Turn the key switch to ground control.

11 Test all machine functions from the ground controls.

- Result: All ground control functions should not operate.

12 Using a suitable lifting device, lift the test weight off the platform floor.

- Result: The platform overload indicator light should be off at both the ground and platform controls and the alarm should not sound.

Note: There may be a 2 second delay before the overload indicator lights and alarm turn off.

13 Test all machine functions from the ground controls.

- Result: All ground control functions should operate normally.

14 Turn the key switch to platform control.

15 Test all machine functions from the platform controls.

- Result: All platform control functions should operate normally.

https://truckmanualshub.com/

Jib Boom Components, S-85

3-1
Jib Boom

How to Remove the Jib Boom

Note: Perform this procedure with the boom in the stowed position.

Note: When removing a hose assembly or fitting, the O-ring (if equipped) on the fitting and/or the hose end must be replaced. All connections must be torqued to specification during installation. Refer to Section 2, *Hydraulic Hose and Fitting Torque Specifications*.

1 Remove the platform. See 2-1, *How to Remove the Platform*.

Note: **Models equipped with platform overoad system:** If the platform overload components are disassembled and/or removed from the platform support, the platform overload system will need to be calibrated. See 2-4, *How to Calibrate the Platform Overload System.*

2 **Models equipped with platform overload system:** Tag and disconnect the electrical connector from the platform load sense module.

3 Remove the hose and cable cover from the side of the jib boom.

4 Remove the hose and cable clamp from the jib boom pivot pin. Lay all hoses and cables to the side.

NOTICE Component damage hazard. Hoses and cables can become damaged if they are kinked or pinched.

5 Tag, disconnect and plug the jib boom lift cylinder hydraulic hoses. Cap the fittings on the cylinder.

⚠WARNING Bodily injury hazard. Spraying hydraulic oil can penetrate and burn skin. Loosen hydraulic connections very slowly to allow the oil pressure to dissipate gradually. Do not allow oil to squirt or spray.

6 Attach a lifting strap from an overhead crane to the jib boom assembly.

7 Place blocks under the platform leveling cylinder for support. Protect the cylinder rod from damage.

8 Remove the pin retaining fastener from the slave cylinder rod-end pivot pin. Use a soft metal drift to remove the pin.

⚠WARNING Crushing hazard. The jib boom could fall when the slave cylinder rod-end pivot pin is removed if not properly attached to the overhead crane.

9 Remove the pin retaining fastener from the jib boom bellcrank to primary boom pivot pin.

10 Use a soft metal drift to remove the pin and carefully remove the jib boom assembly from the primary boom.

⚠WARNING Crushing hazard. The jib boom could become unbalanced and fall when removed from the machine if not properly attached to the overhead crane.

https://truckmanualshub.com/

3-2
Jib Boom Lift Cylinder

How to Remove the Jib Boom Lift Cylinder

Note: Perform this procedure with the boom in the stowed position.

Note: When removing a hose assembly or fitting, the O-ring (if equipped) on the fitting and/or the hose end must be replaced. All connections must be torqued to specification during installation. Refer to Section 2, *Hydraulic Hose and Fitting Torque Specifications*.

1 Raise the jib boom slightly and place blocks under the platform mounting weldment. Then lower the jib boom until the platform is resting on the blocks just enough to support the platform.

Note: Do not rest the entire weight of the boom on the blocks.

2 Tag, disconnect and plug the jib boom lift cylinder hydraulic hoses. Cap the fittings on the cylinder.

WARNING Bodily injury hazard. Spraying hydraulic oil can penetrate and burn skin. Loosen hydraulic connections very slowly to allow the oil pressure to dissipate gradually. Do not allow oil to squirt or spray.

3 Remove the pin retaining fasteners from the jib boom lift cylinder rod-end pivot pin. Do not remove the pin.

4 Use a soft metal drift to tap the jib boom lift cylinder rod-end pivot pin half way out. Then lower one of the leveling arms to the ground. Tap the pin the other direction and lower the opposite leveling arm. Do not remove the pin.

5 Attach a lifting strap from an overhead crane to the lug at the rod end of the jib boom lift cylinder.

6 Remove the pin retaining fastener from the jib boom lift cylinder barrel-end pivot pin. Use a soft metal drift to remove the pin.

7 Use a soft metal drift to remove the jib boom lift cylinder rod-end pin. Remove the cylinder from the machine.

WARNING Crushing hazard. The jib boom lift cylinder could become unbalanced and fall if not properly supported when removed from the machine.

https://truckmanualshub.com/

Boom Components

4-1
Cable Track

The boom cable track guides cables and hoses running up the boom. It can be repaired link by link without removing the cables and hoses that run through it. Removing the entire boom cable track is necessary when performing major repairs that involve removing the boom.

How to Remove the Cable Track

Note: When removing a hose assembly or fitting, the O-ring (if equipped) on the fitting and/or the hose end must be replaced. All connections must be torqued to specification during installation. Refer to Section 2, *Hydraulic Hose and Fitting Torque Specifications*.

1 Open the platform control box.

2 Tag and disconnect the foot switch wiring from the terminal strip inside the platform control box.

3 Loosen the squeeze connector and remove the foot switch cable from the control box.

4 Disconnect the wire connectors from the bottom of the platform control box.

Note: When installing the wire connectors to the bottom of the platform control box, match the color of the connectors to those on the control box to be sure they are installed in the correct location.

5 Remove the mounting fasteners from the power to platform outlet box bracket. Lay the outlet box and bracket assembly off to the side.

6 **S-80:** Tag, disconnect and plug the hydraulic hoses from the counterbalance valve manifold located on the platform rotator. Cap the fittings on the manifold.

⚠WARNING Bodily injury hazard. Spraying hydraulic oil can penetrate and burn skin. Loosen hydraulic connections very slowly to allow the oil pressure to dissipate gradually. Do not allow oil to squirt or spray.

7 Tag, disconnect and plug the hydraulic hoses from the platform leveling slave cylinder at the platform manifold and cap the fittings.

⚠WARNING Bodily injury hazard. Spraying hydraulic oil can penetrate and burn skin. Loosen hydraulic connections very slowly to allow the oil pressure to dissipate gradually. Do not allow oil to squirt or spray.

8 Remove the timing link/timing link cam pin and gently rest the timing link against the counterweight.

9 **S-85:** Remove the hose and cable cover from the side of the jib boom.

10 Tag, disconnect and plug the hydraulic hoses from the jib boom/platform rotate select manifold. Cap the fittings on the manifold.

https://truckmanualshub.com/

11 Tag, disconnect and plug the wiring from the jib boom/platform rotate select manifold.

12 Tag, disconnect and plug the hydraulic hoses from the jib boom lift cylinder. Cap the fittings on the cylinder.

⚠WARNING Bodily injury hazard. Spraying hydraulic oil can penetrate and burn skin. Loosen hydraulic connections very slowly to allow the oil pressure to dissipate gradually. Do not allow oil to squirt or spray.

All models:

13 From the ground controls, raise the boom to a horizontal position.

14 Remove the fasteners from the drive speed limit switch bracket (LS1RS) mounted on the side of the boom at the platform end of the boom. Do not remove the limit switch from the bracket.

15 Remove the cotter pin from the upper cable track at the platform end of the boom.

Note: Always replace the cotter pin with a new one.

16 Remove the cable track guide fasteners from the cable track guides at the platform end of the boom. Remove the cable track guides from the boom.

17 Remove the cable clamp from the pivot end of the boom.

18 Place blocks between the upper and lower cable tracks and secure the upper and lower tracks together.

⚠WARNING Crushing hazard. If the upper and lower cable tracks are not properly secured together, the cable track could become unbalanced and fall when removed from the machine.

19 Attach a lifting strap from an overhead crane to the cable track.

20 Remove the mounting fasteners that attach the lower cable track to the boom.

21 Remove the cable track from the machine and place it on a structure capable of supporting it.

⚠WARNING Crushing hazard. The cable track could become unbalanced and fall if not properly attached to the overhead crane.

NOTICE Component damage hazard. Cables and hoses can be damaged if they are kinked or pinched.

NOTICE Component damage hazard. The cable track can be damaged if it is twisted.

https://truckmanualshub.com/

BOOM COMPONENTS

How to Repair the Cable Track

NOTICE Component damage hazard. The boom cable track can be damaged if it is twisted.

Note: A cable track repair kit is available through the Genie Industries Service Parts Department, part no. 77896. The kit includes a 4-link section of cable track.

1 Visually inspect the cable track and determine which 4 link section needs to be replaced.

2 Carefully remove the snap rings from each end of the damaged section of cable track.

3 Remove the retaining fasteners from the upper black rollers from the 4-link section of cable track to be replaced. Remove the rollers.

4 Lift up the hoses and cables and carefully remove the damaged 4-link section of cable track.

NOTICE Component damage hazard. Hoses and cables can be damaged if they are kinked or pinched.

5 Remove the upper rollers from the replacement section of cable track.

6 Lift up the hoses and cables and carefully insert the new 4 link section of cable track.

NOTICE Component damage hazard. Hoses and cables can be damaged if they are kinked or pinched.

7 Connect the ends of the replacement cable track section to the existing cable track using the snap rings.

8 Install the rollers onto the new section of cable track.

9 Operate the boom extend/retract function through a full cycle to ensure smooth operation of the new section of cable track.

https://truckmanualshub.com/

4-2 Boom

How to Shim the Boom

1 Measure each wear pad.

Note: Replace the pad if thickness is less than minimum specification. If thickness is more than minimum specification, perform the following procedure. Refer to Section 3, *D-1, Check the Boom Wear Pads.*

2 Extend the boom until the wear pads are accessible.

3 Loosen the wear pad mounting fasteners.

4 Install the new shims under the wear pad to obtain zero clearance and zero drag.

5 Tighten the mounting fasteners.

6 Extend and retract the boom through an entire cycle. Check for tight spots that could cause binding or scraping.

Note: Always maintain squareness between the outer and inner boom tubes.

How to Remove the Boom

DANGER Tip-over hazard. This procedure requires the removal of the turntable counterweight. Failure to remove the counterweight before removing the boom assembly will result in the machine tipping over. Do not remove the boom without first removing the counterweight.

DANGER Tip-over hazard. When installing the boom onto the machine, the boom assembly must be first installed prior to the installation of the counterweight. If the counterweight is installed before the boom assembly, the machine will tip over resulting in death or serious injury.

DANGER Tip-over hazard. The turntable counterweight is essential for machine stability. Failure to install the counterweight after installing the boom assembly will compromise machine stability resulting in the machine tipping over. Death or serious injury will result.

WARNING Bodily injury hazard. This procedure requires specific repair skills, lifting equipment and a suitable workshop. Attempting this procedure without these skills and tools could result in death or serious injury and significant component damage. Dealer service is strongly recommended.

1 Remove the jib boom. See 3-1, *How to Remove the Jib Boom.*

2 Remove the cable track. See 4-1, *How to Remove the Cable Track.*

https://truckmanualshub.com/

BOOM COMPONENTS

3 Raise the boom until the short and long link arm to boom pivot pins are above the turntable covers.

4 Place a block of wood measuring 4 x 4 x 60 inches / 10 x 10 x 152 cm under the long link arm, across the turntable covers.

5 Slowly lower the boom until the long link arm contacts the wood block. Do not rest the entire weight of the boom on the block. Turn the machine off.

NOTICE Component damage hazard. The turntable covers can become damaged if the weight of the boom is allowed to rest on the block.

6 Place wood blocks between the short link arm and the turntable weldment for support.

7 Insert a 1.125 x 12 inches / 32 x 300 mm eye-bolt through each hole located on the top surface of the counterweight. Secure the eye-bolts in position with flat washers and nuts.

8 Securely attach lifting straps or chains with a minimum rating of 5 tons / 5000 kg to the lifting points on the top of the turntable counterweight. Attach the lifting straps or chains to a 5 ton / 5000 kg overhead crane.

Note: A spreader bar and other hardware may be needed to safely remove the counterweight.

9 Slowly operate the overhead crane to apply tension to the lifting straps. Do not attempt to lift the machine with the overhead crane.

10 Locate and remove the counterweight retaining fastener at the center of the counterweight. Carefully lift the counterweight upwards and remove the counterweight from the machine. Set the counterweight on the ground. Do not leave the counterweight suspended above the ground.

⚠ DANGER Crushing hazard. The turntable counterweight will fall if not properly supported by the overhead crane resulting in death or serious injury. Keep personnel away from the area when removing the counterweight.

11 Attach lifting straps from a 5 ton / 5000 kg overhead crane to each end of the boom. Support the boom. Do not apply any lifting pressure.

12 Support and secure the rod end of the boom lift cylinder to a second overhead crane or similar lifting device.

13 Remove the lift cylinder rod-end pivot pin retaining fasteners. Use a soft metal drift to remove the pin.

⚠ WARNING Crushing hazard. The boom could fall if not properly supported when the lift cylinder rod-end pivot pin is removed.

https://truckmanualshub.com/

14 Using auxiliary power, activate the boom down function so the cylinder will retract. Retract the cylinder just enough until the rod end of the cylinder will clear the mounting bracket on the boom. Turn the machine off.

WARNING Crushing hazard. The boom lift cylinder could fall if not properly supported and secured to the lifting device.

15 Using the overhead crane, carefully lower the boom lift cylinder and allow it to rest on the boom rest pad. Protect the cylinder rod from damage.

16 Remove the boom end cover retaining fasteners and remove the cover.

17 Tag, disconnect and plug the boom extension cylinder hydraulic hoses. Cap the fittings on the cylinder.

WARNING Bodily injury hazard. Spraying hydraulic oil can penetrate and burn skin. Loosen hydraulic connections very slowly to allow the oil pressure to dissipate gradually. Do not allow oil to squirt or spray.

18 Tag and disconnect the electrical connector for the cable break limit switch.

19 Tag and disconnect all boom wire harness electrical connectors located at the pivot end of the boom.

20 Support the platform leveling master cylinder. Remove the master cylinder rod-end pivot pin retaining fasteners. Place a rod through the pin and twist to remove. Carefully lower the master cylinder down.

21 Tag, disconnect and plug the hydraulic hoses from the bulkhead fittings at the pivot end of the boom. Cap the bulkhead fittings.

WARNING Bodily injury hazard. Spraying hydraulic oil can penetrate and burn skin. Loosen hydraulic connections very slowly to allow the oil pressure to dissipate gradually. Do not allow oil to squirt or spray.

22 Remove the external snap rings from both boom pivot pins at the short and long link arms. Do not remove the pins.

https://truckmanualshub.com/

BOOM COMPONENTS

23 Using the overhead crane, adjust the boom as necessary to relieve pressure from the pivot pins.

24 Use a soft metal drift to remove each boom pivot pin. Carefully remove the boom assembly from the machine and place it on a structure capable of supporting it.

WARNING Crushing hazard. The boom could fall if not properly supported by the overhead crane when each boom pivot pin is removed.

CAUTION Crushing hazard. The long and short link arms may fall if not properly supported when the boom pivot pins are removed.

4-3 Boom Lift Cylinder

The boom lift cylinder raises and lowers the boom. The boom lift cylinder is equipped with counterbalance valves to prevent movement in the event of a hydraulic line failure.

How to Remove the Boom Lift Cylinder

WARNING Bodily injury hazard. This procedure requires specific repair skills, lifting equipment and a suitable workshop. Attempting this procedure without these skills and tools could result in death or serious injury and significant component damage. Dealer service is strongly recommended.

Note: When removing a hose assembly or fitting, the O-ring (if equipped) on the fitting and/or the hose end must be replaced. All connections must be torqued to specification during installation. Refer to Section 2, *Hydraulic Hose and Fitting Torque Specifications*.

1 Raise the boom to a horizontal position.

2 Attach a 5 ton / 5000 kg overhead crane to the boom at the platform end for support. Do not lift the boom.

3 Support and secure both ends of the boom lift cylinder to a second overhead crane or similar lifting device.

4 Remove the pin retaining fastener from the boom lift cylinder rod-end pivot pin. Use a soft metal drift to remove the pin.

WARNING Crushing hazard. The boom will fall if not properly supported when the primary boom rod-end pivot pin is removed.

https://truckmanualshub.com/

5 Using auxiliary power, activate the boom down function so the cylinder will retract. Retract the cylinder just enough until the rod end of the cylinder will clear the mounting bracket on the boom. Turn the machine off.

6 Tag, disconnect and plug the boom lift cylinder hydraulic hoses. Cap the fittings on the cylinder.

WARNING Bodily injury hazard. Spraying hydraulic oil can penetrate and burn skin. Loosen hydraulic connections very slowly to allow the oil pressure to dissipate gradually. Do not allow oil to squirt or spray.

7 Remove the pin retaining fasteners from the boom lift cylinder barrel-end pivot pins. Do not remove the pins.

8 Use a slide hammer to remove the barrel-end pivot pins.

WARNING Crushing hazard. The boom lift cylinder could become unbalanced and fall if not properly supported and secured to the lifting device.

9 Move the boom lift cylinder towards the counterweight end of the machine. Rotate the boom lift cylinder until the barrel-end pivot pin bores will clear the boom linkage.

10 Carefully remove the boom lift cylinder from the machine.

WARNING Crushing hazard. The boom lift cylinder could become unbalanced and fall if not properly supported and secured to the lifting device.

4-4 Boom Extension Cylinder

The boom extension cylinder is located inside the boom assembly and incorporates cables and pulleys that are responsible for extending the number 3 boom tube. The primary boom extension cylinder is equipped with counterbalance valves to prevent movement in the event of a hydraulic line failure.

How to Remove the Boom Extension Cylinder

WARNING Bodily injury hazard. This procedure requires specific repair skills, lifting equipment and a suitable workshop. Attempting this procedure without these skills and tools could result in death or serious injury and significant component damage. Dealer service is strongly recommended.

Note: When removing a hose assembly or fitting, the O-ring (if equipped) on the fitting and/or the hose end must be replaced. All connections must be torqued to specification during installation. Refer to Section 2, *Hydraulic Hose and Fitting Torque Specifications*.

Note: Perform this procedure with the boom fully retracted.

1 Raise the boom to a horizontal position.

https://truckmanualshub.com/

BOOM COMPONENTS

2 Remove the boom end cover retaining fasteners and remove the cover.

3 Remove the access covers from both sides of the boom at the pivot end.

4 Fully loosen the lock nuts on the extend cables. Do not remove the nuts.

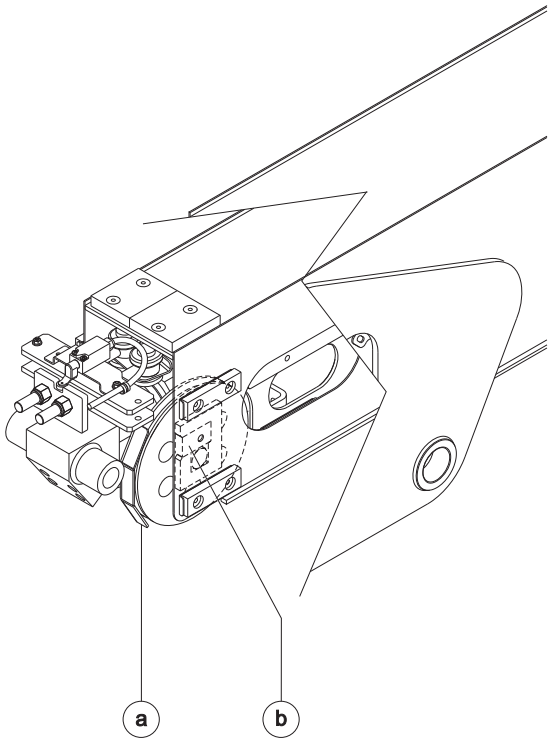

a cable guard
b retaining block

5 Loosen the retract cable nut at the platform end of the boom. Pull the cable rod from the support and let it hang down.

6 Remove the cable guard fasteners and remove the cable guard.

7 Locate the retaining plates that secure the retract cables to the inside of the number 3 boom tube.

8 Remove the cable retaining plates and pull the retract cables off of the pulleys. Lay the cables flat and out of the way.

9 Remove the fasteners from the retaining blocks from the extension cylinder saddle. Remove the blocks.

Note: Access the fasteners through the access hole in the outer boom tube at the pivot end.

10 Disconnect the wire connector to the extend cable break limit switch.

11 Remove the retaining fasteners that secure the extend cable mounting plates to the inside of the number 1 boom tube.

https://truckmanualshub.com/

BOOM COMPONENTS

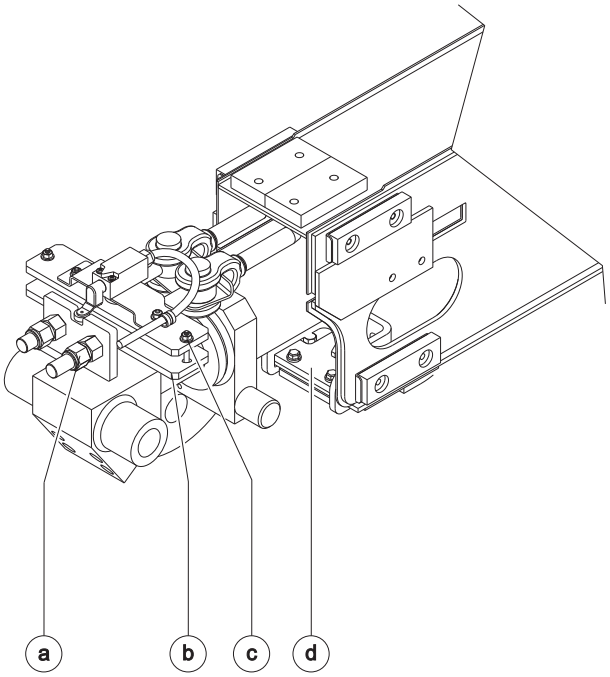

a extend cable lock nuts
b extend cable mounting plate
c extend cable mounting plate fastener
d extend cable bracket

12 Pull back on the extend cable mounting plate until it clears the blocks welded to the inside of the number 1 boom tube.

13 Lift up the extend cable mounting plate and push the extend cables towards the platform to create slack in the cables. Rest the cable and bracket assembly on top of the extend cylinder.

14 Locate the lower extend cable bracket on the bottom of the number 3 boom tube.

15 Remove the lower extend cable bracket mounting fasteners and pull back on the bracket to release it from the number 3 boom tube.

16 While pushing the lower extend cable bracket towards the platform, pull the extend cable mounting plate towards the pivot end of the boom.

17 Secure the extend cable bracket and cables to the cylinder to prevent them from falling off when removing the cylinder.

18 Remove the external snap rings from the extension cylinder pin at the pivot end of the boom.

19 Use a soft metal drift to remove the pin.

20 Tag, disconnect and plug the boom extension cylinder hydraulic hoses. Cap the fittings on the cylinder.

⚠WARNING Bodily injury hazard. Spraying hydraulic oil can penetrate and burn skin. Loosen hydraulic connections very slowly to allow the oil pressure to dissipate gradually. Do not allow oil to squirt or spray.

https://truckmanualshub.com/

BOOM COMPONENTS

21 Attach a lifting strap from a 5 ton / 5000 kg overhead crane to the lug at the rod end of the boom extension cylinder.

22 Lift the boom extension cylinder with the crane until it clears the cylinder saddle inside the number 2 boom tube.

23 Carefully support and slide the extension cylinder out of the boom.

⚠WARNING Crushing hazard. The extension cylinder could fall when removed from the boom if not properly supported.

NOTICE Component damage hazard. Be careful not to damage the cable break limit switch.

NOTICE Component damage hazard. Be careful not to damage the counterbalance valves on the primary boom extension cylinder when removing the cylinder from the boom.

Note: During removal of the extension cylinder, the overhead crane strap will need to be carefully adjusted for proper balancing.

4-5 Boom Extend/Retract Cables

How to Adjust the Boom Extend/ Retract Cables

The boom extend/retract cables are responsible for the extension and retraction of the number 3 boom tube. Proper adjustment of the boom extend/retract cables and related components on a regular basis is essential to good machine performance and safe machine operation. The boom extend and retract functions should operate smoothly and be free of hesitation, jerking and unusual noise.

Note: Perform this procedure with the boom in a horizontal position.

1 Start the engine from the Ground Controls.

2 Raise the boom to a horizontal position

3 Fully retract the boom.

4 Stop the engine.

5 Remove the boom end cover retaining fasteners and remove the cover.

6 Inspect the threaded ends of the boom extend cables. The threads must be clean and in good condition with no damaged threads.

https://truckmanualshub.com/

7 Locate the retract cable adjustment nut on the bottom of the number 1 boom tube at the platform end of the boom. Loosen the nut, but do not remove the nut.

8 Locate the extend cable adjustment nuts on the counterweight end of boom tube #1. Refer to Illustration 2. Loosen the nylock nuts and jam nuts on the cable tension equalizer bracket. Do not remove the nuts.

9 Adjust the extend cable adjustment nut to obtain 6 3/8 inches/16.2 cm to 6 1/2 inches/16.5 cm between the platform end of boom tube #2 and boom tube #3. Refer to illustration 1. There should be approximately 1/2 inch of exposed threads on the adjustment bolts. Refer to Illustration 2.

Note: If the cables have been replaced, be sure the adjustment nuts have been replaced. Do not re-use the existing nuts.

10 Extend the boom until there is approximately 3 feet / 1 m of travel left. Do not fully extend the boom.

11 Locate the retract cable adjustment nut on the bottom of the number 1 boom tube at the platform end of the boom.

12 Using a dial type torque wrench, torque the retract cable adjustment nut to 32-36 ft lbs / 43-49 Nm using gentle and steady torque.

13 Retract and extend the boom approximately 3 feet / 1 m two times and stop during the extension cycle. This will create slack in the retract cables.

Note: Be sure to not fully extend the boom. Stop when there is approximately 3 feet / 1 m of travel left.

14 Repeat steps 12 and 13 two to three times.

15 Fully extend the boom then retract the boom approximately 12 inches / 30 cm.

16 At the pivot end of the boom, visually inspect the boom extend cables for even cable droop or sag.

Note: If the boom extend cables are uneven, tighten the boom extend cable adjustment nut at the pivot end of the boom for the appropriate cable.

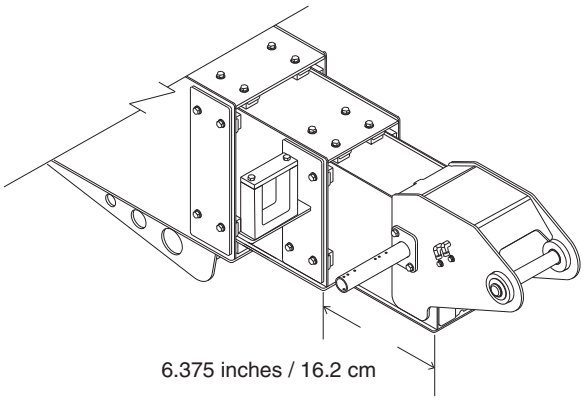

Illustration 1

https://truckmanualshub.com/

BOOM COMPONENTS

17 Visually inspect the cable break limit switch arm to be sure the wheel of the limit switch arm is centered in the notch of the pivot plate.

Note: If the boom extend cables are adjusted evenly, the wheel of the limit switch arm should be centered in the notch of the pivot plate.

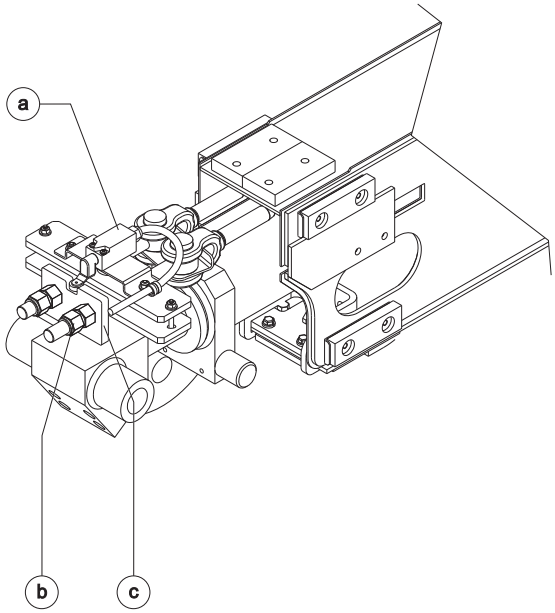

Illustration 2
a cable break limit switch
b extend cable adjustment nut
c extend cable pivot plate

18 Install the boom end cover at the pivot end of the boom.

19 Fully retract and lower the boom to the stowed position.

How to Replace the Boom Extend/Retract Cables

Note: The cable pulleys must also be replaced when replacing the cables.

1 Remove the boom extension cylinder. See Section 4-4, *How to Remove the Boom Extension Cylinder.*

Boom extend cables:

2 Remove the cables from the lower boom extend cable bracket that attaches to the number 3 boom tube.

3 Remove the rue rings and clevis pins from the boom extend cables located near the extend cable break limit switch.

4 Remove the external snap rings from the boom extend cable pulley pivot pin. Use a soft metal drift to remove the pin.

Note: When driving the pivot pin out, be sure to drive it from the shaped end of the pin.

5 Remove the pulley and boom extend cables from the extension cylinder assembly. Discard the old cables and pulleys.

6 Route the new boom extend cables through the boom extend pulley bracket.

7 Install the new boom extend cable pulley, pivot pin and snap rings.

Note: Be sure the boom extend cables are routed through the grooves of the pulley and the upper wear pad on the extension cylinder.

https://truckmanualshub.com/

8 Install the boom extend cable clevis pins and rue rings to the pivot plate near the cable break limit switch.

9 Install the boom extend cables to the lower extend cable bracket that mounts to the number 3 boom tube.

Boom retract cables:

10 Remove the rue rings and clevis pins from the boom retract cables at the platform end of the boom.

11 Attach the cable pulling tool or a rope to one of the boom retract cables at the pivot end of the boom.

Note: A cable pulling tool is available through Genie Service Parts Department (Genie part no. 94510)

12 At the platform end of the boom, pull on the boom retract cable that has the rope attached to it.

13 Pull the old cable completely out of the boom tube. Remove the rope. Discard the old boom retract cable.

14 Securely attach the rope to the same end of the new boom retract cable.

15 At the pivot end of the boom, carefully pull the rope with the new retract cable attached.

16 Pull the new cable towards the pivot end of the boom until the end of the cable is at the end of the boom tube. Remove the rope.

17 Repeat steps 14 through 19 for the other boom retract cable.

18 At the platform end of the boom, install the retract cables, clevis pins and rue rings to the adjustment plate.

19 Remove and discard the old boom retract pulleys from the pivot end of the boom extension cylinder.

20 Install the new boom retract pulleys to the pivot end of the boom extension cylinder.

21 Install the boom extension cylinder assembly into the boom.

Note: Before lowering the extension cylinder into the saddles of the number 1 boom tube, wrap the boom retract cables around the pulleys.

22 Adjust the boom extend/retract cables. See Section 4-5, *How to Adjust the Boom Extend/Retract Cables.*

https://truckmanualshub.com/

BOOM COMPONENTS

4-6 Platform Leveling Master Cylinder

The master cylinder acts as a pump for the slave cylinder. It is part of the closed loop hydraulic circuit that keeps the platform level through the entire range of boom motion. The master cylinder is located inside the pivot end of the boom.

How to Remove the Platform Leveling Master Cylinder

Note: When removing a hose assembly or fitting, the O-ring (if equipped) on the fitting and/or the hose end must be replaced. All connections must be torqued to specification during installation. Refer to Section 2, *Hydraulic Hose and Fitting Torque Specifications*.

1 Raise the boom until the master cylinder rod-end pivot pin is accessible.

2 Remove the turntable end cover to access the master cylinder.

3 Tag, disconnect and plug the master cylinder hydraulic hoses. Cap the fittings on the cylinder.

WARNING Bodily injury hazard. Spraying hydraulic oil can penetrate and burn skin. Loosen hydraulic connections very slowly to allow the oil pressure to dissipate gradually. Do not allow oil to squirt or spray.

4 Remove the pin retaining fastener from the master cylinder barrel-end pivot pin.

5 Place a rod through the barel-end pivot pin and twist to remove the pin.

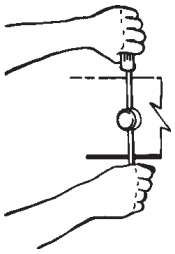

6 Attach a lifting strap from an overhead crane to the lug on the rod end of the master cylinder.

7 Remove the pin retaining fastener from the rod-end pivot pin.

8 Place a rod through the rod-end pivot pin and twist to remove the pin.

9 Remove the master cylinder from the machine.

WARNING Crushing hazard. The master cylinder could become unbalanced and fall if it is not properly supported by the lifting device when removed from the machine.

https://truckmanualshub.com/

Engines

5-1 RPM Adjustment

Refer to Maintenance Procedure B-10, *Check and Adjust the Engine RPM.*

5-2 Flex Plate

The flex plate acts as a coupler between the engine and the pump. It is bolted to the engine flywheel and has a splined center to drive the pump.

Type "B" flex plates combines the pump coupler, as part of the flex plate, which is installed onto the engine flywheel.

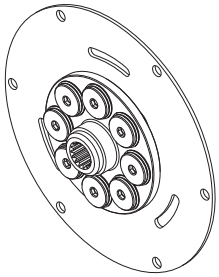

Type "B"
(flexplate with coupler combined)

https://truckmanualshub.com/

ENGINES

How to Remove the Flex Plate

Note: Perform this procedure with the engine off and cool to the touch.

1 Open the engine side turntable cover.

2 Tag and disconnect the battery cables from the battery(s).

WARNING Electrocution/burn hazard. Contact with electrically charged circuits could result in death or serious injury. Remove all rings, watches and other jewelry.

3 Remove the engine tray retaining fastener. Swing the engine tray out away from the machine.

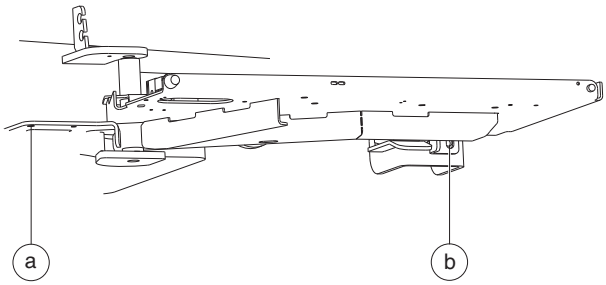

a engine tray anchor hole
b engine tray retaining fastener

4 Tag and disconnect the wiring plug at the electronic displacement controller (EDC), located on the drive pump.

Deutz model:

5 Tag and disconnect the wiring from the bell housing.

6 Remove the U-bolt from the exhaust flex pipe at the muffler.

CAUTION Burn hazard. Hot engine parts can cause severe burns.

7 Remove the muffler bracket retaining fasteners from bell housing. Remove the muffler and bracket assembly from the engine.

8 Support the drive pump with an appropriate lifting device. Remove all of the remaining bell housing engine fasteners.

9 Carefully pull the pump and bell housing assembly away from the engine and secure it from moving.

NOTICE Component damage hazard. Hoses can be damaged if they are kinked or pinched

10 Remove the flex plate mounting fasteners, and remove the flex plate from the engine flywheel.

https://truckmanualshub.com/

Perkins model:

11 Tag and disconnect the wiring from the bell housing.

12 Remove the exhaust pipe clamp at the muffler.

⚠CAUTION Burn hazard. Hot engine parts can cause severe burns.

13 Remove the muffler mounting bracket fasteners. Remove the muffler and bracket assembly from the engine.

14 Remove the hose clamps from the air cleaner elbow and the engine intake manifold.

15 Remove the air cleaner mounting bracket fasteners. Remove the air cleaner and bracket assembly from the engine.

16 Support the drive pump with an appropriate lifting device. Remove all of the remaining bell housing to engine fasteners.

Continental model:

17 Tag and disconnect the wire harness from the oxygen sensor.

18 Remove the exhaust pipe heat shield fasteners from the top of the muffler.

⚠CAUTION Burn Hazard. Hot engine parts can cause severe burns.

19 Remove the muffler retainer bracket fasteners.

20 Remove the muffler fasteners securing the muffler to the exhaust manifold. Remove the muffler from the bracket.

21 Remove the relay housing from the muffler mount. Do not disconnect the relays.

22 Disconnect and remove the ECM from the muffler mount.

23 Close the shutoff valve on the Liquid Petroleum Gas (LPG) tank by turning it clockwise (if equipped).

24 Unbolt the EPR valve from the muffler mount. Leave the hoses attached to the EPR valve.

25 Remove the muffler mount.

26 Support the drive pump with an appropriate lifting device. Remove all of pump plate mounting fasteners.

27 Carefully pull the pump and bell housing assembly away from the engine and secure it from moving.

NOTICE Component damage hazard. Hoses can be damaged if they are kinked or pinched.

28 Remove the flex plate mounting fasteners. Remove the flex plate from the engine flywheel.

https://truckmanualshub.com/

ENGINES

How to Install the Flex Plate

1 Install the flex plate onto the engine flywheel with the raised spline towards the pump. Apply Loctite® removable thread sealant to the mounting screws.

Note: Torque the flex plate mounting bolts in two stages.

Continental model: Torque the flex plate mounting bolts in sequence to 20.8 ft-lbs / 28 Nm.
Deutz model: Torque the flex plate mounting bolts in sequence to 28 ft-lbs / 38 Nm.
Perkins model:
Torque the flex plate mounting bolts in sequence to 46.7 ft-lbs / 63.3 Nm.

2 Install the pump coupler onto the pump shaft with the set screw toward the pump. Leave the appropriate gap between coupler and pump end plate for your engine.

3 Apply Loctite® removable thread sealant to the pump coupler set screw. Torque the set screw to 61 ft-lbs / 83 Nm.

4 Install the pump onto the pump mounting plate. Apply Loctite® removable thread sealant to the pump retaining fasteners. Torque the pump retaining fasteners to 57 ft-lbs / 77 Nm.

NOTICE Component damage hazard. Do not force the drive pump during installation or the flex plate teeth may become damaged.

5 Install the pump coupler onto the pump shaft with the set screw toward the pump. Leave the appropriate gap between coupler and pump end plate for your engine.

6 Install the pump and pump mounting plate assembly onto the engine. Apply Loctite® removable thread sealant to the mounting screws.
Perkins model:
Torque the pump mounting plate fasteners in sequence to 28 ft-lbs / 38 Nm.
Deutz model:
Torque the pump mounting plate fasteners in sequence to 46.7 ft-lbs / 63.3 Nm.
Continental model:
Torque the pump mounting plate fasteners in sequence to 23 ft-lbs / 31.2 Nm.

NOTICE Component damage hazard. When installing the pump, do not force the pump coupler into the flexplate or damage to the pump shaft seal may occur.

NOTICE Component damage hazard. Do not force the drive pump during installation or the flex plate teeth may become damaged.

https://truckmanualshub.com/

ENGINES

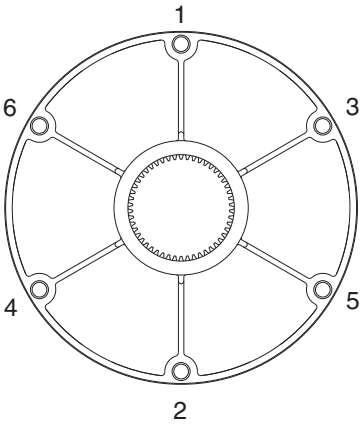

Perkins, Deutz and Continental
Flex Plate

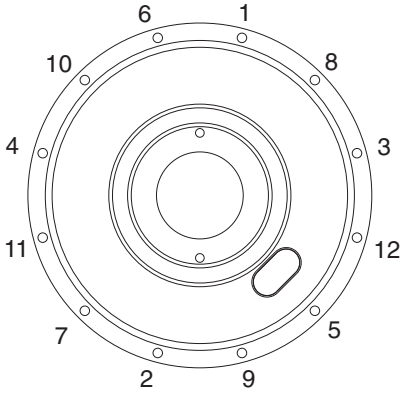

Perkins 804C-33
Pump Mounting Plate

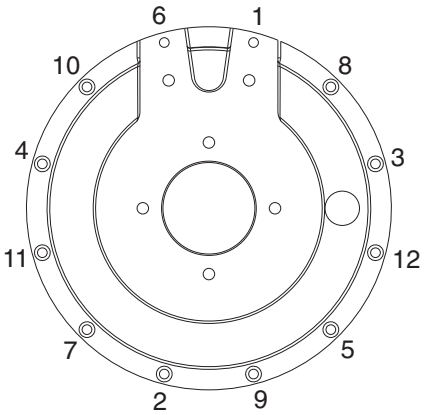

Deutz BF4L-2011
Pump Mounting Plate

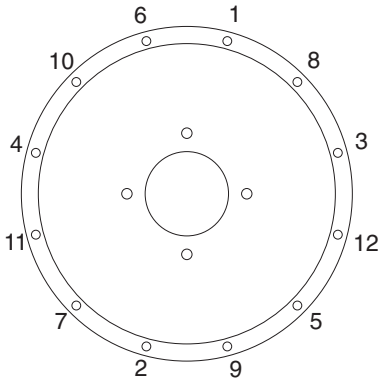

Continental Pump Mounting Plate

https://truckmanualshub.com/

Ground Controls

6-1 Control Relays

Relays used for single function switching are single pole double throw (SPDT) relays.

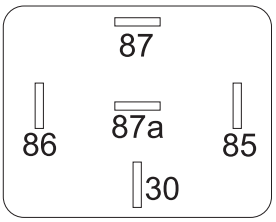

terminal no. 87a - N.C.
terminal no. 85 - coil negative (-)
terminal no. 30 - common
terminal no. 86 - coil positive (+)
terminal no. 87 - N.O.

How to Test a Single Pole Double Throw Relay

⚠WARNING Electrocution/burn hazard. Contact with electrically charged circuits could result in death or serious injury. Remove all rings, watches and other jewelry.

1 Tag and disconnect all the wiring from the relay to be tested.

2 Connect the leads from an ohmmeter or continuity tester to each terminal combination and check for continuity. Terminals 85 and 86 represent the coil and should not be tested in any other combination.

Test	Desired result
terminal 85 to 86 with resistor	75 to 85Ω
terminal 87 to 87a and 30	no continuity (infinite Ω)
terminal 87a to 30	continuity (zero Ω)

3 Connect 12V DC to terminal 85 and a ground wire to terminal 86, then test the following terminal combinations.

Test	Desired result
terminal 87 to 87a and 30	no continuity (infinite Ω)
terminal 87 to 30	continuity (zero Ω)

Control Relay Schematic

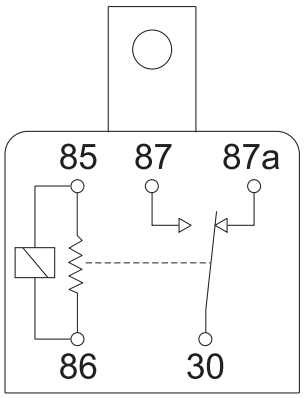

https://truckmanualshub.com/

Hydraulic Pumps

7-1 Function Pump

How to Remove the Function Pump

Note: When removing a hose assembly or fitting, the O-ring (if equipped) on the fitting and/or the hose end must be replaced. All connections must be torqued to specification during installation. Refer to Section 2, *Hydraulic Hose and Fitting Torque Specifications*.

1 Close the two hydraulic tank valves located at the hydraulic tank.

NOTICE Component damage hazard. The engine must not be started with the hydraulic tank shutoff valves in the closed position or component damage will occur. If the tank valves are closed, remove the key from the key switch and tag the machine to inform personnel of the condition.

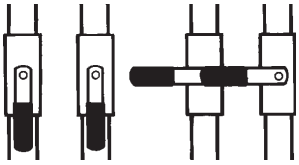

open closed

2 Tag, disconnect and plug the hydraulic hoses from the function pump. Cap the fittings on the pump.

WARNING Bodily injury hazard. Spraying hydraulic oil can penetrate and burn skin. Loosen hydraulic connections very slowly to allow the oil pressure to dissipate gradually. Do not allow oil to squirt or spray.

3 Remove the pump mounting fasteners. Carefully remove the pump.

NOTICE Component damage hazard. Be sure to open the two hydraulic tank valves (if equipped) and prime the pump after installing the pump. See 7-2, *How to Prime the Pump*.

https://truckmanualshub.com/

HYDRAULIC PUMPS

7-2
Drive Pump

The drive pump is a bi-directional variable displacement piston pump. The pump output is controlled by the electronic displacement controller (EDC), located on the pump. The only adjustment that can be made to the pump is the neutral or null adjustment. Any internal service to the pump should only be performed at an authorized Sundstrand-Sauer service center. Call Genie Industries Service Department to locate your local authorized service center.

How to Remove the Drive Pump

NOTICE Component damage hazard. The work area and surfaces where this procedure will be performed must be clean and free of debris that could get into the hydraulic system and cause severe component damage. Dealer service is recommended.

Note: When removing a hose assembly or fitting, the O-ring (if equipped) on the fitting and/or the hose end must be replaced. All connections must be torqued to specification during installation. Refer to Section 2, *Hydraulic Hose and Fitting Torque Specifications*.

1 Disconnect the wire harness at the electronic displacement controller (EDC), located on the drive pump.

2 Close the two hydraulic tank valves located at the hydraulic tank.

NOTICE Component damage hazard. The engine must not be started with the hydraulic tank shutoff valves in the closed position or component damage will occur. If the tank valves are closed, remove the key from the key switch and tag the machine to inform personnel of the condition.

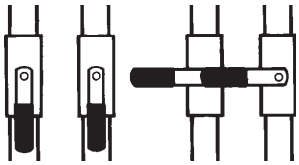

https://truckmanualshub.com/

3 Tag, disconnect and plug the hydraulic hoses from the drive and function pumps. Cap the fittings on the pumps.

⚠WARNING Bodily injury hazard. Spraying hydraulic oil can penetrate and burn skin. Loosen hydraulic connections very slowly to allow the oil pressure to dissipate gradually. Do not allow oil to squirt or spray.

4 Support the pumps with a suitable lifting device and remove the two drive pump mounting fasteners.

5 Carefully pull the drive pump out until the pump coupler separates from the flex plate.

6 Remove the drive pump assembly from the machine.

NOTICE Component damage hazard. Be sure to open the two hydraulic tank valves and prime the pump after installing the pump.

Note: Before installing the pump, verify proper pump coupler spacing. See 5-2, *Flex Plate*.

How to Prime the Pump

NOTICE Component damage hazard. Be sure that the hydraulic tank shutoff valves (if equipped) are in the open position before priming the pump. The engine must not be started with the hydraulic tank shutoff valves in the closed position or component damage will occur.

1 Connect a 0 to 600 psi / 0 to 40 bar pressure gauge to the diagnostic nipple on the drive pump.

2 **Continental models:** If equipped, close the valve on the LPG tank, then disconnect the hose from the tank. Move the fuel select toggle switch to the LPG position.
Deutz and Perkins models: Disconnect the engine wiring harness from the fuel solenoid at the injector pump.

3 Crank the engine with the starter motor for 15 seconds, wait 15 seconds, then crank the engine an additional 15 seconds or until the pressure reaches 300 psi / 20.7 bar.

4 **Continental models:** If equipped, connect the LPG hose to the LPG tank and open the valve on the tank.
Deutz and Perkins models: Connect the engine wiring harness to the fuel solenoid.

5 Start the engine from the ground controls and check for hydraulic leaks.

https://truckmanualshub.com/

Manifolds

8-1
Function Manifold Components

The function manifold assembly is located on the tank side tray, behind the ground control box.

Index No.	Description	Schematic Item	Function	Torque
1	Solenoid valve, 2 position 3 way	SJ	Boom up	50-55 ft-lbs / 68-75 Nm
2	Solenoid valve, 2 position 3 way	SK	Boom down	30-35 ft-lbs / 41-47 Nm
3	Solenoid valve, NO, Poppet	SP	Extend	33-37 ft-lbs / 45-50 Nm
4	Solenoid valve, NO, Poppet	SQ	Retract	33-37 ft-lbs / 45-50 Nm
5	Proportional valve	SR	Extend proportional	20-25 ft-lbs / 27-34 Nm
6	Differential sensing valve	SS	Boom extend	30-35 ft-lbs / 41-47 Nm
7	Proportional valve	SF	Boom up/down proportional	33-37 ft-lbs / 45-50 Nm
8	Solenoid valve, 3 position, 4 way	SL	Steering directional	20-25 ft-lbs / 27-34 Nm
9	Proportional valve	SE	Swing proportional	20-25 ft-lbs / 27-34 Nm
10	Solenoid valve, 3 position, 4 way	SI	Swing directional	26-30 ft-lbs / 35-41 Nm
11	Flow regulator valve	SD	Oscillate flow control	20-25 ft-lbs / 27-34 Nm
12	Relief valve, 2400 psi / 165 bar	SN	Boom down relief	20-25 ft-lbs / 27-34 Nm
13	Relief valve, 2400 psi / 165 bar	SO	Boom extend relief	20-25 ft-lbs / 27-34 Nm
14	Check valve, 30 psi / 2.1 bar	ST	Return check valve	30-35 ft-lbs / 41-47 Nm
15	Differential sensing valve	SH	Primary lift	30-35 ft-lbs / 41-47 Nm
16	Check valve	SA	Back flow / check function pump	30-35 ft-lbs / 41-47 Nm
17	Relief valve, 3200 psi / 221 bar	SB	System relief	20-25 ft-lbs / 27-34 Nm
18	Pressure reducing valve	SC	Oscillate pressure control	30-35 ft-lbs / 41-47 Nm
19	Differential sensing valve	SG	Differential sensing/turntable rotate	30-35 ft-lbs / 41-47 Nm
20	Flow regulator valve	SM	Steering flow control	20-25 ft-lbs / 27-34 Nm

https://truckmanualshub.com/

MANIFOLDS

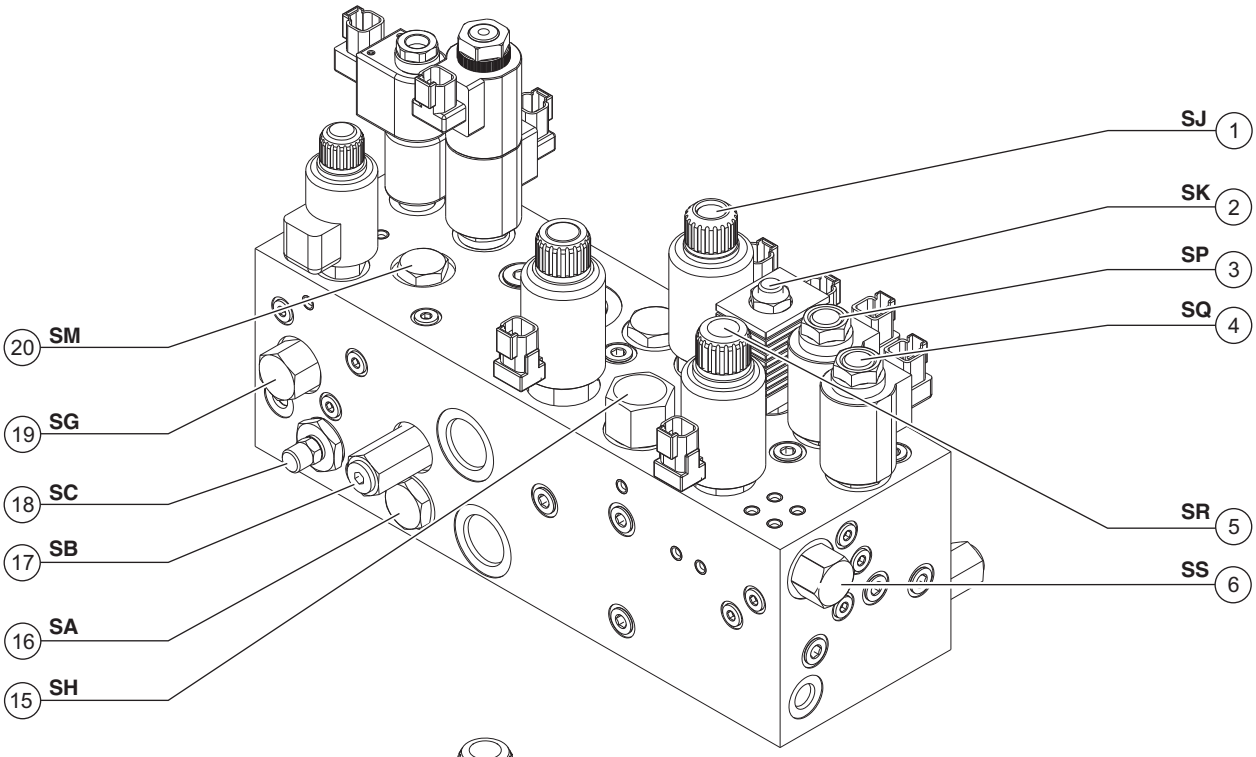

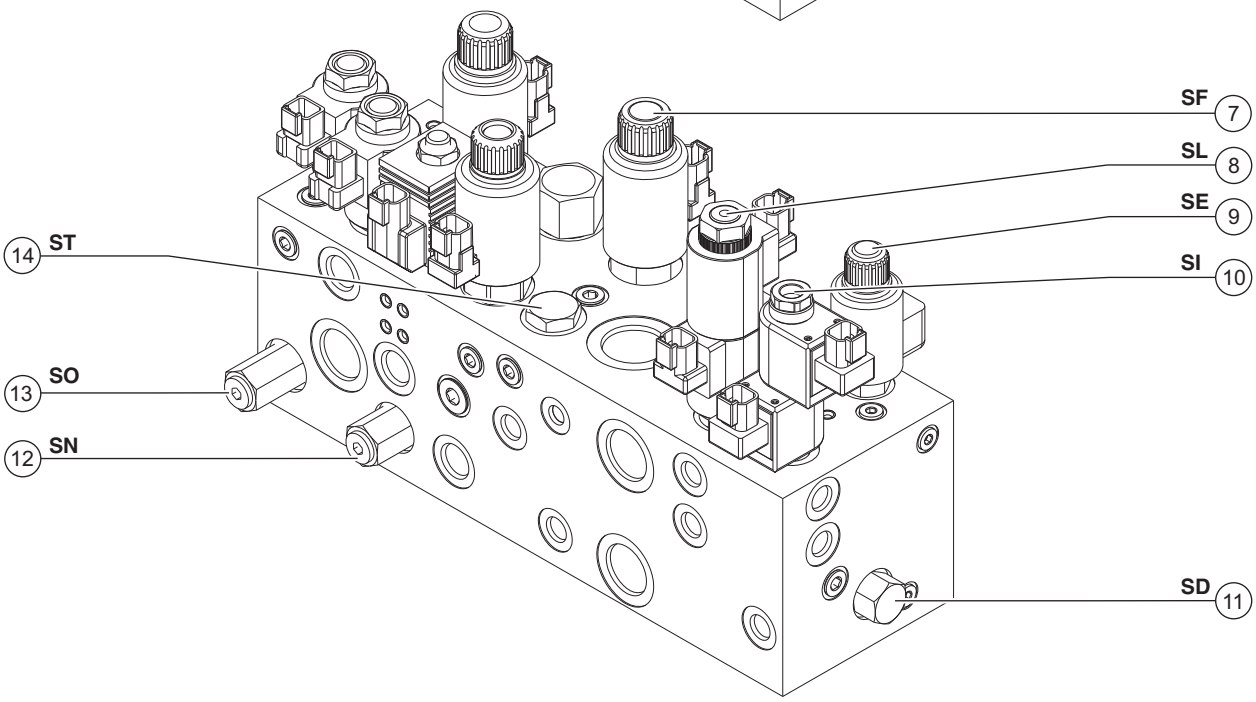

https://truckmanualshub.com/

MANIFOLDS

8-2 Valve Adjustments - Function Manifold

How to Adjust the System Relief Valve

Note: Perform this procedure with the boom in the stowed position.

Note: Auxiliary power will be used to perform this procedure. Do not start the engine.

1 Connect a 0 to 5000 psi / 0 to 350 bar pressure gauge to the diagnostic nipple (PTEST) located next to the auxiliary pump.

2 Simultaneously activate and hold the auxiliary power toggle switch and the primary boom retract toggle switch with the primary boom fully retracted. Observe the pressure reading on the pressure gauge. Refer to Section 2, *Specifications.*

3 Locate the system relief valve on the function manifold (item SB). Use a wrench to hold the relief valve and remove the cap using an allen wrench.

4 Adjust the internal hex socket. Turn it clockwise to increase the pressure or counter clockwise to reduce the pressure. Install the relief valve cap.

NOTICE Component damage hazard. Do not adjust the relief valve higher than specified.

5 Repeat step 2 to confirm relief valve pressure.

6 Remove the pressure gauge.

How to Adjust the Boom Down Relief Valve

Note: Perform this procedure with the boom in the stowed position.

1 Connect a 0 to 5000 psi / 0 to 350 bar pressure gauge to the diagnostic nipple located next to the auxiliary pump.

2 Start the engine from the ground controls.

3 Hold the function enable/rpm select toggle switch to the high idle position and activate and hold the boom down toggle switch with the boom fully lowered. Observe the pressure reading on the pressure gauge. Refer to Section 2, *Hydraulic Specifications.*

4 Turn the engine off. Use a wrench to hold the relief valve and remove the cap (item SN) on the function manifold.

5 Adjust the internal hex socket. Turn it clockwise to increase pressure or counterclockwise to decrease pressure. Install the relief valve cap.

⚠WARNING Tip-over hazard. Do not adjust the relief valves higher than specified.

6 Repeat steps 2 through 5 and confirm relief valve pressure.

https://truckmanualshub.com/

How to Adjust the Boom Extend Relief Valve

Note: Perform this procedure with the boom in the stowed position.

1 Connect a 0 to 3000 psi / 0 to 200 bar pressure gauge to the diagnostic nipple (PTEST port) on the function manifold.

2 Start the engine from the ground controls.

3 Hold the function enable/rpm select toggle switch to the high idle position and activate and hold the boom extend toggle switch with the boom fully extended. Observe the pressure reading on the pressure gauge. Refer to Section 2, *Hydraulic Specifications.*

4 Turn the engine off. Use a wrench to hold the relief valve and remove the cap (item SO) on the function manifold.

5 Adjust the internal hex socket. Turn it clockwise to increase the pressure or counterclockwise to decrease the pressure. Then install the relief valve cap.

⚠WARNING Tip-over hazard. Do not adjust the relief valves higher than specified.

6 Repeat steps 2 through 5 to confirm relief valve pressure.

https://truckmanualshub.com/

MANIFOLDS

8-3
Brake/Two-Speed Manifold Components

The brake/two speed manifold is mounted inside the drive chassis.

Index No.	Description	Schematic Item	Function	Torque
1	Solenoid valve, 2 position 3 way	BA	Brake release	20-25 ft-lbs / 27-34 Nm
2	Solenoid valve, 2 position 3 way	BC	Two-speed motor shift	20-25 ft-lbs / 27-34 Nm
3	Check valve	BB	Brake release circuit	20-25 ft-lbs / 27-34 Nm
4	Orifice, 0.025 inch / 0.63 mm	BD	Turntable rotation brake release	

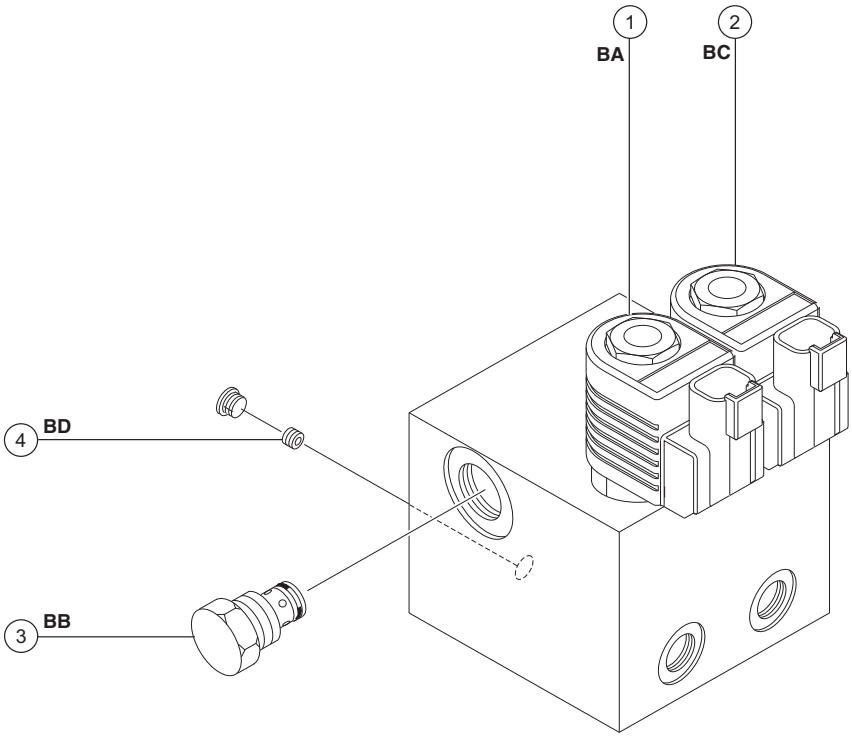

https://truckmanualshub.com/

8-4
Turntable Rotation Manifold Components

The turntable rotation manifold is mounted to the turntable rotation motor at the ground control side of the machine.

Index No.	Description	Schematic Item	Function	Torque
1	Counterbalance valve, 1000 psi	RA	Turntable rotate left	25-30 ft-lbs / 34-41 Nm
2	Counterbalance valve, 1000 psi	RB	Turntable rotate right	25-30 ft-lbs / 34-41 Nm
3	Shuttle valve, 2 position 3 way	RD	Turntable rotation brake release	8-10 ft-lbs / 10-15 Nm
4	Orifice, 0.030 inch / 0.8 mm	RC	Brake release circuit	

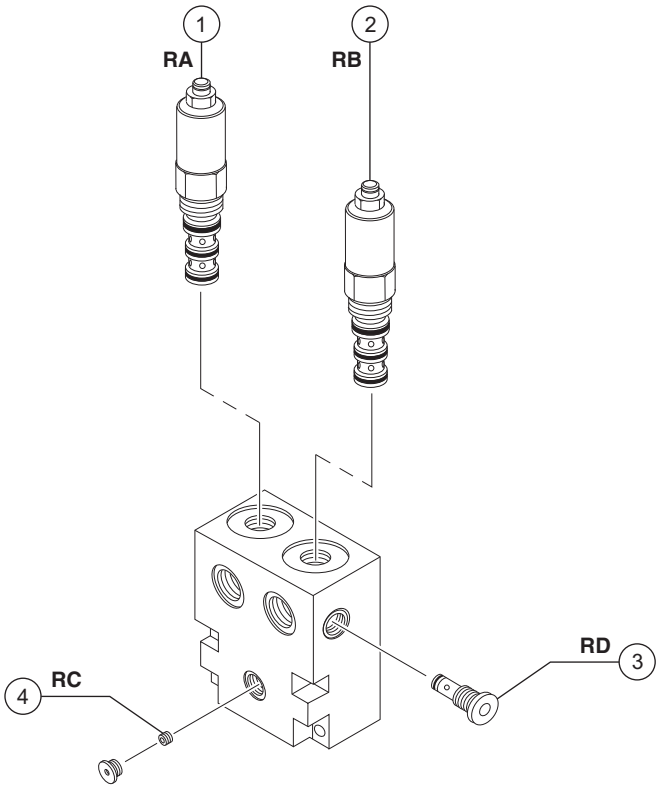

https://truckmanualshub.com/

MANIFOLDS

8-5
Platform Rotate Manifold Components

The platform rotate manifold is mounted on the platform rotator.

Index No.	Description	Schematic Item	Function	Torque
1	Counterbalance valve, 3300 psi	PA	Platform rotate right	37-44 ft-lbs / 50-60 Nm
2	Counterbalance valve, 3300 psi	PB	Platform rotate left	37-44 ft-lbs / 50-60 Nm

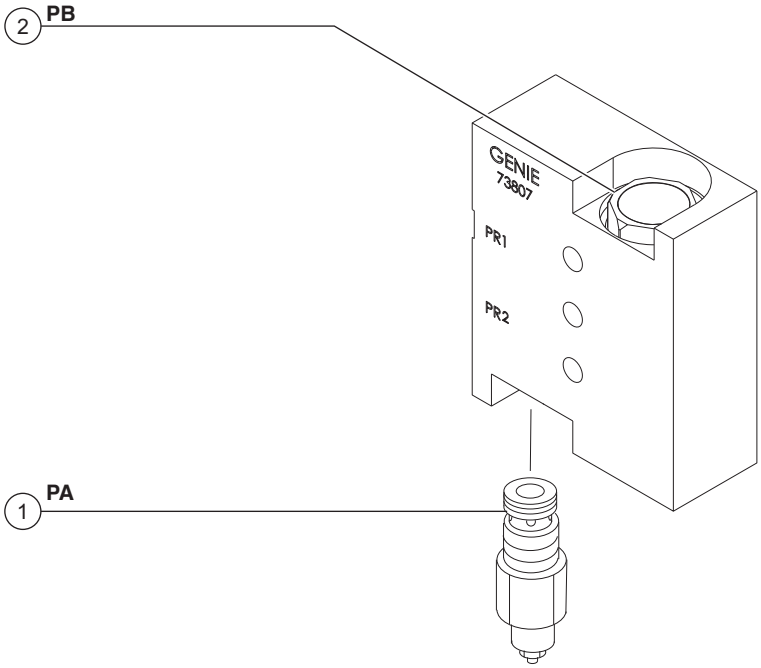

https://truckmanualshub.com/

8-6
Platform Manifold Components, S-80

The jib boom/platform rotate manifold is mounted on the platform end of the boom.

Index No.	Description	Schematic Item	Function	Torque
1	Solenoid valve, 3 position 4 way	EF	Platform rotate CW/CCW	30-35 ft-lbs / 41-47 Nm
2	Solenoid valve, 3 position 4 way	EB	Platform level up/down	30-35 ft-lbs / 41-47 Nm
3	Counterbalance valve, 3500 psi	EC	Platform level CB valve	26-30 ft-lbs / 35-41 Nm
4	Counterbalance valve, 3500 psi	ED	Platform level CB valve	26-30 ft-lbs / 35-41 Nm
5	Needle valve	EA	Platform level	20-25 ft-lbs / 27-34 Nm
6	Pressure comp., flow control valve	EE	Platform rotate flow control	33-37 ft-lbs / 45-50 Nm

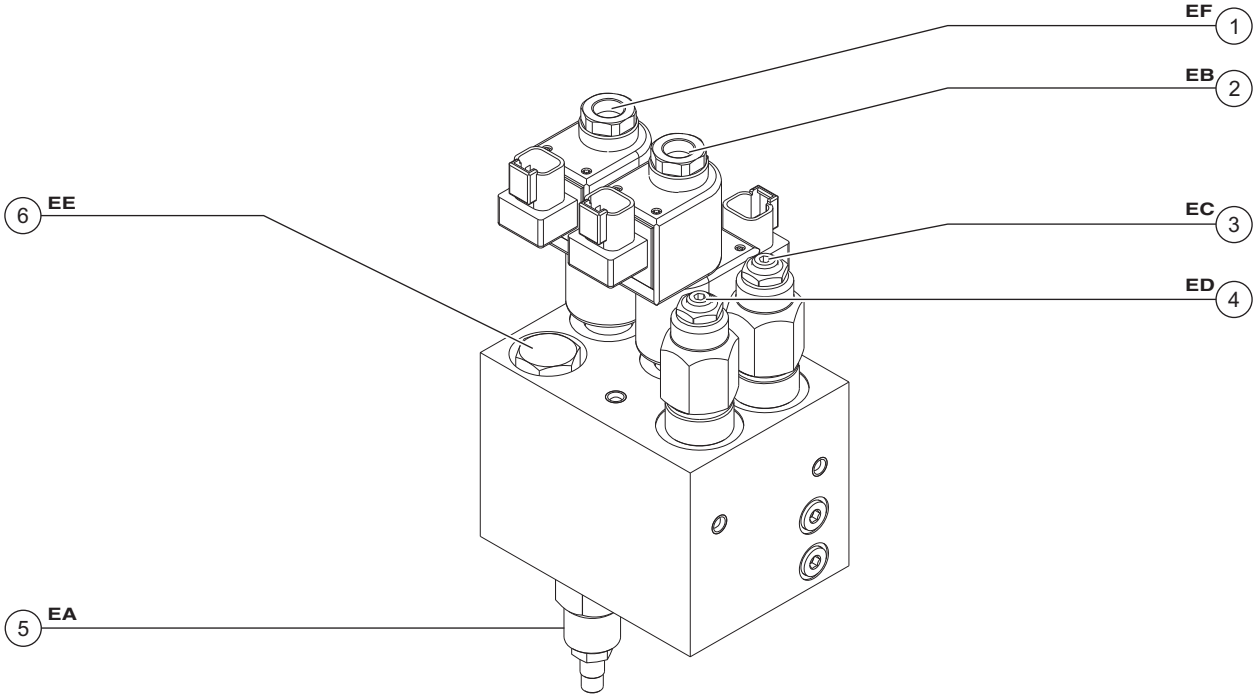

https://truckmanualshub.com/

MANIFOLDS

8-7
Platform Manifold Components, S-85

The jib boom/platform rotate manifold is mounted on the platform end of the boom.

Index No.	Description	Schematic Item	Function	Torque
1	Solenoid valve, 3 position 4 way	EF	Platform rotate CW/CCW	30-35 ft-lbs / 41-47 Nm
2	Solenoid valve, 3 position 4 way	EB	Platform level up/down	30-35 ft-lbs / 41-47 Nm
3	Solenoid valve, 3 position 4 way	EH	Jib Up/Down	30-35 ft-lbs / 41-47 Nm
4	Counterbalance valve, 3500 psi	EC	Platform level CB valve	26-30 ft-lbs / 35-41 Nm
5	Counterbalance valve, 3500 psi	ED	Platform level CB valve	26-30 ft-lbs / 35-41 Nm
6	Needle valve	EA	Platform level	20-25 ft-lbs / 27-34 Nm
7	Pressure comp., flow control valve	EE	Platform rotate flow control	33-37 ft-lbs / 45-50 Nm
8	Pressure comp., flow control valve	EG	Platform rotate flow control	33-37 ft-lbs / 45-50 Nm

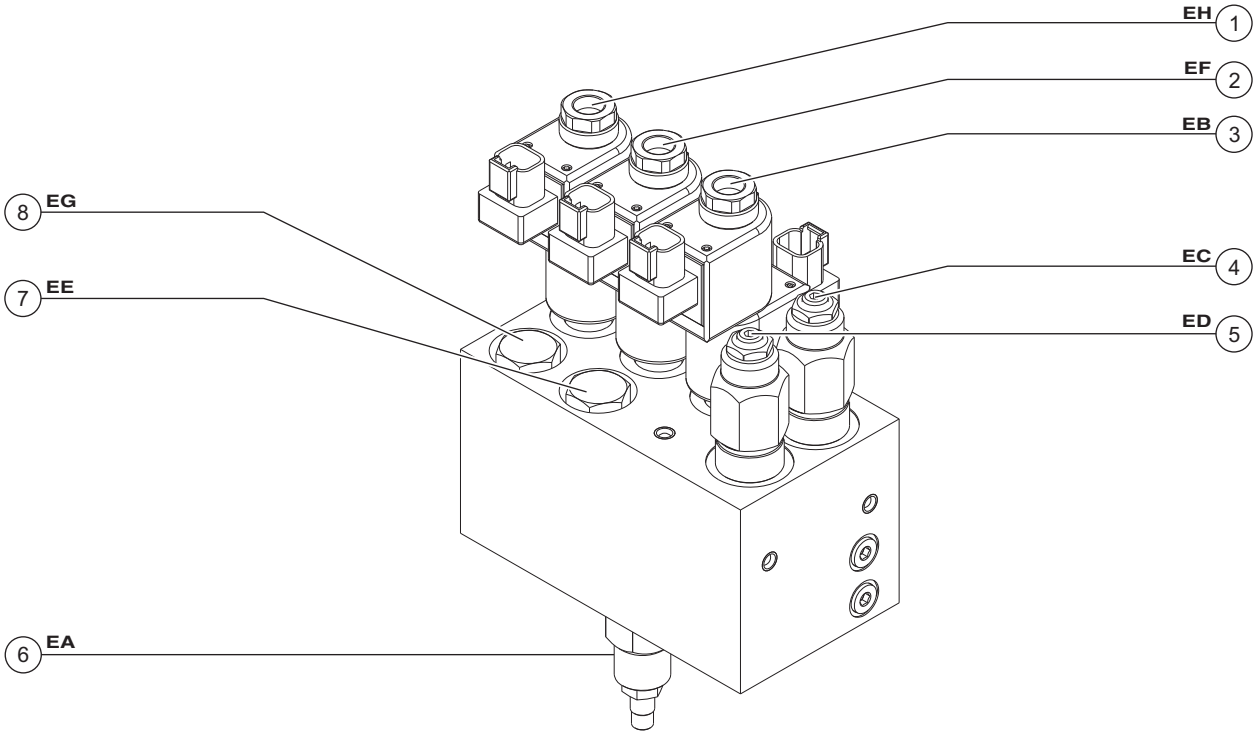

https://truckmanualshub.com/

8-8
2WD Traction Manifold Components

The drive manifold is mounted inside the drive chassis at the non-steer end of the machine.

Index No.	Description	Schematic Item	Function	Torque
1	Relief Valve, 280 psi / 19.3 bar	DE	Charge pressure circuit	30-35 ft-lbs / 41-47 Nm
2	Flow Divider / Combiner Valve	DB	Controls flow to drive motors in forward and reverse	90-100 ft-lbs / 120-133 Nm
3	Check Valve	DC	Drive circuit	30-35 ft-lbs / 41-47 Nm
4	Check Valve	DD	Drive circuit	30-35 ft-lbs / 41-47 Nm
5	Shuttle Valve, 3 position 3 way	DF	Controls flow to drive motors in forward and reverse	50-55 ft-lbs / 67-73 Nm
6	Orifice Plug, 0.070 inch / 1.8 mm	DA	Equalizes flow across flow divider/ combiner valve BY	

https://truckmanualshub.com/

MANIFOLDS

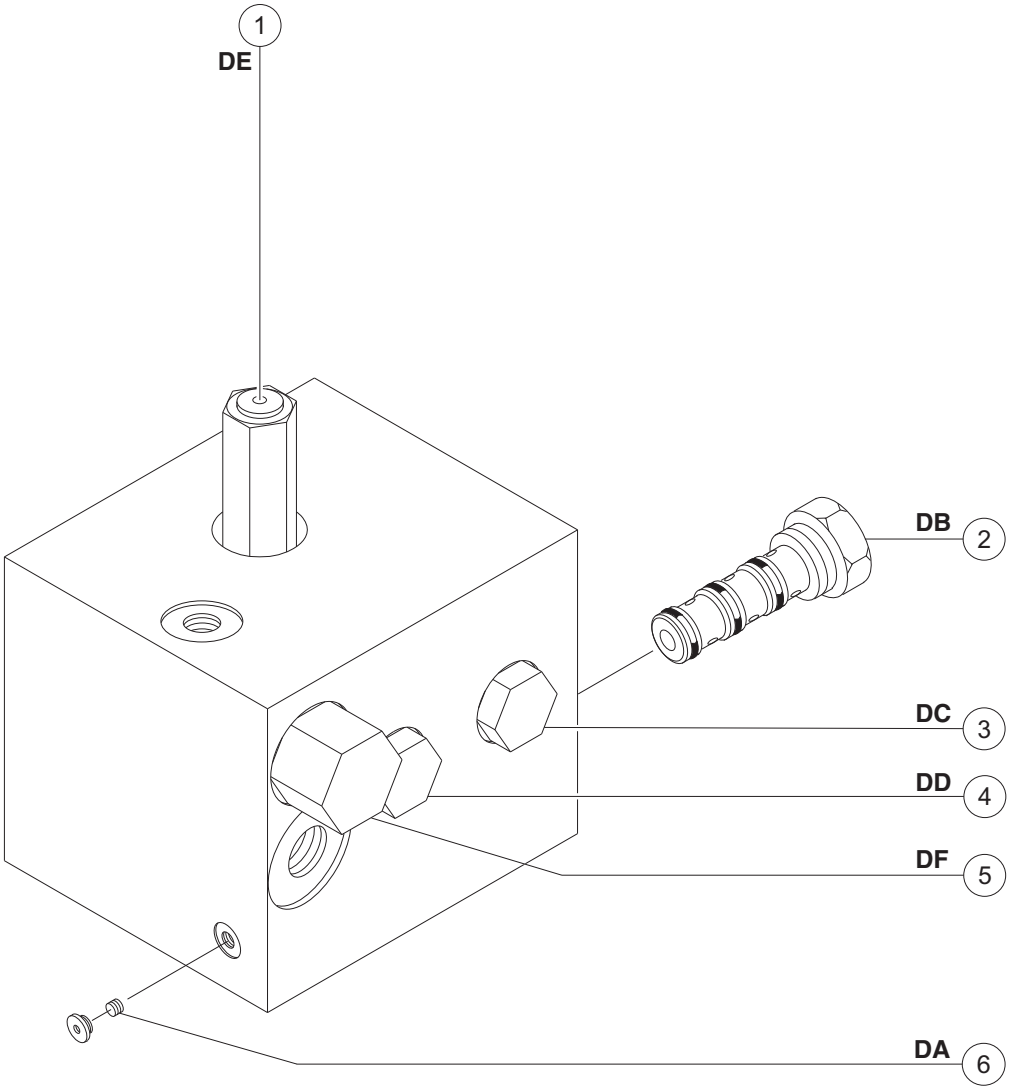

https://truckmanualshub.com/

8-9
4WD Traction Manifold Components (before serial number 8581)

The drive manifold is mounted inside the drive chassis at the non-steer end of the machine.

Index No.	Description	Schematic Item	Function	Torque
1	Relief valve, 280 psi / 19.3 bar	DE	Charge pressure circuit	35-40 ft-lbs / 48-54 Nm
2	Flow divider/combiner valve	DB	Controls flow to non-steer end drive motors in forward and reverse	80-90 ft-lbs / 108-122 Nm
3	Check valve	DF	Steer end drive motor circuit	35-40 ft-lbs / 48-54 Nm
4	Check valve	DC	Non-steer end drive motor circuit	35-40 ft-lbs / 48-54 Nm
5	Flow divider/combiner valve	CK	Controls flow to flow divider/combiner valves 2 and 13	80-90 ft-lbs / 108-122 Nm
6	Check valve	DD	Non-steer end drive motor circuit	60-70 ft-lbs / 81-95 Nm
7	Orifice, 0.040 inch / 1 mm	DL	Equalizes pressure on both sides of flow divider/combiner valve 5	
8	Orifice, 0.040 inch / 1 mm	DA	Equalizes pressure on both sides of flow divider/combiner valve 2	
9	Orifice, 0.040 inch / 1 mm	DN	Equalizes pressure on both sides of flow divider/combiner valve 13	
10	Check valve	DG	Steer end drive motor circuit	60-70 ft-lbs / 81-95 Nm
11	Check valve	DH	Steer end drive motor circuit	35-40 ft-lbs / 48-54 Nm
12	Shuttle valve, 3 position 3 way	DJ	Charge pressure circuit that directs hot oil out of low pressure side of drive pump	80-90 ft-lbs / 108-122 Nm
13	Flow divider/combiner valve	DM	Controls flow to steer end drive motors in forward and reverse	80-90 ft-lbs / 108-122 Nm
14	Check valve	DP	Non-steer end drive motor circuit	35-40 ft-lbs / 48-54 Nm

https://truckmanualshub.com/

MANIFOLDS

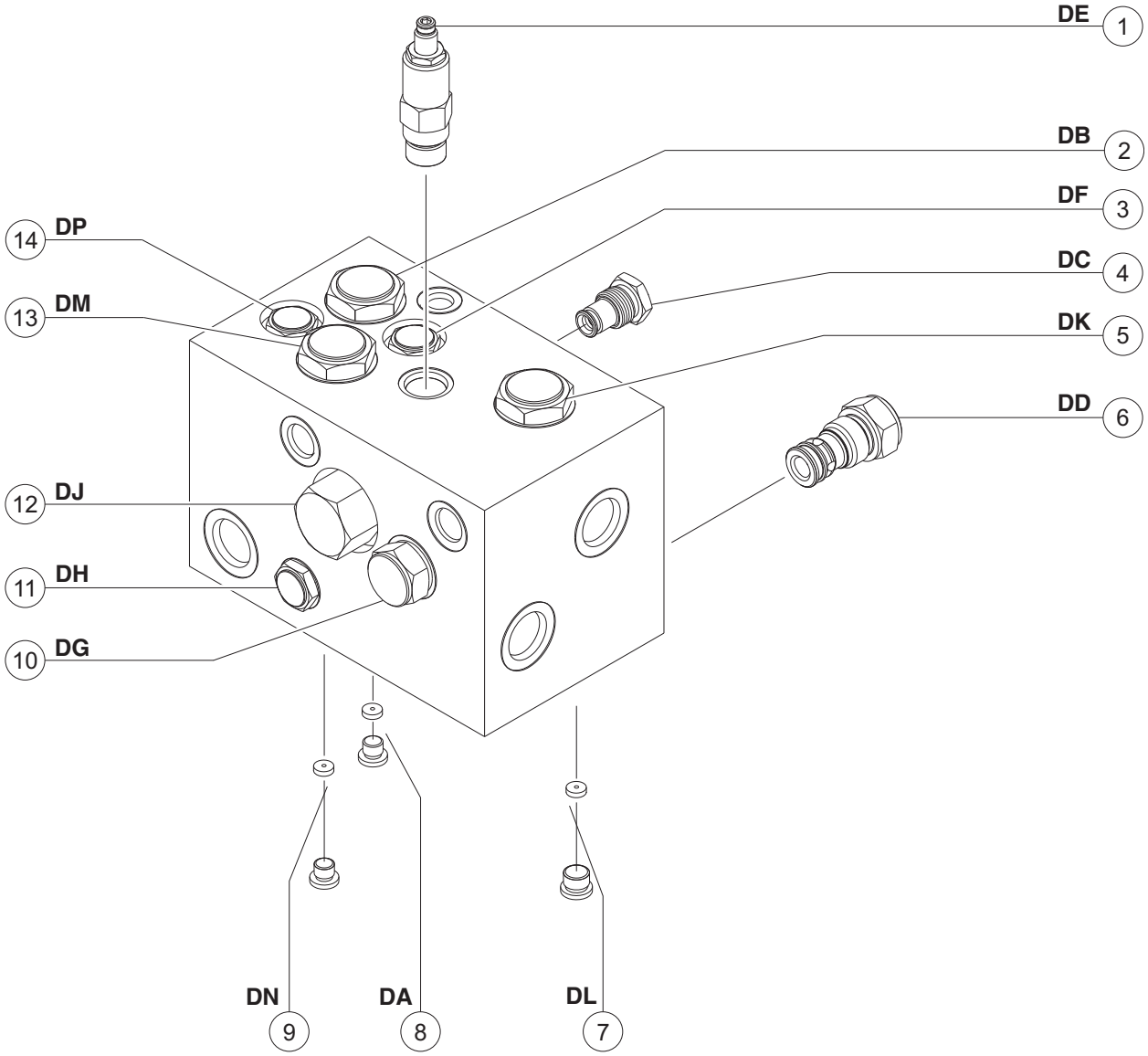

https://truckmanualshub.com/

8-10
4WD Traction Manifold Components (after serial number 8580)

The drive manifold is mounted inside the drive chassis at the non-steer end of the machine.

Index No.	Description	Schematic Item	Function	Torque
1	Relief valve, 280 psi / 19.3 bar	DE	Charge pressure circuit	35-40 ft-lbs / 48-54 Nm
2	Flow divider/combiner valve	DB	Controls flow to non-steer end drive motors in forward and reverse	80-90 ft-lbs / 108-122 Nm
3	Check valve	DF	Steer end drive motor circuit	35-40 ft-lbs / 48-54 Nm
4	Check valve	DC	Non-steer end drive motor circuit	35-40 ft-lbs / 48-54 Nm
5	Flow divider/combiner valve	CK	Controls flow to flow divider/combiner valves 2 and 13	80-90 ft-lbs / 108-122 Nm
6	Check valve	DD	Non-steer end drive motor circuit	60-70 ft-lbs / 81-95 Nm
7	Orifice, 0.040 inch / 1 mm	DL	Equalizes pressure on both sides of flow divider/combiner valve 5	
8	Orifice, 0.040 inch / 1 mm	DA	Equalizes pressure on both sides of flow divider/combiner valve 2	
9	Orifice, 0.040 inch / 1 mm	DN	Equalizes pressure on both sides of flow divider/combiner valve 13	
10	Check valve	DG	Steer end drive motor circuit	60-70 ft-lbs / 81-95 Nm
11	Check valve	DH	Steer end drive motor circuit	35-40 ft-lbs / 48-54 Nm
12	Shuttle valve, 3 position 3 way	DJ	Charge pressure circuit that directs hot oil out of low pressure side of drive pump	80-90 ft-lbs / 108-122 Nm
13	Flow divider/combiner valve	DM	Controls flow to steer end drive motors in forward and reverse	80-90 ft-lbs / 108-122 Nm
14	Check valve	DP	Non-steer end drive motor circuit	35-40 ft-lbs / 48-54 Nm

https://truckmanualshub.com/

MANIFOLDS

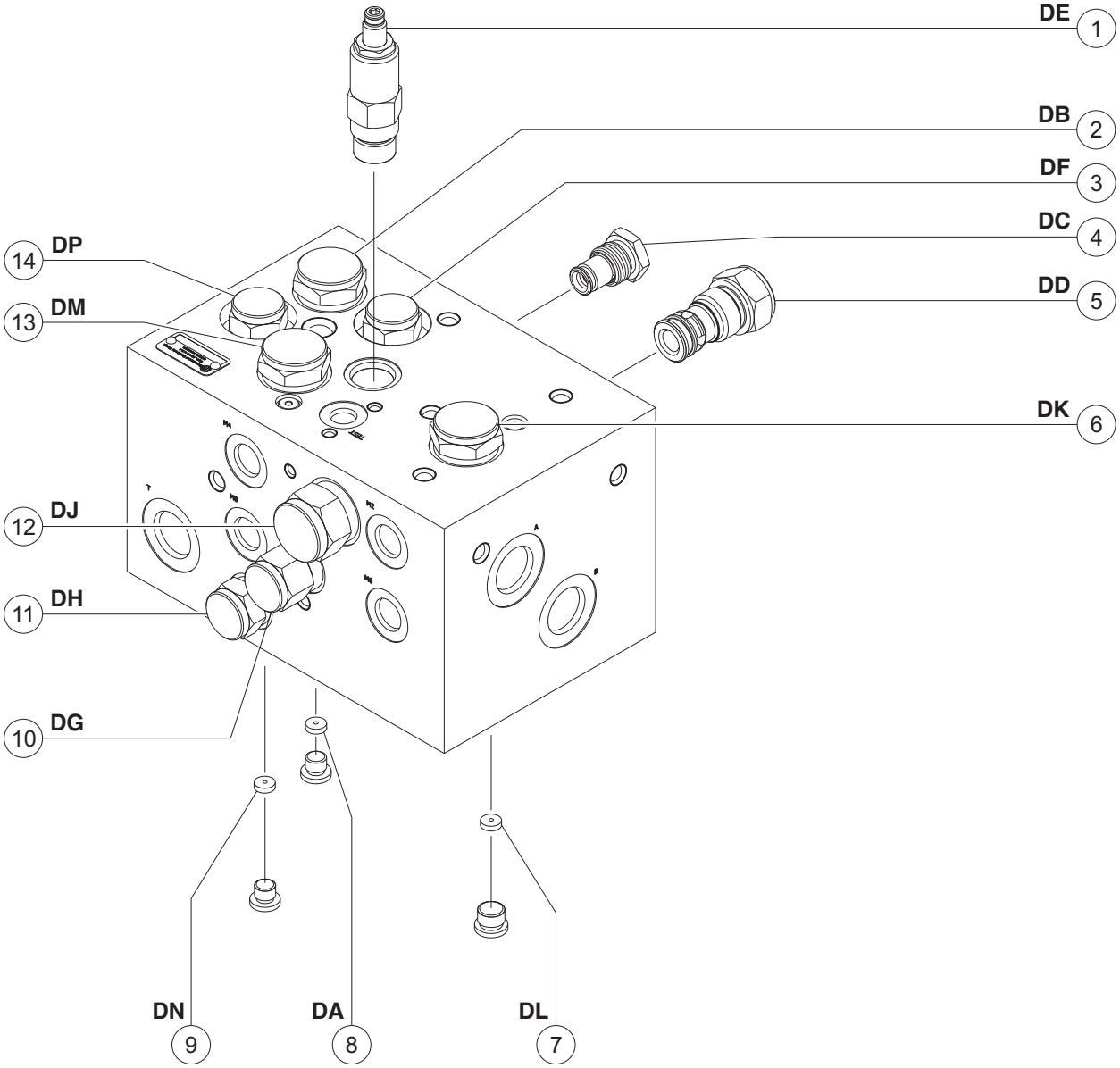

https://truckmanualshub.com/

8-11
Drive Oil Diverter Manifold Components (welder option)

The oil diverter manifold is mounted to the hydraulic generator located in the engine compartment.

Index No.	Description	Schematic Item	Function	Torque
1	Directional Valve	CU	Diverter valve	80-90 ft-lbs / 108-122 Nm
2	Orifice disc, 0.031 inch / 0.8 mm	CV	Delays shift to drive	
3	Solenoid valve	CW	Pilot valve to diverter	35-40 ft-lbs / 47-54 Nm
4	Relief valve	CX	Charge pressure circuit	35-40 ft-lbs / 47-54 Nm
5	Pressure switch	CZ	Power to relay	16 ft-lbs / 22 Nm
6	Connector	---	For pressure switch	11 ft-lbs / 15 Nm
7	Check valve	CY	Prevents oil to generator	35-40 ft-lbs / 47-54 Nm

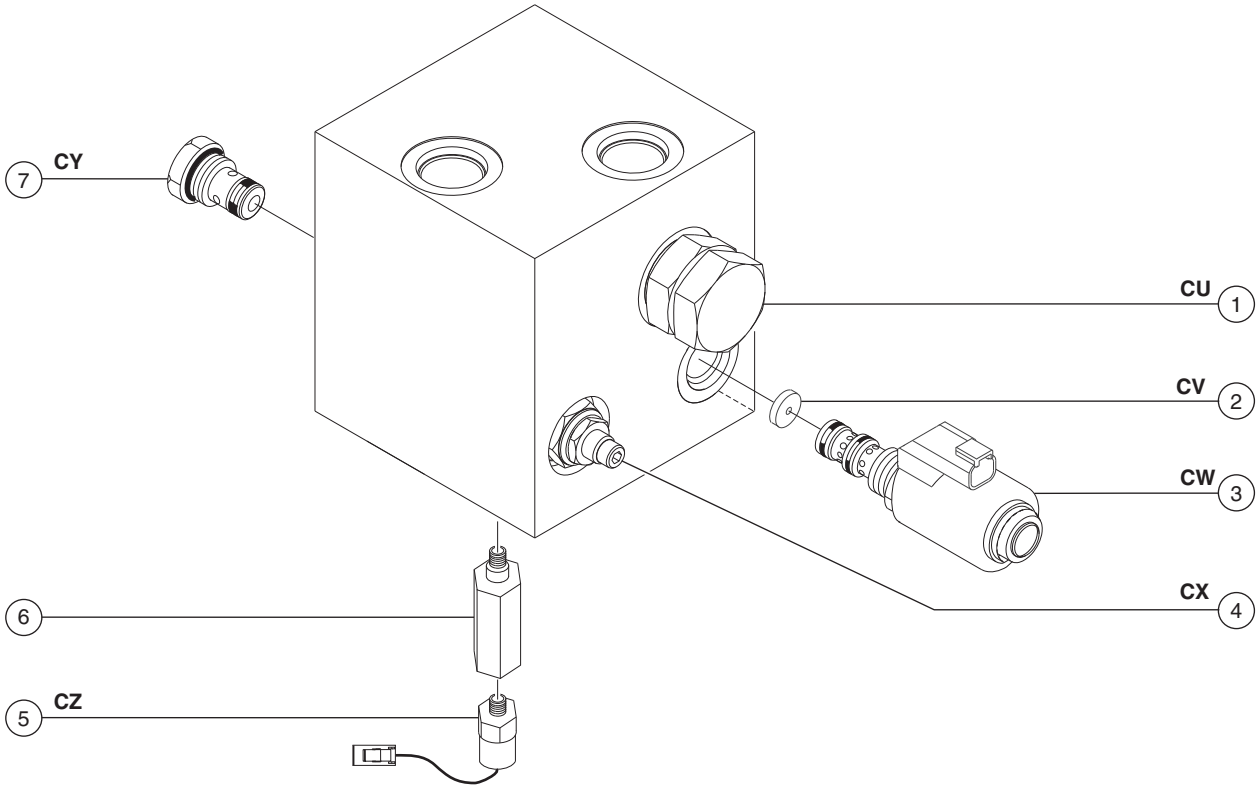

https://truckmanualshub.com/

MANIFOLDS

8-12 Valve Adjustments - Traction Manifold

How to Adjust the Hot Oil Shuttle Relief Valve

Note: The pressure differential between the charge pump relief valve (located in the drive pump) and the hot oil shuttle relief valve (located in the traction manifold) is necessary to return hot oil from the closed loop drive circuit to the hydraulic tank for cooling. This pressure differential must be maintained at 40 psi / 14.5 bar.

Note: The following procedure will require two people.

1 Open the engine side turntable cover and connect a 0 to 600 psi / 0 to 40 bar pressure gauge to the diagnostic nipple on the drive pump.

2 Start the engine from the platform controls and allow the engine to run at low idle. Note the pressure reading on the pressure gauge.

3 Turn the engine off and connect a 0 to 600 psi / 0 to 40 bar pressure gauge to the diagnostic nipple located on the traction manifold.

4 Start the engine from the platform controls and drive the machine slowly in the forward direction. Note the pressure reading on the pressure gauge.

5 Turn the engine off, and remove the hot oil shuttle relief valve cap (item BJ). Adjust the internal hex socket clockwise to increase the pressure or counterclockwise to decrease the pressure. Install the valve cap.

6 Repeat steps 4 and 5 until a pressure differential (between the charge pump reading and the hot oil shuttle relief valve) of 40 psi / 14.5 bar is obtained.

https://truckmanualshub.com/

8-13 Valve Coils

How to Test a Coil

A properly functioning coil provides an electromagnetic force which operates the solenoid valve. Critical to normal operation is continuity within the coil. Zero resistance or infinite resistance indicates the coil has failed.

Since coil resistance is sensitive to temperature, resistance values outside specification can produce erratic operation. When coil resistance decreases below specification, amperage increases. As resistance rises above specification, voltage increases.

While valves may operate when coil resistance is outside specification, maintaining coils within specification will help ensure proper valve function over a wide range of operating temperatures.

⚠WARNING Electrocution/burn hazard. Contact with electrically charged circuits could result in death or serious injury. Remove all rings, watches and other jewelry.

Note: If the machine has been in operation, allow the coil to cool at least 3 hours before performing this test.

1 Tag and disconnect the wiring from the coil to be tested.

2 Test the coil resistance using a multimeter set to resistance (Ω). Refer to the Valve Coil Resistance Specification table.

Result: If the resistance is not within the adjusted specification, plus or minus 10%, replace the coil.

Valve Coil Resistance Specifications

Note: The following coil resistance specifications are at an ambient temperature of 68°F / 20°C. As valve coil resistance is sensitive to changes in air temperature, the coil resistance will typically increase or decrease by 4% for each 18°F / -7.8°C that your air temperature increases or decreases from 68°F / 20°C.

Proportional solenoid valve (schematic items K and W)	4.8 Ω
2 position 3 way solenoid valve (schematic items D, R, X, TT and UU)	6.3 Ω
2 position 3 way solenoid valve (schematic items G)	3.3 Ω
3 position 4 way solenoid valve (schematic items A, E, N and S)	6.3 Ω
2 position 3 way solenoid valve (schematic items AK, AM, VV and WW)	6.3 Ω
2 position 3 way solenoid valve (schematic item G)	3.3 Ω

https://truckmanualshub.com/

MANIFOLDS

How to Test a Coil Diode

Genie incorporates spike suppressing diodes in all of its directional valve coils except proportional valves and those coils with a metal case. Properly functioning coil diodes protect the electrical circuit by suppressing voltage spikes. Voltage spikes naturally occur within a function circuit following the interruption of electrical current to a coil. Faulty diodes can fail to protect the electrical system, resulting in a tripped circuit breaker or component damage.

WARNING Electrocution/burn hazard. Contact with electrically charged circuits could result in death or serious injury. Remove all rings, watches and other jewelry.

1 Test the coil for resistance. Refer to, *How to Test a Coil.*

2 Connect a 10Ω resistor to the negative terminal of a known good 9V DC battery. Connect the other end of the resistor to a terminal on the coil.

Note: The battery should read 9V DC or more when measured across the terminals.

3 Set a multimeter to read DC current.

Note: The multimeter, when set to read DC current, should be capable of reading up to 800 mA.

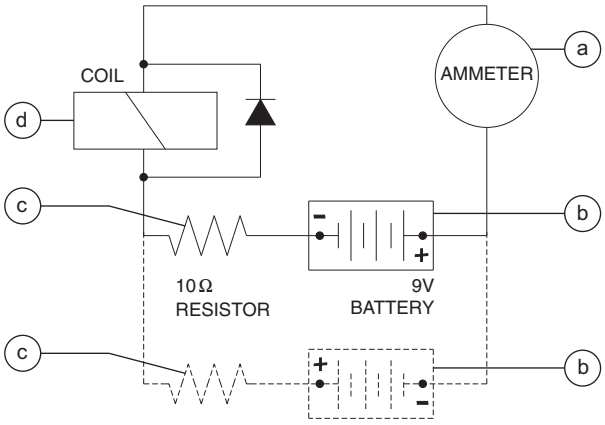

a multimeter
b 9V DC battery
c 10Ω resistor
d coil

Note: Dotted lines in illustration indicate a reversed connection as specified in step 6.

4 Connect the negative lead to the other terminal on the coil.

Note: If testing a single-terminal coil, connect the negative lead to the internal metallic ring at either end of the coil.

5 Momentarily connect the positive lead from the multimeter to the positive terminal on the 9V DC battery. Note and record the current reading.

6 At the battery or coil terminals, reverse the connections. Note and record the current reading.

Result: Both current readings are greater than 0 mA and are different by a minimum of 20%. The coil is good.

Result: If one or both of the current readings are 0 mA, or if the two current readings do not differ by a minimum of 20%, the coil and/or its internal diode are faulty and the coil should be replaced.

https://truckmanualshub.com/

Fuel and Hydraulic Tanks

9-1 Fuel Tank

How to Remove the Fuel Tank

DANGER Explosion and fire hazard. Engine fuels are combustible. Remove the fuel tank in an open, well-ventilated area away from heaters, sparks, flames and lighted tobacco. Always have an approved fire extinguisher within easy reach.

DANGER Explosion and fire hazard. When transferring fuel, connect a grounding wire between the machine and pump or container.

1 Turn the manual fuel shutoff valve to the closed position (if equipped).

2 Remove the fuel filler cap from the tank.

3 Using an approved hand-operated pump, drain the fuel tank into a suitable container. Refer to capacity specifications.

DANGER Explosion and fire hazard. When transferring fuel, connect a grounding wire between the machine and pump or container.

Note: Be sure to only use a hand operated pump suitable for use with gasoline and diesel fuel.

4 Tag, disconnect, drain and plug the supply and return fuel hoses. Cap the fittings on the fuel tank.

5 Remove the fuel tank retaining fasteners.

6 Remove the fuel tank from the machine.

NOTICE Component damage hazard. The fuel tank is plastic and may become damaged if allowed to fall.

NOTICE Component damage hazard. When installing the plastic fuel tank, do not overtighten the retaining fasteners.

Note: Clean the fuel tank and inspect for damage before installing it onto the machine.

https://truckmanualshub.com/

FUEL AND HYDRAULIC TANKS

9-2 Hydraulic Tank

The primary functions of the hydraulic tank are to cool, clean and de-aerate the hydraulic fluid during operation. The tank utilizes internal suction strainers for the pump supply hoses and has an external return filter equipped with a filter condition indicator.

How to Remove the Hydraulic Tank

NOTICE Component damage hazard. The work area and surfaces where this procedure will be performed must be clean and free of debris that could get into the hydraulic system.

Note: When removing a hose assembly or fitting, the O-ring (if equipped) on the fitting and/or the hose end must be replaced. All connections must be torqued to specification during installation. Refer to Section 2, *Hydraulic Hose and Fitting Torque Specifications*.

1 Remove the fuel tank. See 9-1, *How to Remove the Fuel Tank.*

2 Close the two hydraulic tank valves located at the hydraulic tank (if equipped).

NOTICE Component damage hazard. The engine must not be started with the hydraulic tank shutoff valves in the CLOSED position or component damage will occur. If the tank valves are closed, remove the key from the key switch and tag the machine to inform personnel of the condition.

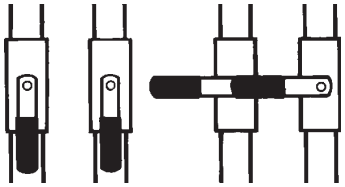

3 Remove the drain plug from the hydraulic tank and completely drain the tank into a suitable container. Refer to Section 2, *Specifications*.

4 Tag, disconnect and plug the two suction hoses that are attached to the hydraulic tank.

5 Tag and disconnect and plug the hose from the return filter. Cap the fitting on the return filter housing.

6 Tag and disconnect and plug the supply hose for the auxiliary power unit. Cap the fitting on the hydraulic tank.

https://truckmanualshub.com/

7 Remove the retaining fasteners from the hydraulic tank hold down straps. Remove the hold down straps from the hydraulic tank.

8 Support the hydraulic tank with 2 lifting straps. Place one lifting strap at each end of the tank and attach the lifting straps to an overhead crane.

9 Remove the hydraulic tank from the machine.

⚠WARNING Crushing hazard. The hydraulic tank could become unbalanced and fall if not properly supported and secured to the overhead crane.

10 Remove the suction strainers from the tank and clean them using a mild solvent.

11 Rinse out the inside of the tank using a mild solvent.

12 Install the suction strainers using pipe thread sealant on the threads.

13 Install the drain plug using pipe thread sealant on the threads.

14 Install the hydraulic tank onto the machine.

15 Install the two suction hoses and the supply hose for the auxiliary power unit.

16 Fill the tank with hydraulic oil until the level is within the top 2 inches / 5 cm of the sight gauge. Do not overfill.

17 Clean up any oil that may have spilled.

18 Open the hydraulic tank shutoff valves (if equipped).

NOTICE Component damage hazard. Be sure to open the two hydraulic tank shutoff valves (if equipped) and prime the pump after installing the hydraulic tank.

Note: Always use pipe thread sealant when installing the drain plug and strainers.

https://truckmanualshub.com/

Turntable Rotation Components

10-1
Turntable Rotation Drive Hub Assembly

How to Remove the Turntable Rotation Drive Hub Assembly

Note: When removing a hose assembly or fitting, the O-ring (if equipped) on the fitting and/or the hose end must be replaced. All connections must be torqued to specification during installation. Refer to Section 2, *Hydraulic Hose and Fitting Torque Specifications*.

1 Secure the turntable from rotating with the turntable rotation lock pin.

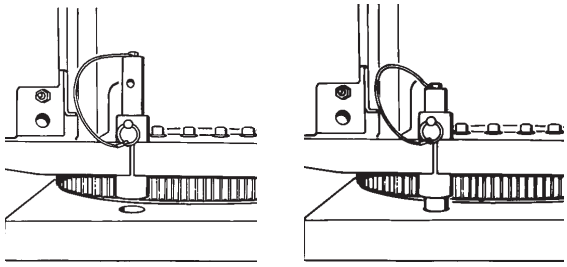

unlocked locked

2 Tag, disconnect and plug the hydraulic hoses from the drive motor. Cap the fittings on the motor.

⚠WARNING Bodily injury hazard. Spraying hydraulic oil can penetrate and burn skin. Loosen hydraulic connections very slowly to allow the oil pressure to dissipate gradually. Do not allow oil to squirt or spray.

3 Loosen the backlash pivot plate and adjustment bolts.

4 Attach a suitable lifting device to the lifting eyes on the drive hub assembly.

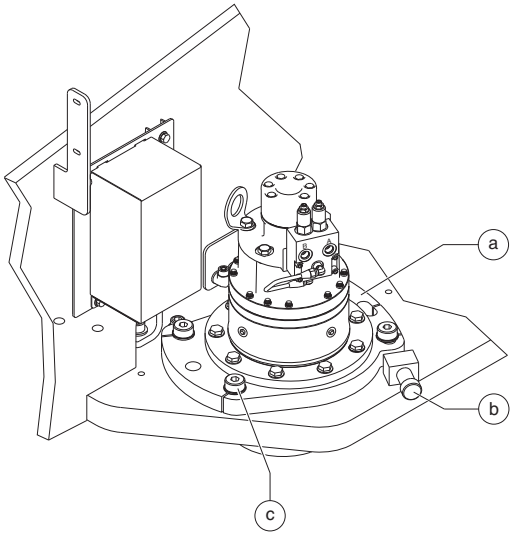

a backlash pivot plate
b adjustment bolt with lock nut
c backlash pivot plate mounting bolts

5 Remove the backlash pivot plate mounting bolts. Carefully remove the drive hub assembly from the machine.

⚠WARNING Crushing hazard. The turntable rotation drive hub assembly could become unbalanced and fall when it is removed from the machine if not properly supported.

When installing the drive hub assembly:

6 Install the drive hub. Apply removable thread locking compound to fastener threads.Torque the backlash pivot plate mounting fasteners to specification. Refer to Section 2, *Machine Torque Specifications.*

7 Install the brake and then the motor onto the drive hub. Apply removable thread locking compound to fastener threads.Torque the motor/brake mounting fasteners to specification. Refer to Section 2, *Machine Torque Specifications.*

8 Adjust turntable rotation gear backlash. See 10-1, *How to Adjust the Turntable Rotation Gear Backlash.*

https://truckmanualshub.com/

TURNTABLE ROTATION COMPONENTS

How to Remove the Turntable Rotation Hydraulic Motor

Note: When removing a hose assembly or fitting, the O-ring (if equipped) on the fitting and/or the hose end must be replaced. All connections must be torqued to specification during installation. Refer to Section 2, *Hydraulic Hose and Fitting Torque Specifications*.

1 Secure the turntable from rotating with the turntable rotation lock pin.

Note: The turntable rotation lock pin is located next to the boom rest pad.

2 Tag, disconnect and plug the hydraulic hoses from the drive motor. Cap the fittings on the motor.

⚠WARNING Bodily injury hazard. Spraying hydraulic oil can penetrate and burn skin. Loosen hydraulic connections very slowly to allow the oil pressure to dissipate gradually. Do not allow oil to squirt or spray.

3 Remove the hydraulic tube that connects from the counterbalance manifold to the brake. Cap the fittings on the brake and manifold.

⚠WARNING Bodily injury hazard. Spraying hydraulic oil can penetrate and burn skin. Loosen hydraulic connections very slowly to allow the oil pressure to dissipate gradually. Do not allow oil to squirt or spray.

4 Remove the motor/brake mounting fasteners. Carefully remove the motor from the brake.

5 Clean up any oil that may have spilled.

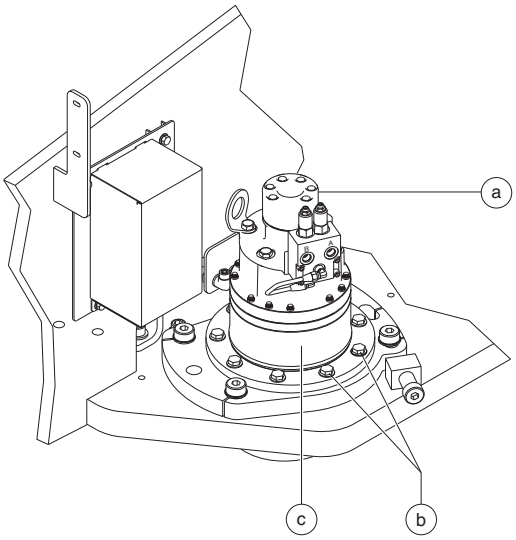

a motor
b drive hub mounting bolts
c drive hub with brake

https://truckmanualshub.com/

TURNTABLE ROTATION COMPONENTS

How to Adjust the Turntable Rotation Gear Backlash

The turntable rotation drive hub is mounted on an adjustable plate that controls the gap between the rotation motor pinion gear and the turntable bearing ring gear.

Note: Perform this procedure with the boom between the non-steer end tires and with the machine on a firm and level surface.

1 Secure the turntable from rotating with the turntable rotation lock pin.

Note: The turntable rotation lock pin is located next to the boom rest pad.

2 Loosen the backlash pivot plate mounting fasteners.

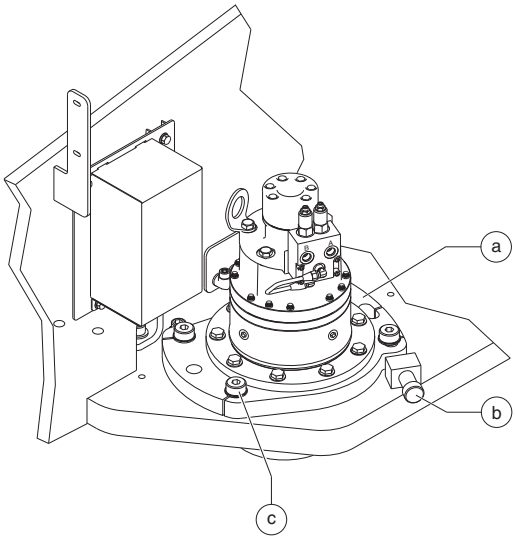

a backlash pivot plate
b adjustment bolt with lock nut
c backlash pivot plate mounting bolts

3 Push the backlash pivot plate towards the turntable as far as possible (this will push the rotation gear into the turntable bearing ring gear).

4 Loosen the lock nut on the adjustment bolt.

5 Turn the adjustment bolt clockwise until it contacts the backlash pivot plate.

6 Turn the adjustment bolt one half turn counterclockwise. Tighten the lock nut on the adjustment bolt.

7 Rotate the backlash pivot plate away from the turntable until it contacts the adjustment bolt. Then torque the mounting fasteners on the backlash pivot plate. Refer to Section 2, *Specifications*.

8 Rotate the turntable through an entire rotation. Check for tight spots that could cause binding. Readjust if necessary.

https://truckmanualshub.com/

2WD Steer Axle Components

11-1 Yoke and Hub

How to Remove the Yoke and Hub

1 Remove the pin retaining fasteners from both the steering cylinder and the tie rod cylinder pivot pins. Use a soft metal drift to remove the pins.

2 Loosen the wheel lug nuts. Do not remove them.

3 Block the non-steer wheels and center a lifting jack of ample capacity under the steer axle.

4 Raise the machine approximately 6 inches / 15 cm and place blocks under the chassis for support.

5 Remove the lug nuts. Remove the tire and wheel assembly.

6 Remove the pin retaining fasteners from the yoke pivot pins.

7 Support and secure the yoke and hub assembly to a lifting jack.

8 Use a slide hammer to remove the upper yoke pivot pin, then use a soft metal drift to drive the lower yoke pivot pin down and out.

9 Remove the yoke and hub assembly from the machine.

⚠CAUTION Crushing hazard. The yoke and hub assembly may become unbalanced and fall if not properly supported and secured to the lifting jack when it is removed from the machine.

How to Remove the Hub and Bearings

1 Loosen the wheel lug nuts. Do not remove them.

2 Block the non-steer wheels and center a lifting jack of ample capacity under the steer axle.

3 Raise the machine approximately 6 inches / 15 cm and place blocks under the chassis for support.

4 Remove the lug nuts. Remove the tire and wheel assembly.

5 Remove the dust cap, cotter pin and castle nut.

Note: Always replace the cotter pin with a new one when installing the castle nut.

6 Pull the hub off the spindle. The washer and outer bearing should fall loose from the hub.

7 Place the hub on a flat surface and gently pry the bearing seal out of the hub. Remove the rear bearing.

https://truckmanualshub.com/

2WD STEER AXLE COMPONENTS

How to Install the Hub and Bearings, 2WD Models

Note: When replacing a wheel bearing, both the inner and outer bearings including the pressed-in races must be replaced.

1 Be sure that both bearings are packed with clean, fresh grease.

2 Place the large inner bearing into the rear of the hub.

3 Press the bearing seal evenly into the hub until it is flush.

4 Slide the hub onto the yoke spindle.

NOTICE Component damage hazard. Do not apply excessive force or damage to the lip of the seal may occur.

5 Place the outer bearing into the hub.

6 Install the washer and castle nut.

7 Tighten the castle nut to 158 ft-lbs / 214 Nm to seat the bearing.

Note: Rotate the hub by hand while torquing the castle nut to make sure the bearings seat properly.

8 Loosen the castle nut one turn, and then torque to 35 ft-lbs / 47 Nm.

9 Install a new cotter pin. Bend the cotter pin to secure the castle nut.

Note: Always use a new cotter pin when installing a castle nut.

10 Install the dust cap, then the tire and wheel assembly. Torque the wheel lug nuts to specification. Refer to Section 2, *Specifications.*

11-2 Steer Cylinder

How to Remove a Steer Cylinder

There are two identical steer cylinders that work in parallel. They are part of the same hydraulic circuit, but move in opposite directions. The tie rod cylinder maintains equal movement of the tires.

Note: When removing a hose assembly or fitting, the O-ring (if equipped) on the fitting and/or the hose end must be replaced. All connections must be torqued to specification during installation. Refer to Section 2, *Hydraulic Hose and Fitting Torque Specifications*.

1 Tag, disconnect and plug the hydraulic hoses from the steer cylinder. Cap the fittings on the cylinder.

⚠WARNING Bodily injury hazard. Spraying hydraulic oil can penetrate and burn skin. Loosen hydraulic connections very slowly to allow the oil pressure to dissipate gradually. Do not allow oil to squirt or spray.

2 Remove the pin retaining fasteners from the steer cylinder pivot pins. Remove the pivot pin from each end of the steer cylinder.

3 Remove the steer cylinder from the machine.

https://truckmanualshub.com/

4WD Steer Axle Components

12-1
Yoke and Drive Hub

How to Remove the Yoke and Drive Hub Assembly

Note: When removing a hose assembly or fitting, the O-ring (if equipped) on the fitting and/or the hose end must be replaced. All connections must be torqued to specification during installation. Refer to Section 2, *Hydraulic Hose and Fitting Torque Specifications*.

1 Remove the pin retaining fasteners from both the steer cylinder and the tie rod cylinder pivot pins. Remove the pins.

2 Tag, disconnect and plug the hydraulic hoses from the drive motor. Cap the fittings on the drive motor.

⚠WARNING Bodily injury hazard. Spraying hydraulic oil can penetrate and burn skin. Loosen hydraulic connections very slowly to allow the oil pressure to dissipate gradually. Do not allow oil to squirt or spray.

3 Loosen the wheel lug nuts. Do not remove them.

4 Block the non-steer wheels, and center a lifting jack of ample capacity under the steer axle.

5 Raise the machine approximately 6 inches / 15 cm and place blocks under the chassis for support.

6 Remove the lug nuts. Remove the tire and wheel assembly.

7 Remove the hydraulic hose clamp retaining fastener from the top of the yoke pivot pin.

8 Remove the drive motor mounting fasteners.

9 Slide the drive motor shaft out of the drive hub and remove the drive motor from the machine.

10 Remove the pin retaining fasteners from the upper and lower yoke pivot pins.

11 Support and secure the yoke and drive hub assembly to a lifting jack.

12 Use a slide hammer to remove the upper yoke pivot pin. Use a soft metal drift to drive the lower yoke pivot pin down and out.

⚠WARNING Crushing hazard. The yoke and drive hub assembly could become unbalanced and fall when the yoke pivot pins are removed if not properly supported and secured to the lifting jack.

13 Place the yoke and drive hub assembly on a flat surface with the drive hub facing down.

14 Remove the drive hub mounting fasteners that attach the drive hub to the yoke. Remove the yoke from the drive hub. Refer to Section 2, *Specifications*.

Note: Replace the thrust washer when installing the yoke and drive hub assembly onto the axle.

https://truckmanualshub.com/

4WD STEER AXLE COMPONENTS

12-2
Drive Motor

How to Remove a Drive Motor

NOTICE Component damage hazard. Repairs to the motor should only be performed by an authorized Sauer dealer.

NOTICE Component damage hazard. The work area and surfaces where this procedure will be performed must be clean and free of debris that could get into the hydraulic system and cause severe component damage. Dealer service is recommended.

Note: When removing a hose assembly or fitting, the O-ring (if equipped) on the fitting and/or the hose end must be replaced. All connections must be torqued to specification during installation. Refer to Section 2, *Hydraulic Hose and Fitting Torque Specifications*.

1 Extend the axles.

2 Remove the drive motor access covers from both sides of the inner axle.

3 Tag, disconnect and plug the hydraulic hoses from the drive motor. Cap the fittings on the drive motor.

⚠WARNING Bodily injury hazard. Spraying hydraulic oil can penetrate and burn skin. Loosen hydraulic connections very slowly to allow the oil pressure to dissipate gradually. Do not allow oil to squirt or spray.

4 Remove the drive motor mounting fasteners.

5 Slide the drive motor shaft out of the drive hub, and remove the drive motor from the machine. Refer to Section 2, *Specifications*.

https://truckmanualshub.com/

12-3 Drive Hub

How to Remove a Drive Hub

Note: When removing a hose assembly or fitting, the O-ring (if equipped) on the fitting and/or the hose end must be replaced. All connections must be torqued to specification during installation. Refer to Section 2, *Hydraulic Hose and Fitting Torque Specifications*.

1 Remove the drive motor. See 12-2, *How to Remove a Drive Motor*.

2 Loosen the wheel lug nuts. Do not remove them.

3 Center a lifting jack of ample capacity under the non-steer axle.

4 Raise the machine approximately 6 inches / 15 cm and place blocks under the chassis for support.

5 Remove the wheel lug nuts, then the tire and wheel assembly.

6 Place a second lifting jack under the drive hub for support and secure the drive hub to the lifting jack.

7 Remove the drive hub mounting fasteners that attach the drive hub to the axle. Remove the drive hub.

⚠WARNING Crushing hazard. The drive hub could become unbalanced and fall if not properly supported and secured to the lifting jack when removed from the machine.

Note: Do not re-use the drive hub mounting fasteners. Genie specifications require the use of new fasteners.

12-4 Steer Cylinders

How to Remove a Steer Cylinder

There are two identical steer cylinders that work in parallel. They are part of the same hydraulic circuit, but move in opposite directions. The tie rod cylinder maintains equal movement of the tires.

Note: When removing a hose assembly or fitting, the O-ring (if equipped) on the fitting and/or the hose end must be replaced. All connections must be torqued to specification during installation. Refer to Section 2, *Hydraulic Hose and Fitting Torque Specifications*.

1 Tag, disconnect and plug the hydraulic hoses from the steer cylinder. Cap the fittings on the cylinder.

⚠WARNING Bodily injury hazard. Spraying hydraulic oil can penetrate and burn skin. Loosen hydraulic connections very slowly to allow the oil pressure to dissipate gradually. Do not allow oil to squirt or spray.

2 Remove the hose bracket mounting fastener on the steer cylinder barrel-end pivot pin.

3 Remove the pin retaining fasteners from the steer cylinder pivot pins. Remove the pivot pin from each end of the steer cylinder.

4 Remove the steer cylinder from the machine.

https://truckmanualshub.com/

Non-steer Axle Components

13-1 Drive Motor

How to Remove a Drive Motor

This procedure is the same as the steer axle procedure. See 12-2, *How to Remove a Drive Motor.*

13-2 Drive Hub

How to Remove a Drive Hub

This procedure is the same as the steer axle procedure. See 12-3, *How to Remove a Drive Hub.*

https://truckmanualshub.com/

Oscillating Axle Components

14-1
Oscillate Axle Cylinders

The oscillating axle cylinders extend and retract between the drive chassis and the axle to maintain a level chassis while driving over uneven terrain. The cylinders are equipped with counterbalance valves to prevent movement in the event of a hydraulic hose failure.

How to Remove an Oscillate Axle Cylinder

Note: Perform this procedure on firm, level surface with the boom in the stowed position.

Note: When removing a hose assembly or fitting, the O-ring (if equipped) on the fitting and/or the hose end must be replaced. All connections must be torqued to specification during installation. Refer to Section 2, *Hydraulic Hose and Fitting Torque Specifications*.

1 Rotate the turntable until the boom is between the steer tires.

2 Remove the fasteners from the drive chassis cover at the steer end. Remove the cover.

3 Tag, disconnect and plug the oscillating axle cylinder hydraulic hoses. Cap the fittings on the cylinder.

WARNING Bodily injury hazard. Spraying hydraulic oil can penetrate and burn skin. Loosen hydraulic connections very slowly to allow the oil pressure to dissipate gradually. Do not allow oil to squirt or spray.

4 Remove the pin retaining fasteners from the rod-end pivot pin. Use a soft metal drift to remove the pin.

5 Attach a lifting strap from an overhead crane to the barrel end of the oscillating cylinder.

6 Remove the pin retaining fasteners from the barrel-end pivot pin. Use a soft metal drift to remove the pin.

7 Remove the cylinder from the machine.

WARNING Crushing hazard. The oscillate cylinder could become unbalanced and fall if not properly attached to the overhead crane when removed from the machine.

https://truckmanualshub.com/

OSCILLATING AXLE COMPONENTS

14-2
Oscillate Directional Valve

How to Adjust the Oscillate Relief Valve Pressure

1 Connect a 0 to 2000 psi / 0 to 150 bar pressure gauge to the diagnostic nipple located on the function manifold.

2 Remove the drive chassis cover from the non-steer end of the machine.

3 Disconnect the directional valve linkage, by removing the clevis yoke from the drive chassis. Refer to illustration 1.

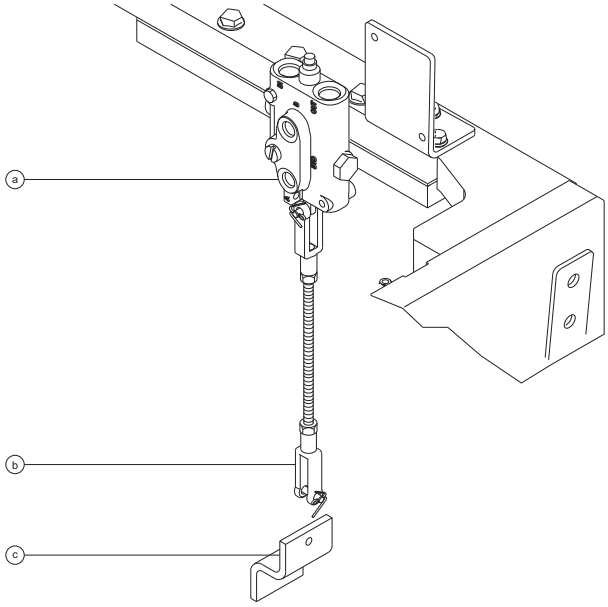

a oscillate valve
b clevis yoke
c drive chassis

4 Start the engine from the ground control.

5 With the engine running, manually activate the valve and observe the pressure reading on the pressure gauge. Refer to Section 2, *Specifications*.

6 Turn the engine off.

7 Locate the relief valve on the function manifold (item SC).

8 Loosen the jam nut on the relief valve.

9 Turn the valve clockwise to increase the pressure or counterclockwise to decrease the pressure.

WARNING Tip-over hazard. Do not adjust the relief valve higher than specified.

10 Tighten the jam nut.

11 Repeat steps 4 through 10 to confirm the oscillate relief valve pressure.

Note: The oscillate pressure required is while the oscillate cylinders are in motion. Do not dead head the cylinders to either side.

12 Turn the engine off, remove the pressure gauge and assemble the directional valve linkage.

13 Install the cover on the non-steer end of the drive chassis.

https://truckmanualshub.com/

How to Set Up the Directional Valve Linkage

Note: Perform this procedure on a firm, level surface.

1 Lower the boom to the stowed position.

2 Use a "bubble type" level to be sure the surface the machine is on is completely level.

DANGER Tip-over hazard. Failure to perform this procedure on a firm, level surface will compromise the stability of the machine and could result in the machine tipping over.

3 Check the tire pressure in all four tires and add air if needed to meet specification.

4 Remove the drive chassis cover from the non-steer end of the machine.

5 Disconnect the linkage clevis yoke from the axle.

6 Place a "bubble type" level on the turntable rotate bearing plate at the non-steer end. Confirm whether the drive chassis is completely level.

7 If the drive chassis is not level, start the engine and push up or pull down on the linkage adjustment rod until the machine is completely level.

8 Verify that the ground and drive chassis are completely level.

9 Loosen the jamb nuts and adjust the length of the rod by turning the clevis yoke until the clevis yoke can be pinned to the axle.

10 Install the cotter pin and tighten the jamb nuts.

11 Measure the gap between the drive chassis and the non-steer axle on both sides (from the inside of the drive chassis).

⊙ Result: The measurements should be equal.

Note: The gap on both sides should be between 0.150 inch / 0.381 cm and 0.170 inch / 0.432 cm.

12 Add or remove shims between the oscillation stop bar and the drive chassis to achieve the proper gap.

https://truckmanualshub.com/

This page intentionally left blank.

https://truckmanualshub.com/

Fault Codes

Observe and Obey:

- ☑ Troubleshooting and repair procedures shall be completed by a person trained and qualified on the repair of this machine.
- ☑ Immediately tag and remove from service a damaged or malfunctioning machine.
- ☑ Repair any machine damage or malfunction before operating the machine.
- ☑ Unless otherwise specified, perform each repair procedure with the machine in the following configuration:
  - Machine parked on a firm, level surface
  - Boom in stowed position
  - Turntable rotated with the boom between the non-steer wheels
  - Turntable secured with the turntable rotation lock
  - Key switch in the off position with the key removed
  - Wheels chocked
  - All external AC power disconnected from the machine

Before Troubleshooting:

- ☑ Read, understand and obey the safety rules and operating instructions in the appropriate operator's manual on your machine before attempting any maintenance or repair procedure.
- ☑ Be sure that all necessary tools and test equipment are available and ready for use.
- ☑ Read each appropiate fault code thoroughly. Attempting shortcuts may produce hazardous conditions.
- ☑ Be aware of the following hazards and follow generally accepted safe workshop practices.

⚠DANGER Crushing hazard. When testing or replacing any hydraulic component, always support the structure and secure it from movement.

⚠WARNING Electrocution/burn hazard. Contact with electrically charged circuits could result in death or serious injury. Remove all rings, watches and other jewelry.

⚠WARNING Bodily injury hazard. Spraying hydraulic oil can penetrate and burn skin. Loosen hydraulic connections very slowly to allow the oil pressure to dissipate gradually. Do not allow oil to squirt or spray.

Note: Two persons will be required to safely perform some troubleshooting procedures.

https://truckmanualshub.com/

FAULT CODES

Fault Codes - Control System

How to Retrieve Control System Fault Codes

Note: At least one fault code is present when the alarm at the platform controls produces two short beeps every 30 seconds for 10 minutes.

Note: Perform this procedure with the engine off, the key switch turned to platform controls and both red Emergency Stop button pulled out to the on position at both the ground and platform controls.

1 Open the platform control box lid.

⚠WARNING Electrocution/burn hazard. Contact with electrically charged circuits could result in death or serious injury. Remove all rings, watches and other jewelry.

2 Locate the red and yellow fault LEDs on the ALC-500 circuit board inside the platform control box. Do not touch the circuit board.

NOTICE Component damage hazard. Electrostatic discharge (ESD) can damage printed circuit board components. If the circuit board does need to be handled, maintain firm contact with a metal part of the machine that is grounded at all times when handling the printed circuit board OR use a grounded wrist strap.

3 **Determine the error source:** The red LED indidates the error source and will flash two separate codes. The first code will indicate the first digit of the two digit code, flashing once per second. It will then pause for 1.5 seconds and flash the second digit once per 0.5 second.

Note: When the red LED is flashing the code, the yellow LED will be on solid.

4 **Determine the error type:** The yellow LED indidates the error type and will flash two separate codes. The first code will indicate the first digit of the two digit code, flashing once per second. It will then pause for 1.5 seconds and flash the second digit once per 0.5 second.

Note: When the yellow LED is flashing the code, the red LED will be on solid.

5 Use the fault code table on the following pages to aid in troubleshooting the machine by pinpointing the area or component affected.

https://truckmanualshub.com/

FAULT CODES

Error Source		Error Type		Condition	Solution
ID	Name	ID	Name		
21	Primary Up / Down Joystick	11 12 15 16	Value at 5V Value too high Value too low Value at 0V	Function is inoperative. Alarm sounds indicating a fault.	Cycle power off, then on after problem has been corrected.
		17	Not calibrated		Calibrate joystick.
22	Primary Up / Down Directional Valves	21	Fault	Valve is operating outside of limits. Alarm sounds indicating a fault.	Cycle power off, then on after problem has been correted.
23	Primary Up / Down Flow Valve	12 15	Value too high Value too low	Valve is operating outside of limits. Alarm sounds indicating a fault.	Cycle power off, then on after problem has been corrected.
		17	Not calibrated	Normal function except threshold for one or both directions is zero.	Calibrate valve threshold.
24	Angle sensor	11 12 15 16	Value at 5V Value too high Value too low Value at 0V	Reduced speed function. Alarm sounds indicating a fault.	Cycle power off, then on after problem has been corrected.
		17 31	Not calibrated Invalid setup		Calibrate angle sensor.
26	Angle sensor cross check (S-80X)	19	Out of range		

Continued on next page

https://truckmanualshub.com/

FAULT CODES

Error Source		Error Type		Condition	Solution
ID	Name	ID	Name		
31	Primary Ext. / Ret. Joystick	11 12 15 16	Value at 5V Value too high Value too low Value at 0V	Function is inoperative. Alarm sounds indicating a fault.	Cycle power off, then on after problem has been corrected.
		17	Not calibrated		Calibrate joystick.
32	Primary Ext. / Ret. Directional Valves	21	Fault	Valve is operating outside of limits. Alarm sounds indicating a fault.	Cycle power off, then on after problem has been correted.
33	Primary Ext. / Ret. Flow Valve	12 15	Value too high Value too low	Valve is operating outside of limits. Alarm sounds indicating a fault.	Cycle power off, then on after problem has been corrected.
		17	Not calibrated	Normal function except threshold for one or both directions is zero.	Calibrate valve threshold.
34	Ext. Ret. Limit Switch Cross Check	31	Invalid setup		
41	Turntable Rotate Joystick	11 12 15 16	Value at 5V Value too high Value too low Value at 0V	Limited speed and direction frozen at zero and neutral. Alarm sounds indicating a fault.	Cycle power off, then on after problem has been corrected.
		17	Not calibrated		Calibrate joystick.

https://truckmanualshub.com/

FAULT CODES

Error Source		Error Type		Condition	Solution
ID	Name	ID	Name		
42	Turntable Rotate Directional Valves	21	Fault	Limited direction. Frozen at zero and neutral. Alarm sounds indicating a fault.	Cycle power off, then on after problem has been corrected.
43	Turntable Rotate Flow Valve	12 15	Value too high Value too low	Limited speed and direction. Frozen at zero and neutral. Alarm sounds indicating a fault.	Cycle power off, then on after problem has been correted.
		17	Not calibrated	Normal function except threshold for one or both directions is zero.	Calibrate valve threshold.
44	Drive Enable Override Switch	21	Fault	Drive enable override direction is frozen at neutral.	Cycle power off, then on after problem has been corrected.
51	Drive Joystick	11 12 15 16	Value at 5V Value too high Value too low Value at 0V	Limited speed and direction. Frozen at zero and neutral. Alarm sounds indicating a fault.	Cylcle power off, then on after problem has been corrected.
		17	Not calibrated		Calibrate joystick.

Continued on next page

https://truckmanualshub.com/

FAULT CODES

Error Source		Error Type		Condition	Solution
ID	Name	ID	Name		
53	Drive Flow Valve (EDC)	12 15	Value too high Value too low Frozen at zero and neutral.	Limited speed and direction. problem has been corrected. Alarm sounds indicating a fault.	Cycle power off, then on after
		17	Not calibrated	Normal function except threshold for one or both directions is zero.	Calibrate valve threshold.
54	Drive Brake Valve	21	Fault	Drive frozen at zero and neutral. Alarm sounds indicating a fault.	Cycle power off, then on after problem has been correted.
55	High Drive Motor Speed Valve	21	Fault	Motor speed in the low state. Alarm sounds indicating a fault.	Cycle power off, then on after problem has been corrected.
61	Steer Joystick	11 12 15 16	Value at 5V Value too high Value too low Value at 0V	Limited speed and direction. Frozen at zero and neutral. Alarm sounds indicating a fault.	Cylcle power off, then on after problem has been corrected.
		17	Not calibrated		Calibrate joystick.
62	Steer Directional Valve	21	Fault	Limited speed and direction. Frozen at zero and neutral. Alarm sounds indicating a fault.	Cycle power off, then on after problem has been corrected.

https://truckmanualshub.com/

Continental Engine Models

How to Retrieve Continental Engine Fault Codes

The ECM constantly monitors the engine by the use of sensors on the engine. The ECM also uses signals from the sensors to initiate sequential fuel injection and make constant and instantaneous changes to ignition timing, fuel delivery and throttle position to maintain the engine's running condition at its highest efficiency while at the same time keeping exhaust emissions to a minimum. When a sensor fails or returns signals that are outside of set parameters, the ECM will store a fault code in memory that relates to the appropriate sensor and will turn on the Check Engine Light.

Note: Perform this procedure with the key switch in the off position.

1 Open the ground controls side cover and locate the run/test toggle switch on the side of the ground control box.

2 Pull out the red Emergency Stop button to the on position at both the ground and platform controls.

3 Quickly activate and release the start toggle switch/button. Do not start the engine.

4 Move and hold the run/test toggle switch to the test position.

⊙ Result: The check engine light should turn on. The check engine light should begin to blink.

5 Continue to hold the run/test toggle switch in the test position and count the blinks.

Note: Before the fault codes are displayed, the check engine light will blink a code 1654 three times. After the fault codes, the check engine light will blink a code 1654 three times again indicating the end of the stored codes.

Note: If any fault codes are present, the ECM will blink a three or four digit code three times for each code stored in memory. It will blink the first digit of a three digit code, pause, blink the second digit, pause, blink the third digit, then pause and possibly a fourth digit. For example: the check engine light blinks 5 consecutive times, blinks 3 times and then 1 time. That would indicate code 531.

Note: Once a fault code has been retrieved and the repair has been completed, the ECM memory must be reset to clear the fault code from the ECM. See *How to Clear Engine Fault Codes from the ECM.*

How to Clear Engine Fault Codes from the ECM

Note: Perform this procedure with the engine off and the key switch in the off position.

1 Open the engine side turntable cover and locate the battery.

2 Disconnect the negative battery cable from the battery for a minimum of 5 minutes.

⚠WARNING Electrocution/burn hazard. Contact with electrically charged circuits could result in death or serious injury. Remove all rings, watches and other jewelry.

3 Connect the negative battery cable to the battery.

https://truckmanualshub.com/

FAULT CODES

System	Code	Fault Name	Shutdown	Adaptive Learn	Adaptive Learn KC*	Power Derate 1	Power Derate 2	Low Rev Limit	Fault Conditions
MAP	**108**	MAP Pressure High		Y	Y				MAP pressure > 16 psi and TPS < 10% and RPM > 1800 To Unlatch, MAP pressure must be < 10 psi
	107	MAP Voltage Low		Y	Y				MAP voltage < 0.05 vdc and TPS > 2% and RPM < 7000 To Unlatch, MAP voltage must be > 0.5 vdc
ECT/ CHT	**118**	ECT Voltage High		Y					ECT voltage > 4.95 vdc
	117	ECT Voltage Low		Y					ECT voltage < 0.05 vdc
	116	ECT higher than expected 1		Y	Y	Y			ECT > 210° F and RPM > 600
	217	ECT higher than expected 2	**Y**						ECT > 230° F and RPM > 600
IAT	**113**	IAT Voltage High		Y					IAT voltage > 4.95 vdc
	112	IAT Voltage Low		Y					IAT voltage < 0.05 vdc
	111	IAT higher than expected 1		Y		Y			IAT > 200° F and RPM > 1000
	127	IAT higher than expected 2	**Y**						IAT > 210° F and RPM > 1000
BP	**2229**	BP Pressure High		Y	Y				BP pressure > 16 psi
	129	BP Pressure Low		Y	Y				BP pressure < 8.3 psi
Battery Voltage	**563**	Voltage High		Y	Y				Voltage > 18 vdc
	562	Voltage Low		Y	Y				Voltage < 9.5 vdc and RPM > 1500
5V External	**643**	5VE1 High Voltage		Y					5VE1 > 5.4 vdc
	642	5VE1 Low Voltage		Y					5VE1 < 4.6 vdc
TPS	**123**	TPS1 High Voltage	**Y**						TPS1 voltage > 4.8 vdc
	122	TPS1 Low Voltage	**Y**						TPS1 voltage < 0.2 vdc
	223	TPS2 High Voltage	**Y**						TPS2 voltage > 4.8 vdc
	222	TPS2 Low Voltage	**Y**						TPS2 voltage < 0.2 vdc
	221	TPS1 > than TPS2	**Y**						(TPS1 percent - TPS2 percent) > 20%
	121	TPS1 < than TPS2	**Y**						(TPS1 percent - TPS2 percent) < -20%
	2112	Unable to reach > TPS	**Y**						(target TPS - actual TPS) > 20%
	2111	Unable to reach < TPS	**Y**						(target TPS - actual TPS) < -20%
	2135	TPS1/2 simultaneous voltages out of range	**Y**						Uses same parameters as individual TPS1/2 voltage fault detection above

* Adaptive Learn Key Cycle

https://truckmanualshub.com/

FAULT CODES

System	Code	Fault Name	Shutdown	Adaptive Learn	Adaptive Learn KC*	Power Derate 1	Power Derate 2	Low Rev Limit	Fault Conditions
FPP	**2122**	FPP1 High Voltage						Y	FPP1 voltage > 4.8 vdc
	2123	FPP1 Low Voltage						Y	FPP1 voltage < 0.2 vdc
Engine Speed	**219**	Max Govern Speed Override							RPM > 3400
	1111	Rev Fuel Limit							RPM > 3600
	1112	Spark Rev Limit	**Y**						RPM > 3800
Oil Pressure	**524**	Oil Pressure Low	**Y**						Oil pressure pulled-up input with a threshold voltage of 2.5 vdc and RPM > 500 and run-time > 30 s
Adaptive Learn	**171**	AL High Gasoline Bank 1							AL_BM > 30% and RPM between 0-9999 and MAP between 0-99 psi
	172	AL Low Gasoline Bank 1							AL_BM < -30% and RPM between 0-9999 and MAP between 0-99 psi
	1161	AL High LPG							AL_BM > 30% and RPM between 0-9999 and MAP between 0-99 psi
	1162	AL Low LPG							AL_BM < -30% and RPM between 0-9999 and MAP between 0-99 psi
Closed Loop	**1155**	CL High Gasoline Bank 1							CL_BM > 40% and RPM between 0-9999 and MAP between 0-99 psi
	1156	CL Low Gasoline Bank 1							CL_BM <-40% and RPM between 0-9999 and MAP between 0-99 psi
	1151	CL High LPG							CL_BM > 35% and RPM between 0-9999 and MAP between 0-99 psi
	1152	CL Low LPG							CL_BM < -35% and RPM between 0-9999 and MAP between 0-99 psi
Catalyst Monitor	**420**	Gasoline Cat Monitor		Y	Y				EGO2 RMS > 0.005 phi and EGO2 RMS > EGO1 RMS* 50% and EGO2 RMS > CL waveform RMS* 50%
	1165	LPG Cat Monitor		Y	Y				EGO2 RMS > 0.005 phi and EGO2 RMS > EGO1 RMS* 50% and EGO2 RMS > CL waveform RMS* 50%

* Adaptive Learn Key Cycle

Continued on next page

https://truckmanualshub.com/

FAULT CODES

System	Code	Fault Name	Shutdown	Adaptive Learn	Adaptive Learn KC*	Power Derate 1	Power Derate 2	Low Rev Limit	Fault Conditions
EGO Sensors	**134**	EGO Open/Lazy Pre-cat 1		Y	Y				EGO cold persistently > 120 seconds
	154	EGO Open/Lazy Post-cat 1		Y	Y				EGO cold persistently > 120 seconds
Injectors	**261**	Injector Loop Open or Low-Side Short to Ground		Y	Y	Y			Injector off-state low-side < 4 vdc and battery voltage > 9 vdc
	262	Injector Coil Shorted		Y	Y	Y			Injector on-state low-side > 4 vdc and battery voltage < 16 vdc
Power Relay Control Coil	**686**	Relay Control Ground Short							
	685	Relay Coil Short							
	687	Relay Coil Short to Pwr							
Tach Output	**2618**	Tach Output Ground Short							Does not turn on MIL
	2619	Tach Output Short to Pwr							Does not turn on MIL
EPR Diagnostics LPG	**1171**	EPR Delivery Pressure > than expected		Y			Y		MJ actual-commanded press > 4 in. H20
	1172	EPR Delivery Pressure < than expected		Y			Y		MJ actual-commanded press < 4 in. H20
	1173	EPR Comm Lost		Y			Y		No MJ packets received within 500 ms
	1174	EPR Voltage Supply High		Y			Y		
	1175	EPR Voltage Supply Low		Y			Y		
	1176	EPR Internal Actuator		Y			Y		
		fault detection							
	1177	EPR Internal Circuitry fault detection		Y			Y		
	1178	EPR Internal Comm fault detection		Y			Y		

* Adaptive Learn Key Cycle

https://truckmanualshub.com/

FAULT CODES

System	Code	Fault Name	Shutdown	Adaptive Learn	Adaptive Learn KC*	Power Derate 1	Power Derate 2	Low Rev Limit	Fault Conditions
Cam Crank Sensors	**342**	Cam Loss		Y	Y				No cam pulse in 4 cycles and RPM > 1000
	337	Crank Loss							Cam pulses without crank activity > 6 cam pulses
	341	Cam Sync Noise		Y	Y				Number of invalid cam re-syncs = 1 within a time window of <= 700 ms
	336	Crank Sync Noise		Y	Y				Number of invalid crank re-syncs = 1 within a time window of <= 800 ms
	16	Never Crank Synced at Start							Cranking revs without sync < 4 revs and RPM > 90 rpm
Internal Processor Diagnostics	**606**	COP Failure			Y		Y		
	1612	RTI 1 Loss			Y		Y		
	1613	RTI 2 Loss			Y		Y		
	1614	RTI 3 Loss			Y		Y		
	1615	A/D Loss			Y		Y		
	1616	Invalid Interrupt			Y		Y		
	601	Flash Checksum Invalid			Y		Y		
	604	RAM Failure			Y		Y		
J1939 Network	**1625**	Shutdown Request							Number of shutdown requests >= 1
	1626	CAN Tx Failure							TX error counter > 100
	1627	CAN Rx Failure							Rx error counter > 100
	1628	CAN Address Conflict Failure							Address conflict counter > 5

* Adaptive Learn Key Cycle

https://truckmanualshub.com/

This page intentionally left blank.

https://truckmanualshub.com/

Schematics

Observe and Obey:

- ☑ Troubleshooting and repair procedures shall be completed by a person trained and qualified on the repair of this machine.
- ☑ Immediately tag and remove from service a damaged or malfunctioning machine.
- ☑ Repair any machine damage or malfunction before operating the machine.

Before Troubleshooting:

- ☑ Read, understand and obey the safety rules and operating instructions in the appropriate operator's manual on your machine before attempting any maintenance or repair procedure.
- ☑ Be sure that all necessary tools and test equipment are available and ready for use.

About This Section

There are two groups of schematics in this section.

Electrical Schematics

WARNING Electrocution/burn hazard. Contact with electrically charged circuits could result in death or serious injury. Remove all rings, watches and other jewelry.

Hydraulic Schematics

WARNING Bodily injury hazard. Spraying hydraulic oil can penetrate and burn skin. Loosen hydraulic connections very slowly to allow the oil pressure to dissipate gradually. Do not allow oil to squirt or spray.

https://truckmanualshub.com/

Electrical Symbols Legend

Quick disconnect terminal

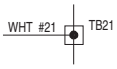

T-circuits connect at terminal

T-circuits connect

Connection no terminal

Circuits crossing no connection

Diode

Battery

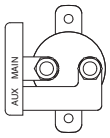

Battery separator

Circuit breaker with amperage

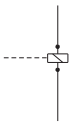

Coil solenoid or relay

Horn or alarm

Flashing beacon

Gauge

Hour meter

LED

Fuse with amperage

Starting aid: glow plug or flame ignitor

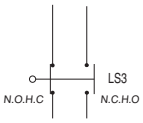

Limit switch

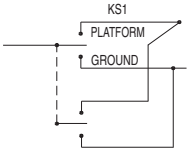

Key switch

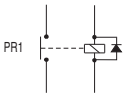

Power relay

Toggle switch SPDT

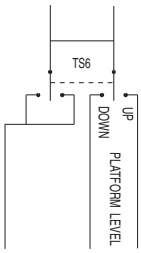

Toggle switch DPDT

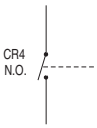

Control relay contact normally open

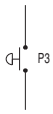

Horn button normally open

Oil temperature switch normally open

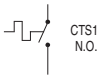

Coolant temperature switch normally open

Oil pressure switch normally closed

Gauge sending unit

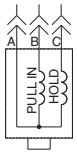

Fuel or RPM solenoid

Coil

Foot switch

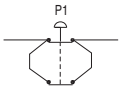

Emergency Stop button normally closed

Hydraulic oil cooling fan

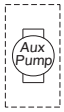

Auxiliary pump

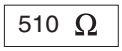

Resistor with ohm value

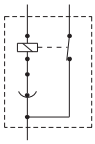

Tilt sensor

https://truckmanualshub.com/

Hydraulic Symbols Legend

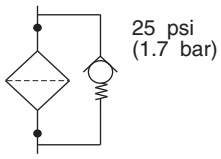

Filter with bypass valve relief setting

Pump fixed displacement

Pump bi-directional, variable displacement

Motor bi-directional

Motor 2-speed, bi-directional

Pump prime mover (engine or motor)

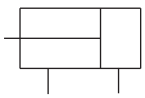

Double acting cylinder

Accumulator

Orifice with size

Shut off valve

Check valve

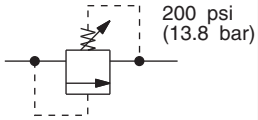

Relief valve with pressure setting

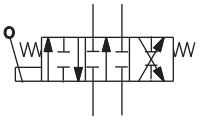

Directional valve (mechanically activated)

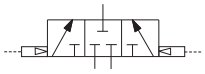

Pilot operated 3 position, 3 way, shuttle valve

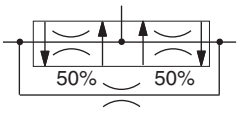

Flow divider/combiner valve with pressure balancing orifice and flow percentages

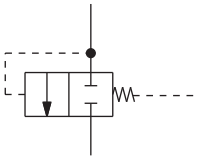

Differential sensing valve

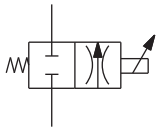

Solenoid operated proportional valve

Priority flow regulator valve

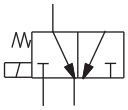

Solenoid operated 2 position, 3 way, directional valve

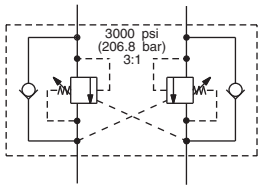

Counterbalance valve with pressure and pilot ratio

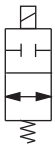

2 position, 2 way solenoid valve

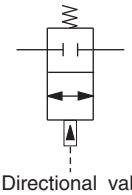

Directional valve pilot operated 2 position, 2 way

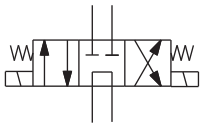

Solenoid operated 3 position, 4 way, directional valve

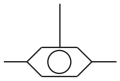

2 position, 3 way, shuttle valve

Hydraulic oil cooler

Brake

https://truckmanualshub.com/

This page intentionally left blank.

https://truckmanualshub.com/

Connector Pin Legend - View 1

https://truckmanualshub.com/

Connector Pin Legend - View 1

A B C D E F G H I J K L M N

1 2 3 4 5 6 7 8

C1 DT06-12SA

COLOR	CIRCUIT #	PIN #
RD	C27AUX	1
RD/BK	C28TTA	2
RD/WH	C29MS	3
WH	C30EDC+	4
WH/BK	C31EDC-	5
WH/RD	C32BRK	6
BK	C33STR	7
BK/WH	C34SA	8
BK/RD	C35RPM	9
BL	C36STC	10
BL/BK	C37STCC	11
BL/WH	C132PLI1	12
BL/WH	C177LS	12

(CE MODEL)
(S-80X MODEL)

C3 DT06-12SC

COLOR	CIRCUIT #	PIN #
RD	C1PBU	1
RD/BK	C2PBD	2
RD/WH	C3PBF	3
WH	C4TRL	4
WH/BK	C5TRR	5
WH/RD	C6TRF	6
BK	C7PBE	7
BK/WH	C8PBR	8
BK/RD	C9PERF	9
BL	C132PLI2	10
BL/BK	C59CNK	11
BL/WH	C133PLA	12
BL/WH	P109LS	12

(CE MODEL)

(CE MODEL)
(S-80X MODEL)

C2 DT06-12SB

COLOR	CIRCUIT #	PIN #
BL/RD	C39LP	1
OR	C40LS	2
OR/BK	C41RPM	3
OR/RD	C42LS	4
GR	C46HRN	5
GR/BK	P134PWR	6
GR/WH	C45GEN	7
GR/RD	C123PBS	8
OR/WH	P109ANG	9
LT BR	SNSR GND	10
-	PLUG	11
-	PLUG	12

C4 DT06-12SD

COLOR	CIRCUIT #	PIN #
BL/RD	C13DRE	1
OR	C14PLU	2
OR/BK	C15PLD	3
OR/RD	V155PCE	4
GR	C17PRL	5
GR/BK	C18PRR	6
GR/WH	C43JU	7
RD/OR	C44JD	8
OR/GR	C49DLITE	9
LT BR	SPARE	10
-	PLUG	11
-	PLUG	12

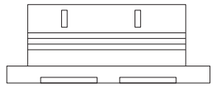

C6 FUNCTION MANIFOLD

PIN#	CIRCUIT #	COLOR	
1	C1PBU	RD	
2	C2PBD	RD/BK	
3	C3PBF	RD/WH	
4	C4TRL	WH	
5	C5TRR	WH/BK	
6	C6TRF	WH/RD	
7	C7PBE	BK	
8	C8PBR	BK/WH	
9	C9PERF	BK/RD	
10			
11	C59CNK	BL/BK	
12	P210PWR	BK	(S-80X MODEL)
13	C13DRE	BL/RD	
14			
15			
16	C109LS	GR/WH	(S-80X MODEL)
17			
18			
19			
20			
21	C177LS	BL/RD	(S-80X MODEL)
22	C42LS	OR/RD	
23	P134PWR(A)	RD	
24	P134PWR(B)	RD	
25	P134PWR(C)	RD	
26			
27			
28	C28TTA	RD/BK	
29			
30	C211LO	BL/BK	(S-80X MODEL)
31	C118LSR	OR	
32			
33	C123PBS	RD/BK	
34	SNSR GND	BR	
35	P109ANG	GR/WH	
36	C36STC	BL	
37	C37STCC	BL/BK	
38	C212LO	GR/BK	(S-80X MODEL)
39	C45GEN	GR/WH	
40	C40LS	OR	

C5
ENGINE

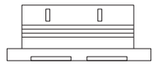

	DEUTZ 2011L04i		PERKINS 804		CONTINENTAL TME27	
PIN#	CIRCUIT #	COLOR	CIRCUIT #	COLOR	CIRCUIT #	COLOR
1	P24PWR	RD	P24PWR	RD	P23PWR	WH
2	C41RPM	OR/BK	C41RPM	OR/BK	C41RPM	OR/BK
3	C21IGN	WH	C21IGN	WH		
4						
5	C33STR	BK	C33STR	BK	C33STR	BK
6	C27AUX	RD	C27AUX	RD	C27AUX	RD
7	C46HRN	GR	C46HRN	GR	C46HRN	GR
8					C127TSW	GR
9					C35RPM	BK/RD
10					C39LP	BL/RD
11	R21IGN	WH(14)	R21IGN	WH(14)	R21IGN	WH(14)
12						
13					C108ESL	BL/WH
14						
15	C24TSPS	WH	C24TSPS	WH	P24PWR	RD
16						
17					R24PWR	RD
18	C35RPM	BK/RD	C35RPM	BK/RD		
19	V155PCE	OR/RD	V155PCE	OR/RD	V155PCE	OR/RD
20	C31EDC-	WH/BK	C31EDC-	WH/BK	C31EDC-	WH/BK
21	C30EDC+	WH	C30EDC+	WH	C30EDC+	WH
22	C34SA	BK/WH	C34SA	BK/WH		
23	C32BRK	WH/RD	C32BRK	WH/RD	C32BRK	WH/RD
24	C29MS	RD/WH	C29MS	RD/WH	C29MS	RD/WH

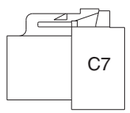

12V POWER TO PLAT

C7 DTP06-4S

COLOR	CIRCUIT #	PIN #
BK	P22PWR	1
WH	P23PWR	2
BR	BATGND	3
	PLUG	4

FOOTSWITCH

C9 FS DT04-4P

COLOR	CKT #	PIN #
BK	P26ESTP	1
WH	P24FS	2
RD	P25FS	3
	PLUG	4

ES0507C

https://truckmanualshub.com/

Connector Pin Legend - View 2

N M L K J I H G F E D C B A

ALC500 POWER/VALVE INPUT

PIN#	CIRCUIT #	COLOR
1	GND	BR
2	P24FS	WH
3	P26ESTP	BK
4	P24FS	WH

J3

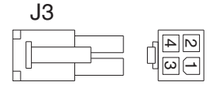

ALC500 INPUT

PIN#	CIRCUIT #	COLOR
1	C165TRS	WH/RD
2	C164PES	RD/WH
3	C163PLS	WH/BK
4	C160JPL	WH/RD
5	C159STC	BL/WH
6	C144DER	BL/WH
7	C143DEL	BL/BK
8	C29MS	RD/WH
9	P109ANG	GR/WH
10	SNSR GND	BR
11	P162JPW2	OR
12	JSGND2	BR
13	P162JPW1	OR
14	JSGND1	BR
15	C28TTA	RD/BK
16	C13DRE(A)	BL/RD

J1

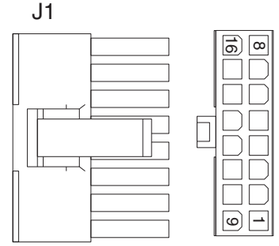

ALC500 OUTPUT

PIN#	CIRCUIT #	COLOR
1	C40LS	OR
2	C123PBS	RD/BK
3	C13DRE	BL/RD
4	C42LS	OR/RD
5	C41RPM	OR/BK
6	C1PBU	RD
7	C2PBD	RD/BK
8	C3PBF	RD/WH
9	C4TRL	WH
10	C5TRR	WH/BK
11	C6TRF	WH/RD
12	C7PBE	BK
13	C8PBR	BK/WH
14	C9PERF	BK/RD
15	C30EDC+	WH
16	C31EDC-	WH/BK
17	C36STC	BL
18	C37STCC	BL/BK
19	C32BRK	WH/RD
20	C29MS	RD/WH

J2

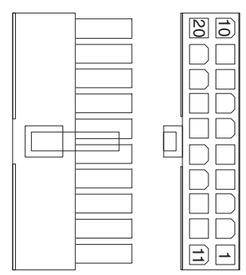

ES0507C

CONTINENTAL TME27 ENGINE PLUG

PIN#	CIRCUIT #	COLOR
1	R23PWR	WH
2	C21RET	WH
3	C38RET	BL
4	C38FP	BL/WH
5	R33STR	BK(14)
6	C41RPM	OR/BK
7	R21IGN	WH
8	C35RPM	BK/RD
9	C108ESL	BL/WH
10	C127TSW	GN
11	C39LP	BL/RD
12	C26TSR	WH/RD

(GAUGE OPTION)

S-80X MODEL

PIN#	CIRCUIT #	WIRE
1	P109LS	GR/WH
2	C184PL	WH
3	NC	——
4	NC	——
5	C169LED2	BL
6	P109LS	GR/WH
7	C177LS	BL/RD
8	SNSR GND	BR
9	NC	——
10	C169LED1	GR

J8

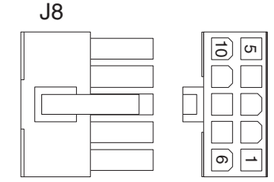

DEUTZ 2011LO4i ENGINE PLUG

PIN#	CIRCUIT #	COLOR
1	C41RPM	OR/BK
2	C107AF	WH
3	C26TSR	WH/RD
4	C24TS	WH
5	C25PSR	WH/BK
6	C24PS	WH
7	R21IGN	WH(14)
8	GND	BR
9	——	——
10	——	——

J144

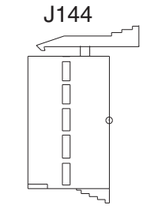

PLATFORM MANIFOLD

J22 DT04-12PA		
PIN #	CIRCUIT #	COLOR
1	GND	BR
2	GND	BR
3	C18PRR	GR/BK
4	C17PRL	GR
5	C43JU	GR
6	C44JD	GR/BK
7	C14PLU	OR
8	C15PLD	OR/BK
9	GND	BR
10	GND	BR
11	GND	BR
12	GND	BR

J22

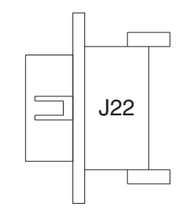

1 2 3 4 5 6 7 8

https://truckmanualshub.com/

Connector Pin Legend - View 2

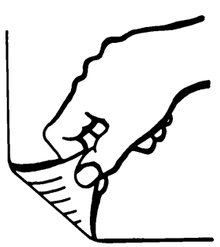

https://truckmanualshub.com/

Electrical Schematic, S-80 and S-85 (ANSI / CSA / AS),

Deutz TD2011L04i Models

https://truckmanualshub.com/

Electrical Schematic, S-80 and S-85 (ANSI / CSA / AS),

Deutz TD2011L04i Models

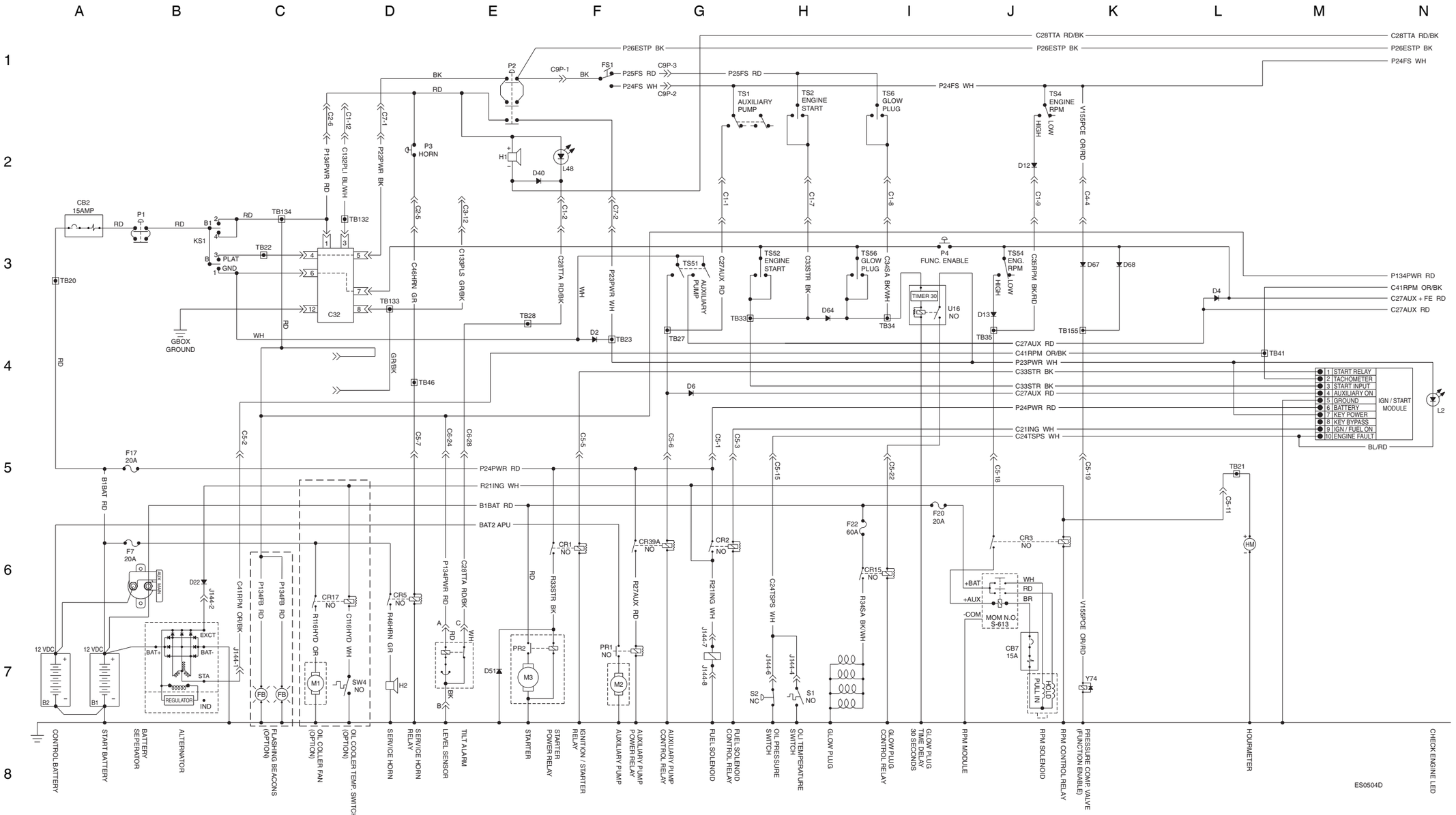

https://truckmanualshub.com/

Electrical Schematic, S-80 and S-85 (ANSI / CSA / AS),

Deutz TD2011L04I Models

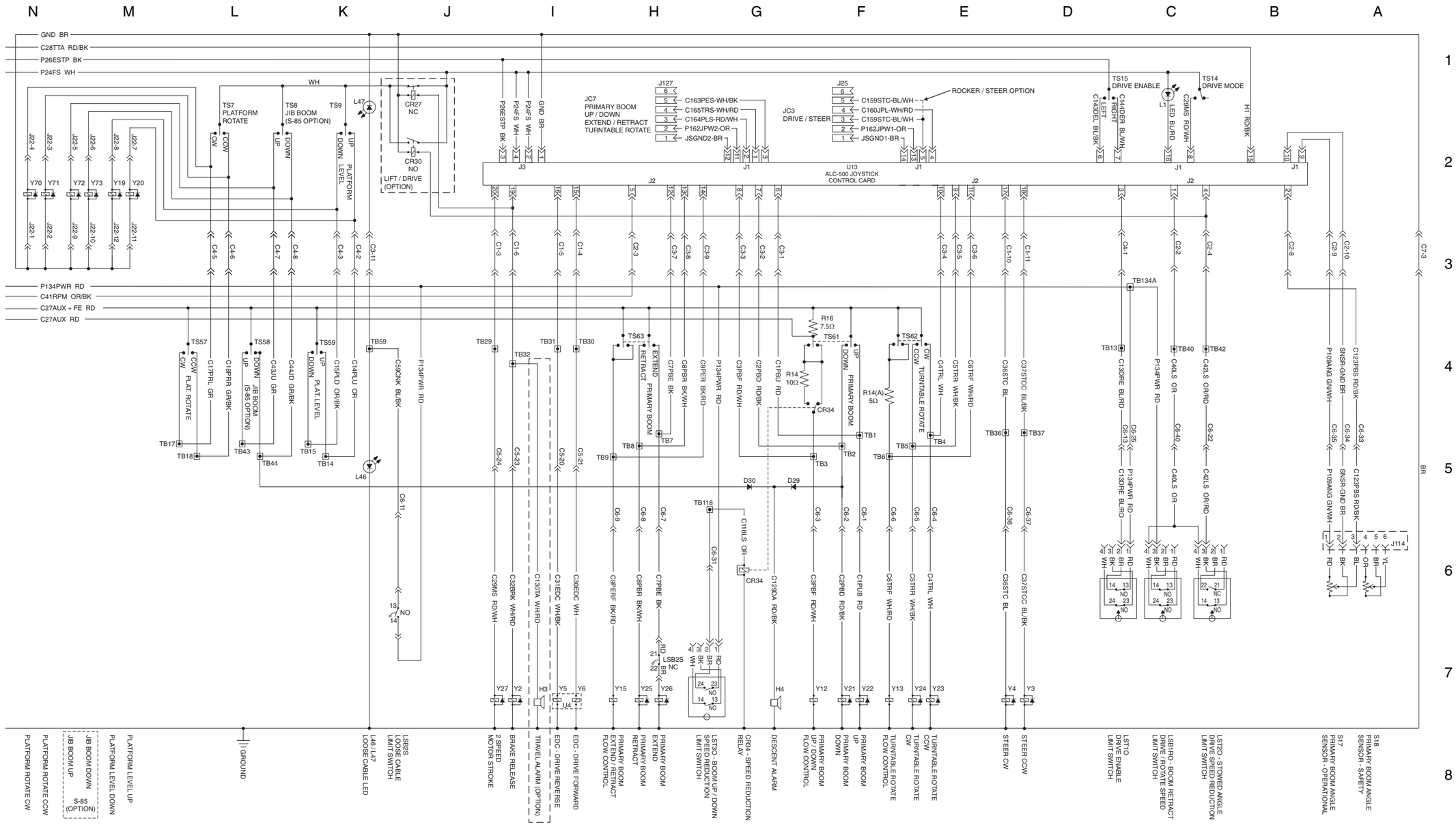

https://truckmanualshub.com/

Electrical Schematic, S-80 and S-85 (ANSI / CSA / AS),
Deutz TD2011L04i Models

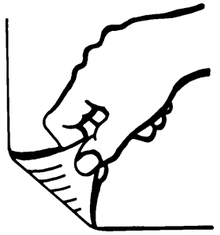

https://truckmanualshub.com/

Ground Control Box Terminal Strip Wiring Diagram, S-80 and S-85 (ANSI / CSA / AS),
Deutz TD2011L04I Models

https://truckmanualshub.com/

Ground Control Box Terminal Strip Wiring Diagram, S-80 and S-85 (ANSI / CSA / AS), Deutz TD2011L04I Models

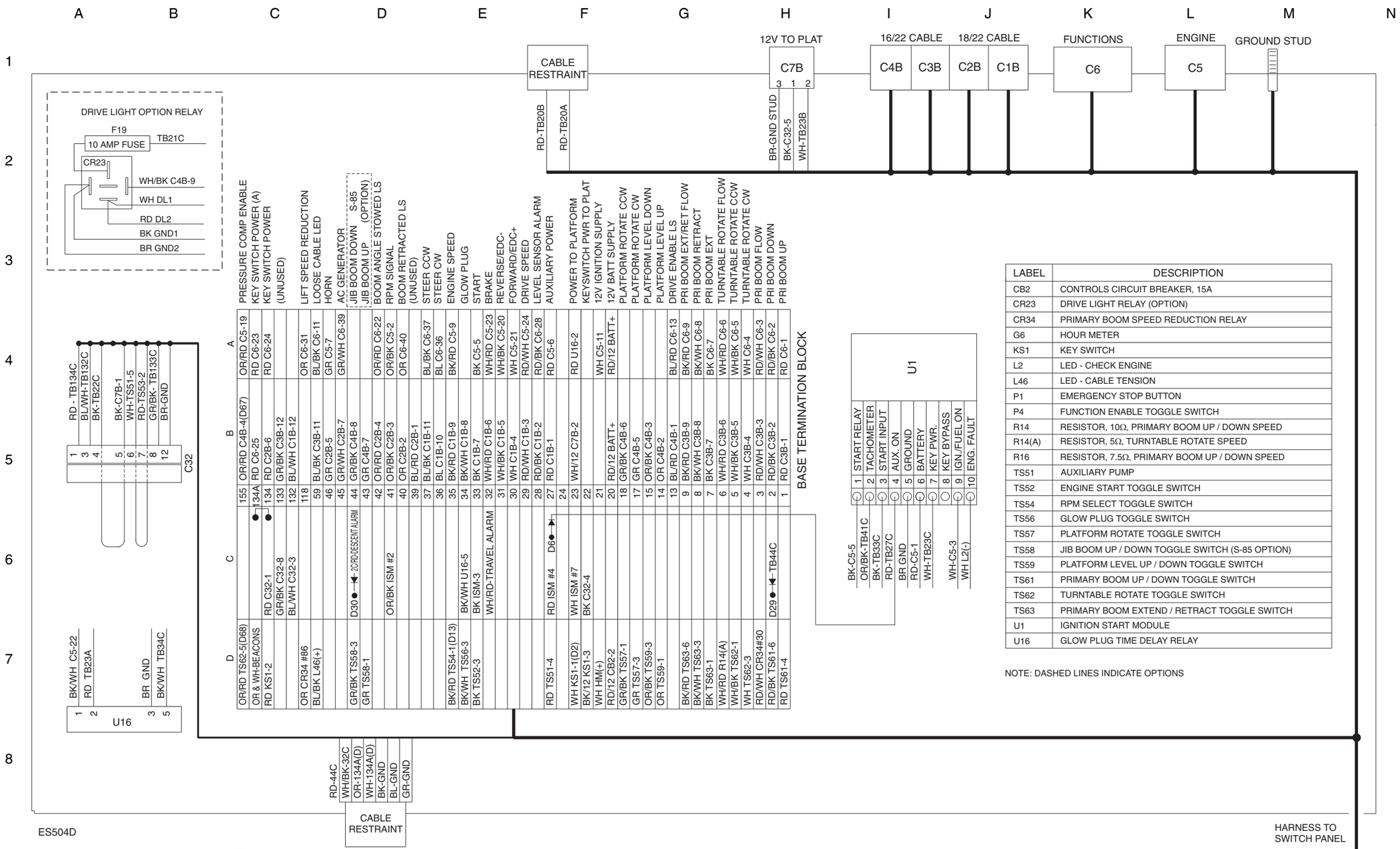

LABEL	DESCRIPTION
CB2	CONTROLS CIRCUIT BREAKER, 15A
CR23	DRIVE LIGHT RELAY (OPTION)
CR34	PRIMARY BOOM SPEED REDUCTION RELAY
G6	HOUR METER
KS1	KEY SWITCH
L2	LED - CHECK ENGINE
L46	LED - CABLE TENSION
P1	EMERGENCY STOP BUTTON
P4	FUNCTION ENABLE TOGGLE SWITCH
R14	RESISTOR, 10Ω, PRIMARY BOOM UP / DOWN SPEED
R14(A)	RESISTOR, 5Ω, TURNTABLE ROTATE SPEED
R16	RESISTOR, 7.5Ω, PRIMARY BOOM UP / DOWN SPEED
TS51	AUXILIARY PUMP
TS52	ENGINE START TOGGLE SWITCH
TS54	RPM SELECT TOGGLE SWITCH
TS56	GLOW PLUG TOGGLE SWITCH
TS57	PLATFORM ROTATE TOGGLE SWITCH
TS58	JIB BOOM UP / DOWN TOGGLE SWITCH (S-85 OPTION)
TS59	PLATFORM LEVEL UP / DOWN TOGGLE SWITCH
TS61	PRIMARY BOOM UP / DOWN TOGGLE SWITCH
TS62	TURNTABLE ROTATE TOGGLE SWITCH
TS63	PRIMARY BOOM EXTEND / RETRACT TOGGLE SWITCH
U1	IGNITION START MODULE
U16	GLOW PLUG TIME DELAY RELAY

NOTE: DASHED LINES INDICATE OPTIONS

https://truckmanualshub.com/

Ground Control Box Switch Panel Wiring Diagram, S-80 and S-85 (ANSI / CSA / AS), Deutz TD2011L04I Models

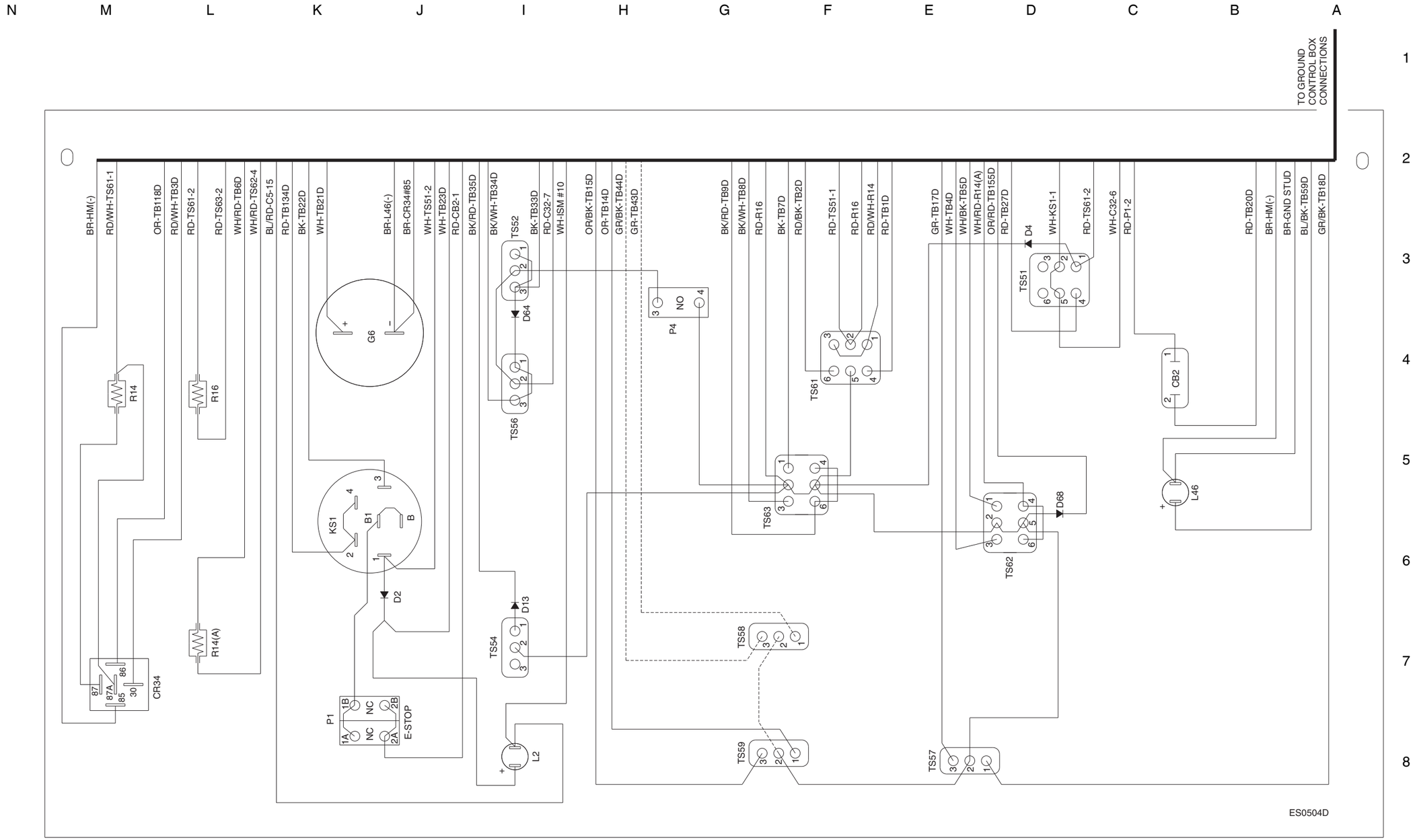

https://truckmanualshub.com/

Ground Control Box Switch Panel Wiring Diagram, S-80 and S-85 (ANSI / CSA / AS),

Deutz TD2011L04I Models

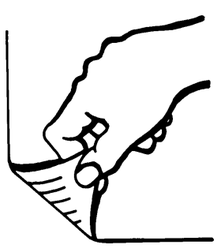

https://truckmanualshub.com/

Platform Control Box Wiring Diagram,
S-80 and S-85 (ANSI / CSA / AS),
Deutz TD2011L04I Models

https://truckmanualshub.com/

Platform Control Box Wiring Diagram, S-80 and S-85 (ANSI / CSA / AS), Deutz TD2011L04I Models

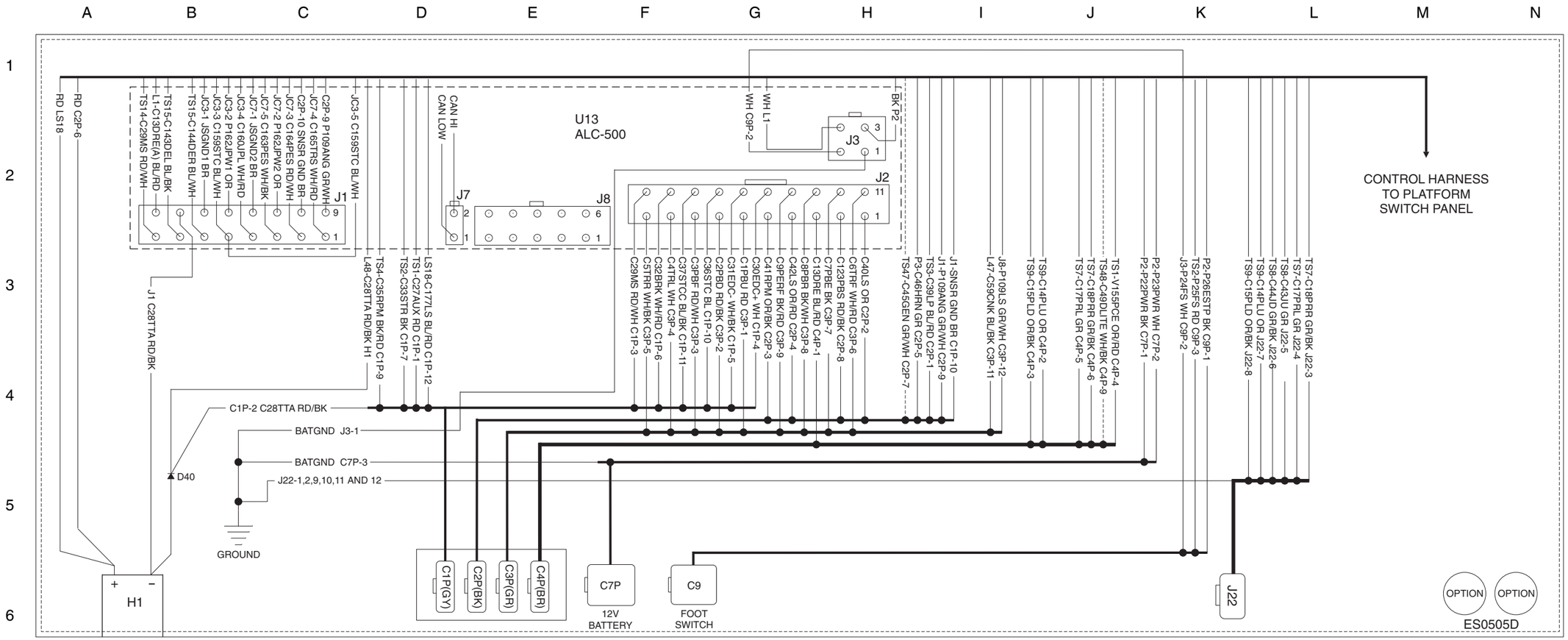

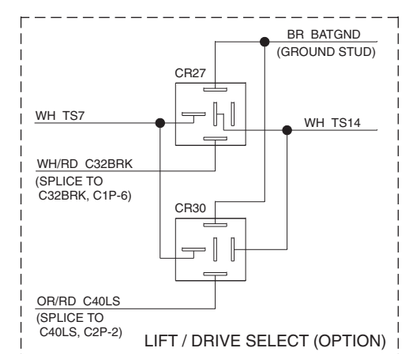

https://truckmanualshub.com/

Platform Control Box Switch Panel Wiring Diagram, S-80 and S-85 (ANSI / CSA / AS), Deutz TD2011L04I Models

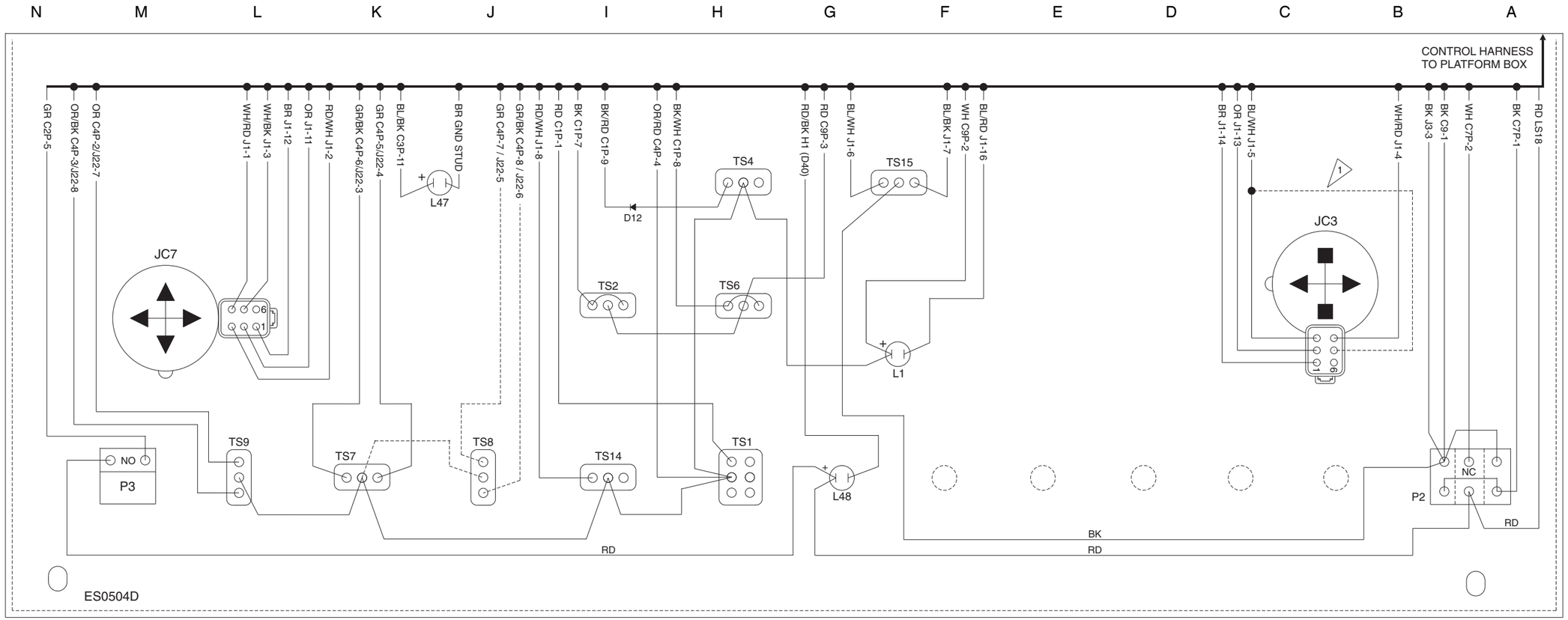

COMPONENT INDEX

H1	TILT ALARM
JC3	JOYSTICK - DRIVE / STEER
JC7	JOYSTICK - PRIMARY BOOM UP / DOWN, EXTEND / RETRACT, TURNTABLE ROTATE
L1	LED - DRIVE ENABLE
L47	LED - CABLE TENSION
L48	LED - TILT ALARM
P2	EMERGENCY STOP BUTTON
P3	HORN BUTTON
TS1	AUXILIARY TOGGLE SWITCH
TS2	ENGINE START TOGGLE SWITCH
TS4	RPM SELECT TOGGLE SWITCH
TS6	GLOW PLUG TOGGLE SWITCH
TS7	PLATFORM ROTATE TOGGLE SWITCH
TS8	JIB BOOM UP/DOWN TOGGLE SWITCH
TS9	PLATFORM LEVEL UP/DOWN TOGGLE SWITCH
TS14	DRIVE SPEED TOGGLE SWITCH
TS15	DRIVE ENABLE TOGGLE SWITCH
U13	ALC500 JOYSTICK CONTROLLER CARD

NOTE: DASHED LINES INDICATE OPTIONS

1 ROCKER / STEER OPTION

https://truckmanualshub.com/

Platform Control Box Switch Panel Wiring Diagram, S-80 and S-85 (ANSI / CSA / AS), Deutz TD2011L04I Models

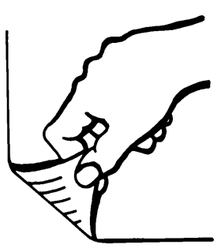

https://truckmanualshub.com/

Electrical Schematic, S-80 and S-85 (CE),
Deutz TD2011L04i Models (before serial number 8111)

https://truckmanualshub.com/

Electrical Schematic, S-80 and S-85 (CE),

Deutz TD2011L04i Models (before serial number 8111)

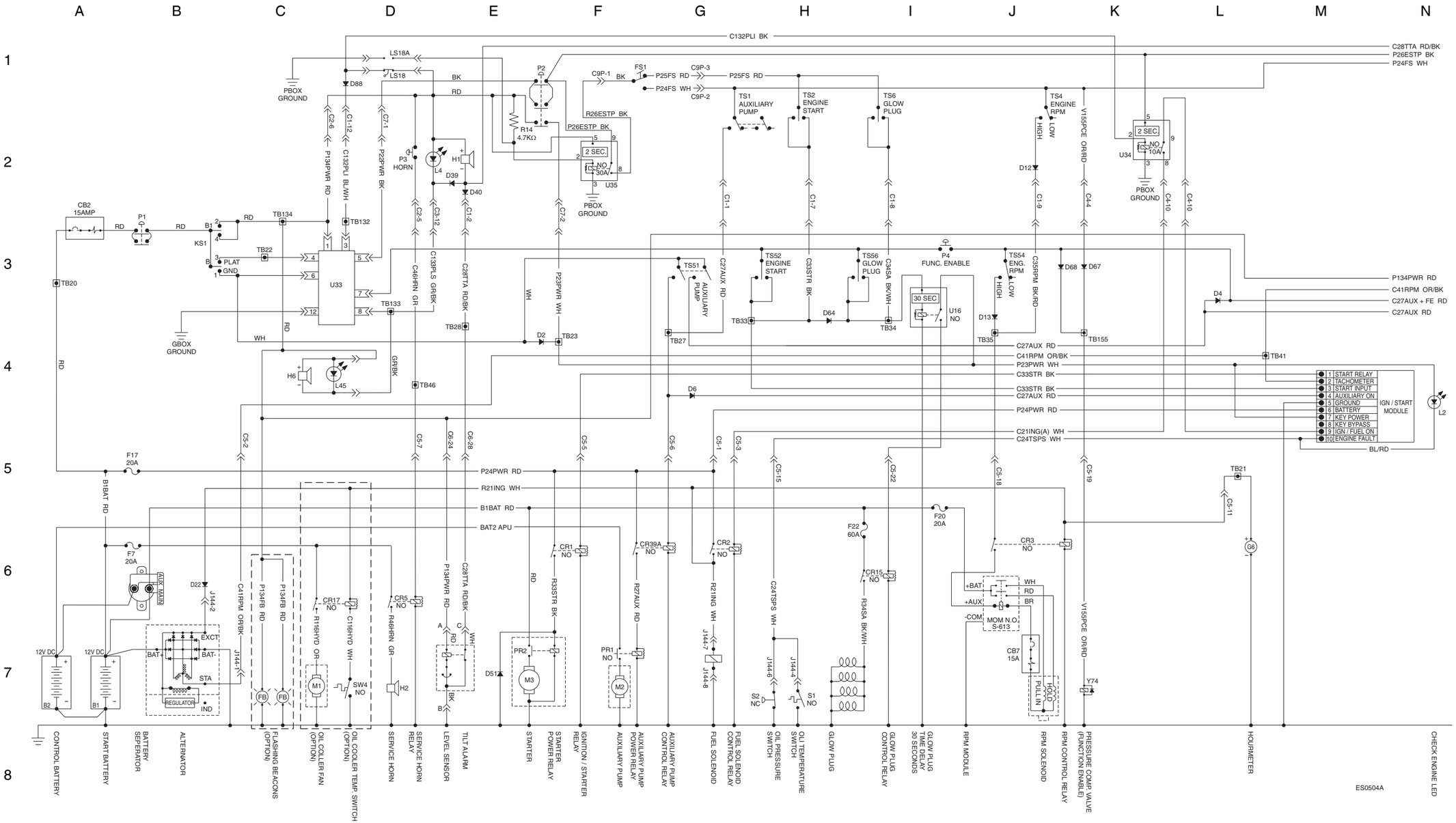

https://truckmanualshub.com/

Electrical Schematic, S-80 and S-85 (CE),

Deutz TD2011L04i Models (before serial number 8111)

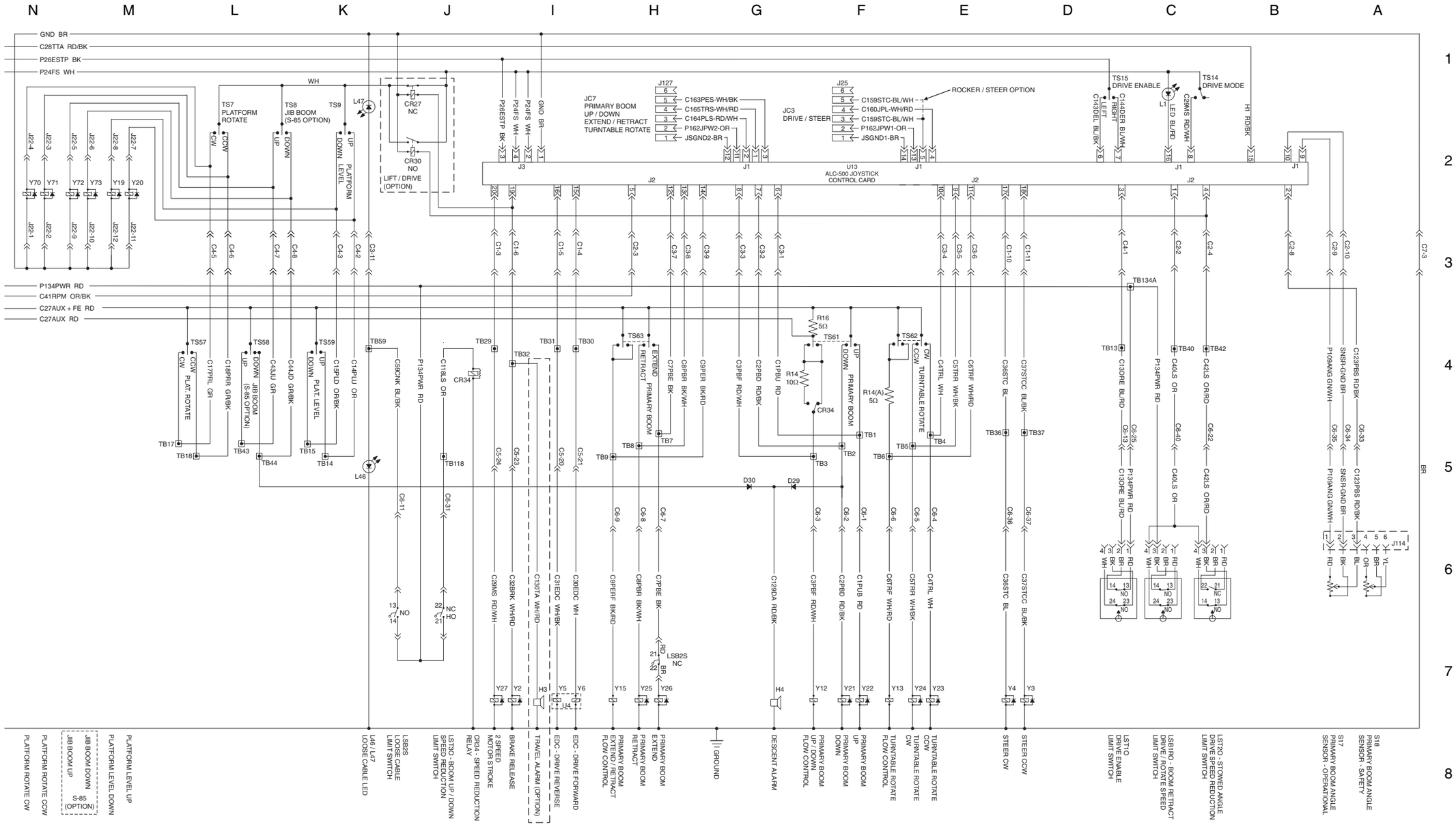

https://truckmanualshub.com/

Electrical Schematic, S-80 and S-85 (CE),
Deutz TD2011L04i Models (before serial number 8111)

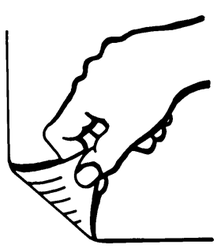

https://truckmanualshub.com/

Ground Control Box Terminal Strip Wiring Diagram, S-80 and S-85 (CE),
Deutz TD2011L04I Models (before serial number 8111)

https://truckmanualshub.com/

Ground Control Box Terminal Strip Wiring Diagram, S-80 and S-85 (CE), Deutz TD2011L04I Models (before serial number 8111)

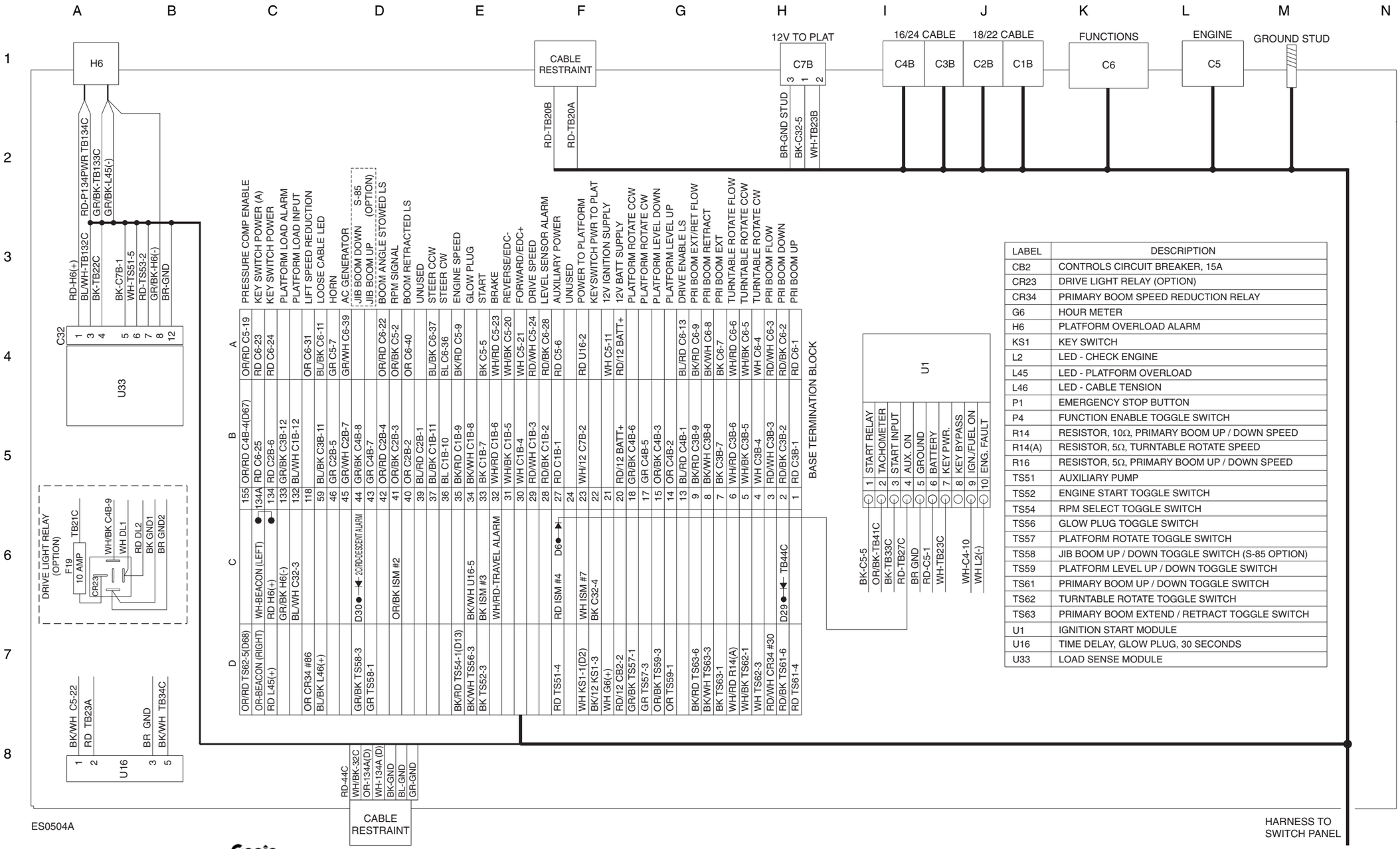

LABEL	DESCRIPTION
CB2	CONTROLS CIRCUIT BREAKER, 15A
CR23	DRIVE LIGHT RELAY (OPTION)
CR34	PRIMARY BOOM SPEED REDUCTION RELAY
G6	HOUR METER
H6	PLATFORM OVERLOAD ALARM
KS1	KEY SWITCH
L2	LED - CHECK ENGINE
L45	LED - PLATFORM OVERLOAD
L46	LED - CABLE TENSION
P1	EMERGENCY STOP BUTTON
P4	FUNCTION ENABLE TOGGLE SWITCH
R14	RESISTOR, 10Ω, PRIMARY BOOM UP / DOWN SPEED
R14(A)	RESISTOR, 5Ω, TURNTABLE ROTATE SPEED
R16	RESISTOR, 5Ω, PRIMARY BOOM UP / DOWN SPEED
TS51	AUXILIARY PUMP
TS52	ENGINE START TOGGLE SWITCH
TS54	RPM SELECT TOGGLE SWITCH
TS56	GLOW PLUG TOGGLE SWITCH
TS57	PLATFORM ROTATE TOGGLE SWITCH
TS58	JIB BOOM UP / DOWN TOGGLE SWITCH (S-85 OPTION)
TS59	PLATFORM LEVEL UP / DOWN TOGGLE SWITCH
TS61	PRIMARY BOOM UP / DOWN TOGGLE SWITCH
TS62	TURNTABLE ROTATE TOGGLE SWITCH
TS63	PRIMARY BOOM EXTEND / RETRACT TOGGLE SWITCH
U1	IGNITION START MODULE
U16	TIME DELAY, GLOW PLUG, 30 SECONDS
U33	LOAD SENSE MODULE

https://truckmanualshub.com/

Ground Control Box Switch Panel Wiring Diagram, S-80 and S-85 (CE), Deutz TD2011L04I Models (before serial number 8111)

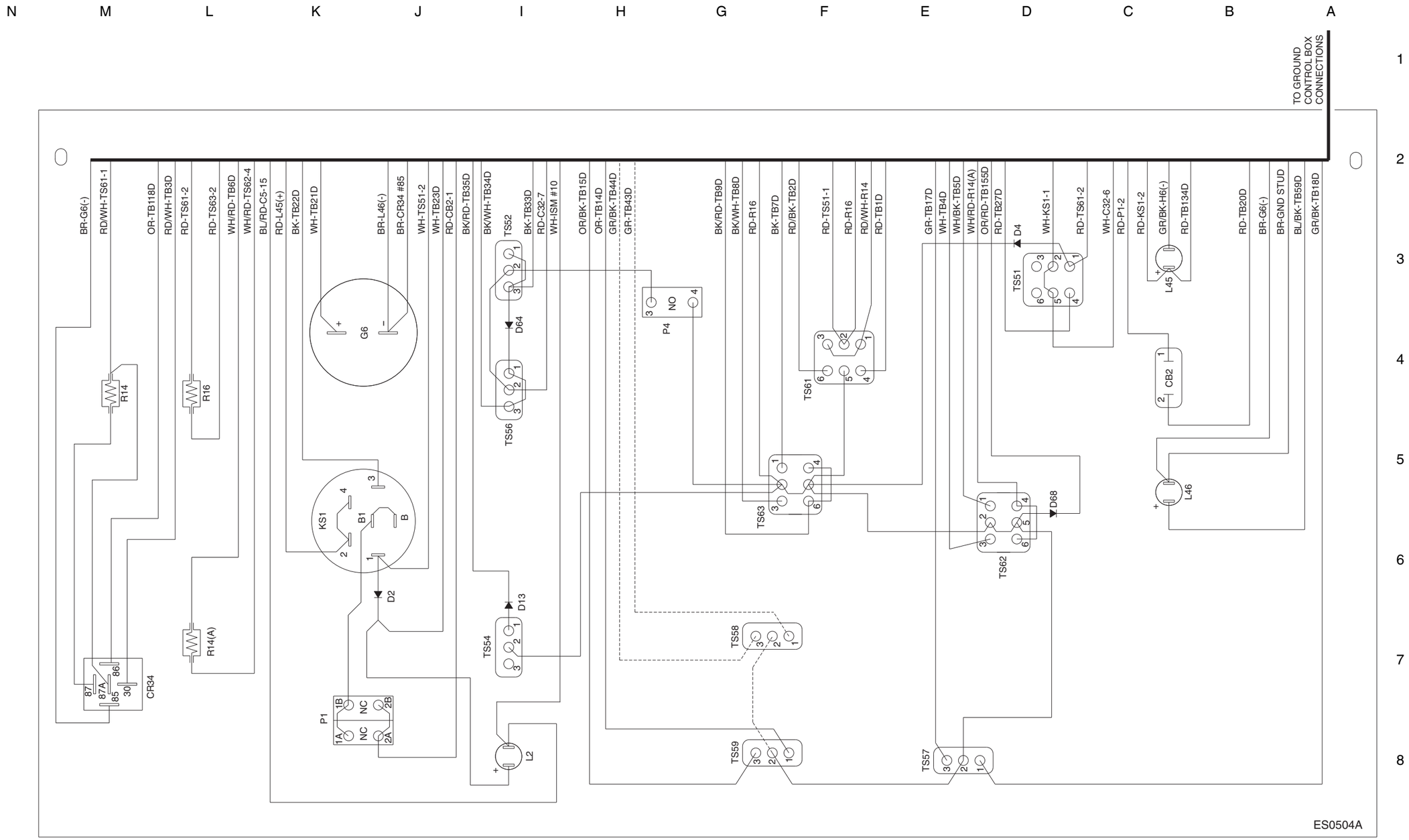

https://truckmanualshub.com/

Ground Control Box Switch Panel Wiring Diagram, S-80 and S-85 (CE),

Deutz TD2011L04I Models (before serial number 8111)

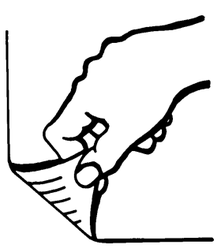

https://truckmanualshub.com/

Platform Control Box Wiring Diagram,
S-80 and S-85 (CE),
Deutz TD2011L04I Models (before serial number 8111)

https://truckmanualshub.com/

Platform Control Box Wiring Diagram,
S-80 and S-85 (CE), Deutz TD2011L04I Models (before serial number 8111)

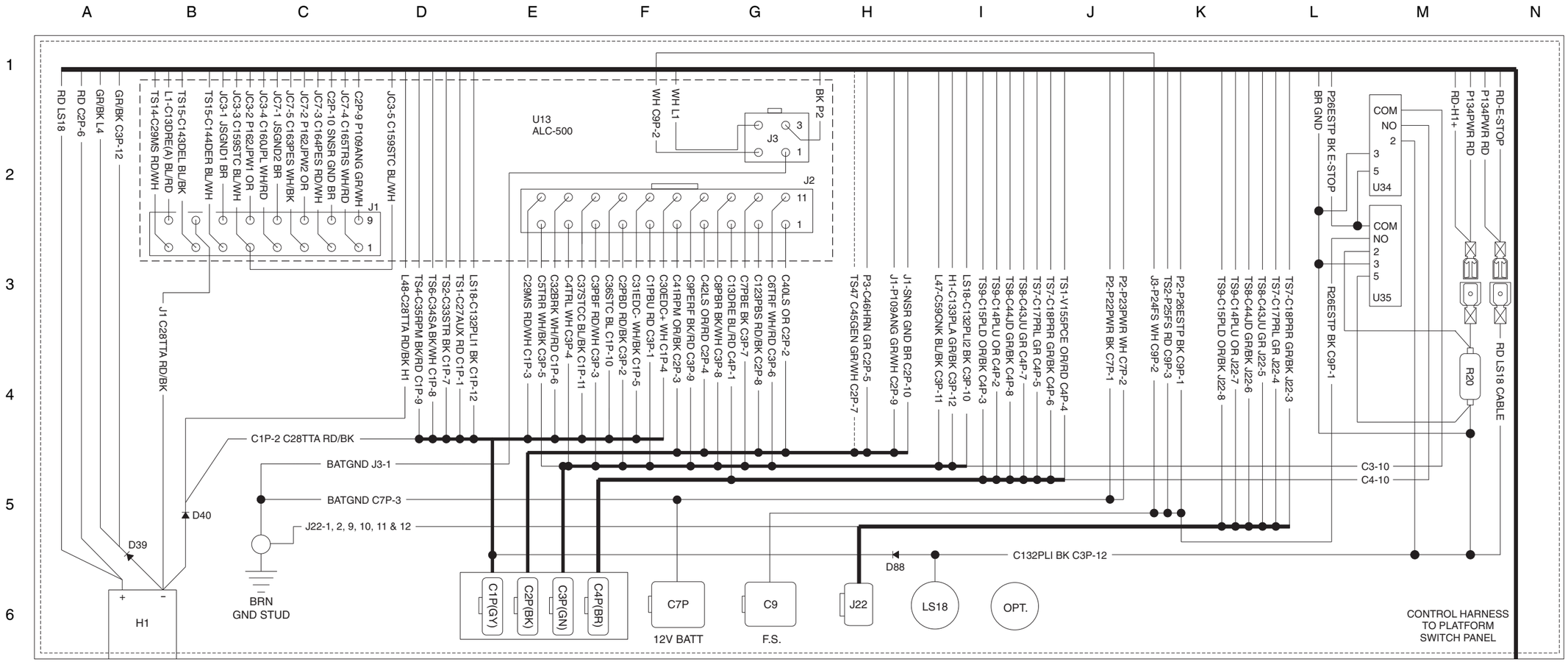

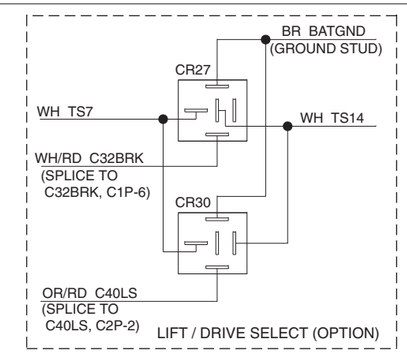

https://truckmanualshub.com/

Platform Control Box Switch Panel Wiring Diagram, S-80 and S-85 (CE), Deutz TD2011L04I Models (before serial number 8111)

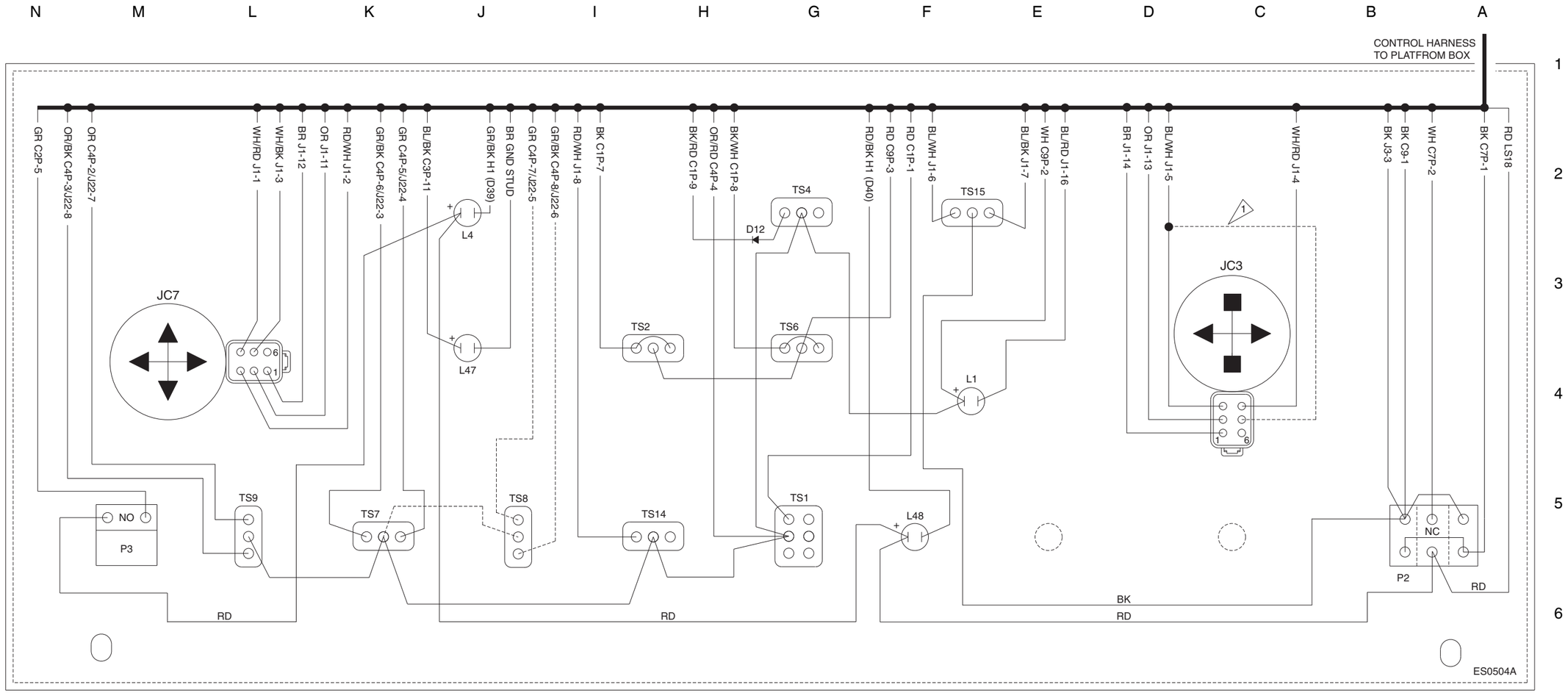

COMPONENT INDEX

CR27	LIFT / DRIVE SELECT - BRAKE CIRCUIT (OPTION)
CR30	LIFT / DRIVE SELECT - LIMIT SWITCH CIRCUIT (OPTION)
H1	TILT ALARM
J22	PLATFORM MANIFOLD
JC3	JOYSTICK - DRIVE / STEER
JC7	JOYSTICK - PRIMARY BOOM UP / DOWN, EXTEND / RETRACT, TURNTABLE ROTATE
L1	LED - DRIVE ENABLE
L4	LED - PLATFORM OVERLOAD
L47	LED - CABLE TENSION
L48	LED - TILT ALARM

LS18	PLATFORM OVERLOAD LIMIT SWITCH
P2	EMERGENCY STOP BUTTON
P3	HORN BUTTON
R20	RESISTOR - 4700Ω
TS1	AUXILIARY TOGGLE SWITCH
TS2	ENGINE START TOGGLE SWITCH
TS4	RPM SELECT TOGGLE SWITCH
TS6	GLOW PLUG TOGGLE SWITCH
TS7	PLATFORM ROTATE TOGGLE SWITCH
TS8	JIB BOOM UP/DOWN TOGGLE SWITCH (S-85 OPTION)

TS9	PLATFORM LEVEL UP/DOWN TOGGLE SWITCH
TS14	DRIVE SPEED TOGGLE SWITCH
TS15	DRIVE ENABLE TOGGLE SWITCH
U13	ALC500 JOYSTICK CONTROLLER CARD
U34	TIME DELAY RELAY - 2 SECONDS, 10A
U35	TIME DELAY RELAY - 2 SECONDS, 30A

NOTE: DASHED LINES INDICATE OPTIONS

1 ROCKER / STEER OPTION

https://truckmanualshub.com/

Platform Control Box Switch Panel Wiring Diagram, S-80 and S-85 (CE),

Deutz TD2011L04I Models (before serial number 8111)

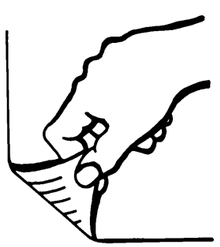

https://truckmanualshub.com/

Electrical Schematic, S-80 and S-85 (CE),
Deutz TD2011L04I Models (after serial number 8110)

https://truckmanualshub.com/

Electrical Schematic, S-80 and S-85 (CE),

Deutz TD2011L04I Models (after serial number 8110)

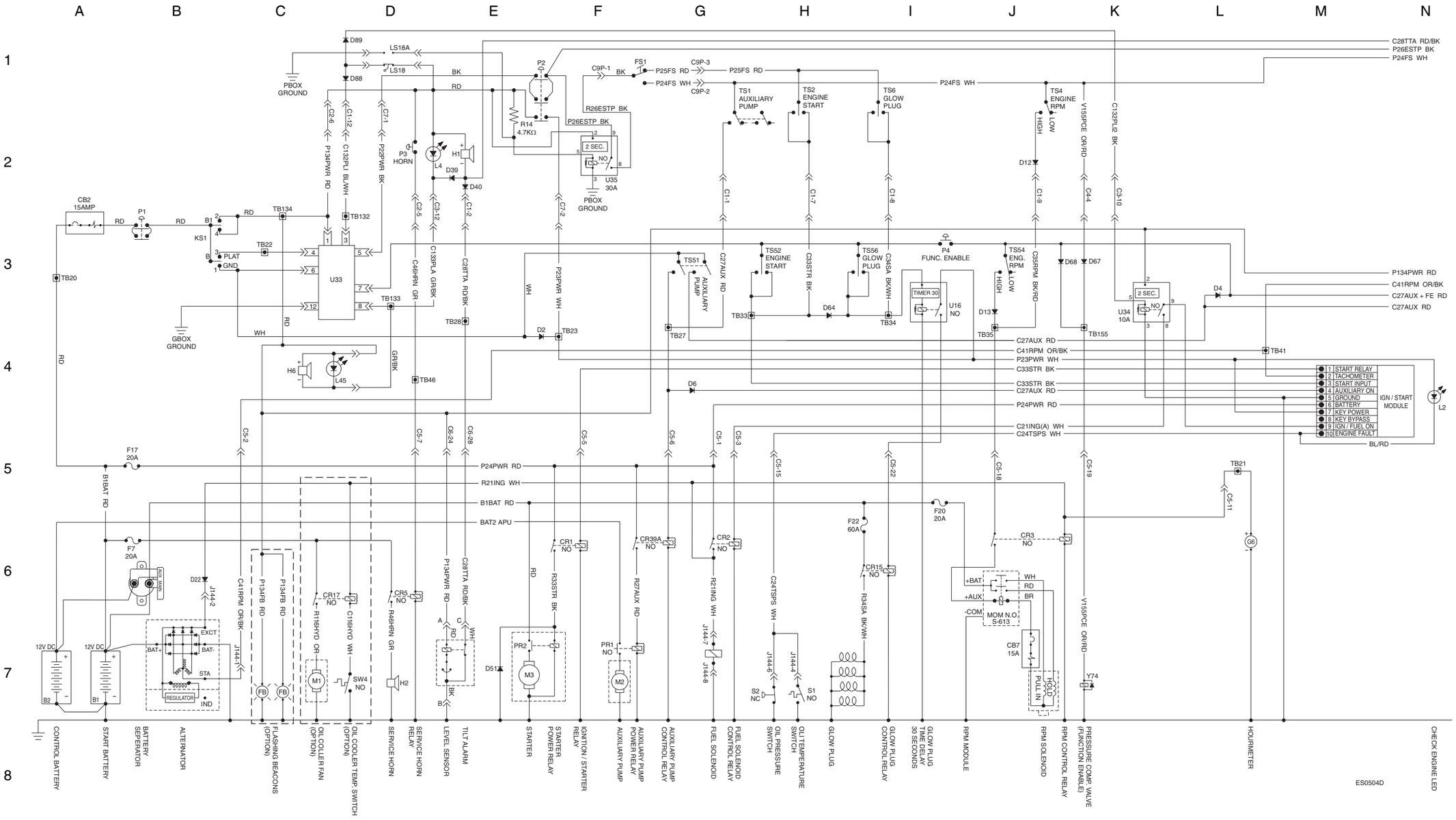

https://truckmanualshub.com/

Electrical Schematic, S-80 and S-85 (CE),

Deutz TD2011L04I Models (after serial number 8110)

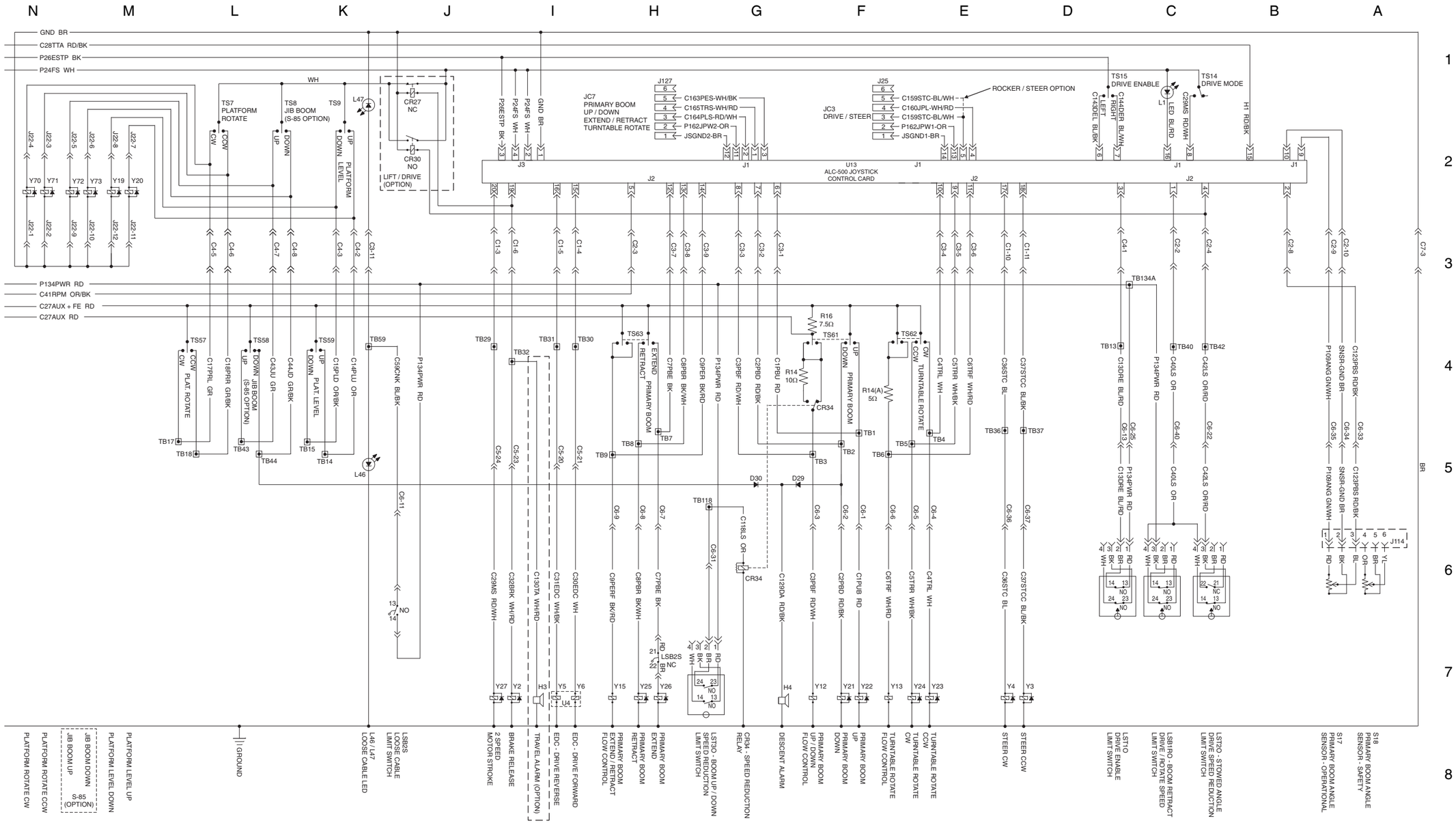

https://truckmanualshub.com/

Electrical Schematic, S-80 and S-85 (CE),
Deutz TD2011L04I Models (after serial number 8110)

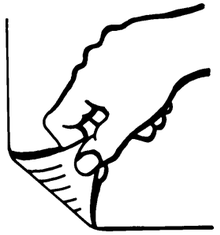

https://truckmanualshub.com/

Ground Control Box Terminal Strip Wiring Diagram, S-80 and S-85 (CE),
Deutz TD2011L04I Models (after serial number 8110)

https://truckmanualshub.com/

Ground Control Box Terminal Strip Wiring Diagram, S-80 and S-85 (CE), Deutz TD2011L04I Models (after serial number 8110)

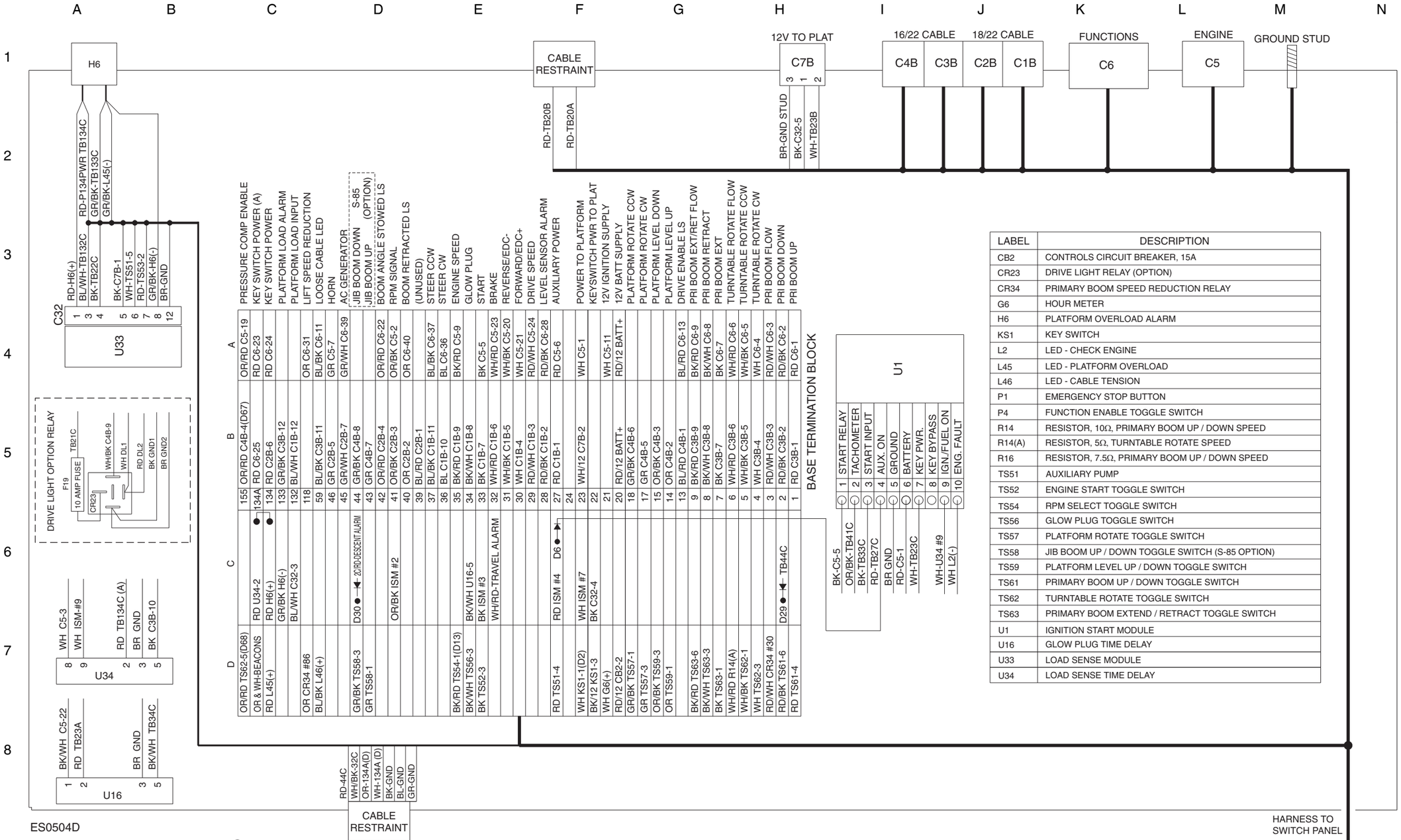

LABEL	DESCRIPTION
CB2	CONTROLS CIRCUIT BREAKER, 15A
CR23	DRIVE LIGHT RELAY (OPTION)
CR34	PRIMARY BOOM SPEED REDUCTION RELAY
G6	HOUR METER
H6	PLATFORM OVERLOAD ALARM
KS1	KEY SWITCH
L2	LED - CHECK ENGINE
L45	LED - PLATFORM OVERLOAD
L46	LED - CABLE TENSION
P1	EMERGENCY STOP BUTTON
P4	FUNCTION ENABLE TOGGLE SWITCH
R14	RESISTOR, 10Ω, PRIMARY BOOM UP / DOWN SPEED
R14(A)	RESISTOR, 5Ω, TURNTABLE ROTATE SPEED
R16	RESISTOR, 7.5Ω, PRIMARY BOOM UP / DOWN SPEED
TS51	AUXILIARY PUMP
TS52	ENGINE START TOGGLE SWITCH
TS54	RPM SELECT TOGGLE SWITCH
TS56	GLOW PLUG TOGGLE SWITCH
TS57	PLATFORM ROTATE TOGGLE SWITCH
TS58	JIB BOOM UP / DOWN TOGGLE SWITCH (S-85 OPTION)
TS59	PLATFORM LEVEL UP / DOWN TOGGLE SWITCH
TS61	PRIMARY BOOM UP / DOWN TOGGLE SWITCH
TS62	TURNTABLE ROTATE TOGGLE SWITCH
TS63	PRIMARY BOOM EXTEND / RETRACT TOGGLE SWITCH
U1	IGNITION START MODULE
U16	GLOW PLUG TIME DELAY
U33	LOAD SENSE MODULE
U34	LOAD SENSE TIME DELAY

https://truckmanualshub.com/

Ground Control Box Switch Panel Wiring Diagram, S-80 and S-85 (CE), Deutz TD2011L04I Models (after serial number 8110)

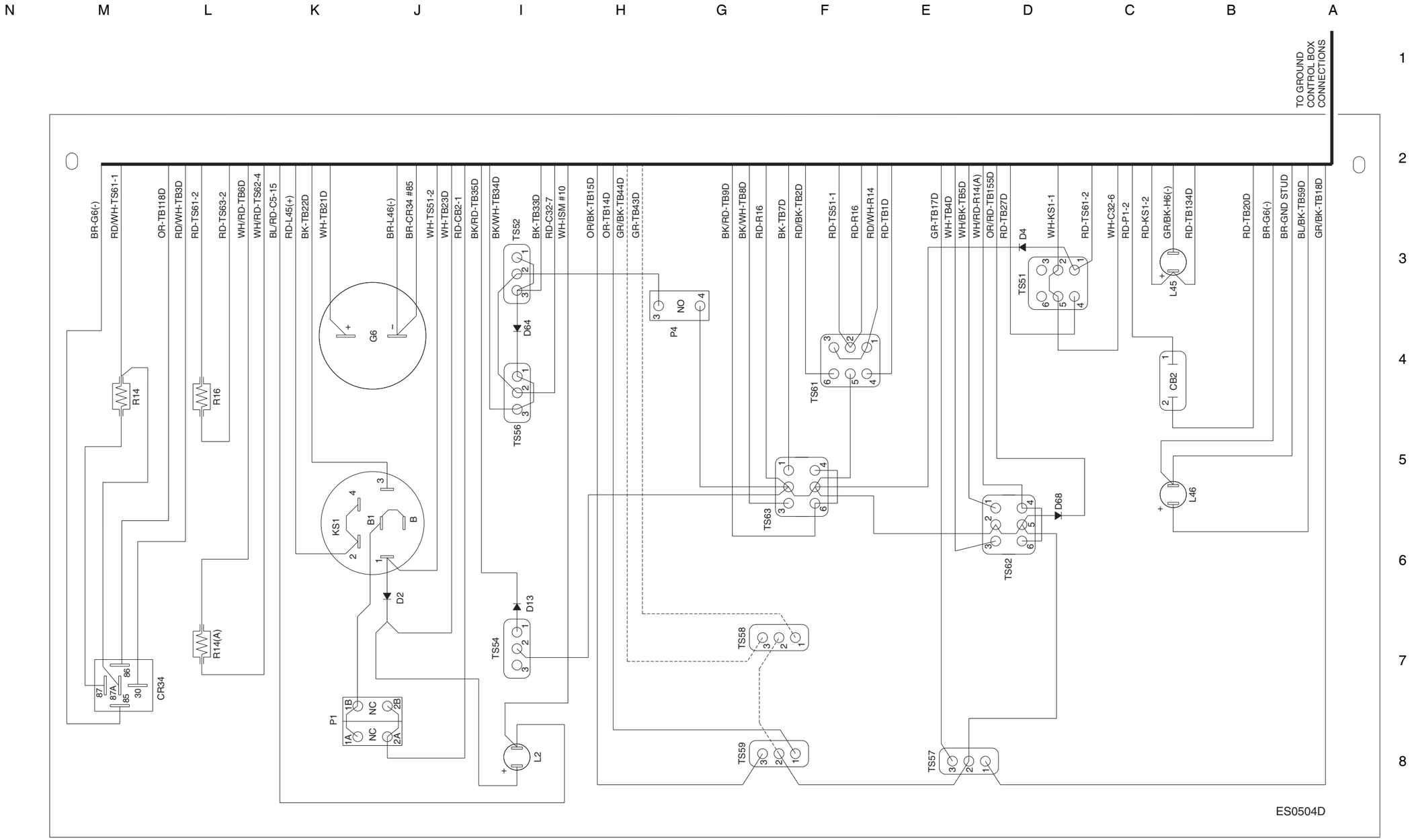

https://truckmanualshub.com/

Ground Control Box Switch Panel Wiring Diagram, S-80 and S-85 (CE),

Deutz TD2011L04I Models (after serial number 8110)

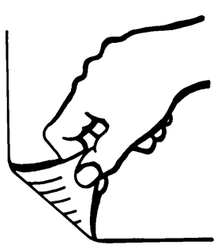

https://truckmanualshub.com/

Platform Control Box Wiring Diagram,
S-80 and S-85 (CE),
Deutz TD2011L04I Models (after serial number 8110)

https://truckmanualshub.com/

Platform Control Box Wiring Diagram, S-80 and S-85 (CE), Deutz TD2011L04I Models (after serial number 8110)

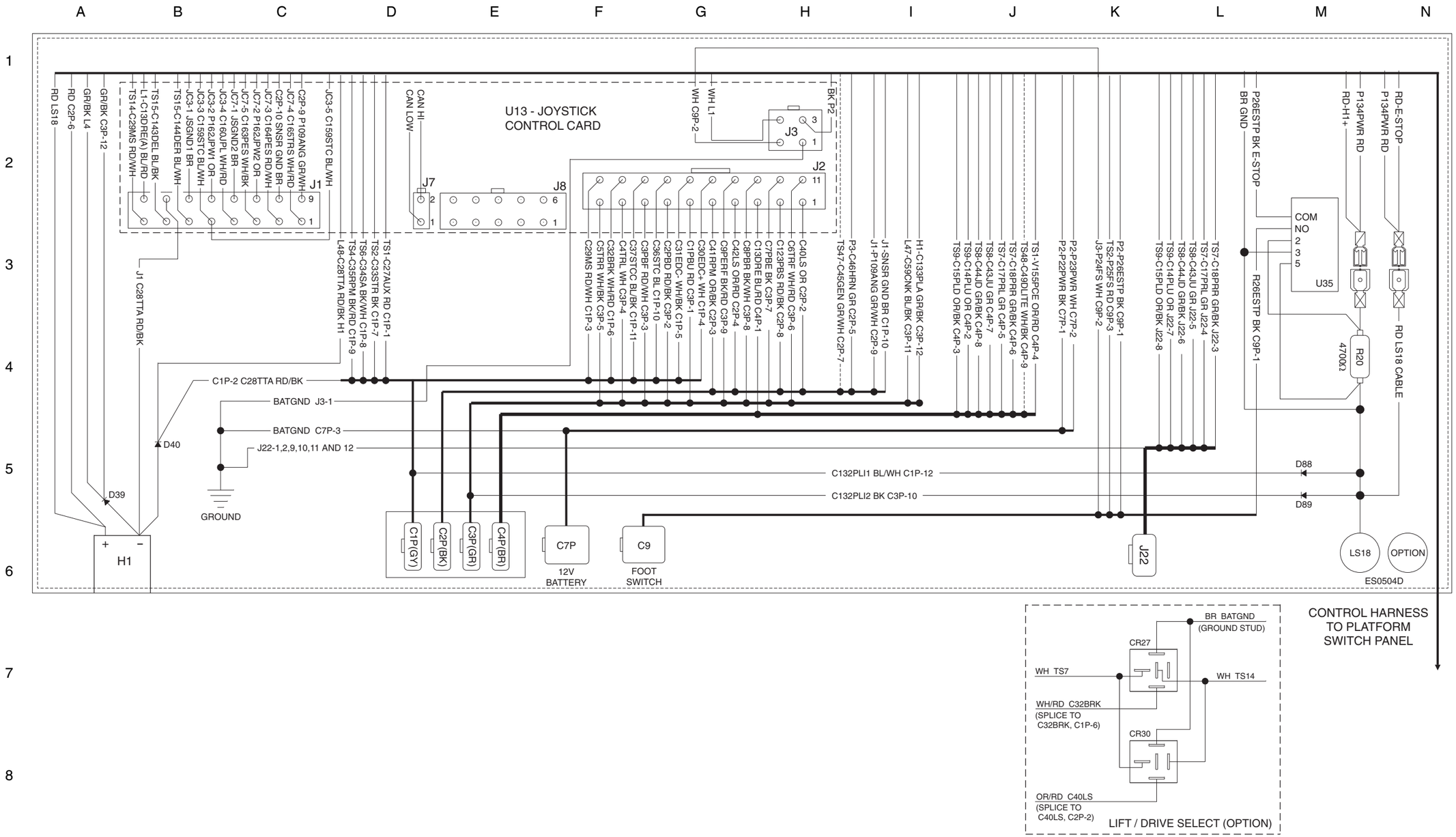

https://truckmanualshub.com/

Platform Control Box Switch Panel Wiring Diagram, S-80 and S-85 (CE), Deutz TD2011L04I Models (after serial number 8110)

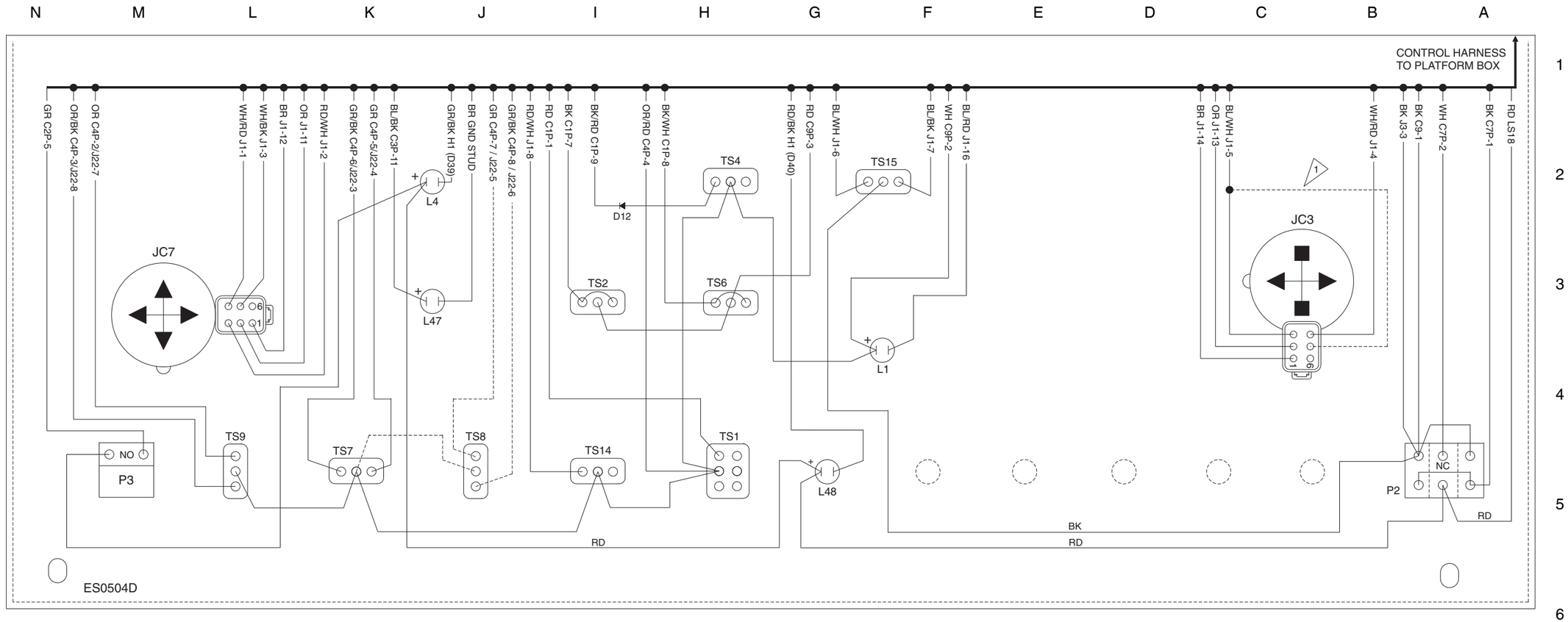

COMPONENT INDEX

CR27	LIFT / DRIVE SELECT - BRAKE CIRCUIT (OPTION)
CR30	LIFT / DRIVE SELECT - LIMIT SWITCH CIRCUIT (OPTION)
H1	TILT ALARM
JC3	JOYSTICK - DRIVE / STEER
JC7	JOYSTICK - PRIMARY BOOM UP / DOWN, EXTEND / RETRACT, TURNTABLE ROTATE
L1	LED - DRIVE ENABLE
L4	LED - PLATFORM OVERLOAD
L47	LED - CABLE TENSION
L48	LED - TILT ALARM
LS18	PLATFORM OVERLOAD LIMIT SWITCH
P2	EMERGENCY STOP BUTTON
P3	HORN BUTTON
R20	RESISTOR - 4700Ω
TS1	AUXILIARY TOGGLE SWITCH
TS2	ENGINE START TOGGLE SWITCH
TS4	RPM SELECT TOGGLE SWITCH
TS6	GLOW PLUG TOGGLE SWITCH

TS7	PLATFORM ROTATE TOGGLE SWITCH
TS8	JIB BOOM UP/DOWN TOGGLE SWITCH (S-85 OPTION)
TS9	PLATFORM LEVEL UP/DOWN TOGGLE SWITCH
TS14	DRIVE SPEED TOGGLE SWITCH
TS15	DRIVE ENABLE TOGGLE SWITCH
U13	ALC500 JOYSTICK CONTROLLER CARD
U35	TIME DELAY RELAY

NOTE: DASHED LINES INDICATE OPTIONS

1 ROCKER / STEER OPTION

https://truckmanualshub.com/

Platform Control Box Switch Panel Wiring Diagram, S-80 and S-85 (CE),

Deutz TD2011L04I Models (after serial number 8110)

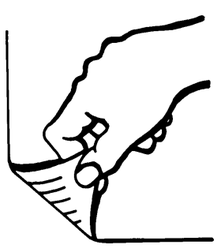

https://truckmanualshub.com/

Electrical Schematic, S-80X,
Deutz TD2011L04I Models

https://truckmanualshub.com/

Electrical Schematic, S-80X,

Deutz TD2011L04I Models

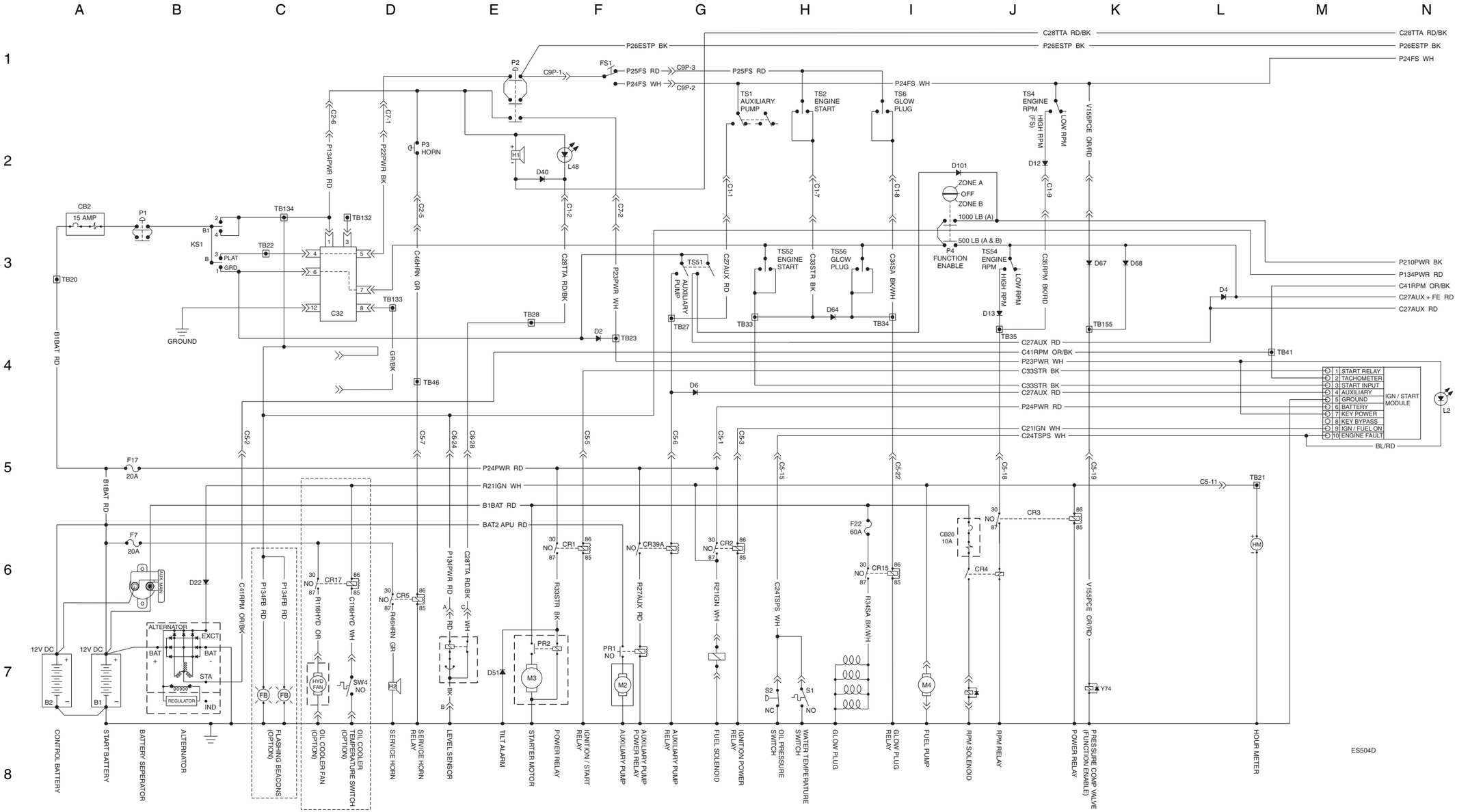

https://truckmanualshub.com/

Electrical Schematic, S-80X,

Deutz TD2011L04I Models

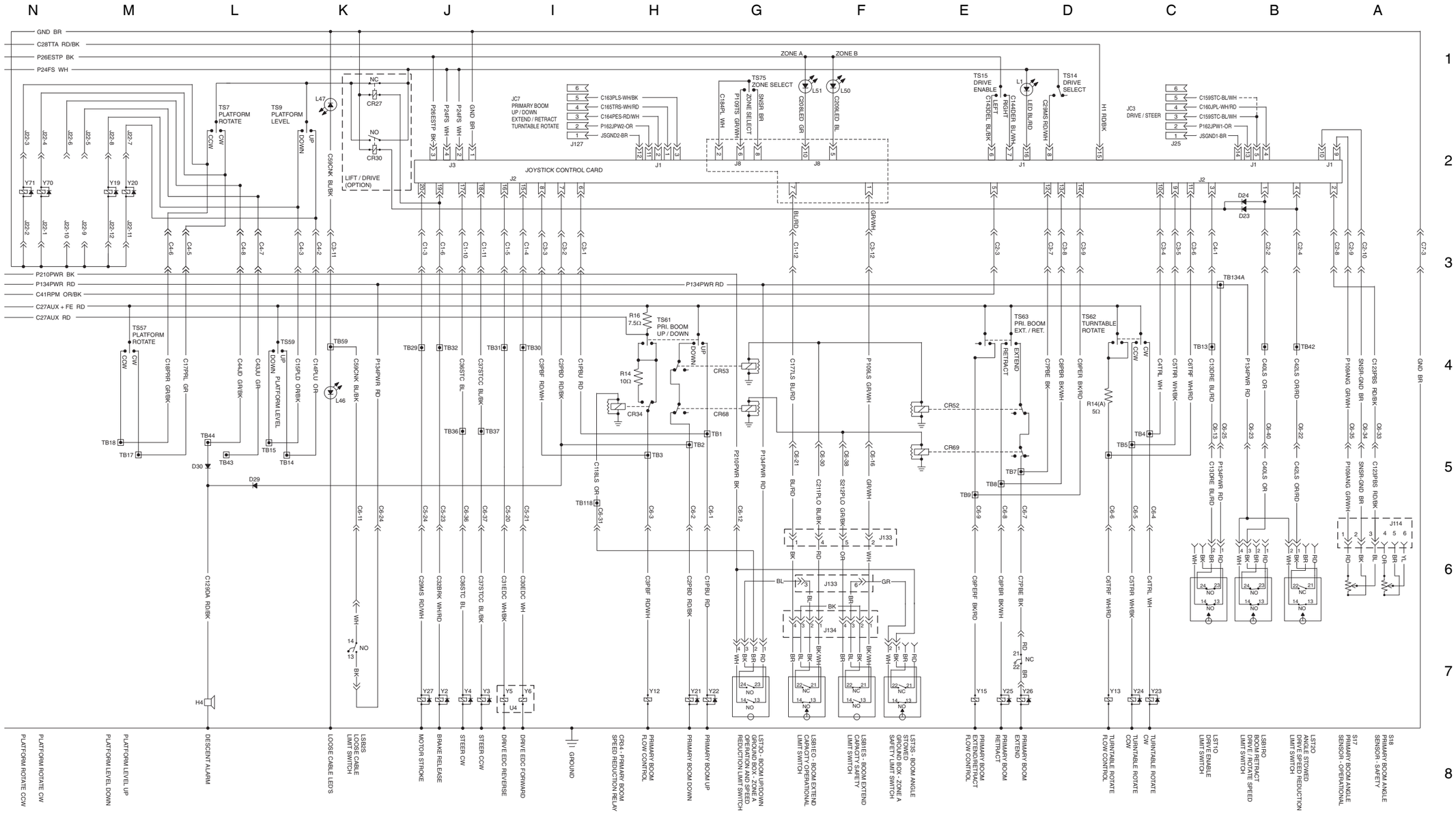

https://truckmanualshub.com/

Electrical Schematic, S-80X,
Deutz TD2011L04I Models

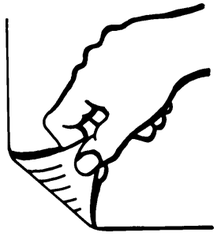

https://truckmanualshub.com/

Ground Control Box Terminal Strip Wiring Diagram, S-80X,
Deutz TD2011L04I Models

https://truckmanualshub.com/

Ground Control Box Terminal Strip Wiring Diagram, S-80X,
Deutz TD2011L04I Models

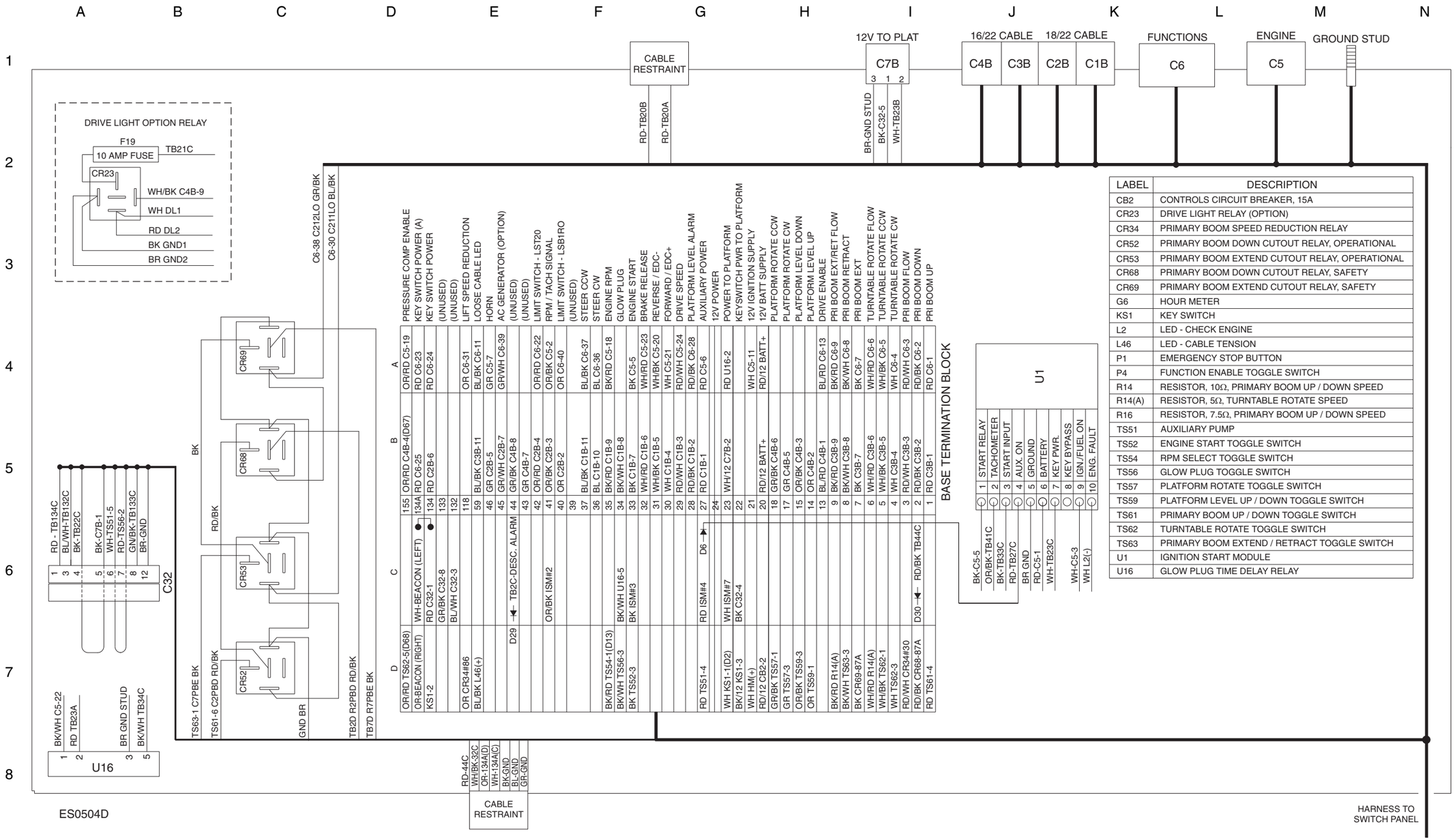

LABEL	DESCRIPTION
CB2	CONTROLS CIRCUIT BREAKER, 15A
CR23	DRIVE LIGHT RELAY (OPTION)
CR34	PRIMARY BOOM SPEED REDUCTION RELAY
CR52	PRIMARY BOOM DOWN CUTOUT RELAY, OPERATIONAL
CR53	PRIMARY BOOM EXTEND CUTOUT RELAY, OPERATIONAL
CR68	PRIMARY BOOM DOWN CUTOUT RELAY, SAFETY
CR69	PRIMARY BOOM EXTEND CUTOUT RELAY, SAFETY
G6	HOUR METER
KS1	KEY SWITCH
L2	LED - CHECK ENGINE
L46	LED - CABLE TENSION
P1	EMERGENCY STOP BUTTON
P4	FUNCTION ENABLE TOGGLE SWITCH
R14	RESISTOR, 10Ω, PRIMARY BOOM UP / DOWN SPEED
R14(A)	RESISTOR, 5Ω, TURNTABLE ROTATE SPEED
R16	RESISTOR, 7.5Ω, PRIMARY BOOM UP / DOWN SPEED
TS51	AUXILIARY PUMP
TS52	ENGINE START TOGGLE SWITCH
TS54	RPM SELECT TOGGLE SWITCH
TS56	GLOW PLUG TOGGLE SWITCH
TS57	PLATFORM ROTATE TOGGLE SWITCH
TS59	PLATFORM LEVEL UP / DOWN TOGGLE SWITCH
TS61	PRIMARY BOOM UP / DOWN TOGGLE SWITCH
TS62	TURNTABLE ROTATE TOGGLE SWITCH
TS63	PRIMARY BOOM EXTEND / RETRACT TOGGLE SWITCH
U1	IGNITION START MODULE
U16	GLOW PLUG TIME DELAY RELAY

https://truckmanualshub.com/

Ground Control Box Switch Panel Wiring Diagram, S-80X,

Deutz TD2011L04I Models

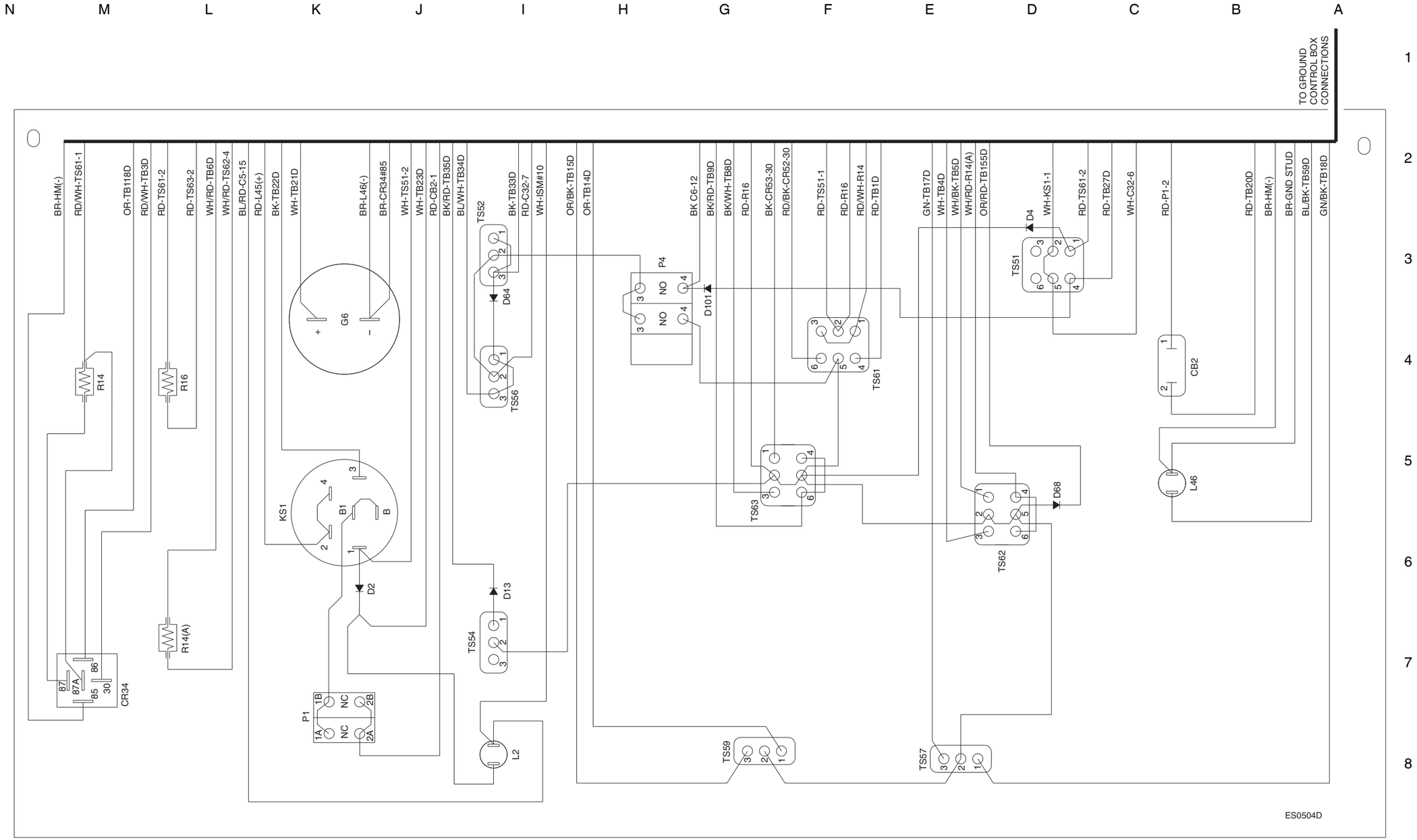

https://truckmanualshub.com/

Ground Control Box Switch Panel Wiring Diagram, S-80X,
Deutz TD2011L04I Models

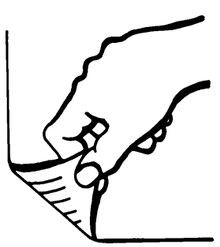

https://truckmanualshub.com/

Platform Control Box Wiring Diagram, S-80X,
Deutz TD2011L04I Models

https://truckmanualshub.com/

Platform Control Box Wiring Diagram, S-80X,
Deutz TD2011L04I Models

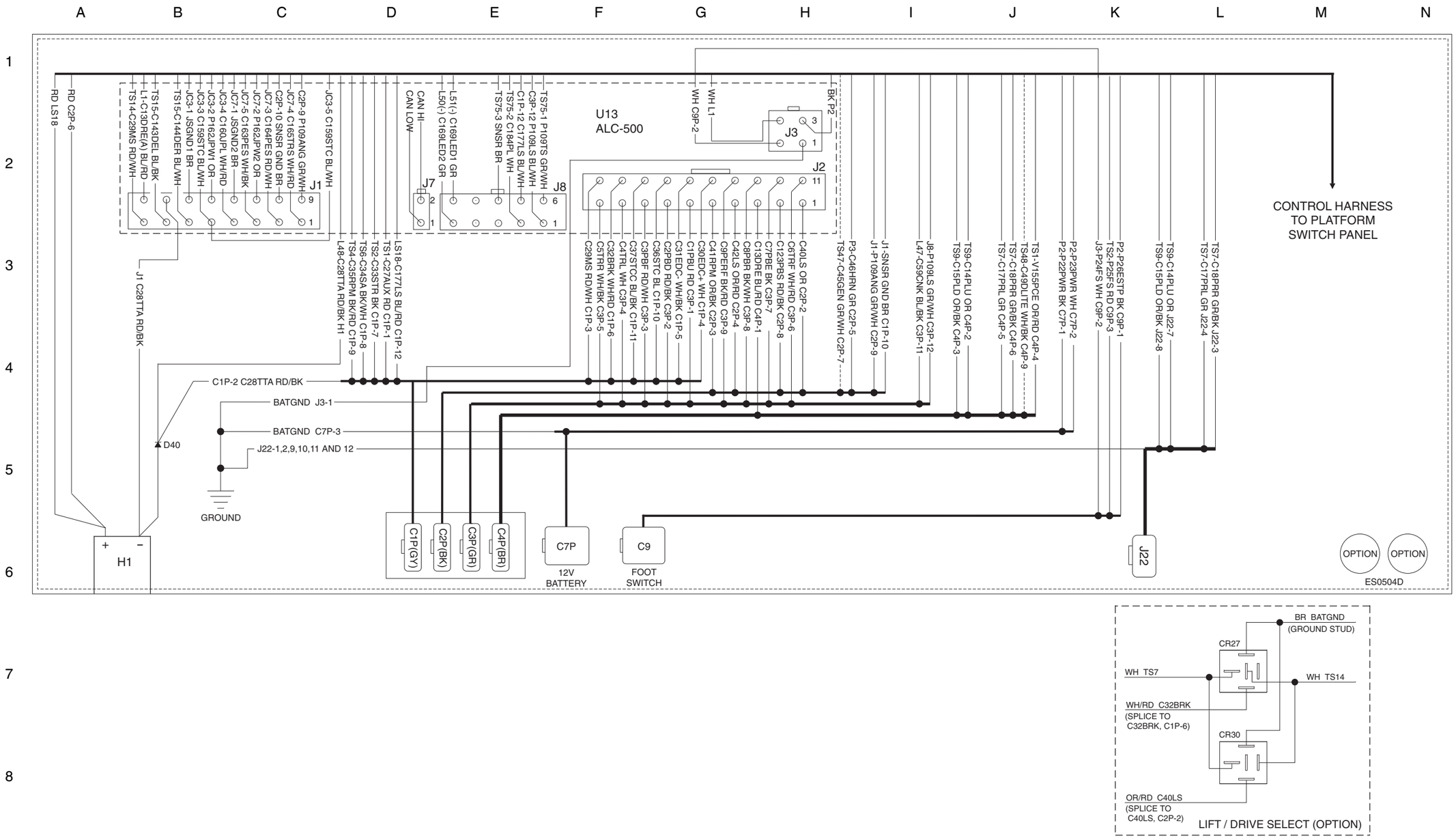

https://truckmanualshub.com/

Platform Control Box Switch Panel Wiring Diagram, S-80X,

Deutz TD2011L04I Models

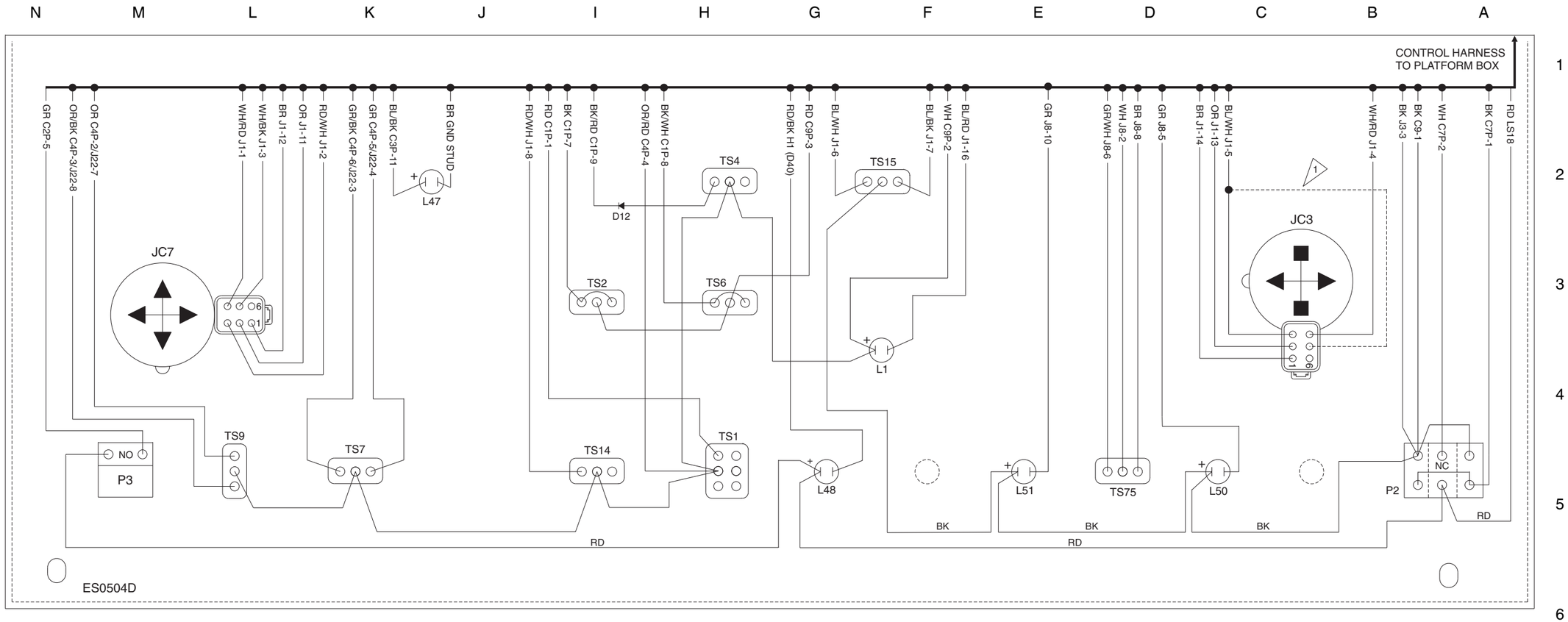

COMPONENT INDEX

H1	TILT ALARM
JC3	JOYSTICK - DRIVE / STEER
JC7	JOYSTICK - PRIMARY BOOM UP / DOWN, EXTEND / RETRACT, TURNTABLE ROTATE
L1	LED - DRIVE ENABLE
L47	LED - CABLE TENSION
L48	LED - TILT ALARM
L50	LED - ZONE B, 500 LB CAPACITY
L51	LED - ZONE A, 1000 LB CAPACITY
P2	EMERGENCY STOP BUTTON
P3	HORN BUTTON
TS1	AUXILIARY TOGGLE SWITCH
TS2	ENGINE START TOGGLE SWITCH
TS4	RPM SELECT TOGGLE SWITCH
TS6	GLOW PLUG TOGGLE SWITCH
TS7	PLATFORM ROTATE TOGGLE SWITCH
TS9	PLATFORM LEVEL UP/DOWN TOGGLE SWITCH
TS14	DRIVE SPEED TOGGLE SWITCH
TS15	DRIVE ENABLE TOGGLE SWITCH
TS75	ZONE SELECT TOGGLE SWITCH (OPTION)
U13	ALC500 JOYSTICK CONTROLLER CARD

NOTE: DASHED LINES INDICATE OPTIONS

1 ROCKER / STEER OPTION

https://truckmanualshub.com/

Platform Control Box Switch Panel Wiring Diagram, S-80X,
Deutz TD2011L04I Models

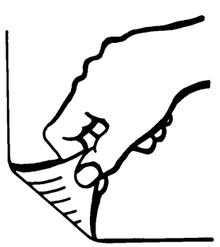

https://truckmanualshub.com/

Electrical Schematic, S-80 and S-85 (ANSI / CSA / AS),
Perkins 804D-33 Models

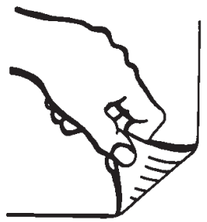

https://truckmanualshub.com/

Electrical Schematic, S-80 and S-85 (ANSI / CSA / AS),

Perkins 804D-33 Models

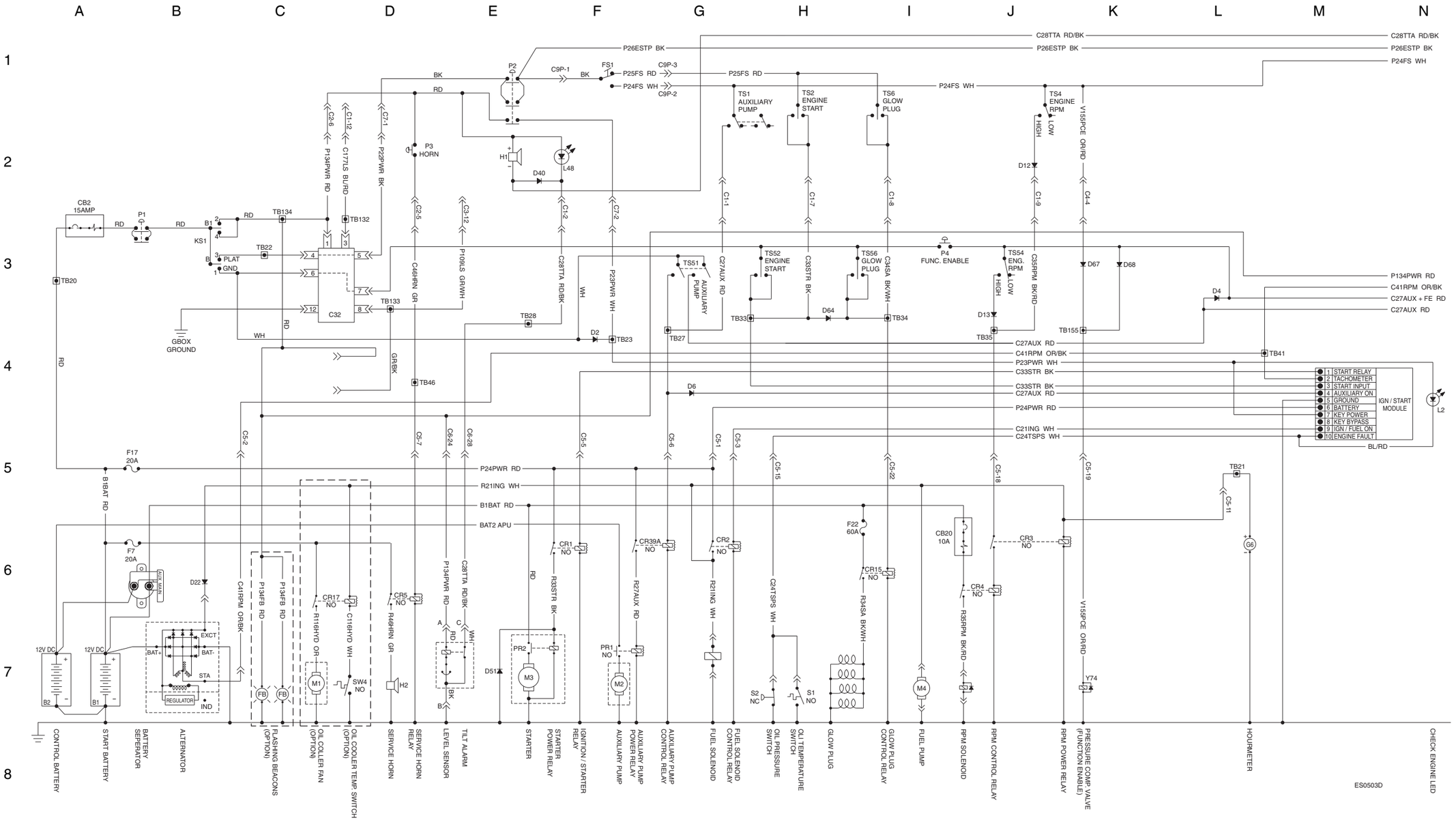

https://truckmanualshub.com/

Electrical Schematic, S-80 and S-85 (ANSI / CSA / AS),

Perkins 804D-33 Models

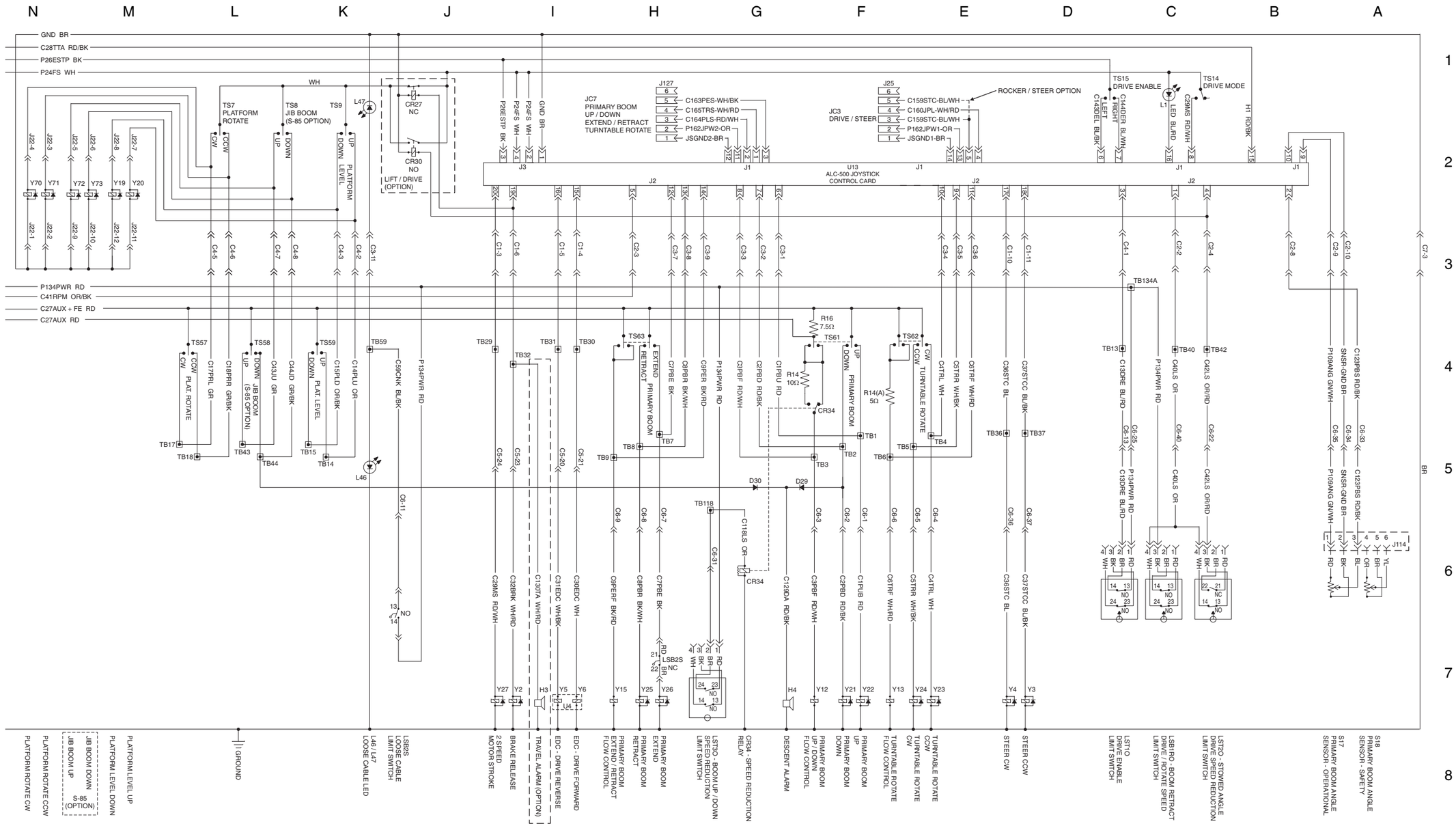

https://truckmanualshub.com/

Electrical Schematic, S-80 and S-85 (ANSI / CSA / AS),
Perkins 804D-33 Models

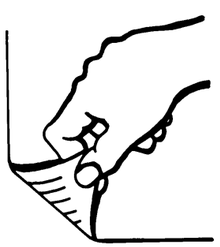

https://truckmanualshub.com/

Ground Control Box Wiring Diagram, S-80 and S-85 (ANSI / CSA / AS),

Perkins 804D-33 Models

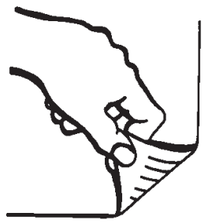

https://truckmanualshub.com/

Ground Control Box Terminal Strip Wiring Diagram, S-80 and S-85 (ANSI / CSA / AS), Perkins 804D-33 Models

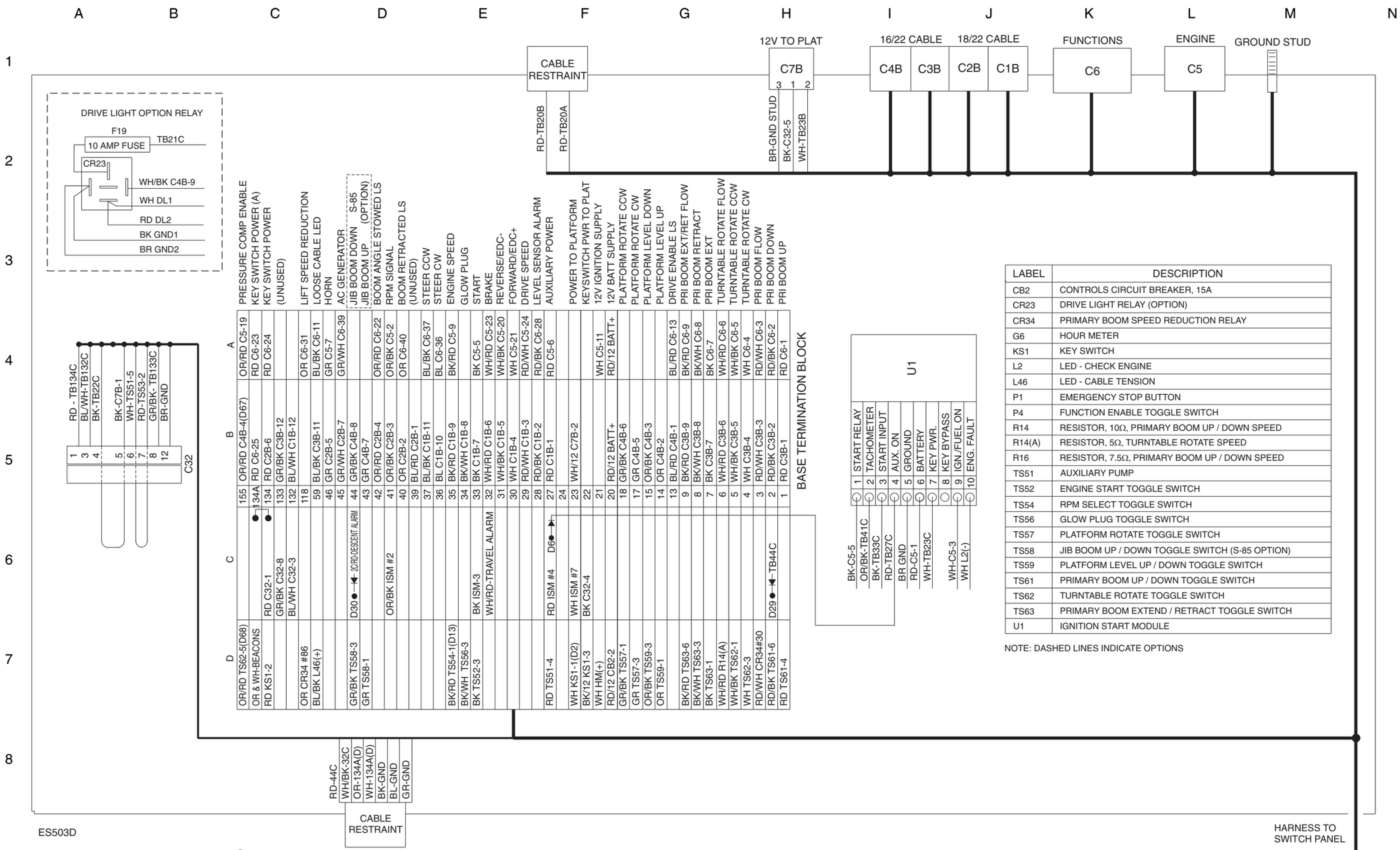

LABEL	DESCRIPTION
CB2	CONTROLS CIRCUIT BREAKER, 15A
CR23	DRIVE LIGHT RELAY (OPTION)
CR34	PRIMARY BOOM SPEED REDUCTION RELAY
G6	HOUR METER
KS1	KEY SWITCH
L2	LED - CHECK ENGINE
L46	LED - CABLE TENSION
P1	EMERGENCY STOP BUTTON
P4	FUNCTION ENABLE TOGGLE SWITCH
R14	RESISTOR, 10Ω, PRIMARY BOOM UP / DOWN SPEED
R14(A)	RESISTOR, 5Ω, TURNTABLE ROTATE SPEED
R16	RESISTOR, 7.5Ω, PRIMARY BOOM UP / DOWN SPEED
TS51	AUXILIARY PUMP
TS52	ENGINE START TOGGLE SWITCH
TS54	RPM SELECT TOGGLE SWITCH
TS56	GLOW PLUG TOGGLE SWITCH
TS57	PLATFORM ROTATE TOGGLE SWITCH
TS58	JIB BOOM UP / DOWN TOGGLE SWITCH (S-85 OPTION)
TS59	PLATFORM LEVEL UP / DOWN TOGGLE SWITCH
TS61	PRIMARY BOOM UP / DOWN TOGGLE SWITCH
TS62	TURNTABLE ROTATE TOGGLE SWITCH
TS63	PRIMARY BOOM EXTEND / RETRACT TOGGLE SWITCH
U1	IGNITION START MODULE

NOTE: DASHED LINES INDICATE OPTIONS

https://truckmanualshub.com/

Ground Control Box Switch Panel Wiring Diagram, S-80 and S-85 (ANSI / CSA / AS), Perkins 804D-33 Models

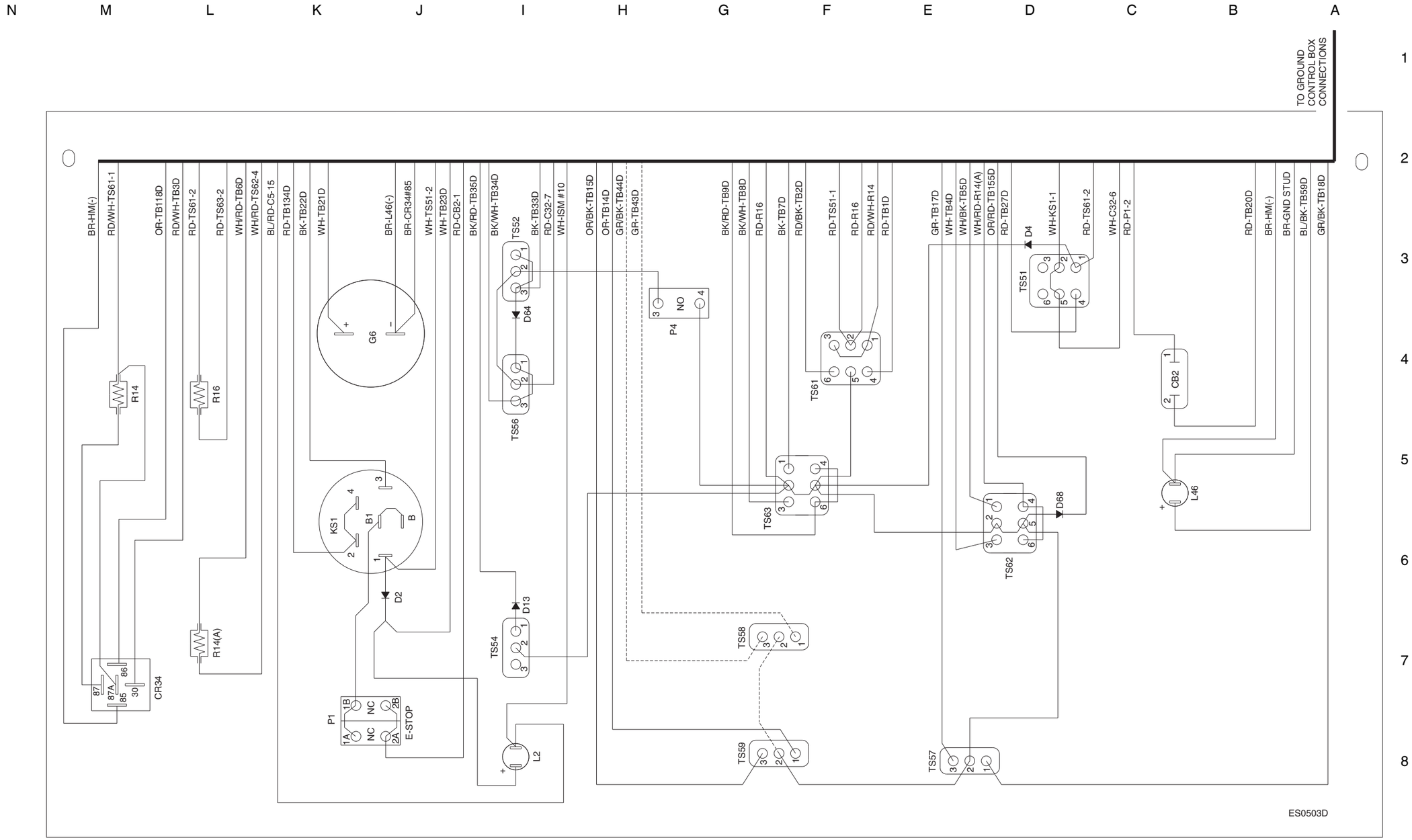

https://truckmanualshub.com/

Ground Control Switch Panel Box Wiring Diagram, S-80 and S-85 (ANSI / CSA / AS),

Perkins 804D-33 Models

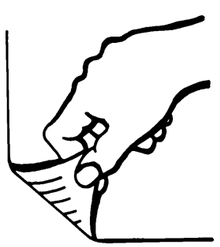

https://truckmanualshub.com/

Platform Control Box Wiring Diagram, S-80 and S-85 (ANSI / CSA / AS),

Perkins 804D-33 Models

https://truckmanualshub.com/

Platform Control Box Wiring Diagram, S-80 and S-85 (ANSI / CSA / AS), Perkins 804D-33 Models

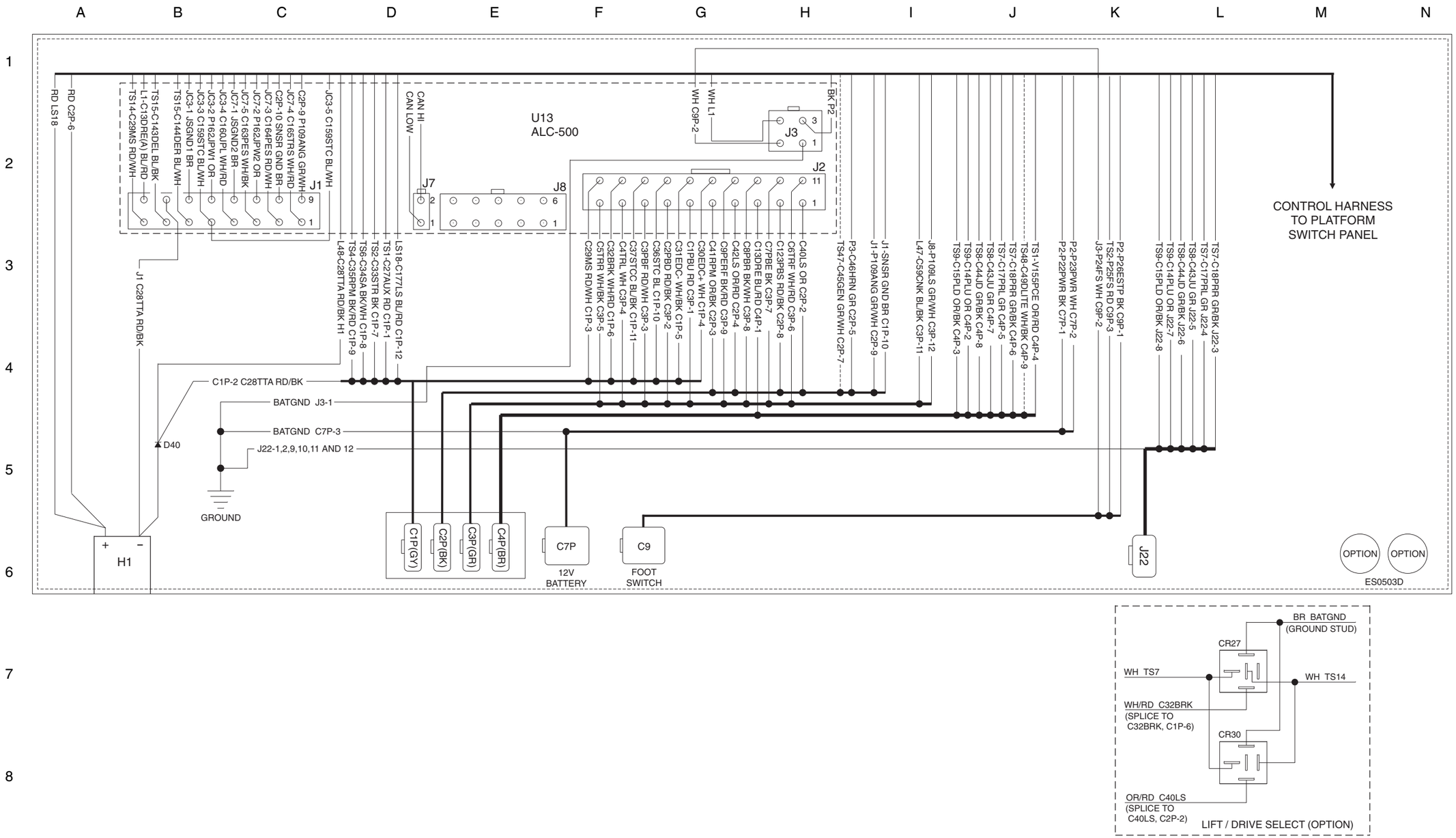

https://truckmanualshub.com/

Platform Control Box Switch Panel Wiring Diagram, S-80 and S-85 (ANSI / CSA / AS), Perkins 804D-33 Models

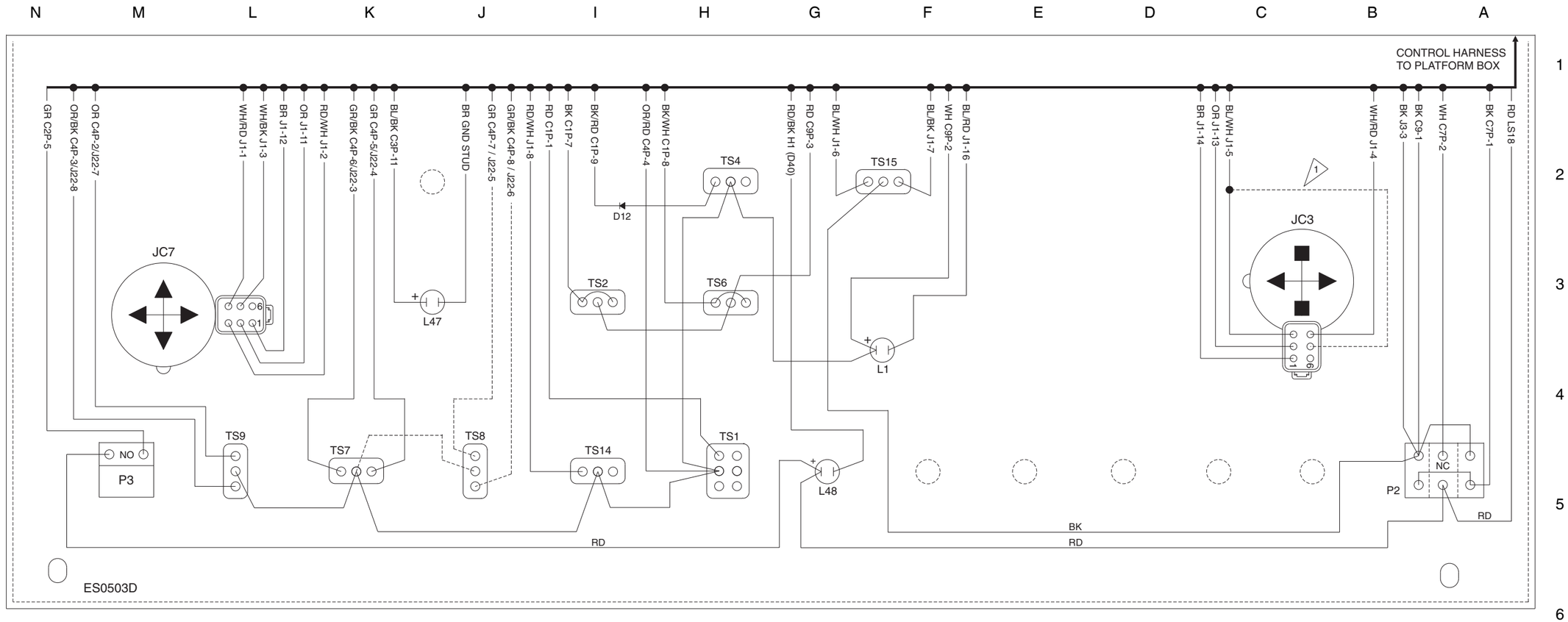

COMPONENT INDEX

H1	TILT ALARM
JC3	JOYSTICK - DRIVE / STEER
JC7	JOYSTICK - PRIMARY BOOM UP / DOWN, EXTEND / RETRACT, TURNTABLE ROTATE
L1	LED - DRIVE ENABLE
L47	LED - CABLE TENSION
L48	LED - TILT ALARM
P2	EMERGENCY STOP BUTTON
P3	HORN BUTTON
TS1	AUXILIARY TOGGLE SWITCH
TS2	ENGINE START TOGGLE SWITCH
TS4	RPM SELECT TOGGLE SWITCH
TS6	GLOW PLUG TOGGLE SWITCH
TS7	PLATFORM ROTATE TOGGLE SWITCH
TS8	JIB BOOM UP/DOWN TOGGLE SWITCH (S-85 OPTION)
TS9	PLATFORM LEVEL UP/DOWN TOGGLE SWITCH
TS14	DRIVE SPEED TOGGLE SWITCH
TS15	DRIVE ENABLE TOGGLE SWITCH
U13	ALC500 JOYSTICK CONTROLLER CARD

NOTE: DASHED LINES INDICATE OPTIONS

1 ROCKER / STEER OPTION

https://truckmanualshub.com/

Platform Control Box Switch Panel Wiring Diagram, S-80 and S-85 (ANSI / CSA / AS),

Perkins 804D-33 Models

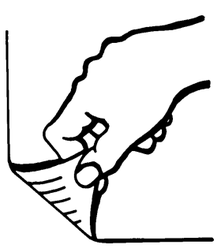

https://truckmanualshub.com/

Electrical Schematic, S-80 and S-85 (CE),
Perkins 804D-33 Models (before serial number 8111)

https://truckmanualshub.com/

Electrical Schematic, S-80 and S-85 (CE),

Perkins 804D-33 Models (before serial number 8111)

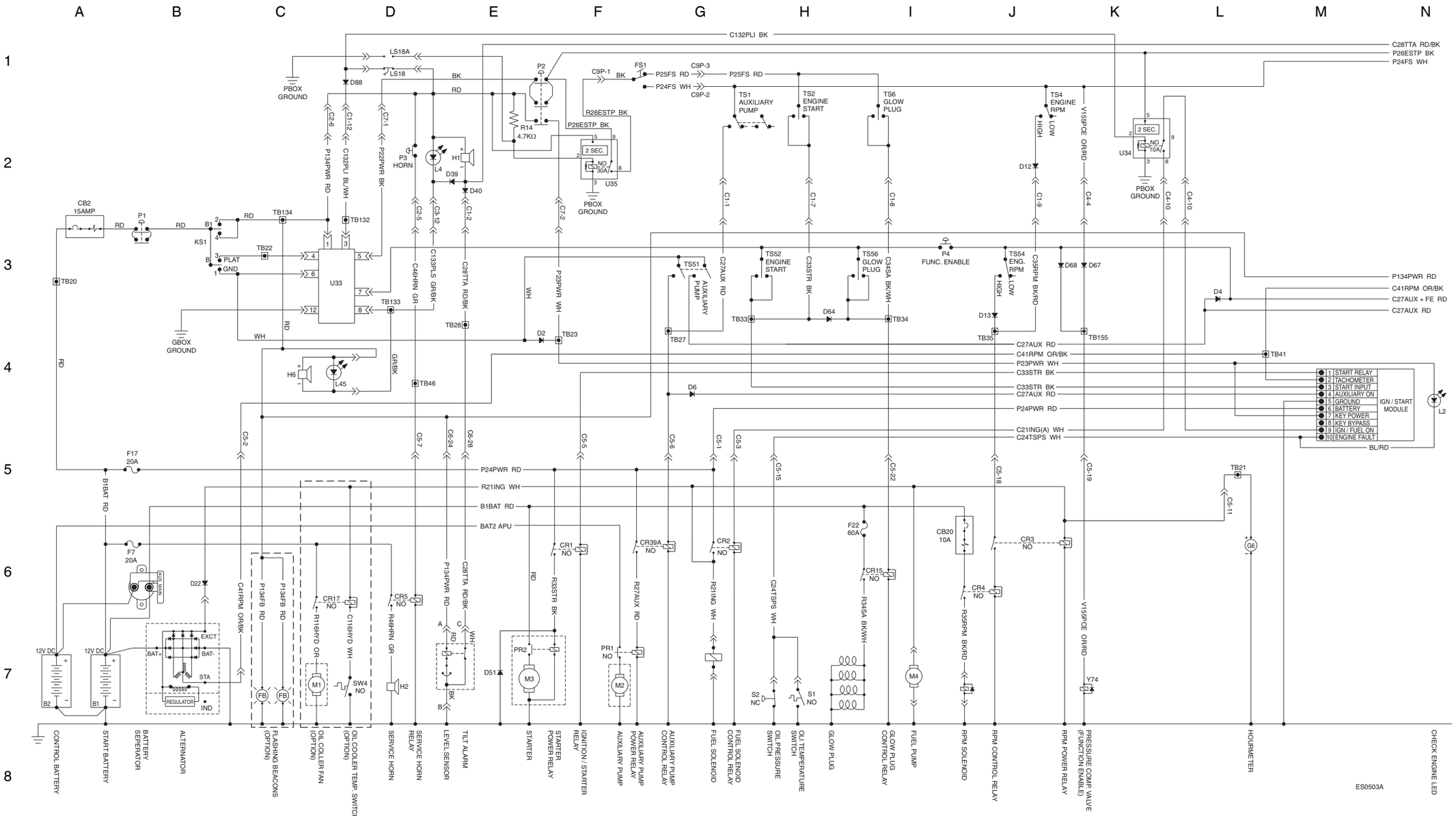

https://truckmanualshub.com/

Electrical Schematic, S-80 and S-85 (CE),

Perkins 804D-33 Models (before serial number 8111)

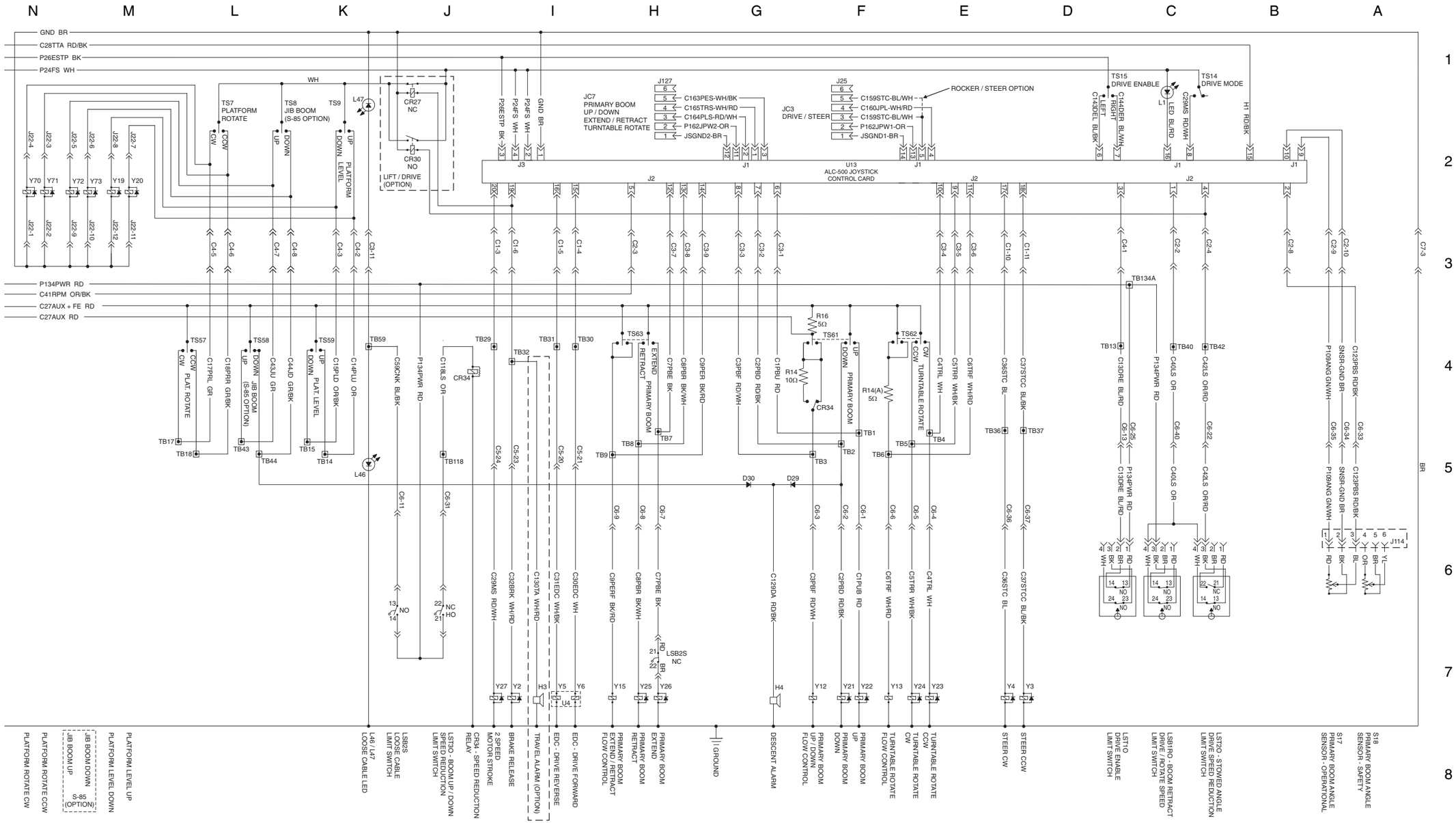

https://truckmanualshub.com/

Electrical Schematic, S-80 and S-85 (CE),
Perkins 804D-33 Models (before serial number 8111)

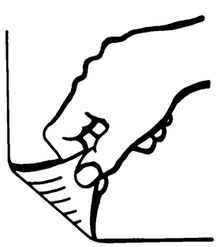

https://truckmanualshub.com/

Ground Control Box Terminal Strip Wiring Diagram, S-80 and S-85 (CE),
Perkins 804D-33 Models (before serial number 8111)

https://truckmanualshub.com/

Ground Control Box Terminal Strip Wiring Diagram, S-80 and S-85 (CE), Perkins 804D-33 Models (before serial number 8111)

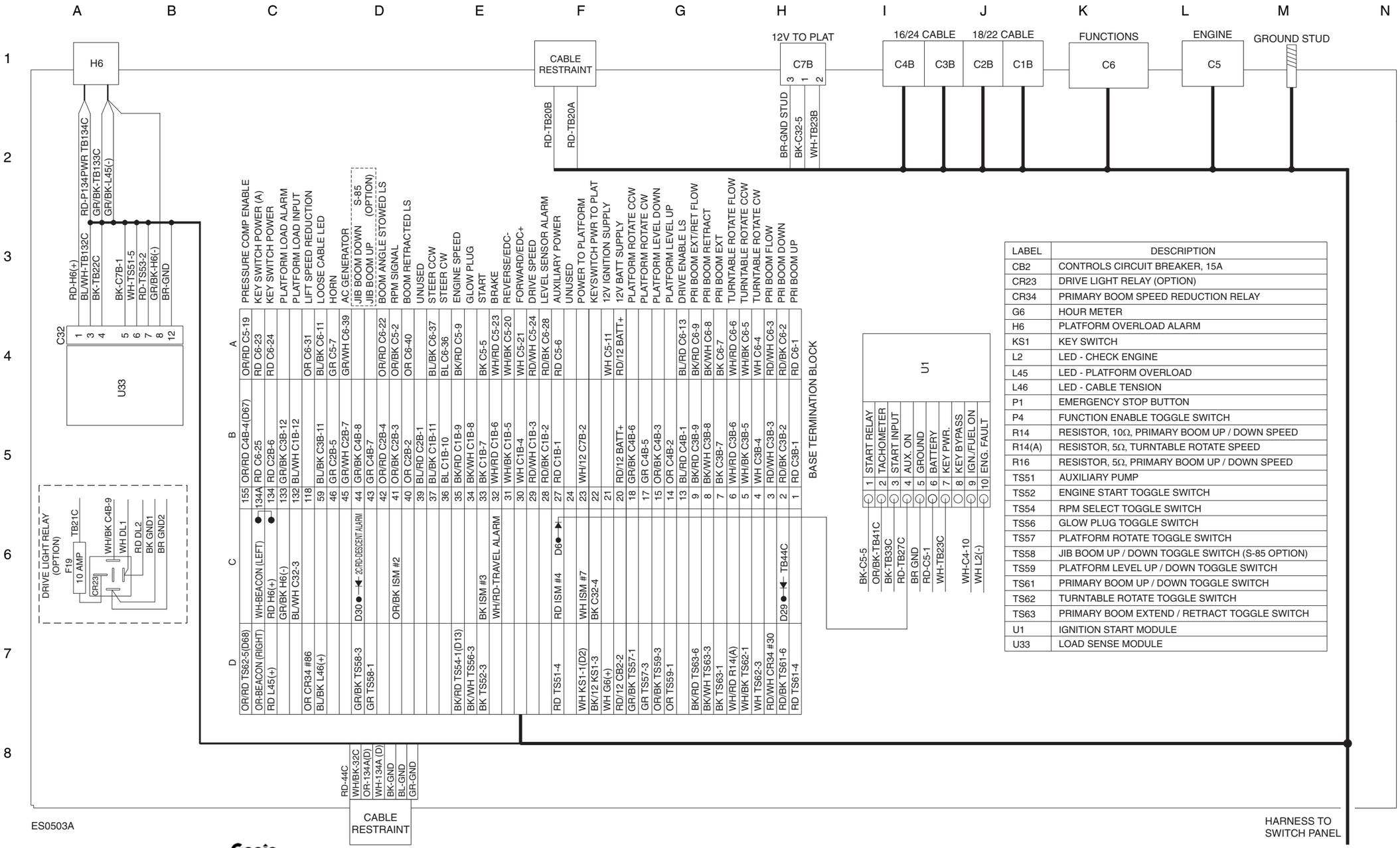

LABEL	DESCRIPTION
CB2	CONTROLS CIRCUIT BREAKER, 15A
CR23	DRIVE LIGHT RELAY (OPTION)
CR34	PRIMARY BOOM SPEED REDUCTION RELAY
G6	HOUR METER
H6	PLATFORM OVERLOAD ALARM
KS1	KEY SWITCH
L2	LED - CHECK ENGINE
L45	LED - PLATFORM OVERLOAD
L46	LED - CABLE TENSION
P1	EMERGENCY STOP BUTTON
P4	FUNCTION ENABLE TOGGLE SWITCH
R14	RESISTOR, 10Ω, PRIMARY BOOM UP / DOWN SPEED
R14(A)	RESISTOR, 5Ω, TURNTABLE ROTATE SPEED
R16	RESISTOR, 5Ω, PRIMARY BOOM UP / DOWN SPEED
TS51	AUXILIARY PUMP
TS52	ENGINE START TOGGLE SWITCH
TS54	RPM SELECT TOGGLE SWITCH
TS56	GLOW PLUG TOGGLE SWITCH
TS57	PLATFORM ROTATE TOGGLE SWITCH
TS58	JIB BOOM UP / DOWN TOGGLE SWITCH (S-85 OPTION)
TS59	PLATFORM LEVEL UP / DOWN TOGGLE SWITCH
TS61	PRIMARY BOOM UP / DOWN TOGGLE SWITCH
TS62	TURNTABLE ROTATE TOGGLE SWITCH
TS63	PRIMARY BOOM EXTEND / RETRACT TOGGLE SWITCH
U1	IGNITION START MODULE
U33	LOAD SENSE MODULE

https://truckmanualshub.com/

Ground Control Box Switch Panel Wiring Diagram, S-80 and S-85 (CE), Perkins 804D-33 Models (before serial number 8111)

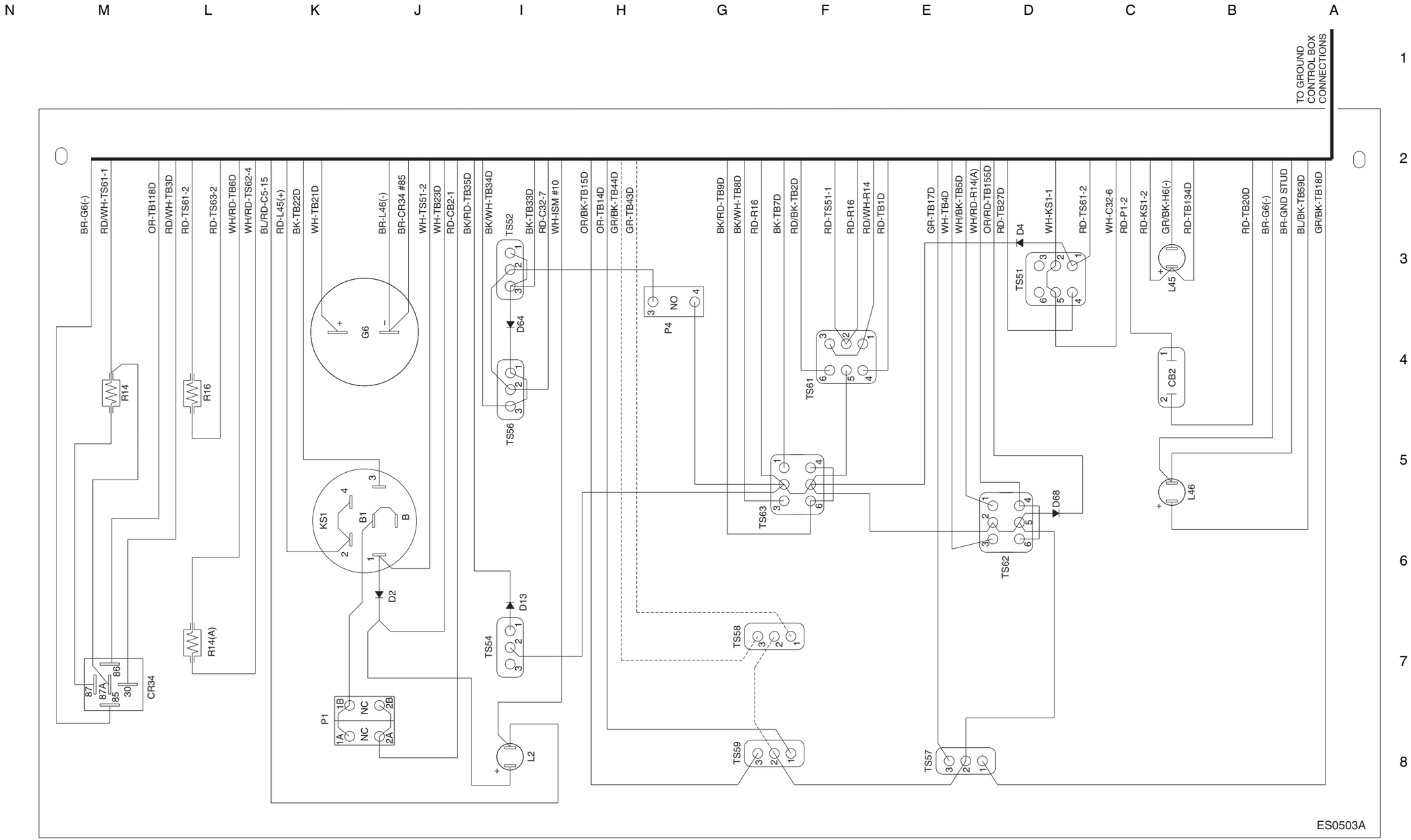

https://truckmanualshub.com/

Ground Control Box Switch Panel Wiring Diagram, S-80 and S-85 (CE),

Perkins 804D-33 Models (before serial number 8111)

https://truckmanualshub.com/

Platform Control Box Wiring Diagram, S-80 and S-85 (CE),

Perkins 804D-33 Models (before serial number 8111)

https://truckmanualshub.com/

Platform Control Box Wiring Diagram, S-80 and S-85 (CE), Perkins 804D-33 Models (before serial number 8111)

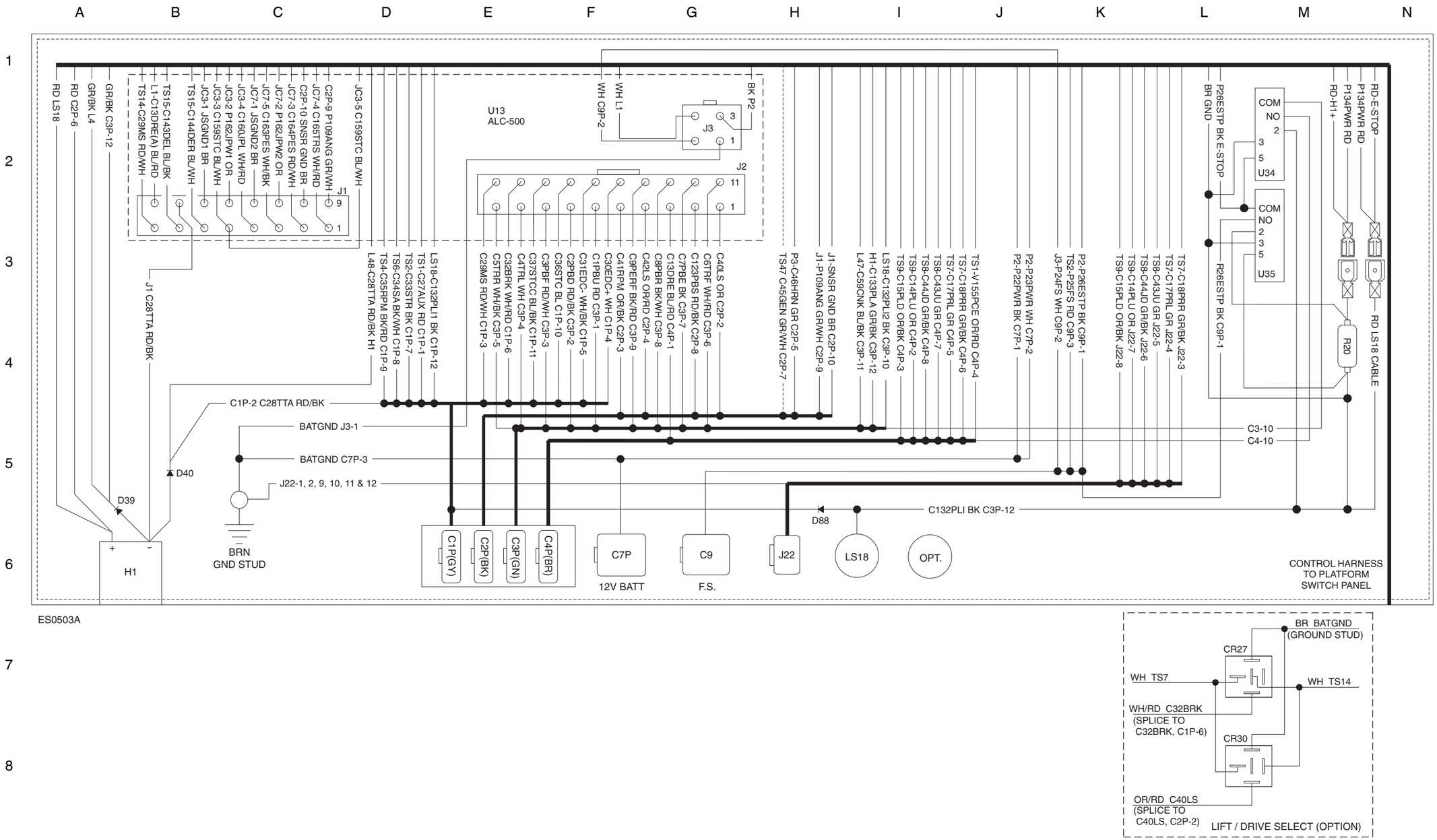

https://truckmanualshub.com/

Platform Control Box Switch Panel Wiring Diagram, S-80 and S-85 (CE), Perkins 804D-33 Models (before serial number 8111)

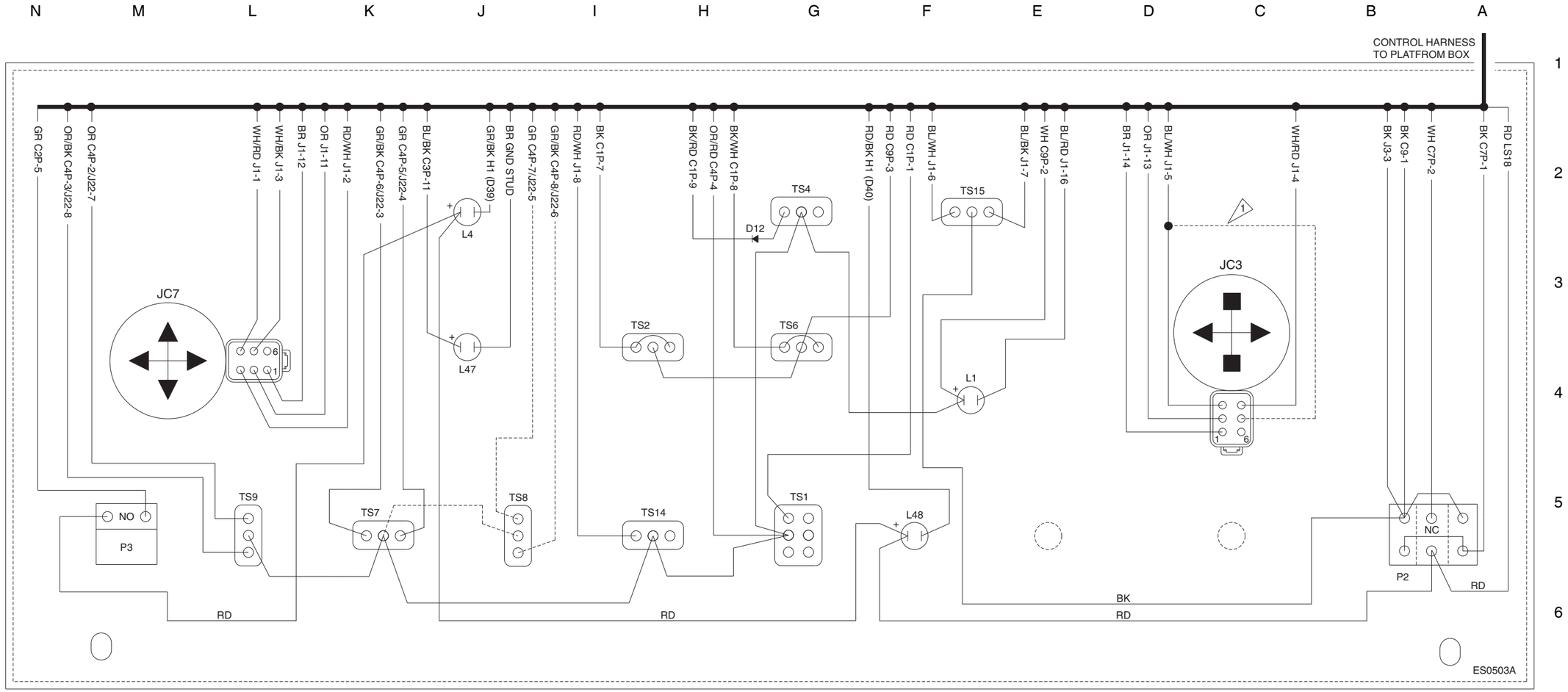

COMPONENT INDEX

CR27	LIFT / DRIVE SELECT - BRAKE CIRCUIT (OPTION)
CR30	LIFT / DRIVE SELECT - LIMIT SWITCH CIRCUIT (OPTION)
H1	TILT ALARM
J22	PLATFORM MANIFOLD
JC3	JOYSTICK - DRIVE / STEER
JC7	JOYSTICK - PRIMARY BOOM UP / DOWN, EXTEND / RETRACT, TURNTABLE ROTATE
L1	LED - DRIVE ENABLE
L4	LED - PLATFORM OVERLOAD
L47	LED - CABLE TENSION
L48	LED - TILT ALARM

LS18	PLATFORM OVERLOAD LIMIT SWITCH
P2	EMERGENCY STOP BUTTON
P3	HORN BUTTON
R20	RESISTOR - 4700Ω
TS1	AUXILIARY TOGGLE SWITCH
TS2	ENGINE START TOGGLE SWITCH
TS4	RPM SELECT TOGGLE SWITCH
TS6	GLOW PLUG TOGGLE SWITCH
TS7	PLATFORM ROTATE TOGGLE SWITCH
TS8	JIB BOOM UP/DOWN TOGGLE SWITCH (S-85 OPTION)

TS9	PLATFORM LEVEL UP/DOWN TOGGLE SWITCH
TS14	DRIVE SPEED TOGGLE SWITCH
TS15	DRIVE ENABLE TOGGLE SWITCH
U13	ALC500 JOYSTICK CONTROLLER CARD
U34	TIME DELAY RELAY - 2 SECONDS, 10A
U35	TIME DELAY RELAY - 2 SECONDS, 30A

NOTE: DASHED LINES INDICATE OPTIONS

1 ROCKER / STEER OPTION

https://truckmanualshub.com/

Platform Control Box Switch Panel Wiring Diagram, S-80 and S-85 (CE),

Perkins 804D-33 Models (before serial number 8111)

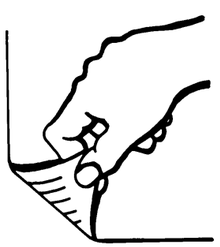

https://truckmanualshub.com/

Electrical Schematic, S-80 and S-85 (CE),
Perkins 804D-33 Models (after serial number 8110)

https://truckmanualshub.com/

Electrical Schematic, S-80 and S-85 (CE),

Perkins 804D-33 Models (after serial number 8110)

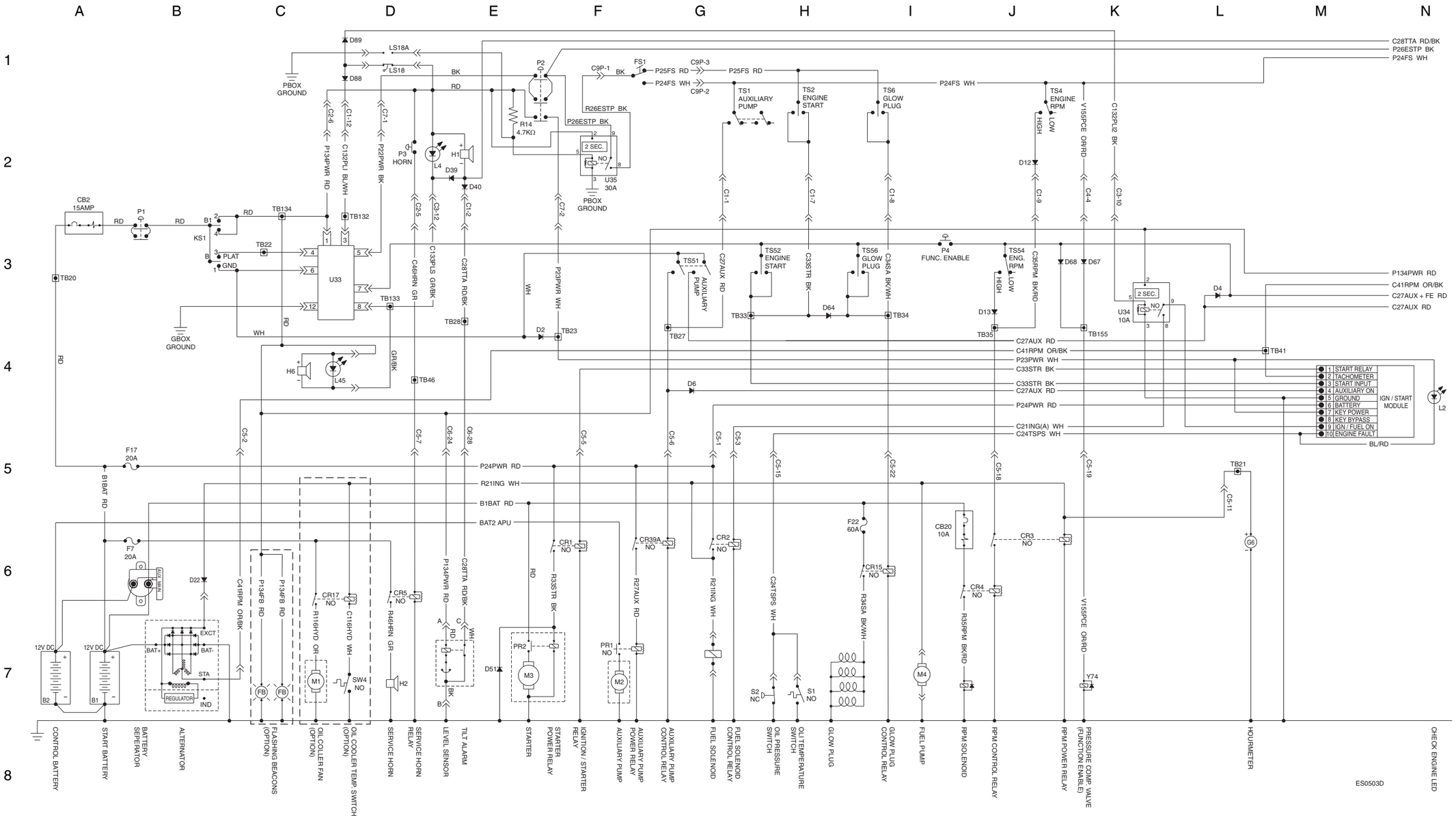

https://truckmanualshub.com/

Electrical Schematic, S-80 and S-85 (CE),

Perkins 804D-33 Models (after serial number 8110)

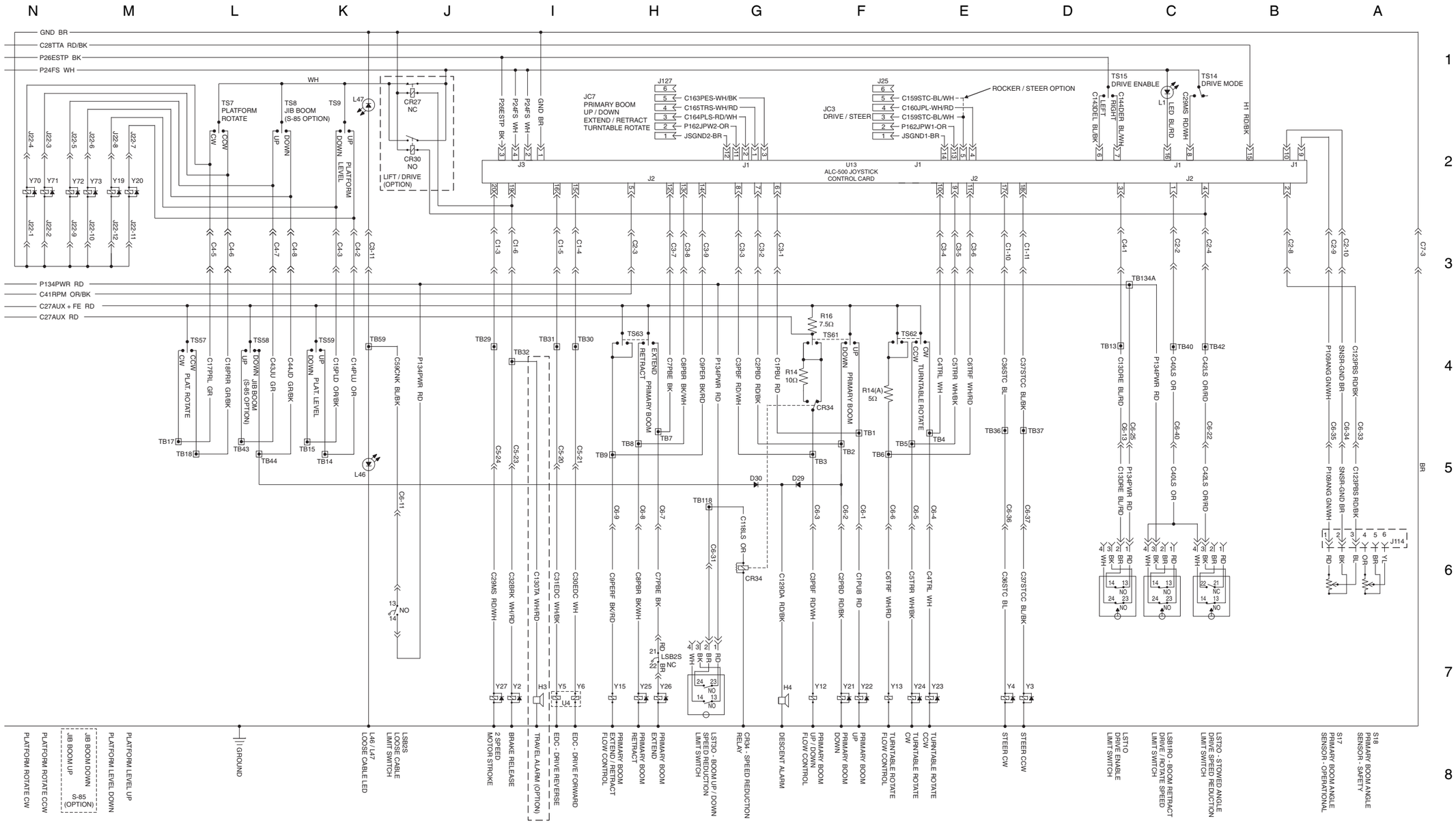

https://truckmanualshub.com/

Electrical Schematic, S-80 and S-85 (CE)

Perkins 804D-33 Models (after serial number 8110)

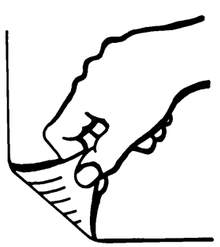

https://truckmanualshub.com/

Ground Control Box Terminal Strip Wiring Diagram, S-80 and S-85 (CE),
Perkins 804D-33 Models (after serial number 8110)

https://truckmanualshub.com/

Ground Control Box Terminal Strip Wiring Diagram, S-80 and S-85 (CE), Perkins 804D-33 Models (after serial number 8110)

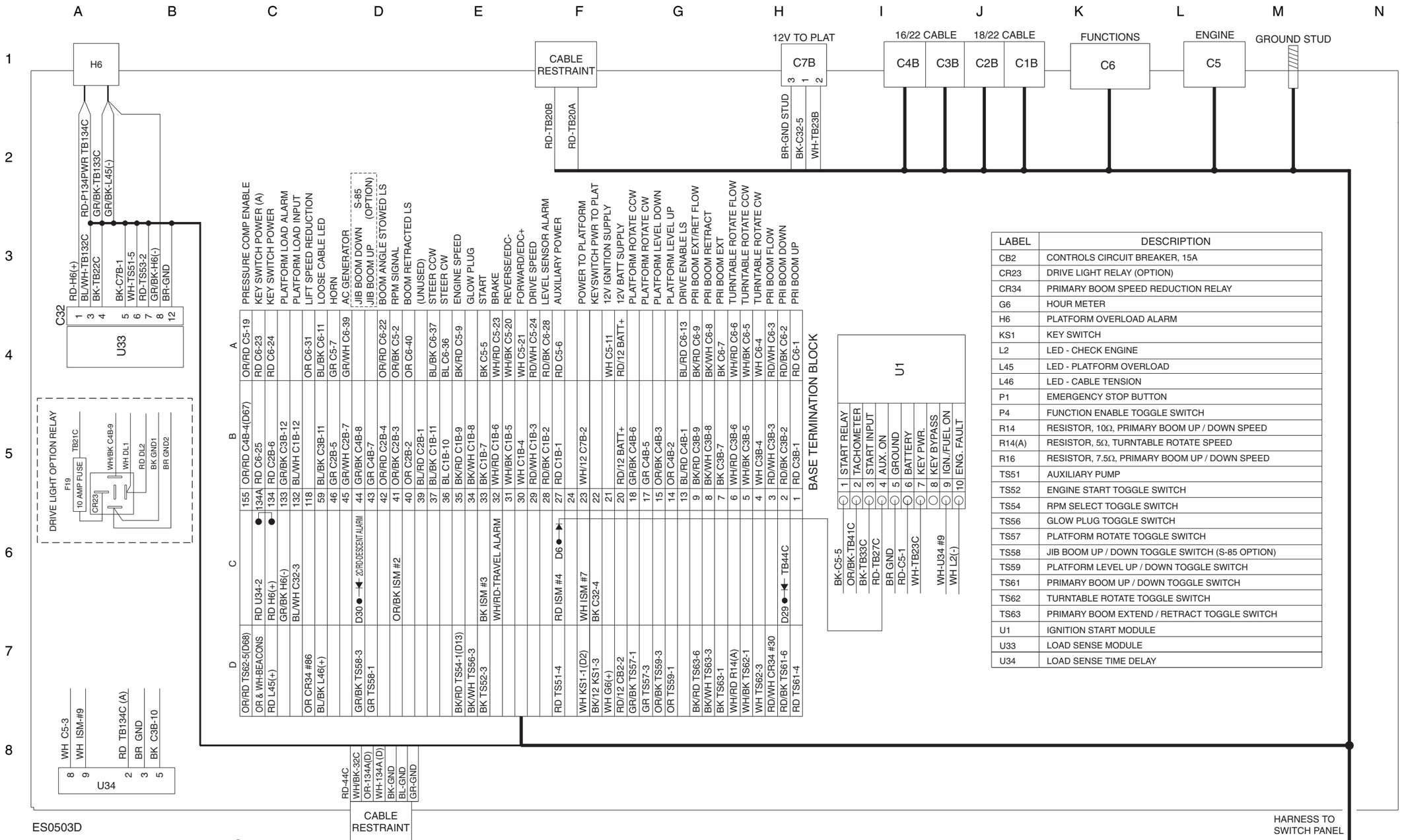

LABEL	DESCRIPTION
CB2	CONTROLS CIRCUIT BREAKER, 15A
CR23	DRIVE LIGHT RELAY (OPTION)
CR34	PRIMARY BOOM SPEED REDUCTION RELAY
G6	HOUR METER
H6	PLATFORM OVERLOAD ALARM
KS1	KEY SWITCH
L2	LED - CHECK ENGINE
L45	LED - PLATFORM OVERLOAD
L46	LED - CABLE TENSION
P1	EMERGENCY STOP BUTTON
P4	FUNCTION ENABLE TOGGLE SWITCH
R14	RESISTOR, 10Ω, PRIMARY BOOM UP / DOWN SPEED
R14(A)	RESISTOR, 5Ω, TURNTABLE ROTATE SPEED
R16	RESISTOR, 7.5Ω, PRIMARY BOOM UP / DOWN SPEED
TS51	AUXILIARY PUMP
TS52	ENGINE START TOGGLE SWITCH
TS54	RPM SELECT TOGGLE SWITCH
TS56	GLOW PLUG TOGGLE SWITCH
TS57	PLATFORM ROTATE TOGGLE SWITCH
TS58	JIB BOOM UP / DOWN TOGGLE SWITCH (S-85 OPTION)
TS59	PLATFORM LEVEL UP / DOWN TOGGLE SWITCH
TS61	PRIMARY BOOM UP / DOWN TOGGLE SWITCH
TS62	TURNTABLE ROTATE TOGGLE SWITCH
TS63	PRIMARY BOOM EXTEND / RETRACT TOGGLE SWITCH
U1	IGNITION START MODULE
U33	LOAD SENSE MODULE
U34	LOAD SENSE TIME DELAY

https://truckmanualshub.com/

Ground Control Box Switch Panel Wiring Diagram, S-80 and S-85 (CE), Perkins 804D-33 Models (after serial number 8110)

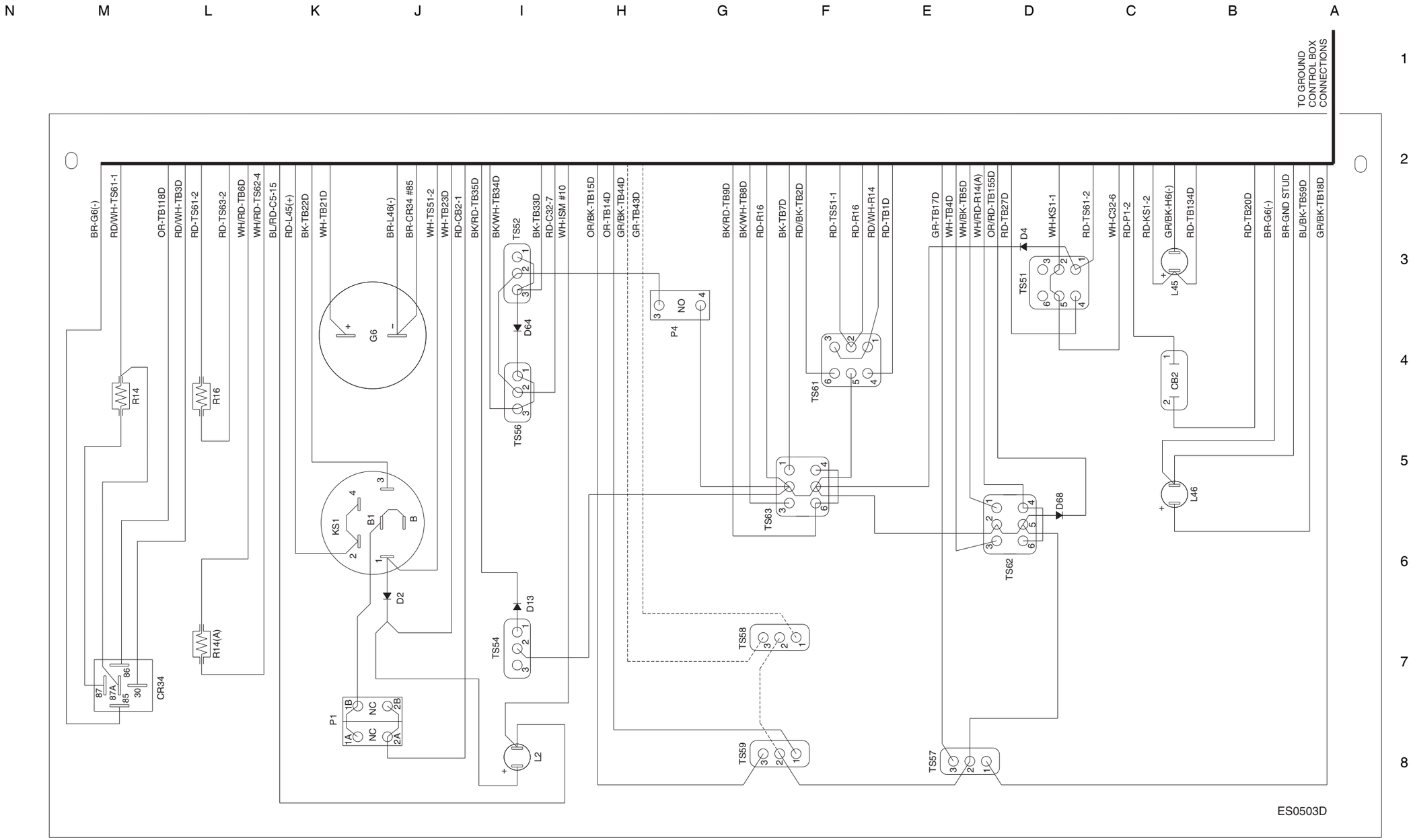

https://truckmanualshub.com/

Ground Control Box Switch Panel Wiring Diagram, S-80 and S-85 (CE),

Perkins 804D-33 Models (after serial number 8110)

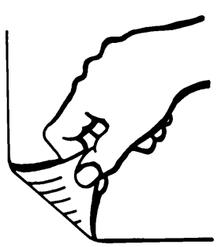

https://truckmanualshub.com/

Platform Control Box Wiring Diagram,
S-80 and S-85 (CE),
Perkins 804D-33 Models (after serial number 8110)

https://truckmanualshub.com/

Platform Control Box Wiring Diagram, S-80 and S-85 (CE), Perkins 804D-33 Models (after serial number 8110)

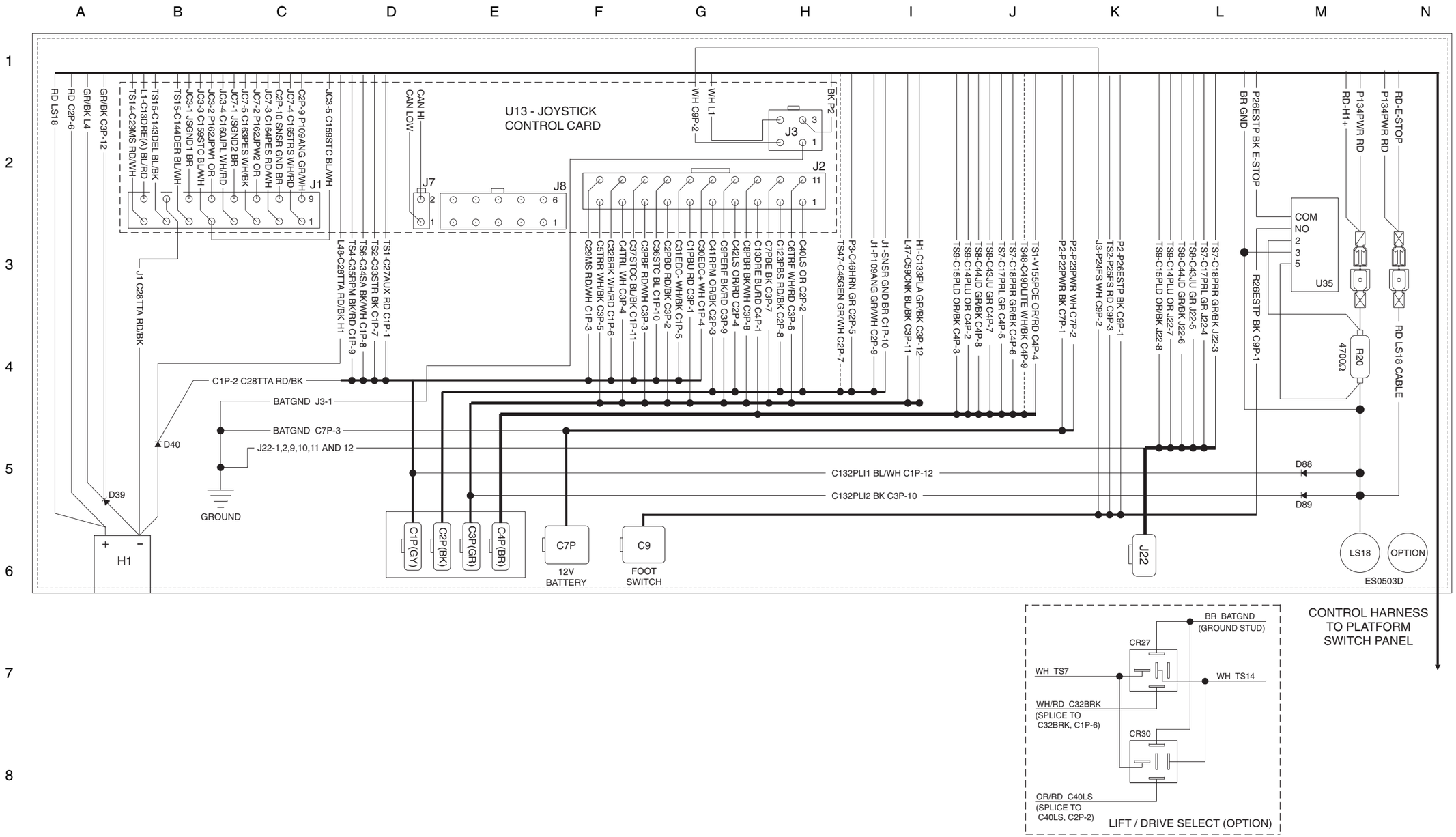

https://truckmanualshub.com/

Platform Control Box Switch Panel Wiring Diagram, S-80 and S-85 (CE), Perkins 804D-33 Models (after serial number 8110)

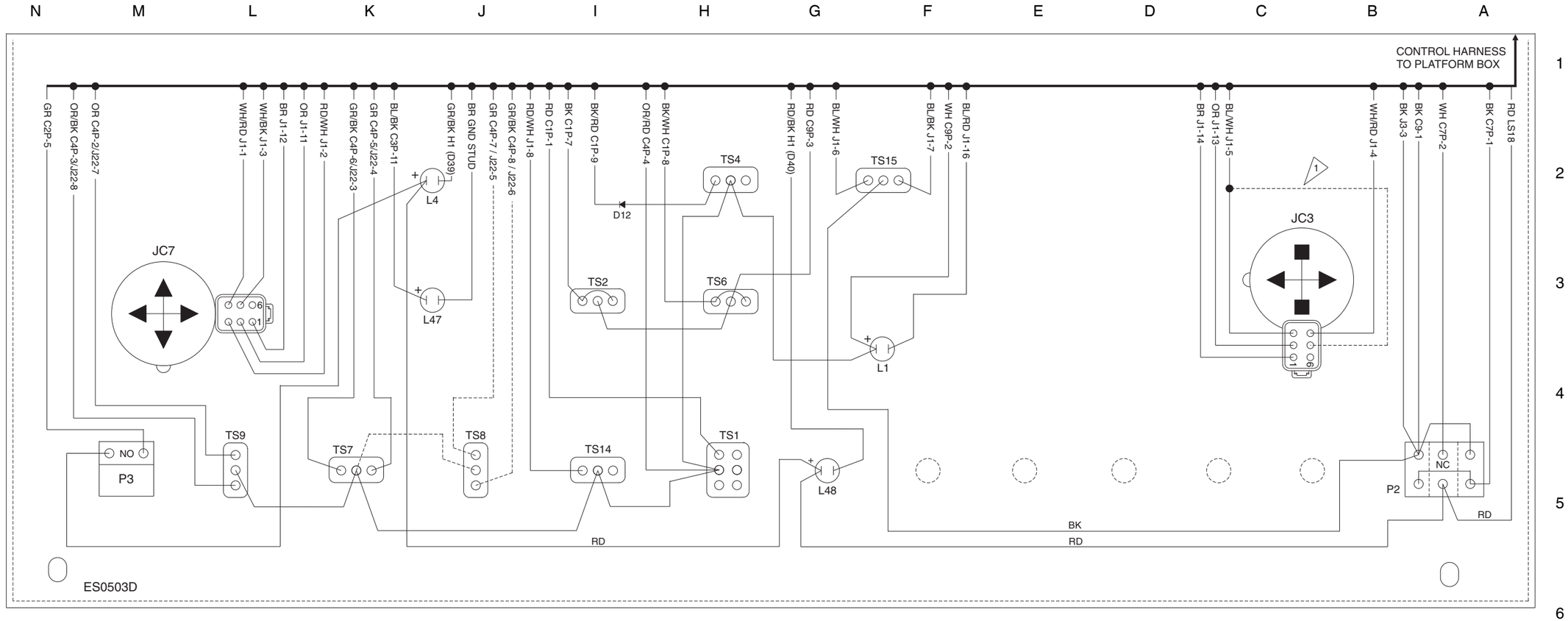

COMPONENT INDEX

CR27	LIFT / DRIVE SELECT - BRAKE CIRCUIT (OPTION)
CR30	LIFT / DRIVE SELECT - LIMIT SWITCH CIRCUIT (OPTION)
H1	TILT ALARM
JC3	JOYSTICK - DRIVE / STEER
JC7	JOYSTICK - PRIMARY BOOM UP / DOWN, EXTEND / RETRACT, TURNTABLE ROTATE
L1	LED - DRIVE ENABLE
L4	LED - PLATFORM OVERLOAD
L47	LED - CABLE TENSION
L48	LED - TILT ALARM
LS18	PLATFORM OVERLOAD LIMIT SWITCH
P2	EMERGENCY STOP BUTTON
P3	HORN BUTTON
R20	RESISTOR - 4700Ω
TS1	AUXILIARY TOGGLE SWITCH
TS2	ENGINE START TOGGLE SWITCH
TS4	RPM SELECT TOGGLE SWITCH
TS6	GLOW PLUG TOGGLE SWITCH

TS7	PLATFORM ROTATE TOGGLE SWITCH
TS8	JIB BOOM UP/DOWN TOGGLE SWITCH (S-85 OPTION)
TS9	PLATFORM LEVEL UP/DOWN TOGGLE SWITCH
TS14	DRIVE SPEED TOGGLE SWITCH
TS15	DRIVE ENABLE TOGGLE SWITCH
U13	ALC500 JOYSTICK CONTROLLER CARD
U35	TIME DELAY RELAY

NOTE: DASHED LINES INDICATE OPTIONS

1 ROCKER / STEER OPTION

https://truckmanualshub.com/

Platform Control Box Switch Panel Wiring Diagram, S-80 and S-85 (CE),

Perkins 804D-33 Models (after serial number 8110)

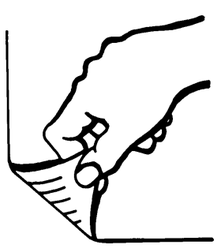

https://truckmanualshub.com/

Electrical Schematic, S-80X,
Perkins 804D-33 Models

https://truckmanualshub.com/

Electrical Schematic, S-80X,
Perkins 804D-33 Models

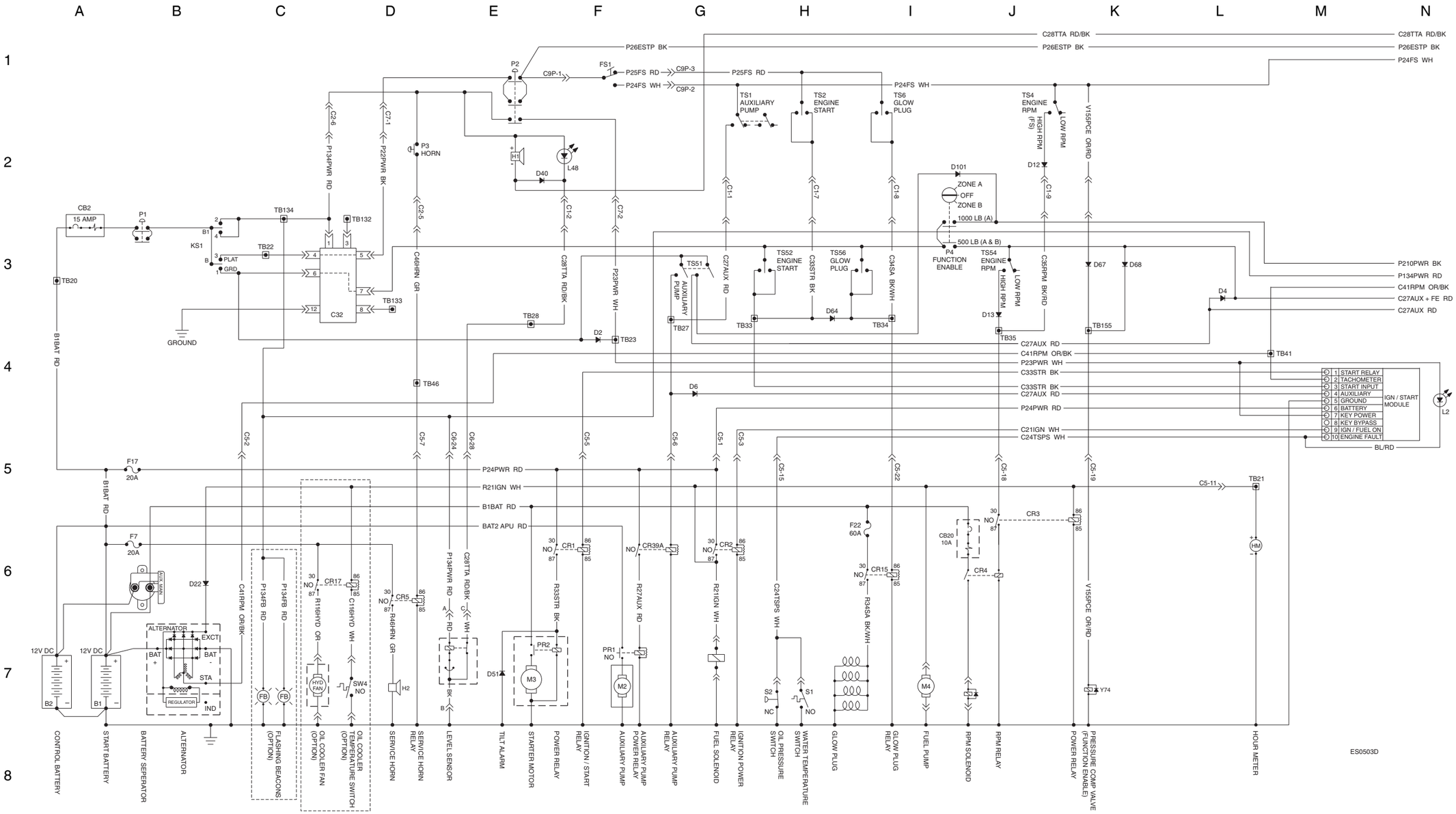

https://truckmanualshub.com/

Electrical Schematic, S-80X,
Perkins 804D-33 Models

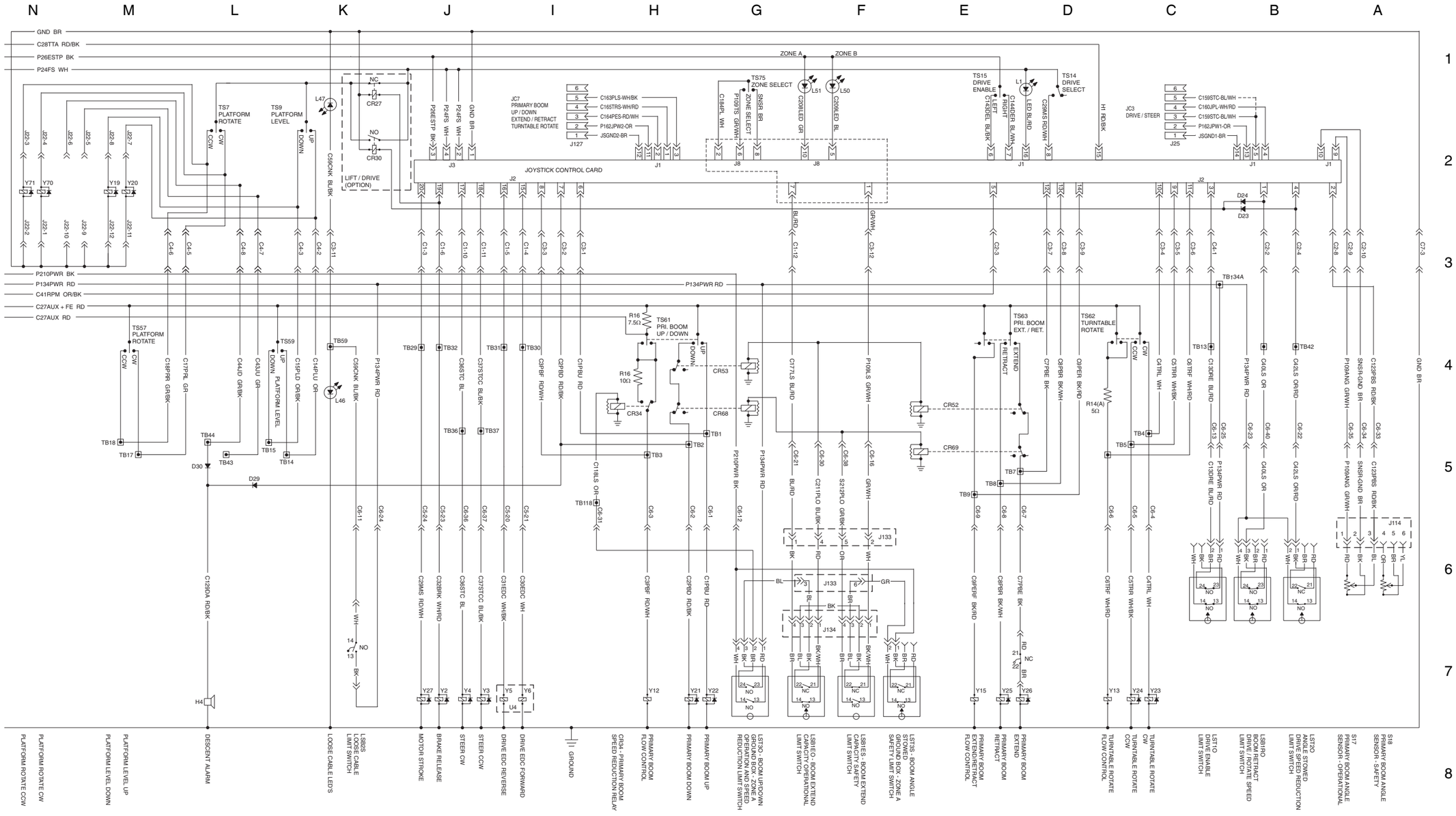

https://truckmanualshub.com/

Electrical Schematic, S-80X,
Perkins 804D-33 Models

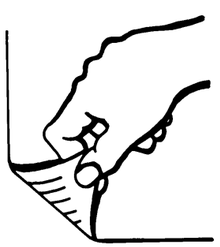

https://truckmanualshub.com/

Ground Control Box Terminal Strip Wiring Diagram, S-80X,
Perkins 804D-33 Models

https://truckmanualshub.com/

Ground Control Box Terminal Strip Wiring Diagram, S-80X,

Perkins 804D-33 Models

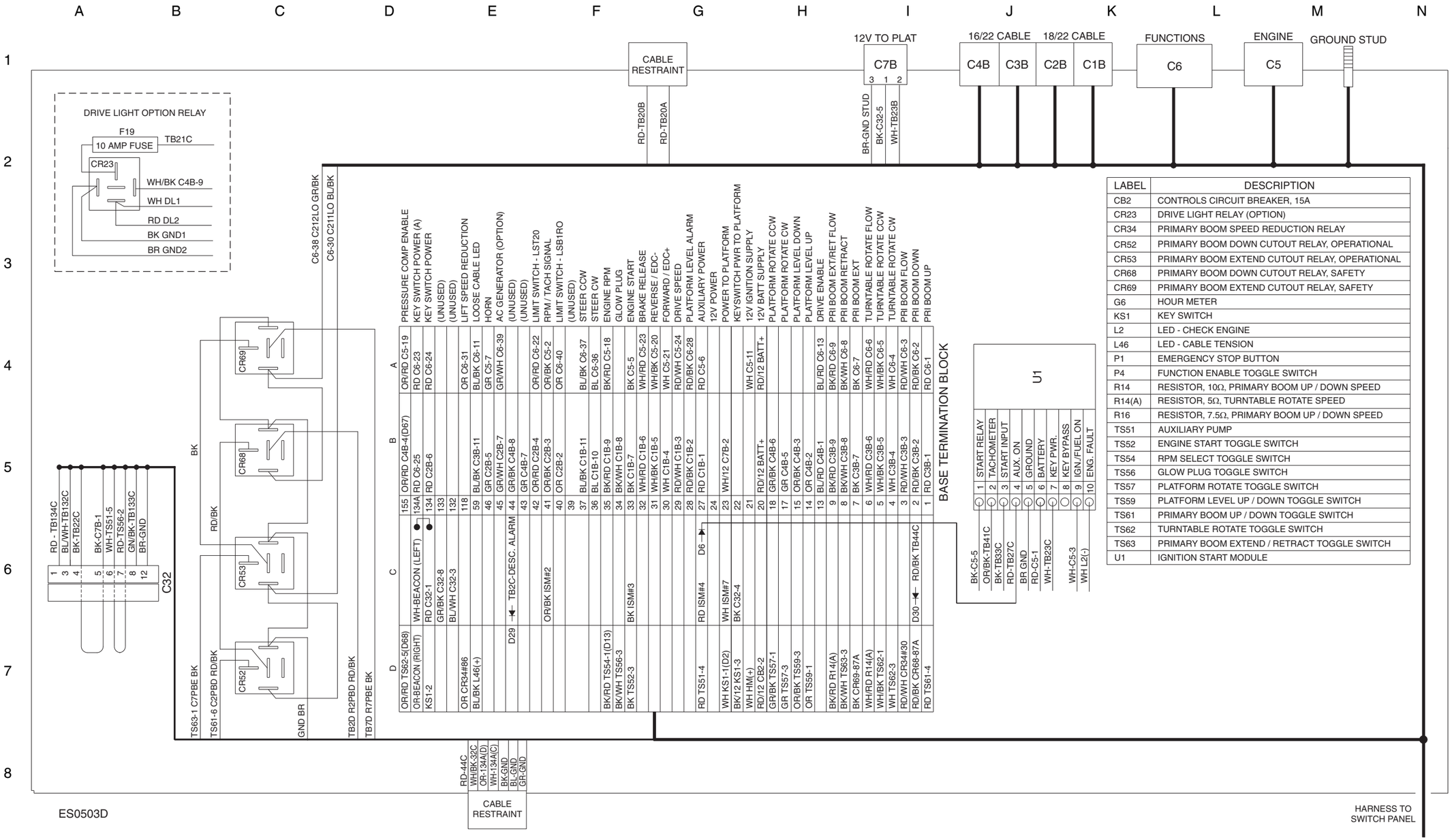

LABEL	DESCRIPTION
CB2	CONTROLS CIRCUIT BREAKER, 15A
CR23	DRIVE LIGHT RELAY (OPTION)
CR34	PRIMARY BOOM SPEED REDUCTION RELAY
CR52	PRIMARY BOOM DOWN CUTOUT RELAY, OPERATIONAL
CR53	PRIMARY BOOM EXTEND CUTOUT RELAY, OPERATIONAL
CR68	PRIMARY BOOM DOWN CUTOUT RELAY, SAFETY
CR69	PRIMARY BOOM EXTEND CUTOUT RELAY, SAFETY
G6	HOUR METER
KS1	KEY SWITCH
L2	LED - CHECK ENGINE
L46	LED - CABLE TENSION
P1	EMERGENCY STOP BUTTON
P4	FUNCTION ENABLE TOGGLE SWITCH
R14	RESISTOR, 10Ω, PRIMARY BOOM UP / DOWN SPEED
R14(A)	RESISTOR, 5Ω, TURNTABLE ROTATE SPEED
R16	RESISTOR, 7.5Ω, PRIMARY BOOM UP / DOWN SPEED
TS51	AUXILIARY PUMP
TS52	ENGINE START TOGGLE SWITCH
TS54	RPM SELECT TOGGLE SWITCH
TS56	GLOW PLUG TOGGLE SWITCH
TS57	PLATFORM ROTATE TOGGLE SWITCH
TS59	PLATFORM LEVEL UP / DOWN TOGGLE SWITCH
TS61	PRIMARY BOOM UP / DOWN TOGGLE SWITCH
TS62	TURNTABLE ROTATE TOGGLE SWITCH
TS63	PRIMARY BOOM EXTEND / RETRACT TOGGLE SWITCH
U1	IGNITION START MODULE

https://truckmanualshub.com/

Ground Control Box Switch Panel Wiring Diagram, S-80X,

Perkins 804D-33 Models

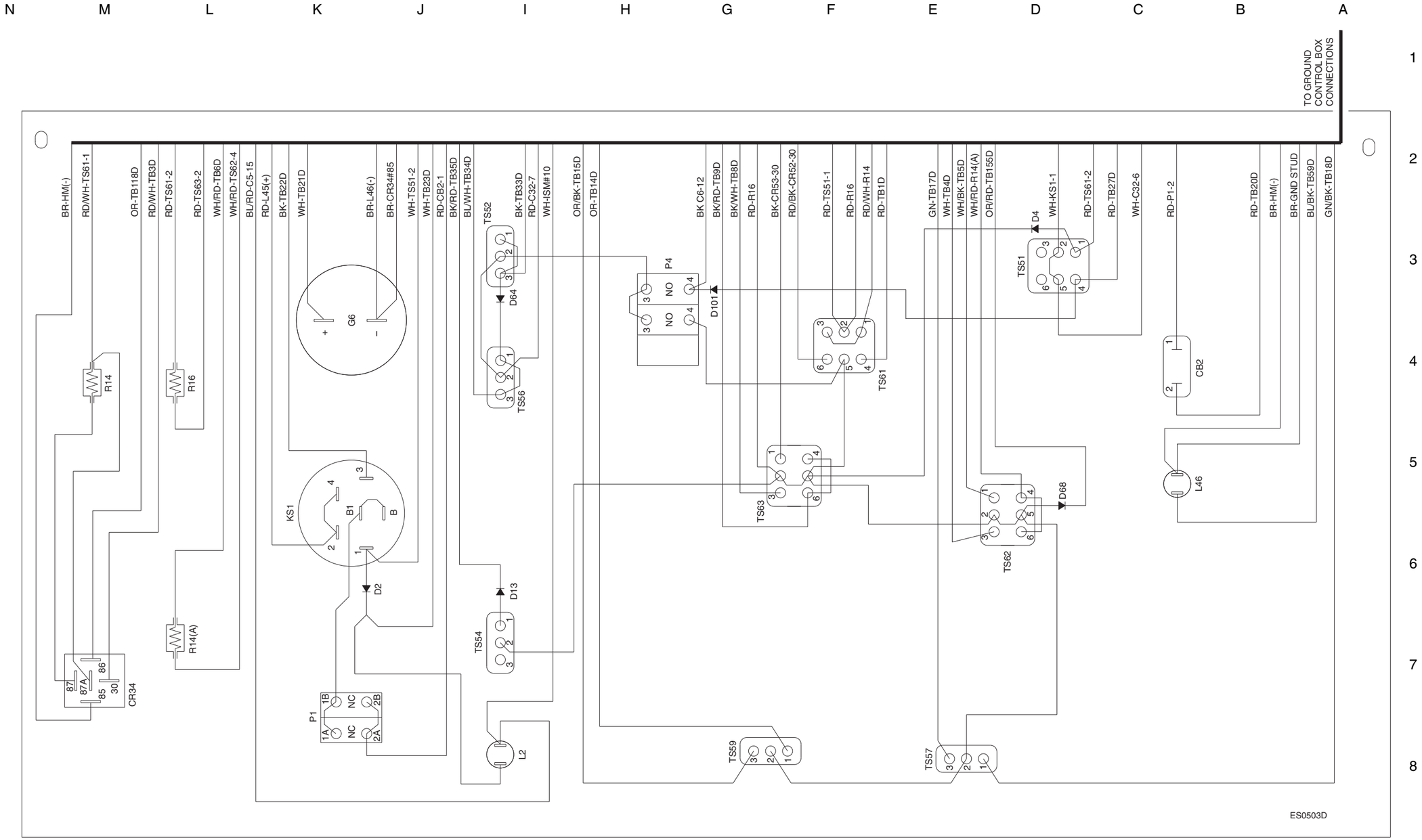

https://truckmanualshub.com/

Ground Control Box Switch Panel Wiring Diagram, S-80X,
Perkins 804D-33 Models

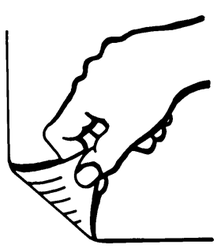

https://truckmanualshub.com/

Platform Control Box Wiring Diagram, S-80X,
Perkins 804D-33 Models

https://truckmanualshub.com/

Platform Control Box Wiring Diagram, S-80X,
Perkins 804D-33 Models

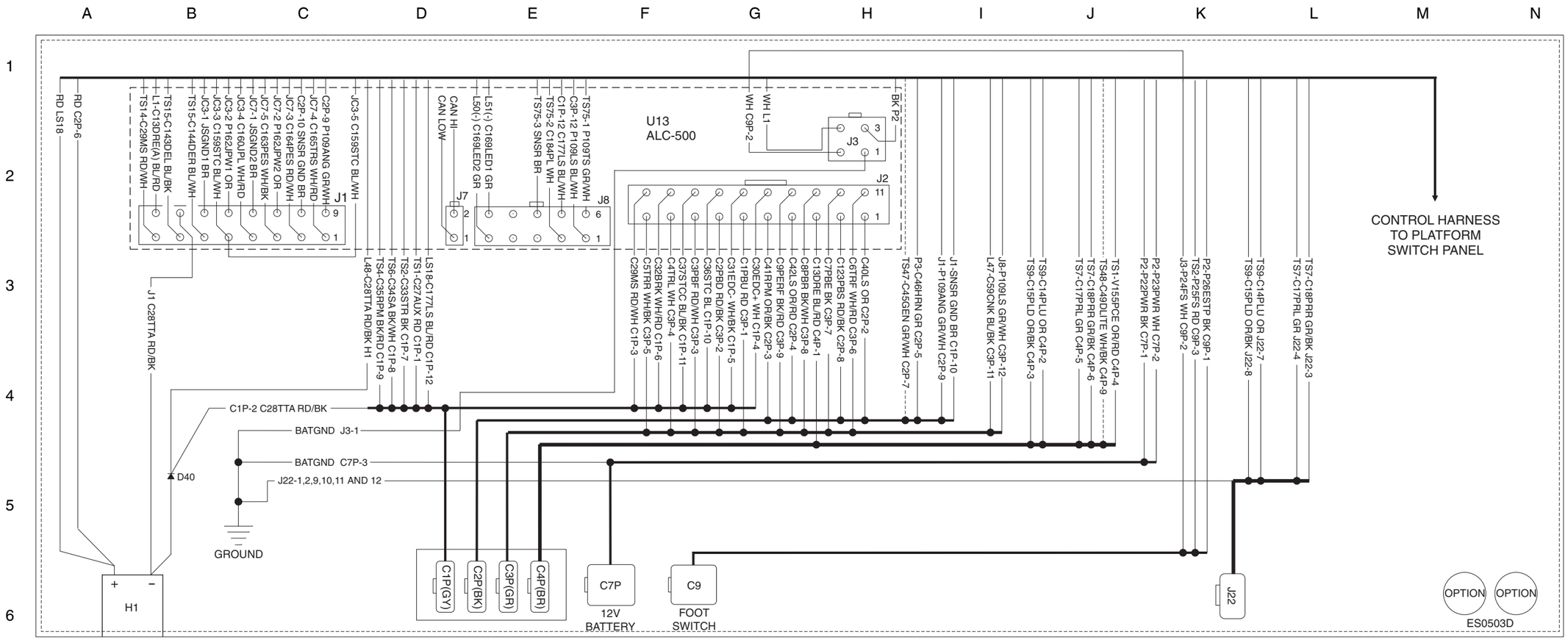

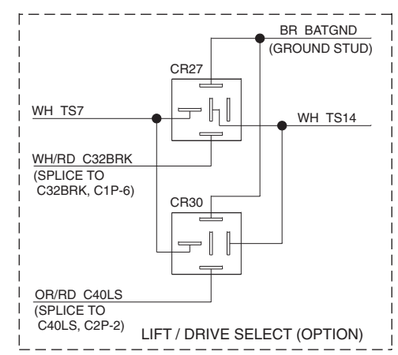

https://truckmanualshub.com/

Platform Control Box Switch Panel Wiring Diagram, S-80X,

Perkins 804D-33 Models

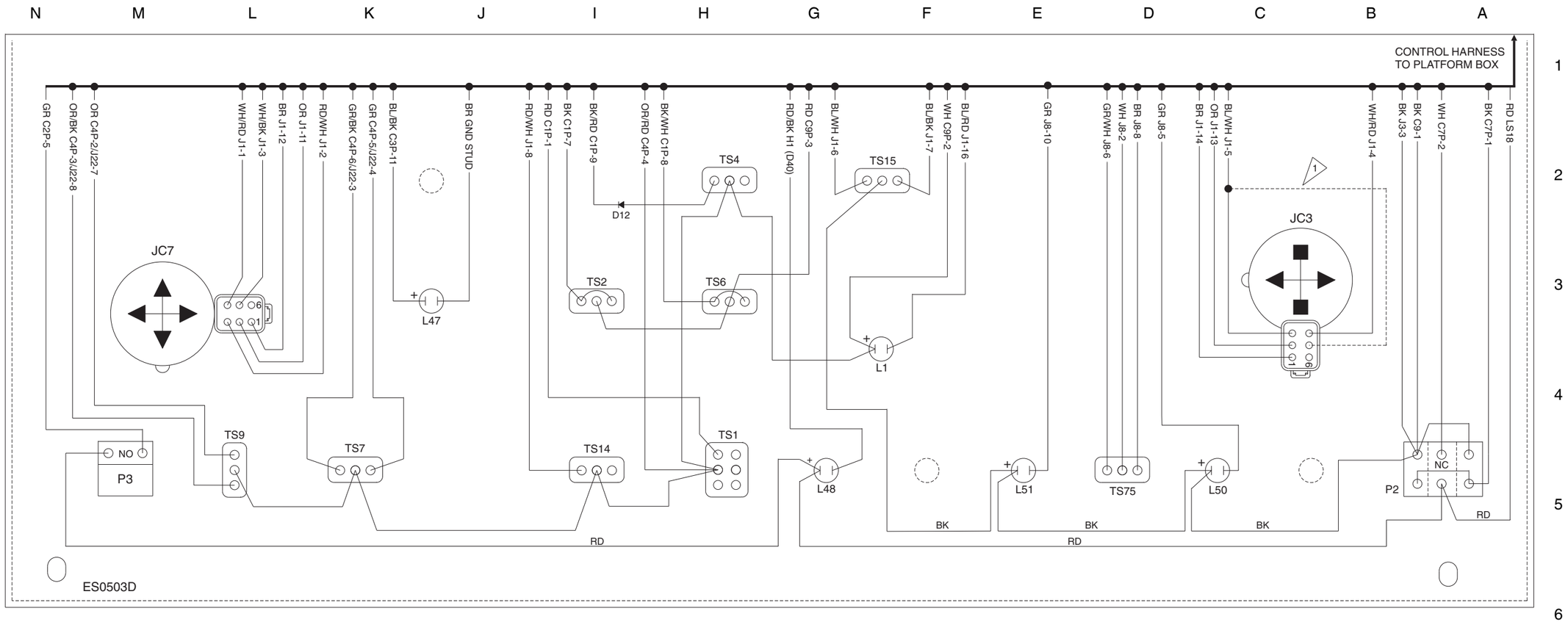

COMPONENT INDEX

H1	TILT ALARM
JC3	JOYSTICK - DRIVE / STEER
JC7	JOYSTICK - PRIMARY BOOM UP / DOWN, EXTEND / RETRACT, TURNTABLE ROTATE
L1	LED - DRIVE ENABLE
L47	LED - CABLE TENSION
L48	LED - TILT ALARM
L50	LED - ZONE B, 500 LB CAPACITY
L51	LED - ZONE A, 1000 LB CAPACITY
P2	EMERGENCY STOP BUTTON
P3	HORN BUTTON
TS1	AUXILIARY TOGGLE SWITCH
TS2	ENGINE START TOGGLE SWITCH
TS4	RPM SELECT TOGGLE SWITCH
TS6	GLOW PLUG TOGGLE SWITCH
TS7	PLATFORM ROTATE TOGGLE SWITCH
TS9	PLATFORM LEVEL UP/DOWN TOGGLE SWITCH
TS14	DRIVE SPEED TOGGLE SWITCH
TS15	DRIVE ENABLE TOGGLE SWITCH
TS75	ZONE SELECT TOGGLE SWITCH (OPTION)
U13	ALC500 JOYSTICK CONTROLLER CARD

NOTE: DASHED LINES INDICATE OPTIONS

1 ROCKER / STEER OPTION

https://truckmanualshub.com/

Platform Control Box Switch Panel Wiring Diagram, S-80X,
Perkins 804D-33 Models

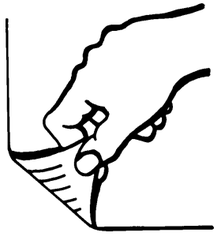

https://truckmanualshub.com/

Electrical Schematic, S-80 and S-85 (ANSI / CSA / AS)

Continental TME27 Models

https://truckmanualshub.com/

Electrical Schematic, S-80 and S-85 (ANSI / CSA / AS), Continental TME27 Models

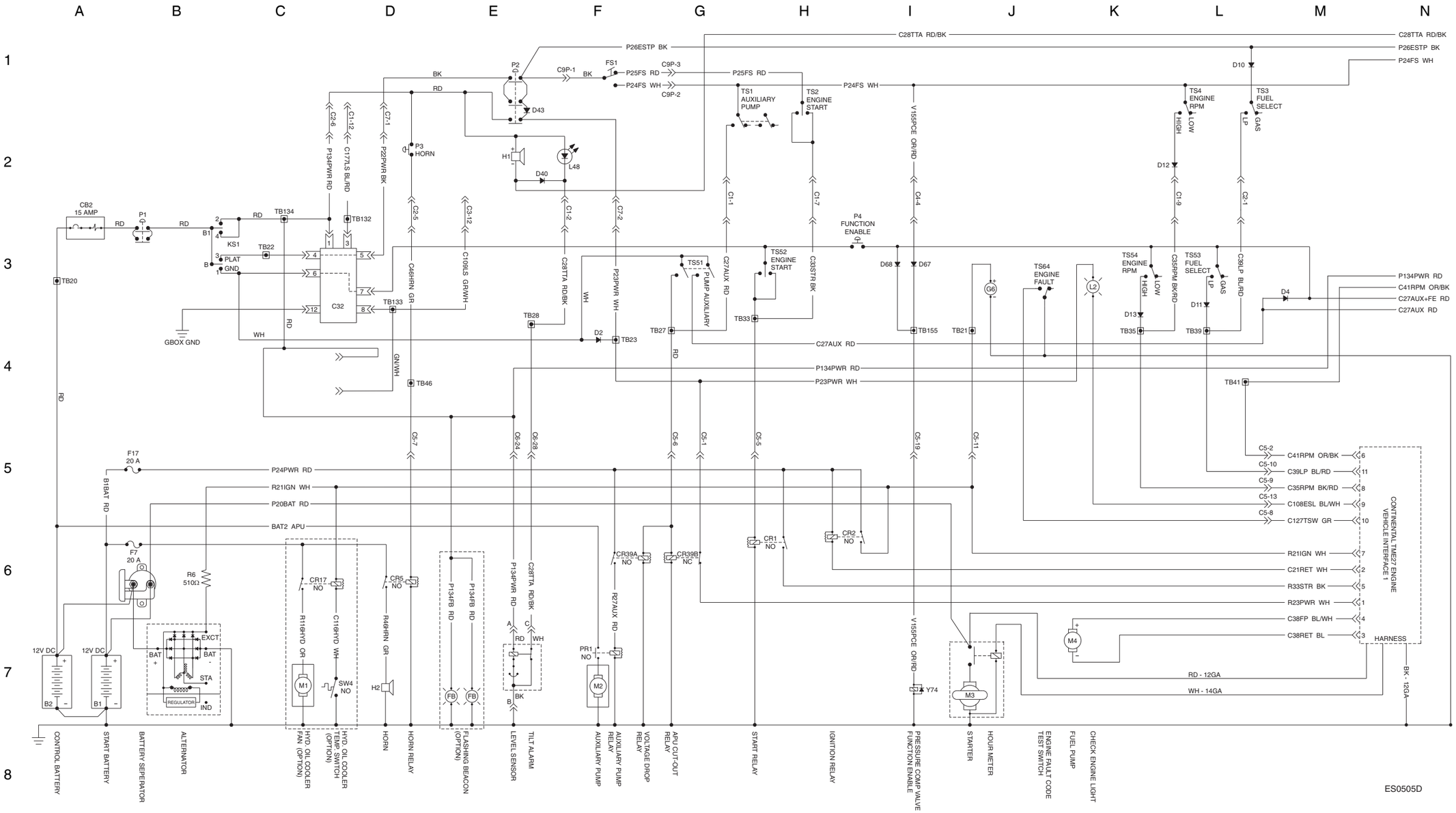

https://truckmanualshub.com/

Electrical Schematic, S-80 and S-85 (ANSI / CSA / AS)

Continental TME27 Models

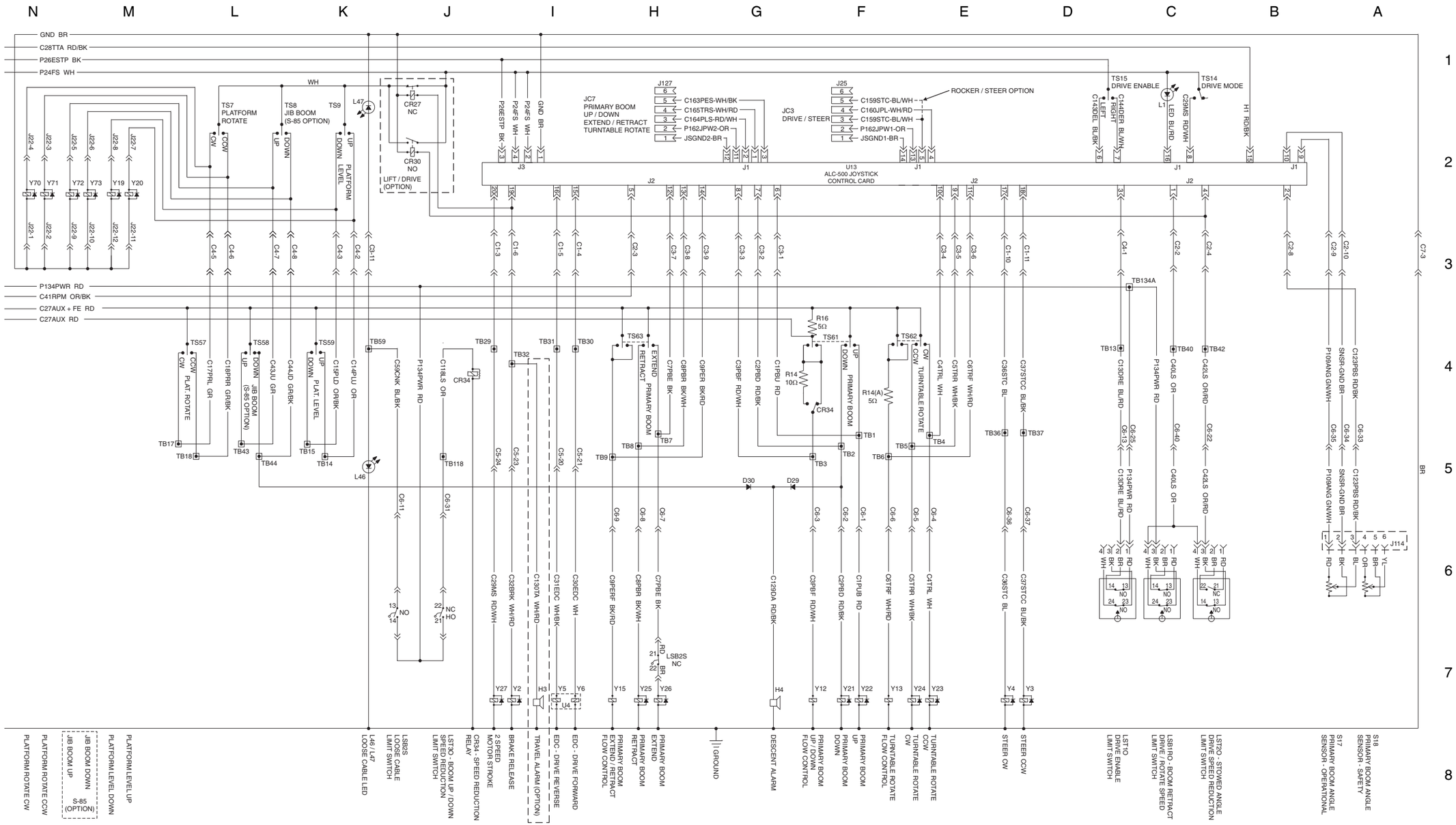

https://truckmanualshub.com/

Electrical Schematic, S-80 and S-85 (ANSI / CSA / AS),
Continental TME27 Models

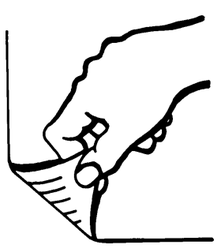

https://truckmanualshub.com/

Ground Control Box Terminal Strip Wiring Diagram, S-80 and S-85 (ANSI / CSA / AS),
Continental TME27 Models

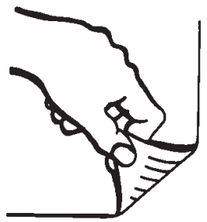

https://truckmanualshub.com/

Ground Control Box Terminal Strip Wiring Diagram, S-80 and S-85 (ANSI / CSA / AS), Continental TME27 Models

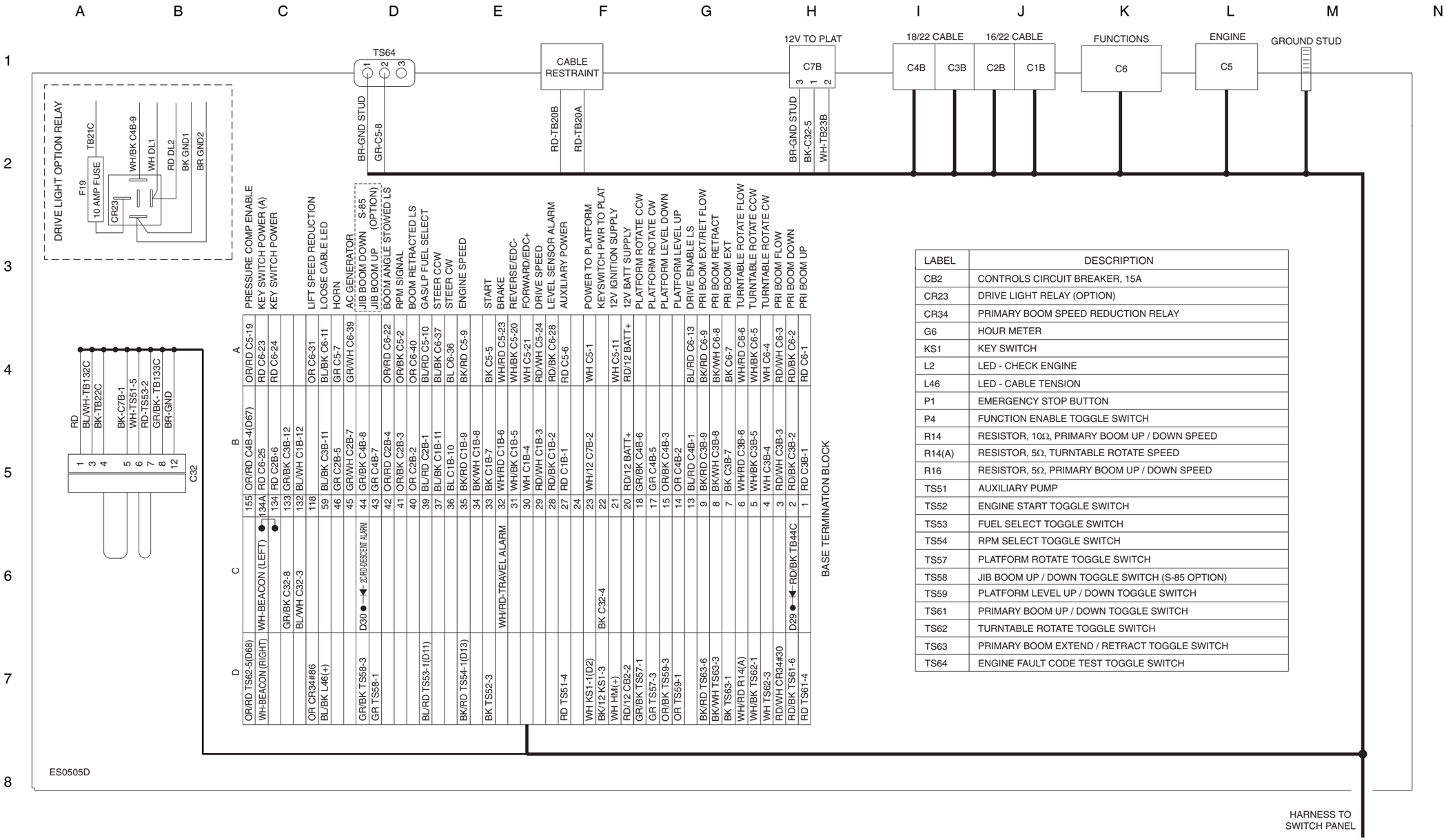

LABEL	DESCRIPTION
CB2	CONTROLS CIRCUIT BREAKER, 15A
CR23	DRIVE LIGHT RELAY (OPTION)
CR34	PRIMARY BOOM SPEED REDUCTION RELAY
G6	HOUR METER
KS1	KEY SWITCH
L2	LED - CHECK ENGINE
L46	LED - CABLE TENSION
P1	EMERGENCY STOP BUTTON
P4	FUNCTION ENABLE TOGGLE SWITCH
R14	RESISTOR, 10Ω, PRIMARY BOOM UP / DOWN SPEED
R14(A)	RESISTOR, 5Ω, TURNTABLE ROTATE SPEED
R16	RESISTOR, 5Ω, PRIMARY BOOM UP / DOWN SPEED
TS51	AUXILIARY PUMP
TS52	ENGINE START TOGGLE SWITCH
TS53	FUEL SELECT TOGGLE SWITCH
TS54	RPM SELECT TOGGLE SWITCH
TS57	PLATFORM ROTATE TOGGLE SWITCH
TS58	JIB BOOM UP / DOWN TOGGLE SWITCH (S-85 OPTION)
TS59	PLATFORM LEVEL UP / DOWN TOGGLE SWITCH
TS61	PRIMARY BOOM UP / DOWN TOGGLE SWITCH
TS62	TURNTABLE ROTATE TOGGLE SWITCH
TS63	PRIMARY BOOM EXTEND / RETRACT TOGGLE SWITCH
TS64	ENGINE FAULT CODE TEST TOGGLE SWITCH

https://truckmanualshub.com/

Ground Control Box Switch Panel Wiring Diagram, S-80 and S-85 (ANSI / CSA / AS), Continental TME27 Models

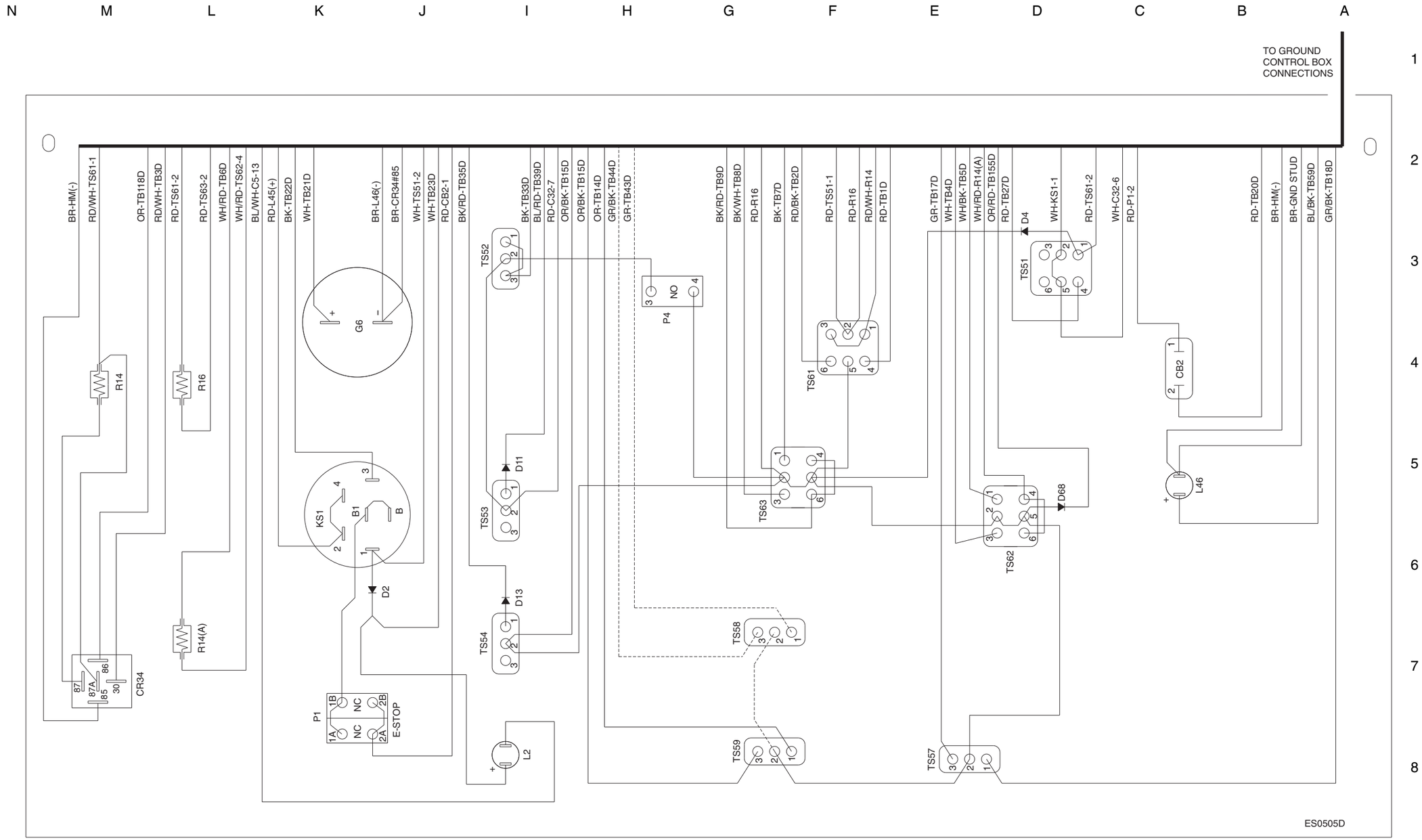

https://truckmanualshub.com/

Ground Control Box Switch Panel Wiring Diagram, S-80 and S-85 (ANSI / CSA / AS), Continental TME27 Models

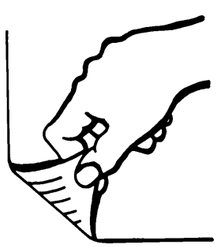

https://truckmanualshub.com/

Platform Control Box Wiring Diagram, S-80 and S-85 (ANSI / CSA / AS),
Continental TME27 Models

https://truckmanualshub.com/

Platform Control Box Wiring Diagram, S-80 and S-85 (ANSI / CSA / AS), Continental TME27 Models

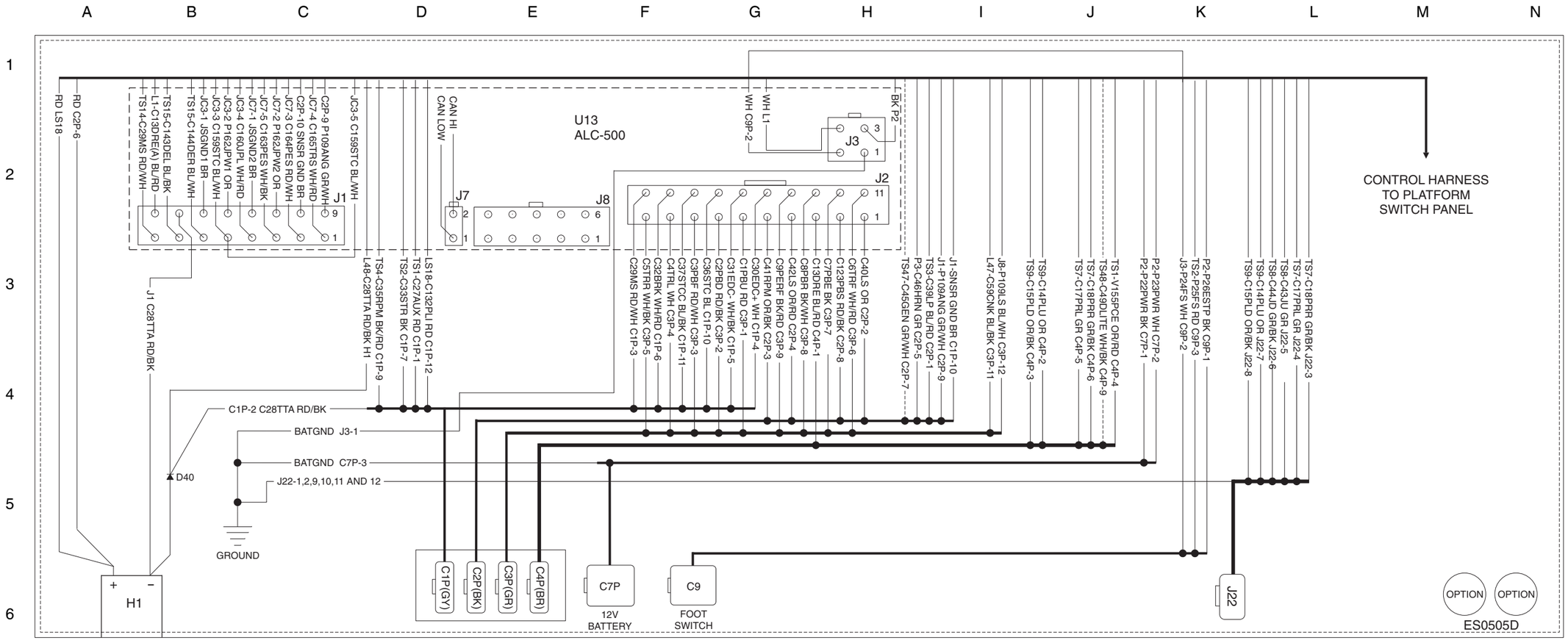

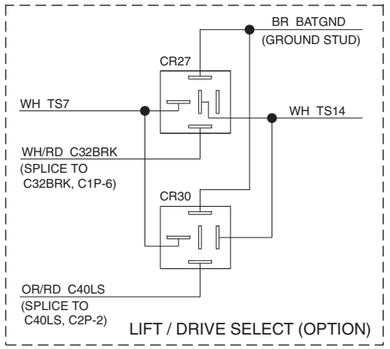

https://truckmanualshub.com/

Platform Control Box Switch Panel Wiring Diagram, S-80 and S-85 (ANSI / CSA / AS), Continental TME27 Models

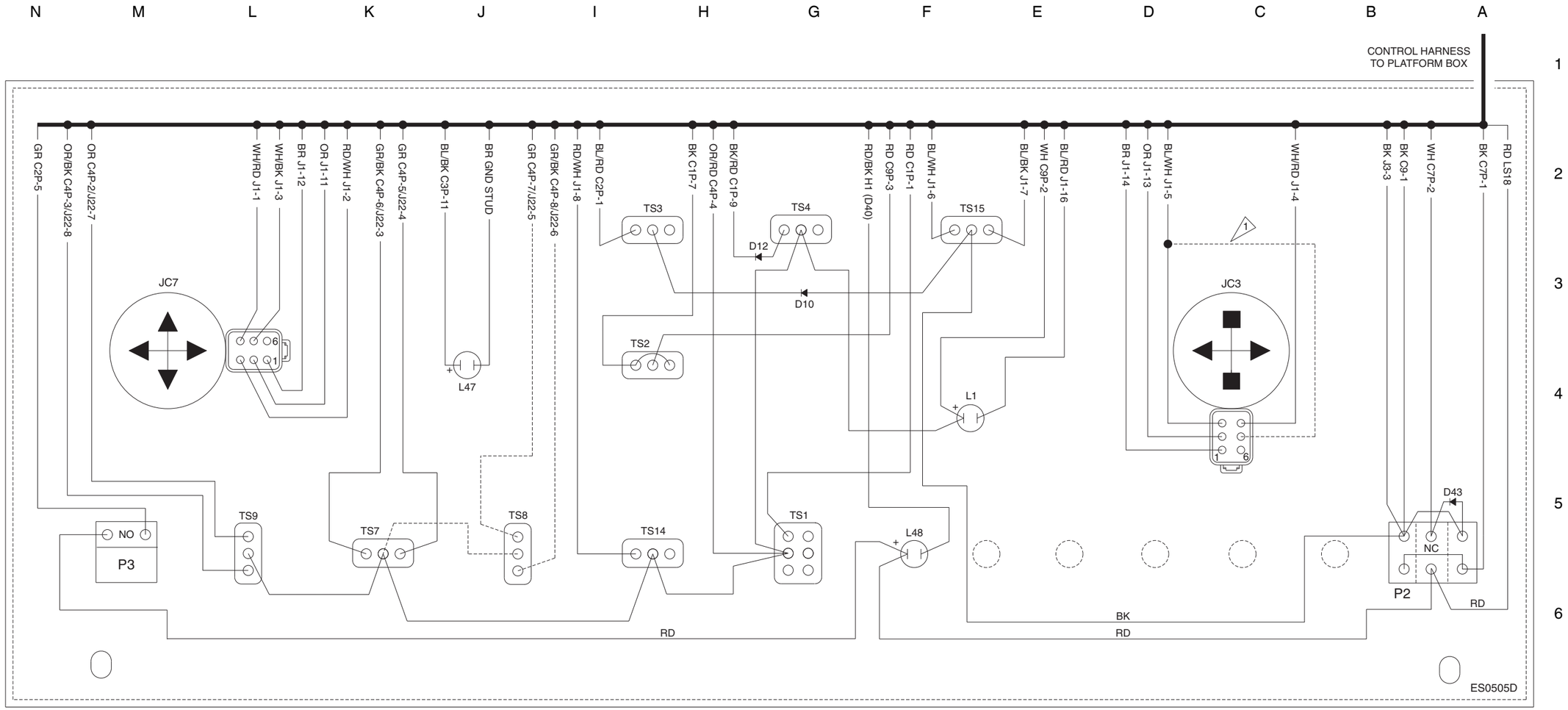

COMPONENT INDEX

CR27	LIFT / DRIVE SELECT - BRAKE CIRCUIT (OPTION)
CR30	LIFT / DRIVE SELECT - LIMIT SWITCH CIRCUIT (OPTION)
H1	TILT ALARM
JC3	JOYSTICK - DRIVE / STEER
JC7	JOYSTICK - PRIMARY BOOM UP / DOWN, EXTEND / RETRACT, TURNTABLE ROTATE
L1	LED - DRIVE ENABLE
L47	LED - CABLE TENSION
L48	LED - TILT ALARM
P2	EMERGENCY STOP BUTTON
P3	HORN BUTTON

TS1	AUXILIARY TOGGLE SWITCH
TS2	ENGINE START TOGGLE SWITCH
TS3	FUEL SELECT TOGGLE SWITCH
TS4	RPM SELECT TOGGLE SWITCH
TS7	PLATFORM ROTATE TOGGLE SWITCH
TS8	JIB BOOM UP/DOWN TOGGLE SWITCH (S-85 OPTION)
TS9	PLATFORM LEVEL UP/DOWN TOGGLE SWITCH
TS14	DRIVE SPEED TOGGLE SWITCH
TS15	DRIVE ENABLE TOGGLE SWITCH
U13	ALC500 JOYSTICK CONTROLLER CARD

NOTE: DASHED LINES INDICATE OPTIONS

1 ROCKER STEER OPTION

https://truckmanualshub.com/

Platform Control Box Switch Panel Wiring Diagram, S-80 and S-85 (ANSI / CSA / AS), Continental TME27 Models

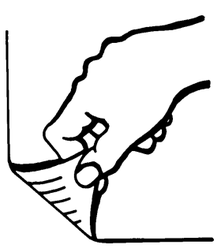

https://truckmanualshub.com/

Electrical Schematic, S-80 and S-85 (CE),
Continental TME27 Models (before serial number 8111)

https://truckmanualshub.com/

Electrical Schematic, S-80 and S-85 (CE),

Continental TME27 Models (before serial number 8111)

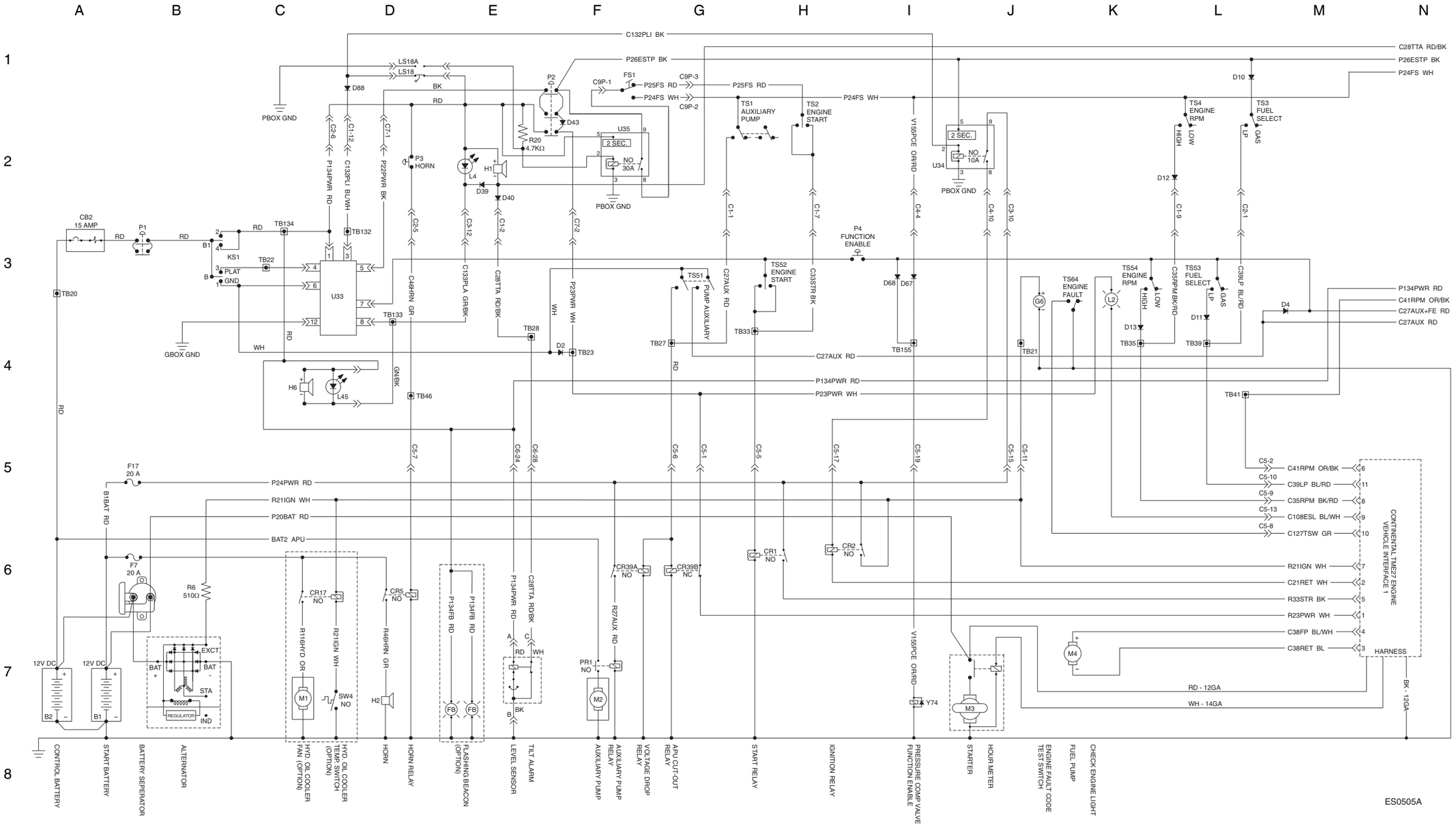

https://truckmanualshub.com/

Electrical Schematic, S-80 and S-85 (CE),

Continental TME27 Models (before serial number 8111)

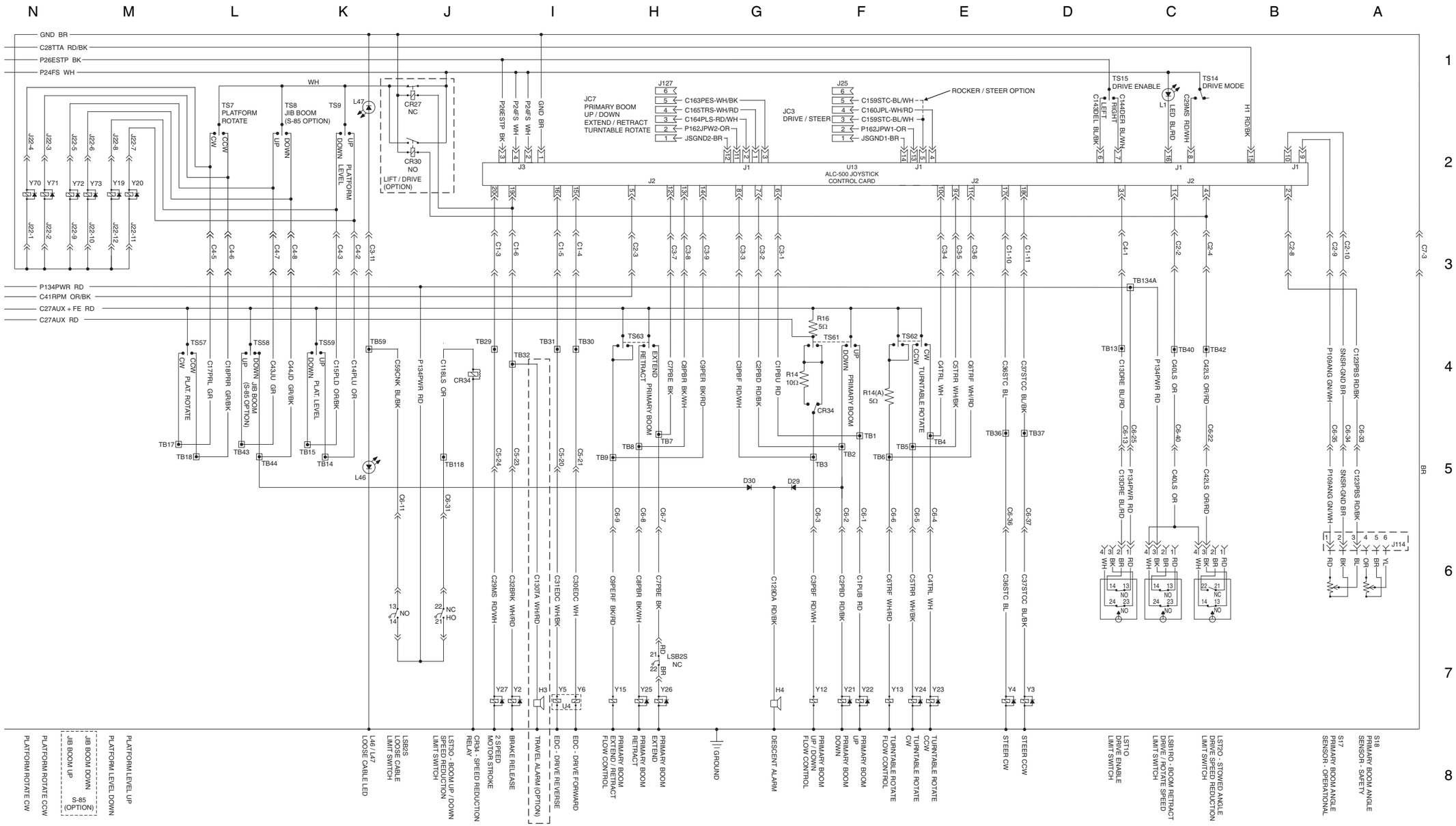

https://truckmanualshub.com/

Electrical Schematic, S-80 and S-85 (CE),
Continental TME27 Models (before serial number 8111)

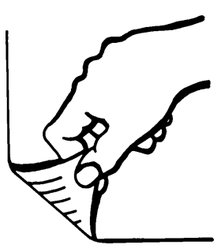

https://truckmanualshub.com/

Ground Control Box Terminal Strip Wiring Diagram, S-80 and S-85 (CE),
Continental TME27 Models (before serial number 8111)

https://truckmanualshub.com/

Ground Control Box Terminal Strip Wiring Diagram, S-80 and S-85 (CE), Continental TME27 Models (before serial number 8111)

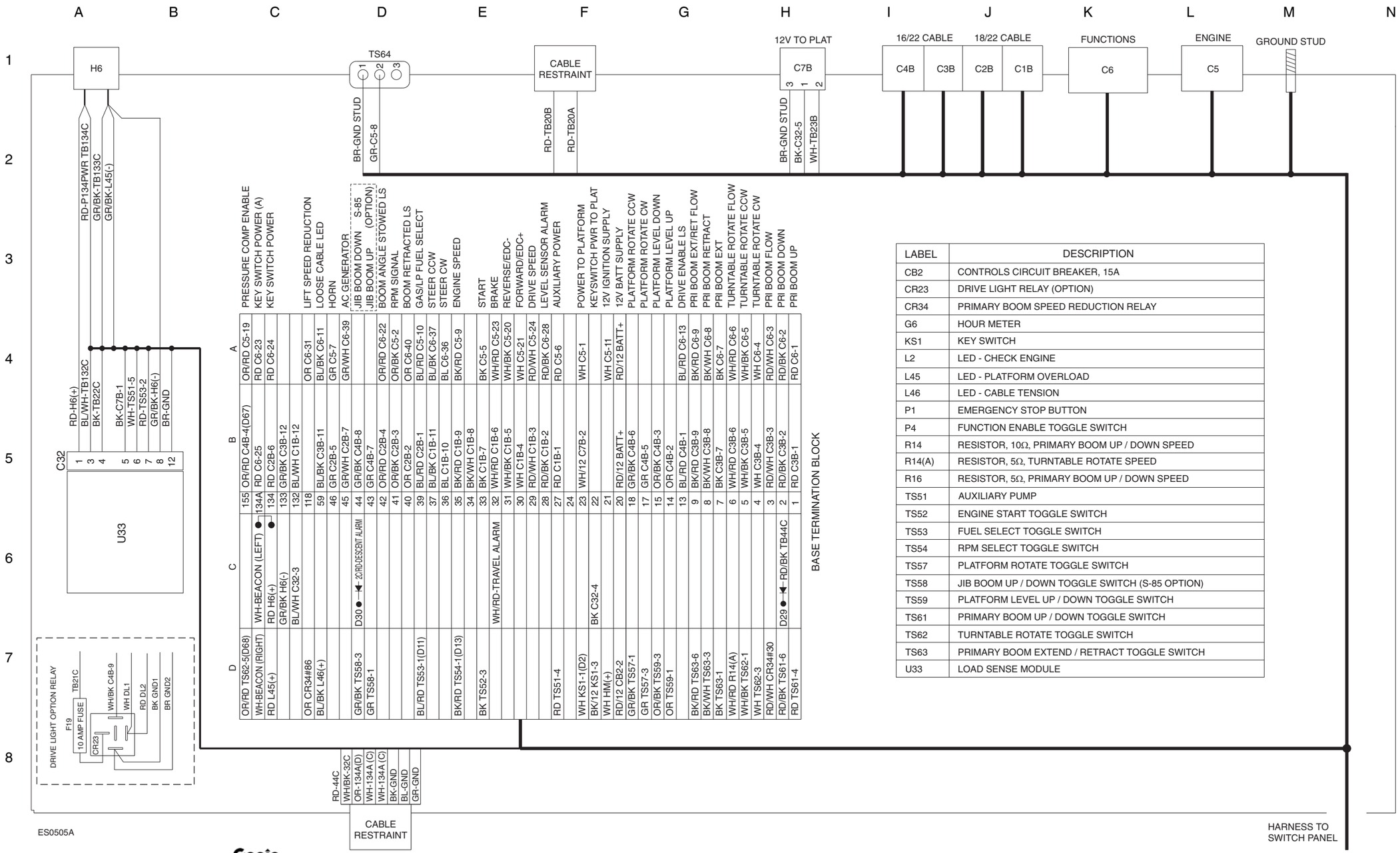

LABEL	DESCRIPTION
CB2	CONTROLS CIRCUIT BREAKER, 15A
CR23	DRIVE LIGHT RELAY (OPTION)
CR34	PRIMARY BOOM SPEED REDUCTION RELAY
G6	HOUR METER
KS1	KEY SWITCH
L2	LED - CHECK ENGINE
L45	LED - PLATFORM OVERLOAD
L46	LED - CABLE TENSION
P1	EMERGENCY STOP BUTTON
P4	FUNCTION ENABLE TOGGLE SWITCH
R14	RESISTOR, 10Ω, PRIMARY BOOM UP / DOWN SPEED
R14(A)	RESISTOR, 5Ω, TURNTABLE ROTATE SPEED
R16	RESISTOR, 5Ω, PRIMARY BOOM UP / DOWN SPEED
TS51	AUXILIARY PUMP
TS52	ENGINE START TOGGLE SWITCH
TS53	FUEL SELECT TOGGLE SWITCH
TS54	RPM SELECT TOGGLE SWITCH
TS57	PLATFORM ROTATE TOGGLE SWITCH
TS58	JIB BOOM UP / DOWN TOGGLE SWITCH (S-85 OPTION)
TS59	PLATFORM LEVEL UP / DOWN TOGGLE SWITCH
TS61	PRIMARY BOOM UP / DOWN TOGGLE SWITCH
TS62	TURNTABLE ROTATE TOGGLE SWITCH
TS63	PRIMARY BOOM EXTEND / RETRACT TOGGLE SWITCH
U33	LOAD SENSE MODULE

https://truckmanualshub.com/

Ground Control Box Switch Panel Wiring Diagram, S-80 and S-85 (CE), Continental TME27 Models (before serial number 8111)

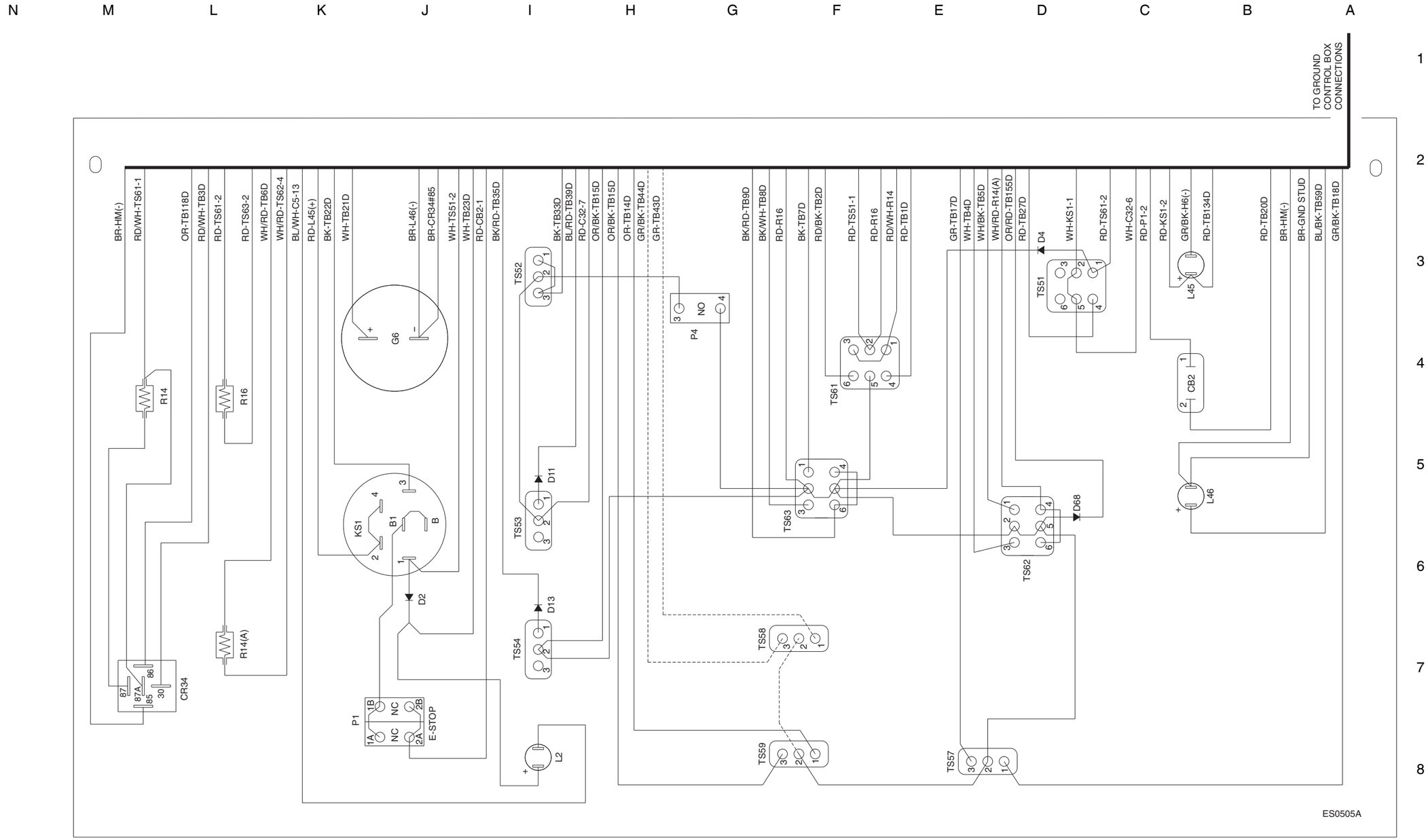

https://truckmanualshub.com/

Ground Control Box Switch Panel Wiring Diagram, S-80 and S-85 (CE),

Continental TME27 Models (before serial number 8111)

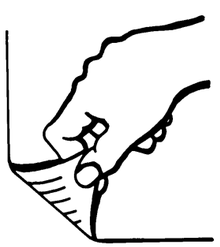

https://truckmanualshub.com/

Platform Control Box Wiring Diagram,
S-80 and S-85 (CE),
Continental TME27 Models (before serial number 8111)

https://truckmanualshub.com/

Platform Control Box Wiring Diagram, S-80 and S-85 (CE), Continental TME27 Models (before serial number 8111)

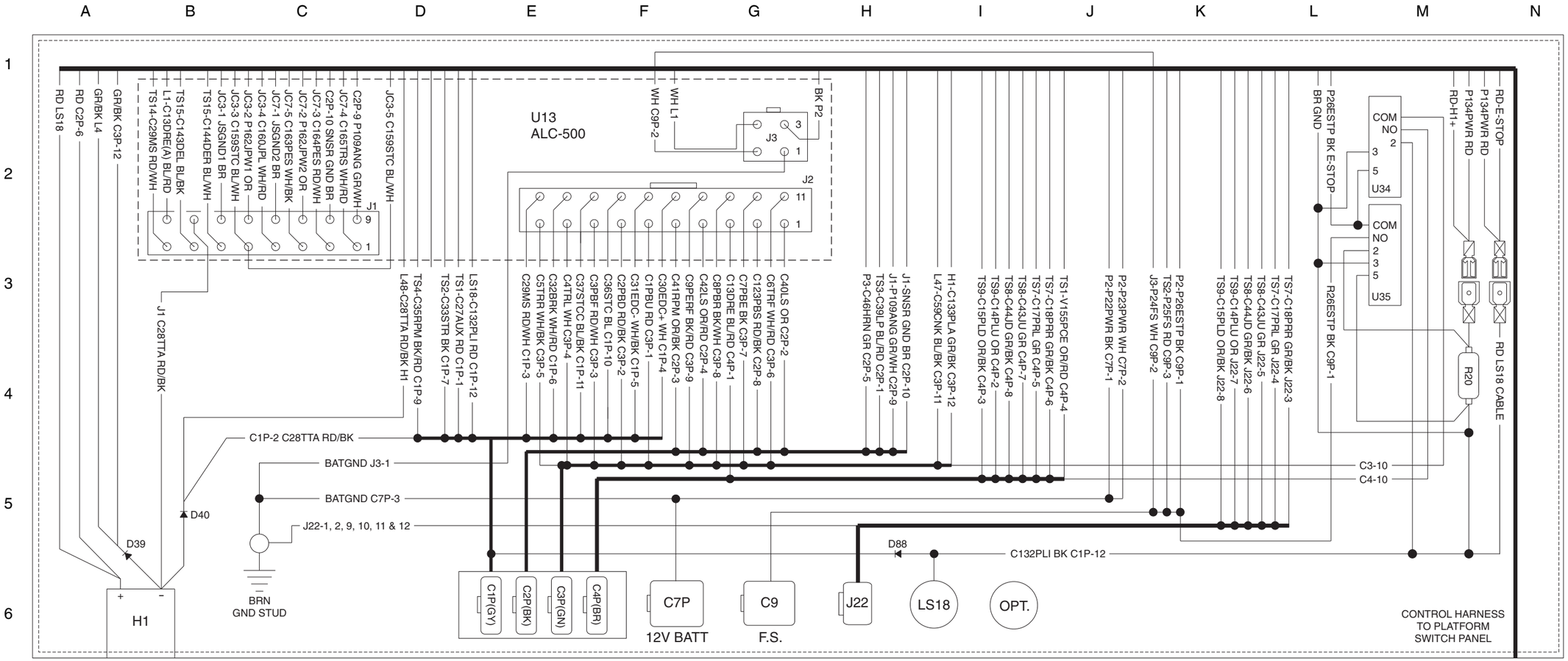

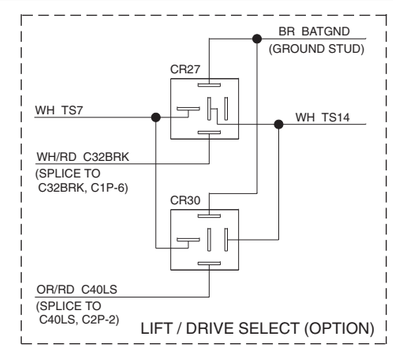

https://truckmanualshub.com/

Platform Control Box Switch Panel Wiring Diagram, S-80 and S-85 (CE), Continental TME27 Models (before serial number 8111)

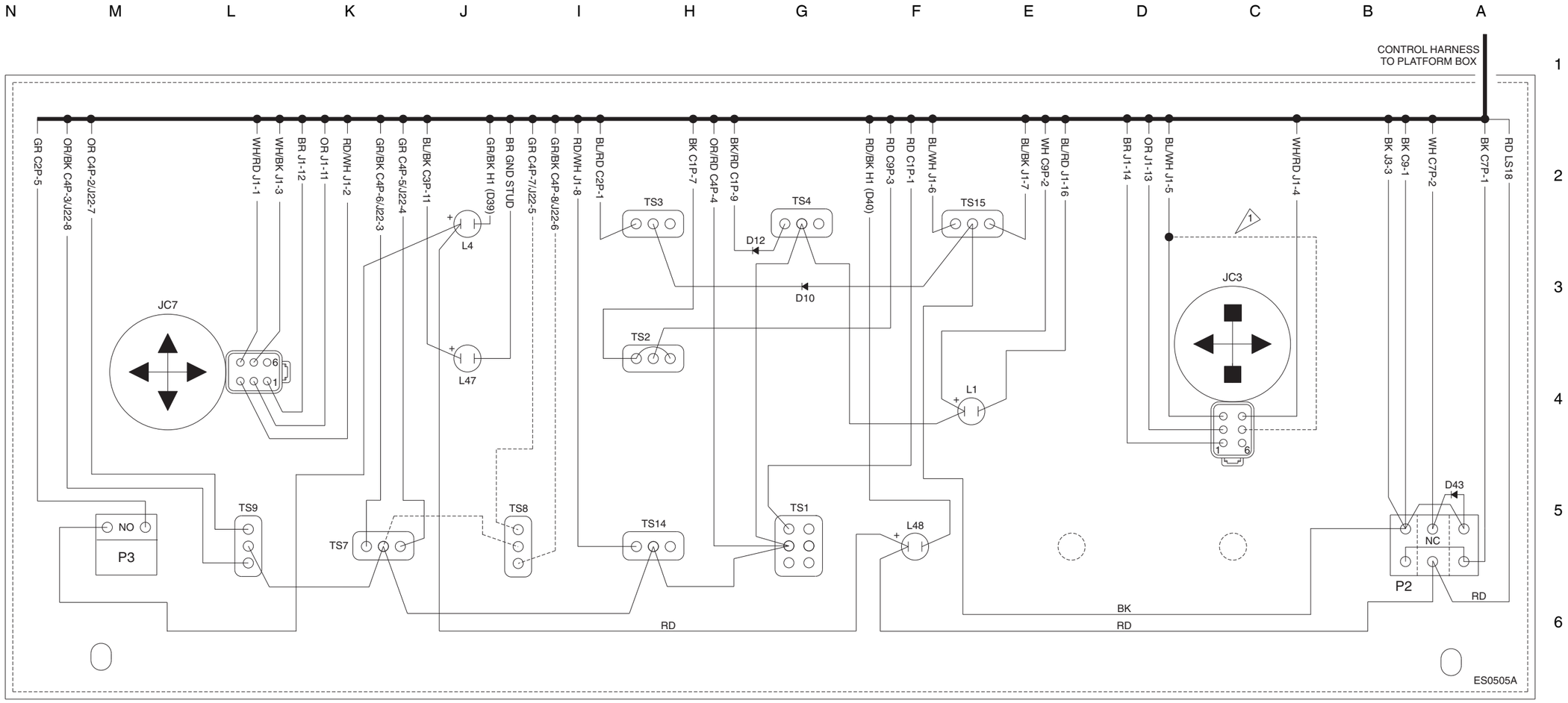

COMPONENT INDEX

C1P	18/22 CONTROL CABLE (GREY)
C2P	18/22 CONTROL CABLE (BLACK)
C3P	16/22 CONTROL CABLE (GREEN)
C4P	16/22 CONTROL CABLE (BROWN)
C7P	12VDC POWER TO PLATFORM
C9	FOOT SWITCH
CR27	LIFT / DRIVE SELECT - BRAKE CIRCUIT (OPTION)
CR30	LIFT / DRIVE SELECT - LIMIT SWITCH CIRCUIT (OPTION)
H1	TILT ALARM
J22	PLATFORM MANIFOLD
JC3	JOYSTICK - DRIVE / STEER
JC7	JOYSTICK - PRIMARY BOOM UP / DOWN, EXTEND / RETRACT, TURNTABLE ROTATE
L1	LED - DRIVE ENABLE
L4	LED - PLATFORM OVERLOAD
L47	LED - CABLE TENSION
L48	LED - TILT ALARM
LS18	PLATFORM OVERLOAD LIMIT SWITCH
P2	EMERGENCY STOP BUTTON
P3	HORN BUTTON
R20	RESISTOR - 4700Ω
TS1	AUXILIARY TOGGLE SWITCH
TS2	ENGINE START TOGGLE SWITCH
TS3	FUEL SELECT TOGGLE SWITCH
TS4	RPM SELECT TOGGLE SWITCH
TS7	PLATFORM ROTATE TOGGLE SWITCH
TS8	JIB BOOM UP/DOWN TOGGLE SWITCH (S-85 OPTION)
TS9	PLATFORM LEVEL UP/DOWN TOGGLE SWITCH
TS14	DRIVE SPEED TOGGLE SWITCH
TS15	DRIVE ENABLE TOGGLE SWITCH
U13	ALC500 JOYSTICK CONTROLLER CARD
U34	TIME DELAY RELAY - 2 SECONDS, 10A
U35	TIME DELAY RELAY - 2 SECONDS, 30A

NOTE: DASHED LINES INDICATE OPTIONS

1 ROCKER STEER OPTION

https://truckmanualshub.com/

Platform Control Box Switch Panel Wiring Diagram, S-80 and S-85 (CE),

Continental TME27 Models (before serial number 8111)

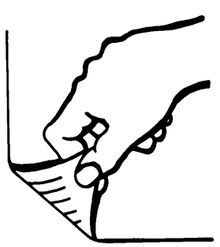

https://truckmanualshub.com/

Electrical Schematic, S-80 and S-85 (CE),
Continental TME27 Models (after serial number 8110)

https://truckmanualshub.com/

Electrical Schematic, S-80 and S-85 (CE),

Continental TME27 Models (after serial number 8110)

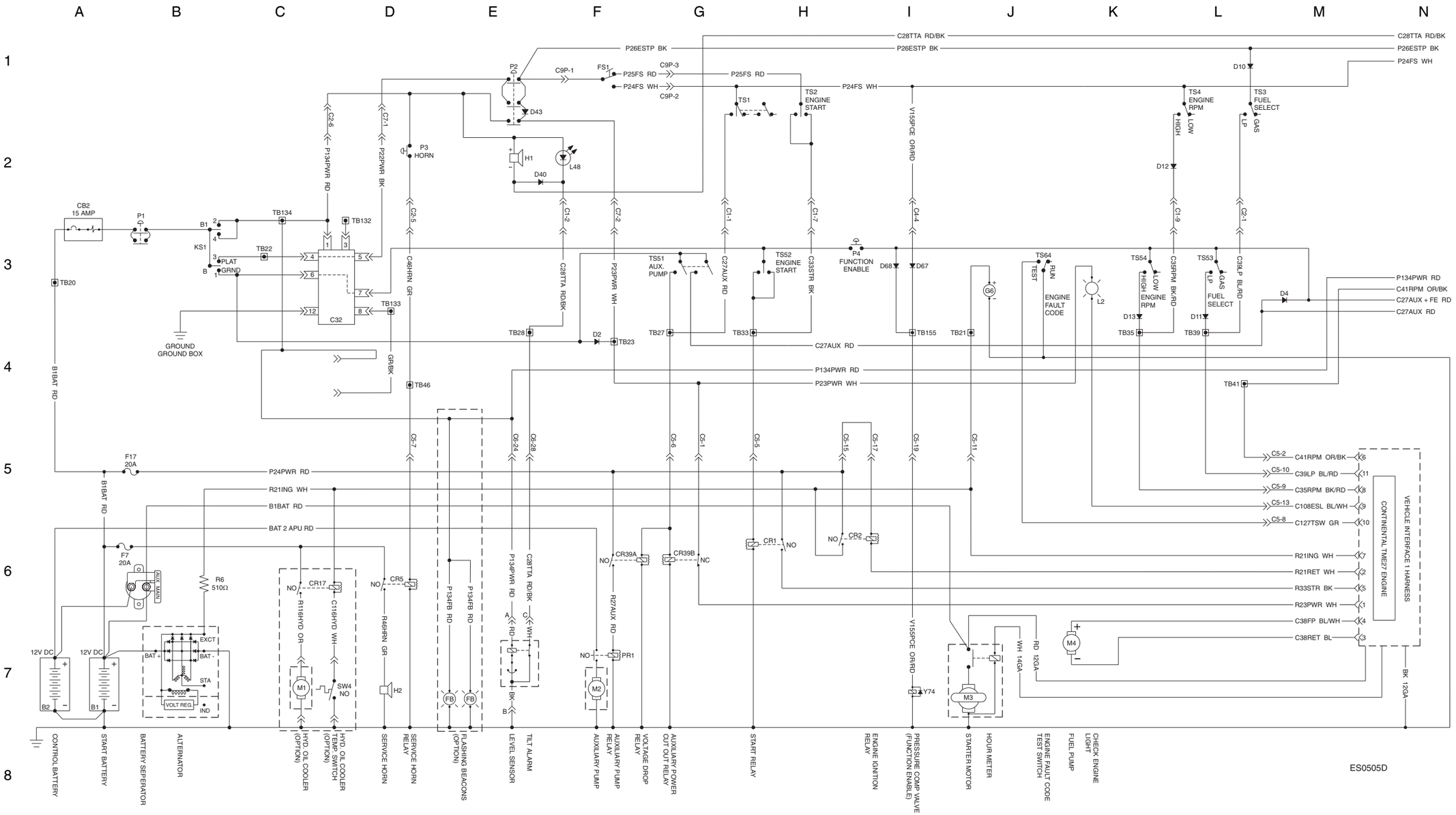

https://truckmanualshub.com/

Electrical Schematic, S-80 and S-85 (CE),

Continental TME27 Models (after serial number 8110)

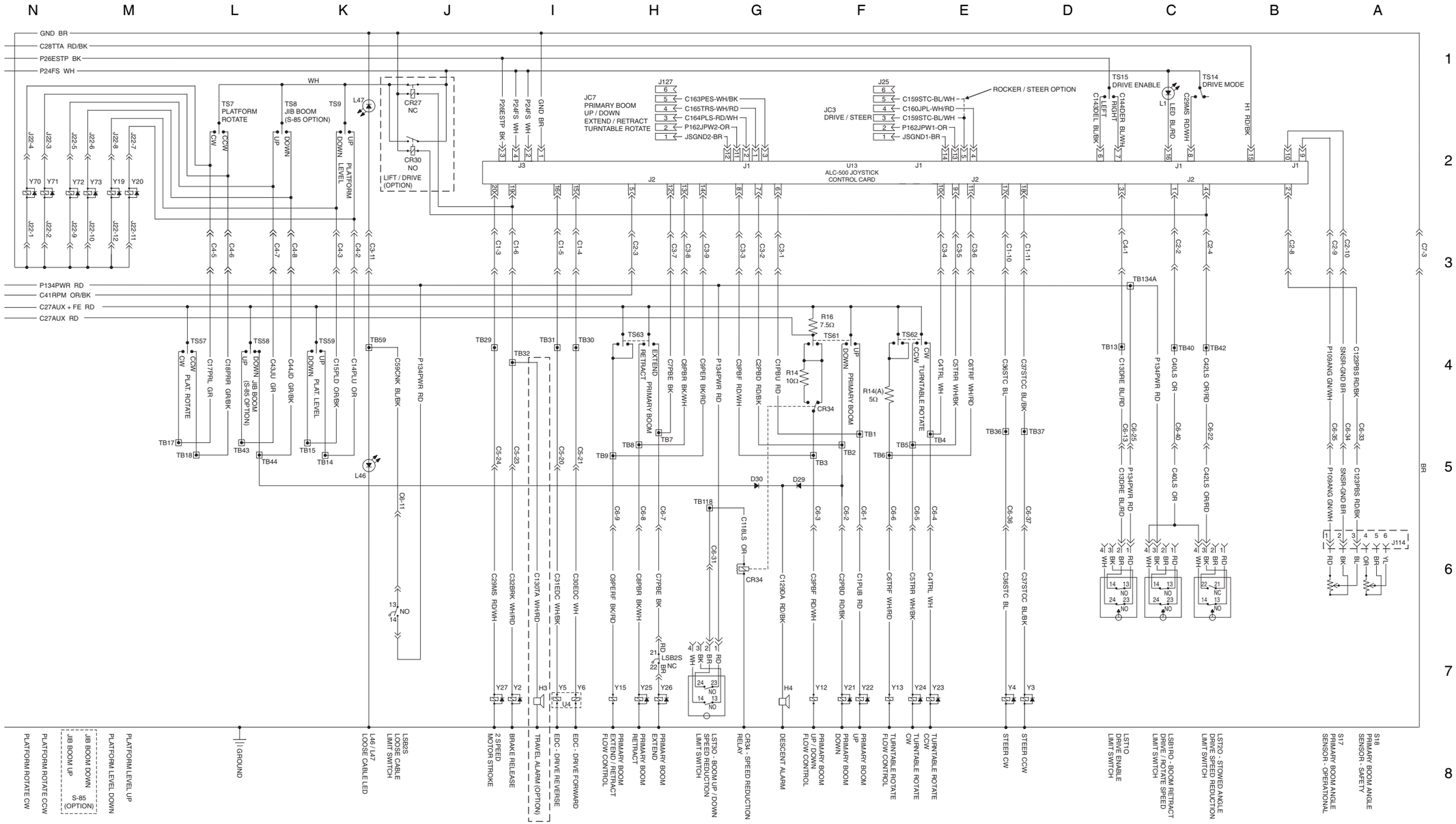

https://truckmanualshub.com/

Electrical Schematic, S-80 and S-85 (CE),
Continental TME27 Models (after serial number 8110)

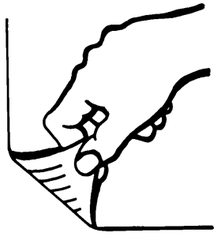

https://truckmanualshub.com/

Ground Control Box Terminal Strip Wiring Diagram, S-80 and S-85 (CE),
Continental TME27 Models (after serial number 8110)

https://truckmanualshub.com/

Ground Control Box Terminal Strip Wiring Diagram, S-80 and S-85 (CE), Continental TME27 Models (after serial number 8110)

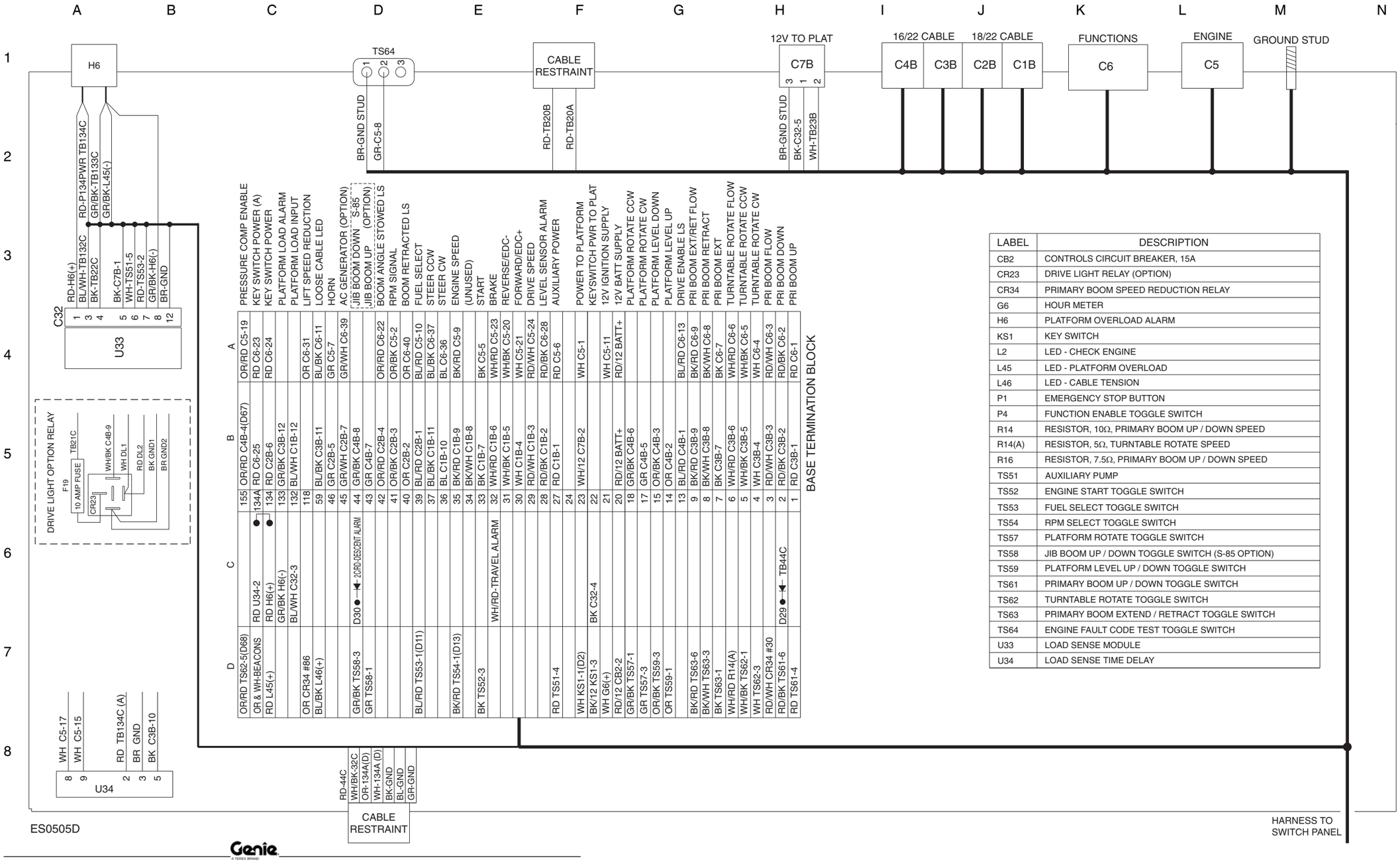

A	B	C	D	
PRESSURE COMP ENABLE	OR/RD C4B-4(D67)	155	OR/RD TS62-5(D68)	
KEY SWITCH POWER (A)	RD C6-25	134A	RD U34-2	
KEY SWITCH POWER	RD C2B-6	134	RD H6(+)	
PLATFORM LOAD ALARM	GR/BK C3B-12	133	GR/BK H6(-)	
PLATFORM LOAD INPUT	BL/WH C1B-12	132	BL/WH C32-3	
LIFT SPEED REDUCTION		118	OR CR34 #86	
LOOSE CABLE LED	BL/BK C3B-11	59	BL/BK L46(+)	
HORN	GR C2B-5	46		
AC GENERATOR (OPTION)	GR/WH C2B-7	45		
JIB BOOM DOWN (OPTION) S-85	GR/BK C4B-8	44	GR/BK TS58-3	D30 ● ◄ 20RD DESCENT ALARM
JIB BOOM UP (OPTION)	GR C4B-7	43	GR TS58-1	
BOOM ANGLE STOWED LS	OR/RD C2B-4	42		
RPM SIGNAL	OR/BK C2B-3	41		
BOOM RETRACTED LS	OR C2B-2	40		
FUEL SELECT	BL/RD C2B-1	39	BL/RD TS53-1(D11)	
STEER CCW	BL/BK C1B-11	37		
STEER CW	BL C1B-10	36		
ENGINE SPEED	BK/RD C1B-9	35	BK/RD TS54-1(D13)	
(UNUSED)	BK/WH C1B-8	34		
START	BK C1B-7	33	BK TS52-3	
BRAKE	WH/RD C1B-6	32		WH/RD-TRAVEL ALARM
REVERSE/EDC-	WH/BK C1B-5	31		
FORWARD/EDC+	WH C1B-4	30		
DRIVE SPEED	RD/WH C1B-3	29		
LEVEL SENSOR ALARM	RD/BK C1B-2	28		
AUXILIARY POWER	RD C1B-1	27	RD TS51-4	
		24		
POWER TO PLATFORM	WH/12 C7B-2	23	WH KS1-1(D2)	
KEYSWITCH PWR TO PLAT		22	BK/12 KS1-3	BK C32-4
12V IGNITION SUPPLY		21	WH G6(+)	
12V BATT SUPPLY	RD/12 BATT+	20	RD/12 CB2-2	
PLATFORM ROTATE CCW	GR/BK C4B-6	18	GR/BK TS57-1	
PLATFORM ROTATE CW	GR C4B-5	17	GR TS57-3	
PLATFORM LEVEL DOWN	OR/BK C4B-3	15	OR/BK TS59-3	
PLATFORM LEVEL UP	OR C4B-2	14	OR TS59-1	
DRIVE ENABLE LS	BL/RD C4B-1	13		
PRI BOOM EXT/RET FLOW	BK/RD C3B-9	9	BK/RD TS63-6	
PRI BOOM RETRACT	BK/WH C3B-8	8	BK/WH TS63-3	
PRI BOOM EXT	BK C3B-7	7	BK TS63-1	
TURNTABLE ROTATE FLOW	WH/RD C3B-6	6	WH/RD R14(A)	
TURNTABLE ROTATE CCW	WH/BK C3B-5	5	WH/BK TS62-1	
TURNTABLE ROTATE CW	WH C3B-4	4	WH TS62-3	
PRI BOOM FLOW	RD/WH C3B-3	3	RD/WH CR34 #30	
PRI BOOM DOWN	RD/BK C3B-2	2	RD/BK TS61-6	D29 ● ◄ TB44C
PRI BOOM UP	RD C3B-1	1	RD TS61-4	

BASE TERMINATION BLOCK

LABEL	DESCRIPTION
CB2	CONTROLS CIRCUIT BREAKER, 15A
CR23	DRIVE LIGHT RELAY (OPTION)
CR34	PRIMARY BOOM SPEED REDUCTION RELAY
G6	HOUR METER
H6	PLATFORM OVERLOAD ALARM
KS1	KEY SWITCH
L2	LED - CHECK ENGINE
L45	LED - PLATFORM OVERLOAD
L46	LED - CABLE TENSION
P1	EMERGENCY STOP BUTTON
P4	FUNCTION ENABLE TOGGLE SWITCH
R14	RESISTOR, 10Ω, PRIMARY BOOM UP / DOWN SPEED
R14(A)	RESISTOR, 5Ω, TURNTABLE ROTATE SPEED
R16	RESISTOR, 7.5Ω, PRIMARY BOOM UP / DOWN SPEED
TS51	AUXILIARY PUMP
TS52	ENGINE START TOGGLE SWITCH
TS53	FUEL SELECT TOGGLE SWITCH
TS54	RPM SELECT TOGGLE SWITCH
TS57	PLATFORM ROTATE TOGGLE SWITCH
TS58	JIB BOOM UP / DOWN TOGGLE SWITCH (S-85 OPTION)
TS59	PLATFORM LEVEL UP / DOWN TOGGLE SWITCH
TS61	PRIMARY BOOM UP / DOWN TOGGLE SWITCH
TS62	TURNTABLE ROTATE TOGGLE SWITCH
TS63	PRIMARY BOOM EXTEND / RETRACT TOGGLE SWITCH
TS64	ENGINE FAULT CODE TEST TOGGLE SWITCH
U33	LOAD SENSE MODULE
U34	LOAD SENSE TIME DELAY

https://truckmanualshub.com/

Ground Control Box Switch Panel Wiring Diagram, S-80 and S-85 (CE), Continental TME27 Models (after serial number 8110)

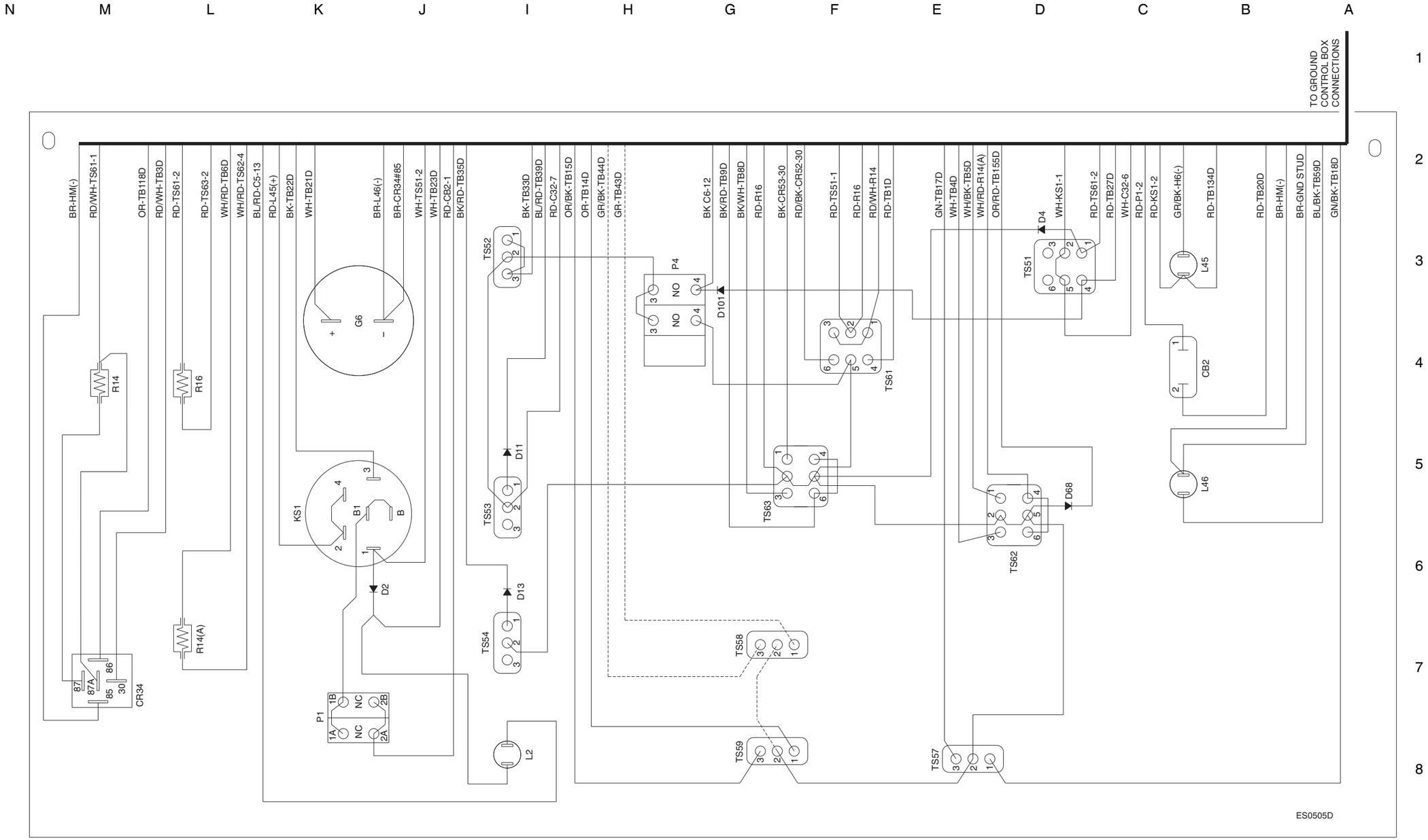

https://truckmanualshub.com/

Ground Control Box Switch Panel Wiring Diagram, S-80 and S-85 (CE),

Continental TME27 Models (after serial number 8110)

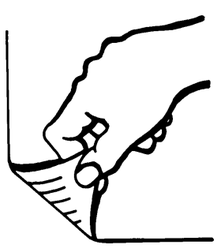

https://truckmanualshub.com/

Platform Control Box Wiring Diagram,
S-80 and S-85 (CE),
Continental TME27 Models (after serial number 8110)

https://truckmanualshub.com/

Platform Control Box Wiring Diagram, S-80 and S-85 (CE), Continental TME27 Models (after serial number 8110)

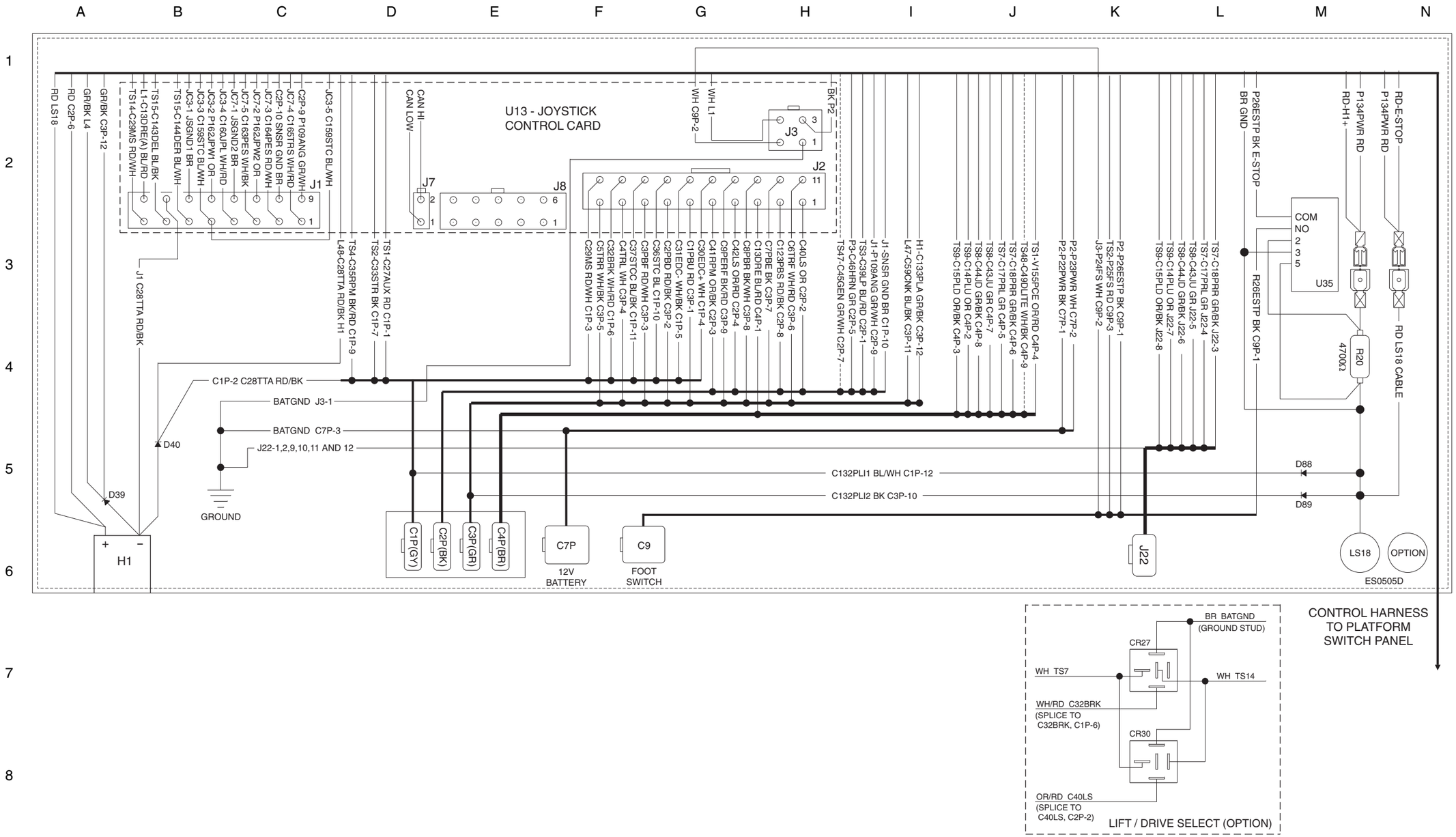

https://truckmanualshub.com/

Platform Control Box Switch Panel Wiring Diagram, S-80 and S-85 (CE), Continental TME27 Models (after serial number 8110)

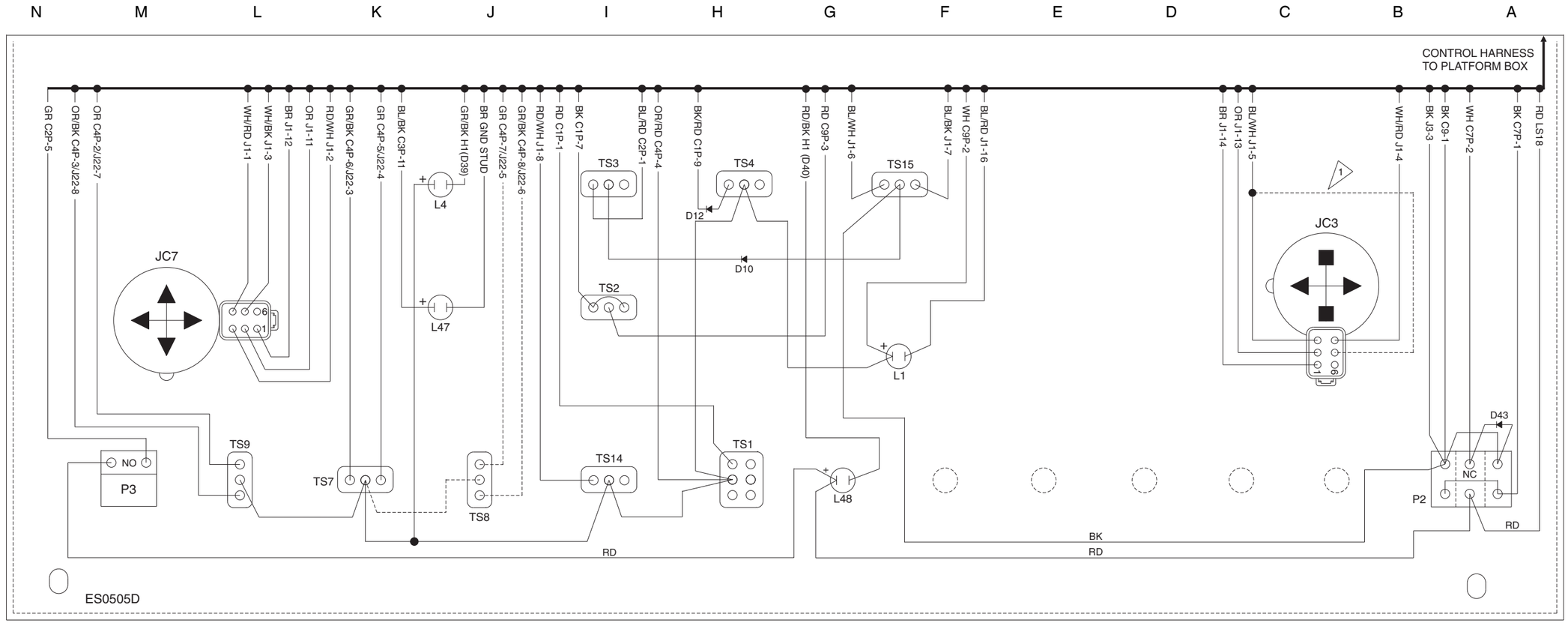

COMPONENT INDEX

H1	TILT ALARM
JC3	JOYSTICK - DRIVE / STEER
JC7	JOYSTICK - PRIMARY BOOM UP / DOWN, EXTEND / RETRACT, TURNTABLE ROTATE
L1	LED - DRIVE ENABLE
L4	LED - PLATFORM OVERLOAD
L47	LED - CABLE TENSION
L48	LED - TILT ALARM
P2	EMERGENCY STOP BUTTON
P3	HORN BUTTON
TS1	AUXILIARY TOGGLE SWITCH
TS2	ENGINE START TOGGLE SWITCH
TS3	FUEL SELECT TOGGLE SWITCH

TS4	RPM SELECT TOGGLE SWITCH
TS7	PLATFORM ROTATE TOGGLE SWITCH
TS8	JIB BOOM UP / DOWN TOGGLE SWITCH
TS9	PLATFORM LEVEL UP/DOWN TOGGLE SWITCH
TS14	DRIVE SPEED TOGGLE SWITCH
TS15	DRIVE ENABLE TOGGLE SWITCH
U13	ALC500 JOYSTICK CONTROLLER CARD

NOTE: DASHED LINES INDICATE OPTIONS

1 ROCKER / STEER OPTION

https://truckmanualshub.com/

Platform Control Box Switch Panel Wiring Diagram, S-80 and S-85 (CE),

Continental TME27 Models (after serial number 8110)

https://truckmanualshub.com/

Electrical Schematic, S-80X,
Continental TME27 Models

https://truckmanualshub.com/

Electrical Schematic, S-80X,
Continental TME27 Models

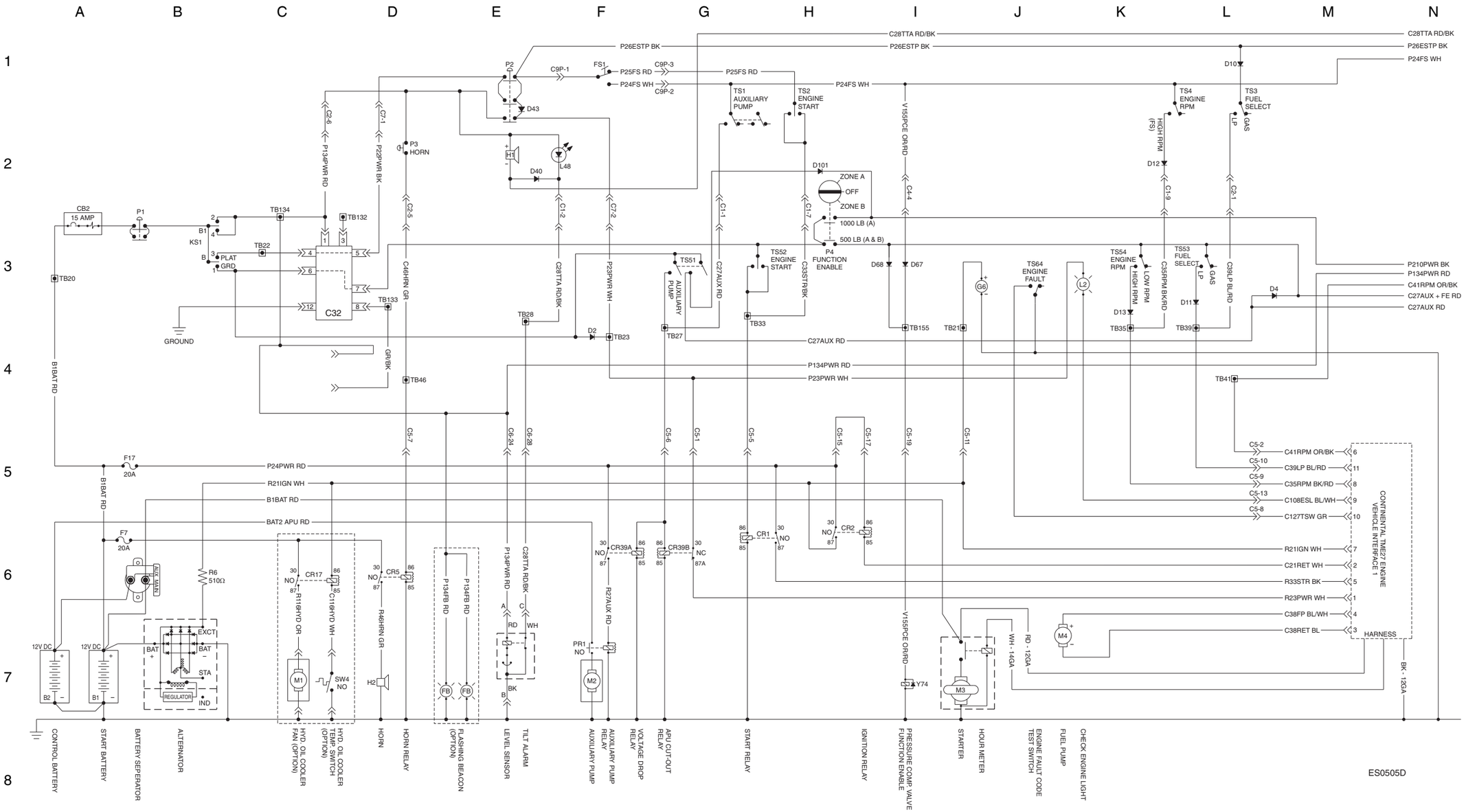

https://truckmanualshub.com/

Electrical Schematic, S-80X,
Continental TME27 Models

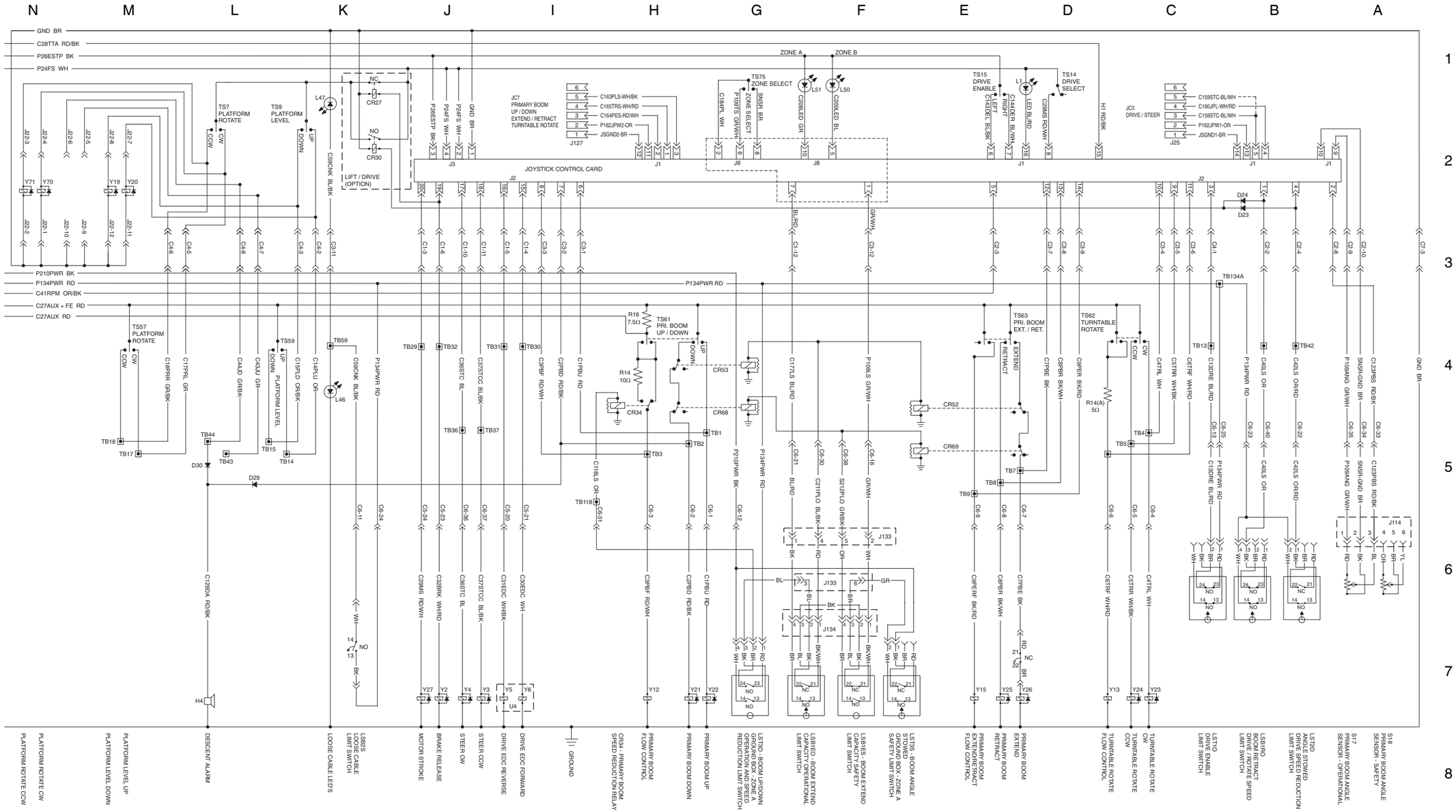

https://truckmanualshub.com/

Electrical Schematic, S-80X,
Continental TME27 Models

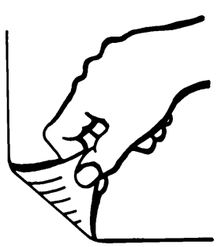

https://truckmanualshub.com/

Ground Control Box Terminal Strip Wiring Diagram, S-80X,
Continental TME27 Models

https://truckmanualshub.com/

Ground Control Box Terminal Strip Wiring Diagram, S-80X,
Continental TME27 Models

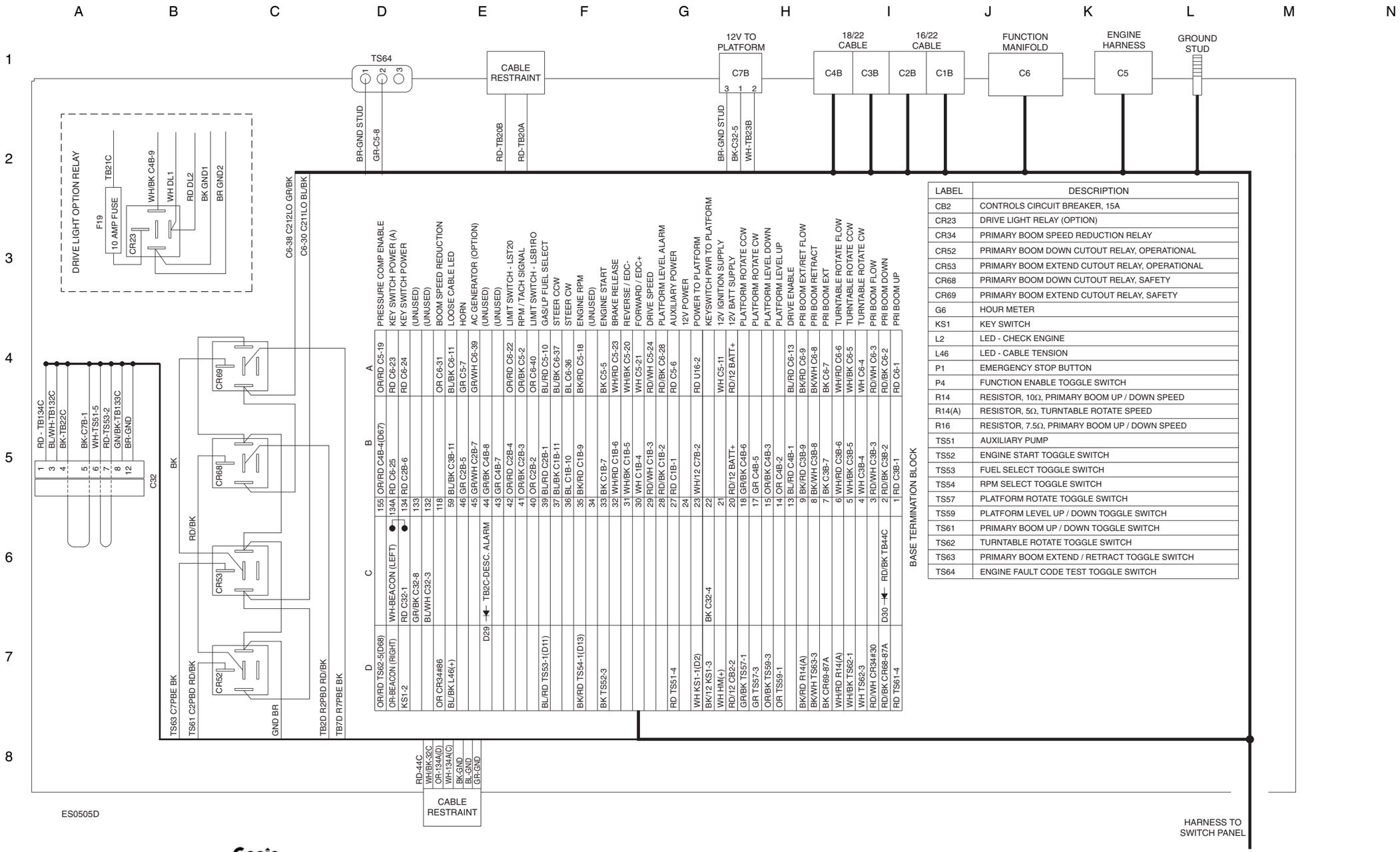

LABEL	DESCRIPTION
CB2	CONTROLS CIRCUIT BREAKER, 15A
CR23	DRIVE LIGHT RELAY (OPTION)
CR34	PRIMARY BOOM SPEED REDUCTION RELAY
CR52	PRIMARY BOOM DOWN CUTOUT RELAY, OPERATIONAL
CR53	PRIMARY BOOM EXTEND CUTOUT RELAY, OPERATIONAL
CR68	PRIMARY BOOM DOWN CUTOUT RELAY, SAFETY
CR69	PRIMARY BOOM EXTEND CUTOUT RELAY, SAFETY
G6	HOUR METER
KS1	KEY SWITCH
L2	LED - CHECK ENGINE
L46	LED - CABLE TENSION
P1	EMERGENCY STOP BUTTON
P4	FUNCTION ENABLE TOGGLE SWITCH
R14	RESISTOR, 10Ω, PRIMARY BOOM UP / DOWN SPEED
R14(A)	RESISTOR, 5Ω, TURNTABLE ROTATE SPEED
R16	RESISTOR, 7.5Ω, PRIMARY BOOM UP / DOWN SPEED
TS51	AUXILIARY PUMP
TS52	ENGINE START TOGGLE SWITCH
TS53	FUEL SELECT TOGGLE SWITCH
TS54	RPM SELECT TOGGLE SWITCH
TS57	PLATFORM ROTATE TOGGLE SWITCH
TS59	PLATFORM LEVEL UP / DOWN TOGGLE SWITCH
TS61	PRIMARY BOOM UP / DOWN TOGGLE SWITCH
TS62	TURNTABLE ROTATE TOGGLE SWITCH
TS63	PRIMARY BOOM EXTEND / RETRACT TOGGLE SWITCH
TS64	ENGINE FAULT CODE TEST TOGGLE SWITCH

https://truckmanualshub.com/

Ground Control Box Switch Panel Wiring Diagram, S-80X,
Continental TME27 Models

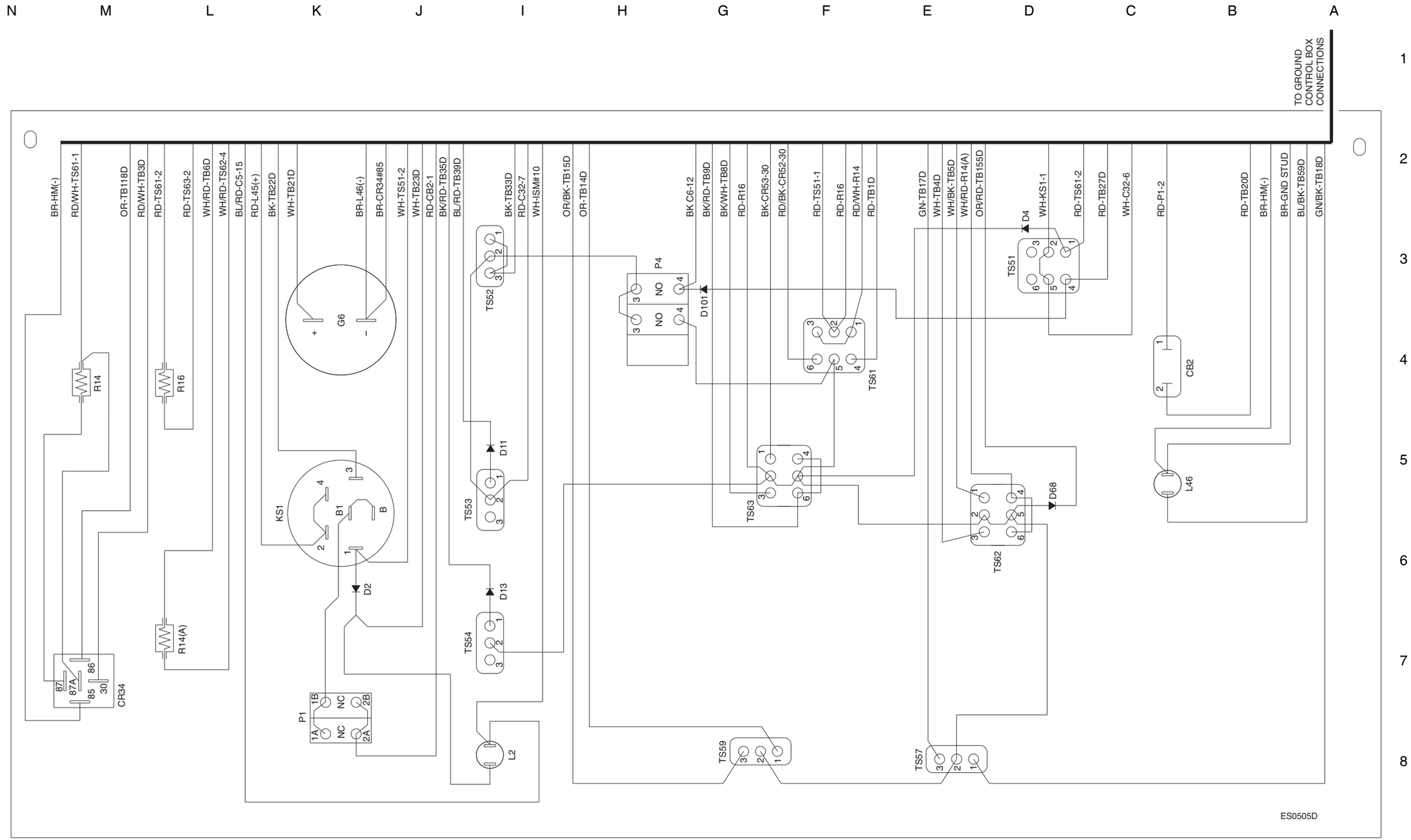

https://truckmanualshub.com/

Ground Control Box Switch Panel Wiring Diagram, S-80X,
Continental TME27 Models

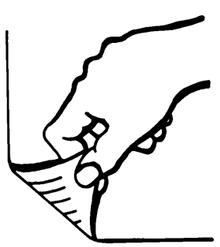

https://truckmanualshub.com/

Platform Control Box Wiring Diagram, S-80X,
Continental TME27 Models

https://truckmanualshub.com/

Platform Control Box Wiring Diagram, S-80X,
Continental TME27 Models

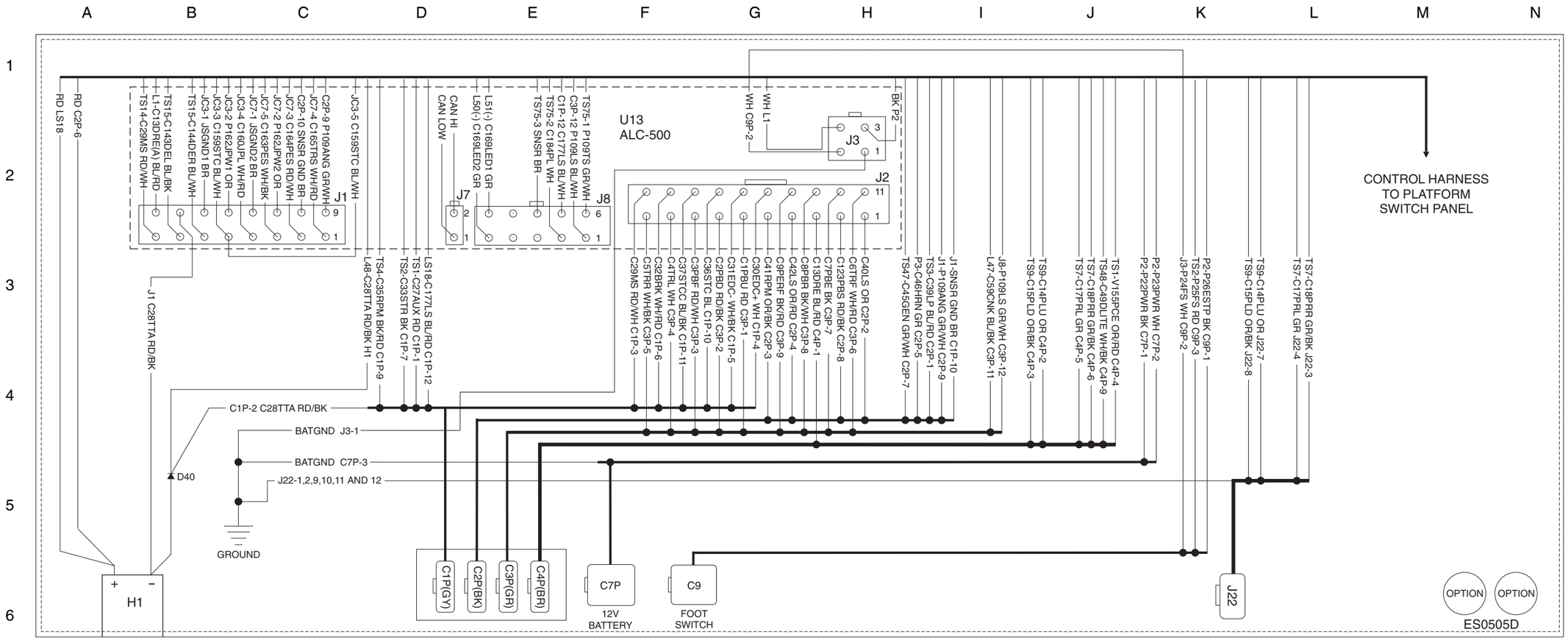

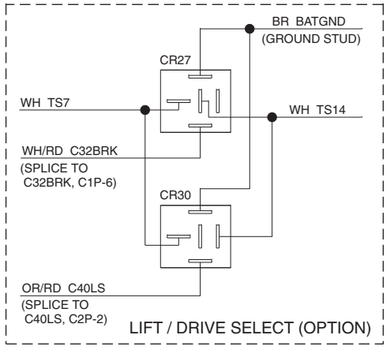

https://truckmanualshub.com/

Platform Control Box Switch Panel Wiring Diagram, S-80X,
Continental TME27 Models

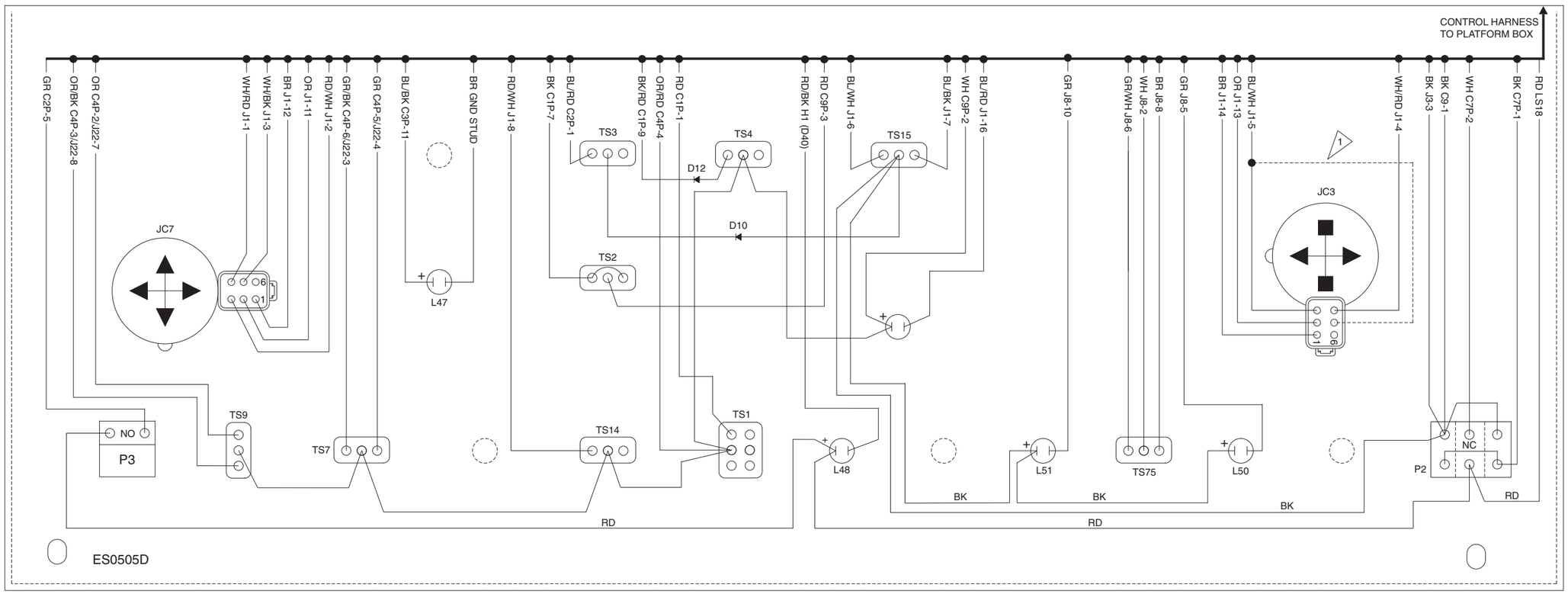

COMPONENT INDEX

CR27	BRAKE CIRCUIT (LIFT / DRIVE OPTION)
CR30	LIMIT SWITCH (LIFT / DRIVE OPTION)
H1	TILT ALARM
JC3	JOYSTICK - DRIVE / STEER
JC7	JOYSTICK - PRIMARY BOOM UP / DOWN, EXTEND / RETRACT, TURNTABLE ROTATE
L1	LED - DRIVE ENABLE
L47	LED - CABLE TENSION
L48	LED - TILT ALARM
L50	LED - ZONE B, 500 LB CAPACITY
L51	LED - ZONE A, 1000 LB CAPACITY
P2	EMERGENCY STOP BUTTON
P3	HORN BUTTON
TS1	AUXILIARY TOGGLE SWITCH

TS2	ENGINE START TOGGLE SWITCH
TS3	FUEL SELECT TOGGLE SWITCH
TS4	RPM SELECT TOGGLE SWITCH
TS7	PLATFORM ROTATE TOGGLE SWITCH
TS9	PLATFORM LEVEL UP/DOWN TOGGLE SWITCH
TS14	DRIVE SPEED TOGGLE SWITCH
TS15	DRIVE ENABLE TOGGLE SWITCH
TS75	ZONE SELECT TOGGLE SWITCH
U13	ALC500 JOYSTICK CONTROLLER CARD

NOTE: DASHED LINES INDICATE OPTIONS.

1 ROCKER / STEER OPTION

https://truckmanualshub.com/

Platform Control Box Switch Panel Wiring Diagram, S-80X,
Continental TME27 Models

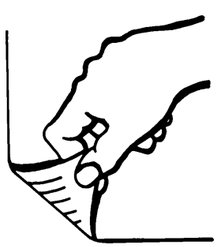

https://truckmanualshub.com/

Continental TME27 Engine Harness

https://truckmanualshub.com/

Continental TME27 Engine Harness

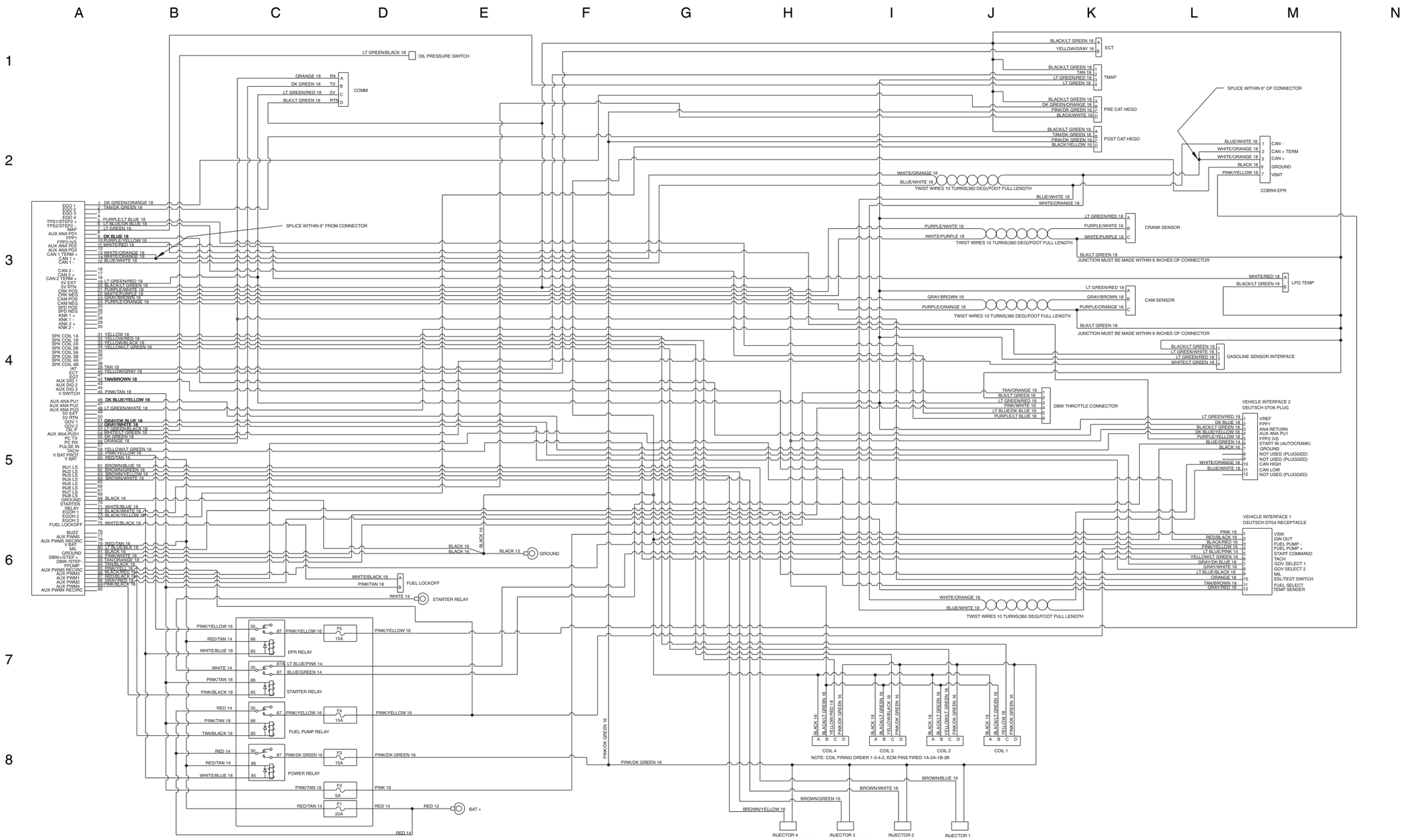

https://truckmanualshub.com/

Platform Level Cutout, CTE Option

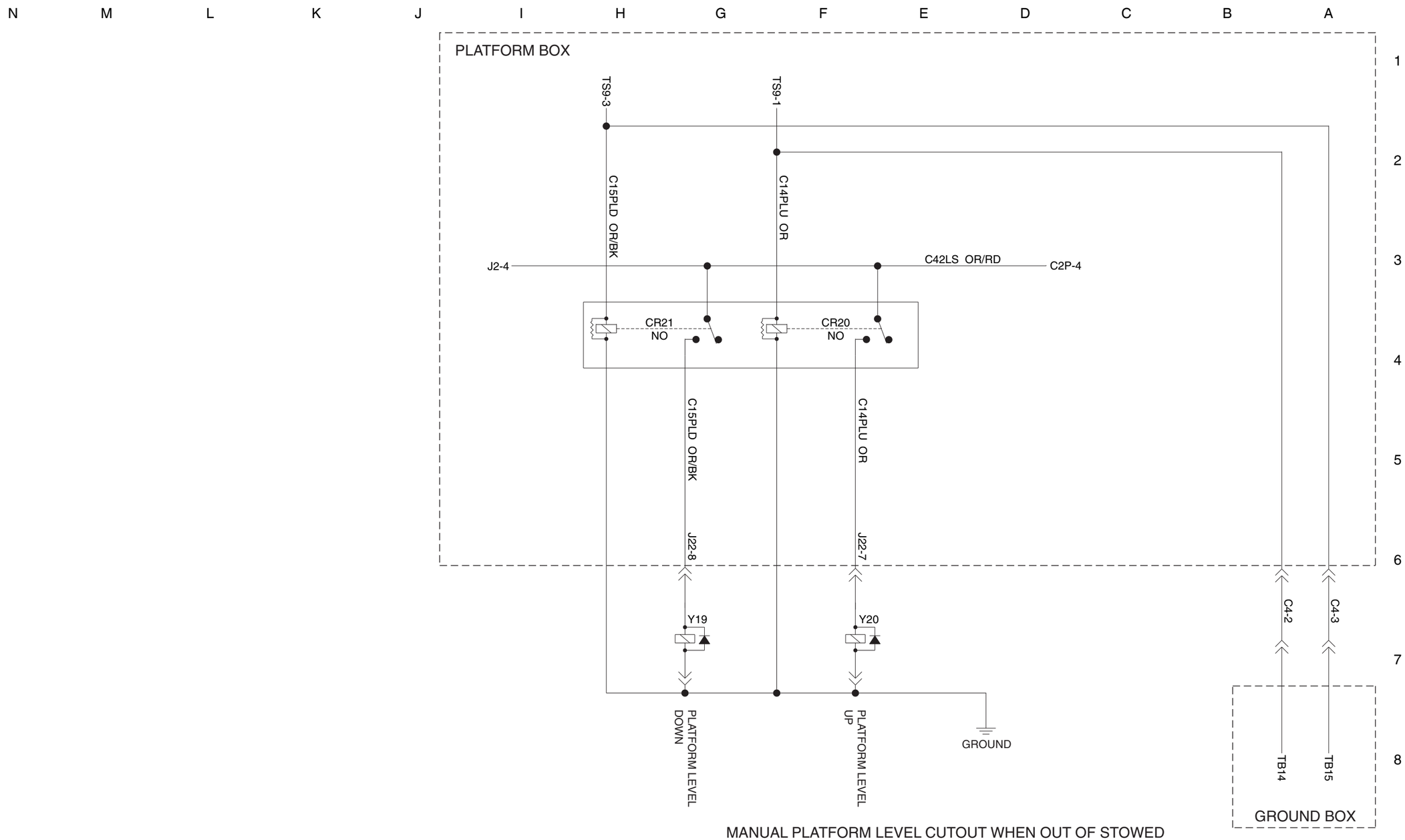

MANUAL PLATFORM LEVEL CUTOUT WHEN OUT OF STOWED

https://truckmanualshub.com/

Platform Level Cutout, CTE Option

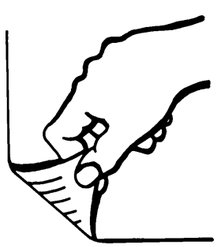

https://truckmanualshub.com/

Continental Options Schematic

https://truckmanualshub.com/

Continental Options Schematic

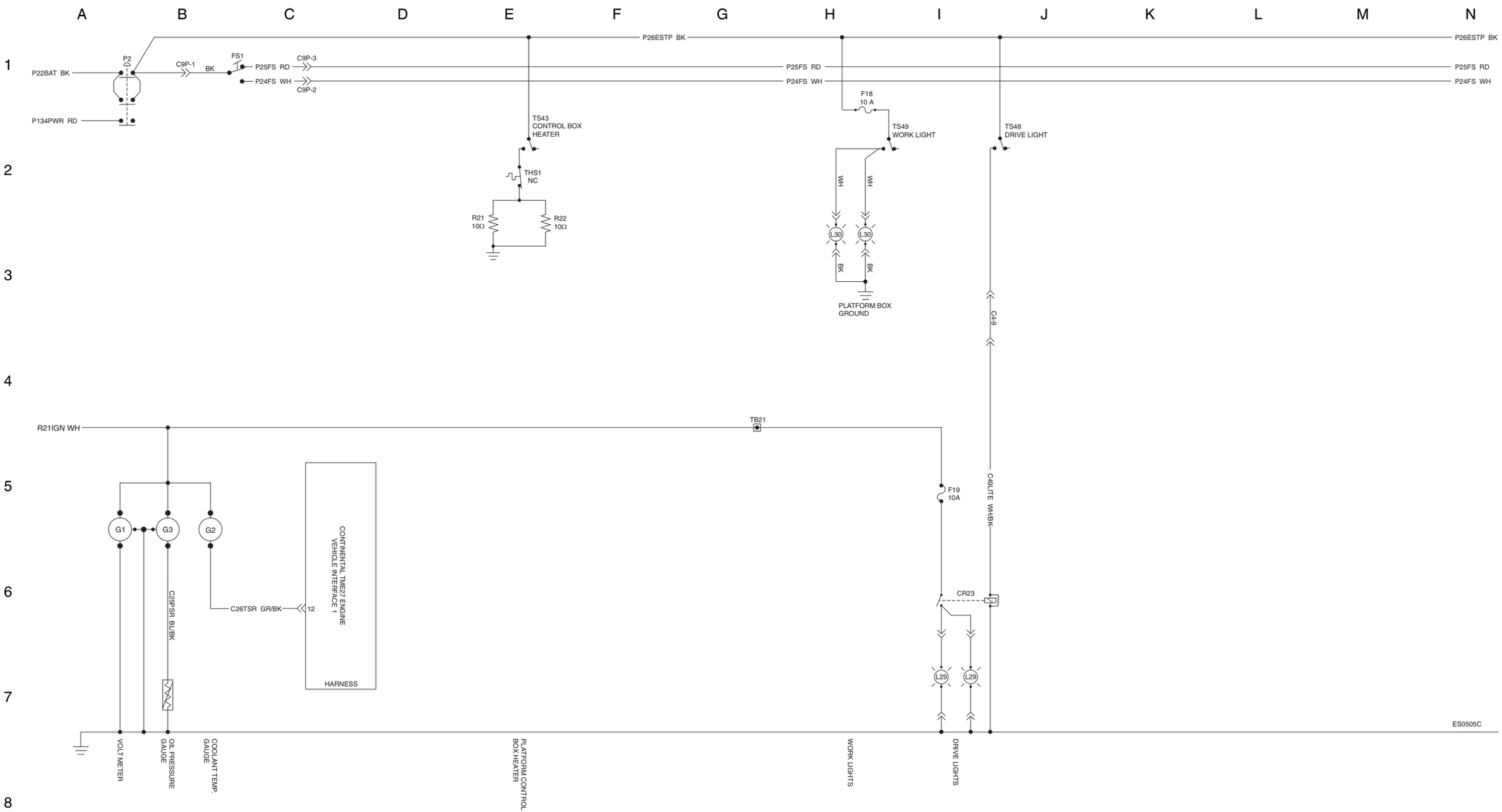

https://truckmanualshub.com/

Deutz and Perkins Options Schematic

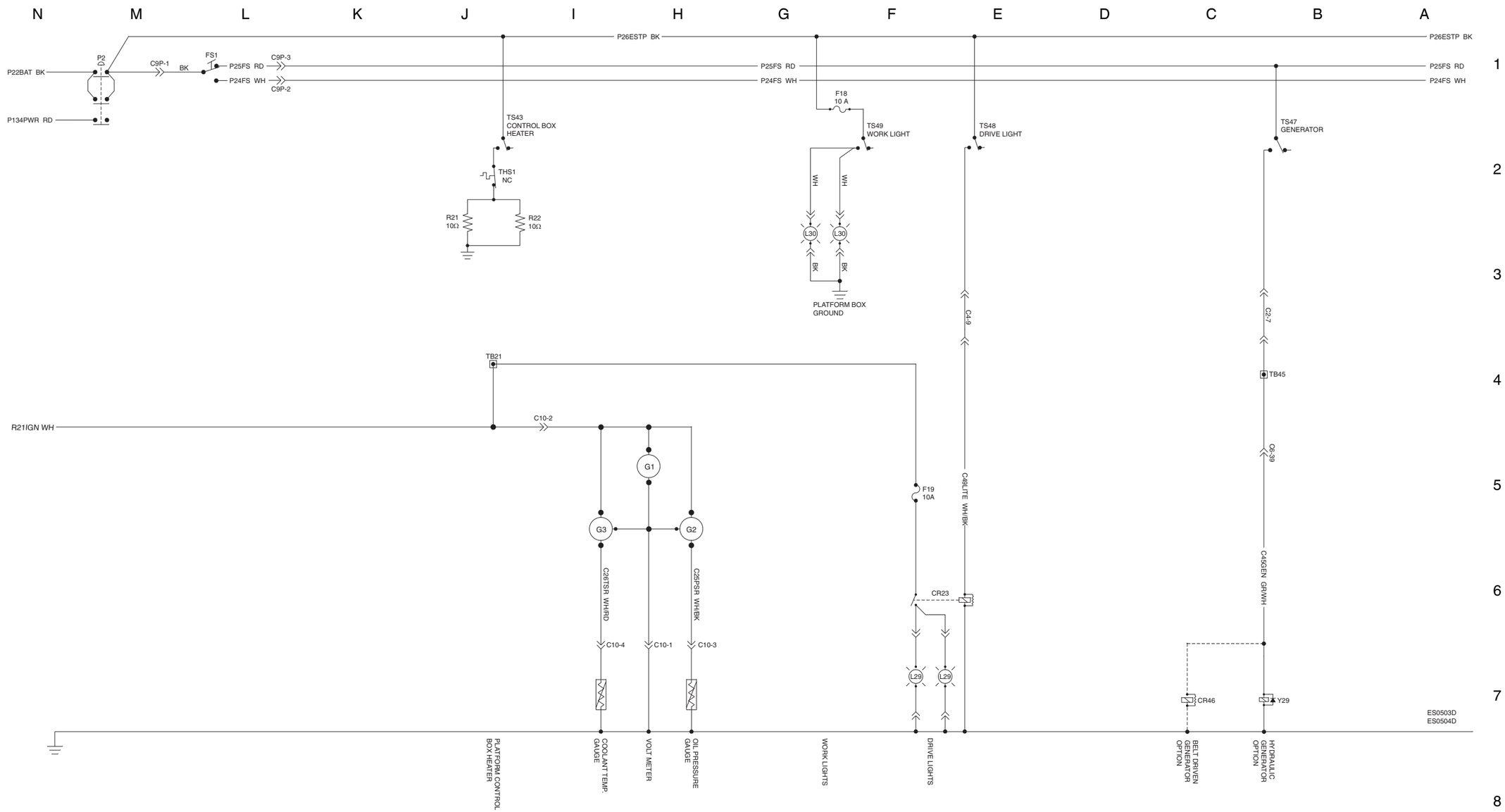

https://truckmanualshub.com/

Deutz and Perkins Options Schematic

https://truckmanualshub.com/

12 kW Hydraulic Generator Wiring Diagram

https://truckmanualshub.com/

12 kW Hydraulic Generator Wiring Diagram

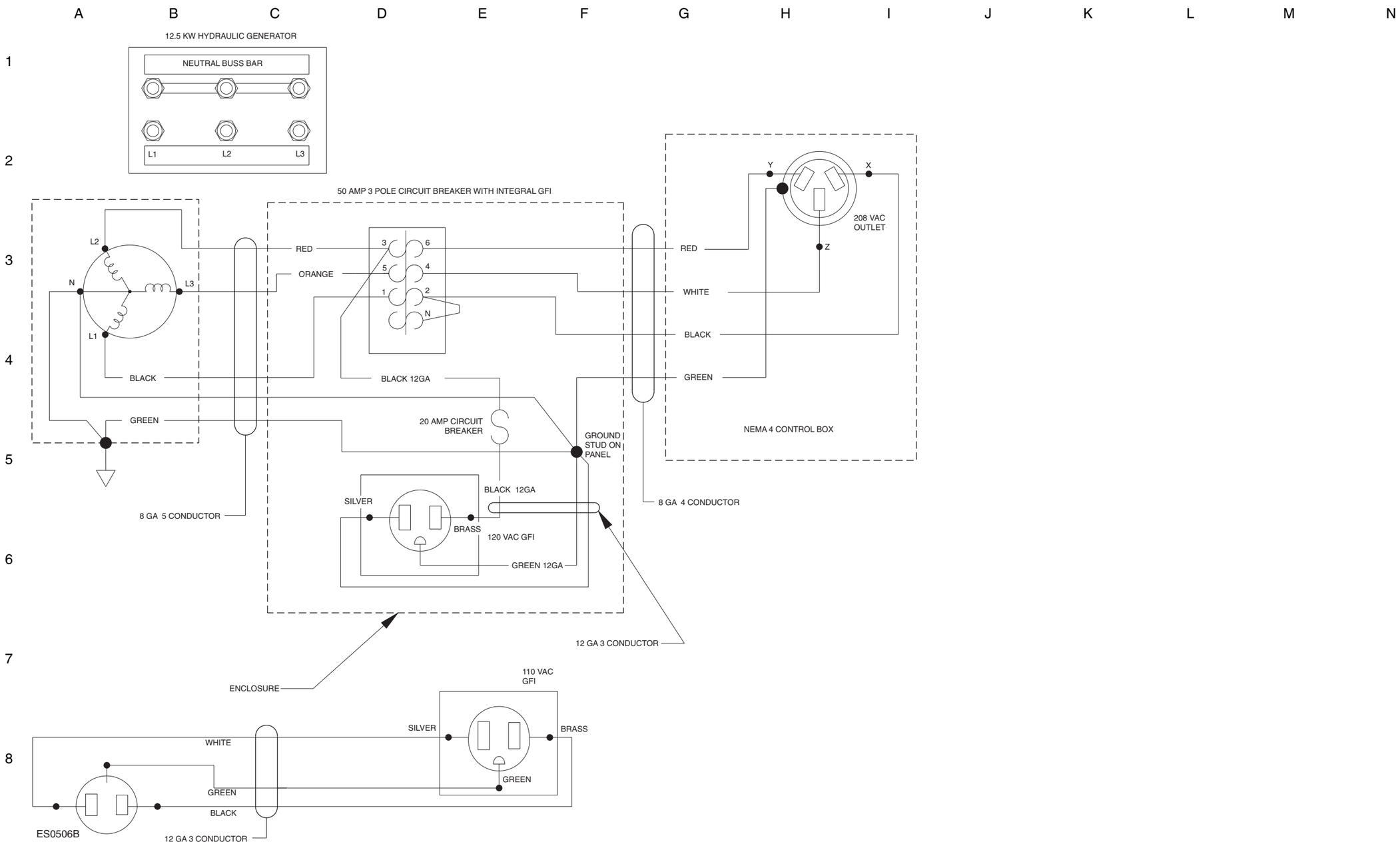

https://truckmanualshub.com/

12 kW Hydraulic Generator Electrical Schematic

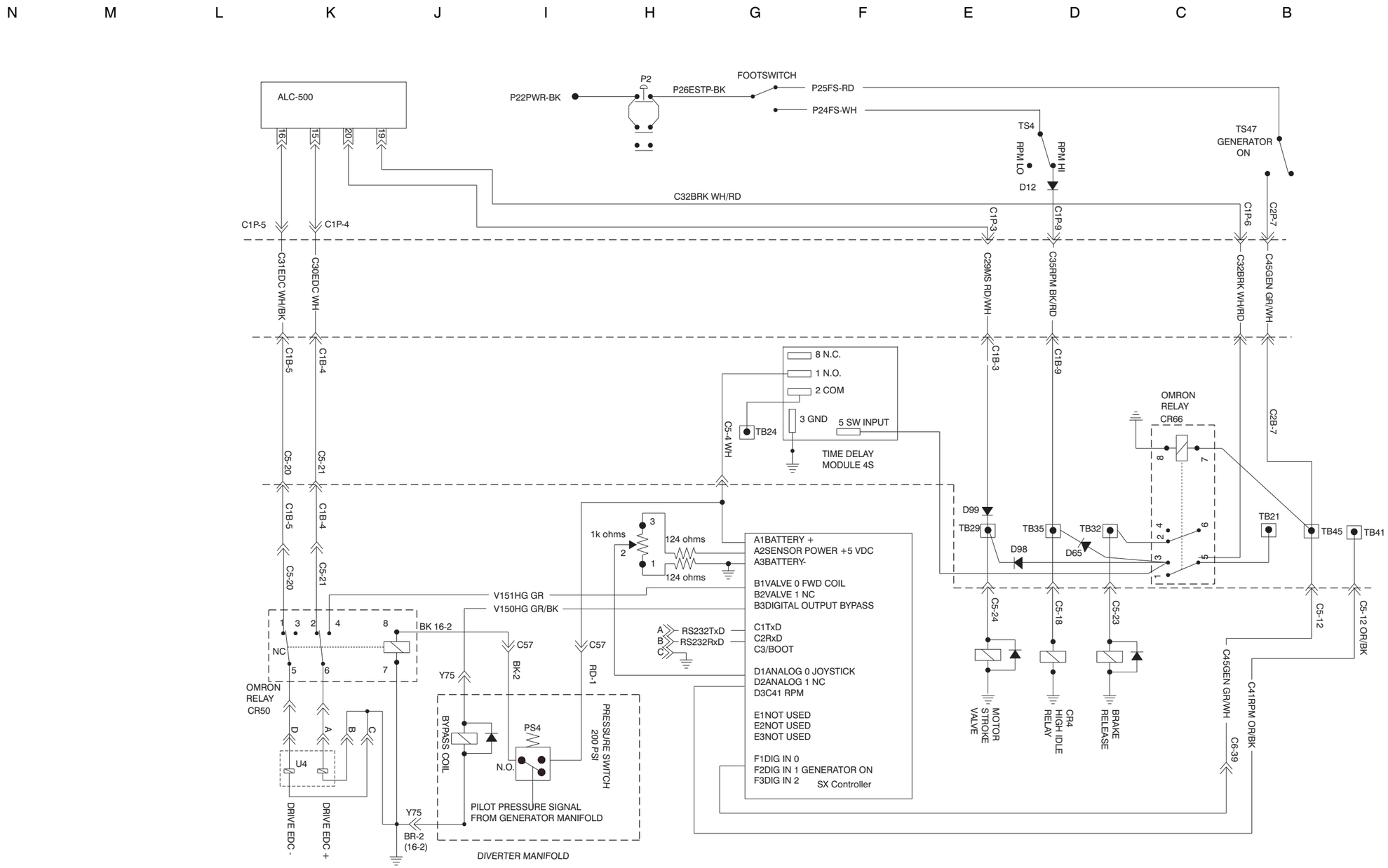

https://truckmanualshub.com/

12 kW Hydraulic Generator Electrical Schematic

https://truckmanualshub.com/

Belt Driven Generator Option

https://truckmanualshub.com/

Belt Driven Generator Option

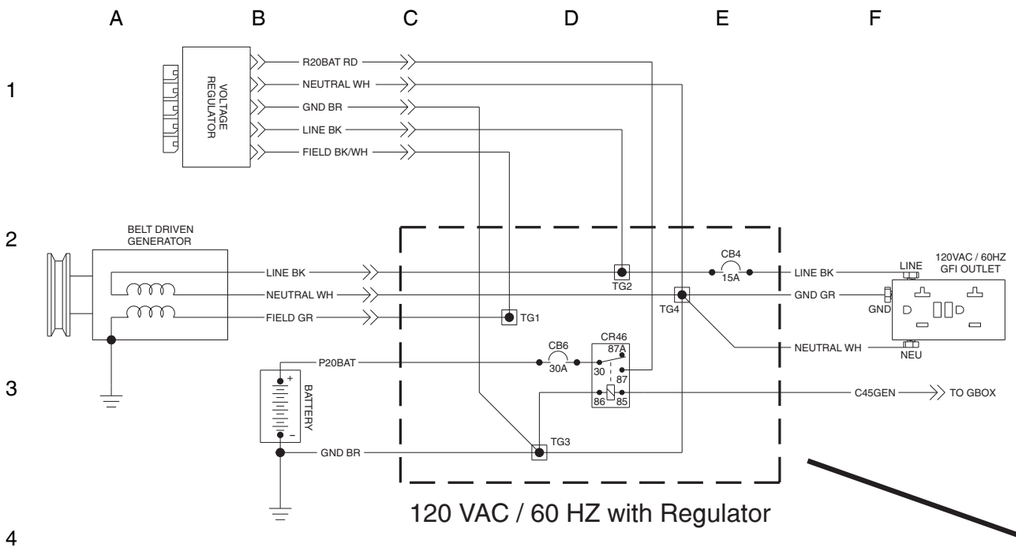

120 VAC / 60 HZ with Regulator

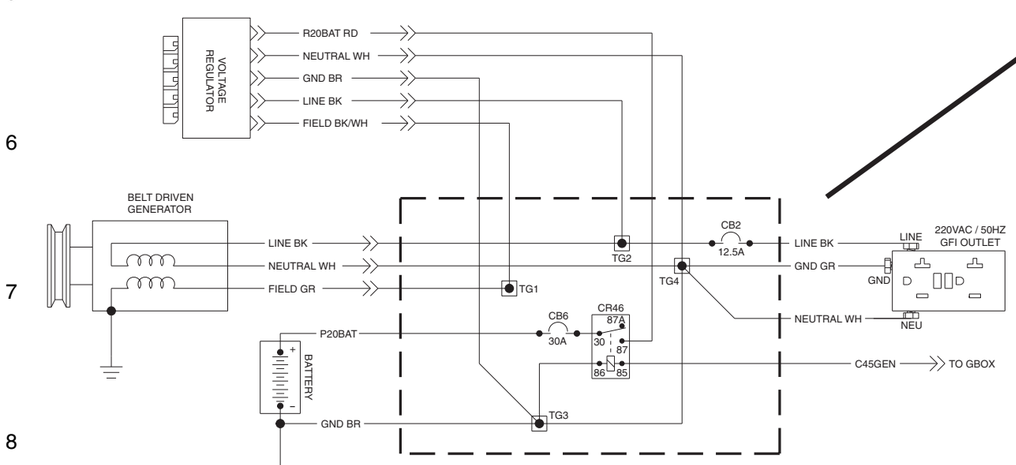

220 VAC / 50 HZ with Regulator

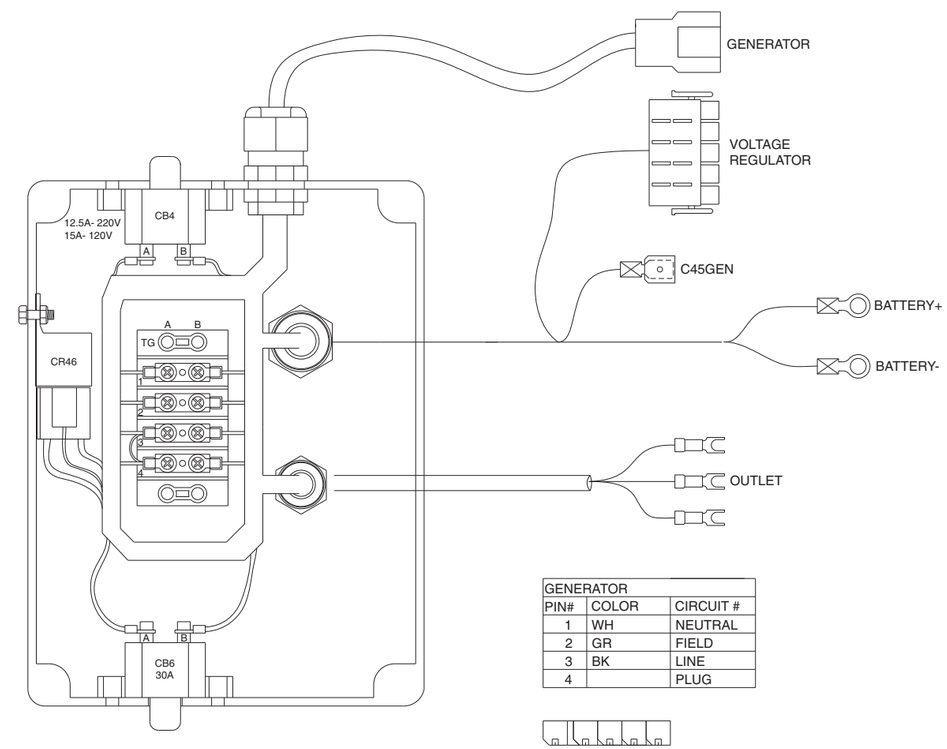

GENERATOR		
PIN#	COLOR	CIRCUIT #
1	WH	NEUTRAL
2	GR	FIELD
3	BK	LINE
4		PLUG

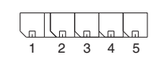

VOLTAGE REGULATOR		
PIN#	COLOR	CIRCUIT#
1	RD 12GA	R20BAT
2	WH 12GA	NEUTRAL
3	BR 12GA	GND
4	BK 12GA	LINE
5	BK/WH 14GA	FIELD

https://truckmanualshub.com/

Relay and Fuse Panel Legend

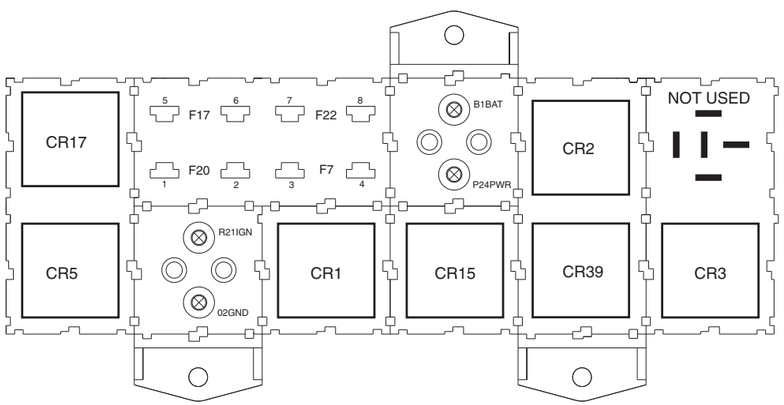

Deutz TD2011L04i

LABEL	DESCRIPTION
CR1	START RELAY
CR2	IGNITION / FUEL RELAY
CR3	HIGH IDLE RELAY
CR5	HORN RELAY
CR15	GLOW PLUG RELAY
CR17	HYDRAULIC OIL COOLER RELAY
CR39	AUXILIARY PUMP RELAY
CR39	AUXILIARY PUMP RELAY
F7	FUSE, 30A, OIL COOLER FAN / HORN
F17	FUSE, 30A, ENGINE / AUXILIARY PUMP
F20	FUSE, 20A, ENGINE RPM SOLENOID
F22	FUSE, 60A, GLOW PLUGS

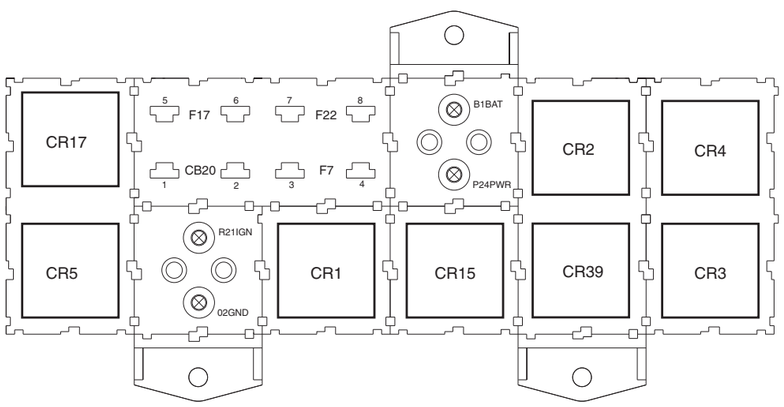

Perkins 804D-33

LABEL	DESCRIPTION
CB20	CIRCUIT BREAKER, 10A, ENGINE RPM SOLENOID
CR1	START RELAY
CR2	IGNITION / FUEL RELAY
CR3	HIGH IDLE RELAY
CR4	ENGINE RPM SOLENOID RELAY
CR5	HORN RELAY
CR15	GLOW PLUG RELAY
CR17	HYDRAULIC OIL COOLER RELAY
CR39	AUXILIARY PUMP RELAY
F7	FUSE, 30A, OIL COOLER FAN / HORN
F17	FUSE, 30A, ENGINE / AUXILIARY PUMP
F22	FUSE, 60A, GLOW PLUGS

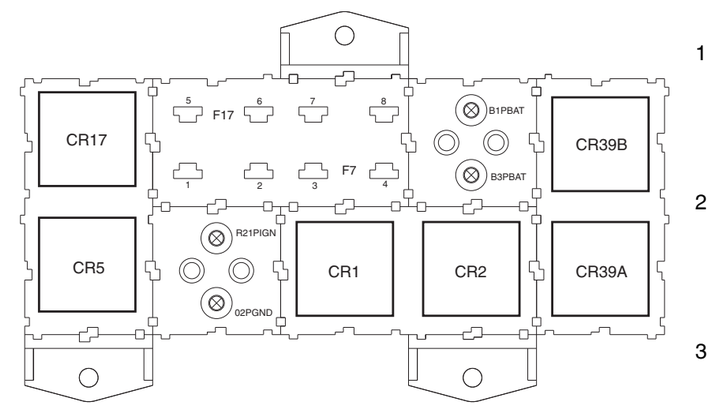

Continental TME27

LABEL	DESCRIPTION
CR1	START RELAY
CR2	IGNITION / FUEL RELAY
CR5	HORN RELAY
CR17	HYDRAULIC OIL COOLER RELAY
CR39A	AUXILIARY PUMP RELAY
CR39B	AUXILIARY PUMP ENGINE CUTOUT RELAY
F7	FUSE, 30A, OIL COOLER FAN / HORN
F17	FUSE, 30A, ENGINE / AUXILIARY PUMP

https://truckmanualshub.com/

Relay and Fuse Panel Legend

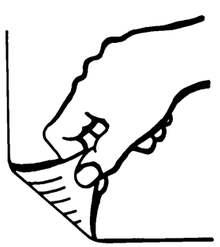

https://truckmanualshub.com/

Hydraulic Schematic, 2WD Models

https://truckmanualshub.com/

Hydraulic Schematic, 2WD Models

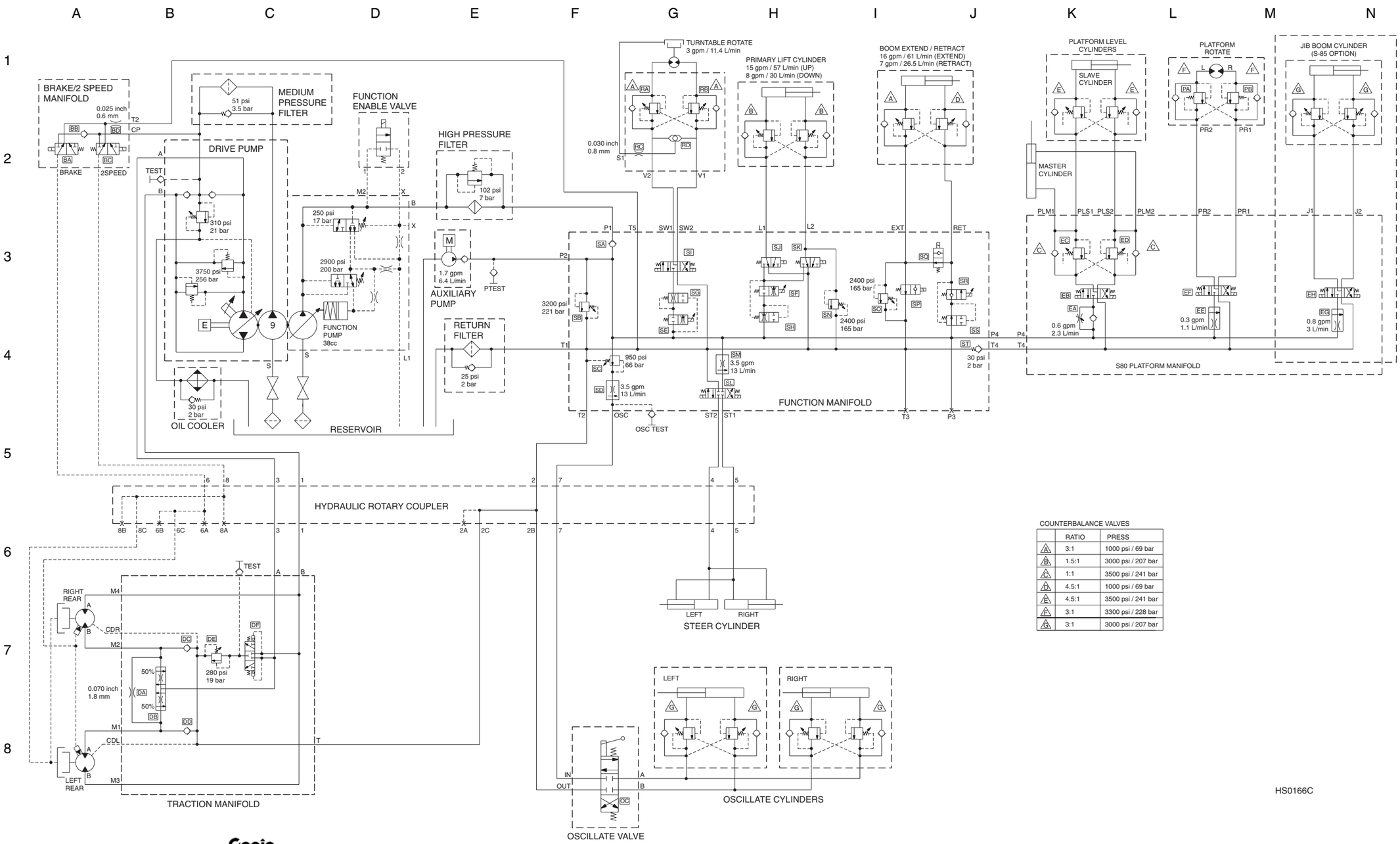

COUNTERBALANCE VALVES

	RATIO	PRESS
A	3:1	1000 psi / 69 bar
B	1.5:1	3000 psi / 207 bar
C	1:1	3500 psi / 241 bar
D	4.5:1	1000 psi / 69 bar
E	4.5:1	3500 psi / 241 bar
F	3:1	3300 psi / 228 bar
G	3:1	3000 psi / 207 bar

HS0166C

https://truckmanualshub.com/

Hydraulic Schematic, 4WD Models

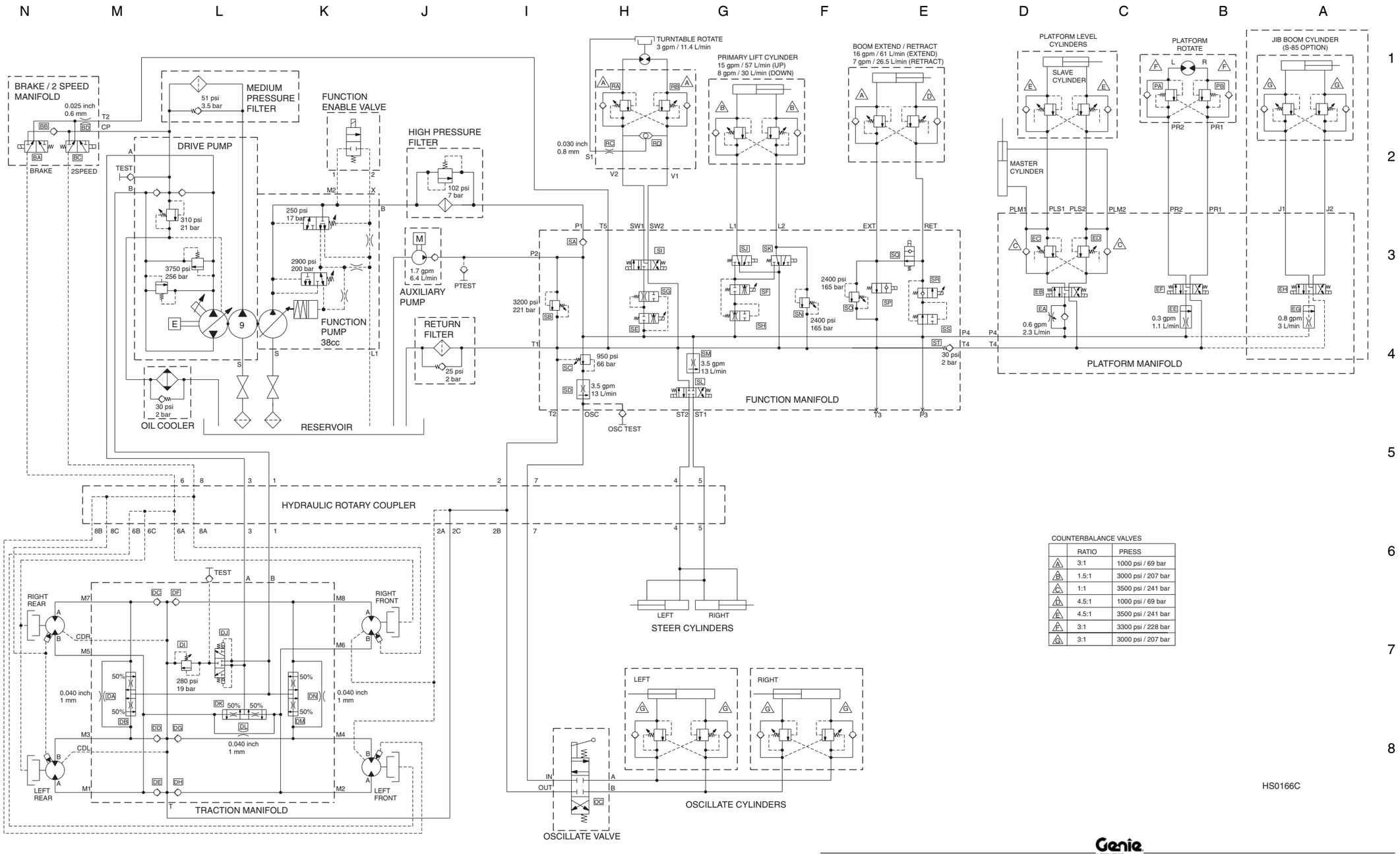

COUNTERBALANCE VALVES

	RATIO	PRESS
A	3:1	1000 psi / 69 bar
B	1.5:1	3000 psi / 207 bar
C	1:1	3500 psi / 241 bar
D	4.5:1	1000 psi / 69 bar
E	4.5:1	3500 psi / 241 bar
F	3:1	3300 psi / 228 bar
G	3:1	3000 psi / 207 bar

https://truckmanualshub.com/

Hydraulic Schematic, 4WD Models

https://truckmanualshub.com/

12 kW Hydraulic Generator Hydraulic Schematic

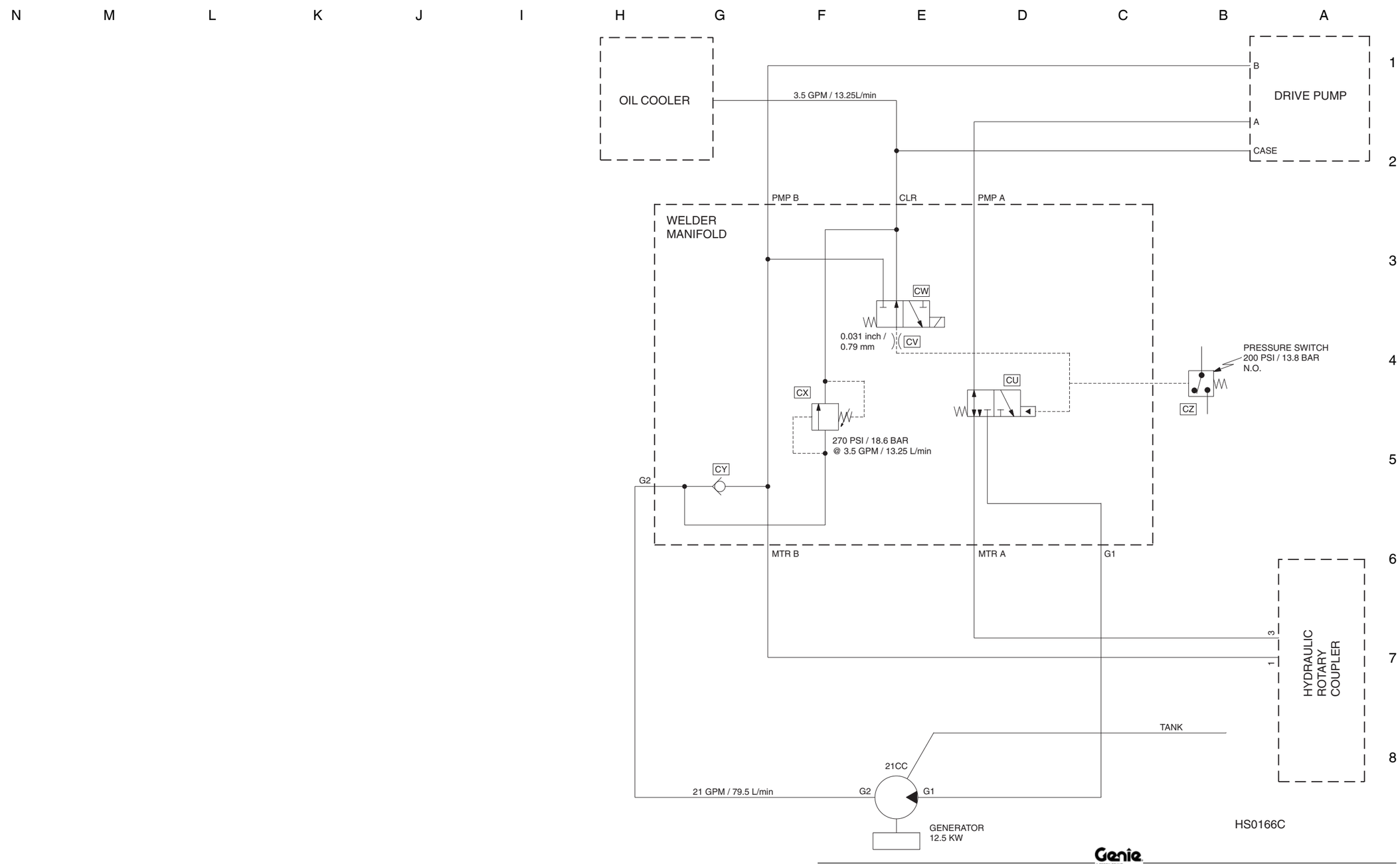

https://truckmanualshub.com/

12 kW Hydraulic Generator Hydraulic Schematic

https://truckmanualshub.com/

California Proposition 65

Warning

The exhaust from this product contains chemicals known to the State of California to cause cancer, birth defects or other reproductive harm.

Distributed By:

Genie North America
Phone 425.881.1800
Toll Free USA and Canada 800.536.1800
Fax 425.883.3475

Genie Australia Pty Ltd.
Phone +61 7 3375 1660
Fax +61 7 3375 1002

Genie China
Phone +86 21 53853768
Fax +86 21 53852569

Genie Singapore
Phone +65 67533544
Fax +65 67533544

Genie Japan
Phone +81 3 6436 2020
Fax +81 3 5445 1231

Genie Korea
Phone +82 2 558 7267
Fax +82 2 558 3910

Genie Brasil
Phone +55 11 4082 5600
Fax +55 22 4082 5630

Genie Holland
Phone +31 183 581 102
Fax +31 183 581 566

Genie Scandinavia
Phone +46 31 57 51 00
Fax +46 31 57 51 04

Genie France
Phone +33 2 37 26 09 99
Fax +33 2 37 26 09 98

Genie Iberica
Phone +34 93 572 5090
Fax +34 93 572 5091

Genie Germany
Phone 0800 180 9017
Phone +49 4221 491 810
Fax +49 4221 491 820

Genie U.K.
Phone +44 1476 584333
Fax +44 1476 584334

Genie Mexico City
Phone +52 55 5666 5242
Fax +52 55 5666 3241