T 158-8P6R33.341 6×6.2

https://truckmanualshub.com/

COMMERCIAL

6×6 THREE-WAY TIPPER

The TATRA PHOENIX Euro 6 combines the unique TATRA chassis with a spacious cab, modern and efficient PACCAR MX-11 or MX-13 engines, complying with the strictest emission requirements pursuant to the Euro 6 standards. With this combination TATRA can take you further - to the locations unavailable for other trucks. Powerful PACCAR MX engines offer reasonable operating costs, even in difficult terrain. Vehicles those will be coupled with trailer are then fitted with the MX Engine Brake as standard.
The outstanding productivity of TATRA PHOENIX trucks results from high payload and higher transport speeds in even in hard terrain, enabling you to haul more material faster. Compared to competing vehicles with rigid axles, TATRA PHOENIX achieves higher speed. Thanks to the air suspension on all axles, the vehicle provides a high degree of comfort for both the driver and carried superstructures or cargo.
TATRA PHOENIX vehicles use ZF transmissions, both manual and automated, or fully automatic Allison transmissions. The automated 16-speed AS Tronic version offers the driver perfect driving comfort, both in "standard auto" shift mode, or "off-road auto" mode, or in the manual mode. In addition, AS Tronic transmissions reduce fuel consumption through shifting at the optimum speed, and also protect the drive train from driver error, such as overspeeding or burning the clutch. The automated AS Tronic transmission is also equipped with a handy "Hill Holder" system. Based on experience from the operation of civilian and military special trucks, the Allison automatic transmission with a hydrodynamic converter is suitable for the most demanding conditions. The ZF and Allison transmissions can be optionally equipped with an integrated retarder - intarder, representing a significant brake system and crucially affecting both braking performance and wear on the vehicle service brakes.

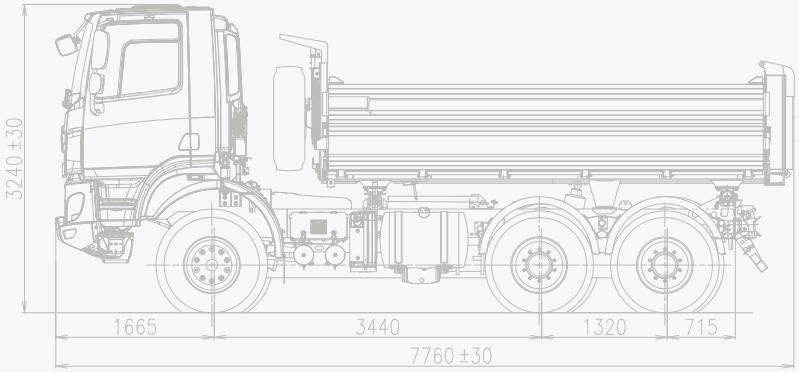

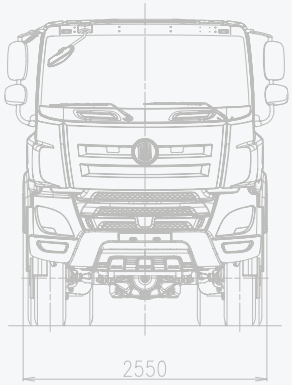

TATRA TAKES YOU FURTHER

tatratrucks.com

TATRA PHOENIX Euro 6

T 158-8P6R33.341 6×8.2

https://truckmanualshub.com/

6×6 THREE-WAY TIPPER

TATRA PHOENIX EURO6

ENGINE

Type	PACCAR MX-11 Euro 6
No. of cylinders	6
Swept volume	10,800 cm³
Net power	291 kW/1,700 rpm
Net torque	1,900 Nm/1,000-1,450 rpm

SCR, EGR, DPF exhaust gas treatment system

Optional:

- MX-11 engine, power output 271, 320 kW/1,700 rpm
- MX-13 engine, cylinder capacity 12,900 cm³, power 300, 340, 375 kW/1,450 rpm
- Decompression MX Engine Brake as standard

TRANSMISSION

Manual / Automated, ZF type 16S Ecosplit/Astronic.

Number of speeds	
- forward	16
- reverse	2

Hydraulically operated clutch, diam. 1x430 mm.

Optional: intarder

TRANSFER CASE

One-speed TATRA 1.30 TR, ratio 1.28

Optional: one-speed (1.12; 1.46) or two-speed TATRA 2.30 TRK changeable at standstill (ratios 0.95/1.44)

FRONT AXLE

Steered, driven with swinging half-axles, switchable, drive, axle differential. Air suspension with bellows, telescopic shock absorbers (optional stabilizer).

REAR AXLES

Driven, with swinging half-axles, axle differential locks, inter-axle differential lock.

Air suspension with bellows, combined with coil springs, telescopic shock absorbers and torsion stabilizer at the last axle (optional).

STEERING

Left-hand sided, monoblock

BRAKES

Four independent brake systems: service, emergency, parking, relief.

TYRES, DISCS

	front	rear
Tyres	385/65 R22.5	315/80 R22.5
Discs	22.5×11.5	9.00×22.5

CAB

Over-engine, hydraulically folding, with engine-dependent water heating. Number of seats: 2

Optional: with A/C or independent heater, sleeper cab or a third seat.

FUEL TANK

Steel, 300 to 340 liters + 45-liter AdBlue.

DIMENSIONS

Width	2,550 mm
Wheelbase	
- front	1,942 mm
- rear	1,774 mm
Ground clearance	280 mm

WEIGHTS

Total weight	30,000 kg
Maximum front axle load	9,000 kg
Maximum rear axles load	2×11,500 kg

ELECTRIC EQUIPMENT

Rated voltage	24 V
Batteries	2×12V 180 Ah
Alternator	24 V / 80 A

Preparation for the FMS connector

FEATURES

Climbing ability at the total weight of 30,000 kg	100 %
Max. speed (with speed limiter)	85 km/h
Turning radius (contour)	17.5±1.0 m

OPTIONAL

Cold Start System, body heating by exhaust gases.

tatratrucks.com

TATRA TRUCKS a.s.
Areál Tatry 1450/1, 742 21 Kopřivnice, Czech Republic
tel.: +420 556 494 332, fax: +420 556 494 304, e-mail: ou@tatra.cz