No. SEB-7P0BE

TCM®

SERVICE MANUAL

FORKLIFT TRUCK

Counter Balanced

FB10-8
FB15-8
FB18-8
FB20-8
FB25-8
FB30-8

FB25-8LB
FB25-8V
FB30-8V
FB35-8S

TCM CORPORATION

FOREWORD

The new TCM's FB-8 Series battery-powered forklift trucks are provided with a newly designed speed control system and AC motors for both the traveling and load handling systems to assure high performance operation.

The trucks of this series are also provided with a self-diagnosis function which keeps watching the operating statuses of the main control systems of the truck. If the truck has a trouble, the function detects the trouble and displays the result of diagnosis. The maintainability is thus improved.

As for mobility, since the high capacity batteries and high power drive motor are used, the first-class acceleration, gradeability, and traveling performance are achieved.

Controllability is also improved by the standard equipped power steering unit.

To save power, the acceleration and traveling speeds are selectable and made changeable according to working conditions. Also for effective use of the battery, a regenerative device is provided to send back counter electromotive force to the battery.

This Service Manual is intended to provide the maintenance personnel with helpful information of the structures of the major components and with instructions on the maintenance and repair of such components. We hope it will be much help for your servicing and maintenance operations.

December 2012

TCM CORPORATION

SPECIFICATIONS (1)

Item \ Truck model			FB10-8	FB15-8	FB18-8	FB20-8
Performance						
Max. load		kg [lbs]	1000 [2000]	1500 [3000]	1750 [3500]	2000 [4000]
Load center		mm [in.]	500 [24]	←	←	←
Max. lifting height		mm [in.]	3000 [118.1]	←	←	←
Tilting angle						
Fwd		°	6	←	←	←
Bwd		°	12	←	←	←
Free lift	**A**	mm [in.]	155 [6.1]	←	←	110 [4.3]
Mast tilting time (Fwd - Bwd)		s	2.0 - 1.4	←	←	2.7 - 2.0
Fork lifting speed						
Loaded		mm/s [fpm]	390 [76.8]	350 [68.9]	330 [65.0]	290 [57.1]
Unloaded		mm/s [fpm]	580 [114.2]	←	←	510 [100.4]
Travel speed						
Loaded		km/h [mph]	14 [8.7]	←	←	←
Unloaded		km/h [mph]	16 [9.9]	←	←	←
Gradeability (Starting on an uphill when loaded)			1/7	←	←	←
Min. turning radius (Outermost part of truck) EPS:	**B**	mm [in.]	1700 [66.9]	←	1790 [70.5]	1950 [76.8]
Orbitrol type:			1800 [70.9]	←	1890 [74.4]	2070 [81.5]
Min. intersecting aisle	**C**	mm [in.]	1690 [66.5]	←	1730 [68.1]	1895 [79.6]
Dimensions		mm [in.]				
Overall length (includ. fork)	**D**		2875 [113.2]	←	2975 [117.1]	3315 [130.5]
Overall width	**E**		1070 [42.1]	←	←	1150 [45.3]
Overall height (Overhead guard)	**F**		2080 [81.9]	←	←	2125 [83.7]
EXN:			2140 [84.3]	←	←	2185 [86.0]
Overall extended height			4030 [158.7]	←	←	←
Wheel base	**G**		1250 [49.2]	←	1350 [53.2]	1400 [55.1]
Tread						
Front wheels	**H**		910 [35.8]	←	←	955 [37.6]
Rear wheels	**J**		900 [35.4]	←	←	950 [37.4]
Fork overhang	**K**		375 [14.8]	←	←	435 [17.1]
Rear overhang	**L**		330 [13.0]	←	←	410 [16.1]
Fork size (Length **L** x Width **M** x Thickness **N**)			920x100x35 [36.2x3.9x1.4]	←	←	1070x122x40 [42.1x4.8x1.6]
Fork spacing	**Q**		200 - 920 [7.9 - 36.2]	←	←	245 -1020 [9.6 - 40.2]
Minimum under clearance			90 [3.5] (Rear axle)	←	←	100 [3.9] (Rear axle)
Tow pin height			390 [15.4]	←	←	440 [17.3]
Weight						
Service Weight with std. batteries		kg [lbf]	2680 [5908]	2710 [5976]	3030 [6680]	3500 [7716]

The values in the Performance section are given for trucks operating in the Super mode.

SPECIFICATIONS (2)

Item \ Truck model			FB25-8	FB25-8LB FB25-8V	FB30-8 FB30-8V	FB35-8S
Performance						
Max. load		kg [lbs]	2500 [5000]	←	3000 [6600]	3500 [7000]
Load center		mm [in.]	500 [24]	←	←	←
Max. lifting height		mm [in.]	3000 [118.1]	←	←	←
Tilting angle						
Fwd		°	6	←	←	←
Bwd		°	12	←	←	10
Free lift	**A**	mm [in.]	110 [4.3]	←	165 [6.5]	170 [6.7]
Mast tilting time (Fwd - Bwd)		s	2.7 - 2.0	←	2.5 - 2.0	3.5 - 2.5
Fork lifting speed						
Loaded		mm/s [fpm]	265 [52.2]	←	290 [57.1]	240 [47.2]
Unloaded		mm/s [fpm]	510 [100.4]	←	490 [96.5]	410 [80.7]
Travel speed						
Loaded		km/h [mph]	14 [8.7]	13.5 [8.4]	14 [8.7]	←
Unloaded		km/h [mph]	16 [9.9]	15.5 [9.6]	15 [9.3]	←
Gradeability (Starting on an uphill when loaded)			1/7	1/8	←	1/10
Min. turning radius (Outermost part of truck) EPS:	**B**	mm [in.]	1970 [77.6]	2065 [81.3]	2140 [84.3]	2360 [92.9]
Orbitrol type:			2100 [82.7]	2200 [86.6]	2290 [90.2]	2500[98.4]
Min. intersecting aisle	**C**	mm [in.]	1905 [75.0]	1955 [76.9]	2050 [80.7]	2250 [88.6]
Dimensions		mm [in.]				
Overall length (includ. fork)	**D**		3355 [132]	3460 [136]	3580 [140.9]	3805 [149.8]
Overall width	**E**		1150 [45.3]	←	1225 [48.2]	1380 [54.3]
Overall height (Overhead guard)	**F**		2125 [83.7]	LB: 2250 [88.6] V: 2100 [82.7]	2190 [86.2] V: 2100 [82.7]	2190 [86.2]
Overall extended height			4030 [158.7]	←	4260 [167.7]	←
Wheel base	**G**		1400 [55.1]	1545 [60.8]	1600 [63.0]	1800 [70.9]
Tread						
Front wheels	**H**		955 [37.6]	←	1000 [39.4]	1140 [44.9]
Rear wheels	**J**		950 [37.4]	←	←	←
Fork overhang	**K**		435 [17.1]	←	480 [18.9]	500 [19.7]
Rear overhang	**L**		450 [17.7]	410 [16.1]	430 [16.9]	←
Fork size (Length **L** x Width **M** x Thickness **N**)			1070x122x40 [42.1x4.8x1.6]	←	1070x125x45 [42.1x4.9x1.8]	1070x150x50 [42.1x5.9x2.0]
Fork spacing	**Q**		245 - 1020 [9.6 - 40.2]	←	250 - 1090 [9.8 - 42.9]	300 - 1090 [11.8 - 42.9]
Minimum under clearance			100 [3.9] (Rear axle)	90 [3.5] (Rear axle)	←	←
Tow pin height			440 [17.3]	←	475 [18.7]	←
Weight						
Service Weight with std. batteries		kg [lbf]	3910 [8620]	LB: 4400 [9700] V: 4290 [9460]	4640 [10200]	5240 [11600]

The values in the Performance section are given for trucks operating in the Super mode.

Unit: mm [in.]

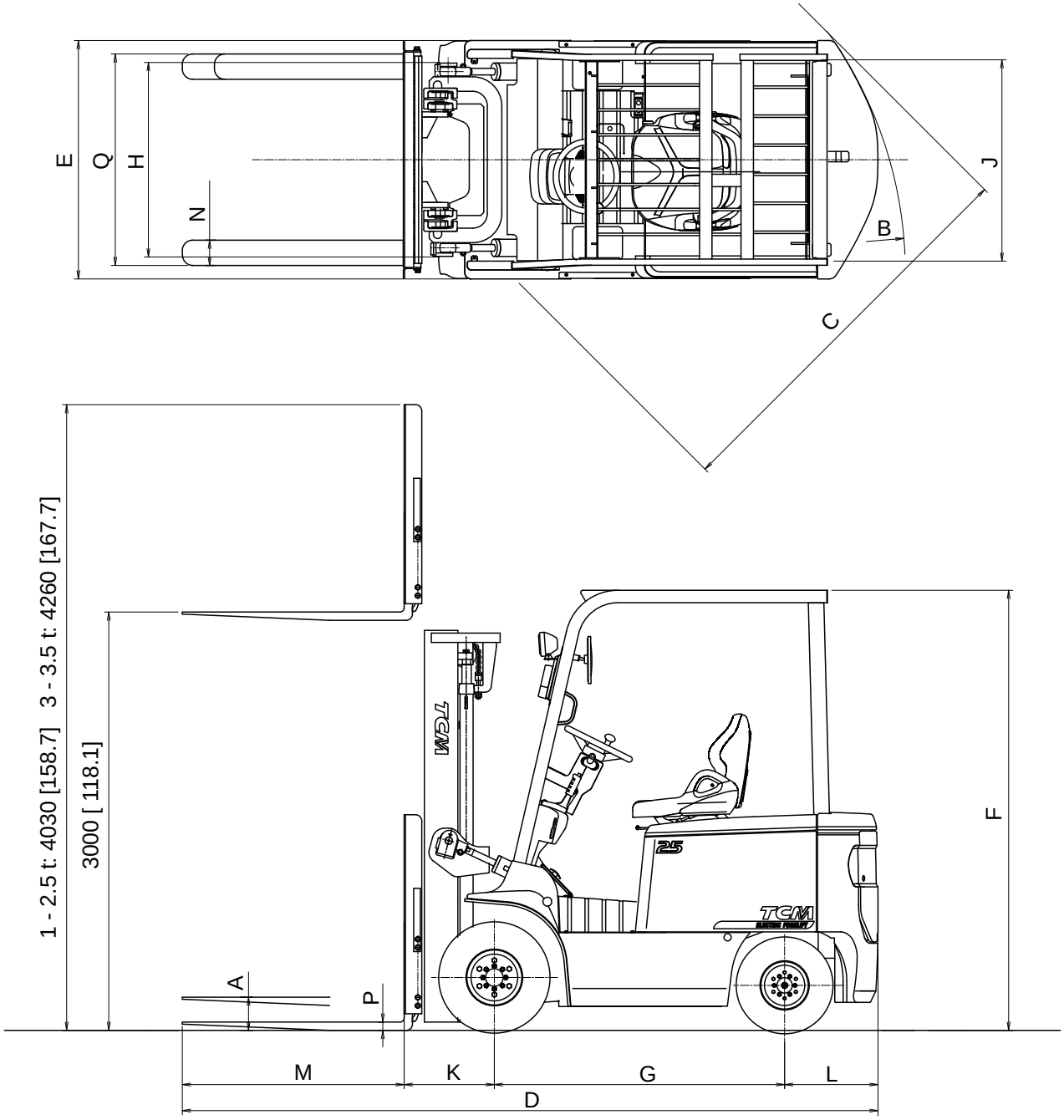

Fig. 1 Overall Dimensions

Table 1. Maintenance Standard List

Item				Truck model	FB10-8 FB15-8	FB18-8	FB20-8 FB25-8 FB25-8LB FB25-8V	FB30-8 FB30-8V	FB35-8S
Electric system	Motor brush size and wear limit	Traction		mm [in.]	*	*	*	*	*
		Pump		mm [in.]	*	*	*	*	*
		Power steering (EPS type only)		mm [in.]	22 - 13 [0.87 - 0.51]	←	←	←	←
	Motor brush spring force	Traction		N{kgf}[lbf]	*	*	*	*	*
		Pump		N{kgf}[lbf]	*	*	*	*	*
		Power steering (EPS type only)		N{kgf}[lbf]	11.8 {1.2} [2.7]	←	←	←	←
	Voltage relay check voltage (20°C)			(V)	58.8±0.2	←	←	87.0±0.2	←
	Timer operating time	Normal		(h)	14	←	←	←	←
		Fail		(h)	16	←	←	←	←
	Controller current limit value (Traction motor lock current)	P		(A)	*	*	*	*	*
		E		(A)	*	*	*	*	*
	Fuses	Traveling system main circuit		(A)	400	←	500	400	←
		For control circuit (battery power supply)		(A)	10	←	←	←	←
		Lift lock		(A)	2	←	←	←	←
		Battery charger primary side (thermal relay)		(A)	24	←	34	40	←
		Battery charger secondary side		(A)	130	←	130/200	130	←
		For control circuit (key switch power supply)		(A)	10	←	←	←	←
		For accessory circuit		(A)	10	←	←	←	←
Steering axles and wheels	Tire air pressure	Front	(single)	MPa{kgf/cm²}[psi]	0.85±0.03 {8.5±0.3} [123.3±4.35]	1.00±0.03 {10.0±0.3} [145.0±4.35]	←	0.8±0.03 {8.0±0.3} [116.0±4.35]	0.85±0.03 {8.5±0.3} [123.3±4.35]
			(double)		0.7±0.03 {7.0±0.3} [101.5±4.4]	←	←	←	←
		Rear		MPa{kgf/cm²}[psi]	0.85±0.03 {8.5±0.3} [123.3±4.35]	←	0.90±0.03 {9.0±0.3} [130.5±4.35]	←	*
	Hub nut tightening torque	Front		N·m{kgf·m}[lbf·ft]	150-175 {15-17.5} [110.6-129.1]	←	370-420 {37.8-42.8} [273-310]	470.7-549.2 {48-56} [347-405]	←
		Rear		N·m{kgf·m}[lbf·ft]	127.5-190.3 13.0-19.4} [94-140]	←	←	←	←
	Axle shaft mounting bolt tightening torque			N·m{kgf·m}[lbf·ft]	96.1-110.8 {9.8-11.3} [70.9-81.7]	←	*	96.1-110.8 {9.8-11.3} [70.9-81.7]	←
	Split rim assembly bolt tightening torque	Front		N·m{kgf·m}[lbf·ft]	60.8-90.2 {6.2-9.2} [44.8-66.5]	←	*	*	*
		Rear		N·m{kgf·m}[lbf·ft]	30.4-45.1 {3.1-4.6} [22.4-33.3]	←	60.8-90.2 {6.2-9.2} [44.8-66.5]	←	←
	Steering axle gap in fore-and-aft direction			mm [in.]	less than 1 [0.039]	←	←	←	←
	Steering axle center pin diameter (EPS type only)			mm [in.]	$40^{+0}_{-0.1}$ [$1.57^{+0}_{-0.004}$]	←	$50^{+0}_{-0.1}$ [$1.97^{+0}_{-0.004}$]	←	←
	Steering axle bushing inner diameter			mm [in.]	$40^{+0.1}_{-0}$ [$1.57^{+0}_{-0.004}$]	←	$50^{+0}_{-0.1}$ [$1.97^{+0}_{-0.004}$]	←	←
Steering system	Steering wheel play in rotating direction			mm [in.]	75±25 [2.95±0.98]	←	←	←	←
	Camber angle			°	1	←	←	←	←
	Minimum turning radius mm [in.]	EPS type			1700^{+50}_{-0} [$66.9^{+1.97}_{-0}$]	1790^{+50}_{-0} [$70.5^{+1.97}_{-0}$]	FB20: 1950^{+50}_{-0} [$76.8^{+1.97}_{-0}$]	2140^{+50}_{-0} [$84.3^{+1.97}_{-0}$]	2360^{+50}_{-0} [$92.9^{+1.97}_{-0}$]
		EPS type					FB25: 1970^{+50}_{-0} [$77.6^{+1.97}_{-0}$]		
		Orbitrol type			1800 [70.9]	1890 [74.4]	FB20: 2070 [81.5] FB25: 2100 [82.7]	2290 [90.2]	2500 [98.4]
	Power steering relief pressure setting			MPa{kgf/cm²}[psi]	*	*	*	*	*
Brake system	Brake pedal height			mm [in.]	97 [3.8]	←	←	110	←
	Brake pedal play			mm [in.]	10±5 [0.393±0.197]	←	←	←	←
	Brake pedal height when depressed fully			mm [in.]	60±10 [2.362±0.393]	←	←	←	←
	Foot pedal braking effect			Unloaded	within 2.5 m	←	←	←	←
				Loaded	within 2.5 m	←	←	←	←
	Parking brake lever operating force			N{kgf}[lbf]	*	*	*	*	*
	Parking brake braking effect			Unloaded	Held in position on 20% slope	←	Held in position on 16.7% slope	←	←
				Loaded	Held in position on 14.3% slope	←	←	Held in position on 12.5% slope	←
	Clearance between brake drum and lining			mm [in.]	0.25-0.4 [0.0098-0.016]	←	←	←	←
	Lining thickness			mm [in.]	5^{+0}_{-3} [$0.197^{+0}_{-0.118}$]	←	$5.6^{+0}_{-3.6}$ [$0.22^{+0}_{-0.142}$]	8^{+0}_{-6} [$0.31^{+0}_{-0.236}$]]	←
	Brake drum inner diameter			mm [in.]	254^{+2}_{-0} [$10^{+0.079}_{-0}$]	←	280^{+2}_{-0} [$11.0^{+0.079}_{-0}$]	314^{+2}_{-0} [$12.4^{+0.079}_{-0}$]	←
	Brake drum mounting bolt tightening torque			N·m{kgf·m}[lbf·ft]	*	*	215.7-235.4 {22-24} [159.1-173.6]	470.7-549.2 {48-56} [347.2-405.1]	←
	Back plate mounting bolt tightening torque			N·m{kgf·m}[lbf·ft]	117.7-137.3 {12-14} [86.8-101.3]	←	205.9-225.6 { 21-23} [151.9-166.4]	←	←
Load handling system	Fork thickness			mm [in.]	35^{+0}_{-4} [$1.38^{+0}_{-0.157}$]	←	40^{+0}_{-4} [$1.57^{+0}_{-0.157}$]	45^{+0}_{-6} [$1.77^{+0}_{-0.236}$]	50^{+0}_{-5} [$1.97^{+0}_{-0.197}$]
	Opening of fork tips			mm [in.]	within 10 [0.394]	←	←	←	←
	Difference in height between right and left fork tips			mm [in.]	0±5 [0±0.197]	←	←	←	←
	Chain length			mm [in.]	19.05^{+50}_{-0}	←	←	25.4^{+50}_{-0}	←
Hydraulic system	Tilt cylinder piston rod lock bolt and nut tightening torque			N·m{kgf·m}[lbf·ft]	107.9±20.6 {11.0±2.1} [79.6±15.2]	←	←	←	←
	Lift cylinder natural drop			mm [in.]/min	less than 75 [2.95]/10	←	less than 60 [2.36]/10	less than 50 [1.97]/10	←
	Tilt cylinder natural tilt (extension of piston rod)			mm [in.]/min	less than 25 [0.98]/10	←	less than 20 [0.79]/10	←	←
	Fork lifting speed (Unloaded)			mm [in.]/sec	580^{+50}_{-0} [$22.8^{+1.97}_{-0}$]	←	510^{+50}_{-0} [$20.1^{+1.97}_{-0}$]	490^{+50}_{-0} [$19.3^{+1.97}_{-0}$]	410^{+50}_{-0} [$16.1^{+1.97}_{-0}$]
	Control valve relief pressure setting			MPa{kgf/cm²}[psi]	$13.7^{+0.49}_{-0}$ {140^{+5}_{-0}} [$1990^{+71.1}_{-0}$]	$15.7^{+0.49}_{-0}$ {160^{+5}_{-0}} [$2277^{+71.1}_{-0}$]	$17.2^{+0.49}_{-0}$ {175^{+5}_{-0}} [$2495^{+71.1}_{-0}$]	←	←
Safety device	Overhead guard mounting bolt and nut tightening torque			N·m{kgf·m}[lbf·ft]	31.4-47.1 {3.2-4.8} [23.2-34.7]	←	←	←	←
	Load backrest mounting bolt tightening torque			N·m{kgf·m}[lbf·ft]	59.3±11.9 {6.05±1.21} [43.7±8.8]	←	←	←	←

01. CAUTION TO TAKE WHEN SERVICING THE TRUCK

* Before servicing the truck, make sure to:

1. Park the truck on a level surface and jack up the drive wheel off the floor or ground.
   Make sure there is no obstacle above and around the truck before operating the load handling system.

* Caution to take when measuring, inspecting or repairing:

2. Before connecting or disconnecting wire harness couplers, make sure the key switch is turned off and the battery receptacles are disconnected.
3. When measuring the resistance of wire harness couplers with a multimeter, connect the probes to **the lead wire side of the coupler**.
4. When inspecting the truck with the forks raised, support the forks to prevent them from falling unexpectedly.
5. When inspecting the truck with the mast advanced, put a pallet between the mast and the front guard of the truck to prevent the mast from retracting unexpectedly.
6. Inspection and repair of the truck must be performed only by qualified service personnel authorized by TCM.

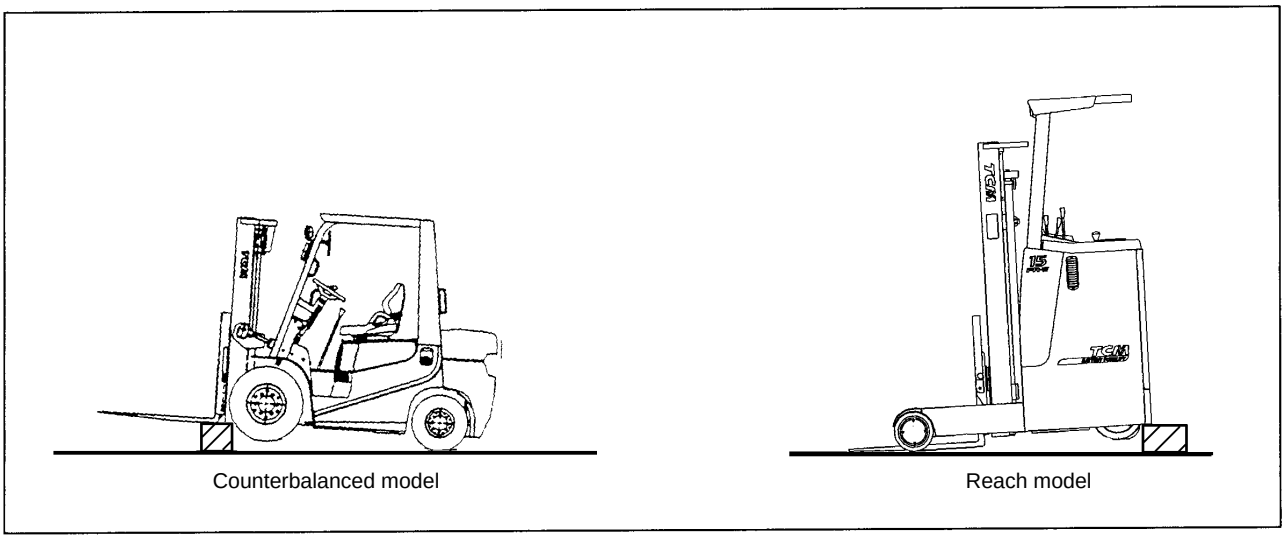

02. BASIC SERVICING KNOWLEDGE

1. Installing bearings

When installing a bearing onto a shaft, tap its inner race with a mallet as shown in Figure 02.1. When installing a bearing into a case, tap its outer race.

When removing, use the same procedure as for installing.

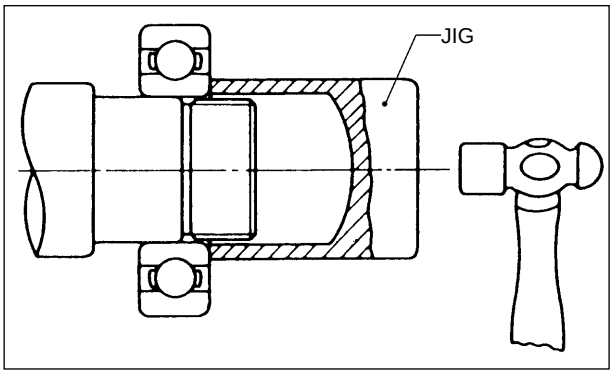

Fig. 02.1 Installing bearings

2. "O"-rings

① Use "O"-rings free from molding fault or damage.

② Clean "O"-rings and their mounting area and apply grease or hydraulic oil to them.

③ When installing "O"-rings, do not expand them so excessively that they suffer permanent deformation. Also do not roll them when installing; otherwise they might stay twisted, causing oil leakage.

④ When using an "O"-ring and back-up ring as a set, such as when hydraulic pressure is high, position the "O"-ring at the side which receives the oil pressure.

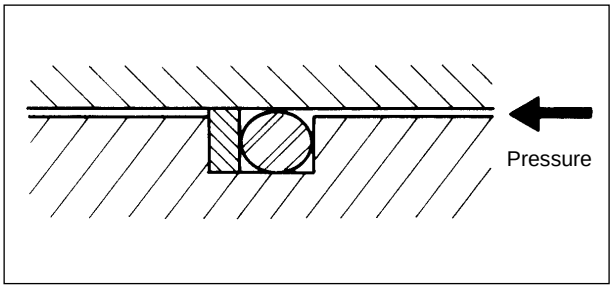

Fig. 02.2 "O"-ring location

3. Oil seals

① Oil seals should be installed with the seal lip pointed toward the lubrication or hydraulic oil.

② When installing an oil seal on a housing, apply a thin coat of packing cementing agent on the oil seal outer ring and inside the housing to prevent oil leakage through the fitting area. It is recommended to use a suitable jig to apply uniform pressure when mounting oil seals.

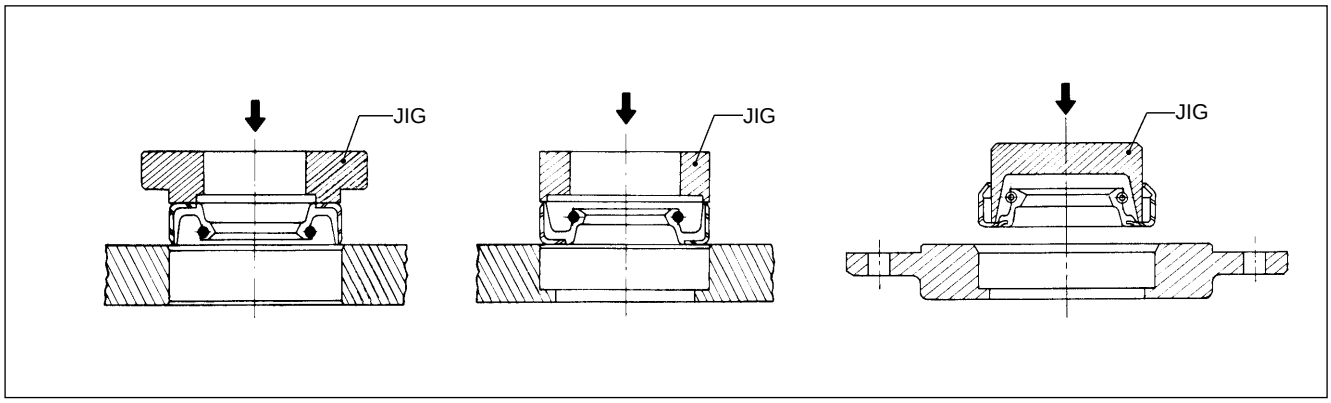

Fig. 02.3 Installing Oil Seal

③ When installing an oil seal onto a shaft, apply lubricating oil or grease to its seal lip and the mounting surface of the shaft. For a double-lip type, fill grease by 1/3 to 1/2 of the space between the lips.
When inserting an oil seal into a case, use care to damage the seal lip. It is good practice to use a suitable conical sleeve.

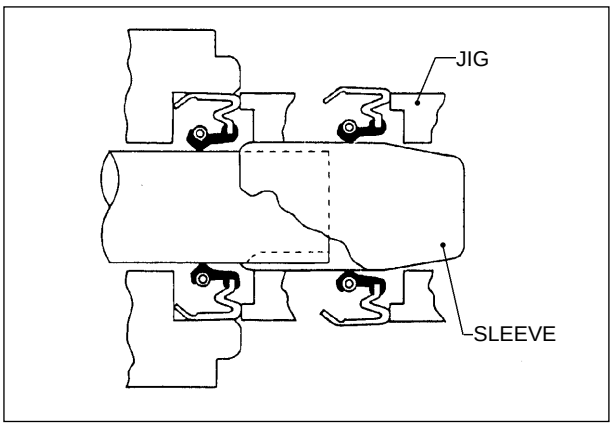

Fig. 02.4 Installing Oil Seal

4. Using LOCTITE

(1) Procedure for using LOCTITE

① Clean or degrease the surface of parts you are going to apply LOCTITE, using trichloroethylene, acetone, ether or alkaline solution.
② Blow dry them with compressed air or allow to air dry at room temperature sufficiently.
③ Apply specified LOCTITE.

(2) Removing parts

When removing parts which were installed with the application of LOCTITE, use tools such as a spanner, wrench, and pulley remover.

If you fear that a part may break due to the effect of LOCTITE if forcibly removed, heat the part to 200 to 250°C [392 to 482°F] with a soldering iron or gas burner.

⚠ **Remember that parts are very hot after heating. Use caution not to get burnt when removing them.**

(3) Reinstalling parts

① When destroyed, LOCTITE remains as white powder on the threads of bolts. You can apply a new coat of LOCTITE again over their surface.

Note: For example, if a bolt turns slightly due to bolt torque checking, remove the bolt and apply LOCTITE again and reinstall.

② If LOCTITE is used for the surface of a flange, it is necessary to remove hardened LOCTITE with a wire brush when reinstalling the flange.

5. How to use a power wrench

Power wrenches have their respective torque multiplying factors. Refer to the product catalog of each power wrench.

It should be noted that a value obtained by multiplying the output torque of a torque wrench by the multiplying factor of a power wrench is not necessarily an output torque.

Remember this especially when the tightening torque is strictly specified.

03. CLEANING

1. General metallic parts

① Clean parts thoroughly using cleaning fluid. It is recommended that parts be immersed in cleaning fluid and moved up and down slowly until all old lubricant and foreign material is dissolved and parts are thoroughly cleaned.

② Cast parts should be cleaned with cleaning solvent or steam cleaned.

③ If a part is severely contaminated, use a wire brush or a piece of wood or metal to scrape off contaminants from the part. Wash it in cleaning fluid once, before cleaning it completely. However, do not use a wire brush for cleaning sliding surfaces or machined surfaces.

④ Oil passages must be cleaned with a steam cleaner. After checking for clogging with a piece of wire, they also should be cleaned with cleaning fluid or with compressed air.

⑤ Some parts may be cleaned in hot solution tanks with mild alkaline solution. Parts should remain in solution long enough to be thoroughly cleaned and warmed.
This will aid the evaporation of the cleaning solution and rise water. Parts cleaned in solution tanks must be thoroughly rinsed with clean water to remove all traces of alkali.

⚠ **Care should be exercised to avoid skin rashes, fire hazards and inhalation of vapors when using solvent type cleaners.**

⑥ If alloy parts, such as bearing shells or bushings, are cleaned with alkaline solution, they are apt to corrode due to ionization. Such parts should be cleaned with kerosene, Tricrene solvent vapor or “Magnus” fluid.

⑦ After cleaning, parts must be thoroughly dried with compressed air.

2. Bearings

① To dislodge solidified particles of lubricant, immerse bearings in cleaning fluid and remove them from the fluid. On a clean work bench, tap the bearing softly with a soft mallet to dislodge solidified particles.

② When drying bearings, be careful to direct air stream across bearing to avoid spinning.

3. Rubber parts

① When rubber parts need to be cleaned, use alcohol or wipe them clean with a soft cloth.

② Never use gasoline, diesel fuel or kerosene for cleaning. Use the same kind of oil for which the rubber part will be used.

04. STANDARD BOLT TIGHTENING TORQUE

See the section “04. STANDARD BOLT TIGHTENING TORQUE” for the torques of standard bolts when they are used for general applications. Refer to the Shop Manual and Service Manual of your truck model when:

1) Special nuts are used.
2) Synthetic resin or rubber is used for tightening.
3) Specified tightening torque is given.

Table 04.1 Strength

Strength	Indication on bolt	Material
4.6		SS400 (The number may be omitted.)
6.8		S45C
8.8		SCM435
		Boron steel (“B” may be omitted.)
10.9		SCM435
		Boron steel (“B” may be omitted.)

Table 04.2

Name	Shape	Thread size	Material	Division by strength	Surface treatment	Part number ⟷
Hex. head bolt	Normal	M4 - M8 coarse and M10 - M39 fine	SS400	4.6	Black	01101- Nominal symbol
			SS400	4.6	Yellow chromate	01100- “
			S45C	6.8		01103- “
			SCM435, Boron steel	8.8		01106- “
			SCM435, Boron steel	10.9		01107- “
			BsBME1	—		01108- “
	Coarse	M10 - M39 coarse	SS400	4.6	Black	01112- “
			SS400	4.6	Yellow Chromate	01110- “
			S45C	6.8		01113- “
			SCM435, Boron steel	8.8		01116- “
			SCM435, Boron steel	10.9		01119- “
	Full thread (normal, coarse)	M10 - M39 coarse	SS400	4.6	Black	01115- “
			SS400	4.6	Yellow Chromate	01111- “
			S45C	6.8		01114- “
			SCM435, Boron steel	8.8		01117- “
	Full thread (normal)	M4 - M8 coarse and M10 - M39 fine	SS400	4.6	Black	01121- “
			SS400	4.6	Yellow Chromate	01120- “
			S45C	6.8		01123- “
			SCM435, Boron steel	8.8		01126- “
			SCM435, Boron steel	10.9		01127- “
			BsBME1	—		01128- “
	w. socket head	M4 - M8 coarse and M10 - M39 fine	SS400	4.6	Black	01131- “
			SS400	4.6	Yellow Chromate	01130- “
			S45C	6.8		01133- “
			SCM435, Boron steel	8.8		01136- “
			SCM435, Boron steel	10.9		01137- “
	w. hole in threads	M4 - M8 coarse and M10 - M39 fine	SS400	4.6	Black	01161- “
			SS400	4.6	Yellow Chromate	01160- “
			S45C	6.8		01163- “
			SCM435, Boron steel	8.8		01166- “
			SCM435, Boron steel	10.9		01167- “

• Designation of screws: Each part number consists of a screw type designation and a nominal symbol.

Example: 01130-16050 (hex. bolt 4.6, M16 x 50, w. socket head)

Table 04.3 Tightening torque chart (Division by strength: 4.6)

Class	Nominal size	Pitch	Lubrication condition: Dry				LOCTITE262				Lubricant			
			Target value		Allowable value		Target value		Allowable value		Target value		Allowable value	
			N・m	kgf・cm	N・m	kgf・cm	N・m	kgf・cm	N・m	kgf・cm	N・m	kgf・cm	N・m	kgf・cm
Metric, fine system	M 4	0.50	1.36	13.9	1.09 - 1.63	11.1 - 16.6	1.21	12.3	0.96 - 1.44	9.8 - 14.7	0.99	10.1	0.79 - 1.19	8.1 - 12.1
	M 5	0.50	2.87	29.3	2.30 - 3.44	23.5 - 35.1	2.53	25.8	2.02 - 3.00	20.6 - 30.9	2.08	21.2	1.66 - 2.50	16.9 - 25.5
	M 6	0.75	4.59	46.8	3.67 - 5.55	37.4 - 56.1	4.06	41.4	3.25 - 4.87	33.1 - 49.7	3.34	34.1	2.68 - 4.01	27.3 - 40.9
	M 8	1.00	10.9	111	8.69 - 13.3	88.6 - 133	9.62	98.1	7.70 - 1.15	78.5 - 117	7.93	80.9	6.34 - 9.51	64.6 - 97.0
	M 10	1.25	21.2	216	17.1 - 25.4	174 - 259	18.8	192	15.0 - 22.6	153 - 230	15.5	158	12.5 - 18.6	127 - 190
	M 12	1.25	39.1	399	31.4 - 47.1	320 - 480	34.5	352	27.7 - 41.5	282 - 423	28.4	290	22.7 - 34.1	231 - 348
	M 14	1.50	61.7	629	49.3 - 74.0	503 - 755	54.2	553	43.4 - 65.3	443 - 666	44.7	456	35.9 - 53.7	366 - 548
	M 16	1.50	95.9	978	76.8 - 115	783 - 1170	84.3	860	67.5 - 100	1688 - 1030	69.5	709	55.5 - 83.4	566 - 850
	M 18	1.50	141	1440	113 - 170	1150 - 1730	125	1270	99.1 - 148	1010 - 1510	102	1040	81.5 - 123	831 - 1250
	M 20	1.50	198	2020	159 - 238	1620 - 2430	175	1780	139 - 208	1420 - 2120	143	1460	114 - 172	1160 - 1750
	M 22	1.50	270	2750	216 - 324	2200 - 3300	235	2400	188 - 282	1920 - 2880	194	1980	155 - 233	1580 - 2380
	M 24	2.00	334	3410	268 - 401	2730 - 4090	293	2990	234 - 351	2390 - 3580	241	2460	193 - 289	1970 - 2950
	M 27	2.00	489	4990	391 - 587	3990 - 5990	429	4370	342 - 515	3490 - 5250	352	3590	282 - 424	2880 - 4320
	M 30	2.00	686	7000	550 - 824	5610 - 8400	600	6120	480 - 720	4890 - 7340	493	5030	395 - 592	4030 - 6040
	M 33	2.00	931	9490	744 - 1120	7590 - 11400	812	8280	650 - 974	6630 - 9930	669	6820	534 - 802	5450 - 8180
	M 36	3.00	1130	11500	903 - 1350	9210 - 13800	991	10100	792 - 1190	8080 - 12100	815	8310	652 - 979	6650 - 9980
	M 39	3.00	1460	14900	1170 - 1740	11900 - 17700	1280	13100	1020 - 1540	10400 - 15700	1050	10700	844 - 1270	8610 - 12900
Metric, coarse system	M 4	0.70	1.15	11.7	0.92 - 1.38	9.4 - 14.1	1.03	10.5	0.82 - 1.24	8.4 - 12.6	0.8	8.66	0.68 - 1.02	6.9 - 10.4
	M 5	0.80	2.36	24.1	1.89 - 2.82	19.3 - 28.8	2.11	21.5	1.70 - 2.53	17.3 - 25.8	1.7	17.8	1.39 - 2.08	14.2 - 21.2
	M 6	1.00	3.98	40.6	3.20 - 4.79	32.6 - 48.8	3.56	36.3	2.85 - 4.29	29.1 - 43.7	2.9	30.0	2.35 - 3.53	24.0 - 36.0
	M 8	1.25	9.81	100	7.84 - 11.7	79.9 - 119	8.74	89.1	7.00 - 10.5	71.4 - 107	7.2	73.5	5.77 - 8.65	58.8 - 88.2
	M 10	1.50	19.5	199	15.6 - 23.4	159 - 239	17.5	178	13.9 - 20.9	142 - 213	14.3	146	11.5 - 17.3	117 - 176
	M 12	1.75	34.2	349	27.5 - 41.1	280 - 419	30.4	310	24.4 - 36.6	249 - 373	25.1	256	20.1 - 30.1	205 - 307
	M 14	2.00	55.0	561	43.9 - 65.9	448 - 672	48.8	498	39.0 - 55.8	398 - 597	40.2	410	32.3 - 48.3	329 - 493
	M 16	2.00	86.9	886	69.5 - 104	709 - 1060	77.0	785	61.6 - 92.4	628 - 942	63.5	647	50.8 - 76.1	518 - 776
	M 18	2.50	118	1200	94.6 - 142	965 - 1450	105	1070	84.1 - 127	858 - 1290	86.6	883	69.3 - 104	707 - 1060
	M 20	2.50	171	1740	136 - 204	1390 - 2080	150	1530	121 - 180	1230 - 1840	125	1270	99.1 - 149	1010 - 1520
	M 22	2.50	234	2390	187 - 252	1910 - 2570	207	2110	165 - 248	1680 - 2530	171	1740	136 - 204	1390 - 2080
	M 24	3.00	293	2990	234 - 352	2390 - 3590	259	2640	208 - 312	2120 - 3180	214	2180	172 - 257	1750 - 2620
	M 27	3.00	436	4450	349 - 524	3560 - 5340	385	3930	308 - 463	3140 - 4720	318	3240	254 - 381	2590 - 3890
	M 30	3.50	588	6000	471 - 706	4800 - 7200	521	5310	417 - 624	4250 - 6360	429	4370	342 - 515	3490 - 5250
	M 33	3.50	810	8260	648 - 972	6610 - 9910	714	7280	572 - 857	5830 - 8740	588	6000	471 - 706	4800 - 7200
	M 36	4.00	1030	10500	828 - 1250	8440 - 12700	914	9320	731 - 1100	7450 - 11200	753	7680	602 - 903	6140 - 9210
	M 39	4.00	1350	13800	1080 - 1140	11000 - 11650	1190	12100	953 - 1430	9720 - 14600	981	10000	785 - 1180	8000 - 12000

Table 04.4 Tightening torque chart (Division by strength: 6.8)

Class	Nominal size	Pitch	Lubrication condition: Dry				LOCTITE262				Lubricant			
			Target value		Allowable value		Target value		Allowable value		Target value		Allowable value	
			N・m	kgf・cm	N・m	kgf・cm	N・m	kgf・cm	N・m	kgf・cm	N・m	kgf・cm	N・m	kgf・cm
Metric, fine system	M 4	0.50	2.71	27.6	2.17 - 3.26	22.1 - 33.2	2.40	24.5	1.92 - 2.87	19.6 - 29.3	1.98	20.2	1.58 - 2.38	16.1 - 24.3
	M 5	0.50	5.74	58.5	4.59 - 6.87	46.8 - 70.1	5.05	51.5	4.04 - 6.06	41.2 - 61.8	4.15	42.3	3.33 - 4.98	33.9 - 50.8
	M 6	0.75	9.14	93.2	7.32 - 11.0	74.6 - 112	8.10	82.6	6.48 - 9.72	66.1 - 99.1	6.68	68.1	5.34 - 8.01	54.4 - 81.7
	M 8	1.00	21.7	221	17.4 - 26.0	177 - 265	19.2	196	15.4 - 23.0	157 - 235	15.8	161	12.7 - 19.0	129 - 194
	M 10	1.25	42.4	432	33.8 - 50.9	345 - 519	37.5	382	30.0 - 45.0	306 - 459	30.9	315	24.7 - 37.1	252 - 378
	M 12	1.25	78.3	798	62.6 - 93.9	638 - 957	68.9	703	55.1 - 82.7	562 - 843	56.8	579	45.5 - 68.2	464 - 695
	M 14	1.50	123	1250	98.1 - 148	1000 - 1510	109	1110	86.9 - 129	886 - 1320	89.4	912	71.6 - 107	730 - 1090
	M 16	1.50	192	1960	153 - 229	1560 - 2340	169	1720	135 - 202	1380 - 2060	139	1420	111 - 168	1130 - 1700
	M 18	1.50	282	2870	225 - 337	2290 - 3440	247	2520	198 - 296	2020 - 3020	203	2070	163 - 244	1660 - 2490
	M 20	1.50	396	4040	317 - 476	3230 - 4850	347	3540	278 - 416	2830 - 4240	285	2910	229 - 343	2330 - 3500
	M 22	1.50	537	5480	431 - 645	4390 - 6580	471	4800	376 - 565	3830 - 5760	386	3940	310 - 465	3160 - 4740
	M 24	2.00	668	6810	534 - 800	5440 - 8160	585	5970	469 - 702	4780 - 7160	481	4910	385 - 579	3930 - 5900
	M 27	2.00	978	9970	782 - 1170	7970 - 11900	855	8720	685 - 1030	6980 - 10500	704	7180	564 - 845	5750 - 8620
	M 30	2.00	1370	14000	1100 - 1650	11200 - 16800	1200	12200	958 - 1440	9770 - 14700	991	10100	788 - 1180	8040 - 12000
	M 33	2.00	1860	19000	1490 - 2330	15200 - 22700	1620	16500	1290 - 1950	13200 - 19900	1340	13700	1070 - 1600	10900 - 16300
	M 36	3.00	2250	22900	1790 - 2700	18300 - 27500	1980	20200	1580 - 2370	16100 - 24200	1630	16600	1290 - 1950	13200 - 19900
	M 39	3.00	2920	29800	2330 - 3510	23800 - 35800	2560	26100	2050 - 3070	20900 - 31300	2110	21500	1690 - 2530	17200 - 25800
Metric, coarse system	M 4	0.70	2.29	23.3	1.82 - 2.75	18.6 - 28.0	2.06	21.0	1.65 - 2.47	16.8 - 25.2	1.70	17.3	1.36 - 2.03	13.9 - 20.7
	M 5	0.80	4.72	48.1	3.77 - 5.66	38.4 - 57.7	4.21	42.9	3.36 - 5.06	34.3 - 51.6	3.47	35.4	2.78 - 4.17	28.3 - 42.5
	M 6	1.00	7.95	81.1	6.36 - 9.55	64.9 - 97.4	7.13	72.7	5.70 - 8.54	58.1 - 87.1	5.87	59.9	4.70 - 7.04	47.9 - 71.8
	M 8	1.25	19.6	200	15.7 - 23.4	160 - 239	17.5	178	14.0 - 21.0	143 - 214	14.4	147	11.5 - 17.3	117 - 176
	M 10	1.50	38.6	397	31.2 - 46.8	318 - 477	34.8	355	27.8 - 41.7	283 - 425	28.6	292	22.9 - 34.4	233 - 351
	M 12	1.75	68.4	697	54.6 - 82.1	557 - 837	60.9	621	48.6 - 73.1	496 - 745	50.2	512	40.1 - 60.1	409 - 613
	M 14	2.00	110	1120	87.8 - 132	895 - 1350	97.6	995	78.1 - 117	796 - 1190	80.3	819	64.2 - 96.4	655 - 983
	M 16	2.00	174	1770	139 - 208	1420 - 2120	154	1570	123 - 185	1250 - 1890	127	1290	101 - 152	1030 - 1550
	M 18	2.50	235	2400	189 - 282	1930 - 2880	210	2140	168 - 252	1710 - 2570	173	1760	138 - 208	1410 - 2120
	M 20	2.50	338	3450	271 - 407	2760 - 4150	300	3060	240 - 360	2450 - 3670	247	2520	198 - 297	2020 - 3030
	M 22	2.50	468	4770	374 - 562	3810 - 5730	413	4210	330 - 495	3370 - 5050	340	3470	272 - 409	2770 - 4170
	M 24	3.00	585	5970	469 - 702	4780 - 7160	519	5290	414 - 623	4220 - 6350	428	4360	341 - 513	3480 - 5230
	M 27	3.00	872	8890	697 - 1050	7110 - 10700	770	7850	616 - 924	6280 - 9420	634	6460	507 - 760	5170 - 7750
	M 30	3.50	1180	12000	940 - 1410	9580 - 14400	1040	10600	831 - 125	8470 - 12700	855	8720	685 - 1030	6980 - 10500
	M 33	3.50	1620	16500	1280 - 1940	13100 - 19800	1430	14600	1140 - 1710	11600 - 17400	1180	12000	940 - 1410	9580 - 14400
	M 36	4.00	2070	21100	1650 - 2480	16800 - 25300	1820	18600	1460 - 2190	14900 - 22300	1500	15300	1200 - 1790	12200 - 18300
	M 39	4.00	2700	27500	2160 - 3240	22000 - 33000	2380	24300	1900 - 2840	19400 - 29000	1960	20000	1570 - 2340	16000 - 23900

Table 04.5 Tightening torque chart (Division by strength: 8.8)

Class	Nominal size	Pitch	Lubrication condition: Dry				LOCTITE262				Lubricant			
			Target value		Allowable value		Target value		Allowable value		Target value		Allowable value	
			N・m	kgf・cm	N・m	kgf・cm	N・m	kgf・cm	N・m	kgf・cm	N・m	kgf・cm	N・m	kgf・cm
Metric, fine system	M 4	0.50	3.62	36.9	2.89 - 4.34	29.5 - 44.3	3.20	32.6	0.26 - 0.39	26.1 - 39.3	2.64	26.9	2.12 - 3.17	21.6 - 32.3
	M 5	0.50	7.65	78.0	6.12 - 9.18	62.4 - 93.6	6.73	68.6	0.54 - 0.81	55.0 - 82.4	5.55	56.6	4.44 - 6.66	45.3 - 67.9
	M 6	0.75	12.2	124	9.78 - 14.7	99.7 - 150	10.8	110	0.87 - 1.30	88.2 - 133	8.91	90.9	7.13 - 10.7	72.7 - 109
	M 8	1.00	28.9	295	23.1 - 34.7	236 - 354	25.6	261	2.05 - 3.08	209 - 314	21.1	215	16.9 - 25.3	172 - 258
	M 10	1.25	56.5	576	45.2 - 67.9	461 - 692	50.1	511	4.01 - 6.01	409 - 613	41.3	421	33.0 - 49.5	337 - 505
	M 12	1.25	104	1060	83.6 - 126	852 - 1280	92.0	938	7.37 - 11.0	751 - 1120	75.8	773	60.6 - 90.9	618 - 927
	M 14	1.50	164	1670	131 - 197	1340 - 2010	145	1480	11.6 - 17.4	1180 - 1770	119	1210	95.4 - 143	973 - 1460
	M 16	1.50	256	2610	204 - 307	2080 - 3130	226	2300	18.0 - 27.0	1840 - 2750	185	1890	148 - 222	1510 - 2260
	M 18	1.50	377	3840	301 - 451	3070 - 4600	330	3360	26.4 - 39.5	2690 - 4030	271	2760	217 - 327	2210 - 3330
	M 20	1.50	529	5390	423 - 635	4310 - 6470	463	4720	37.0 - 55.5	3770 - 5660	381	3890	305 - 457	3110 - 4660
	M 22	1.50	718	7320	574 - 861	5850 - 8780	629	6410	50.2 - 75.3	5120 - 7680	517	5270	413 - 620	4210 - 6320
	M 24	2.00	890	9080	712 - 1070	7260 - 10900	782	7970	62.6 - 93.8	6380 - 9560	643	6560	514 - 773	5240 - 7870
	M 27	2.00	1300	13300	1040 - 1570	10600 - 16000	1140	11600	91.3 - 137	9310 - 14000	940	9590	752 - 1130	7670 - 11500
	M 30	2.00	1830	18700	1460 - 2190	14900 - 22300	1600	16300	128 - 192	13100 - 19600	1320	13500	1050 - 1580	10700 - 16100
	M 33	2.00	2480	25300	1980 - 2970	20200 - 30300	2160	22000	173 - 259	17600 - 26400	1780	18200	1420 - 2140	14500 - 21800
	M 36	3.00	3010	30700	2400 - 3610	24500 - 36800	2640	26900	211 - 316	21500 - 32200	2170	22100	1740 - 2610	17700 - 26600
	M 39	3.00	3900	39800	3120 - 4680	31800 - 47700	3410	34800	273 - 409	27800 - 41700	2810	28700	2260 - 3370	23000 - 34400
Metric, coarse system	M 4	0.70	3.06	31.2	2.45 - 3.67	25.0 - 37.4	2.7	27.9	2.19 - 3.30	22.3 - 33.6	2.27	23.1	1.81 - 2.71	18.5 - 27.6
	M 5	0.80	6.30	64.2	5.03 - 7.55	51.3 - 77.0	5.6	57.3	4.49 - 6.74	45.8 - 68.7	4.63	47.2	3.70 - 5.56	37.7 - 56.7
	M 6	1.00	10.6	108	8.50 - 12.7	86.7 - 130	9.5	96.9	7.60 - 11.4	77.5 - 116	7.85	80.0	6.28 - 9.40	64.0 - 95.9
	M 8	1.25	26.1	266	20.9 - 31.0	213 - 319	23.3	238	18.6 - 28.0	190 - 286	19.2	196	15.4 - 23.0	157 - 235
	M 10	1.50	52.1	531	41.6 - 62.5	424 - 638	46.4	473	37.1 - 55.7	378 - 568	38.2	390	30.6 - 45.9	312 - 468
	M 12	1.75	91.2	930	73.1 - 109	745 - 1110	81.2	828	64.9 - 97.4	662 - 993	66.9	682	53.5 - 80.3	546 - 819
	M 14	2.00	146	1490	117 - 177	1190 - 1800	130	1330	104 - 156	1060 - 1590	107	1090	85.8 - 1290	875 - 1320
	M 16	2.00	232	2370	185 - 279	1890 - 2840	205	2090	164 - 246	1670 - 2510	169	1720	135 - 203	1380 - 2070
	M 18	2.50	315	3210	252 - 379	2570 - 3860	280	2860	224 - 336	2280 - 3430	231	2360	185 - 278	1890 - 2830
	M 20	2.50	452	4610	362 - 543	3690 - 5540	401	4090	320 - 482	3260 - 4910	330	3370	264 - 396	2690 - 4040
	M 22	2.50	624	6360	499 - 749	5090 - 7640	551	5620	441 - 662	4500 - 6750	454	4630	363 - 545	3700 - 5560
	M 24	3.00	782	7970	626 - 938	6380 - 9560	692	7060	554 - 831	5650 - 8470	570	5810	456 - 685	4650 - 6980
	M 27	3.00	1160	11800	931 - 1400	9490 - 14300	1030	10500	821 - 123	8370 - 12500	846	8630	678 - 1020	6910 - 10400
	M 30	3.50	1570	16000	1260 - 1880	12800 - 19200	1390	14200	1110 - 1660	11300 - 16900	1140	11600	913 - 1370	9310 - 14000
	M 33	3.50	2160	22000	1730 - 2590	17600 - 26400	1900	19400	1520 - 2290	15500 - 23300	1570	16000	1260 - 1880	12800 - 19200
	M 36	4.00	2770	28200	2210 - 3310	22500 - 33800	2430	24800	1950 - 2920	19900 - 29800	2010	20500	1600 - 2410	16300 - 24600
	M 39	4.00	3600	36700	2880 - 4320	29400 - 44100	3170	32300	2540 - 3810	25900 - 38900	2610	26600	2090 - 3140	21300 - 32000

Table 04.6 Tightening torque chart (Division by strength: 10.9)

Class	Nominal size	Pitch	Lubrication condition: Dry				LOCTITE262				Lubricant			
			Target value		Allowable value		Target value		Allowable value		Target value		Allowable value	
			N・m	kgf・cm	N・m	kgf・cm	N・m	kgf・cm	N・m	kgf・cm	N・m	kgf・cm	N・m	kgf・cm
Metric, fine system	M 4	0.50	5.33	54.3	4.26 - 6.38	43.4 - 65.1	4.71	48	3.77 - 5.65	38.4 - 57.6	3.87	39.5	3.11 - 4.66	31.7 - 47.5
	M 5	0.50	11.3	115	9.00 - 13.5	91.8 - 138	9.91	101	7.92 - 12.0	80.8 - 122	8.15	83.1	6.52 - 9.79	66.5 - 99.8
	M 6	0.75	17.9	183	14.3 - 21.6	146 - 220	15.9	162	12.7 - 19.0	130 - 194	13.0	133	10.5 - 15.7	107 - 160
	M 8	1.00	42.6	434	34.1 - 51.0	348 - 520	37.7	384	30.1 - 45.2	307 - 461	31.1	317	24.9 - 37.2	254 - 379
	M 10	1.25	83.1	847	66.5 - 100	678 - 1020	73.6	750	58.8 - 88.4	600 - 901	60.6	618	48.5 - 72.8	495 - 742
	M 12	1.25	154	1570	123 - 184	1250 - 1880	135	1380	109 - 162	1110 - 1650	112	1140	89.0 - 133	908 - 1360
	M 14	1.50	241	2460	193 - 289	1970 - 2950	213	2170	171 - 255	1740 - 2600	176	1790	140 - 210	1430 - 2140
	M 16	1.50	376	3830	300 - 450	3060 - 4590	330	3370	265 - 396	2700 - 4040	272	2770	218 - 327	2220 - 3330
	M 18	1.50	552	5630	442 - 663	4510 - 6760	484	4940	387 - 582	3950 - 5930	398	4060	319 - 479	3250 - 4880
	M 20	1.50	777	7920	621 - 933	6330 - 9510	681	6940	544 - 815	5550 - 8310	560	5710	448 - 672	4570 - 6850
	M 22	1.50	1060	10800	843 - 1270	8600 - 12900	922	9400	738 - 1110	7530 - 11300	759	7740	607 - 912	6190 - 9300
	M 24	2.00	1300	13300	1050 - 1570	10700 - 16000	1150	11700	919 - 1380	9370 - 14100	946	9650	756 - 1140	7710 - 11600
	M 27	2.00	1910	19500	1540 - 2300	15700 - 23500	1690	17200	1330 - 2020	13600 - 20600	1380	14100	1110 - 1660	11300 - 16900
	M 30	2.00	2690	27400	2160 - 3230	22000 - 32900	2350	24000	1880 - 2820	19200 - 28800	1930	19700	1550 - 2320	15800 - 23700
	M 33	2.00	3640	37100	2910 - 4370	29700 - 44600	3180	32400	2540 - 3810	25900 - 38900	2620	26700	2090 - 3140	21300 - 32000
	M 36	3.00	4420	45100	3530 - 5300	36000 - 54000	3870	39500	3110 - 4650	31700 - 47400	3190	32500	2550 - 3820	26000 - 39000
	M 39	3.00	5730	58400	4580 - 6860	46700 - 70000	5020	51200	4010 - 6020	40900 - 61400	4130	42100	3300 - 4950	33700 - 50500
Metric, coarse system	M 4	0.70	4.49	45.8	3.60 - 5.39	36.7 - 55.0	4.03	41.1	3.22 - 4.83	32.8 - 49.2	3.32	33.9	2.66 - 3.98	27.1 - 40.6
	M 5	0.80	9.24	94.2	7.40 - 11.1	75.5 - 113	8.26	84.2	6.60 - 9.91	67.3 - 101	6.81	69.4	5.44 - 8.18	55.5 - 83.4
	M 6	1.00	15.6	159	12.6 - 18.7	128 - 191	14.0	143	11.2 - 16.8	114 - 171	11.5	117	9.21 - 13.8	93.9 - 141
	M 8	1.25	38.3	391	30.7 - 46.0	313 - 469	34.3	350	27.4 - 41.1	279 - 419	28.2	288	22.6 - 33.8	230 - 345
	M 10	1.50	76.5	780	61.2 - 91.8	624 - 936	68.2	695	54.5 - 81.9	556 - 835	56.1	572	44.9 - 67.5	458 - 688
	M 12	1.75	133	1360	108 - 161	1100 - 1640	120	1220	95.4 - 143	973 - 1460	98.1	1000	78.8 - 118	803 - 1200
	M 14	2.00	216	2200	173 - 258	1760 - 2630	191	1950	153 - 230	1560 - 2350	158	1610	127 - 189	1290 - 1930
	M 16	2.00	341	3480	272 - 409	2770 - 4170	301	3070	241 - 362	2460 - 3690	249	2540	199 - 298	2030 - 3040
	M 18	2.50	463	4720	370 - 555	3770 - 5660	412	4200	330 - 493	3360 - 5030	338	3450	272 - 407	2770 - 4150
	M 20	2.50	665	6780	534 - 797	5440 - 8130	588	6000	471 - 707	4800 - 7210	485	4950	387 - 583	3950 - 5940
	M 22	2.50	918	9360	734 - 1100	7480 - 11200	810	8260	648 - 972	6610 - 9910	668	6810	534 - 802	5450 - 8180
	M 24	3.00	1150	11700	919 - 1380	9370 - 14100	1020	10400	814 - 1230	8300 - 12500	838	8550	670 - 1010	6830 - 10300
	M 27	3.00	1720	17500	1370 - 2050	14000 - 20900	1510	15400	1220 - 1800	12400 - 18400	1250	12700	991 - 1490	10100 - 15200
	M 30	3.50	2300	23500	1840 - 2770	18800 - 28200	2040	20800	1630 - 2440	16600 - 24900	1690	17200	1330 - 2020	13600 - 20600
	M 33	3.50	3170	32300	2540 - 3810	25900 - 38800	2800	28600	2240 - 3350	22800 - 34200	2300	23500	1840 - 2760	18800 - 28100
	M 36	4.00	4060	41400	3240 - 4860	33000 - 49600	3580	36500	2860 - 4300	29200 - 43800	2950	30100	2360 - 3530	24100 - 36000
	M 39	4.00	5290	53900	4240 - 6350	43200 - 64800	4660	47500	3740 - 5590	38100 - 57000	3830	39100	3070 - 4610	31300 - 47000

05. LUBRICATION

1. Lubricating lift chains

Lubricate the lift chains with engine oil using an oiler or a brush.

To allow oil to enter between each pin and link plate of the lift chain, observe the following conditions:

- Loosen the chains sufficiently.
- After applying engine oil, operate the lift cylinders at least ten times through full travel.

> ☞ **NOTE**
>
> If your lift truck is used near a port or coastal area, the lift chains might be damaged from salty breezes. After a storm or typhoon, it is advisable to wash them with water before lubricating in the above manner.

2. Mast and steering system

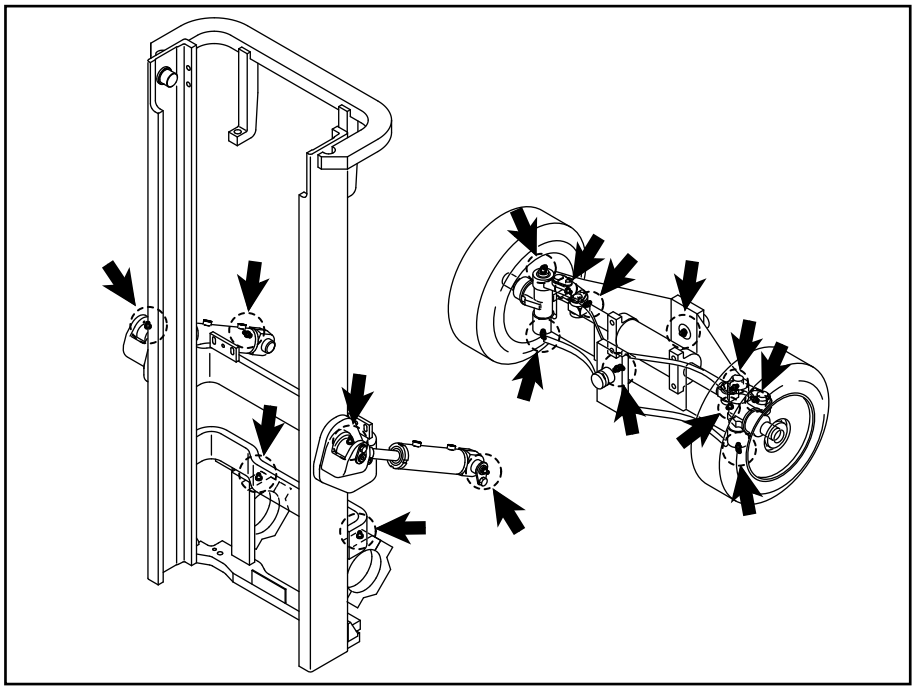

Fig. 05.1

■ Rear slippers of the mast

> ⚠ **WARNING**
>
> **Do not ride on the mast. Do not put your hand or foot on the connecting member across the mast or between the outer and inner mast channels; otherwise you might get injured if the mast accidentally moves.**

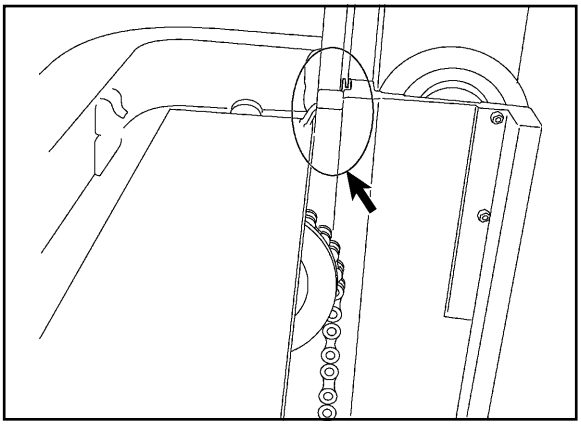

Fig. 05.2

3. Checking hydraulic oil level

Check the hydraulic oil level in the hydraulic oil tank using the oil level dipstick.

Remove the dipstick of the tank cap, clean the rod with a clean cloth and reinsert it. Remove the dipstick again and check the oil level. If the level is low, add hydraulic oil.

[How to read oil level]

"H" mark: Highest position of the standard truck

"L" mark: Lowest position of the standard truck

"S" mark: For trucks with a lift height of 6 m or more or for special trucks, the oil level should be within 10 mm above or below this mark.

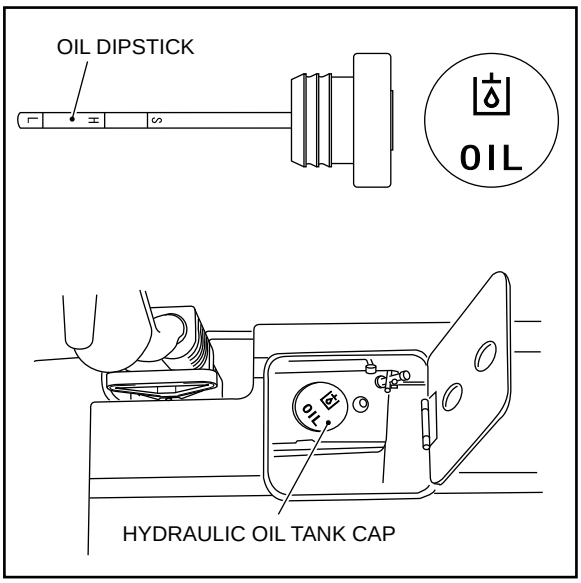

Fig. 05.3

NOTE

- Too high oil level might cause oil leakage.
- The oil level check should be performed with the mast vertical, the forks on the ground or floor surface, and the truck parked on a level surface.

06. PARTS LIST

Item	Part name		Part number				Remarks
			FB10-8 FB15-8 FB18-8	FB20-8 FB25-8	FB25-8V FB25-8LB	FB30-8 FB30-8V FB35-8S	
Fuses	Fuse, F1		283R2-63901 400A	283T2-63901 500A		283R2-63901 400A	Controller
	Fuse, F6		27292-62272 130A		27732-62091 200A	27292-62272 130A	Battery charger
	Fuses, F4, F5, F9		25592-42311				10A
	Fuse, F7		-			25592-42311	10A
	Fuse, F8		27232-62111				2A
Oil tank	Suction filter		216G7-52051				
Lights (standard trucks)	Head lights	Bulb	271A2-42421				48V/40W
		Assembly	277H2-42001				
	Front combination lights	Bulb	Turn signal : 277H2-42361				48V/25W
			Side marker : 277H2-42371				48V/10W
		Assembly	277H2-42011				
	Rear combination lights	Bulb	Turn signal : 277H2-42361				48V/25W
			Side marker : 271A2-42441				48V/25W-10W
			Back-up : 277H2-42371				48V/10W
		Assembly	280C2-42001				
	Relay unit		281E2-63252				

* Note: The part numbers given below are subject to change without notice.

CONTENTS

1. BATTERY AND CHARGER (OPTION) 1
1.1 GENERAL DESCRIPTION 2
1.1.1 BATTERY 2
1.1.2 BATTERY CHARGER 4
1.1.3 CHARGING PROCEDURES 9
1.1.4 CHARGER OPERATION 11

2. MOTORS 13
2.1 GENERAL DESCRIPTION 13
2.1.1 DRIVE MOTOR 13
2.1.2 PUMP MOTOR 17
2.2 MAINTENANCE 19
2.2.1 DRIVE MOTOR 19
2.2.2 PERIODIC INSPECTION 20
2.2.3 MAINTENANCE OF BEARINGS 22

3. CONTROL SYSTEM 23
3.1 GENERAL DESCRIPTION 23
3.1.1 INVERTER UNIT 23
3.1.2 ACCELERATOR PEDAL 30

4. DRIVE UNIT AND DRIVE AXLE 31
4.1 GENERAL DESCRIPTION 31
4.1.1 DRIVE UNIT 31
4.1.2 DRIVE AXLE 35

5. BRAKE SYSTEM 39
5.1 GENERAL DESCRIPTION 39
5.1.1 BRAKE PEDAL 39
5.1.2 MASTER CYLINDER 41
5.1.3 WHEEL BRAKE 42
5.1.4 PARKING BRAKE LEVER 44
5.2 MAINTENANCE 47
5.2.1 DISASSEMBLING WHEEL BRAKE 47
5.2.2 INSPECTION 49
5.2.3 REASSEMBLING WHEEL BRAKE 50
5.2.4 OPERATION TEST OF AUTOMATIC CLEARANCE ADJUSTER 52

5.2.5 ADJUSTING BRAKE PEDAL 53
5.2.6 TROUBLESHOOTING GUIDE 54

6A. STEERING SYSTEM (ORBITROL type) 55
6A.1 GENERAL DESCRIPTION 55
6A.1.1 STEERING AXLE 56
6A.1.2 STEERING WHEEL ASSEMBLY 60
6A.1.3 ORBITROL 62
6A.1.4 POWER CYLINDER 65

6B. STEERING SYSTEM (EPS type) 67
6B.1 GENERAL DESCRIPTION 67
6B.1.1 OUTLINE OF STEERING SYSTEM 68
6B.1.2 STEERING GEARBOX 69
6B.1.3 ACTUATOR 72
6B.1.4 REAR AXLE 72
6B.1.5 ADJUSTING PRELOAD OF REAR WHEEL BEARING 76
6B.2 MAINTENANCE 77
6B.2.1 MAINTENANCE FOR ACTUATOR 77

7. HYDRAULIC SYSTEM 81
7.1 GENERAL DESCRIPTION 81
7.1.1 MAIN PUMP 82
7.1.2 CONTROL VALVE 82
7.1.3 VALVE CONTROL 84
7.1.4 HYDRAULIC OIL TANK 86
7.1.5 LIFT CYLINDER 87
7.1.6 FLOW REGULATOR VALVE 92
7.1.7 TILT CYLINDER 94
7.2 MAINTENANCE 97
7.2.1 MAINTENANCE OF PUMP 97
7.2.2 TRIAL RUN 109
7.2.3 TROUBLESHOOTING GUIDE 110

8. LOAD HANDLING SYSTEM 111
8.1 GENERAL DESCRIPTION 112
8.1.1 OUTER AND INNER CHANNELS 112
8.1.2 CARRIAGE 113
8.1.3 LOCATIONS OF ROLLERS 115

8.2 MAINTENANCE 118
8.2.1 ADJUST LIFT CYLINDER ROD WITH SHIMS 118
8.2.2 ADJUSTING HEIGHT OF CARRIAGE 118
8.2.3 PROCEDURE FOR REPLACING ROLLERS AT CARRIAGE SIDE 120
8.2.4 PROCEDURE FOR REPLACING ROLLERS AT MAST SIDE 122
8.2.5 PROCEDURE FOR ADDING OR SUBTRACTING SHIMS 123

9. ELECTRIC SYSTEM 125
9.1 SYSTEM DESCRIPTION 125
9.1.1 RELAY UNIT 126
9.1.2 LIGHTS 128

1. BATTERY AND CHARGER (OPTION)

The description in this section applies to our optional batteries and chargers. For other types of batteries and chargers, refer to their respective instruction manuals.

Item \ Truck model	FB10-8	FB15-8	FB18-8	FB20-8	FB25-8
Battery					
Capacity	330 Ah/5 h	400 Ah/5 h		450 Ah/5 h	565 Ah/5 h
Name	VSDX330M	VSDX400M		VSDX450M	VSDX565M
Voltage	48V				
Specific gravity of electrolyte	1.280				
Weight	650 kg [1430 lbs]	660 kg [1460 lbs]	930 kg [2050 lbs]	800 kg [1760 lbs]	880 kg [1940 lbs]
Charger					
Type	On-board type, 3-phase AC semiconstant voltage charger				
Rated power	6.0 kVA		8.5 kVA		
Rated current	17 A		24 A		
Power supply voltage	205 / 390 / 440 V				
Applicable battery capacity	320 - 500 Ah/5 h		450 - 700 Ah/5 h		
Output					
Voltage	51 - 64 V				
Current	80 - 20 A		115 - 29 A		

Item \ Truck model	FB25-8LB	FB25-8V	FB30-8 FB30-8V	FB35-8S
Battery				
Capacity	935Ah/5h	865Ah/5h	450Ah/5h	
Name	VSF935	VSF865	VSDX450MZ	
Voltage	48 V		72 V	
Specific gravity of electrolyte	1.280			
Weight	1440 kg [3170 lbs]	1325 kg [2920 lbs]	1110 kg [2450 lbs]	1225 kg [2700 lbs]
Charger				
Type	On-board type, 3-phase AC semiconstant voltage charger			
Rated power	12 kVA		12 kVA	
Rated current	34 A		34 A	
Power supply voltage	205 / 390 / 440 V			
Applicable battery capacity	865 - 935 Ah/5 h		450 - 545 Ah/5 h	
Output				
Voltage	51 - 64 V		76.5 - 96 V	
Current	160 - 40 A		105 - 26 A	

1.1 GENERAL DESCRIPTION

1.1.1 BATTERY

The battery unit consists of twenty-four 2-volt battery cells for the 48-volt electrical system (thirty-six 2-volt battery cells for the 72-volt electrical system) connected in series. Figure 1.1 shows its construction.

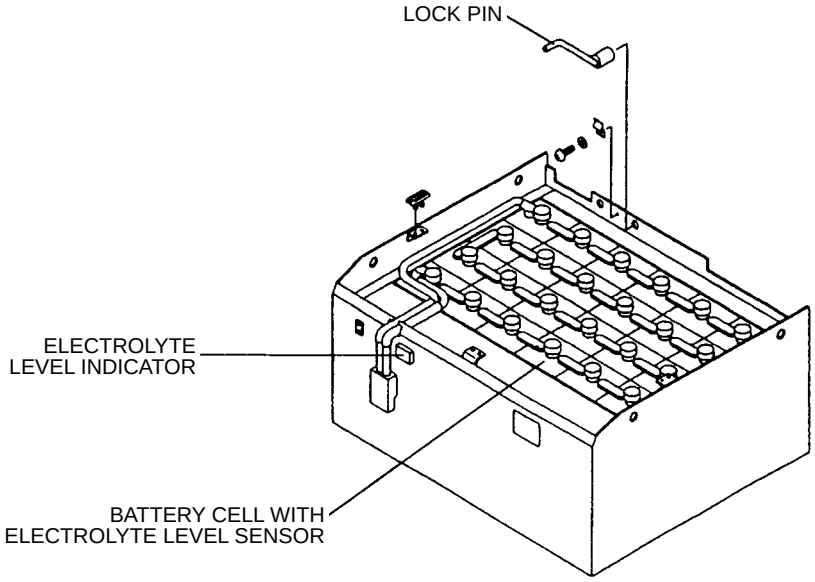

Note: The sketch shows a 48-volt battery unit. The 72-volt battery unit has 36 battery cells.

Fig. 1.1 Battery Unit

(1) Battery care

The most important point in battery care is to prevent overdischarge. The deeper the battery discharges, the shorter its life becomes (See Figure 1.2).

The approximate depth of discharge can be known by measuring the specific gravity of the electrolyte (See Figure 1.3)

Check the level of electrolyte every ten days. Add distilled water if the level is found lower than the specified level before charging the battery.

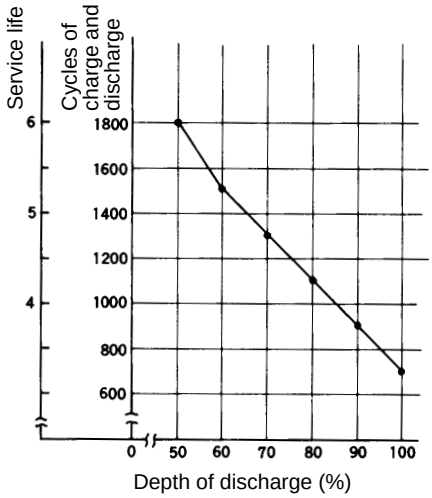

Fig. 1.2 Relation Between Depth of Discharge and Service Life (Example)

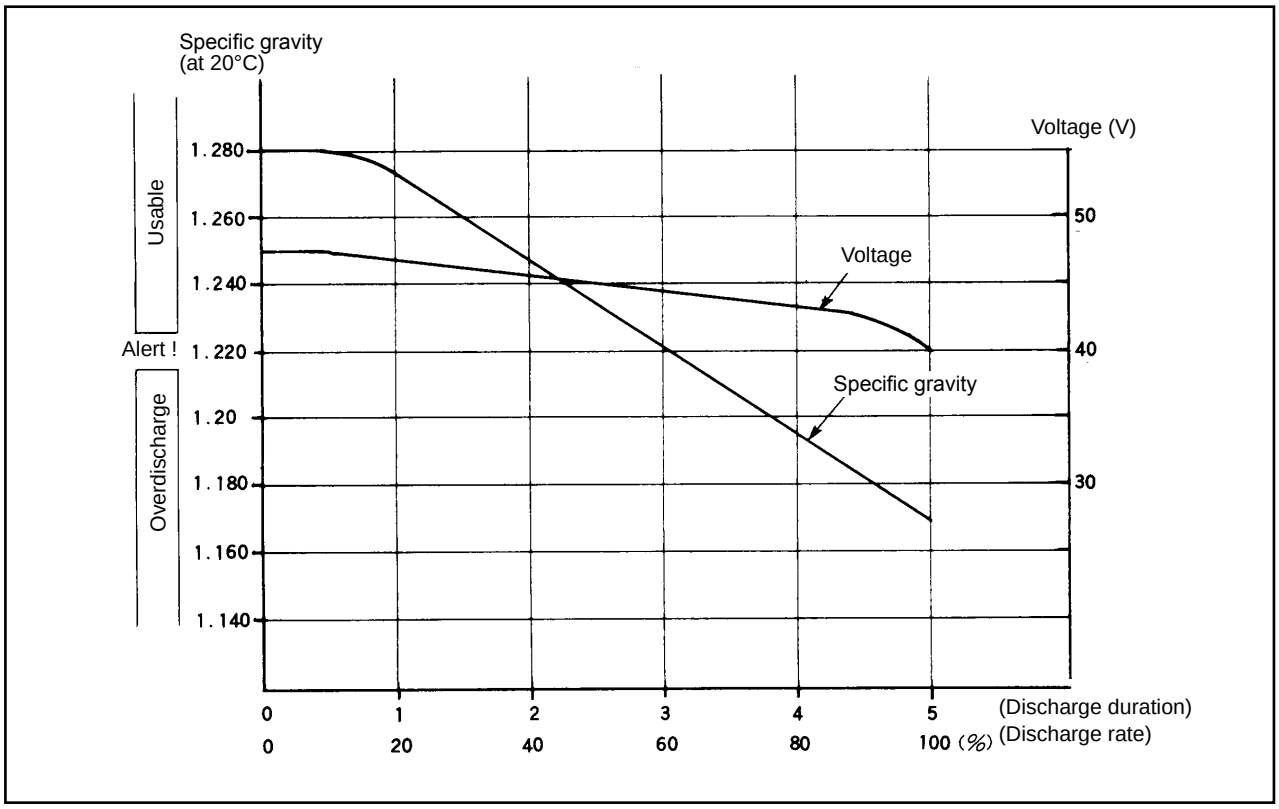

Fig. 1.3 An Example of Specific Gravity Drop

(2) Charging the battery

When discharged, the battery should be recharged as soon as possible. Leaving the battery discharged for a long time may cause sulfation, which will result in a drop of the battery performance.

If the battery is kept out of service for a long time, it should be thoroughly charged before put in storage. An additional charge is also required once a month.

Do not leave a fully discharged battery longer than a day as it is. Be sure to recharge it as soon as possible.

If the amount of discharge is considered to be small, measure the specific gravity of the electrolyte. If lower than 1.260, recharge the battery.

Equalizing charge is required if the specific gravity varies among the cells by the amount of 0.020 or larger. Equalizing charge is normally needed between one to four times a month.

If the specific gravity variation is not made smaller by equalizing charge, specific gravity adjustment will be required.

Giving an equalizing charge more times than necessary will overcharge the battery, and its service life will be shortened.

For a truck-mounted type charger, a microcomputer determines when an equalizing charge is required and carries out equalizing charge automatically.

[Cautions on Charging the Battery]

① Do not start charging the battery if the electrolyte temperature is higher than 50°C. Leave the battery for a while until the temperature goes low. Then charge it.

② Overdischarge or overcharge raises the electrolyte temperature. While charging the battery, be sure to keep the battery cover fully open in order to let the generated gas and heat get out.

[Specific Gravity Correction According to Temperature]

The specific gravity of the electrolyte varies as the electrolyte temperature changes. The specific gravity is generally based on the electrolyte temperature of 20°C. Therefore, if the specific gravity is measured at the electrolyte temperature if other than 20°C, correct it using the following formula:

$$S20 = St + 0.0007\,(t - 20)$$

where S20 .....specific gravity for 20°C
St .....specific gravity measured at t
t .....electrolyte temperature measured.

1.1.2 BATTERY CHARGER

The on-board battery charger is a computer-controlled, semiconstant-voltage type consisting of a transformer, diodes, an operation panel, a CM contactor and a thermal relay.

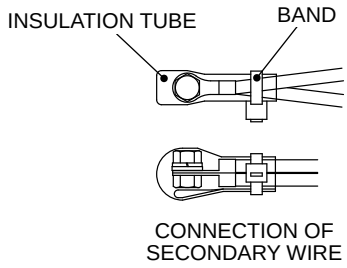

Thermal relay current settings

Transformer model	Setting (A)
M80B	24
M80C	13
M80D	
M115B	34
M115C	18
M115D	
M160B	40
M160C	26
M160D	

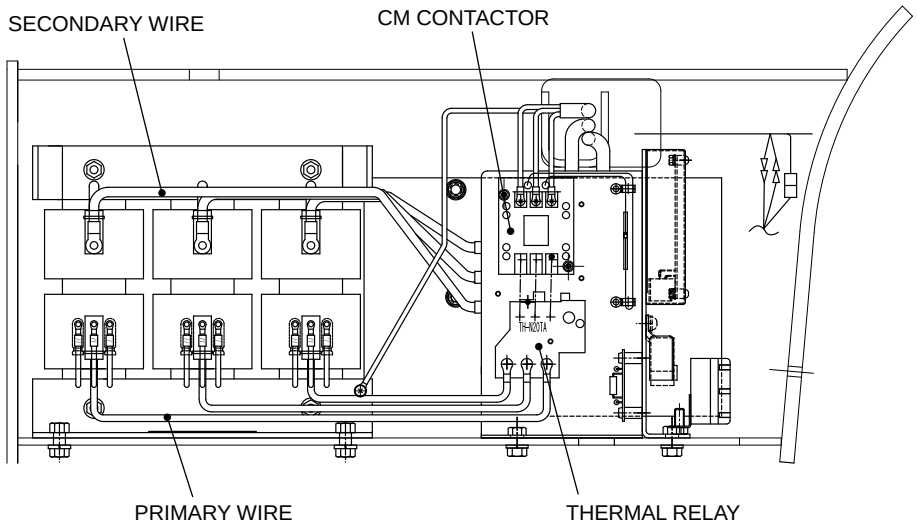

FB10-8 FB15-8 FB18-8

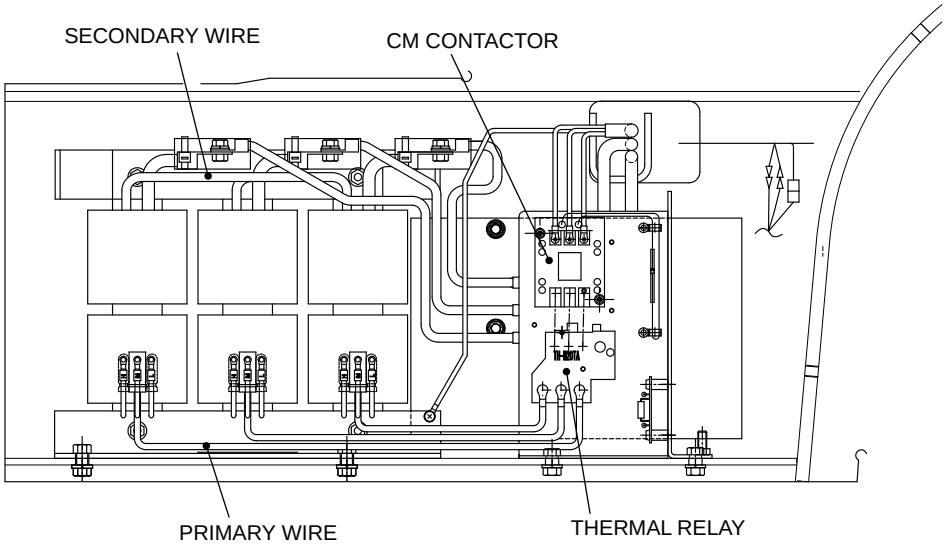

FB20-8 FB25-8 FB25-8LB FB25-8V

Fig. 1.4 Battery Charger (1- to 2.5-ton Trucks)

Thermal relay current settings

Transformer model	Setting (A)
M105B	40
M105C	26
M105D	

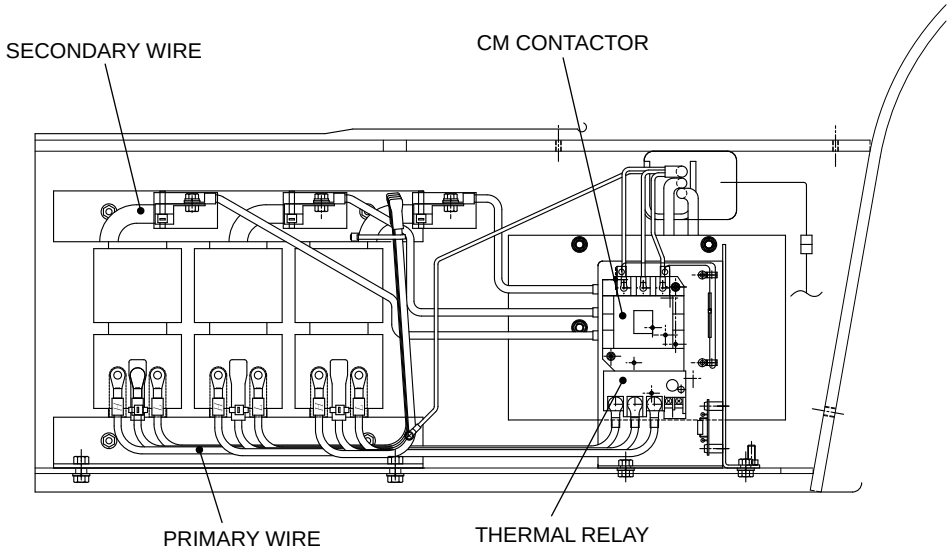

Fig. 1.5 Battery Charger (3- to 3.5-ton Trucks)

(1) Transformer

The transformer is located at the right side frame and converts input voltage to a voltage of the level necessary for charging the battery.

There are three taps provided with a 10-volt difference from one to another. Make a selection among them at the input side according to the input voltage level.

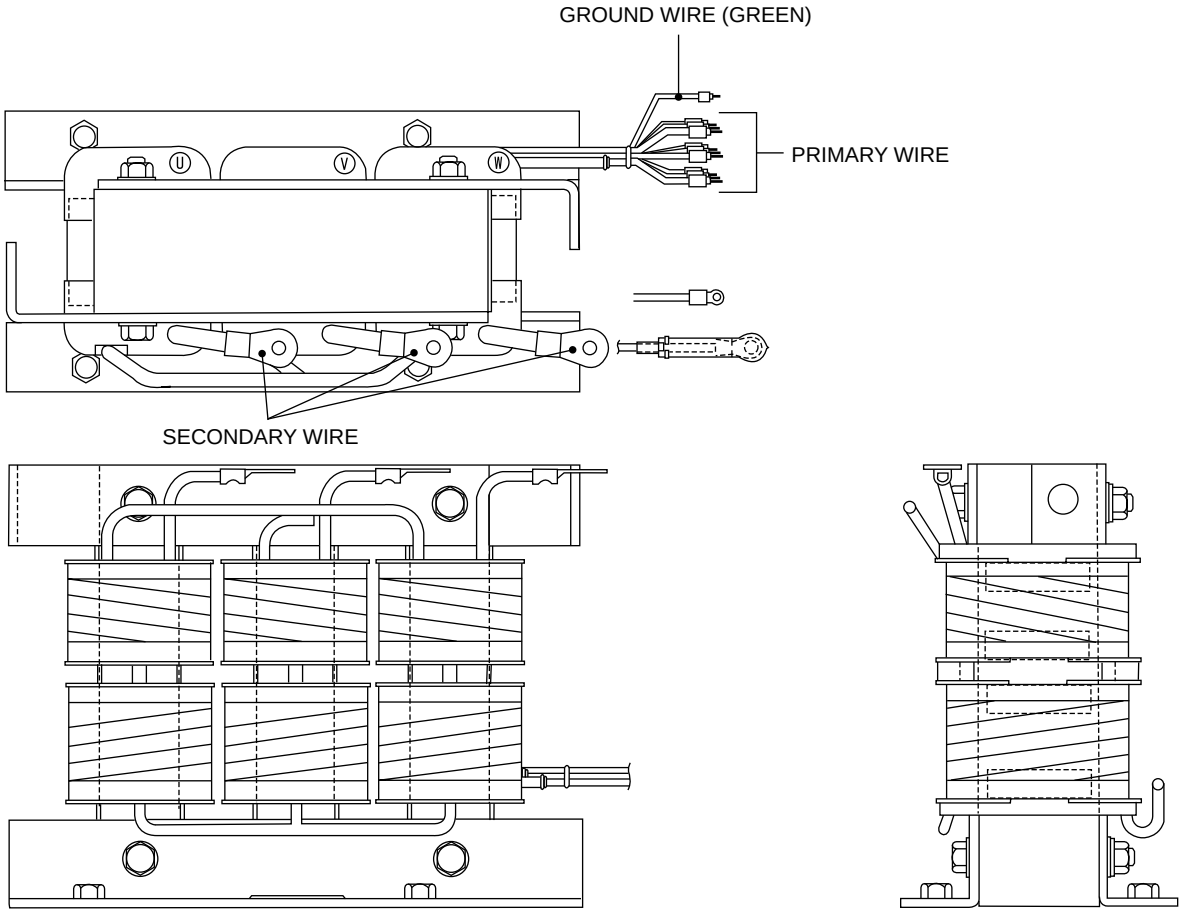

■ **Transformer tap changing**

The supply voltage varies with the periods of time. Change therefore the taps from one to another according to the average of supply voltages which to charger receives for the period of time during which the battery is normally charged.

Supply Voltage (Average)						Symbol of Tap	
205 V		390 V		440 V			Note 1: Change all the three phases as a set. Note 2: Give a terminal cap to each of the taps which are not used, and fix them by the wire binder.
50 Hz	60 Hz	50 Hz	60 Hz	50 Hz	60 Hz		
180 - 190	190 - 200	340 - 360	360 - 380	390 - 410	410 - 430	L	
190 - 200	200 - 210	360 - 380	380 - 400	410 - 430	430 - 450	M	
200 - 210	210 - 220	380 - 400	400 - 420	430 - 450	450 - 470	H	

Fig. 1.6 Transformer

(2) Diode

The diode, installed inside the right-side frame, is a 3-phase, full-wave rectification type which converts AC to DC.

The current rectified by the diode flows through the fuse F6 to charge the battery.

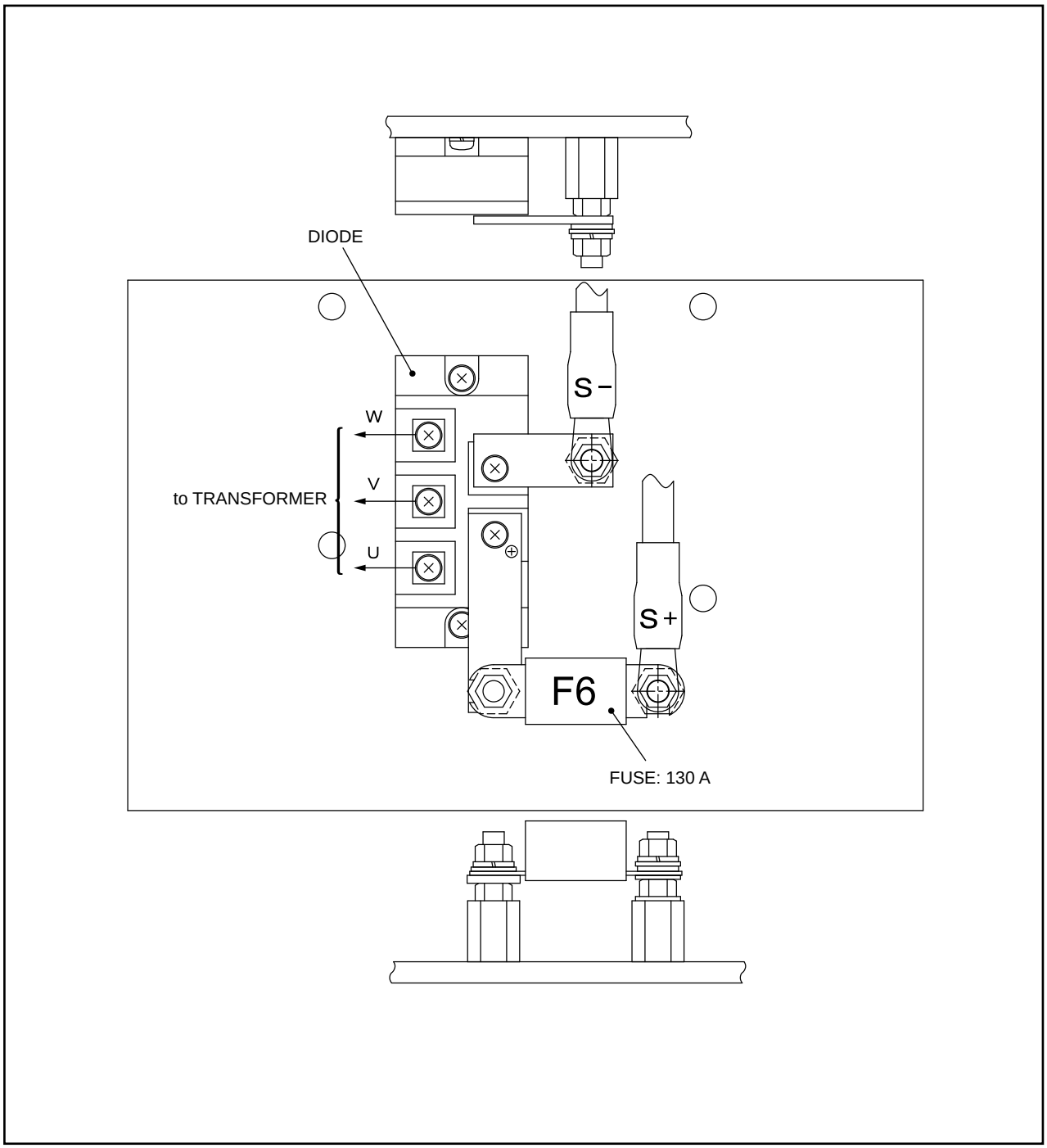

Fig. 1.7 Diode

(3) Operation panel

The operation panel is located on the left side of the cabinet and equipped with charger control switches, lamps and service power outlet.

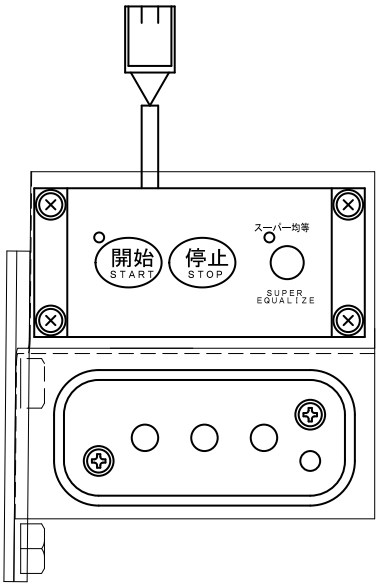

Fig. 1.8 Operation Panel

1.1.3 CHARGING PROCEDURES

(1) Normal charge

① Turn off the key switch and apply the parking brake.

② Make sure that the power supply at the facility side is off and insert the plug into the receptacle at the truck side.
The plug at the truck side is a locking type. Insert the plug securely until it reaches the locked position. Then, insert the plug into the receptacle at the facility side when it is equipped with the power service outlet.

③ When the power supply at the facility side is turned on and the START button at the charging operation panel is pressed, the CHARGING lamp lights up and the charging is started. Then, the humming is heard from the transformer, which shows that the charger is operating. The charging state is also displayed on the LCD panel.

Note: If the battery is not connected or the power supply at the facility side is 0-volt, the charging operation cannot be started.

④ The charging is automatically terminated after it continues for 8 to 10 hours (the charging time varies with the amount of discharge). The battery is not so exhausted, the charging may continue for a short time (a few minutes).

Note: If power failure occurs during charging and is remedied within 120 hours, battery charging is automatically started again.

⑤ Make sure that the CHARGING lamp is turned off, turn off the power supply at the facility side. Remove the plug at the truck side with its lock lever pressed.

⑥ After charging is finished, measure the specified gravity of the battery electrolyte to check if the proper charging is carried out.

(2) Boosting charge

If the residual level gauge of the LCD panel is probable to indicate level 3 or less after completing the day's work, it is recommended that boosting charge is carried out by using a rest period.

The starting procedure of the boosting charge is same as that of the normal charge, but be sure to press the STOP button when terminating the boosting charge.

(3) Equalizing charge

Normally the battery does not need equalizing charge because when the battery needs it, the microcomputer detects it and automatically puts the charger in equalizing charge operation. However, manual equalizing charge is needed if:

- Purified water is added to the battery electrolyte
- The difference of the specific gravity in each cell is 0.02 or more.
- Overdischarge more than 100% occurs.

The procedure for carrying out the equalizing charge is as follows:

① Press the SUPER EQUALIZE button after taking the same steps as needed for normal charge, so that the CHARGING lamp and SUPER EQUALIZE lamp light up.

② When equalizing charge is automatically terminated (the CHARGING lamp goes out), the "SUPER EQUALIZE" lamp is turned off and equalizing charge is released by pressing the "SUPER EQUALIZE" button or turning the key switch on.

While the battery is charged, equalizing charge can be released by pressing the STOP button.

(4) Super equalizing charge

① Super equalizing charge is used when you want to use 100% of the battery capacity after consecutive holidays. The operation steps are the same as those described in "Equalizing charge."

② In super equalizing charge, both of equalizing charge and automatic proper boosting charge during consecutive holidays are carried out, so that proper boosting charge is automatically carried out every 24 hours after completing the charge. Therefore, 100% of the battery capacity can be used after consecutive holidays. However, if 100 % of the battery capacity is used, the battery service life will be short. It is recommended to adopt a high capacity battery or to prepare a spare battery when super equalizing charge is so often used.

(5) Flickering CHARGING lamp

When charging voltage doesn't rise up due to the deteriorated battery or other reasons, the timer won't operate properly, continuing to charge the battery.

However, for the truck-mounted type charger, the second timer is operated after charging the battery for 15 to 17 hours, so that the charging is forcibly terminated and the CHARGING lamp blinks. In such a case, inspect the cause and contact your TCM dealer.

Note: Have a helper for this procedure.

(1) Remove the battery connector.
(2) Having the helper keep the super equalizing charge button held down, reconnect the battery connector.
(3) Make sure "Charging" lamp goes out.

1.1.4 CHARGER OPERATION

(1) When the power supply switch to the battery charger is turned on, the charging circuit inside the LCD panel is activated.

(2) When the START button is pressed, a circuit consisting of the CM contactor, thermal relay TH and CN1-8 terminals of the LCD panel is completed to activate the CM contactor.

(3) When the CM contactor is activated to connect the power supply to the transformer, the LED1 turns on and the fail timer starts counting down the time and thus charging operation starts. The fail timer is usually set to 15 hours for normal charge.

(4) When the battery voltage rises up to the preset voltage, the control circuit inside the LCD panel detects the voltage level and then timer starts counting down the time.
This timer is automatically set to a proper amount of time according to how much the battery has been discharged.

(5) When the time set to the timer expires, the CM contactor opens to finishing charging.

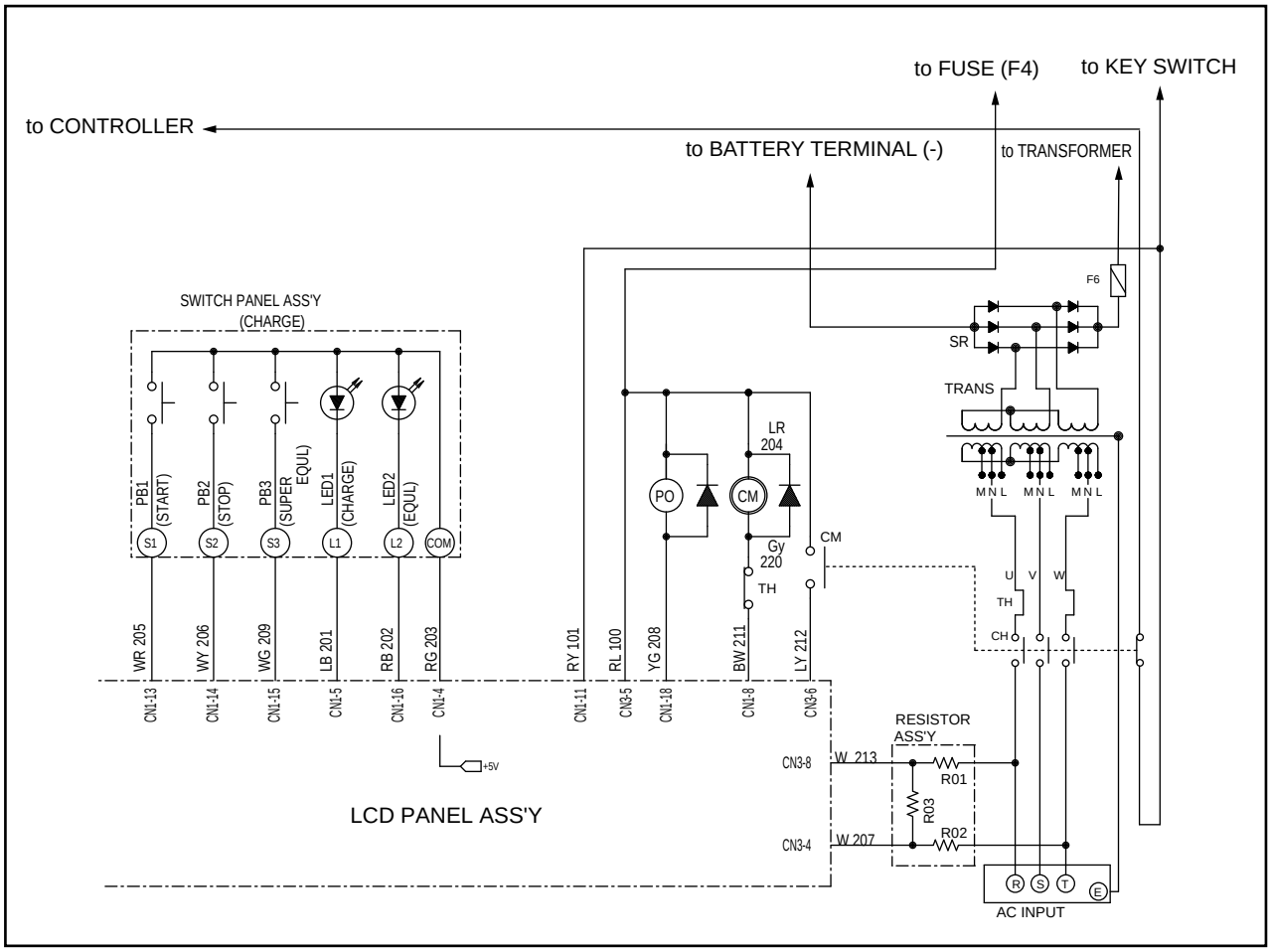

Fig. 1.9 Charging Circuit

NOTE

2. MOTORS

Truck model / Item	FB10-8 FB15-8 FB18-8	FB20-8 FB25-8 FB25-8LB FB25-8V	FB30-8 FB35-8S FB30-8V
Drive motor			
Name	HO-NR		
Type	Self-ventilated, 3-phase induction motor		
Rated output	6.9 kW (60-min rate)	8.5 kW (60-min rate)	11.9 kW (60-min rate)
Rated voltage	26.5 V	26.3 V	43 V
Rated current	210 A	255 A	210 A
Weight	48 kg [106 lbs]	54 kg [119 lbs]	63 kg [139 lbs]
Pump motor			
Name	HO-NR		
Type	Self-ventilated, 3-phase induction motor		
Rated output	8.6 kW (5-min rate)	9 kW (5-min rate)	14 kW (5-min rate)
Rated voltage	28 V	26 V	42 V
Rated current	260 A	280 A	260 A
Weight	34 kg [75 lbs]	43 kg [94.8 lbs]	47 kg [104 lbs]

Note: On trucks with an Orbitrol steering system, the pump motors of the 1-ton and 2-ton class trucks are the same in design and specifications..

2.1 GENERAL DESCRIPTION

The drive and pump motor are located in positions shown in Figs 2.1 and 2.6, and controlled by the controller inside the counterweight.

2.1.1 DRIVE MOTOR

The drive motor has a structure as shown Figure 2.2 and is installed on the drive unit, with the rotation controlled by the inverter in the controller.

The rotation of the drive motor is sensed by the two sensors installed in the rear part of the motor and sent to the controller.

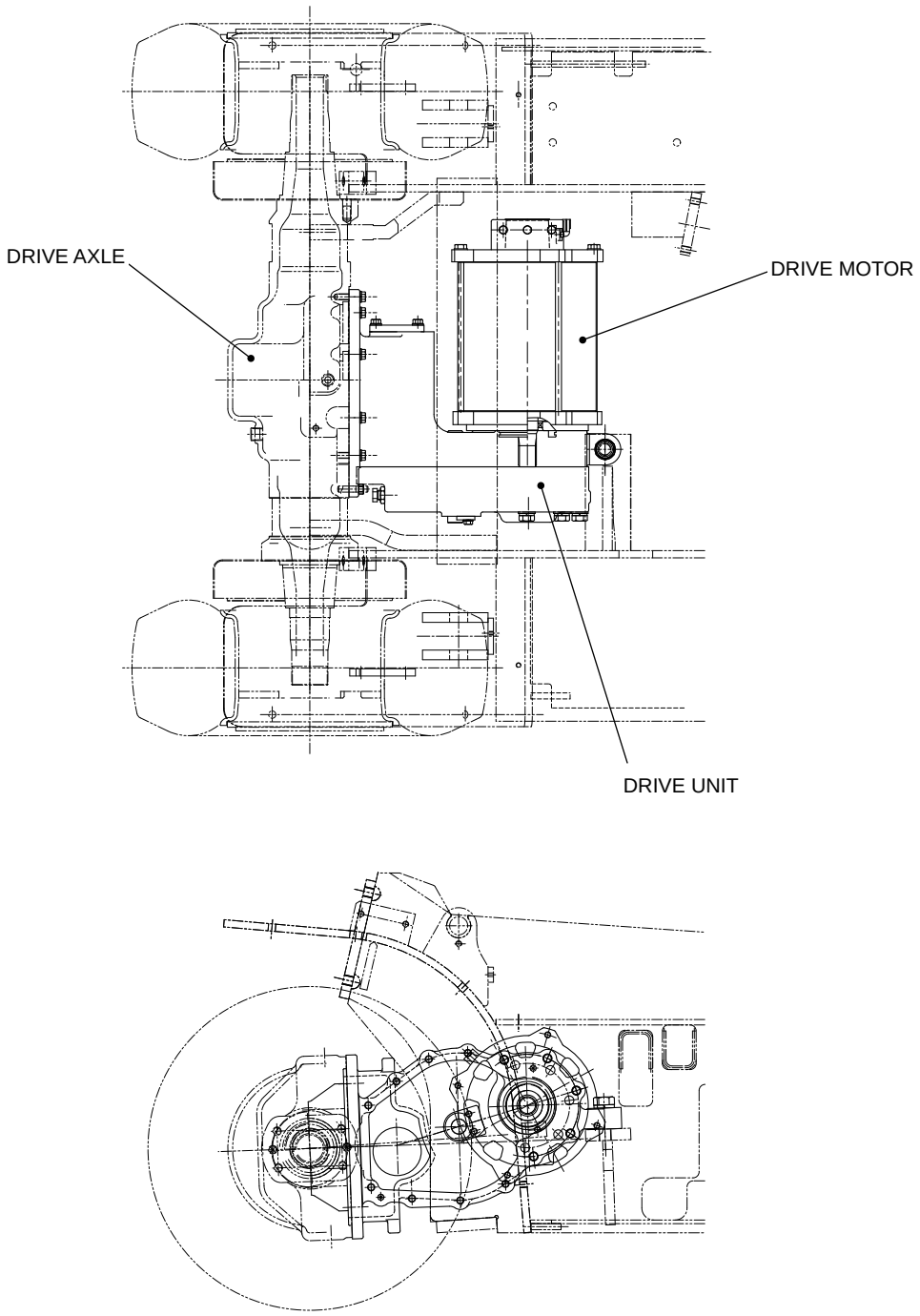

Fig. 2.1 Drive Motor Installation

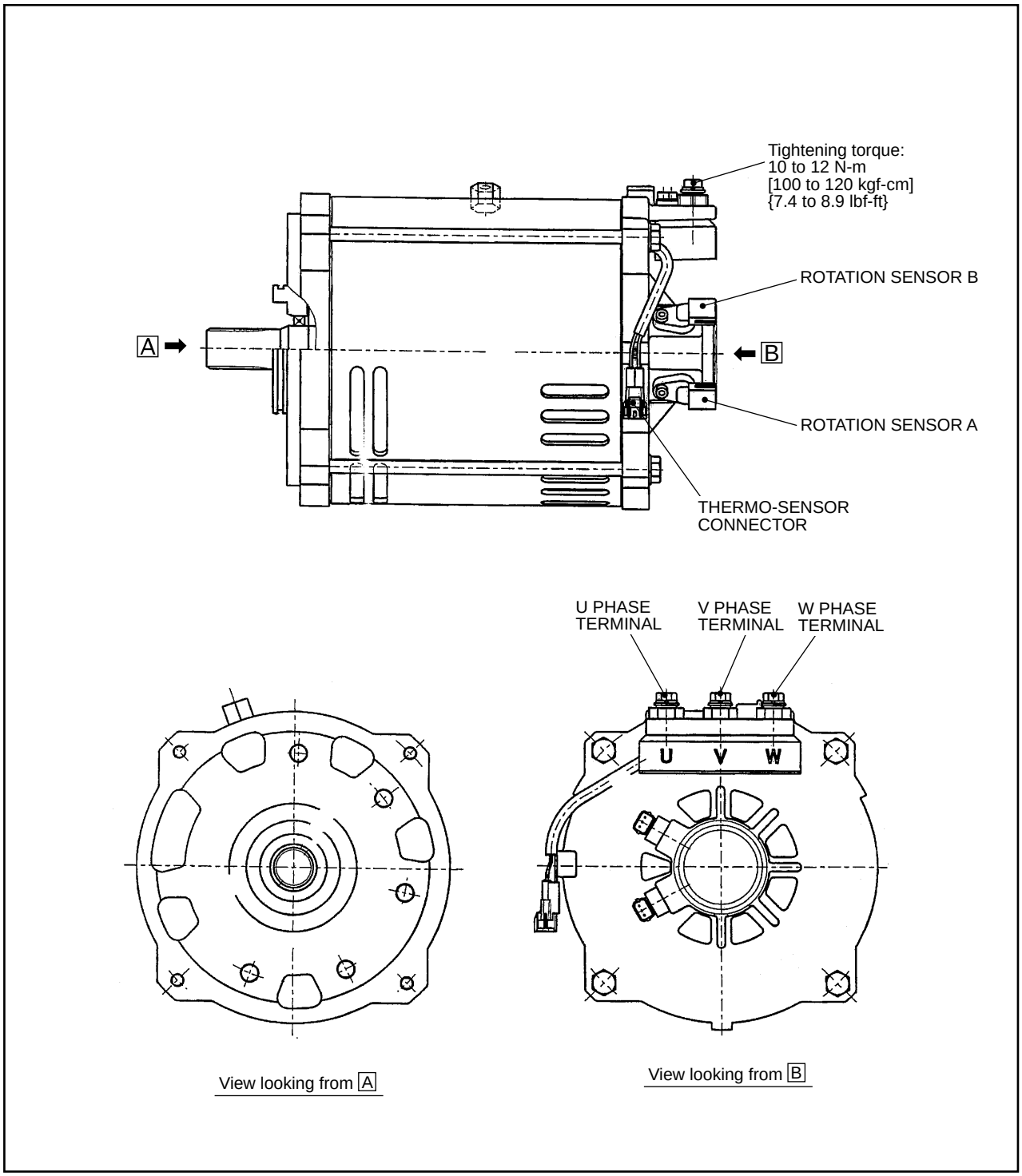

Fig. 2.2 Drive Motor

■ Operating principle of 3-phase induction motor

As shown in Figure 2.3, when the magnetic poles N and S are rotated outside the rectangular oil, the coil side cuts the magnetic flux to induce electromotive force in the direction indicated in the figure, thus flowing circulating current inside the coil. This causes rotating force in the same direction as in which the magnetic poles rotates so that the coil also rotates, following the magnetic poles. Motors which operate in such a principle is called an induction motor.

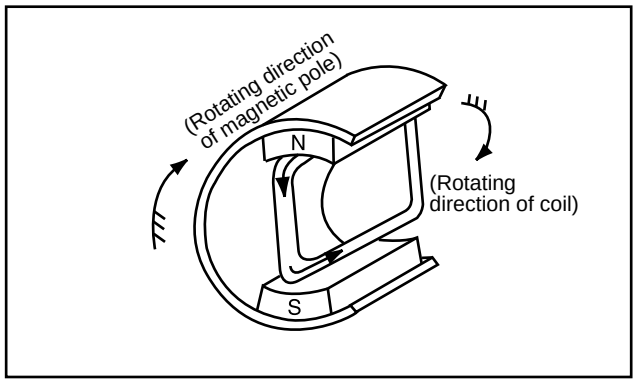

Fig. 2.3 Operating Principle of Induction Motor

Three-phase alternating current is suitable for rotating the magnetic coil. When 3-phase current is passed into a 3-phase winding, a revolving magnetic field which rotates a certain speed is created. It is thus possible to perform the same action as the purpose of rotating the magnetic poles N and S in Figure 2.3. The 3-phase winding consists of an iron core and three coils A, B, and C, spaced 120° apart, installed in the iron core slots and connected in Y or delta connection. The sketch "b" in Figure 2.4 shows a typical Y connection which is widely used for the connection of induction motors.

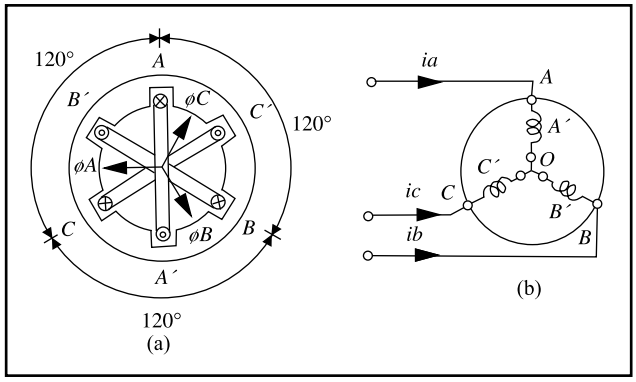

Fig. 2.4 3-phase Winding

When the directions (A → A', B → B', C → C') in which current flows into the coil are regarded as the positive direction, the current of the coil in each phase at the moment ① at (a), (b) and (c) in Figure 2.5, +Im flows into the coil A and –Im/2 flows into both coils B and C. Therefore, the synthetic magnetic flux in the space becomes (c) to create a magnetic field moving from right to left. This means that the magnetic pole is located at the right side and the S at the left side. As such, each moment from ② - ⑥ is followed in order, the synthetic magnetic field created by synthetic magnetic flux is a magnetic field which rotates by 60° clockwise. With time, it rotates to cause a rotating magnetic field which makes a complete turn per one cycle of alternating current. The poles formed at each moment are N and S, and thus this type of motor is called a 2-pole motor.

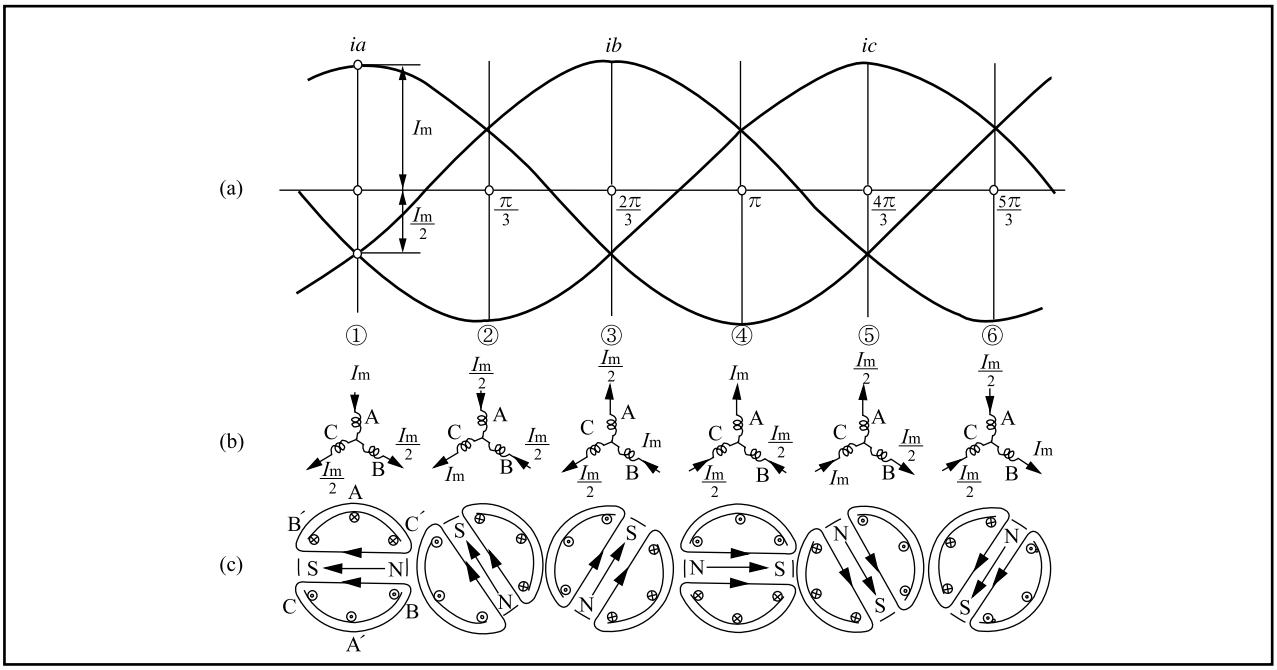

Fig. 2.5 Rotating Magnetic Field due to 3-phase Alternating Current

2.1.2 PUMP MOTOR

The pump motor is located on the left side frame and is used to drive the main pump.

Its rotation is controlled by the load handling inverter built in the speed controller only when the lift lever is operated. Except that, the pump motor is used for starting or stopping the rotation of the main pump.

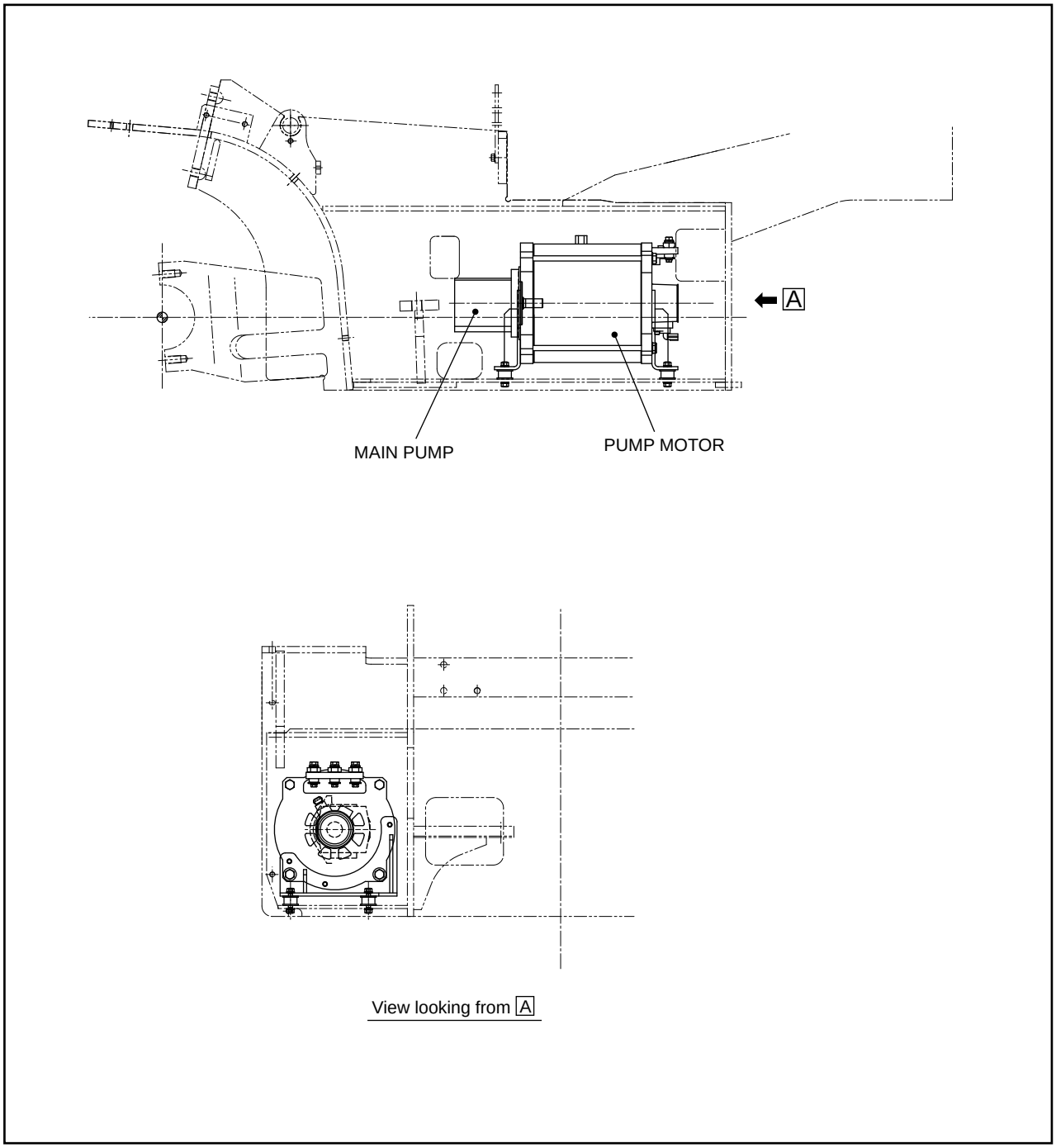

Fig. 2.6 Pump Motor

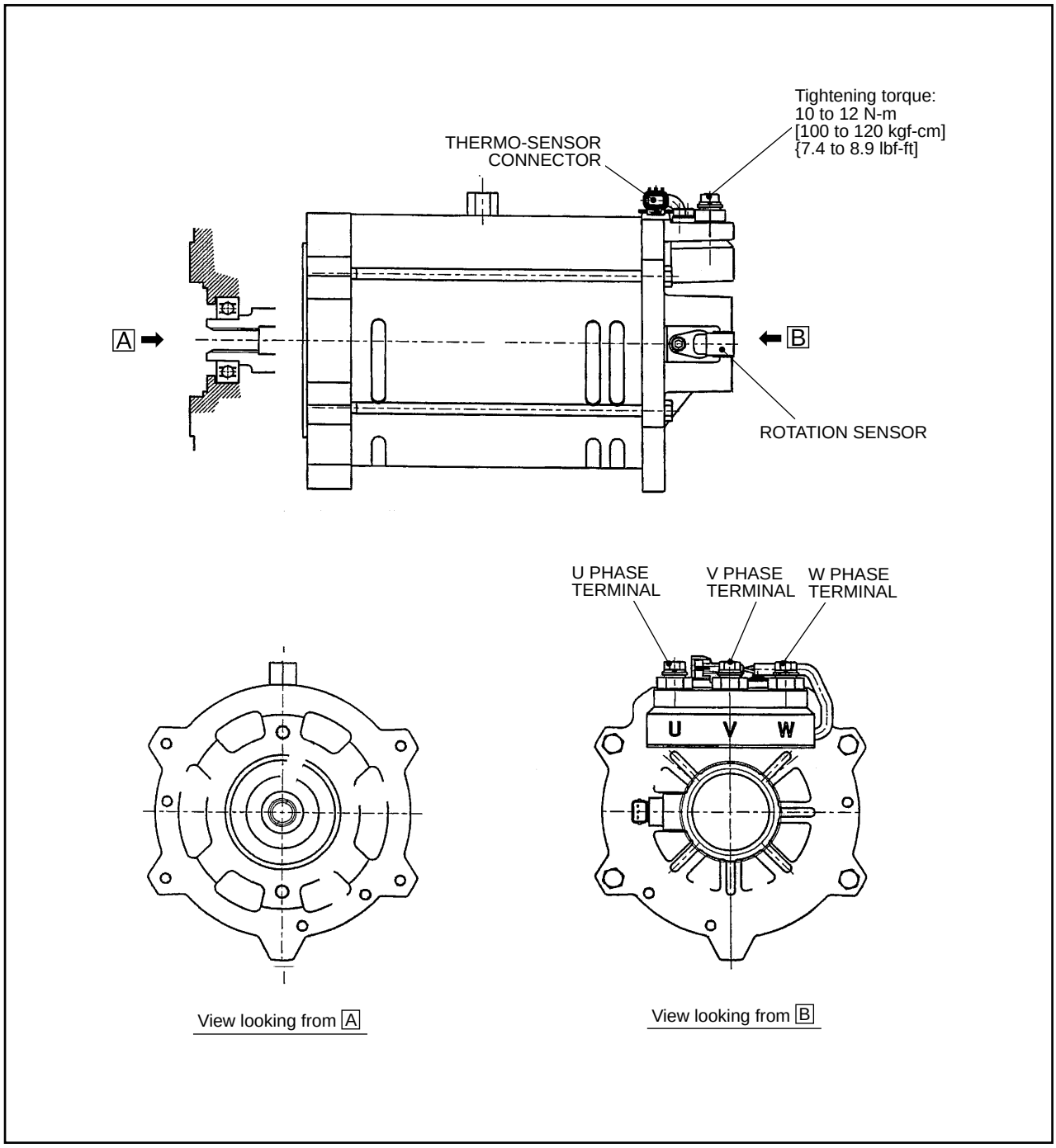

Fig. 2.7 Pump Motor

2.2 MAINTENANCE

2.2.1 DRIVE MOTOR

(1) Check the following points with the motor running

Check item		Location	Criteria	Remedy
Environment	Dust	Motor frame	No remarkable deposit of dust allowed compared with usual operation. Usual temperature rise. Visual check.	If too much deposit of dust is found, stop the motor and clean.
	Foreign matter, splash, liquid	Motor frame	No remarkable change allowed compared with usual operation. Visual check.	Return to normal condition.
Temperature rise		Motor frame, bearing	No remarkable rise in temperature allowed compared with usual operation. Temperature is below specified values: Motor frame : 80°C [176°F] Bearing : 55°C [131°F]	Return to normal condition.
Vibration		Motor frame, bearing, and cover	No remarkable vibration or amplitude increase allowed compared with usual operation. Visual and audible checks.	If allowable limit is exceeded, stop the motor and remove the cause.
Noise		Motor frame, bearing, cover	No remarkable noise or sound allowed compared with usual operation. Using a sound-check rod, check against new product. Audible check.	If any defect is found, stop the motor and remove the cause.

(2) Check the following items with the motor stopped

Check item	Location	Criteria	Remedy
Tightened areas	Screws and nuts	No looseness, adherence of dust, or corrosion allowed. Check visually and by tapping.	Retighten, clean or paint.
Terminals	Connections	Connections are correct and not loose. Proper insulation is ensured. Visual check.	Retighten. Check for insulation.
	Lead wires	No damage to coating allowed. Visual check.	Ask specialist for repair.

2.2.2 PERIODIC INSPECTION

(1) Inspection criteria

Check the motor at periodic intervals, referring to the following troubleshooting chart. If the motor is used under a severe working condition, earlier or more frequent preventive maintenance is required.

Operation time	more than 12 hours/day	8 – 12 hours/day
Inspection interval	Once a year	Once every two years

Location	Check item	Criteria	Remedy
Roller bearing	Bearing (sealed type)	Check grease leaks, noise, adherence of dust visually or audibly.	Replace.
Tightened areas	Joined parts	Check for damage or rough surface due to corrosion visually.	Clean.
	Fasteners	Check for looseness, corrosion or seizure visually or by tapping.	Retighten, apply anti-rust or replace.
Terminals	Joined areas	Check for damage or rough surface due to corrosion visually.	Clean.
	Connections	Visually check that connections are correct and not loose, and that proper insulation is ensured.	Retighten.
	Lead wire	Check coating for damage visually.	Ask specialist for repair.
Stator and rotor assembly	Iron core	Check for adherence of dust visually.	Clean.
	Coil and insulation at connections	Insulation resistance is more than 1 MΩ. (Use 500 V megger)	Clean. Heat. Varnish.
Rotation sensor	Measure resistance	620 ± 60 Ω (20°C or 68°F)	Replace.
	Measure gap	0.7 ± 0.3 mm [0.028 ± 0.012 in.]	Ask specialist for adjustment.
Thermo sensor	Measure resistance	13.04 kΩ ± 10% (20°C or 68°F)	Ask specialist for repair.
Painting	Damage	Check for damage, discoloration, peeling, or corrosion visually.	Apply anti-rust. Paint again.
Cleanliness	Deposit of contaminants or dust	Check for contamination, adherence of dust or corrosion visually.	Clean or apply anti-rust. Paint.

(2) Inspection procedure

Inspect the motors observing the following conditions:

① Select a place which is not dusty or humid.

② Parts which have been disassembled should be kept in order and the order of disassembly recorded to ensure correct reassembly.
Screws and wave washers removed should be put in order in boxes.

③ When removing or reinstalling brackets with a wooden mallet, tap them evenly. Do not use a metallic hammer.

④ Use caution not to damage parts, especially stator coil and bearings. Exercise caution not to allow them to collect moisture, dust, or sand.

⑤ Disassembled parts should be cleaned and checked for damage. Any defective parts should be replaced with new one.

⑥ Do not rub a contaminated coil forcefully. Do not use gasoline, petroleum or solvent for cleaning; otherwise the insulation will be impaired. Use a dry cloth or soft brush for cleaning.

⑦ If the insulation resistance of the coil is lower than the specified value, dry the coil by heating it to 80 to 90°C [176 to 194°F], avoiding local heating, until the insulation resistance is more than 1 MΩ.

⑧ Check bolts for looseness, retightening any loose bolt.

⑨ For the procedure for checking and servicing the bearings, see (4) Maintenance of bearings.

⑩ If the coating is damaged, discolored or exfoliated, apply anti-rust or paint again.

⑪ Tighten the terminals securely. Connections must be completely insulated with insulation tape.

⑫ After reassembly, make sure that there is not any part left and the bolts and screws are securely tightened. Turn the shaft by hand to make sure it turns smoothly. Run the motor on a trial basis.

⑬ The motor should be stored in a dry, clean place free from alkaline or other harmful gases. The shaft should be applied with anti-rust and covered with oilpaper or vinyl sheet.

2.2.3 MAINTENANCE OF BEARINGS

The service life of bearings varies with the magnitude of loads and operating conditions. Replace the bearings with new ones when the temperature rises excessively or produces noise.

Sealed bearings sealing in lithium soap-based grease ensure effective lubrication and prevent the entrance of dust. They can be used for a long period of time without adding grease.

The sealed bearing should be replaced using the following table as a rough guide.

Operation time	8 – 12 hours/day	12 hours/day
Replacement intervals	Once every 6 years	Once every 3 years

Earlier replacement may be required if the motor is used at a place which is dusty or might cause the sealed grease to deteriorate or flow out due to the atmosphere of harmful gases or solvent.

■ **Installing bearing**

Install the bearing onto the shaft using a pipe (with a patch, if needed), as shown in Figure 2.8.
When heating the bearing, do not heat to more than 60 to 80°C [140 to 176°F].

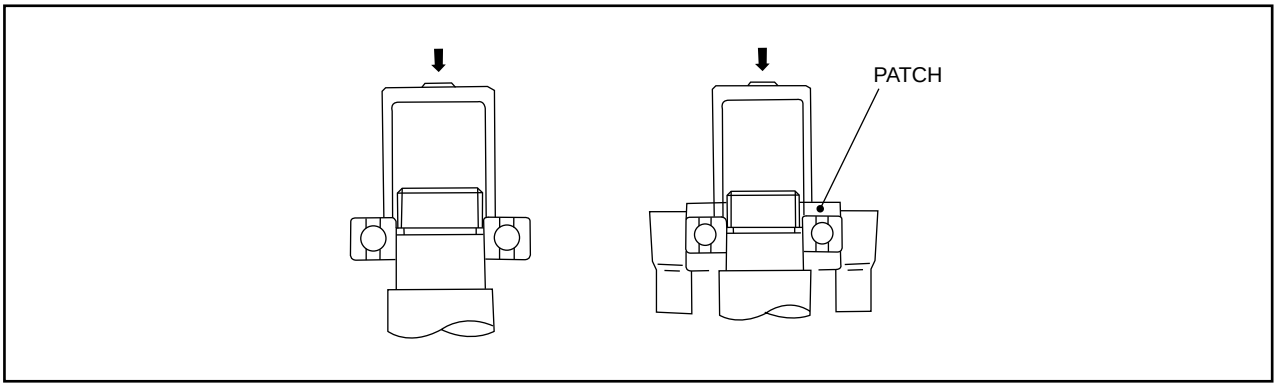

Fig. 2.8

■ **Removing bearing**

Using a puller, remove the bearing.

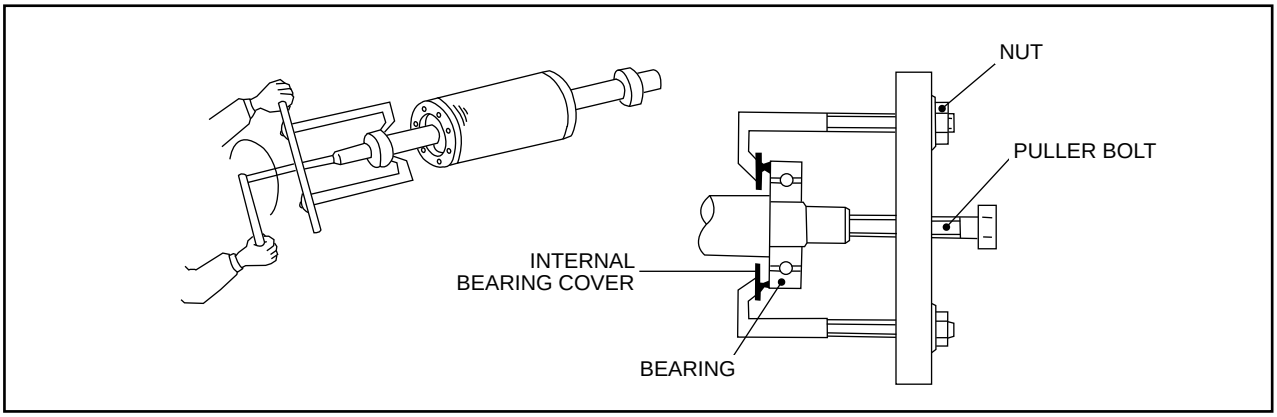

Fig. 2.9

3. CONTROL SYSTEM

3.1 GENERAL DESCRIPTION

The controller assembly consists of two inverter units which control the drive and the pump motors, respectively (excluding trucks with an Orbitrol steering system), and an EPS controller unit which controls the EPS motor, as shown in Figures 3.1 and 3.4.

3.1.1 INVERTER UNIT

The inverter unit is a device consisting of a CPU board and FET modules and converts direct current to 3-phase alternating current.

The CPU board receives various electric signals through the operation of the accelerator pedal and valve control levers to control the drive motor and the pump motor through the inverter's FET modules.

The operating status of the drive motor and the pump motor is detected by the rotation sensor, thermo-sensor and current sensor to feed the information back to the CPU board.

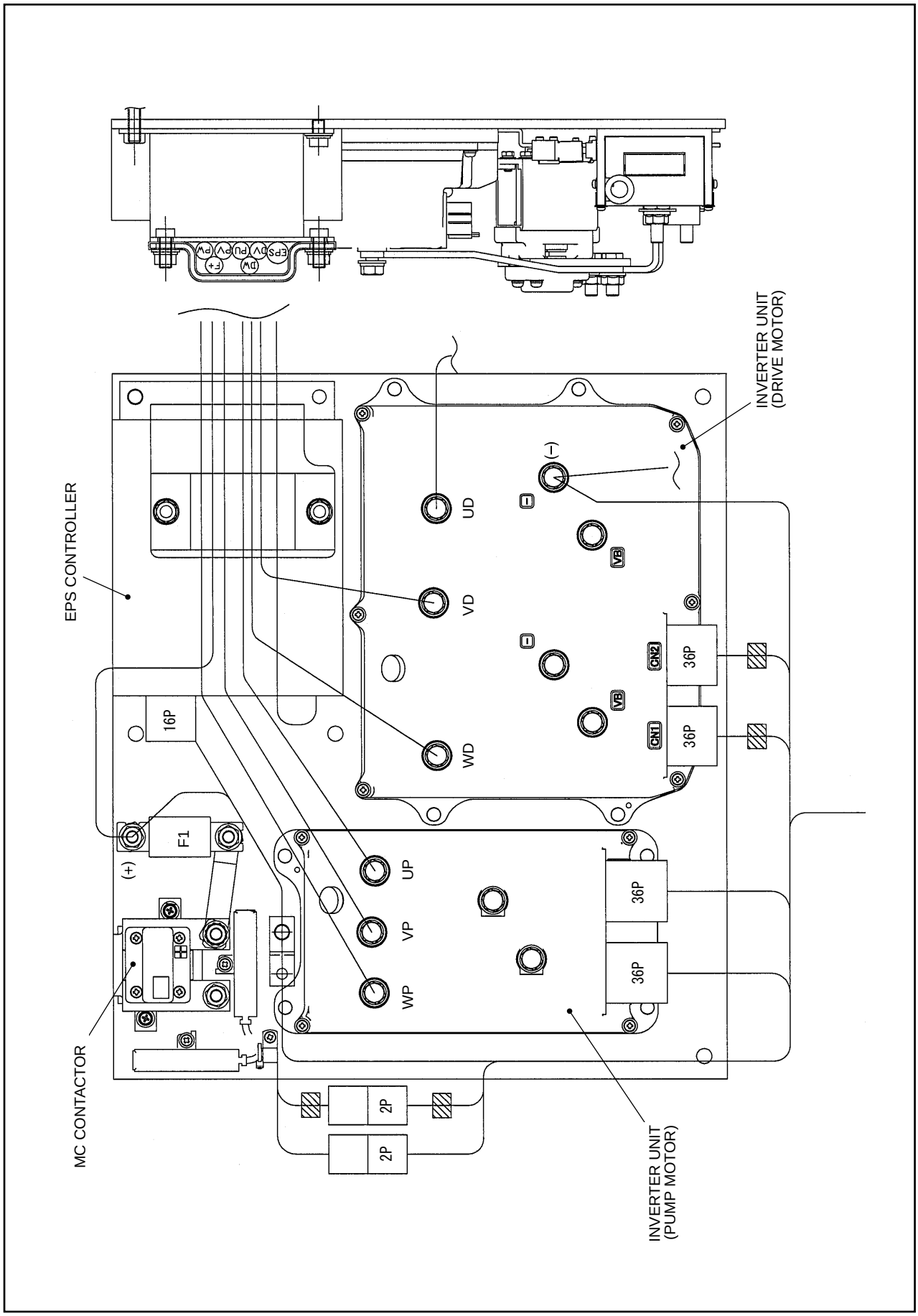

Fig. 3.1 Controller (1.0 - to 1.8-ton Trucks (excluding those with an Orbitrol steering system))

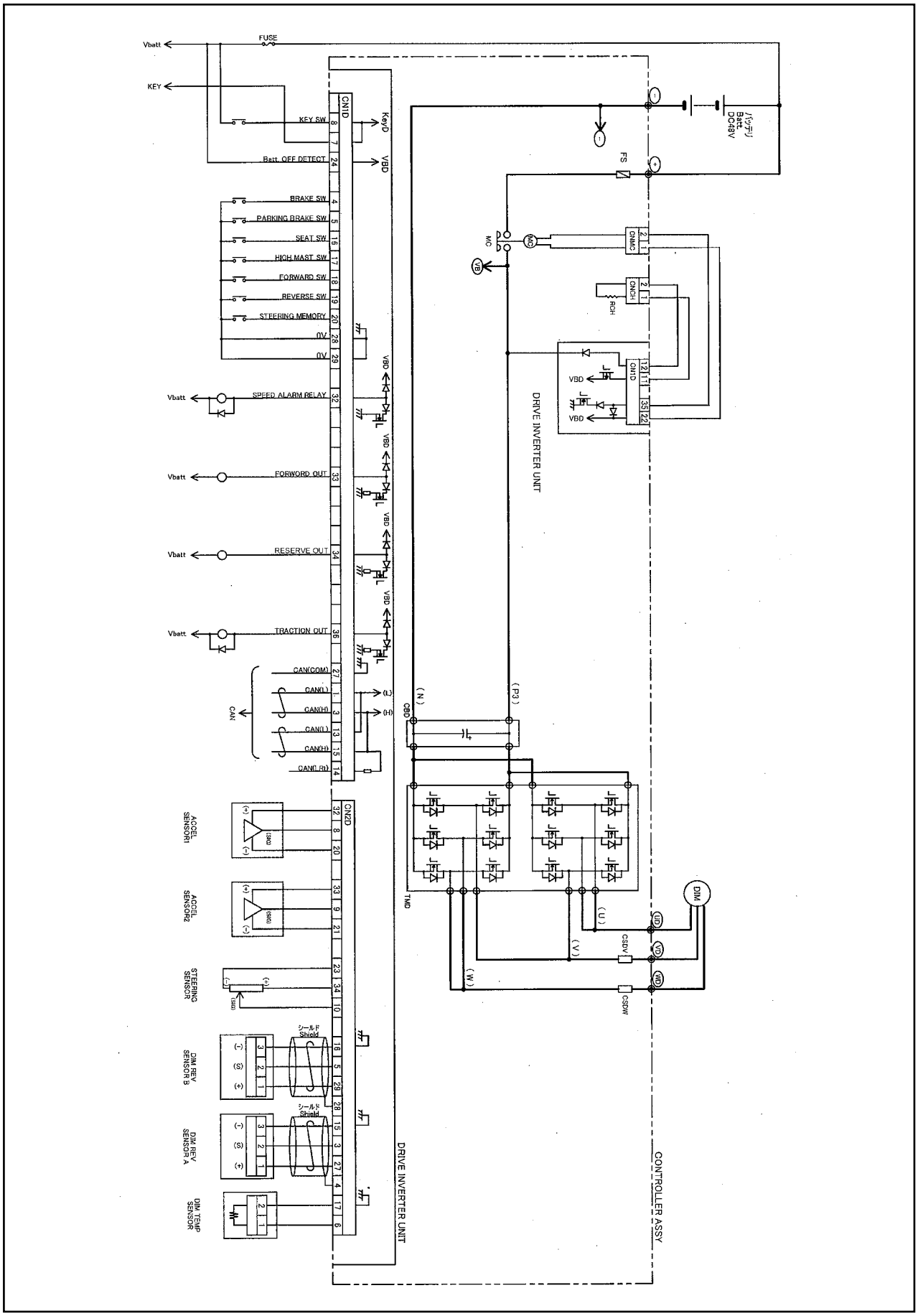

Fig. 3.2 Inverter Unit (drive motor) Circuit
(1.0 - to 1.8-ton Trucks (excluding those with an Orbitrol steering system))

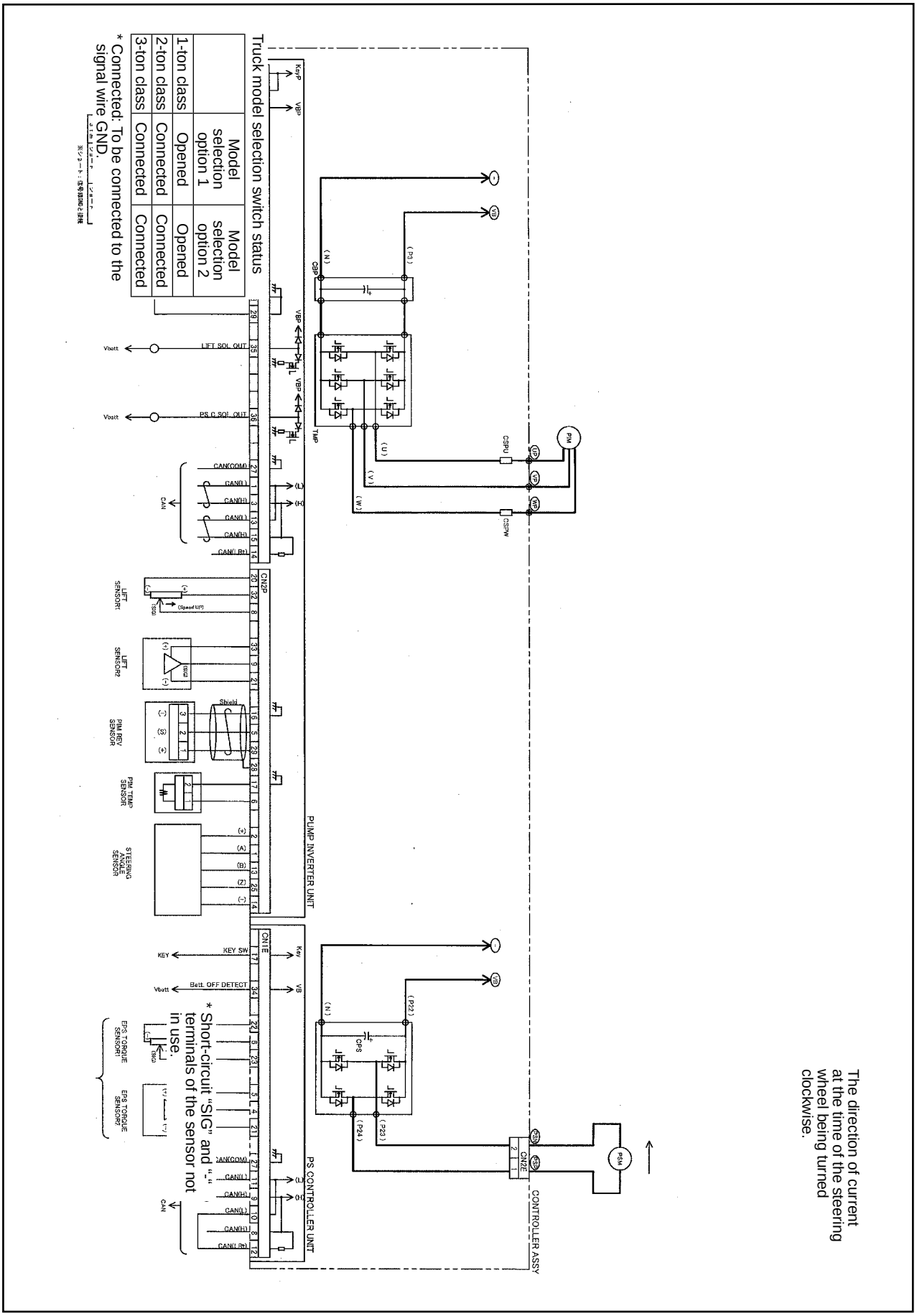

Fig. 3.3 Inverter Unit (pump motor) Circuit
(1.0- to 1.8-ton Trucks (excluding those with an Orbitrol steering system))

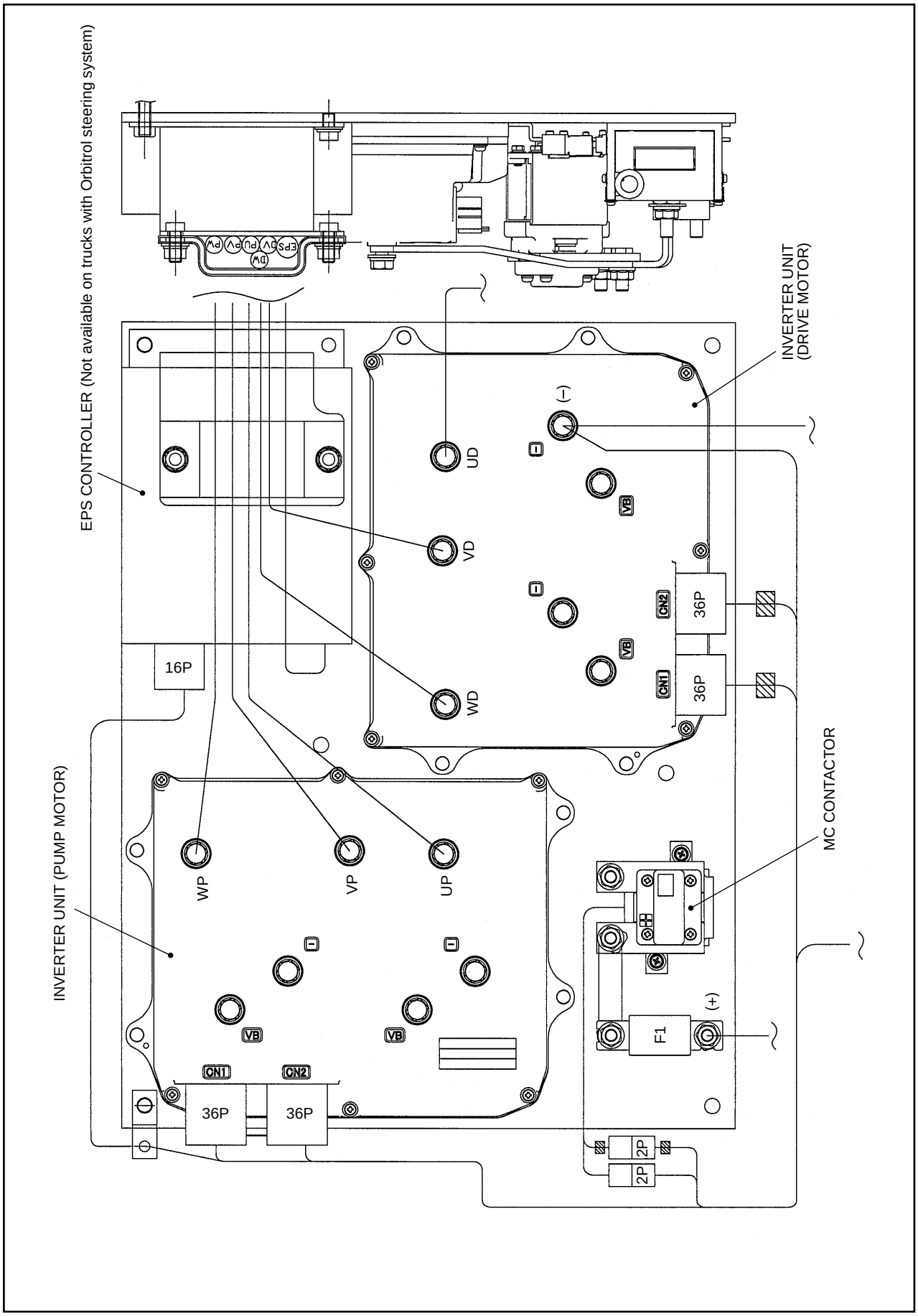

Fig. 3.4 Controller (2.0- to 3.5-ton Trucks with an EPS steering system and 1-ton Class Trucks with an Orbitrol steering system)

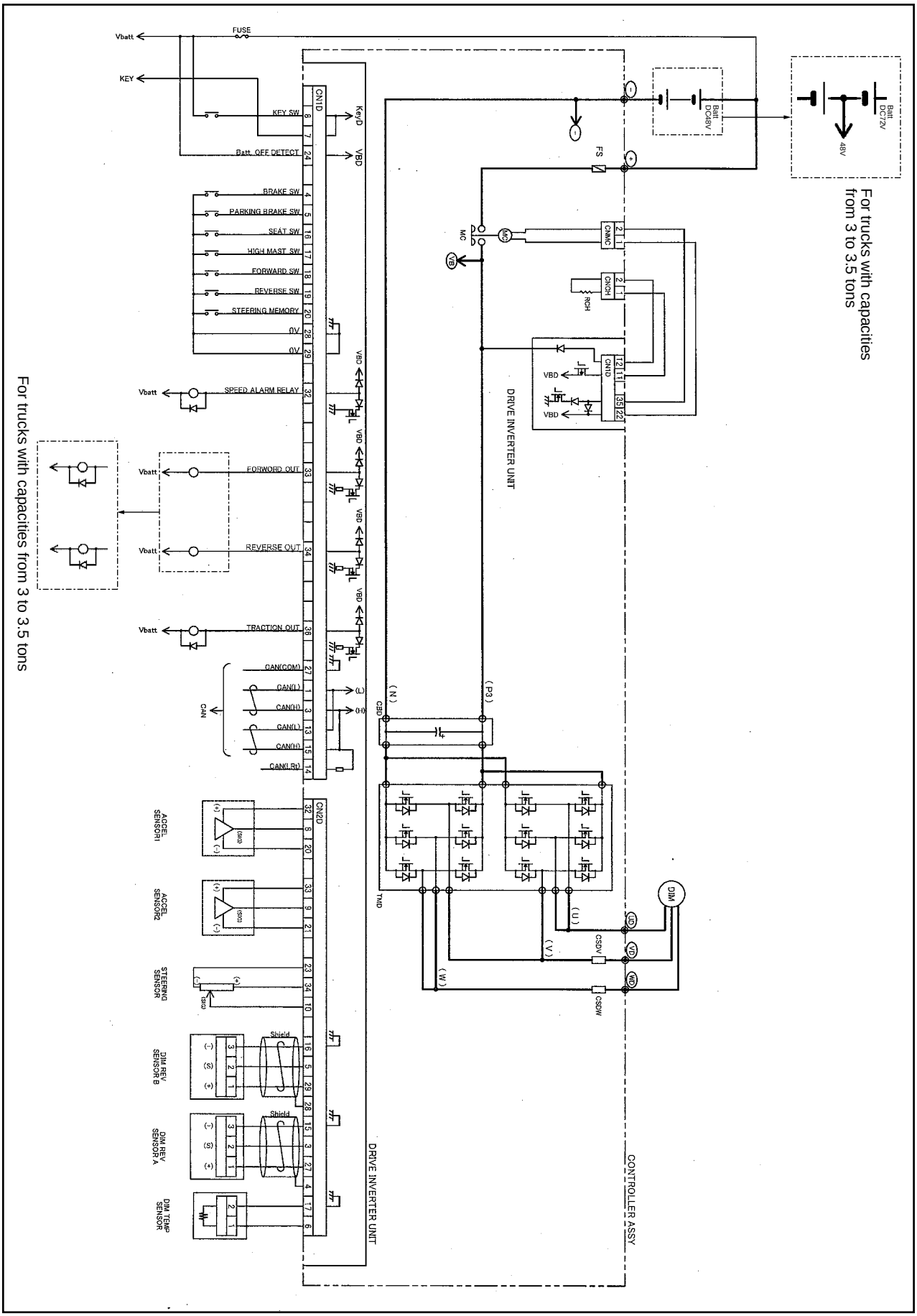

Fig. 3.5 Inverter Unit (drive motor) Circuit (2.0- to 3.5-ton Trucks with an EPS steering system and 1-ton Class Trucks with an Orbitrol steering system)

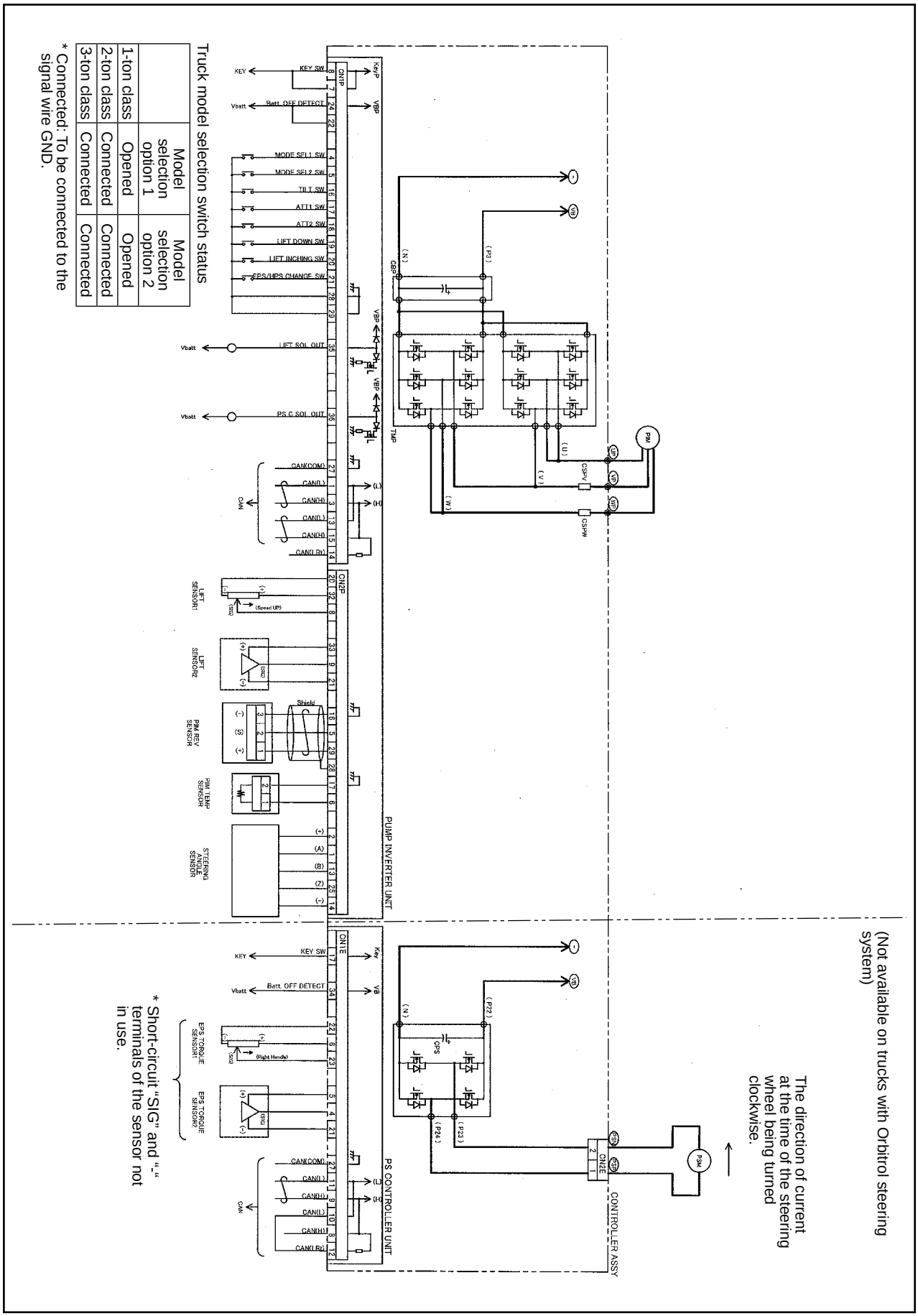

Fig. 3.6 Inverter Unit (pump motor) Circuit (2.0- to 3.5-ton Trucks with an EPS steering system and 1-ton Class Trucks with an Orbitrol steering system)

3.1.2 ACCELERATOR PEDAL

The accelerator pedal is installed as shown in Figure 3.7, and the amount of accelerator pedal effort is transmitted to the potentiometer.

The potentiometer converts pedal effort into voltage change and sends it to the controller.

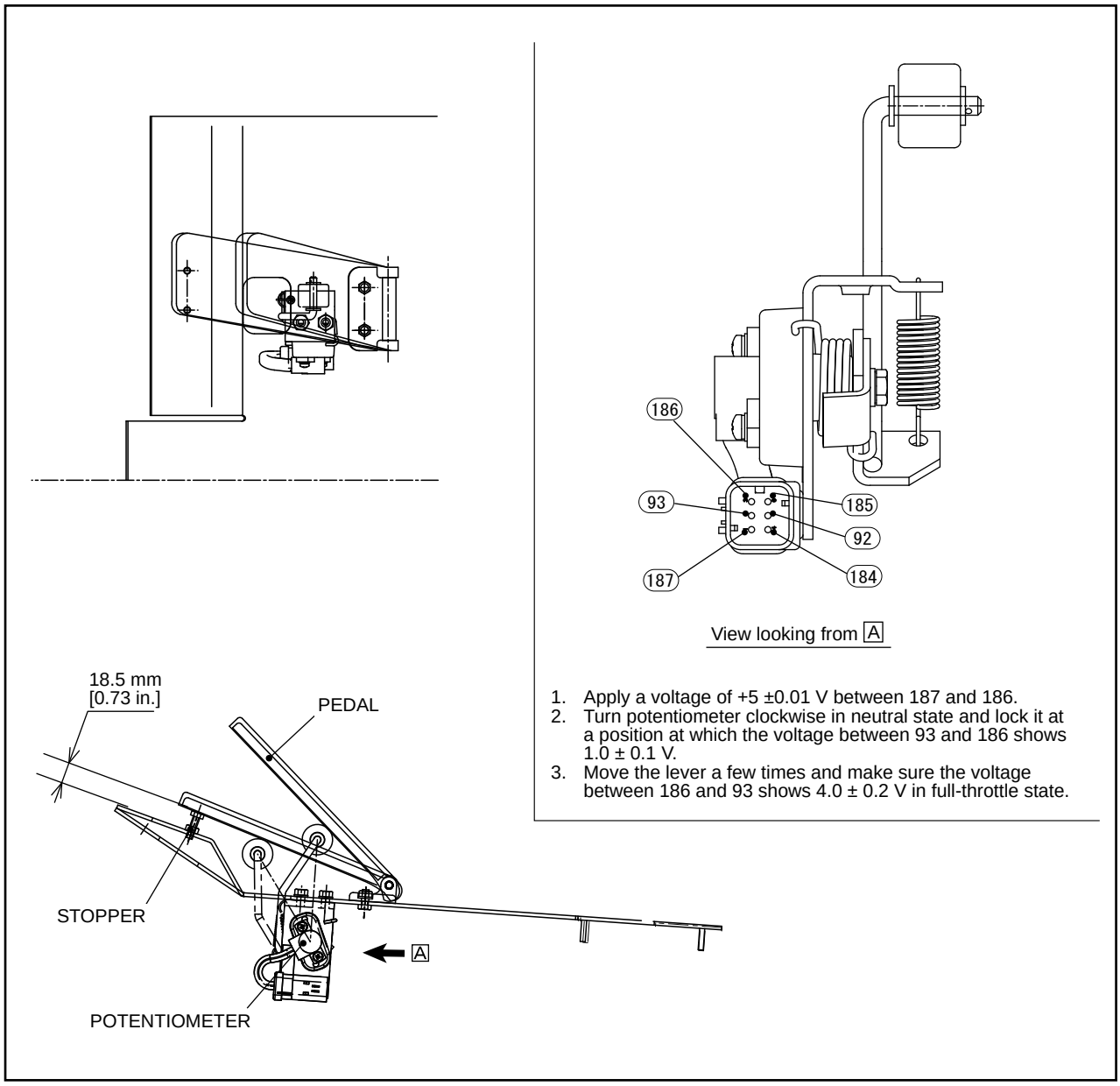

Fig. 3.7 Accelerator Pedal

4. DRIVE UNIT AND DRIVE AXLE

Item \ Truck model	FB10-8 FB15-8 FB18-8	FB20-8 FB25-8 FB25-8LB FB25-8V	FB30-8 FB35-8S FB30-8V
Drive unit			
Type	Three-stage reduction	←	←
Model	81E-25	81N-25	81U-25
Reduction ratio	25.1	←	30.144
Drive axle			
Type	Full floating	←	←
Wheel dimensions	6.00 x 9 – 10PR Rib lug	21 x 8 – 9 16PR Rib lug	28 x 9 – 15 14PR Rib lug
Rim size	9 x 4.00E	9 x 6.00E	7.00T x 15
Air pressure	850 kPa {8.5 kgf/cm^2} [120.9 psi]	1000 kPa {10 kgf/cm^2} [142.2 psi]	800 kPa {8.0 kgf/cm^2} [100 psi]

4.1 GENERAL DESCRIPTION

4.1.1 DRIVE UNIT

The drive unit is a three-stage reduction type and located between the drive motor and the drive axle as shown in Figs. 4.1 through 4.3.

The drive gear is splined to the output shaft of the drive motor, being in mesh with the counter gear 1. The drive gear is supported by two ball bearings on the case. The rotation of the drive gear is transmitted through the counter gears 1 and 2 to the ring gear.

The counter gear 2 of the 81N-25 and the 81U-25 is attached by two tapered roller bearings to the case, with the starting torque adjusted with shims.

In the case the differential is installed by two ball bearings. The cross case has two side gears and four pinions in it (Two pinions for the model 81E-25). For adjustment of the backlash between each side gear and pinion, a washer is installed. These washers also work as bearings.

To the cross case a ring gear is fitted by a reamer bolt. The ring is in mesh with the final pinion gear.

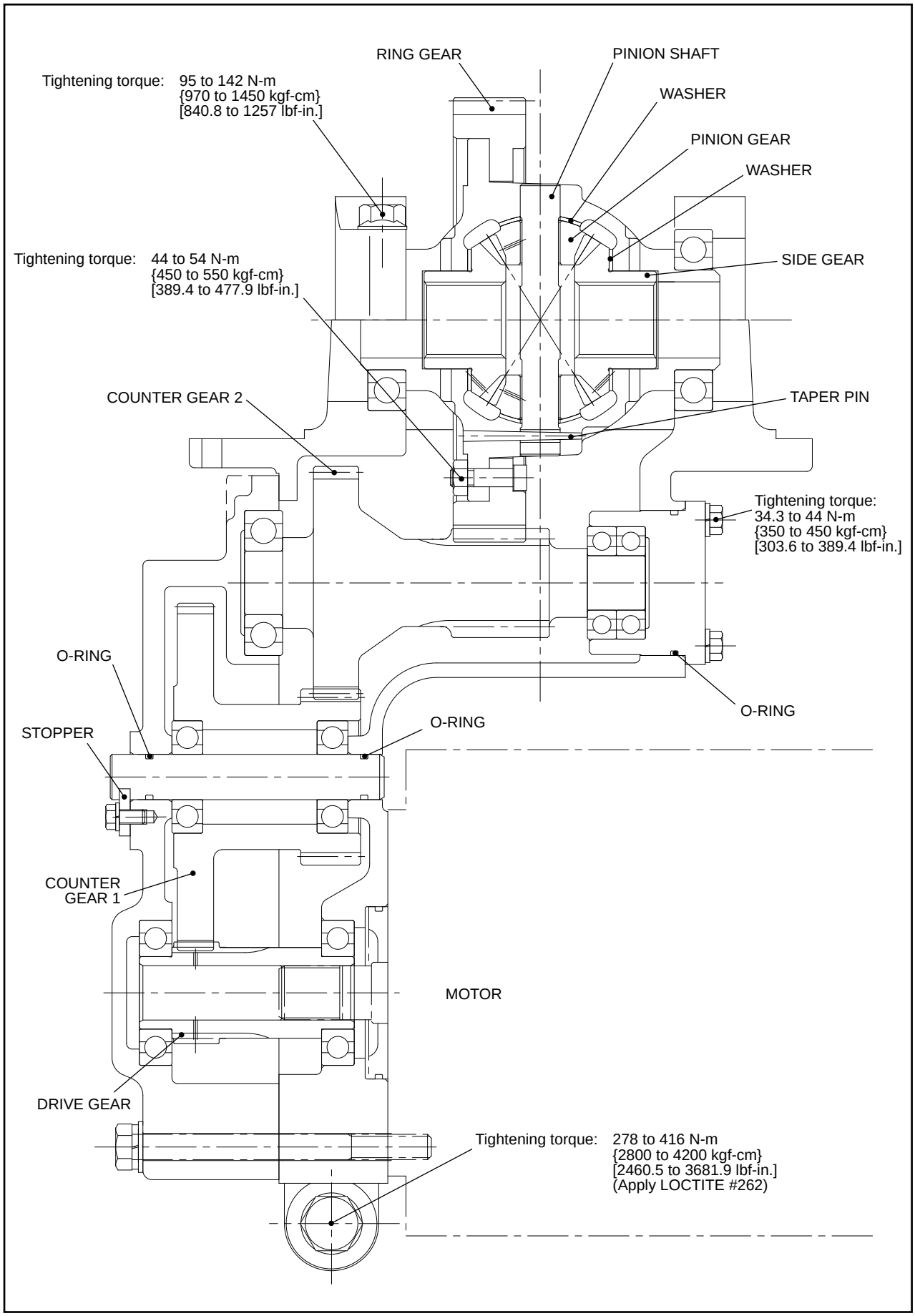

Fig. 4.1 Drive Unit (1- to 1.8-ton Trucks)

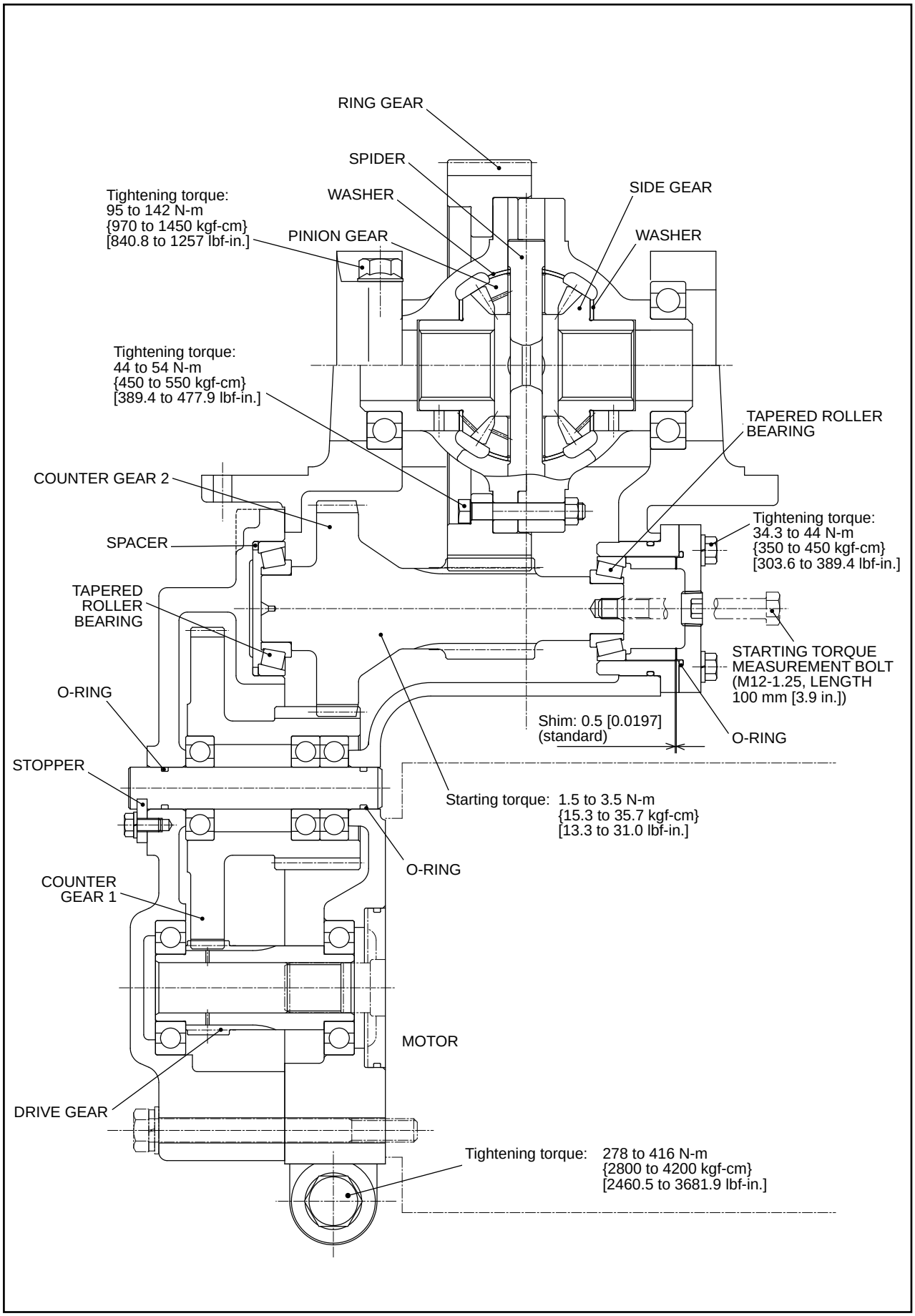

Fig. 4.2 Drive Unit (2- to 2.5-ton Trucks)

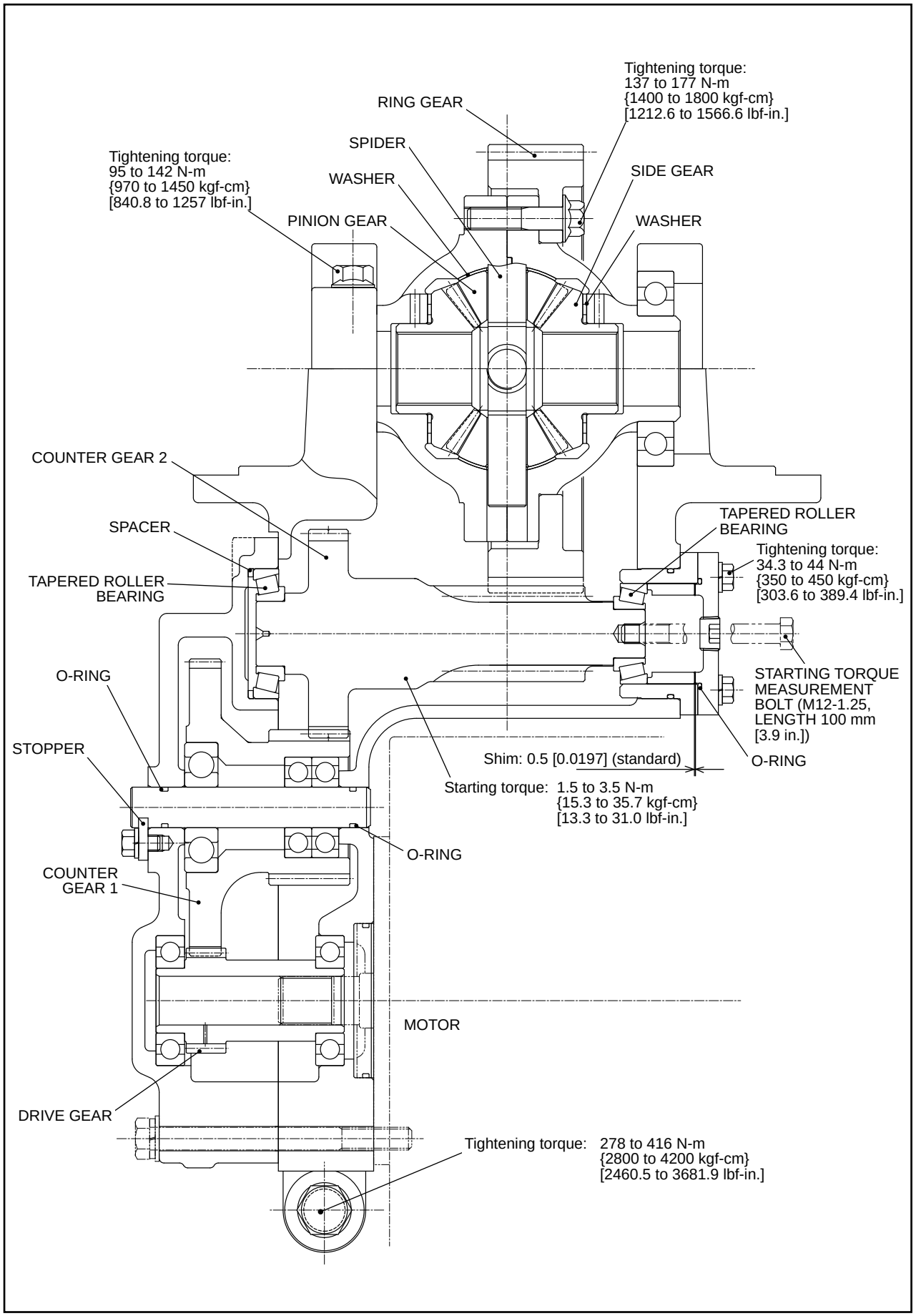

Fig. 4.3 Drive Unit (3.0- to 3.5-ton Trucks)

4.1.2 DRIVE AXLE

The drive axle is composed of an axle housing, wheel hub, and wheels. It is mounted at the front side of the frame.

At each end of the axle housing are a wheel hub and a wheel brake.

The wheel hub is supported on the spindle by two tapered roller bearings, and is driven by the axle shaft.

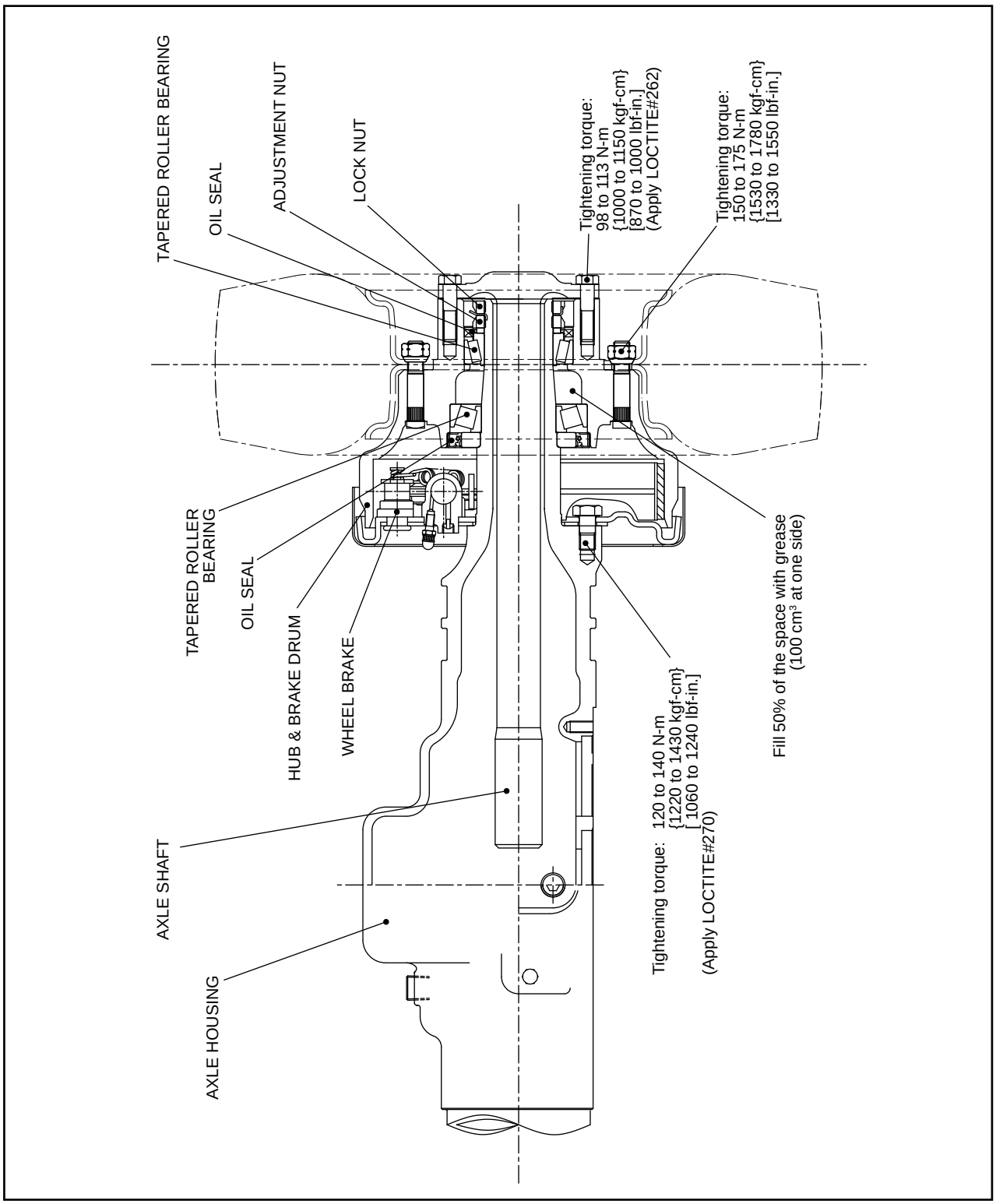

Fig. 4.4 Drive Axle (1- to 1.8-ton Trucks)

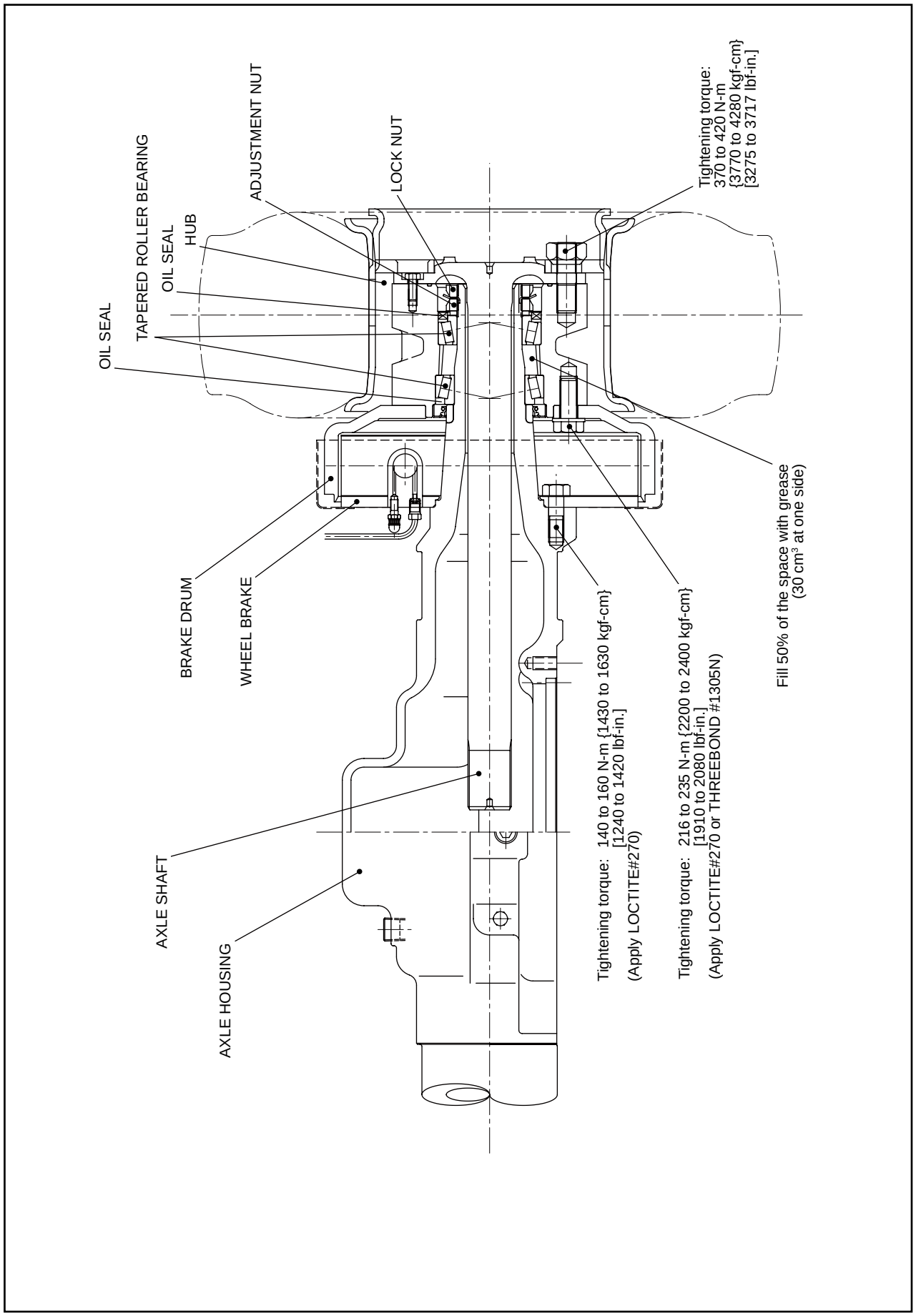

Fig. 4.5 Drive Axle (2- to 2.5-ton Trucks)

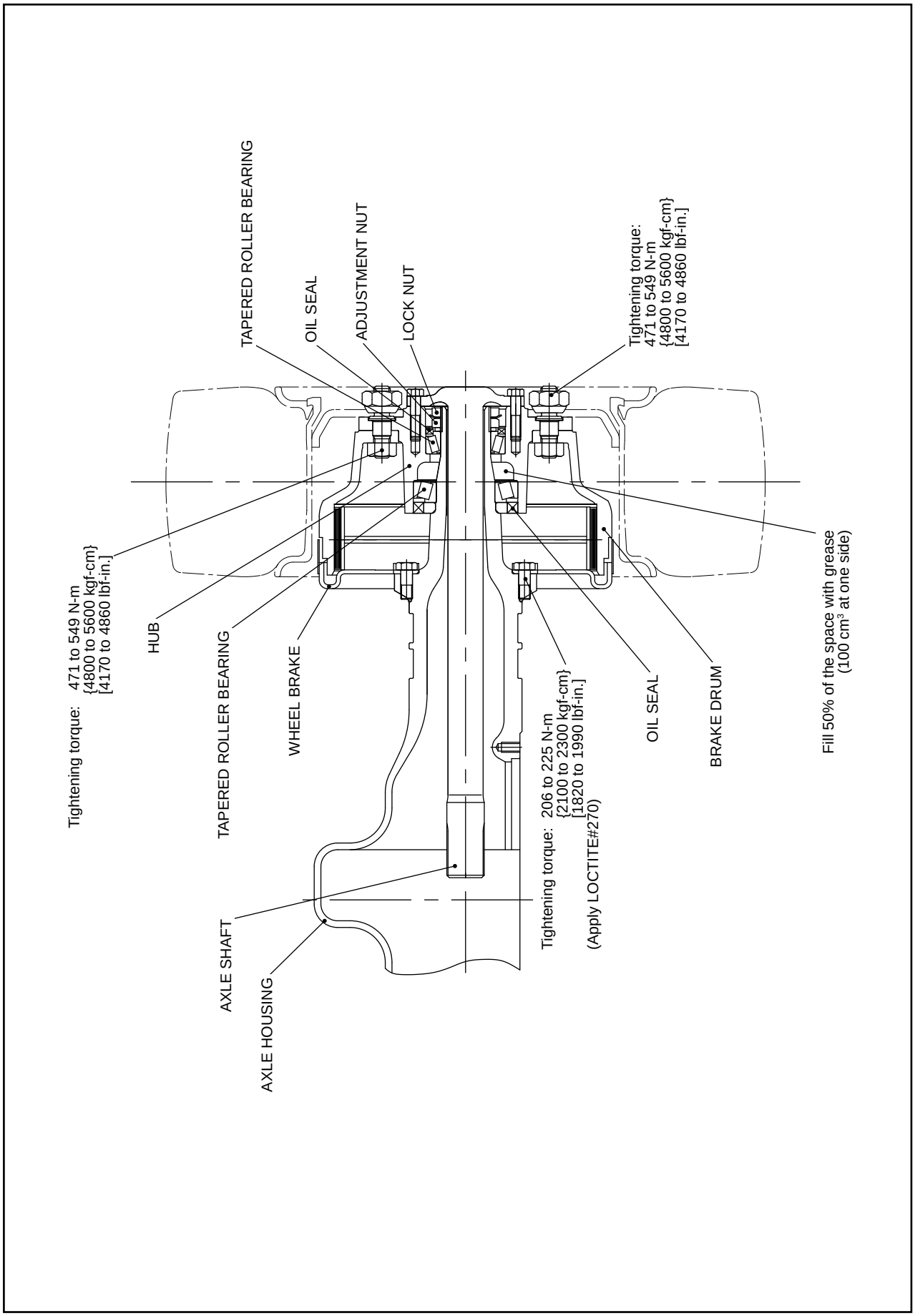

Fig. 4.6 Drive Axle (3.0- to 3.5-ton Trucks)

■ **Procedure for installing the wheel hub**

(1) Put the specified amount of grease into the space A of the wheel hub and install it onto the spindle.

(2) Tighten the adjustment nut to approx. 98 N-m {1 kgf-m} [7.23 lbf-ft] torque and loosen it by 1/2 turn.

(3) Set the spring balancer to the stud bolt. Adjust the starting force of the hub while tightening the adjustment nut gradually.
Starting force: 4.9 to 6.9 N
{0.5 to 0.7 kgf}
[43.4 to 61.1 lbf]

(4) Install the lock washers and the lock nuts, and secure the lock nuts with the claws of the lock washers.

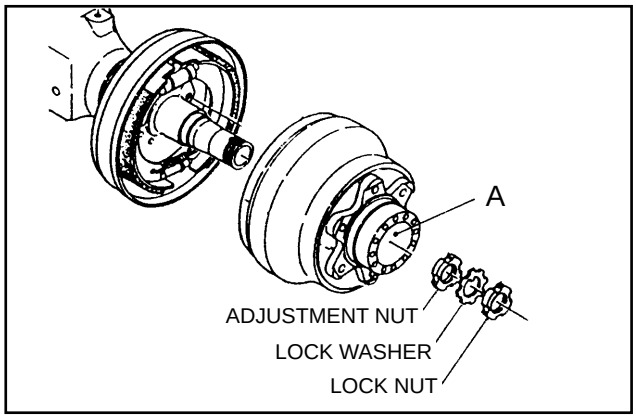

Fig. 4.7 Filling Grease

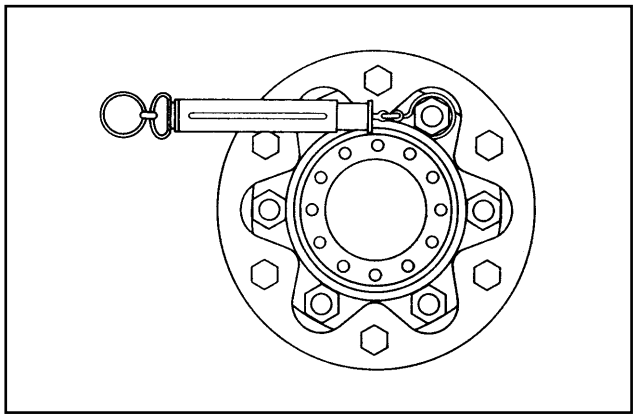

Fig. 4.8 Measuring Starting Force

5. BRAKE SYSTEM

Item \ Truck model	FB10-8	FB15-8 FB18-8	FB20-8 FB25-8LB	FB25-8 FB25-8V	FB30-8 FB30-8V	FB35-8S
Type	Front two wheel braking, internal expansion, hydraulic type					
Pedal ratio	6.2		←		←	
Master cylinder bore	19.05 mm [0.75 in.]		←		←	
Wheel brake						
Type	Duo-servo type		←		←	
Wheel cylinder bore	22.22 mm [0.875 in.]		25.4 mm [1 in.]		28.58 mm [1.125 in.]	
Brake drum inner dia.	254 mm [10 in.]		279.4 mm [in.]		314 mm [12.36 in.]	
Lining size	279 x 48.5 x 5 mm [10.98 x 1.91 x 0.20 in.]		302 x 55 x 5.1 mm [11.9 x 2.2 x 0.2 in.]		348 x 76 x 7.67 mm [13.7 x 3.0 x 0.31 in.]	
Surface area	4 x 13530 mm^2 [4 x 30 $in.^2$]		4 x 16600 mm^2 [4 x 25.7 $in.^2$]		4 x 26400 mm^2 [4 x 40.9 $in.^2$]	
Parking brake						
Type	Front two wheel braking, internal expansion, mechanical type					

5.1 GENERAL DESCRIPTION

The brake system is a front two wheel braking, internal expansion, hydraulic type consisting of a brake pedal, a master cylinder and wheel brakes.

5.1.1 BRAKE PEDAL

The brake pedal is installed through a bracket to the frame as shown in Figure 5.1.

Pedal movement pushes the piston of the master cylinder by means of the push rod, which converts pedal effort into hydraulic pressure.

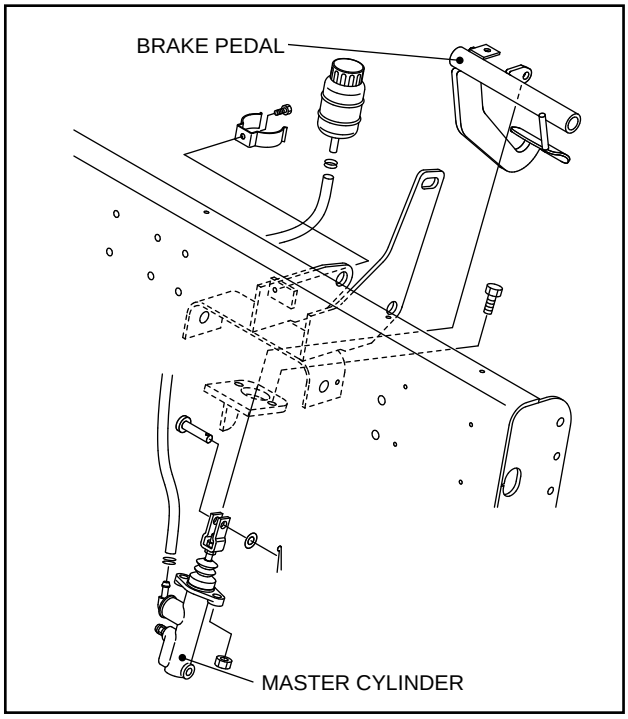

Fig. 5.1 Brake Pedal

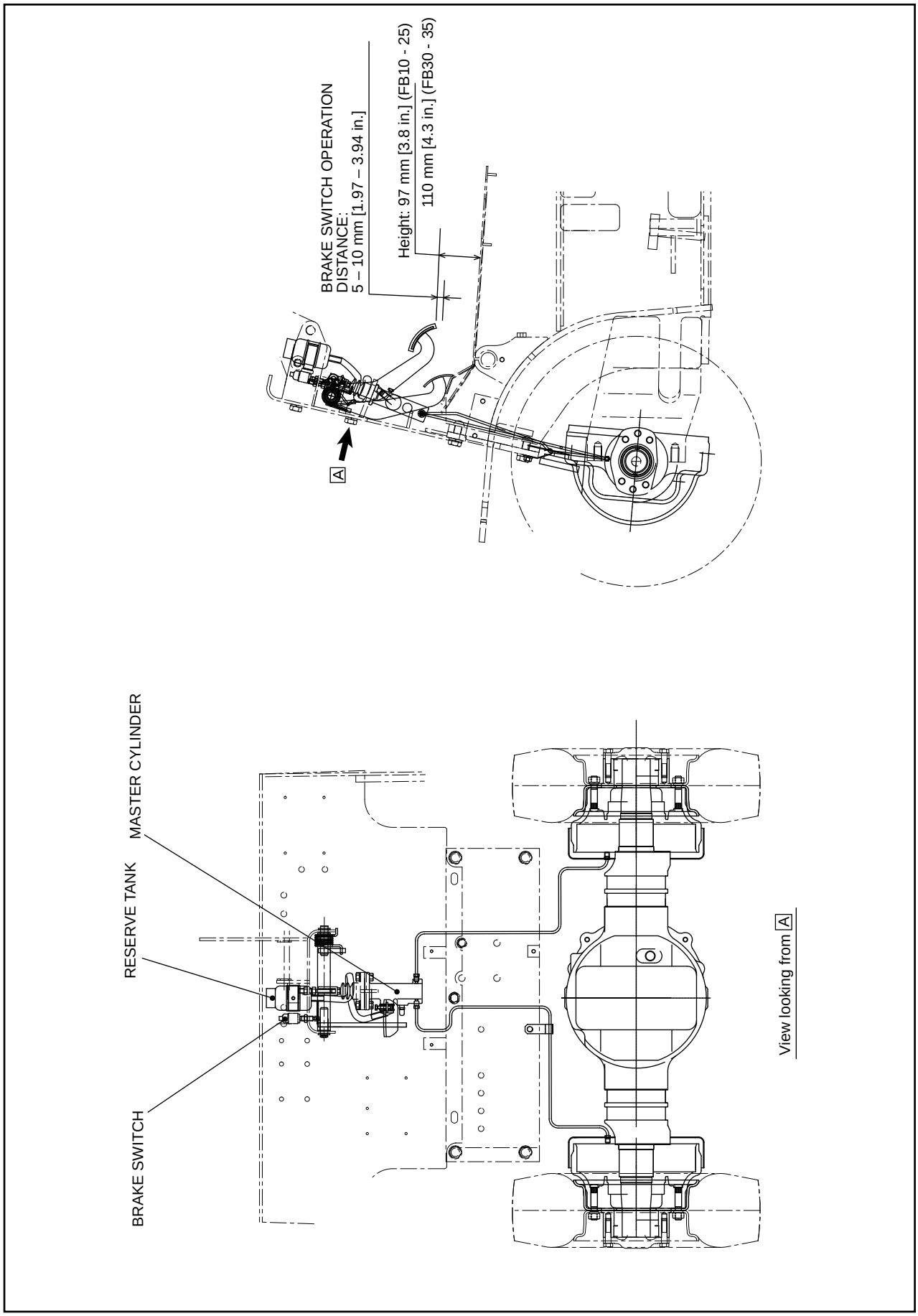

Fig. 5.2 Brake Pedal

5.1.2 MASTER CYLINDER

The master cylinder is installed on the bracket of the brake pedal unit as shown in Figure 5.3.

Built in the master cylinder are a check valve, spring and piston. They are kept in position by a snap ring.

The primary and secondary cups installed on the piston slide inside the cylinder when brake pedal is operated.

The check valve is operated so that the proper pressure remains in the wheel cylinder and brake pipe. This pressure keeps pushing the piston cup of each wheel cylinder so as to prevent oil leakage and also prevent vapor locking from occurring.

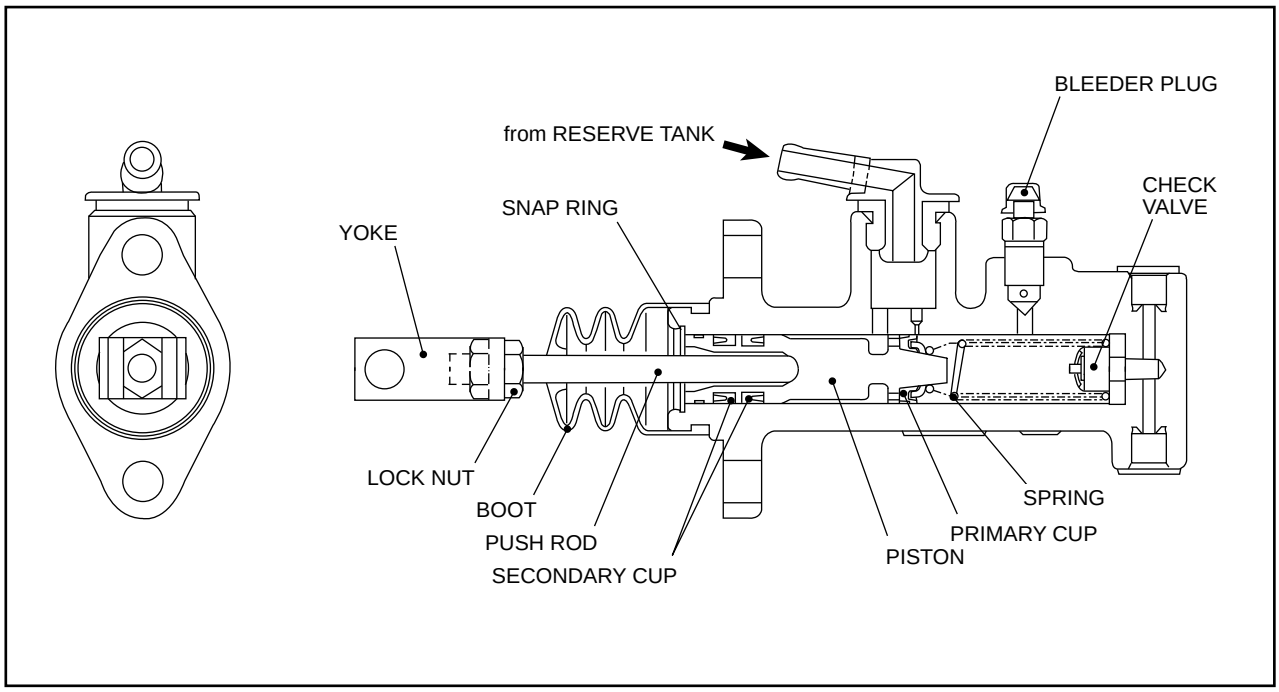

Fig. 5.3 Master Cylinder

5.1.3 WHEEL BRAKE

The wheel brake is duo-servo type, and is mounted on each of the both ends of the drive axle.

The wheel brake is composed of two pairs of brake shoes, a wheel cylinder and adjuster.

One end of the brake shoe is contacted with the anchor pin and another end is contacted with the adjuster. The brake shoes are pushed against the backing plate through the shoe hold-down spring and shoe hold-down pin.

The parking brake mechanism and the automatic clearance adjuster are also built in the wheel brake.

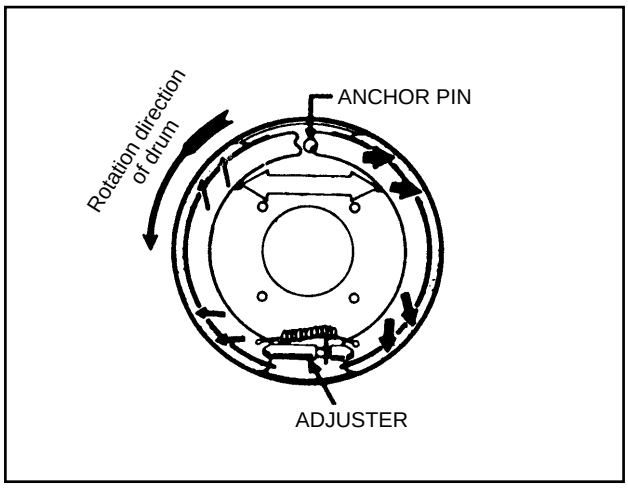

Fig. 5.4 Braking Operation in Forward Travel

(1) Wheel brake operation

The wheel cylinder pushes the primary and secondary shoes against the brake drum with an equal force. The shoes are kept turning with the brake drum until the top of the secondary shoe comes in contact with the anchor pin.

When the secondary shoe comes in contact with the anchor pin, the friction force is generated between the brake lining and the brake drum, and the primary shoe pushes the secondary shoe with a stronger force than the operation force of the wheel cylinder. Powerful braking force is thus achieved. (See Figure 5.4)

In backward travel, the braking force works in the reverse direction of forward travel. (See Figure 5.5)

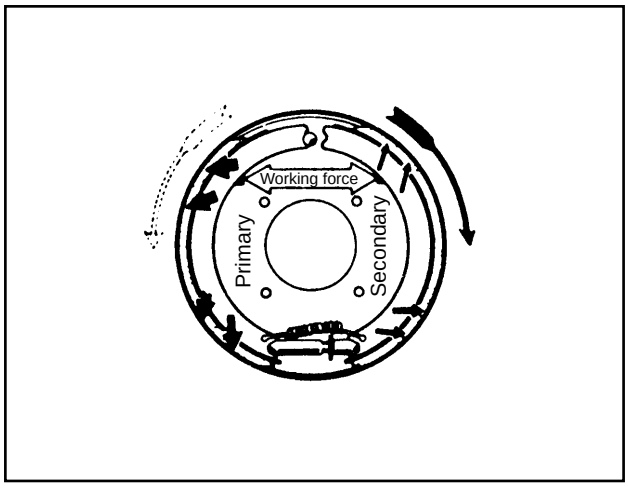

Fig. 5.5 Braking Operation in Backward Travel

(2) Parking brake

The parking brake unit is built in the wheel brake, and consists of a lever and strut.

The lever is installed on the primary shoe side with a pin. Movement of the lever is also transmitted to the secondary shoe side through the strut.

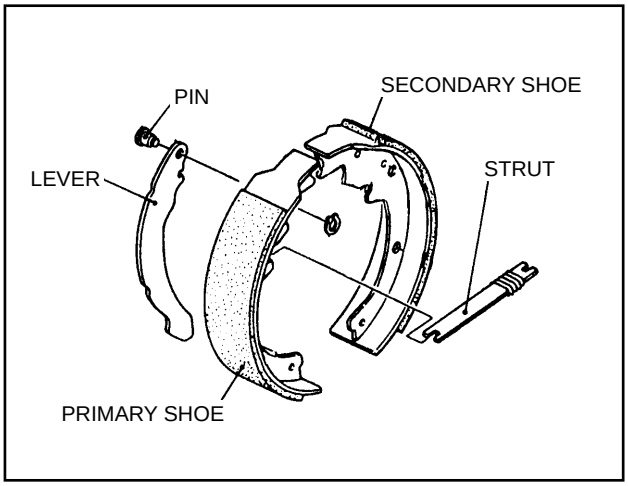

Fig. 5.6 Parking Brake

(3) Automatic clearance adjuster

The automatic clearance adjuster automatically keeps the lining-to-drum clearance properly. The components are as shown in Figure 5.7. It is put in action when the brakes are applied while traveling backward.

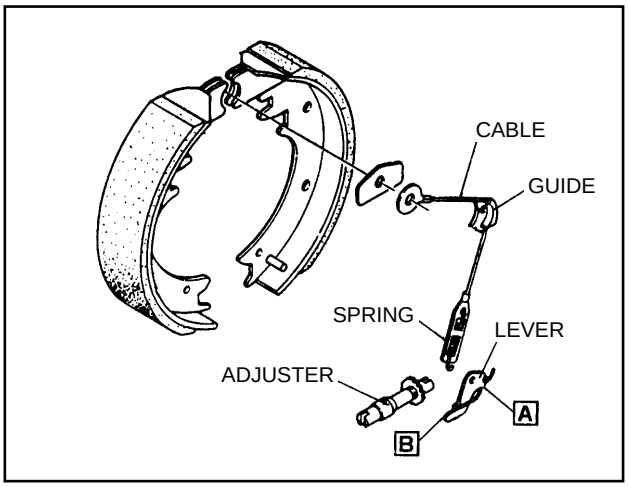

Fig. 5.7

■ Operation of the automatic clearance adjuster

When the brake pedal is pressed down in reverse travel, the secondary shoe is slightly turned together with the brake drum, and the lever is turned clockwise around the section A shown in Figure 5.7.

At this step, the section B of the lever turns the adjuster. As the braking force becomes stronger, the more force is applied to the threaded area of the adjuster, and the force of the lever cannot turn the adjuster.

When the brake pedal is released, the brake shoe returns to the initial position, the lever turns counterclockwise around the section A, and the section B moves downward.

If a tooth of the adjuster is aligned with the section B of the lever, the B is in mesh with the next tooth and the clearance is adjusted within the range from 0.25 to 0.4 mm [0.0098 to 0.0157 in.].

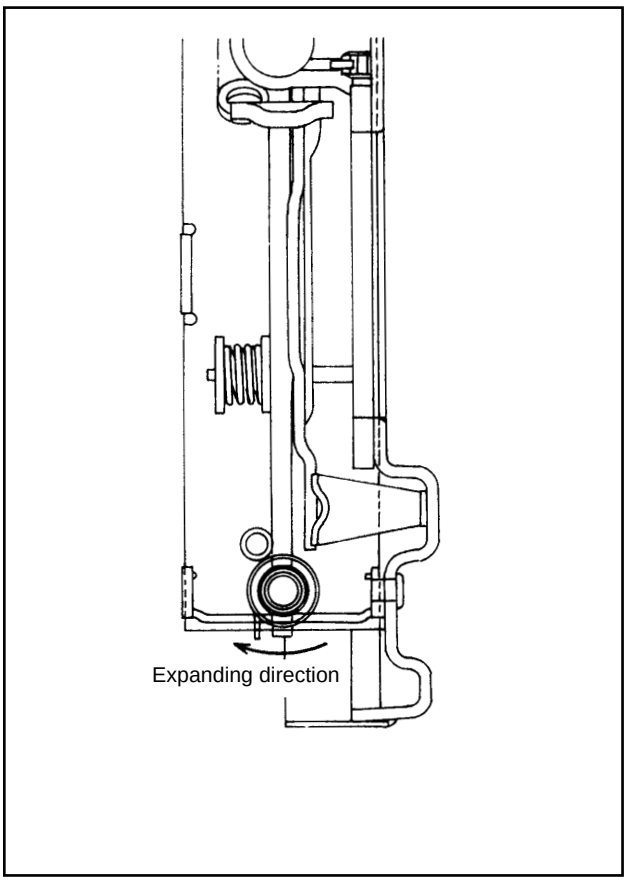

Fig. 5.8 Automatic Clearance Adjuster

5.1.4 PARKING BRAKE LEVER

The parking brake lever is a toggle type and it is installed as shown in Figure 5.9. An adjuster adjusting the braking force is located on the top of the lever.

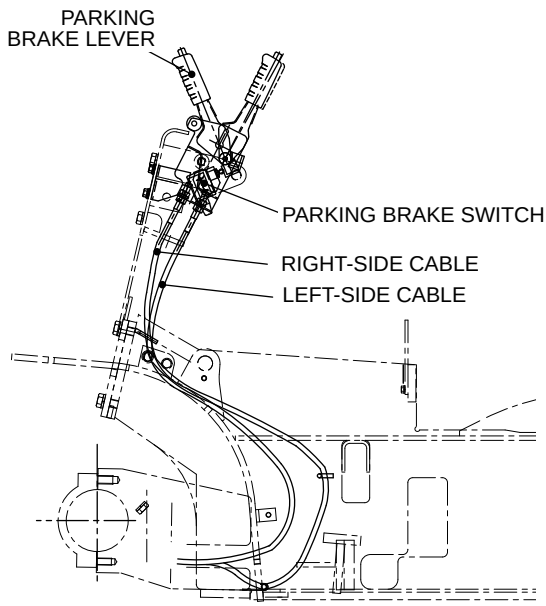

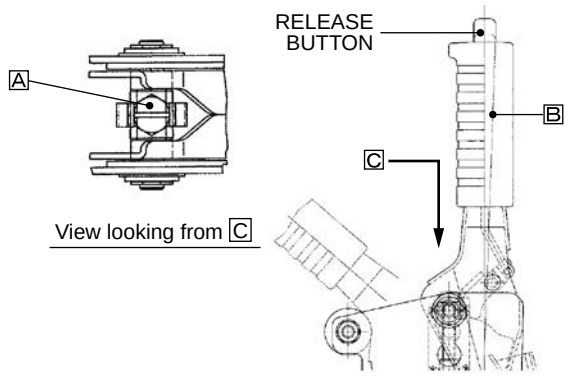

■ Adjusting lever pulling force

(1) Put the lever in the release position.

(2) Adjust the lever so that it is positioned as shown in the figure when the point B of the lever is pulled by a force of 147 to 167 N {15 to 17 kgf} [33 to 37.5 lbs].
Turn the point A clockwise when you want a harder pulling force and counterclockwise when you want a lighter pulling force.

Fig. 5.9 Parking Brake Lever

Parking brake alarm system

1. If the parking brake is released while the key switch is in the OFF position:
   Alarm
   - The alarm buzzer keeps sounding regardless of whether the operator is in the seat or not.

   How to release the alarm
   - Pull on the parking brake lever to set the brakes.
2. If the parking brake is released while the key switch in the ON position:
   Alarm
   - The alarm buzzer will sound for one half second if the parking brake is released and the operator leaves the seat when the key switch is in the ON position. If more than 3 seconds has passed after the parking brake is released and the operator leaves the seat, the alarm buzzer will keep sounding.

   How to release the alarm
   - Sit down or pull on the parking brake lever to set the brakes.

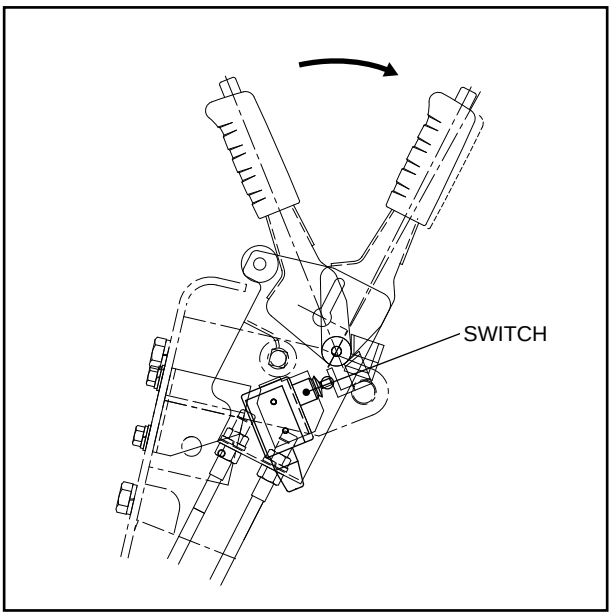

Fig. 5.10

Adjusting brake switch

① Loosen the two nuts securing the switch.
② Pull the brake lever.
③ Press the switch roller against the arm. After it clicks, press another 1 mm [0.0394 in.] and lock.
④ Release the brake and pull the brake lever again to see if the switch is turned ON.

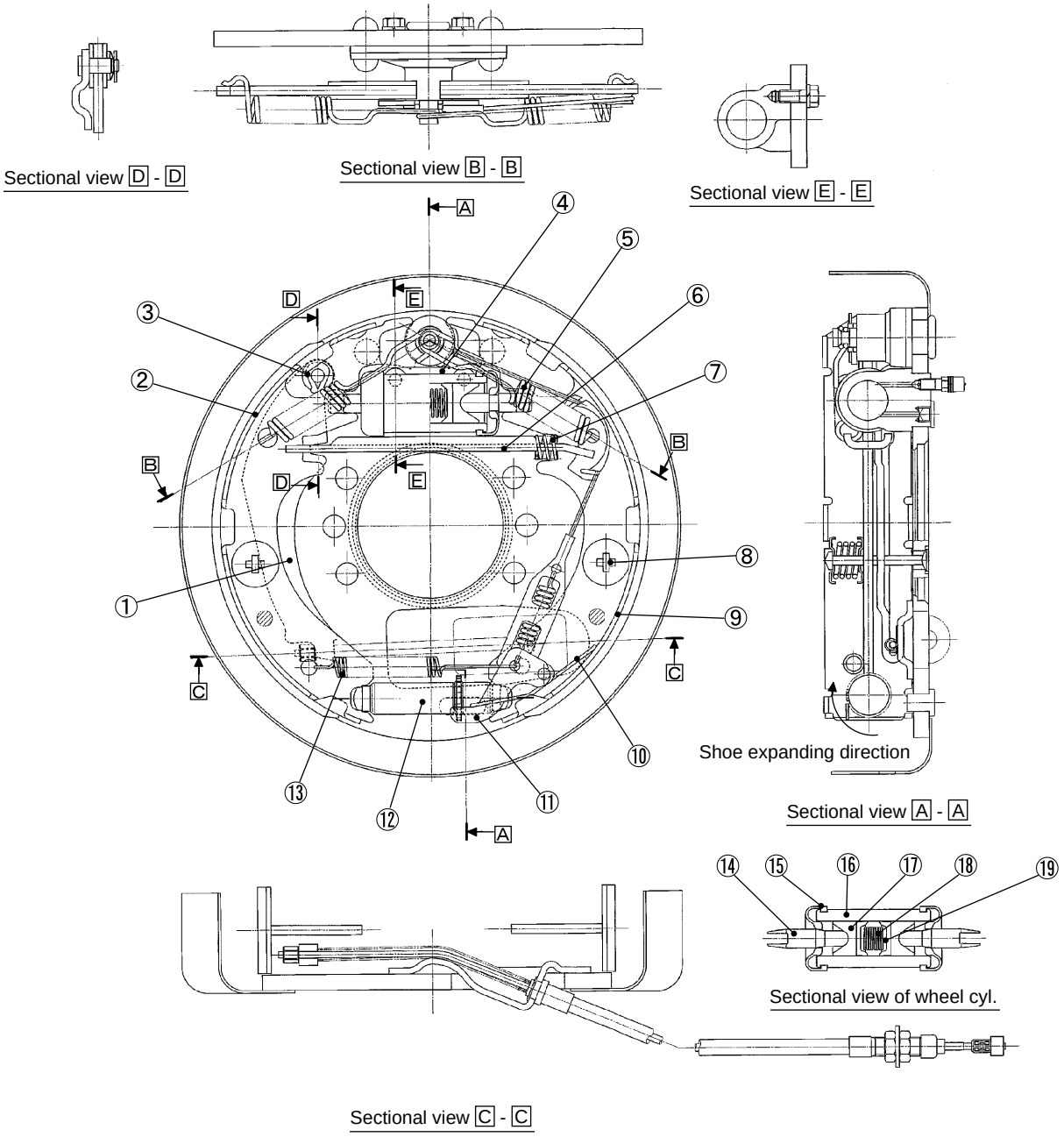

1. BRAKE LEVER
2. SECONDARY SHOE
3. E RETAINER
4. WHEEL CYLINDER
5. RETURN SPRING
6. STRUT
7. SPRING
8. SHOE HOLD-DOWN PIN
9. PRIMARY SHOE
10. SPRING
11. ADJUSTER LEVER
12. ADJUSTER
13. SPRING
14. PUSH ROD
15. BOOT
16. CYLINDER
17. PISTON
18. SPRING
19. CUP

Fig. 5.11 Wheel Brake (1- to 2.5-ton Trucks)

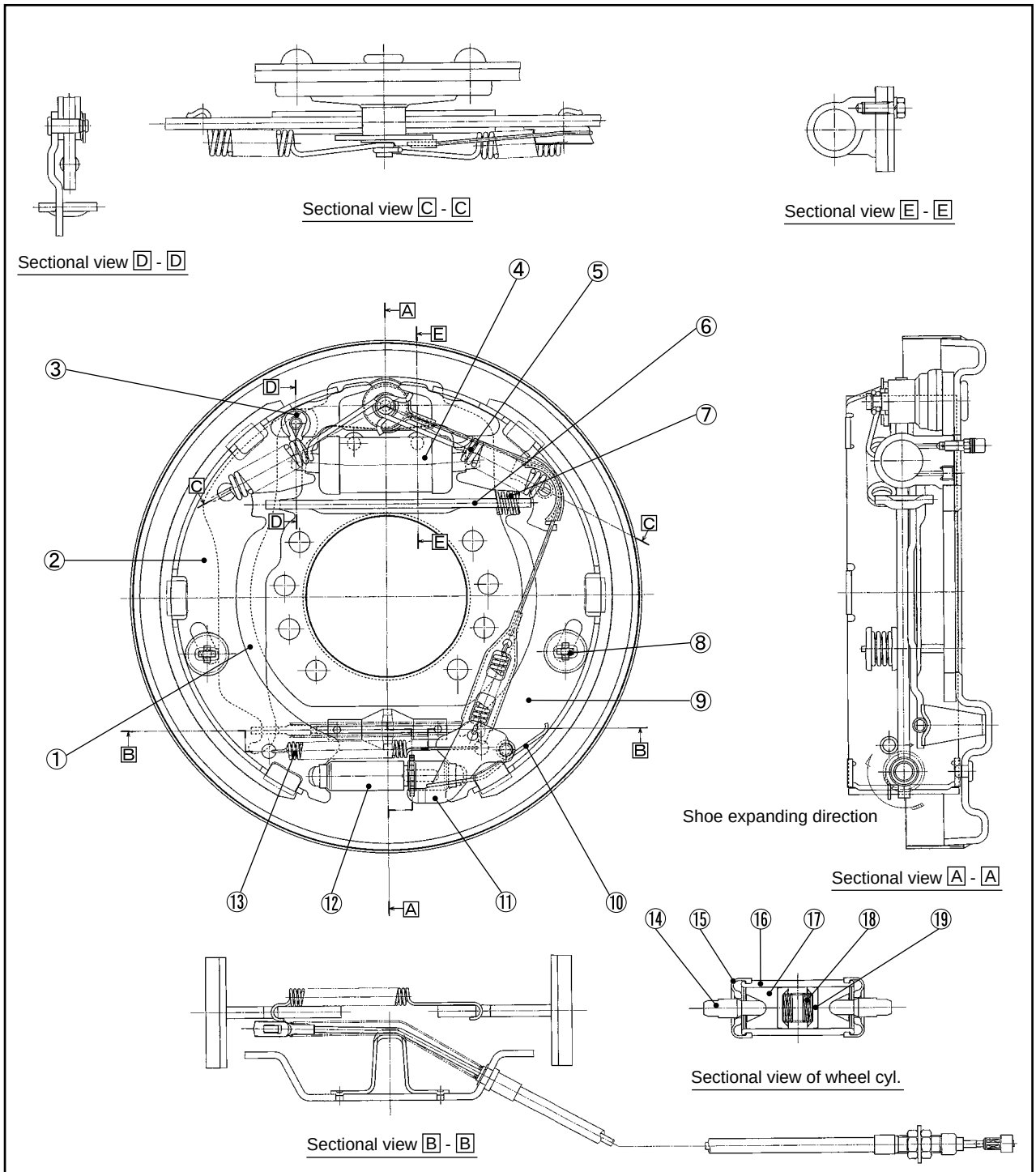

1. BRAKE LEVER
2. SECONDARY SHOE
3. E RETAINER
4. WHEEL CYLINDER
5. RETURN SPRING
6. STRUT
7. SPRING
8. SHOE HOLD-DOWN PIN
9. PRIMARY SHOE
10. SPRING
11. ADJUSTER LEVER
12. ADJUSTER
13. SPRING
14. PUSH ROD
15. BOOT
16. CYLINDER
17. PISTON
18. SPRING
19. CUP

Fig. 5.12 Wheel Brake (3- to 3.5-ton Trucks)

5.2 MAINTENANCE

This section describes the procedure for disassembling, reassembling and adjusting the wheel brake and the procedure for adjusting the brake pedal, with the wheel brake and hub removed.

5.2.1 DISASSEMBLING WHEEL BRAKE

(1) Remove the shoe hold-down pin, adjuster lever, adjuster and spring from the secondary shoe.

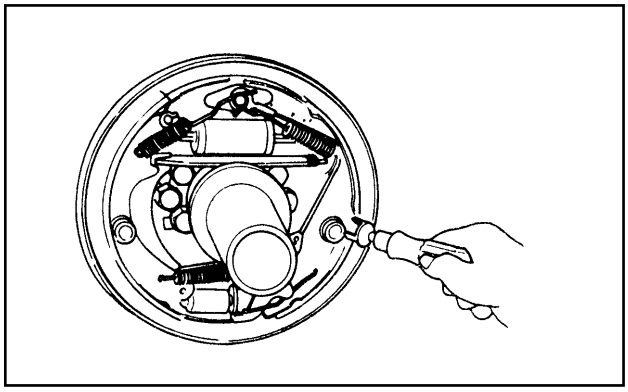

Fig. 5.13

(2) Remove the shoe return spring.

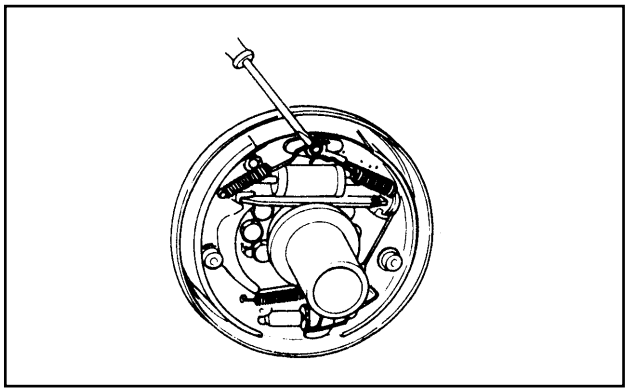

Fig. 5.14

(3) Remove the shoe hold-down spring from the primary side.

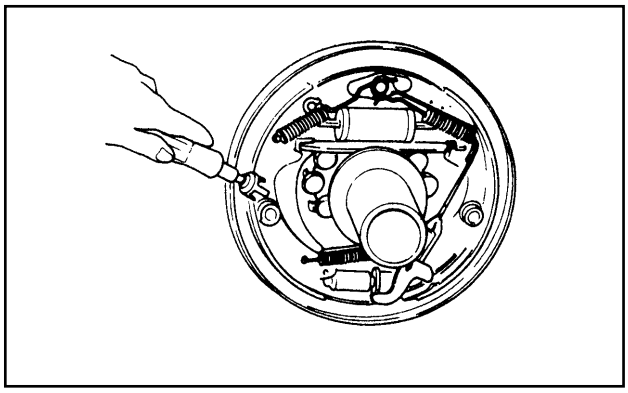

Fig. 5.15

(4) Remove the primary and secondary shoes. Also remove the adjuster and adjuster spring at the same time.

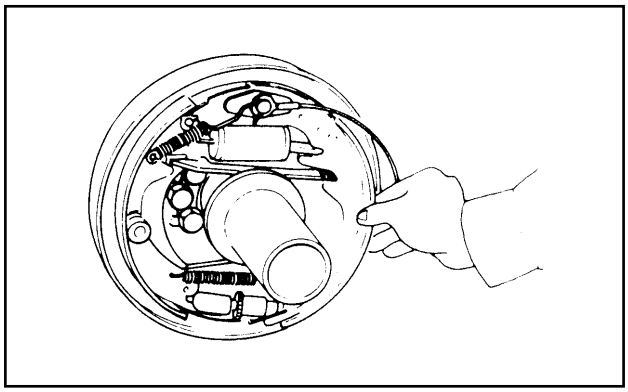

Fig. 5.16

(5) Remove the brake pipe from the wheel cylinder. Remove the bolts securing the wheel cylinder. Remove the wheel cylinder from the backing plate.

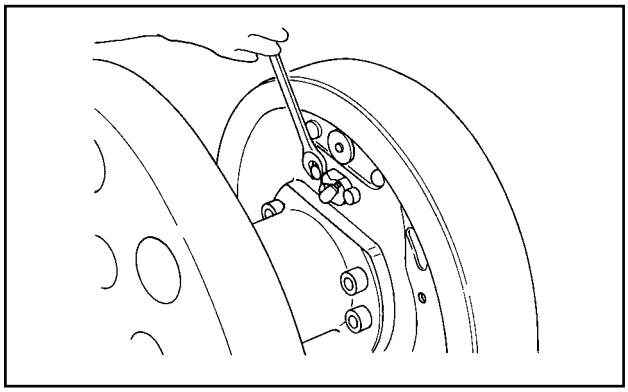

Fig. 5.17

(6) Remove the E retainer which secures the parking brake cable to the backing plate. After that, remove the bolt securing the backing plate and remove the backing plate from the axle.

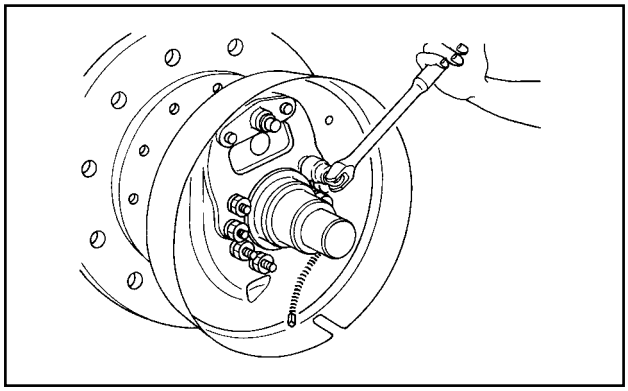

Fig. 5.18

(7) Remove the boot and insert the piston to remove one of the two wheel cylinders. Then remove the other wheel cylinder by pushing with a finger from the opposite side.

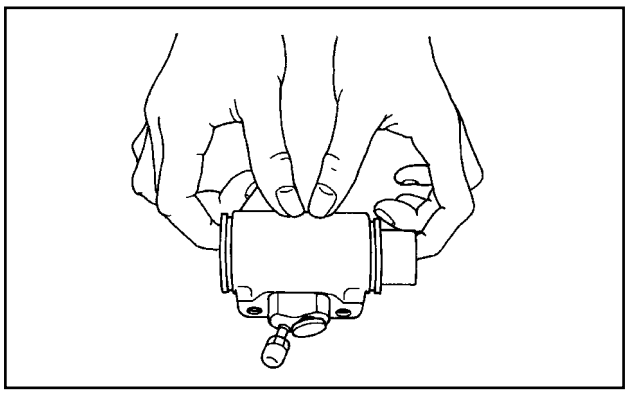

Fig. 5.19

5.2.2 INSPECTION

Check each part and repair or replace any defective one.

(1) Check the wheel cylinder inner surface and piston outer periphery for rust.
Measure the clearance between the piston and cylinder.
Standard: 0.03 to 0.10 mm
[0.0012 to 0.0039 in.]
Limit: 0.15 mm [0.0059 in.]

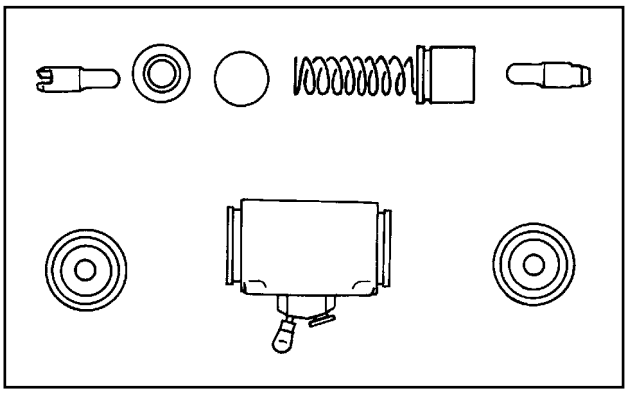

Fig. 5.20

(2) Visually check the piston cup for damage or deformation and replace any damaged or deformed one.

(3) Measure the free length of the wheel cylinder spring. If the length is out of the standard value, replace the spring.

(4) Measure the brake lining thickness and replace any excessively worn lining.

Unit: mm [in.]

	1.0 – 1.8 t	2.0 – 3.5 t
Standard	4.87 [0.192]	7.67 [0.302]
Limit	2.5 [0.098]	5.0 [0.197]

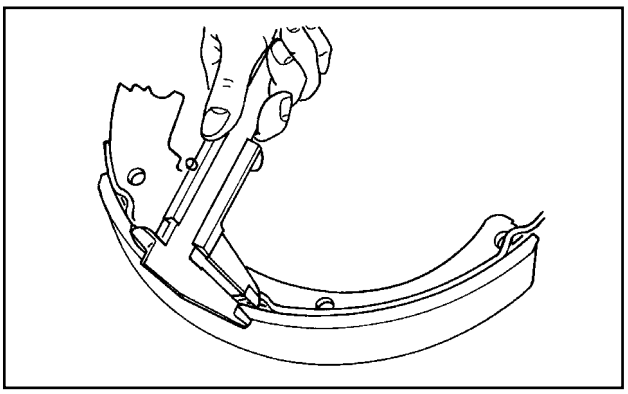

Fig. 5.21

(5) Visually check the inner surface of the brake drum. If any damage or uneven wear is observed, grind it to repair. Replace an excessively damaged or worn drum.

Unit: mm [in.]

	1.0 – 1.8 t	2.0 – 2.5 t	3.0 – 3.5 t
Standard	254 [10]	279.4 [11]	314 [12.36]
Limit	256 [10.1]	281.4 [11.1]	316 [12.44]

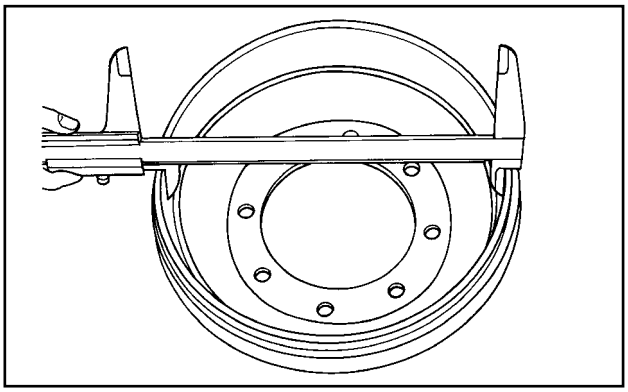

Fig. 5.22

5.2.3 REASSEMBLING WHEEL BRAKE

(1) Apply brake fluid to the cup and piston of the wheel cylinder. Install the spring, piston cup, piston and boot in this order.

(2) Install the wheel cylinder on the backing plate.
Tightening torque: 17.7 to 26.5 N-m {180 to 270 kgf-cm} [156.7 to 234.5 lbf-in.]

(3) Install the backing plate on the drive axle.
Tightening torque: 117.7 to 137.3 N-m {1200 to 1400 kgf-cm} [1042 to 1215 lbf-in.]

(4) Apply high-temperature grease to the points shown in Figure 5.23, using caution to keep grease away from the lining.

(a) Shoe contacting surface on the backing plate
(b) Anchor pin
(c) Cable guide surface contacting the adjuster cable
(d) Parking brake lever pin
(e) Threaded area of the adjuster and the other rotation areas

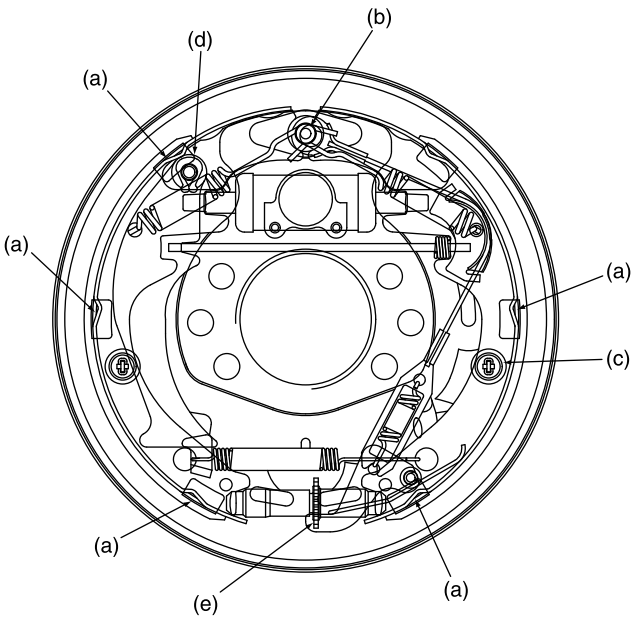

Fig. 5.23

(5) Install the parking brake cable with the E retainer.

(6) Install the shoe with the hold-down spring.

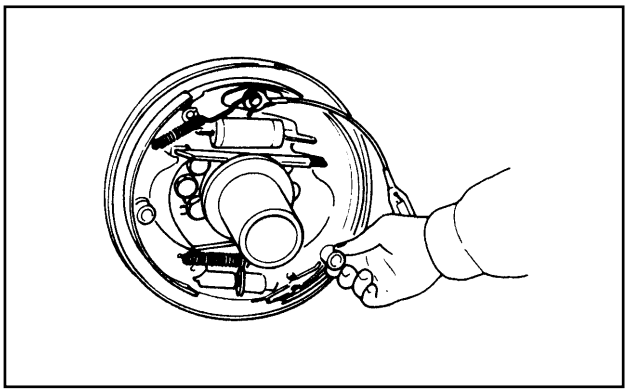

Fig. 5.24

(7) Insert the spring into the strut and attach the strut to the shoe.

(8) Install the shoe guide pin in the anchor pin, and install the shoe return spring.
In this step, install the spring at first on the primary side and then on the secondary side.

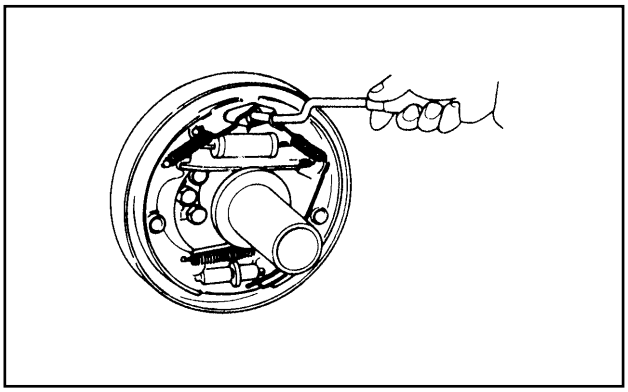

Fig. 5.25

(9) Install the spring, adjuster, adjuster spring and adjuster lever, paying attention to the following items:

① Install the adjuster in such a way that the left screw is used for the left brake, and that the right screw is used for the right brake.

② Install the adjuster so that its teeth do not make contact with the spring.

③ Install the return spring at the adjuster side, with its longer hook attached to the adjuster lever side.

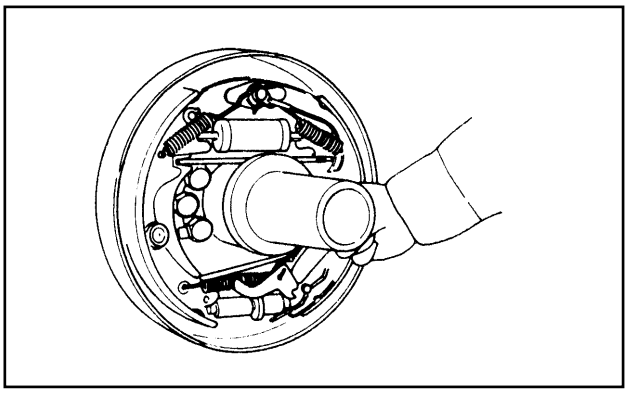

Fig. 5.26

④ After reassembling, check that the tip of the adjuster lever comes in contact with the adjuster teeth.

(10) Install the brake pipe on the wheel cylinder.

(11) Measure the inner diameter of the brake drum and the outer diameter of the shoe. Adjust the adjuster so that the outer diameter of the brake shoe is “the inner diameter – 1.0 mm [0.0394 in.]”.

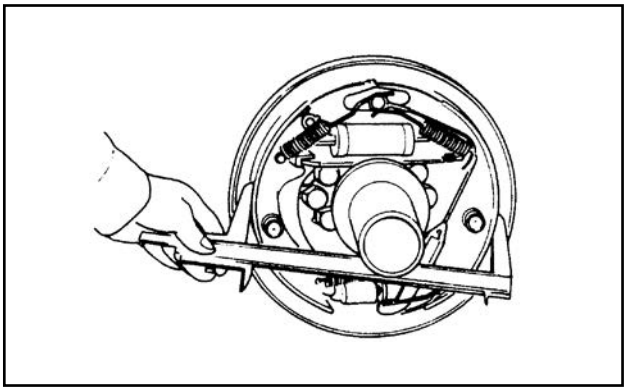

Fig. 5.27

5.2.4 OPERATION TEST OF AUTOMATIC CLEARANCE ADJUSTER

(1) Set the outer diameter of the brake shoe to nearly the normal mounting dimension. Push up the adjuster lever and adjust the diameter, turning the teeth of the adjuster.
When your finger is released, the teeth of the adjuster do not turn and the adjuster lever returns to the original position.

Note: If the teeth of the adjuster return with the lever, they are adjusted properly after mounting the brake system on the truck.

(2) If the operation described above does not occur by pushing up the adjuster lever, take the following measures:

(a) Check that the adjuster lever, adjuster, adjuster spring, adjuster cable and shoe return spring are securely installed.

(b) Check the shoe return spring and adjuster spring for deterioration, the adjuster for rotation, damaged tooth or damage of the contact area with the teeth of the adjuster lever, and replace any defective parts.

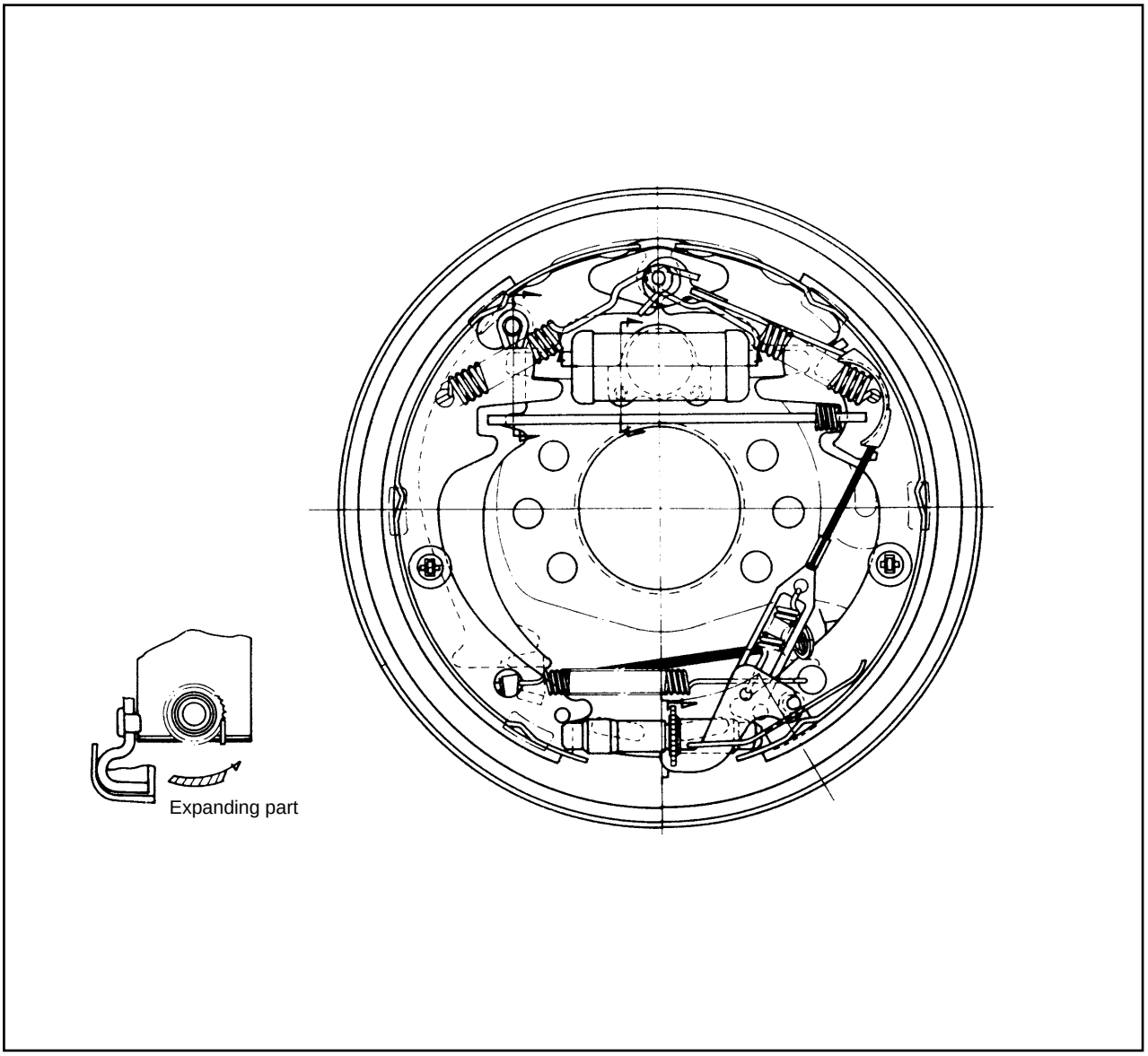

Fig. 5.28

5.2.5 ADJUSTING BRAKE PEDAL

(1) Shorten the push rod length of the master cylinder.
(2) Using the stopper bolt, adjust the pedal upheight to the value shown in Figure 5.29.
(3) Keeping the pedal pressed down by the pedal play, extend the push rod so that its tip contacts the piston of the master cylinder.
(4) Securely tighten the push rod by its lock nut.

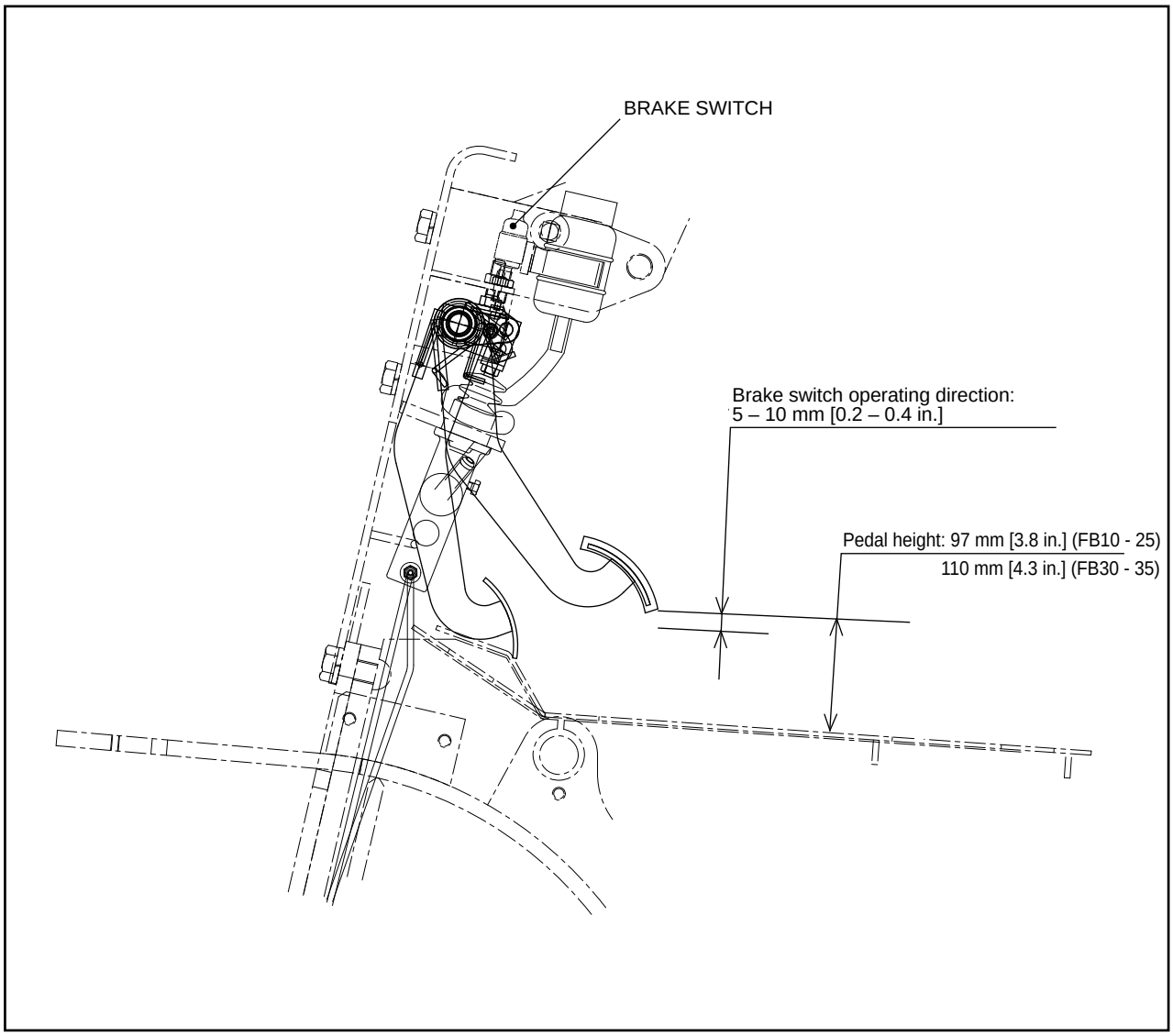

Fig. 5.29

■ **Adjusting brake switch**

(1) Make sure that the pedal upheight is the value shown in Figure 5.29. Loosen the brake switch lock nut.
(2) Remove the brake switch lead wire from the connector.
(3) While turning the brake switch and pressing down the brake pedal by 5 to 10 mm [0.2 to 0.4 in.], check and find the position where the switch turns ON.
(4) Secure the brake switch with the lock nut.

5.2.6 TROUBLESHOOTING GUIDE

Trouble	Probable Cause	Remedy
Poor braking force	1. Brake fluid leaks from the brake system	Repair.
	2. Maladjustment of brake shoe clearance	Check and adjust the adjuster.
	3. Overheating brake	Check for dragging.
	4. Poor contact between brake drum and lining	Adjust contact.
	5. Foreign matter sticking to lining	Repair or replace.
	6. Foreign matter mixed in brake fluid	Check brake fluid.
	7. Maladjustment of brake pedal	Adjust.
Noisy brake	1. Lining surface hardened or foreign matter sticking to lining	Repair or replace.
	2. Deformed backing plate or loose bolts	Repair or replace.
	3. Shoes deformed or improperly installed	Repair or replace.
	4. Lining unevenly worn	Replace.
	5. Defective wheel bearing	Replace.
Uneven braking	1. Foreign matter adhering to lining	Repair or replace.
	2. Maladjusted brake shoe clearance	Check and adjust the adjuster.
	3. Malfunctioning wheel cylinder	Repair or replace.
	4. Shoe return spring defective	Replace.
	5. Deflected Drum	Repair or replace.
	6. Improper tire inflation pressure	Adjust.
Soft or spongy brake	1. Brake fluid leaks from brake system	Repair.
	2. Maladjusted brake shoe clearance	Check and adjust the adjuster.
	3. Air mixed in brake system	Bleed air.
	4. Pedal maladjusted.	Adjust.

6A. STEERING SYSTEM (ORBITROL type)

Truck model / Item	FB10-8 FB15-8 FB18-8	FB20-8 FB25-8V FB35-8S FB25-8 FB25-8LB FB30-8 FB30-8V
Steering axle		
Type	Center-pin supported, Elliot type with box-shaped cross section of weld construction	
King pin spacing	735 mm [28.9 in.]	740 mm [29.1 in.]
King pin angle	0°	
Toe-in	0 mm	
Camber	1°	
Caster	0°	
Wheel dimension	16 x 6-8 10PR	18 x 7-8 14PR
Rim size	4.25 x DT	←
Air pressure	850 kPa {8.5 kgf/cm^2}	900 kPa {9.0 kgf/cm^2}
Steering angle		
Inner wheel	78.4°	75.3°
Outer wheel	53.3°	59.2°
Orbitrol		
Type	Open-centered, non-load reaction type	
Discharge	96 cm^3 [5.86 in.^{3}]/rev	
Power cylinder		
Type	Double-acting piston type	
Cylinder bore	71 mm [2.8 in.]	
Piston rod diameter	40 mm [1.57 in.]	
Stroke	132 mm [5.20 in.]	146 mm [5.75 in.]
Flow divider valve		
Flow rate	20 liters [5.28 U.S. gal]/min	
Pressure setting	8.8 MPa {90 kgf/cm^2} [1280 psi]	

6A.1 GENERAL DESCRIPTION

The steering system consists primarily of a steering wheel, an orbitrol, and a power cylinder. When the steering wheel is turned, the rotation is transmitted to the orbitrol; the oil passages in the orbitrol are changed over to direct the hydraulic pressure from the flow divider valve to the power cylinder, which extends or contracts depending on the hydraulic pressure, thereby steering the truck.

6A.1.1 STEERING AXLE

The steering axle is of steel-welded construction with a box-shaped cross section, incorporating a power cylinder inside it. See Figures 6A.1 and 6A.3. The power cylinder is housed in the axle to protect it from being damaged by obstacles on the road surface. The axle is installed onto the truck frame through a center pin with bushing and cap, and it cradles around this center pin.

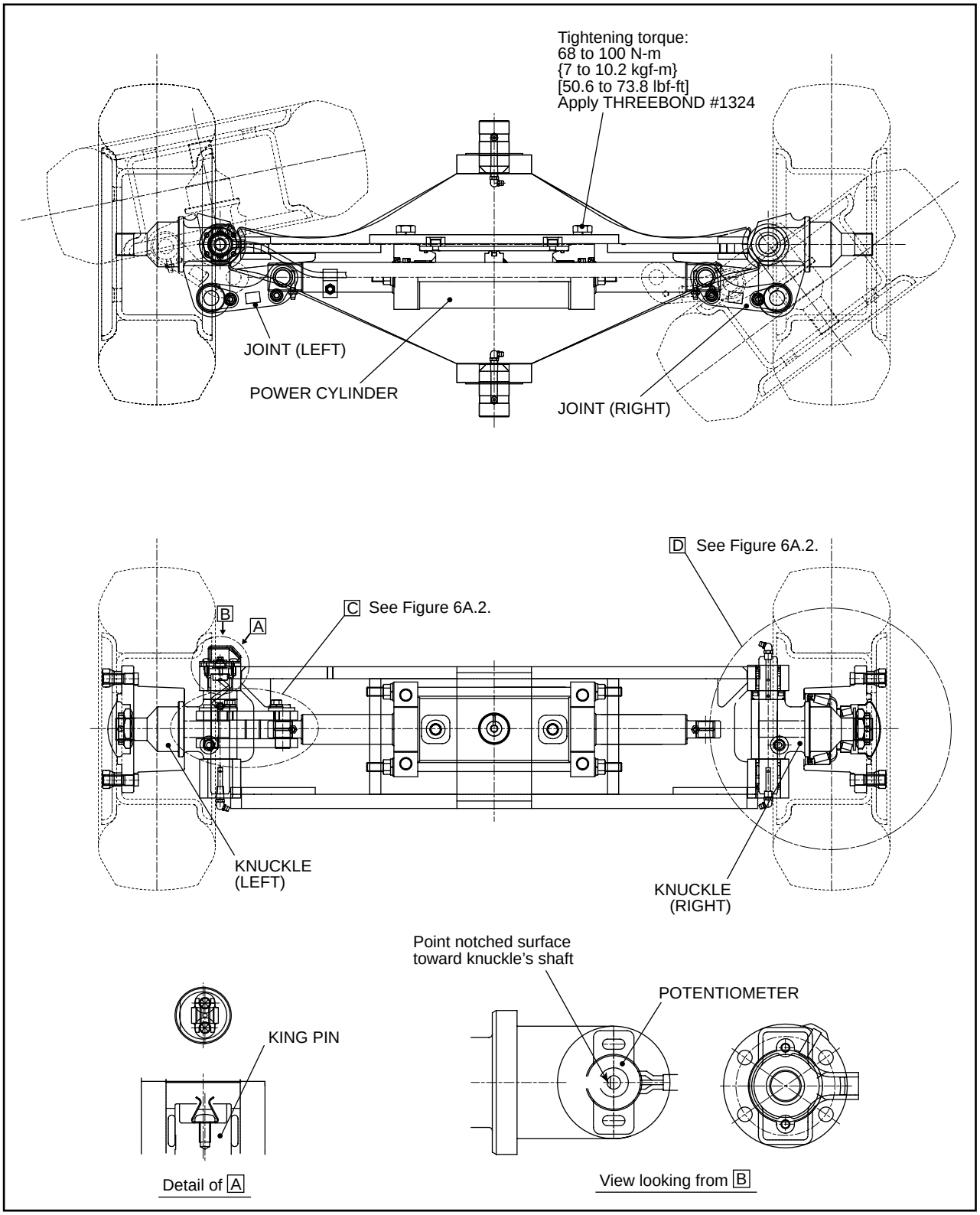

Fig. 6A.1 Steering Axle (for 1.0- to 1.8-ton Trucks) 1/2

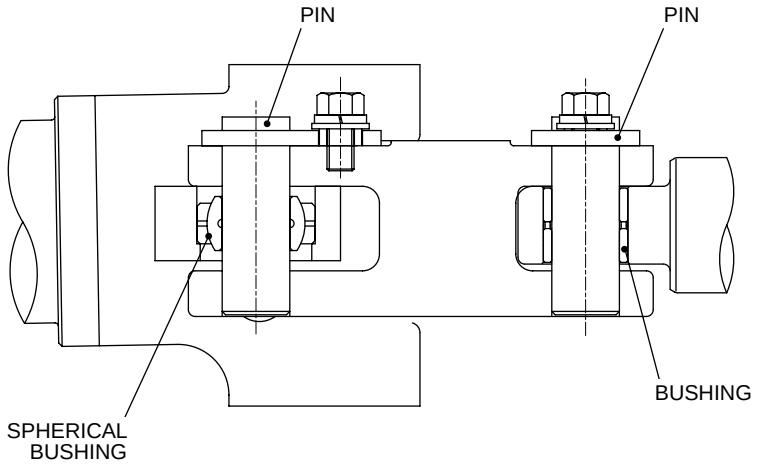

Detail of C

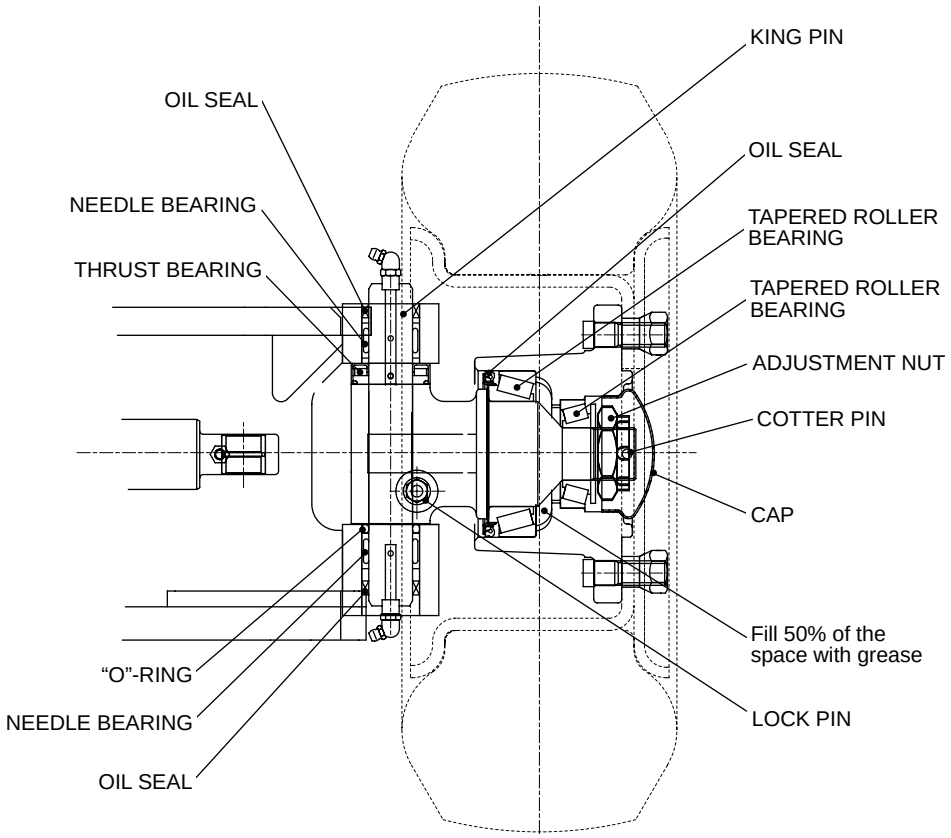

Detail of D

Fig. 6A.2 Steering Axle (for 1.0- to 1.8-ton Trucks) 2/2

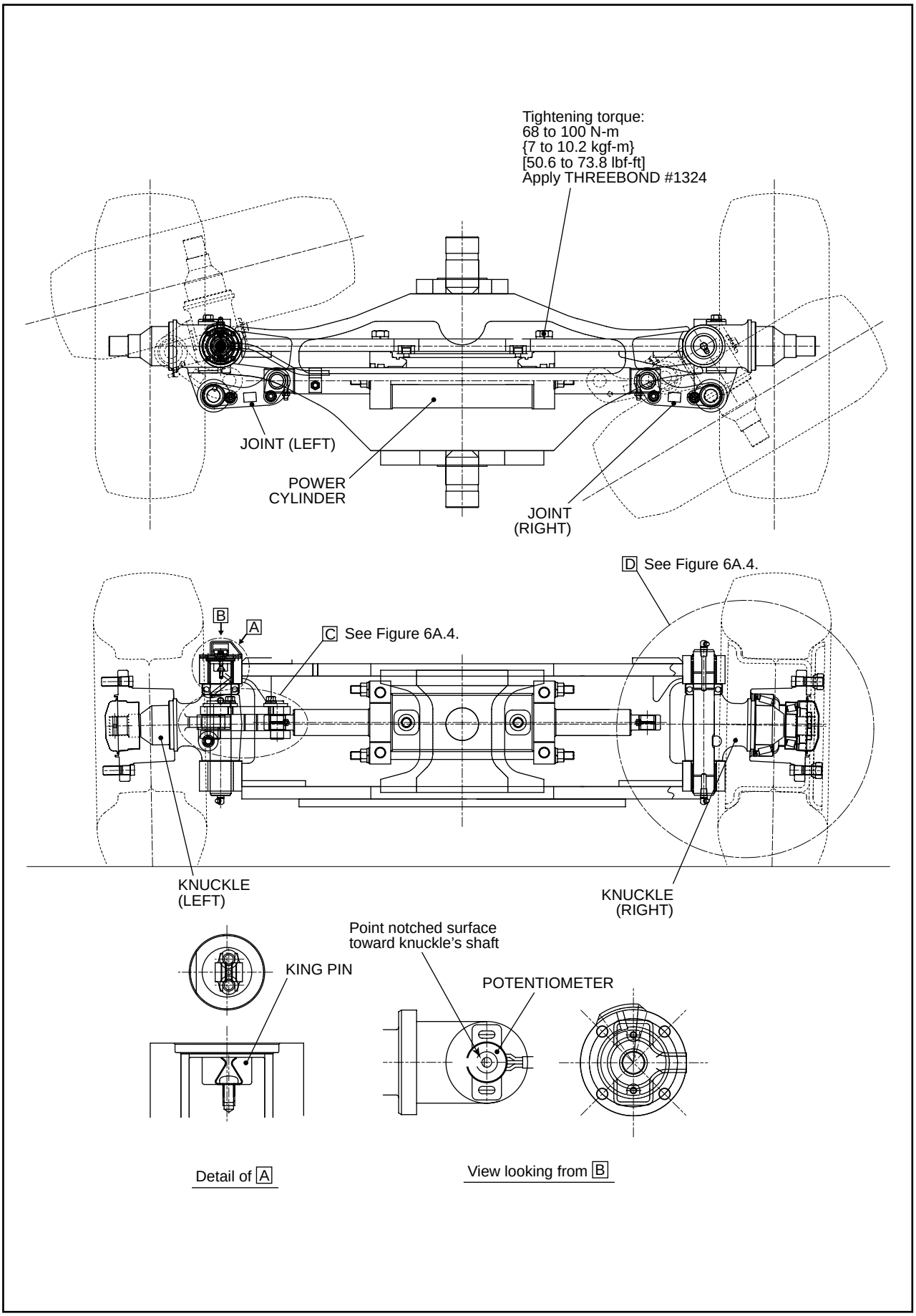

Fig. 6A.3 Steering Axle (for 2.0- to 3.5-ton Trucks) 1/2

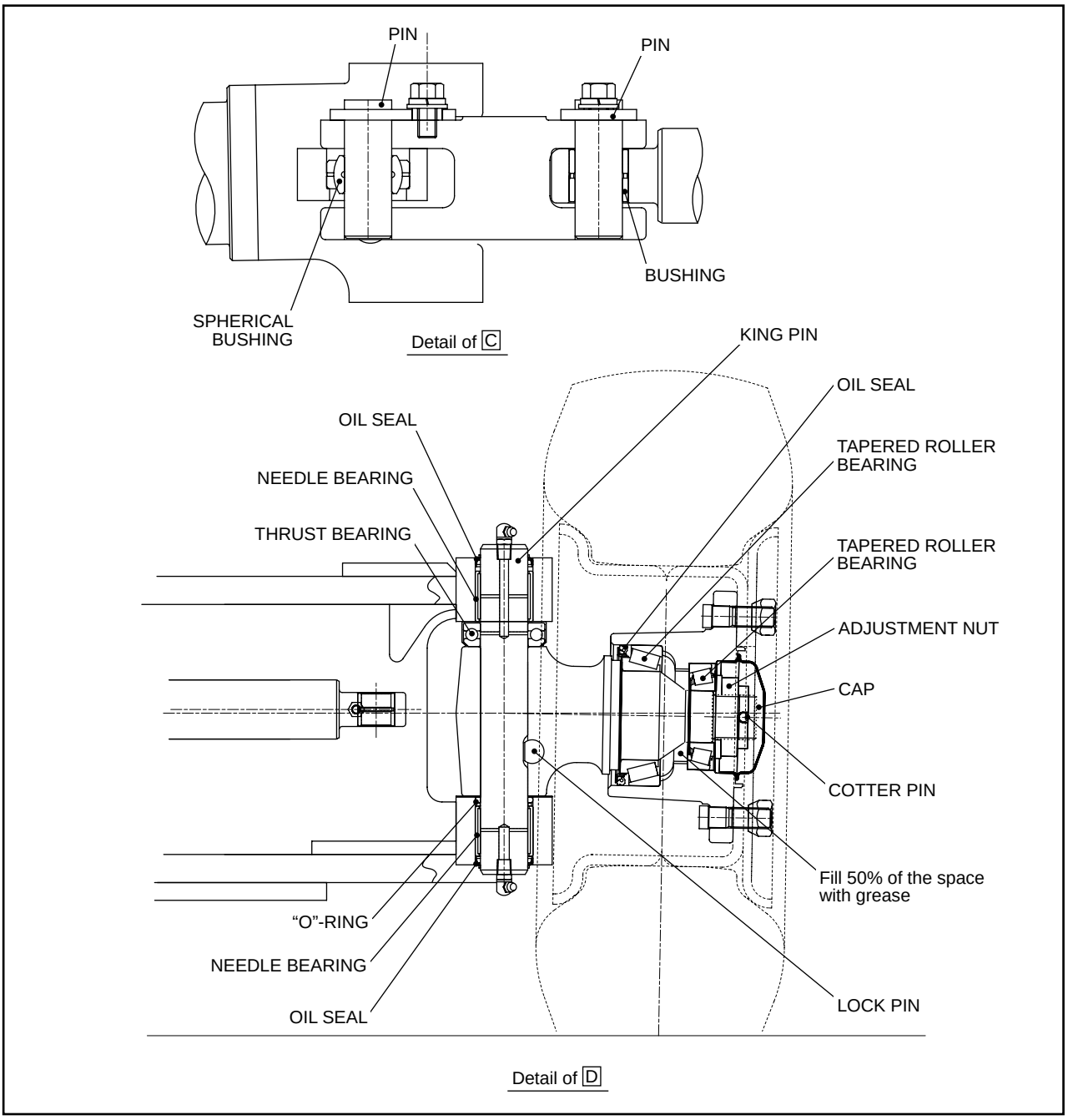

Fig. 6A.4 Steering Axle (for 2.0- to 3.5-ton Trucks) 2/2

(1) Knuckle and king pin

The knuckle is supported with a king pin which in turn is secured at the knuckle side with a lock pin. The top and bottom of the king pin are fitted to the axle boss with needle bearings.

Between the axle boss and the knuckle is a thrust bearing to let the knuckle smoothly rotate around the king pin, sustaining load.

The top and bottom needle bearings and thrust bearing are lubricated by grease supplied through the grease fittings at top and bottom of the king pin.

(2) Wheel hub

The wheel hub is mounted on the knuckle spindle with two tapered roller bearings and its preload is adjusted with a nut.

6A.1.2 STEERING WHEEL ASSEMBLY

The steering wheel assembly is arranged as shown in Figure 6A.5. The orbitrol is located at the bottom of the assembly. At the center of the steering wheel is the horn button.

The steering shaft is connected to the drive shaft of the orbitrol. The steering wheel can be moved to a certain extent back and forth to suit the driver's physique.

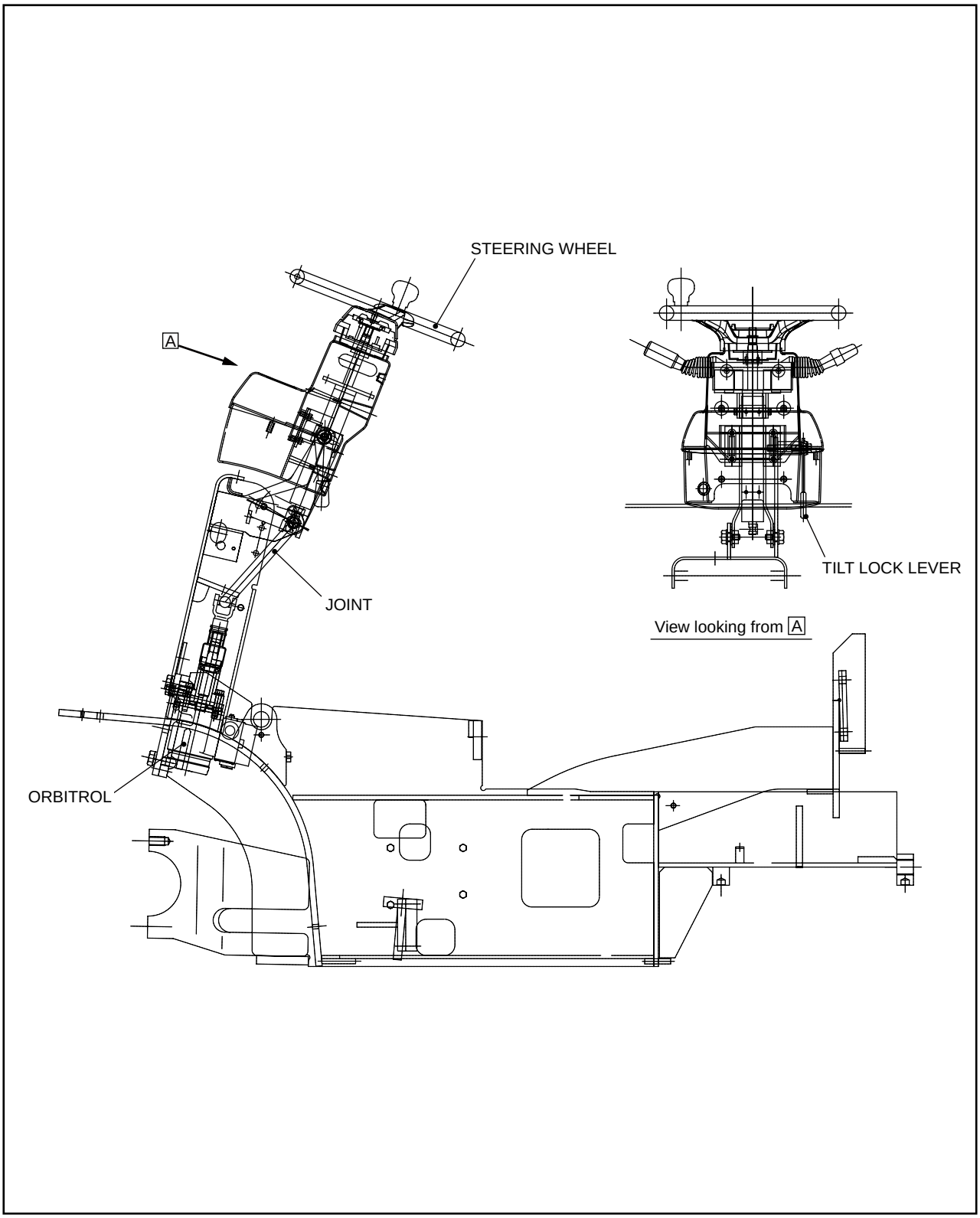

Fig. 6A.5 Steering Wheel Assembly

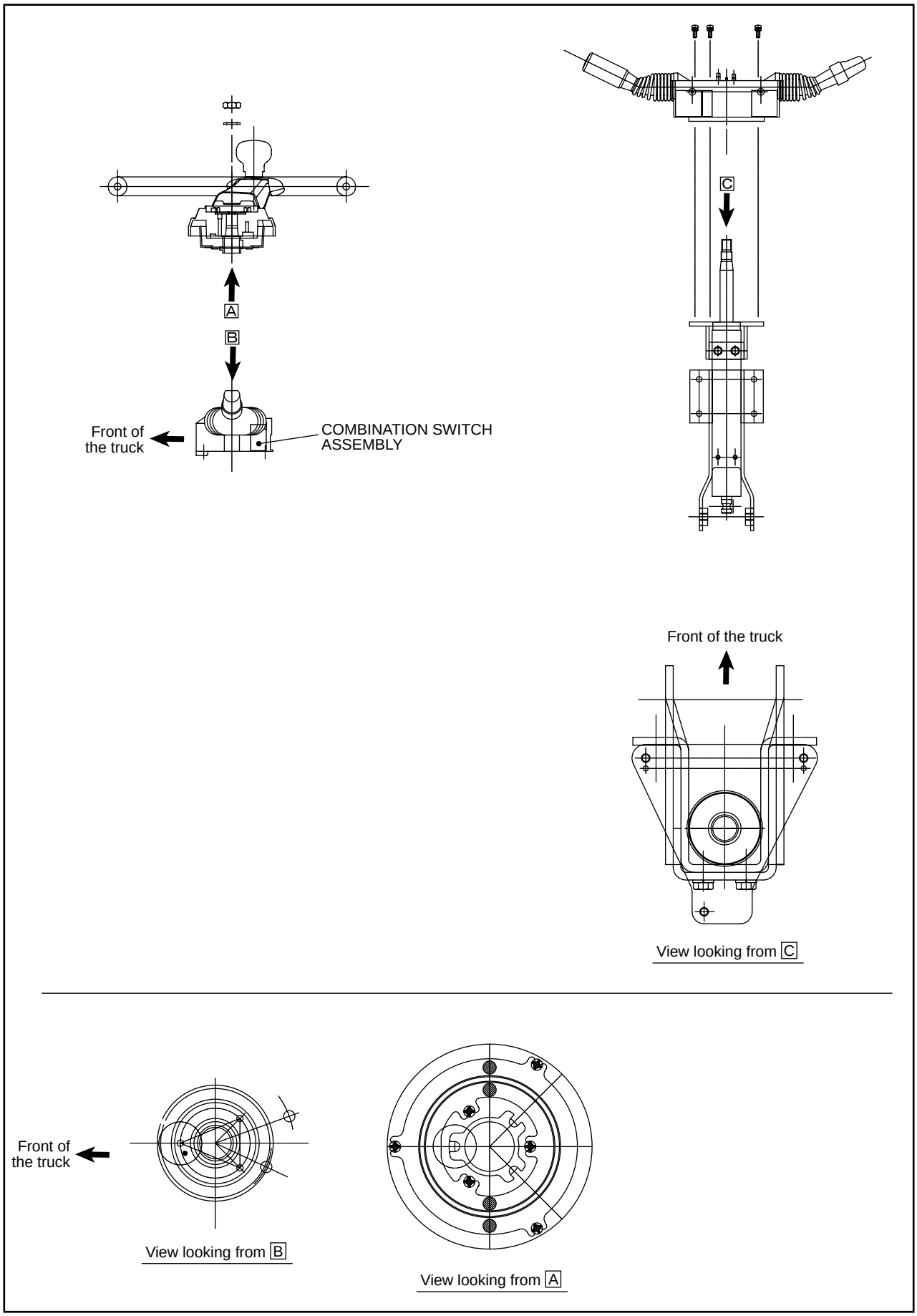

Fig. 6A.6 Steering Wheel

6A.1.3 ORBITROL

The orbitrol sends pressure oil from the pump selectively to the steering cylinder. It consists primarily of a control valve and a metering device.

The control valve used in the orbitrol is not an ordinary spool valve whose spool moves in the axial direction, but a rotary valve which consists of a sleeve and a spool that rotate together forming different oil passages through the combination of their oil holes. The valve housing is provided with four ports which lead to the pump, tank, right and left chambers of the cylinder. Between the inlet port and return port is a check valve.

The metering device consists of an internally toothed stator and an externally toothed rotor. During normal operation, it operates as an oil motor. In an emergency, it can be used as hand pump. The rotor is mechanically linked with the sleeve through the drive shaft so that feedback operation is possible.

The sleeve is interlocked with the motor's rotor through the cross pin and drive shaft while the spool is splined to the steering shaft.

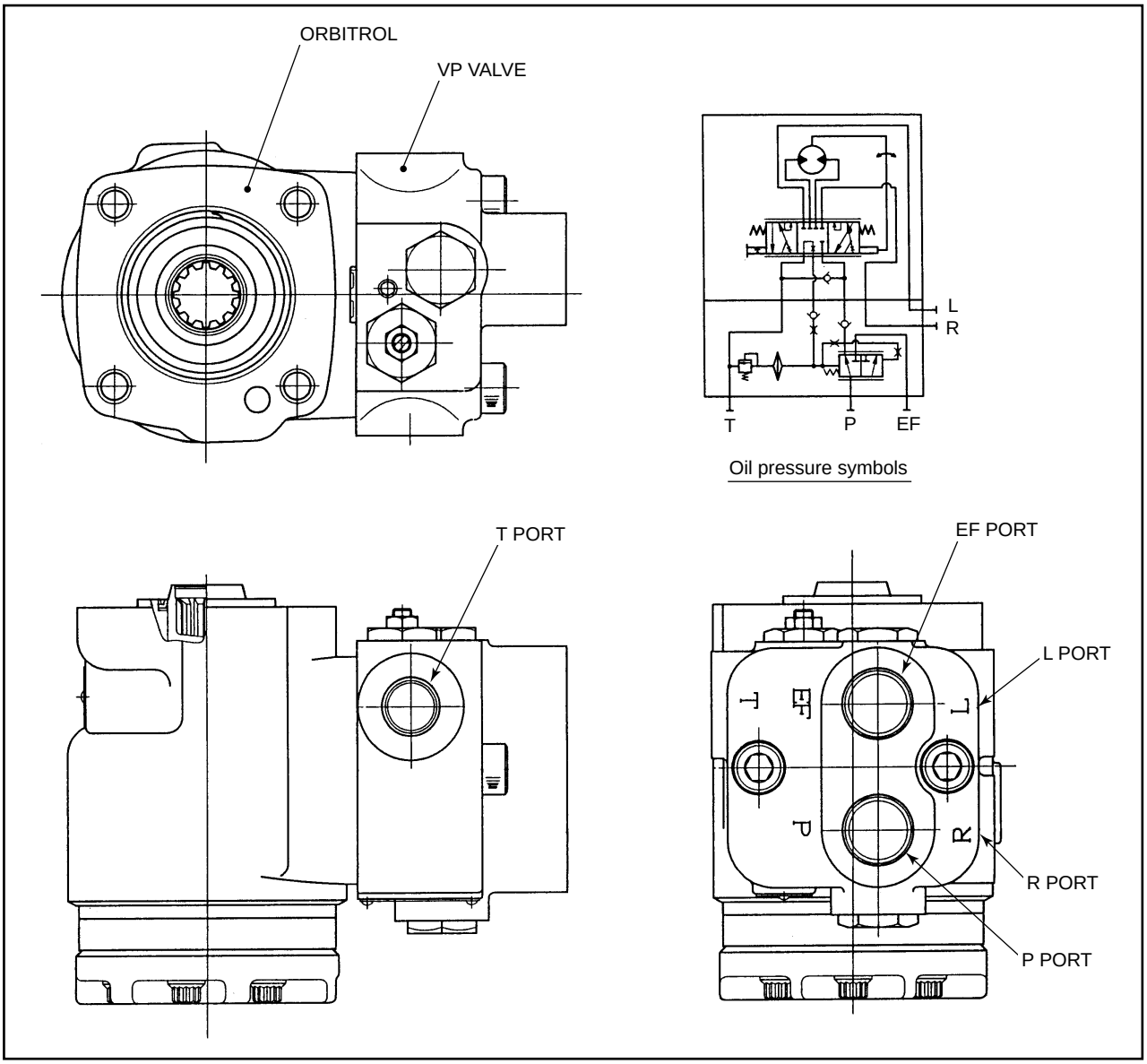

Fig. 6A.7 Orbitrol

(1) Operation of orbitrol

(a) In “Neutral”

While the steering wheel is in straight position, the oil from the pump flows through oil passage ① to oil groove ② . The sleeve has 24 oil holes ③ which are now in line with the holes ④ in the spool so that the oil that flowed into groove ② passes through oil holes ③ and ④ to space ⑤ between the spool and drive shaft. Then the oil flows through spool groove ⑥ and sleeve groove ⑦ back to the oil tank.

Since cylinder ports ⑳ and ㉑ are respectively open to oil holes ⑱ and ⑰ in the sleeve but not to groove ⑯ nor ⑲ in the spool, the oil in the cylinder does not go any where.

Oil passage ⑮ that leads to the hydraulic motor is open to oil hole ⑭ in the sleeve which is used as the inlet and outlet for the hydraulic motor, but not to grooves ⑬ nor ⑯ in the spool and thus the oil remain unmoved.

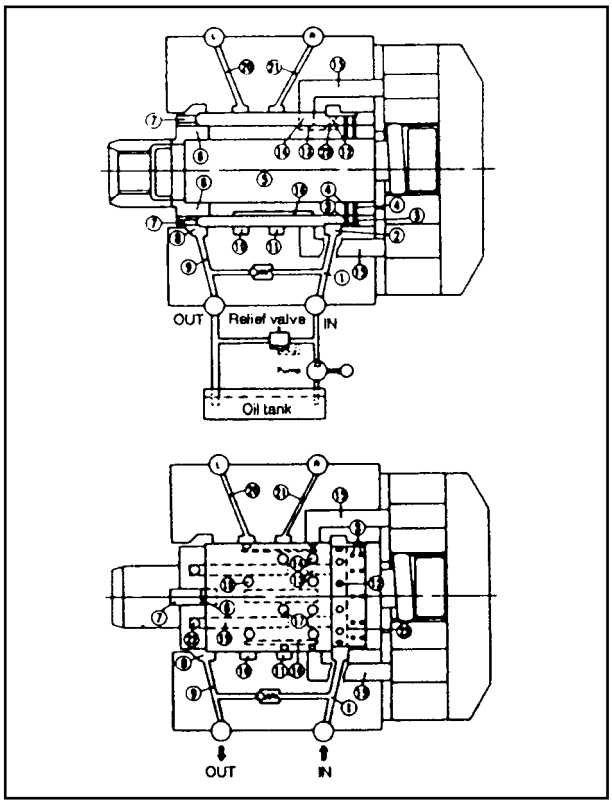

Fig. 6A.8

(b) When steering wheel is turned counterclockwise

As the steering wheel is turned counterclockwise, the grooves in the spool shift to the left in relation with the holes and grooves in the sleeve so that holes ④ in the spool get out of line with holes ③ in the sleeve. The oil that has flowed into groove ② thus far begins to flow into hole ⑫ in the sleeve, passing through grooves ㉓ and ⑬ in the spool, hole ⑭ in the sleeve, and oil passage ⑮ in the housing, to the hydraulic motor.

The hydraulic motor thus rotates in the counterclockwise direction and the oil discharged from the hydraulic motor flows through oil hole ⑭ in the sleeve, groove ⑯ in the spool, and oil hole ⑱ in the sleeve to the cylinder port L in the housing and thus actuates the steering cylinder.

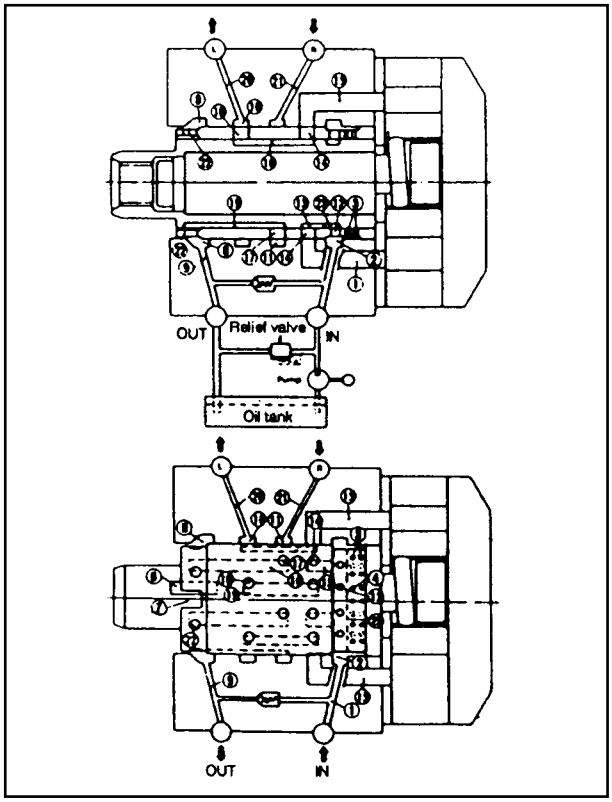

Fig. 6A.9

The returning oil from the power cylinder flows, passing through the cylinder port R, groove ⑪ in the valve housing, oil hole ⑰ in the sleeve, groove ⑲ in the spool, oil hole ㉒ in the sleeve, and groove ⑧ in the valve housing, back to the oil tank.

(c) When steering wheel is turned clockwise

As the steering wheel is turned clockwise, the grooves in the spool shift to the right in relation to the oil holes and grooves in the sleeve so that oil holes ④ in the spool get out of line with holes ③ in the sleeve. The oil that has flowed into groove ② thus far begins to flow into oil hole ⑫ in the sleeve and then flows through grooves ㉓ and ⑬ in the spool, oil hole ⑭ in the sleeve, and oil passage ⑮ in the valve housing to the hydraulic motor. The hydraulic motor thus rotates in the clockwise direction and the oil discharged from the hydraulic motor flows through oil hole ⑭ in the sleeve, groove ⑯ in the spool, and oil hole ⑰ in the sleeve to the cylinder port R in the housing and thus actuates the power cylinder.

The returning oil from the power cylinder flows, passing through the cylinder port L, groove ⑩ in the housing, oil hole ⑱ in the sleeve, groove ⑲ in the spool, oil hole ㉒ in the sleeve and groove ⑨ in the housing back to the oil tank.

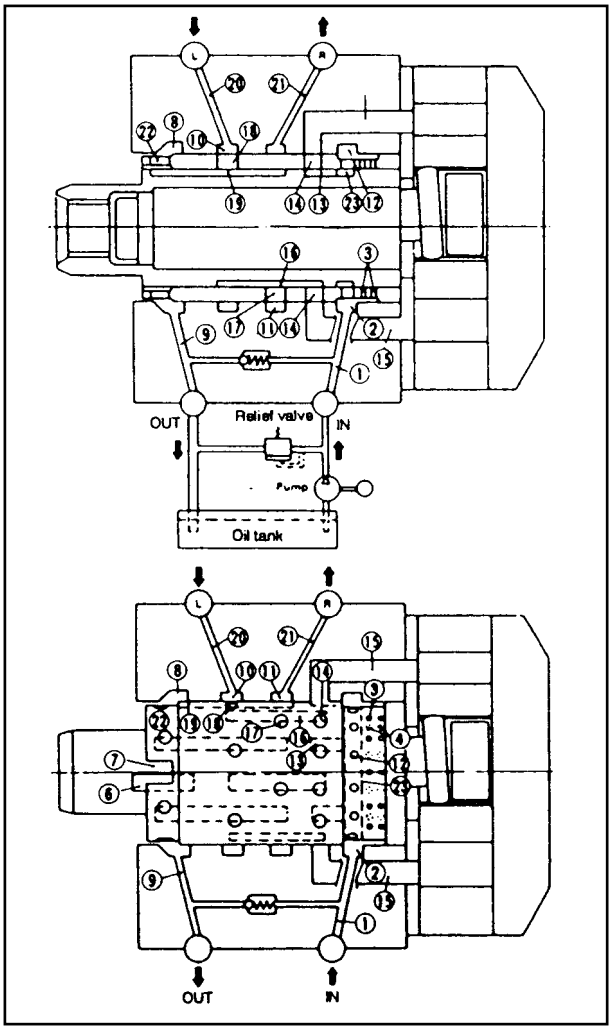

Fig. 6A.10

(2) Relationship between the rotating speed and operating force of the steering wheel

The force required to operate the orbitrol is basically a valve operating force (the force required to compress the centering spring: 2.9 N-m {0.3 kgf-m} [2.14 lbf-ft]). That is, there is no mechanical linkage between the steering wheel and the tires, and thus the operating force of the steering wheel remains constant regardless of the rotating speed of the steering wheel. The discharge of oil from the orbitrol rotor to the steering cylinder is 80 cm^3/revolution.

(3) Neutral feedback of orbitrol

The neutral feedback function of the orbitrol is performed by the valve switching over the oil passages according to the reaction force of the centering spring. (If the steering wheel is turned and then released with the engine turned off, it will automatically return to the straight-ahead position.) Should the neutral feedback not function properly, the steering wheel might turn by itself when the operator does not turn it.

(4) When the pump fails to operate normally

If the pump fails to supply pressure oil to the orbitrol, the orbitrol can serve as an emergency manual steering device. Even if the orbitrol does not receive pressure oil from the pump, you can rotate the spool by turning the steering wheel. However, when the spool turns 8°, it hits against the cross pin, which in turn turns the rotor through the drive shaft. This way, the metering device of the orbitrol works as a hand pump to send oil to the steering cylinder. At this time, the check valve provided between the return port and the suction port opens to allow the oil to flow from the cylinder to the suction side, making it possible to steer the truck manually.

6A.1.4 POWER CYLINDER

The power cylinder is attached to the steering axle and operated by oil from the orbitrol. The cylinder body is secured to the axle, with both ends of the piston rod connected to the knuckles with joints.

The cylinder cap has a bushing, an oil seal, and a dust seal, and is assembled on the cylinder with two bolts.

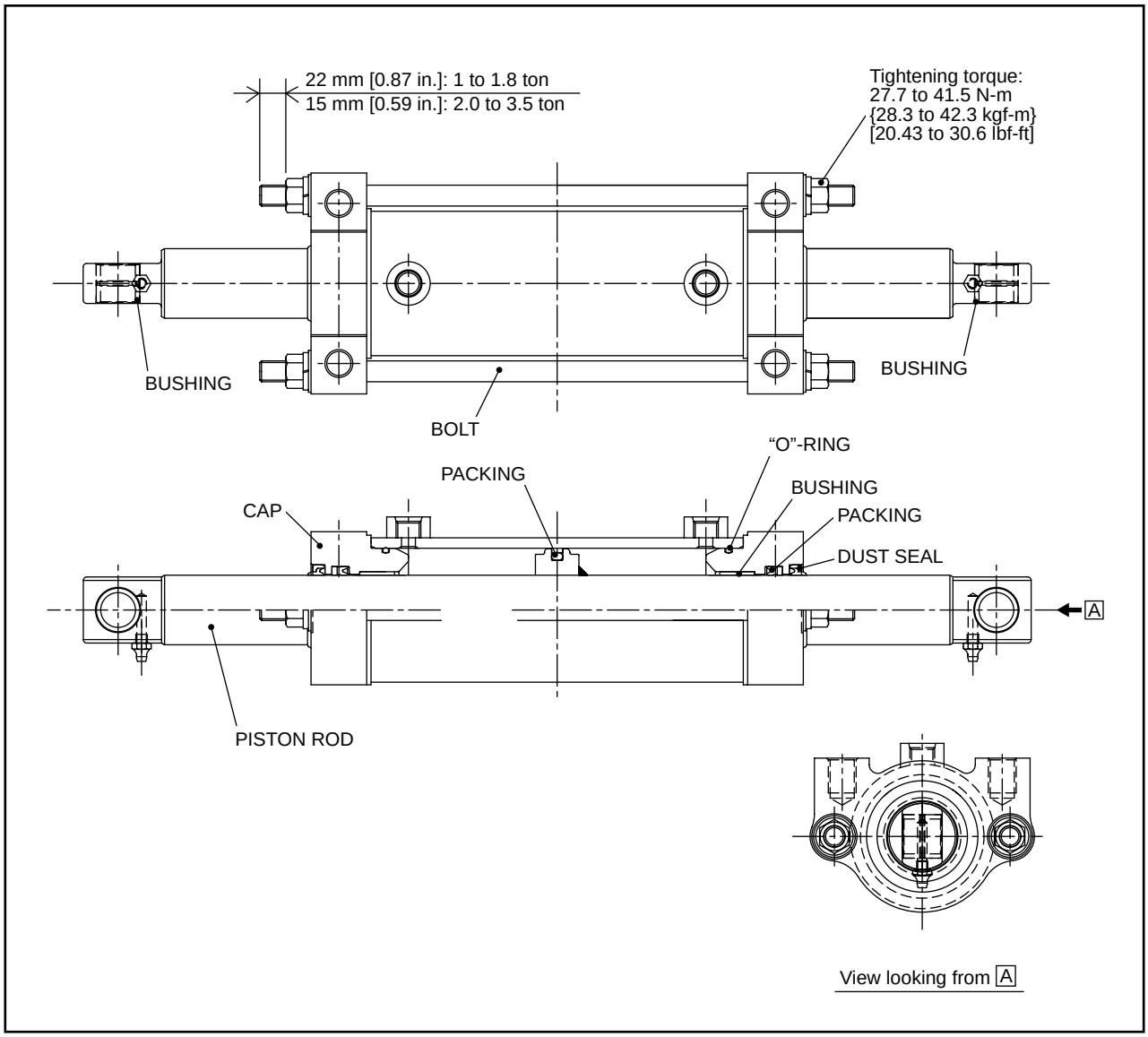

Fig. 6A.11 Power Cylinder

NOTE

6B. STEERING SYSTEM (EPS type)

Item \ Truck model	FB10-8	FB15-8 FB18-8	FB20-8 FB25-8LB	FB25-8 FB25-8V	FB30-8 FB30-8V FB35-8S
Steering system					
Type	Rear wheel steering, electric power steering				
Steering gear					
Type	Ball nut type				
Name	PU41				
Reduction ratio	18.9				
Operating angle	92°				
Worm returning angle	Left				
Handwheel dia.	360 mm [14.2 in.]				
Actuator					
Type	Motor-driven, ball nut type				
Rated voltage of motor	48 V		←		72 V
Rated output of motor	350 W		550 W		←
Stroke	235 mm [9.3 in.]		←		←
Controller					
Type	Voltage controlling type				
Rated voltage	48 V		←		72 V
Current limit	Max. ±40 A		Max. ±45 A		←
Rear axle					
Type	Elliot type		←		←
Steering angle					
(Inner wheel)	85.8°		83.5°		←
(Outer wheel)	55.6°		56.4°		←
King pin spacing	735 mm [28.9 in.]		740 mm [29.1 in.]		←
King pin tilt	0°		←		←
Camber	0°		1°		←
Caster	0		←		←
Toe-in	0		←		←
Trail	0		←		←
Wheel					
Tire size	16 x 6 – 8 10PR		18 x 7 – 8 14PR		←
Rim size	4.25 x DT		←		←
Inflation pressure	850 kPa {8.5 kgf/cm^2} [120.9 psi]		900 kPa {9.0 kgf/cm^2} [128.0 psi]		←

6B.1 GENERAL DESCRIPTION

The steering system consists of a steering gear, actuator, controller, and axle. The steering wheel operating force is boosted by the motor-driven actuator.

6B.1.1 OUTLINE OF STEERING SYSTEM

As shown in Figure 6B.1, the steering system is composed of a steering gearbox, actuator, and controller.

The steering gearbox is provided with a potentiometer which detects the steering handwheel operating force and sends to the controller a signal which corresponds to the strength and direction of the force. The controller converts the signal from the potentiometer into the direction and amount of electric current which flows into the motor. If an external force is applied to the steering wheel, the potentiometer detects that force and the actuator generates a force of the same strength in the reverse direction so that no shock is felt at the handwheel.

The controller is incorporated in the speed controller inside the counterweight.

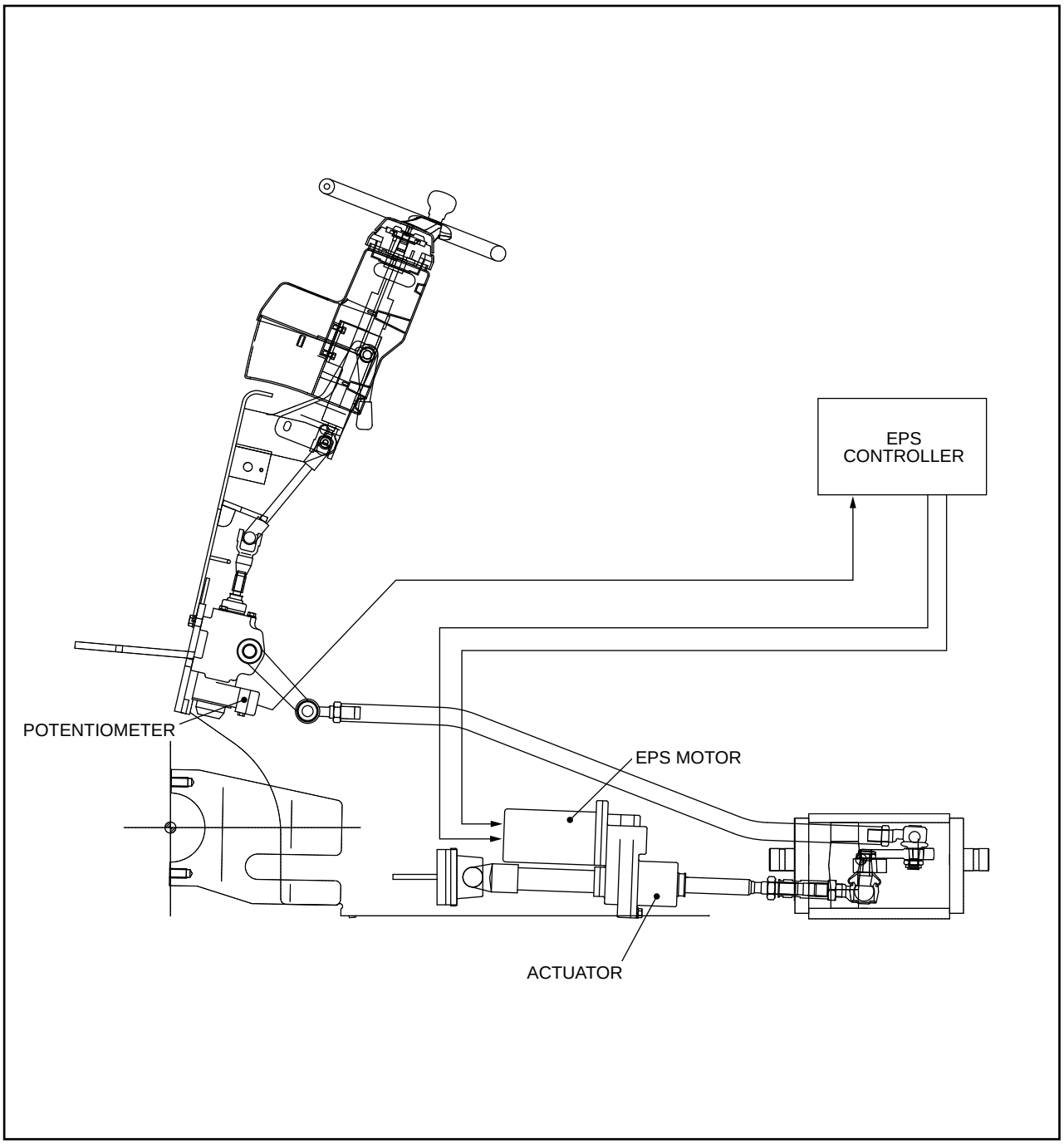

Fig. 6B.1 Steering System

6B.1.2 STEERING GEARBOX

The steering gearbox is constructed as shown in Figure 6B.2. Rotation of the steering wheel is transmitted to the sector shaft by way of the ball nut screw. At the lower part of the steering gearbox unit is located the potentiometer which converts slight up-and-down movement of the steering shaft into a voltage and sends the voltage to the controller.

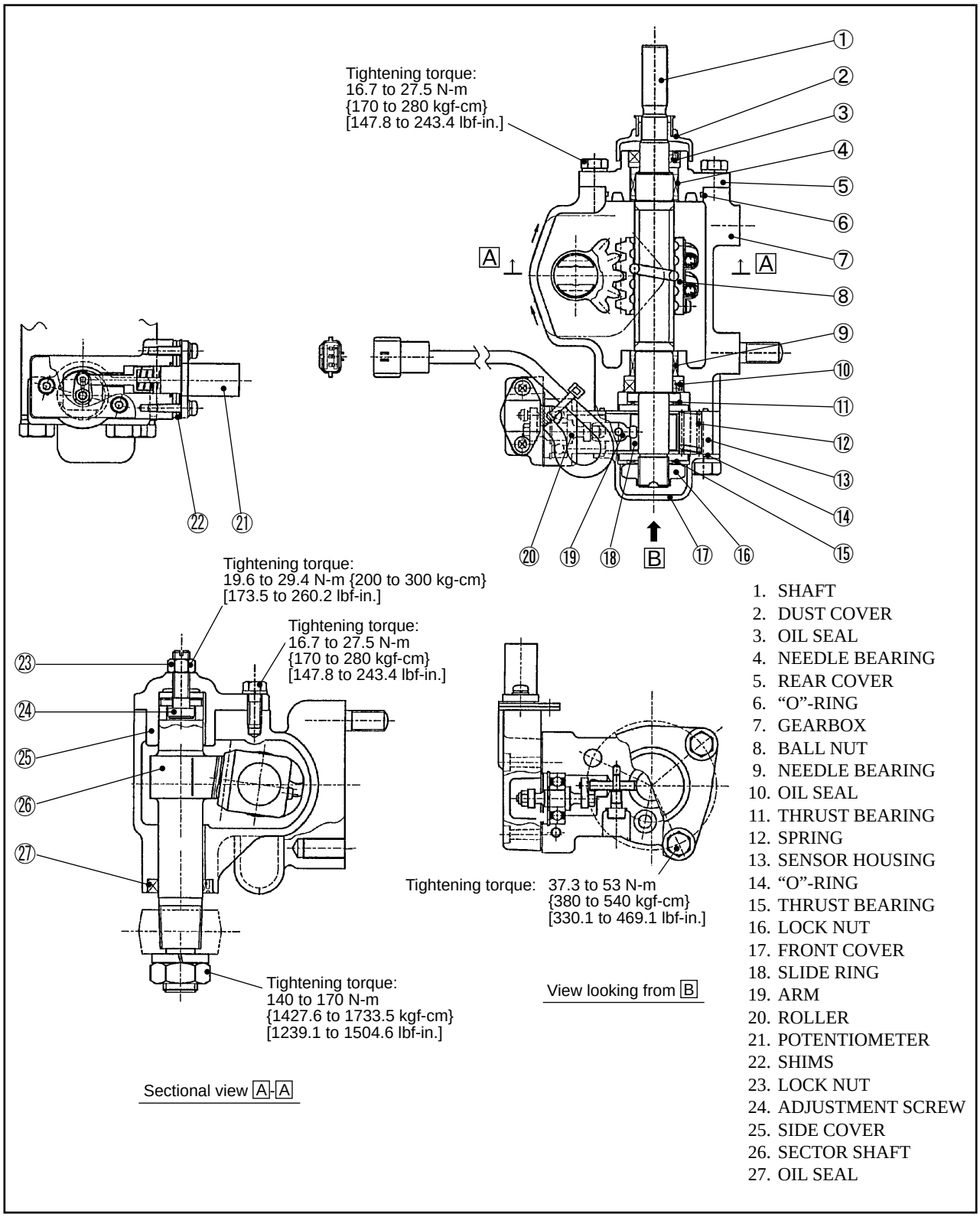

Fig. 6B.2 Steering Gearbox

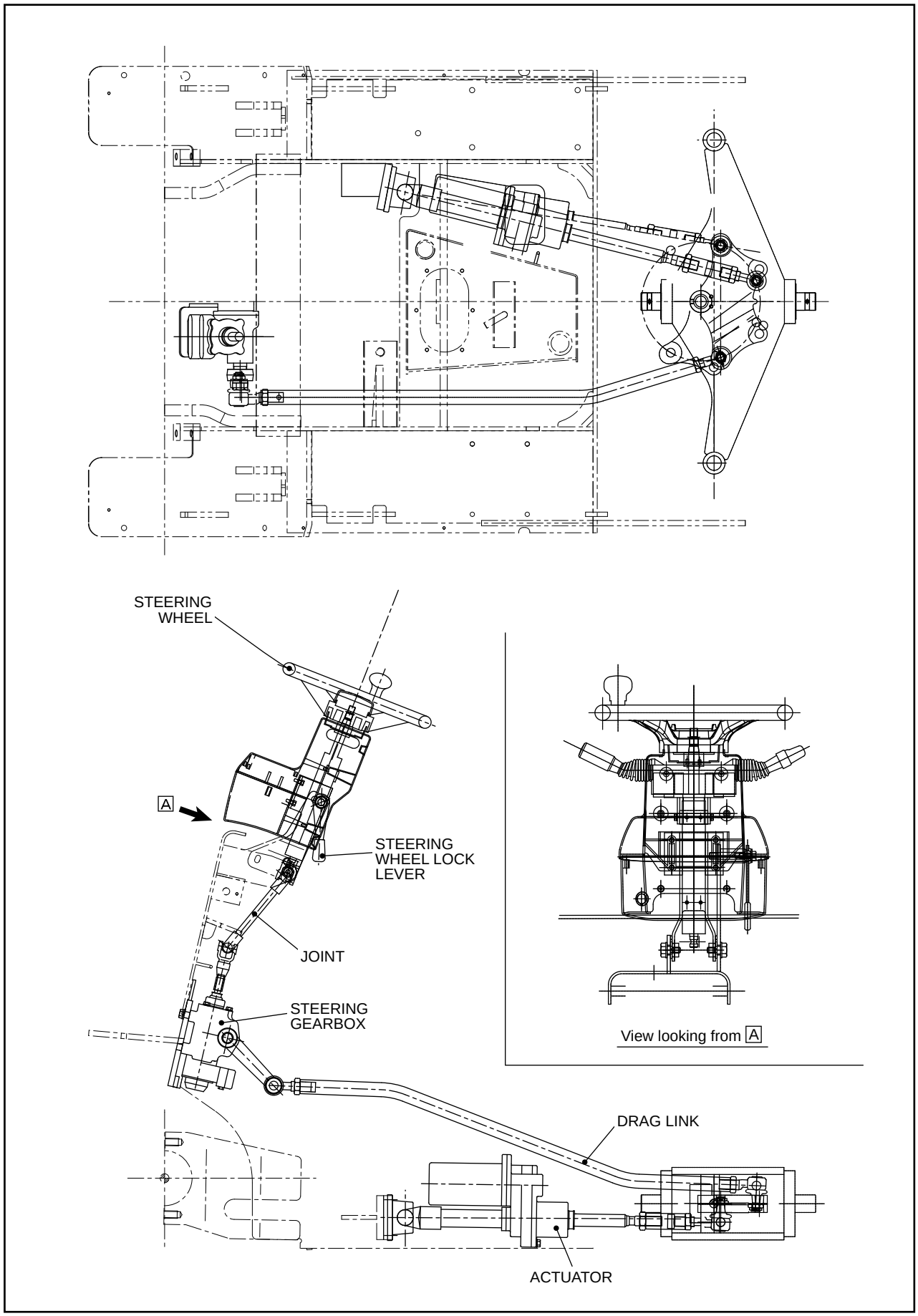

Fig. 6B.3 Steering Linkage

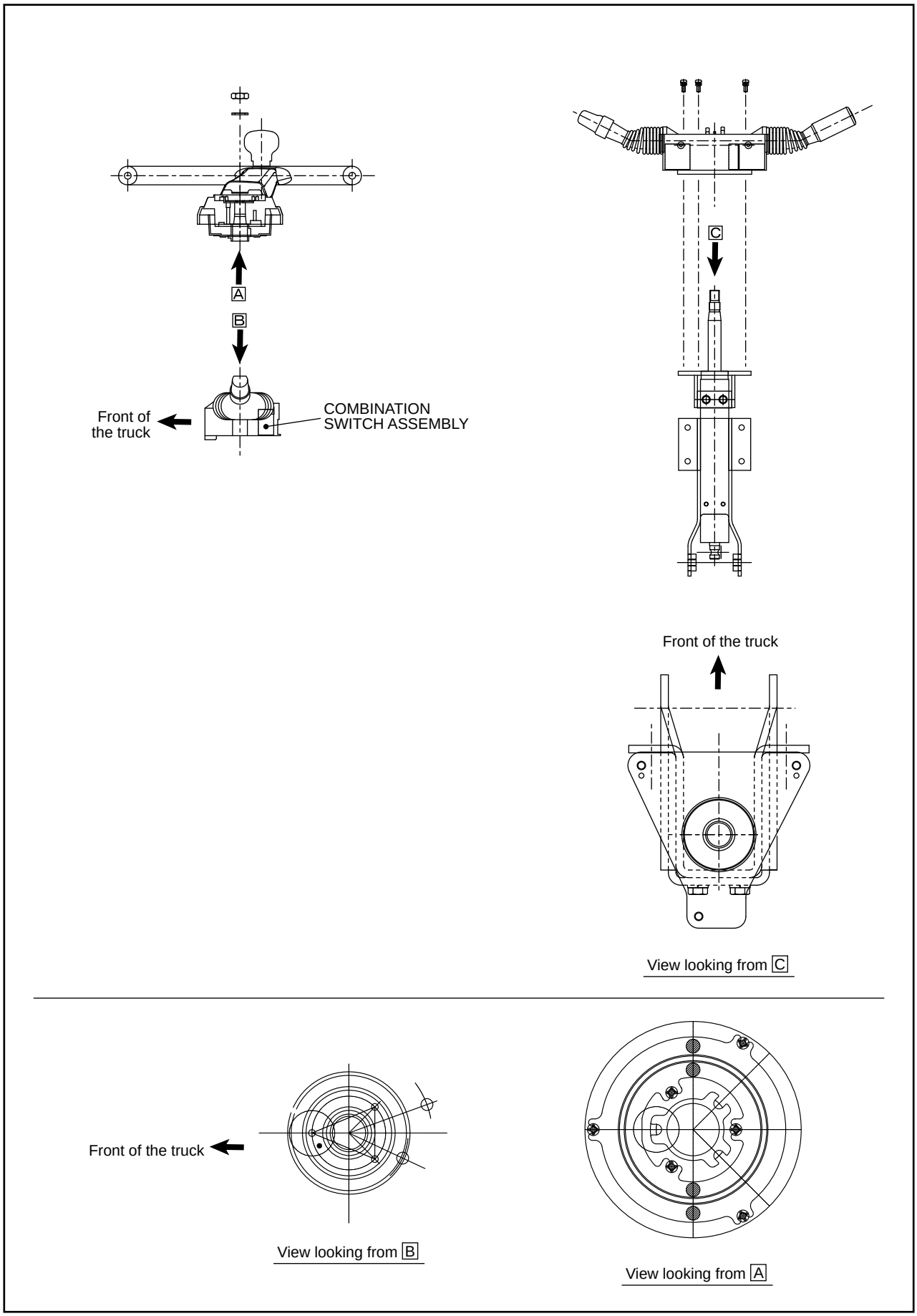

Fig. 6B.4 Steering Wheel

6B.1.3 ACTUATOR

The actuator is a ball and nut screw type. The screw lengthens and shortens according to motor operation.

Motor operation is transmitted to the ball and nut unit after its speed is reduced by two gears. The ball and nut unit are supported by two tapered roller bearings on the gearbox.

The actuator is installed with its tube side fitted to the frame of the truck by a universal joint and with its screw side fitted to the center arm of the axle by a ball joint.

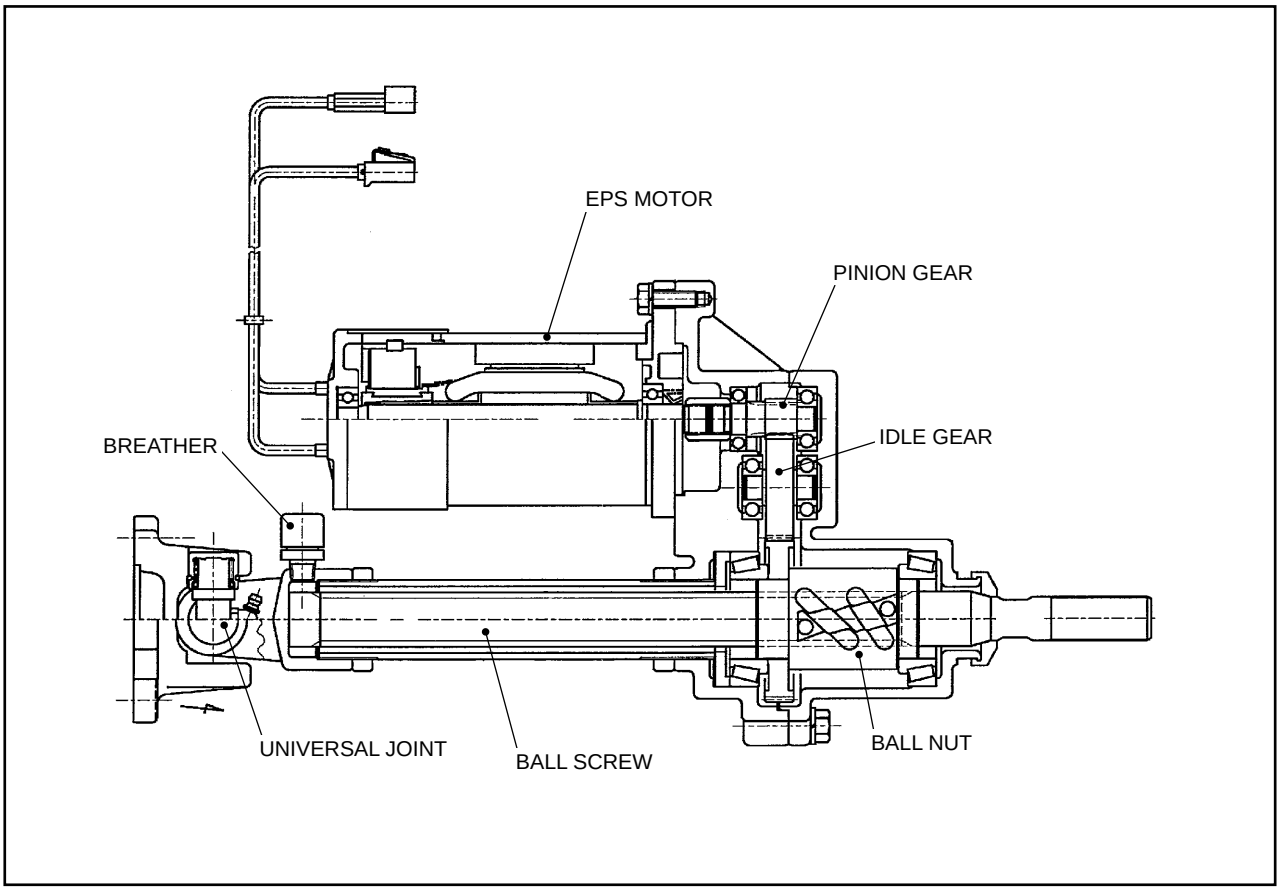

Fig. 6B.5 Actuator

6B.1.4 REAR AXLE

The rear axle unit is of welded construction with a box-shaped cross section, consisting of an axle, center arm, tie rods, and knuckles.

The rear axle support with a bushing press-fitted is attached to the support pins located at the front and rear of the axle. The support is bolted to the rear frame. The axle is so mounted as to be cradled with the front and rear support pins as an axis.

The knuckle attached to each end of the axle is so structured as can turn clockwise and counterclockwise around the king pin. The rear wheel hub is mounted on the spindle of the knuckle through two tapered roller bearings. On the hub installed is the wheel with hub bolts and nuts. The tapered roller bearing at the king pin side has a single-side seal to keep tight the grease filled between the hub and the knuckle.

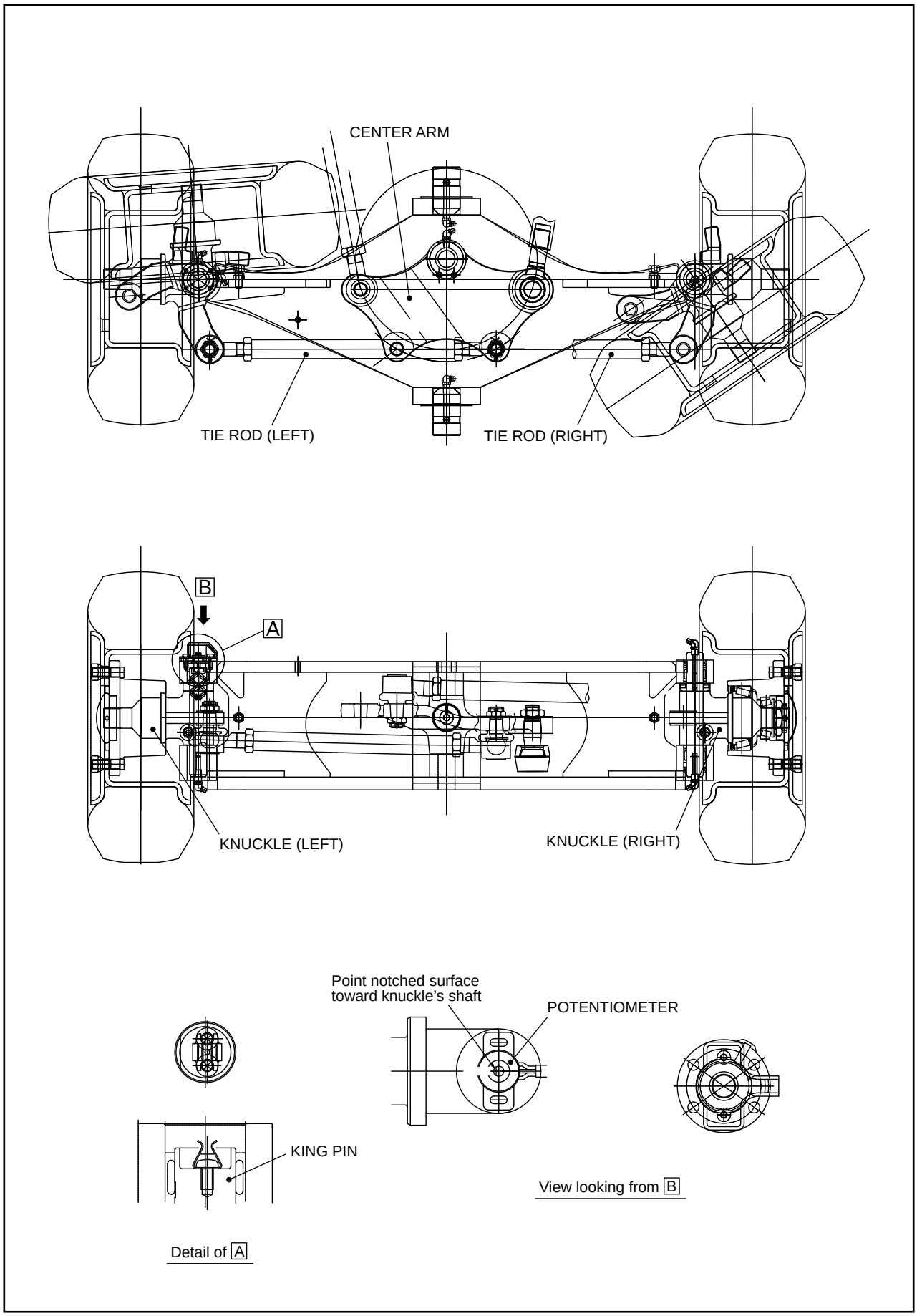

Fig. 6B.6 Rear Axle (1- to 1.8-ton Trucks)

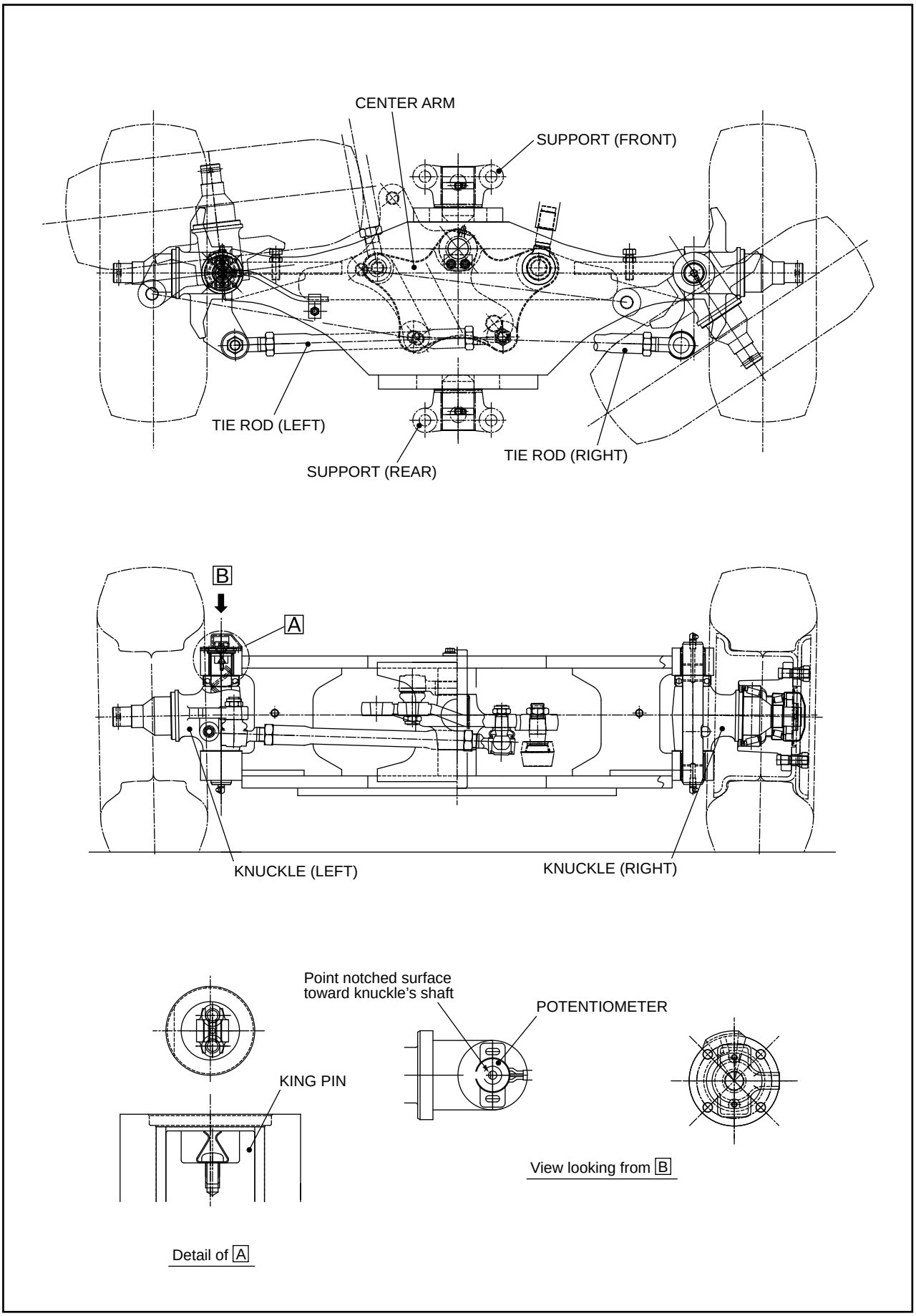

Fig. 6B.7 Rear Axle (2- to 3.5-ton Trucks)

(1) Knuckle and king pin

The king pin supporting the knuckle is secured to the knuckle side with the lock pin. Its upper and lower ends are each installed on the axle boss through each needle bearing.

The thrust bearing is installed between the axle upper boss and the knuckle so that the knuckle rotates smoothly around the king pin with its load.

The upper and lower needle bearings, and the thrust bearing are lubricated with grease through the grease fittings located on the upper and lower sides of the king pin.

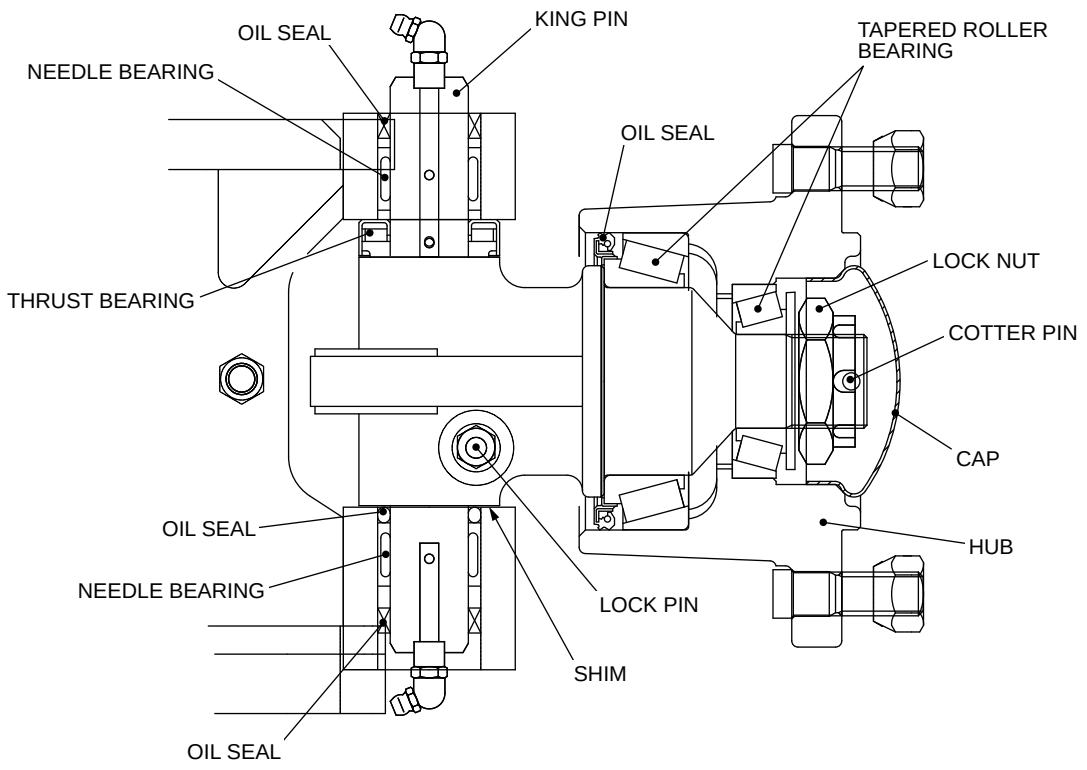

Fig. 6B.8 Knuckle

(2) Wheel hub

The wheel hub is installed on the knuckle spindle unit with two tapered roller bearings. Its preload is adjusted with the nut.

6B.1.5 ADJUSTING PRELOAD OF REAR WHEEL BEARING

(1) As shown in Figure 6B.8, apply grease to the hub, inner bearing, outer bearing, and cap. Also apply grease to the oil seal lips.
(2) Set the bearings on the hub, then installed the hub on the knuckle spindle.
(3) Place a washer, then tighten the adjustment nut with a torque of 206 to 235 N-m {21 to 24 kgf-m} [1823 to 2080 lbf-in.]. Loosen the adjustment nut, then retighten it with a torque of 9.8 N-m {1 kgf-m} [86.7 lbf-in.].
(4) Gently tapping the hub with a mallet, make sure there is no looseness.
(5) Tighten the hub with a mallet, give it a few turns. Then measure the starting torque.
(6) Tapping the hub with a mallet, give it a few turns. Then measure the starting torque.
Starting torque: 1.67 to 1.96 N-m {17 to 20 kgf-cm} [14.8 to 17.4 lbf-in.]
(7) If the starting torque measured is beyond the standard range, replace the washer and adjustment nut. Then, repeat the steps from (3) to (6) till the standard range is acquired.
(8) Lock the adjustment nut with cotter pin.

6B.2 MAINTENANCE

6B.2.1 MAINTENANCE FOR ACTUATOR

(1) Replacing the motor

① As shown in Figure 6B.9, securely hold the actuator assembly by a vise.

Note: Be sure to hold it in a lying position.

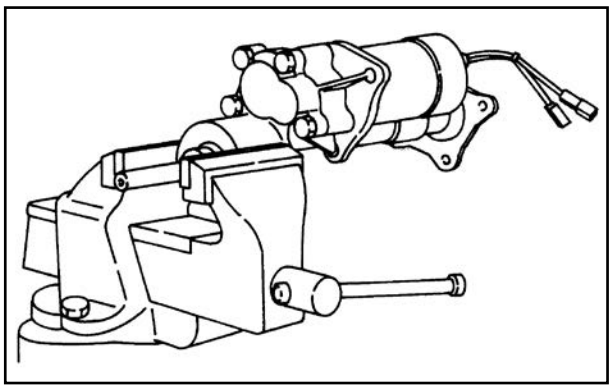

Fig. 6B.9

② Remove the motor securing bolts, then remove the motor.

Note: Do not give a strong shock to the motor.

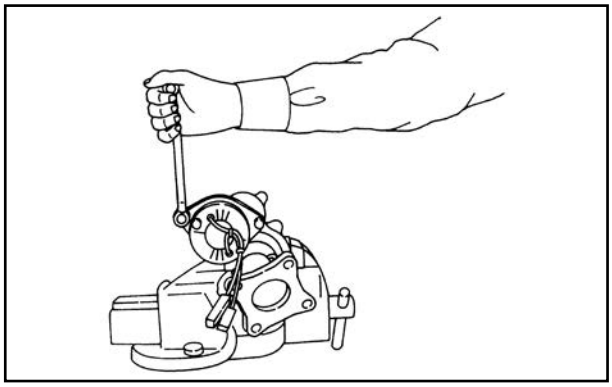

Fig. 6B.10

③ Remove the packing from the motor fitting surface.

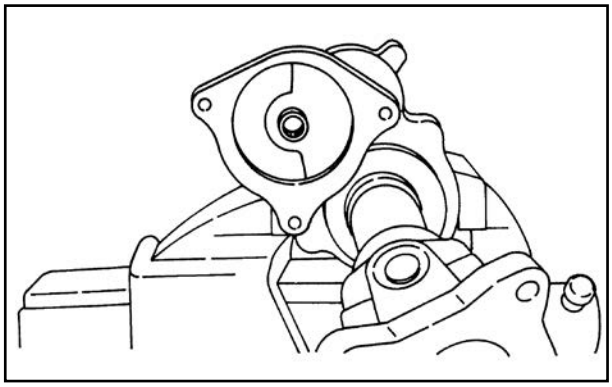

Fig. 6B.11

④ Apply grease to the joint. Install the motor with a new packing.

Tightening torque: 18.6 to 30.4 N-m
{1.9 to 3.1 kgf-m}
[13.7 to 22.4 lbf-ft]

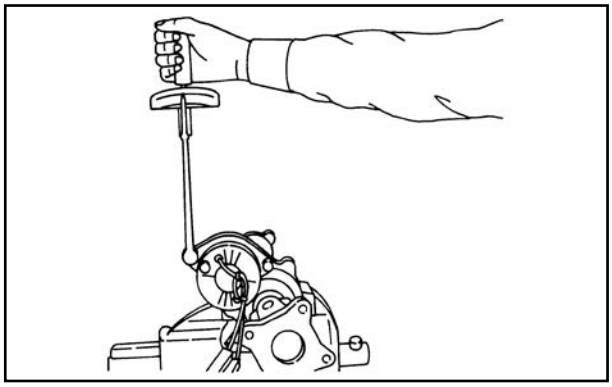

Fig. 6B.12

(2) Replacing the ball joint

① Securely fix the ball joint with its connector held in a vise.

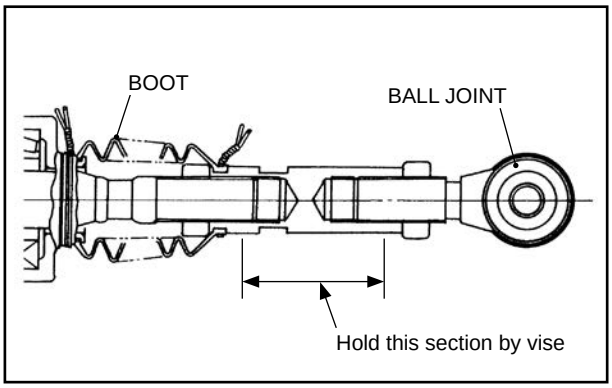

Fig. 6B.13

② Loosen the lock nut of the ball joint, then remove the ball joint.

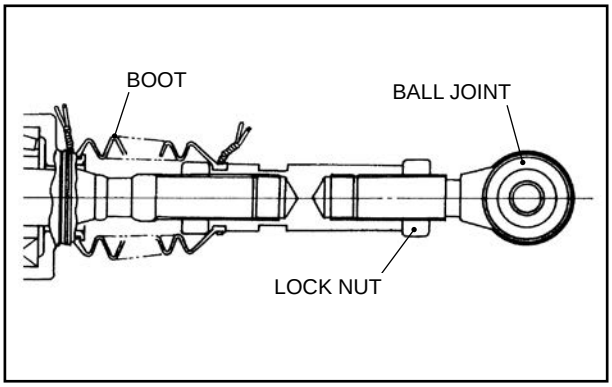

Fig. 6B.14

③ Apply LOCTITE#271 to the threaded areas of the connector and lock nut. Then install the ball joint.

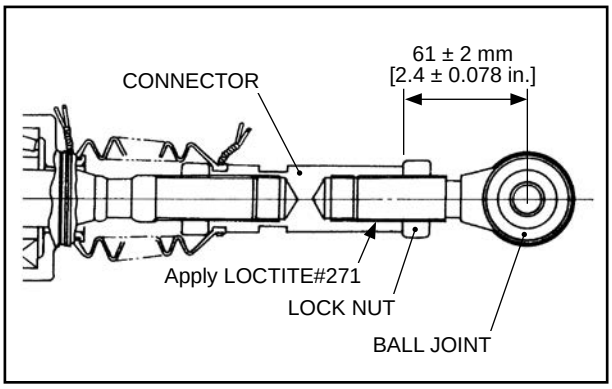

Fig. 6B.15

(3) Replacing the boot

① Hold the connector section in a vise.

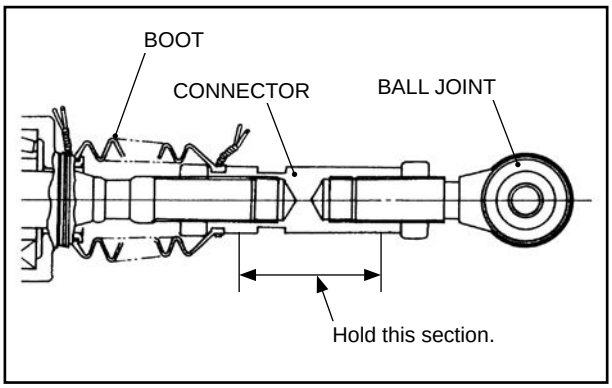

Fig. 6B.16

② Remove the clamp of the boot connector side. Shift the position of the boot. Then loosen the connector lock nut, and remove the connector.

Note: Fix the ball joint to prevent it from turning.

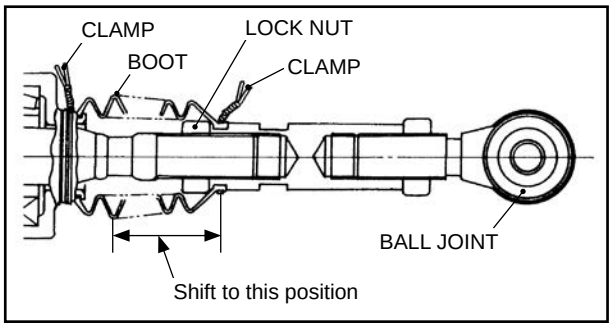

Fig. 6B.17

③ Replace the boot with a new one. When installing the new one, let its end of larger outer diameter face the actuator.

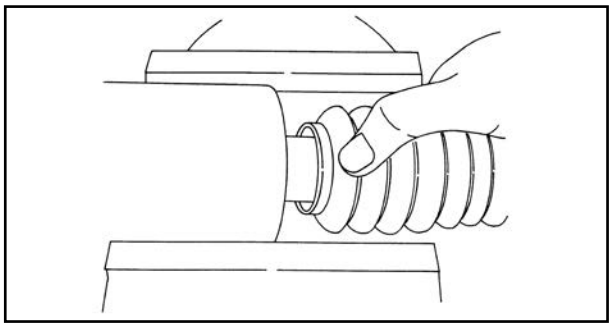

Fig. 6B.18

④ Turn counterclockwise the ball screw till it contracts the most.
Apply LOCTITE#271 to the threaded areas of the connector and the lock nut, then install the connector as specified in Figure 6B.19.
Tightening torque: 176.5 to 215.8 N-m
{18 to 22 kgf-m}
[130 to 159 lbf-ft]

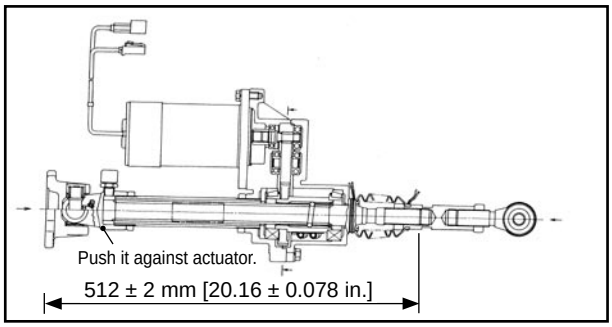

Fig. 6B.19

⑤ Clamp the both ends of the boot by wire. Before clamping, align the position of the joint, as shown in Figure 6B.21, to correct a dislocation of the boot.

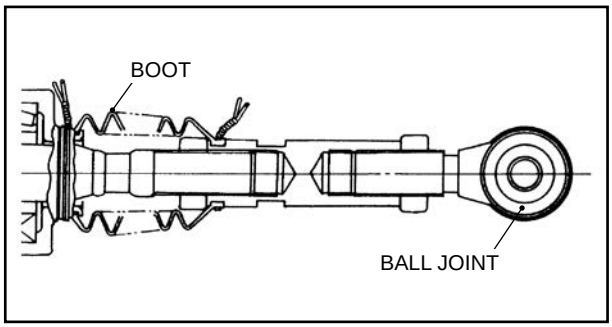

Fig. 6B.20

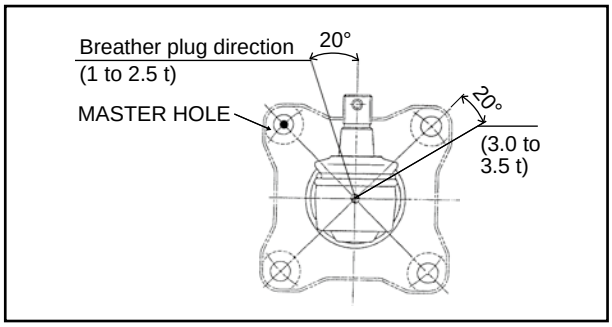

Fig. 6B.21

NOTE

7. HYDRAULIC SYSTEM

Truck model / Item	FB10-8 FB15-8	FB18-8	FB20-8 FB25-8 FB25-8LB FB25-8V	FB30-8 FB30-8V	FB35-8S
Main pump					
Type	Gear type	←	←	←	←
Name	TMG1A18	←	TMG1A20	TMG1A23	←
Discharge	18.9 cm^3/rev	←	21 cm^3/rev	24.5 cm^3/rev	←
Drive	Directly connected to motor	←	←	←	←
Control valve					
Type	Spool sliding type	←	←	←	←
Name	MSV04	←	←	←	←
Pressure setting	13.7 MPa {140 kgf/cm^2} [1987 psi]	15.7MPa {160 kgf/cm^2} [2275 psi]	17.2 MPa {175 kgf/cm^2} [2489 psi]	←	←
Lift cylinder					
Type	Single-acting piston type	←	←	←	←
Cylinder inner dia.	45 mm [1.77 in.]	←	50 mm [1.97 in.]	55 mm [2.17 in.]	60 mm [2.36 in.]
Rod outer dia.	35 mm [1.38 in.]	←	40 mm [1.58 in.]	45 mm [1.77 in.]	50 mm [1.97 in.]
Stroke	1495 mm [57.4 in.] (when lifting height is 3000 mm [118.1 in.])	←	←	←	←
Tilt cylinder					
Type	Double-acting piston type	←	←	←	←
Cylinder inner dia.	65 mm [2.56 in.]	←	70 mm [2.8 in.]	←	←
Rod outer dia.	30 mm [1.2 in.]	←	←	←	←
Stroke	120 mm [4.72 in.]	←	139 mm [5.47 in.]	151 mm [5.94 in.]	←
Hydraulic oil tank					
Type	Separate type	←	←	←	←
Capacity	18 L [4.8 US gal]	←	25 L [6.6 US gal]	←	←

7.1 GENERAL DESCRIPTION

The hydraulic system consists of a pump, control valve, tank, lift cylinders, and tilt cylinders.

Oil is supplied by the pump directly driven by a motor. The control valve is used for controlling cylinders.

For the high-pressure piping, the O-ring fitting method that provides high sealing performance is employed to improve hydraulic system serviceability.

For lifting operation, the load handling inverter is used to control the motor operation so as to achieve the lifting speed that complies with the amount of lever operation.

7.1.1 MAIN PUMP

The main pump is a gear type as shown in Figure 7.1.

The main pump consists of a pump body, a pair of gears, bushings and packings. To minimize the gap between the gears' side-faces, pressure-balanced type bearings and lubrication method are used.

The pressure-balanced type directs part of the oil discharged from the main pump into between the pressure plate and pump body, to press the pressure plate toward the gear side.

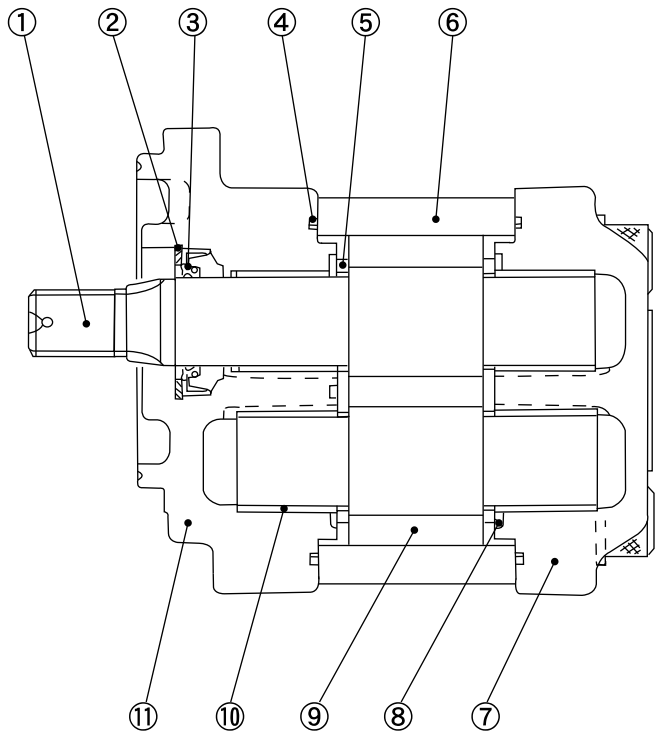

1. DRIVE GEAR
2. SNAP RING
3. OIL SEAL
4. GASKET
5. SIDE PLATE
6 PUMP BODY
7. REAR COVER
8. HYPSILOID GASKET
9. DRIVEN GEAR
10. BUSHING
11. FRONT COVER

Fig. 7.1 Main Pump

7.1.2 CONTROL VALVE

The control valve consists of two plunger sections, an outlet section, and an inlet section with a relief valve as shown in Figure 7.2. The inlet section relief valve is a cartridge type featuring that its pressure setting does not change even when it is reinstalled after removed.

Between the inlet section and the lift plunger section and between the lift plunger section and the tilt plunger section, check valves are installed (two in total).

These check valves serve to prevent the back flow from a heavily loaded section to a lightly loaded section when the lift and tilt levers are simultaneously operated.

A potentiometer installed on the plunger section at the lift side converts the movement of the plunger into the voltage and sends it to the controller.

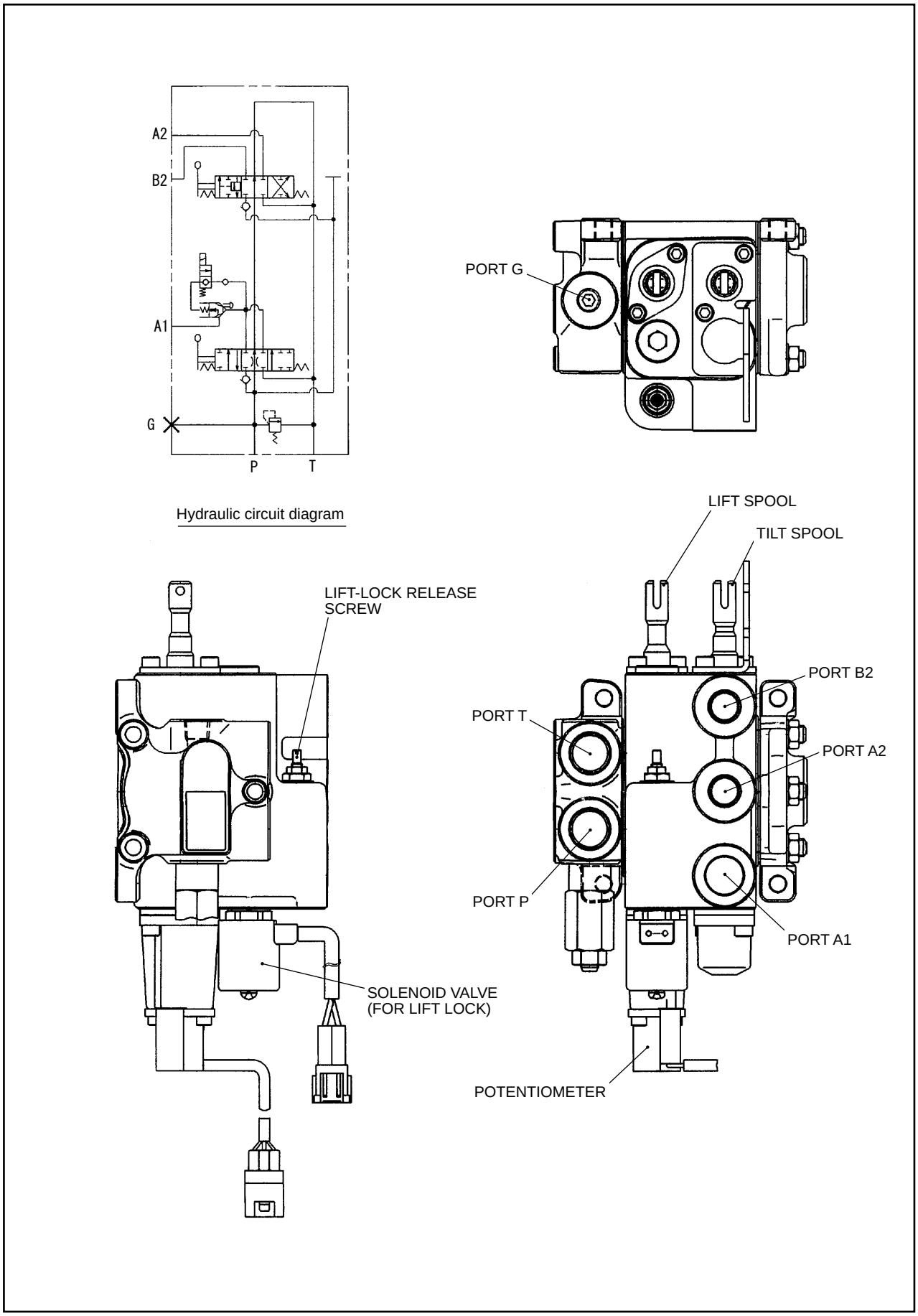

Fig. 7.2 Control Valve

7.1.3 VALVE CONTROL

The control valve plungers are operated with the levers shown in Figure 7.3, with each of the levers installed on a single shaft.

The bracket supporting each shaft is attached to the cowl. The movement of each lever is transmitted through the rod to the corresponding plunger.

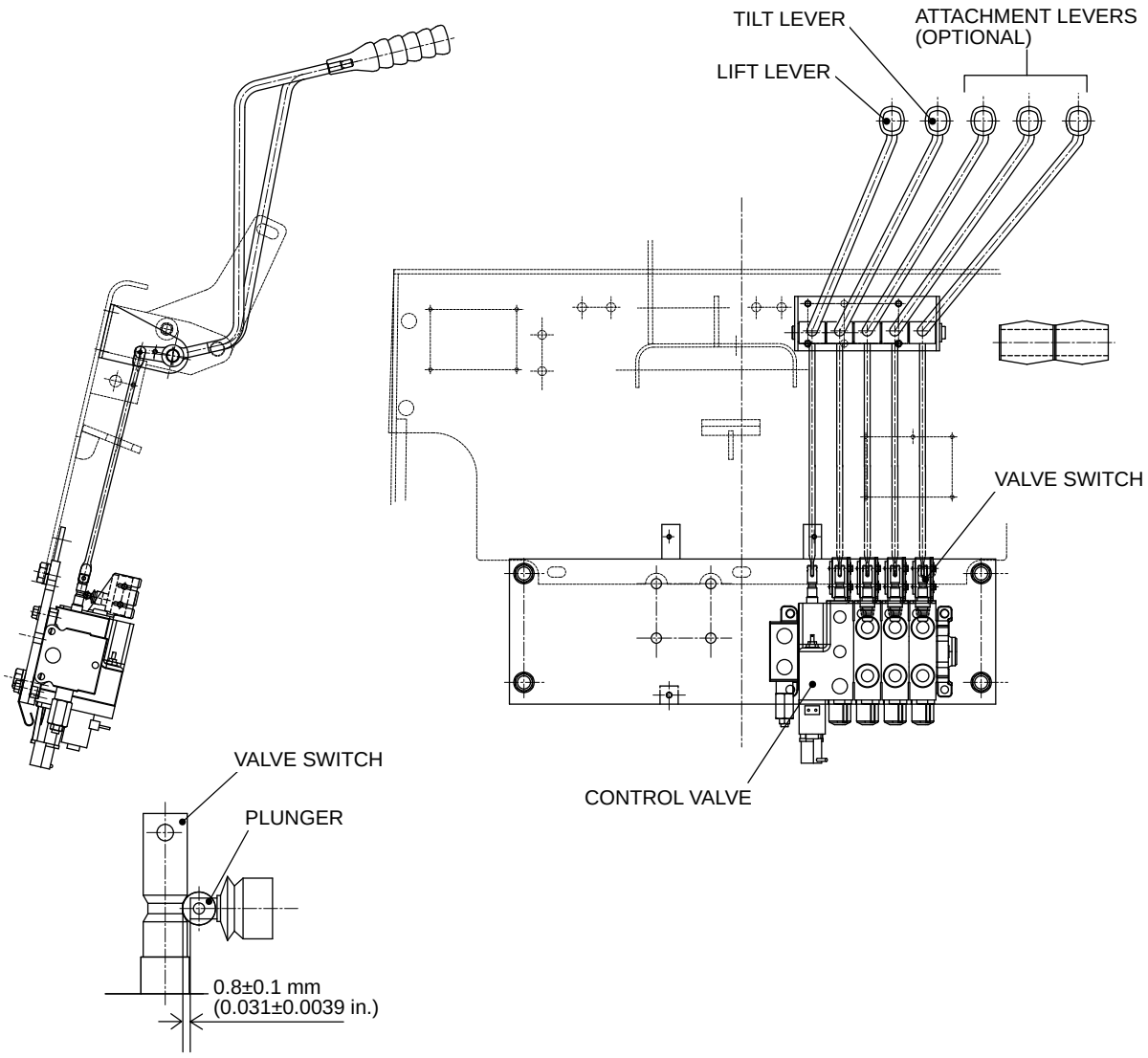

○ Installing the valve switch
Install the valve switch so that it turns on when the plunger is pushed in 0.8 ±0.1 mm [0.031 ±0.0039 in.].
At this time, the center of switch's plunger is aligned with the center of the cam.

Fig. 7.3 Valve control

■ Oil pressure adjustment

① Remove the plug of the check port (G) located in the inlet section of the control valve, then set there a 20 MPa {200 kgf/cm^2} [2901 psi] capacity oil pressure gauge.

② Operate the tilt lever till the cylinder piston reaches it stroke end. Then measure the hydraulic pressure at that position.

③ If the pressure is not as specified, loosen the relief valve lock nut and adjust it by turning the adjustment. If the measured pressure is higher than the specified, once lower it by turning the adjustment screw counterclockwise till it goes down below the specified level. Then turn the screw clockwise this time till the specified level is acquired.

④ When adjustment is complete, tighten the lock nut.

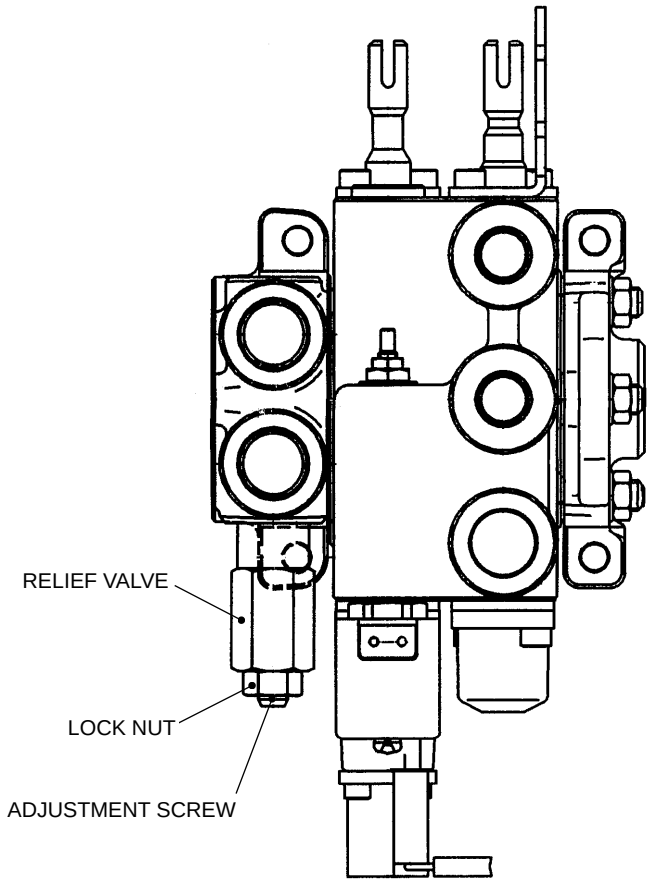

Unit: MPa {kgf/cm^2}[psi]

	1 to 1.5 t	1.8 t	2.0 to 3.5 t
Pressure setting	13.7 {140} [1990]	15.7 {160} [2280]	17.2 {175} [2490]

Fig. 7.4

7.1.4 HYDRAULIC OIL TANK

The hydraulic oil tank is located at the center of the frame. In the tank, a suction filter and a return filter are provided for the purpose of ensuring clean oil supply.

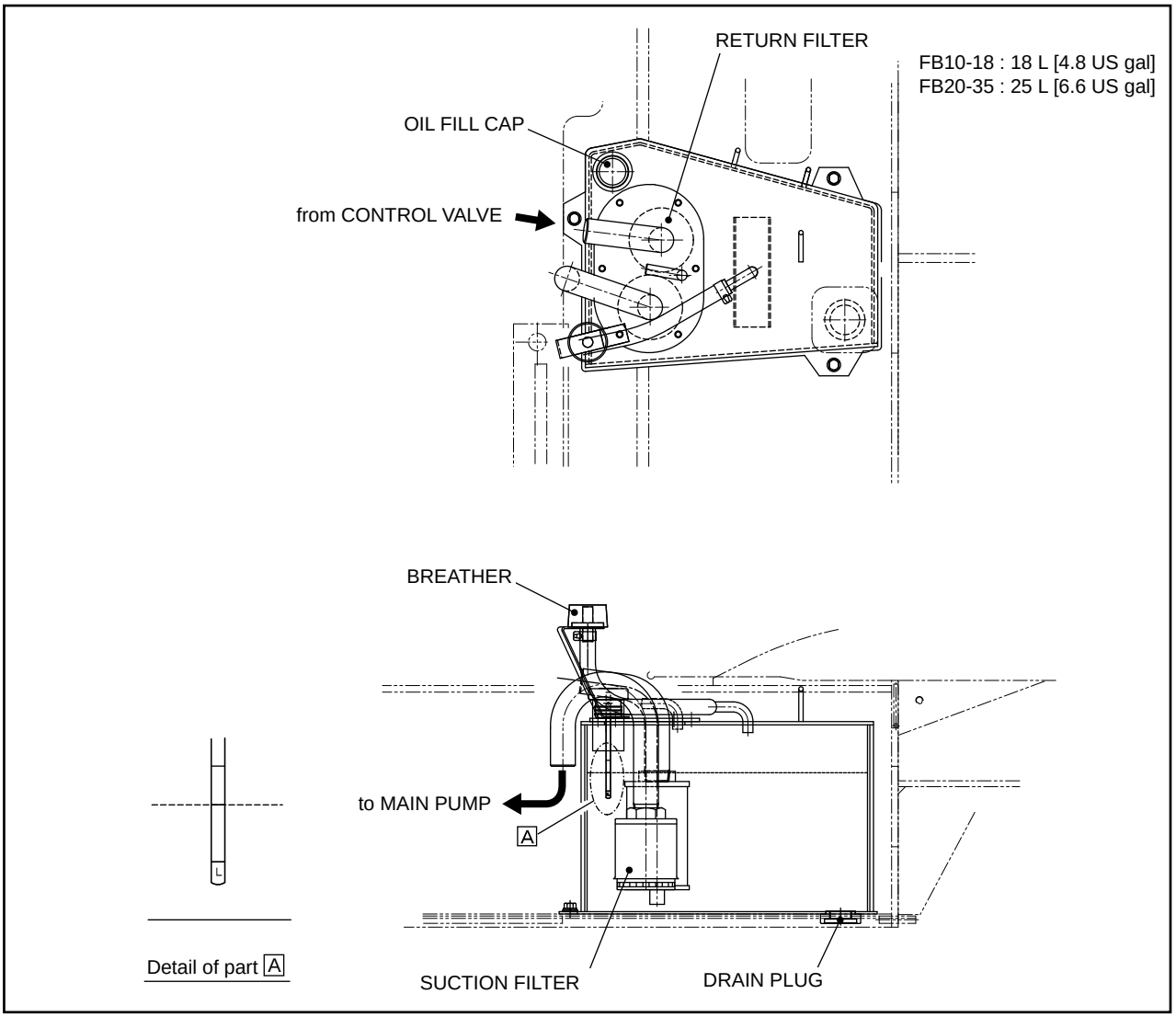

Fig. 7.5 Hydraulic Oil Tank

(1) Replacing filters

① Remove the drain plug and drain the oil tank.
② Clean the tank cover surrounding area. Then remove the cover securing bolts.
③ Remove the suction and return hoses.
④ Remove the tank cover.
⑤ Remove the return filter, then install a new return filter.
⑥ Remove the suction filter, then install a new suction filter.
⑦ Remove the packings from the cover and the tank, then apply sealing agent to the tank.
Sealing agent: THREEBOND#4001 or equivalent
⑧ Reinstall the tank cover, then connect the suction and return hoses.

7.1.5 LIFT CYLINDER

The two lift cylinders of single-acting type are located on the outer mast frame. Each lift cylinder, consists of cylinder body, rod, piston, and cylinder cap.

The piston fastened to the rod with a snap ring is provided with a wear ring and packing on its circumference.

At this lower part of the cylinder body provided is a cut-off valve which works as a safety device when the high-pressure hose connecting the right and left lift cylinders is broken.

The bushing and oil seal pressed into the cylinder cap serve to support the rod and protect the inside of the cylinder from dust.

■ **Cut-off valve operation**

The oil from the cylinder flows back to the tank via the piston holes A and B. In this step, if the flow rate passing through the holes are within a range of the flow rate which can be controlled by the flow regulator, the pressure difference between the front and rear of the piston is less than the spring force so that the piston does not move.

If the hose is ruptured and the oil passing through the holes A and B exceeds the flow to be controlled, the pressure difference between the front and rear of the piston becomes larger than the spring force, moving the piston to the right.

The piston is thereby in firm contact the section C of the case so that the oil in the cylinder does not flow out, stopping the fork go down.

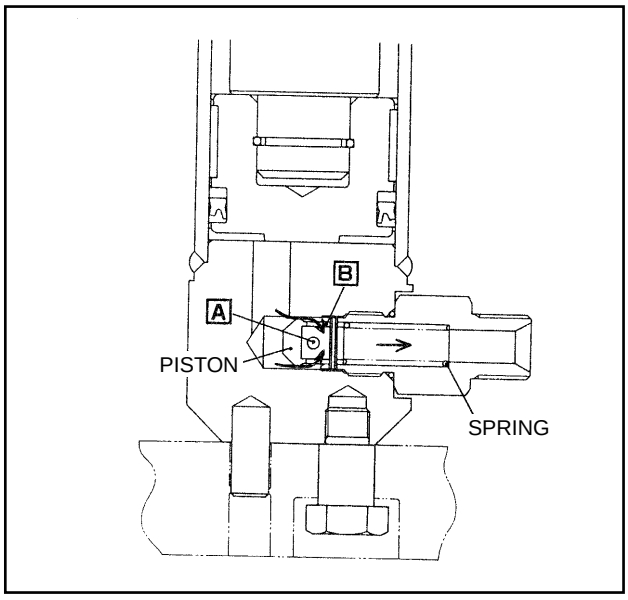

Fig. 7.6 In Below Control Flow Rate

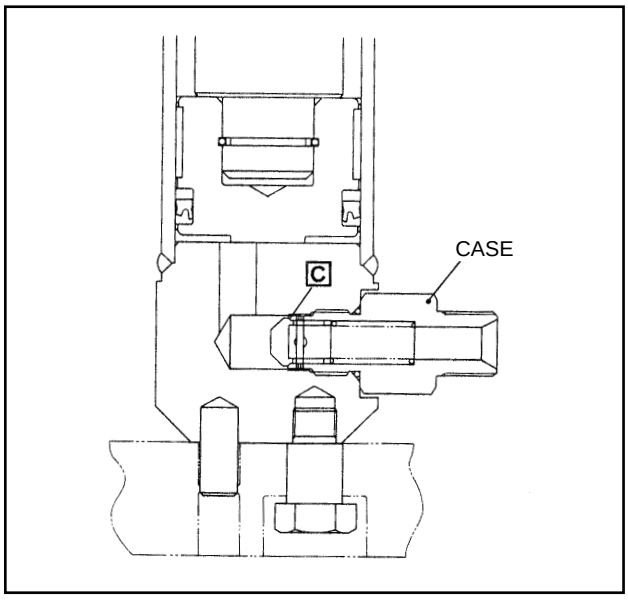

Fig. 7.7 In Over Control Flow Rate

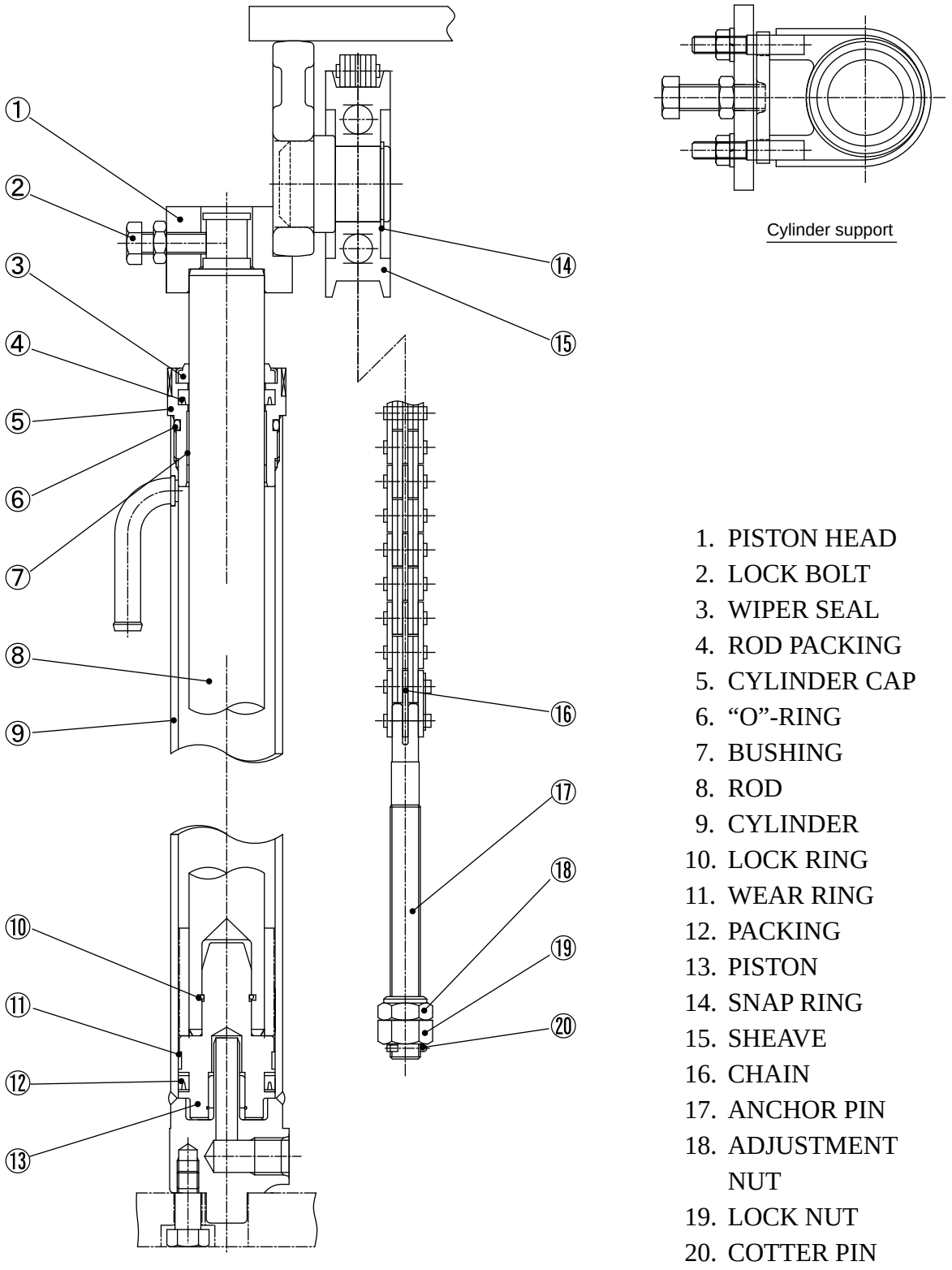

1. PISTON HEAD
2. LOCK BOLT
3. WIPER SEAL
4. ROD PACKING
5. CYLINDER CAP
6. “O”-RING
7. BUSHING
8. ROD
9. CYLINDER
10. LOCK RING
11. WEAR RING
12. PACKING
13. PISTON
14. SNAP RING
15. SHEAVE
16. CHAIN
17. ANCHOR PIN
18. ADJUSTMENT NUT
19. LOCK NUT
20. COTTER PIN

Fig. 7.8 Lift Cylinder (1- to 1.8-ton Trucks)

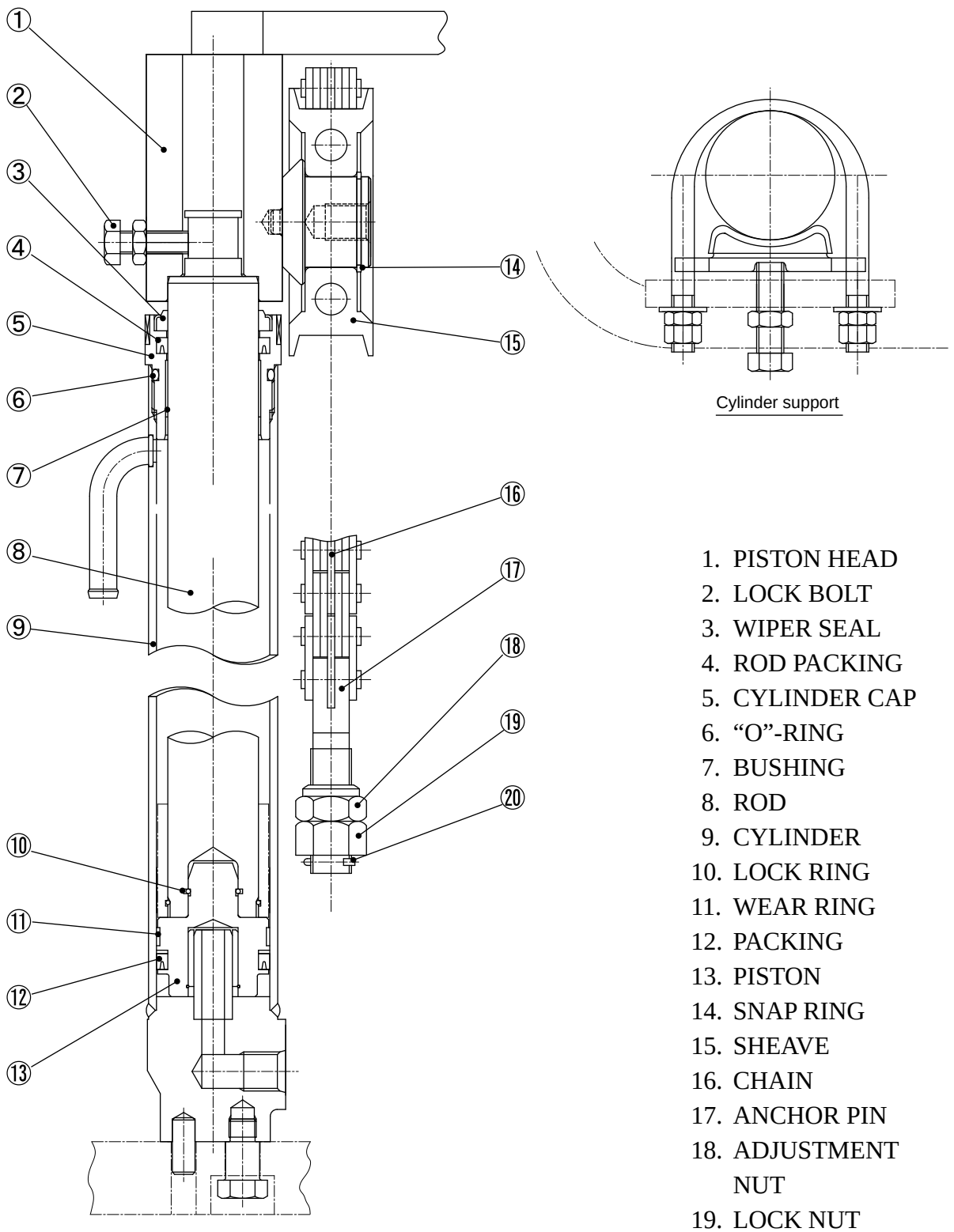

1. PISTON HEAD
2. LOCK BOLT
3. WIPER SEAL
4. ROD PACKING
5. CYLINDER CAP
6. “O”-RING
7. BUSHING
8. ROD
9. CYLINDER
10. LOCK RING
11. WEAR RING
12. PACKING
13. PISTON
14. SNAP RING
15. SHEAVE
16. CHAIN
17. ANCHOR PIN
18. ADJUSTMENT NUT
19. LOCK NUT
20. COTTER PIN

Fig. 7.9 Lift Cylinder (2- to 2.5-ton Trucks)

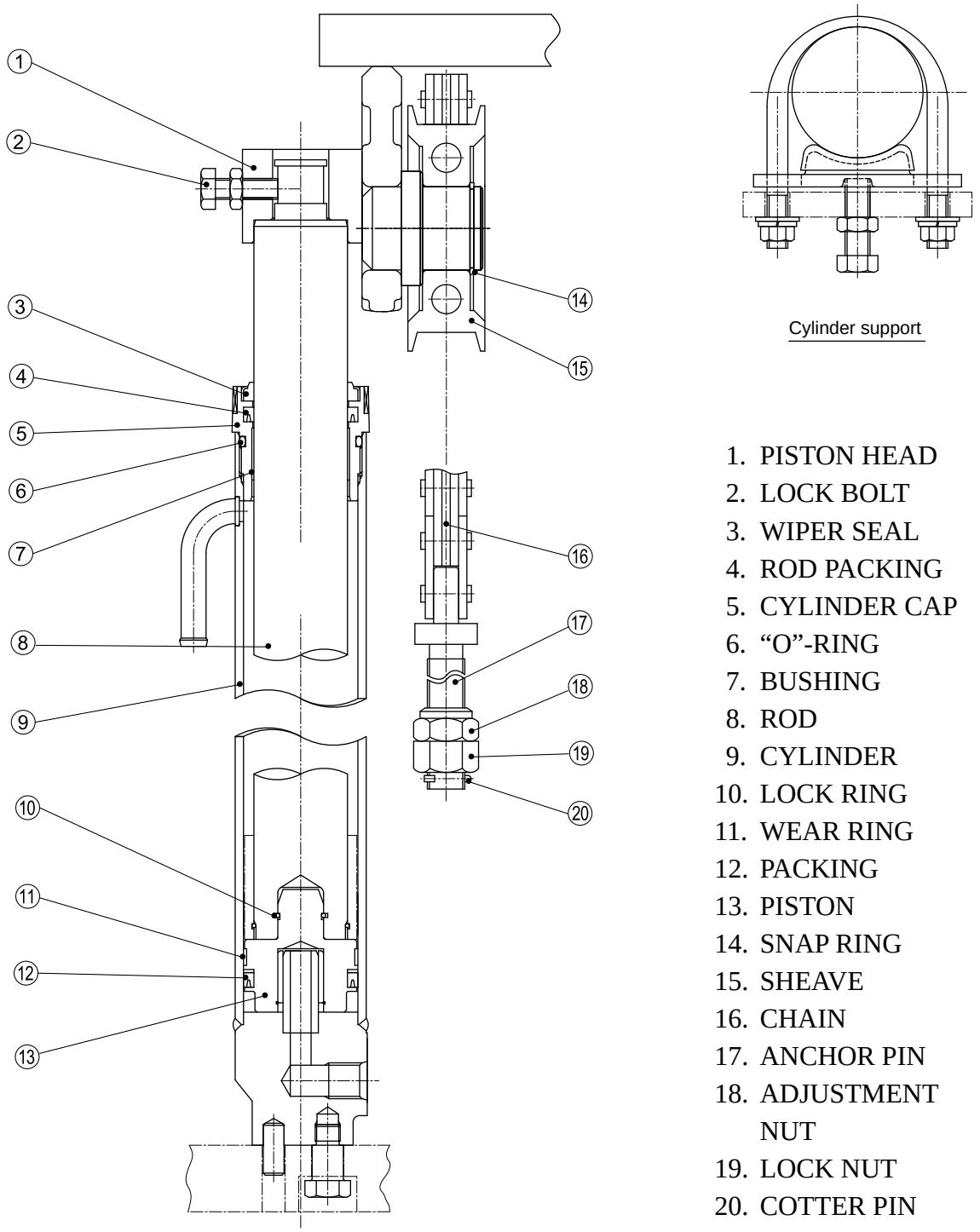

1. PISTON HEAD
2. LOCK BOLT
3. WIPER SEAL
4. ROD PACKING
5. CYLINDER CAP
6. “O”-RING
7. BUSHING
8. ROD
9. CYLINDER
10. LOCK RING
11. WEAR RING
12. PACKING
13. PISTON
14. SNAP RING
15. SHEAVE
16. CHAIN
17. ANCHOR PIN
18. ADJUSTMENT NUT
19. LOCK NUT
20. COTTER PIN

Fig. 7.10 Lift Cylinder (3-ton Trucks)

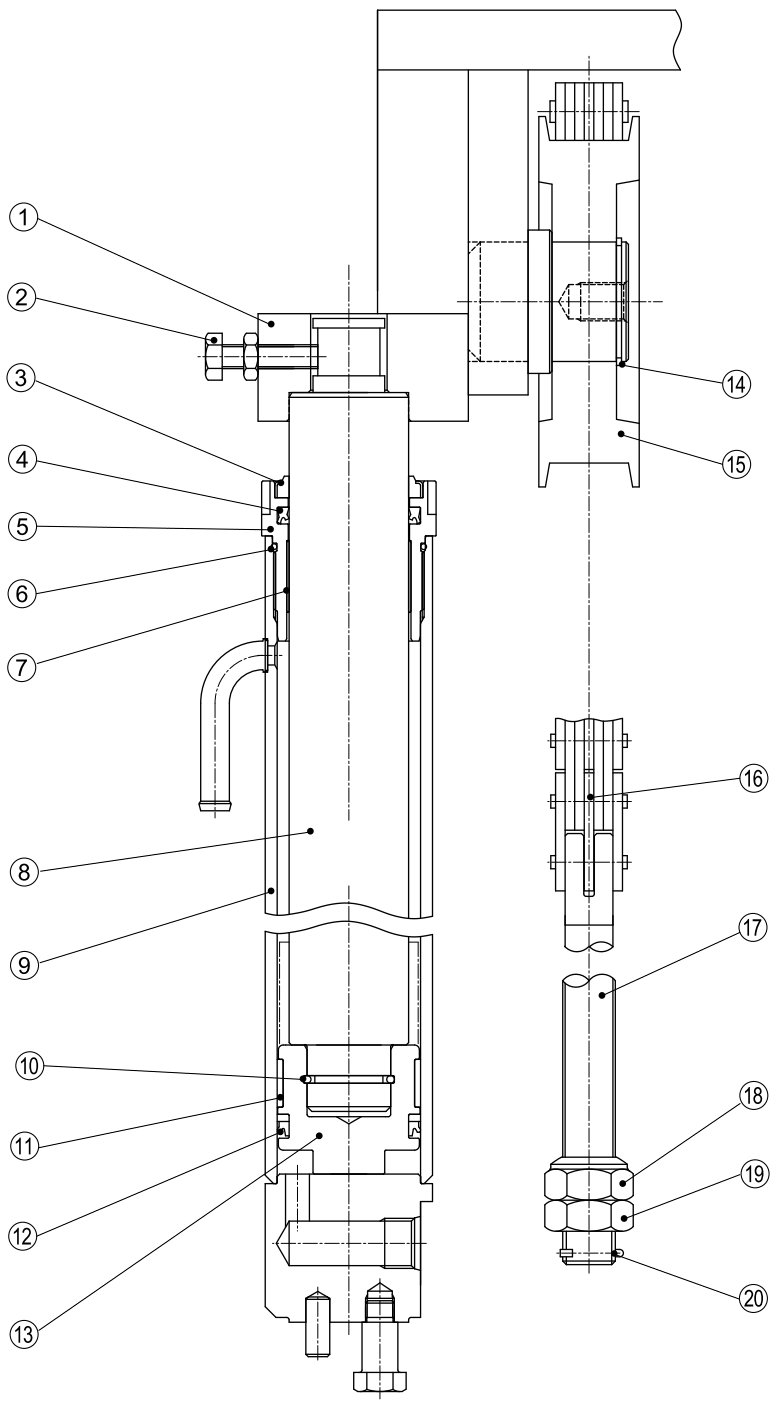

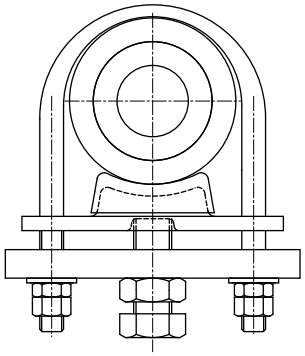

Cylinder support

1. PISTON HEAD
2. LOCK BOLT
3. WIPER SEAL
4. ROD PACKING
5. CYLINDER CAP
6. “O”-RING
7. BUSHING
8. ROD
9. CYLINDER
10. LOCK RING
11. WEAR RING
12. PACKING
13. PISTON
14. SNAP RING
15. SHEAVE
16. CHAIN
17. ANCHOR PIN
18. ADJUSTMENT NUT
19. LOCK NUT
20. COTTER PIN

Fig. 7.11 Lift Cylinder (3.5-ton Trucks)

7.1.6 FLOW REGULATOR VALVE

The flow regulator valve is located at the position as shown in Figure 7.12. It not only controls the fork lowering speed but works as a safety device in case of a rupture of the high-pressure hose.

The oil flowing from the control valve to the lift cylinders is not controlled, but the oil returning from the lift cylinders is controlled.

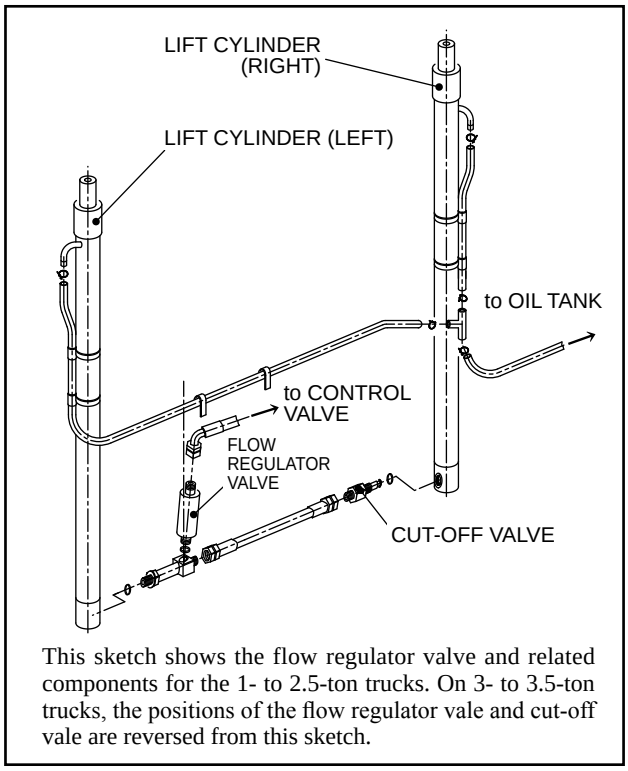

Fig. 7.12 Mast Piping

■ **Flow regulator valve operation (1- to 3-ton trucks)**

The oil returning from the lift cylinders flows into the chamber G from which it flows through the chambers D. E, D, C, B and A back into the control valve.

In this step, the more the oil flow via the hole C in the piston ④ becomes, the larger the pressure difference between the front and rear of the piston becomes.

When the force that pushes the piston ④, produced by the pressure differential, is greater than the spring force ⑦, the piston ④ moves to the right. The hole D is narrowed by the hole C to limit the flow rate, and the fork lowering speed is thus controlled.

When the forks are raised, the high-pressure oil from the control valve flows through the chambers A, B, C, D, E, F, and G into the lift cylinders.

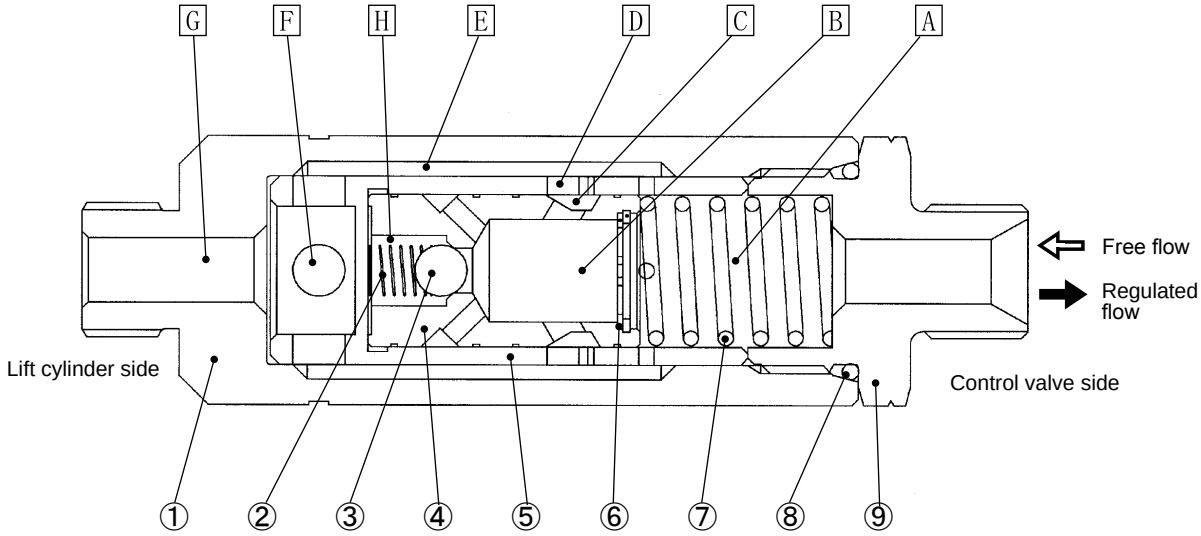

1. CASE
2. SPRING
3. BALL
4. PISTON
5. SLEEVE
6. ORIFICE
7. SPRING
8. “O”-RING
9. NIPPLE

Fig. 7.13 Flow Regulator Valve (1.0- to 3.0-ton Trucks)

■ **Flow regulator valve operation (3.5-ton trucks)**

The oil returning from the lift cylinder flows into the chamber F, past the chambers E, D, C, B, and A, and then back into the control valve.

In this step, the more the oil flows via the hole C in the piston ⑤, the greater the pressure differential across the piston ⑤ becomes to shift the piston ⑤ to the right. Therefore, the hole D is narrowed by the hole C so that the quantity of oil flowing through the hole D is restricted to reduce the forks lowering speed.

When the forks are raised, the high-pressure oil from the control valve flows through the chambers A, B, C, D, E, and F to the lift cylinders.

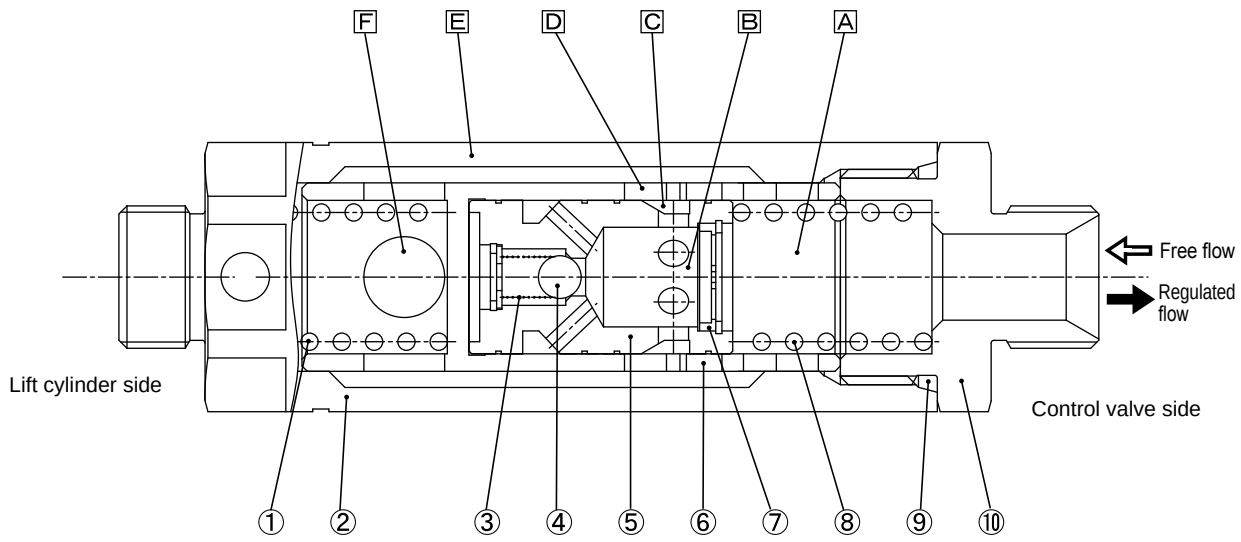

1. SPRING
2. CASE
3. SPRING
4. BALL
5. PISTON
6. SLEEVE
7. ORIFICE
8. SPRING
9. “O”-RING
10. NIPPLE

Fig. 7.14 Flow Regulator Valve (3.5-ton Trucks)

7.1.7 TILT CYLINDER

The tilt cylinder is a double-acting type. The piston rod end is supported by the mast, and the cylinder tail by a pin on the frame. Two tilt cylinders are mounted on both sides of the truck, one at each.

The tilt cylinder consists of a cylinder body, cylinder cap, piston and piston rod. The piston is attached to the piston rod with a nut, and is provided with two packings and one wear ring on its circumference. It is slid by hydraulic oil along the inner surface of the cylinder.

The cylinder cap is provided inside with a press-fitted bushing, packing, and dust seal which provide oil tightness for the piston rod and in the cylinder cap, and also supports piston rod.

When the tilt lever is pushed forward, high-pressure oil flows into the tilt cylinder through its tail. The oil then moves the piston forward, high-pressure oil flows into the tilt cylinder through its tail. The oil then moves the piston forward, causing the mast to tilt forward by 6 degrees.

When it is pulled toward the operator, high-pressure oil enters the tilt cylinder from the cylinder cap side. The oil then pushes back the piston, causing the mast to tilt backward by 12 degrees.

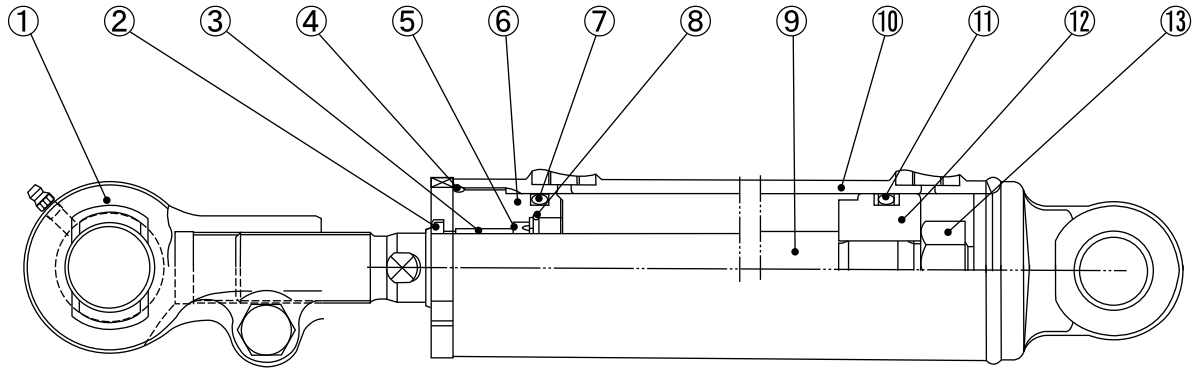

1. JOINT
2. DUST SEAL
3. BUSHING
4. “O”-RING
5. PACKING
6. CYLINDER CAP
7. “O”-RING
8. LOCK RING
9. ROD
10. CYLINDER
11. PACKING
12. PISTON
13. LOCK NUT

Fig. 7.15 Tilt Cylinder

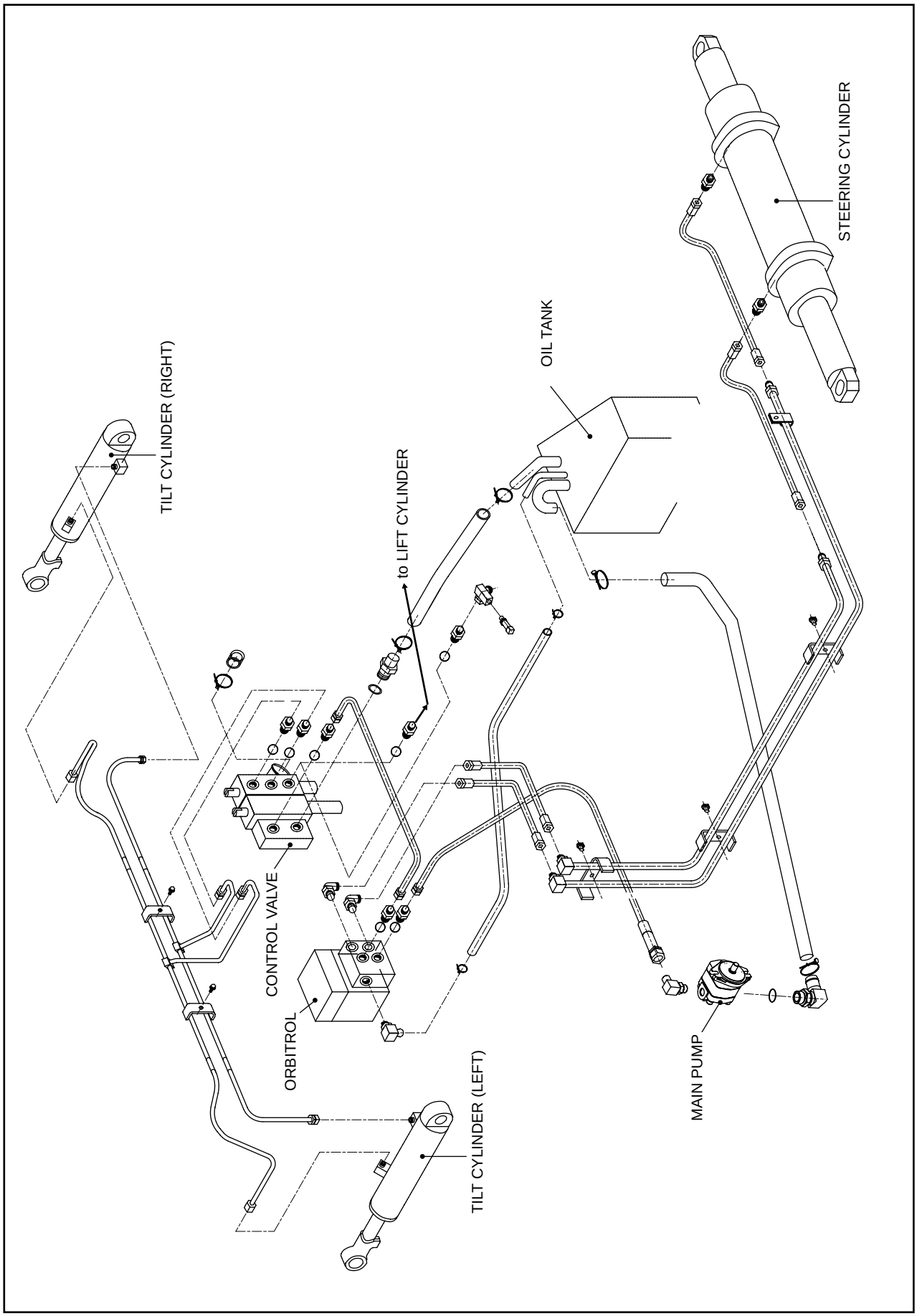

Fig. 7.16 Hydraulic Oil Piping (Orbitrol type)

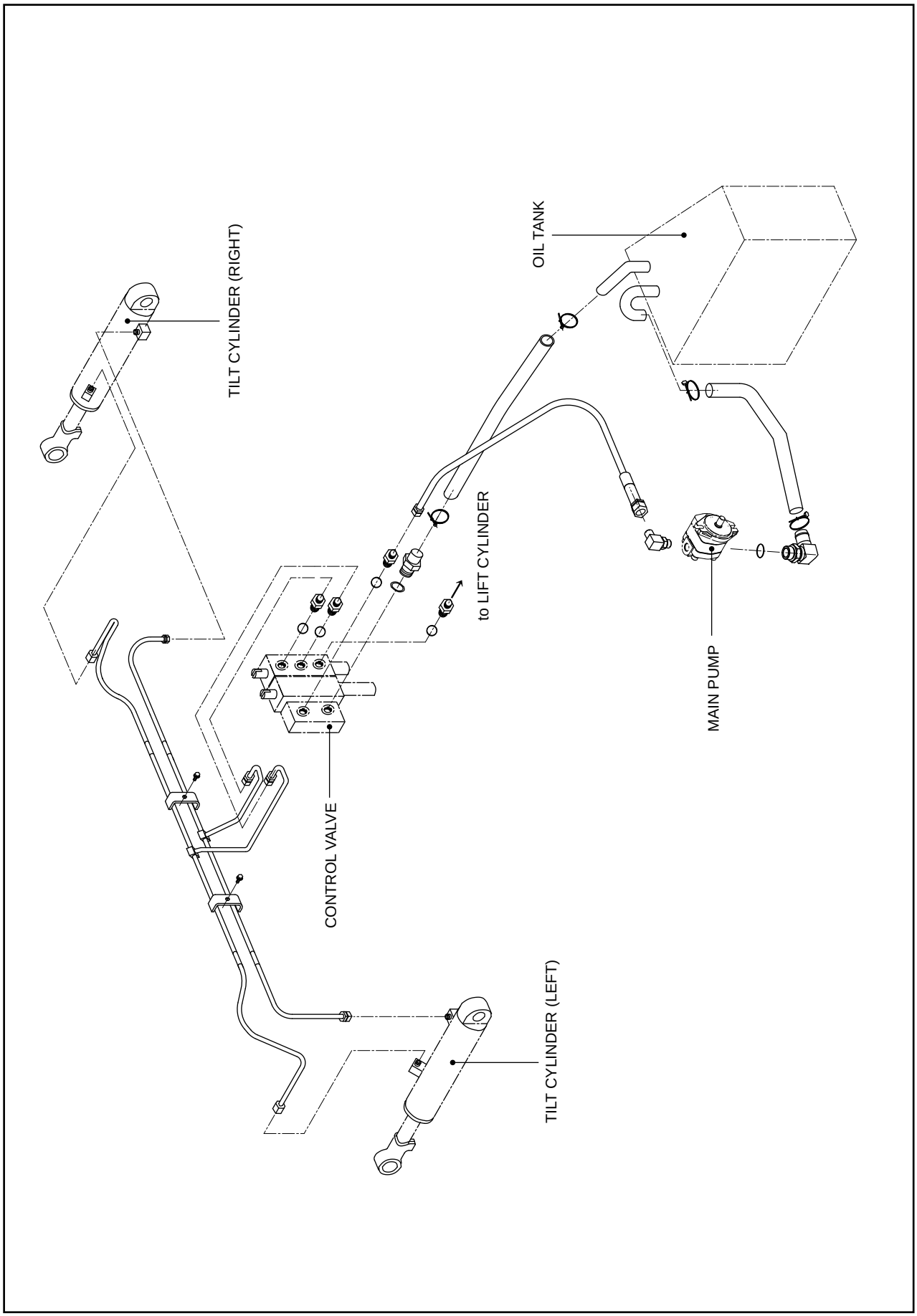

Fig. 7.17 Hydraulic Oil Piping (EPS type)

7.2 MAINTENANCE

7.2.1 MAINTENANCE OF PUMP

■ **Cautions**

1. Before disassembling the pump, check for oil leaks from the oil seal, the mating section of the pump body and cover, and other areas.
2. Remove rust, dust and dirt at the shaft end and the pump body. Failure to do so might damage the parts or allow them to enter the inside of the pump during disassembly, thus misleading your diagnosis about the pump.
3. The pump has some symmetrical parts. Before disassembling the pump, mark the parts in the manner shown in the “disassembly procedure”, to ensure correct reassembly. For this purpose, use oil paint not to damage the parts.
4. Disassembly is a means of finding out the cause of a trouble. Observe the procedure for disassembling the pump.
5. Before disassembly, make sure you get new packings, gaskets, and oil seals.

(1) Disassembly

① Hold the front cover in a vice with the input shaft side downward.

Notes: 1. The bolts will be loosened during disassembly. Make sure to hold the front cover in a vice securely as shown in Figure 7.18, to prevent the pump from the vice when a force is applied on the pump.

2. Mark the rear and front covers and the drive gear side of the pump body with oil paint.

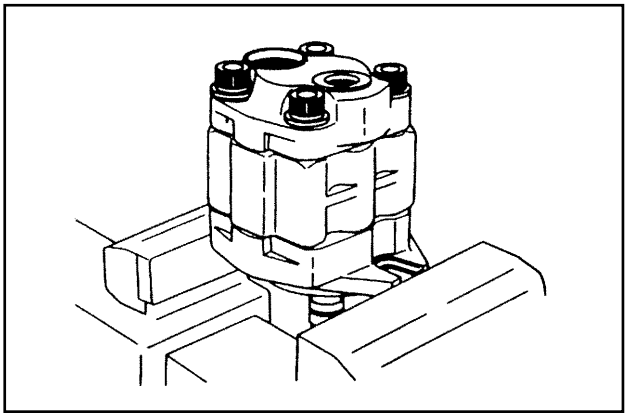

Fig. 7.18

② Turn the four fitting bolts with a torque wrench in the tightening direction, to check whether they are properly tightened to 88.3 to 98 N-m {9 to 10 kgf-m} [782 to 867 lbf-in.].

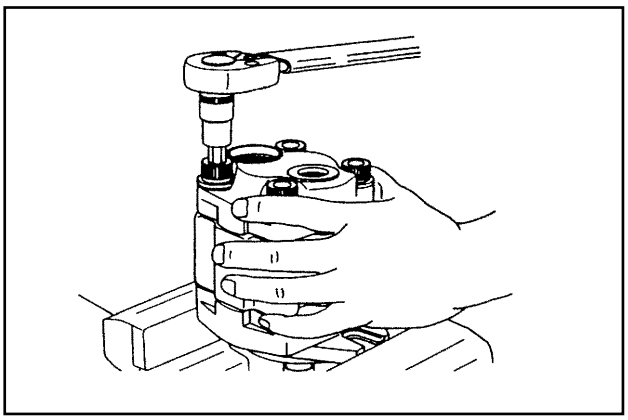

Fig. 7.19

③ Remove the four fitting bolts.

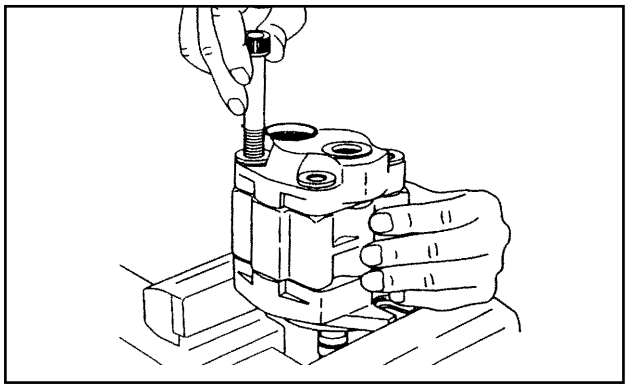

Fig. 7.20

④ Remove the rear cover by tapping the side face of the pump body with a plastic mallet. If the gaskets remain inside the pump body, move them toward the rear cover side.

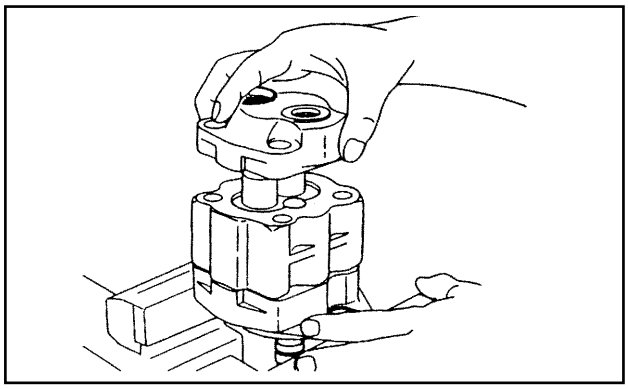

Fig. 7.21

⑤ Remove the pump body. If the gaskets remain inside the pump body, move them toward the front cover side.

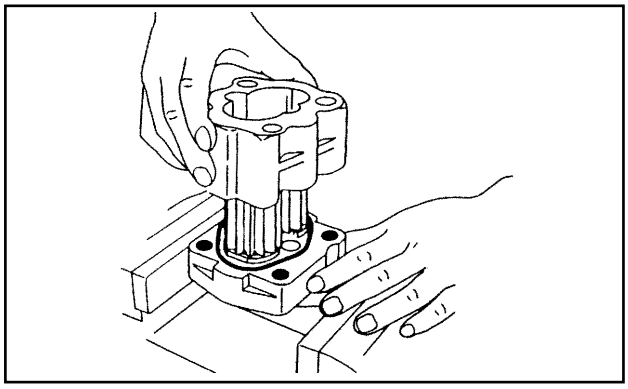

Fig. 7.22

⑥ Put the mark “RV” the rear cover side plate at the drive gear side before removing the side plate.

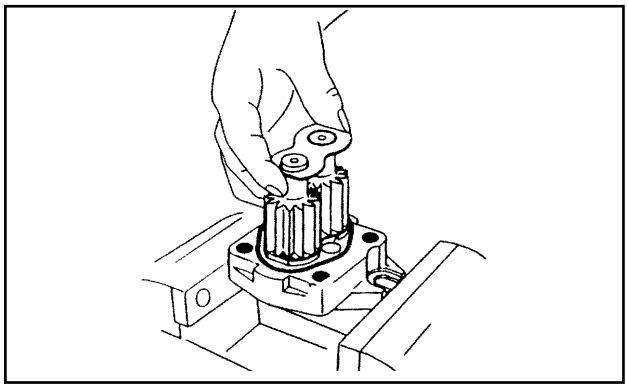

Fig. 7.23

⑦ Put the mark “R” on the driven gear shaft end and remove the drive gear.

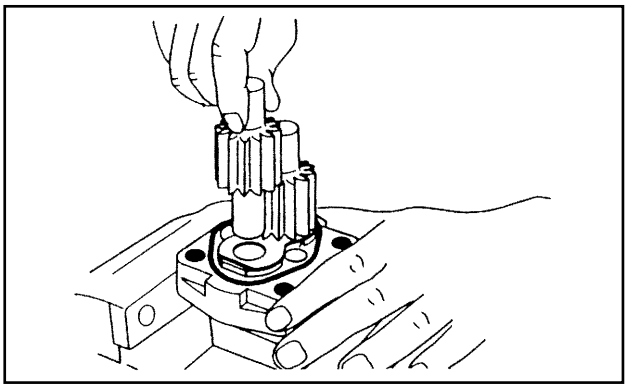

Fig. 7.24

⑧ Holding the front side plate, remove the drive gear.

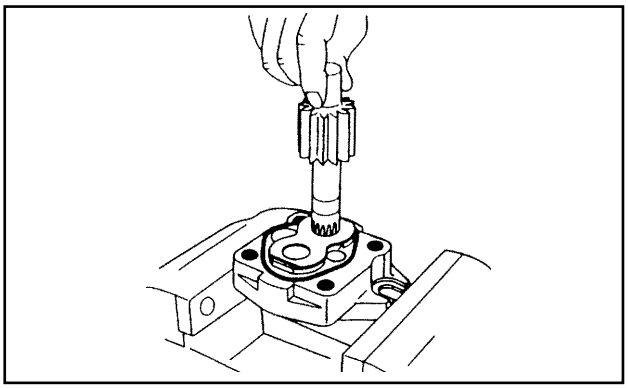

Fig. 7.25

⑨ Put the mark “FV” on the front side plate at the drive gear side, and remove the side plate.

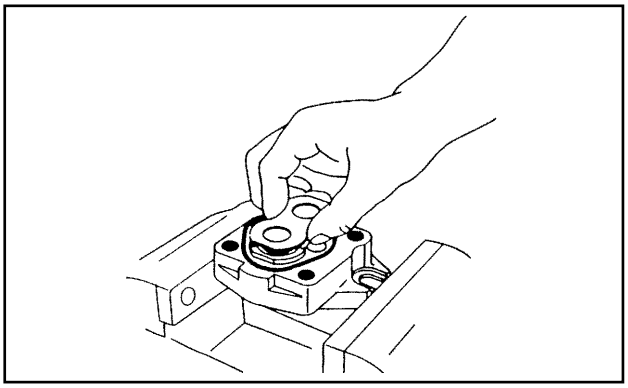

Fig. 7.26

⑩ Turn over the front cover and hold it again in the vice. Remove the snap ring.

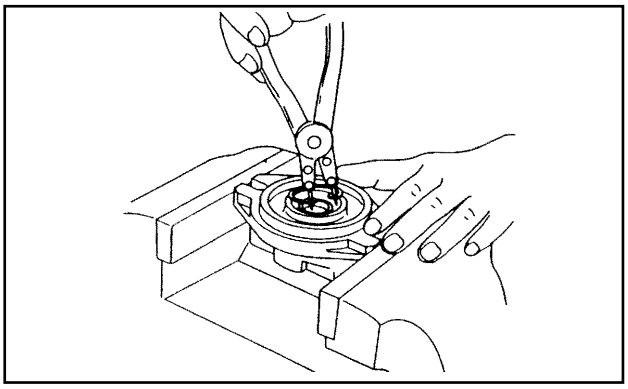

Fig. 7.27

⑪ Remove the oil seal from the front cover.

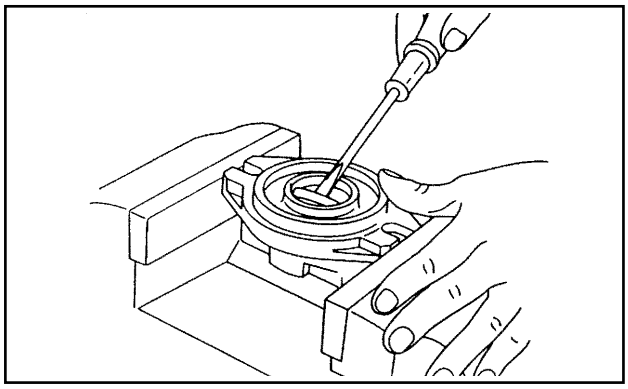

Fig. 7.28

CAUTION

1. **Inspections are carried out to locate the cause of troubles and to determine whether parts are reusable or not. Inspections must be carried out only by personnel with a certain amount of knowledge and experience in hydraulic equipment.**
2. **The "useful limit" shown in this section should be used as a rough guide. We do not always guarantee the performance of a part if it does not reach its useful limit.**

Name of component	Items to be checked	Remarks (cause and others)
① Front cover	(a) Check for cracks or damage.	Oil pressure is too high.
	CAUTION **The mating section between the front cover and the pump body looks black in some parts. This is caused by the friction between aluminum parts and is not a problem.**	
② Pump body (cast iron)	(a) Check for cracks or damage.	Oil pressure is too high.
	(b) Check wipe depth or wipe surface.	Oil pressure is too high.
	Useful limit Wipe depth limit: less than 0.04 mm [0.0016 in]	
	(c) Check for signs of interference with gear at discharge side.	Runout of gears Pump's performance is not affected if there is a sign of interference.
③ Drive and driven gears	(a) Check shaft ends and keyways for cracks, damage or undue wear.	They might occur when gears are runout or insufficiently lubricated, or when oil pressure is too high.
	(b) Check journal (in the area which slides on the bearing) for discoloration, undue wear, or roughness.	Contaminants in oil, too high oil temperature (120°C [248°F] or higher), too frequently idle operations
	CAUTION 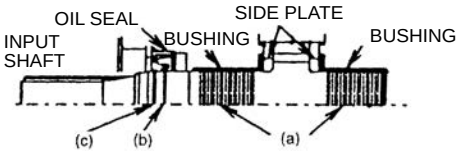 The shaft might have the following scratches or scores on its outer diameter: (a) Those caused by a hard object between the shaft and bushing. (b) Those caused by the oil seal's main lip (c) Those caused by the oil seal's dust lip	
	Useful limit Roughness on journal (a): 0.8S - 1.6S Roughness on oil seals (b and c): 1.6S - 3.2S	

Name of component	Items to be checked	Remarks (cause and others)
(continued from the preceding page)	(c) Check for discoloration, undue wear, or roughness on the gears.	Contaminants in oil, too high oil temperature (120°C [248°F] or higher), too frequently idle operations
	Useful limit 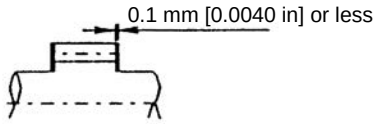 	
	(d) Check gear teeth for roughness or pitching.	Irregular rotation at high speeds
	(e) Check for missing or broken gear teeth	Too high oil pressure or a hard object caught in gear
④ Side plate	(a) Check side plate in the gear sliding area for wear or nicks or scores.	Fine dust between side plate and gears
	(b) Check the gears for erosion at or near the engagement area.	Cavitation or aeration
	Useful limit 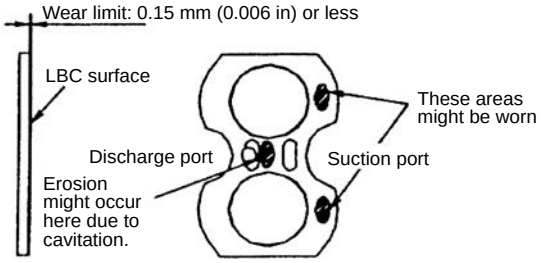 	
⑤ Bushing The bushings are fitted into front and rear covers.	Check the inner surfaces of bushings for roughness or wear.	The bushings are made of copper with the back plate made of lead brass. The back plate consists of porous and PTFE (polytetrafluoro-ethylene) layers.
	Useful limit When the back plate of the bushing is exposed to view.	
⑥ Gasket	(a) Check gaskets for proper installation or cut.	Too high oil temperature
	(b) Check rubber parts for swelling.	Fire retardant hydraulic oil (phosphate) or gasoline is used.
⑦ Oil seal **CAUTION** **The oil seal might be damaged when the drive gear is disassembled or when it is removed from the front cover. It is difficult to locate the cause of damage when removing it from the front cover.**	(a) Check oil seal for round or peeled edge.	Wear occurs due to contaminants in oil, dust which enters oil due to undue external negative pressure, or rust due to moisture.
	(b) Check main lip for warping outward.	Increased internal oil leaks or high oil pressure (0.2 - 0.3 MPa {2 - 3 kgf/cm^2} [28.5 - 42.7 psi] or more) applied on oil seal
	(c) Check rubber parts for swelling.	Fire retardant hydraulic oil (phosphate) or gasoline is used.

(2) Pump reassembly

① As shown in Figure 7.29, hold the front cover in a vice.

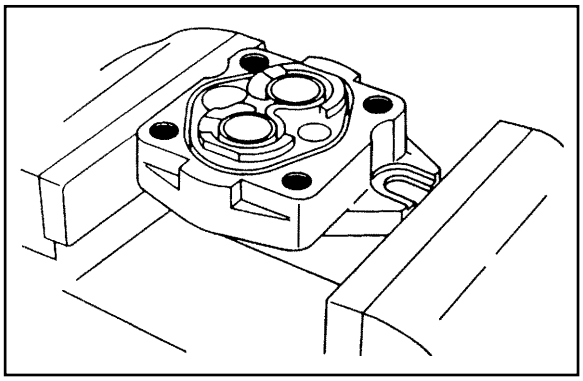

Fig. 7.29

② Install a new gasket in the groove in the front cover.

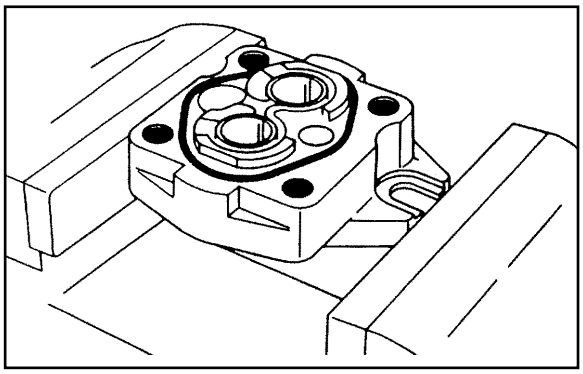

Fig. 7.30

③ Install a new "E" gasket in the groove in the front cover, referring to Figure 7.32.

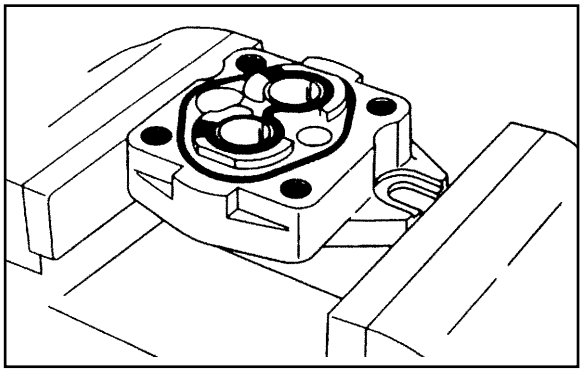

Fig. 7.31

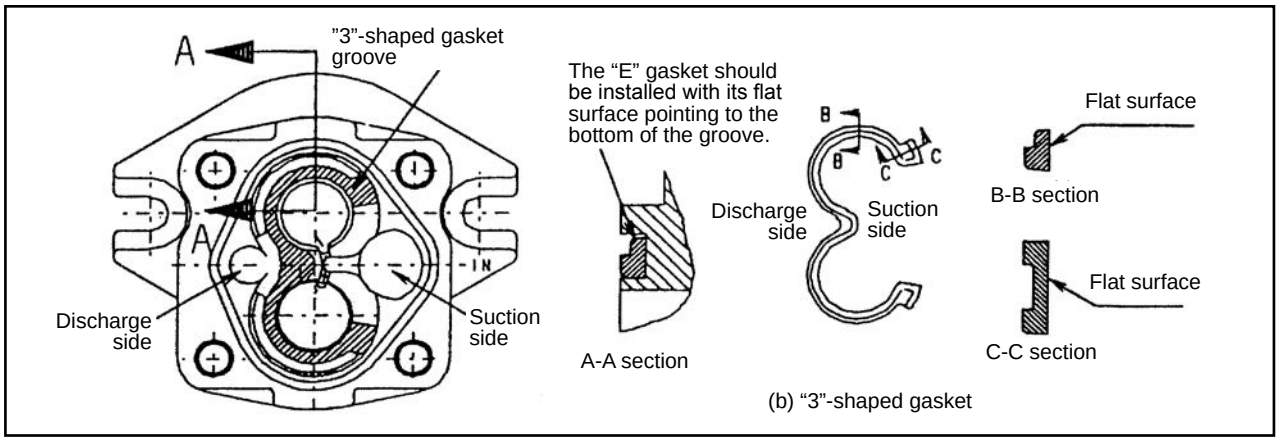

Fig. 7.32 Gasket Installation

④ Install the pump body on the front cover, referring to Figure 7.34.

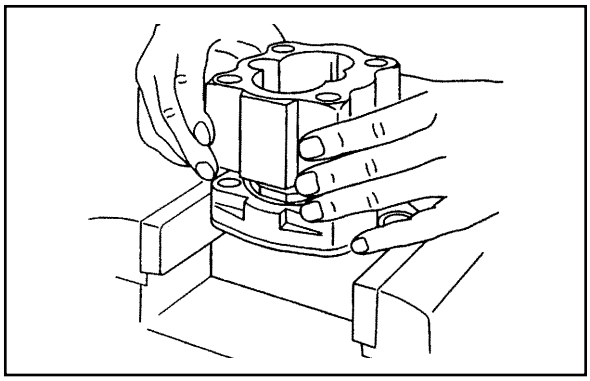

Fig. 7.33

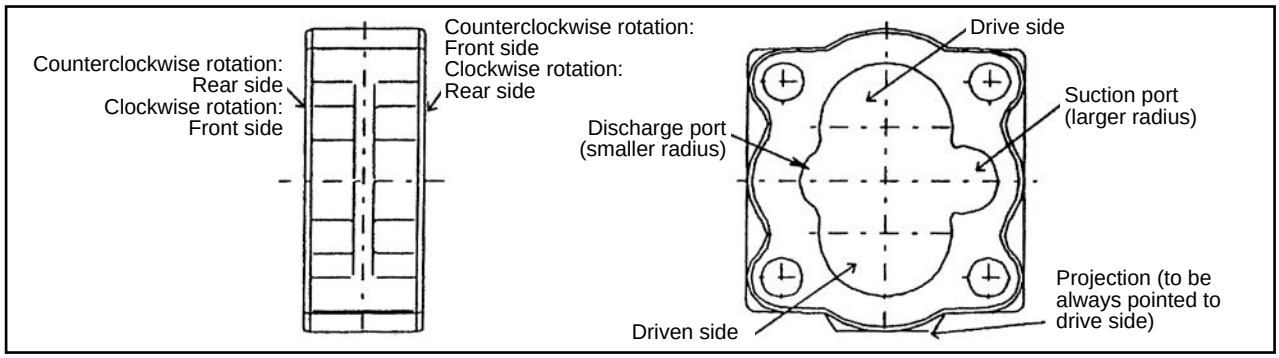

Fig. 7.34

⑤ Install the front side plate on the front cover, referring to Figure 7.36.

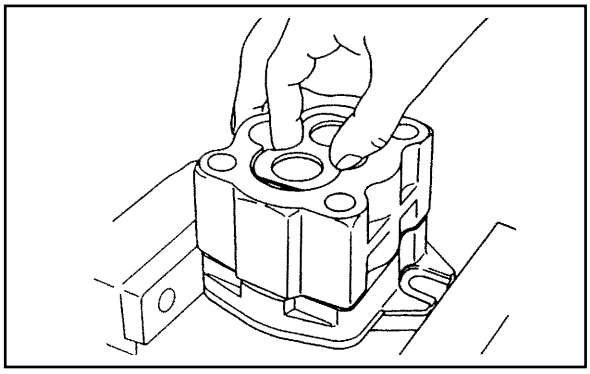

Fig. 7.35

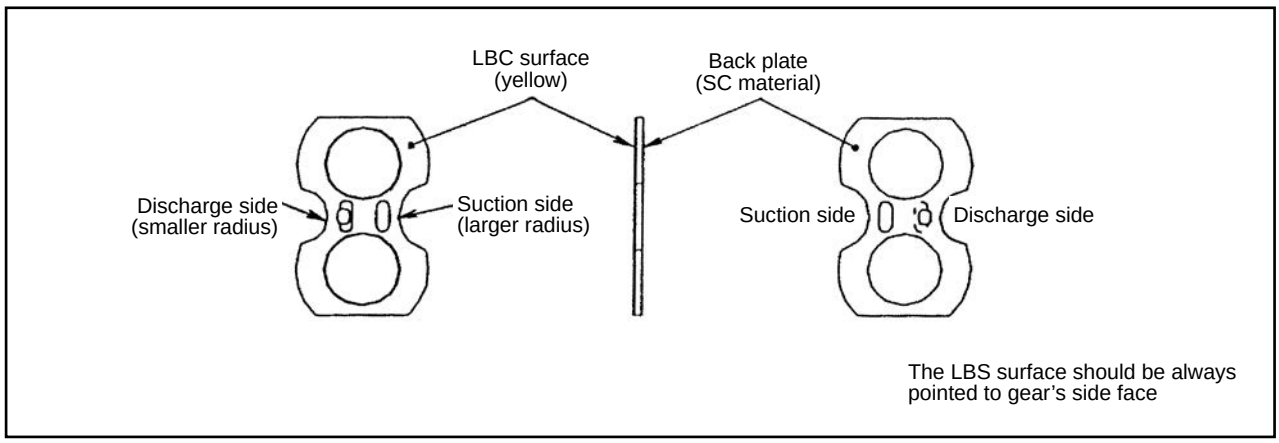

Fig. 7.36

⑥ Install the drive gear in the pump body, with its splines pointed downward.

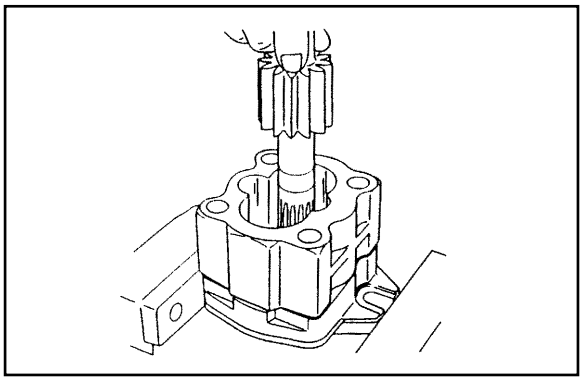

Fig. 7.37

⑦ Install the drive gear in the pump body, as shown in Figure 7.39.

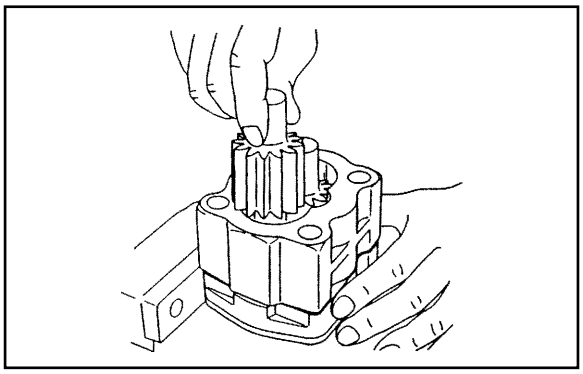

Fig. 7.38

CAUTION

The sketch shows the engagement of the left-rotation pump. Since the tooth profiles of the two gears are asymmetric, install them with their larger pressure angle sides pointed to each other. Failure to do so might damage the gear teeth.

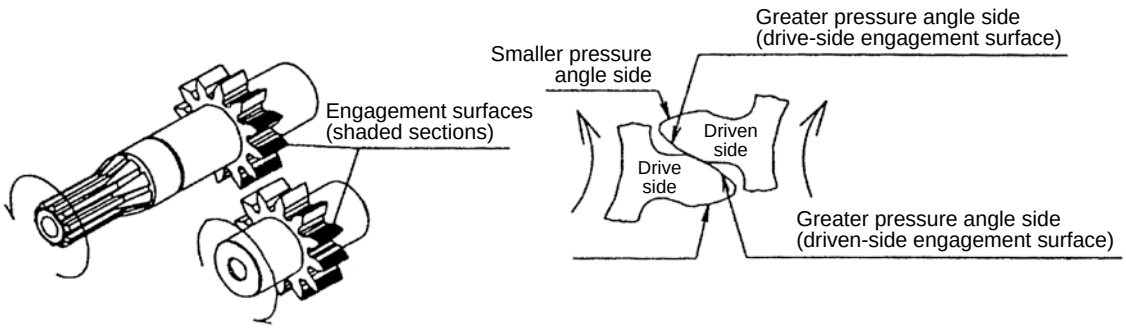

(a) Engagement of 1st pump

Fig. 7.39

⑧ Install the rear side plate in the pump body, as shown in Figure 7.36.

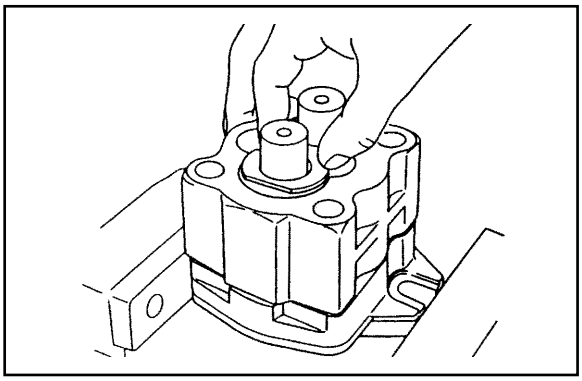

Fig. 7.40

⑨ Apply grease on a new gasket in some points and install the gasket in the rear cover groove.

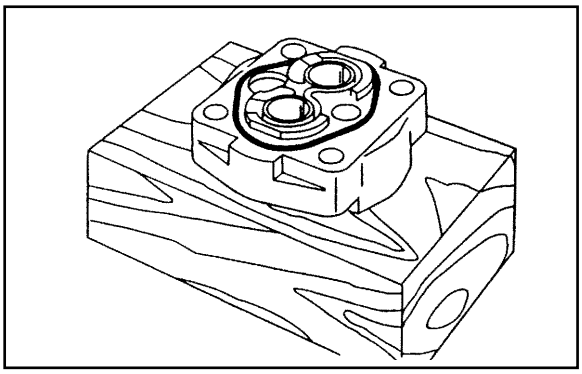

Fig. 7.41

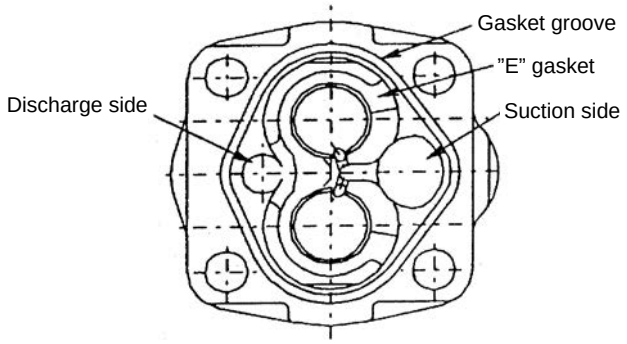

The rear cover is commonly used for the "L" (counterclockwise rotation) type and the "R" (clockwise rotation) type. Align the discharge side with the suction side.

Fig. 7.42

⑩ Install the "3"-shaped gasket in the rear cover, as shown in Figure 7.32.

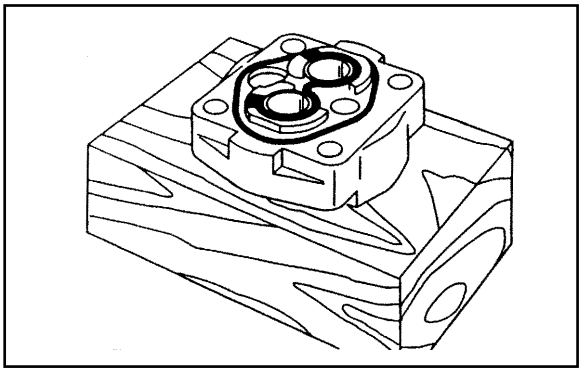

Fig. 7.43

⑪ Install the rear cover in the pump body with its gasket pointed downward.

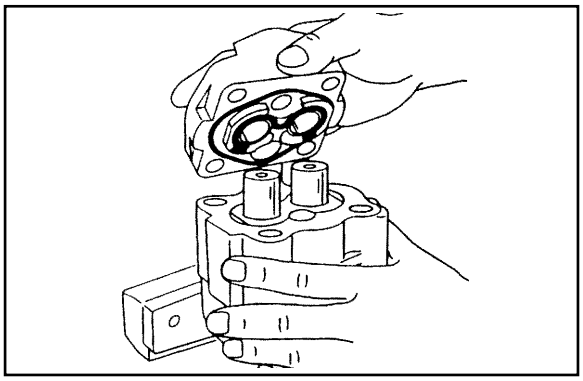

Fig. 7.44

⑫ Install the four bolts and tighten them to the specified torque:
Tightening torque: 88.3 - 98 N-m
{9 - 10 kgf-m}
[782 - 867 lbf-in.]

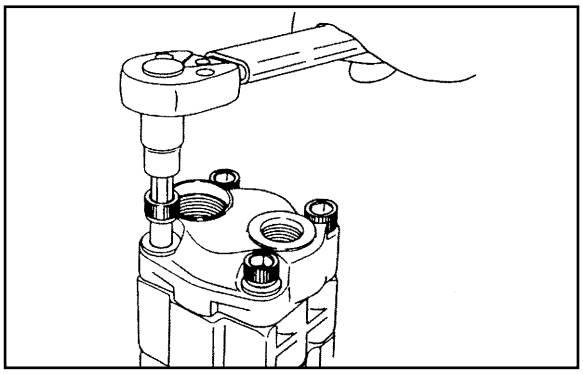

Fig. 7.45

⑬ Remove the pump from the vice and put it on a work bench.
Apply grease on the area between the lips and on the outer diameter of a new oil seal. Install it on the oil seal guide shown in Figure 7.51. Put it on the drive shaft of the pump, and install the oil seal onto the front cover with an oil seal snap.

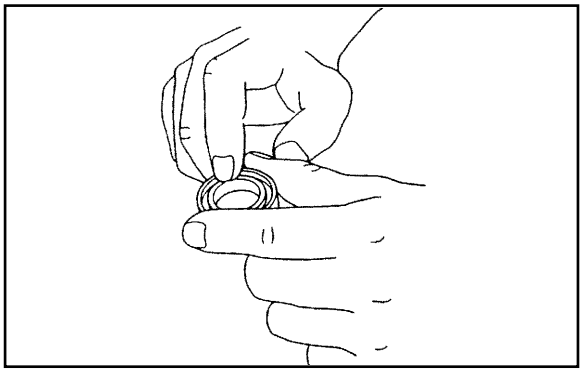

Fig. 7.46

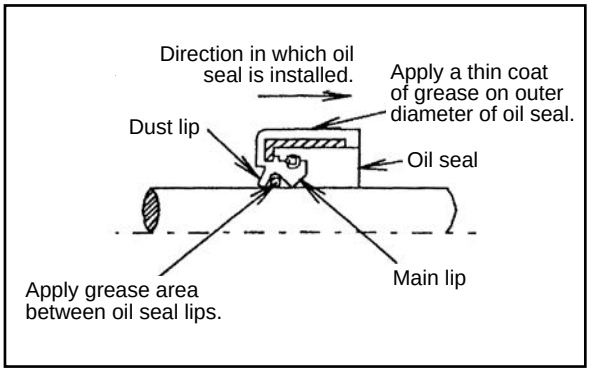

Fig. 7.47

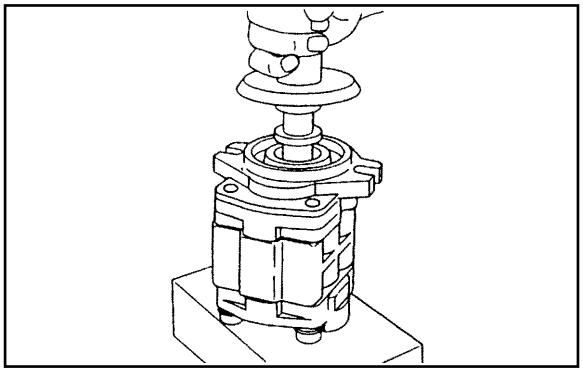

Fig. 7.48

⑭ Secure the oil seal with a snap ring and remove the oil seal guide.

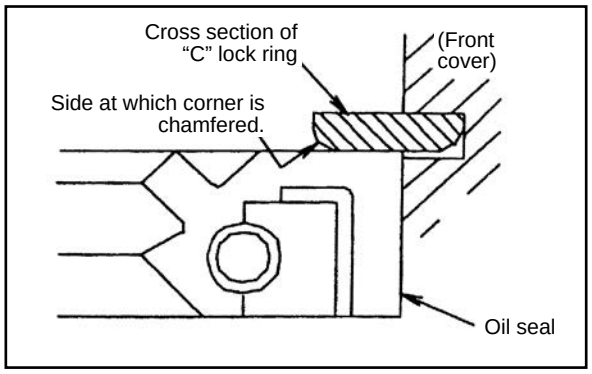

Fig. 7.49

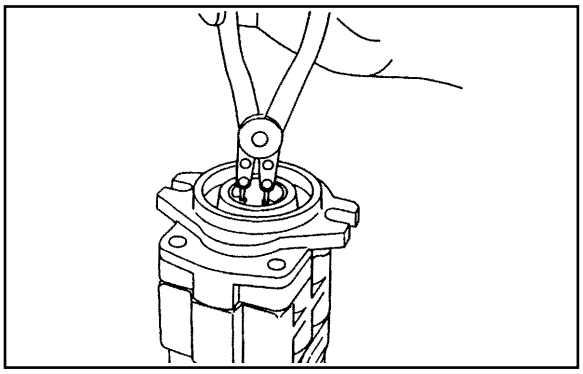

Fig. 7.50

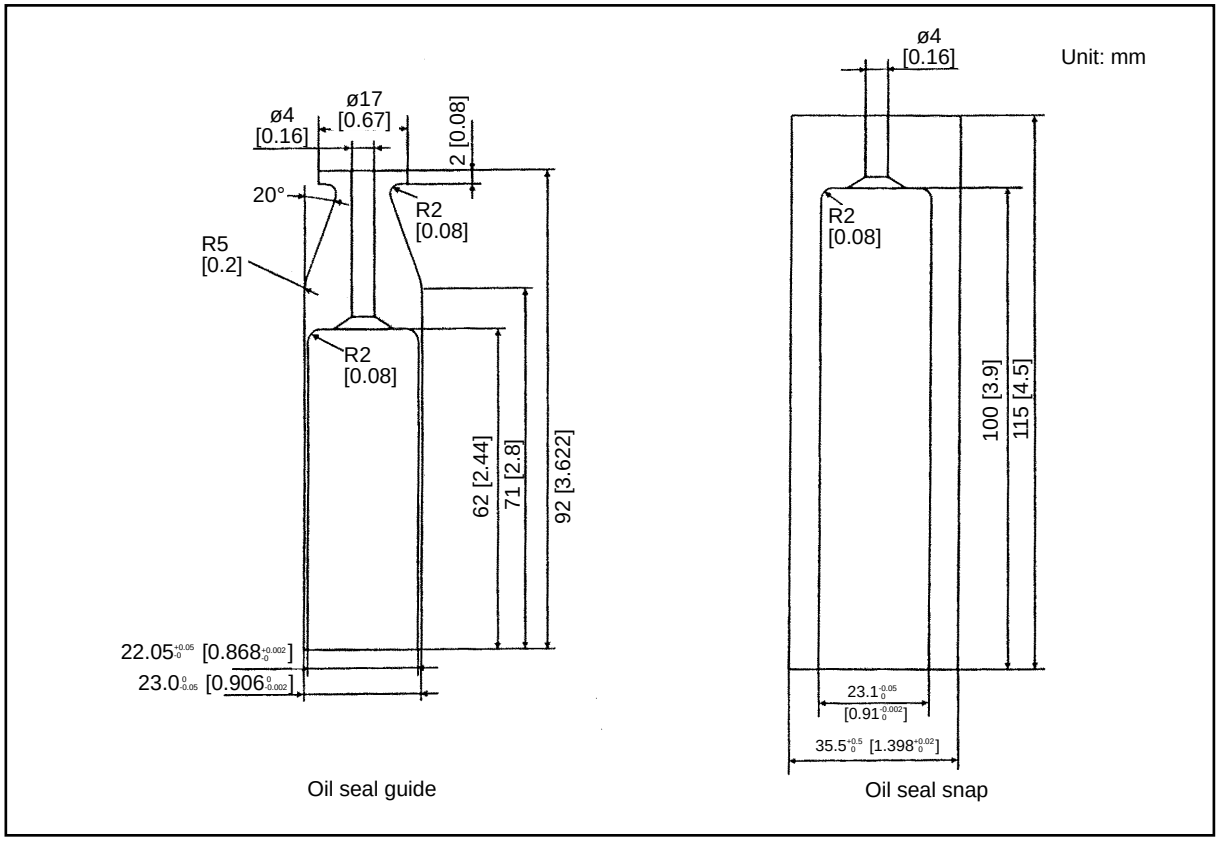

Fig. 7.51

7.2.2 TRIAL RUN

Trial runs should be performed to run in an assembled pump and to ensure that it delivers the specified performance. Trial runs are preferably carried on a special test stand, but may be carried out with the pump on the machine using the following manner:

(If the pump were disassembled because of a seized pump or an abnormally worn internal component, be sure to change the hydraulic oil and replace the filters with new ones before trying to make a trial run.)

(a) Install the pump on the truck. Install a pressure gauge on the oil pressure check port of the control valve.

(b) Loosen the relief valve adjustment screw and operate the pump at 500 to 1000 rpm for about 10 minutes. Make sure the pressure is less than 0.98 MPa {10 kgf/cm^2} [142 psi].

(c) Increase the pump speed to 1500 to 2000 rpm and let the pump operate for about 10 minutes.

(d) Keeping the pump speed at 1500 to 2000 rpm, increase the pressure by 2 - 3 MPa {20 to 30 kgf/cm^2} [284 to 427 psi] up to 17.2 MPa {175 kgf/cm^2} [2489 psi], letting the pump operate at each pressure for about 5 minutes. Operate each circuit for 5 minutes and replace the return filter with a new one.

While increasing the pressure, check the oil temperature and pump surface temperature. Check also for operating noise. If the oil temperature or pump surface temperature rises excessively, reduce the load and drop the temperature before continuing the test.

(e) After the test is over, set the oil pressure for 17.2 MPa {175 kgf/cm^2} [2489 psi], perform a discharge test. The pump discharge is checked by observing the lift speed.

7.2.3 TROUBLESHOOTING GUIDE

If any problem occurs in the hydraulic system, locate the cause of the problem and take necessary measures, referring to the tables given below.

(1) Control valve

Problem	Cause	Remedy
The control flow is not a specified value.	Relief valve malfunctioning	Readjust.
Noisy control valve	Relief valve malfunctioning	Readjust.
Oil leaks (external)	“O”-ring deteriorated or damaged	Replace “O”-ring.
Low pressure setting	Spring defective Set surface defective	Replace spring. Readjust. Replace relief valve.
Oil leaks (internal)	Seat surface damaged	Correct seat surface.
Noisy control valve	Sliding area too worn	Replace relief valve.
Pressure setting rises	Poppet stuck.	Disassemble and clean.

(2) Main pump

Problem	Cause	Remedy
No oil discharged from gear pump	Low oil level in oil tank	Add oil to specified level.
	Clogged suction tube or strainer	Clean or change oil if necessary.
Gear pump pressure won’t rise	• Worn pressure plate • Worn bearing • Defective plate seal, bushing seal or back-up	Replace with new one
	Maladjusted relief valve	Adjust relief valve setting with a pressure gauge.
	Air being sucked	• Retighten suction side piping connections. • Add oil into oil tank. • Check pump oil seal.
Noisy gear pump	Collapsed suction hose or clogged strainer causes cavitation	Check hose or service strainer.
	Air being sucked due to a loose suction side joint	Retighten a loose joint.
	Too viscous oil causes cavitation	Change to oil of proper viscosity Operate pump at proper temperature.
	Air bubbles in oil	Find the cause of air bubbles and take necessary measures.
Oil leaks from pump	Defective pump oil seal or plate seal	Replace with new ones.
	Defective pump	Replace pump with a new one.

8. LOAD HANDLING SYSTEM

Truck model / Item	FB10-8 FB15-8 FB18-8	FB20-8 FB25-8	FB25-8LB FB25-8V	F30-8 FB30-8V	FB35-8S
Name	VM-7P1	VM-7P4	VM-7P5	VM-7P7	VM-7P9
Type	Roller type 2-step telescopic mast with free lift				
Max. standard lifting height	3000 mm [118.1 in.]	←		←	←
Fork lifting system	Hydraulic	←		←	←
Mast tilting system	Hydraulic	←		←	←
Lift chain	Leaf chain BL534	Leaf chain BL634		Leaf chain BL823	Leaf chain BL834
Mast cross section					
Outer mast 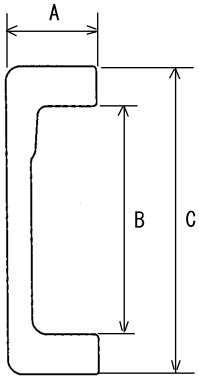	A: 44 mm [1.73 in.] B: 102.5 mm [4.04 in.] C: 134.5 mm [5.30 in.]	A: 48 mm [1.89 in.] B: 119.5 mm [4.71 in.] C: 161.5 mm [6.36 in.]		← ← ←	A: 60 mm [2.36 in.] B: 124 mm [4.88 in.] C: 170 mm [6.69 in.]
Inner mast 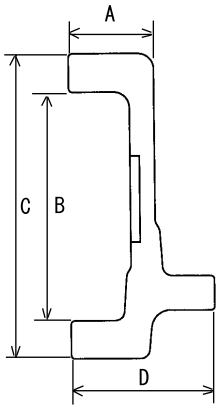	A: 43 mm [1.69 in.] B: 102.5 mm [4.04 in.] C: 134.5 mm [5.30 in.] D: 72 mm [2.83 in.]	A: 45 mm [1.77 in.] B: 119.5 mm [4.71 in.] C: 159.5 mm [6.28 in.] D: 76 mm [2.99 in.]		← ← ← ←	← ← ← ←

8.1 GENERAL DESCRIPTION

The load handling system is of roller type having a two-staged telescopic mast. It consists of an outer channel, inner channel, and carriage.

8.1.1 OUTER AND INNER CHANNELS

Outer and inner channels are of welded construction. The lower part of the outer channel is provided with a support to be used for installing the mast assembly on the drive axle.

The center of the outer channel is supported by the frame via the tilt cylinders. The mast assembly tilts forward and rearward by expanding and contracting the tilt cylinders.

At the inner channel, the end roller is installed on the lower outside. At the outer channel, it is installed on the upper inside through shims.

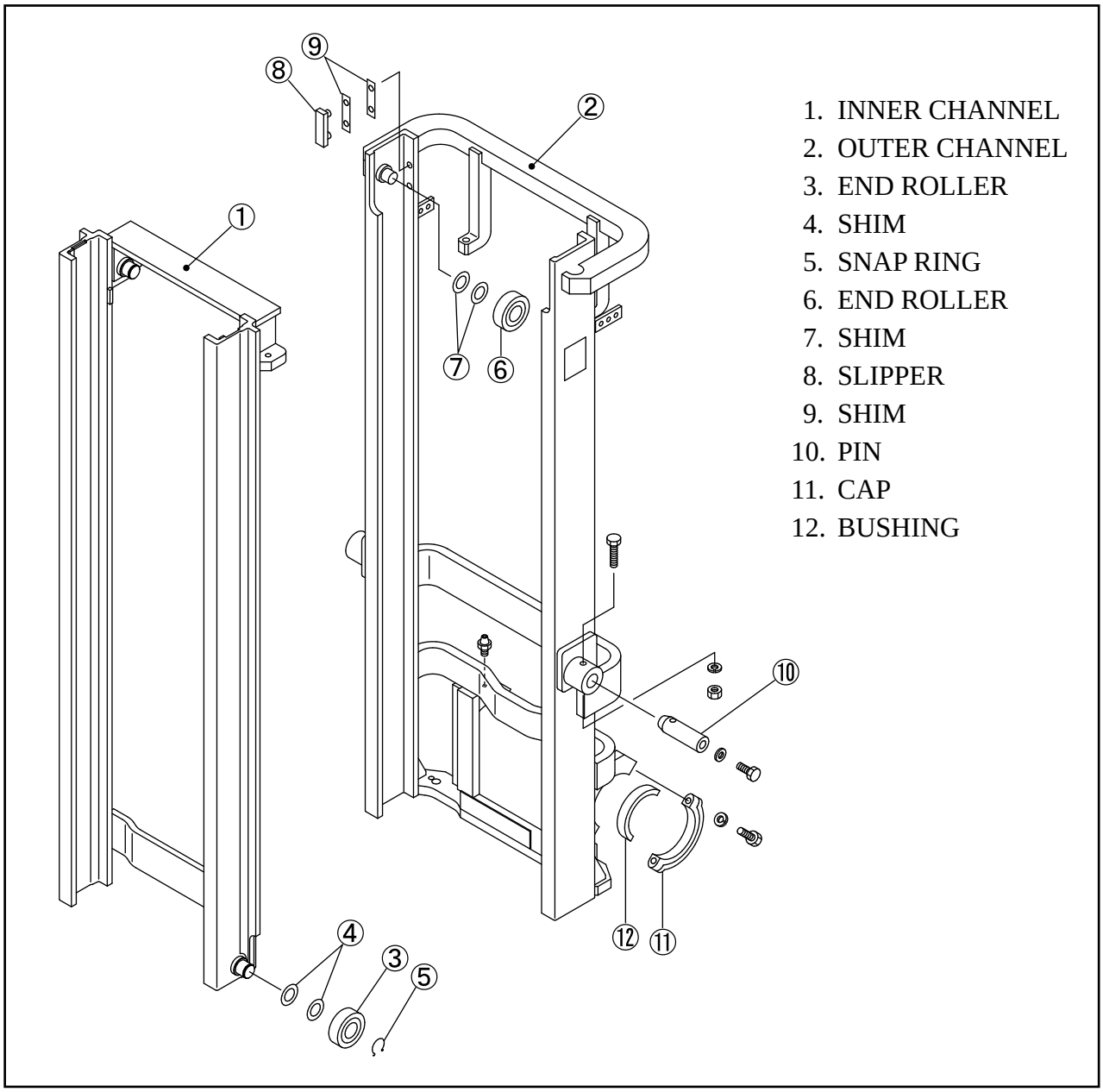

Fig. 8.1 Outer and Inner Channels (VM-7P1)

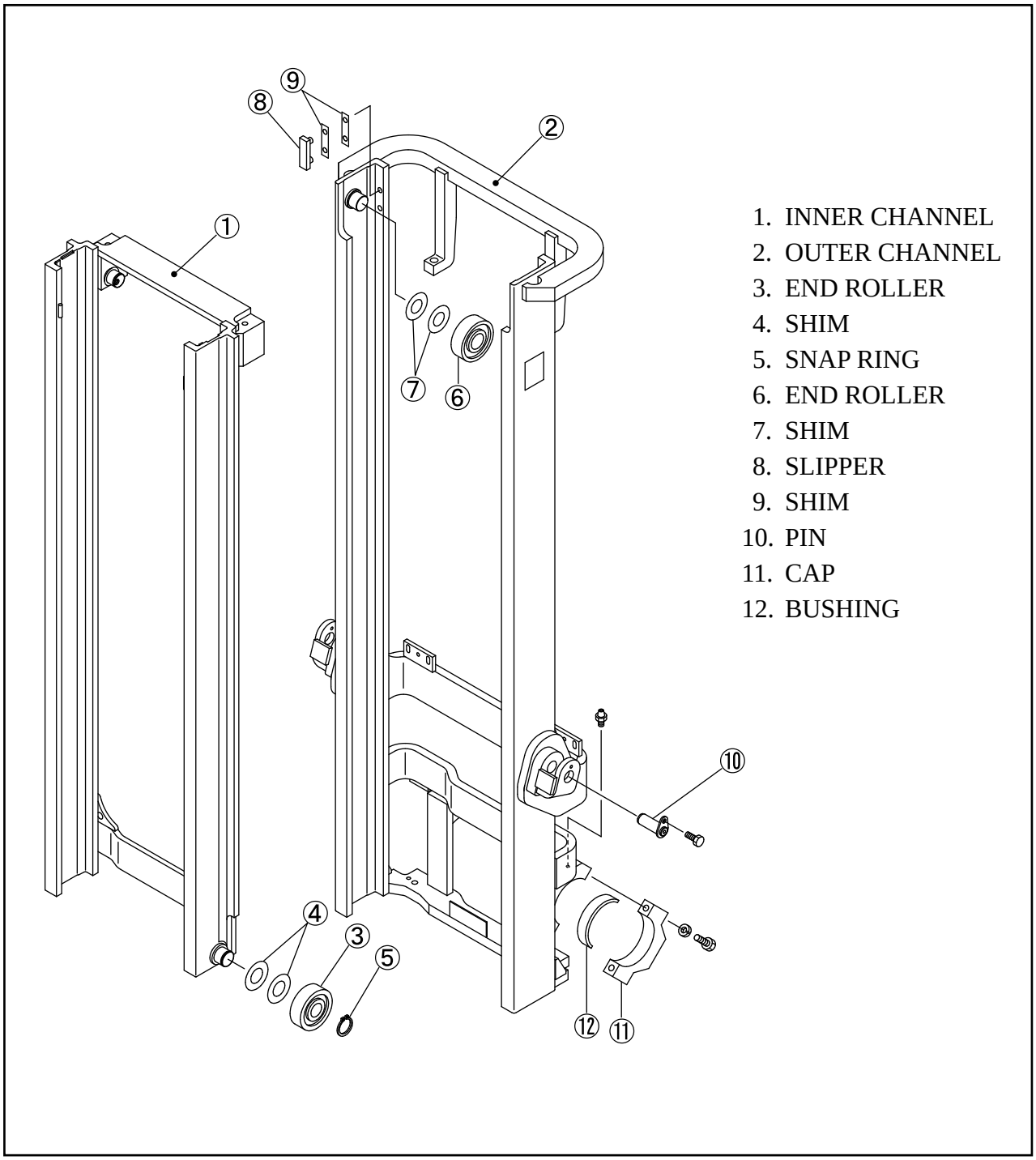

Fig. 8.2 Outer and Inner Channels (VM-7P4, VM-7P7, VM-7P9)

8.1.2 CARRIAGE

The carriage has end rollers that roll along the inside of the inner channel, each installed on the end roller shaft by bearings. The end roller shafts are welded to the carriage. The upper end rollers are shim-adjusted while the lower end rollers are secured to the shafts with snap rings.

Longitudinal load is sustained by the end rollers. When the forks are raised to the maximum height, the upper end rollers emerge from the mast top. Transverse load is sustained by the lower side-rollers.

1. FORK
2. CARRIAGE
3. END ROLLER
4. SHIM
5. SNAP RING
6. SIDE ROLLER
7. SHIM
8. SPACER

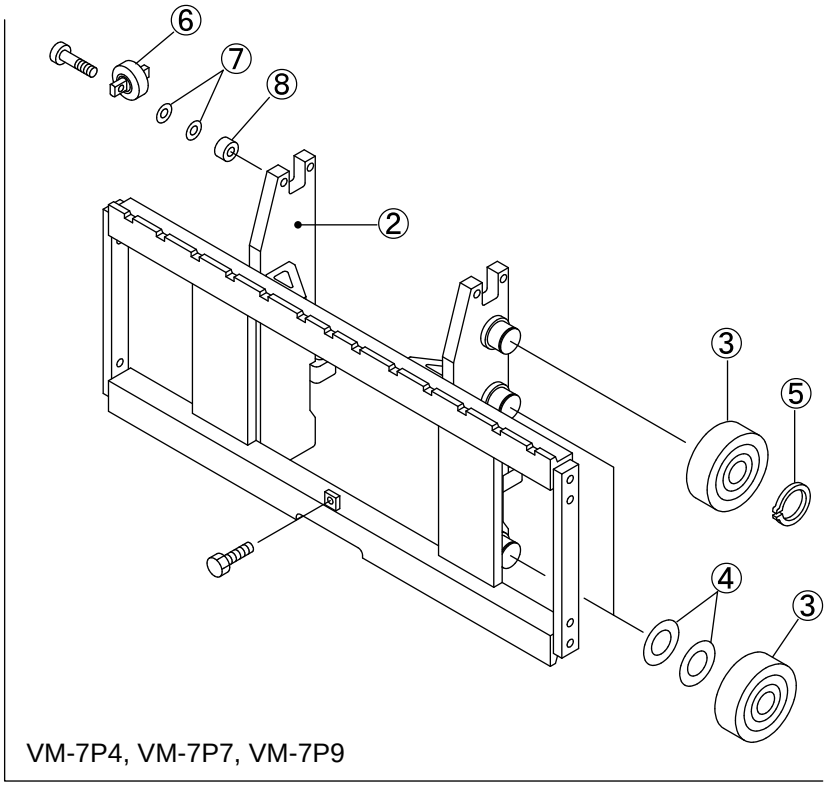

VM-7P1

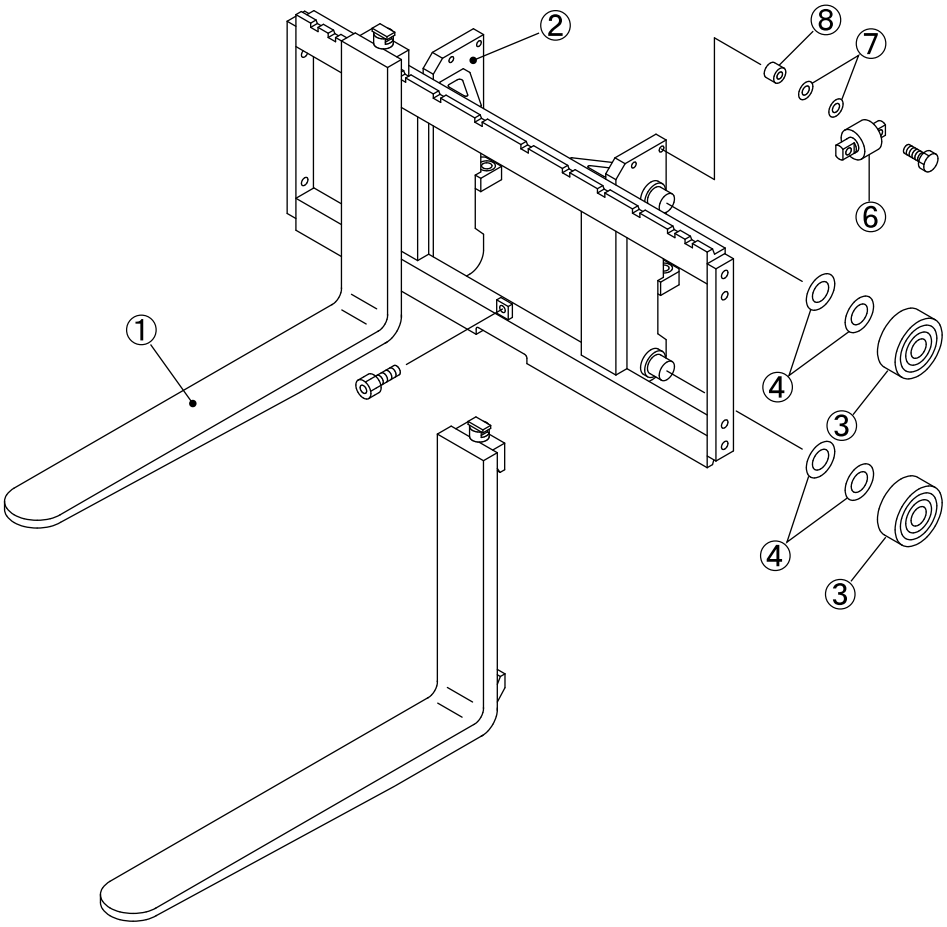

Fig. 8.3 Carriage

8.1.3 LOCATIONS OF ROLLERS

End and side rollers are installed on the carriage.

The end rollers support longitudinal load and the side rollers support lateral load so that the inner channel and carriage are raised and lowered smoothly.

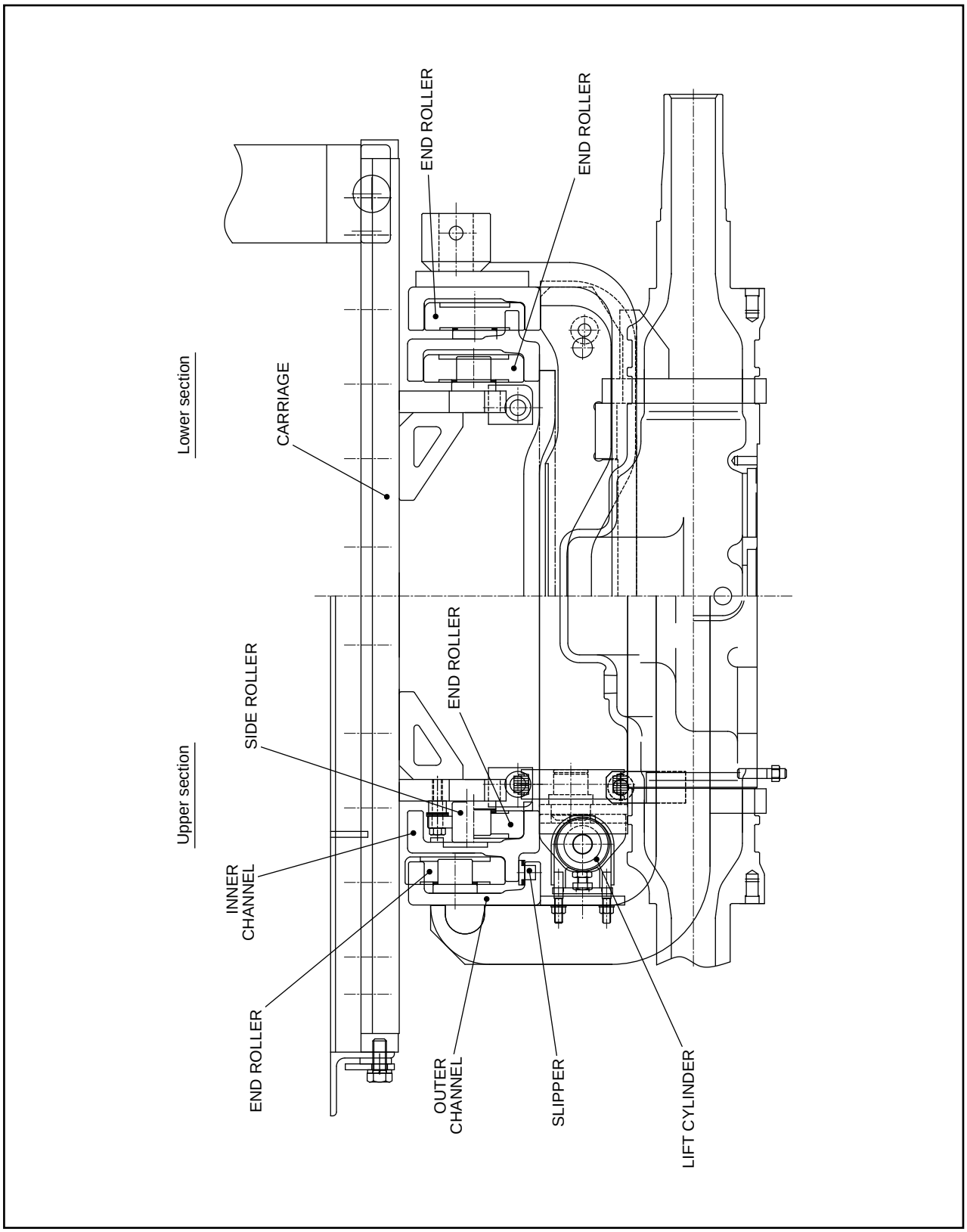

Fig. 8.4 Locations of Rollers (1- to 1.8-ton Trucks)

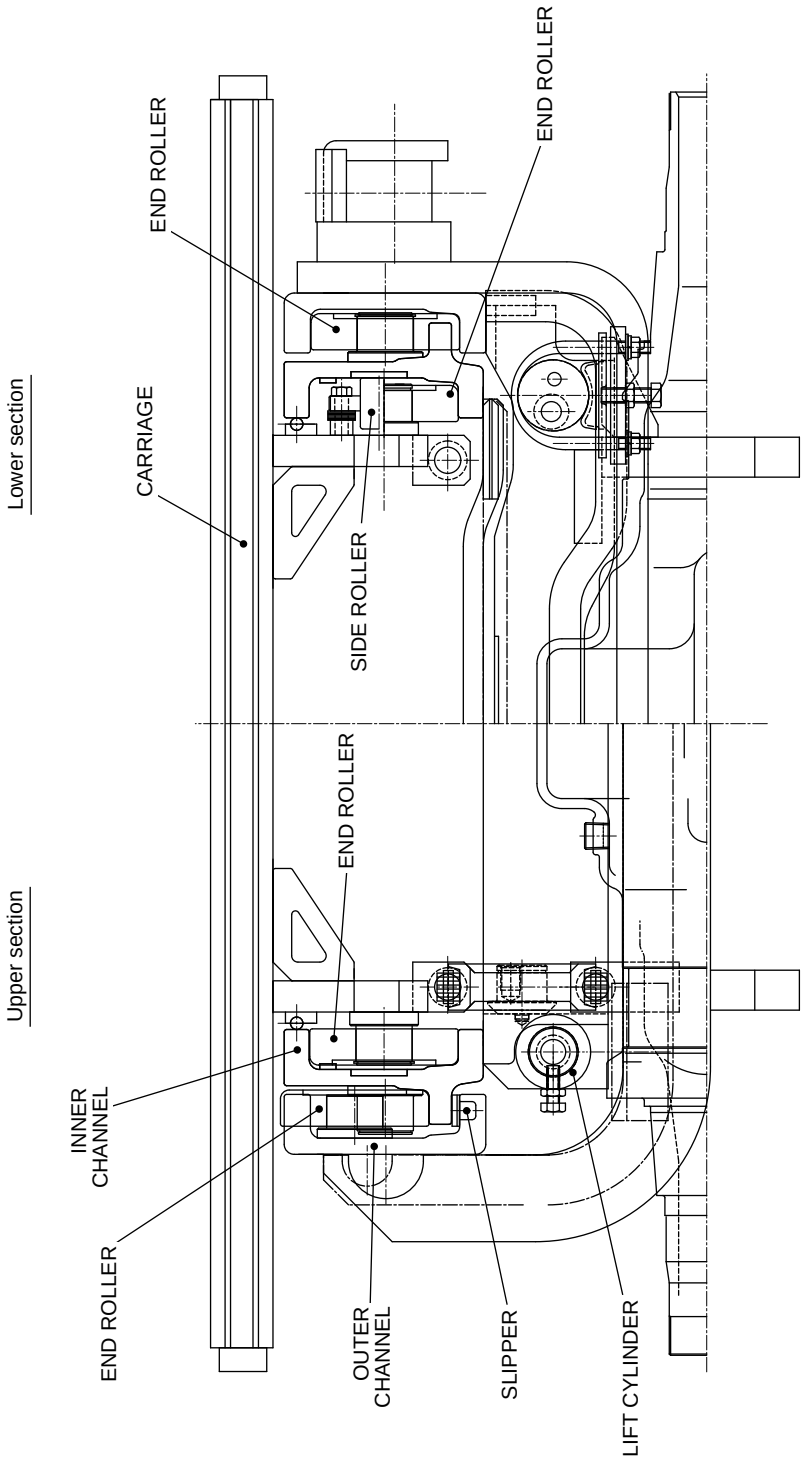

Fig. 8.5 Locations of Rollers (2- to 3.0-ton Trucks)

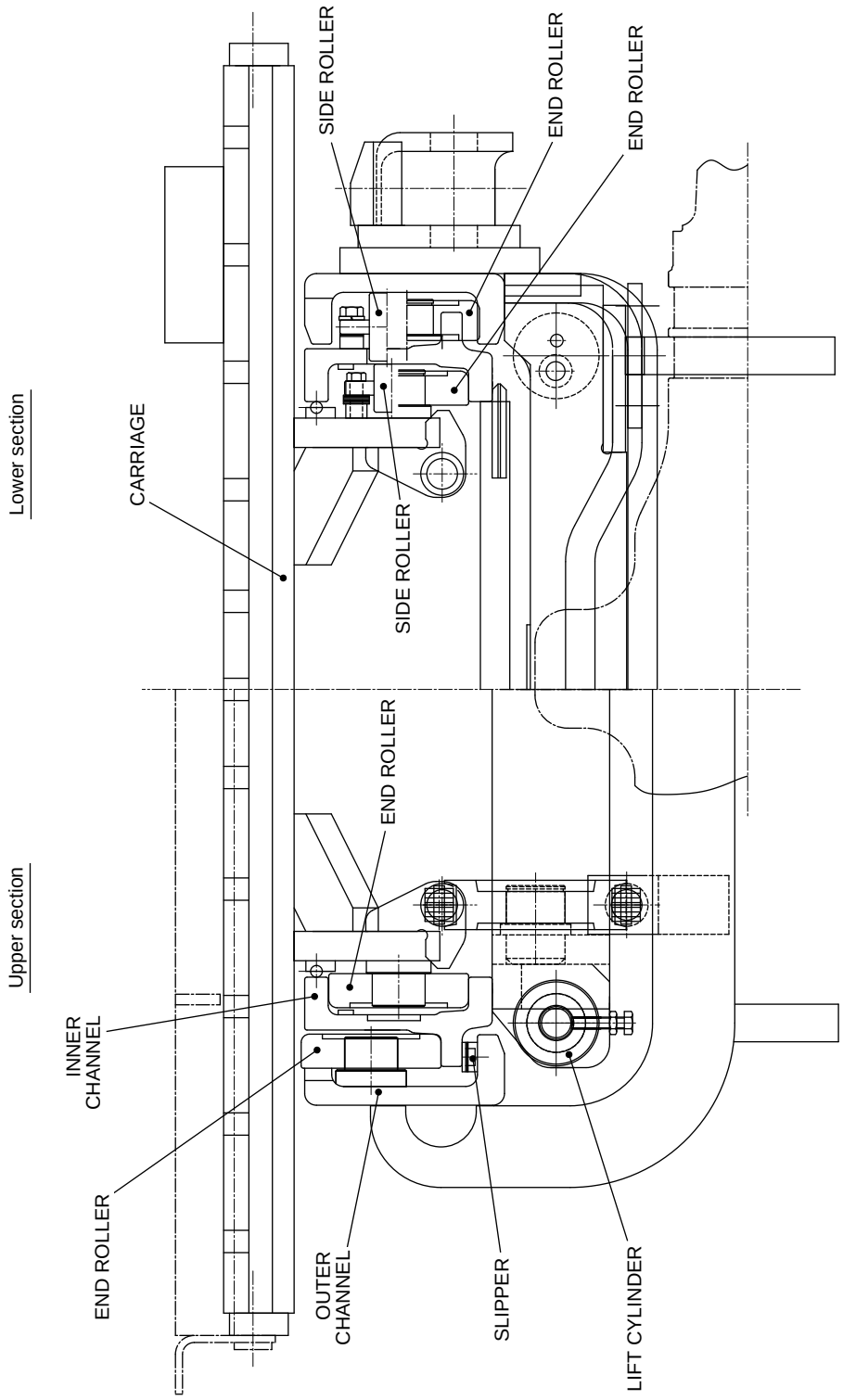

Fig. 8.6 Locations of Rollers (3.5-ton Trucks)

8.2 MAINTENANCE

8.2.1 ADJUST LIFT CYLINDER ROD WITH SHIMS

After the lift cylinders, inner channel, or outer channel is replaced, the lift cylinder rod length needs to be adjusted.

(1) Install a piston head on the rod of each lift cylinder without using shims.
(2) Extend the rod of each lift cylinder slowly and examine the difference in the rod stopping time when the rod reaches the stroke end between the two lift cylinders.
(3) Add shims to the space between the rod and piston head of the lift cylinder whose rod stops first.
Shim thickness: 0.2 and 0.5 mm
[0.0079 and 0.0197 in.]
(4) Adjust the lift chain tension.

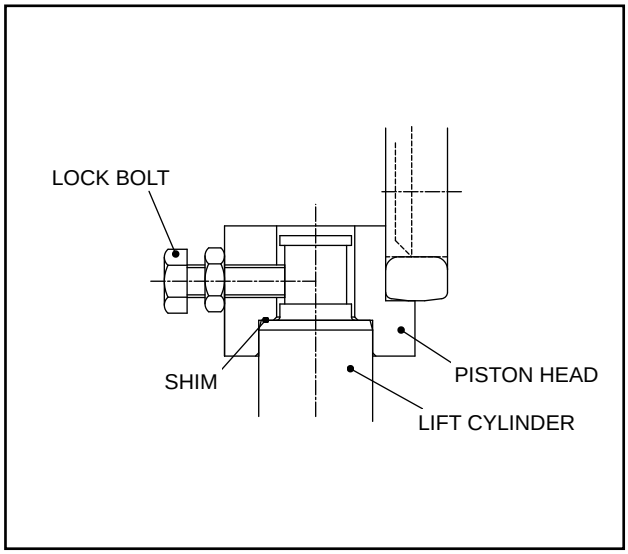

Fig. 8.7

8.2.2 ADJUSTING HEIGHT OF CARRIAGE

(1) Stop the truck on a level surface and put the mast vertically.
(2) Keep the fork bottom on the ground and adjust the projected amount A of the carriage lower end roller to the value as shown in Table 8.1, using the chain anchor pin at the mast side.

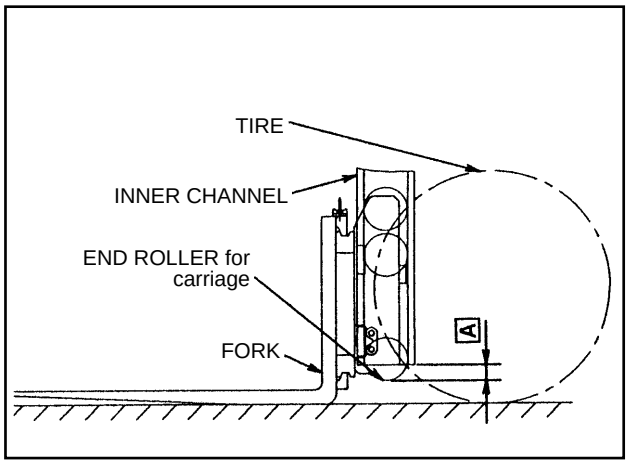

Fig. 8.8

Table 8.1

Model	Mast Type	A (mm [in.])
1 – 1.8 t	VM-7P1	36 – 41 [1.42 – 1.61]
2 – 2.5 t	VM-7P4	24 – 29 [0.94 – 1.14]
3.0 t	VM-7P7	44 – 49 [1.73 – 1.93]
3.5 t	VM-7P9	37 – 42 [1.46 – 1.65]

(3) Make sure that the clearance between the carriage and the inner channel stoppers is 0 mm when the fork is raised to the maximum lifting height

Note 1: When the mast lifting height is over 4000 mm [157.5 in.], the dimension B is +50 mm [1.97 in.].

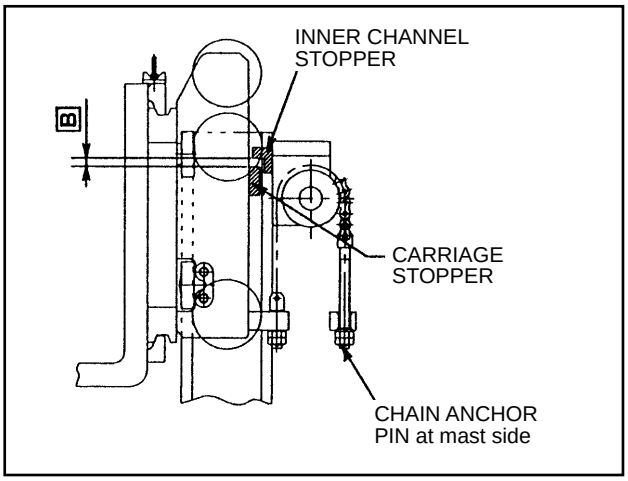

Fig. 8.9

(4) Adjust the tension of the right and left chains to the same value with the chain anchor pin at the mast side when the fork is at the bottom position and the mast is tilted back all the way.

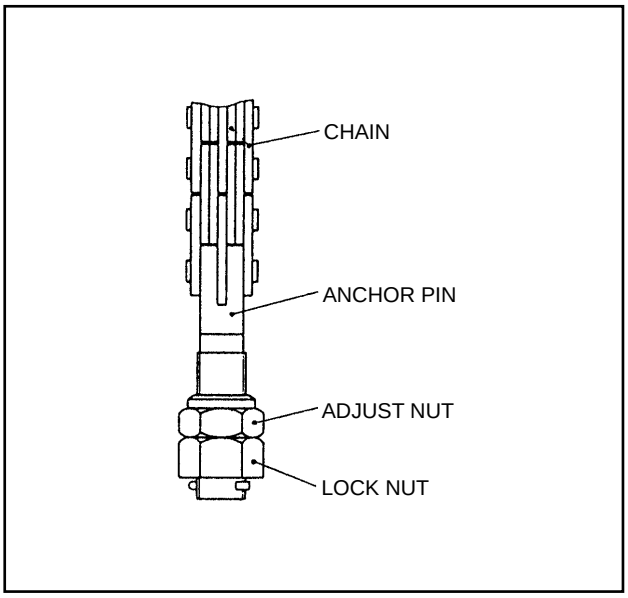

Fig. 8.10

8.2.3 PROCEDURE FOR REPLACING ROLLERS AT CARRIAGE SIDE

(1) Put a pallet to the fork and stop the truck on a level surface.
(2) Lower the forks with the pallet to the ground.
(3) Remove the joint link of the mast side anchor pin and remove the chain from the sheave.
(4) Extent the lift cylinder rods to raise the inner channel. (See ① in Figure 8.11.)
(5) Move the truck backwards after making sure that the carriage is removed from the inner channel. (See ② in Figure 8.11.)

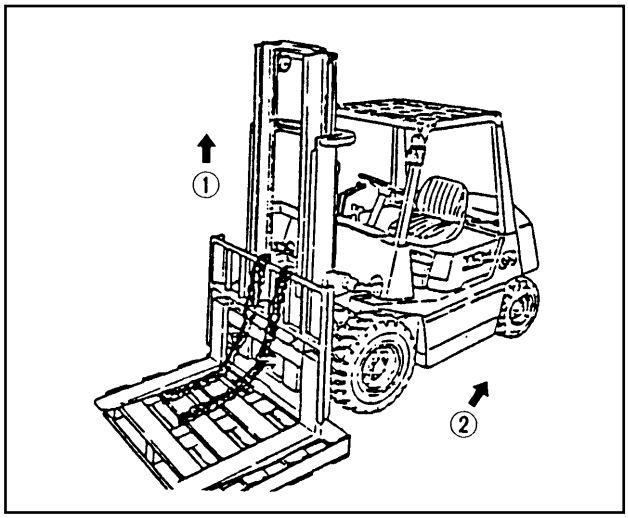

Fig. 8.11

(6) Replacing end rollers
① Remove the lower end rollers with a puller, keeping the shims.
② Install new end rollers with the shims removed in step ① . Check the stamp of S or SS and install the roller which is marked the same stamp, pointing the stamp side to the carriage side.
③ Remove the snap ring and remove the upper end rollers with a puller.
④ Install new end rollers and secure them with snap rings.

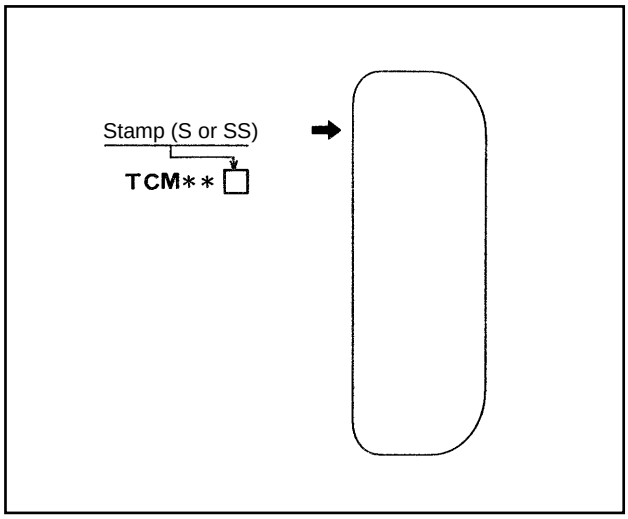

Fig. 8.12

(7) Replacing side rollers
① Remove the side roller assembly. Keep the numbers of the shims and their combination as they were.
② Install a new roller with the shims removed in step ① , pointing the groove for the balls to the shim side. (See Figure 8.14.)
③ If there is excessive looseness between the side roller and inner channel, add the shims between the end roller and side roller, seeing “8.2.5 PROCEDURE FOR ADDING OR SUBTRACTING SHIMS”.

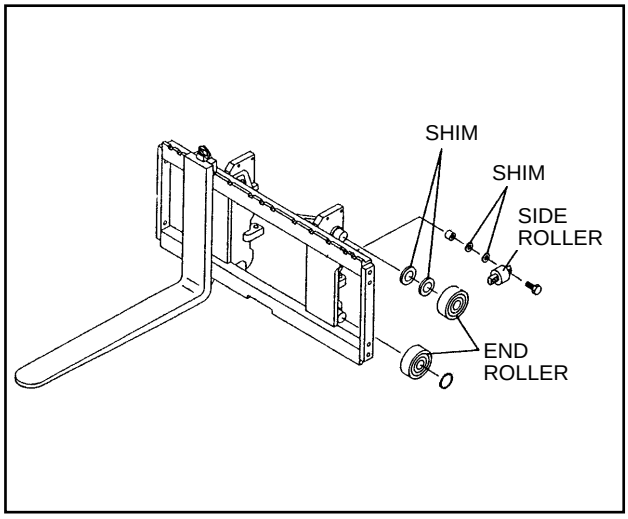

Fig. 8.13

(8) Extend the lift cylinder rods so that the inner channel bottom projects the upper section of the carriage.
(9) Bring the truck close to the carriage side so that each roller enters inside of the outer channel.
(10) Contract the lift cylinder rods to lower the inner channels gradually. Place each roller of the carriage into the inner channel.
(11) Engage the chain with the sheave and connect the chain and anchor through the joint link.

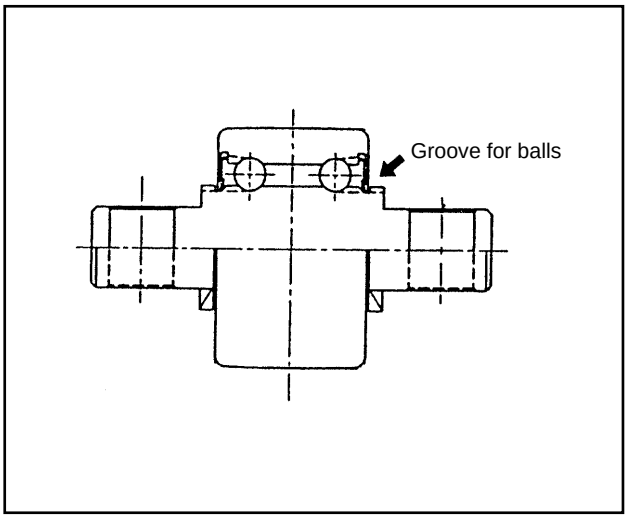

Fig. 8.14 Side Roller

(12) Adjust the height of the carriage. (See 8.2.2.)

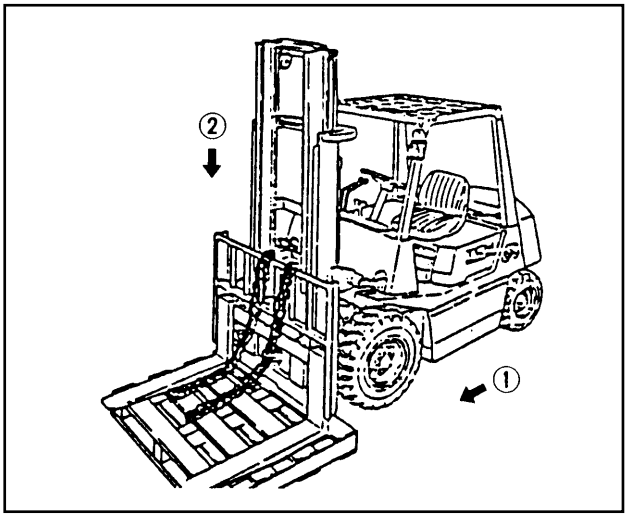

Fig. 8.15

8.2.4 PROCEDURE FOR REPLACING ROLLERS AT MAST SIDE

(1) Remove the carriage from the inner channel in the same procedure as described in "8.2.3 PROCEDURE FOR REPLACING ROLLERS AT CARRIAGE SIDE."

(2) Move the truck to a level surface and put the both rear wheels on the bench of 250 – 300 mm [9.8 – 11.8 in.] in height.

(3) Apply parking brake and block the rear wheels securely.

(4) Remove the bolt securing the lift cylinders to the inner channel, and hoist the inner channel with a crane, keeping shims at the end of the piston rod.

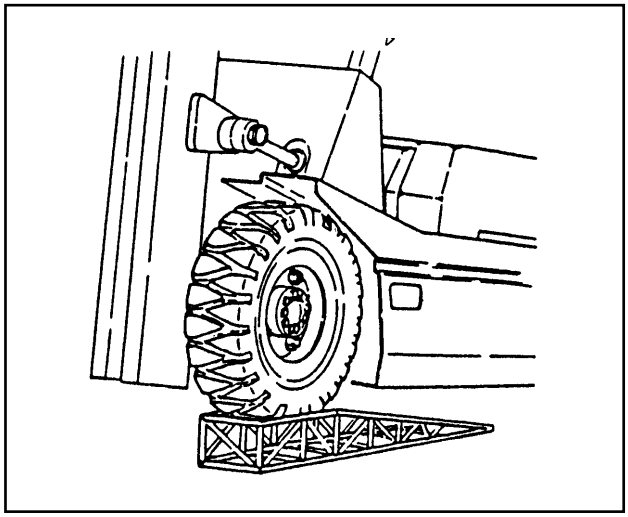

Fig. 8.16

(5) Remove the lift cylinder mounting bolts at the lower section of the outer channel and cylinders support at the middle section, and remove the lift cylinder from the outer channel. Remove the hydraulic hose with two wrenches, using caution not to loosen the fittings at the cylinder side.

(6) Operate the crane to lower the inner channel gradually and remove the end rollers from the lower section of the inner channel. At the same time, the end rollers at the upper section of the outer channel can also be removed.

(7) Replacing end rollers
① Remove upper end rollers with a puller, keeping shims.
② Install new end rollers with the shims removed in step ①. Check for the stamp of S or SS and install the roller which is marked the same stamp, pointing the stamp side to the inner channel side. (See Figure 8.12.)
③ Replace the lower end rollers, using same procedure as above. In this step, point the stamp side to the outer channel side.

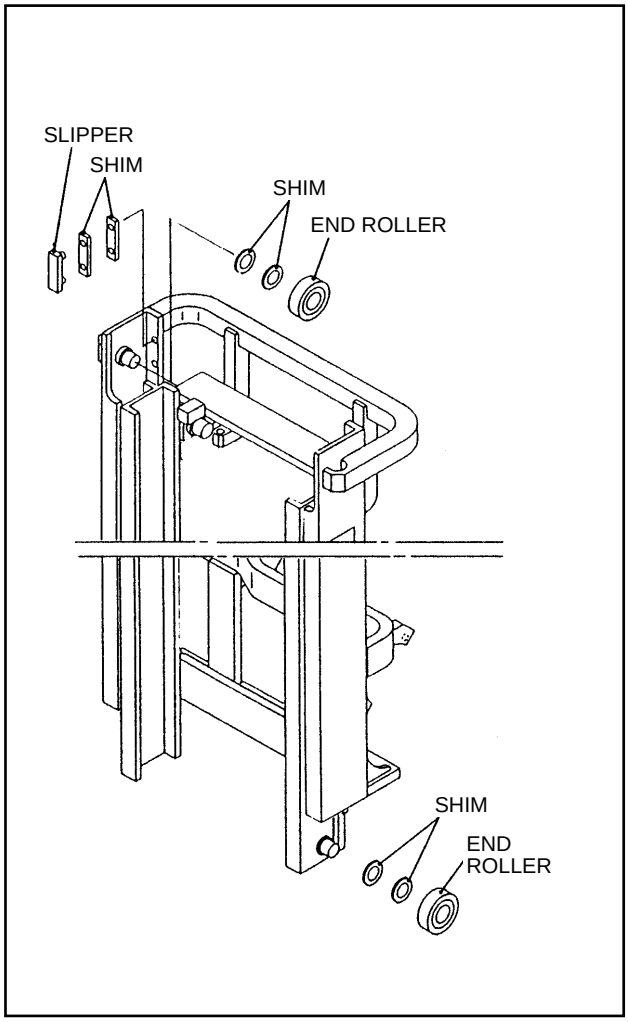

Fig. 8.17

(8) Operate the crane to hoist the inner channel. Place each roller into the channels.

(9) Install the lift cylinder and carriage in the reverse order of disassembly.

8.2.5 PROCEDURE FOR ADDING OR SUBTRACTING SHIMS

Move the inner channel and carriage to one side of the outer channel. Measure the clearance between the end roller at the opposite side and each channel.

Clearance between roller and channel: 0 to 0.5 mm [0 to 0.197 in.]

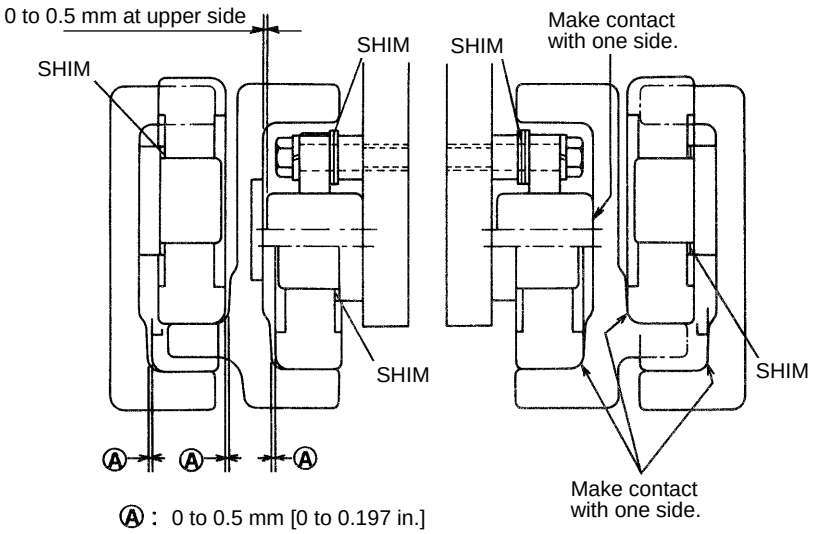

Note: Apply grease to the end roller contacting surface of each channel.

Procedure for Adding or Subtracting Shims

Fig. 8.18

NOTE

9. ELECTRIC SYSTEM

Headlights	
Capacity	48 V - 40 W
Front combination lights	
Capacity	
Side marker lights	48 V - 10 W
Turn signal lights	48 V - 25 W
Rear combination lights	
Capacity	
Tail/brake lights	48 V - 10 W/25 W
Turn signal lights	48 V - 23 W
Back-up lights	48 V - 10 W

9.1 SYSTEM DESCRIPTION

The electric system components, excluding the speed controller and its related components, get their electricity from a high-capacity battery installed in the truck. They include head lights and front and rear combination lights, which are turned on and off via the relay unit.

9.1.1 RELAY UNIT

The relay unit is a semi-conductor switch that uses transistors to perform the switching. The mechanical switch input signals cause the relay unit to turn the lights and electric devices on the truck on and off.

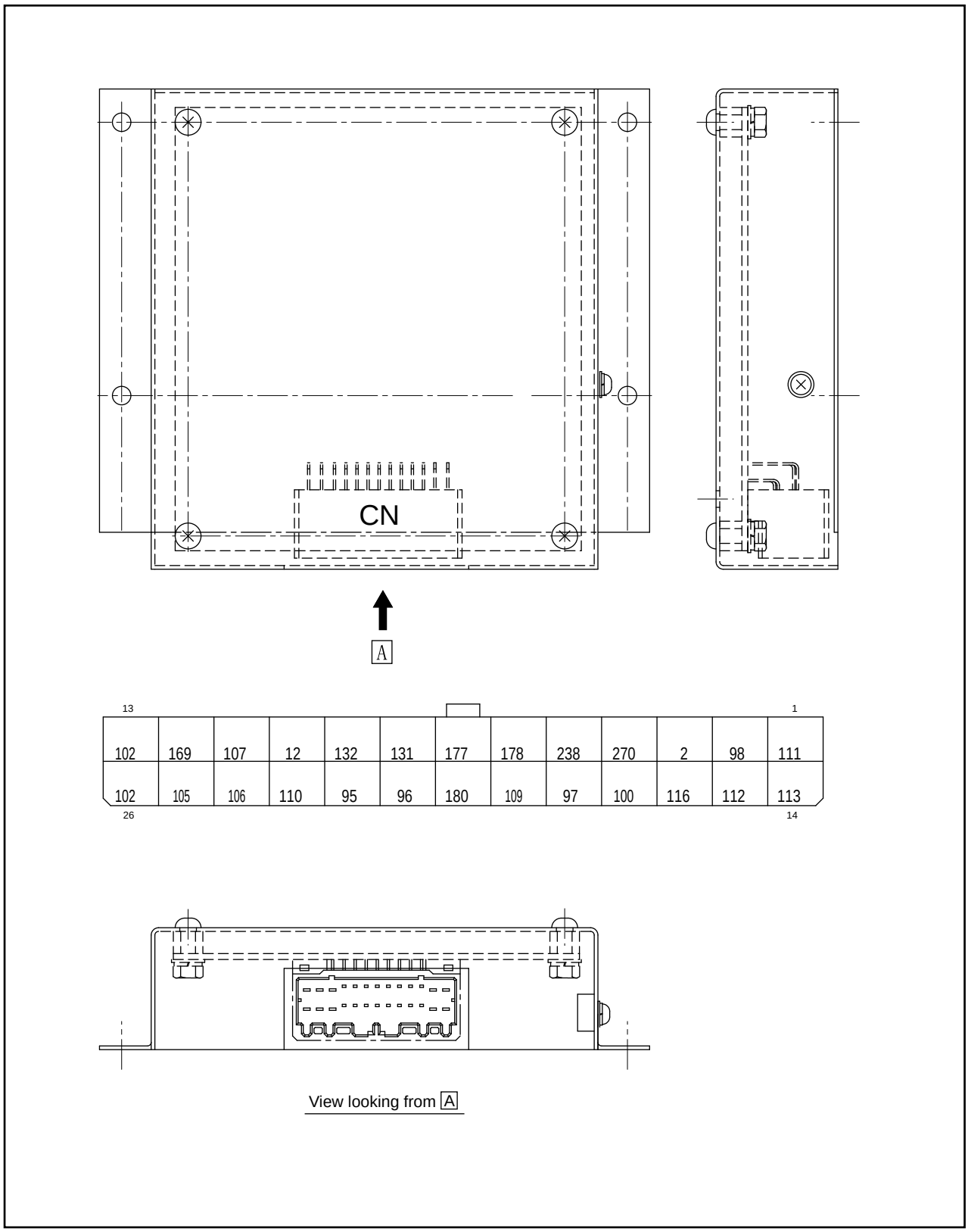

Fig. 9.1 Relay Unit

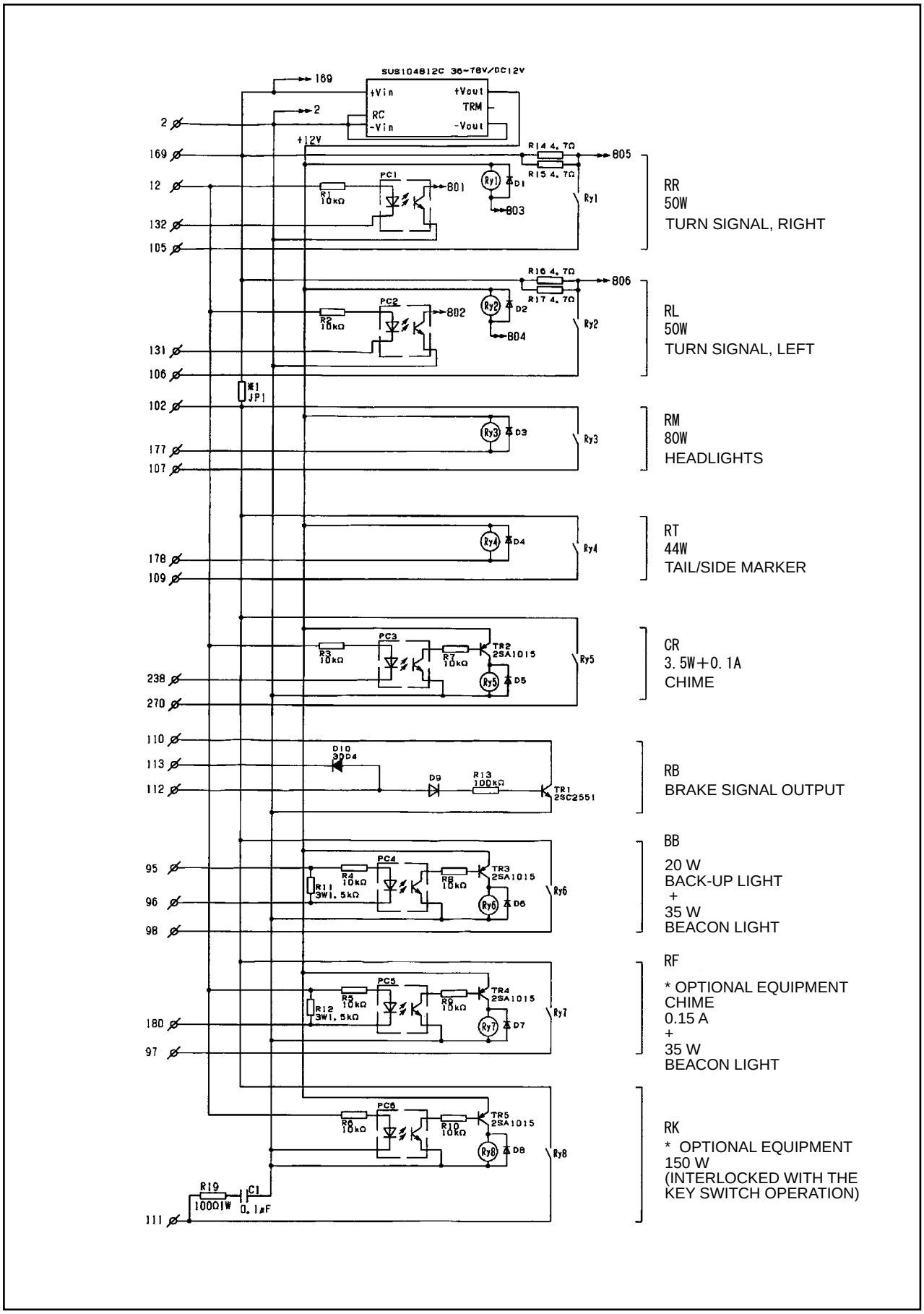

Fig. 9.2 Relay Unit Circuit (Ref.)

9.1.2 LIGHTS

The truck is equipped with headlights, front combination light assemblies, rear combination light assemblies and a work light. They can be turned on and off with the integrated turn signal and light switch lever, as shown in Figure 9.3

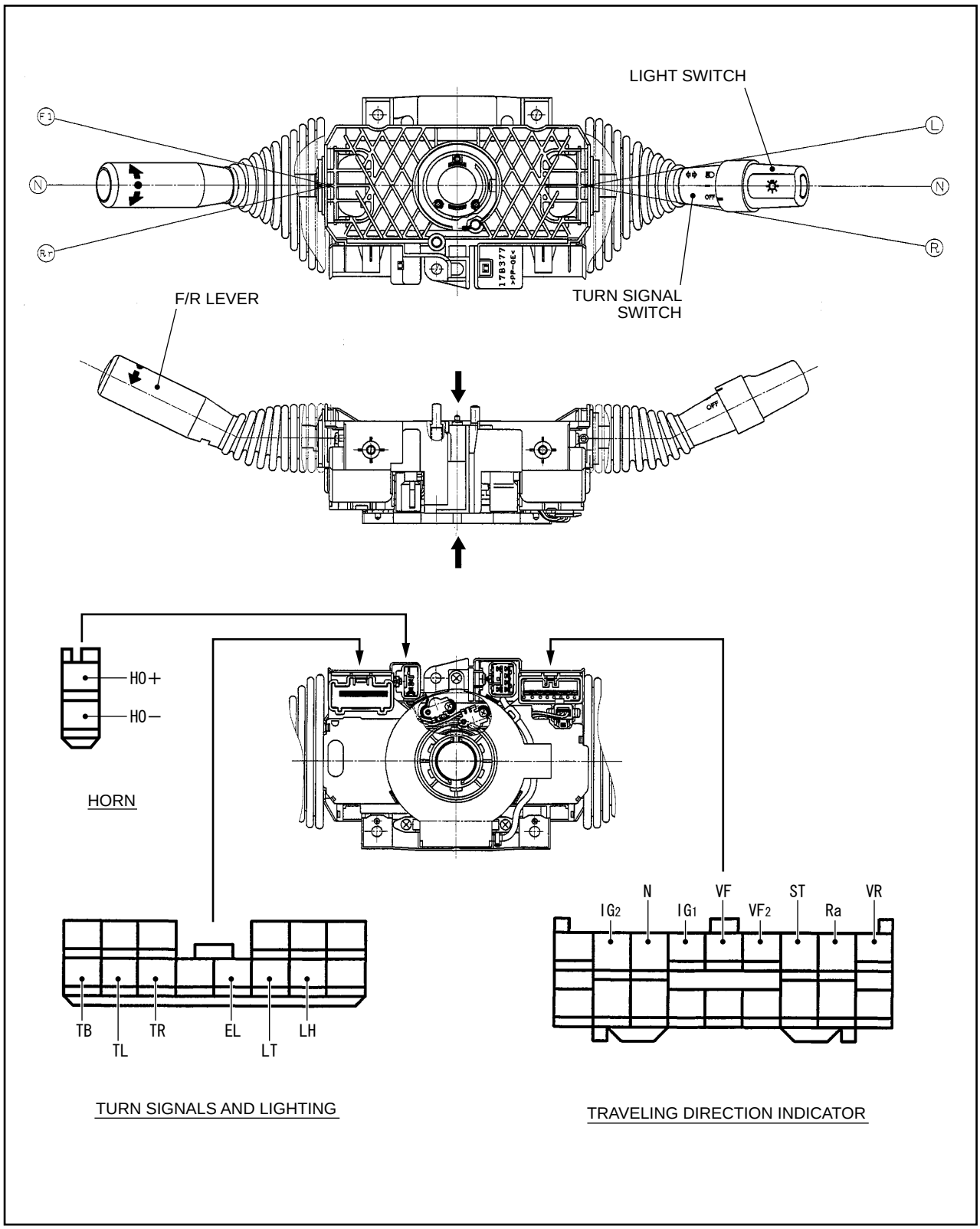

Fig. 9.3 Integrated Turn Signal and Light Switch

(1) Light Switch

The light switch is incorporated into the right lever of the integrated turn signal and light switch assembly. The side marker lights, tail lights and head lights can be turned on and off by rotating the lever.

■ 1st notch

When the lever is rotated to the 1st notch, terminals EL and LT in the light switch are connected to each other to activate the RT relay inside the relay unit, thus turning on the side marker lights in the front combination light assemblies, the tail lights in the rear combination light assemblies and the LCD panel illumination.

■ 2nd notch

When the lever is rotated further to the 2nd notch, terminals EL, LT, and LH are connected to each other to activate the RM relay inside the relay unit, in addition to the RT relay, thus turning on the headlights.

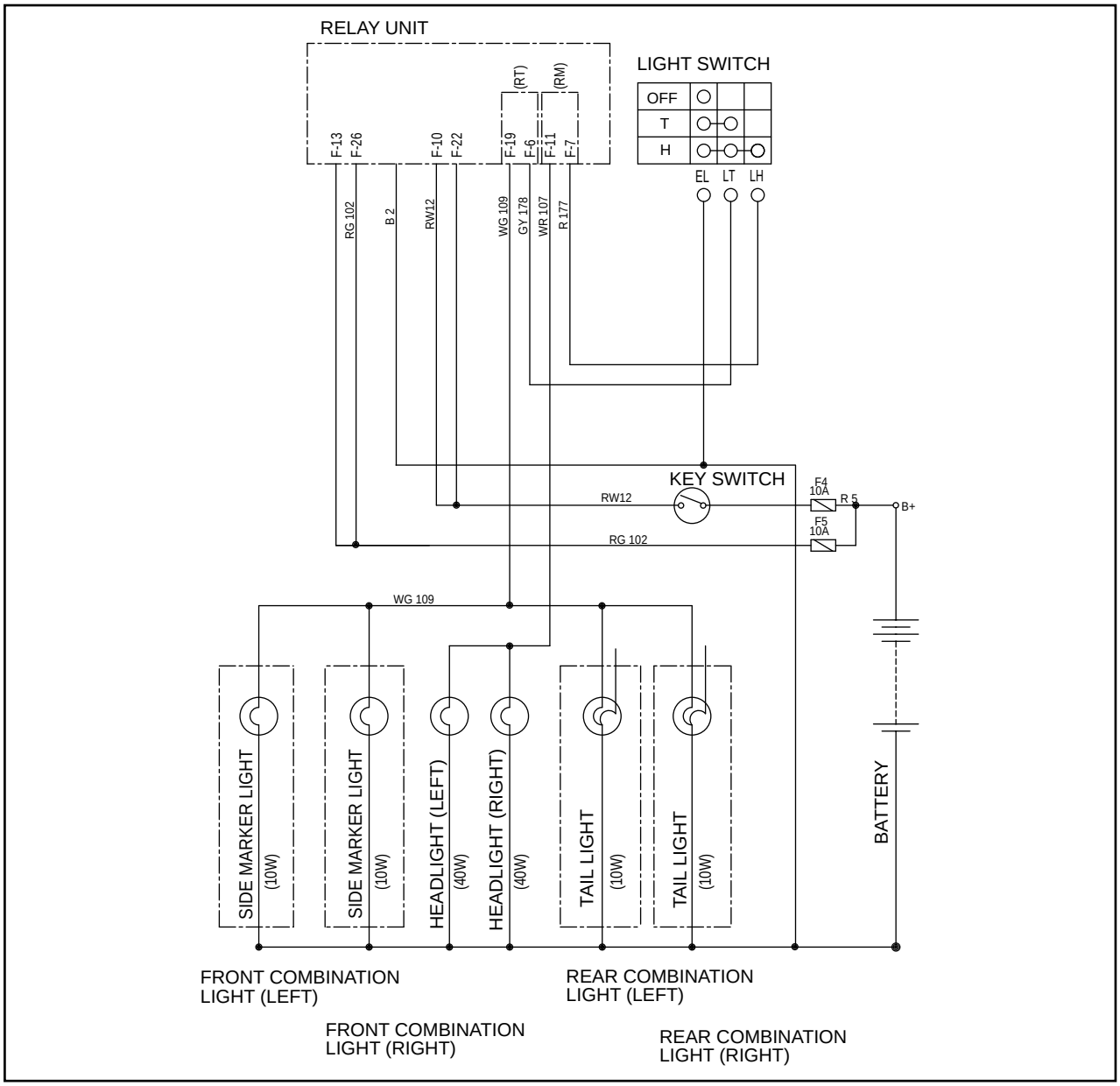

Fig. 9.4 Lighting Circuit

(2) Turn signal switch

The turn signal switch is incorporated into the right lever of the turn signal and light switch assembly. When the lever is moved forward or backward, the left or right turn signal lights flash accordingly.

When the lever is moved forward, terminals TB and TL are connected to each other, causing the turn signals in the left front and rear combination light assemblies to flash; and when the lever is moved backward, terminals TB and TR are connected to each other, and the turn signals in the right front and rear combination light assemblies flash.

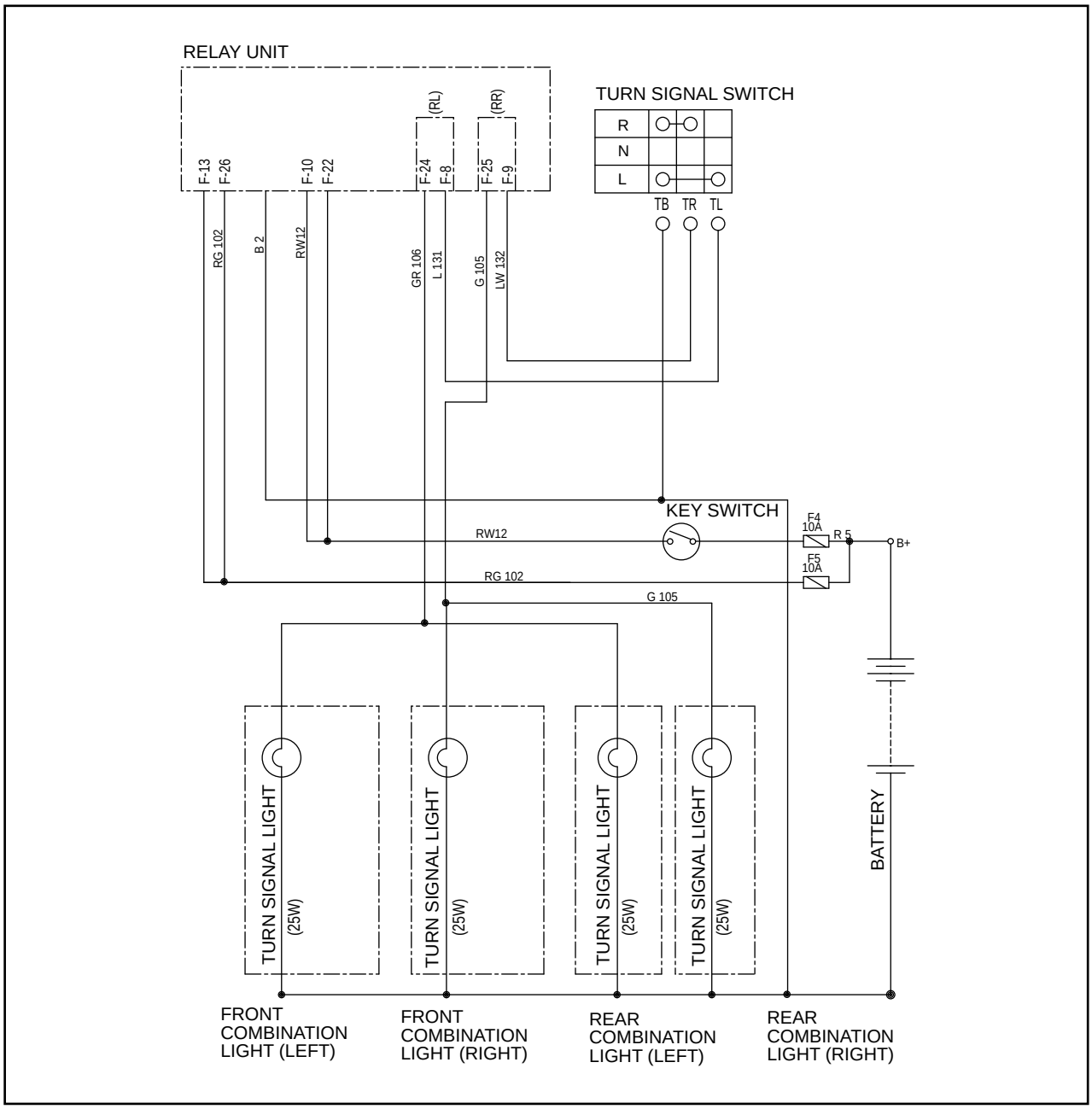

Fig. 9.5 Turn Signal Circuit

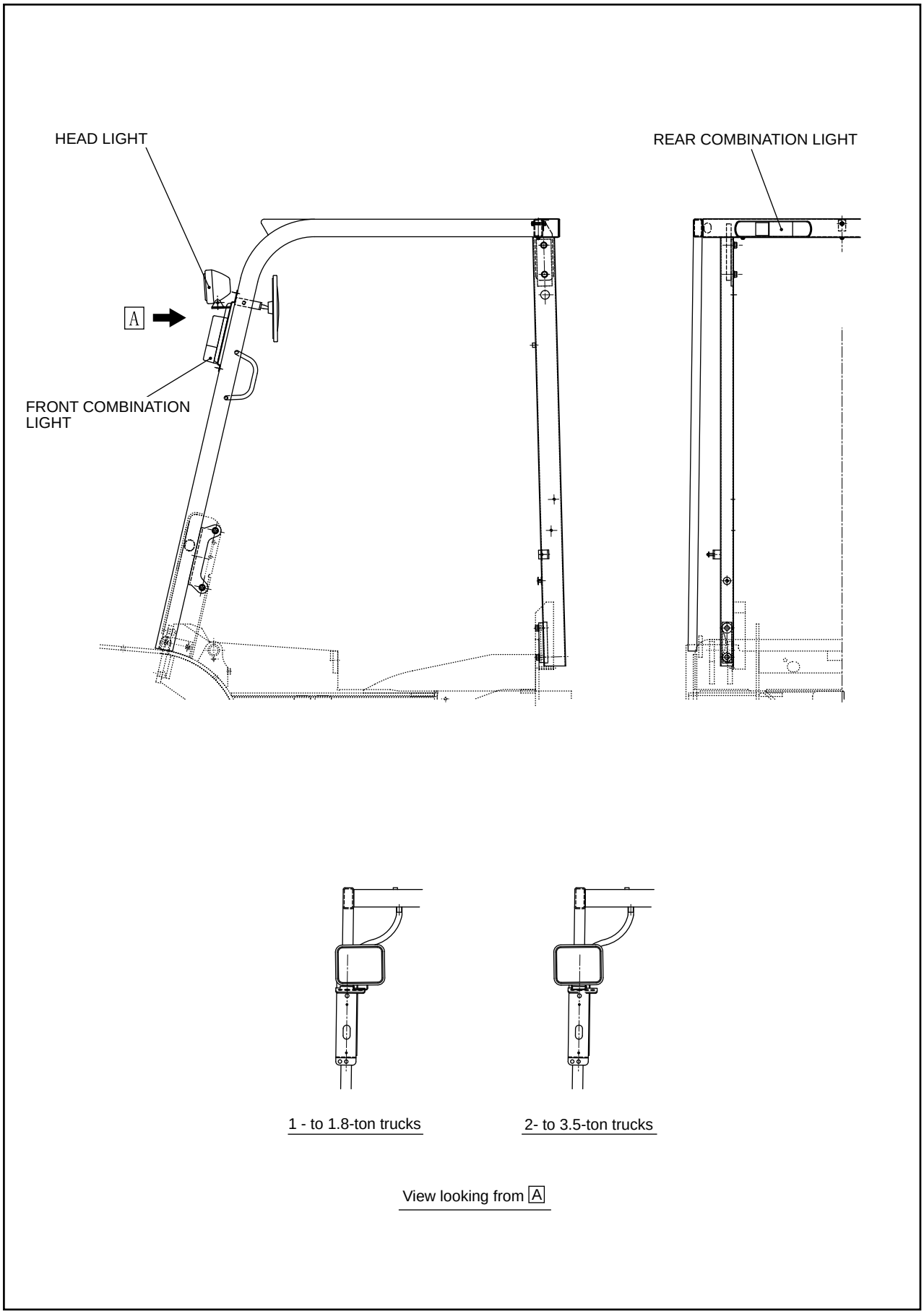

Fig. 9.6 Locations of lights

(3) Head lights

The head lights are installed on the upper part of the front legs of the overhead guard.

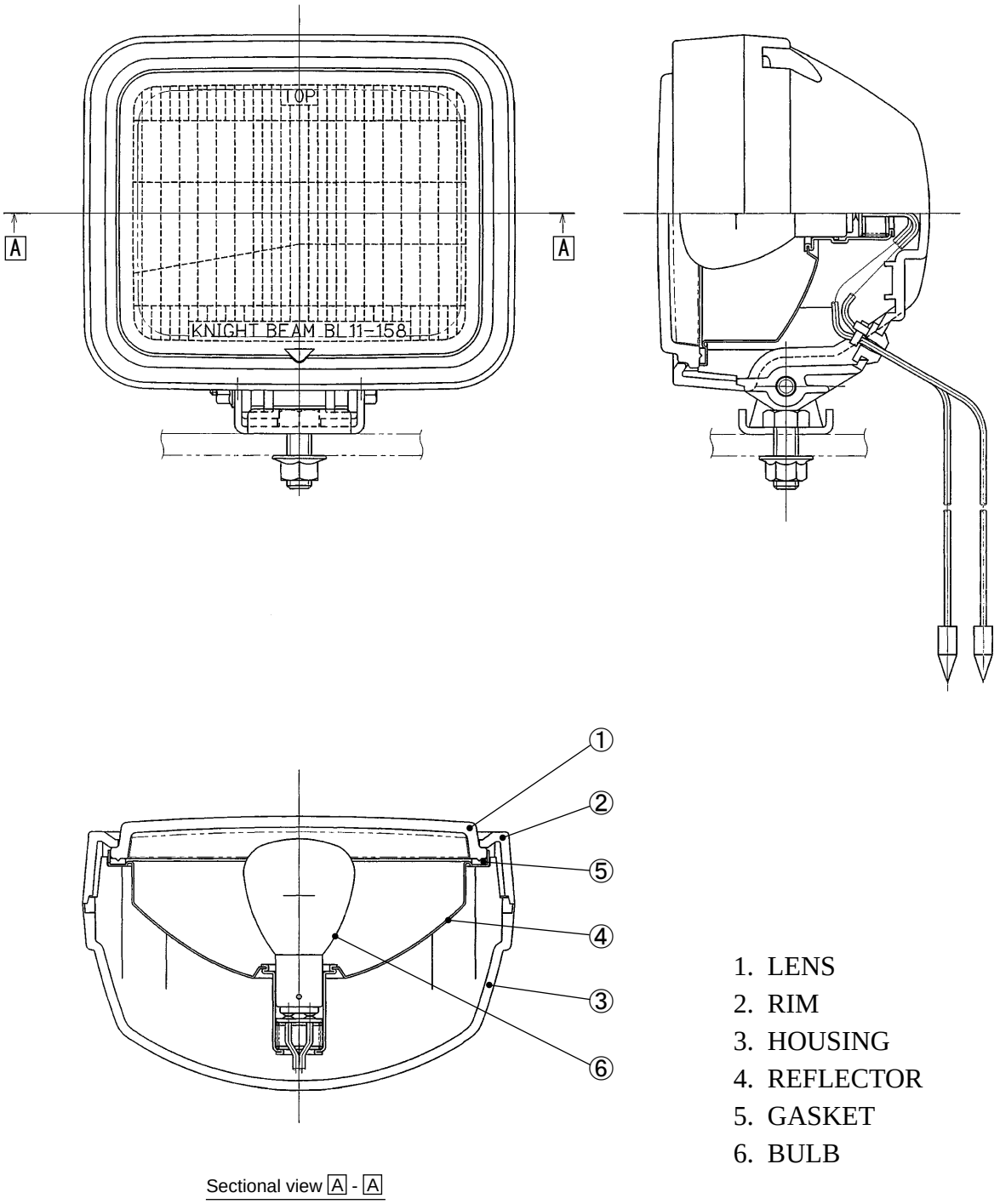

1. LENS
2. RIM
3. HOUSING
4. REFLECTOR
5. GASKET
6. BULB

Fig. 9.7 Head Lights

(4) Front and rear combination lights

The structures of the front and rear combination lights are shown in Figure 9.8.

The front combination light consists of a turn signal light and a side marker light.

The rear combination has a turn signal light, a brake light and a tail light incorporated in it.

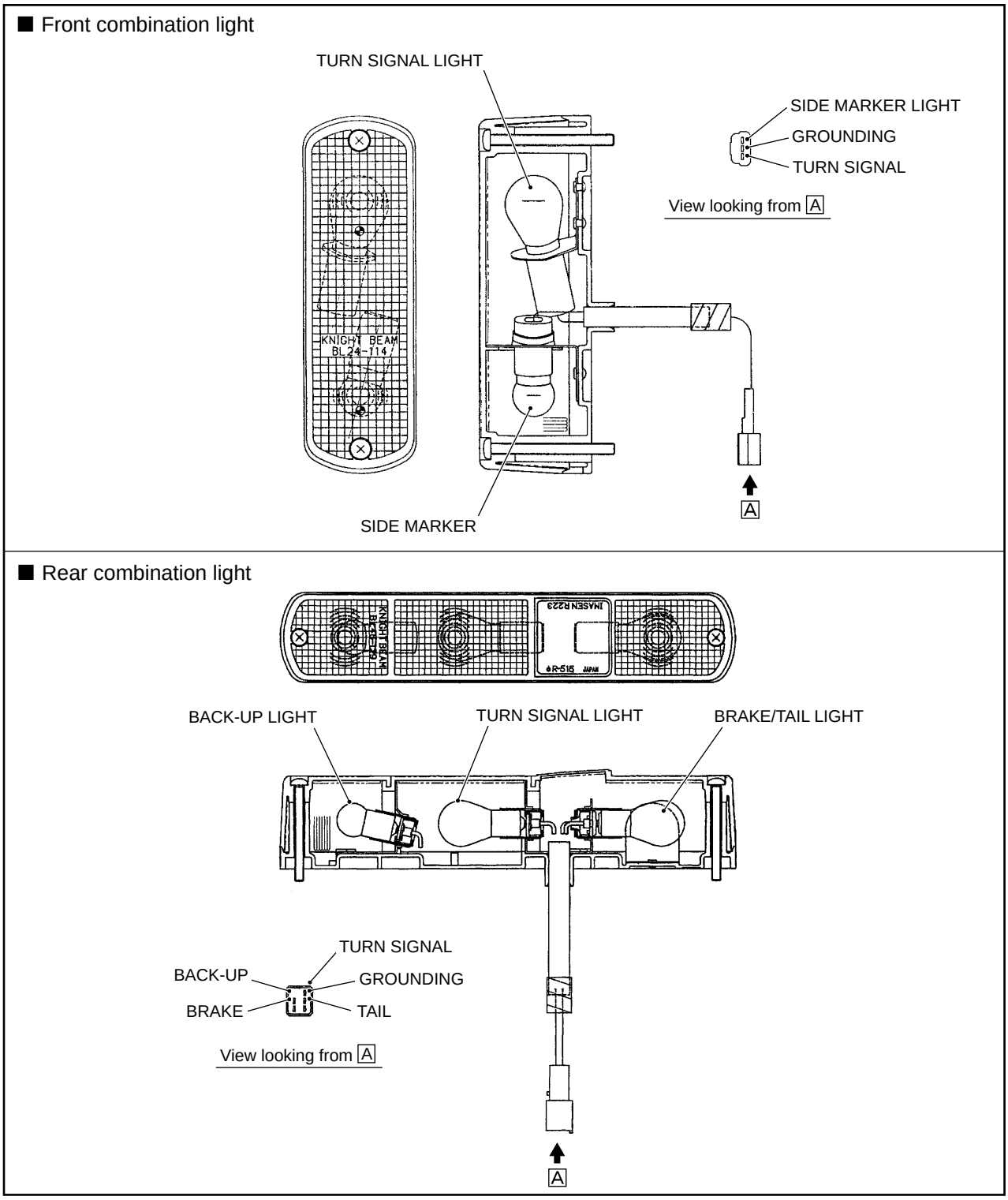

Fig. 9.8 Combination Light

■ Replacing light bulbs

If you want to remove a bulb, push it into the reflector and then turn to the left.

If you want to install a new bulb, push it into the reflector and then turn to the right.

(1) Head light and work light

① Remove the screw securing the rim and housing, and remove the rim, lens, and gasket.

② Remove the bulb from the reflector and install a new bulb.

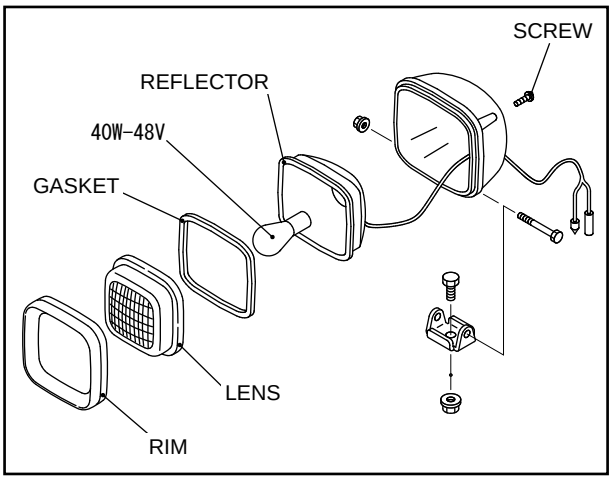

Fig. 9.9 Head Light (Work Light)

⚠ **1. Use caution not to get burnt because the surface of a hot soon after it is turned off.**
2. Use caution not to contaminate the bulb and reflector surfaces.

③ With the gasket, install the lens and reflector.

(2) Rear and front combination lights

① Remove the screws securing the lens and body, and separate the lens from the body.

② Remove the the burned-out bulb you want to replace and install a new bulb.

③ Reassemble the lens and body with the screws.

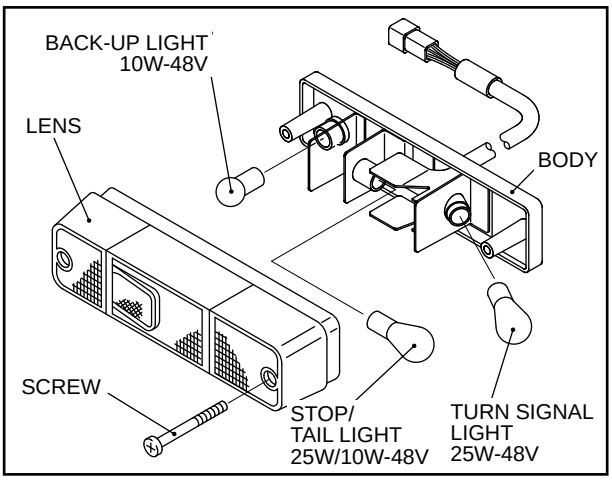

Fig. 9.10 Rear Combination Light

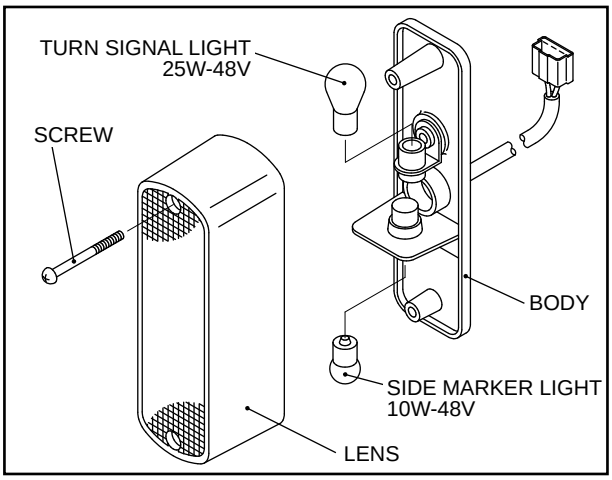

Fig. 9.11 Front Combination Light

TROUBLESHOOTING
TABLE OF CONTENTS

1. CONTROL CIRCUITS 1
1.1 CONTROLLER POWER SUPPLY AND DRIVE SYSTEM 1
1.2 LOAD HANDLING SYSTEM 5
1.3 POWER STEERING SYSTEM 8
1.4 OTHERS 9

2. ELECTRICAL PARTS AND PROCEDURES FOR CHECKING 11
2.1 PART LOCATION DIAGRAM AND TERMINAL LOCATIONS 11
2.2 PROCEDURE FOR CHECKING THE CONTROLLER ASSEMBLY SEPARATELY 13
2.2.1 CONTROLLER ASSEMBLY 13
2.2.2 INVERTER UNIT 16
2.2.3 EPS MOTOR CONTROLLER 18
2.2.4 HEAT-DISSIPATING SHEET 19
2.2.5 MC CONTACTOR 20
2.2.6 FAST CHARGE RESISTANCE (RCH) 20
2.2.7 FUSE (F1) 21
2.2.8 ACCELERATOR PEDAL 21
2.2.9 MOTOR ROTATION SENSOR 22
2.2.10 LIFT POTENTIOMETER 23
2.2.11 STEERING POTENTIOMETER 24
2.2.12 LCD PANEL 25
2.2.13 CM CONTACTOR 26
2.2.14 CONTROL SWITCH PANEL 27
2.2.15 BATTERY CHARGER SWITCH PANEL 28
2.2.16 CHARGE RECTIFICATION DIODE 29
2.2.17 CHECKING CHARGE TIMER 30
2.2.18 MOTOR THERMO-SENSOR 31
2.2.19 F/R SWITCH 32
2.2.20 CHECKING VOLTAGE ON THE LCD PANEL 33

3. TROUBLESHOOTING GUIDE 35
3.1 HOW TO USE THIS GUIDE 35
3.2 CHECKING BEFORE TROUBLESHOOTING 36
3.3 ERROR CODE TABLE 38
3.4 LCD PANEL SYSTEM ERRORS 48
3.5 TROUBLESHOOTING BY ERROR CODE 49
3.6 TROUBLESHOOTING BY PROBLEM 66

4. PARAMETER SETTING 73
4.1 SETTING THE PARAMETERS 73
4.2 PARAMETER SETUP SCREEN 73
4.3 KEYPAD 73
4.4 SCREEN OPERATION 74
4.5 SUPPLEMENTARY INFORMATION ABOUT LEVEL SETTING 78
4.6 SETTING THE PASSWORDS 80

5. DESCRIPTION OF THE FUNCTIONS 81

6. ELECTRIC WIRING 83

1. CONTROL CIRCUITS

1.1 CONTROLLER POWER SUPPLY AND DRIVE SYSTEM

	Circuit Diagram	Description
Power Supply	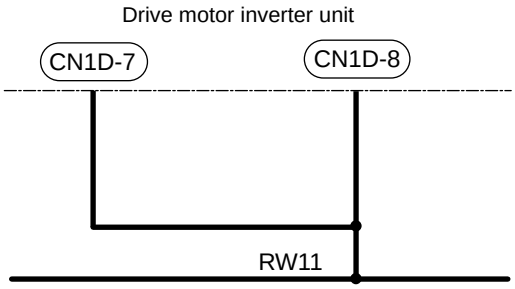	1. Drive motor inverter unit **CN1D-7** and **CN1D-8** terminals When the key switch is turned on, the battery voltage is applied to these terminals and the inverter unit is energized.
Drive System	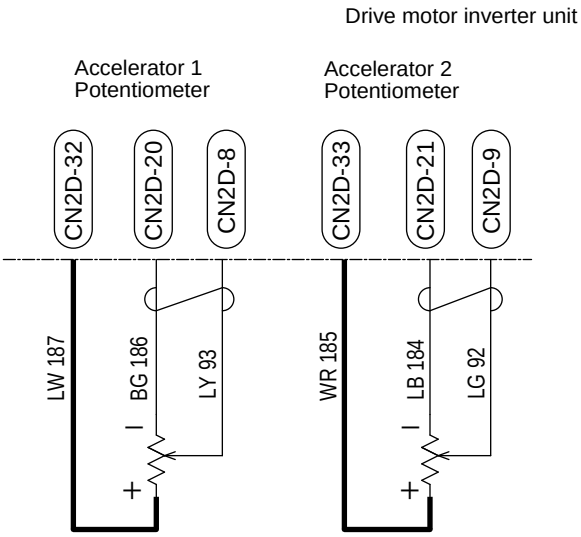	2. Accelerator potentiometer (1) Accelerator 1 potentiometer 4.5 V is supplied from **CN2D-32**. The voltage at **CN2D-8** varies according to the amount of accelerator pedal effort. (2) Accelerator 2 potentiometer 4.5 V is supplied from **CN2D-33**. The voltage at **CN2D-9** varies according to the amount of accelerator pedal effort. (3) Voltage at **CN2D-8** and **CN2D-9** terminals Unit: V Terminal / Accelerator pedal not pressed / Accelerator pedal fully pressed Accelerator 1 **CN2D-8** / 1.0 ± 0.1 / 3.92 ± 0.2 Accelerator 2 **CN2D-9** / 0.5 ± 0.1 / 1.96 ± 0.2 The voltage at **CN2D-9** should be 50% of the voltage at **CN2D-8**. If not, it indicates the signal wire is broken.
	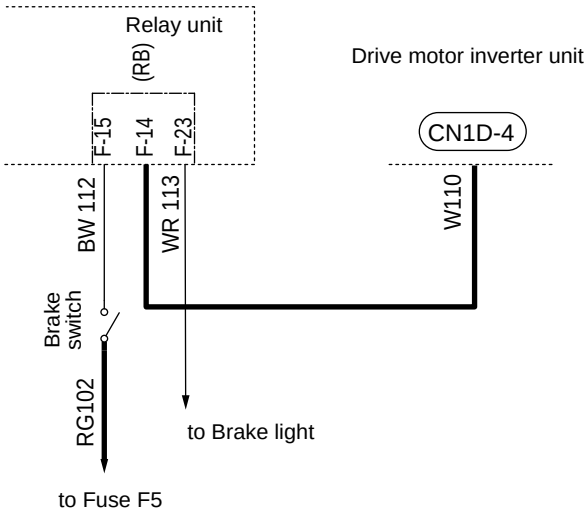	3. RB relay (1) This relay enables the inverter unit to know when the brake pedal is pressed. (2) When the brake pedal is pressed, the brake switch is turned on and the **CN1D-4** terminal voltage changes from 4.6 V to 0 V.

	Circuit Diagram	Description
Drive System	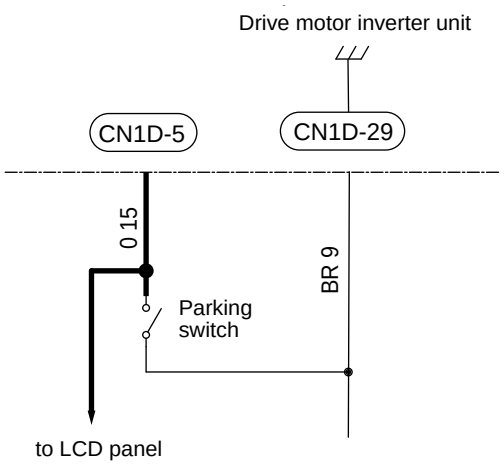	4. Parking brake switch (1) When the parking brake lever is pulled, the parking brake switch is turned on and the "P" light on the LCD panel comes on. This keeps the truck from moving. (2) Voltage between **CN1D-5** and **CN1D-29** Parking brake lever pulled: 0V (switch ON) Parking brake lever released: 5V (switch OFF)
	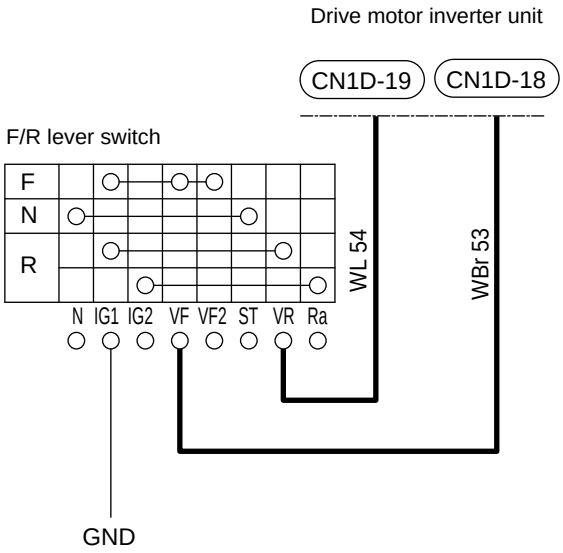	5. F/R lever switch (1) This switch tells the inverter unit whether the F/R lever is in the forward or reverse travel position. (2) Voltage between **CN1D-18** and **CN1D-19** Unit: V Lever position: N (Neutral) / F (Forward) / R (Reverse) **CN1D-18**: 4.6 / 0 / 4.6 **CN1D-19**: 4.6 / 4.6 / 0
	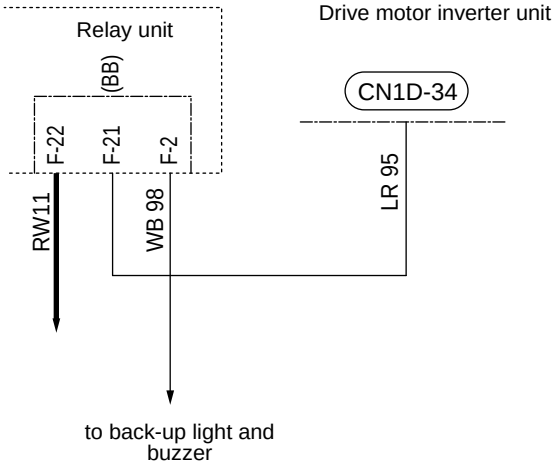	6. BB relay (1) Activates the back-up buzzer and light. (2) When the F/R lever is placed in the R position, the battery supplies voltage to the **CN1D-34** terminal. This activates the BB relay, feeding power to the back-up light and buzzer.

	Circuit Diagram	Description
Drive System	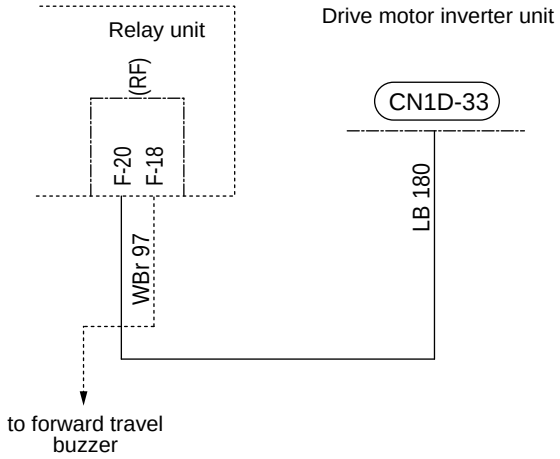	7. RF relay (option) (1) Activates the forward travel buzzer. (2) When the F/R lever is placed in the F position, the battery supplies voltage to the **CN1D-33** terminal. This activates the relay, feeding power to the forward travel buzzer.
	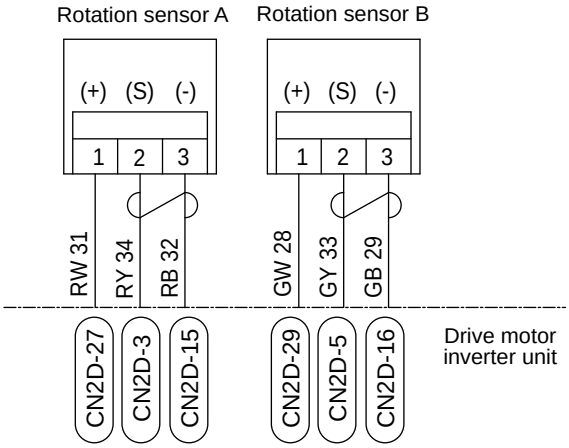	8. Drive motor rotation sensor (1) Detects the drive motor speed. (2) When the drive motor runs, a pulsed voltage is present between **CN2D-3** and **CN2D-15** and between **CN2D-5** and **CN2D-16**.
	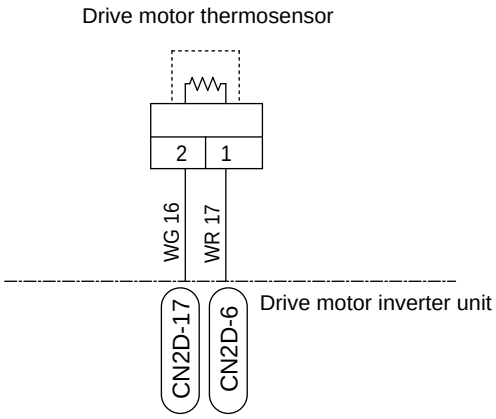	9. Drive motor thermosensor (1) Detects the drive motor temperature. (2) When the sensor detects a temperature of 145°C [293°F] or above, the symbol 206 appears on the LCD panel, the blinks, and the motor output is limited. (3) When the sensor detects a temperature of 156°C [312.9°F] or above, the symbol 205 appears on the LCD panel, the blinks, and the motor is stopped.

	Circuit Diagram	Description
Drive System	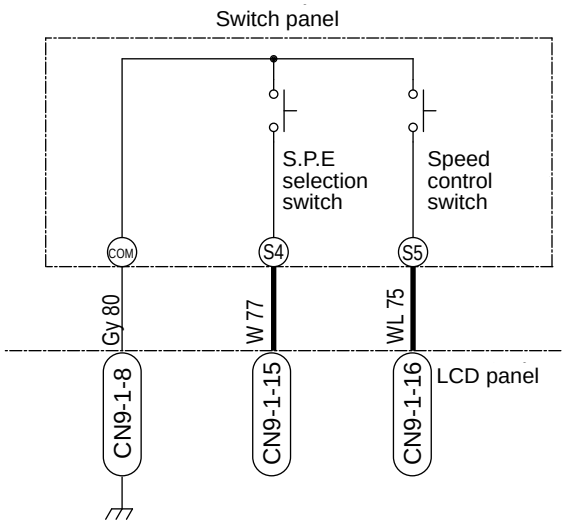	10. Speed control switch (“turtle” button) (1) When speed control switch is pressed, the turtle mark appears on the LCD panel, activating travel speed limit feature. If the speed control switch is pressed with the turtle mark appeared on the LCD panel, travel speed limit feature is cancelled. (2) Voltage between **CN9-1-16** and **CN9-1-8** terminals Speed control switch pressed: 0 V Speed control switch released: 5 V 11. S.P.E mode selection switch (1) Acceleration speed and top speed can be switched over in 3 stages. The speed control mode changes in turns from S, P, to E every time the switch is pressed. (2) Voltage between **CN9-1-15** and **CN9-1-8** terminals S.P.E selection switch pressed: 0 V S.P.E selection switch released: 5 V
	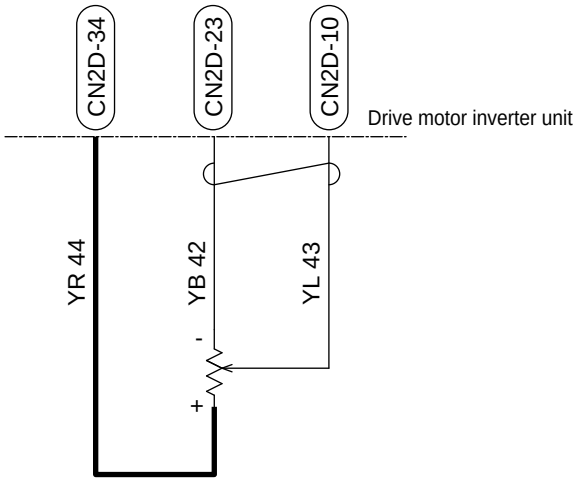	12. Steering potentiometer (1) Potentiometer power supply 4.8V is supplied from the **CN2D-34** terminal. (2) Voltage between **CN2D-10** and **CN2D-23** terminals The voltage at the **CN2D-10** terminal varies according to the steering angle of the wheels. Steering angle at neutral: 2.5 V Steering angle at left end: 3.5 V Steering angle at right end: 1.8 V

1.2 LOAD HANDLING SYSTEM

<table>
<tr><th></th><th>Circuit Diagram</th><th>Description</th></tr>
<tr><td rowspan="3">Load Handling System</td><td> 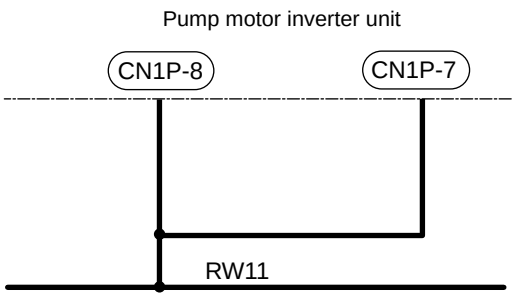
</td><td>1. Pump motor inverter unit CN1P-7 and CN1P-8 terminals
When the key switch is turned on, the battery voltage is present at these terminals and the inverter unit is energized.</td></tr>
<tr><td> 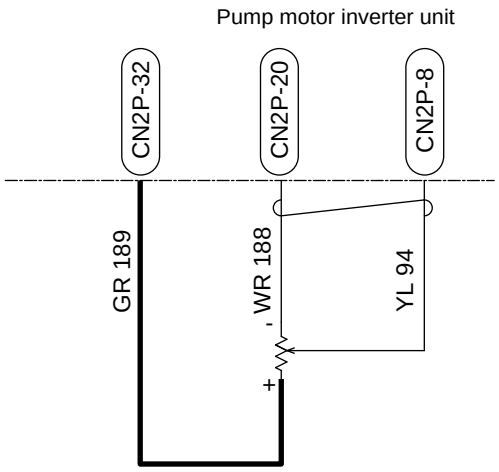
</td><td>2. Lift potentiometer
(1) Potentiometer power supply
4.8 V is supplied from the CN2P-32 terminal.
(2) Potentiometer signal
The voltage between CN2P-8 and CN2P-20 terminals varies as follows, according to the amount of lever movement away from the neutral position.
<table>
<tr><th></th><th colspan="3">Lever position</th></tr>
<tr><th></th><th>Down</th><th>Neutral</th><th>Up</th></tr>
<tr><td>CN2P-8 terminal</td><td>1.1 V or less</td><td>1.1 V or less</td><td>2.4 to 4.5 V</td></tr>
</table></td></tr>
<tr><td> 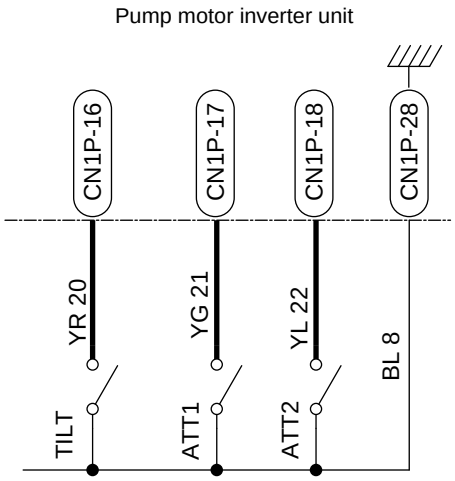
</td><td>3. Tilt and ATT1/ATT2 switches
(1) 4.6 V is supplied from CN1P-16, CN1P-17, and CN1P-18.
(2) When each lever is operated, the switch turns on to operate the pump motor. (4.6 V→ 0 V)</td></tr>
</table>

	Circuit Diagram	Description
Load Handling System	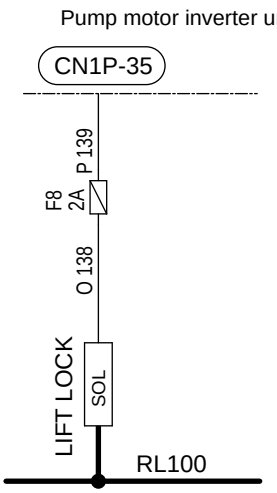	4 Lift lock solenoid (1) When the seat switch and the load handling neutral safety switch are engaged, the lift lock solenoid is energized. (2) The voltage between the **CN1P-35** terminal and the negative (-) terminal. Key switch ON (with seat switch ON): 36 V Key switch ON (with seat switch OFF): 48 V
	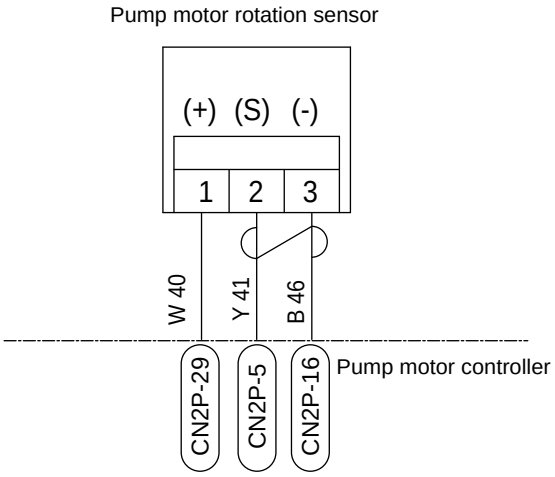	5. Pump motor rotation sensor (1) Detects the pump motor speed. (2) When the pump motor runs, a pulsed voltage is generated between **CN2P-5** and **CN2P-16** terminals.
	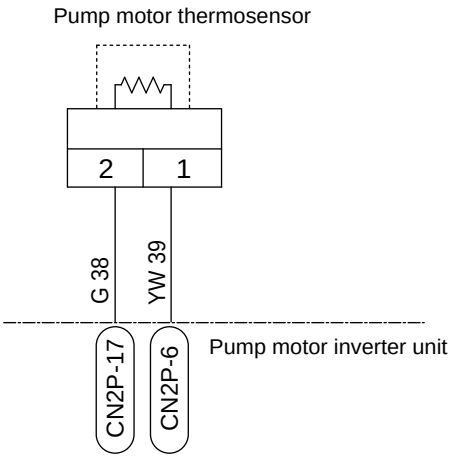	6. Pump motor thermosensor (1) Detects the drive motor temperature. (2) When the sensor detects a temperature of 145ºC [293ºF] or above, the symbol 406 appears on the LCD panel, the blinks, and the motor output is limited. (3) When the sensor detects a temperature of 156ºC [312.8 ºF] or above, the symbol 405 appears on the LCD panel, the blinks, and the motor is stopped.

	Circuit Diagram	Description
Load Handling System	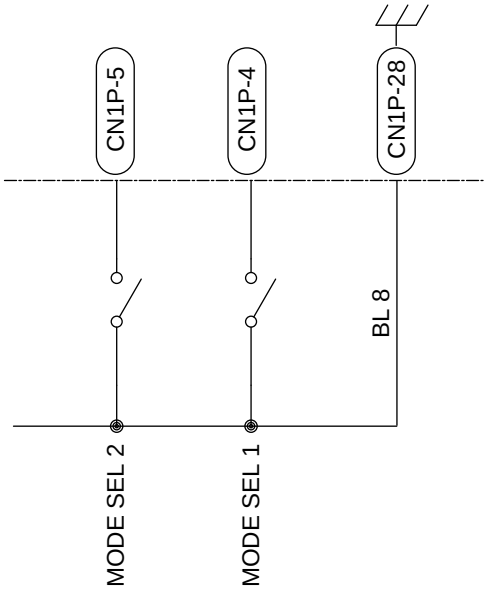	7 Truck model selection terminals The relevant truck model is selected by turning on or off each model selection switch. MODE SEL 1 / MODE SEL 2 1 to 1.8 ton trucks: OFF / OFF 2 to 2.5 ton trucks: ON / OFF 3 to 3.5 ton trucks: ON / ON Note: The load handling unit differs depending on the truck model. Therefore the load handling unit is not interchangeable, regardless of the truck model switch selection. Note: Although the circuit diagram on the left shows some switch symbols, those switches are not installed on the truck.

1.3 POWER STEERING SYSTEM

	Circuit Diagram	Description
Power Steering System (EPS type)	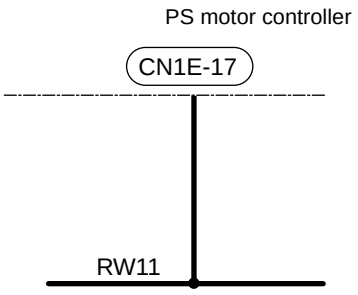	1. PS motor controller **CN1E-17** terminal When the key switch is turned on, the battery voltage is present at this terminal and the PS motor controller is energized.
	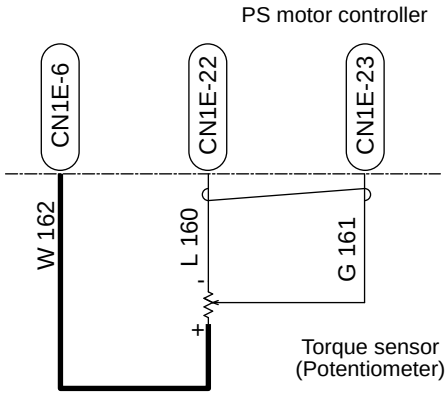	2. PS torque sensor (1) Power supply 4.6 V is supplied from the **CN1E-6** terminal. (2) Input voltage (a) The EPS motor duty factor is controlled according to the torque sensor **CN1E-23** terminal voltage. (b) The voltage between **CN1E-23** and **CN1E-22** terminals: In straight-ahead driving: 2.3 V The voltage decreases when the steering wheel is turned counterclockwise and increases when it is turned clockwise.
Power Steering System (Orbitrol type)	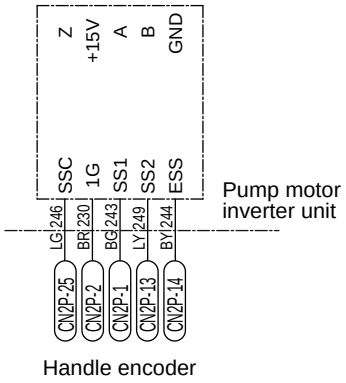	1. Steering wheel sensor (1) The steering wheel sensor detects the number of rotations and the rotating direction of the steering wheel. (2) A pulse voltage develops between **CN2P-1** and **CN2P-25**, and between **CN2P-13** and **CN2P-25** according to the rotation of the steering wheel.
	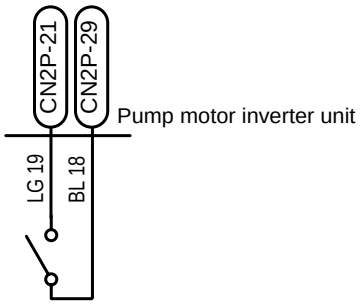	2. EPS/HPS switching terminal The HPS and EPS units are switched over by connecting or disconnecting the CN2P-21 and CN2P-29. When **CN2P-21** is connected with **CN2P-29**: HPS (Orbitrol type power sttering) is available. When **CN2P-21** is not connected with **CN2P-29**: EPS (electric power steering) is available.

1.4 OTHERS

	Circuit Diagram	Description
Others	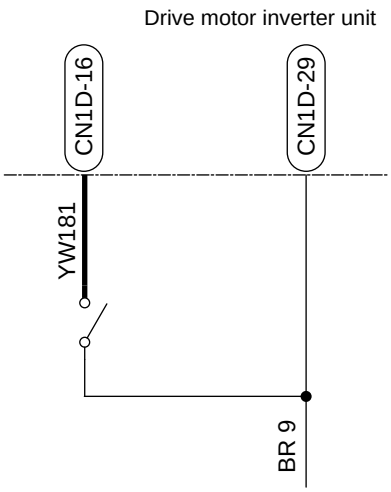	1. Seat switch (1) 4.6 V is supplied from **CN1D-16**. (2) When the operator sits in the operator's seat, the seat switch turns on, releasing the interlock. (4.6 V→0 V)
	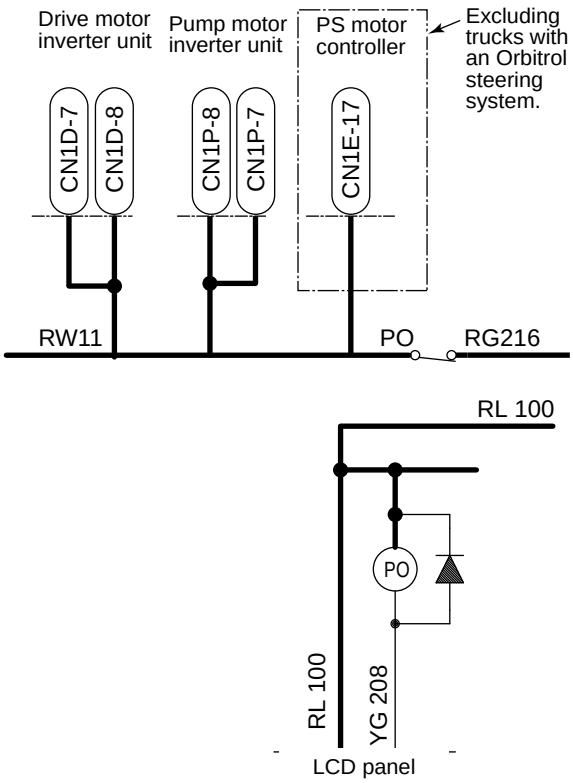	2. Auto power-off relay If no operation (traveling, load handling nor power steering) is performed for more than 15 minutes, the auto power-off relay PO is energized to shut off the power supply to the entire controller circuit.

	Circuit Diagram	Description
Others	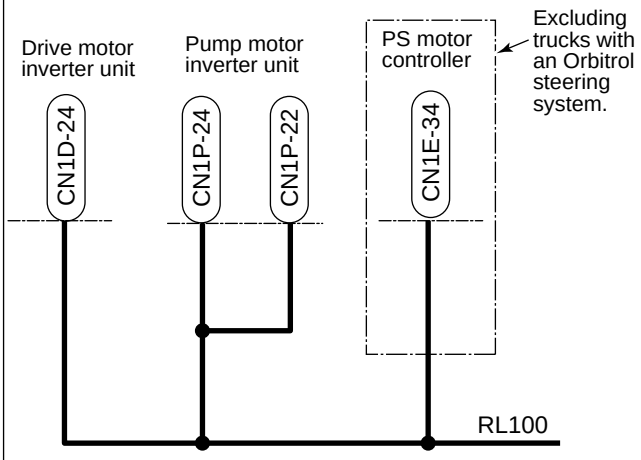	3. **CN1D-24**, **CN1P-24**, **CN1P-22**, and **CN1E-34** terminals When the battery is connected, the battery voltage is present at these terminals. These terminals are used to detect the battery voltage.

2. ELECTRICAL PARTS AND PROCEDURES FOR CHECKING

2.1 PART LOCATION DIAGRAM AND TERMINAL LOCATIONS

Note: Trucks with an Orbitrol steering system do not have an EPS unit.

■ 1- to 1.8-ton trucks (Excluding those with an Orbitrol steering system.)

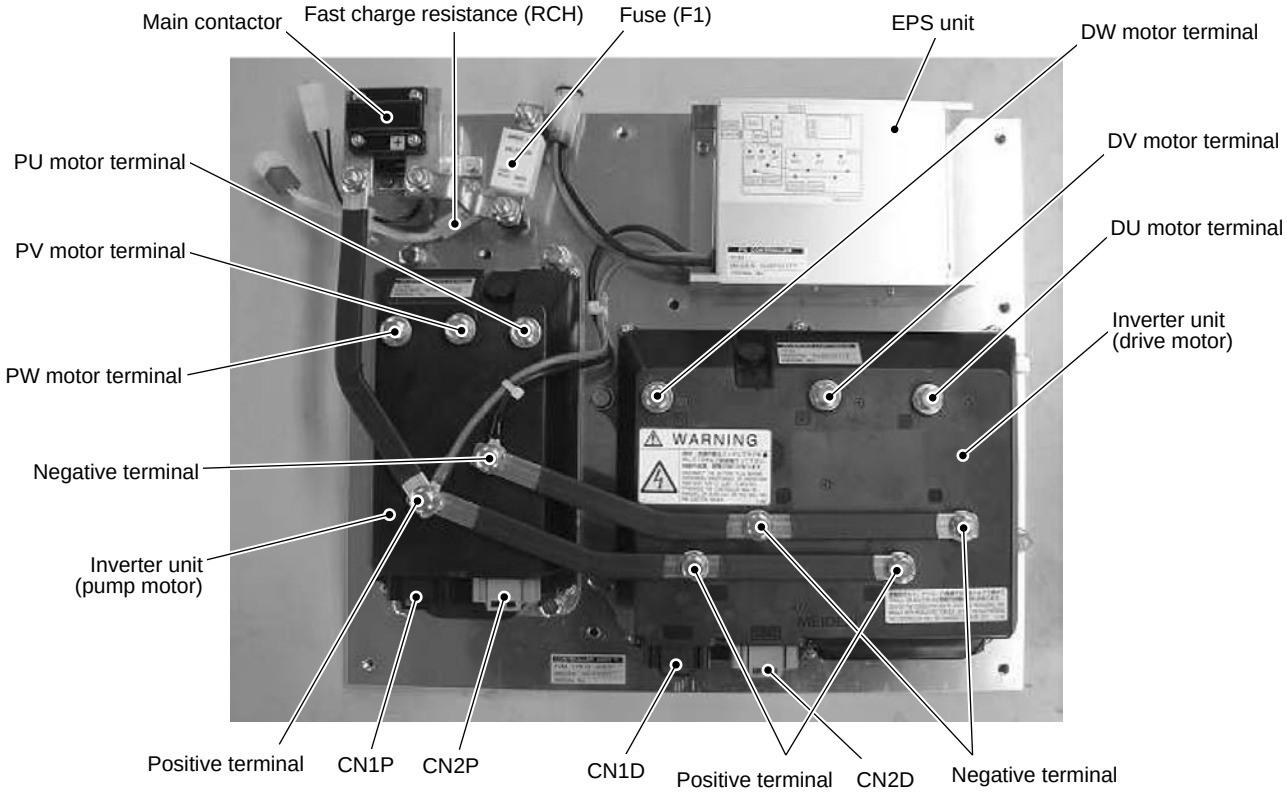

■ 2- to 3.5-ton trucks (Excluding those with an Orbitrol steering system.)

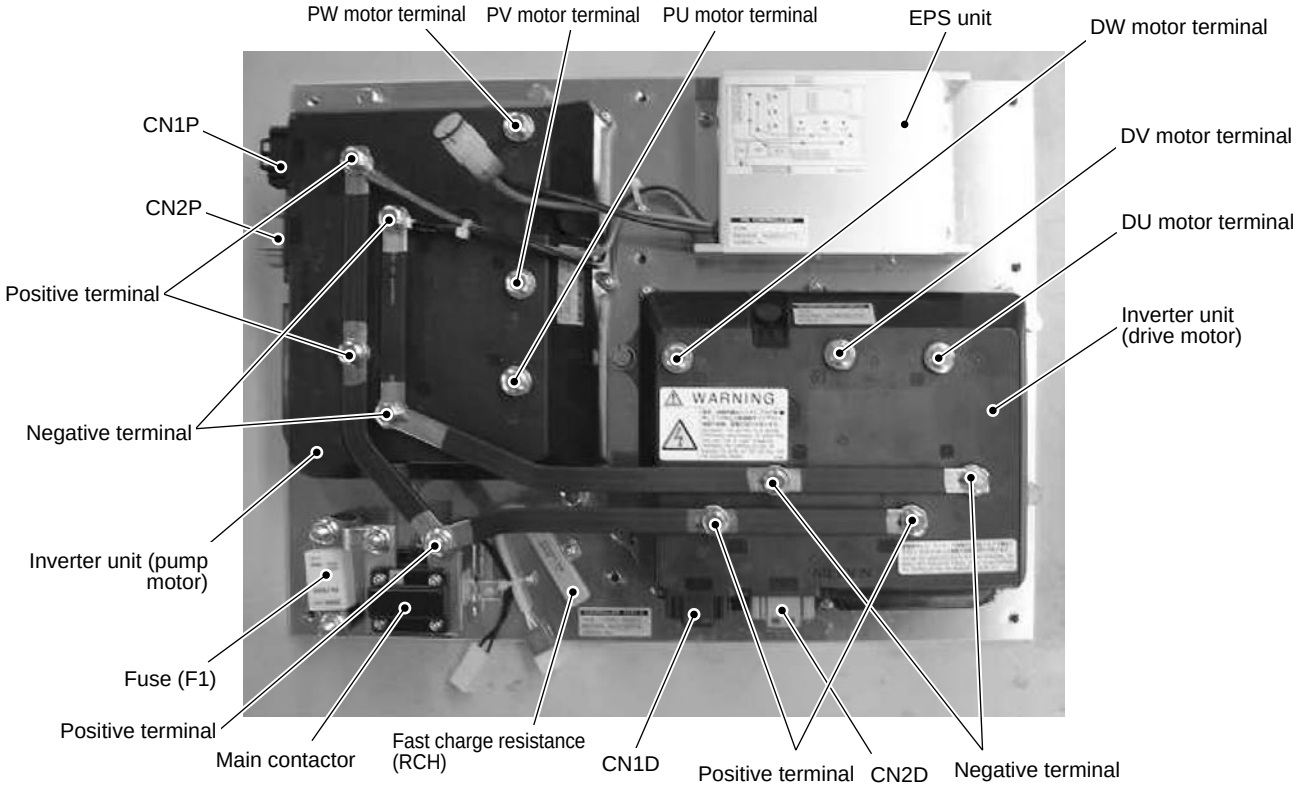

■ 1- to 3.5-ton trucks (Excluding those with an Orbitrol steering system.)

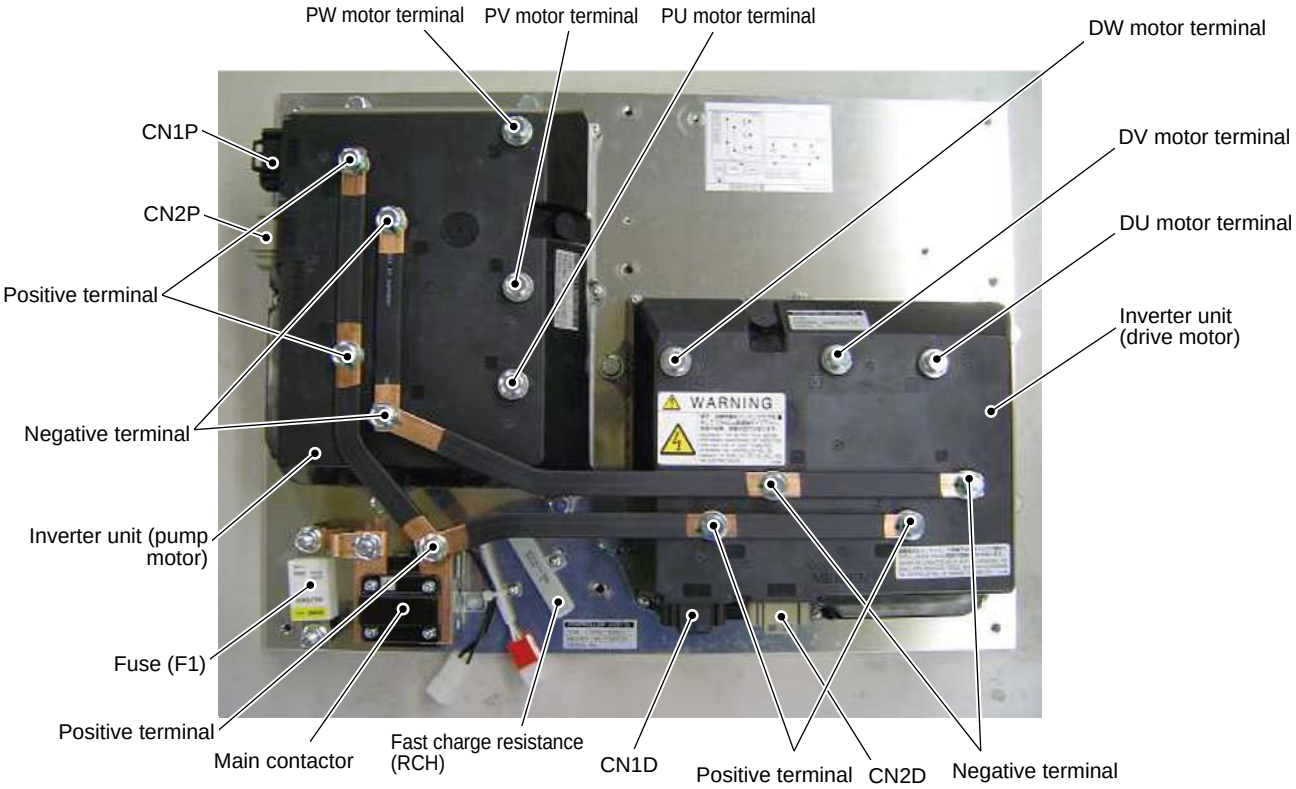

2.2 PROCEDURE FOR CHECKING THE CONTROLLER ASSEMBLY SEPARATELY

2.2.1 CONTROLLER ASSEMBLY

The controller assembly controls the drive, pump and power steering motors according to signals from the F/R lever, accelerator pedal, load handling levers, and steering wheel.

It consist of a contactor which turns the battery power supply on and off, one EPS controller and two inverter units. Each of the controller and converter units is connected by a CAN communications network through which necessary information is sent and received.

The drive and pump motor inverter units each consist of a CPU printed-circuit board and a main power circuit (FET boards and capacitor boards), which control the drive and pump motors.

The EPS (electric power steering) unit consists of a CPU printed-circuit board and main power circuit assembly which controls the EPS motor. (excluding trucks with an Orbitrol steering system.)

The information stored in memory in the motor controller or inverter unit, including settings, can be displayed on the LCD panel by operating the switch panel.

Checking procedure

■ Loose bolts and poor connector contacts

A loose nut or bolt, which secure a controllers' power terminals, will generate heat or cause a fire. Thoroughly clean any loose nuts or bolts with sand paper before retightening them.

Poor connector contacts will cause a system to fail to operate normally. If any poor contacts are found, remove all dust, dirt or corrosion from the connectors and then connect and disconnect the connectors a few times. In addition, check the lead wires for breaks and the terminals for deformation.

■ Checking the controllers on the machine

It is dangerous to work on the electric system of the truck with the key switch turned on and the battery connectors connected. Make sure the battery connectors are disconnected and wait at least 15 minutes before touching any electrical part.

If you need to make measurements with the key switch turned on and the battery connected, lift the drive wheel off the ground to prevent the truck from moving accidentally should the drive motor turn suddenly.

Apply the parking brake, measure the maximum current while performing switch-back and load handling operations.

■ Removing the inverter unit (1-ton class trucks excluding those with an Orbitrol steering system)

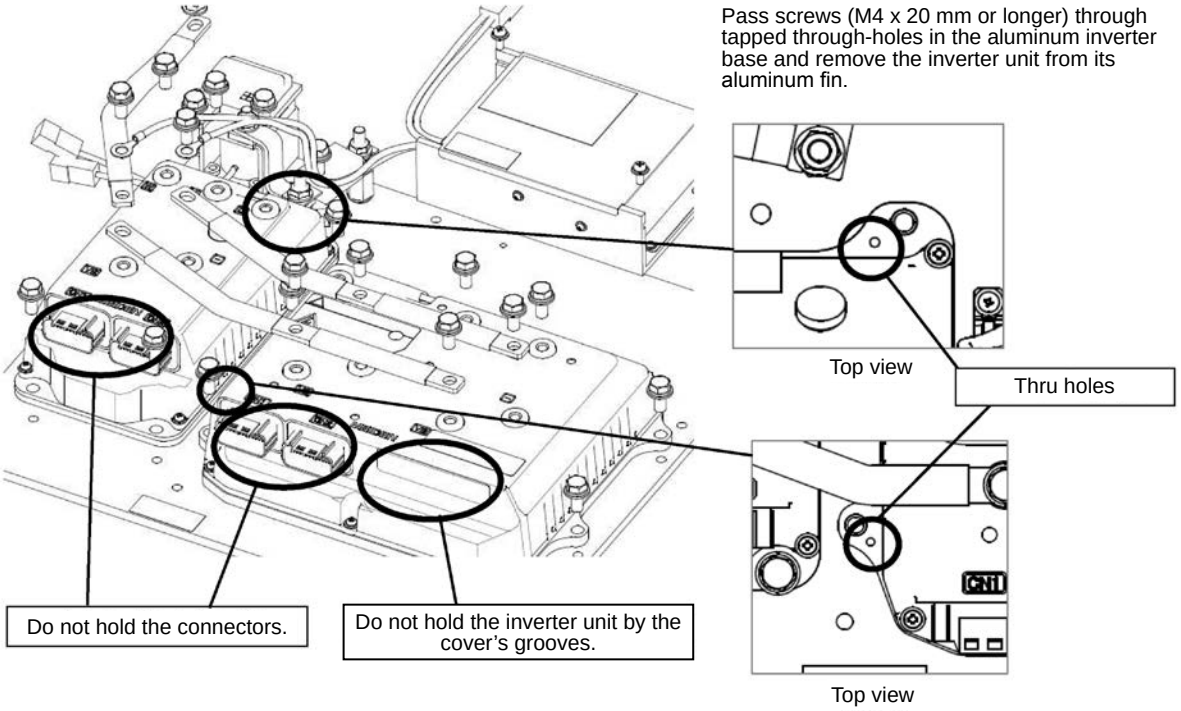

■ Removing the inverter unit (2- and 3-ton class trucks excluding those with an Orbitrol steering system)

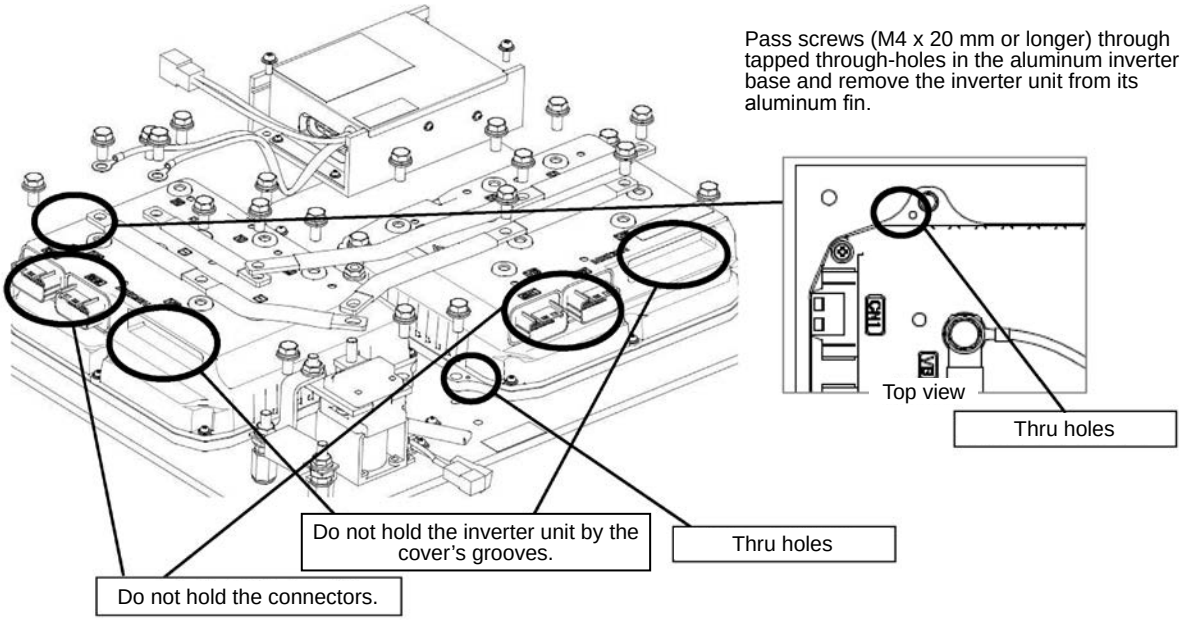

■ Removing the inverter unit (1-, 2- and 3-ton class trucks with an Orbitrol steering system)

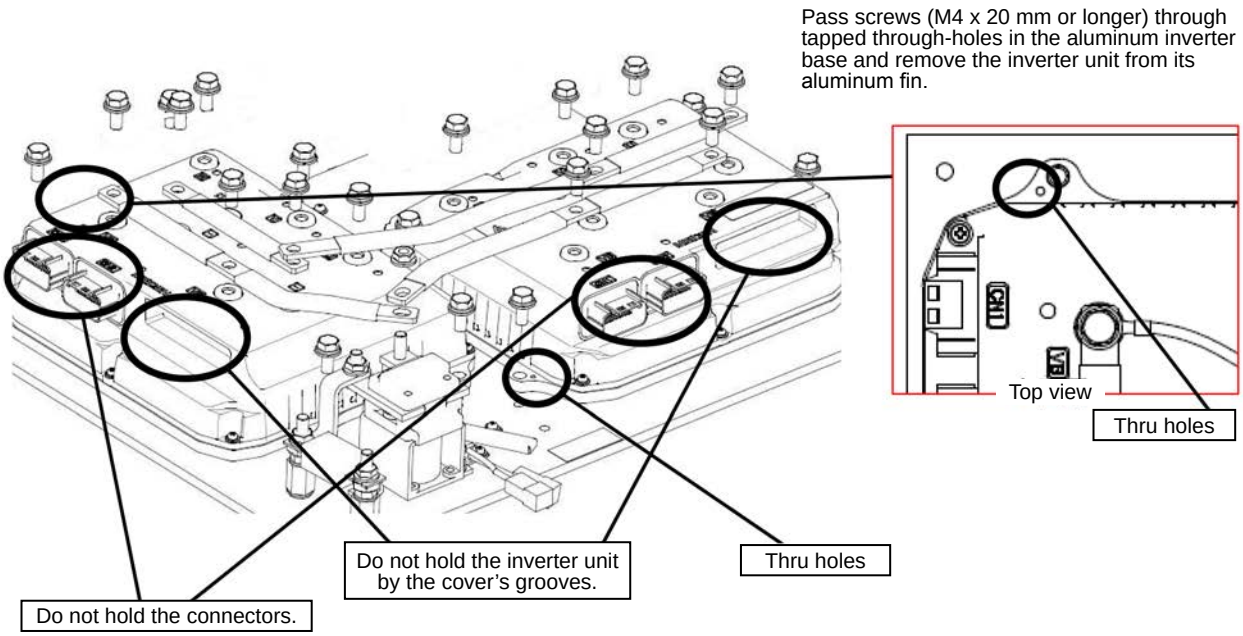

■ CAUTION

Do not hold the inverter unit by the cover's grooves to detaching the inverter unit. Do not hold the controller assembly by the connectors to lift it; otherwise there is a risk of damaging the cover or boards or loosening the inverter seal.

2.2.2 INVERTER UNIT

The truck has two inverter units for the drive and pump motors, each having output terminals U, V and W to the motor and power supply terminals (+) and (-).

The pump motor inverter unit of 1-ton class trucks (excluding those with an Orbitrol steering system) is an S-type.

1. Main circuit terminal location and internal circuit diagram

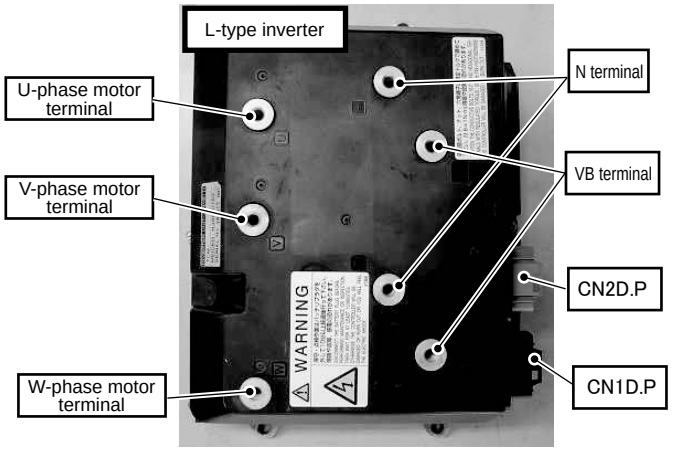

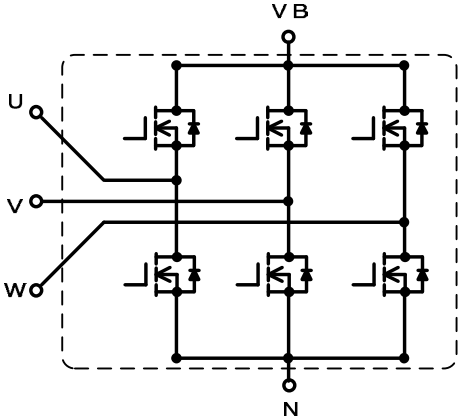

Internal circuit diagram

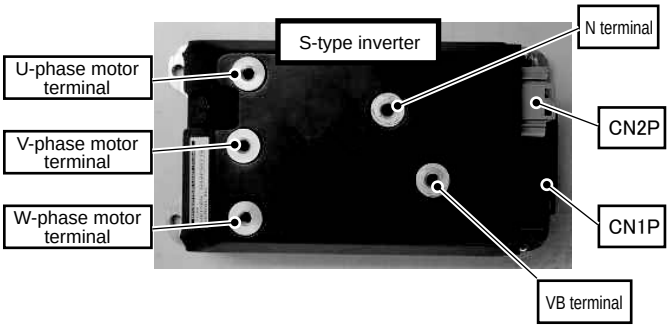

2. Connector pin numbers

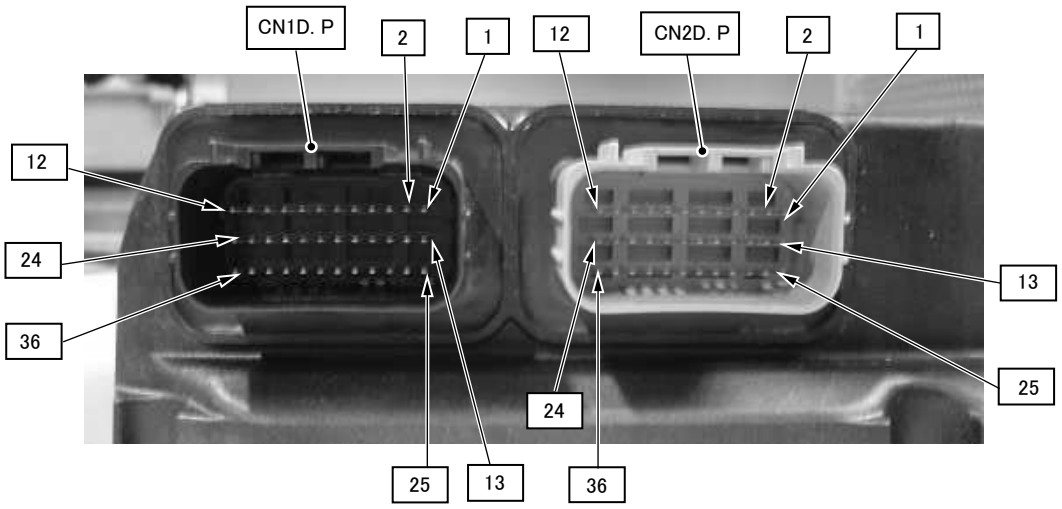

Checking procedure (using an analog multimeter)

① Measure the resistance of each terminal according to the table given below using an analog multimeter with the resistance range set to x1000 ohms.

② Determine whether the inverter unit is defective or not according to the resistance value measured at each terminal.

Standard value for each terminal on the inverter unit

Measurement point	Multimeter		Normal value	Judgment
	Red probe (+)	Black probe (-)	Approximate reading	
VB-U	VB	U	2 or 3 kΩ	Defective if 0 Ω or ∞ Ω
	U	VB	2 or 3 kΩ to ∞ Ω	The judgment varies according to charge status of the capacitors in the main circuit; defective if 0 Ω is seen.
VB-V	VB	V	2 or 3 kΩ	Defective if 0 Ω or ∞ Ω
	V	VB	2 or 3 kΩ to ∞ Ω	The judgment varies according to charge status of the capacitors in the main circuit; defective if 0 Ω is seen.
VB-W	VB	W	2 or 3 kΩ	Defective if 0 Ω or ∞ Ω
	W	VB	2 or 3 kΩ to ∞ Ω	The judgment varies according to charge status of the capacitors in the main circuit; defective if 0 Ω is seen.
U-N	U	N	2 or 3 kΩ	Defective if 0 Ω or ∞ Ω
	N	U	2 or 3 kΩ to ∞ Ω	The judgment varies according to charge status of the capacitors in the main circuit; defective if 0 Ω is seen.
V-N	V	N	2 or 3 kΩ	Defective if 0 Ω or ∞ Ω
	N	V	2 or 3 kΩ to ∞ Ω	The judgment varies according to charge status of the capacitors in the main circuit; defective if 0 Ω is seen.
W-N	W	N	2 or 3 kΩ	Defective if 0 Ω or ∞ Ω
	N	W	2 or 3 kΩ to ∞ Ω	The judgment varies according to charge status of the capacitors in the main circuit; defective if 0 Ω is seen.

*1. The values in the "Normal Value" column should be used as a rough guide, because they may vary with the type of multimeter used and battery's internal state of charge.

*2 If a digital multimeter is used, the resistance between each terminal will usually show a reading of 20 to 30 kΩ as a normal value. However, in this case too, the value may vary with the type of multimeter and the battery's internal state of charge.
If the resistance is 0 Ω, a digital multimeter will read between 0 and 20-30 Ω.

Notes

- Apply a heat-dissipating silicone compound (KS-609: Shinetsu Kagaku) over the whole back-surface of the inverter unit.
- Make sure to apply the silicone compound whenever the inverter unit is replaced with a new one, to allow the heat generated by the inverter unit to be transmitted to the aluminum base efficiently.
- Make sure there is no metal powder, cuts, damage or burrs on the mating surfaces of the aluminum base and the inverter unit before applying the compound.

2.2.3 EPS MOTOR CONTROLLER (excluding trucks with an Orbitrol steering system)

Note: Trucks with an Orbitrol steering system do not have an EPS motor controller.

The EPS motor controller uses a motor-wire connector with a VB (+) wire and an N (-) wire as an external harness.

1. Main circuit terminal location and internal circuit diagram

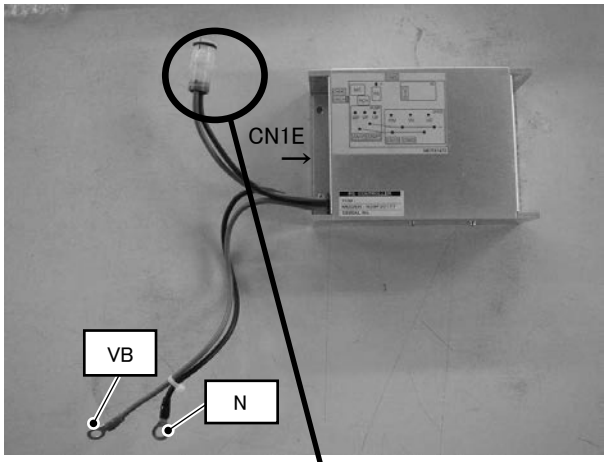

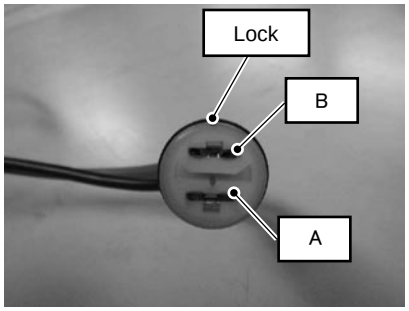

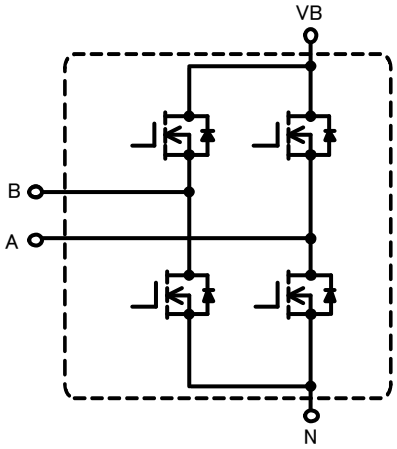

Internal circuit diagram

2. Connector pin numbers

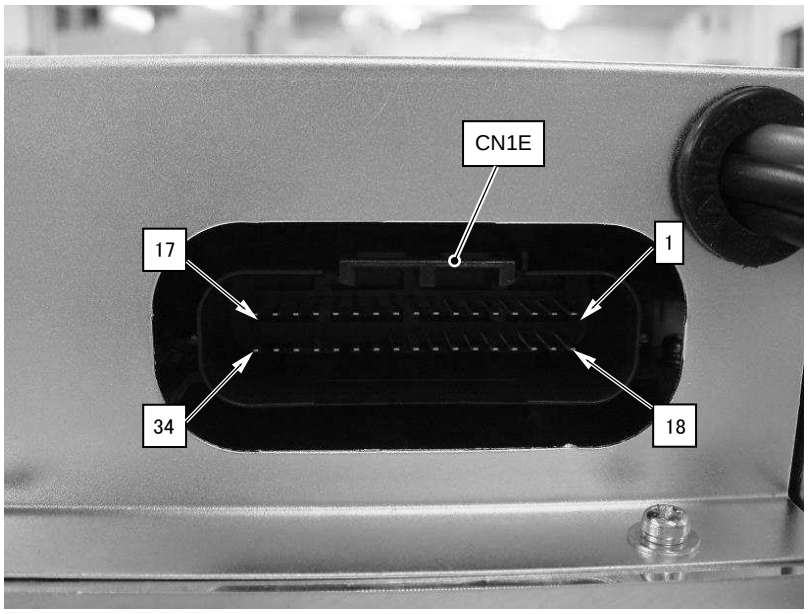

Checking procedure (using an analog multimeter)

① Measure the resistance of each terminal according to the table given below using an analog multimeter with the resistance range set to x1000 ohms.

② Determine whether the inverter unit is defective or not according to the resistance value measured at each terminal.

Standard value for each terminal of the EPS motor controller

Measurement point	Multimeter		Normal value	Judgment
	Red probe (+)	Black probe (-)	Approximate reading	
VB-A	VB	A	2 or 3 kΩ	Defective if 0 Ω or ∞ Ω
	A	VB	2 or 3 kΩ to ∞ Ω	The judgment varies according to charge status of the capacitors in the main circuit; defective if 0 Ω is seen.
VB-B	VB	B	2 or 3 kΩ	Defective if 0 Ω or ∞ Ω
	B	VB	2 or 3 kΩ to ∞ Ω	The judgment varies according to charge status of the capacitors in the main circuit; defective if 0 Ω is seen.
A-N	A	N	2 or 3 kΩ	Defective if 0 Ω or ∞ Ω
	N	A	2 or 3 kΩ to ∞ Ω	The judgment varies according to charge status of the capacitors in the main circuit; defective if 0 Ω is seen.
B-N	B	N	2 or 3 kΩ	Defective if 0 Ω or ∞ Ω
	N	B	2 or 3 kΩ to ∞ Ω	The judgment varies according to charge status of the capacitors in the main circuit; defective if 0 Ω is seen.

*1. The values in the "Normal Value" column should be used as a rough guide, because they may vary with the type of multimeter used and battery's internal state of charge.

*2 If a digital multimeter is used, the resistance between each terminal will usually show a reading of 20 to 30 kΩ as a normal value. However, in this case too, the value may vary with the type of multimeter and the battery's internal state of charge.
If the resistance is 0 Ω, a digital multimeter will read between 0 and 20-30 Ω.

2.2.4 HEAT-DISSIPATING GREASE

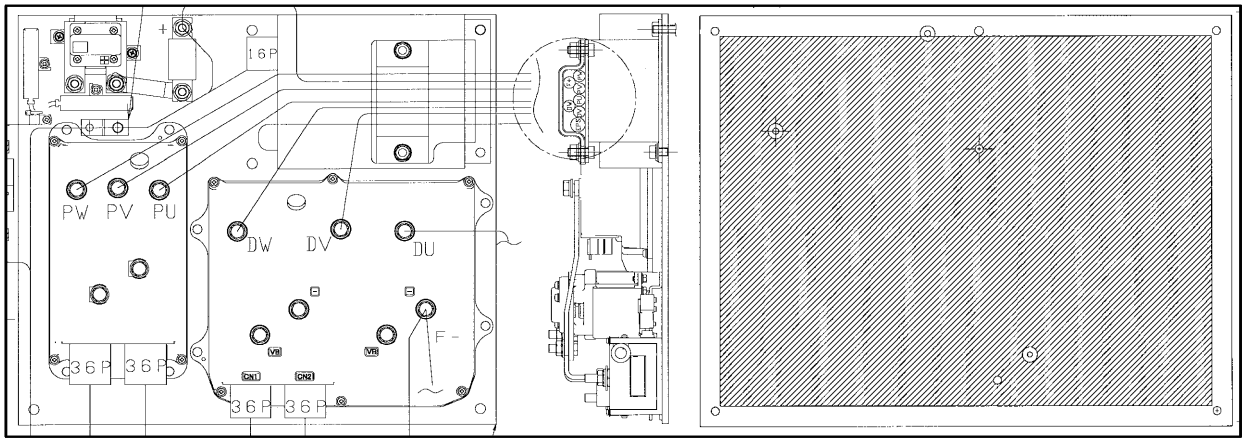

Apply a heat-dissipating grease 250 g on the back of the controller base plate (all areas) to allow the heat generated by the controller to be transmitted to the counterweight efficiently.

2.2.5 MC CONTACTOR

Checking procedure

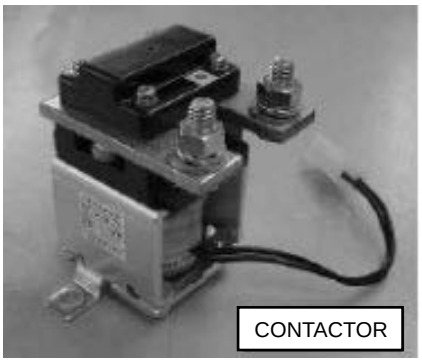

① Check the mechanical action
- Check the contactors separately.
- Visually check the contacts, coil and connectors for damage or remarkable discoloration.
- Replace any failed MC contactor with a new one.

② Checking the coil
- Remove the coil wiring connector.
- Set the multimeter to the resistance range of x100 Ω and measure the resistance between the terminals.
- Determine whether the contactor is defective or not according to the resistance value measured.

Resistance value (key switch OFF, battery connectors disconnected, at 20°C [68°F])

Resistance	Judgment
about 20 Ω	Good
∞	Defective (replace contactor with a new one)

③ Checking the contacts
- Check the contacts visually, replacing any contactor with a new one if any of the contact has a severely rough surface or serious wear.
  Wear limit: 0.5 mm [0.0197 in.]

2.2.6 FAST CHARGE RESISTANCE (RCH)

The capacitor inside the inverter unit is charged through the fast charge resistance (RCH) by the battery, to prevent erroneous detection of a short-circuit in the main circuit.

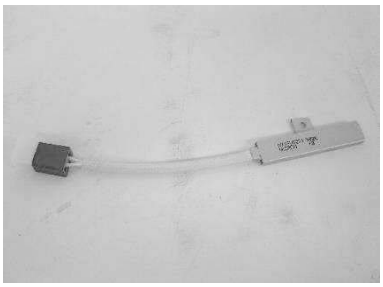

Checking procedure

① Visually check the RCH for damage or remarkable discoloration.

② Set the multimeter to the resistance range of x100 Ω and measure the resistance between the terminals.

③ Determine whether the RCH is defective or not according to the resistance value measured.

Resistance	Judgment
about 39 Ω	Good
0 Ω	Defective (short circuit)
∞	Defective (circuit open)

2.2.7 FUSE (F1)

If too large a current flows in the main circuit, the fuse (F1) will blow to prevent the controller from being damaged or catching fire.

Applicable truck model	Symbol	Type
1-ton and 3-ton class trucks	F1	96LFB-400
2-ton class trucks	F1	96LFB-500

Checking procedure

① Set the multimeter to measure voltage and connect the negative probe to the negative cable connection terminal on the controller.

② Connect the positive probe to the F1 fuse. Measure the voltage and determine whether the fuse is defective or not.

1 to 1.8-ton trucks

Measurement point	Voltage	Judgment
Cable-side terminal	Battery voltage	Good
Contactor-side terminal	Battery voltage	Good
	0 (V)	Defective (Replace the fuse with a new one)

2- to 3.5-ton trucks

Measurement point	Voltage	Judgment
Cable-side terminal	Battery voltage	Good
Contactor-side terminal	Battery voltage	Good
	0 (V)	Defective (Replace the fuse with a new one)

Note

If the fuse is blown, find the cause of the blown fuse (overloading, shorting or grounding) and take the necessary repair measures before replacing the fuse.

2.2.8 ACCELERATOR PEDAL

The accelerator pedal controls the traveling speed. It outputs a signal according to the angle at which the pedal is pressed.

Two accelerator potentiometers are installed to allow a broken signal line to be detected.

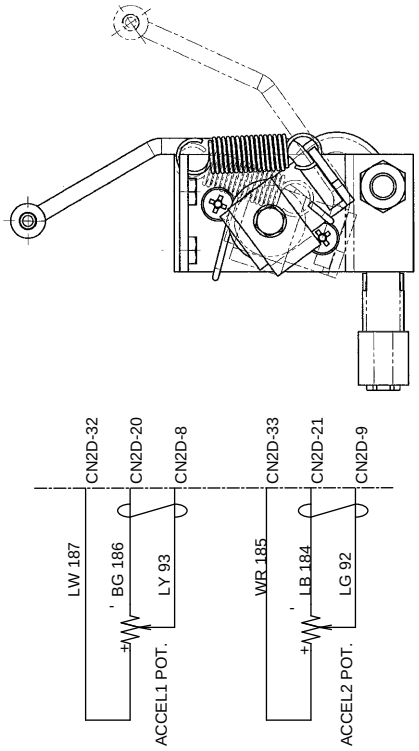

Checking procedure

① Turn on the key switch in the truck. Lift the front wheels off the ground.

② Press and hold the MODE button on the control panel for at least 3 seconds.

③ Press and hold the SPE button on the control panel for at least 3 seconds.

	A (Accelerator 1 potentiometer output voltage)	B (Accelerator 2 potentiometer output voltage)
Accelerator pedal released	1.0 V	0.5 V
Accelerator pedal pressed fully	3.92 V	1.96 V

Note: The voltage at B is always supposed to be half of the voltage at A.

2.2.9 MOTOR ROTATION SENSOR

The motor rotation sensor is a magnetic induction sensor which detects the alternating voltage generated by the passing of the teeth in the rotor opposite the motor shaft.

Two motor rotation sensors are installed on the drive motor to detect the direction of rotation of the motor.

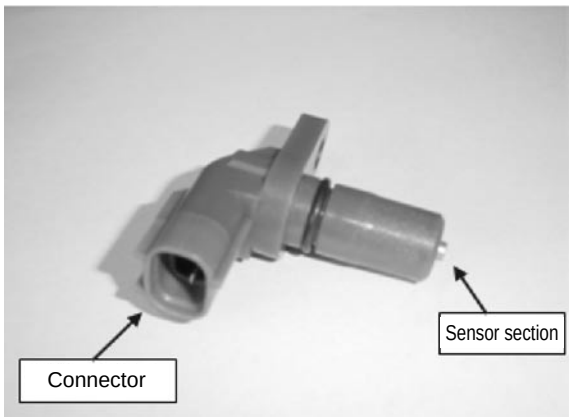

Checking procedure

① Connect a 4.75-16 V power supply to both the Vcc terminal and the GND terminal of the motor rotation sensor.

② Connect an analog multi-meter to both the Vout terminal and the GND terminal.

③ Rotate the output shaft of the motor and make sure the voltage at the Vout terminal should be about 1/2 of the power supply voltage.

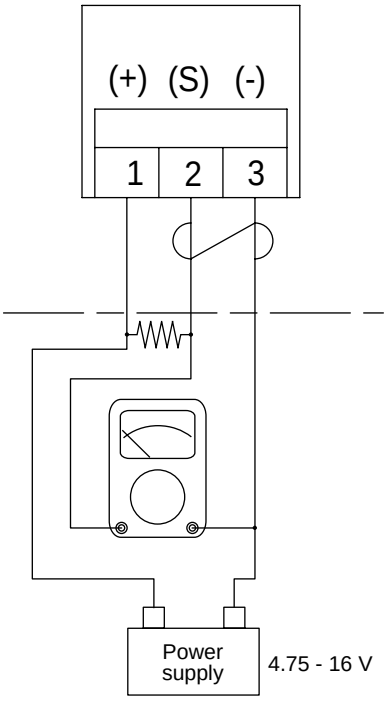

■ **How to rotate the output shaft of the motor**

1. Jack up one of the front wheels and block the other front wheel and the two rear wheels with blocks.
2. Turn the jacked-up front wheel with both hands. This allows the output shaft of the motor to be rotated.

2.2.10 LIFT POTENTIOMETER

The lift potentiometer is used to control the lift speed of the forks and outputs a signal according to the tilt angle of the lift lever. The potentiometer is located in the lift section of the control valve.

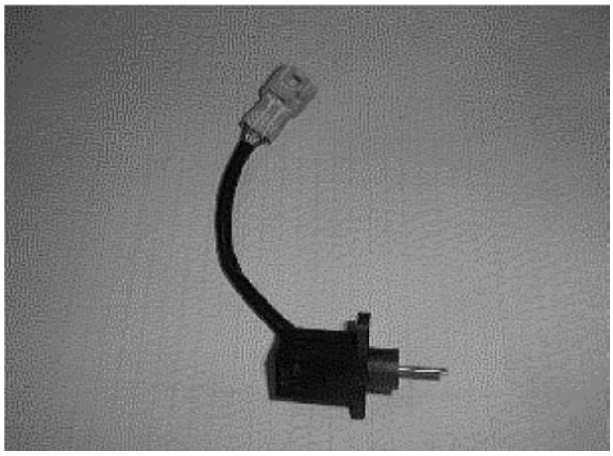

Checking procedure

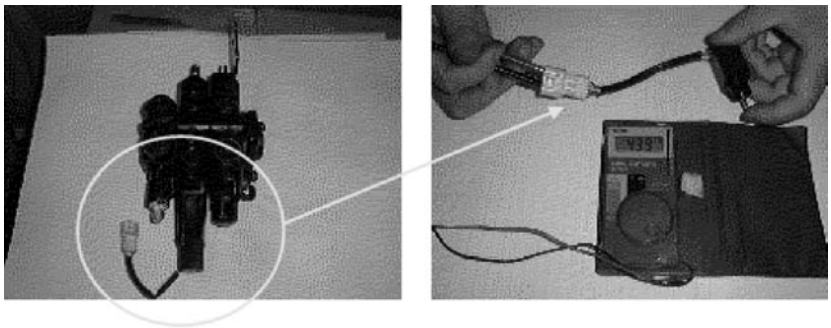

Control valve

Resistance (using a digital multimeter)

Measurement point (within the coupler)	Normal value
Between brown and red	4.7 kΩ ±0.3 kΩ
Between white and red	Shaft status: Pushed in: 0.3 kΩ ±0.3 kΩ Released: 4.7 kΩ ±0.3kΩ

2.2.11 STEERING POTENTIOMETER

The steering potentiometer is used to detect the turning angle of the left rear wheel. It is located on the top of the left-side king pin on the rear axle. The motor speed is controlled according to the angle at which the left rear wheel to prevent it from exceeding the preset value.

1. Checking procedure

With the truck in the maintenance mode (See 2.2.20.), check the voltage at point D.

- When the left rear wheel is in the straight-ahead position: 2.4 to 2.7 V
- When the left rear wheel is turned all the way left: about 3.6 V
- When the left rear wheel is turned all the way right: about 1.9 V
- Whenever the steering potentiometer or the drive motor inverter unit is replaced with a new one, it will be necessary to set the center, right-end and left-end positions of the steering wheel into the steering potentiometer in the following manner:

2. Operating procedure

■ Using the steering memory switch

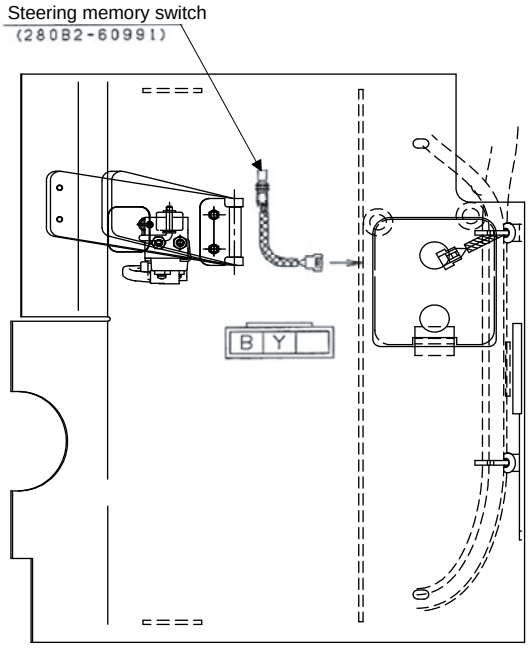

(1) With the key switch turned off, connect a steering memory switch (part number: 280B2-60991) to the 3P coupler near the center of the floorboard (on the side where the truck-body harness is found).

(2) Press the steering memory switch while turning the key switch on. Then, release the steering memory switch to turn it off to put the steering potentiometer in the read-in mode. The buzzer will sound for 1 second.

(3) Turn the steering wheel counterclockwise all the way and then press and release the steering memory switch. The buzzer will sound for 1 second. (The full left position will have been stored in memory.)

(4) Return the steering wheel to the center. Then press and release the steering memory switch. The buzzer will sound for 1 second. (The center position will have been stored in memory.)

(5) Turn the steering wheel clockwise all the way. Then press and release the steering memory switch. The buzzer will sound for 1 second. (The full right position will have been stored in memory.)

(6) Return the steering wheel to the center and turn the key switch off.

(7) Remove the steering memory switch.

■ **When you do not have a steering memory switch**

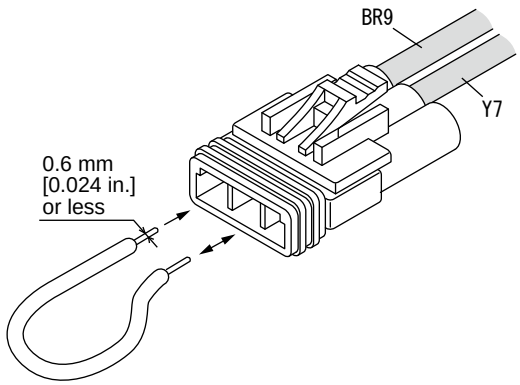

(1) With the truck key switch off, connect one end of a wire to the 3P coupler (BR9 terminal) near the center of the floorboard.
(2) Connect the other end of the wire to the 3P coupler (Y7 terminal). Turn the key switch on and remove the end of the wire from the Y7 terminal. The buzzer will sound for 1 second.
(3) Turn the steering wheel counterclockwise all the way and touch the free end of the wire briefly to the Y7 terminal. Remove it immediately. The buzzer will sound for 1 second. (The full left position will have been stored in memory.)
(4) Turn the steering wheel to the center and touch the free end of the wire briefly to the Y7 terminal. Remove it immediately. The buzzer will sound for 1 second. (The center position will have been stored in memory.)
(5) Turn the steering wheel clockwise all the way and touch the free end of the wire briefly to the Y7 terminal. Remove it immediately. The buzzer will sound for 1 second. (The full right position will have been stored in memory.)
(6) Return the steering wheel to the center and turn the key switch off.
(7) Remove the wire from the 3P coupler.

2.2.12 LCD PANEL

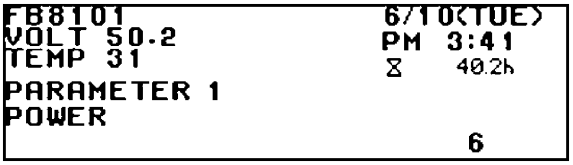

The LCD panel includes the hour meter, error code display (up to 5 error codes, with the most serious 5 error codes displayed if more than 5 error codes occur), run time clock, drive wheel angle indicator, steering wheel in neutral display, an hour meter screen which shows previous data and other detailed information, fuel consumption screen and an auto power-off function.

The LCD panel also has a VTM board function that allows you to control the battery charging, over-discharge control, and make various other adjustments (by setting various parameters).

By connecting a PC to the LCD panel you can check the error history, battery charge history and other data.

The maintenance mode is used to display voltages and other information (15 items). Without having to connect a PC, you can also check the error history in the maintenance mode.

2.2.13 CM CONTACTOR

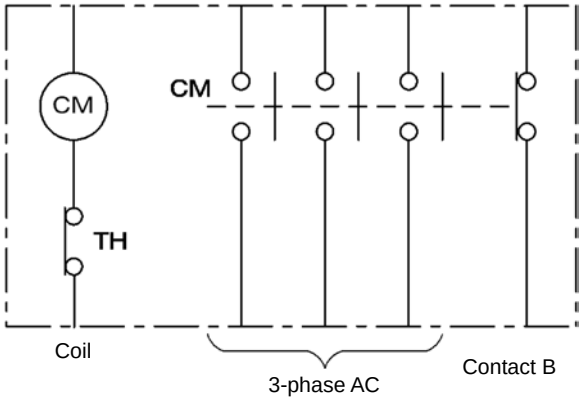

The CM contactor is used for the on-board battery charger. During charging, 3-phase AC is flowing through the contactor to open the contact B, thus shutting off the control circuit power supply for the controllers and other devices. Under normal conditions, it opens the 3-phase contacts to prevent the charge current from flowing.

Applicable truck model	CM contactor	Thermal relay setting	Input voltage	Thermal relay setting range
FB10-8 FB15-8 FB18-8	281E2-62661	13A	3 ø 50/60Hz 380/390 V 430/440 V	9 to 13 A
FB20-8 FB25-8	281E2-62651	18A		12 to 18 A
FB25-8LB FB25-8V FB30-8 FB30-8V FB35-8S	281U2-62661	26A		18 to 26 A

Checking procedure

(1) Checking coil resistance
Measure the resistance between points “a” and “b”.
The resistance should be 0.1 to 0.3 kΩ.

(2) Checking for continuity of contact B
Measure the resistance between points “c” and “d”.
There should be no continuity while the button “e” at the center is being pressed.

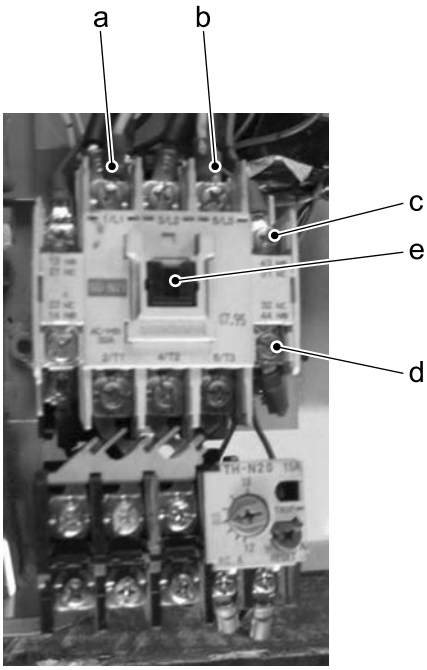

2.2.14 CONTROL SWITCH PANEL

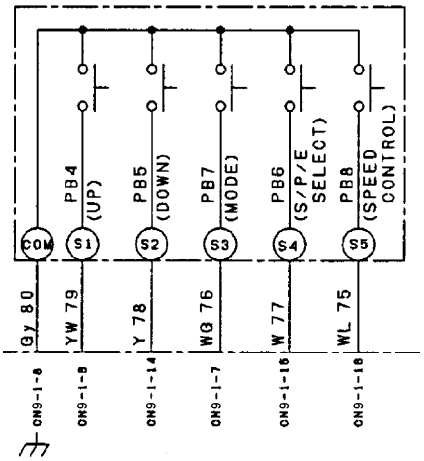

Checking procedure

(1) Checking the truck speed control switch (“turtle” button)

- Measure the voltage between the CN9-1-16 terminal (WL) and the CN9-1-8 terminal (Gy) on the LCD panel.
  The voltage reading must be as follows: 0 V when the turtle button is pressed and 5 V when the button is not pressed.

(2) Checking the S.P.E switch

- Measure the voltage between the CN9-1-15 terminal (W) and the CN9-1-8 terminal (Gy) on the LCD panel.
  The voltage reading must be as follows: 0 V when the S.P.E button is pressed and 5 V when the button is not pressed.

(3) Checking the “Mode” button

- Measure the voltage between the CN9-1-7 terminal (WG) and the CN9-1-8 terminal (Gy) on the LCD panel.
  The voltage reading must be as follows: 0 V when the Mode button is pressed and 5 V when the button is not pressed.

(4) Checking the “-” button

- Measure the voltage between the CN9-1-14 terminal (Y) and the CN9-1-8 terminal (Gy) on the LCD panel.
  The voltage reading must be as follows: 0 V when the “-” button is pressed and 5 V when the button is not pressed.

(5) Checking the “+” button

- Measure the voltage between the CN9-1-6 terminal (YW) and the CN9-1-8 terminal (Gy) on the LCD panel.
  The voltage reading must be as follows: 0 V when the “+” button is pressed and 5 V when the button is not pressed.

2.2.15 BATTERY CHARGER SWITCH PANEL

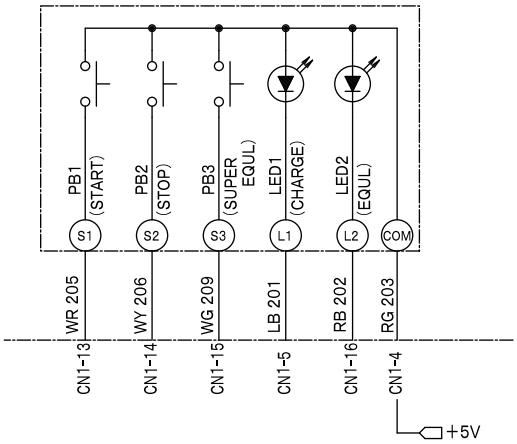

Checking procedure

(1) Checking the power supply

- Measure the voltage between the CN1-4 (RG) and the CN9-1-5 (BR) on the LCD panel. The voltage reading should be 5 V.

(2) Checking the start button

- Measure the voltage between the CN1-13 (WR) and the CN9-1-5 (BR) on the LCD panel. The voltage should be as follows: 5 V when the start button is pressed and 0 V when the start button is released.

(3) Checking the stop button

- Measure the voltage between the CN1-14 (WY) and the CN9-1-5 (BR) on the LCD panel. The voltage should be as follows: 5 V when the stop button is pressed and 0 V when the stop button is released.

(4) Checking SUPER EQUL button

- Measure the voltage between the CN1-15 (WG) and the CN9-1-5 (BR) on the LCD panel. The voltage should be as follows: 5 V when the SUPER EQUL button is pressed and 0 V when the SUPER EQUL button is released.

2.2.16 CHARGE RECTIFICATION DIODE

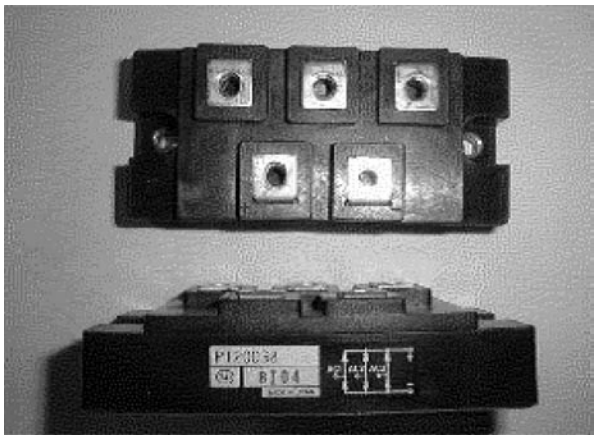

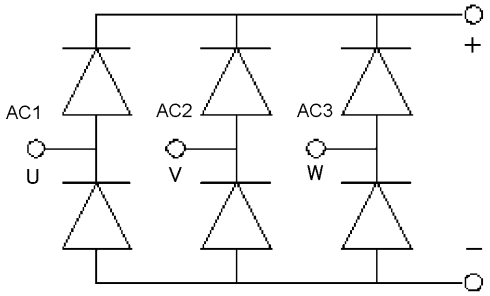

* The symbols are given on the product surface.

The diode is used to rectify the current in the charge circuit.

Part number	Model	Applicable truck model
177P2-62401	PT200S8	All models

Checking procedure

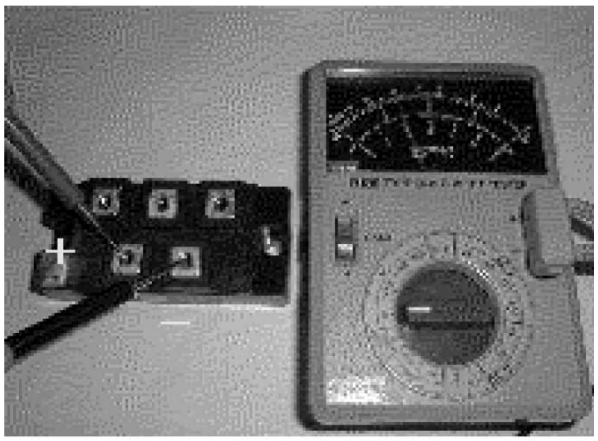

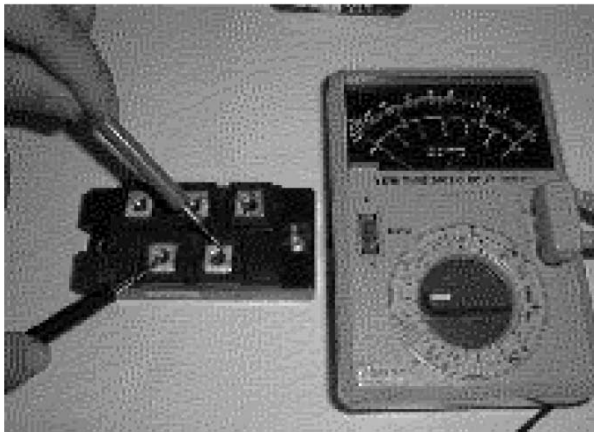

Resistance range x 1 Ω (Zero adjustment should be made.)

Measurement point	Probe	Normal value
– +	Black Red	60 ± 20 Ω
+ –	Black Red	∞
+ U	Black Red	∞
U +	Black Red	15 ± 10 Ω
+ V	Black Red	∞
V +	Black Red	15 ± 10 Ω
+ W	Black Red	∞
W +	Black Red	15 ± 10 Ω
– U	Black Red	15 ± 10 Ω
U –	Black Red	∞
– V	Black Red	15 ± 10 Ω
V –	Black Red	∞
– W	Black Red	15 ± 10 Ω
W –	Black Red	∞

Note: Whenever the charge rectification diode is replaced with a new one, apply silicone grease (KS-609) on the fitting surface of a new diode.

2.2.17 CHECKING CHARGE TIMER

Check the secondary timer for operation using the following procedure. If any fault is found, replace the LCD panel with a new one.

○ : Lighting, △ : Flashing, × : Off

When the charge timer is normal:

	Checking method		Super equalizing charge LED	Charge start LED	CM contactor operation
1	Connect power supply plug to wall outlet		×	×	OFF
2	Press and hold super equalizing charge button for more than 3 seconds		△	×	OFF
3	Press start button	when the button is pressed	△	○	ON
		31 seconds after pressing	×	×	OFF
4	Checking is over (Timer counts up normally.)		×	×	OFF

When the charge timer is defective:

	Checking method		Super equalizing charge LED	Charge start LED	CM contactor operation
1	Connect power supply plug to wall outlet		×	×	OFF
2	Press and hold super equalizing charge button for more than 3 seconds		△	×	OFF
3	Press start button	when the button is pressed	△	○	ON
		more than 2 minutes pass	△	×	OFF
4	Checking is over (Charge error)		△	×	OFF

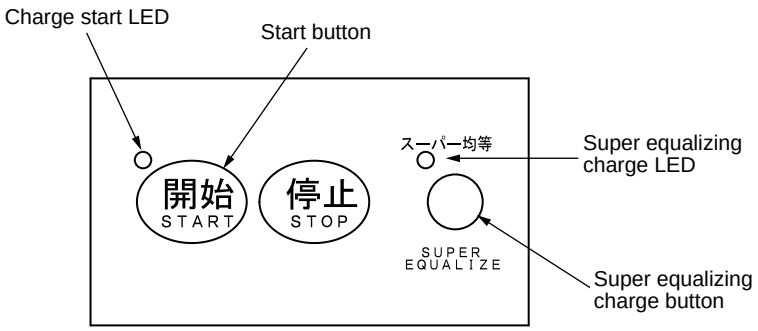

2.2.18 MOTOR THERMO-SENSOR

The drive and pump motors are provided with thermo-sensors to check the motor temperature. If the detection value of a thermo-sensor is judged to be abnormal, the controller limits the electric current to the corresponding motor.

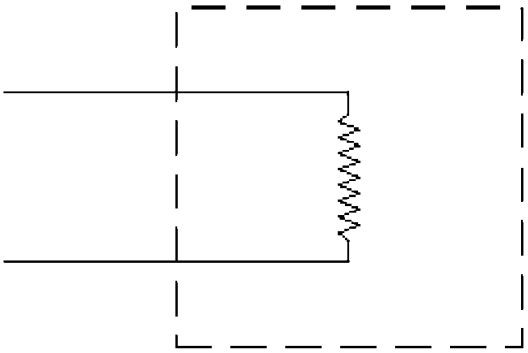

Checking procedure

① Disconnect the motor sensor connectors.

② Set the multimeter to a resistance range of x1000 Ω. Measure the resistance between the terminals according to the table given below.

③ Determine whether the sensor is defective or not according to the measured resistance.

Normal value (rough guide)	
10°C [50°F]:	about 20 kΩ
20°C [68°F]:	about 13 kΩ
30°C [86°F]:	about 9 kΩ
50°C [122°F]:	about 4.4 kΩ

Voltage checking

Measurement terminals (wire color)				Normal value
Drive motor		Pump motor		
+	–	+	–	
CN11-4 (WG)	CN11-3 (WR)	CN1-22 (LW)	N terminal	0.2 to 4.8 V

2.2.19 F/R SWITCH

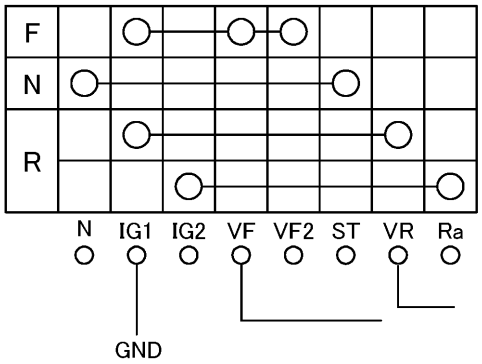

Checking procedure

Measure the resistance between terminals with the multimeter in the resistance range (minimum range).

Standard value

IG1 (GND) | VF (Inverter CN1-8)	① 0 Ω for F ② ∞ for positions other than F	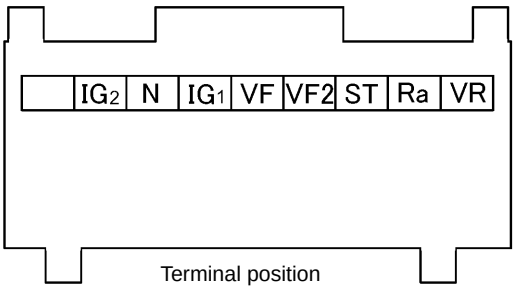
IG1 (GND) | VR (Inverter CN1-21)	① 0 Ω for R ② ∞ for positions other than R	

2.2.20 CHECKING VOLTAGE ON THE LCD PANEL

The FB-8 series trucks have controllers completely sealed with the couplers made into waterproof type. This makes it difficult to measure the voltage of the controller system directly.

To make it easier to service the controller system of the truck, the trucks are provided with the maintenance mode on the LCD panel to display the operating status information of the controllers.

The information of up to 15 items and error history can be displayed on the LCD panel using the following procedure:

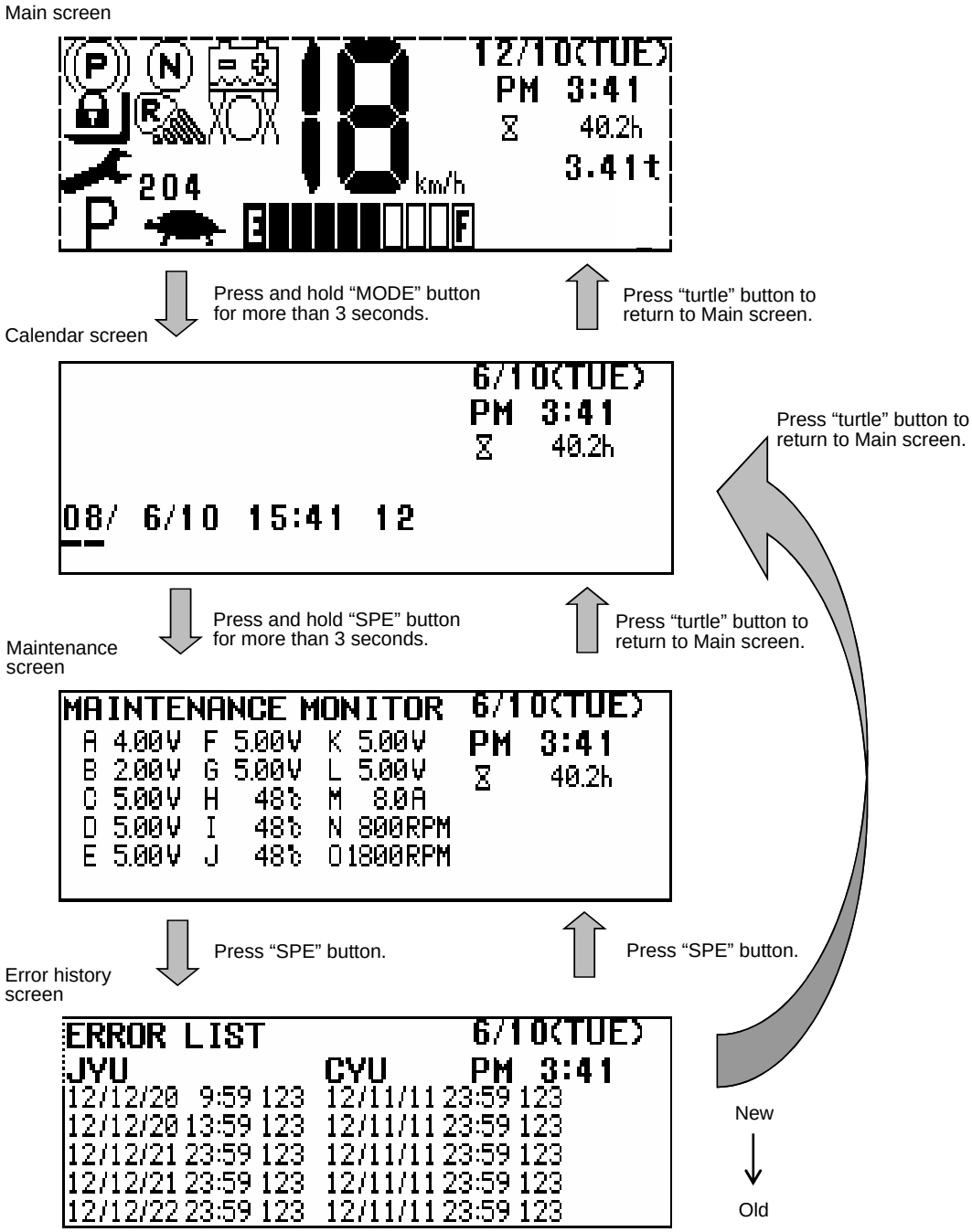

JYU: Serious error CYU: Moderately serious error
Year/Month/Day Hour:Minute Error code: Year/Mont/ Day Hour: Minute Error code
The error history is updated by pressing the SPE button.

Items to be displayed on the maintenance screen:

A	Accelerator 1 POT output voltage (V)	F	Drive motor current sensor 1 voltage (V)	K	Lift current sensor 1 voltage (V)
B	Accelerator 2 POT output voltage (V)	G	Drive motor current sensor 2 voltage (V)	L	Lift current sensor 2 voltage (V)
C	Lift POT output voltage (V)	H	Pump motor inverter internal temp. (°C)	M	EPS motor current (A)
D	Steering POT output voltage (V)	I	Drive motor inverter internal temp. (°C)	N	Drive motor speed (rpm)
E	Torque sensor output voltage (V)	J	Power steering motor inverter internal temp. (°C)	O	Pump motor speed (rpm)

On trucks with an Orbitrol steering system, the items E, J, and M are always displayed as "0".

Drive system

No.	Terminal	Key switch	Parking lever	Forward switch	Accelerator	Remarks
		ON	Released	ON	Full throttle	
A	Accelerator 1 POT output voltage (V)	0.97	0.97	0.97	4.08	common to all models.
B	Accelerator 2 POT output voltage (V)	0.51	0.51	0.51	2.04	common to all models.
F	Drive motor current sensor 1 voltage (V)	2.49	2.49	2.49	2.49	common to all models.
G	Drive motor current sensor 2 voltage (V)	2.49	2.49	2.49	2.49	common to all models.
I	Drive motor inverter internal temp. (°C)	–	–	–	–	
N	Drive motor speed (rpm)	0	0	0	4085	1-ton class trucks (S mode)
					3829	2-ton class trucks (S mode)
					3407	3-ton class trucks (S mode)

Load handling system

No.	Terminal	Lever position			Remarks
		Lever pulled back	Neutral	Lever pushed forward	
				during rotation	
C	Lift POT output voltage (V)	4.27	1.05	0.9	common to all models
H	Pump motor inverter internal temp. (°C)	–	–	–	
K	Lift current sensor 1 voltage (V)	2.49	2.49	2.49	common to all models
L	Lift current sensor 2 voltage (V)	2.49	2.49	2.49	common to all models
O	Pump motor speed (rpm)	0	0	2963	1.5-ton class trucks (S mode)
				2962	2.5-ton class trucks (S mode)
				2961	3-ton class trucks (S mode)

Power steering system (All the items except “D” are inapplicable to trucks with an Orbitrol steering system.)

No.	Terminal	Steering wheel position			Remarks
		Left end	Center	Right end	
D	Steering POT output voltage (V)	3.63	2.5	1.9	common to all models
E	Torque sensor output voltage (V)	1.04	2.4	3.8	common to all models
J	PS motor inverter internal temp. (°C)	–	–	–	
M	EPS motor current (A)	40	0	40	1-ton class trucks (MAX): The current is limited when the steering wheel is turned to each end.
		45	0	45	2-ton class trucks (MAX): The current is limited when the steering wheel is turned to each end.
		38	0	38	3-ton class trucks (MAX): The current is limited when the steering wheel is turned to each end.

3. TROUBLESHOOTING GUIDE

3.1 HOW TO USE THIS GUIDE

Check the LCD panel for any error codes.

If an error code is displayed on the LCD panel, see “3.5 TROUBLESHOOTING BY ERROR CODE”. If no error code is displayed, see “3.6 TROUBLESHOOTING BY PROBLEM”.

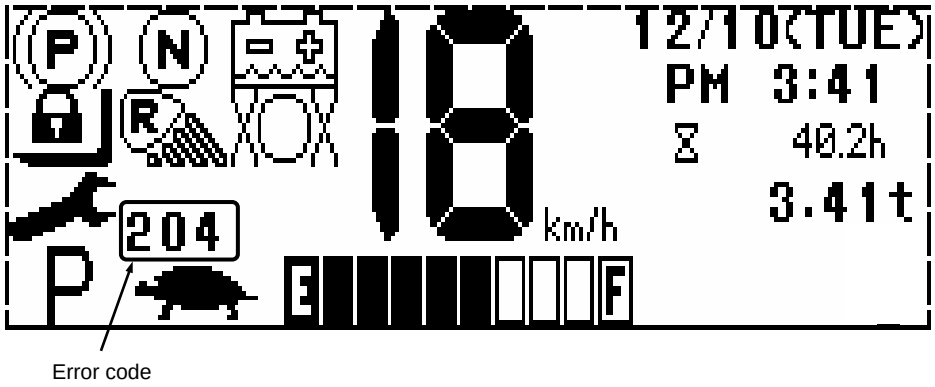

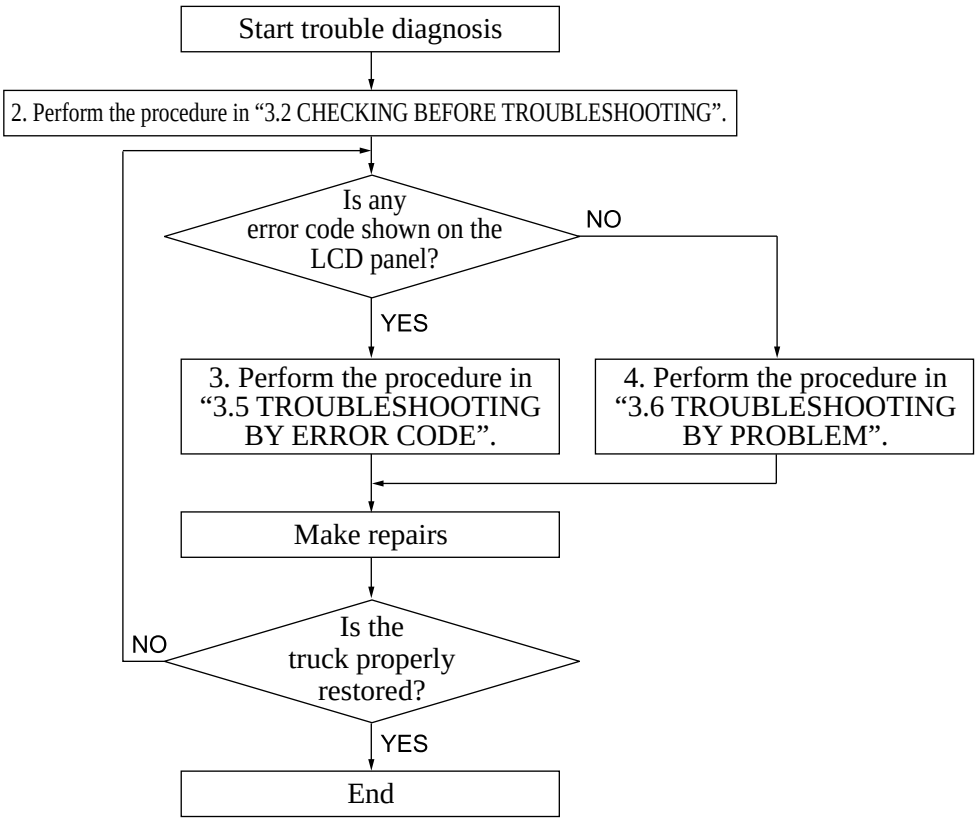

3.2 CHECKING BEFORE TROUBLESHOOTING

(1) Checking wiring and terminals for looseness

If a bolt or nut of the controller gets loose, that part will be heated and burn out. When you find a loosened bolt or nut or a heated area, polish the contacting areas and retighten the bolt/nut. Give close watch especially on the parts where a large current flows such as the minus terminal, fuses, motors, contactors, etc. If the minus terminal is loosened, a large current will flow, which may damage the board.

(2) Checking wire harness and cables visually

If any outer cover of wire harness or cables is damaged, insulate it with a vinyl tape. If any core wire inside is damaged, replace it with a new one.

(3) Checking fuses

Check main fuse (in the controller) and the fuse in the fuse box.

(4) Checking the communication line

Check whether the LCD panel display looks correct.
When the P/E display changes by flipping the switch, the communication line is working correctly.
The hourglass symbol ⌛ on the LCD panel should blink when normal.

(5) Leaks from body

The wiring of the electric truck is insulated from the frame. If there is any leak from the body, various troubles will occur. Be sure to check for leaks.
It is recommended to wipe off dirt on the battery surface with a wet waste cloth or paper and dry the cleaned surface by blowing air.
(Criteria)

Wiring side: If leak resistance is 100 k-ohm or more, the wiring condition in the wiring side is judged as good.
Frame to body receptacle (+)
Frame to body receptacle (-)

Battery side: If the leak is 1 k-ohm impedance with 1 V or less, the wiring condition in the battery side is judged as good.
Frame to battery (+)
Frame to battery (-)

< ERROR CODES SHOWN BY LED >

The error code numbers are displayed by an orange LED blinking on the controller CPU board.

Error codes are displayed as 2-digit numbers (decimal system). The 1's digit and 10's digit blink at an interval of 0.5 seconds. The 100's digit is not displayed for 3-digit error codes. The 1's and 10's digits are separated by a 1-second OFF period. The 10's digit is flashed first, and then the 1's digit.

After flashing one error code, the LED will be OFF for 4 seconds before repeating the blinking process.

If multiple errors occur, the last error code that was detected by the controller will be the one displayed.

Because the error codes displayed on the LCD panel have a one-to-one correspondence with the flashing LED error codes, the information described above is helpful if the LCD panel fails to display the error codes.

(Example) Error code: 23 (Drive motor current sensor output abnormal)

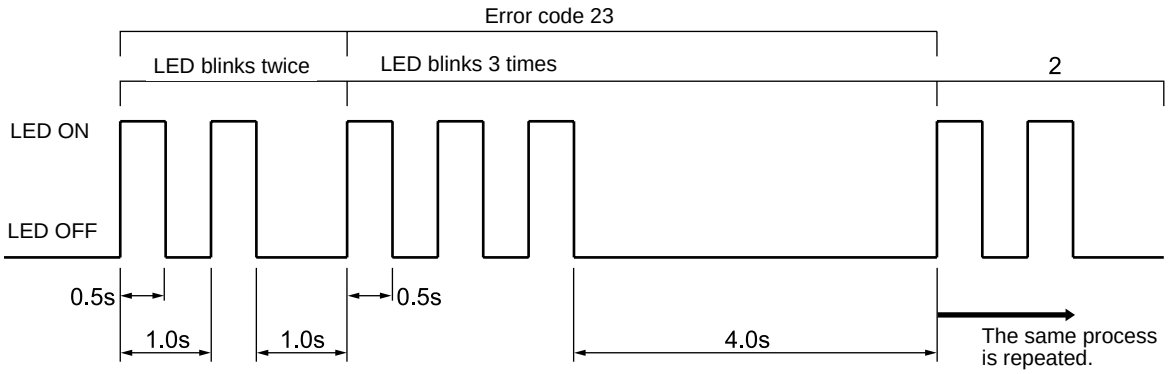

■ Locations of LEDs

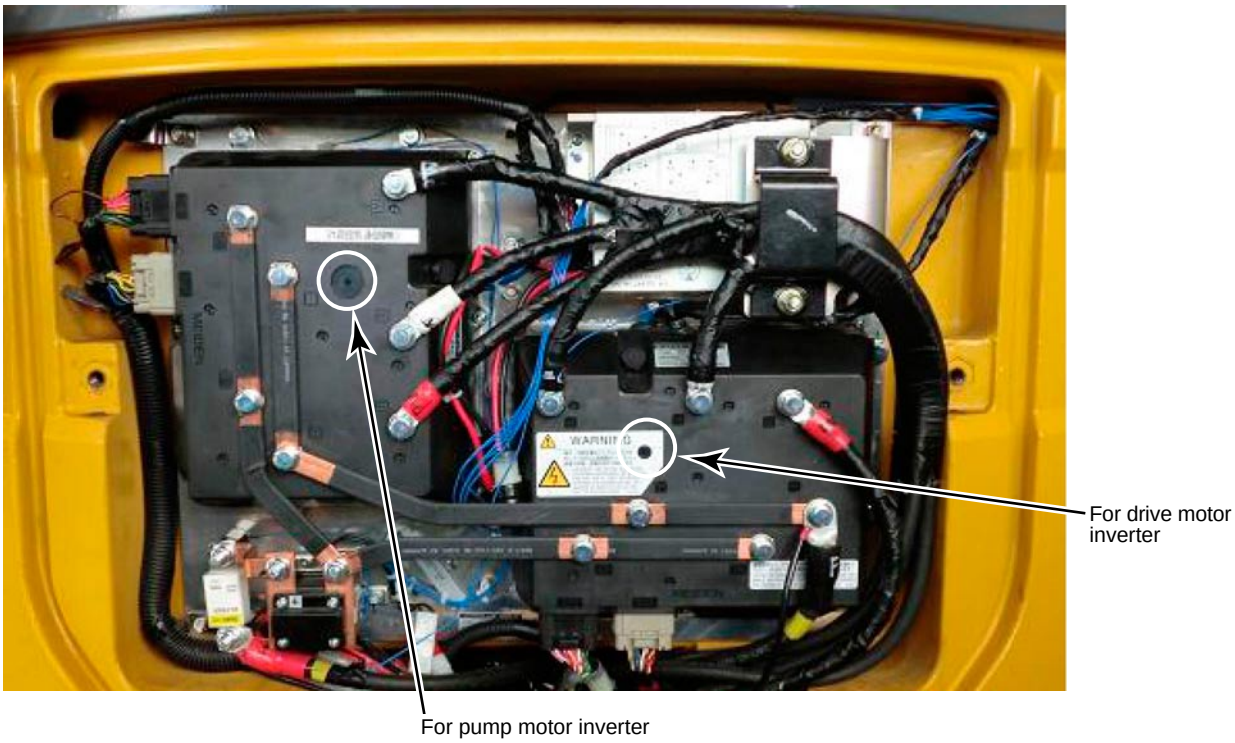

3.3 ERROR CODE TABLE

(1) Drive system (1/5)

Error code on display	Error description	Problem	Resetting	Error code conditions	LED code	Page
Ⓝ blinks.	Drive system neutral interlock	The truck won't travel.	Turn the key switch ON when: • the accelerator is OFF • the F/R lever is in neutral	When the key switch is turned ON, • an accelerator signal is present • a forward or reverse travel signal is present.	01	49
101	Low battery voltage detected (Battery voltage dropped)	The truck won't travel, steering system and the load handling system won't work.	Turn the key switch OFF.	Battery voltage: 28 V or less (for 48 V trucks) 42 V or less (for 72 V trucks) This error occurs if the voltage in the EPS system stays below 24 V (for 48 V trucks) or 36 V (for 72 V trucks) for at least 2 seconds.	09	49
102	Low battery voltage detected (Low output)	Lower output of drive and pump motors	Battery voltage: • 28 V or less (for 48 V trucks) • 42 V or less (for 72 V trucks)	Battery voltage (for travel and load-handling systems): • 45 V or less (for 48 V trucks) • 60 V or less (for 72 V trucks)	95	49
103 Battery discharge indicator blinks.	Low battery voltage detected (Overdischarge warning)	Lower output of drive and pump motors	The battery discharge indicator level rises above the warning level (factory set to Level 2).	The battery discharge indicator level drops below the warning level (factory set to Level 2).	-	49
Ⓝ blinks. 105	Seat switch OFF detected (after the key switch is turned ON)	The truck won't travel and the load handling system won't work. Lift lock solenoid OFF.	Turn the seat switch ON. (The operator must sit in the seat.)	After the key switch is turned ON, the seat switch stays OFF for the preset period of time, or longer.	02	50
Ⓝ blinks. 106	Seat switch OFF detected (When the key switch is turned ON)	The truck won't travel and the load handling system won't work. Lift lock solenoid OFF.	The seat switch is ON when the key switch is turned ON.	The seat switch is OFF when the key switch is turned ON.	02	50
201	Forward or reverse travel switch abnormal	The truck won't travel.	Automatically resets when the input returns to normal.	The forward and reverse travel switches are turned ON simultaneously.	07	50
202	Drive motor inverter unit temp. abnormal	The truck won't travel.	The temp. drops to less than 109°C [228°F].	This error occurs when the temp. reaches 109°C [228°F].	34	50
203	Drive motor inverter unit temp. too high	The truck can be driven (but the output is limited).	The temp. drops to 90°C [194°F] or below.	This error occurs when the temp. reaches 94°C [201°F].	33	50

(1) Drive system (2/5)

Error code on display	Error description	Problem	Resetting	Error code conditions	LED code	Page
204	Drive motor inverter unit thermosensor 1 (TMD1) AD input range abnormal	The drive output is limited.	Automatically resets when the input returns to normal.	The thermosensor voltage drops below 0.2 V or rises above 4.92 V	31	48
	Drive motor inverter unit thermosensor 2 (TMD2) AD input range abnormal				32	
205	Drive motor temp. abnormal	The truck won't travel.	The temp. drops below 155°C [311°F].	The thermosensor temp. reaches 155°C [311°F].	37	49
206	Drive motor temp. too high	The truck can be driven (but the current is limited).	The temp. drops below 135°C [275°F].	The thermosensor temp. reaches 145°C [293°F].	36	49
207	Drive motor thermosensor abnormal AD input range abnormal	The drive output is limited.	Automatically resets when the input returns to normal.	The thermosensor voltage drops below 0.15 V or rises above 4.92 V	35	49
208	Excessive travel inching	The truck won't travel. (Limits the output to 80% when the accelerator and brake are both turned ON)	Accelerator output OFF	The brake switch remains ON for at least 10 seconds while the accelerator output is 70% or more.	89	49
209	Rotation sensor defective • The A or B phase pulse is missing. • The A and B phase pulses are missing.	The truck won't travel.	Automatically resets when the input returns to normal.	After the accelerator is turned ON, if there is no speed pulse input and the electric current equivalent to the max. torque (i.e., the torque command is for more than 60% of full current) remains present for at least 15 seconds.	73	50
	Rotation sensor defective Bearing defective (Stall signals detected continuously)	The drive output is limited.	Automatically resets when the input returns to normal.		74	50
210	Accelerator signal wire short-circuited	The truck can be driven normally. Accelerator 1 or 2 signal wire short-circuited	Automatically resets when the input returns to normal.	Accelerator voltage comparison: Accelerator 1 – Accelerator 2 x 2 ≧ 0.5	-	51
211	Accelerator 2 potentiometer defective	The truck can be driven normally. The truck cannot be driven if this error is detected together with Error Code 212.	Automatically resets when the input returns to normal.	The output detected is not 1/2 of the accelerator 1 potentiometer output.	06	50
212	Accelerator 1 potentiometer defective	Operated via accelerator 2 potentiometer. The truck cannot be driven if this error is detected together with Error Code 211.	Automatically resets when the input returns to normal.	The output detected is not twice that of the accelerator 2 potentiometer output.	06	50

(1) Drive system (3/5)

Error code on display	Error description	Problem	Resetting	Error code conditions	LED code	Page
213	Drive motor inverter unit U-phase upper side FET defective Drive motor inverter unit U-phase lower side FET defective	The truck won't travel.	Turn the key switch OFF.		16	51
214	Drive motor inverter unit V-phase upper side FET defective Drive motor inverter unit V-phase lower side FET defective	The truck won't travel.	Turn the key switch OFF.		17	51
215	Drive motor inverter unit W-phase upper side FET defective Drive motor inverter unit W-phase lower side FET defective	The truck won't travel.	Turn the key switch OFF.		18	51
216	V-phase current detection abnormal, AD input too low V-phase current detection abnormal, AD input too high	The truck won't travel.	Turn the key switch OFF.		24	51
	V-phase current offset abnormal, AD input too low V-phase current offset abnormal, AD input too high	The truck won't travel.	Turn the key switch OFF.		25	51
	W-phase current detection abnormal, AD input too low W-phase current detection abnormal, AD input too high	The truck won't travel.	Turn the key switch OFF.		26	51
	W-phase current offset abnormal, AD input too low W-phase current offset abnormal, AD input too high	The truck won't travel.	Turn the key switch OFF.		27	51
217	Rapid charging of capacitor abnormal (Improper charging of the capacitor between the P and N terminals) (Error Codes 218 and 418 also occur.)	The travel, load handling, and PS (power steering) systems are inoperative. Contactor OFF.	Turn the key switch OFF.		23	52
218	Drive motor inverter unit upper/lower FET short-circuited (Error Code 418 also occurs because the drive and load handling units are connected with a copper bar.) (Error Code 217 is also triggered because the capacitor between the P and N terminals cannot be charged.)	The travel, load handling, and PS (power steering) systems are inoperative. Contactor OFF.	Turn the key switch OFF.		15	52

(1) Drive system (4/5)

Error code on display	Error description	Problem	Resetting	Error code conditions	LED code	Page
219	Drive motor inverter unit upper FET defective (Error Code 418 also occurs because the drive and load handling units are connected with a copper bar.) (Error Code 217 is also triggered because the capacitor between the P and N terminals cannot be charged.)	The travel, load handling, and PS (power steering) systems are inoperative. Contactor OFF.	Turn the key switch OFF.		19	54
220	Drive motor inverter unit lower FET defective (Error Code 418 also occurs because the drive and load handling units are connected with a copper bar.) (Error Code 217 is also triggered because the capacitor between the P and N terminals cannot be charged.)	The travel, load handling, and PS (power steering) systems are inoperative. Contactor OFF.	Turn the key switch OFF.		21	54
221	Travel overspeed	The truck can be driven normally.	Automatically resets when the input returns to normal.		94	54
307	Accelerator potentiometer not positioned properly	The truck can be driven normally.	Automatically resets when the input returns to normal.	When the key switch is turned ON: • Accelerator 1: 0.8 V or less • Accelerator 2: 0.4 V or less	-	53
308	Contactor coil broken (Blown fuse)	The travel, load handling, and EPS systems are inoperative.	Turn the key switch OFF.		12	55
309	Contactor stuck	The travel, load handling, and EPS systems are inoperative.	Turn the key switch OFF.	The contactor is stuck.	11	55
318	Overvoltage (Battery connectors disconnected during regenerative braking)	The truck won’t travel, and the load handling and EPS systems won’t work.	Automatically resets when the input returns to normal.	48 V trucks: More than 72 V 72 V trucks: More than 118 V	86	55
503	Wheel angle sensor defective	Steering SSC Loss of control	Automatically resets when the input returns to normal.		52	55
600	LCD panel data reception error (Communication wire broken)	The truck can be driven normally. Mode selection is not possible. Operates with default settings.	Automatically resets when the input returns to normal.		65	56

(1) Drive system (5/5)

Error code on display	Error description	Problem	Resetting	Error code conditions	LED code	Page
602	Load-handling data reception error (Communication wire broken) (The contactor does not operate when the load-handling data has no errors when the key switch is turned ON.)	The truck can be driven normally.	Automatically resets when the input returns to normal.		63	56
603	EPS (power steering) data reception error (Communication wire broken) (The contactor does not operate when the power steering data has no errors when the key switch is turned ON.)	The truck can be driven normally.	Automatically resets when the input returns to normal.		64	56
-	Abnormal battery voltage detected	The travel, load-handling and PS (power steering) systems are inoperative.	Turn the key switch OFF.	48 V trucks: More than 63 V 72 V trucks: More than 94 V	08	56
-	Load short circuit (Motor interphase short-circuited)	The truck won't travel.	Turn the key switch OFF.		22	57
-	EEPROM SUM error	The truck can be driven normally. (The parameters used for the drive adjustments are the default settings.)	Turn the key switch OFF.		82	57
	EEPROM ACK error				83	
-	Overcurrent (Hard OCL detected)	The truck won't travel.	Turn the key switch OFF.		91	57

(2) Load-handling system (including trucks with an Orbitrol steering system) (1/3)

Error code on display	Error description	Problem	Resetting	Error code conditions	LED code	Page
Ⓝ blinks.	Load-handling system neutral interlock	The load handling system won't work. Lift lock solenoid OFF.	Turn the key switch ON when: • the load-handling levers are in neutral.	When the key switch is turned ON: • A load-handling signal is present (i.e., the seat switch is ON).	01	58
402	Pump motor inverter unit temp. abnormal	The load handling system won't work.	The temp. drops to less than 109°C [228°F].	The temp. rises above 109°C [228°F].	34	58
403	Pump motor inverter unit temp. too high	The load handling system works (but the output current is limited).	The temp. drops to 90°C [194°F] or below.	The temp. rises above 94°C [201°F].	33	58
404	Pump motor inverter unit thermosensor 1 (TMD1) AD input range abnormal	The load-handling output is limited.	Automatically resets when the input returns to normal.	The thermosensor voltage drops below 0.2 V or rises above 4.92 V.	31	58
	Pump motor inverter unit thermosensor 2 (TMD2) AD input range abnormal				32	
405	Pump motor temp. abnormal	The load handling system won't work.	The temp. drops to less than 115°C [311°F].	The temp. rises above 155°C [311°F].	37	58
406	Pump motor temp. too high	The load handling system works (but the output current is limited).	The temp. drops to 135°C [275°F] or below.	The temp. rises above 145°C [293°F].	36	58
407	Pump motor thermosensor defective AD input range abnormal	The load-handling output is limited.	Automatically resets when the input returns to normal.	The thermosensor voltage drops below 0.15 V or rises above 4.92 V.	35	59
410	Rotation sensor defective • The A or B phase pulse is missing. • The A and B phase pulses are missing.	The load handling system won't work.	Automatically resets when the input returns to normal.	A load-handling signal (including operation of the steering wheel during OBT) is present and speed pulse inputs (both A and B phases) are absent. The current equivalent to the maximum torque (i.e., the torque command is for more than 60% of full current) continues for 15 seconds or longer.	73	59
	Rotation sensor defective Bearing defective (Stall signals detected continuously)	The load-handling output is limited.	Automatically resets when the input returns to normal.		74	59
412	Lift potentiometer defective	The load handling system won't work.	Automatically resets when the input returns to normal.	The lift potentiometer output voltage drops below 0.2 V or rises above 4.8 V.	06	59

(2) Load-handling system (including trucks with an Orbitrol steering system) (2/3)

Error code on display	Error description	Problem	Resetting	Error code conditions	LED code	Page
413	Pump motor inverter unit U-phase upper side FET defective Drive motor inverter unit U-phase lower side FET defective	The load-handling system won't work.	Turn the key switch OFF.		16	60
414	Pump motor inverter unit V-phase upper side FET defective Drive motor inverter unit V-phase lower side FET defective	The load-handling system won't work.	Turn the key switch OFF.		17	60
415	Pump motor inverter unit W-phase upper side FET defective Drive motor inverter unit W-phase lower side FET defective	The load-handling system won't work.	Turn the key switch OFF.		18	60
416	V-phase current detection abnormal, AD input too low V-phase current detection abnormal, AD input too high	The load-handling system won't work.	Turn the key switch OFF.		24	60
	V-phase current offset abnormal, AD input too low V-phase current offset abnormal, AD input too high	The load-handling system won't work.	Turn the key switch OFF.		25	60
	W-phase current detection abnormal, AD input too low W-phase current detection abnormal, AD input too high	The load-handling system won't work.	Turn the key switch OFF.		26	60
	W-phase current offset abnormal, AD input too low W-phase current offset abnormal, AD input too high	The load-handling system won't work.	Turn the key switch OFF.		27	60
418	Pump motor inverter unit upper and lower FET defective (Error Code 218 also occurs because the drive and pump motor inverter units are connected with a copper bar.) (Error Code 217 is also triggered because the capacitor between the P and N terminals cannot be charged.)	The travel, load handling, and PS (power steering) systems are inoperative. Contactor OFF.	Turn the key switch OFF.		15	61
419	Pump motor inverter unit upper FET defective (Error Code 218 also occurs because the drive and pump motor inverter units are connected with a copper bar.) (Error Code 217 is also triggered because the capacitor between the P and N terminals cannot be charged.)	The travel, load handling, and PS (power steering) systems are inoperative. Contactor OFF.	Turn the key switch OFF.		19	61

(2) Load-handling system (including trucks with an Orbitrol steering system) (3/3)

Error code on display	Error description	Problem	Resetting	Error code conditions	LED code	Page
420	Pump motor inverter unit lower FET defective (Error Code 218 also occurs because the drive drive and pump motor inverter units are connected with a copper bar.) (Error Code 217 is also triggered because the capacitor between the P and N terminals cannot be charged.)	The travel, load handling, and PS (power steering) systems are inoperative. Contactor OFF.	Turn the key switch OFF.		21	61
-	Load short-circuit (Motor interphase short-circuited)	The load-handling system won't work.	Turn the key switch OFF.		22	61
-	Drive data reception error (Communication wire broken) (The contactor does not operate when the drive data has no errors when the key switch is turned ON.)	The truck can be driven normally.	Automatically resets when the input returns to normal.		61	62
-	EEPROM SUM error	The truck can be driven normally. (The parameters used for the drive adjustments are the default settings.)	Turn the key switch OFF.		82	62
	EEPROM ACK error				83	
-	Overcurrent (Hard OCL detected)	The load-handling system won't work.	Turn the key switch OFF.		91	61

(3) EPS Power steering system (1/2)

Error code on display	Error description	Problem	Resetting	Error code conditions	LED code	Page
506	EPS transistor short-circuited	The travel, load-handling and EPS (power steering) systems are inoperative. Contactor OFF.	Turn the key switch OFF.		05	63
	EPS transistor short-circuited (after startup)	The travel, load-handling and EPS (power steering) systems are inoperative. Contactor OFF.	Turn the key switch OFF.		06	63
	EPS transistor short-circuited (Lower)	The travel, load-handling and EPS (power steering) systems are inoperative. Contactor OFF.	Turn the key switch OFF.		07	63
	EPS transistor short-circuited (Upper)	The travel, load-handling and EPS (power steering) systems are inoperative. Contactor OFF.	Turn the key switch OFF.		08	63
507	EPS transistor open	The EPS power steering system won't work.	Turn the key switch OFF.		04	63
508	Continuous energizing protection 1.	The EPS power steering output is limited.	Automatically reset when the input returns to normal.	1-ton class trucks: 32A or more continues for at least 5 seconds. 2-ton class trucks: 36A or more continues for at least 6 seconds. 3-ton class trucks: 34A or more continues for at least 7 seconds.	17	63
	Continuous energizing protection 2.	The EPS power steering output is limited.	Automatically reset when the input returns to normal.	1-ton class trucks: 8A or more continues for at least 60 seconds. 2-ton class trucks: 8A or more continues for at least 60 seconds. 3-ton class trucks: 7A or more continues for at least 60 seconds.	19	63
509	Torque sensor defective (Short-circuited)	The EPS power steering system won't work.	Turn the key switch OFF.		22 25	64
	Torque sensor defective (Open)	The EPS power steering system won't work.	Turn the key switch OFF.		23 26	64
-	DM open	The EPS power steering system stops working.	Turn the key switch OFF.		09	64
-	FET temp. too high	The EPS power steering output is limited.	The temp. drops below 95°C [203°F].	The temp. rises above 100°C [212°F].	11	64
-	FET temp. abnormal	The EPS power steering system stops working.	The temp. drops below 110°C [230°F].	The temp. rises above 115°C [239°F].	12	64
-	FET1 thermosensor defective	Only operates at ambient temperature.	Turn the key switch OFF.		13	64
-	FET2 thermosensor defective	Only operates at ambient temperature.	Turn the key switch OFF.		14	64

(3) EPS Power steering system (2/2)

Error code on display	Error description	Problem	Resetting	Error code conditions	LED code	Page
-	Data reception error	If this error is detected before startup: → The EPS power steering system is disabled. If this error is detected after startup: → Speed detection is not possible. Tire angle detection is not possible.	Automatically reset when the input returns to normal.		21	65

3.4 LCD PANEL SYSTEM ERRORS

Error Code	Description	Problem	Cause	Corrective Action	Icon displayed
071	CM relay malfunction	The travel, load-handling and EPS systems are inoperative.	This error code is displayed when no current is being drawn by the CM contactor or the “a”-contact. The CM contactor, diodes, or their wiring may be defective.	Check BW211 and LY212 between the LCD panel and the CM contactor. Check the RL100 wire that goes to the CM contactor. Also check any diodes connected in parallel. If no problem is found, replace the CM contactor with a new one.	Wrench
072	PO relay short circuit	Undefined	This error code is displayed if there is no current being drawn by the PO relay coil. The PO relay or its wiring may be defective.	Check YG 208 between the LCD panel and the PO relay. Check the RL100 wire that leads to PO relay. If no problem is found, replace the PO relay with a new one.	Wrench
073	CM relay short circuit	The travel, load-handling and EPS systems are inoperative.	This error code is displayed if the CM contactor does not work when the charge STOP button on the battery charger control panel is pressed. The CM contactor, diodes, or their wiring may be defective.	Check BW211 and LY212 between the LCD panel and the CM contactor, and the RL100 wire that leads to the CM contactor. Also check any diodes connected in parallel. If no problem is found, replace the CM contactor with a new one	Wrench
074	AD conversion error	The travel, load-handling and EPS systems are inoperative.	This error code is displayed if a time-out has occurred while receiving analog input data (current draw or temperature readings). Any of the indicators or wiring may be defective.	Replace the LCD panel with a new one.	Wrench
075	RTC error	The travel, load-handling and EPS systems are inoperative.	This error code is displayed if a time-out has occurred while receiving data from the RTC (real time clock). The connections on the LCD panel board or the RTC may be defective.		Wrench
076	EEPROM access error	The travel, load-handling and EPS systems are inoperative.	A time-out has occurred while reading memory or writing to the LCD panel memory. The connections on the LCD panel board or the EEPROM may be defective.	Remove and reinstall the battery connectors. If the problem is not solved, replace the LCD panel with a new one.	Wrench
077	Program sum error	The travel, load-handling and EPS systems are inoperative.	These error codes refer to errors that occur while loading the program or when an incorrect program version was loaded.	Replace the LCD panel with a new one.	Wrench
078	Version loading error				Wrench
081	AC ON	The travel, load-handling and EPS systems are inoperative.	This error code is displayed if the key switch is turned ON while AC power supply is connected.	To reset, turn the key switch OFF.	Wrench
082	Communication error (controller)	The travel and load-handling systems can work.	This error code is displayed if no signal is received from the controller. The controller or the controller communication lines may be defective.	Check to see if the controller operates properly when the key switch is tuned ON (see if the orange pilot lamp on the main CPU board is lit). Check the communication lines (GW81, GR82) between the LCD panel and the controller. If no problem is found, replace the LCD panel with a new one.	Wrench
083	Communication error (PC)	The travel, load-handling and EPS systems are inoperative.	This error code is displayed if no signal is received from PC. The communication line with PC may be defective.	Follow the instructions given by the fault diagnosis program installed on a PC. Check the communication lines between the LCD panel and PC. If no problem is found, replace the LCD panel with a new one.	Wrench
084	Another mode was requested while charging	The travel, load-handling and EPS systems are inoperative.	This error code is displayed if the key switch is turned ON while charging.	To reset, turn the key switch OFF.	Wrench
085	Low battery voltage	The travel, load-handling and EPS systems are inoperative.	This indicates that the battery voltage detected by the LCD panel has dropped below 26 V.	This error will be cleared when the battery voltage returns to 24 V. When cleared, the key switch is forced OFF.	Wrench
087	Abnormal charging	The travel, load-handling and EPS systems are inoperative.	This error code is displayed if the charging process has not finished when the fail-safe timer times out, or if an AC power failure lasts for more than 120 hours while charging. The LED on the battery charger control panel will keep blinking.	Connect the battery while pressing and holding the SUPER EQUALIZE switch on the battery charger control panel.	Wrench
088	AC power failure during charging	The travel, load-handling and EPS systems are inoperative.	This error code is displayed if the AC power goes OFF while charging. The truck is not operative because the battery is being charged.	This error will be cleared when the AC power is restored and then charging will resume.	Wrench

3.5 TROUBLESHOOTING BY ERROR CODE

This section explains how to perform troubleshooting using the error codes displayed on the LCD panel.

< How to use this troubleshooting guide >

① Take Step ① and see if there is a problem. If a problem is found, take the corrective action in the right column. If no problem is found, proceed to Step ② .

② Take Step ② and see if there is a problem. If a problem is found, take the corrective action in the right column. If no problem is found, proceed to Step ③ .

③ Continue on the same way until the problem is resolved.

<Example: Accelerator 1 sensor defective>

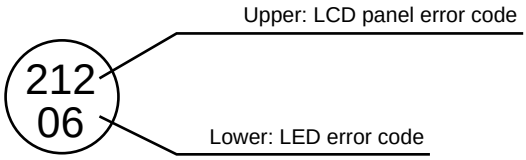

1. Drive system

(1) (N blinks 06): Drive system neutral interlock	Resets when the accelerator pedal and F/R lever are placed in neutral.
① Turn the key switch ON when the accelerator pedal and the F/R lever are in neutral.	
② Check the voltage of the potentiometer for accelerator 1.	Repair the accelerator 1 potentiometer or wiring.
③ Check the voltage of the potentiometer for accelerator 2.	Repair the accelerator 2 potentiometer or wiring.
④ Check the F/R lever switch voltage.	Repair the F/R lever switch or wiring.
⑤ Replace the drive motor inverter unit.	

(2) (101 09): Low voltage (Low battery voltage)	Resets when the key switch is turned OFF.
(102 95): Low voltage (Low output)	Resets when the battery voltage reaches: 48 V (for 48 V trucks) 72 V (for 72 V trucks)
(103 -): Low voltage (Over-discharge)	Resets when the battery discharge indicator level rises above the warning level (factory set to Level 2).
① Check the battery voltage.	Recharge the battery.
② Check the voltage at the **CN1D-24** terminal on the drive motor inverter unit.	Correct the wiring.
③ Replace the drive motor inverter unit.	

(3)	(105 02): Safety interlock (after the key switch is turned on)	Resets when the seat switch is turned ON (i.e., when the operator is seated in the operator's seat).
	(106 02): Safety interlock (when the key switch is turned on)	Resets when the key switch is turned ON while the seat switch is on (i.e., the operator is seated in the operator's seat).
①	Turn the seat switch ON, and put the accelerator pedal and F/R lever in neutral. Then turn the key switch ON.	
②	Check the voltage at the **CN1D-16** terminal on the drive motor inverter unit.	Repair the seat switch or wiring.
③	Replace the drive motor inverter unit.	

(4)	(201 07): Forward travel switch or reverse travel switch abnormal	Automatically resets when the input returns to normal.
①	Check the voltage at the **CN1D-18** and **CN1D-19** terminals on the drive motor inverter unit.	Repair the combination switch or wiring.
②	Replace the drive motor inverter unit.	

(5)	(202 34): Drive motor inverter unit temp. too high	Resets when the temperature drops below 109°C [228.2°F].
	(203 33): Drive motor inverter unit temp. abnormal	Resets when the temperature drops below 90°C [194°F].
①	Turn the key switch OFF and allow the controller to cool down for at least 30 minutes.	
②	Check the drive and pump motor inverter units for loose screws.	Retighten.
③	Replace the drive motor inverter unit.	

(6)	(204 31): Drive motor inverter unit thermosensor 1 (TMD1) AD input range abnormal	Automatically resets when the input returns to normal.
	(204 32): Drive motor inverter unit thermosensor 2 (TMD2) AD input range abnormal	Automatically resets when the input returns to normal.
①	Replace the drive motor inverter unit.	

(7) 205 37: Drive motor temp. abnormal	Resets when the temperature drops to less than 165°C [329°F].
206 36: Drive motor temp. too high	Resets when the temperature drops to 145°C [293°F] or below.
① Turn the key switch OFF and allow the motor to cool down for at least 30 minutes.	
② Check the voltage between **CD2D-6** and **CD2D-17** on the drive motor inverter unit.	Repair the drive motor or wiring.
③ Replace the drive motor inverter unit.	

(8) 207 35: Drive motor thermosensor defective AD input range abnormal	Automatically resets when the input returns to normal.
① Check the drive motor thermosensor for proper installation.	Install properly.
② Check the voltage between **CD2D-6** and **CD2D-17** on the drive motor inverter unit.	Repair the drive motor or wiring.
③ Replace the drive motor inverter unit.	

(9) 208 89: Excessive travel inching	Resets when the accelerator output is OFF.
① Check whether the accelerator and brake pedals have been pressed for 10 seconds or longer.	
② Check the voltage between **CD2D**-8 and **CD2D-20** on the drive motor inverter unit.	Repair the accelerator 1 potentiometer or wiring.
③ Check the voltage between **CD2D-9** and **CD2D-21** on the drive motor inverter unit.	Repair the accelerator 2 potentiometer or wiring.
④ Check the voltage at the **CD2D-4** on the drive motor inverter unit.	Repair the relay unit or wiring.
⑤ Replace the drive motor inverter unit.	

(10) (209 73): Rotation sensor defective The A or B phase pulse is missing. The A and B phase pulses are missing.	Automatically resets when the input returns to normal.
(209 74): Rotation sensor defective Bearing defective (Stall signals detected continuously)	Automatically resets when the input returns to normal.
① Check the harness between the drive motor inverter unit (**CN2D-3, -5, -15, -16, -27, -29**) and the rotation sensor.	Correct the wiring.
② Check the motor slit board.	Repair the motor slit board.
③ Check the rotation sensor.	Repair the rotation sensor.
④ Replace the drive motor inverter unit.	

(11) (211 06): Accelerator 2 sensor defective	Automatically resets when the input returns to normal.
① Check the accelerator 2 sensor connector for proper connection.	Connect properly.
② Check the harness between the drive motor inverter unit (**CN2D-9, -21, -33**) and the accelerator 2.	Correct the wiring.
③ Check the accelerator 2 sensor.	Repair the accelerator unit.
④ Replace the drive motor inverter unit.	
(212 06): Accelerator 1 sensor defective	Automatically resets when the input returns to normal.
① Check the accelerator 2 sensor connector for proper connection.	Connect properly.
② Check the harness between the drive motor inverter unit (**CN2D-8, -20, -32**) and the accelerator 1.	Correct the wiring.
③ Check the accelerator 1 sensor.	Repair the accelerator unit.
④ Replace the drive motor inverter unit.	

(12) 210 -: Accelerator signal wire short-circuited	Automatically resets when the input returns to normal.
① Check the voltage at **CN2D-8** and **-9** terminals on the drive motor inverter unit.	
② Check the drive motor inverter unit (**CN2D-8, -9**) harness.	Correct the wiring.
③ Check the accelerator unit.	Repair the accelerator unit.
307 -: Accelerator potentiometer not positioned properly	Automatically resets when the accelerator voltage is 0.8 V or more.
① Check the voltage at the **CN2D-8** and **-9** terminals on the drive motor inverter unit.	
② Check the accelerator unit for proper positioning.	Accelerator voltage should be 1.00 V in the neutral position.
③ Replace the accelerator unit.	

(13) 213 16: Drive motor inverter unit U-phase FET open	Resets when the key switch is turned OFF.
214 17: Drive motor inverter unit V-phase FET open	Resets when the key switch is turned OFF.
215 18: Drive motor inverter unit W-phase FET open	Resets when the key switch is turned OFF.
① Check the drive motor for loose terminals.	Retighten.
② Check the drive motor cable.	Correct the cable.
③ Replace the drive motor inverter unit.	

(14) 216 24: V-phase current detection abnormal AD input too low, AD input too high	Resets when the key switch is turned OFF.
216 25: V-phase current offset abnormal AD input too low, AD input too high	Resets when the key switch is turned OFF.
216 26: W-phase current detection abnormal AD input too low, AD input too high	Resets when the key switch is turned OFF.
216 27: W-phase current offset abnormal AD input too low, AD input too high	Resets when the key switch is turned OFF.
① Replace the drive motor inverter unit.	

(15) (217 23): Rapid charging of capacitor abnormal (Improper charging of capacitor between P and N terminals)	Resets when the key switch is turned OFF.
① Troubleshoot the problem according to Error Code 218.	
② Troubleshoot the problem according to Error Code 418.	

(16) (218 15): Drive motor inverter upper/lower FET short-circuited	Resets when the key switch is turned OFF.
(219 19): Drive motor inverter upper FET short-circuited	Resets when the key switch is turned OFF.
(220 21): Drive motor inverter lower FET short-circuited	Resets when the key switch is turned OFF.
① Check the battery cable connection. (Check the contactor secondary side for any negative (-) voltage leaks.)	Correct the cable.
② Remove the motor cables from U-, V-, and W phase.	–
③ Check for any electrical leaks between the motor cable, and the positive (+) and negative (-) terminals.	Correct the cable.
④ Check the bars and bolts that connect between the drive and pump motor inverter units for looseness.	Retighten.
⑤ Check the harness for the **CN1D-24** terminal on the drive motor inverter unit.	Correct the wiring.
⑥ Check the RCH (rapid charger resistor).	Repair the RCH.
⑦ Check the harness between **CN1D-11/CN1D-12** and **C**NCH on the drive motor inverter unit.	Correct the wiring.
⑧ Replace the drive motor inverter unit.	

(17) (221 94): Travel overspeed	Automatically resets when the input returns to normal.
① Check the harness between the drive motor inverter unit (**CN2D-3, -5, -15, -16, -27, -29**) and the rotation sensor.	Correct the wiring.
② Check the drive motor slit board.	Repair the slit board.
③ Check the rotation sensor.	Repair the rotation sensor.
④ Replace the drive motor inverter unit.	

(18) (308 12): Contactor coil broken (Blown fuse)	Resets when the key switch is turned OFF.
① Check the contactor coil.	Repair the contactor.
② Check the F1 fuse.	Replace the F1 fuse, if needed.
③ Check the harness between **CN1D-22/CN1D-35** and **CNMC** (contactor coil connector) on the drive motor inverter unit.	Correct the wiring.
④ Replace the drive motor inverter unit.	

(19) (309 11): Contactor coil short-circuited	Resets when the key switch is turned OFF.
① Check the battery cable for proper connection. (Check for any positive (+) voltage leak on the contactor secondary side.)	Correct the battery cable.
② Check the contactor coil.	Repair the contactor.
③ Check the harness between **CN1D-22/CN1D-35** and **CNMC** (contactor coil connector) on the drive motor inverter unit.	Correct the wiring.
④ Replace the drive motor inverter unit.	

(20) (318 86): Overvoltage (Battery connectors disconnected during regenerative braking)	Resets when the key switch is turned OFF.
① Check the battery connectors for proper connection.	
② Refer to the repair procedure for Error Code 308.	

(21) (503 52): Tire angle sensor defective	Automatically resets when the input returns to normal.
① Check the tire angle potentiometer connector for proper connection.	Connect properly.
② Check the harness between the drive motor inverter unit (**CN2D-10, -23, -24**) and the tire angle sensor.	Correct the wiring.
③ Check the tire angle potentiometer.	Repair the tire angle potentiometer.
④ Replace the drive motor inverter unit.	

(22) (600 65): LCD panel data reception error (Communication wire broken)	Automatically resets when the input returns to normal.
① Check the connectors for the **CN1D-1, -3, -13, -14,** and **-15** terminals on the drive motor inverter unit for proper installation.	Install properly.
② Check the LCD panel connector for proper installation.	Install properly.
③ Remove the EPS motor controller connector.	–
④ Check the resistance between **CN1E-9** and **CN1E-12** on the EPS motor controller.	Repair the EPS motor controller.
⑤ Replace the drive motor inverter unit.	

(23) (602 63): Load-handling data reception error (Communication wire broken)	Automatically resets when the input returns to normal.
(603 64): EPS data reception error (Communication wire broken)	Automatically resets when the input returns to normal.
① Check the connectors for the **CN1D-1, -3, -13, -14,** and **-15** terminals on the drive motor inverter for looseness.	Connect securely.
② Check the connectors for the **CN1P-1, -3, -13, -14,** and **-15** terminals on the pump motor inverter unit for looseness.	Connect securely.
③ Check the connectors for the **CN1E-8, -9, -10, -11,** and **-12** terminals on the EPS motor controller for looseness.	Connect securely.
④ Check each harness of the connectors described in items ①, ②, and ③.	Repair the harness.
⑤ Remove the EPS motor controller connector.	–
⑥ Check the resistance between **CN1E-9** and **CN1E-12** on the EPS motor controller.	Repair the EPS motor controller.
⑦ Replace the drive motor inverter unit.	

(24) (- 08): Abnormal battery voltage	Resets when the key switch is turned OFF.
① Check the charger connection.	Connect properly.
② Check the battery voltage.	
③ Replace the drive motor inverter unit.	

(25) (-22): Load short circuit (Motor interphase short-circuit)	Resets when the key switch is turned OFF.
(-91): Overcurrent (Hardware OCL detected)	Resets when the key switch is turned OFF.
① Check the drive motor cable terminals U, V, and W for foreign matter.	Remove the foreign matter.
② Check the drive motor cable for looseness.	Retighten.
③ Check the drive motor cable for short circuit.	Correct the cable.
④ Check the **CN1D-24** terminal on the drive motor inverter unit for proper connection.	Connect properly.
⑤ Check the harness for the **CN1D-24** terminal on the drive motor inverter unit.	Correct the wiring.
⑥ Refer to the repair procedure for Error Code 308.	
⑦ Refer to the repair procedure for Error Code 216.	
⑧ Replace the drive motor.	
⑨ Replace the drive motor inverter unit.	

(26) (-82): EEPROM SUM error	Resets when the key switch is turned OFF.
(-83): EEPROM ACK error	Resets when the key switch is turned OFF.
① Replace the drive motor inverter unit if this error occurs frequently.	

2. Load handling system (including trucks with an Orbitrol steering system)

(1) (N点滅 01): Load-handling system neutral interlock	Resets when the load-handling levers are put in neutral.
① Put the load-handling levers in neutral.	
② Check the lift potentiometer voltage.	Repair the lift potentiometer or wiring.
③ Check the voltage at the **CN1P-16, -17**, and **-18** terminals on the pump motor inverter unit	Repair the switch or wiring.
④ Replace the pump motor inverter unit.	

(2) (402 34): Pump motor inverter unit temp. abnormal	Resets when the temperature drops to less than 109°C [228.2°F].
(403 33): Pump motor inverter unit temp. too high	Resets when the temperature drops to 90°C [194°F] or below.
① Turn the key switch OFF and allow the controller to cool down for 30 minutes.	
② Check the drive and pump motor inverter units for loose screws.	Retighten.
③ Replace the pump motor inverter unit.	

(3) (404 31): Pump motor inverter unit thermosensor 1 (TMD1) AD input range abnormal	Automatically resets when the input returns to normal.
(404 32): Pump motor inverter unit thermosensor 2 (TMD2) AD input range abnormal	Automatically resets when the input returns to normal.
① Replace the pump motor inverter unit.	

(4) (405 37): Pump motor temp. abnormal	Resets when the temperature drops to less than 155°C [311°F].
(406 36): Pump motor temp. too high	Resets when the temperature drops to 135°C [275°F] or below.
① Turn the key switch OFF and allow the motor to cool down for 30 minutes.	
② Check the voltage between **CN2P-6** and **CN2P-17** on the pump motor inverter unit.	Repair the pump motor or wiring.
③ Replace the pump motor inverter unit.	

(5) (407 35): Pump motor thermosensor defective AD input range abnormal	Automatically resets when the input returns to normal.
① Check the pump motor thermosensor for looseness.	Connect securely.
② Check the voltage between **CN2P-6** and **CN2P-17** on the pump motor inverter unit.	Repair the pump motor or wiring.
③ Replace the pump motor inverter unit.	

(6) (410 73): Rotation sensor defective The A or B phase pulse is missing. The A and B phase pulses are missing.	Automatically resets when the input returns to normal.
(410 74): Rotation sensor defective Abnormal bearing (Stall signals detected continuously)	Automatically resets when the input returns to normal.
① Check the voltage between the pump motor inverter unit (**CN2P-5, -16, -29**) and the speed sensor	Correct the wiring.
② Check the pump motor slit board.	Repair the motor slit board.
③ Check the rotation sensor.	Repair the rotation sensor.
④ Replace the pump motor inverter unit.	

(7) (412 06): Lift potentiometer defective	Automatically resets when the input returns to normal.
① Check the lift potentiometer connector for looseness.	Connect securely.
② Check the harness between the pump motor inverter unit (**CN2P-8, -20, -32**) and the lift potentiometer.	Correct the wiring.
③ Check the lift potentiometer.	Repair the lift potentiometer.
④ Replace the pump motor inverter unit.	

(8) (413 16): Pump motor inverter unit U-phase FET open	Resets when the key switch is turned OFF.
(414 17): Pump motor inverter unit V-phase FET open	Resets when the key switch is turned OFF.
(415 18): Pump motor inverter unit W-phase FET open	Resets when the key switch is turned OFF.
① Check the pump motor for loose terminals.	Retighten.
② Check the pump motor cable.	Correct the cable.
③ Replace the pump motor inverter unit.	

(9) (416 24): V-phase current detection abnormal AD input too low, AD input too high	Resets when the key switch is turned OFF.
(416 25): V-phase current offset abnormal AD input too low, AD input too high	Resets when the key switch is turned OFF.
(416 26): W-phase current detection abnormal AD input too low, AD input too high	Resets when the key switch is turned OFF.
(416 27): W-phase current offset abnormal AD input too low, AD input too high	Resets when the key switch is turned OFF.
① Replace the pump motor inverter unit.	

(10) (418 15): Pump motor inverter unit upper/lower FET short	Resets when the key switch is turned OFF.
(419 19): Pump motor inverter unit upper FET short	Resets when the key switch is turned OFF.
(420 21): Pump motor inverter unit lower FET short	Resets when the key switch is turned OFF.
① Check the battery cable connection (Check the contactor secondary side for any negative (-) voltage leaks).	Correct the cable.
② Remove the motor cables from the U, V and W terminals.	–
③ Check for electrical leaks between the motor cable, and the positive (+) and negative (-) terminals.	Correct the cable.
④ Check the bar and bolts that connect between the drive and pump motor inverter units.	Retighten.
⑤ Check the harness for the **CN1D-22** and **-24** terminals on the pump motor inverter unit.	Correct the wiring.
⑥ Check the RCH (rapid charger resistor).	Repair the RCH.
⑦ Check the harness between **CN1D-11/CN1D-12** and **CNCH** on the drive motor inverter unit.	Correct the wiring.
⑧ Replace the pump motor inverter unit.	

(11) (- 22): Load short-circuit (Motor interphase short-circuited)	Resets when the key switch is turned OFF.
(- 91): Overcurrent (Hard OCL detected)	Resets when the key switch is turned OFF.
① Check the pump motor cable U, V, and W terminals and the areas around them for foreign material.	Remove the foreign material.
② Check the pump motor cable for looseness.	Retighten.
③ Check the pump motor for short circuit.	Correct the cable.
④ Check the pump motor inverter unit (**CN1P-24, -22**) for proper connection.	Connect properly.
⑤ Check the harness for the **CN1P-24** and **-22** terminals on the pump motor inverter unit.	Correct the wiring.
⑥ Refer to the repair procedure for Error Code 308.	
⑦ Refer to the repair procedure for Error Code 416.	
⑧ Replace the pump motor.	
⑨ Replace the pump motor inverter unit.	

(12) (-61): Drive data reception error (Communication wire broken)	Resets when the key switch is turned OFF.
① Check the connectors for **CN1D-1, -3, -13, -14,** and **-15** terminals on the drive motor inverter unit for looseness.	Connect securely.
② Check the connectors for **CN1P-1, -3, -13, -14,** and **-15** terminals on the pump motor inverter unit for looseness.	Connect securely.
③ Check the connectors for the **CN1E-8, -9, -10, -11,** and **-12** terminals on the EPS motor controller for looseness.	Connect securely.
④ Check each harness for the connectors described in items ① , ② , and ③ .	Correct the wiring.
⑤ Remove the EPS motor controller connector.	
⑥ Check the resistance between **CN1E-9** and **CN1E-12** on the EPS motor controller.	Repair the EPS motor controller.
⑦ Replace the pump motor inverter unit.	

(13) (-82): EEPROM SUM error	Resets when the key switch is turned OFF.
(-83): EEPROM ACK error	Resets when the key switch is turned OFF.
① Replace the pump motor inverter unit if this error occurs frequently.	

3. EPS Power steering system

(1) 506 05: EPS transistor short-circuited (at startup)	Resets when the key switch is turned OFF.
506 06: EPS transistor short-circuited (after startup)	Resets when the key switch is turned OFF.
506 07: EPS transistor short-circuited (lower)	Resets when the key switch is turned OFF.
506 08: EPS transistor short-circuited (upper)	Resets when the key switch is turned OFF.
① Check the battery cable connection. (Check the contactor secondary side for any negative (-) voltage leaks).	Correct the cable.
② Remove the EPS connector.	–
③ Check for any electrical leaks between the frame-side wires, and the positive (+) and negative (-) terminals.	Correct the cable.
④ Check the bar and bolts that connect between the drive and pump motor inverter units for looseness.	Retighten.
⑤ Check the EPS motor controller's positive (+) and negative (-) terminals and motor wiring.	Correct the wiring.
⑥ Check the **CN1E-34** terminal on the EPS motor controller for proper connection.	Connect properly.
⑦ Check the harness for the **CN1E-34** terminal on the EPS motor controller.	Correct the wiring.
⑧ Replace the EPS motor controller.	

(2) 507 04: EPS transistor open	Resets when the key switch is turned OFF.
① Check the EPS motor connector for looseness.	Connect securely.
② Check the EPS motor wiring.	Repair the harness.
③ Replace the EPS motor controller.	

(3) 508 17: Continuous energizing protection 1	Automatically resets when the input returns to normal.
508 19: Continuous energizing protection 2	Automatically resets when the input returns to normal.
① Put the steering wheel in neutral.	
② Replace the EPS motor controller.	

(4) 509 22 509 25: Torque sensor defective (shorted)	Resets when the key switch is turned OFF.
509 23 509 26: Torque sensor defective (open)	Resets when the key switch is turned OFF.
① Check the torque sensor connector for looseness.	Connect securely.
② Check the harness between the EPS motor controller (**CN1E-6, -22, -23**) and the torque sensor.	Correct the wiring.
③ Check the torque sensor.	Repair the torque sensor.
④ Replace the EPS motor controller.	

(5) - 09: DM open	Resets when the key switch is turned OFF.
① Check the EPS motor connector for looseness.	Connect properly.
② Check the EPS motor wiring.	Correct the wiring.
③ Check the EPS motor.	Repair the EPS motor.
④ Replace the EPS motor controller.	

(6) - 11: FET temp. too high	Automatically resets when the input returns to normal.
- 12: FET temp. abnormal	Automatically resets when the input returns to normal.
① Put the steering wheel in neutral.	–
② Turn the key switch OFF and allow the FET to cool down.	–
③ Check the EPS motor controller for loose screws.	Retighten.
④ Replace the EPS motor controller.	

(7) - 13: FET1 thermosensor defective	Resets when the key switch is turned OFF.
- 14: FET2 thermosensor defective	Resets when the key switch is turned OFF.
① Replace the EPS motor controller.	

(8) (21): Data reception abnormal	Automatically resets when the input returns to normal.
① Check the connectors for the **CN1E-8, -9, -10, -11, -12** terminals on the EPS motor controller for looseness.	Connect securely.
② Check the harness for those connectors.	Correct the wiring.
③ Remove the EPS motor controller connector.	–
④ Check the resistance between **CN1E-9** and **CN1E-12** on the EPS motor controller.	Repair the EPS motor controller.

3.6 TROUBLESHOOTING BY PROBLEM

(1) The LCD panel is blank.

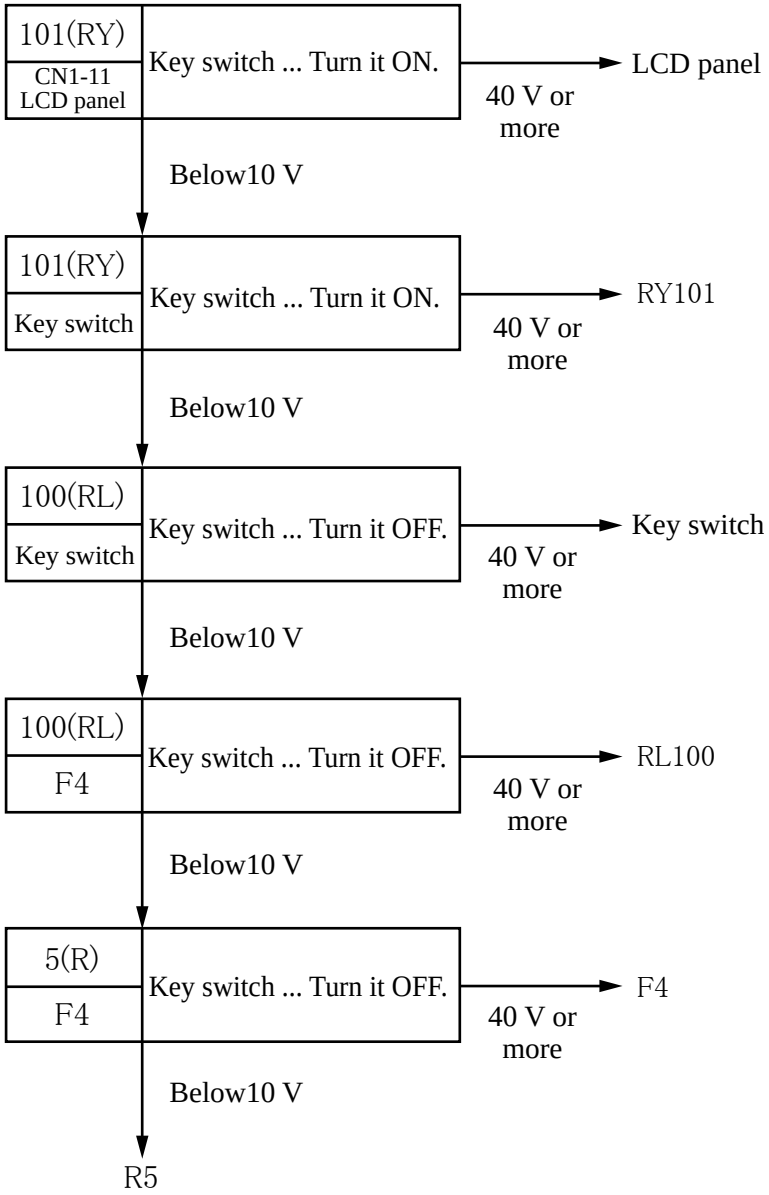

(2) MC contactor does not work. (The travel, load handling, and EPS systems are inoperative.)

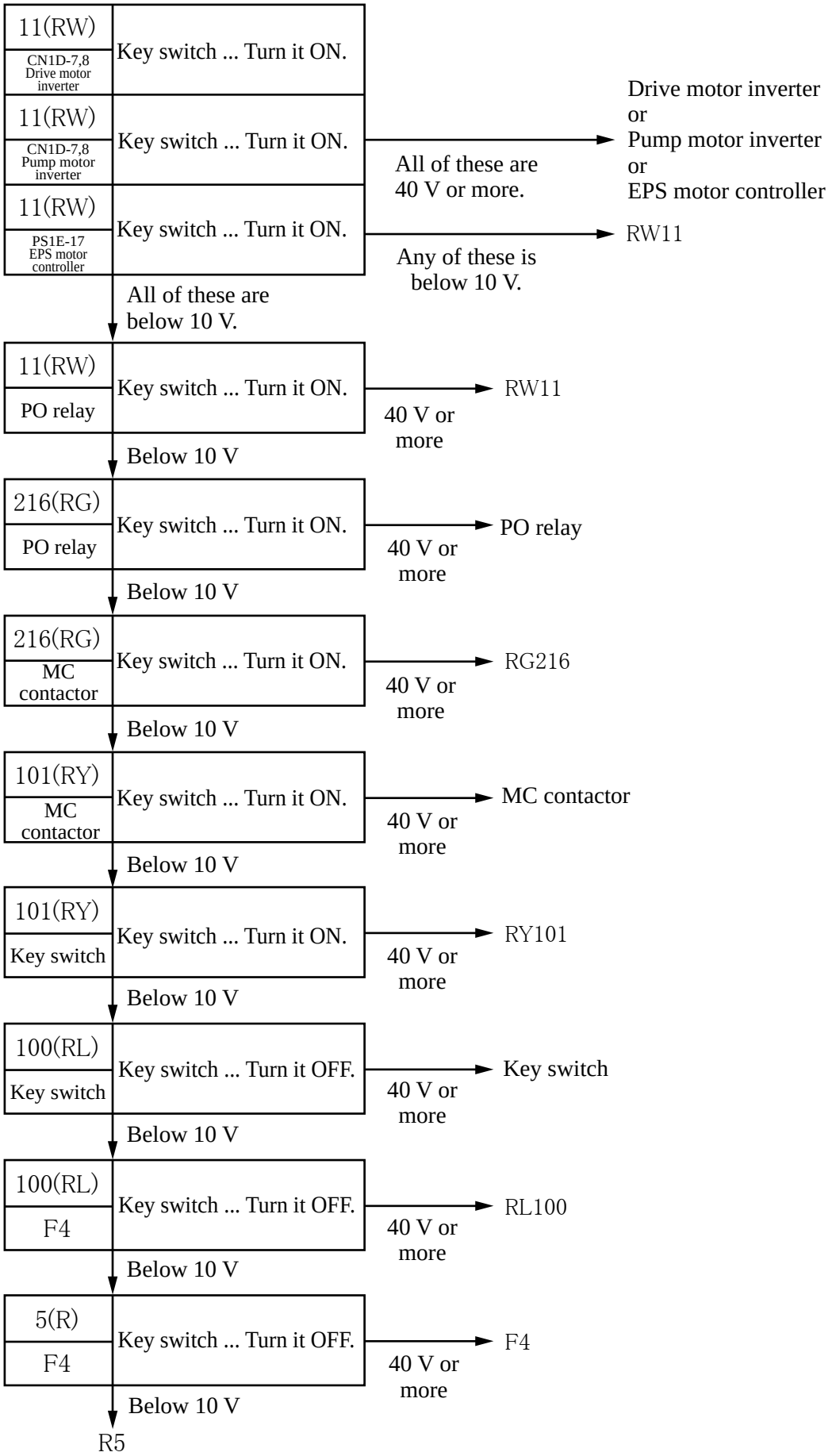

(3) MC contactor works but the truck won't travel.

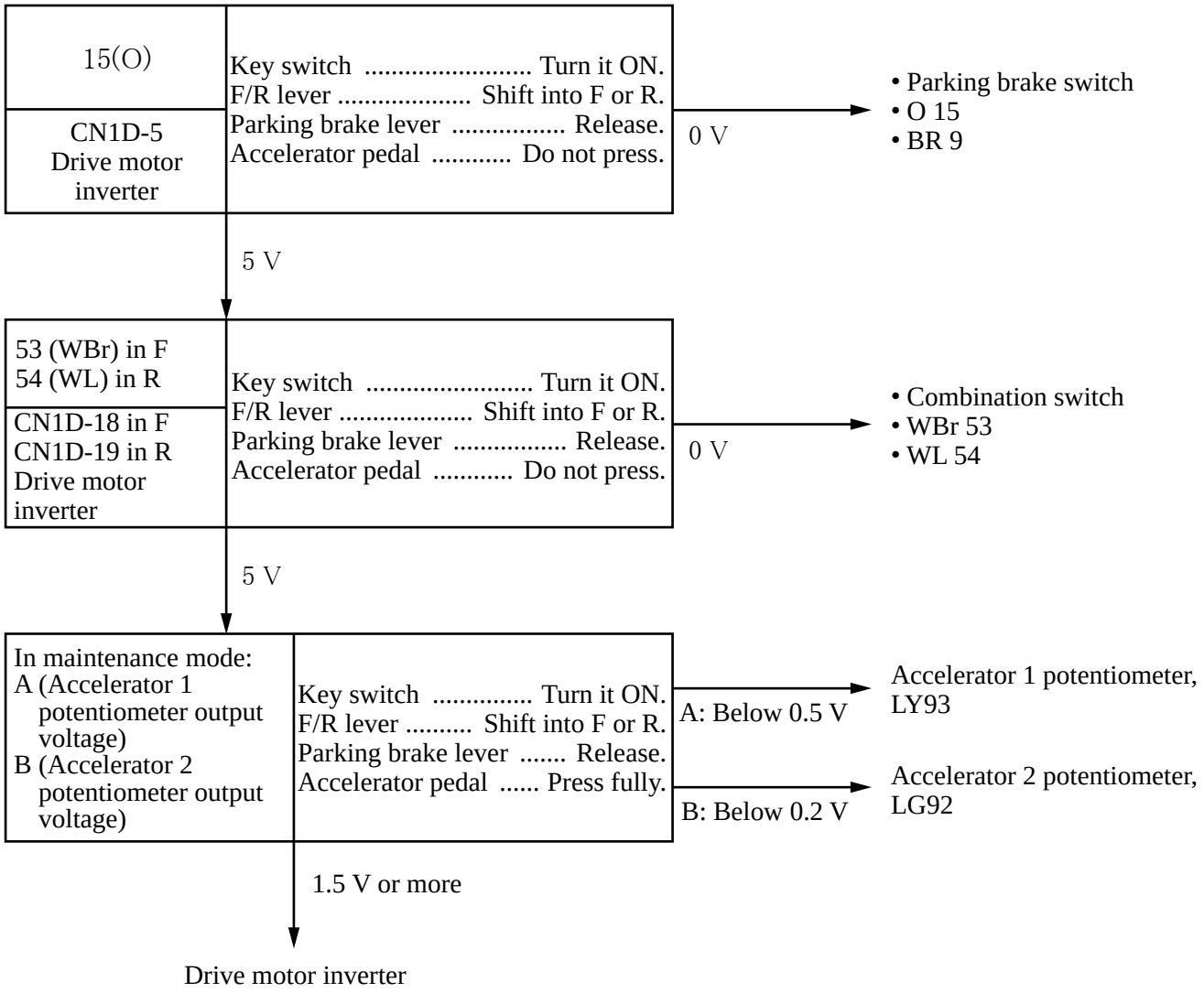

(4) The truck travels, but does not gain speed.

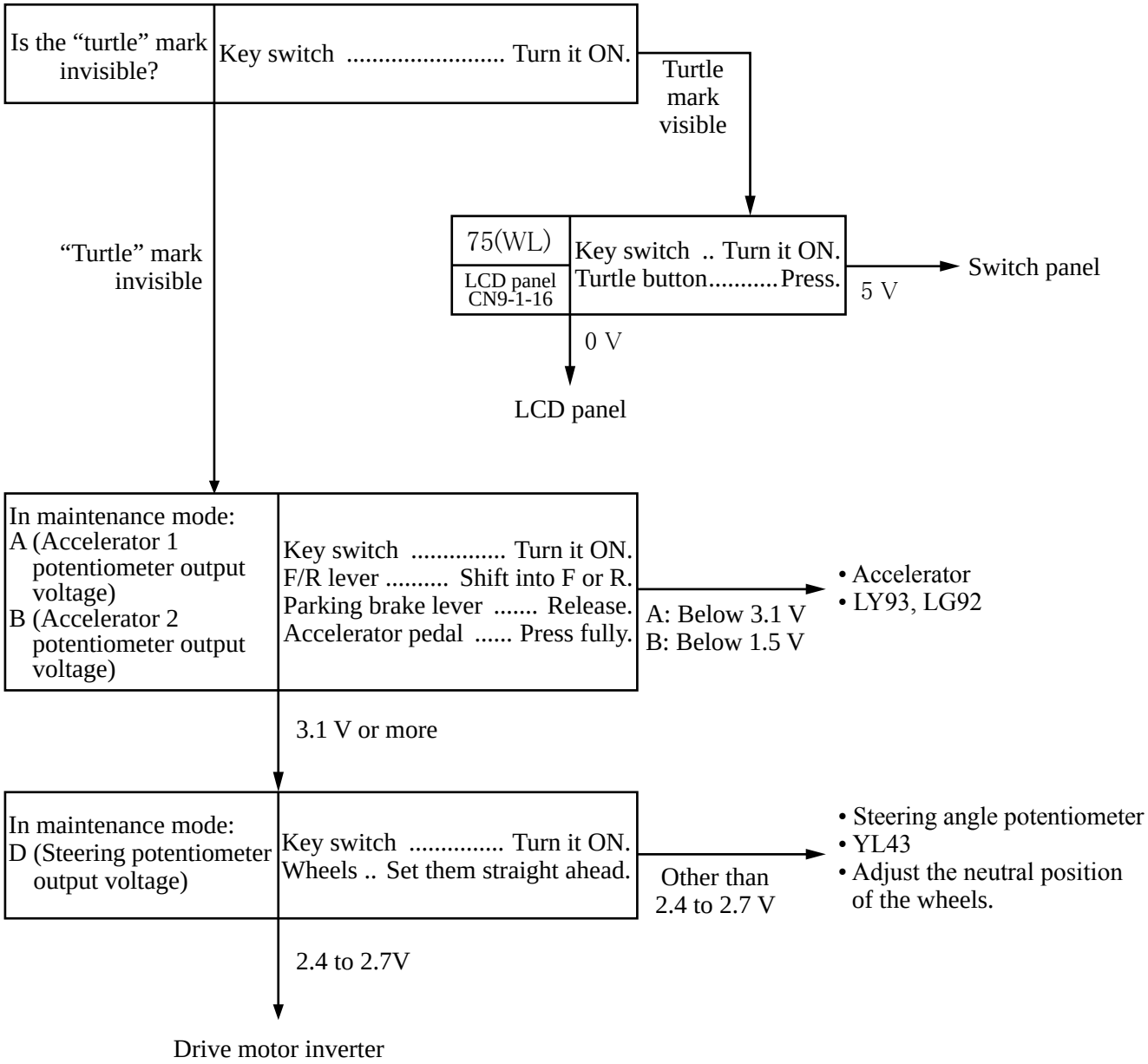

(5) Only the lift lever does not work.

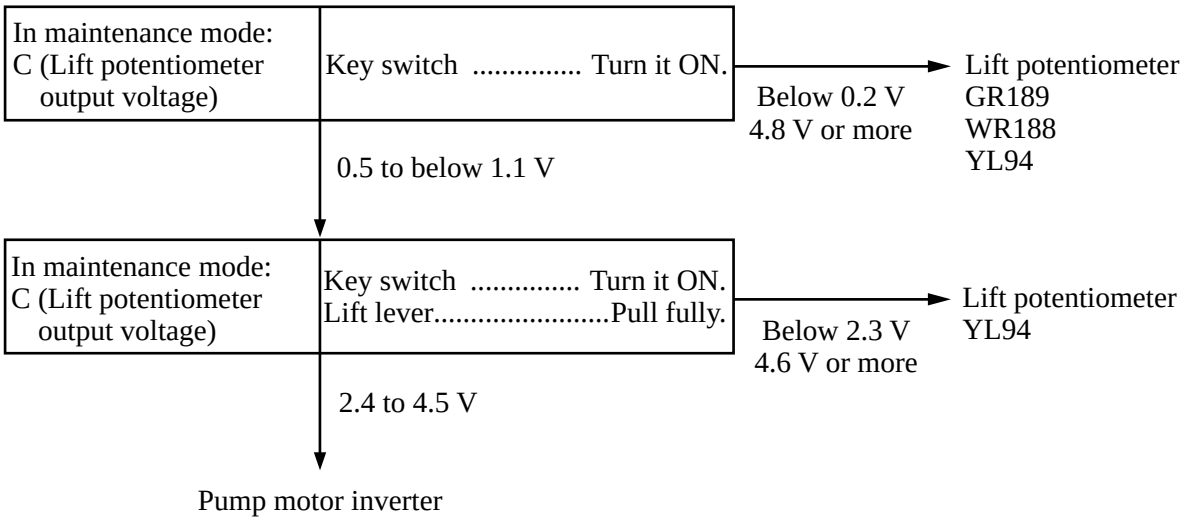

(6) Only the tilt lever does not work.

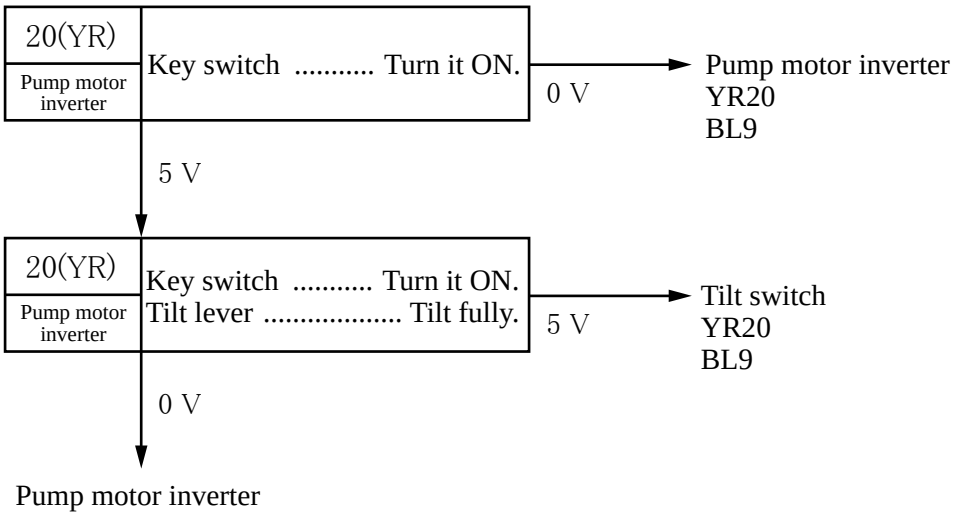

(7) The pump motor is running when no load-handling operation is being performed. (Applicable only to trucks with an EPS steering system)

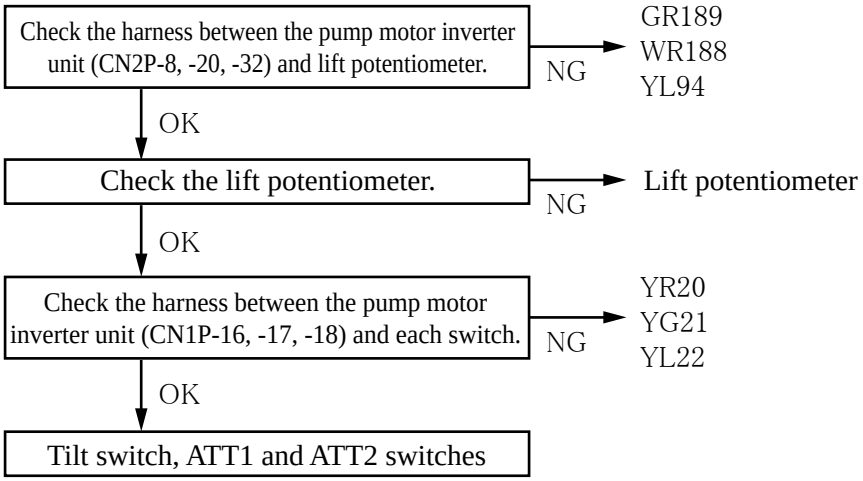

(8) Hard steering

■ EPS steering system

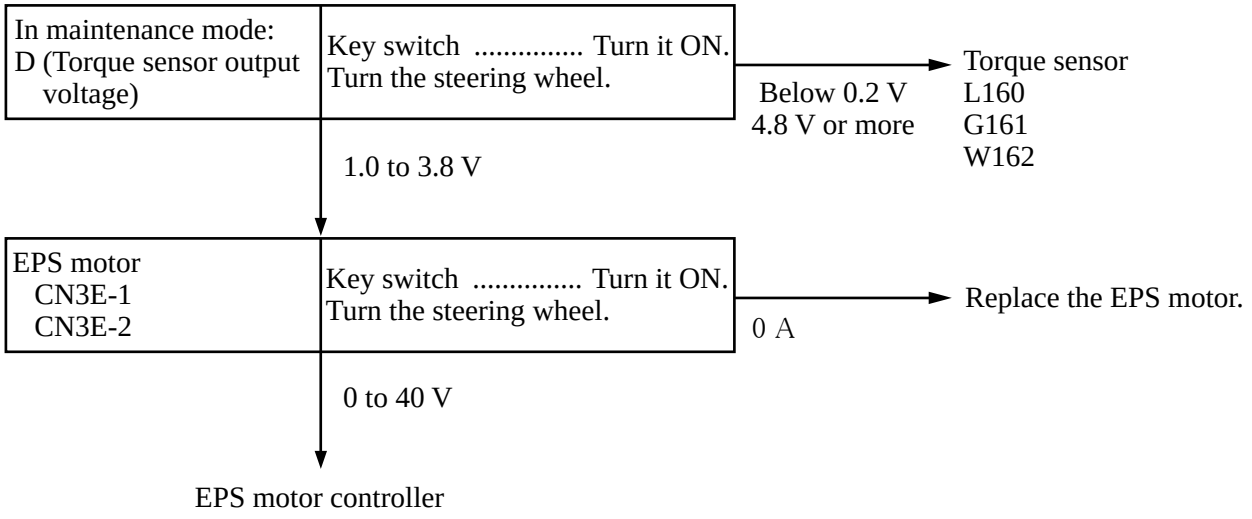

■ Orbitrol steering system

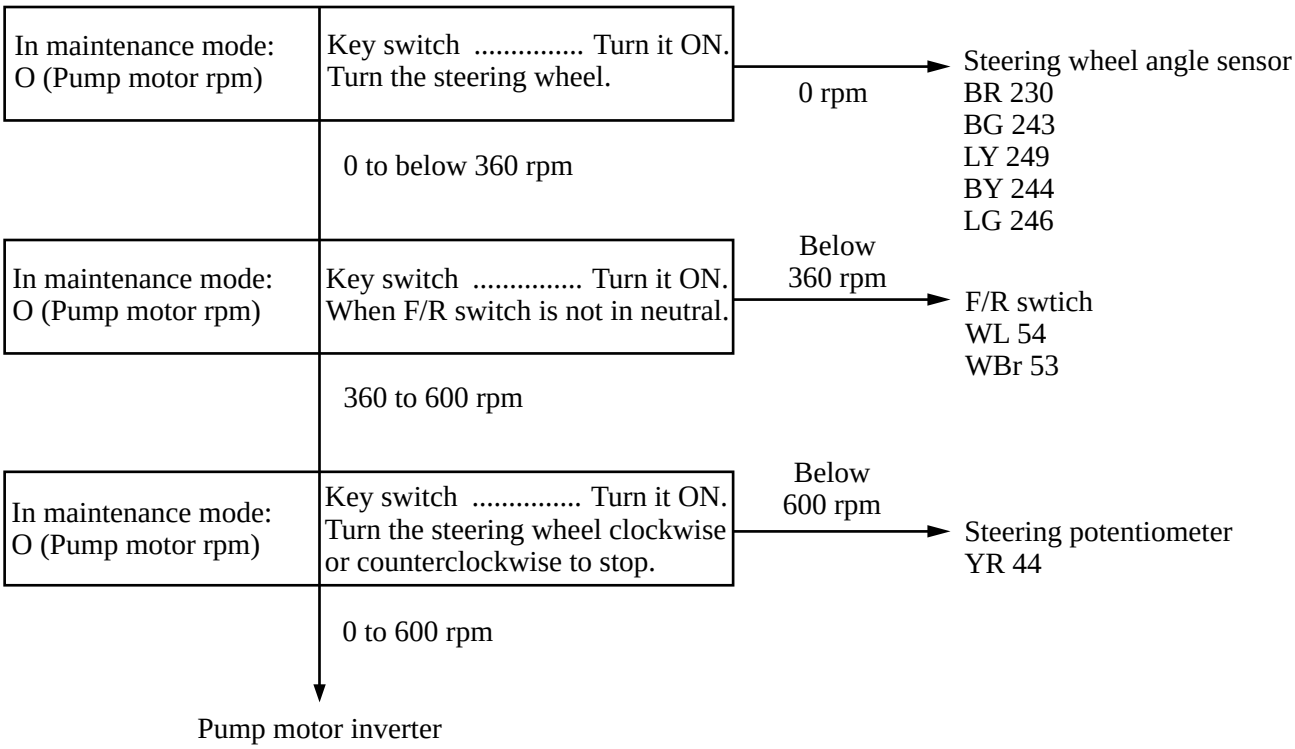

NOTE

4. PARAMETER SETTING

4.1 SETTING THE PARAMETERS

Take the following considerations into account when changing the parameters.

1. Be careful when increasing the acceleration level or load-handling speed levels, because that may reduce the number of hours you can operate the truck, the motor may overheat, or other problems may occur.
2. Remember that increasing the levels of any parameter settings may adversely affect the operation of the truck.

4.2 PARAMETER SETUP SCREEN

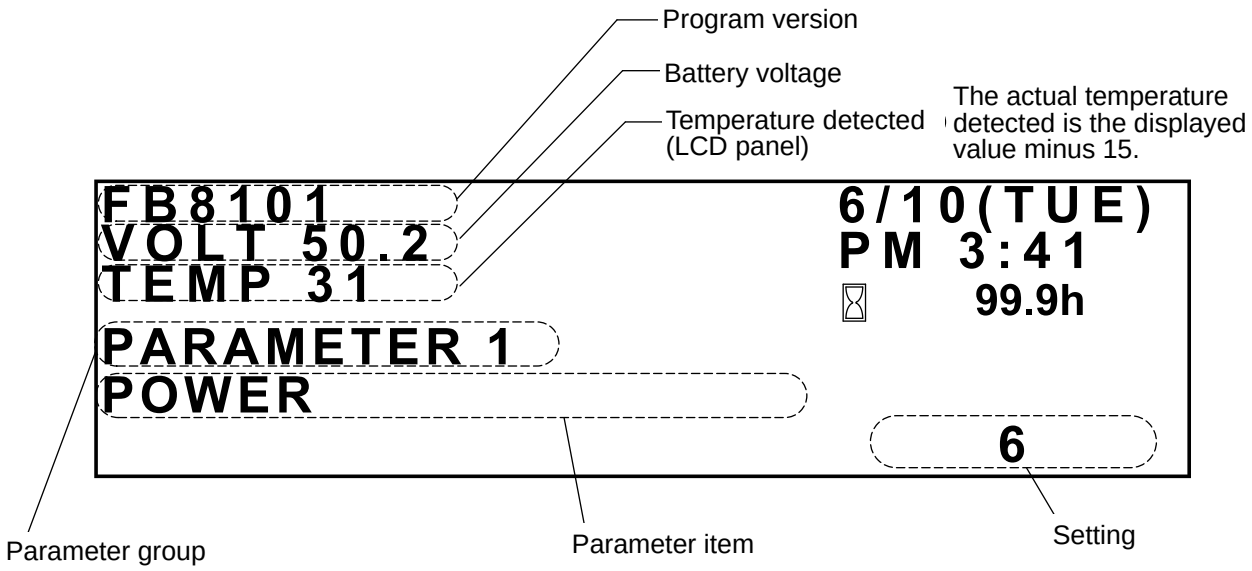

4.3 KEYPAD

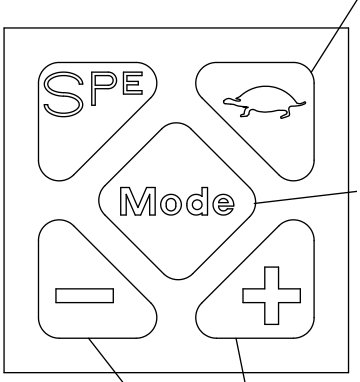

LOW-SPEED TRAVEL (TURTLE) BUTTON
If this button is pressed while the PARAMETER GROUP SETUP screen is displayed, the display will return to the INITIAL PARAMETER SETUP screen.
If this button is pressed while the PARAMETER ITEM SETUP screen is displayed, the display will return to the PARAMETER GROUP SETUP screen.

MODE BUTTON
Use this button to toggle between parameter items.
This button is also used to display the PARAMETER SETUP COMPLETE screen and the DATA TRANSMISSION screen.

+ BUTTON

- BUTTON
Use these buttons to increase or decrease the parameter group number when selecting a parameter group, and to set a parameter value.

4.4 SCREEN OPERATION

INITIAL PARAMETER SETUP SCREEN

```
FB8101                    6/10(TUE)
VOLT 50.2                 PM 3:41
TEMP 31                   ⌛   99.9h
PARAMETER
```

While pressing and holding the Mode button and the “+” button on the keypad, turn on the key switch. The INITIAL PARAMETER SETUP screen shown above will be displayed.

Note that the MC contactor is not activated at this point.

Press the “+” button to display PARAMETER 1; press the “-” button to display PC.

Use the “+” button or the “-” button to toggle between the parameter groups, as shown below.

PARAMETER GROUP SETUP SCREEN

```
FB8101                    6/10(TUE)
VOLT 50.2                 PM 3:41
TEMP 31                   ⌛   99.9h
PARAMETER 1
```

Parameter group

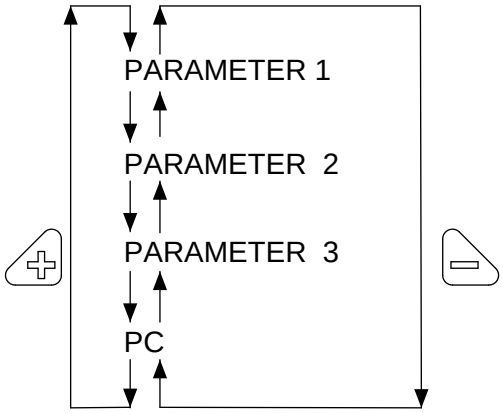

PARAMETER 1 and PARAMETER 2 are used when setting the parameters for the controller.
PARAMETER 3 is used to set the LCD panel parameters.
PC is the mode used when a PC (an electric truck fault-diagnosis support system) is connected.

Press this turtle button to return to the INITIAL PARAMETER SETUP screen.

PARAMETER GROUP SETUP SCREEN

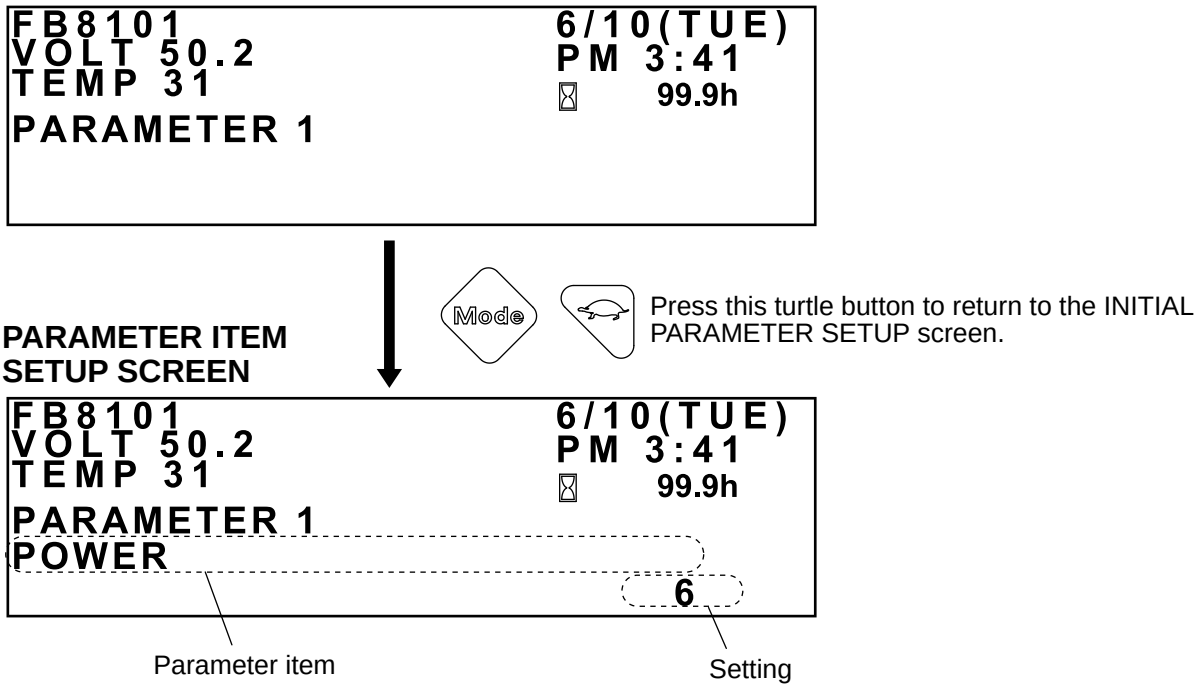

Press the Mode button when the PARAMETER GROUP SETUP screen is displayed. The first parameter item in the selected parameter group will be displayed.

Each time the Mode button is pressed, another parameter item is displayed.
Pressing the Mode button on the last parameter item will return you to the first parameter item.

To cancel any changes to the settings and return to the INITIAL PARAMETER SETUP screen, press the turtle button.

If the parameter item to be set has a range, press the “+” button or the “-” button to increase or decrease the value within that range.
If the parameter item requires an ON or OFF setting, press the “+” button to select ON or the “-” button to select OFF.

PARAMETER ITEM SETUP SCREEN

```
FB8101                6/10(TUE)
VOLT 50.2             PM 3:41
TEMP 31               ⌛ 99.9h
PARAMETER 1
POWER
```

Mode — Press and hold this button.

After setting a parameter item, press and hold the Mode button when the PARAMETER ITEM SETUP screen is displayed.
The PARAMETER SETUP COMPLETE screen (shown on the left) will be displayed.

PARAMETER SETUP COMPLETE SCREEN

```
FB8101                6/10(TUE)
VOLT 50.2             PM 3:41
TEMP 31               ⌛ 99.9h
TERMINATED
```

Mode — Press and hold this button.

Press and hold the Mode button when the PARAMETER SETUP COMPLETE screen is displayed. The controller MC contactor will be activated and the DATA TRANSMISSION screen (shown on the left) will be displayed. This screen indicates that the new setting is being sent to the controller.

Note that the truck cannot be operated during data transmission.

DATA TRANSMISSION SCREEN

```
FB8101                6/10(TUE)
VOLT 50.2             PM 3:41
TEMP 31               ⌛ 99.9h
DATA IN TRANSMISSION
DO NOT TURN OFF THE KEY
```

DATA TRANSMISSION COMPLETE SCREEN

```
FB8101                6/10(TUE)
VOLT 50.2             PM 3:41
TEMP 31               ⌛ 99.9h
TERMINATED
TURN OFF THE KEY
```

Once the data transmission is finished, the DATA TRANSMISSION COMPLETE screen (shown on the left) will be displayed. Then turn the key switch OFF.

FB-8 Parameter Setting Table

	No.	Screen display	Item	Description	Unit	0	1	2	3	4	5	6	7	8	9	10	Remarks
						Factory settings											
PARAMETER 1	1	POWER	Travel speed acceleration level	Travel speed acceleration mode numbers	–	0	1	2	3	4	5	6	7	8	9	10	
	2	TRAVEL SPEED LIMIT	Truck speed limit level	Max. speed in the "turtle" mode	km/h	3	4	5	6	7	8	9	10	12	14	16	
	3	LIFT SPEED	Lift speed level	Lift conduction ratio limit	%	50	55	60	65	70	75	80	85	90	95	100	
	4	LIFT INCING LEV.	Lift inching level	Lift inching conduction ratio limit	%	0	5	10	15	20	25	30	35	40	45	50	
	5	TILT SPEED	Tilt speed level	Tilt conduction ratio limit	%	0	10	20	30	40	50	60	70	80	90	100	
	6	ATT1 SPEED	ATT1 speed level	ATT1 conduction ratio limit	%	0	10	20	30	40	50	60	70	80	90	100	
	7	ATT2 SPEED	ATT2 speed level	ATT2 conduction ratio limit	%	0	10	20	30	40	50	60	70	80	90	100	
	8	SWITCH BACK REG.	Switchback regeneration level	Switchback regeneration intensity	%	0	10	20	30	40	50	60	70	80	90	100	
	9	ACCELERATOR OFF REG	Accelerator-off regeneration level	Accelerator-off regeneration intensity	%	0	10	20	30	40	50	60	70	80	90	100	
	10	BRAKE REG.	Brake OFF regeneration level	Brake OFF regeneration intensity	%	0	10	20	30	40	50	60	70	80	90	100	
	11	ANTI ROLL BACK	Anti-rollback regeneration level	Anti-rollback regeneration intensity	%	0	10	20	30	40	50	60	70	80	90	100	
	12	ACCELERATOR STAGE	Accelerator stage level	Accelerator stage mode numbers	–	0	1	2	3	4	5	6	7	8	9	10	
	13	SPEED ALARM OUTPUT SPEED	Speed alarm output level	Speed at which alarm output is started with speed alarm output mode enabled	km/h	3	4	5	6	7	8	9	10	12	14	16	
	14	STEERING SSC LEVEL	Steering SSC level	Lower speed limit when steering SSC is activated	km/h	3	4	5	6	7	8	9	10	12	14	16	
	15																
	16	SPEED LIMIT LEVEL	Max. speed limit level	The speed obtained when the max. speed limit flag is enabled.	km/h	3	4	5	6	7	8	9	10	12	14	16	
PARAMETER 2	1	SEAT SW	Flag setting (1)	Seat switch enabled		OFF					ON						
	2	SPEED LIMIT SI	Speed limit, vehicle inspection specifications	15 km/h or less		OFF					ON						
	3	S MODE LIMIT	Flag setting (3)-1	S mode disabled		OFF					ON						
	4	NEUTRAL SAFTY LOCK ACCEL.	Flag setting (3)-2	Accelerator pedal neutral safety enabled	–	OFF					ON						
	5	NEUTRAL SAFTY LOCK PUMP LEV.	Flag setting (3)-3	Load-handling neutral safety enabled	–	OFF					ON						
	6	SPEED LIMIT	Max. speed limit enabled	Max. speed limit enabled	–	OFF					ON						
	7	LIFT DOWN SWITCH	Flag setting (2)-1	Lift-down switch ON		OFF					ON						Note displayed. Always OFF.
	8	PUMP ACCELERATION MODE	Flag setting (2)-2	Lift acceleration mode: High/N/Low/Super Low	–	SL			Low		N			H			
	9	SEAT SW DETECTION TIME	Seat switch detection time	The time required for seat switch OFF to be enabled.	sec	0	1	1	2	2	3	3	4	4	4.5	5	
	10	SEAT SW OFF DELAY TIME	Seat switch OFF delay time	The reset delay time after seat switch OFF is detected.	sec	0	2	4	6	8	10	15	20	30	60	∞	
	11	SPEED LIMIT RATE BATT	Truck speed limit rate that becomes effective when the overdischarge alarm signal is present.	Truck speed limit rate that becomes effective when the overdischarge alarm signal is present.	%	0	10	20	30	40	50	60	70	80	90	100	
	12	PUMP UNIT LIMIT RATE	Load-handling operation limit rate during overdischarge	Lift duty factor that is used when the overdischarge alarm signal is present.	%	0	10	20	30	40	50	60	70	80	90	100	
PARAMETER 3	1	OVER DISCHARGE LEVEL	Overdischarge output level	Battery discharge indicator level at which overdischarge signal is issued.	–	1	2	3	4	5	6	7	8	9	10		The numbers correspond to the battery meter level.
	2	AUTO POWER OFF TIME	Auto power-off time	The time required for auto power-off function to be enabled.		0	1–14			15	16–90						Settable in minutes. 0: OFF
	3	AH METER DISPLAY	Hour meter display switching over	Items to be displayed on hour meter when key switch is turned on.		TOTAL	DRIVE		PUMP		WORK		TRAVEL RATE				
	4	HEATER	Heater ON/OFF control	Not settable		OFF					ON						Fixed to OFF
	5	SPEED MODE LIMIT	Fixed in the "turtle" mode	Locked with the turtle switch pressed		OFF					ON						
	6	PASS WORD SET	Password setting	Password mode ON/OFF		OFF					ON						
	7	BATTERY CAPACITY	Battery capacity	Battery capacity selection		330	400	450	485	545	565	600	700	865	935		Factory setting
	8	CONTRAST	Contrast adjustment			1–44					45	46–90					
	9	CYLINDER	Load meter constants	Specify if an optional load meter is installed.		0	1	2	3	4	5	6	7	8	9	10	0, 9, 10: OFF, 1: VM 1t, 2: VM 2t, 3: VM 3t, 4: VM 3.5t, 5: VFHM 1t, 6: VFHM 2t, 7: VFHM 3t, 8: VFHM 3.5 t
	11	INT BUZZER TIME	Number of beeps made by interlock buzzer	Number of beeps by buzzer		1	2	3	4	5	6	7	8	9	10		10: unlimited

4.5 SUPPLEMENTARY INFORMATION ABOUT LEVEL SETTING

(1) PARAMETER 1 - No. 4 “Lift inching level”

If the controller’s CN1P-20 terminal is turned ON, the upper limit of the conduction ratio during lifting operations will be according to the setting of this parameter, thus slowing down the lifting speed.

Note: A standard harness does not have any wiring going to this terminal.

(2) PARAMETER 1 - No. 12 “Accelerator stage level”

You can specify the accelerator power curve to be used.

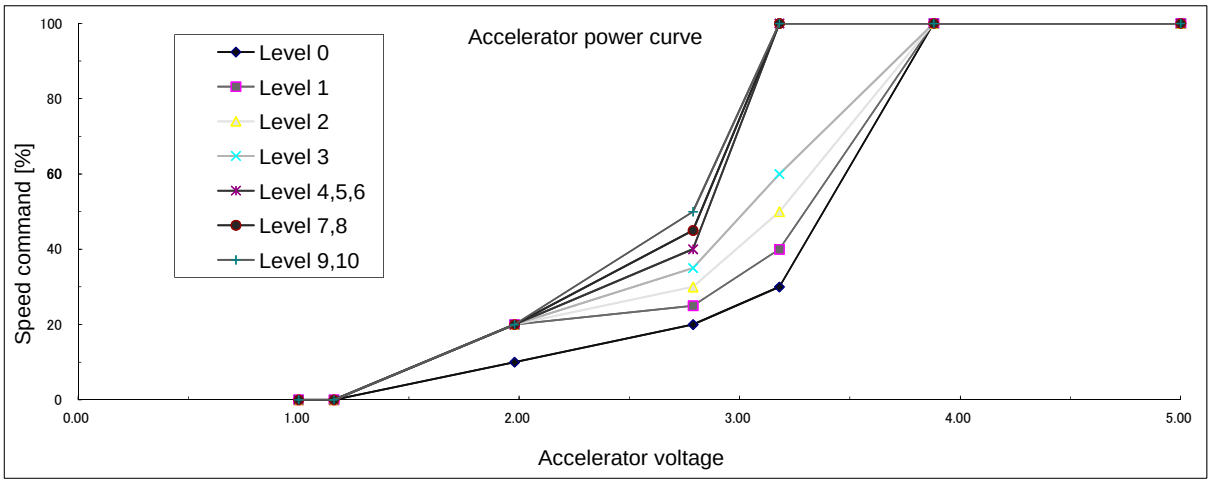

(3) PARAMETER 1 - No. 13 “Speed alarm output level” (option)

Sets the speed at which the speed alarm relay (RS) is turned on.

The output will be turned ON when the speed reaches the preset level and it is turned OFF when the speed drops 0.5 km/h below that preset level.

If an additional RS relay is installed (inside the right side frame), 48 V can be output at Y99 (under the floorboard).

(4) PARAMETER 1 - No. 14 “Steering SSC speed level”

This function starts to gradually limit the truck speed when the tire steering angle reaches 30 degrees left or right from the center position. It eventually limits the truck speed to a preset level when the tire steering angle reaches 60 degrees.

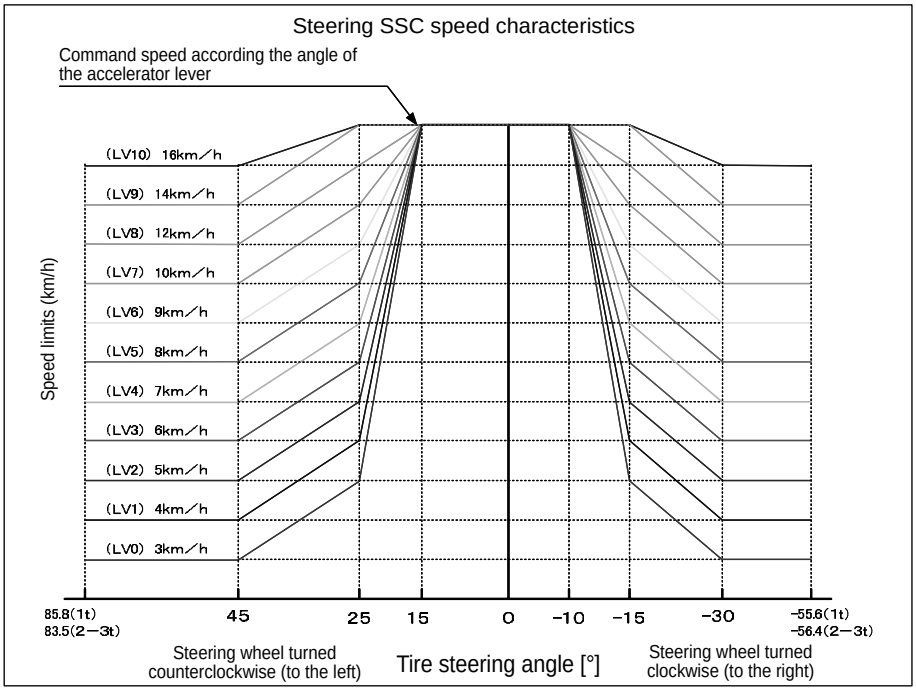

(5) PARAMETER 2 - No. 11 “Truck speed limit rate during overdischarge”
PARAMETER 2 - No. 12 “Pump motor speed limit rate during overdischarge”
PARAMETER 3 - No. 1 “Overdischarge output level”

If the battery discharge indicator level drops to a preset level, an overdischarge signal will be output from the LCD panel to the controller, thus limiting the drive motor and pump motor speeds.

Use PARAMETER 3 – No.1 to set the battery discharge indicator level at which the overdischarge signal is output. You can specify the speed limit rates (percentage) in PARAMETER 2 - Nos. 11 and 12.

(6) PARAMETER 3 - No. 4 “Heater ON/OFF control”

This parameter item is displayed on the LCD panel, but its factory setting cannot be changed.

On LCD panels designed for use in a freezer, a heater is installed that maintains the correct LCD temperature to keep the LCD panel functioning correctly.

This parameter item is factory set to OFF.

However, LCD panels for use in a freezer will switch the heater ON/OFF, according to the temperature detected.

(7) PARAMETER 3 - No. 7 “Battery capacity”

Select the capacity of the battery installed in your truck. This setting will be used as the basis of the calculations for the fuel consumption display.

This setting must be changed if the battery capacity is changed from the factory default setting.

If the capacity of the battery installed in your truck is not in the list, select the closest one.

4.6 SETTING THE PASSWORDS

Two different passwords can be specified. These two passwords are factory set to “0000”.

KEYPAD

	Low-speed travel (turtle) button	Switches between PASSWORD SETUP screens 1 and 2 (when pressed at the same time as the S.P.E button).
SPE	S.P.E button	Switches between PASSWORD SETUP screens 1 and 2 (when pressed at the same time as the Low-Speed Travel button).
Mode	Mode button	Selects the digit to enter. Confirms the entered password.
	+ button - button	Increases or decreases the number.

PASSWORD INPUT SCREEN

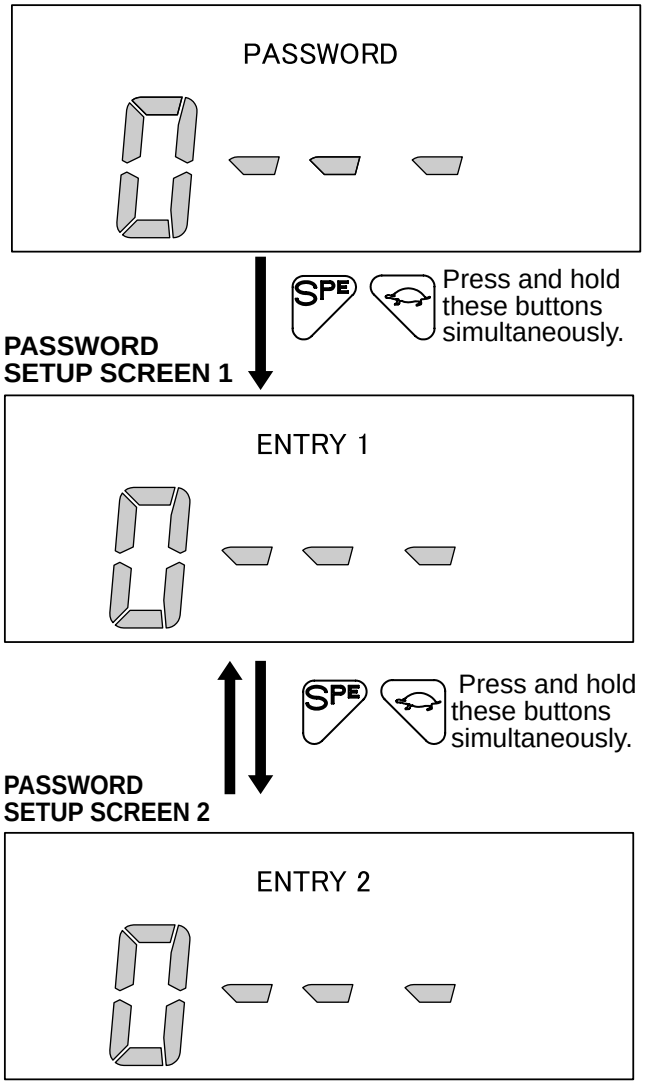

Set “PARAMETER 3 - No.6 PASSWORD SET” to ON.
For details on the setup procedure, refer to the PARAMETER SETTING section.

Turn on the key switch to display the PASSWORD screen (shown on the left).
Press and hold the low-speed travel (turtle) button and S.P.E button at the same time.

PASSWORD SETUP screen 1 (shown on the left) will be displayed.
To display PASSWORD SETUP screen 2, press and hold the low-speed travel (turtle) button and S.P.E button simultaneously while PASSWORD SETUP screen 1 is being displayed.
Use these buttons to toggle between PASSWORD SETUP screens 1 and 2.

The zero on the screen indicates the selected digit.

The selected digit moves to the right each time the Mode button is pressed.
Pressing the Mode button when the selected digit is the last digit on the right will select the digit on the far left.
Select a number (0 to 9) for each digit by pressing the “+” button or the “–“ button.

After entering one or two 4-digit passwords, press and hold the Mode button for at least 3 seconds. Your password (or passwords) will be confirmed and the Main screen will be displayed.

You cannot specify “0000” as a valid password.
If you press and hold the Mode button when “0000” is displayed on PASSWORD SETUP screen 1, an error will be displayed.
If you conform “0000” as your second password by pressing and holding the Mode button on PASSWORD SETUP screen 2, the use of a second password will be canceled and only the first password you specified on PASSWORD SETUP screen 1 will be valid.

5. DESCRIPTION OF THE FUNCTIONS

(1) Travel speed control while turning (Steering SSC)

- Controls the motor speed so that the truck does not exceed the travel speed specified according to the angle of the rear left wheel (steering potentiometer voltage) while turning.

<Speed control for each steering angle range>

(a) When the rear left wheel steering angle is 0 to 15 degrees while turning left, or 0 to -10 degrees while turning right. ------ Maximum speed

(b) When the rear left wheel steering angle is 15 to 25 degrees while turning left, or -10 to -15 degrees while turning right. ------ The larger the steering angle, the higher deceleration rate.

(c) When the rear left wheel steering angle is 25 to 45 degrees while turning left, or -15 to -30 degrees while turning right. ------ Varies with the SSC steering level setting.

(2) Traveling neutral interlock

- Prevents the truck from suddenly lurching forward or back when the key switch is turned ON while the accelerator pedal is pressed or the F/R lever is in the forward or reverse position.

<Activation conditions>

- If the accelerator pedal is pressed or the F/R lever is in the forward or reverse position when the key switch is turned ON.

<Truck operation>

- The truck cannot be moved.

<Deactivation conditions>

- Accelerator pedal and F/R lever in neutral

(3) Load-handling system neutral interlock

- Prevents the load handling system from starting suddenly when the key switch is turned ON while a load handling lever is operated.

< Activation conditions>

- If a load handling command (potentiometer switch or valve switch) is present when the key switch is turned ON.

<Truck operation>

- Load handling system disabled

<Deactivation conditions>

- Load handling command (potentiometer switch, valve switch) OFF

(4) Interlock control

- The interlock system is a safety device that cuts off the power to the drive and load handling circuits when the operator leaves the compartment during operation. This system helps prevent an accident from happening if the operator is not in the correct driving position or if the controls are moved unintentionally when no one is in the operator's compartment.

<Activation conditions>

(a) When the key switch is turned ON:
- If the key switch is turned ON while the interlock switch is OFF

(b) After the key switch is turned ON:
- If a predetermined period of interlock OFF time has passed while the key switch is ON

<Truck operation>

(a) The truck won't travel and the load handling system won't work. However, the EPS will work.

(b) The truck won't travel and the load handling system won't work. However, the EPS will work.

<Deactivation conditions>

(a) If the key switch is turned ON while the seat switch is ON

(b) Travel system: Accelerator lever OFF and seat switch ON
Load handling system: Load handling command OFF and seat switch ON

(5) Regenerative control

(a) Switchback regeneration

- Regenerative braking occurs when the F/R lever is switched from forward to reverse or vice versa while the accelerator pedal is pressed.

<Activation conditions>

See the table below.

(b) Brake OFF regeneration

- Regenerative braking occurs when the brake switch is turned OFF.

< Activation conditions>

See the table below.

(c) Accelerator neutral regeneration (accelerator OFF regeneration)

- Regenerative braking occurs when the accelerator lever is moved to the neutral position while the truck is traveling.

< Activation conditions>

See the table below.

Table 1 Regenerative Control

Input conditions		Controller drive mode							
Accelerator		ON				OFF			
Brake switch		OFF		ON		OFF		ON	
Slope detected		No	Yes	No	Yes	No	Yes	No	Yes
Accelerator switch	Truck status	–		–		–	–	–	–
F	Forward travel	Driving under power	Driving in slope mode *2	Driving with output limit *1	Driving in slope mode *2	Accelerator OFF regeneration	Anti-roll OFF regeneration	Brake OFF regeneration	Anti-roll OFF regeneration
	Stopped	Driving under power	Driving in slope mode *2	Driving with output limit *1	Driving in slope mode *2	Output OFF		Output OFF	
	Reverse travel	Switchback regeneration	Switchback regeneration	Brake OFF regeneration	Brake OFF regeneration	Accelerator OFF regeneration	Anti-roll OFF regeneration	Brake OFF regeneration	Anti-roll OFF regeneration
N	Forward travel	Accelerator neutral regeneration	Anti-roll OFF regeneration	Brake OFF regeneration	Brake OFF regeneration	Accelerator neutral regeneration	Anti-roll OFF regeneration	Brake OFF regeneration	Anti-roll OFF regeneration
	Stopped	Output OFF		Output OFF		Output OFF		Output OFF	
	Reverse travel	Accelerator neutral regeneration	Anti-roll OFF regeneration	Brake OFF regeneration	Brake OFF regeneration	Accelerator neutral regeneration	Anti-roll OFF regeneration	Brake OFF regeneration	Anti-roll OFF regeneration
R	Forward travel	Switchback regeneration	Switchback regeneration	Brake OFF regeneration	Brake OFF regeneration	Accelerator OFF regeneration	Anti-roll OFF regeneration	Brake OFF regeneration	Anti-roll OFF regeneration
	Stopped	Driving under power	Driving in slope mode *2	Driving with output limit *1	Driving in slope mode *2	Output OFF		Output OFF	
	Reverse travel	Driving under power	Driving in slope mode *2	Driving with output limit *1	Driving in slope mode *2	Accelerator OFF regeneration	Anti-roll OFF regeneration	Brake OFF regeneration	Anti-roll OFF regeneration

*1: Driving with output limit: This refers to inching control. Limited to 80% of the maximum torque (Excessive Travel inching).
*2: Driving in slope mode: When a truck driving down a slope exceeds the speed that should normally be obtained by a given amount of accelerator pedal pressure, the power output will be limited in order to maintain the speed that corresponds to that accelerator pedal effort.

(6) Output duty factor reduction when the rear wheels are at the maximum steering angle (Excluding trucks with an Orbitrol steering system)

<Activation conditions>

- The rear wheels are within 5 degrees of the maximum steering angle.

<Control applied>

- Limits the output duty factor to 10%.

<Deactivation conditions>

- When the torque sensor voltage indicates that the wheels are in neutral (the straight-ahead position).

6. ELECTRIC WIRING

The electric components of the truck are wired using several types of wire harnesses and color coded by circuit (wire number).

The wire harnesses are connected with connectors (2 types) or screws.

Table 6.1 Color symbols and examples

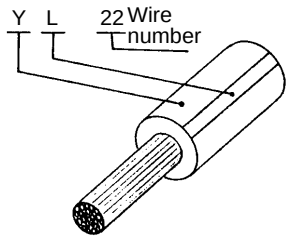	B	Black	R	Red	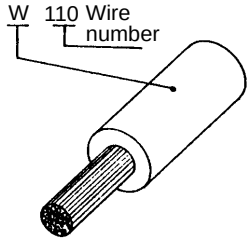
	G	Green	W	White	
	L	Blue	Y	Yellow	
	O	Orange	Lg	Light green	
Example: Wire number 22, Yellow coating with a blue marking	P	Pink	Sb	Light blue	Example: Wire number 110, White number 110, White coating without marking

Table 6.2 Connector symbol

Connecting type		Plug-in side	Receptacle side	Remarks
Plug-in type	Housing	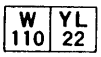	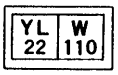	The numbers signify wire numbers. The alphabetic letters mean colors. (Table 6.1)
	Plug	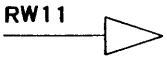	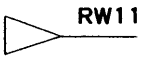	
Screw type		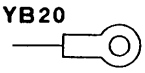	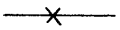	

Two wires may have different wire numbers even though they have the same wire color. Before trying to check the wires, refer to wire harness and circuit diagrams on pages that follow.

The dotted lines in the circuit diagrams are given for optional equipment.

NOTE

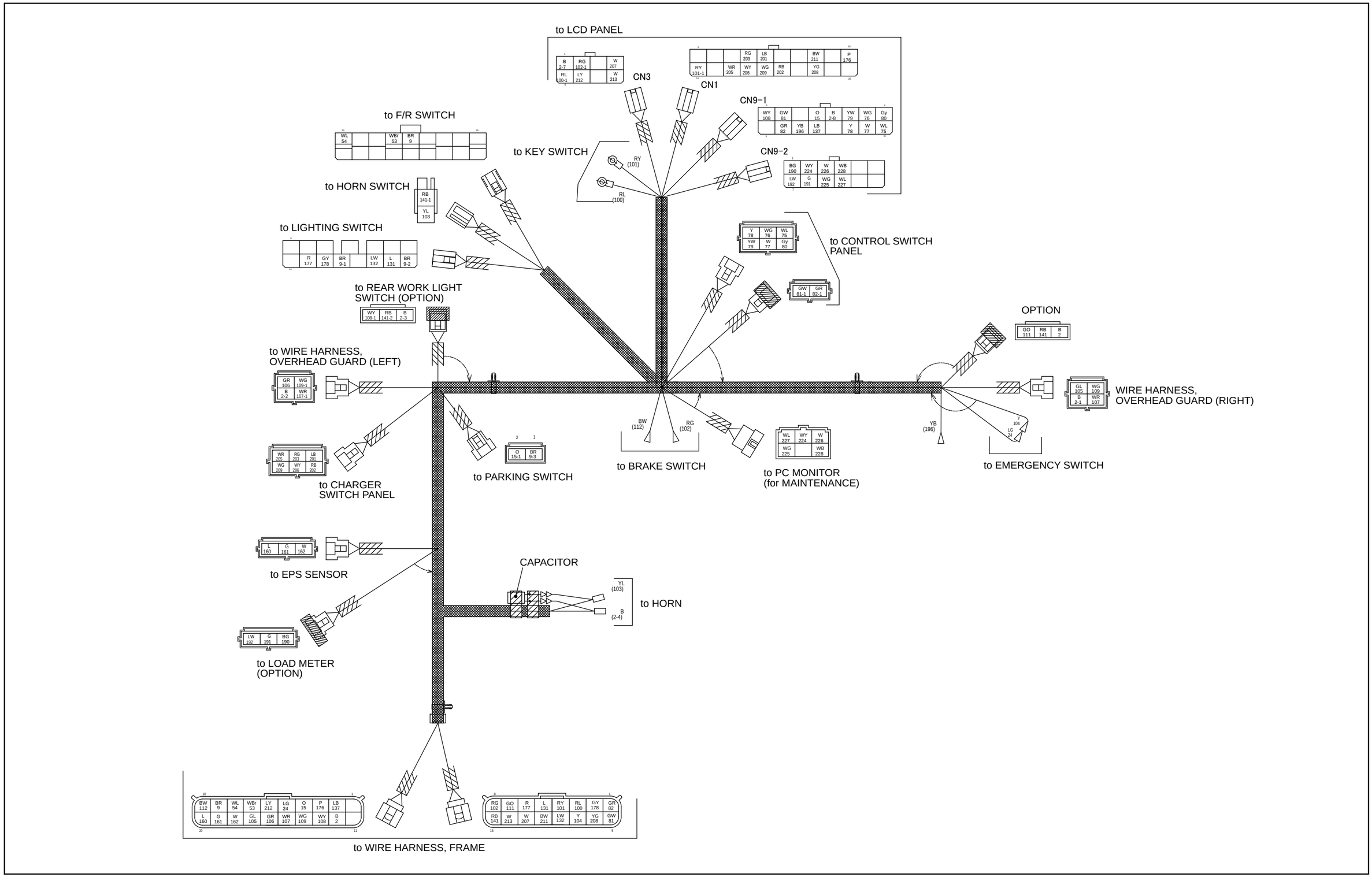

Fig. 6.1 Wire Harness, Front Guard (1- to 2.5-ton Trucks)

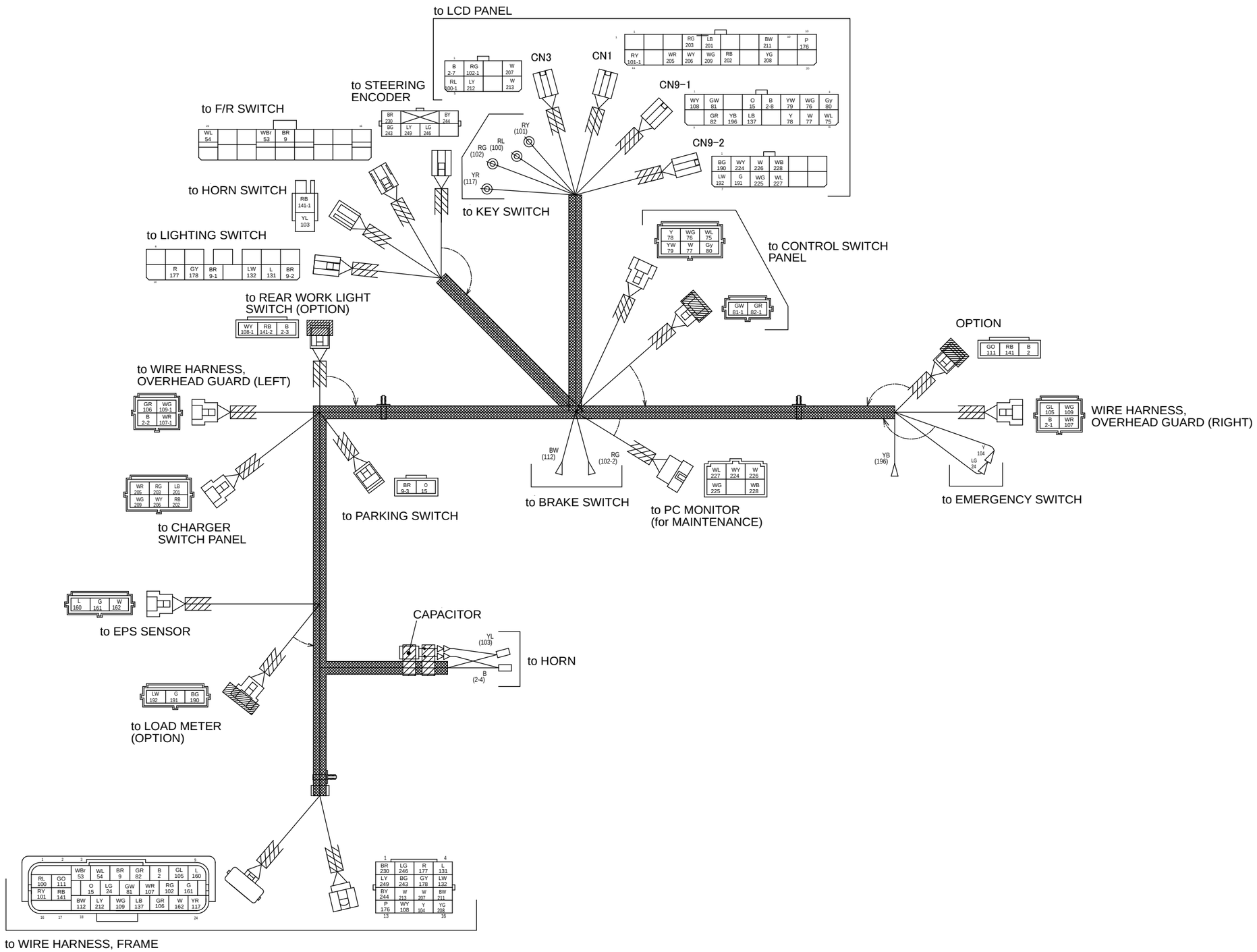

Fig. 6.2 Wire Harness, Front Guard (3- to 3.5-ton Trucks)

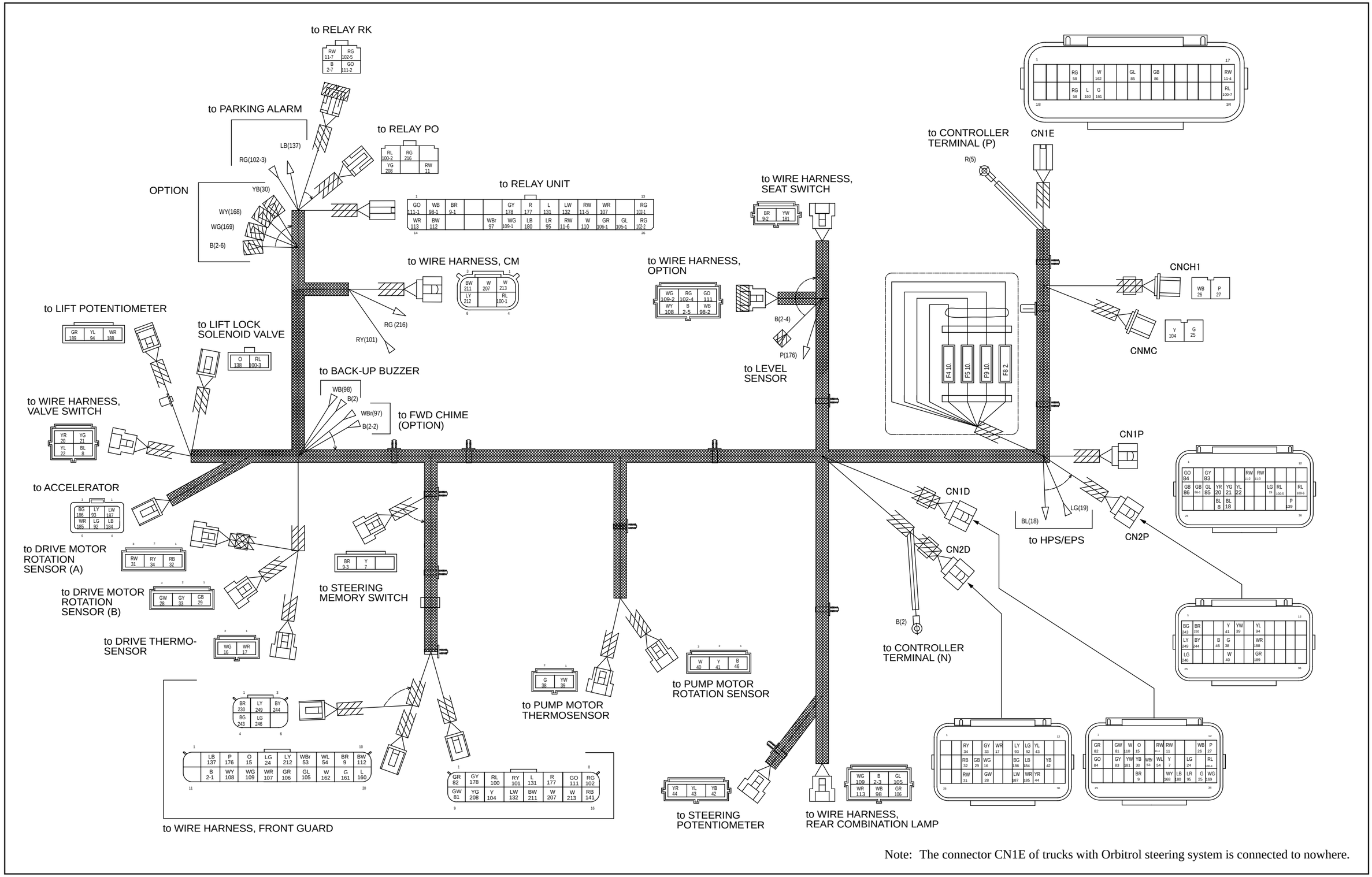

Note: The connector CN1E of trucks with Orbitrol steering system is connected to nowhere.

Fig. 6.3 Wire Harness, frame (1- to 1.8-ton Trucks)

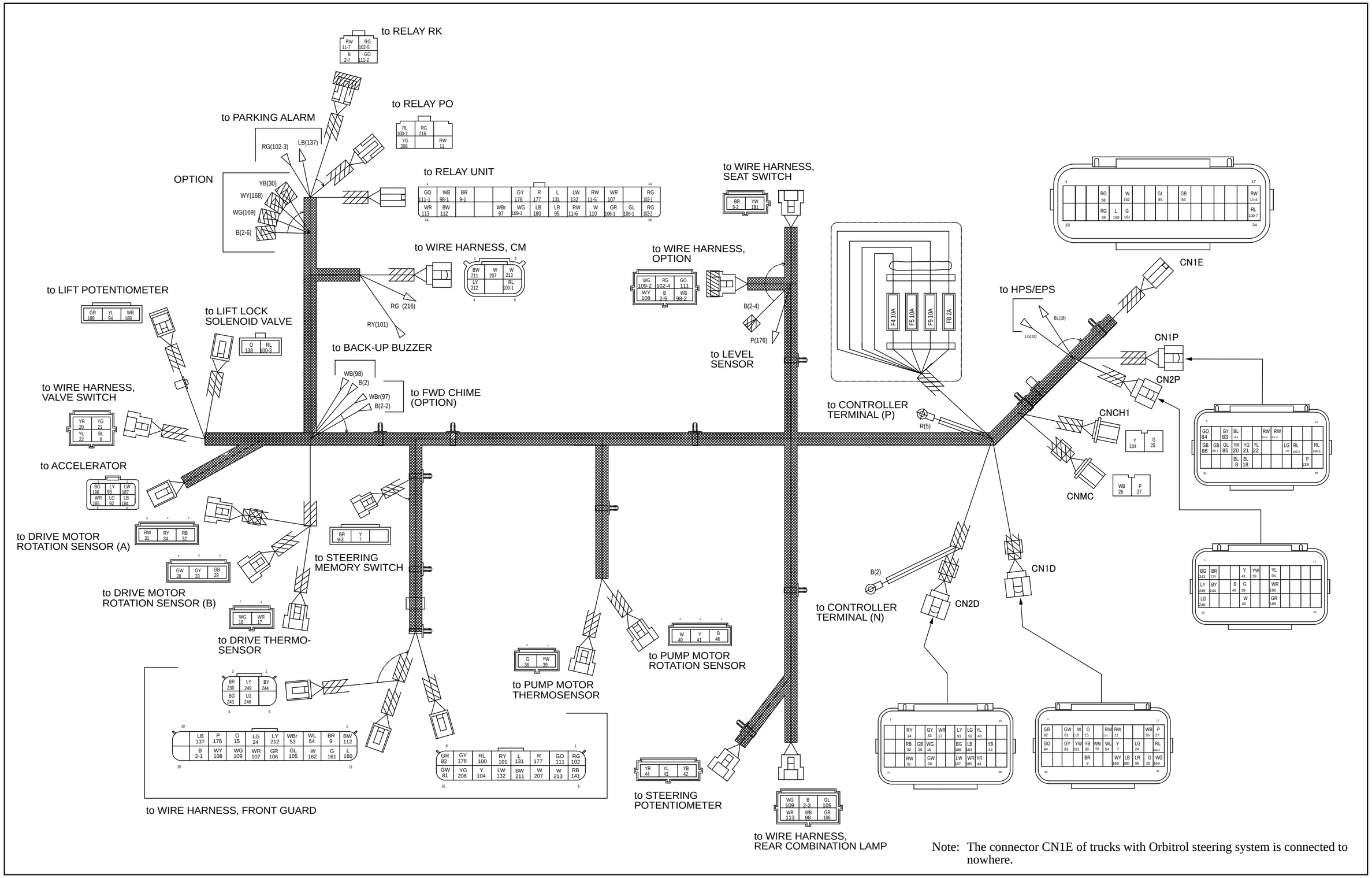

Note: The connector CN1E of trucks with Orbitrol steering system is connected to nowhere.

Fig. 6.4 Wire Harness, frame (2.0- to 2.5-ton Trucks)

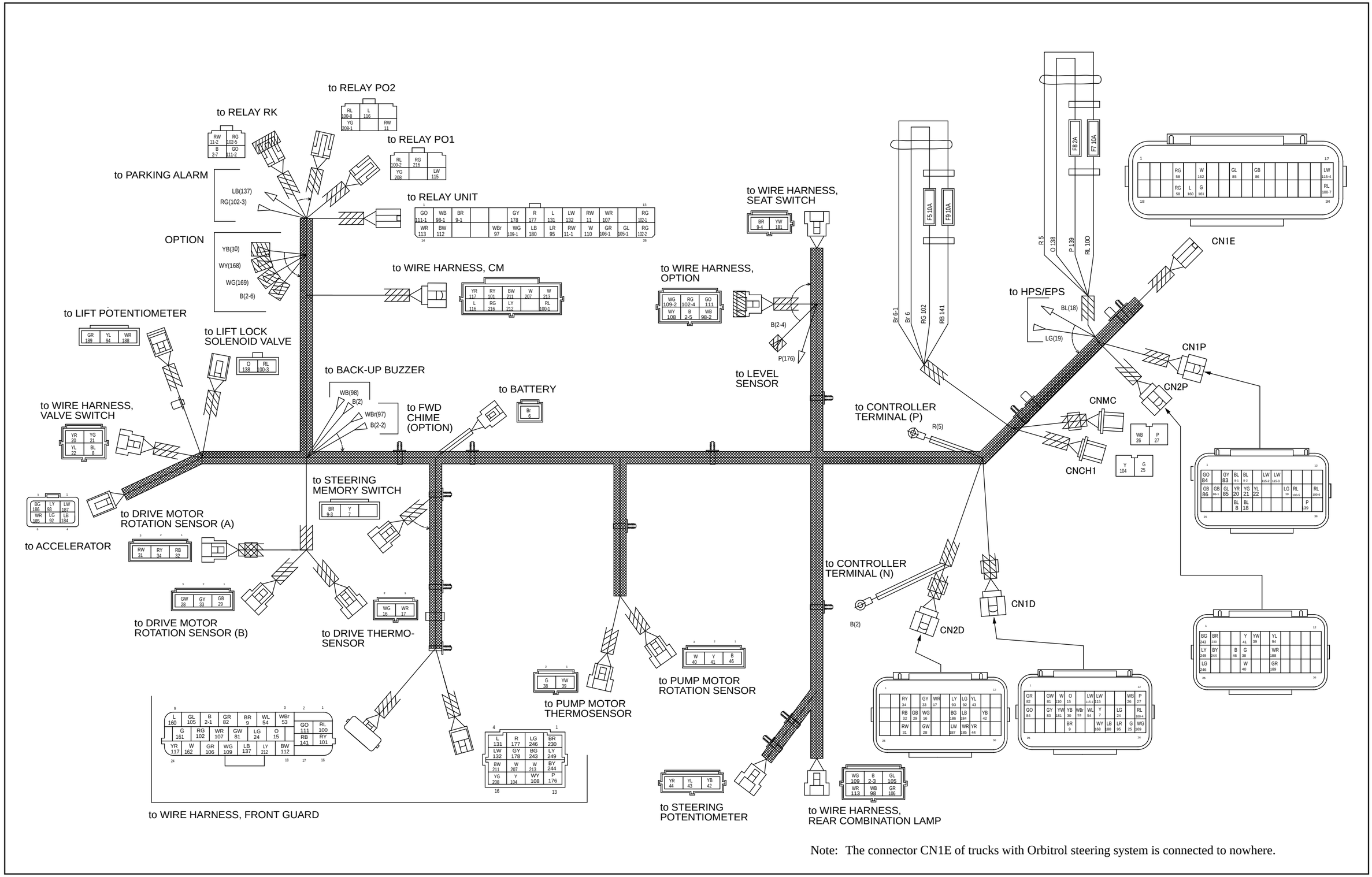

Note: The connector CN1E of trucks with Orbitrol steering system is connected to nowhere.

Fig. 6.5 Wire Harness, frame (3.0- to 3.5-ton Trucks)

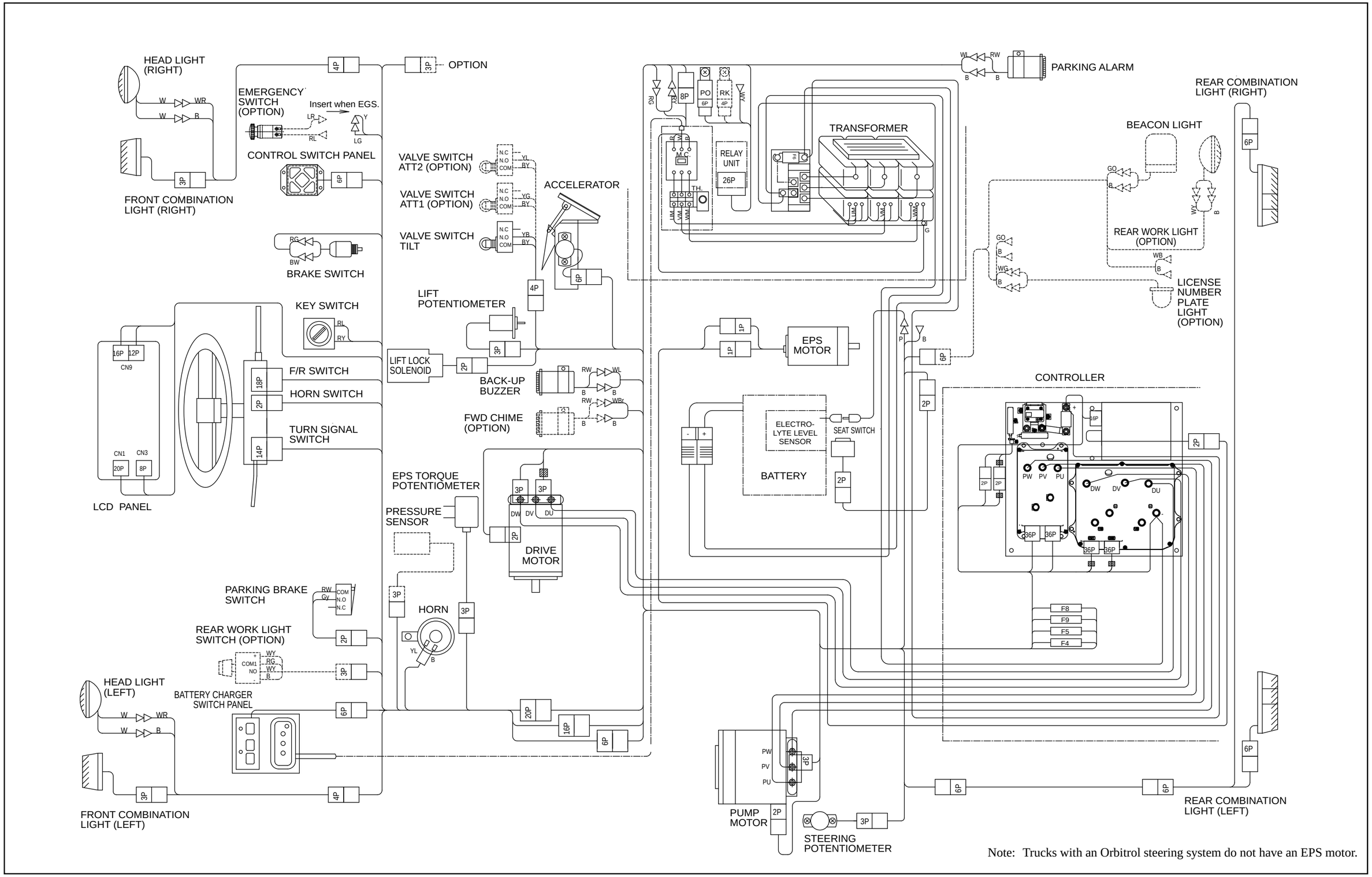

Note: Trucks with an Orbitrol steering system do not have an EPS motor.

Fig. 6.6 Wiring Diagram (1- to 1.8-ton Trucks)

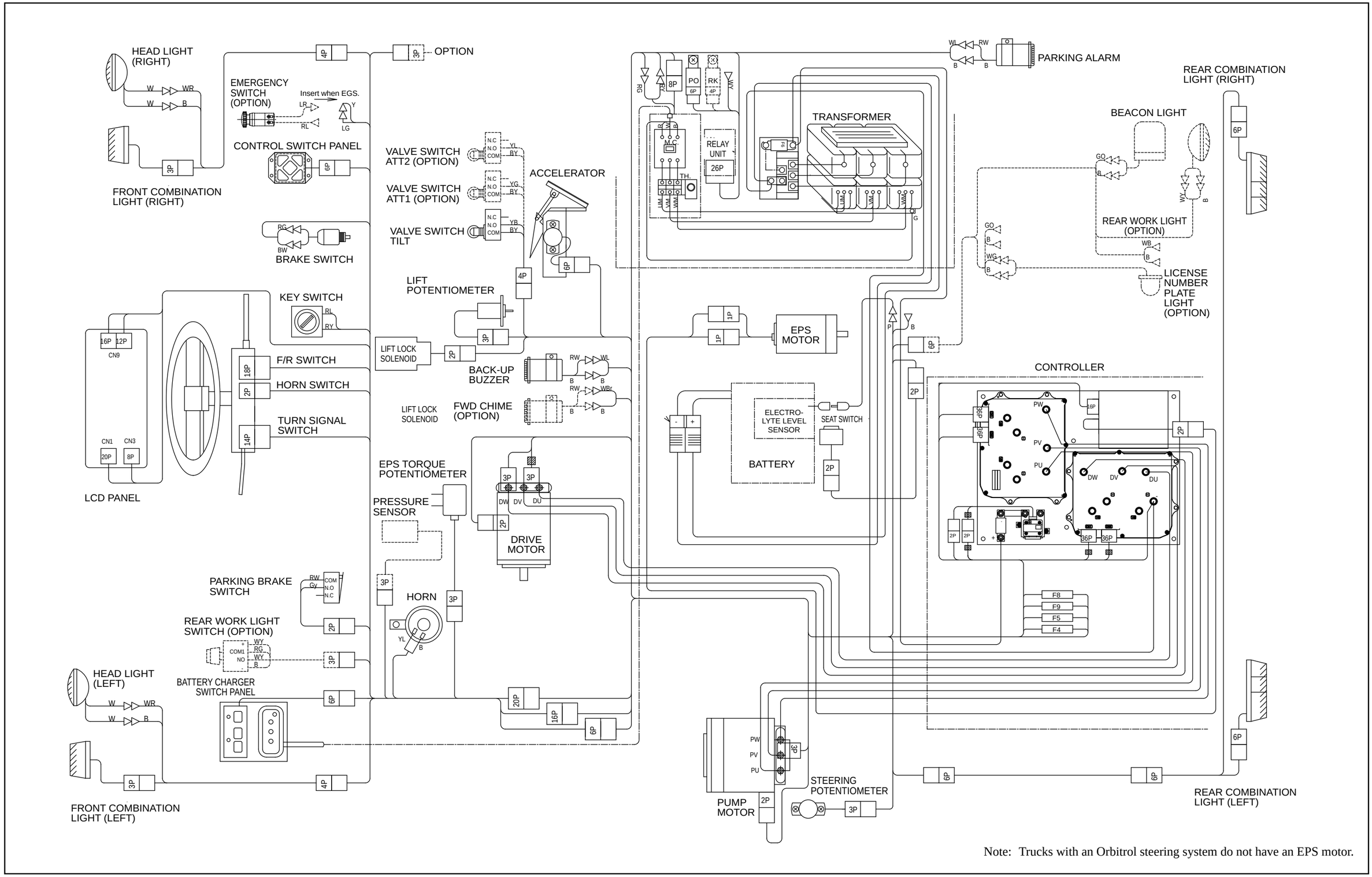

Note: Trucks with an Orbitrol steering system do not have an EPS motor.

Fig. 6.7 Wiring Diagram (2.0- to 2.5-ton Trucks)

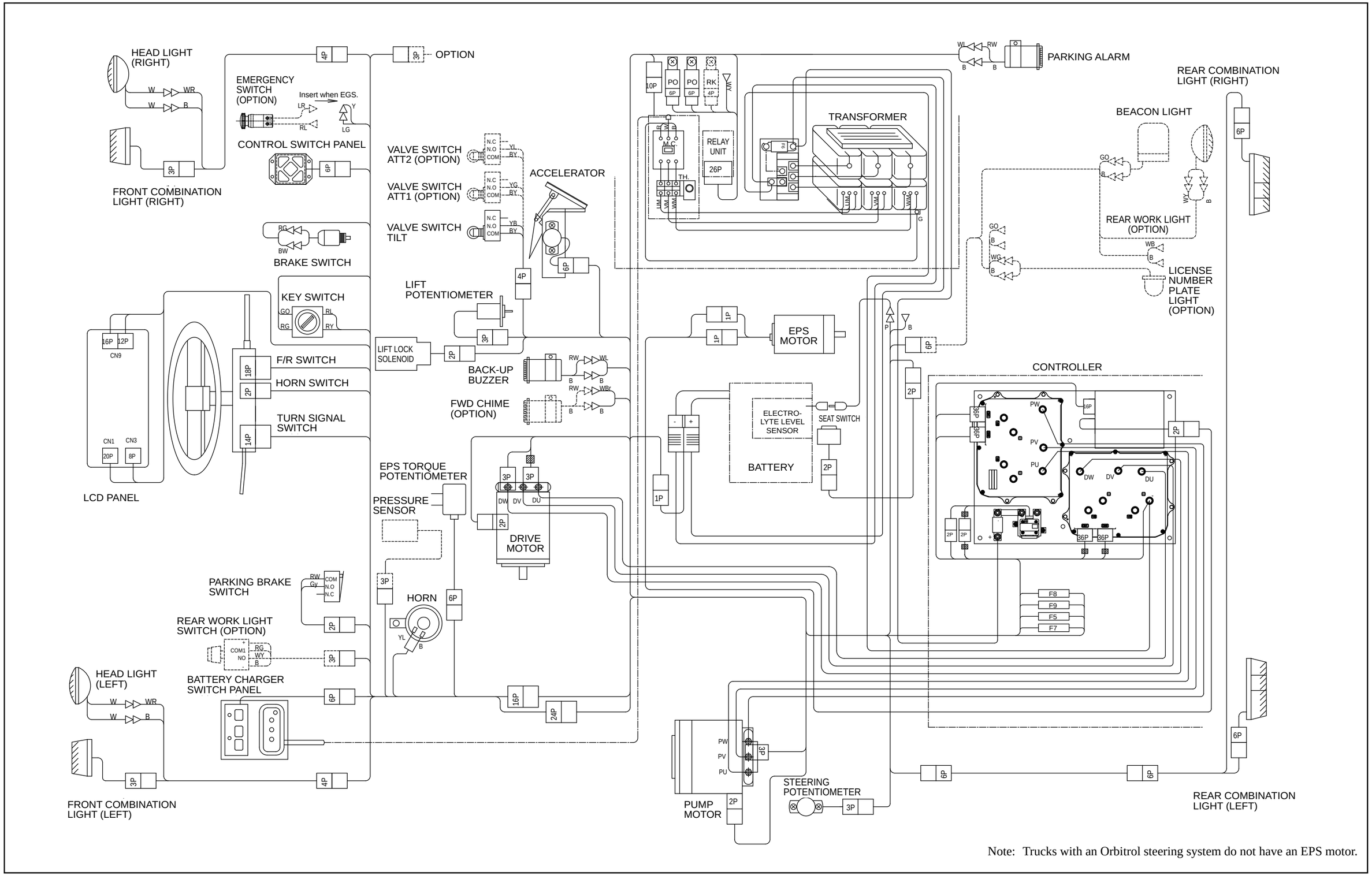

Note: Trucks with an Orbitrol steering system do not have an EPS motor.

Fig. 6.8 Wiring Diagram (3.0- to 3.5-ton Trucks)

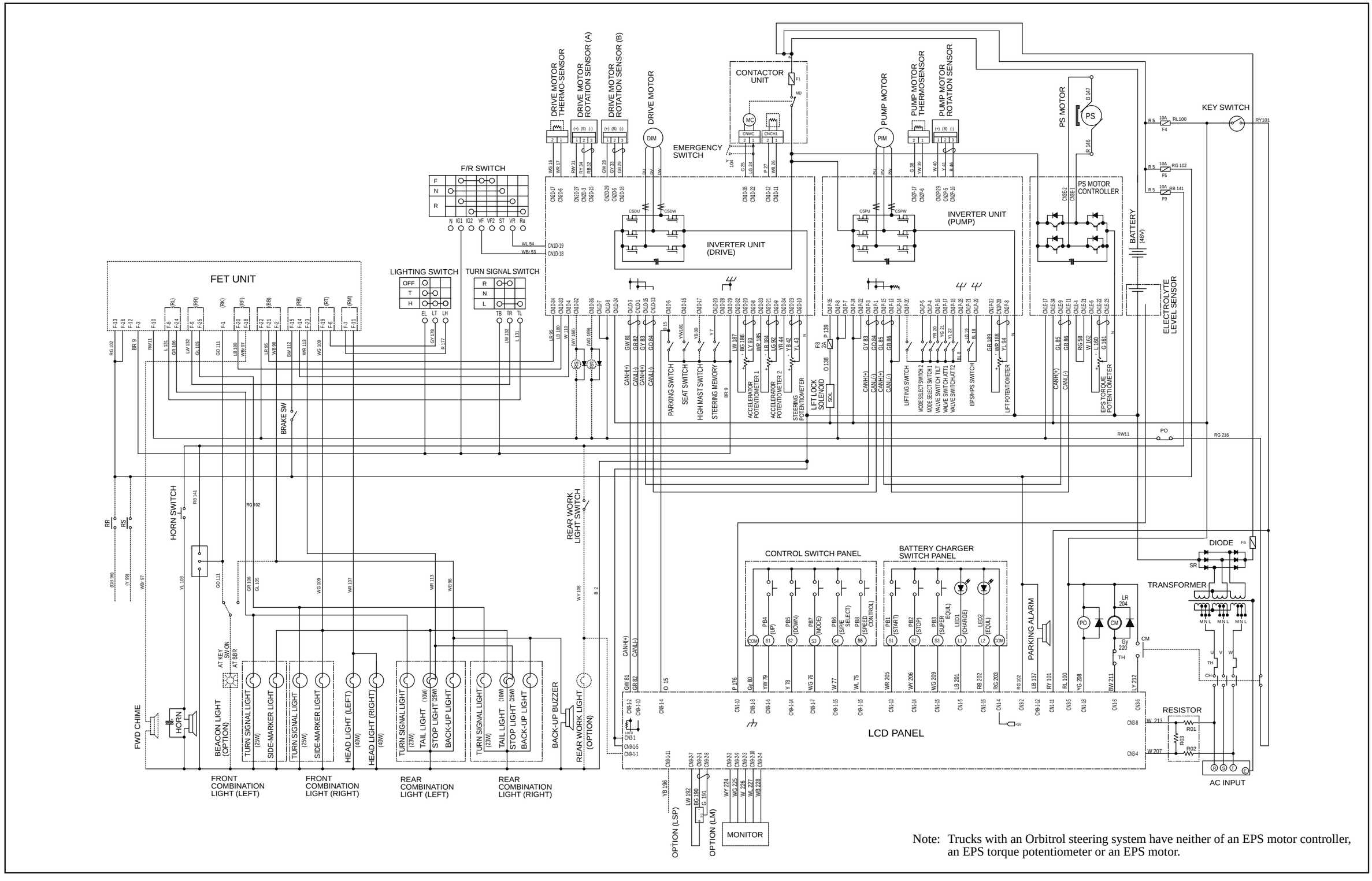

Note: Trucks with an Orbitrol steering system have neither of an EPS motor controller, an EPS torque potentiometer or an EPS motor.

Fig. 6.9 Circuit Diagram (1- to 2.5-ton trucks)

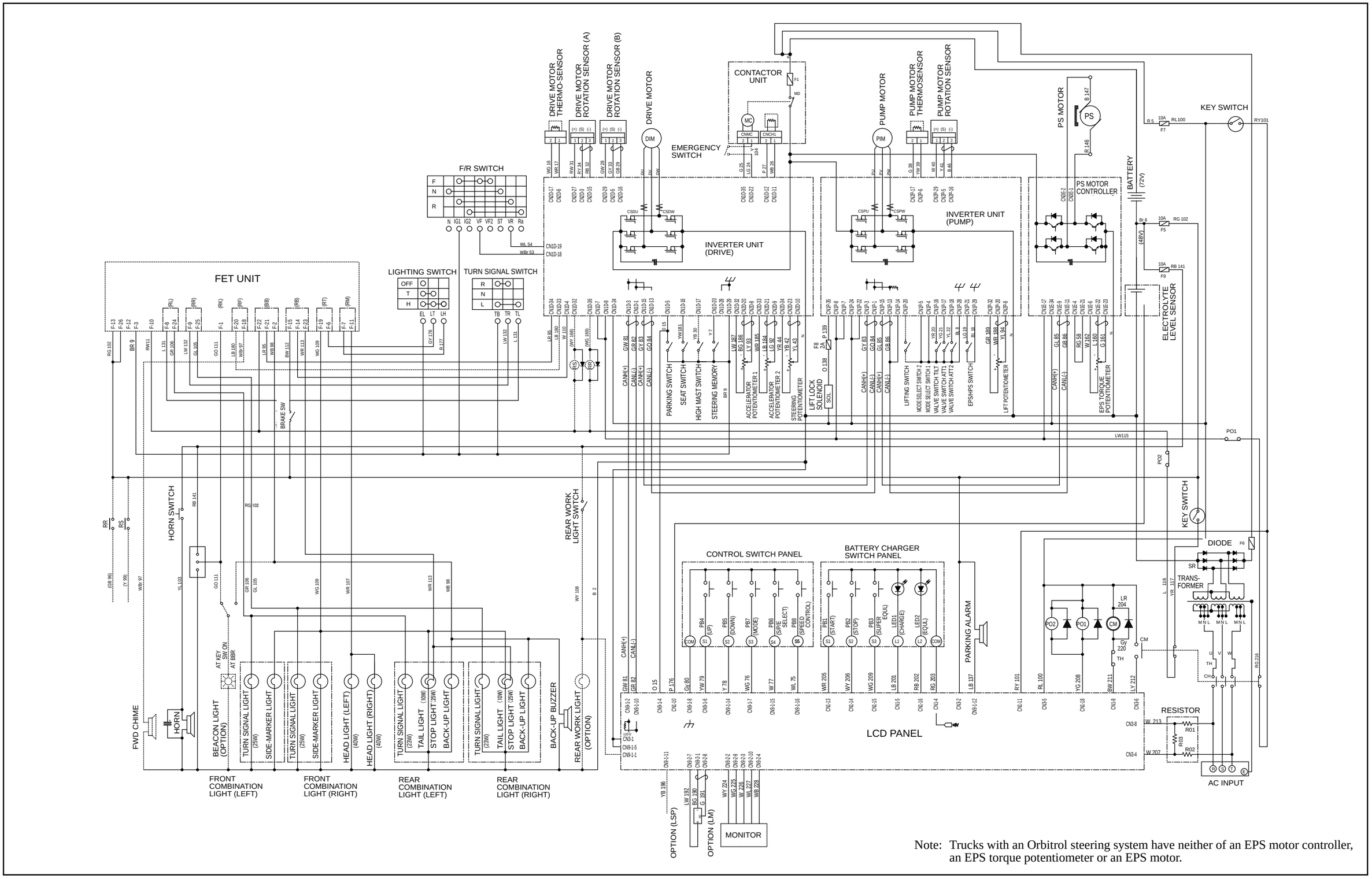

Note: Trucks with an Orbitrol steering system have neither of an EPS motor controller, an EPS torque potentiometer or an EPS motor.

Fig. 6.10 Circuit Diagram (3- to 3.5-ton trucks)

No. SEB-7P0BE

Issued: July, 2012
Revised: December, 2012

TCM CORPORATION

MARKETING GROUP: 6-22-7, Minami-Oi, Shinagawa-ku Tokyo
140-0013, Japan
FAX:Japan +81-3-6730-3371

All rights reserved

JB-1212010(HO) Printed in Japan

TCM

SERVICE MANUAL

FB10 · FB15 · FB18 · FB20 · FB25 · FB30 · FB35

TCM CORPORATION

No. SEB-7P0BE