https://truckmanualshub.com/

WEAM006600

Operation & Maintenance Manual

GALEO

PC30MR-2
PC35MR-2

HYDRAULIC EXCAVATOR

SERIAL NUMBER

PC30MR-2 20001 and up

PC35MR-2 5001 and up

WARNING

Unsafe use of this machine may cause serious injury or death. Operators and maintenance personnel must read this manual before operating or maintaining this machine.
This manual should be kept inside the cab for reference and periodically reviewed by all personnel who will come into contact with the machine.

KOMATSU

Utility

https://truckmanualshub.com/

https://truckmanualshub.com/

1.1 FOREWORD

- This manual has been carried out by Komatsu Utility in order to supply their customers with all the necessary information on the machine and the safety regulations related to it, together with the use and maintenance instructions that enable the operator to exploit the capacity of the machine with optimal results and to keep the machine efficient over time.
- The operation manual, together with the spare parts catalogue, is an integral part of the machine and must accompany it, even when it is resold, until its final disposal.
- The manual must be handled with the greatest care and always kept on board the machine, so that it can be consulted at any moment; it must be placed in the appropriate compartment inside the seat support, where also the ownership documents and the logbook are usually kept.
- This manual must be given to the persons who have to use the machine and carry out the routine maintenance operations; they must read the contents carefully more than once, in such a way as to clearly understand what are the correct operating conditions and the dangerous conditions that must be avoided.
  In case of loss or damage, request a new copy to Komatsu Utility or your Komatsu Utility Dealer.
- The illustrations contained in this manual may represent machine configurations available on request.
  Komatsu Utility machines are constantly improved in order to increase their efficiency and reliability; this manual sums up all the information regarding the most recent techniques applied at the moment in which the machine is marketed.
  For any further and/or updated information, contact your Komatsu Utility Dealer.
- Punctual periodic annotations regarding the maintenance operations that have been carried out are important to have a clear prospect of the situation and to know exactly what has been done and what has to be done after the next maintenance interval. Therefore, it is advisable to consult either the hour meter and the maintenance plan frequently.
- Over the years Komatsu Utility Dealers have gathered considerable experience in customer service.
  If more information is needed, do not hesitate to contact your Komatsu Utility Dealer: he always knows how to get the best performance from the machine, he can suggest the use of the equipment that is most suitable for specific needs and can provide the technical assistance necessary for any change that may be required to conform the machine to the safety standards and traffic rules.
  Furthermore, Komatsu Utility Dealers also ensure their assistance for the supply of Komatsu Utility genuine spare parts, which alone guarantee safety and interchangeability.
- The table included in this manual must be filled in with the machine data, which are the data that must always be indicated to the Dealer when requiring assistance and ordering spare parts.

⚠ CAUTION

- **The incorrect use of the machine and inappropriate maintenance operations may cause serious injuries and even death.**
- **Operators and maintenance personnel must carefully read this manual before using the machine or performing maintenance operations.**
- **Any serious accident that may occur during the use of the machine or during maintenance operations is due to failure to comply with the instructions given herein.**
- **The procedures and precautions described in this manual are valid for application to the machine only when it is used correctly.**
  If the machine is used for any purpose or in any way other than those described herein, the operator shall be responsible for his own safety and for the safety of any other person involved.

https://truckmanualshub.com/

1.2 INFORMATION ON SAFETY

Many accidents are caused by insufficient knowledge of and failure to comply with the safety regulations prescribed for the maintenance operations that must be performed on the machine.
In order to avoid accidents, before starting work and before carrying out any maintenance operation, carefully read and be sure to understand all the information and warnings contained in this manual and given on the plates applied onto the machine, so that you can follow the instructions without making mistakes.
To identify the messages regarding safety that are included in this manual and written on the machine plates, the following words have been used.

⚠ DANGER

- **This word is used in the safety warnings in the manual and on the plates when the situation is dangerous and it may possibly result in serious injuries or even death.**
  These messages describe the safety precautions to be taken in order to avoid any risk. Non-compliance with these instructions may also result in serious damage to the machine.

⚠ CAUTION

- **This word is used in the safety warnings in the manual and on the plates to signal risks that may cause moderate damage or injuries.**
  The message can be used even to indicate the risk of damage to the machine only.

IMPORTANT

- **This word is used when precautions are indicated, which must be taken to avoid actions that may shorten the life of the machine.**

Komatsu Utility cannot reasonably predict every circumstance that might involve a potential hazard during the operation or maintenance of the machine; for this reason, the safety messages included in this manual and applied onto the machine may not include all possible safety precautions.
If all the procedures and operations prescribed for this machine are kept to, you can be sure that the operator and the persons in the vicinity can work in total safety, with no risk of damaging the machine. In case of doubt regarding the safety measures necessary for some procedures, contact Komatsu Utility or your local Dealer.

⚠ DANGER

- **Before starting any maintenance operation, position the machine on a firm and level surface, lower the equipment to the ground, engage the safety locks of either the equipment and the controls and stop the engine.**

⚠ DANGER

- **To make the information clearer, some illustrations in this manual represent the machine without safety guards. Do not use the machine without guards and do not start the engine when the engine protection casing is open, if this is not expressly prescribed for some specific maintenance operations.**

https://truckmanualshub.com/

DANGER

- **It is strictly forbidden to modify the setting of the hydraulic system safety valves; Komatsu Utility cannot be held liable for any damage to persons, property or the machine, if this has been tampered with by modifying the standard setting of the hydraulic system.**

DANGER

- **Before carrying out any electrical welding, disconnect the battery and the alternator (See "2.8.13 PRECAUTIONS CONCERNING THE BATTERY AND THE ALTERNATOR").**

DANGER

- **Install only authorized additional equipment (See "6.1 ATTACHMENTS AND OPTIONS - GENERAL INFORMATION").**

https://truckmanualshub.com/

1.3 INTRODUCTION

1.3.1 INTENDED USES

The Komatsu Utility MACHINES described in this manual have been designed and constructed to be used mainly for EXCAVATION and EARTH-MOVING OPERATIONS.

If provided with suitable safety devices, they can be used with authorized optional equipment having the characteristics illustrated at point “6. AUTHORIZED OPTIONAL EQUIPMENT”.

1.3.2 IMPROPER OR UNAUTHORIZED USES

⚠ CAUTION

- **This paragraph describes some of the improper or unauthorized uses of the machine; since it is impossible to predict all the possible improper uses, if the machine happens to be used for particular applications, contact your Komatsu Utility Dealer before carrying out the work.**

IMPORTANT

- **The instructions regarding the authorized optional equipment are given in the relevant operation and maintenance manuals; if the equipment is supplied by Komatsu Utility, these publications are enclosed to this manual.**
- **The instructions regarding the assembly of the authorized equipment, the controls requiring special arrangements on the machine and the hydraulic couplings necessary for the operation of the equipment are grouped in the final section of this manual.**

Komatsu Utility MACHINES are constructed exclusively for the handling, excavation and treatment of inert materials; therefore, the following uses are absolutely forbidden:

- USE OF THE MACHINE BY MINORS OR INEXPERIENCED PERSONS.
- USE OF THE MACHINE FOR LIFTING PERSONS OR OBJECTS.
- TRANSPORT OF CONTAINERS WITH FLAMMABLE OR DANGEROUS FLUIDS.
- USE OF THE BUCKET FOR DRIVING OR EXTRACTING PILES.
- USE OF THE MACHINE FOR TOWING DAMAGED VEHICLES.

1.3.3 MAIN CHARACTERISTICS

- Simple and easy operation.
- Hydrostatic transmission obtained through two axial piston motors that operate epicyclic reduction gears.
- Rotation of the upper structure achieved by means of an axial piston hydraulic motor acting on an epicyclic reduction gear.
- Main equipment servolevers ensuring also combined movements that can be modulated proportionally and continually.
- Pedal controls for the boom swing and the optional equipment.
- Lever controls for travel and blade.
- Travel speed increase achieved through a pedal-operated push button.
- Complete series of instruments visible from the operating position.
- Lever accelerator.
- Easy maintenance with simplified intervals.

https://truckmanualshub.com/

1.3.4 RUNNING-IN

Every machine is scrupulously adjusted and tested before delivery.
A new machine, however, must be used carefully for the first 100 hours, in order to ensure proper running-in of the various components.
If the machine is subjected to excessive work load at the beginning of operation, its potential yield and its functionality will be shortly and untimely reduced.
Every new machine must be used carefully, paying special attention to the following indications:

- After the start, let the engine idle for 5 minutes, in such a way as to warm it up gradually before actual operation.
- Avoid operating the machine with the limit loads allowed or at high speed.
- Avoid abrupt starts or accelerations, useless sudden decelerations and abrupt reversals.
- After the first 250 hours, carry out the following operations, in addition to those to be performed every 250 hours:
  1 - Change the oil in the travel reduction gears.
  2 - Check and adjust the engine valve clearance.

SYNTHETIC BIODEGRADABLE OIL TYPE HEES

On machines in which the synthetic biodegradable oil type HEES is used, the following operations are to be performed besides the standard maintenance operations:

- After the first 50 hours of operation, change the hydraulic circuit drain filter.
- After the first 500 hours of operation, change the hydraulic circuit oil.

IMPORTANT

- **When changing the oil filters (cartridges), check their inner part to make sure that there are no deposits. If considerable deposits are observed, find out what may have caused them before starting the machine.**
- **The number of operating hours is indicated by the hour meter.**

https://truckmanualshub.com/

1.4 PRODUCT IDENTIFICATION

The Komatsu Utility EXCAVATOR and its main components are identified by serial numbers stamped on the identification plates.
The serial number and the identification numbers of the components are the only numbers that must be indicated to the Dealer when requiring assistance and ordering spare parts.

1.4.1 MACHINE SERIAL NUMBER

The machine serial number is stamped on the front upper part of the main frame, on the left side.

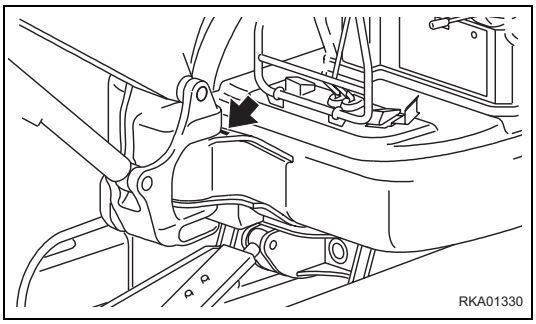

1.4.2 MACHINE IDENTIFICATION PLATE AND PRODUCT IDENTIFICATION NUMBER (PIN)

The Komatsu Utility EXCAVATORS described in the present manual are provided with the CE mark, which certifies that they are in compliance with the harmonized standards of the European Community.
The plate provided with the mark is applied onto the front wall of the main frame, on the left side.

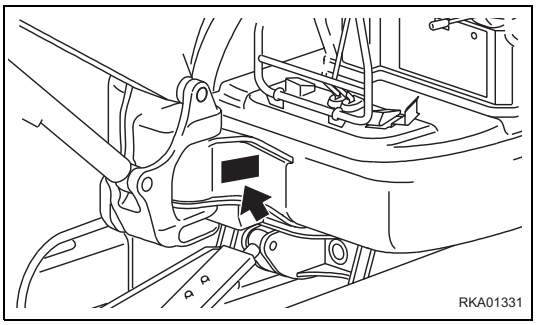

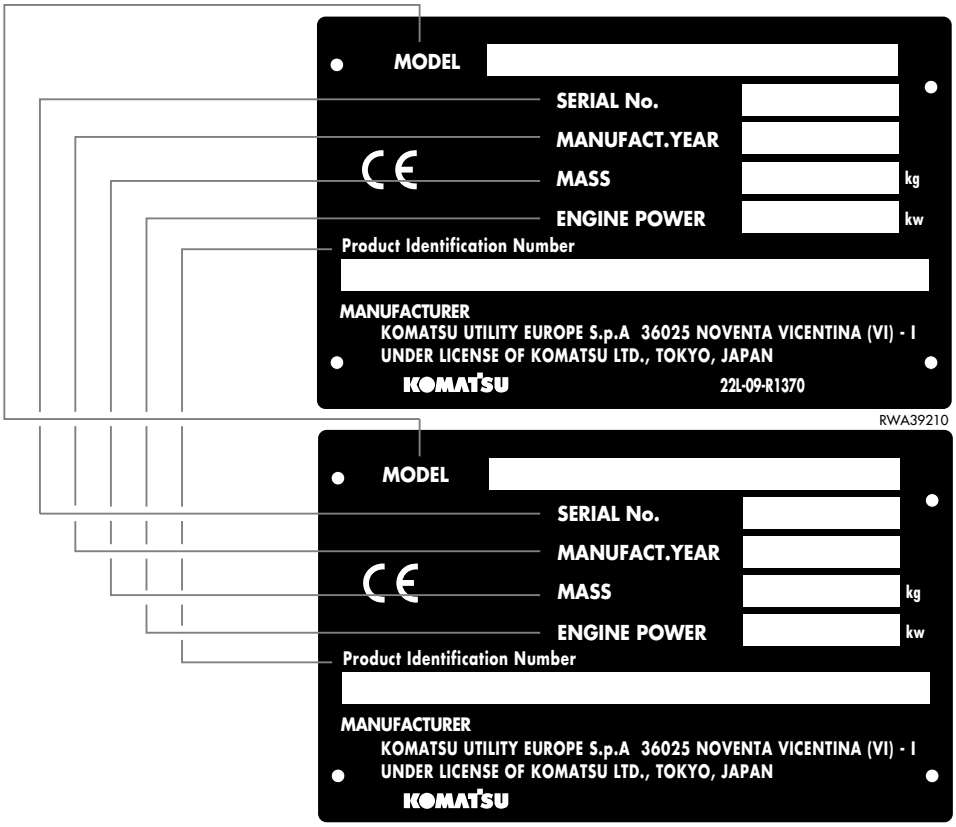

https://truckmanualshub.com/

1.4.3 ENGINE SERIAL NUMBER AND EXHAUST GAS EMISSION PLATE

The serial number is stamped on the plate positioned on the upper side of the tappet cover.

RKAA0350

The exhaust gas emission plates are positioned on the upper side of the tappet cover and on the inner right side of the counterweight.

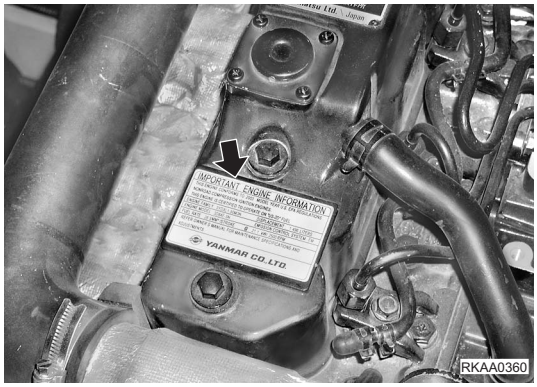

RKAA0360

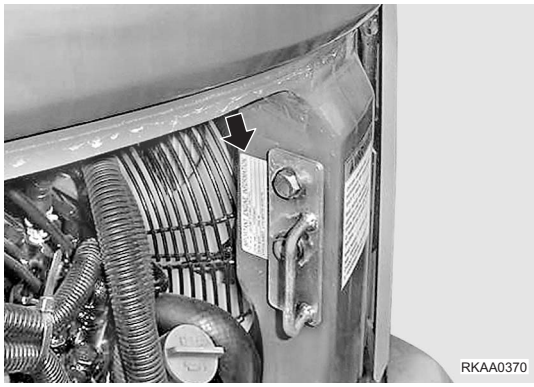
RKAA0370

1.4.4 TRAVEL REDUCTION GEAR SERIAL NUMBER

The serial number is stamped on the plate positioned inside the travel reduction gear and can be seen after removing the cover (1).

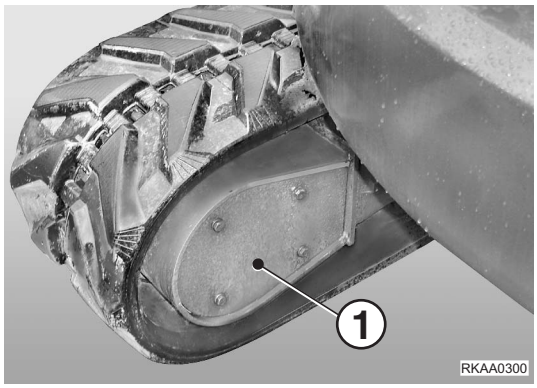

RKAA0300

https://truckmanualshub.com/

1.4.5 SWING REDUCTION GEAR SERIAL NUMBER

The serial number is stamped on the plate positioned on the upper side of the swing motor.

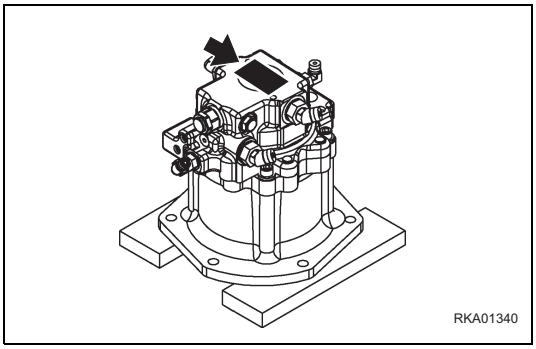

1.4.6 CAB SERIAL NUMBER

The CAB serial number is stamped on the plate positioned on the top left side.

https://truckmanualshub.com/

1.4.7 SERIAL NUMBERS AND DEALER'S ADDRESS

Machine n. _____ Model _____

Engine n. _____

Product identification number (PIN) _____

Travel reduction gear n. _____

Swing reduction gear n. _____

Cab n. _____

Dealer:

_____

_____

_____

_____

Address: _____

_____

_____ Tel. _____

Person to contact: _____

NOTES: _____

https://truckmanualshub.com/

TABLE OF CONTENTS

1. FOREWORD

1.1 FOREWORD 1

1.2 INFORMATION ON SAFETY 2

1.3 INTRODUCTION 4

1.3.1 INTENDED USES 4
1.3.2 IMPROPER OR UNAUTHORIZED USES 4
1.3.3 MAIN CHARACTERISTICS 4
1.3.4 RUNNING-IN 5

1.4 PRODUCT IDENTIFICATION 6

1.4.1 MACHINE SERIAL NUMBER 6
1.4.2 MACHINE IDENTIFICATION PLATE AND PRODUCT IDENTIFICATION NUMBER (PIN) 6
1.4.3 ENGINE SERIAL NUMBER AND EXHAUST GAS EMISSION PLATE 7
1.4.4 TRAVEL REDUCTION GEAR SERIAL NUMBER 7
1.4.5 SWING REDUCTION GEAR SERIAL NUMBER 8
1.4.6 CAB SERIAL NUMBER 8
1.4.7 SERIAL NUMBERS AND DEALER’S ADDRESS 9

TABLE OF CONTENTS 10

2. SAFETY AND ACCIDENT PREVENTION

2.1 SAFETY, NOISE AND VIBRATION PLATES 18

2.1.1 POSITION OF THE SAFETY PLATES 18
2.1.2 PICTOGRAMS AND RELEVANT MEANINGS 19
2.1.3 POSITION OF THE NOISE PLATES ON MACHINES WITH CAB 24
2.1.4 POSITION OF THE NOISE PLATES ON MACHINES WITH CANOPY 25
2.1.5 VIBRATIONS TO WHICH THE OPERATOR IS SUBJECTED 25

2.2 GENERAL PRECAUTIONS 26

2.2.1 GENERAL SAFETY RULES 26
2.2.2 SAFETY DEVICES AND GUARDS 26
2.2.3 CLOTHING AND PERSONAL PROTECTION ITEMS 26
2.2.4 UNAUTHORIZED MODIFICATIONS 27
2.2.5 LEAVING THE OPERATOR’S SEAT 27
2.2.6 GETTING ON AND OFF THE MACHINE 28
2.2.7 PREVENTING FIRES DUE TO FUEL AND OIL 28
2.2.8 PREVENTING BURNS 29
2.2.9 PREVENTING DAMAGE DUE TO ASBESTOS POWDER 29
2.2.10 PREVENTING DAMAGE CAUSED BY THE WORK EQUIPMENT 29
2.2.11 FIRE EXTINGUISHERS AND FIRST AID KIT 30
2.2.12 PRECAUTIONS CONCERNING THE CAB STRUCTURE 30
2.2.13 PRECAUTIONS CONCERNING THE EQUIPMENT 30

2.3 PRECAUTIONS TO BE TAKEN BEFORE STARTING THE ENGINE 31

2.3.1 SAFETY ON THE WORK SITE 31
2.3.2 FIRE PREVENTION 31
2.3.3 PRECAUTIONS TO BE TAKEN FOR THE OPERATOR'S CAB 31
2.3.4 ROOM VENTILATION 32
2.3.5 PRECAUTIONS TO BE TAKEN FOR THE LIGHTS 32
2.3.6 CLEANING THE WINDOWS - CHECKING THE WINDSHIELD WIPER BLADES 32

https://truckmanualshub.com/

2.4 PRECAUTIONS TO BE TAKEN WHEN WORKING 33
2.4.1 STARTING THE ENGINE 33
2.4.2 CHECK THE DIRECTION BEFORE STARTING THE MACHINE 33
2.4.3 CHECKS FOR TRAVELLING IN REVERSE 34
2.4.4 MOVING THE MACHINE 34
2.4.5 MOVING ON SLOPES 35
2.4.6 WORKING ON SLOPES 36
2.4.7 UNAUTHORIZED OPERATIONS 36
2.4.8 PREVENTING ELECTROCUTION 38
2.4.9 VISIBILITY 38
2.4.10 WORKING ON ICY OR SNOW-COVERED SURFACES 38
2.4.11 PREVENTING DAMAGE CAUSED BY THE WORK EQUIPMENT 39
2.4.12 WORKING ON LOOSE GROUND 39
2.4.13 PARKING THE MACHINE 39
2.5 TRANSPORTING THE MACHINE ON MOTOR VEHICLES 40
2.5.1 LOADING AND UNLOADING 40
2.5.2 TRANSPORT 40
2.6 BATTERY 41
2.6.1 PREVENTING RISKS THAT MAY BE DUE TO THE BATTERY 41
2.6.2 STARTING WITH BOOSTER CABLES 41
2.7 PRECAUTIONS FOR THE REMOVAL 42
2.8 PRECAUTIONS FOR MAINTENANCE 43
2.8.1 WARNING PLATES 43
2.8.2 TOOLS 43
2.8.3 PERSONNEL 43
2.8.4 EQUIPMENT 44
2.8.5 WORKING UNDER THE MACHINE 44
2.8.6 CLEANING THE MACHINE 44
2.8.7 USE OF THE ENGINE DURING MAINTENANCE OPERATIONS 45
2.8.8 PERIODICAL CHANGE OF THE PARTS THAT ARE CRITICAL FOR SAFETY 45
2.8.9 STOP THE ENGINE BEFORE CARRYING OUT ANY MAINTENANCE OPERATION OR INSPECTION 45
2.8.10 RULES TO BE FOLLOWED DURING FUEL OR OIL TOPPING UP 46
2.8.11 CHECKING THE COOLANT LEVEL IN THE RADIATOR 46
2.8.12 USING LAMPS 46
2.8.13 PRECAUTIONS CONCERNING THE BATTERY AND THE ALTERNATOR 47
2.8.14 PRECAUTIONS CONCERNING THE STARTER 47
2.8.15 HANDLING HIGH-PRESSURE PIPES 47
2.8.16 PRECAUTIONS TO BE TAKEN WHEN HANDLING HIGH-PRESSURE OIL 48
2.8.17 PRECAUTIONS FOR MAINTENANCE OPERATIONS AT HIGH TEMPERATURES AND HIGH PRESSURE 48
2.8.18 COOLING FAN AND BELT 48
2.8.19 WASTE MATERIALS 49
2.8.20 PRECAUTIONS FOR THE USE OF THE synthetic biodegradable oil type HEES 49

3. THE MACHINE AND ITS OPERATIONS

3.1 MACHINE VIEW ILLUSTRATIONS 52
3.1.1 OVERALL MACHINE VIEW 52
3.1.2 CONTROLS AND GAUGES 53
3.2 DETAILED CONTROLS AND GAUGES 54

https://truckmanualshub.com/

3.2.1 MONITORING SYSTEM 54
3.2.1.1 EMERGENCY MONITORS 55
3.2.1.2 METER DISPLAY PORTION 57
3.2.1.3 PILOT LAMPS 59
3.2.1.4 MONITOR SWITCHES PORTION 60
3.2.2 SWITCHES 62
3.2.3 CONTROL LEVERS AND PEDALS 65
3.2.4 WINDSHIELD (Machines equipped with cab) 71
3.2.5 SLIDING DOOR (Machines equipped with cab) 75
3.2.6 SLIDING WINDOW (Machines equipped with cab) 75
3.2.7 EMERGENCY ESCAPE HAMMER (Machines equipped with cab) 76
3.2.8 COVER WITH LOCK 77
3.2.9 ENGINE REAR COVER 78
3.2.10 COOLING COVER 79
3.2.11 MUD COVER 80
3.2.12 METHOD OF OPENING (TILTING) FLOOR 81
3.2.13 FUSE 86
3.2.14 BLOCK FUSE 86
3.2.15 OPERATION MANUAL STORAGE 87
3.2.16 TOOL BOX 87
3.2.17 GREASE GUN HOLDER 87
3.2.18 ASHTRAY (Machines equipped with cab) 87

3.3 MACHINE OPERATIONS AND CONTROLS 88
3.3.1 BEFORE STARTING ENGINE 88
3.3.1.1 WALK-AROUND CHECKS 88
3.3.1.2 CHECKS BEFORE STARTING 90
3.3.1.3 ADJUSTMENT 96
3.3.1.4 OPERATIONS BEFORE STARTING ENGINE 99
3.3.1.5 STARTING ENGINE 101
3.3.2 AFTER STARTING ENGINE 104
3.3.2.1 BREAKING-IN THE NEW MACHINE 104
3.3.2.2 WARMING-UP OPERATION 104
3.3.3 STOPPING THE ENGINE 106
3.3.4 MACHINE OPERATION 107
3.3.4.1 PREPARATIONS FOR MOVING THE MACHINE OFF 107
3.3.4.2 MOVING MACHINE FORWARD 107
3.3.4.3 MOVING MACHINE BACKWARD 109
3.3.4.4 STOPPING MACHINE 110
3.3.5 STEERING THE MACHINE 111
3.3.5.1 STEERING 111
3.3.6 SWINGING 113
3.3.7 WORK EQUIPMENT CONTROLS AND OPERATIONS 114
3.3.8 PROHIBITED OPERATIONS 116
3.3.9 GENERAL OPERATION INFORMATION 118
3.3.10 TRAVELING ON SLOPES 120
3.3.11 ESCAPE FROM MUD 122
3.3.12 WORK POSSIBLE USING COMPACT HYDRAULIC EXCAVATOR 123
3.3.13 CHANGING THE BUCKET 125
3.3.14 PARKING MACHINE 126
3.3.15 CHECK AFTER SHUT OFF ENGINE 127
3.3.16 MACHINE INSPECTION AFTER DAILY WORK 127
3.3.17 LOCKING 127
3.3.18 RUBBER SHOES AND ROAD LINERS (Machine equipped with rubber shoe or road liner) 128
3.3.18.1 RUBBER SHOES AND ROAD LINERS INFORMATION 128

https://truckmanualshub.com/

3.3.18.2 WARRANTY FOR RUBBER SHOES AND ROAD LINERS 128
3.3.18.3 USING RUBBER SHOES AND ROAD LINERS 128

3.4 TRANSPORTATION 132
3.4.1 TRANSPORTATION PROCEDURE 132
3.4.2 LOADING AND UNLOADING WITH TRAILER 132
3.4.3 LIFTING MACHINE 138

3.5 COLD WEATHER OPERATION 140
3.5.1 COLD WEATHER OPERATION INFORMATION 140
3.5.1.1 FUEL AND LUBRICANTS 140
3.5.1.2 COOLING SYSTEM COOLANT 140
3.5.1.3 BATTERY 141
3.5.2 CAB HEATER IN COLD WEATHER (Machines equipped with cab) 141
3.5.3 AFTER DAILY WORK COMPLETION 142
3.5.4 AFTER COLD WEATHER SEASON 142

3.6 LONG TERM STORAGE 143
3.6.1 BEFORE STORAGE 143
3.6.2 DURING STORAGE 143
3.6.3 AFTER STORAGE 143

3.7 TROUBLES AND ACTIONS 144
3.7.1 RUNNING OUT OF FUEL 144
3.7.2 PHENOMENA THAT ARE NOT FAILURES 144
3.7.3 TOWING THE MACHINE 144
3.7.4 SEVERE JOB CONDITION 145
3.7.5 DISCHARGED BATTERY 145
3.7.5.1 BATTERY REMOVAL AND INSTALLATION 146
3.7.5.2 BATTERY CHARGES 146
3.7.5.3 STARTING ENGINE WITH BOOSTER CABLES 147
3.7.6 OTHER TROUBLE 149
3.7.6.1 ELECTRICAL SYSTEM 149
3.7.6.2 CHASSIS 150
3.7.6.3 ENGINE 150

4. MAINTENANCE

4.1 MAINTENANCE INFORMATION 154

4.2 LUBRICANTS, COOLANT AND FILTERS 157
4.2.1 HANDLING OIL, FUEL, COOLANT, AND PERFORMING OIL CLINIC 157
4.2.1.1 OIL 157
4.2.1.2 FUEL 157
4.2.1.3 COOLING SYSTEM COOLANT 158
4.2.1.4 GREASE 158
4.2.1.5 CARRYING OUT KOWA (KOMATSU OIL WEAR ANALYSIS) 159
4.2.1.6 OIL AND FUEL STORAGE 160
4.2.1.7 FILTERS 160
4.2.2 ELECTRIC SYSTEM MAINTENANCE 161
4.2.3 HANDLING HYDRAULIC SYSTEM 161

4.3 WEAR PARTS 162
4.3.1 WEAR PARTS LIST 162

4.4 LUBRICANTS, FUEL AND COOLANT SPECIFICATIONS 163
4.4.1 HOMOLOGATED HEES SYNTHETIC BIODEGRADABLE LUBRICANTS 167

4.5 TIGHTENING TORQUE SPECIFICATIONS 168
4.5.1 TIGHTENING TORQUE LIST 168

https://truckmanualshub.com/

4.6 LUBRICATION 169
4.6.1 LUBRICATION DIAGRAM 169
4.7 SAFETY CRITICAL PARTS 170
4.7.1 SAFETY CRITICAL PARTS LIST 170
4.8 MAINTENANCE SCHEDULE 171
4.8.1 MAINTENANCE SCHEDULE CHART 171
4.8.2 MAINTENANCE INTERVAL FOR HYDRAULIC BREAKER 172
4.9 MAINTENANCE PROCEDURE 173
4.9.1 WHEN REQUIRED 173
4.9.1.a CHECK, CLEAN AND REPLACE AIR CLEANER ELEMENT 173
4.9.1.b CLEAN INSIDE OF COOLING SYSTEM 175
4.9.1.c CHECK LEVEL OF BATTERY ELECTROLYTE 177
4.9.1.d CLEAN WATER SEPARATOR ELEMENT 179
4.9.1.e DRAIN WATER AND SEDIMENT FROM FUEL TANK 179
4.9.1.f CHECK AND TIGHTEN TRACK SHOE BOLTS (Machine equipped with road liner, steel shoe) 180
4.9.1.g CHECK AND ADJUST TRACK TENSION (Machine equipped with road liner, steel shoe) 180
4.9.1.h CHECK, RUBBER SHOES OR ROAD LINERS (Machine equipped with rubber shoes, road liner) 182
4.9.1.i CHECK AND ADJUST RUBBER SHOE TENSION (Machine equipped with rubber shoes) 184
4.9.1.j REPLACE RUBBER SHOES (Machine equipped with rubber shoes) 186
4.9.1.k REPLACE ROAD LINERS (Machine equipped with road liner) 188
4.9.1.l CHECK WINDOW WASHER FLUID LEVEL, ADD FLUID (Machine equipped with cab) 188
4.9.1.m CHECK, CLEAN AND LUBRICATE CAB SLIDE DOOR RAIL AND ROLLER (Machine equipped with cab) 189
4.9.1.n LUBRICATING 189
4.9.1.o BLEEDING AIR FROM HYDRAULIC SYSTEM 190
4.9.2 CHECK BEFORE STARTING 191
4.9.3 EVERY 500 HOURS MAINTENANCE 192
4.9.3.a LUBRICATING 192
4.9.3.b CHANGE OIL IN ENGINE OIL PAN, REPLACE ENGINE OIL FILTER CARTRIDGE 194
4.9.3.c REPLACE FUEL FILTER CARTRIDGE 195
4.9.3.d CHECK OIL LEVEL IN FINAL DRIVE CASE, ADD OIL 196
4.9.3.e CLEAN AND INSPECT RADIATOR FINS AND OIL COOLER FINS 196
4.9.3.f CHECK AND ADJUST COOLING FAN BELT TENSION 197
4.9.4 EVERY 1000 HOURS MAINTENANCE 198
4.9.4.a REPLACE HYDRAULIC OIL FILTER ELEMENT 198
4.9.4.b CHANGE OIL IN FINAL DRIVE CASE 200
4.9.4.c CHECK ENGINE VALVE CLEARANCE, ADJUST 200
4.9.5 EVERY 2000 HOURS MAINTENANCE 201
4.9.5.a CHANGE OIL IN HYDRAULIC TANK, CLEAN STRAINER 201
4.9.5.b CHECK ALTERNATOR, STARTING MOTOR 202

5. TECHNICAL SPECIFICATIONS

5.1 SPECIFICATIONS 204
5.2 LIFTING CAPACITIES 206
5.2.1 LIFTING CAPACITIES PC30MR-2 (WITH CANOPY) 206
5.2.2 LIFTING CAPACITIES PC30MR-2 (WITH CABIN) 209
5.2.3 LIFTING CAPACITIES PC35MR-2 (WITH CANOPY) 212
5.2.4 LIFTING CAPACITIES PC35MR-2 (WITH CABIN) 215

https://truckmanualshub.com/

6. AUTHORIZED OPTIONAL EQUIPMENT

6.1 ATTACHMENTS AND OPTIONS - GENERAL INFORMATION 220
6.1.1 SAFETY FIRST 220
6.1.2 ATTACHMENT INSTALLATION 221
6.1.3 CHARACTERISTICS OF THE OPTIONAL EQUIPMENT 222
6.1.3.1 FOR MODEL PC30MR-2 ONLY 222
6.1.3.2 FOR MODEL PC35MR-2 ONLY 222

6.2 MACHINE READY FOR ATTACHMENT 223
6.2.1 LOCATIONS 223
6.2.2 HYDRAULIC CIRCUIT 225
6.2.2.1 ASSEMBLYING AND CONNECTING THE EQUIPMENT 225
6.2.2.2 MAINTENANCE 226
6.2.2.3 BLEEDING AIR 226

6.3 ATTACHMENT OPERATIONS 227
6.3.1 LONG TERM STORAGE 228
6.3.2 SPECIFICATIONS 228

6.4 ATTACHMENT GUIDE 229
6.4.1 ATTACHMENT COMBINATIONS 229

6.5 RECOMMENDED ATTACHMENT OPERATIONS 230
6.5.1 HYDRAULIC BREAKER 230

https://truckmanualshub.com/

PAGE INTENTIONALLY LEFT BLANK

https://truckmanualshub.com/

SAFETY AND ACCIDENT PREVENTION

https://truckmanualshub.com/

2.1 SAFETY, NOISE AND VIBRATION PLATES

2.1.1 POSITION OF THE SAFETY PLATES

- The safety plates must always be legible and in good conditions; for this reason, if they are dirty with dust, oil or grease, it is necessary to clean them with a solution made of water and detergent.
  Do not use fuel, petrol or solvents.
- If the plates are damaged, ask for new ones to Komatsu Utility or to your Komatsu Utility Dealer.
- In case of replacement of a component provided with a safety plate, make sure that this plate is applied also on the new piece.
- The machine can be provided with other plates in addition to those indicated below; keep also to the instructions given in the additional plates, in any case.

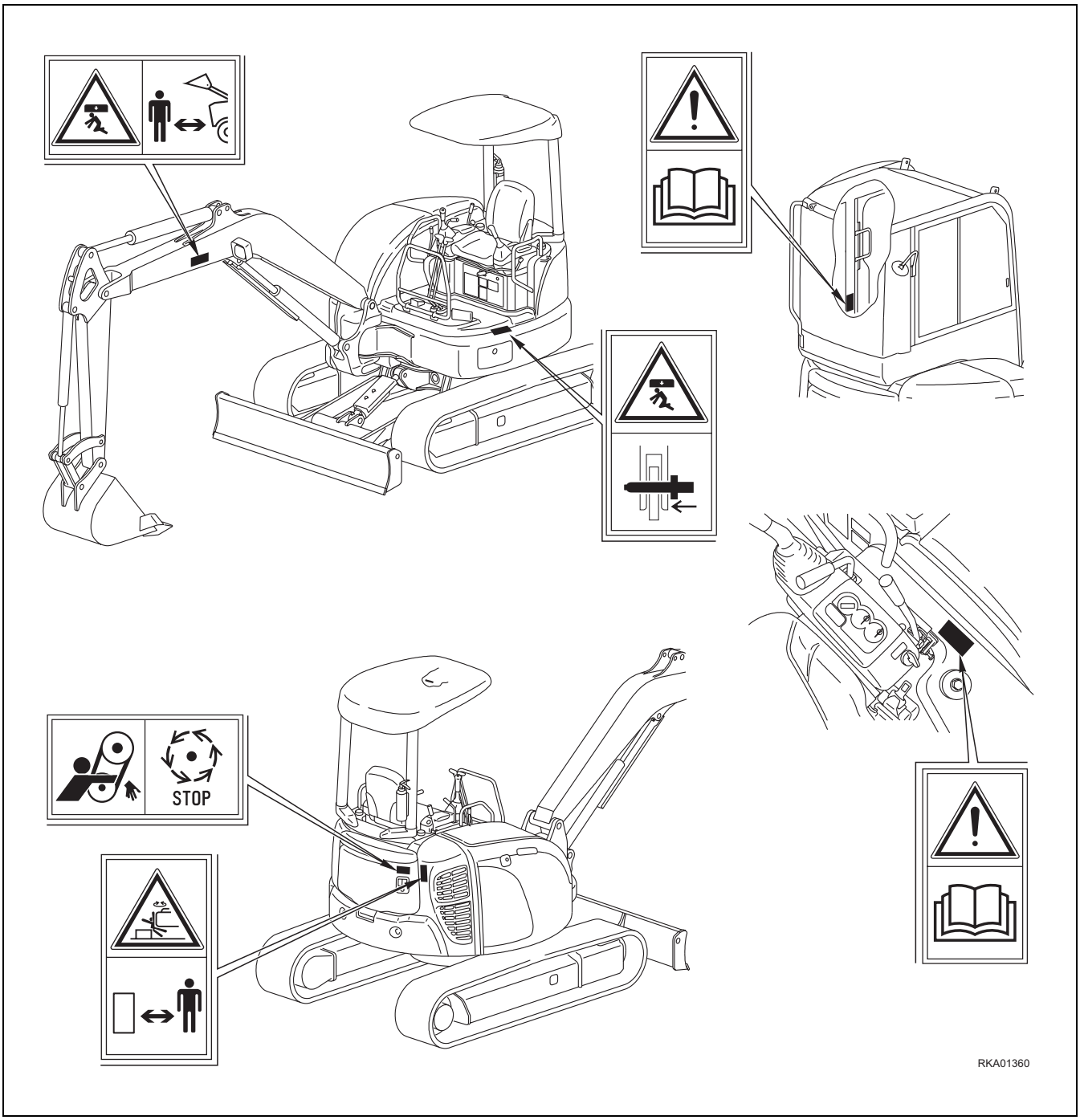

https://truckmanualshub.com/

2.1.2 PICTOGRAMS AND RELEVANT MEANINGS

The warning and danger plates applied onto the machine are accompanied or represented by pictograms.
The personnel in charge with the operation and maintenance of the machine must know the symbols contained in the pictograms perfectly; the following description illustrates what they look like and their respective meanings.

DANGER IN THE WORK AREA

- Do not approach or stand within the equipment operating radius when the boom and the bucket are raised.

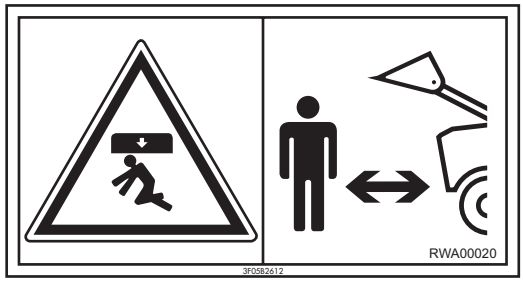

DO NOT OPEN THE HOOD

- Do not open or remove the hood when the engine is running.

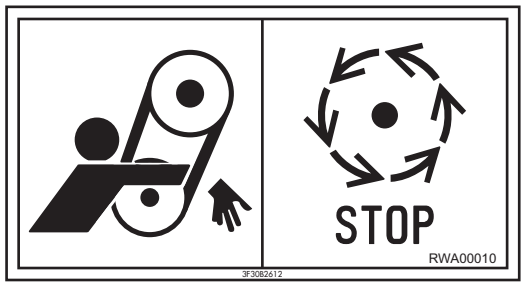

CONSULT THE MANUAL

- Carefully read the contents of the manual before using the machine or performing maintenance operations.

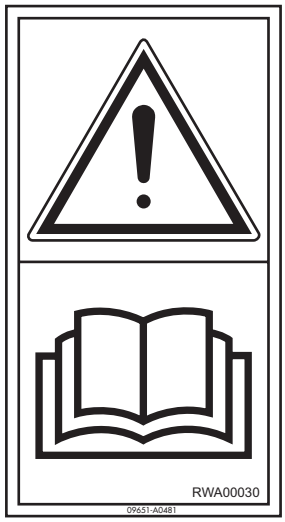

SAFETY DISTANCE

- Do not get too near the machine and do not stand within its operating radius.

RKA01350

https://truckmanualshub.com/

CAB LIFTING SAFETY LOCK

RKA01380

FILLING THE HYDRAULIC SYSTEM WITH OIL

- **(Only for machines in which the synthetic biodegradable oil type HEES is used)**

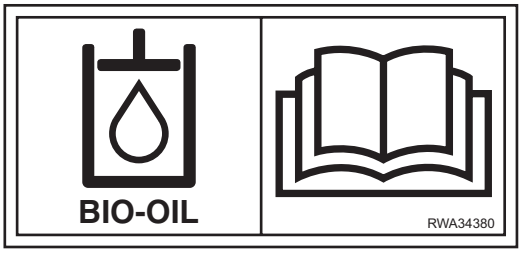

HYDRAULIC OIL TOPPING UP

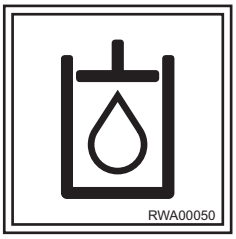

REFUELLING

ENGINE LUBRICATING OIL FILTER

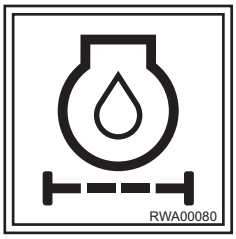

https://truckmanualshub.com/

FUEL FILTER

ENGINE AIR SUCTION FILTER

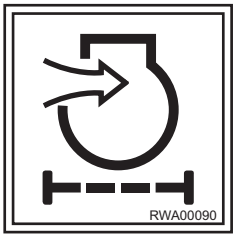

ENGINE COOLANT

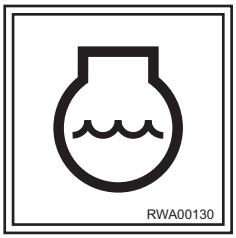

ENGINE COOLANT PRESSURE

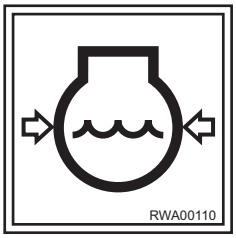

HYDRAULIC OIL LEVEL

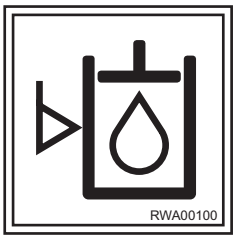

HYDRAULIC OIL FILTER

https://truckmanualshub.com/

ELECTRIC OUTLET

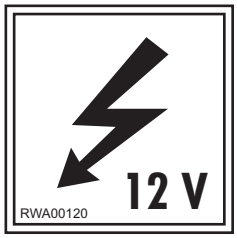

ANCHORAGE POINT

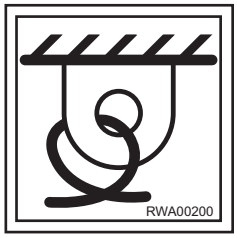

EMERGENCY EXIT

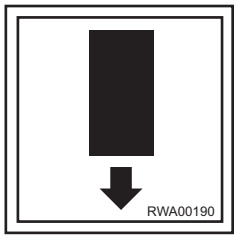

LIFTING POINT

https://truckmanualshub.com/

LIFTING CAPACITIES (PC30MR-2)

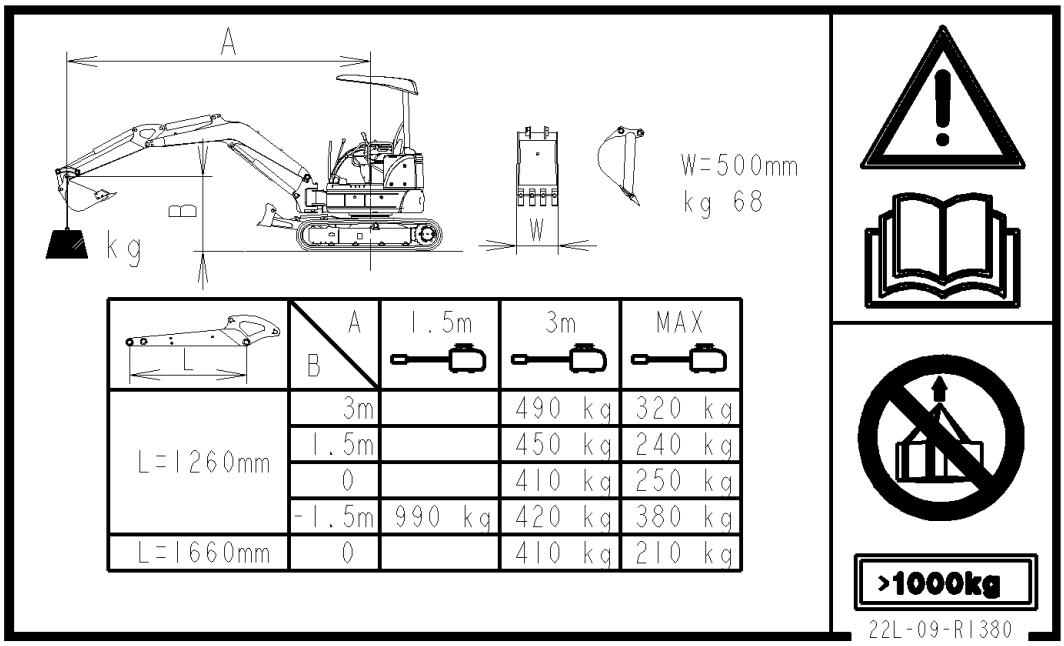

L	B \ A	1.5m	3m	MAX
L=1260mm	3m		490 kg	320 kg
	1.5m		450 kg	240 kg
	0		410 kg	250 kg
	-1.5m	990 kg	420 kg	380 kg
L=1660mm	0		410 kg	210 kg

LIFTING CAPACITIES (PC35MR-2)

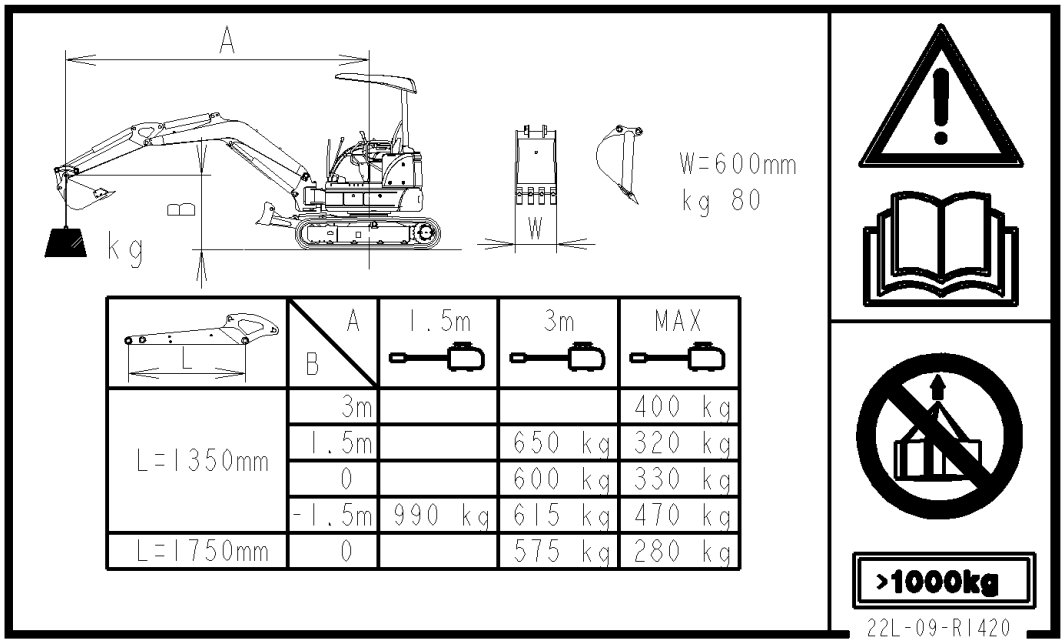

L	B \ A	1.5m	3m	MAX
L=1350mm	3m			400 kg
	1.5m		650 kg	320 kg
	0		600 kg	330 kg
	-1.5m	990 kg	615 kg	470 kg
L=1750mm	0		575 kg	280 kg

https://truckmanualshub.com/

2.1.3 POSITION OF THE NOISE PLATES ON MACHINES WITH CAB

- The noise plates must always be legible and in good conditions; for this reason, if they are dirty with dust, oil or grease, it is necessary to clean them with a solution made of water and detergent.
  Do not use fuel, petrol or solvents.
- If the plates are damaged, ask for new ones to Komatsu Utility or to your Komatsu Utility Dealer.
- In case of replacement of a component provided with a noise plate, make sure that this plate is applied also on the new piece.

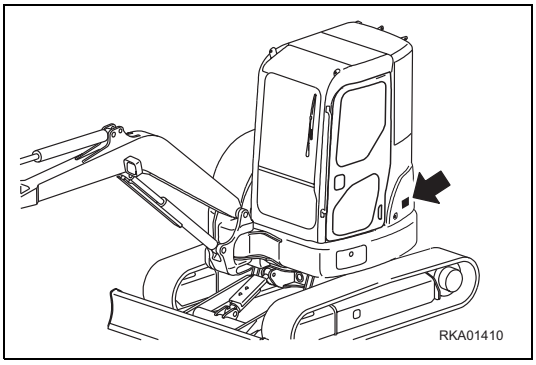

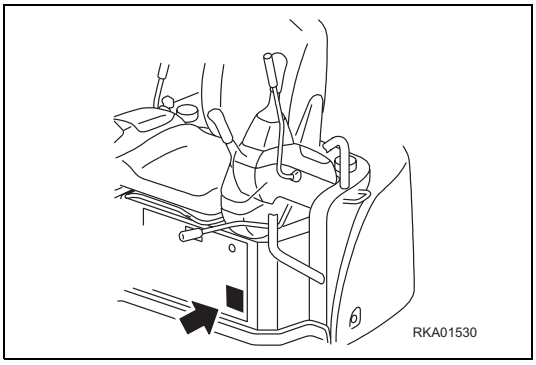

NOISE OUTSIDE THE CAB

- This value indicates the noise level outside the machine and refers to the noise perceived by persons in the vicinity of the work area.

PC30MR-2

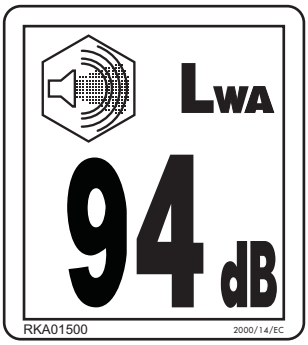

PC35MR-2

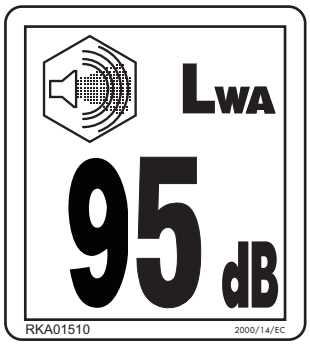

NOISE INSIDE THE CAB

- This value indicates the maximum noise level perceived by the operator's ears inside the cab when this is completely closed.

PC30MR-2

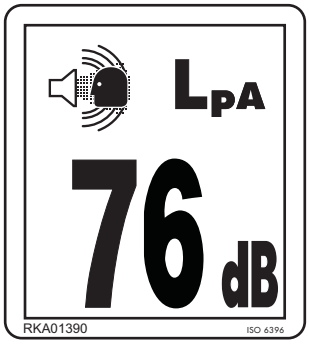

PC35MR-2

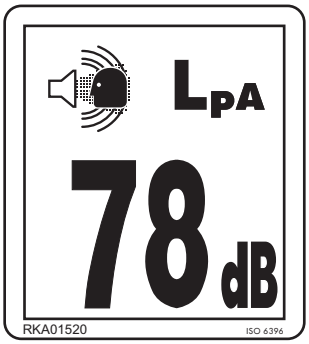

https://truckmanualshub.com/

2.1.4 POSITION OF THE NOISE PLATES ON MACHINES WITH CANOPY

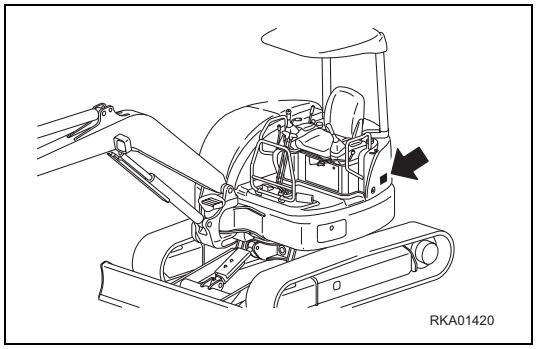

- The noise plates must always be legible and in good conditions; for this reason, if they are dirty with dust, oil or grease, it is necessary to clean them with a solution made of water and detergent.
  Do not use fuel, petrol or solvents.
- If the plates are damaged, ask for new ones to Komatsu Utility or to your Komatsu Utility Dealer.
- In case of replacement of a component provided with a noise plate, make sure that this plate is applied also on the new piece.

EXTERNAL NOISE

- This value indicates the noise level outside the machine and refers to the noise perceived by persons in the vicinity of the work area.

PC30MR-2

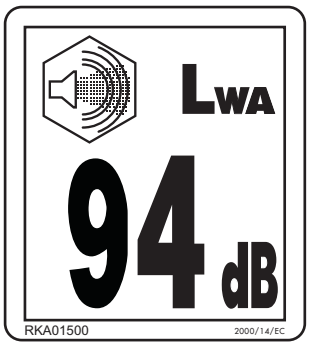

PC35MR-2

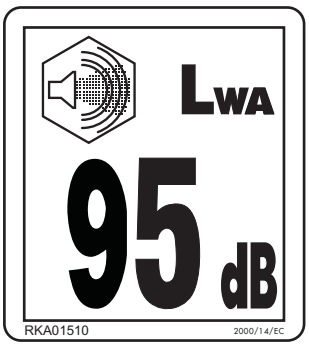

2.1.5 VIBRATIONS TO WHICH THE OPERATOR IS SUBJECTED

- According to the results of the tests carried out to determine the vibrations transmitted to the operator by the machine, the upper limbs are subjected to vibrations lower than 2.5 m/sq.sec., while the seated part of the body is subjected to vibrations lower than 0.5 m/sq.sec.

https://truckmanualshub.com/

2.2 GENERAL PRECAUTIONS

2.2.1 GENERAL SAFETY RULES

- Only trained and authorized personnel can use the machine and perform maintenance operations.
- Follow all the safety rules, precautions and instructions when using the machine or performing maintenance operations.
- When working with other operators or when the work site is often occupied by other operators, make sure that everyone knows and understands all the agreed signals and, in any case, that everyone works in such a way as to be able to see the machine and to be visible to the operator.

2.2.2 SAFETY DEVICES AND GUARDS

- Make sure that all the guards and covers are in the correct position. Have guards and covers changed or repaired if damaged. Neither use the machine without guards, nor remove the guards when the engine is running.
- Always use the proper safety devices to lock the machine when parking and fasten the safety belt.
- Do not remove the safety devices and always keep them in good operating conditions.
- Any improper use of the safety devices may result in serious injuries or even death.

2.2.3 CLOTHING AND PERSONAL PROTECTION ITEMS

- Do not wear large or loose clothes, rings and watches and do not approach the machine with loose long hair, since they can get entagled in the moving parts of the machine and cause serious injuries or damage.
  Avoid also wearing clothes dirty with oil or fuel, since they are flammable.
- Wear a hard hat, goggles, safety shoes, mask, gloves and headphones when operating the machine or performing maintenance operations.
- Always wear safety goggles, a hard hat and heavy gloves if your job involves scattering metal chips or minute materials; these precautions are particularly useful when driving the equipment connection pins with a hammer and when blowing compressed air into the air filter and the radiator to clean them.
  During these operations, make also sure that no one is standing or working near the machine without the necessary protections.
- When working for 8 hours with a noise level exceeding 90 dBA, it is necessary to use headphones or ear plugs and be particularly careful, especially at the end of the work shift.

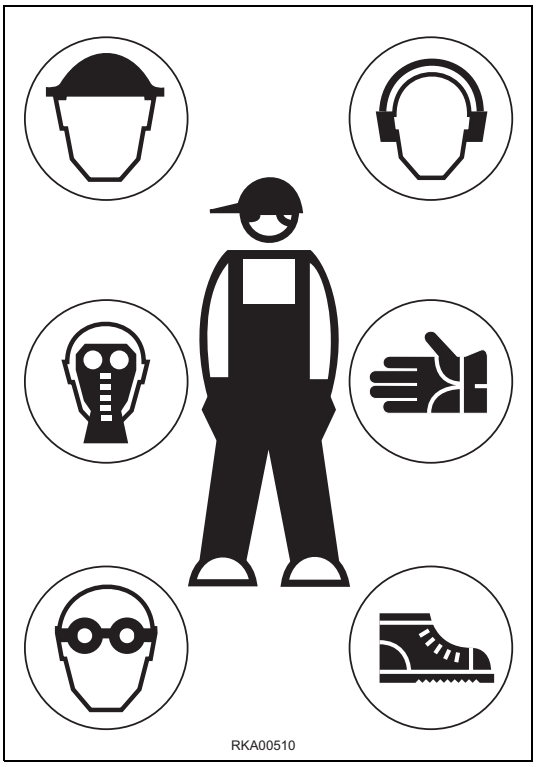

https://truckmanualshub.com/

2.2.4 UNAUTHORIZED MODIFICATIONS

- Any modification made without the authorization of Komatsu Utility can involve hazards.
- Before making a modification, consult your Komatsu Utility Dealer. Komatsu Utility declines any responsibility for injuries or damage caused by unauthorized modifications.

2.2.5 LEAVING THE OPERATOR'S SEAT

- When leaving the operator's seat, even if temporarily, make sure that the machine is in a safe position. (See "2.4.13 PARKING THE MACHINE").
- Before leaving the operator's seat, carry out the following operations in the sequence indicated below:

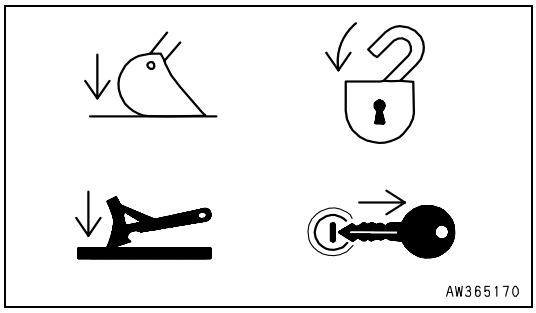

1 - Rest the equipment onto the ground.

2 - Connect the safety devices of the boom swing, optional equipment and upper structure rotation controls.

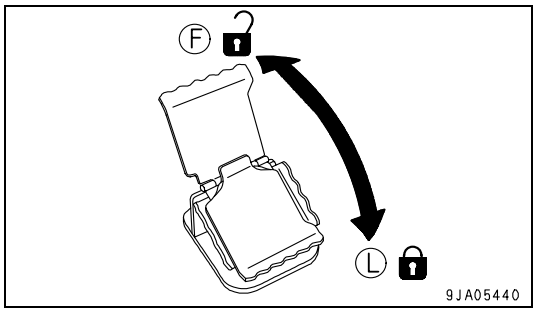

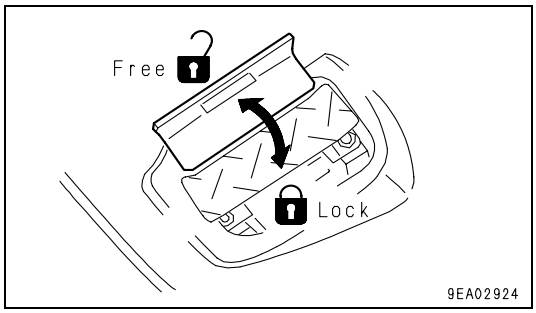

3 - Lock the equipment control by shifting the safety device lever to the lock position.

4 - Stop the engine (See "3.3.3 STOPPING THE ENGINE").

5 - If you have to go so far away that you will not be able to see the machine, extract the ignition key.

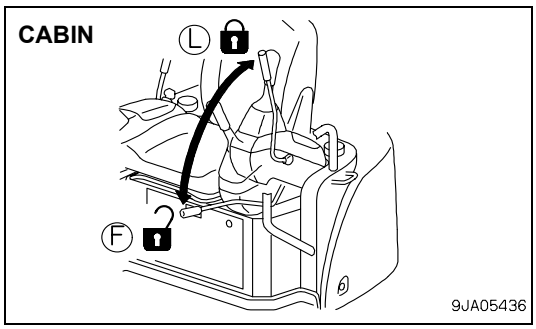

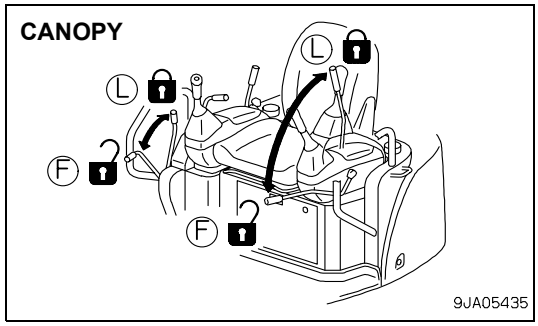

https://truckmanualshub.com/

2.2.6 GETTING ON AND OFF THE MACHINE

- Do not jump on or off the machine, either when it is at rest and when it is moving.
- When getting on or off the machine, always use the handles and the tracks; get on and off the machine very carefully.
- Never hold or rest on the control levers.
- Either when getting on and when getting off the machine, always maintain three points of contact (holding or resting points), in order to avoid losing your balance and falling down.
- Tighten the handle connection screws if they are loose and clean the handles and tracks if they are dirty with oil or grease. Carefully clean the cab floor if it is dirty with oil, grease, mud or rubble.

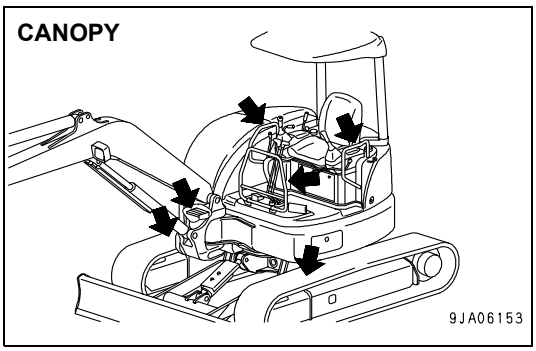

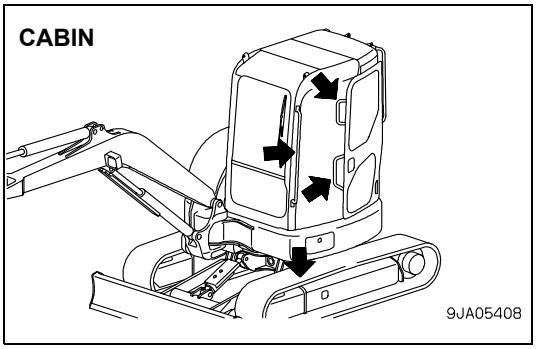

2.2.7 PREVENTING FIRES DUE TO FUEL AND OIL

Fuel, oil and some types of antifreeze can be easily ignited if they get in contact with a flame. Fuel is particularly flammable and therefore extremely hazardous.

- Keep any naked flame away from flammable fluids.
- Stop the engine and do not smoke when refuelling.
- Top up with fuel and oil only after stopping the engine and in well ventilated areas.
- Top up with fuel and oil in a well delimited area and do not allow unauthorized persons to approach.
- When refuelling, hold the fuel gun firmly and keep it constantly in contact with the filler until you have finished, in order to avoid sparks due to static electricity.
- After topping up, tighten the fuel and oil safety caps securely.
- Do not fill the tank completely, in order to leave room for the fuel to expand.
- In case some fuel is spilled, wipe it up immediately.

https://truckmanualshub.com/

2.2.8 PREVENTING BURNS

- If the engine coolant, the engine oil and the hydraulic oil are hot, use heavy cloths and wear gloves, heavy clothing and safety goggles before carrying out any check or touching the hot parts.
- Before checking the coolant level, stop the engine and let the fluid cool down.
  If a check is necessary due to the overheating of the engine, slowly loosen the radiator plug to release any residual pressure before removing it. The hot fluid that spurts out may cause serious burns.
- Before checking the engine oil and hydraulic circuit oil levels, stop the engine and let the oil cool down. The hot oil that can be sprayed out of the tank may cause serious burns.

2.2.9 PREVENTING DAMAGE DUE TO ASBESTOS POWDER

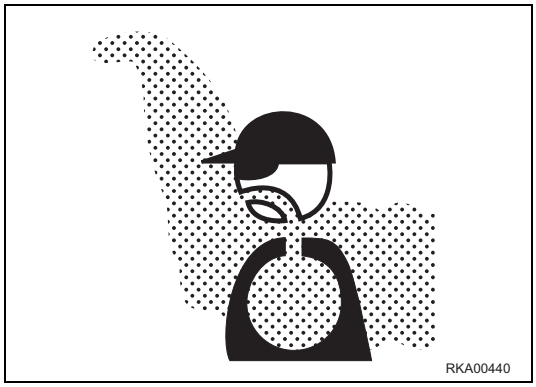

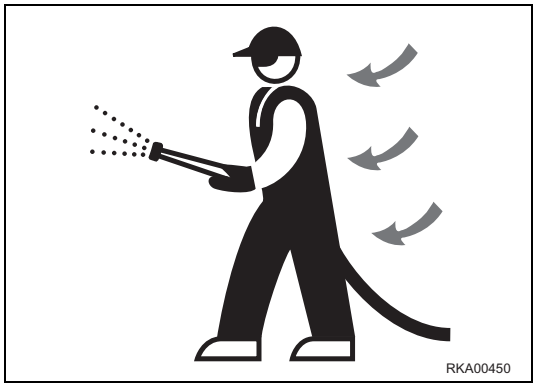

- Asbestos powder can be hazardous to your health if it is inhaled.
- If you handle materials containing asbestos fibers, keep to the instructions given below:
  1 - **Do not use compressed air, but only aspirators** to clean the machine and make sure that the room in which you are working is properly ventilated.
  2 - Use low-pressure water to keep down the dust when cleaning.
  3 - If there is danger that there may be asbestos powder in the air, operate the machine with the wind to your back whenever possible.
  4 - Even if the cab provides suitable protection, use an approved and homologated respirator.
  5 - The powder gathered during the cleaning operations must be dampened and put in a sealed and marked container, so that it can be safely disposed of according to the regulations in force.

2.2.10 PREVENTING DAMAGE CAUSED BY THE WORK EQUIPMENT

- Do not stand within or approach the operating radius of the work equipment, even when the operator is on board the machine and the engine is running.
- Do not stand or work under the arms or the articulations when the arms are lifted, if you are not sure that the safety locks have been duly engaged.
- Do not carry out any operation requiring the lifting of the arms, if you are not sure that the locks are correctly positioned and coupled to the arms.

https://truckmanualshub.com/

2.2.11 FIRE EXTINGUISHERS AND FIRST AID KIT

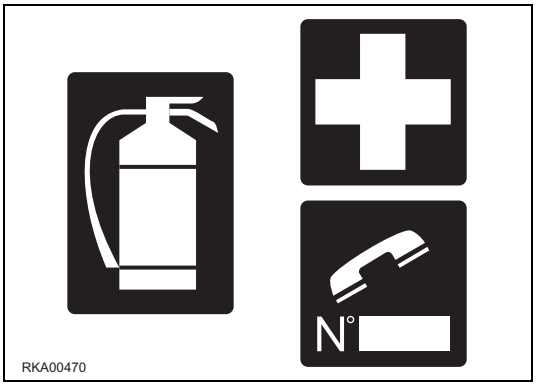

- Make sure that fire extinguishers have been provided and check their position.
- Periodically make sure that the fire extinguishers are loaded and that you know how to use them.
- Find out where the first aid kit has been located.
- Periodically make sure that the first aid kit contains the necessary disinfectants, bandages, medicins, etc.
- It is necessary to know what to do in case of fire.
- Make sure that you have the phone numbers of the persons or structures you may need to contact in case of an emergency at hand (either at the work site and where maintenance operations are performed).

2.2.12 PRECAUTIONS CONCERNING THE CAB STRUCTURE

- If the cab is inadvertently hit or the machine overturns during work, the cab may be damaged with consequent reduction of its stiffness and of the safety that must be guaranteed to the operator.
  Consult Komatsu Utility or your Komatsu Utility Dealer to have the cab structure and resistance checked in case of impact or damage.

2.2.13 PRECAUTIONS CONCERNING THE EQUIPMENT

- When installing and using optional equipment, carefully read the relevant instruction manual and keep to the indications given therein.
- Do not use optional or special equipment without the authorization of Komatsu Utility or the Komatsu Utility Dealer.
  The installation and use of unauthorized equipment may create safety problems and adversely affect the efficiency and life of the machine.
- Komatsu Utility cannot be held liable for any injury, accident, product failure resulting from the installation and use of unauthorized equipment.

https://truckmanualshub.com/

2.3 PRECAUTIONS TO BE TAKEN BEFORE STARTING THE ENGINE

2.3.1 SAFETY ON THE WORK SITE

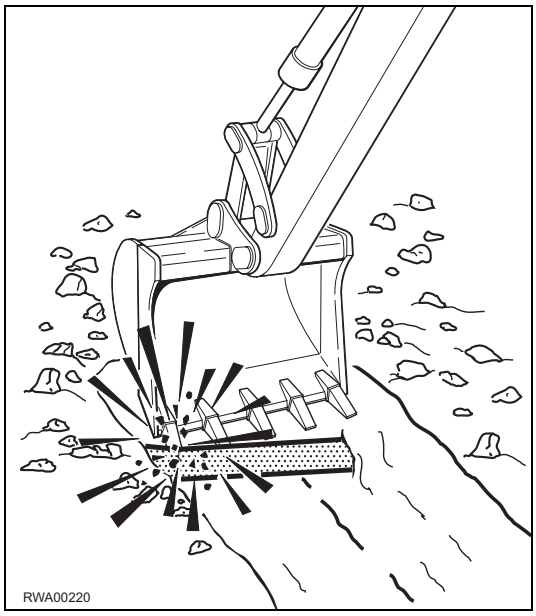

- Before starting the engine, thoroughly check the area for any unusual condition of the ground due to which work may be dangerous.
- Check the conditions of the ground at the work site and before starting the engine define the work plan and the best and safest operating procedure.
- Make the ground surface as level as possible before carrying out any operation.
- In case of work on the road, protect pedestrians and cars by designating a person for work site traffic duty and install fences around the work site.
- If water lines, gas lines, and telephone or high-voltage electrical lines are located under the work site, contact the relevant utility company in order to find out their exact positions or to make them ineffective until the end of the operations. Be careful not to sever or damage any of these lines.
- Check the depth and flow of water before operating in water or on river banks.

2.3.2 FIRE PREVENTION

- Completely remove all wood chips, rubbish, paper and other flammable materials that may have accumulated inside the engine compartment, since they can cause fires.
- Check the fuel and hydraulic system pipes for leaks and if necessary repair them. Wipe up any excess oil, fuel or other flammable fluids.
- Make sure that fire extinguishers are available in the work area.

2.3.3 PRECAUTIONS TO BE TAKEN FOR THE OPERATOR'S CAB

- Do not leave objects or tools lying around in the operator's cab. They may hinder the operation of the controls and cause serious accidents.
- Keep the cab floor and the controls (pedals and levers) clean, by removing any trace of oil and grease and, as far as the floor is concerned, remove any excess dirt (earth, stones, etc.).
- Check the safety belt and change it if it is broken or damaged.
  Replace any component only with homologated parts available at Komatsu Utility or its Dealers.

https://truckmanualshub.com/

2.3.4 ROOM VENTILATION

- Before starting the machine in confined or poorly ventilated places, provide for proper ventilation or connect the engine exhaust pipe to a suction duct. The engine exhaust gases can be deadly.

2.3.5 PRECAUTIONS TO BE TAKEN FOR THE LIGHTS

- Remove any trace of dirt from the lights, in such a way as to ensure perfect visibility on the work area.
- Make sure that the working lights are installed as prescribed. Make also sure that they come on correctly.

2.3.6 CLEANING THE WINDOWS - CHECKING THE WINDSHIELD WIPER BLADES

- Remove any trace of dirt from the cab windows, in order to ensure perfect visibility on the work area.
- Check the conditions of the windshield wiper blades; the scraping wire must be smooth, with no indentations and attached to the rubber back of the blade.
  In case of doubts on the efficiency of the scraping wire, change the blades.

https://truckmanualshub.com/

2.4 PRECAUTIONS TO BE TAKEN WHEN WORKING

2.4.1 STARTING THE ENGINE

- Before getting on the machine, walk around it and check for people and objects that might be in the way.
- Do not start the engine if warning plates have been attached to the control levers.
- Before starting the engine, check that the safety lock lever is at the LOCK position.
- When starting the engine, sound the horn as an alert signal.
- Start the engine only while seated with fastened safety belt.
- Do not allow anyone to get on the machine.
- Do as follows to check that the floor is fixed securely in position. If it is not fixed securely in position, it may cause serious personal injury.
  1 - Open the engine rear cover and check that floor tilt lock bolts (1) (6 places) are securely tightened.
  2 - If there is any up-down play in the floor frame or any gap at (A) (normal: 5 mm), lock bolt (1) may be broken or loose, so check lock bolts (1).

  If any abnormality is found, always carry out repairs or ask your Komatsu Utility Dealer to carry out repairs.

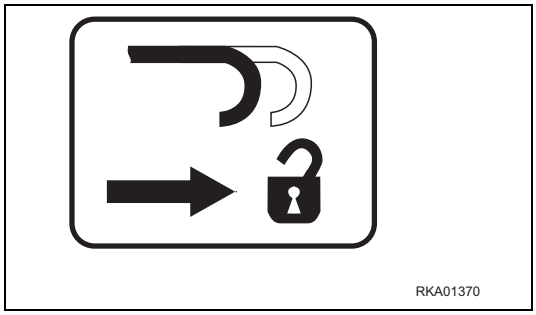

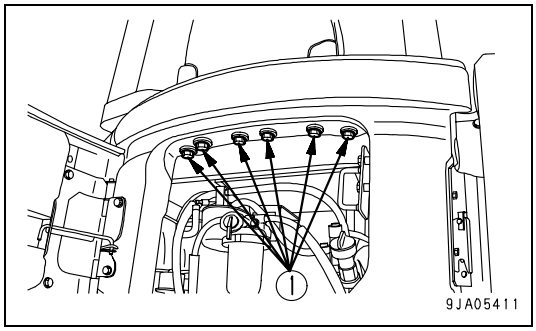

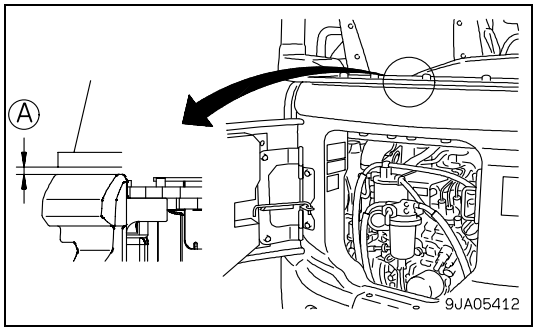

2.4.2 CHECK THE DIRECTION BEFORE STARTING THE MACHINE

- Before operating the machine travel levers, check the position of the blade.
  If the blade is positioned on the back of the machine, the operation of the travel levers is inverted.
  In this condition, take care not to mistake the travel movements during the use of the machine.
  (See "3.3.4 MACHINE OPERATION").

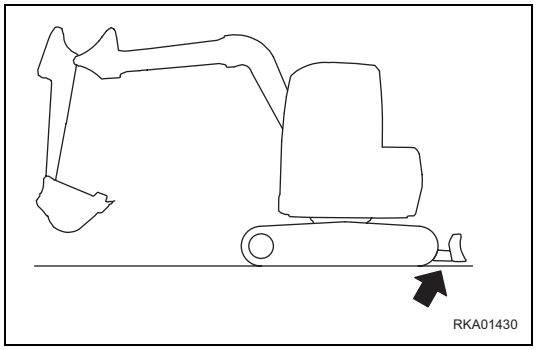

https://truckmanualshub.com/

2.4.3 CHECKS FOR TRAVELLING IN REVERSE

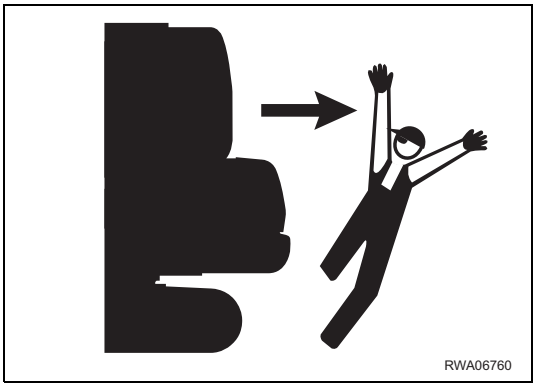

- When operating in areas that may be hazardous or have poor visibility, designate a person to direct the movements of the machine and traffic on the work site.
- Make sure that no unauthorized person is within the machine operating radius or in its travel direction.
  If necessary, put up appropriate fences.
- Before moving the machine, sound the horn in order to warn the persons near the work area.
- There are blind spots behind the machine, which cannot be seen and where someone may be standing: therefore, it is necessary to make sure that there is no one behind the machine before travelling in reverse.

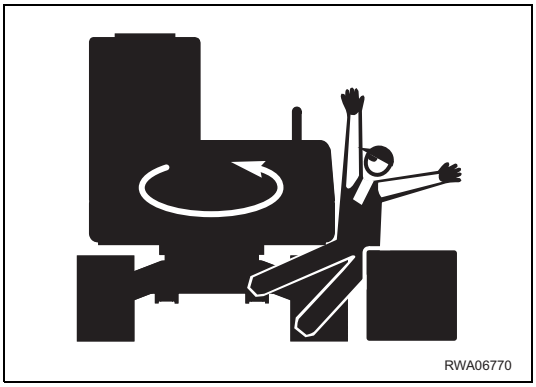

2.4.4 MOVING THE MACHINE

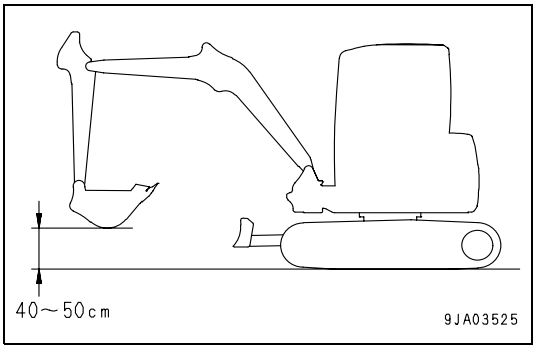

- When moving the machine, position the bucket at about 40-50 cm from the ground; this position makes it possible to evaluate the space required for the movements more precisely and at the same time ensures the stability of the machine.
- Make sure that the driver's seat is directed towards the blade.
  Otherwise, pay attention to the steering and advance manoeuvres, since they are inverted.
- If the equipment control levers must be used during travel, avoid moving them abruptly; sudden manoeuvres change the attitude of the machine and make driving difficult.
- When travelling on rough ground, keep the speed low and avoid sudden movements of the bucket arm.

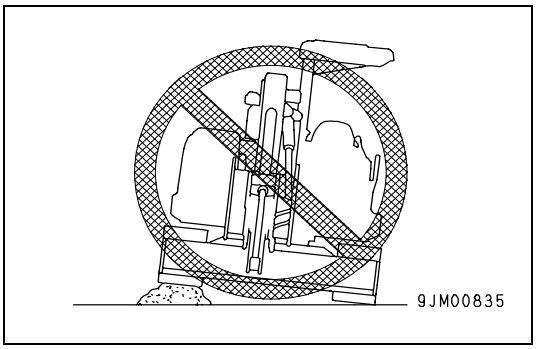

- If possible, avoid moving on obstacles.
  If the machine has to travel over an obstacle, keep the equipment as close to the ground as possible and travel at low speed.
  Never move on obstacles that may incline the machine considerably (over 10°).
- If one of the two rubber tracks moves on an obstacle or gets into a hole in the ground, the machine may overturn.
  In these cases, reduce the speed to minimum and be very careful to the balance of the machine.

https://truckmanualshub.com/

2.4.5 MOVING ON SLOPES

- Operations on slopes and on river or lake banks with damp ground may result in the tipping over or slipping of the machine.
- On hills, banks or slopes, keep the bucket very close to the ground (20-30 cm from the ground) and in case of emergency quickly lower it to the ground to help the machine stop.
- When traveling up a steep slope, extend the work equipment to the front to improve the balance, keep the work equipment approximately 20 to 30cm (8 to 12 in) above the ground, and travel at low speed.
- When traveling downhill, lower the engine speed, keep the travel lever close to the neutral position, and travel at low speed.
  When traveling down a slope with a grade of more than 15°, set the machine with the sprocket (1) at the downhill end and the work equipment in the posture shown in the diagram on the right, then lower the engine speed and travel downhill.
- Do not change direction and avoid travelling obliquely when working on slopes. It is advisable to go down or up to a flat place to perform these operations.
- Do not travel on wet grass or thick layers of leaves: if the machine moves obliquely in these conditions, it may slip.
- Do not move on slopes with inclination exceeding 15°, since the machine may overturn.
- When the fuel level indicator reaches the red reserve area during work on a slope, immediately provide for refuelling; due to the inclination of the machine, the engine may suck in air and suddenly stop, which represents a grave risk for the safety of the operator and of the persons before the machine.
- If the engine should stop all of a sudden, immediately lower the bucket to the ground.

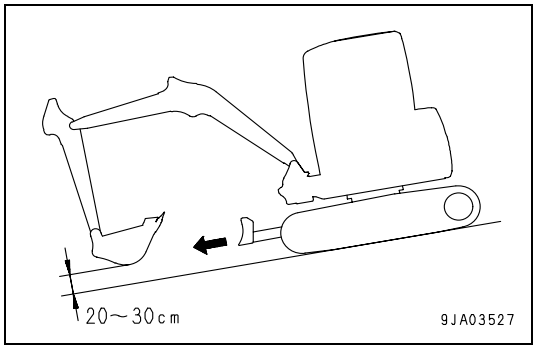

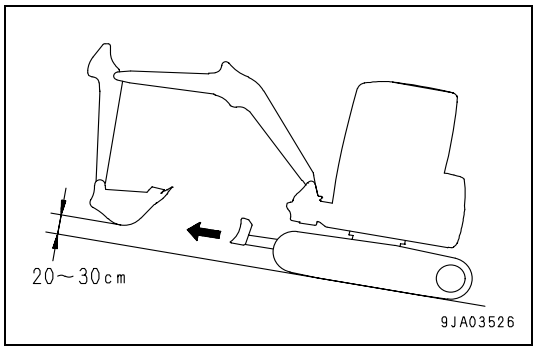

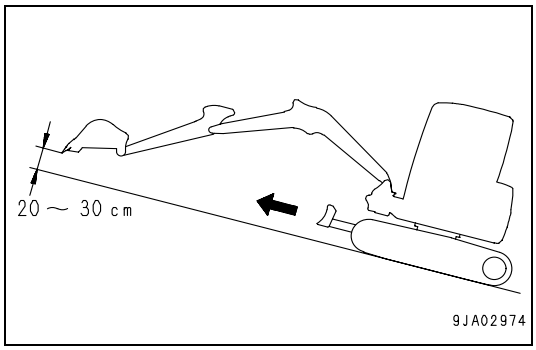

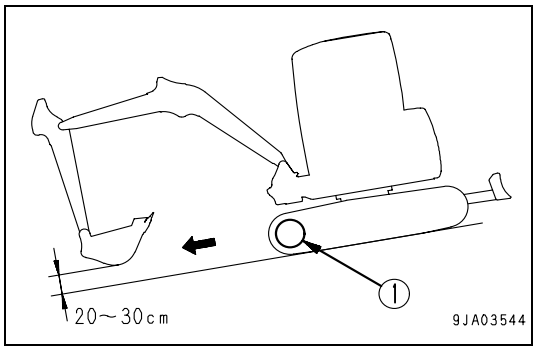

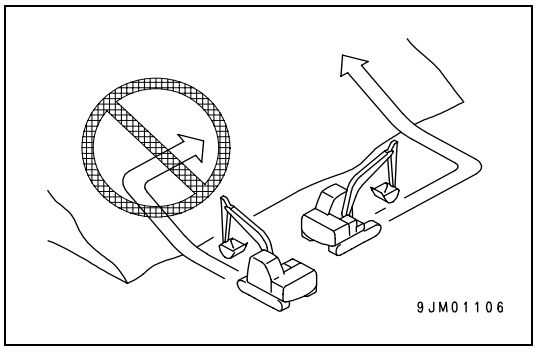

https://truckmanualshub.com/

2.4.6 WORKING ON SLOPES

- When working on slopes, if possible avoid rotating the upper structure, since the machine may lose balance and overturn.
  It is particularly dangerous to swing on slopes when the bucket is full.
  If these operations must last longer, accumulate soil in such a way as to create a horizontal platform on which the machine can be positioned.

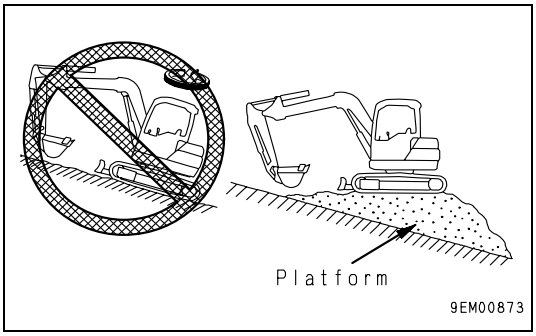

2.4.7 UNAUTHORIZED OPERATIONS

- Never dig the work face under an overhang. There is a hazard that rocks may fall or that the overhang may collapse and fall on top of the machine.

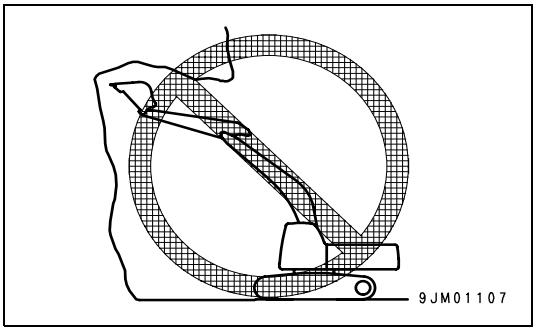

- Do not excavate too deeply under the front of the machine. The ground under the machine may collapse and cause the machine to fall.

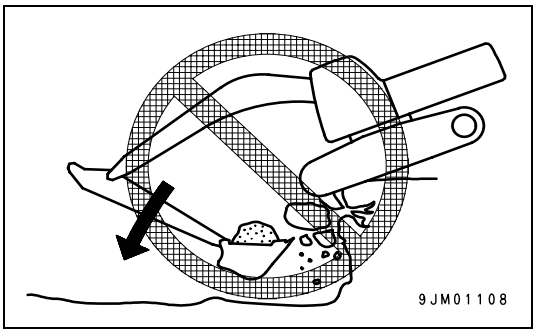

- To make it easier to escape if there is any problem, set the tracks at right angles to the road shoulder or cliff with the sprocket at the rear when carrying out operations.

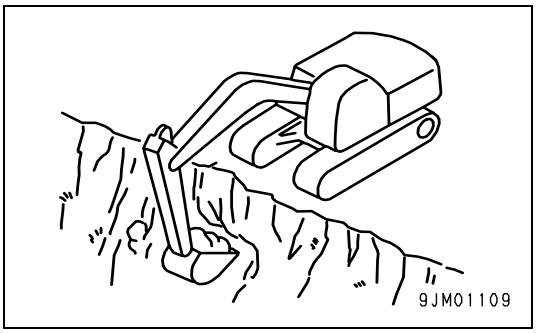

- Do not carry out demolition work under the machine. There is a hazard that the machine may become unstable and tip over.
- When working on or from the top of buildings or other structures, check the strength and the structure before starting operations. There is a hazard of the building collapsing and causing serious injury or damage.

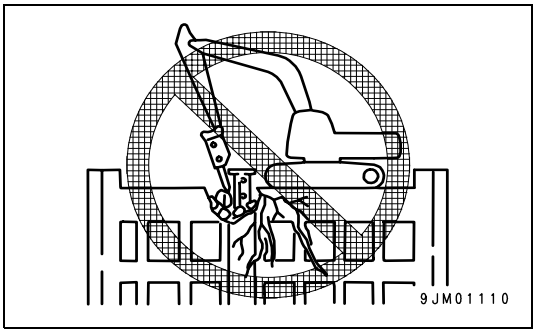

https://truckmanualshub.com/

- When carrying out demolition work, do not carry out demolition above your head. There is a hazard of broken parts falling or of the building collapsing and causing serious injury or property damage.

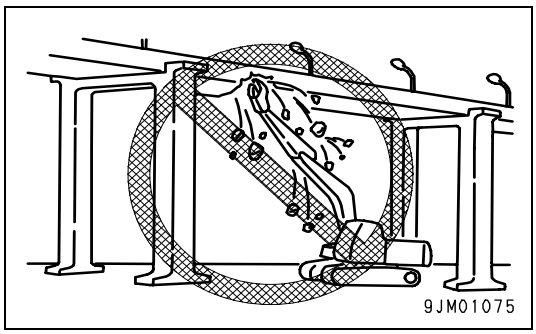

- Do not use the impact force of the work equipment for breaking work. There is a hazard of damage to the work equipment, or a hazard of serious personal injury being caused by flying pieces of broken materials, or of the machine tipping over due to reaction from the impact.
- Generally speaking, the machine is more liable to overturn when the work equipment is at the side than when it is at the front or rear.

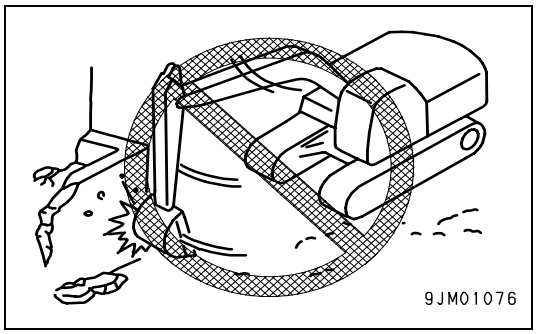

- When using a breaker or other heavy work equipment, there is a hazard of the machine losing its balance and tipping over. When operating on flat ground as well as on slopes.
  - Do not suddenly lower, swing, or stop the work equipment.
  - Do not suddenly extend or retract the boom cylinder. There is a hazard that impact will cause the machine to tip over.
- Do not pass the bucket over the head of other workers or over the operator's seat of dump trucks or other hauling equipment. The load may spill or the bucket may hit the dump truck and cause serious injury or property damage.

https://truckmanualshub.com/

2.4.8 PREVENTING ELECTROCUTION

- Digging operations near overhead electric lines are extremely dangerous and they may also cause death due to electrocution; for this reason, when working near overhead electrical lines always respect the minimum safety distances prescribed by the competent authorities and by the accident-prevention rules in force.
- As far as underground long-distance lines are concerned, the minimum distance depends on the covering of the ducts in which the cables are laid.
- The basic safety precautions to be taken to prevent this risk are the following:
  1 - Wear shoes with thick rubber or leather soles.
  2 - Request the aid of another person who can warn you if the machine gets too close to the electric line.
  3 - Operate at low speed.
  4 - Learn what is to be done first in case of electrocution.
  5 - Keep the phone number of the electricity company and of the nearest first aid station at hand.
- If the work equipment gets accidentally entangled in the cables, the operator must not leave the cab until the electricity company has insulated the line.
- When carrying out this kind of operations, warn everyone standing in the work area to keep at the minimum distance prescribed from the machine and the work equipment.
- Ask the electricity company what are the voltage of the cables and the minimum safety distance in advance.

⚠ DANGER

- **The minimum distances from overhead lines can vary in the different countries, according to the climate and to the humidity percentage in the air.**
  Indicatively, the distances indicated in the table should be respected.

Cable voltage	Min. safety distance
1.0 kV (distribution line)	5 m
6.6 kV (2–3 insulators)	5.2 m
33 kV (min. 3 insulators)	5.5 m
66 kV (min. 6 insulators)	6 m
154 kV (min. 10 insulators)	8 m
275 kV (min. 19 insulators)	10 m

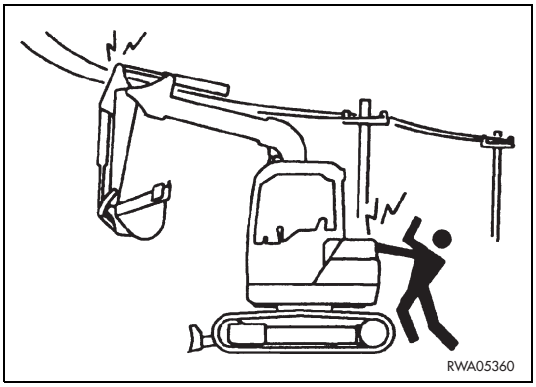

2.4.9 VISIBILITY

- Switch on the working lights as soon as visibility decreases.
- If visibility decreases due to mist, smoke or heavy rain, stop the machine in a safe position and wait for the weather to improve until visibility becomes acceptable.

2.4.10 WORKING ON ICY OR SNOW-COVERED SURFACES

- If the ground is icy or covered with snow, even a slight slope may cause the machine to slip sidewards, therefore it is advisable to move at low speed and to avoid abrupt starts, stops or turns.
- When it has snowed heavily, the road shoulders and any obstacle are buried in the snow and are not visible, therefore proceed with care when clearing the snow.

https://truckmanualshub.com/

2.4.11 PREVENTING DAMAGE CAUSED BY THE WORK EQUIPMENT

- When working in tunnels, galleries, under electric cables or other ducts (air, telephone lines) and wherever the height is limited, proceed with the greatest care to prevent the bucket or the arms from causing any damage.

2.4.12 WORKING ON LOOSE GROUND

- Avoid operating the machine too close to the edge of cliffs, overhangs and deep ditches.
  These areas may collapse, making the machine fall down or tip over and this could result in serious injuries or death.
  Remember that after heavy rain or earthquakes these dangerous conditions usually get worse.
- The earth laid near ditches is loose and can easily collapse due to the weight or vibrations of the machine.
  Be extremely careful: always fasten the safety belt and close the cab door, if provided.
- In case of work in areas where stones or other material may fall on the machine, install the FOPS protection device.

2.4.13 PARKING THE MACHINE

- Park the machine on firm and level ground. If this is not possible and it is necessary to park on a slope, position the machine with the bucket directed downwards and carry out the following operations:
  1 - Rotate the bucket to the dumping position and lower the arms until thrusting the teeth into the ground.
  2 - Stop the engine.
  3 - Put wedges or safety blocks under the tracks.
- Always rest the work equipment on the ground; if it is necessary to park with raised arms, make sure that the safety locks are engaged.
- Lock the equipment control by shifting the safety device lever to the lock position.
- When leaving the machine, remove the ignition key.
- If it is necessary to park on public roads, provide for signalling the presence of the machine according to the local regulations in force (signalling fires, fences, road works ahead, alternated direction and direction signs, etc.).

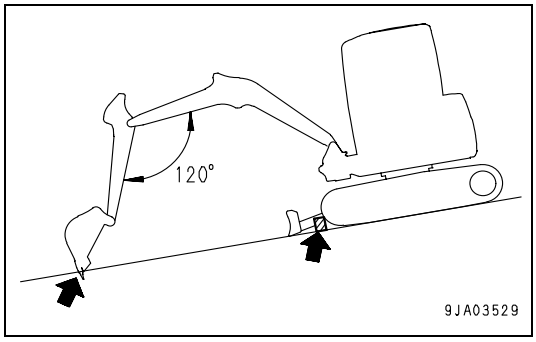

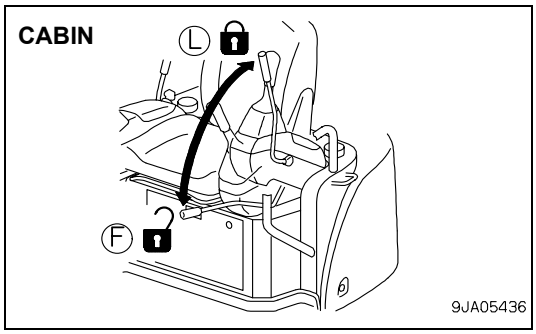

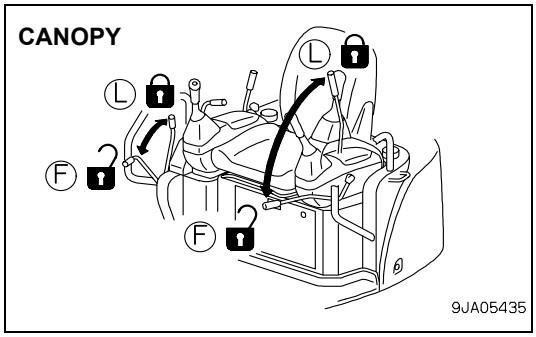

https://truckmanualshub.com/

2.5 TRANSPORTING THE MACHINE ON MOTOR VEHICLES

2.5.1 LOADING AND UNLOADING

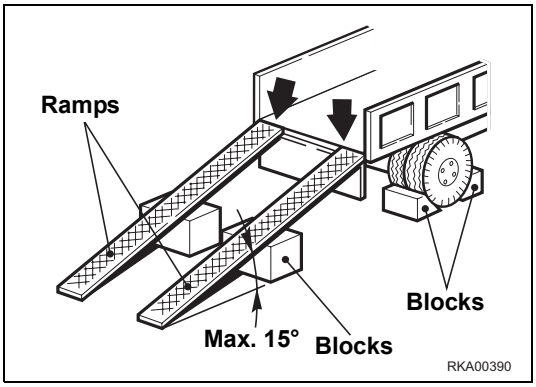

- Loading and unloading the machine on/from a motor vehicle always involves potential hazards. Proceed with extreme care.
- Perform loading and unloading on firm, level ground. Maintain a safety distance from the edges of ditches or from road sides.
- If the vehicles used have not been appositely equipped, put support blocks under the ramps, in order to avoid any bending.
- Always lock the wheels of the transporting vehicle with wedges.
- Always use ramps that are sufficiently wide and can support the weight of the machine. The longitudinal axes of the ramps must be parallel to each other and perpendicular to the loading side board and their distance must be suitable for the tread of the machine.
- Make sure that the ramps are securely positioned and fastened to the loading board and that they have the same length.
- Position the ramps with a maximum inclination of 15°.
- Make sure that the ramp surface is clean and there is no trace of grease, oil, soil and ice; remove dirt from the tracks before starting to load the machine on the vehicle.
- The machine must be loaded on the vehicle with the bucket directed forwards, that is, in the direction of advancement of the vehicle.
- Do not correct the trajectory of the machine on the ramps. If necessary, get down the ramps and start the operation again.
- After loading the machine, block the tracks with wedges and secure it with tie-downs or chains that prevent even any sideward shift. (See "3.4 TRANSPORTATION").

2.5.2 TRANSPORT

- Define the route to be followed, taking in consideration the width, height and weight of the transport means and of the machine.
  Make sure that the dimensions of the machine are compatible with the road and any gallery, subway, bridge, electric and telephone lines, etc.
- Keep to the regulations in force regarding the permissible width, height, weight of the machine and the transport speed.

https://truckmanualshub.com/

2.6 BATTERY

2.6.1 PREVENTING RISKS THAT MAY BE DUE TO THE BATTERY

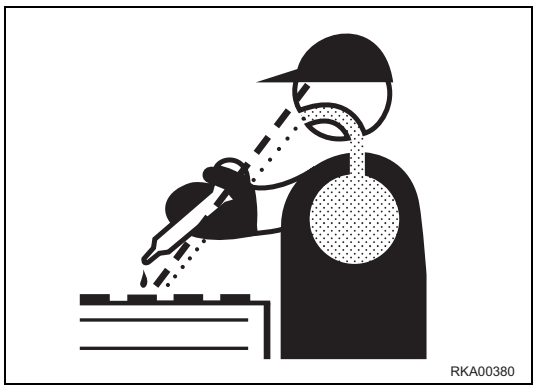

- Electrolytic batteries contain sulphuric acid that can quickly burn the skin and corrode clothes making holes in the fabric. If you spill acid on yourself, immediately rinse the involved area with plenty of water.
- Battery acid may cause blindness if splashed into the eyes.
  If acid gets accidentally into your eyes, flush them immediately with plenty of water and consult a doctor without delay.
- If you accidentally swallow some acid, drink a large quantity of water or milk, beaten egg white or vegetable oil and in any case antiacid substances like magnesia, bicarbonate, etc. call a doctor or a poisoning prevention center immediately.
- When handling batteries, always wear safety goggles.
- Batteries generate hydrogen. Hydrogen is highly explosive and can be easily ignited with small sparks or naked flames.
- Before working with batteries, stop the engine and remove the ignition key.
- Avoid short-circuiting the battery terminals through accidental contact with metal objects or tools or through the inversion of the terminals.
- Tighten the battery terminals securely. Loose terminals may generate sparks and even cause the explosion of the battery.

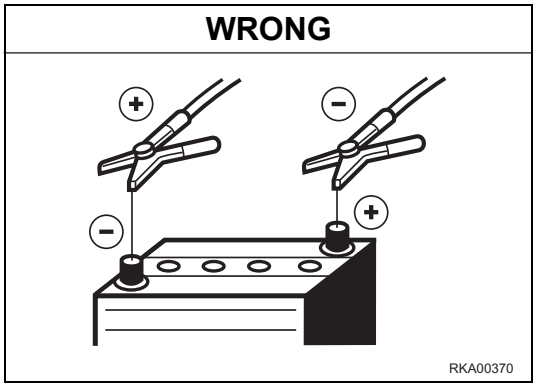

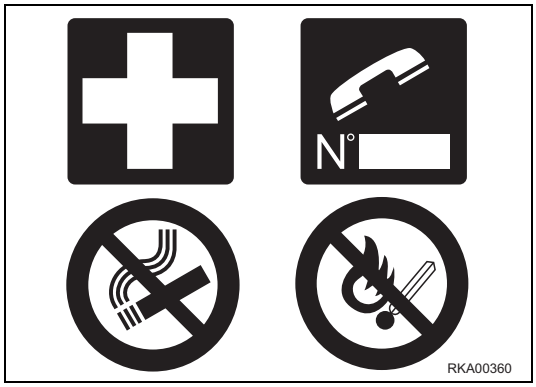

2.6.2 STARTING WITH BOOSTER CABLES

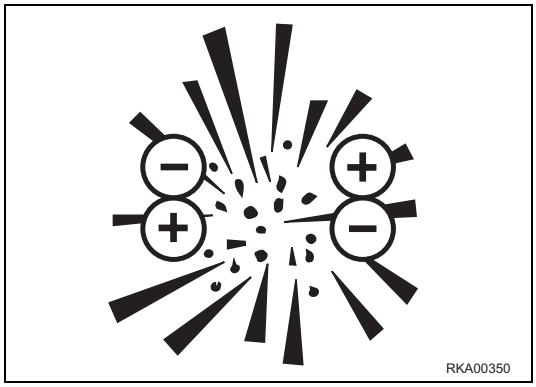

- When starting the machine with booster cables, always wear safety goggles.
- When starting the engine by means of another machine, avoid any contact between the two machines.
- Be sure to connect the positive cable (+) first and then the negative or earth cable (–) when connecting the booster cables. Disconnect first the negative or earth (–) cable and then the positive cable (+) after the start.
- Connect the batteries in parallel: positive to positive and negative to negative.
- When connecting the earth cable to the frame of the machine to be started, operate as far as possible from the battery.
  (See "3.7.5 DISCHARGED BATTERY").

https://truckmanualshub.com/

2.7 PRECAUTIONS FOR THE REMOVAL

- The draw hook must be used only for the first aid and not for towing the machine.
- Before moving the machine, make sure that all the controls are in neutral.
- Incorrect manoeuvres may result in serious injuries or even death.
- To move the machine, use properly dimensioned steel cables; do not use worn cables or cables with broken strands (A), twisted cables (B), deformed cables (C).
- During the removal, no one can be allowed to get near the machines or the cable.
- Do not get astride the cable.
- Remove the machine only as much as necessary to permit the required repairs.
- Put wooden blocks between the towing cable and the machine body, in order to avoid wear or damage.
- Do not remove the machine in any way other than that indicated at point "3.7.3 TOWING THE MACHINE".

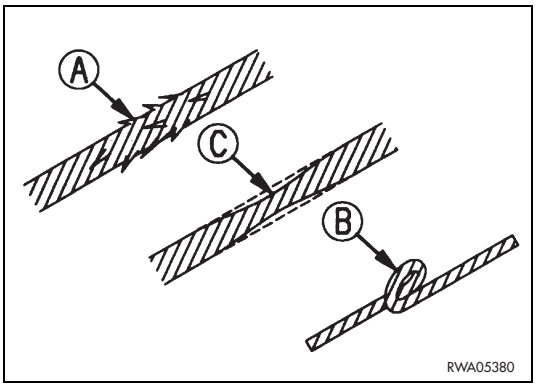

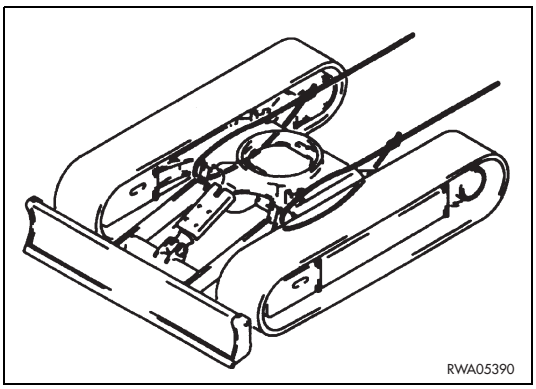

CAUTION

- **The maximum applicable force for the removal is the following:**
  PC30MR-2
  F= 3200 kg (for canopy)
  F= 3360 kg (for cabin)
  PC35MR-2
  F= 3670 kg (for canopy)
  F= 3800 kg (for cabin)
- **Use cables having the same length and draw continuosly and constantly, without jerks.**
- **Arrange and couple the machine to be removed by positioning it on the same axis as the towing vehicle; the drawing force must be parallel to the axis of movement of the machine.**

https://truckmanualshub.com/

2.8 PRECAUTIONS FOR MAINTENANCE

2.8.1 WARNING PLATES

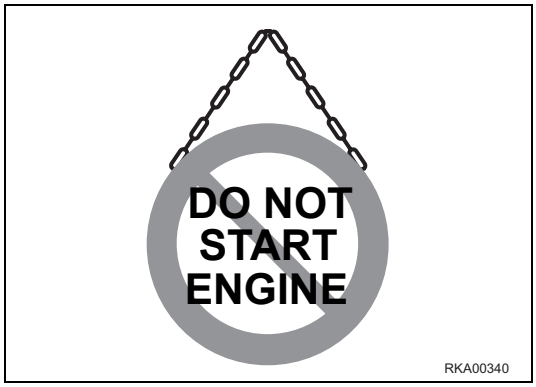

- Before starting any maintenance operation, position the machine on a firm and level surface, rest the equipment onto the ground, engage the safety locks of either the equipment and the controls and stop the engine.
- If another person starts the engine and operates the control levers while the operator is providing for service, this may result in serious injuries or even death.
- To avoid these risks, always attach warning plates to the control levers and to the ignition key before performing any maintenance operation; if necessary, attach additional warning tags also around the machine and in particular on the cab door handles.

2.8.2 TOOLS

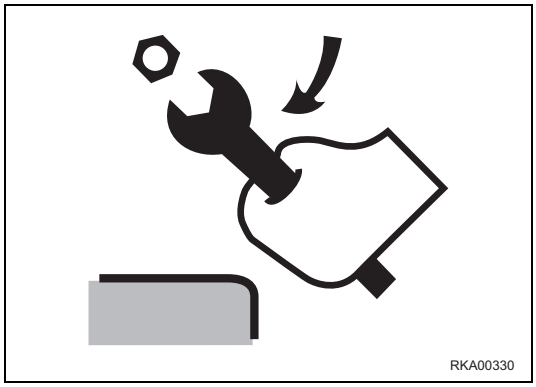

- Use only the tools provided with the machine and high-quality tools suitable for the tasks to be performed.
- Do not use worn, damaged, low-quality tools or tools that are not suitable for the tasks to be performed, in order to avoid any personal injury.

2.8.3 PERSONNEL

- Only authorized and duly trained personnel can service and repair the machine; additional precautions must be taken when grinding, welding and using a sledge hammer or heavy hammers.
- When assemblying the equipment or cylinder connection pins, use wooden, plastic or in any case not excessively hard tools to check the centering of the holes.
  Do not use your fingers, since you run the risk of cutting them.

https://truckmanualshub.com/

2.8.4 EQUIPMENT

- The normal or special equipment that must be installed on the machine or that have been removed must be stored in safe places, preventing them from falling down. If they fall on someone, they can cause serious bodily harm.
- When assemblying or removing any equipment, make sure that the ropes and the lifting hook are in good conditions and properly dimensioned for the load to be lifted.

2.8.5 WORKING UNDER THE MACHINE

- Always lower the work equipment to the ground or in any case to its lowest position before performing service or repairs under the machine.
- Always lock the machine tracks securely.
- Do not work under the machine, if this is not sufficiently supported.

2.8.6 CLEANING THE MACHINE

- Spilled oil or grease, scattered tools or broken pieces are dangerous, because they may cause someone to slip or trip. Always keep the machine and the work site clean and tidy.
- To clean the machine, use a pressurized jet of warm water or steam and the appropriate detergents available on the market. Do not use gas oil, oil or solvents, since the former leave an oily coat that favours the sticking of dust, while the latter (even if weak) damage the painted surfaces and therefore facilitate rusting.
- While cleaning the machine, keep the pressurized jet at a minimum distance of approx. 60 cm in order not to damage the warning plates and the pictograms.
  If the plates are damaged, request Komatsu Utility or your Komatsu Utility Dealer to send you spare plates and change them.
- Water into the electrical system provokes the oxidation of the contacts and may hinder the start of the machine or even make it start suddenly and abruptly. For this reason, never use water or steam jets to clean sensors, connectors or the inside of the operator's cab.

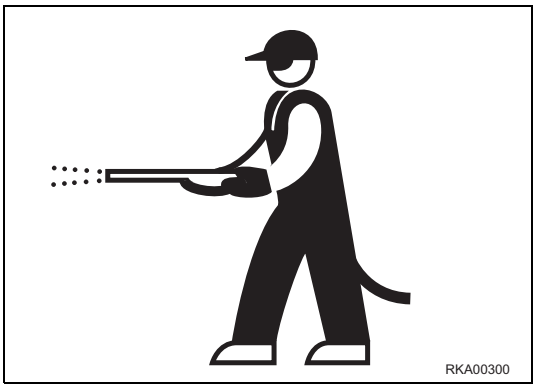

https://truckmanualshub.com/

2.8.7 USE OF THE ENGINE DURING MAINTENANCE OPERATIONS

- During maintenance operations, let the engine run only when indispensable. If it is necessary to have the engine running (for example, to wash the cooling circuit or to check the functionality of the alternator), an operator should constantly remain in the cab, in order to be able to stop the engine whenever necessary.
- During maintenance operations with running engine, never move the control locking devices from the “lock” position or change the position of the travel levers.
  Service personnel must not move any control lever.
- When carrying out maintenance operations, do not touch the moving parts of the machine and avoid wearing large and loose clothes.

2.8.8 PERIODICAL CHANGE OF THE PARTS THAT ARE CRITICAL FOR SAFETY

- Periodically change the following parts, which are important to prevent fires.
  Fuel supply system: fuel delivery and return pipes.
  Hydraulic system: main delivery pipes of the hydraulic pump.
- Even if they seem to be in good conditions, these components must be periodically changed with new ones. In fact, these components tend to deteriorate over time.
- If one of these parts is defective, change or repair it even if the change interval has not elapsed yet. (See "4.7 SAFETY CRITICAL PARTS").

2.8.9 STOP THE ENGINE BEFORE CARRYING OUT ANY MAINTENANCE OPERATION OR INSPECTION

- Stop the machine only on firm and level ground and stop the engine before carrying out any maintenance operation or inspection.
- If the engine must turn during a maintenance operation, shift the safety device lever to the LOCK position and carry out the maintenance operation with the help of another person; one operator must remain on the machine and the words and signs to be used must be agreed upon in advance.
- The person who carries out the maintenance operation must be very careful not to touch any moving part of the engine.

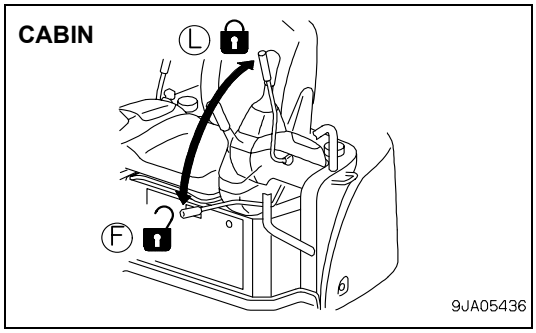

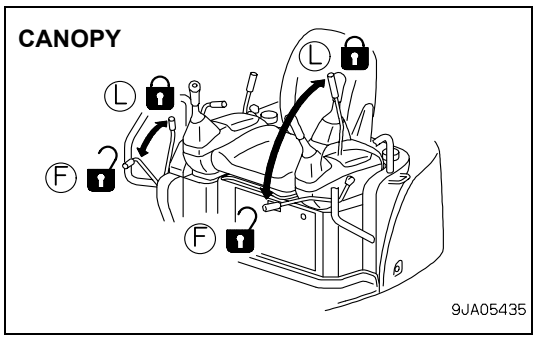

https://truckmanualshub.com/

2.8.10 RULES TO BE FOLLOWED DURING FUEL OR OIL TOPPING UP

- Keep away from naked flames while refuelling or topping up oil.
- Spilled fuel or oil make the ground slippery and may cause accidents; clean any dirty area immediately and carefully.
- Always tighten the fuel tank and the hydraulic circuit oil safety caps securely.
- Do not use fuel to clean any part of the machine that may be dirty with oil or dust.
- Always top up the fuel and oil tanks in properly ventilated place and avoid smoking.
- When refuelling, hold the fuel gun firmly and keep it constantly in contact with the filler until you have finished, in order to avoid sparks due to static electricity.
- Do not fill the tank completely, in order to leave room for the fuel to expand.

2.8.11 CHECKING THE COOLANT LEVEL IN THE RADIATOR

- Let the engine and the radiator cool down before checking the coolant level.
- If it is necessary to remove the cap with hot engine, wear suitable clothes and protections and loosen the cap slowly, in order to gradually release the pressure.

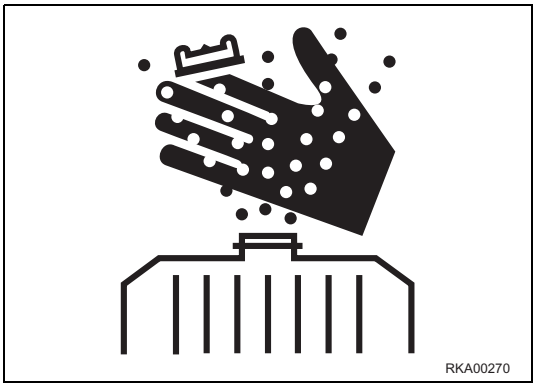

2.8.12 USING LAMPS

- When checking the fuel, oil, coolant or battery electrolyte levels, always use homologated explosion-proof lamps.
  If such lighting equipment is not used, there is danger of fire or explosion.

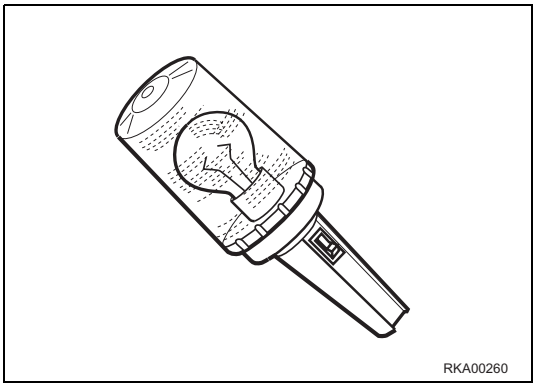

https://truckmanualshub.com/

2.8.13 PRECAUTIONS CONCERNING THE BATTERY AND THE ALTERNATOR

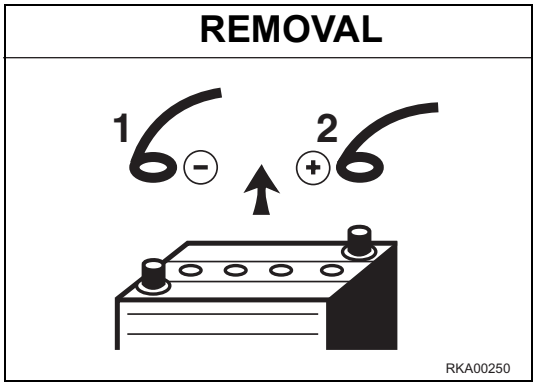

- When repairing the electrical system, disconnet the battery in order to stop the flow of current.

IMPORTANT

- **Disconnect first the negative earth cable (–) and then the positive cable (+).**
  At the end of the operation, reconnect first the positive cable (+) and then the negative cable (–).

- If electrical welding operations are to be carried out on the machine, it is necessary to disconnect the battery and also the alternator.

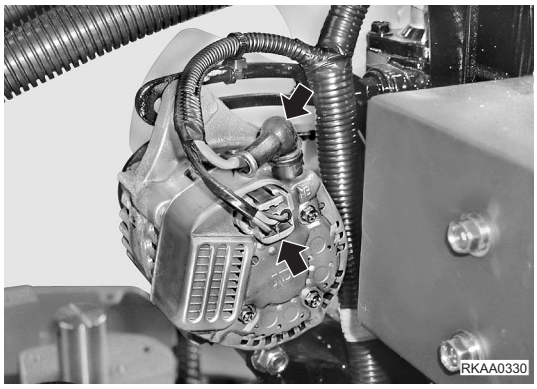

2.8.14 PRECAUTIONS CONCERNING THE STARTER

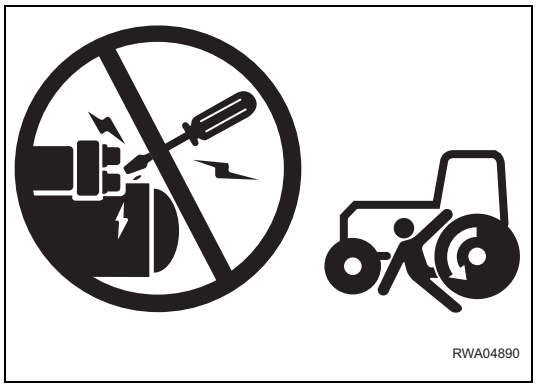

- Do not start the engine by tampering with the terminals of the starter, since the machine may move.
- Sudden or accidental movements of the machine may cause serious injuries or even death.

2.8.15 HANDLING HIGH-PRESSURE PIPES

- Do not bend high-pressure pipes or rub them with abrasive or cutting objects.
  Do not use any bent or cracked pipes or hoses that were previously rejected because of leaks or fastening defects, since they may burst during use.
- Always repair or replace any loose or faulty fuel or oil pipe. Any leakage of fuel or oil may cause fires.

https://truckmanualshub.com/

2.8.16 PRECAUTIONS TO BE TAKEN WHEN HANDLING HIGH-PRESSURE OIL

- Do not forget that the work equipment circuits are always under pressure; for this reason, when it is necessary to add or drain hydraulic oil or to perform maintenance operations or inspections on the hydraulic circuit, it is advisable to lower the equipment to the ground and completely release the pressures and the residual pressure present in the tank.
  Small leakages from pipes under pressure and the resulting jets are extremely dangerous, since they can perforate the skin and penetrate in the blood circulation or injure the eyes.
  For this reason, always wear goggles and thick gloves during the inspections and use a piece of cardboard or a sheet of plywood to check for oil leakages.
  If you are hit by a jet of high-pressure oil or are injured, even if slightly, immediately consult a doctor.

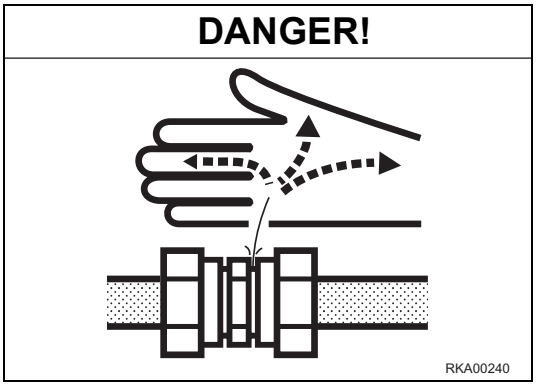

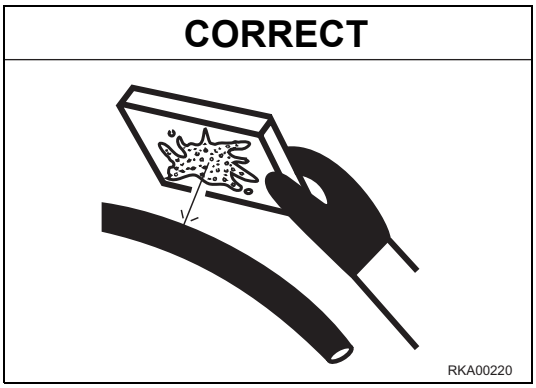

2.8.17 PRECAUTIONS FOR MAINTENANCE OPERATIONS AT HIGH TEMPERATURES AND HIGH PRESSURE

- When the machine is stopped at the end of operations, the engine coolant, the oil and all the components are hot and the hydralic circuits are under pressure.
  In these conditions, if the coolant, the hydraulic oil and the engine oil are to be drained in order to change them or the filters, there are serious risks of damage and burns.
  Wait for the temperature to lower within the normal operating range (40–45) before carrying out the maintenance operations in accordance with the procedures indicated in the relevant sections of this manual).

2.8.18 COOLING FAN AND BELT

- Be careful to the revolving parts and do not allow anyone to get too close to these parts, since clothes or parts of the body may get caught into them.
- If hands, clothes, or tools touch the fan blades or the belt, they may be cut, torn or seriously damaged; for this reason, avoid touching the revolving parts.

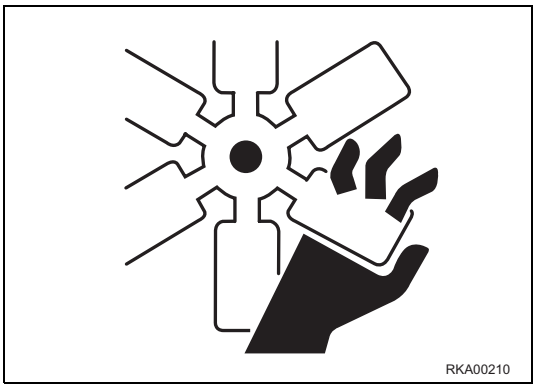

https://truckmanualshub.com/

2.8.19 WASTE MATERIALS

- Do not dispose of used oil in the sewer system, rivers, etc.
- Always put used oil in containers. Never drain the oil directly onto the ground.
- Keep to the laws and regulations in force when disposing of harmful substances such as oil, fuel, solvents, used filters and batteries.

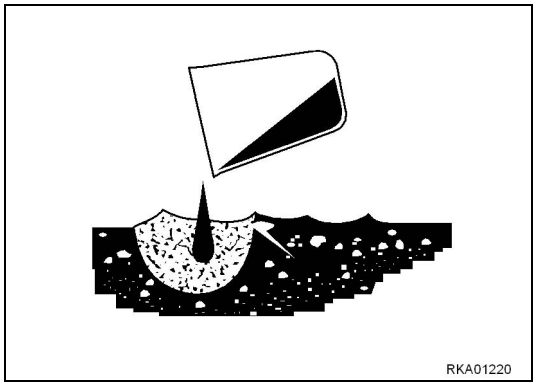

2.8.20 PRECAUTIONS FOR THE USE OF THE SYNTHETIC BIODEGRADABLE OIL TYPE HEES

- It is not possible to mix the synthetic biodegradable oil type HEES with ordinary hydraulic oils, since when the temperature increases insoluble compounds are generated, which are deposited on the filters and clog them (the maximum concentration of ordinary oil cannot exceed 1% of the total quantity of oil).
- The biodegradable oil can be used only in the hydraulic system; it cannot be used for the endothermic engine, the transmissions, the braking system, etc.
- Before introducing the synthetic biodegradable oil in the hydraulic system, empty the system completely, disconnecting the cylinders and all the parts that may contain ordinary oil, and replace the drain filter with a new one.
  Start the engine and let it idle without using the work equipment, wait until the oil reaches a temperature of at least 40°C, then start moving the equipment, so that all the parts of the system are filled with oil.
  Stop the engine and check the oil level. (See "3.3.1.2 CHECKS BEFORE STARTING" - " CHECK OIL LEVEL IN HYDRAULIC TANK, ADD OIL").

https://truckmanualshub.com/

PAGE INTENTIONALLY LEFT BLANK

https://truckmanualshub.com/

THE MACHINE AND ITS OPERATIONS

https://truckmanualshub.com/

3.1 MACHINE VIEW ILLUSTRATIONS

3.1.1 OVERALL MACHINE VIEW

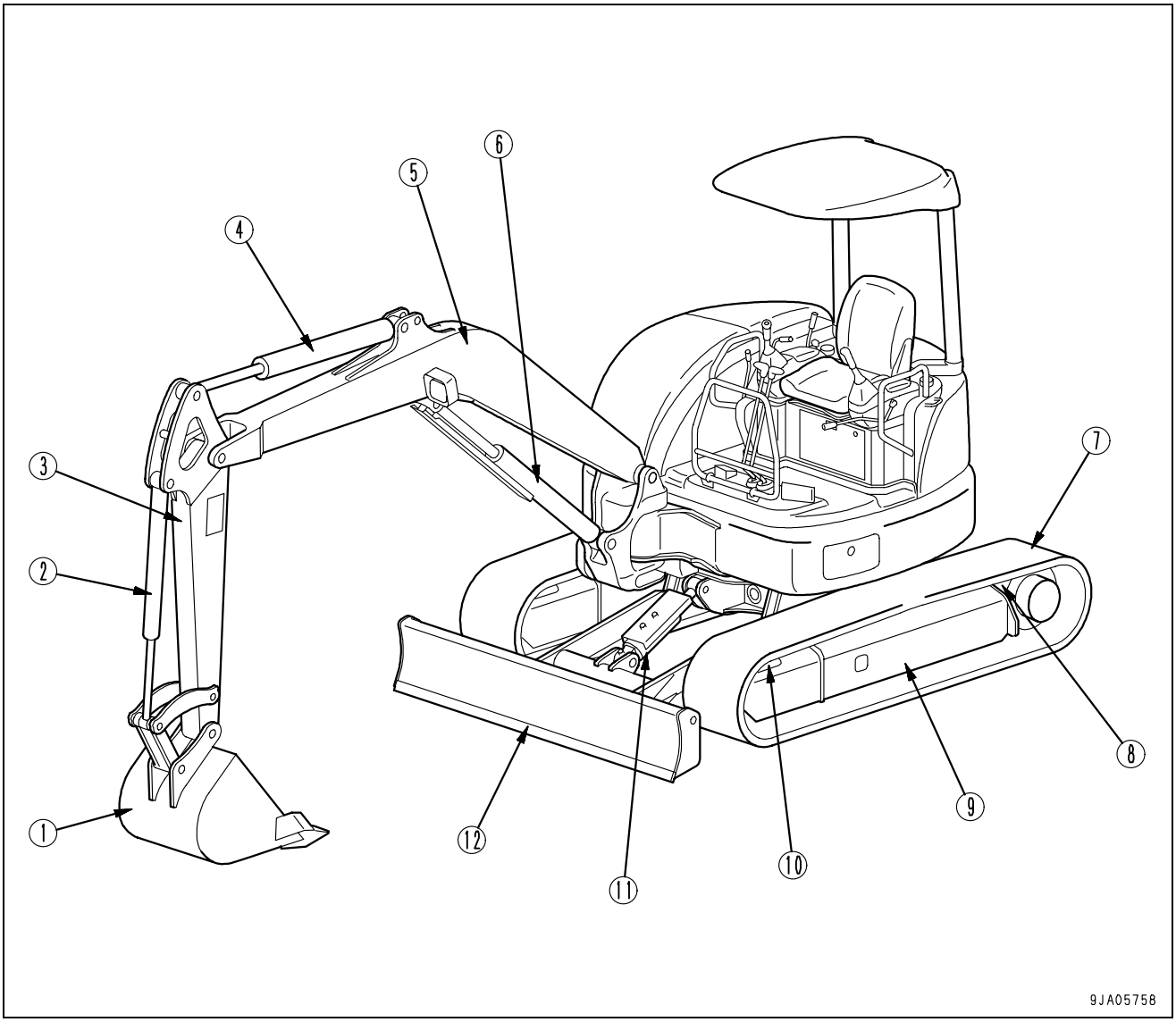

(1) Bucket
(2) Bucket cylinder
(3) Arm
(4) Arm cylinder
(5) Boom
(6) Boom cylinder
(7) Track shoe
(8) Sprocket
(9) Track frame
(10) Idler
(11) Blade cylinder
(12) Blade

https://truckmanualshub.com/

3.1.2 CONTROLS AND GAUGES

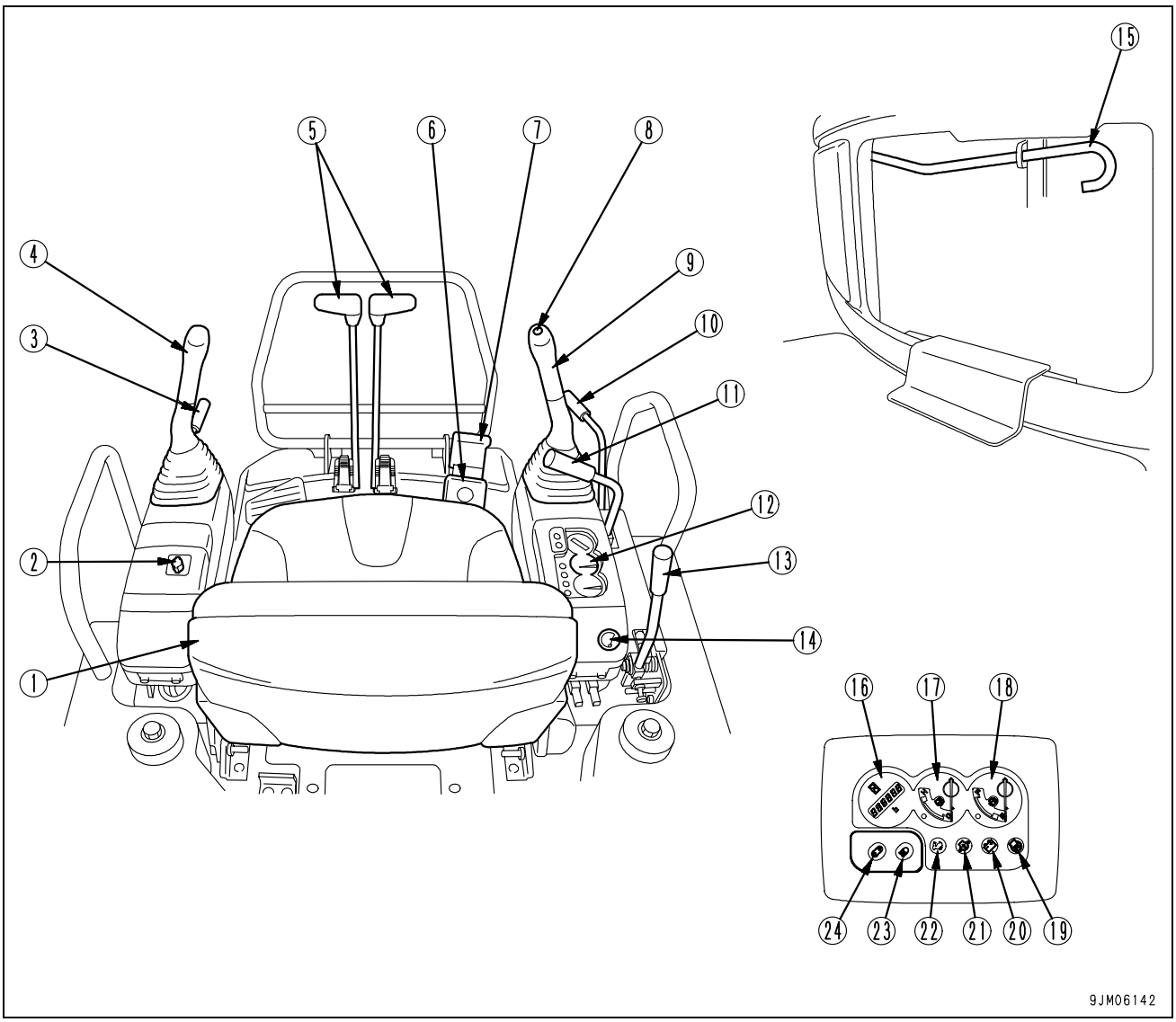

(1) Operator's seat
(2) Heater switch (cab specification machine)
(3) Safety lock lever (left)
(4) Left work equipment control lever
(5) Travel lever (pedal is equipment)
(6) Boom swing control pedal
(7) Pedal lock
(8) Horn switch
(9) Right work equipment control lever
(10) Safety lock lever (right) (canopy specification machine)
(11) Blade control lever
(12) Machine monitor
(13) Fuel control lever
(14) Starting switch
(15) Floor lock cancel lever
(16) Service meter
(17) Engine water temperature gauge
(18) Fuel gauge
(19) Engine pre-heating monitor
(20) Charge level monitor
(21) Engine oil pressure monitor
(22) Travel speed boost monitor
(23) Lamp switch
(24) Travel speed selector switch

https://truckmanualshub.com/

3.2 DETAILED CONTROLS AND GAUGES

The following is an explanation of the devices needed for operating the machine.

To perform suitable operations correctly and safely, it is important to completely understand the methods of operating equipment and meanings of the displays.

3.2.1 MONITORING SYSTEM

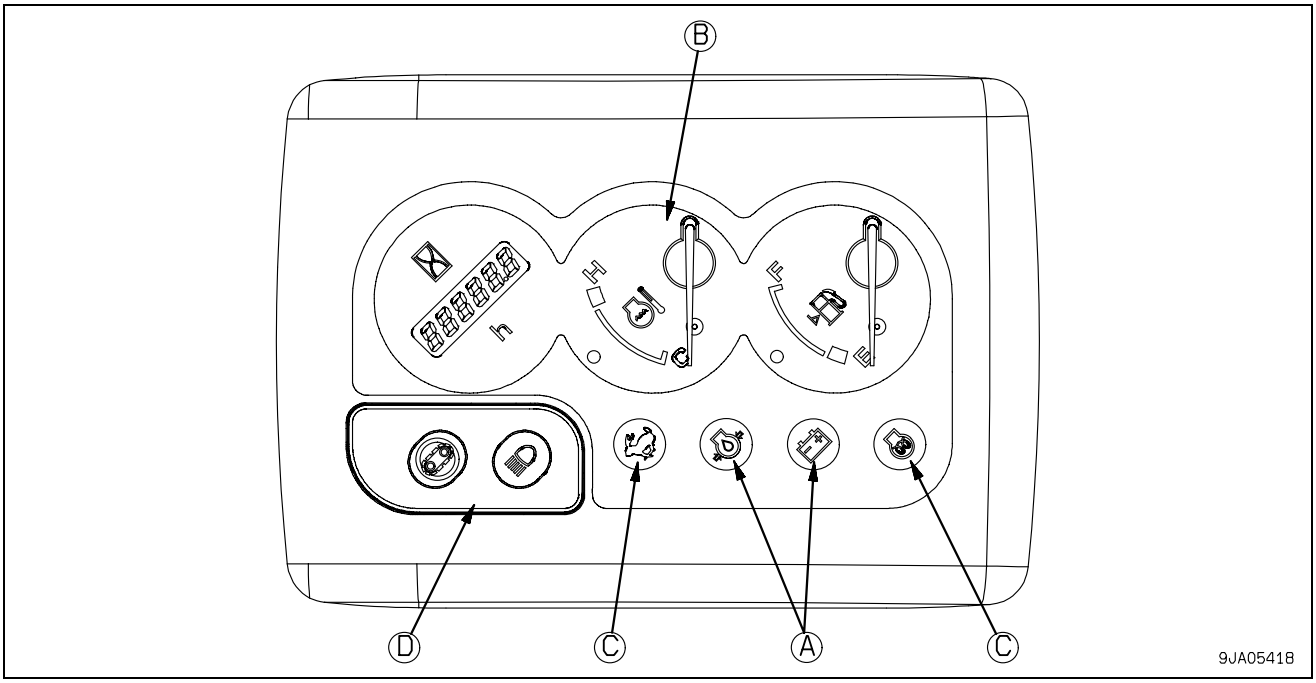

(A) Emergency Monitors
(B) Meter Display Portion
(C) Pilot Lamps
(D) Monitor Switch Portion

https://truckmanualshub.com/

3.2.1.1 EMERGENCY MONITORS

⚠ CAUTION

- **If the monitor flashes or the buzzer sounds, stop the engine immediately or run it at low idling, then inspect the problem point immediately and repair the problem.**

These are items which need to be observed when the engine is running. If there is any abnormality, the abnormal location on the monitor will lights up and the buzzer will second. Carry out the necessary repairs immediately.

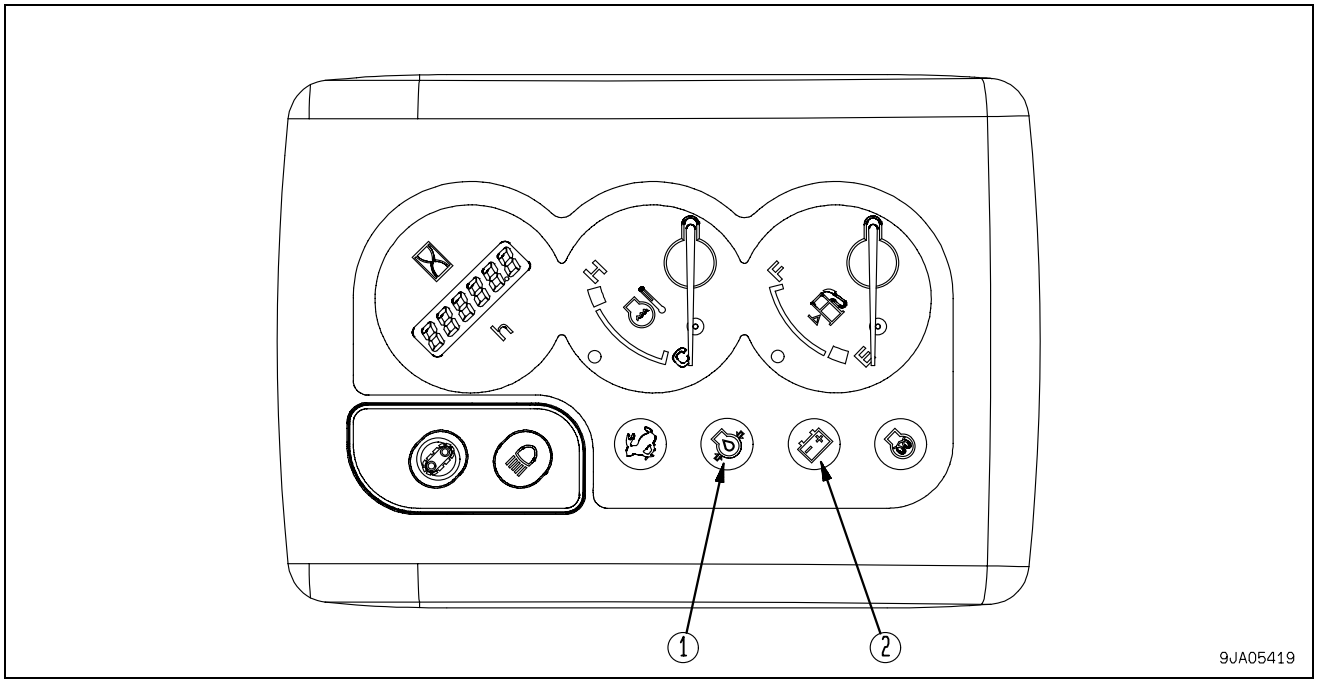

(1) Engine Oil Pressure Monitor

(2) Charge Level Monitor

1. Engine Oil Pressure Monitor

This monitor (1) flashes and the buzzer sounds if the engine and lubricating oil pressure goes below the specified level.

If the monitor flashes, stop the engine and carry out inspection. For details, see "3.7.6 OTHER TROUBLE".

While the starting switch is ON, the lamp will remain lit and will go off once the engine is started.

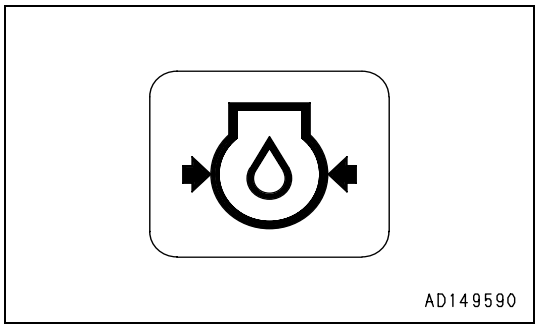

https://truckmanualshub.com/

2. Charge Level Monitor

If there is an abnormality in the charging when the engine is running, this monitor (2) flashes and the buzzer sounds.

If the monitor flashes, stop the engine and check the V-belt tension. If any abnormality is found, see "3.7.6 OTHER TROUBLE".

NOTE

- **While the starting switch is ON, the lamp will remain lit and will go off once the engine is started.**

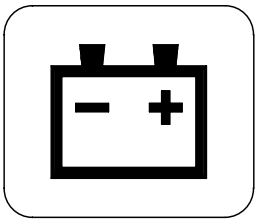

https://truckmanualshub.com/

3.2.1.2 METER DISPLAY PORTION

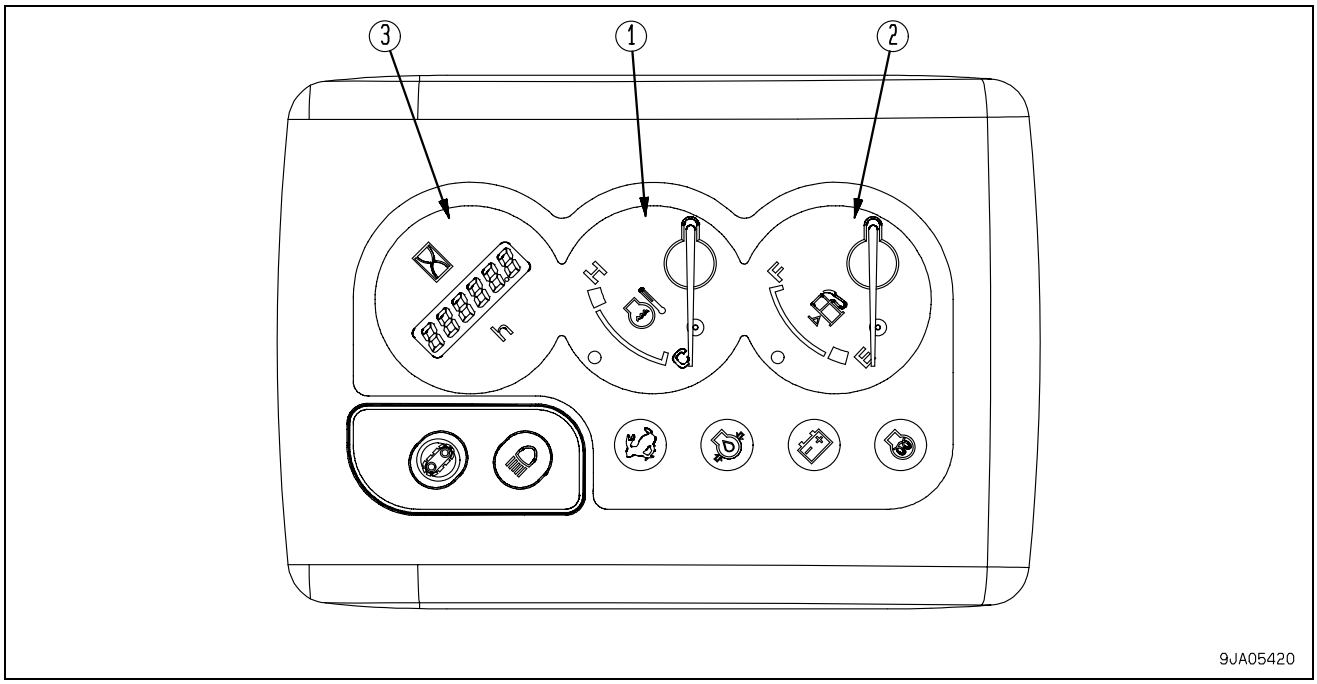

(1) Engine Water Temperature Gauge
(2) Fuel Gauge
(3) Service Meter

1. Engine Water Temperature Gauge

This meter (1) shows the engine water temperature.

During operation, the indicator should be in range (A).

If the indicator enters red range (B) during operation, pilot lamp (C) flashes and the buzzer sounds at the same time. If this happens, run the engine at low idling and wait until pilot lamp (C) goes out and the indicator goes down to range (A).

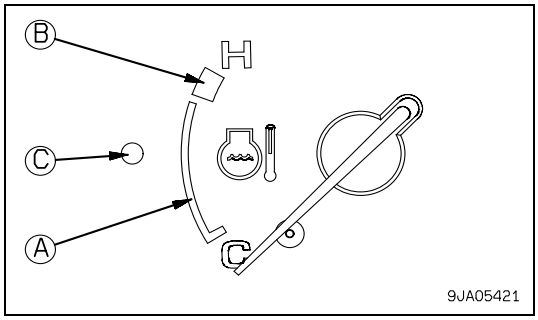

https://truckmanualshub.com/

2. Fuel Gauge

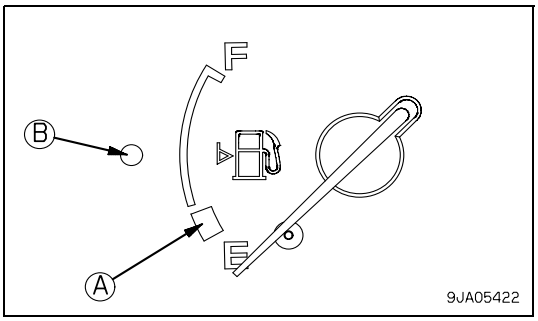

This meter (2) shows the fuel level in the fuel tank.

F indicates that the tank is full.

E indicates that the fuel level is low. If the fuel level goes below 4.5 liters (1.19 US.gall.), the indicator enters red range (A), and at the same time, pilot lamp (B) flashes.

If the indicator enters red range (A) or pilot lamp (B) flashes, check the fuel level and add fuel.

The correct level may not be displayed for a short time after the starting switch is turned to the ON position, but this is not an abnormality.

3. Service Meter

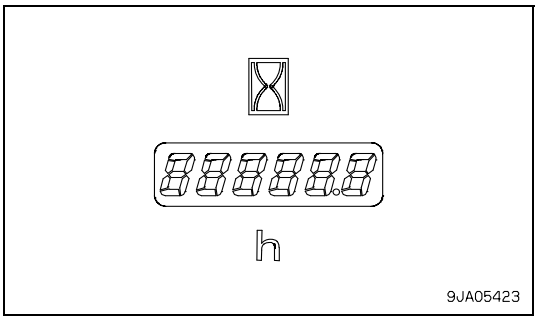

This meter (3) shows the total time that the machine has been operated.

Use this display to manage the specified service intervals.

If the engine is running, the service meter advances even if the machine is not being operated.

The meter advances 0.1 for every 1/10 hours (6 minutes) of engine operation, regardless of the engine speed.

https://truckmanualshub.com/

3.2.1.3 PILOT LAMPS

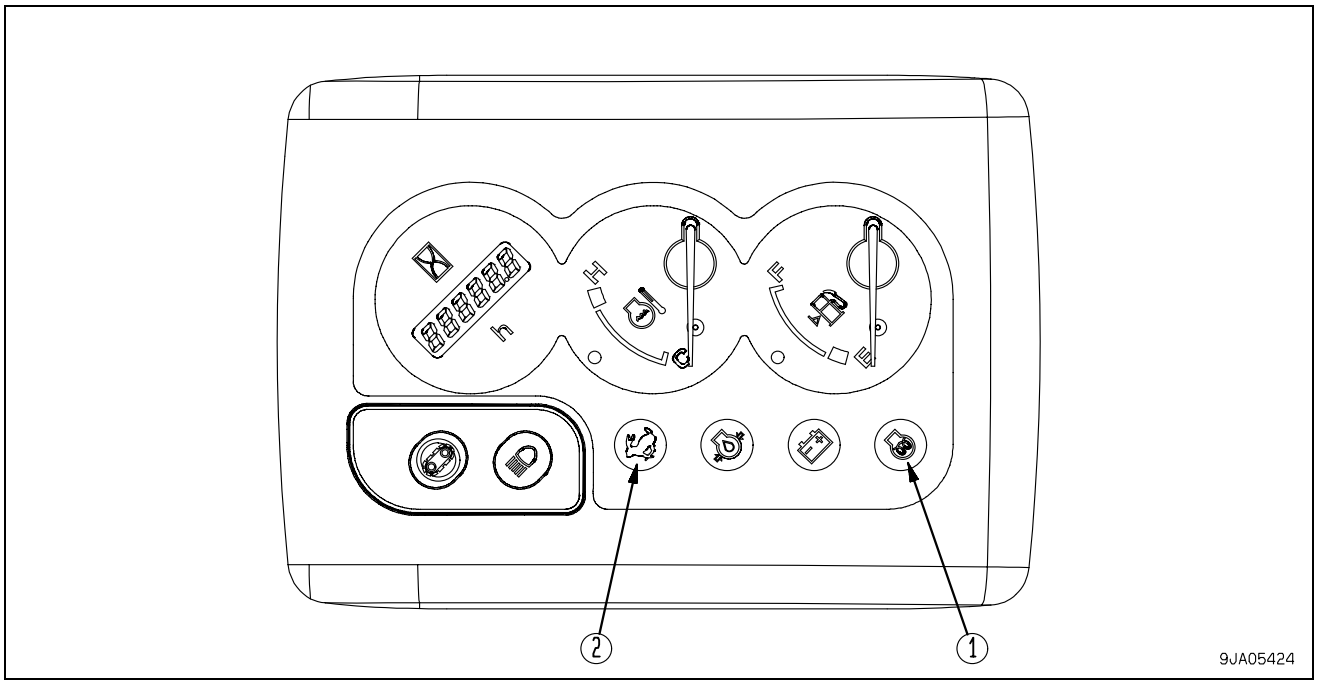

(1) Engine Pre-heating Monitor

(2) Travel Speed Boost Monitor

1. Engine Pre-heating Monitor

This monitor (1) flashes when the starting switch is set to the HEAT position. After approx. 18 seconds, the buzzer sounds and the monitor goes out.

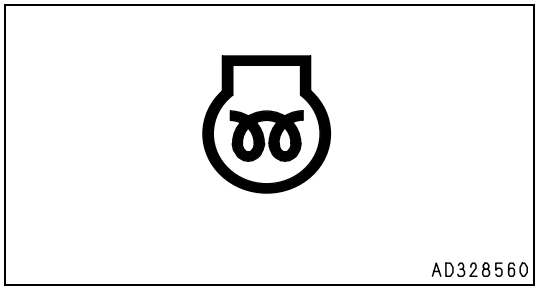

2. Travel Speed Boost Monitor

This monitor (2) lights up when the speed range selector switch is at high speed. When the speed range is low speed, the monitor goes out.

NOTE

- **When traveling at high speed, if the machine travels on soft ground or up a slope and the load increases, the travel is automatically switched to low speed travel, but the travel speed boost monitor displays stays lighted up.**

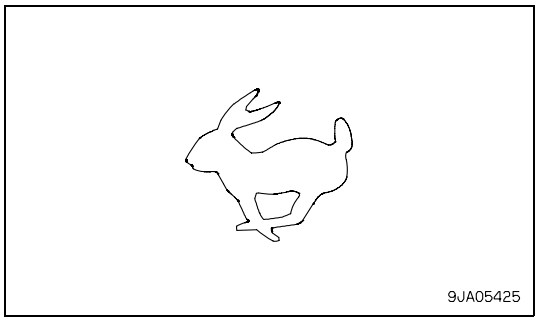

https://truckmanualshub.com/

3.2.1.4 MONITOR SWITCHES PORTION

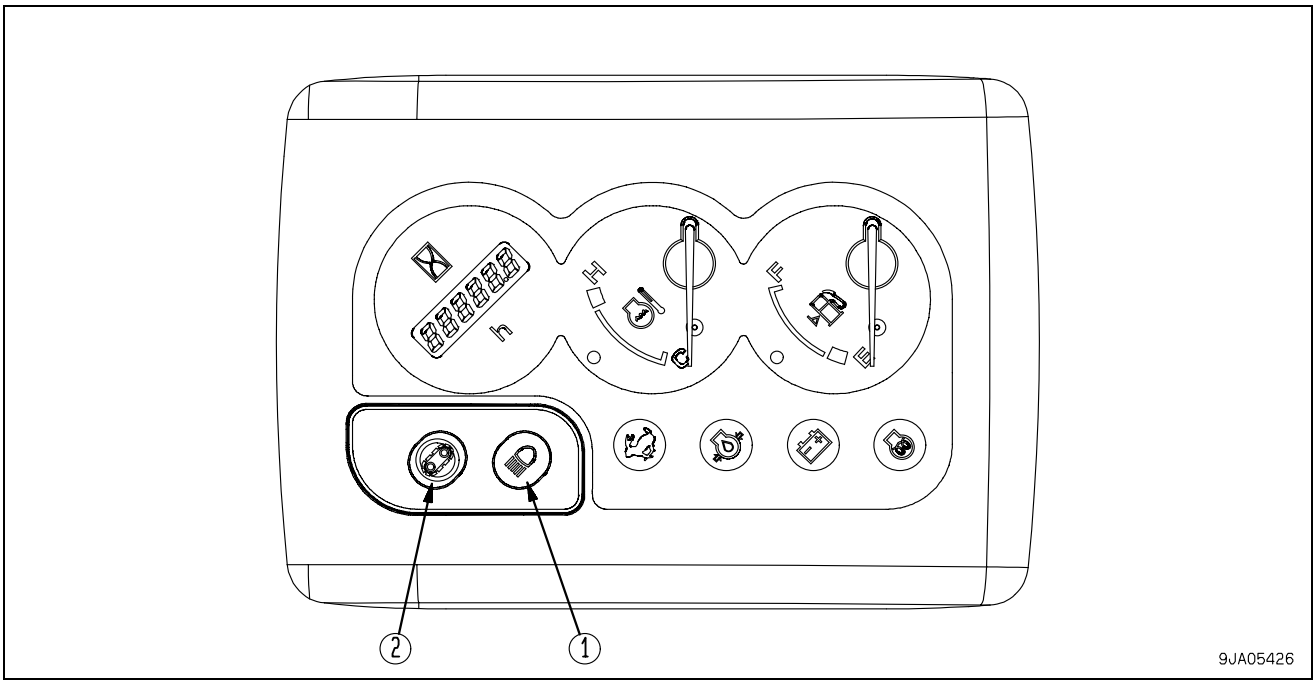

(1) Lamp Switch

(2) Travel Speed Selector Switch

1. Lamp Switch

Use this switch (1) to turn on the headlamps and the lamp inside the machine monitor.

Each time the switch is pressed, it is switched between ON and OFF.

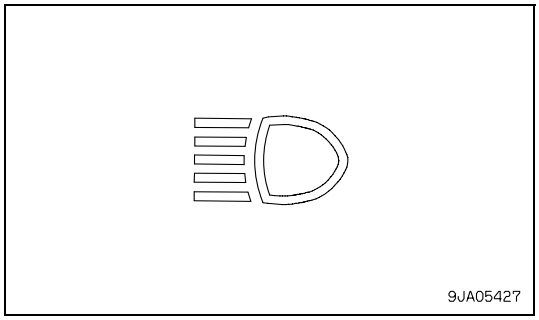

https://truckmanualshub.com/

2. Travel Speed Selector Switch

WARNING

- **When loading or unloading from a trailer, always travel at low speed. Never operate the travel speed selector switch during the loading or unloading operation.**
- **If the travel speed is switched between Hi and Lo when the machine is traveling, the machine may deviate to one side, even when traveling in a straight line.**
  Stop the machine before switching the travel speed.

Use this switch (2) to switch the travel speed to low speed or high speed.

Each time the switch is pressed, it is switched between low speed and high speed.

When the machine is traveling at high speed, the travel speed boost monitor lights up.

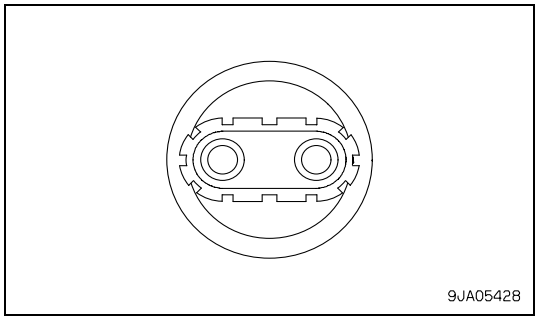

NOTE

- **When the engine is started, the travel speed is automatically set to low speed.**
  When traveling at high speed, if the machine travels on soft ground or up a slope and the load increases, the travel is automatically switched to low speed travel, so there is no need to operate the switch. The travel speed boost monitor displays stays lighted up.
  When the load is reduced, the travel system returns to high speed travel.

https://truckmanualshub.com/

3.2.2 SWITCHES

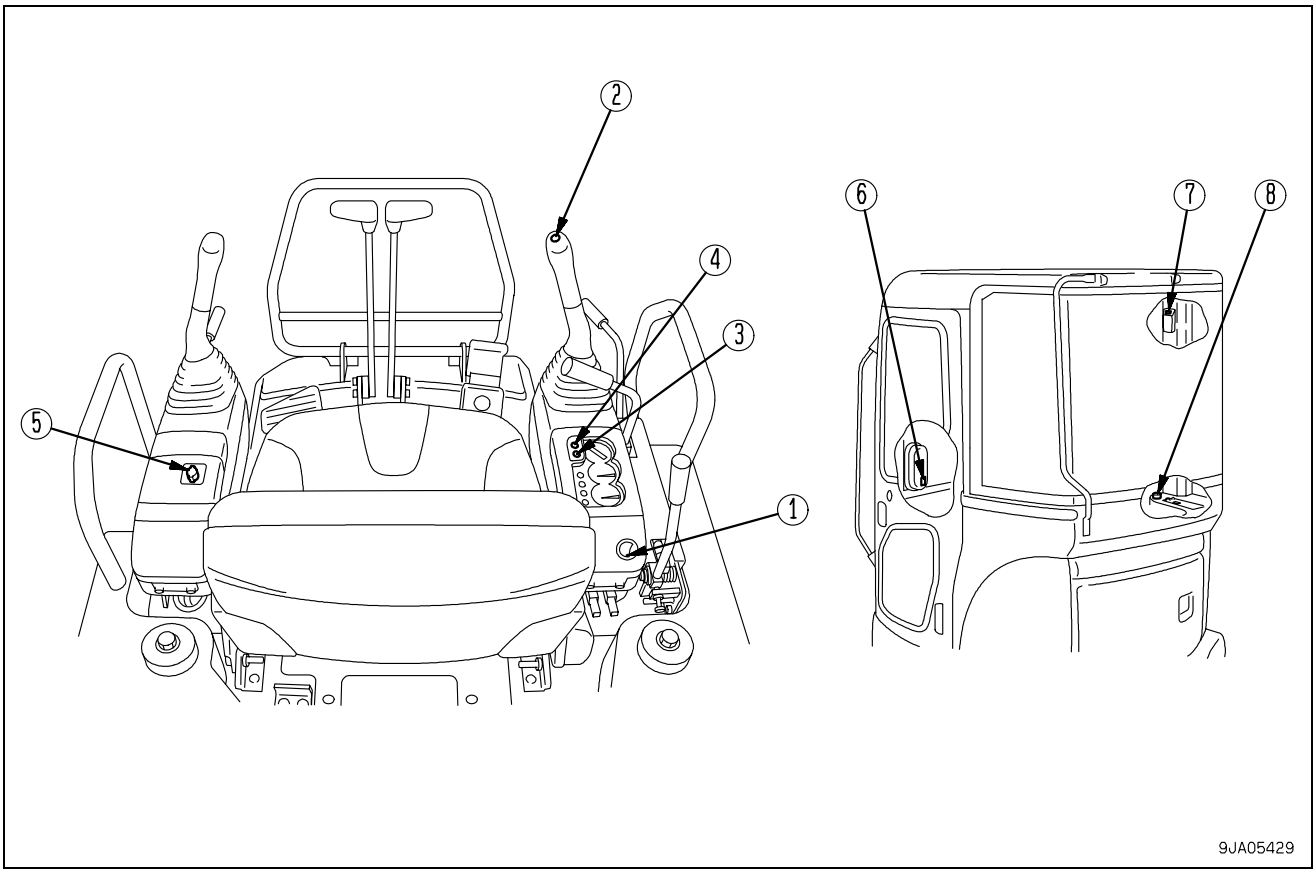

(1) Starting Switch
(2) Horn Switch
(3) Lamp Switch
(4) Travel Speed Selector Switch
(5) Cab Heater Switch
(Machines equipped with cab)
(6) Windshield Wiper Switch
(Machines equipped with cab)
(7) Room Lamp Switch
(Machines equipped with cab)
(8) Cigarette Lighter (12V)
(Machines equipped with cab)

1. Starting Switch

This switch (1) is used to start or stop the engine.

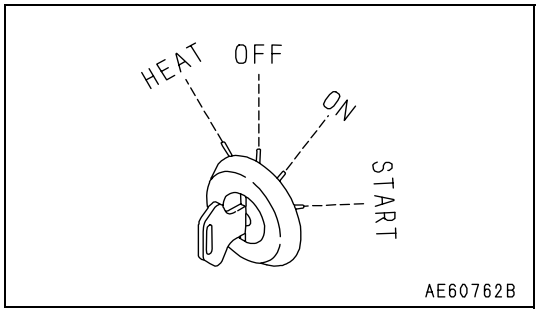

- OFF position
  The key can be inserted or withdrawn. The switches for the electric system are all turned off and the engine is stopped.
- ON position
  Electric current flows in the charging and lamp circuits. Keep the starting switch key at the ON position while the engine is running.
- START position
  This is the engine-start position. Keep the key at this position during cranking. Immediately after starting the engine, release the key. It will automatically return to the ON position.
- HEAT (preheat) position
  When starting the engine in cold weather, turn the key to this position. When the key is set to the HEAT position, the preheating monitor lights up. Keep the key at this position until the preheating monitor goes out.
  When the preheating monitor goes out, release the key.
  When the key is released, it will return to the OFF position, so turn it immediately to START and start the engine.

https://truckmanualshub.com/

2. Horn Switch

Press switch (2) at the center of the knob of the right work equipment lever to sound the horn.

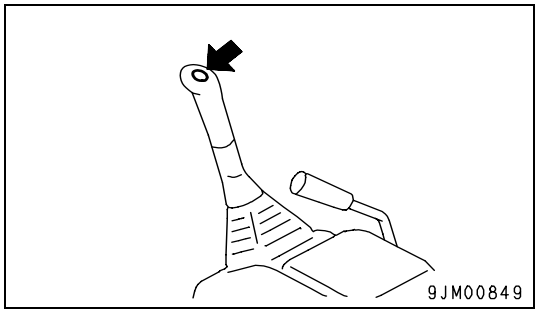

3. Lamp Switch

Use this switch (3) to turn on the headlamps and the lamp inside the machine monitor.

For details, see "3.2.1.4 MONITOR SWITCHES PORTION" - " 1. Lamp Switch".

4. Travel Speed Selector Switch

Use this switch (4) to switch the travel speed to low speed or high speed.

For details, see "3.2.1.4 MONITOR SWITCHES PORTION" - " 2. Travel Speed Selector Switch".

5. Cab Heater Switch
(Machines equipped with cab)

This switch (5) is used to heat the operator's compartment. The flow rate of the hot air can be set to two levels.

- Position 0: Off
- Position 1: Weak
- Position 2: Strong

Hot water from the engine is used to carry out heating, so heating is possible when the engine cooling water is hot.

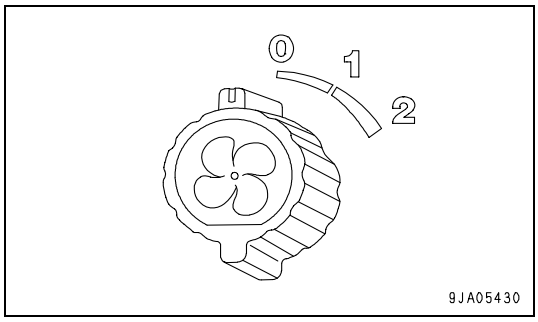

6. Windshield Wiper Switch
(Machines equipped with cab)

This switch (6) actuates the front window wiper.

This is also used as the window washer switch.

The switch is operated as follows.

- **Wiper only**
  When the switch is set to position (B), the wiper is actuated.
  Position (A): Wiper stopped
  Position (B): Wiper actuated

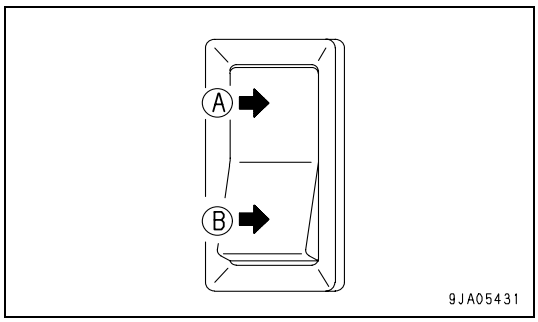

https://truckmanualshub.com/

- **Wiper and window washer**
  When the wiper is working and the switch is kept pushed to position (B), washer fluid is sprayed out.
  When the switch is released, it returns, and only the wiper operates.

NOTE

- **Be careful of the following when operating the window washer.**
  Do not keep the switch pushed in to the washer spray position for more than 10 seconds continuously.
  Do not press the switch to the washer spray position if the washer fluid tank is empty.

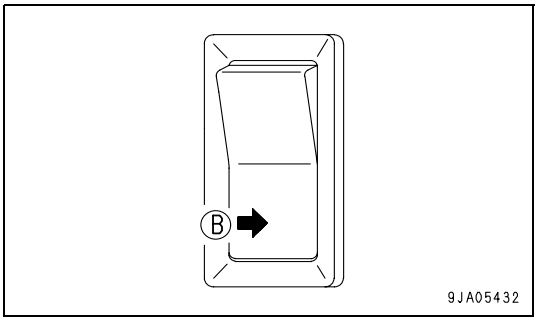

7. Room Lamp Switch
(Machines equipped with cab)

This switch (7) is used to turn on the room lamp.

- Position (A): Lights off
- Position (B): Lights up

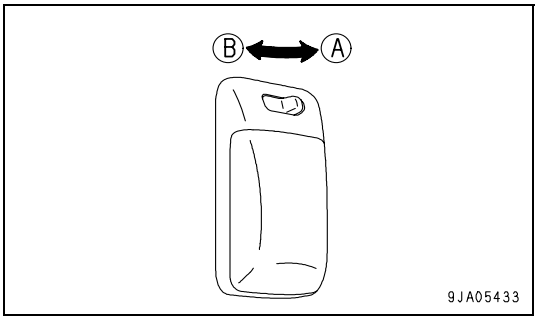

8. Cigarette Lighter (12V)
(Machines equipped with cab)

This lighter (8) is used to light cigarettes.

When the cigarette lighter is pushed in, it will return to its original position after a few seconds, so take it out to light your cigarette.

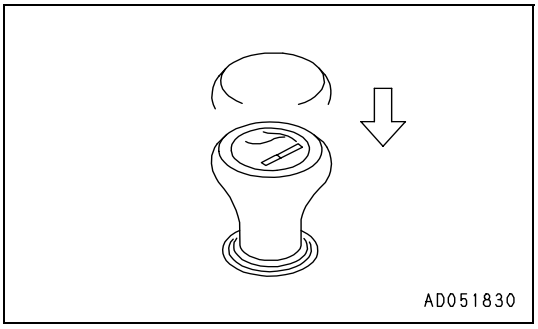

https://truckmanualshub.com/

3.2.3 CONTROL LEVERS AND PEDALS

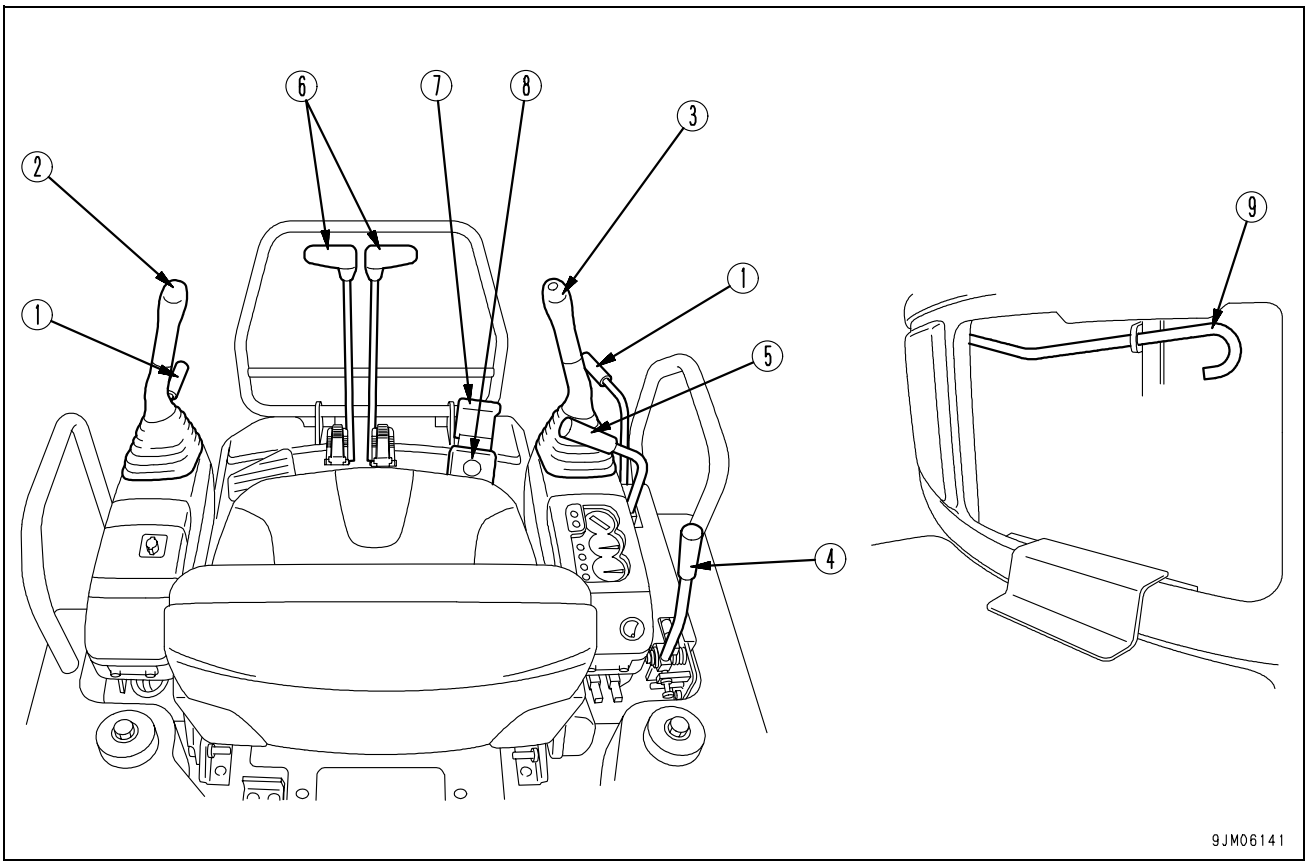

(1) Safety Lock Lever
(Machine equipped with cab: left side only)
(2) Left Work Equipment Control Lever
(3) Right Work Equipment Control Lever
(4) Fuel Control Lever
(5) Blade Control Lever
(6) Travel Lever (pedal is equipment)
(7) Pedal Lock (for boom swing control pedal)
(8) Boom Swing Control Pedal
(9) Floor Lock Cancel Lever

https://truckmanualshub.com/

1. Safety Lock Lever

WARNING

- **When leaving the operator's compartment, set the safety lock lever securely to the LOCK position (L). If the safety lock lever is not at the LOCK position (L) and the control levers are touched by mistake, it may lead to serious personal injury.**
- **If the safety lock lever is not set securely to LOCK position (L), it may cause serious personal injury. Always check that the lever is at LOCK position (L).**
- **When pulling the safety lever up, be careful not to touch the work equipment control lever.**
- **When pushing the safety lever down, be careful not to touch the work equipment control lever.**

This lever (1) is a device to lock the operation of the work equipment, swing, travel, and attachment.

When the lever is pulled up, it is set to LOCK position (L).

This safety lock lever is a hydraulic lock type, so even when it is at LOCK position (L), the control levers and pedals move, but the work equipment and and the machine do not move.

NOTE

- **If the safety lock lever on either the left or right is not at LOCK position (L), the engine will not start. Check that the safety lock lever is at LOCK position (L) before operating the starting switch.**
  If the engine stops when the safety lock lever is at FREE position (F), operate the safety lock lever to LOCK position (L) before operating the starting switch.

- Machine equipped with canopy

  (F): Free

  (L): Lock

  When the left lever is pulled up, the lever stand springs up and is locked.

  When the right lever is pulled up, the lever stand does not move, but it is locked.

NOTE

- **The engine can be started even when the right lever is at the FREE position (F).**

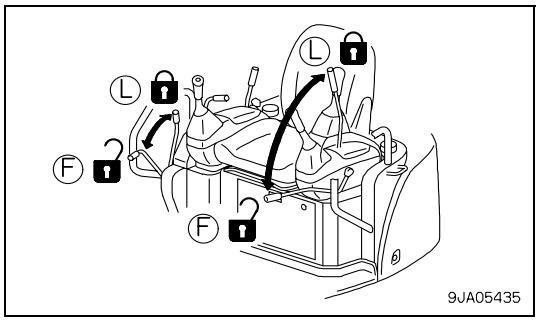

- Machine equipped with cab

  (F): Free

  (L): Lock

  When the left lever is pulled up, the lever stand springs up and is locked.

NOTE

- **For machines equipped with a cab, there is only a safety lock lever on the left.**

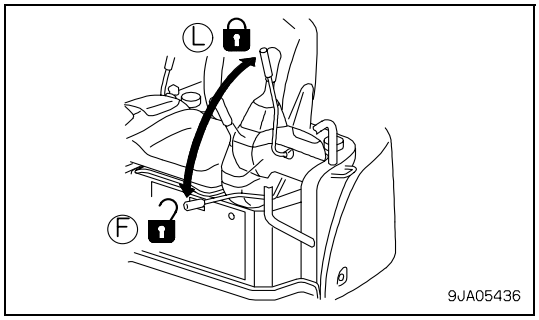

https://truckmanualshub.com/

2. - 3. Work Equipment Control Lever

A: Canopy specification
B: Cab specification

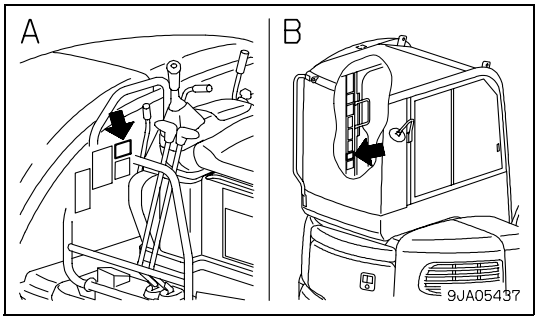

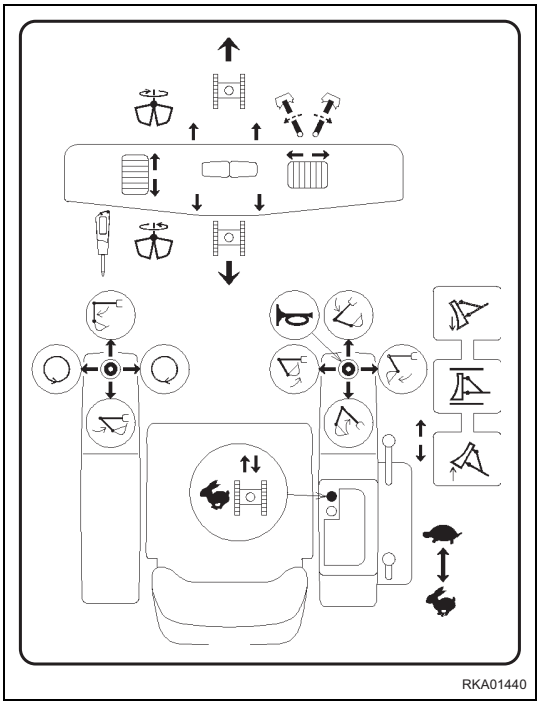

This left work equipment control lever (2) is used to operate the arm and upper structure.

- Swing operation
  (a) Swing to right
  (b) Swing to left
- Arm operation
  (c) Arm IN
  (d) Arm OUT

N (Neutral): The upper structure and arm are held in that position when they come to a stop and do not move.

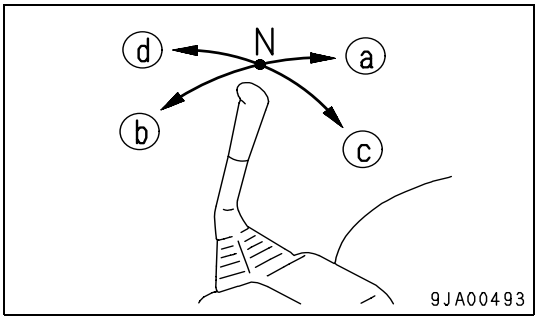

This right work equipment control lever(3) is used to operate the arm and upper structure.

- Boom operation
  (e) RAISE
  (f) LOWER
- Bucket operation
  (g) DUMP
  (h) CURL

N (Neutral): The boom and bucket are held in that position when they come to a stop and do not move.

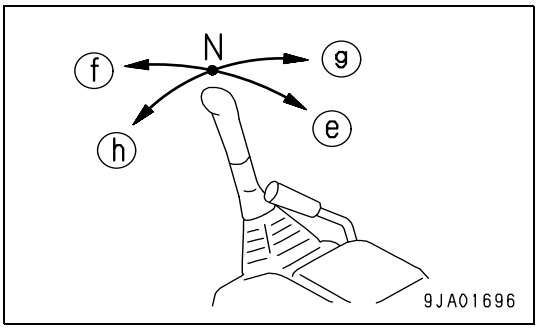

https://truckmanualshub.com/

4. Fuel Control Lever

This lever (4) is used to control the engine speed and output.

(a) Low idling: Push the lever fully.

(b) High idling: Pull the lever fully.

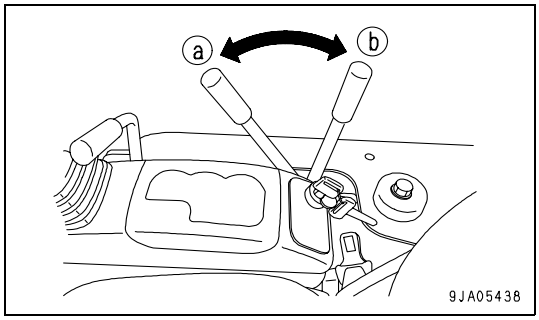

5. Blade Control Lever

IMPORTANT

- **When digging operations using the blade are continued for more than one hour, pay careful attention to the rise in the water temperature.**

This lever (5) is used to control the blade.

(a) Lower

(b) Raise

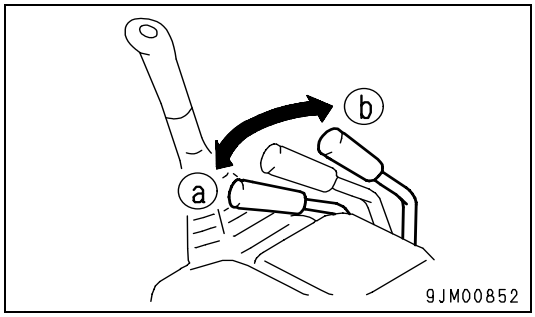

https://truckmanualshub.com/

6. Travel Levers

The travel pedal may be an option.

⚠ WARNING

- **Do not put your foot on the pedal unless the machine is traveling. If you leave your foot on the pedal and press it by mistake, the machine will move suddenly, and this may lead to a serious accident. Do not rest a foot on the pedal except when traveling or steering the machine, using the pedal.**
- **If the track frame is facing the rear, the direction of travel operations will be reversed.**
  When operating the travel levers, check if the track frame is facing the front or the rear.
  (If sprocket (A) is at the rear, the track frame is facing the front.)
- **Take good care when traveling or steering the machine, using the pedal.**
- **When getting in or out of the operator's compartment, there is danger that your toes may catch on the travel pedal, so always fold back the pedal so that it cannot be operated.**

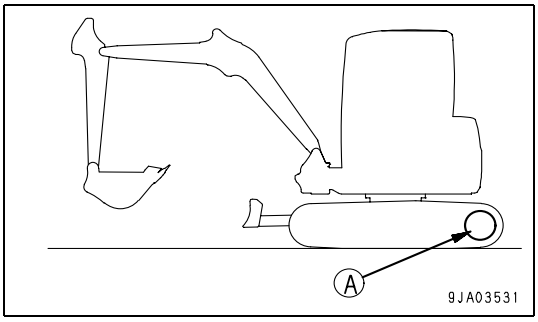

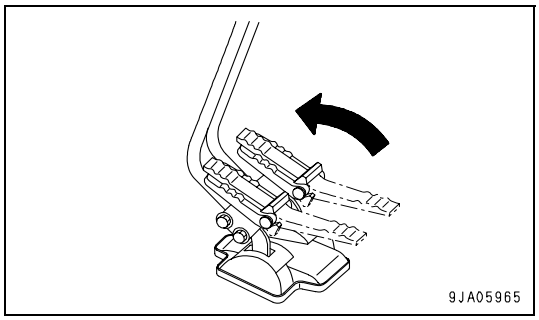

This lever (6) is used to change the direction of travel.

( ): This indicates operation of the pedal.

(a) FORWARD: This lever is pushed forward
(The pedal is angled forward)

(b) REVERSE: The lever is pulled back
(The pedal is angled back)

N (Neutral): The machine stops

When operating the pedal, first sit in the operator's seat, then fold out the pedal.

After finishing pedal operations, fold back the pedal while still seated in the operator's seat.

NOTE

- **If the lever is shifted to the advance or reverse position from the neutral position, the alarm sounds to warm that the machine is starting to advance.**

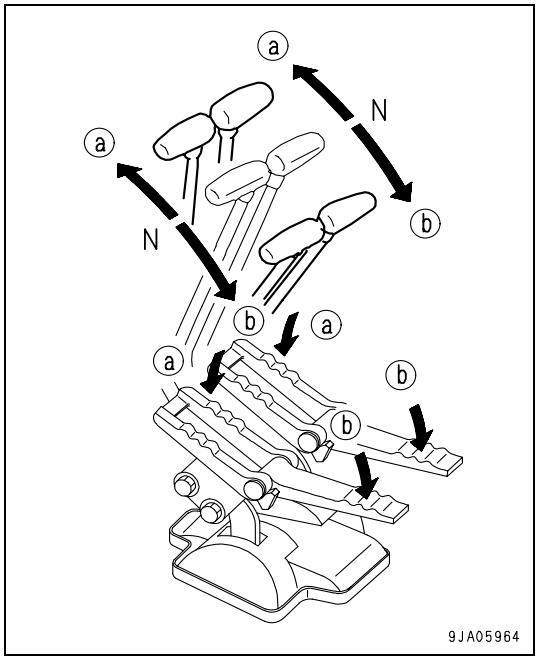

https://truckmanualshub.com/

7. Pedal Lock
(For boom swing contol pedal)

WARNING

- **When boom swing operation is not required, lock the boom with the pedal lock. If the operation pedal is accidentally pressed while it is not lock, a serious accident or injury.**

This pedal (7) is used to lock the boom swing pedal.

The pedal is locked by fitting the plate over the pedal.

(F): Free

(L): Lock

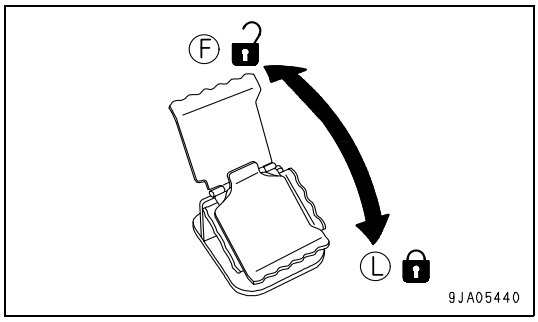

8. Boom Swing Control Pedal

This pedal (8) swings the boom to the left and right.

(a): Right swing

(b): Left swing

N (Neutral): Boom is stopped and held in this position.

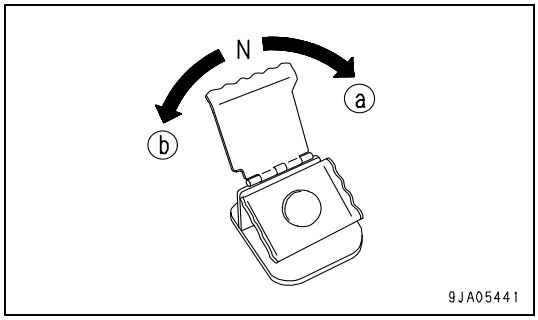

9. Floor Lock Cancel Lever

WARNING

- **Always observe the warning and caution items when opening or closing the floor. If the operation is carried out mistakenly, it may lead to serious personal injury.**
  Do not open or close the floor on slopes.
  Do not open or close the floor when there is a strong wind.

When opening or closing the floor, pull this lever (9) to FREE (F) position to release the lock.

Open or close the floor while pulling this lever (9).

After opening or closing the floor, release lever (9). It will return automatically to LOCK position (L).

(F): Free

(L): Lock

When opening (tilting) the cab or floor, see "3.2.12 METHOD OF OPENING (TILTING) FLOOR" for details.

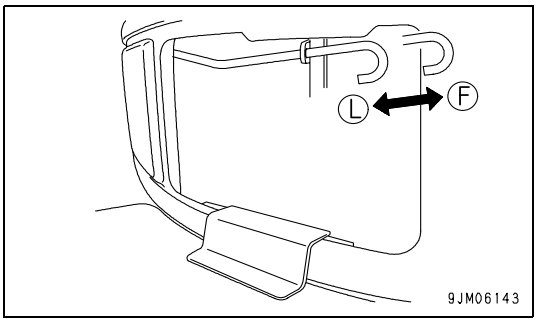

https://truckmanualshub.com/

3.2.4 WINDSHIELD (Machines equipped with cab)

WARNING

- **When opening or closing the front window, bottom window, or door, always set the safety lock lever to the LOCK position.**
  If the control levers are not locked and they are touched by accident, this may lead to a serious accident.
- **When opening or closing the window at the front of the cab, stop the machine on horizontal ground, lower the work equipment completely to the ground, stop the engine, then carry out the operation.**
- **When opening the front window, hold the grip securely with both hands, pull up, and do not let go until the automatic lock catch is locked.**
- **When closing the front window, hold the handle with your both hands and close it firmly.**

It is possible to stow (pull up) the front window in the roof of the operator's compartment.

The front window (bottom) can be removed and stored at the rear inside the cab.

Opening

1. Stop the machine on level ground, lower the work equipment completely to the ground, then stop the engine.
2. Lock the safety lock lever (1) securely.

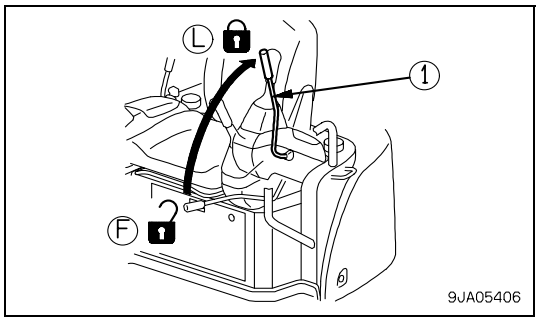

3. Grip knobs (A) on the left and right in the center of the front window, keep lock lever (B) pressed down with your thumb, then pull left and right knobs (A) to release the lock.

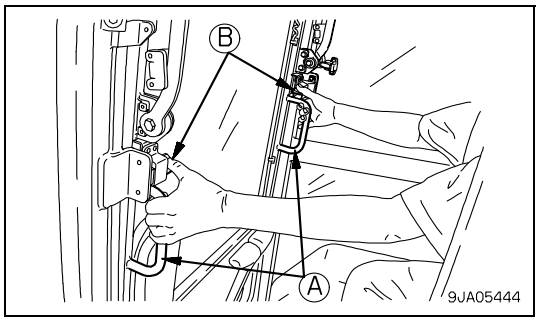

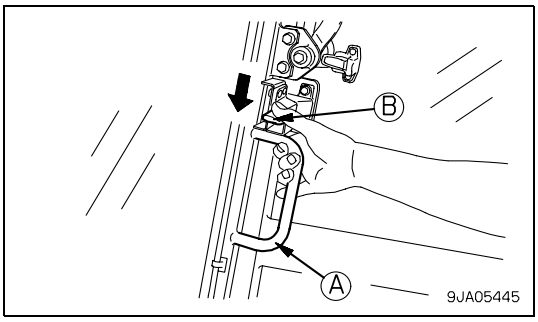

https://truckmanualshub.com/

4. Grip left and right knobs (A) and pull the front window up diagonally.

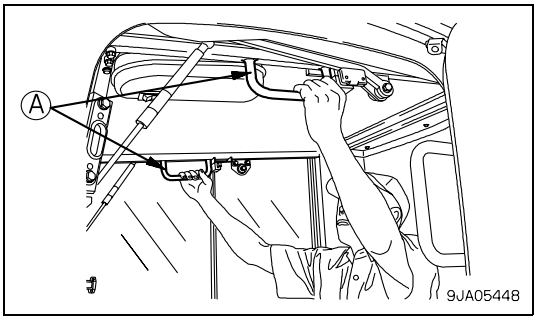

5. When it will move no further to the rear, push up knobs (A) to lock securely.
When pushing up, check that lock lever (B) moves in lock release direction (F), then returns in the lock direction (L).
Push up knobs (A) to lock securely.

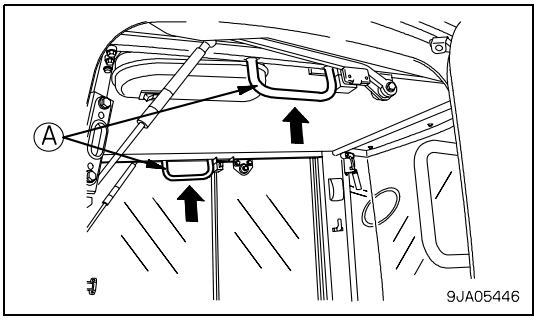

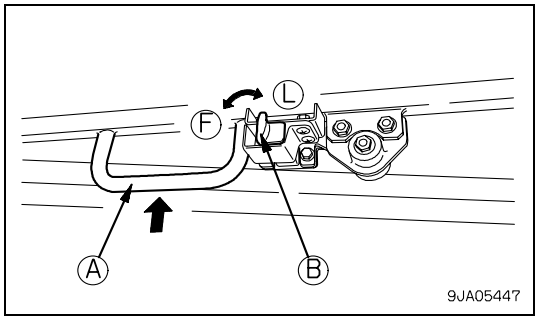

https://truckmanualshub.com/

Closing

WARNING

- **When closing the window, lower it slowly and be careful not to get your hand caught.**

1. Stop the machine on level ground, lower the work equipment completely to the ground, then stop the engine.

2. Lock the safety lock lever (1) securely.

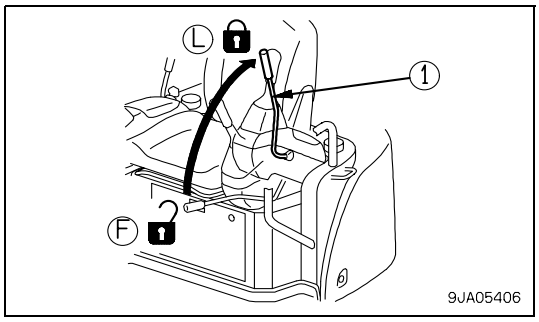

3. Hold left and right knobs (A), then push lock lever (B) with your thumb to the front and pull knobs (A) down to release the lock.
4. Grip left and right knobs (A) and slowly lower the front window diagonally to the front.

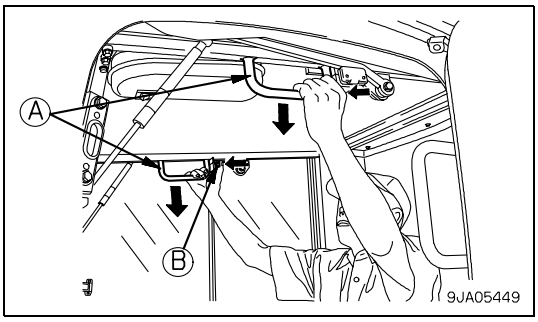

5. When the bottom of the window reaches the top of the bottom window, push left and right knobs (A) to the front, and push against left and right stoppers (C) to engage the lock.

   When pushing to the front, check that lock lever (B) moves in lock release direction (F), then returns in the lock direction (L). Push knobs (A) to the front to lock securely.

NOTE

- **To check that the lock is applied, check that lock (D) is in front of stopper (C).**

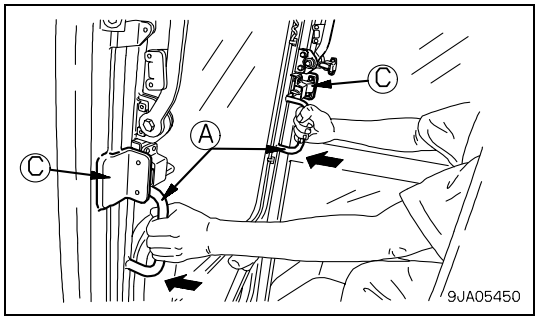

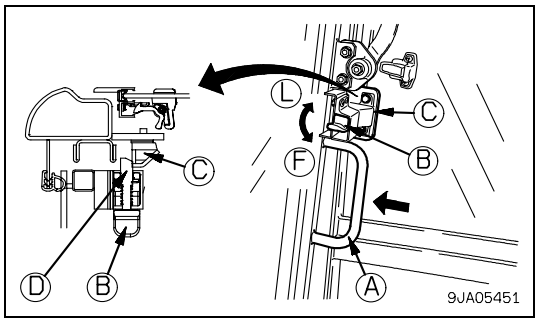

https://truckmanualshub.com/

Removing Lower Windshield

1. Open the front window, then hold grip (A), pull up, and remove the bottom window.

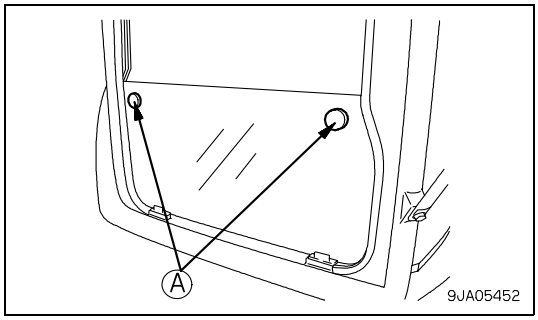

2. After removing the lower window, stow it in left and right brackets (B) at the rear of the operator's cab.

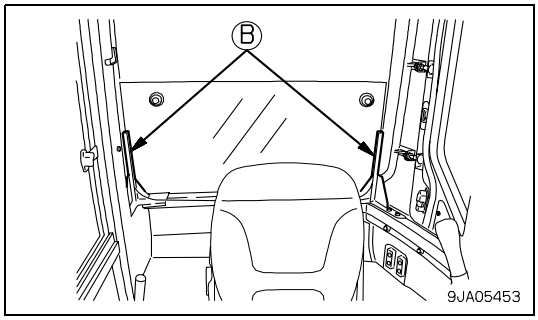

Installing Lower Windshield

With the front window open, install the bottom part of the front window.

1. Open the front window, then hold grip (A), pull up, and remove the bottom window.

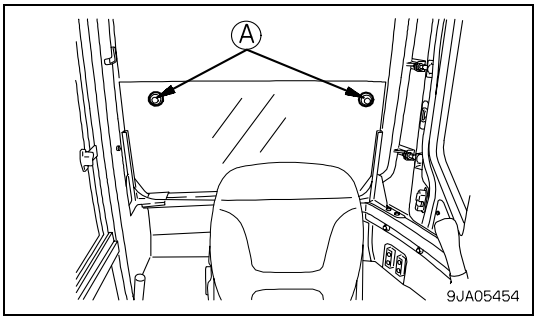

2. Install the lower window and push it down securely.

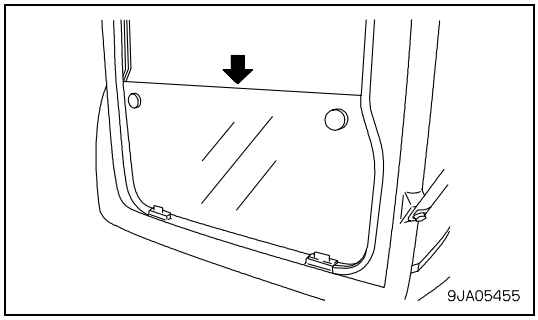

https://truckmanualshub.com/

3.2.5 SLIDING DOOR (Machines equipped with cab)

⚠ CAUTION

- **Be sure to check that the sliding door is locked in position both when it is open and when it is closed.**
  Always stop the machine on level ground when opening or closing the door.
  If the door is opened or closed on a slope, there is danger that the operating effort will suddenly change.
  Do not open or close the door on slopes.
  When opening or closing the door, always use door handle (1) and knob (2).
  Be careful not to get your hands caught between the front pillar or center pillar.
  If there is anyone inside the cab, call out to that person before opening or closing the door.

IMPORTANT

- **Always clean the step at the entrance to the cab and take action to prevent snow or mud from accumulating.**
  If snow accumulates, it may freeze and make it impossible to open the door.

Door Lock

When closing the door, pull the handle back to remove lock (3), then pull the door to the front.

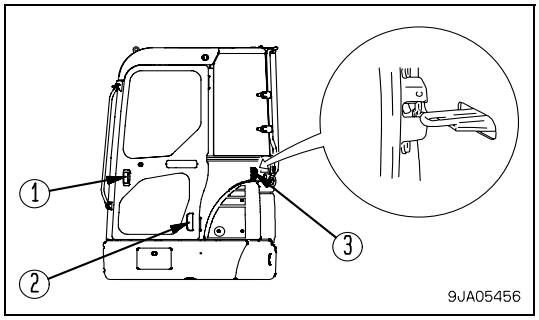

3.2.6 SLIDING WINDOW (Machines equipped with cab)

⚠ CAUTION

- **Do not put your head or hands out of the window when traveling or during operations.**

The window on the right side of the cab can be opened.

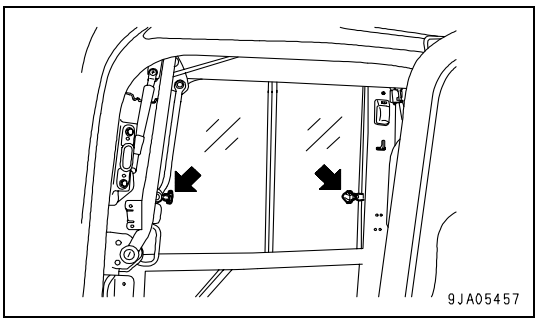

https://truckmanualshub.com/

3.2.7 EMERGENCY ESCAPE HAMMER (Machines equipped with cab)

⚠ CAUTION

- **When you are obliged to break the window glass pane with a hammer, take good care not to get hurt with flying glass shards.**
  Before getting out of the operator's cab, remove glass fragments remained in the windowsills not to get hurt with them. Moreover watch your step not to slip over the broken glasses scattered on the ground.
  To prevent injury from pieces of glass, remove all the broken glass from the window frame. Be careful also not to slip on the broken glass that has fallen to the ground.

In case it becomes impossible to open the door, a hammer (1) to be used for escape from the cab is installed.

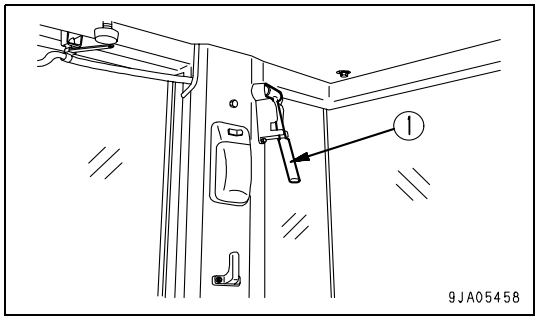

When escaping, break the window glass with hammer (1).

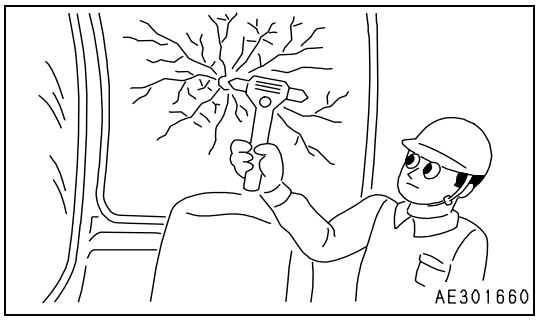

https://truckmanualshub.com/

3.2.8 COVER WITH LOCK

Opening and Closing Covers with Lock

Use the starting switch key to open or close the cover with the lock.

For details of the position of the cover with the lock, see Section "3.3.17 LOCKING".

Insert the key securely (6 mm (0.236 in.) from the root of the key), then turn it. If it is turned when partially inserted, the key may break.

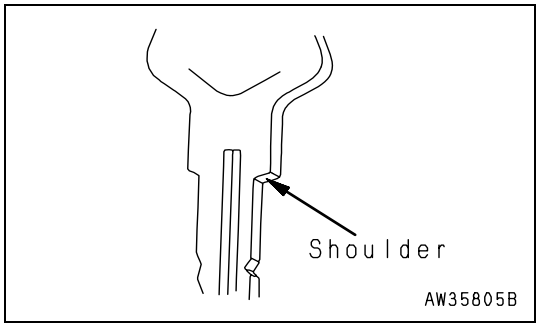

IN CASE OF TOOL BOX AND CAB DOOR

When opening

1. Insert the key into the key slot.
2. Turn the key counterclockwise and pull the cover or doorknob to open.

When locking

1. Close the cover and insert the key into the key slot.
2. Turn the key clockwise and take the key out.

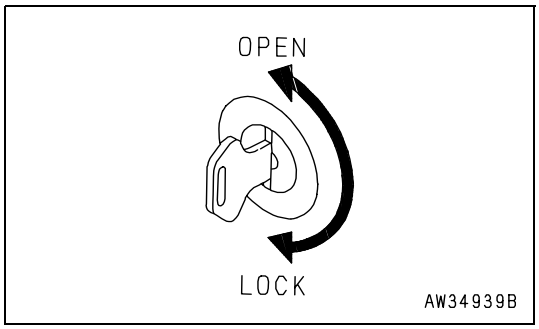

IN CASE OF ENGINE REAR COVER AND DIRT COVER

When opening

1. Insert the key into the key slot.
2. Turn the key clockwise and open the cover.

When locking

1. Close the cover and insert the key into the key slot.
2. Turn the key counterclockwise and take the key out.

https://truckmanualshub.com/

3.2.9 ENGINE REAR COVER

⚠ CAUTION

- **When carrying out inspection and service inside the engine rear cover, always open the cover fully until it is secured in position by the rod.**

IMPORTANT

- **Except when opening the cover, always keep it locked.**
- **When it is locked, opening knob (1) of the cover does not move.**

1. Release lock (1) of the cover.
   (For details of the method of opening and closing the cover with the lock, see Section "3.2.8 COVER WITH LOCK").
2. Pull opening knob (2) of the cover and open engine rear cover (3).
3. Pull engine rear cover (3) and open it fully. Cover (3) is secured in position by rod (4).
4. When closing engine rear cover (3), lift up rod (4) and close cover (3) slightly. When the rod comes out from the groove, close the cover.
   Push cover (3) in to lock it.
5. Lock the cover.

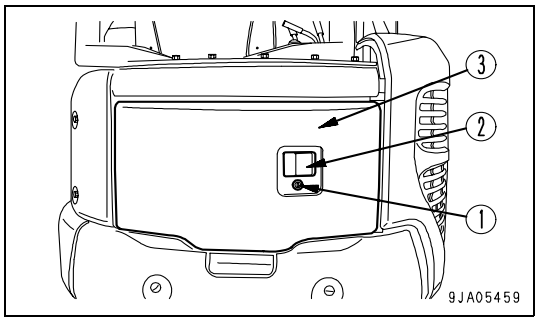

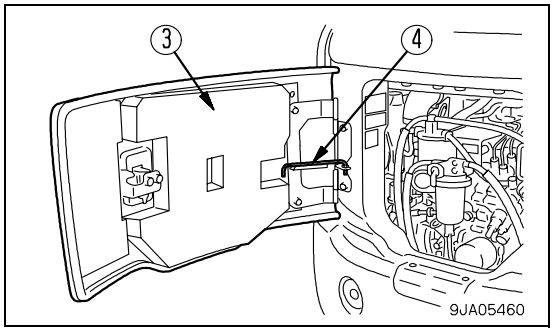

https://truckmanualshub.com/

3.2.10 COOLING COVER

⚠ CAUTION

- **When carrying out inspection and maintenance inside the cooling cover, open the engine rear cover, then open the cooling cover.**
  Always open the engine rear cover fully to a point where it is held in position by the rod.
  Always secure the cooling cover in position with the rod.

1. Open engine rear cover (1) until it is secured in position. (For details, see Section "3.2.9 ENGINE REAR COVER")
2. Pull cover opening lever (2) and open cooling cover (3).

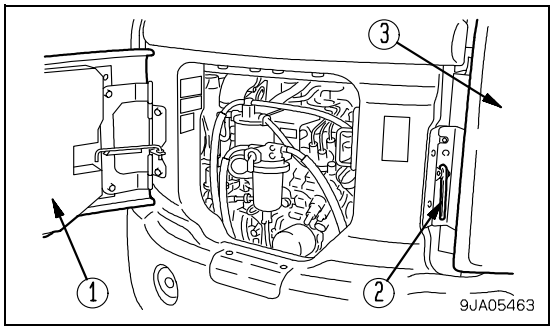

3. Pull engine rear cover (3) and open it fully. Cover (3) is secured in position by rod (4).
4. When closing engine rear cover (3), lift up rod (4) and close cover (3) slightly. When the rod comes out from the groove, close the cover.
   Push cover (3) in to lock it.
5. Lock the cover.

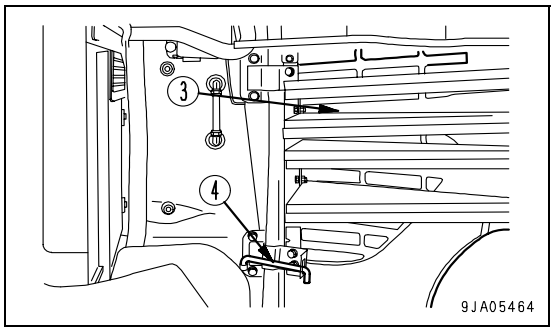

https://truckmanualshub.com/

3.2.11 MUD COVER

WARNING

- **Never climb on top of the cover. There is danger that you may slip and fall.**
- **When carrying out inspection and maintenance inside the cover, always open the cover fully and check that it is secured in position by the support lever.**

IMPORTANT

- **Always keep the hood locked except when opening it. Check the direction of the key slot in the opening knob to check that it is locked.**

1. Release lock (1) of the cover.
   (For details of the method of opening and closing the cover with the lock, see Section "3.2.8 COVER WITH LOCK").
2. Push opening knob (1) of the dirt cover to release the lock, then open cover (2).

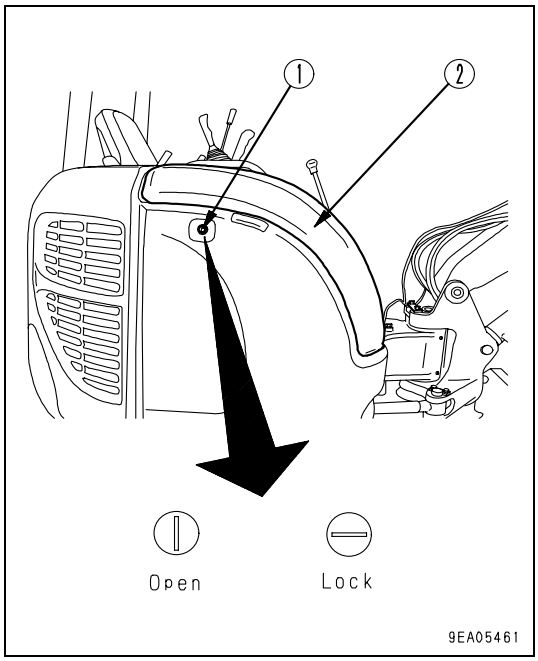

3. When dirt cover (2) is opened fully, it is secured in position by support lever (3).
   After opening dirt cover (2), check that cover (2) is secured in position by support lever (3).
4. When closing dirt cover (2), pull up support lever (3) slightly, hold cover (2), lower it slowly, then push cover (2) in to lock it.
5. Lock the cover.

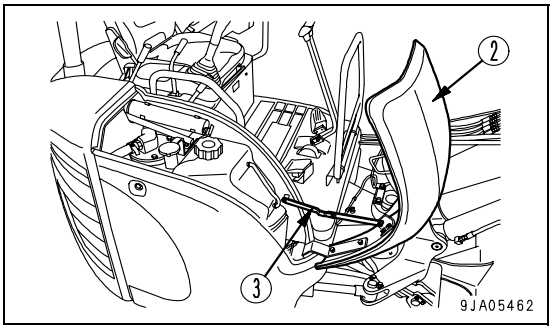

https://truckmanualshub.com/

3.2.12 METHOD OF OPENING (TILTING) FLOOR

⚠ WARNING

- **Always observe the warning and caution items when opening or closing the floor. If the operation is carried out mistakenly, it may lead to serious personal injury.**
  Do not open or close the floor on slopes.
  Do not open or close the floor when there is a strong wind.
  Do not enter the floor area or the inside of the cab when the floor is open.
  Do not start the engine when the floor is open.
  If there is any breakage or abnormality in the lock when the floor is opened, stop the operation and ask your Komatsu Utility Dealer to carry out repairs.
  Do not remove the canopy. There is danger that the floor may suddenly come up.
  Do not remove the floor mounting bolts (1). There is danger that the floor may suddenly come up.

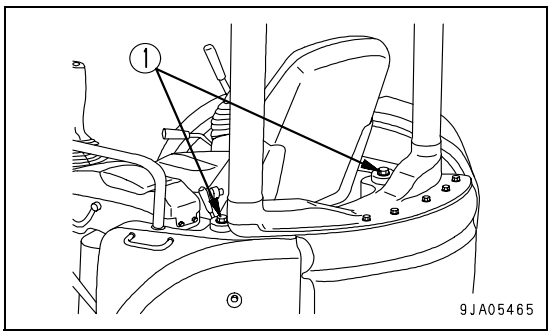

When opening (tilt open)

1. Lower the blade.
2. Extend the bucket and arm cylinders fully, then lower the boom slowly.

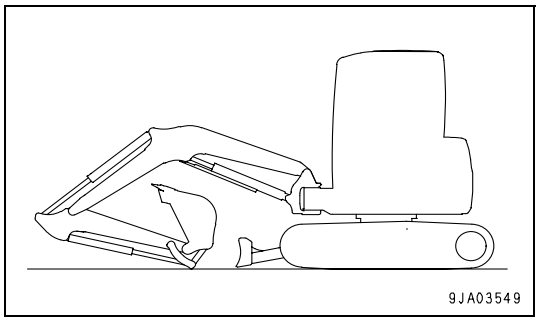

3. Set the safety lock lever to the LOCK position, then stop the engine.

NOTE

- **For machines equipped with a cab, there is only a safety lock lever on the left.**

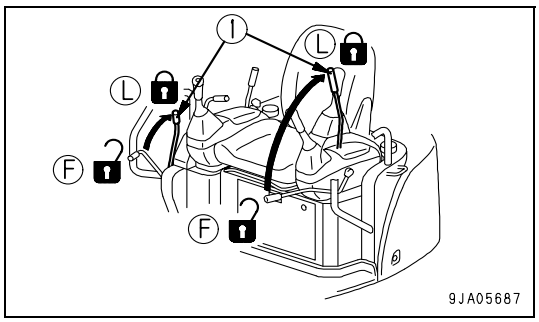

4. Fit blocks securely under the track to prevent the machine from moving.

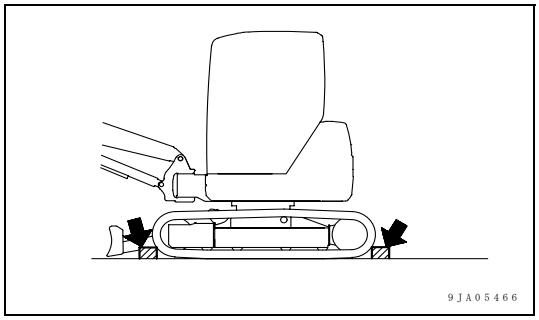

https://truckmanualshub.com/

5. Open dirt cover (2) fully and secure it in position.
   (For details of the method of opening and closing the cover with the lock, see Section "3.2.8 COVER WITH LOCK").

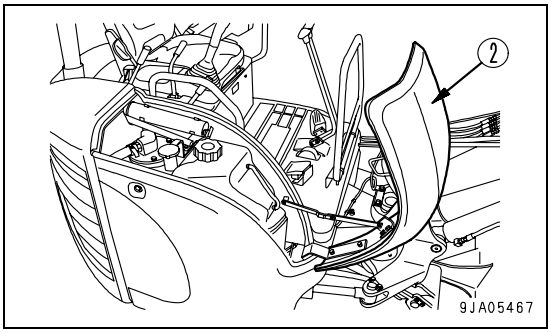

6. Remove bolts (3) (M10 x 3), then remove triangular cover (4).

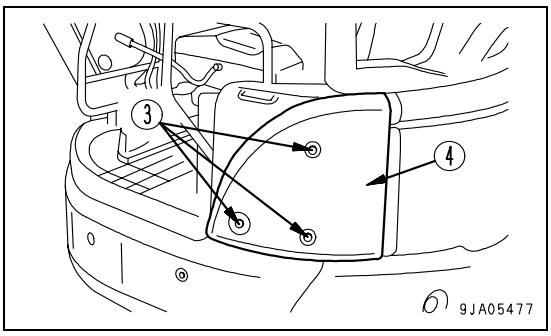

7. Open engine rear cover (5) fully and secure it in position.
   (For details of the method of opening and closing the cover with the lock, see Section "3.2.8 COVER WITH LOCK")
8. Loosen floor tilt lock bolts (6) (M14 x 2).
   Bolts (6) have a structure that prevents them from falling out.
9. Close engine rear cover (5).

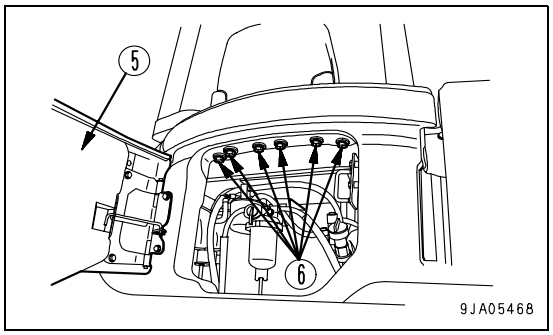

https://truckmanualshub.com/

10. Open inspection window (7), use your left hand to pull floor lock release lever (8) in the direction of the arrow (to the rear) while holding knob (9) with your right hand and pushing it up in the direction of the arrow (approx 45°).
    The canopy or cab form one unit with the floor and rise up together with the floor.

IMPORTANT

- **If the floor does not come up, release lever (8) is not in the release position.**
  Pull knob (9) back with your right hand, then repeat the above procedure again.
- **When opening or closing the floor, do not let any part of your body enter the area under the floor.**

NOTE

- **The floor opening operation is assisted by a gas cylinder, so when the ambient temperature is low, the operating effort increases.**

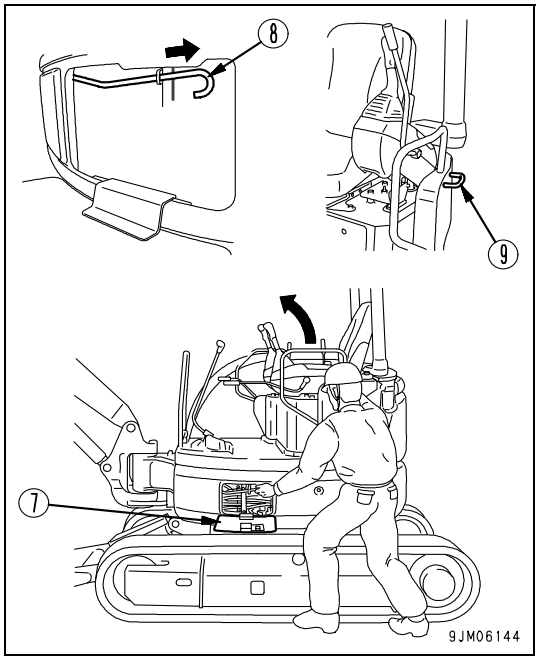

11. After the floor rises, push knob (9) up until lock pin (10) fits in the lock groove (12) of lock plate (11).
    When lock pin (10) moves to lock groove (12), the 1st stage lock is completed.
12. Insert 2nd lock pin (13) into lock hole (14) from the inside. When doing this, insert securely until the tip of lock pin (13) comes out at least 15 mm (0.6 in.) from the plate.
    This completes the 2nd stage lock, and and the operation to open the floor is completed.

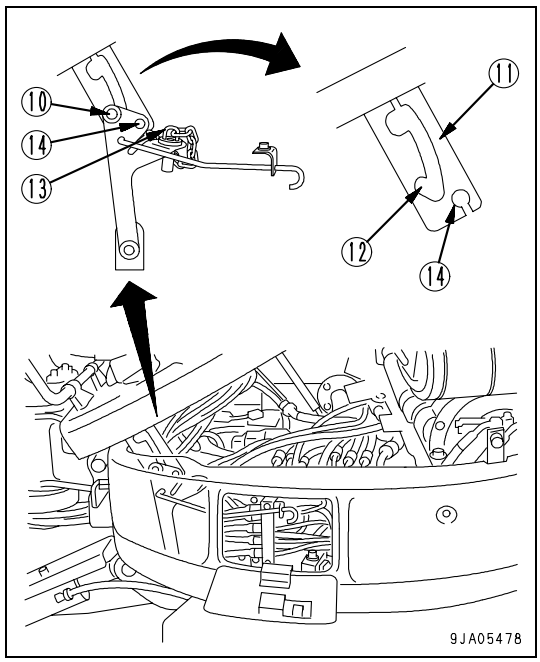

https://truckmanualshub.com/

When closing (tilt close)

IMPORTANT

- **Before closing the floor, check that there is no damage or abnormality in the wiring or piping inside the floor.**
  If any damage or abnormality is found, please ask your Komatsu Utility Dealer to carry out repairs.

1. Remove lock pin (13) and insert it into storage hole (15).

NOTE

- **If lock pin (13) does not come out, do as follows.**
  Machine equipped with canopy:
  Hold knob (9) and raise while removing lock pin.
  Machine equipped with cab:
  Hold knob (9) and lower while removing lock pin.

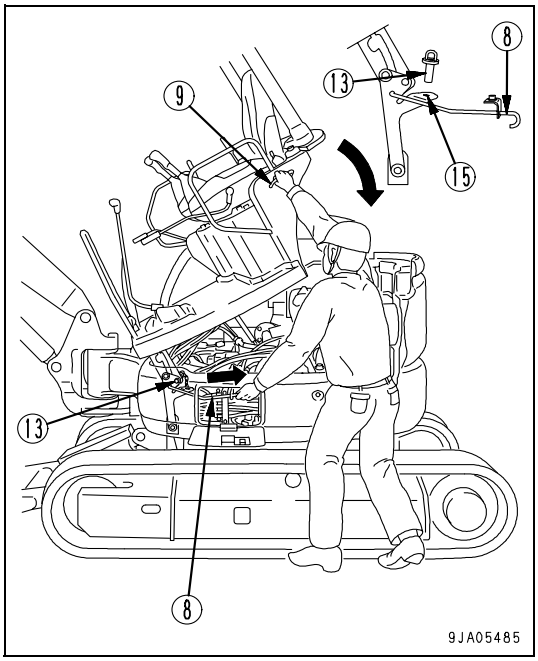

2. Use your left hand to pull floor lock release lever (8) in the direction of the arrow (to the rear) while holding knob (9) with your right hand and pulling it down in the direction of the arrow (approx 45°).

IMPORTANT

- **Lower slowly and check that there is no damage or catching of the wiring or piping.**
- **When opening or closing the floor, do not let any part of your body enter the area under the floor.**

3. Open engine rear cover (5) fully and secure it in position. (For details of the method of opening and closing the cover with the lock, see Section "3.2.8 COVER WITH LOCK").
4. Tighten floor tilt lock bolts (6) (M14).
   Number of floor tilt lock bolts: 6
   Tightening torque: 156.8 to 196 Nm

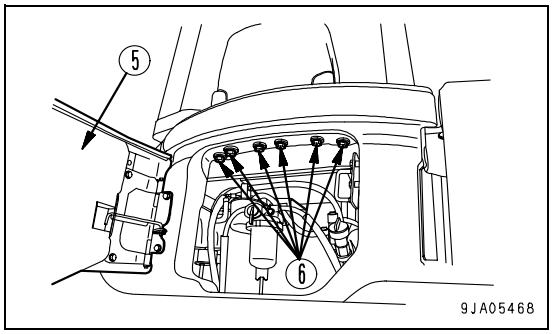

NOTE

- **If any bolt (6) is damaged, replace it with a genuine Komatsu Utility part of the same size.**

5. Close engine rear cover (5).
6. Install triangular cover (4) with bolts (3) (M10 x 3).

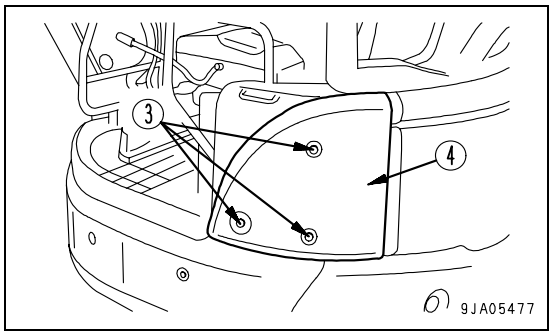

https://truckmanualshub.com/

7. Close dirt cover (2).
   (For details of the method of opening and closing the cover with the lock, see Section "3.2.8 COVER WITH LOCK").
   This completes the operation for closing the floor.

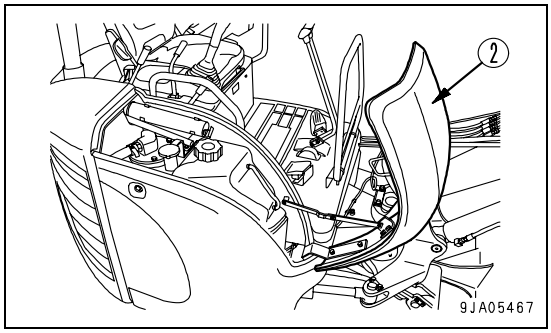

https://truckmanualshub.com/

3.2.13 FUSE

IMPORTANT
- **Before replacing a fuse, be sure to turn off the starting switch.**

The fuses protect the electrical equipment and wiring from burning out.
If the fuse becomes corroded, or white powder can be seen, or the fuse is loose in the fuse holder, replace the fuse.
Replace the fuse with another of the same capacity.

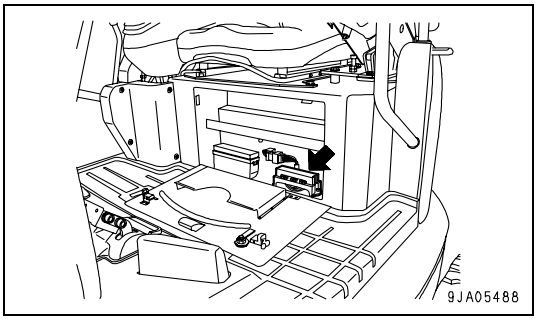

Fuse Capacities and Circuit Names

No.	Fuse capacity		Name of circuit
	Canopy specification	Cab specification	
(1)	30A		Engine stop solenoid
(2)	10A		PPC solenoid, horn, fuel pump, safety relay
(3)	10A		Monitor panel, buzzer, speed boost solenoid
(4)	10A		If equipped
(5)	10A	20A	Heater, travel alarm buzzer air conditioner (Cab specification)
(6)	-	20A	Room lamp, radio, windshield wiper, window washer
(7)	10A		Monitor panel, controller, radio (Cab specification)
(8)	10A	20A	Working lamp
(9)	-		-
(10)	-		-
(11)	30A		Spare
(12)	10A	20A	Spare
(13)	10A		Spare

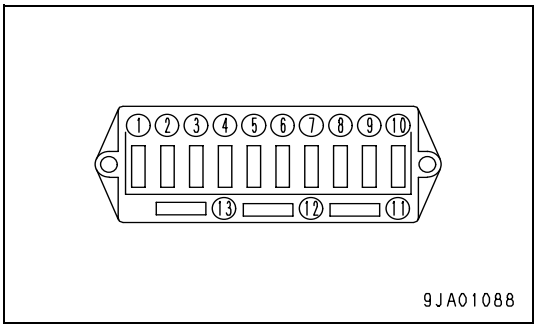

3.2.14 BLOCK FUSE

If the starting motor does not turn even when the starting switch is turned to the ON position, block fuse (1) is probably blown, so open the cover at the right side of the machine and check or replace the fuse.
This is at the top surface of the battery.
For details of the method of opening and closing the cover on the right side of the machine, see "3.2.10 COOLING COVER".

NOTE
- **A block fuse is a large fuse wire installed to the circuit where a large-capacity current is flowing. It acts in the same way as a normal fuse to protect the electrical equipment and wiring from burning out under abnormal current.**

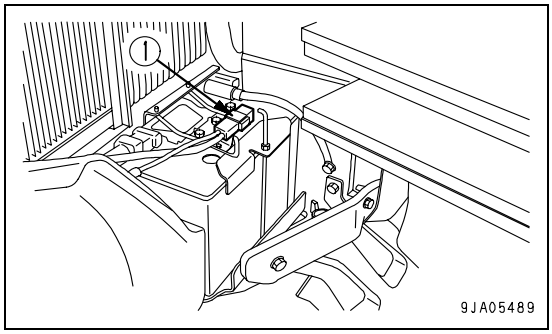

https://truckmanualshub.com/

3.2.15 OPERATION MANUAL STORAGE

IMPORTANT

- **Except when opening the cover for some reason, always keep the cover locked.**

This is under the operator's seat.
There is a box for keeping the Operation and Maintenance Manual in the rear of the operator's seat backrest.
Keep the Operation and Maintenance Manual in the box so that it can be seen at any time.

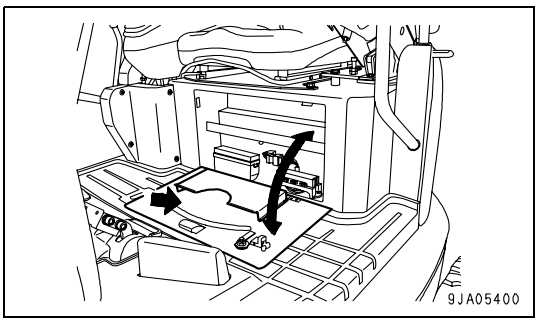

3.2.16 TOOL BOX

IMPORTANT

- **Except when opening the cover for some reason, always keep the cover locked.**

Store the tools in this box.

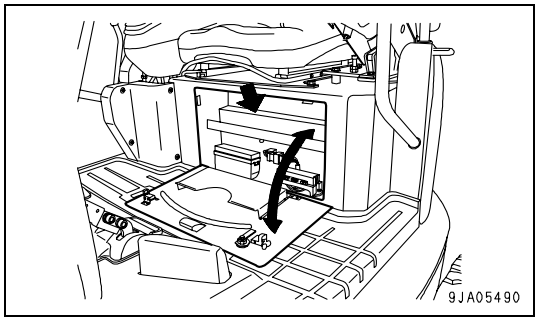

3.2.17 GREASE GUN HOLDER

⚠ WARNING

- **Immediately after the engine is stopped, the parts are at a high temperature, and will cause burns. Wait for the temperature to go down before starting the operation.**

This is on top of the fuel tank. When not using the grease gun, fit it in this holder.

Close the grease gun handle and stow the grease gun with the handle on the outside of the machine.

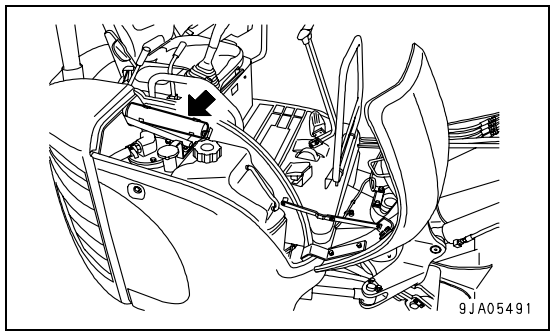

3.2.18 ASHTRAY

(Machines equipped with cab)

This is on the right side of the operator's compartment.
It is a magnetic type, so it can be fitted at any suitable place.
Always check that the cigarette is out before closing the lid.

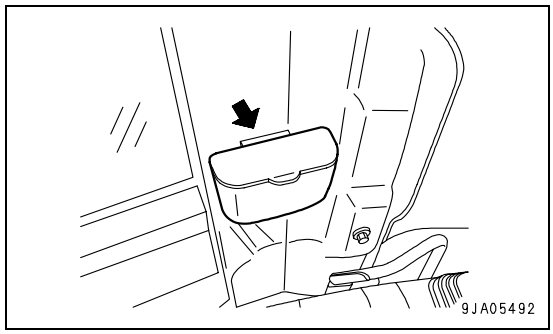

https://truckmanualshub.com/

3.3 MACHINE OPERATIONS AND CONTROLS

3.3.1 BEFORE STARTING ENGINE

3.3.1.1 WALK-AROUND CHECKS

Before starting the engine, look around the machine and under the machine to check for loose nuts or bolts, or leakage of oil, fuel, or coolant, and check the condition of the work equipment and hydraulic system. Check also for loose wiring, play, and accumulation of dust in places which reach high temperatures.

⚠ WARNING

- **When opening the engine rear cover, cooling cover, and dirt cover to carry out inspection and maintenance, always open the cover until it is secured in position by the stopper.**
- **Immediately remove any flammable materials that have accumulated around the battery or engine muffler and other high temperature parts of the engine. Leakage of oil and fuel will cause the machine to catch fire. Always check thoroughly and repair any problems or contact your Komatsu distributor.**
- **Check that the floor is secured properly by bolts (1). If it is not secured properly, it may cause serious personal injury.**

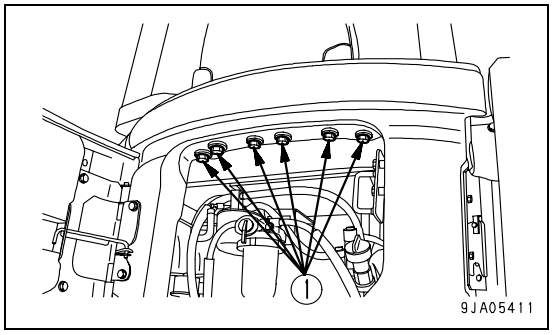

If the machine is at an angle, reposition it level before checking.
Carry out the following inspections and cleaning every day before starting the engine for the day's work.

1. Check for damage, wear, play in work equipment, cylinders, linkage, and hoses.
   Check that there are no cracks, excessive wear, or play in the work equipment, cylinders, linkage, or hoses. If any abnormality is found, repair it.
2. Remove dirt and dust from around engine, battery, and radiator.
   Check that there is no dirt or dust accumulated around the engine or radiator. Check also that there is no flammable material (dry leaves, twigs, etc.) accumulated around the engine muffler or high temperature parts of the engine, or around the battery. Remove all dirt, dust, and flammable materials.
3. Check for leakage of water or oil around engine.
   Check that there is no leakage of oil from the engine or leakage of water from the cooling system. If any abnormality is found, repair it.
4. Check for oil leakage from hydraulic equipment, hydraulic tank, hoses, joints
   Check that there is no oil leakage. If any abnormality is found, repair the place where the oil is leaking.
5. Check of the undercarriage parts.
   Check track shoe, sprocket, idler, guard for damage, wear, loose bolts, or leakage of oil from rollers, etc. Repair them if any trouble is found.
6. Check of the handrails and steps.
   Check the handrails and steps for any damage or loosened bolts, and repair the damaged part and tighten the loosened bolts, if any.
7. Check for abnormality in gauges and monitor.
   Check that there is no abnormality in the gauges and monitor in the operator's cab. If any abnormality is found, replace the parts. Clean off any dirt on the surface.
8. Seat belt and mounting clamps.
   Check that there is no abnormality in the seat belt or mounting clamps. If there is any damage, replace with new parts.

https://truckmanualshub.com/

9. Inspection of floor tilt lock bolts.
   - Open the engine rear cover and check that 6 floor tilt lock bolts (1) are tightened properly.
     If any bolts are loose, tighten them.
   - If there is any up-and-down play in the floor plate, or if clearance (A) is too large (normal: approx. 5 mm (0.197 in)), lock bolts (1) may be broken or loose, so check lock bolts (1).

   If any abnormality is found, always carry out repairs or ask your Komatsu Utility Dealer to carry out repairs.

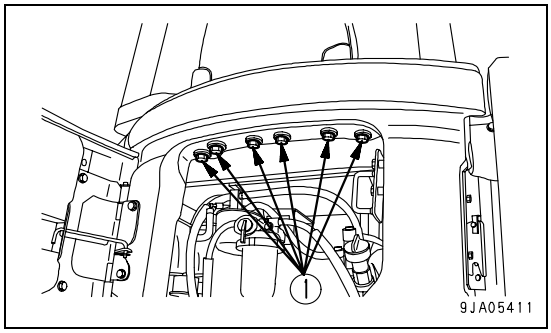

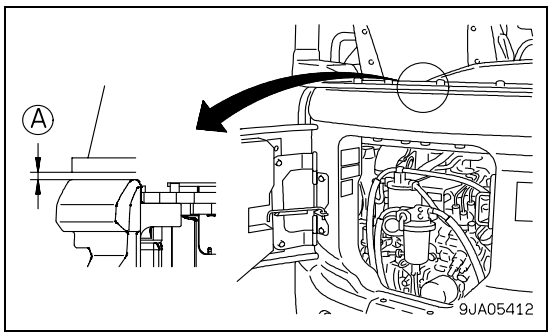

https://truckmanualshub.com/

3.3.1.2 CHECKS BEFORE STARTING

Always check the items in this section before starting the engine each day.

CHECK COOLANT LEVEL, ADD COOLANT

⚠ WARNING

- **Do not open the radiator cap unless necessary. When checking the coolant, always wait for the engine to cool down and check the sub tank.**
- **Immediately after the engine is stopped, the coolant is at a high temperature and the radiator is under high internal pressure. If the cap is removed to check the coolant level in this condition, there is a hazard of burns. Wait for the temperature to go down, then turn the cap slowly to release the pressure before removing it.**

1. Open the engine rear cover and cooling cover. For details, see Section "3.2.10 COOLING COVER".
2. Check that the cooling water level is between the FULL and LOW range on sub tank (1). If the water level is low, add water through the water filler port of sub tank (1) to the FULL line.
3. After adding water, tighten the cap securely.
4. If the reserve tank is empty, check for leakage of water, then check the radiator water level. Add water to the radiator if necessary, then add water to the reserve tank.

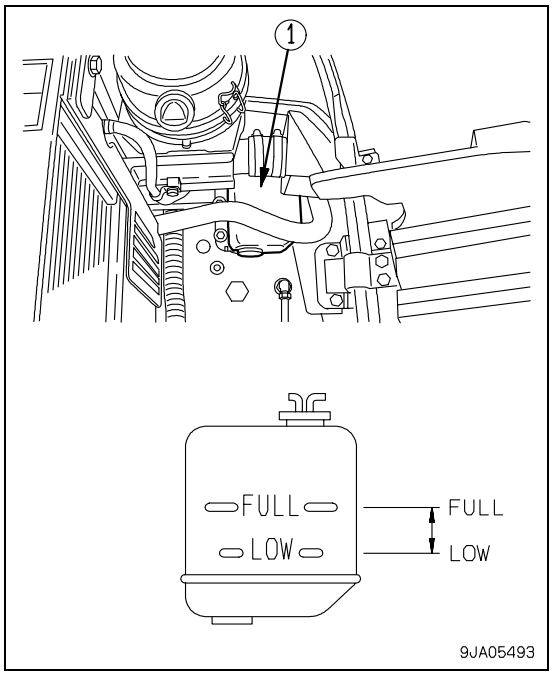

https://truckmanualshub.com/

CHECK OIL LEVEL IN ENGINE OIL PAN, ADD OIL

WARNING

- **Engine parts and oil are at high temperature immediately after the engine is stopped, and will cause serious burns. Wait for the temperature to cool down before starting the operation.**

CAUTION

- **When carrying out inspection and service inside the engine rear cover, always open the cover fully until it is secured in position by the rod.**

If the machine is at an angle, reposition it to level before checking.
When checking the oil level after the engine has been operated, allow the engine to cool for 15 minutes before checking.

1. Open the engine rear cover.
2. Remove dipstick (G) and wipe the oil off with a cloth.
3. Completely insert dipstick (G) into the oil filler pipe, then remove it and check the oil level.

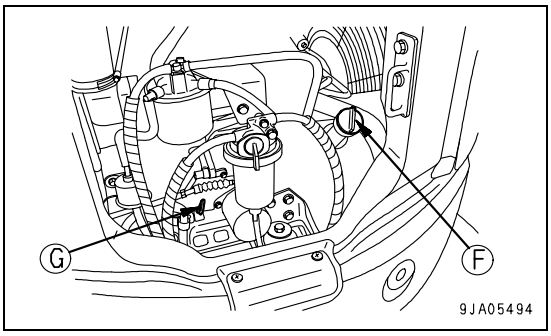

4. The oil level should be between the H and L marks on dipstick (G).
   If the oil level is below the L mark, add oil through oil filler (F).

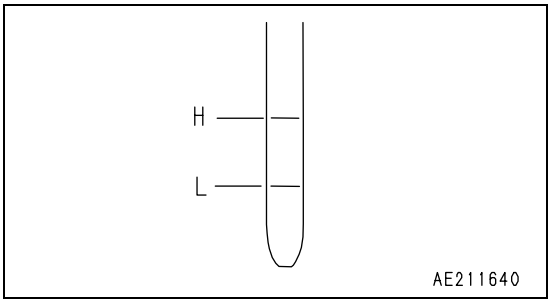

5. If the oil is above the H mark, drain the excess engine oil from drain plug (P), and check the oil level again.

NOTE
- **An undercover is installed on the PC35MR, so remove the undercover before starting the operation.**

6. If the oil level is correct, tighten the oil filler, then close the engine rear cover.

NOTE
- **Install the undercover on the PC35MR.**

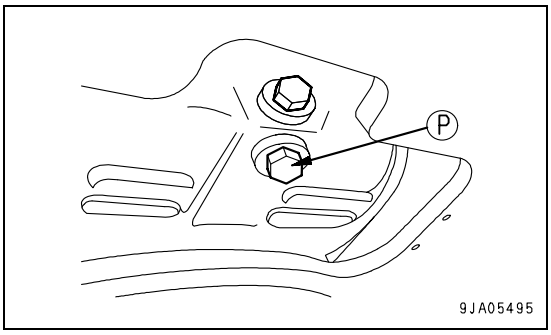

https://truckmanualshub.com/

CHECK FUEL LEVEL, ADD FUEL

⚠ WARNING

- **When adding fuel, never spill the fuel or let it overflow. It will cause fire.**
  If any fuel has spilled, wipe it up completely. If fuel has spilled over soil or sand, remove that soil or sand.
  Fuel is highly flammable and dangerous. Never bring flames near fuel.

1. Insert the key in starting switch (1), and turn in to the ON position to light up the monitor.
2. Check the fuel level with fuel gauge (2). If the fuel level is low, open the dirt cover and add fuel through fuel filler port (F) while checking level gauge (G).
   Fuel capacity: 44 liters (11.62 US.gall.)
3. After adding fuel, tighten the cap securely.

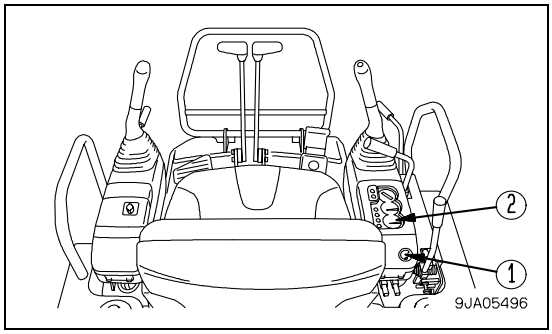

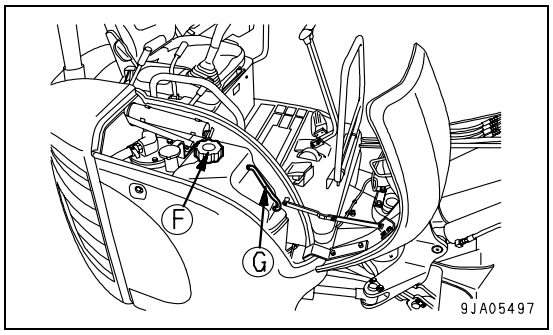

IMPORTANT

- **If breather hole (3) in the cab is clogged, the pressure in the tank will drop and fuel may not flow. Clean the hole from time to time and check that breather hole (3) is not clogged.**

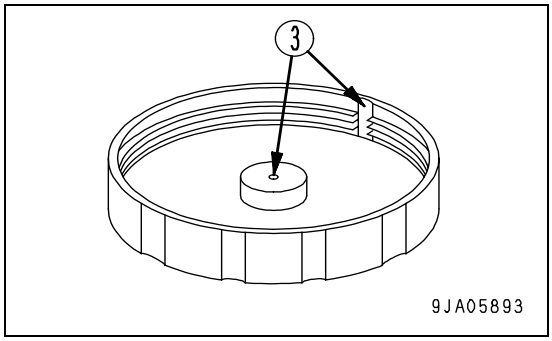

https://truckmanualshub.com/

CHECK OIL LEVEL IN HYDRAULIC TANK, ADD OIL

WARNING

- **The parts and oil are at high temperature after the engine is stopped, and may cause burns. Wait for the temperature to go down before starting the work.**
- **When removing the oil filler cap, turn it slowly to release the internal pressure, then remove it.**

1. If the work equipment is not in the condition shown in the diagram on the right, start the engine, run the engine at low speed, retract the arm and bucket cylinder rods fully, then lower the boom, set the bucket teeth in contact with the ground, and stop the engine.
2. Open the engine rear cover and cooling cover. For details, see Section "3.2.10 COOLING COVER".

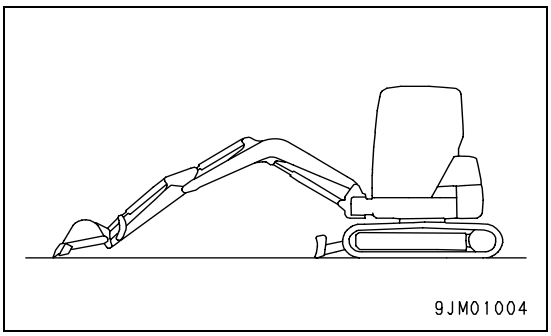

3. Confirm that the oil level is between the H and L marks of sight gauge (G).

IMPORTANT

- **Do not add oil above the H line. This will damage the hydraulic circuit or cause the oil to spurt out.**
  If oil has been added above the H level, stop the upper structure so that the drain plug (P) under the hydraulic tank will be between both tracks, and stop the engine and wait for the hydraulic oil to cool down, then drain the excess oil from drain plug (P).

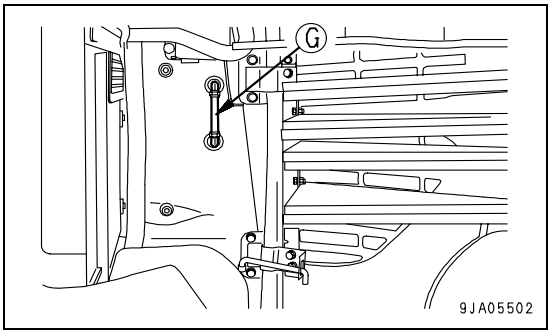

4. If the oil level is below the L mark, open the dirt cover, move the cover on top of oil filler port (F), then add oil through oil filler port (F) and install the oil filler cap.

NOTE

- **The oil level will vary depending upon the oil temperature.**
  Accordingly, use the following as the guide:
  Before operation: around L level
  (Oil temperature 10 to 30°C (50 to 86°F))
  Normal operation: around H level
  (Oil temperature 50 to 80°C (122 to 176°F))

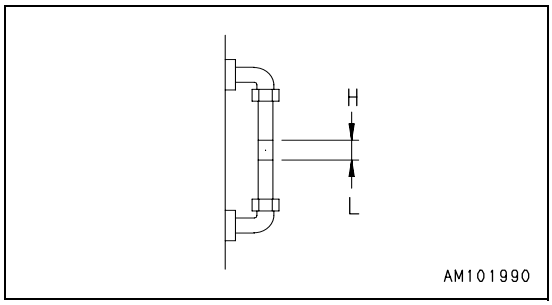

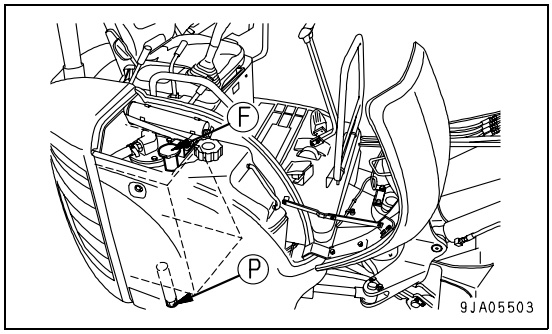

https://truckmanualshub.com/

5. Extend the boom, arm, and bucket cylinder fully as shown in the diagram on the right, remove the oil filler cap, then install the cap and pressurize the inside of the tank.

IMPORTANT

- **Be sure to pressurize the hydraulic tank. If it is not pressurized, the pump will suck in air, and this will adversely affect the equipment.**

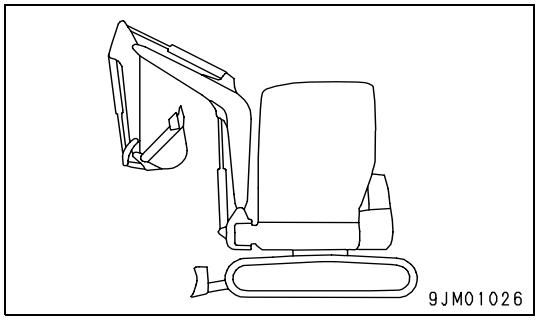

CHECK DUST INDICATOR

1. Open the engine rear cover and cooling cover. For details, see Section "3.2.10 COOLING COVER".
2. Check that the red piston has not appeared in the transparent portion of dust indicator (1).
3. If the red piston has appeared, clean or replace the element immediately.
   For details of the method of cleaning the element, see "4.9.1.a CHECK, CLEAN AND REPLACE AIR CLEANER ELEMENT".

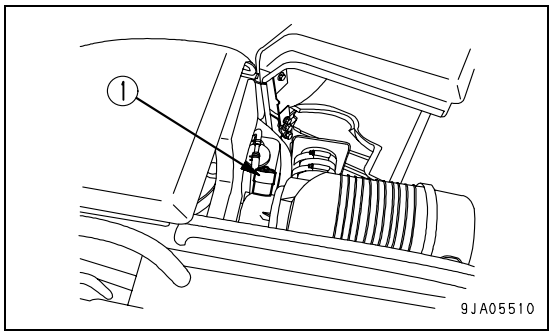

4. After checking, cleaning, and replacing, press the knob of dust indicator (1) to return the red piston to its original position.

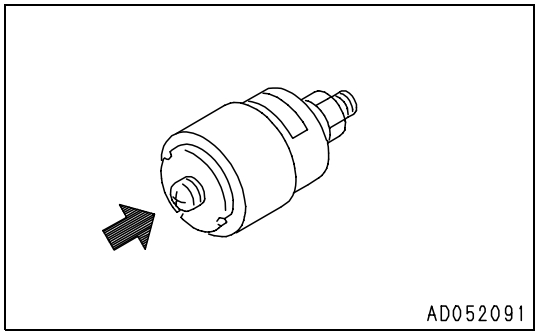

CHECK WATER SEPARATOR

If red ring (1) of the water separator is at the bottom of case (2), there is no water.

If the ring (1) is floating, there is water up to the bottom of the ring, so drain the water as follows.

1. Open the engine rear cover and cooling cover. For details, see Section "3.2.10 COOLING COVER".
2. Set handle (3) to CLOSED position (A).
3. Loosen drain plug (4), drain the accumulated water until red ring (1) reaches the bottom, then tighten plug (4).
4. Set handle (3) to OPEN position (B).
5. Drain any water or sediment from the fuel tank. For details, see "4.9.1.e DRAIN WATER AND SEDIMENT FROM FUEL TANK".

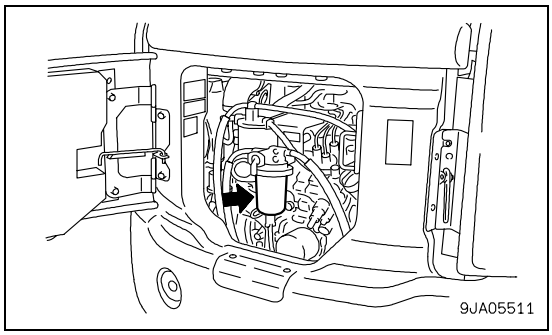

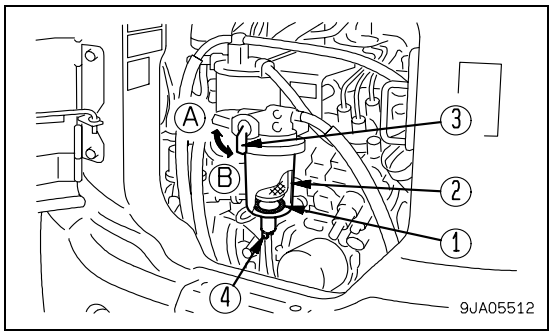

https://truckmanualshub.com/

CHECK ELECTRIC WIRINGS

⚠ WARNING

- **If the fuses frequently blow or if there are traces of short circuits on the electrical wiring, locate the cause immediately and carry out repairs, or contact your Komatsu Utility Dealer for repairs.**
- **Keep the top surface of the battery clean and check the breather hole in the battery cap. If it is clogged with dirt or dust, wash the battery cap to clean the breather hole.**

Check that there is no damage to the fuse, that a fuse of the specified capacity is being used, that there are no signs of any disconnection, breakage, or short circuit in the electric wiring, check for any loose terminals, and tighten any loose terminals that are found.
Be particularly careful to check the wiring for the battery, starting motor, and alternator.
In addition, if any flammable material is accumulated around the battery, remove it.
For troubleshooting and repairs, contact your Komatsu Utility Dealer.

CHECK FUNCTION OF HORN

1. Turn the starting switch to the ON position.
2. Confirm that the horn sounds immediately when the horn button is pressed.
   If the horn does not sound, please contact your Komatsu Utility Dealer for repair.

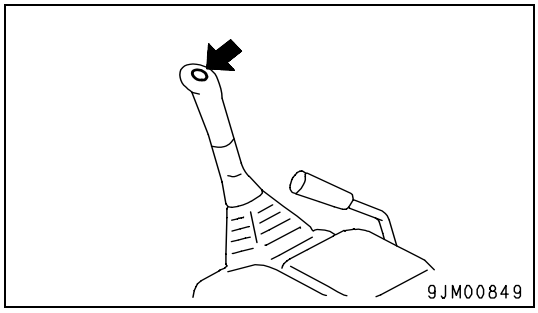

https://truckmanualshub.com/

3.3.1.3 ADJUSTMENT

WARNING

- **Adjust the seat position before starting operations or after changing the operator.**
- **Adjust the seat so that the control levers and switchis can be operated freely and easily with the operator back against the backrest.**

SEAT ADJUSTMENT

(A) Fore-and-aft adjustment

The seat can move forward and backward.

Move lever (1) to the upper, set the operator's seat at the desired poaition, then release the lever.

Amount for fore-and-aft adjustment: 140 mm (5.5 in.)

Adjust the position of the operator's seat to match the operation. For example, when carrying out deep digging operations, slide the seat to the front to improve the view below the front of the machine.

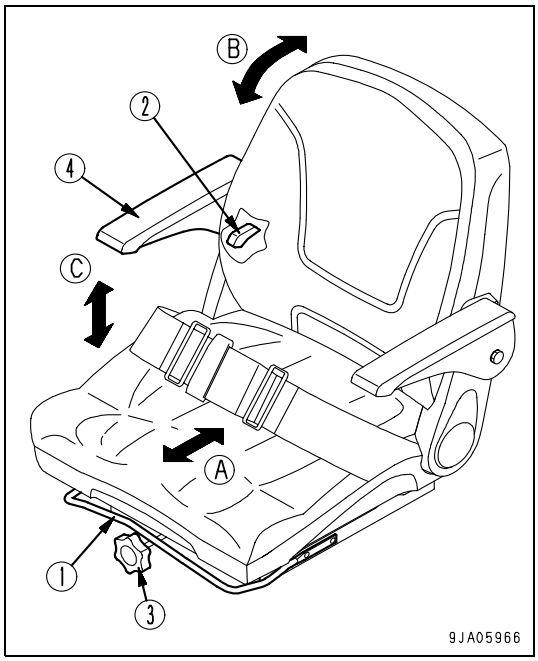

(B) Adjusting reclining

Pull up lever (2) and set the seat back to a position which is comfortable for operation, then release the lever.

Sit with your back against the seat back when adjusting. If your back is not touching the seat back, the seat back may suddenly move forward.

(C) Adjusting suspension

Turn knob (3) under the seat and adjust to the desired position.

The weight can be adjusted to 50 to 120 kg (110 to 265 lb.).

If you want to make the seat softer, turn the weight adjustment to a lower weight; if you want to make the seat harder, adjust to a higher weight.When operating on uneven surfaces, adjust the seat to a harder setting.

(D) Armrest

Armrest (4) can be made to spring up by hand approx. 90°.

https://truckmanualshub.com/

REARVIEW MIRRORS

Adjust the angle so that the area behind the operator's compartment can be seen clearly.

- **Machine equipped with canopy**

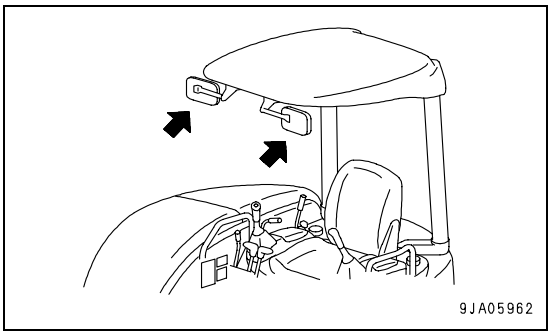

- **Machine equipped with cab**

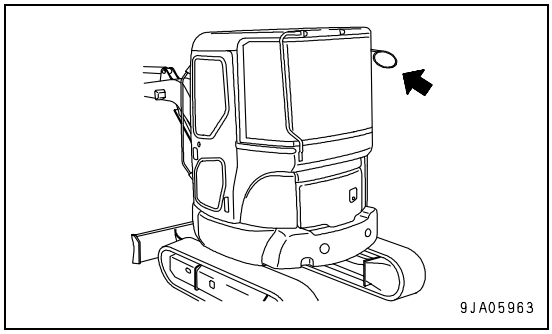

https://truckmanualshub.com/

SEAT BELT

⚠ WARNING

- **Before fastening the seat belt, check that there is no abnormality in the securing brackets or belt. If there is any wear or damage, replace.**
- **Even if there appears to be no abnormality in the seat belt, replace the seat belt once every 3 years. The date of manufacture is woven on the reverse side of the belt.**
- **Adjust and fasten the seat belt before operating the machine.**
- **Always use the seat belt when operating the machine.**
- **Do not use the seat belt with either half of the belt twisted.**

Check the mounting bolts of the belt fitting on the machine body for looseness, and re-tighten them if necessary. The tightening torque for the mounting bolt is 24.5 ± 4.9 Nm.
If the belt surface is scratched or frayed or if the fittings are broken or deformed, replace the seat belt unit.

Fastening and Removing

1. Adjust the seat so that the operator still feels that there is sufficient knee room when fully depressing the pedal while seated, with the operator's back against the back-rest.
2. After adjusting the seat poaition, sit in the seat. Grip buckle (1) and tongue (2) in each hand and insert tongue (2) into buckle (1). Confirm by pulling the belt that the tongue is securely locked to the buckle.
3. When removing the belt, raise the tip of buckle (1) lever to release it.

Fasten belt along your body without kinking it. Adjust the lengths of the belt on the tongue sides.

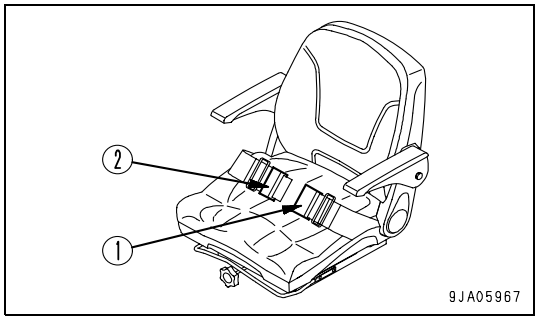

SEAT BELT ADJUSTMENT

Shortening

Pull the free end of the belt on either the buckle body or tongue side.

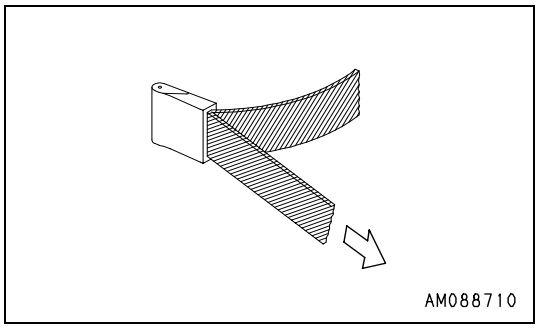

Lengthening

Pull the belt while holding it at a right angle to the buckle or tongue.

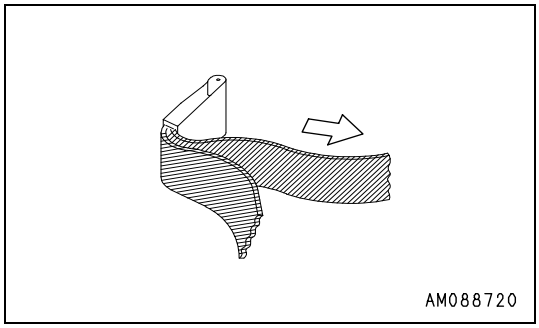

https://truckmanualshub.com/

3.3.1.4 OPERATIONS BEFORE STARTING ENGINE

WARNING

- **When standing up from the operator's seat, always set the safety lock lever to the LOCK position, regardless of whether the engine is running or stopped.**

1. Check that safety lock lever (1) is at the LOCK position (L).

NOTE

- **If the safety lock lever is not at LOCK position (L), the engine will not start.**

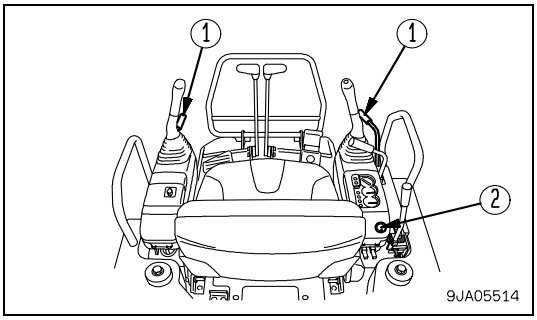

Machine equipped with canopy

If the safety lock lever on either the left or right is not at LOCK position (L), the engine will not start.

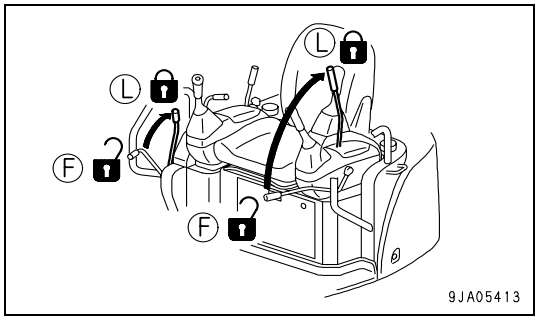

Machine equipped with cab

NOTE

- **For machines equipped with a cab, there is only a safety lock lever on the left.**

2. Check the position of each levers.

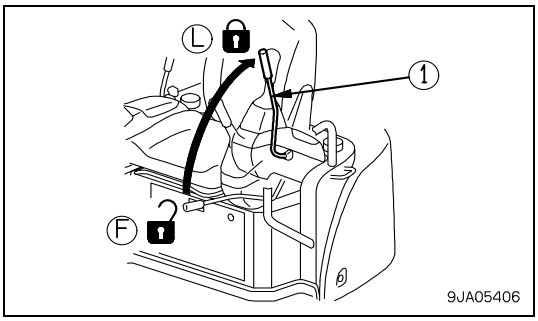

3. Insert the key in starting switch (2), turn the key to the ON position, then carry out the following checks.
4. The buzzer sounds for approx. 1 second, then the monitors and gauges light up for approx. 3 seconds.
   - Preheating monitor (3)
   - Charge monitor (4)
   - Engine oil pressure monitor (5)
   - Engine water temperature caution lamp (6)
   - Fuel level caution lamp (7)
   - Travel speed boost monitor (8)

   If a monitor or gauge does not light up or the buzzer does not sound, there is probably a blown fuse or disconnection in the monitor, so contact your Komatsu Utility Dealer for repairs.
   After approx. 3 seconds, only the following monitors stay lighted up. The other monitors go out.
   - Charge monitor (4)
   - Engine oil pressure monitor (5)

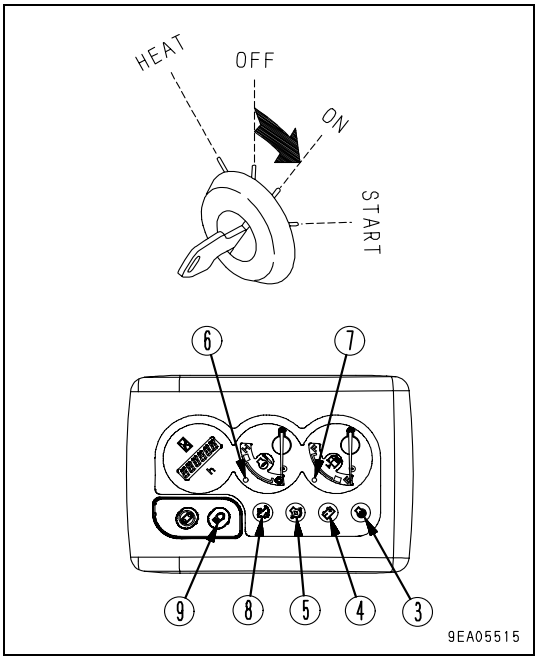

https://truckmanualshub.com/

5. Press lamp switch (9) and check that the working lamp lights up. If it does not light up, there is probably a blown bulb or disconnection, so contact your Komatsu Utility Dealer for repairs.

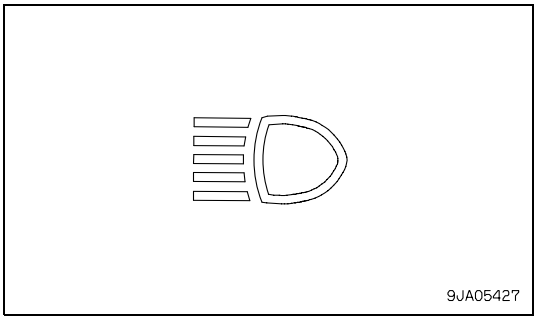

6. Press horn switch (10) to confirm that the horn will sound.

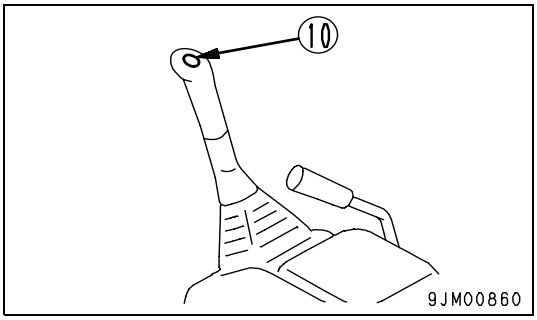

https://truckmanualshub.com/

3.3.1.5 STARTING ENGINE

Normal Starting

WARNING

- **Start the engine only after sitting down in the operator's seat.**
- **Do not attempt to start the engine by short-circuiting the engine starting circuit. Such an act may cause serious bodily injury or fire.**
- **Check that there are no persons or obstacles in the surrounding area, then sound the horn and start the engine.**
- **Exhaust gas is toxic. When starting the engine in confined spaces, be particularly careful to ensure good ventilation.**

IMPORTANT

- **Do not keep the starting motor rotating continuously for more than 20 seconds.**
  If the engine does not start, wait for at least one minute, then try again.

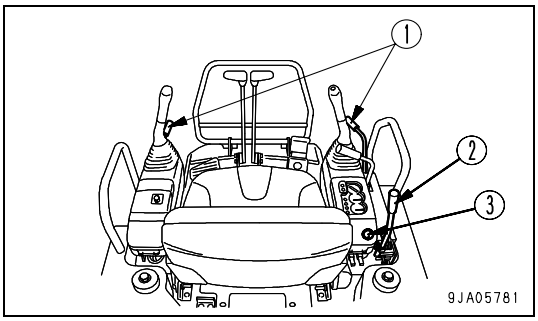

1. Check the safety lock lever (1) is at the LOCK position (L). If the safety lock lever is in the FREE position (F), the engine does not start.

NOTE

- **For machines equipped with a cab, there is only a safety lock lever on the left.**

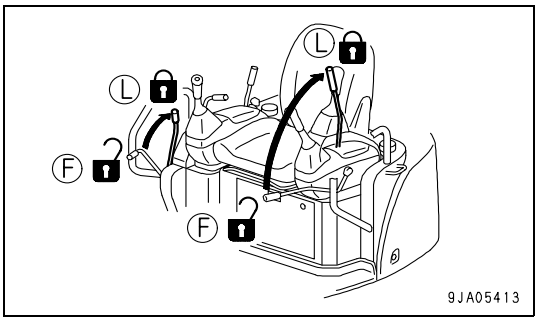

2. Pull fuel control lever (2) to position (B) midway between low idling position (A) and the full position.

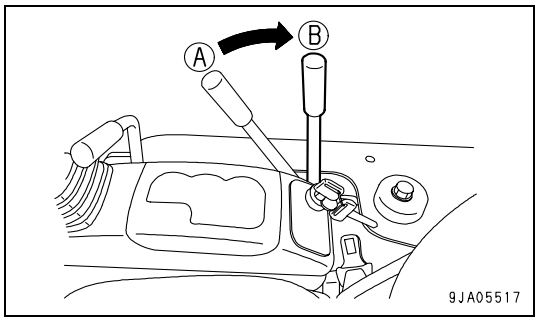

3. Turn the key in starting switch (3) to the START position. The engine will start.

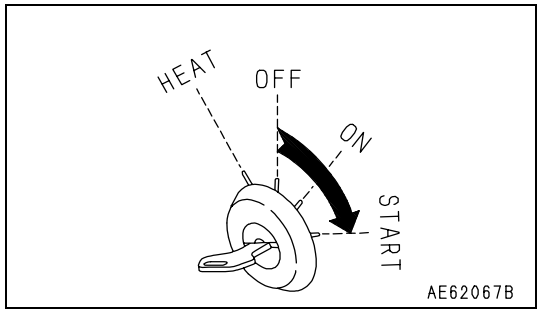

https://truckmanualshub.com/

4. When the engine start, release the key in the starting switch (3). The key will return automatically to the ON position.

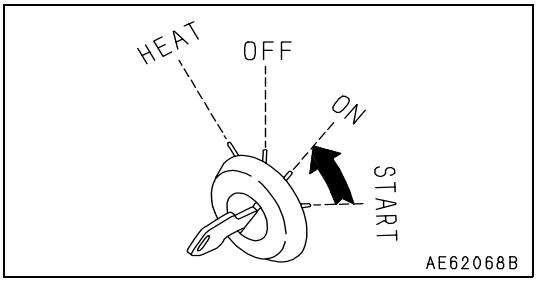

Starting Engine in Cold Weather

⚠ WARNING

- **Start the engine only after sitting down in the operator's seat.**
- **Do not attempt to start the engine by short-circuiting the engine starting circuit. Such an act may cause a serious bodily injury or fire.**
- **Check that there are no persons or obstacles in the surrounding area, then sound the horn and start the engine.**
- **Never use starting aid fluids as they may cause explosions.**
- **Exhaust gas is toxic. When starting the engine in confined spaces, be particularly careful to ensure good ventilation.**

IMPORTANT

- **Do not keep the starting motor rotating continuously for more than 20 seconds.**
  If the engine does not start, wait for at least one minute, then repeat the operation from Step 3.

When starting in low temperatures, do as follows.

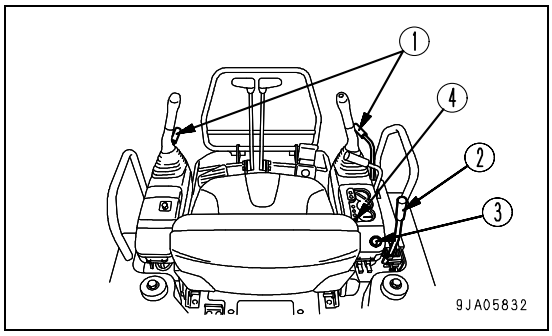

1. Check the safety lock lever (1) is at the LOCK position (L). If the safety lock lever is in the FREE position (F), the engine does not start.

NOTE

- **For machines equipped with a cab, there is only a safety lock lever on the left.**

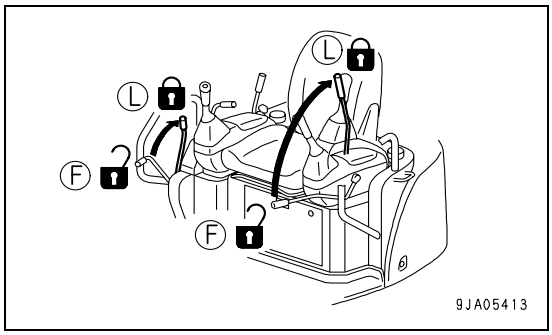

2. Pull fuel control lever (2) fully from the low idling position (position A) to the full speed position (position B).

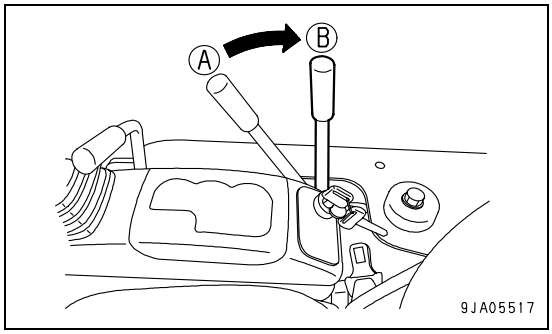

https://truckmanualshub.com/

3. Hold the key in starting switch (3) at the HEAT position and check that the buzzer sounds and preheating monitor (4) lights up, and that preheating monitor (4) flashes after that.
   After approx. 18 seconds, the buzzer sounds and preheating monitor (4) goes out to indicate that the preheating is completed.

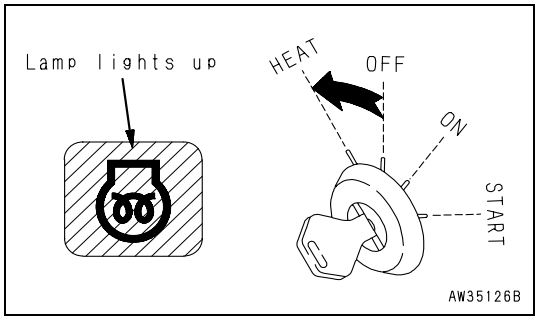

NOTE

- **The monitor and gauge also light up when the key is at the HEAT position, but this does not indicate any abnormality.**

4. When pre-heating monitor (4) goes off, turn the key in stating switch (3) to the START position to start the engine.

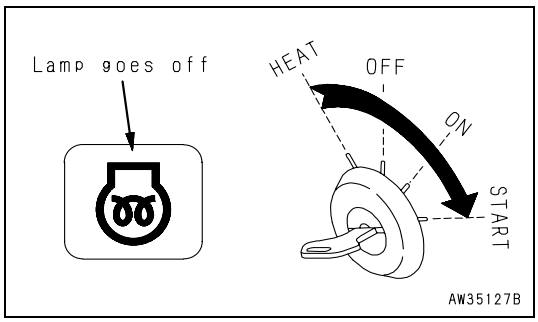

5. When the engine starts, release the key in starting switch (3). The key will return automatically to the ON position.

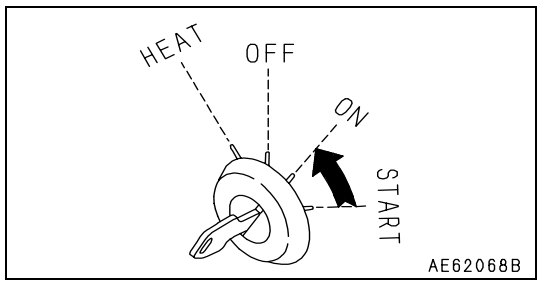

https://truckmanualshub.com/

3.3.2 AFTER STARTING ENGINE

WARNING

- **Emergency stop**
  If there has been any abnormal actuation or trouble, turn the starting switch key to the OFF position.
- **If the work equipment is operated without warming the machine up sufficiently, the response of the work equipment to the movement of the control lever will be slow, and the work equipment may not move as the operator desires, so always carry out the warming-up operation. Particularly in cold areas, be sure to carry out the warming-up operation fully.**

3.3.2.1 BREAKING-IN THE NEW MACHINE

CAUTION

- **Your Komatsu Utility machine has been thoroughly adjusted and tested before shipment. However, operating the machine under severe conditions at the beginning can adversely affect the performance and shorten the machine life.**
  Be sure to break-in the machine for the initial 100 hours (as indicated by the service meter).
  During break-in operations, follow the precautions described in this manual.

- Idle the engine for 5 minutes after starting it up.
- Avoid operation with heavy loads or at high speeds.
- Immediately after starting the engine, avoid sudden starts, sudden acceleration, unnecessary sudden stops, and sudden changes in direction.

3.3.2.2 WARMING-UP OPERATION

IMPORTANT

- **When the hydraulic oil is at a low temperature, do not carry out operations or move the lever suddenly. Always carry out the warming-up operation. This will help to extend the machine life.**
- **Do not suddenly accelerate the engine before the warming-up operation is completed.**
  Do not run the engine at low idling or high idling continuously for more than 20 minutes.

After starting the engine, do not immediately start operations. First, carry out the following operations and checks.

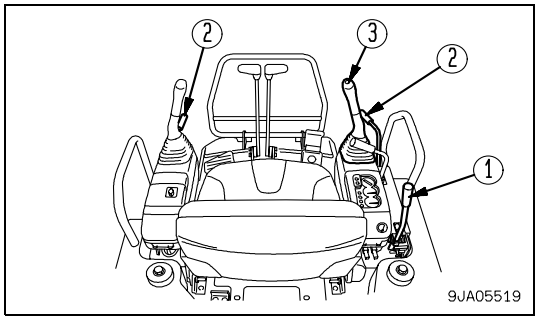

1. Pull fuel control lever (1) from low idling (position A) to midway position (B) between full speed and low idling to raise the engine speed to a mid-range speed, then run under no load for approx. 5 minutes.

NOTE

- **When the ambient temperature is below 0°C (32°F), keep the fuel control lever close to the 1/4 position when carrying out the warming-up operation.**

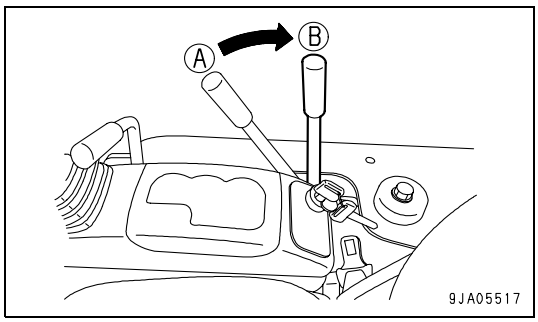

https://truckmanualshub.com/

2. Set safety lock lever (2) to the FREE position, and raise the bucket from the ground.

Machine equipped with canopy

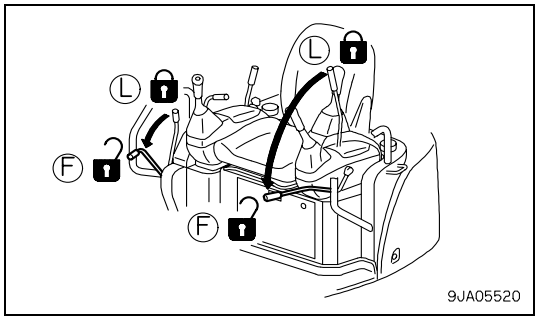

Machine equipped with cab

NOTE

- **For machines equipped with a cab, there is only a safety lock lever on the left.**

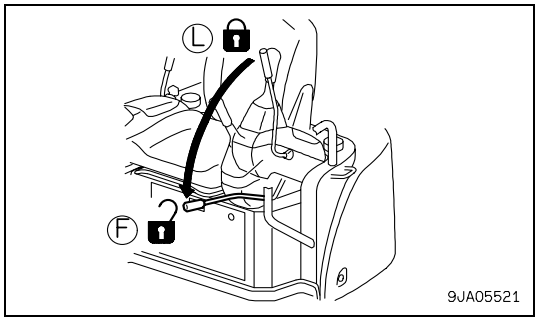

3. Operate right work equipment control lever (3) slowly, pull the bucket into the stop position, and hold it there for 5 minutes.

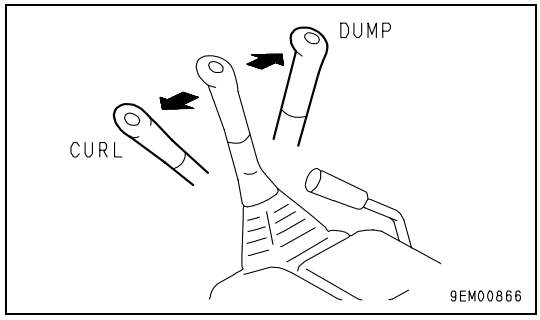

4. After carrying out the warming-up operation, check that each gauge and monitor is in the following condition. If any abnormality is found, carry out maintenance and repair.
   - Engine water temperature gauge (4): Indicator is in correct range
   - Fuel gauge (5): Indicator is in correct range
   - Engine oil pressure monitor (6): Monitor is off
   - Charge monitor (7): Monitor is off

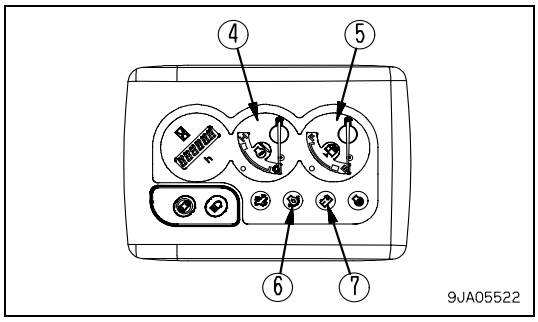

5. Check that there is no abnormal exhaust gas color, noise or vibration. If any abnormality is found, contact your Komatsu Utility Dealer.

https://truckmanualshub.com/

6. Set safety lock lever (2) to the LOCK position, then check that the machine does not move even when the levers and pedals are operated.
7. The work equipment and swing do not move when the left and right work equipment control levers are operated.
8. The machine does not travel when the left and right travel levers are operated.
9. The blade does not move when the blade control lever is operated.
10. The boom swing does not move when the boom swing control pedal is operated.

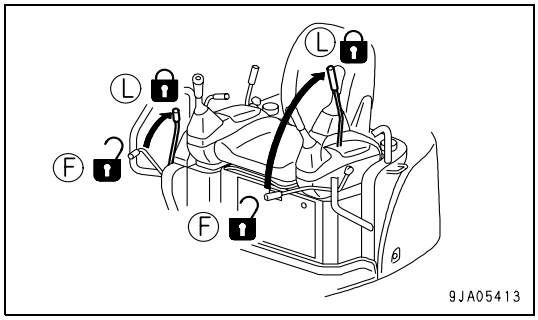

3.3.3 STOPPING THE ENGINE

IMPORTANT

- **If the engine is stopped abruptly, service life of component parts of the engine may be considerably reduced. Hence do not stop the engine abruptly except in an emergency. If the engine has overheated, do not try to stop it abruptly but run it at medium speed to allow it to cool down gradually, and then stop it.**

1. Run the engine at low idling for about 5 minutes to cool down gradually.

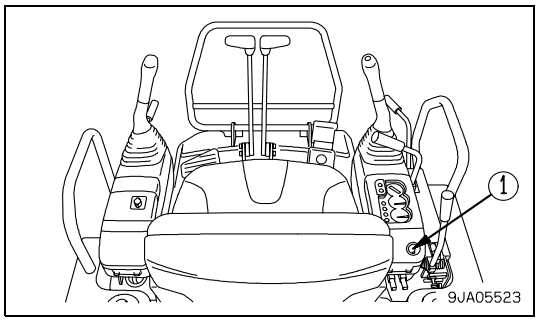

2. Turn the key of starting switch (1) to the OFF position to stop the engine.
3. Remove the key from starting switch (1).

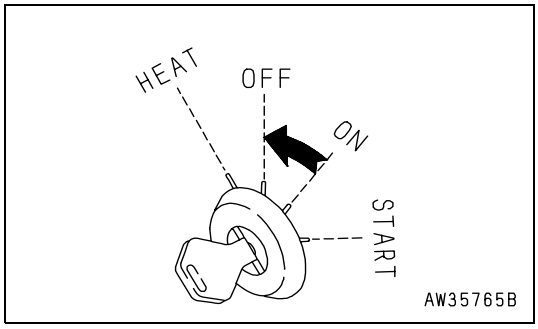

https://truckmanualshub.com/

3.3.4 MACHINE OPERATION

⚠ WARNING

- **Before carrying out any manoeuvre with these levers, the operator must be seated in the work position with fastened safety belt.**
- **Before operating the travel levers, check the direction of the track frame. If the sprocket is at the front, the operation of the travel levers is reversed.**
- **When moving off, check that the area around the machine is safe, and sound the horn before moving.**
- **Clear all personnal from the machine and the area.**
- **Clear all obstracles from the path of the machine.**
- **Check that the travel alarm works properly.**

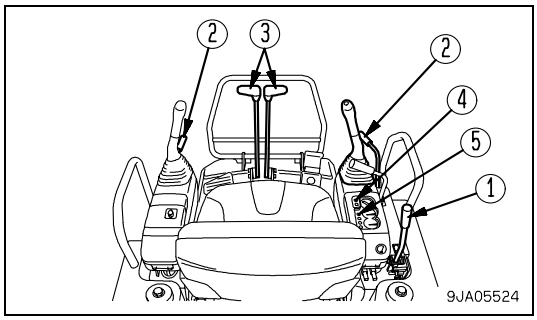

3.3.4.1 PREPARATIONS FOR MOVING THE MACHINE OFF

1. Pull fuel control lever (1) towards the high idling position to increase the engine speed.
   (A): Low idling
   (B): High idling

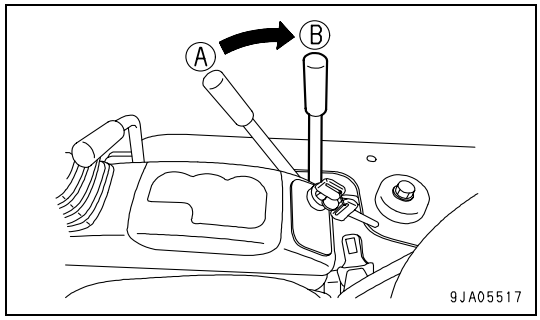

3.3.4.2 MOVING MACHINE FORWARD

1. Set safety lock lever (2) to the FREE position, then raise the work equipment 40 to 50 cm (1.6 to 2.0 in) from the ground.
2. Raise the blade.
3. Opearate the both travel levers (3) as explained below.

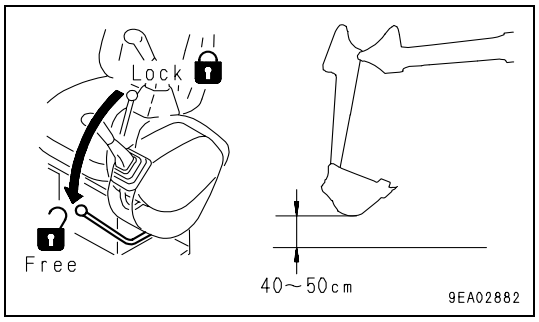

- When the sprocket (A) is at the rear of the machine.
  Push levers (3) forward slowly to move the machine off.

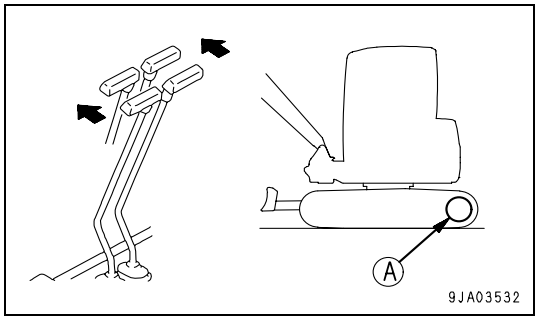

https://truckmanualshub.com/

- When the sprocket (A) is at the front of the machine.
  Pull levers (3) backward slowly to move the machine off.

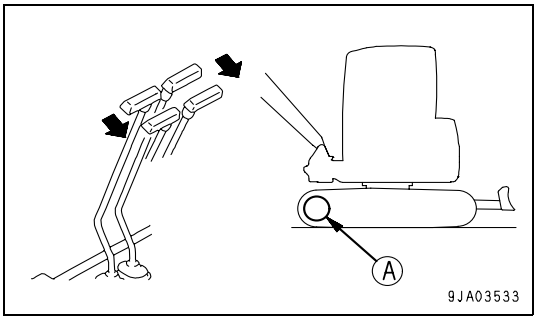

4. Switch the travel speed as follows.
   - When the travel speed selector switch (4) is pressed, the travel speed can be switched between high speed and low speed.
     Each time the switch is pressed, the travel speed is switched between low speed and high speed.

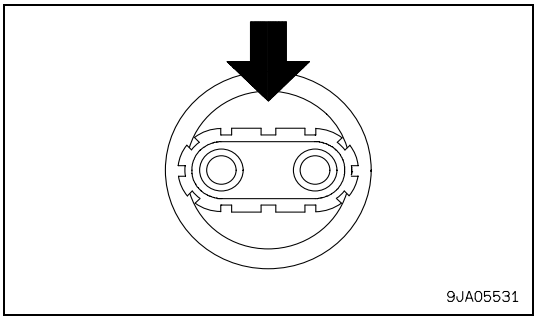

   - When the machine is traveling at high speed, travel speed boost monitor (5) lights up.
     For details of the travel speed values, see Section "5.1 SPECIFICATIONS".

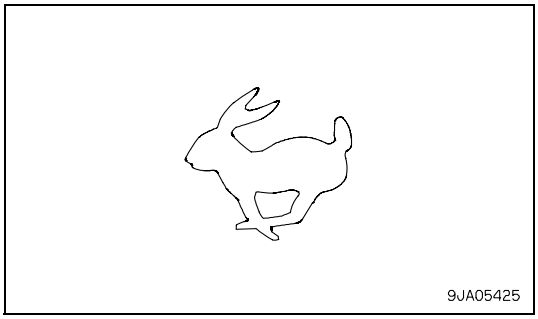

NOTE
- **When the engine is started, the travel speed is automatically set to low speed.**
  When traveling at high speed, if the machine travels on soft ground or up a slope and the load increases, the travel is automatically switched to low speed travel, so there is no need to operate the switch. The travel speed boost monitor displays stays lighted up.
  When the load is reduced, the travel system returns to high speed travel.

5. Check that the travel alarm sounds.
   If the alarm dose not sounds, please contact your Komatsu Utility Dealer for repairs.

https://truckmanualshub.com/

3.3.4.3 MOVING MACHINE BACKWARD

1. Set safety lock lever (2) to the FREE position, then raise the work equipment 40 to 50 cm (1.6 to 2.0 in) from the ground.
2. Raise the blade.
3. Opearate the both travel levers (3) as explained below.

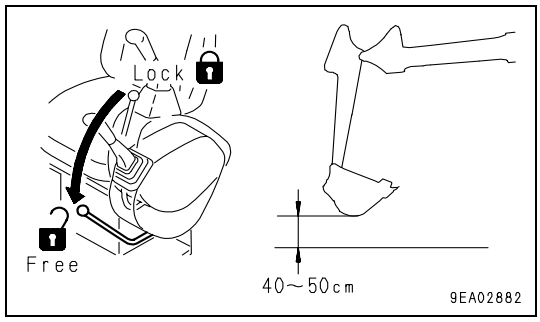

- When the sprocket (A) is at the rear of the machine.
  Pull levers (3) backward slowly to move the machine off.

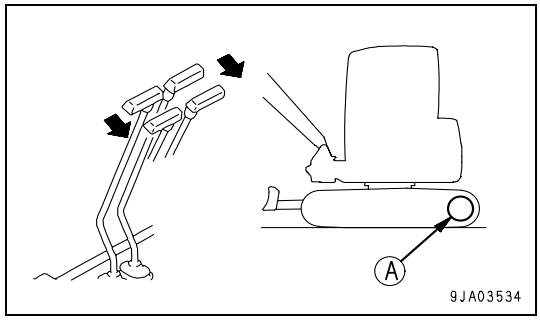

- When the sprocket (A) is at the front of the machine.
  Push levers (3) forward slowly to move the machine off.

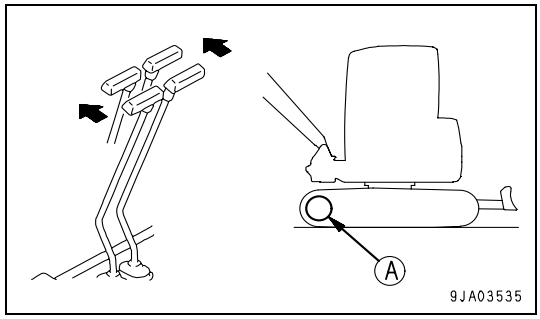

4. Switch the travel speed as follows.
   - When the travel speed selector switch (4) is pressed, the travel speed can be switched between high speed and low speed.
     Each time the switch is pressed, the travel speed is switched between low speed and high speed.

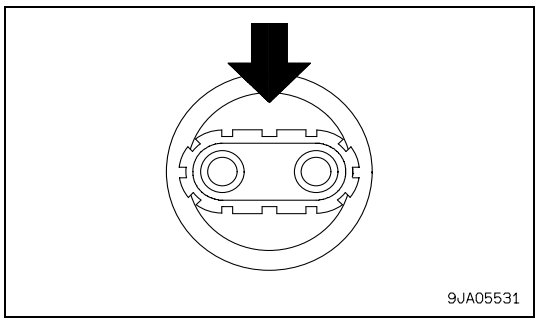

   - When the machine is traveling at high speed, travel speed boost monitor (5) lights up.
     For details of the travel speed values, see Section "5.1 SPECIFICATIONS".

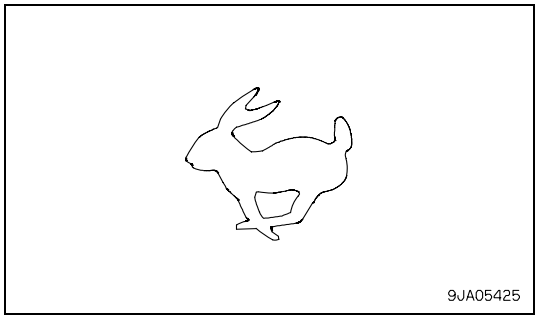

https://truckmanualshub.com/

NOTE

- **When the engine is started, the travel speed is automatically set to low speed.**
  When traveling at high speed, if the machine travels on soft ground or up a slope and the load increases, the travel is automatically switched to low speed travel, so there is no need to operate the switch. The travel speed boost monitor displays stays lighted up.
  When the load is reduced, the travel system returns to high speed travel.

5. Check that the travel alarm sounds.
   If the alarm dose not sounds, please contact your Komatsu Utility Dealer for repairs.

3.3.4.4 STOPPING MACHINE

⚠ WARNING

- **Avoid stopping suddenly. Give yourself ample room when stopping.**

1. Put the left and right travel levers (1) in the NEUTRAL position, then stop the machine.

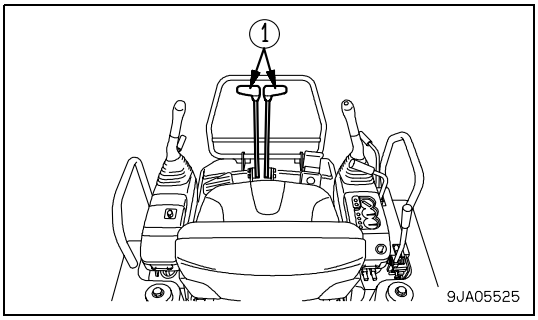

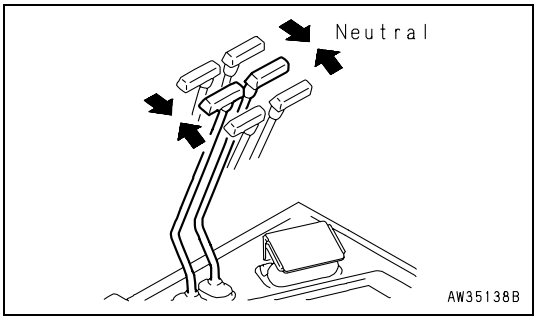

https://truckmanualshub.com/

3.3.5 STEERING THE MACHINE

3.3.5.1 STEERING

WARNING

- **Before operating the travel control levers, check the direction of the track frame (i.e. position of the sprocket) first. If the sprocket is at the front, the machine moves in the reverse direction to the operation of the travel lever.**

NOTE

- **When traveling at high speed, if the load increases, the automatic travel speed shifting function automatically shifts the transmission to low speed and the machine travels slowly. When the load decreases, it automatically returns the transmission to high speed travel.**

Use the travel levers to change direction.

Avoid sudden changes of direction as far as possible. In particular, when carrying out counter-rotation (spin turn), stop the machine first before turning.
Operate two travel levers (1) as follows.

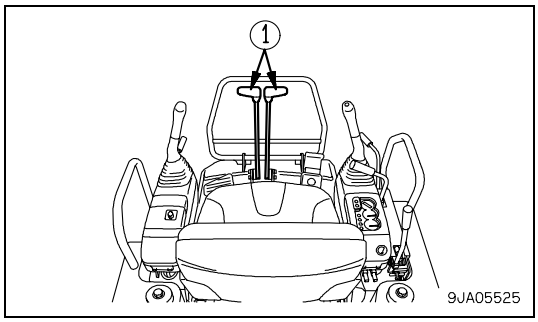

STEERING THE MACHINE WHEN STOPPED

When turning to the left:

Push the right travel lever forward to travel left when traveling forward; and pull it back to turn left when traveling in reverse.

NOTE

- **When turning to the right, operate the left travel lever in the same way.**

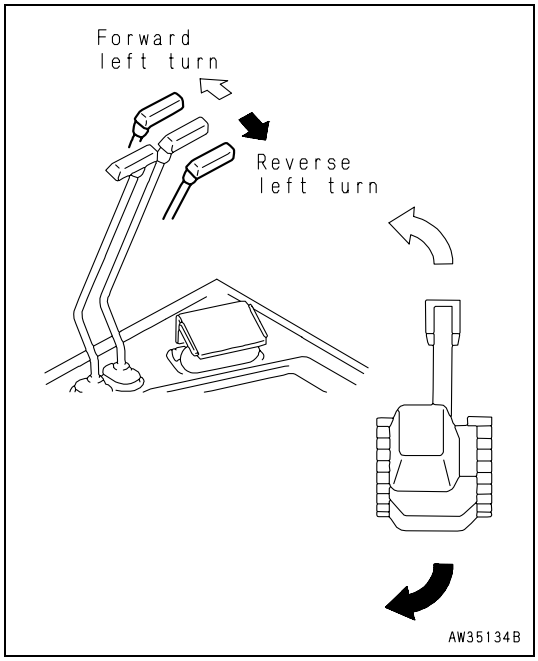

https://truckmanualshub.com/

CHANGING DIRECTION OF THE MACHINE

When turning to the left:

If the left travel lever is returned to the neutral position, the machine will turn to the left.

NOTE

- **When turning to the right, operate the right travel lever in the same way.**

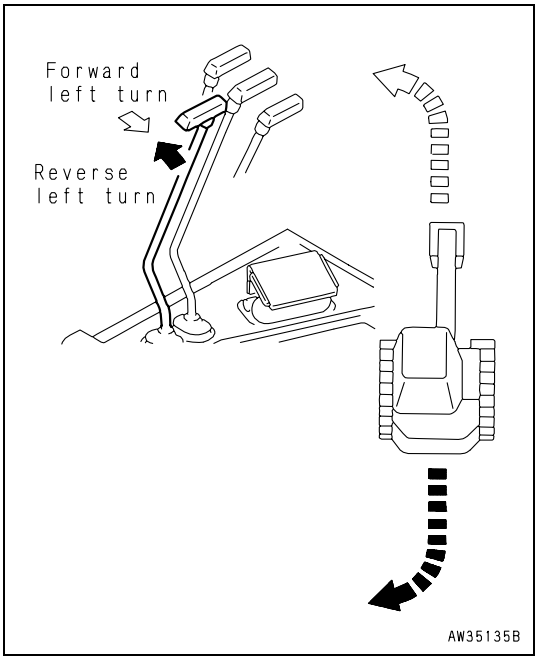

COUNTER-ROTATION TURN (SPIN TURN)

When using counter-rotation (spin turn) to turn left, pull the left travel lever back and push the right travel lever forward.

NOTE

- **When using counter-rotation (spin turn) to turn right, pull the right travel lever back and push the left travel lever forward.**

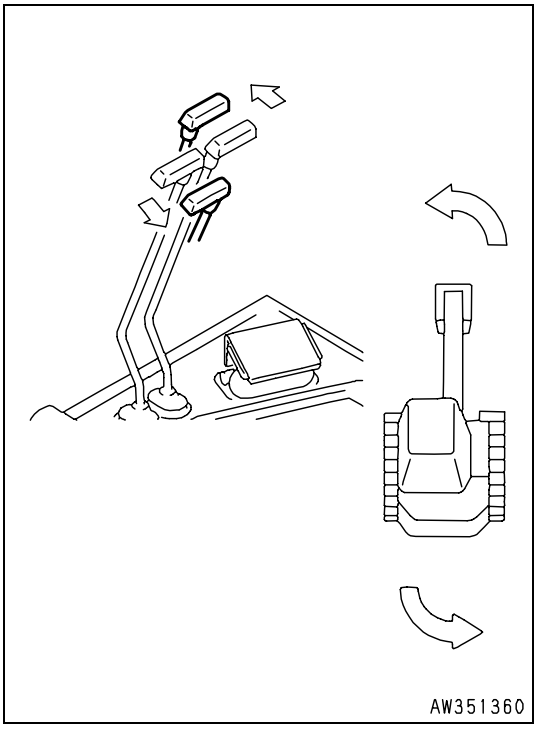

https://truckmanualshub.com/

3.3.6 SWINGING

WARNING

- **When operating the swing, check that the area around the machine is safe.**

1. Operate left work equipment control lever (1) to swing the upper structure.
2. When not using the swing, set left work equipment control lever (1) to the N position.
   The swing holding brake will be applied.

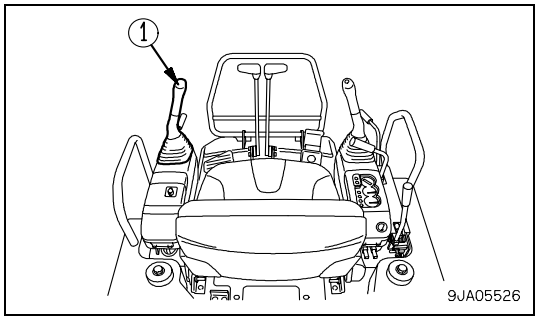

NOTE

- **When using the swing on a slope, run the engine at low idling and operate the swing lever extremely slowly.**
  Be particularly careful to avoid sudden movement when the bucket is loaded.
  When the bucket is loaded and the left work equipment control lever is operated, the swing holding brake is released, so the upper structure may swing momentarily, but this is not an abnormality.

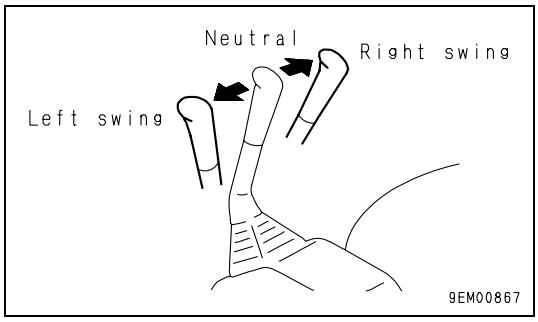

https://truckmanualshub.com/

3.3.7 WORK EQUIPMENT CONTROLS AND OPERATIONS

Use the control levers to operate the work equipment.

Note that when the levers are released, they return to the HOLD position and the work equipment is held in that position.

- **Arm control**
  Move the left work equipment control lever to the front or rear to operate the arm.

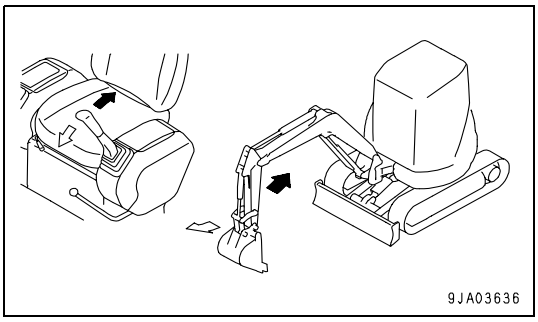

- **Swing control**
  Move the left work equipment control lever to the left or right to swing the upper structure.

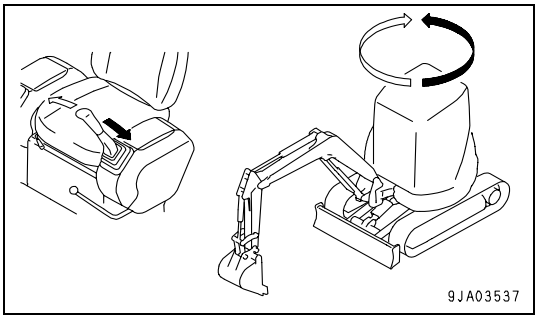

- **Boom control**
  Move the right work equipment control lever to the front or rear to operate the boom.

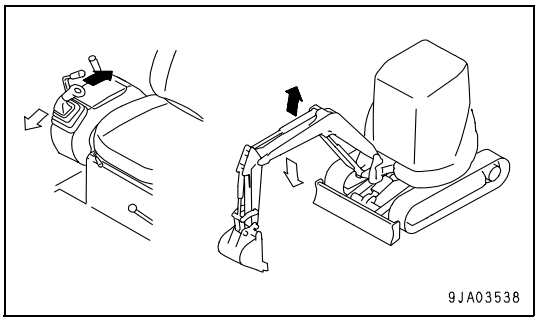

- **Bucket control**
  Move the right work equipment control lever to the left or right to operate the bucket.

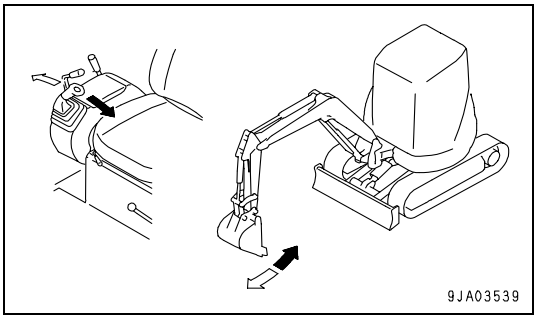

https://truckmanualshub.com/

- **Boom swing operation**
  The boom swing operation can be carried out with the boom swing control pedal.

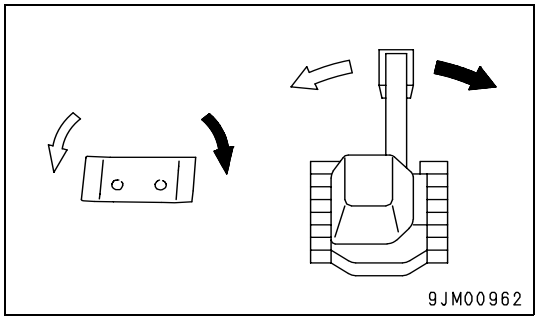

- **Blade control**
  Move the lever on the right side of the operator's seat to the front or rear to operate the blade.

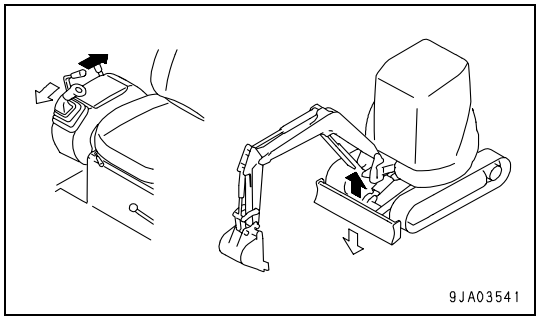

https://truckmanualshub.com/

3.3.8 PROHIBITED OPERATIONS

⚠ WARNING

- **Do not attempt to operate the work equipment control lever, while the machine is traveling.**

- **Operations Using Swing Force**
  Do not use the swing force to compact soil or break earth mounds or walls.
  When swinging, do not dig the bucket teeth into the soil.
  These operations will damage the work equipment.

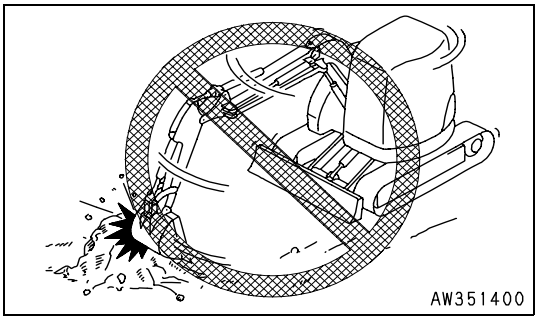

- **Operations Using Travel Force**
  Do not dig the bucket into the ground and use the travel force to carry out excavation. This will damage the machine or work equipment.

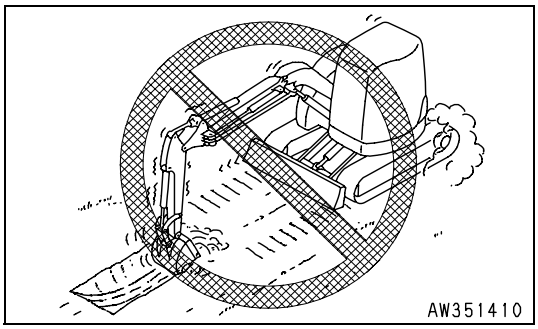

- **Prohibition of Operations Using Hydraulic Cylinders to Stroke Ends**
  When operating the cylinder, do not operate it to the end of its stroke. Always leave a small margin.
  If the cylinder is operated to the end of its stroke, force will be brought to bear on the cylinder, and this may cause damage to the pins, boom, arm, and frame.

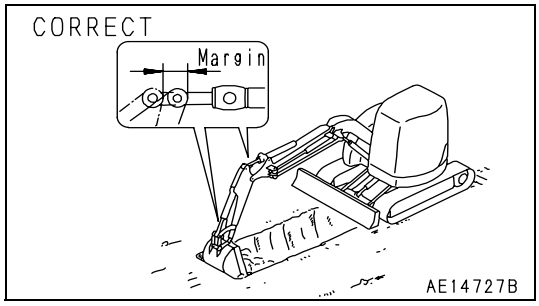

- **Digging Hard Rocky Ground**
  It is better to excavate hard rocky ground after breaking it up by some other means. This will not only reduce damage to the machine but make for better economy.

- **Operations Using Bucket Dropping Force**
  Do not use the dropping force of the machine for digging, or use the dropping force of the bucket as a pickaxe, breaker, or pile driver.
  This will markedly reduce the life of the machine.

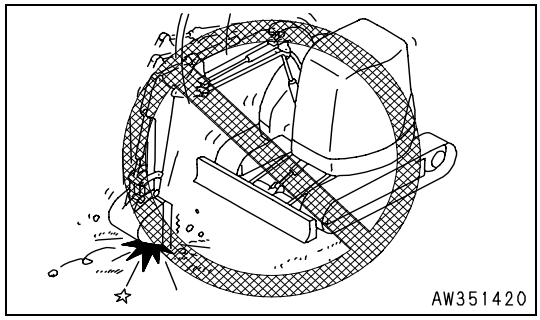

https://truckmanualshub.com/

- **Operations Using Machine Dropping Force**
  It is prohibited to carry out digging operations using the dropping force of the machine.
  When excavating hard rock bed, use some other method to break the rock into small pieces before excavating. This avoids damage to the machine and also is more economical.

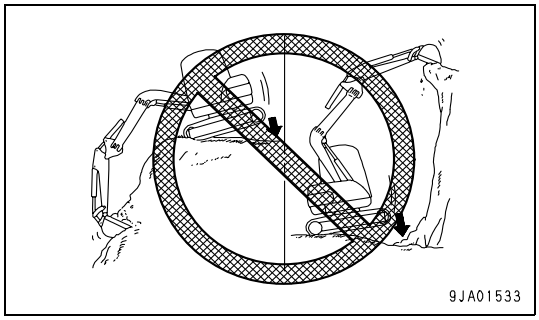

- **Prohibition of Lifting Operation**
  It is prohibited to use this machine for lifting operations.

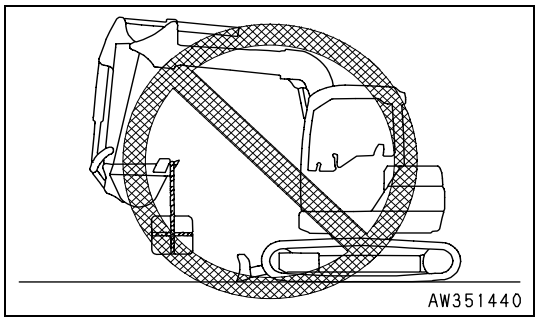

- **Support Blade on Both Sides**
  When using the blade as an outrigger, never suport the machine with only one end of the blade.

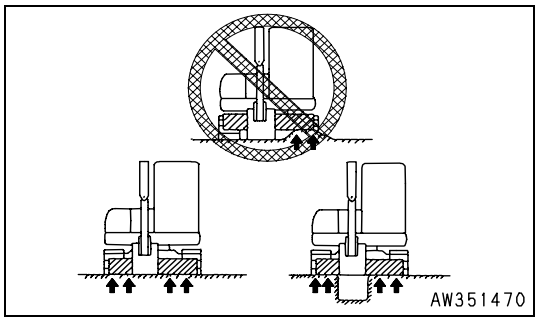

https://truckmanualshub.com/

3.3.9 GENERAL OPERATION INFORMATION

- **Traveling**
  Traveling over boulders, tree stumps, or other obstacles will cause a big shock to the chassis (and in particular to the tracks), and this will cause damage to the machine. For this reason, always remove any obstacles or travel around them, or take other steps to avoid traveling over such obstacles as far as possible.
  If there is no way to avoid traveling over an obstacle, reduce the travel speed, keep the work equipment close to the ground, and try to travel so that the center of the track passes over the obstacle.

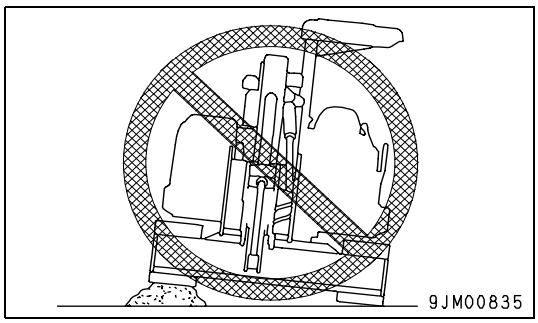

- **Folding in Work Equipment**
  When folding in the work equipment to the travel or transportation posture, be careful not to let the bucket hit the blade.

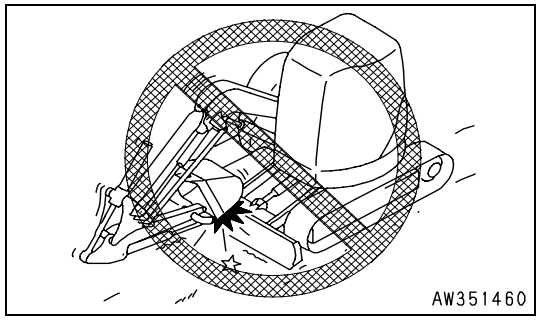

- **Avoid Hitting Blade**
  Be careful not to hit the blade against rocks or boulders. This will cause premature damage to the blade or cylinders.

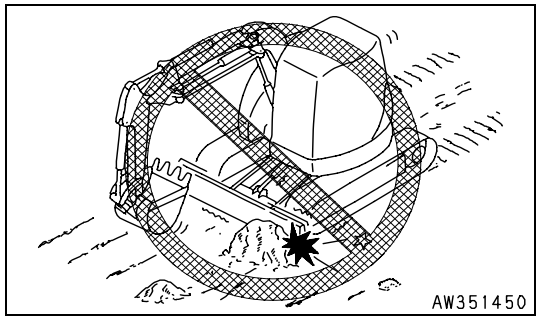

- **Blade During Backhoe Operations**
  When carrying out deep digging operations with the blade at the front, be careful not to the boom cylinder hit the blade. Always position the blade at the back unless it is needed at the front.

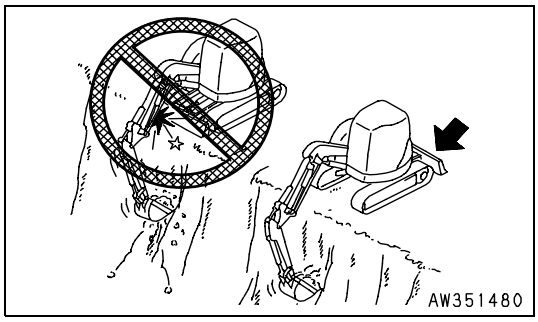

https://truckmanualshub.com/

- **Permissible Water Depth**

CAUTION

- **When driving the machine out of water, if the angle of the machine exceeds 15°, the rear of the upper structure will go under water, and water will be thrown up by the radiator fan. This may cause the fan to break.**
  Be extremely careful when driving the machine out of water.

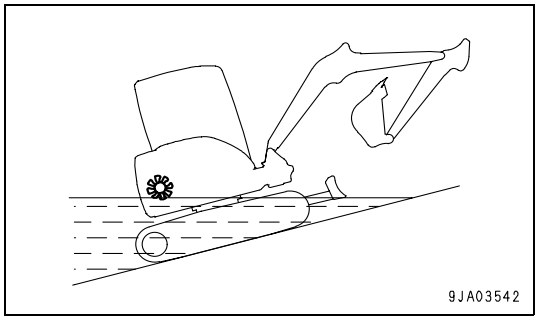

Do not immerse the machine in water by more than the permissible depth (under center of carrier roller (1)).

In addition, for parts that have been immersed in water for a long time, pump in grease until the old grease comes out from the bearings. (Around the bucket pins)

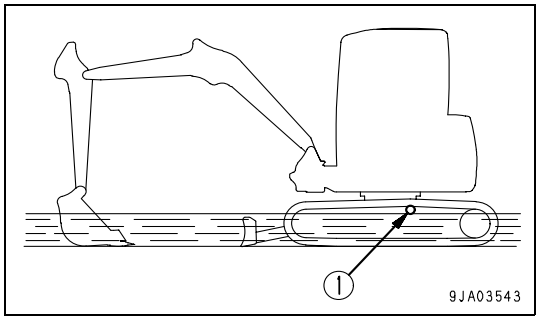

https://truckmanualshub.com/

3.3.10 TRAVELING ON SLOPES

⚠ WARNING

- **Turning or operating the work equipment when working on slopes may cause the machine to lose it balance and turn over, so avoid such operations.**
  It is particularly dangerous to swing downhill when the bucket is loaded.
  If such operations have to be carried out, pile soil to make a platform on the slope so that the machine can be kept horizontal when operating.
- **Do not travel up or down steep slopes. There is danger that the machine may turn over.**
- **When traveling, raise the bucket approx. 20 to 30 cm (8 to 12 in) from the ground.**
  Do not travel downhill in reverse.
- **Never turn on slopes or travel across slopes.**
  Always go down to a flat place to perform these operations. It may be longer, but it will ensure safety.
- **Always operate or travel in such a way that it is possible to stop safely at any time if the machine slips or becomes unstable.**
- **When traveling uphill, if the shoes slip or it is impossible to travel uphill using only the force of the tracks, do not use the pulling force of the arm to help the machine travel uphill. There is danger that the machine may turn over.**

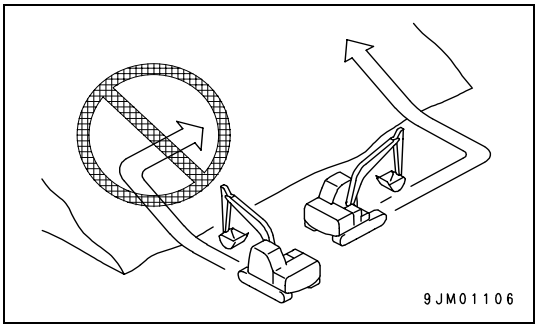

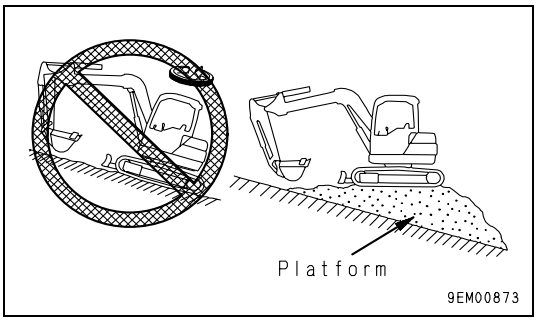

1. When traveling down steep hills, use the travel lever and fuel control lever to keep the travel speed low.
   When traveling down a steep hill of more than 15°, set the work equipment to the posture shown in the diagram on the right, and lower the engine speed.

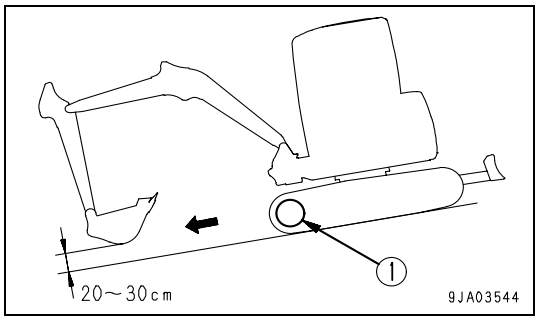

NOTE

- **Travel down fills with the sprocket (1) side down.**
  If the machine travels down with the sprocket (1) side up, the track tends to become loose, and that can cause skipping pitches.

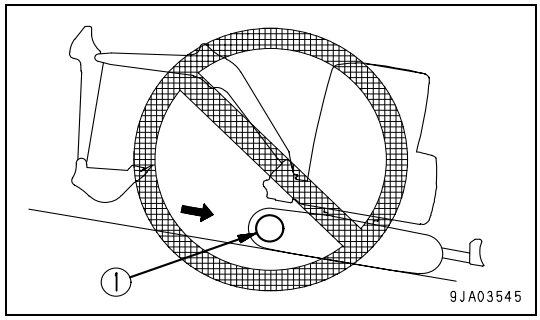

https://truckmanualshub.com/

2. When traveling up a steep hill of more than 15°, set the work equipment to the posture shown in the diagram on the right.

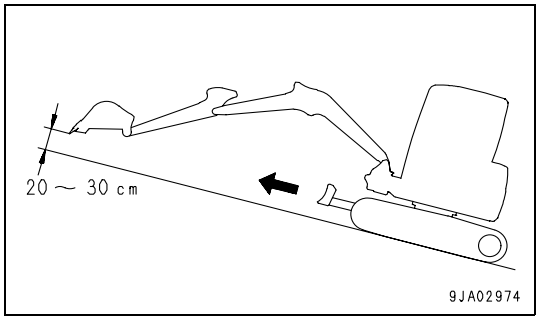

TRAVELING DOWNHILL

Put the travel lever in the neutral position. This will cause the brake to be automatically applied.

ENGINE STOPPED ON SLOPE

If the engine stops when traveling uphill, move the travel levers to the neutral position, lower the bucket to the ground, stop the machine, then start the engine again.

CAB DOORS ON SLOPE

- If the engine stops when the machine is on a slope, never use the left work equipment control lever to carry out swing operations. The upper structure will swing under its own weight.
- Do not open or close the sliding door (cab specifications) on slopes when traveling or operating. The operating effort may change suddenly.
- Always keep the sliding door locked.
- Take good care when opening or closing the sliding door (the cab specification). There is the danger that it will likely gain momentum due to its own weight and open or shut suddenly.

https://truckmanualshub.com/

3.3.11 ESCAPE FROM MUD

Always operate carefully to avoid getting affixed in mud. If the machine does get affixed in mud, do as follows to get the machine out.

STUCK ONE SIDE OF TRACK

IMPORTANT

- **When using the boom or arm to raise the machine, always have the bottom of the bucket in contact with the ground. (Never push with the teeth.) The angle between the boom and arm should be 90° to 110°.**

When only one side is affixed in mud, use the bucket to raise the track, then lay boards or logs and drive the machine out.

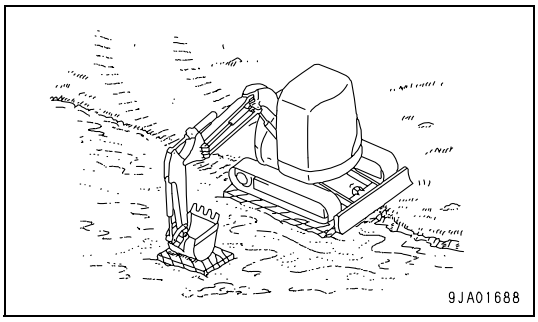

STUCK BOTH SIDES OF TRACKS

If the track on both sides are in mud and the machine slips and cannot move, use the procedure given above to lay logs or timber. dig the bucket into the ground at the front, operate the arm in the same way as when digging, and set the travel lever to FORWARD to pull the machine out.

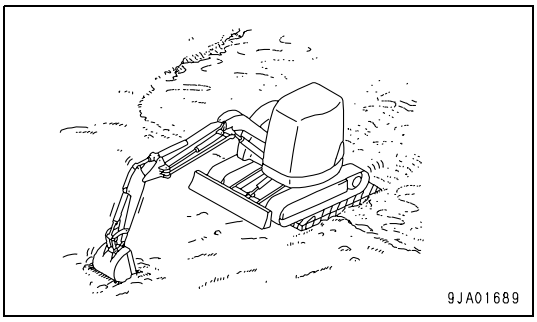

https://truckmanualshub.com/

3.3.12 WORK POSSIBLE USING COMPACT HYDRAULIC EXCAVATOR

In addition to the following, it is possible to further increase the range of applications by using various attachments.

BACKHOE WORK

This is suitable for excavating places lower than the machine.
When work equipment is in condition shown in diagram on right, each cylinders maximum pushing exacavtion force is obtained when the center line of arm cylinder and arm foot pin and the bucket cylinder and link are at 90°, the push-out digging force of each cylinder is the maximum.
Make the optimum use of this angle during digging operations to increase the operating efficiency.

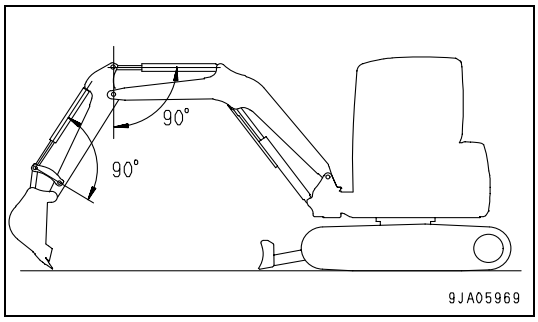

The range for excavating with the arm is from a 45° angle away from the machine to a 30° angle toward the machine.

There may be some differences depending on the digging depth, not try to keep within the above range rather than operating to the end of the cylinder stroke.

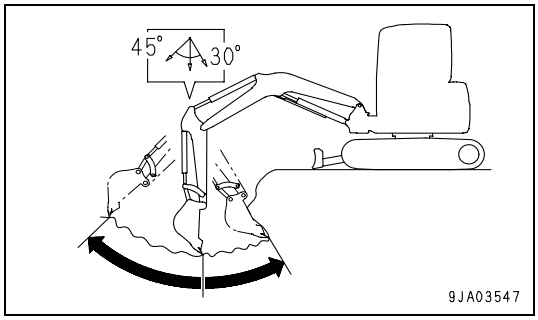

DITCHING WORK

Ditching work can be performed efficiently by attaching a bucket which matches the digging operation and then setting the tracks parallel to the line of the ditch to be excavated.

To excavate a wide ditch, first dig both sides and then finally remove the center portion.

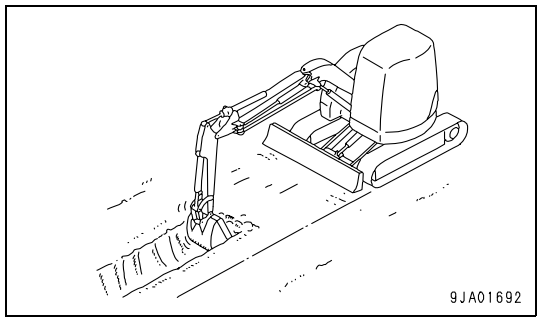

LOADING WORK

In places where the swing angle is small, work efficiency can be enhanced by locating the dump truck in a place easily visible to the operator.

Loading dump trucks is easier and the loading capacity is greater if the hydraulic excavator loads from the rear of the dump truck rather than from the side.

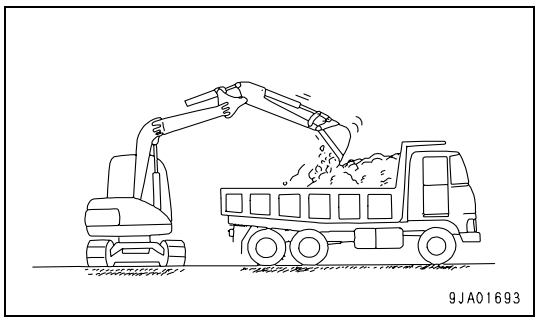

https://truckmanualshub.com/

SMOOTHING WORK

When refilling after excavation and when smoothing the ground surface, use the blade.

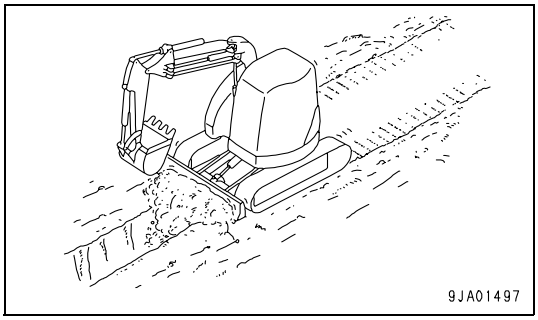

SIDE DITCHING WORK

The machine can be used for side ditching in a confined work-site by combining the swing and boom swing operations.

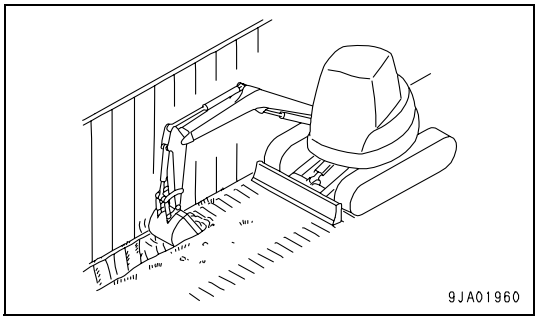

https://truckmanualshub.com/

3.3.13 CHANGING THE BUCKET

⚠ DANGER

- **When the coupling pins are removed or installed, chips may come off; always use gloves, goggles and helmet.**
- **The change of the equipment must be carried out by two persons, who must decide together the words and signals to use during operations.**
- **Do not use your fingers to center the holes, since they may be injured or even cut in case of sudden or uncontrolled movements.**
- **The described procedures are valid also for the coupling of the mechanical constraints of the optional equipment.**

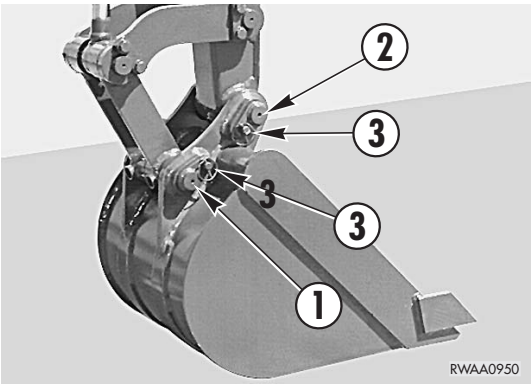

1. Position the bucket on a level surface, directing it so that the flat part of its back rests on the ground.
2. Remove the tie rod pin (1) and the arm connection pin (2).
3. Change the bucket, taking care to clean the pins, the bushings and the seals perfectly and to grease the pins slightly before reinstalling them.

IMPORTANT

- **Install first the arm connection pin, making sure that the seals are in good conditions.**

4. Put back all the safety pins (3) and lubricate by means of the appropriate grease nipple.

https://truckmanualshub.com/

3.3.14 PARKING MACHINE

⚠ WARNING

- **Avoid stopping suddenly. Give yourself ample room when stopping.**
- **Park the machine on the firm, level ground.**
  Avoid parking the machine on slopes.
  If it is unavoidably necessary to park the machine on a slope, put blocks under the tracks and dig the work equipment into the ground surface to stop the machine from moving.
- **If the control levers are touched by accident, the work equipment or machine may move suddenly, and this may lead to a serious accident. Before standing up from the operator's seat, always set the safety lock lever securely to the LOCK position.**
- **Set the blade on the downhill side and lower it to the ground.**

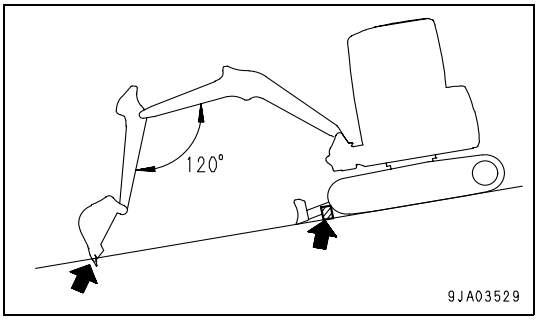

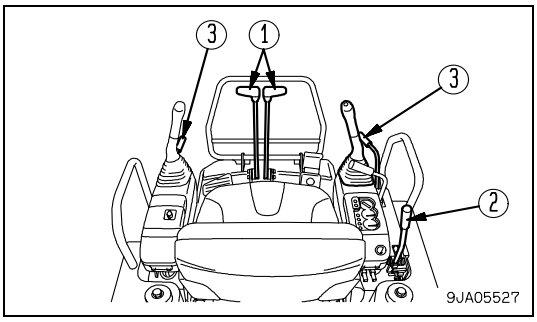

1. Put the left and right travel levers (1) in the NEUTRAL position, then stop the machine.

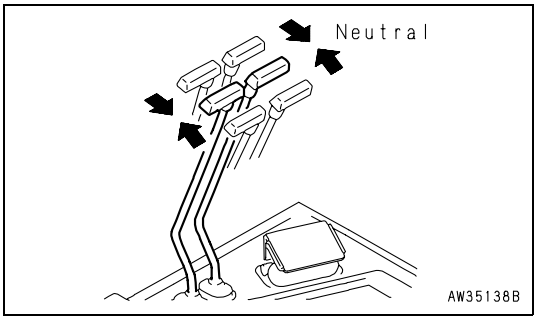

2. Lower fuel control lever (2) to low idling position (A) to reduce the engine speed.

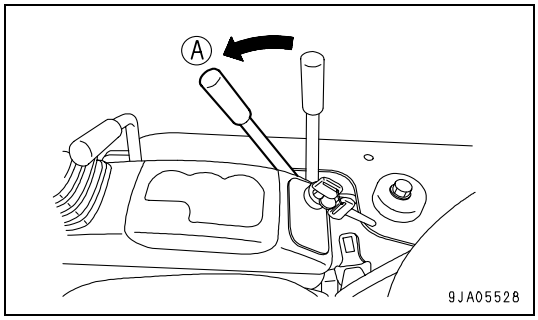

3. Lower the bucket horizontally until the bottom touches the ground.
4. Lower the blade to the ground.

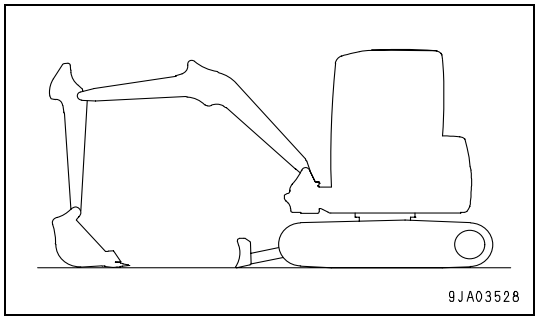

https://truckmanualshub.com/

5. Set safety lock lever (3) in the LOCK position.

NOTE
- **For machines equipped with a cab, there is only a safety lock lever on the left.**

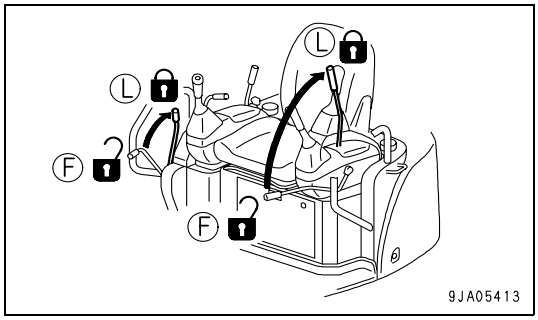

3.3.15 CHECK AFTER SHUT OFF ENGINE

Check the engine water temperature (1), engine oil pressure (2), and fuel level (3) on the machine monitor.

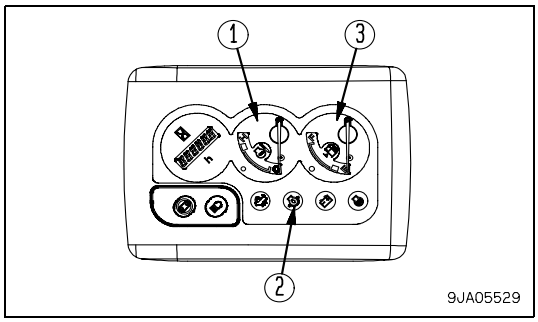

3.3.16 MACHINE INSPECTION AFTER DAILY WORK

1. Walk around the machine and check the work equipment, machine exterior, and undercarriage, also check for any leakage of oil or coolant. If any abnormalities are found, repair them.
2. Fill the fuel tank.
3. Check the engine compartment for paper and debris. Clean out any paper and debris to avoid a fire hazard.
4. Remove any mud affixed to the undercarriage.

3.3.17 LOCKING

Always lock the following places.

(1) Operator's cab door (machines equipped with cab)

Always close the windows.

(2) Engine rear cover

(3) Dirt cover

(4) Operation and Maintenance Manual, toolbox cover

For details of locking, see Section "3.2.8 COVER WITH LOCK".

NOTE
- **Use the starting switch key to open and close all these places.**

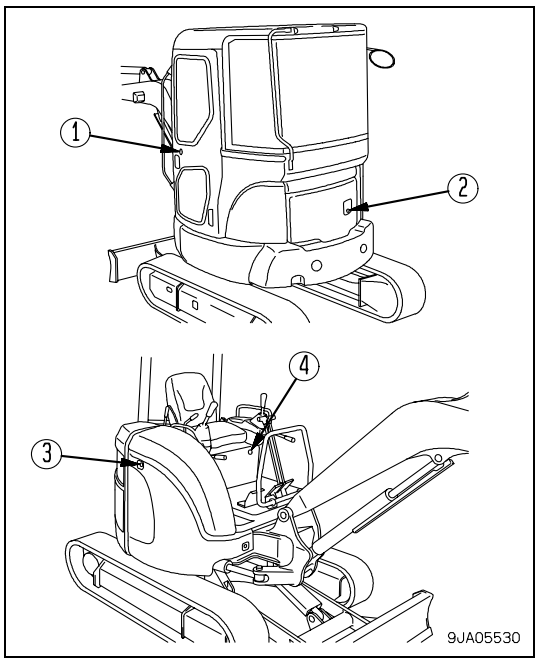

https://truckmanualshub.com/

3.3.18 RUBBER SHOES AND ROAD LINERS (Machine equipped with rubber shoe or road liner)

3.3.18.1 RUBBER SHOES AND ROAD LINERS INFORMATION

Rubber shoes and road liner have excellent properties that are not found in steel shoes. However, if they are used in the same way as steel shoes, full use cannot be made of their advantages.

Be sure to operate without straining the rubber shoes in a way that matches the condition of the jobsite and the nature of the work.

COMPARISON AMONG RUBBER SHOES

	Rubber shoe	Road liner	Steel shoe
Little vibration	Excellent	Excellent	Average
Smooth travel (No creaks)	Excellent	Good	Good
Little noise	Excellent	Excellent	Average
No damage to paved surface	Excellent	Excellent	Average
Easy to handle	Excellent	Average	Average
Easily damage	Average	Good	Excellent
Strong drawber pull	Excellent	Excellent	Excellent

Considering the properities of the material used, rubber shoes and road liners offer various advantages. However, thier weak point is lack of strength. Therefore, it is important to understand the advantages of rubber shoes and road liners, and to follow the precautions regarding handling and prohibited work. This will extend the life of the rubbershoes and road liners and will enable the machine to display the advantages of rubber shoes and road liners to the maximum. Before using rubber shoes and road liner, always read "3.3.18.3 USING RUBBER SHOES AND ROAD LINERS".

3.3.18.2 WARRANTY FOR RUBBER SHOES AND ROAD LINERS

It is important to inspect and maintain the tracks at the correct tension. Furthermore, these shoes must not be used near objects where they are likely to suffer damage, such as the corners of steel plates, U-shaped ditch liners, blocks, on crushed rock or the sharp edges of rocks, iron beams, or scrap iron.
Any damage resulting from the customer's mistaken use of the machine shall not be included in the scope of the warranty.

3.3.18.3 USING RUBBER SHOES AND ROAD LINERS

PROHIBITED WORKS

Do not carry out the following types of work.

- Carrying out operations and steering on crushed rock, extremely rough hard rock, steel beams, scrap iron, or near the edges of steel plates will cause damage to the rubber shoes and road liners.
- In places such as river beds where there are large numbers of large and small boulders, the stones may get caught and damage the rubber shoes and road liners or make the shoes come off. If dozing operations are carried out when the shoes are slipping, this will reduce the life of the rubber shoes and road liner.
- Be careful not to get oil, fuel, or chemical solvent on the rubber shoes and road liners. If such a substance shold get on the shoes, remove it immediately. Furthermore, do not travel on road surfaces where oil has collected.
- When putting the machine into long-term storage (3 months or more), store the machine indoors where it is protected from direct sunlight or rain.

https://truckmanualshub.com/

- Do not use the machine in high-temperature areas, such as areas where there is burning wood, steel plates that have been left under the hot sun, or places where asphalt has been laid.
- Do not move the machine with the crawler on one side raised using the work equipment. This will cause damage to the rubber shoes and may cause the rubber shoes to come off.
- When the rubber parts of the road liner are so worn or broken that the head of the mounting bolts are scratched, replace the shoe immediately. If the bolt heads are broken, the bolt cannot be removed.
- When installing road liners, always install them to all links on both sides. If they are installed to only one part of the links, their durability will be greatly reduced.

LONG LIFE OPERATIONS

Be careful of the following points when carrying out work.

- Avoid carrying out counterrotation turns on concrete surfaces. There is danger that the concrete surface will scrape off the rubber from the shoe.
- Avoid making sudden changes in direction. This may cause premature wear or damage to the rubber shoes and road liners.
- Avoid operating the steering when traveling over places where there is a big difference in height. When traveling over obstacles or places where there is a difference in height, drive the machine at right angles to the obstacle to prevent the shoes from coming off.
- If the machine has been raised using the bucket, lower it slowly.
- Avoid doing work with materials that produce oil when crushed (soya beans, corn, or remains of vegetables squeezed for oil); or wash the machine after use.
- Avoid handling materials that will attack the adhesion of the steel core, such as salt, ammonium sulphate, potassium chloride, potassium sulphate, or calcium superphosphate; or wash the machine after use.
- The adhesion of the core will be attacked by salt, so avoid using the machine in coastal areas.
- When handling salt, sugar, wheat, or soya beans, if there is any deep cut in the rubber shoes and road liners, these substances may get into the lugs or cut portion of the rubber. Always repair the rubber before use.
- Do not carry out work that involves scraping against walls or concrete embankments.
- Rubber shoes and road liners slip extremely easily on snow or frozen roads. Be careful not to slip when traveling or working on slopes.
- The properties of rubber shoes and road liners change when working in extermely cold places, and this will reduce the life of the rubber shoes and road liners.
- Because of the properties of rubber, use the rubber shoes within a range of -25°C to +55°C (-13°F to +131°F).
  Because of the properties of rubber, use the road liners within a range of -25°C to +65°C (-13°F to +149°F).
- When carrying out bucket operations, be careful not to damage the rubber shoes and road liners with the bucket.
- Always maintain the rubber shoes at the proper tension to prevent them from coming off.
  If the tension is low, the rubber shoes will come off under the following conditions.
  Even if the tension is correct, be extremely careful when carrying out operations.

https://truckmanualshub.com/

1. Avoid operating the steering when traveling over curbs, rocks, or places where there is a big difference in height (more than approx. 20 cm (8 in)). When traveling over such objects, always travel at right angles to the object.

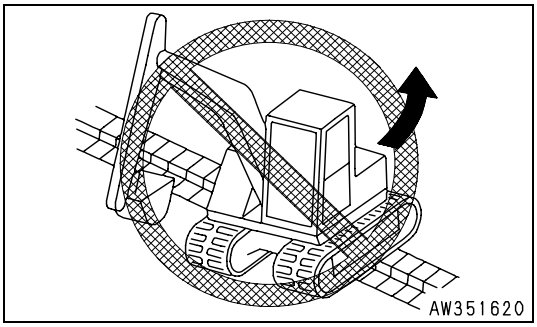

2. When traveling in reverse up a slope, do not turn when moving from flat ground onto the slope.
   If it is necessary to turn on slopes, be sure to turn gradually.

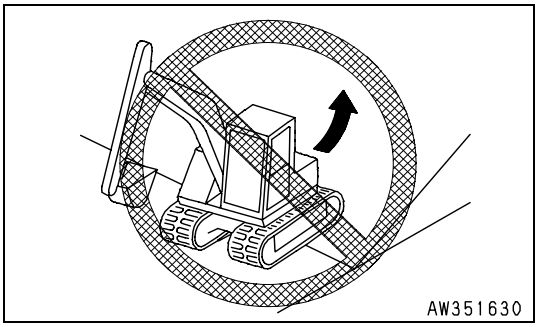

3. Avoid traveling along the edge of slopes or on rough groundwith the track on one side raised (with the machine tilting at anangle of more than approx. 10°) and with the track on the other side on flat ground. To avoid damage to the rubber shoes and road liners, travel with the tracks on both sides on flat ground.

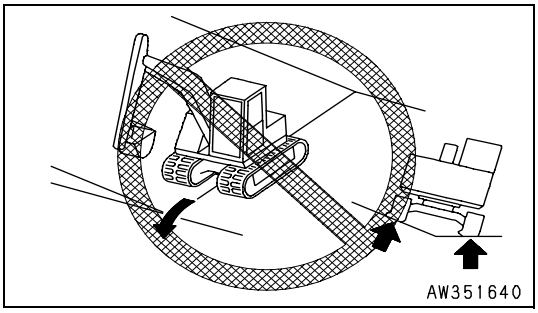

4. If the machine is operated as explained in 1 to 3 above, the rubber shoes is slackened. Do not steer the machine in the positions shown in the figure.

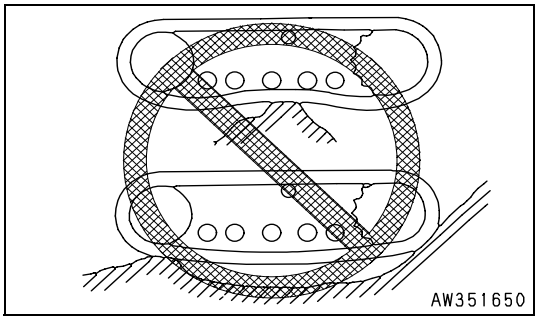

Mechanism of rubber shoe coming off track

5. When traveling over an obstacle, a gap is formed between the track roller and the rubber shoe. In this condition, the rubber shoe may come off.

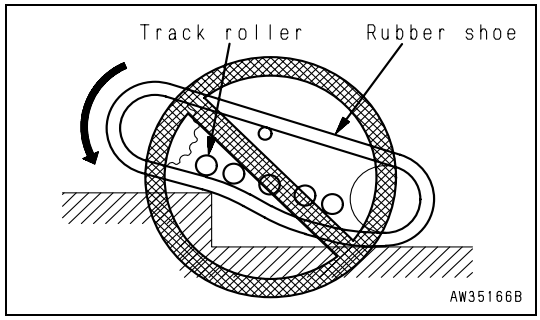

https://truckmanualshub.com/

6. Furthermore, if the machine travels in reverse, a gap is formed between the track roller, idler, and rubber shoe.

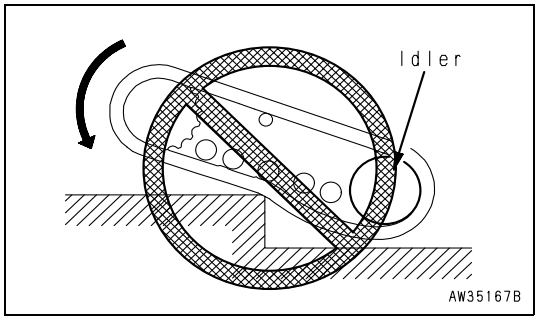

- When turning in a condition where the rubber shoe cannot move to the side because of the object it is passing over, or because of some other object.
- When the rubber shoe has moved out of alignment and the idler or track roller are not aligned with the core.

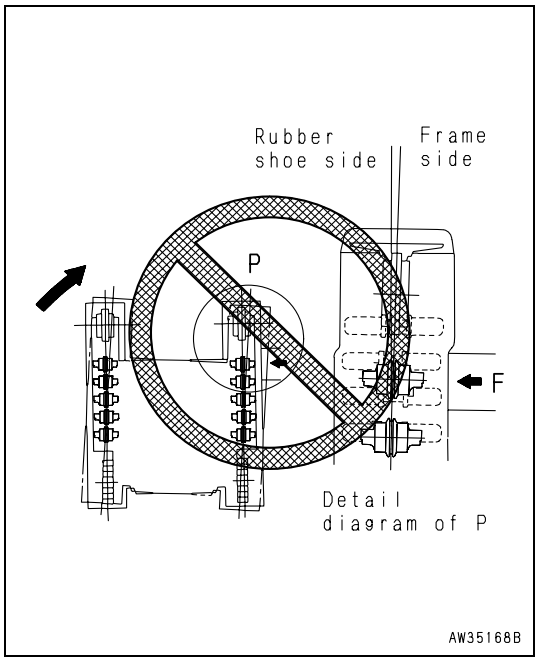

- If the machine travels in reverse in this condition, the rubber shoe will come off.

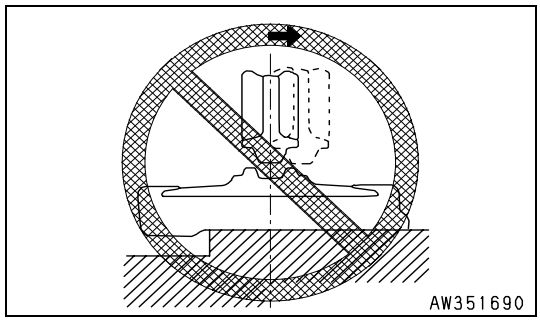

- If the machine is turned in this condition, the rubber shoe will come off.

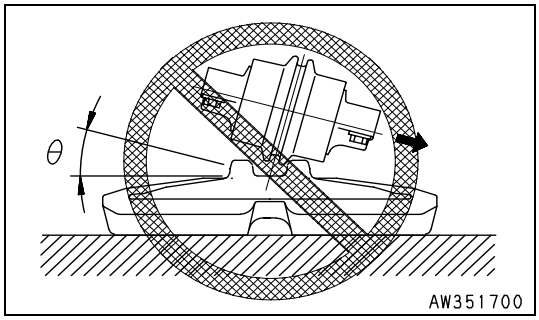

https://truckmanualshub.com/

3.4 TRANSPORTATION

When transporting the machine, observe all related laws and regulations, and be careful to assure safety.

3.4.1 TRANSPORTATION PROCEDURE

As a basic rule, transport the machine by trailer.

Select the trailer to match the weight and dimensions given in "5.1 SPECIFICATIONS".

Note that the value for the weight and transportation dimensions given in SPECIFICATIONS may differ according to the type of shoe or type of arm or other attachments.

3.4.2 LOADING AND UNLOADING WITH TRAILER

⚠ WARNING

- **When loading or unloading, check that travel speed boost monitor (1) is off, and always travel at low speed. If the monitor is on, the speed is set to high-speed travel, so press travel speed selector switch (2). Monitor (1) goes out and the speed is shifted to low-speed travel.**
- **Always keep the one-touch deceleration switch (if equipped) at the OFF position during loading or unloading operations.**
- **When loading or unloading, run the engine at low speed, travel at low speed, and operate slowly.**
- **When loading or unloading the machine, park the trailer on a flat firm road surface. Keep ample distance between the road shoulder and the machine.**
- **Use ramps with ample width, length, thickness, and strength, and install them at a maximum slope of 15°. When using piled soil, compact the piled soil fully to prevent the slope face from collapsing.**
- **Remove the mud from the undercarriage to prevent the machine from slipping to the side on the ramps. Remove any water, snow, grease, oil, or other substances stuck to the ramps.**
- **Never change the direction of travel when the machine is on the ramps. There is danger that the machine may tip over. Return the machine to the road surface or the trailer platform, then change the direction of travel.**

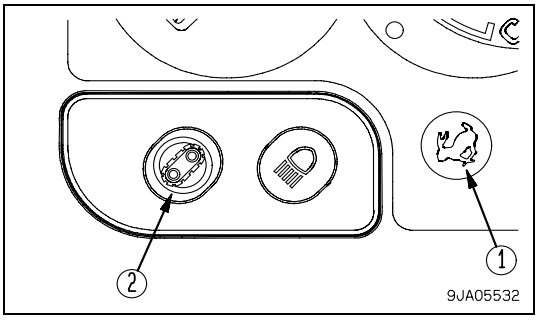

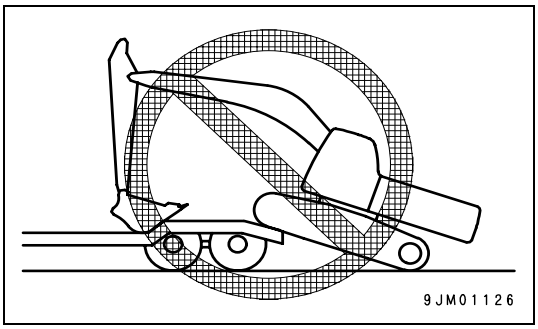

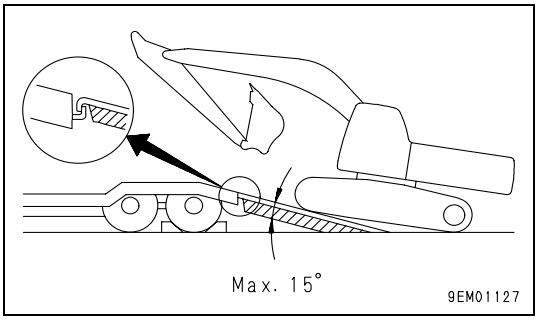

- **It is dangerous to use the work equipment for the loading or unloading operation.**
- **Never operate any lever other than the travel lever on the ramps.**
- **The center of gravity of the machine will change suddenly at the joint between the ramps and the truck or trailer, and there is a hazard of the machine losing its balance. Travel slowly over this point.**
- **When swinging the upper structure on the trailer or truck, the machine is unstable, so pull in the work equipment and swing slowly.**
- **On machines with the cab specification, always check that the sliding door is locked in position, both when it is open and when it is closed. If the door is open or closed on the ramps or on the platform of the trailer, there is danger that the operating effort will suddenly change. Do not open or close the door on the ramps or trailer platform.**

https://truckmanualshub.com/

When loading or unloading, always use ramps or a platform and carry out the operation as follows.

LOADING

1. Load and unload on firm level ground only.
   Maintain a safe distance from the edge of a road.
2. Properly apply the brakes on the trailer and put blocks under the tires to ensure that the trailer does not move.
   Make the slope of the ramps a maximum of 15°.

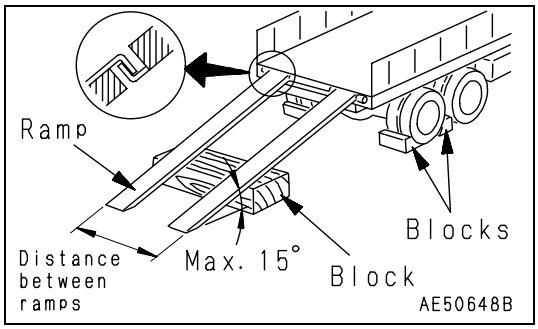

3. Run the engine at low speed.
   (A): Low idling

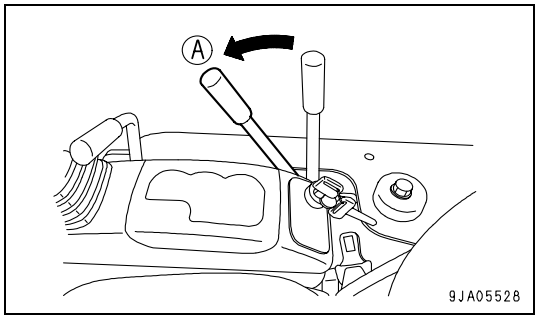

4. Check that the travel speed boost monitor is off.

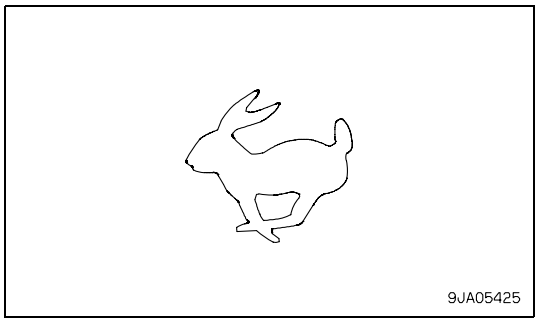

If the monitor is on, the speed is set to high speed travel, so press the travel speed selector switch.
The monitor goes out and the speed is shifted to low speed travel.

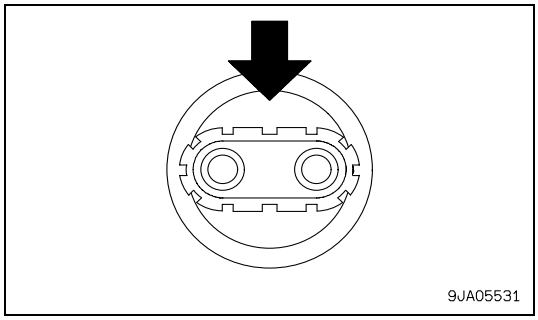

https://truckmanualshub.com/

5. When loading, set the work equipment at the front and the blade at the rear, with the undercarriage and upper structure set parallel.
6. Before moving onto the ramps, make sure that the machine is positioned in a straight line with the ramps and that the centerline of the machine matches that of the trailer.

   Align the direction of travel with the ramps and travel slowly.

   Lower the work equipment as far as possible without causing interference.

   When on the ramps, operate only the travel lever. Do not operate any other lever.
7. Stop the machine at the specified place, then swing the upper structure slowly 180°.
8. Load the machine at the specified position on the trailer or truck.

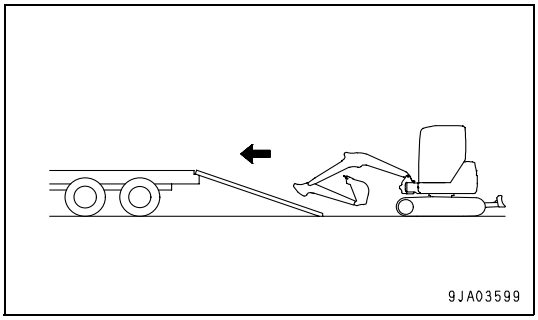

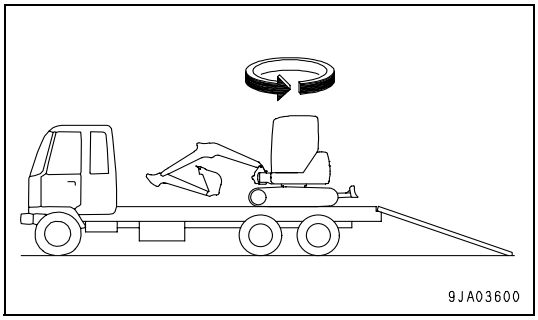

https://truckmanualshub.com/

SECURING MACHINE

After placing the machine on the specified position of the trailer, secure it according to the following procedure.

IMPORTANT
- **To prevent damage to the bucket cylinder during transportation, fit a wooden block at one end of the bucket cylinder to prevent it from touching the floor.**

1. Lower the blade.
2. Extend the bucket and arm cylinders fully, then lower the boom slowly.
3. Stop the engine, then remove the key from the starting switch.

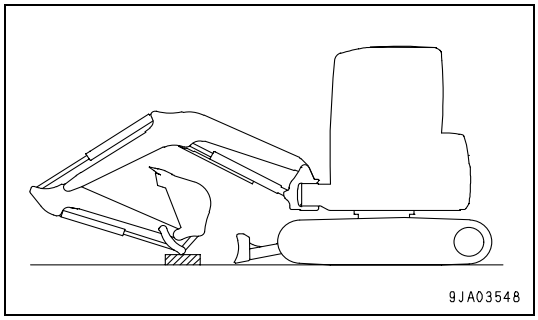

4. Secure control levers with the safety lock lever.

NOTE
- **For machines equipped with a cab, there is only a safety lock lever on the left.**

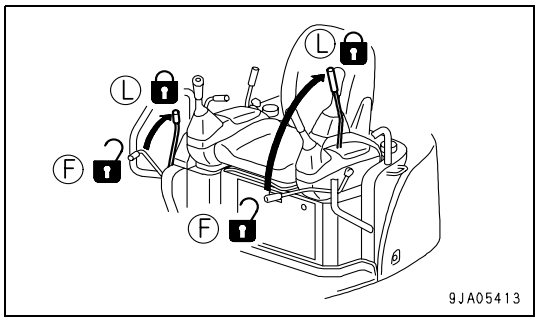

5. Lock the sliding door (cab specification) and covers with locks.
   See Section "3.2.8 COVER WITH LOCK".

IMPORTANT
- **Do not use the hole at the back of the track frame for towing or lifting the machine.**

6. Place blocks under both ends of the tracks to prevent the machine from moving during transportation, and secure the machine with chains or wire rope of suitable strength. Be particulary careful to secure the machine in position so it does not slip to the side.

   When securing with a chain or wire rope, use the hole at the rear of the track frame and the hole in the blade side plate.

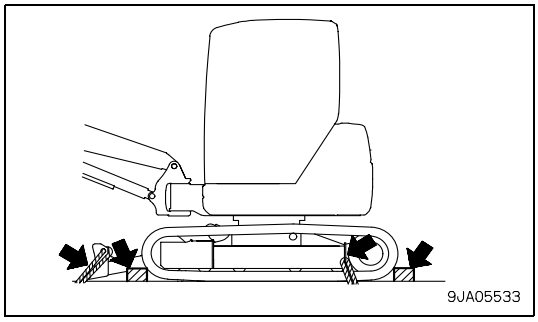

https://truckmanualshub.com/

UNLOADING

1. Load and unload on firm level ground only. Maintain a safe distance from the edge of a road.
2. Properly apply the brakes on the trailer and put blocks under the tires to ensure that the trailer does not move.
   Make the slope of the ramps a maximum of 15°.
3. Remove the chains and wire ropes fastening the machine.
4. Start the engine.
   Warm the engine up fully.

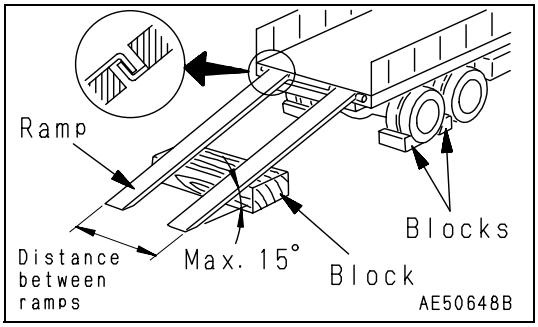

5. Check that the travel speed boost monitor is off.

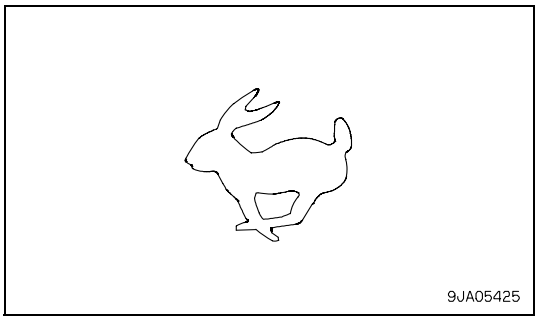

If the monitor is on, the speed is set to high speed travel, so press the travel speed selector switch.
The monitor goes out and the speed is shifted to low speed travel.

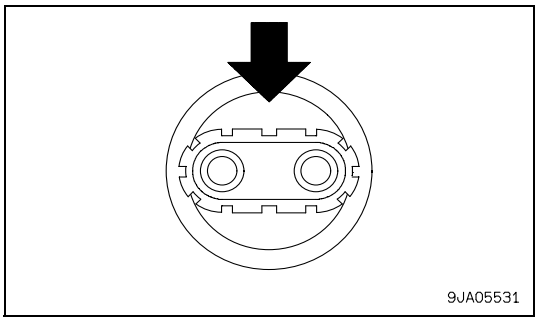

6. Set the safety lock lever to the FREE position.

Machine equipped with canopy

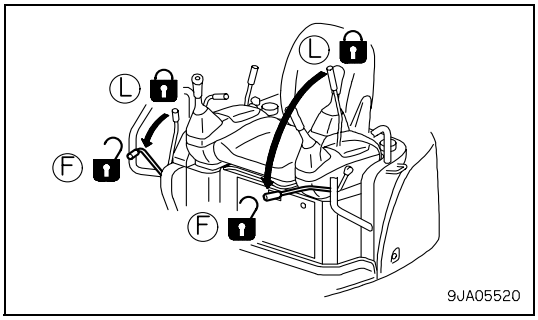

Machine equipped with cab

NOTE

- **For machines equipped with a cab, there is only a safety lock lever on the left.**

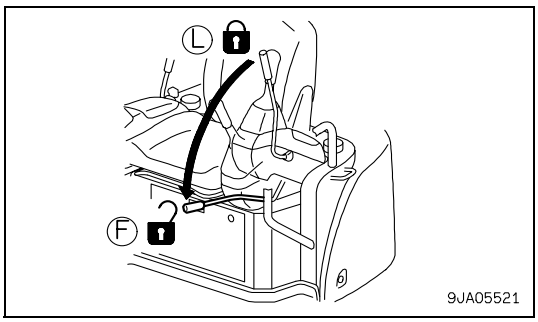

https://truckmanualshub.com/

7. Run the engine at low speed.
   (A): Low idling
8. Raise the blade.

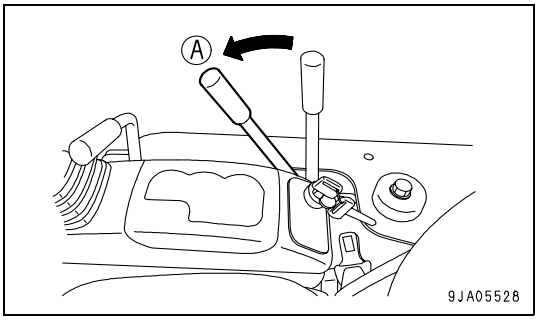

9. Raise the work equipment, align the direction of travel with the ramp, and travel slowly.

   Lower the work equipment as far as possible without causing interference.

   When on the ramps, operate only the travel lever. Do not operate any other lever or pedal.

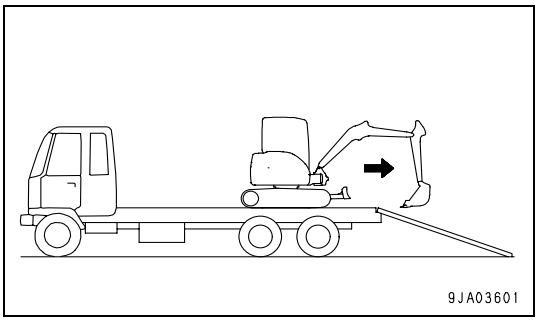

https://truckmanualshub.com/

3.4.3 LIFTING MACHINE

WARNING

- **The operator carrying out the lifting operation using a crane must be a properly qualified crane operator.**
- **Never raise the machine with any worker on it.**
- **Always make sure that the wire rope is of ample strength for the weight of this machine.**
- **Never lift the machine with the upper structure swing to the side. Always set the upper structure parallel to the undercarriage before lifting.**
- **When lifting, keep the machine horizontal.**
- **Never go under the machine when it is raised.**
- **Never try to lift the machine in any posture other than the posture given in the procedure below or using lifting equipment other than in the procedure below.**
  There is a hazard that the machine may lose its balance.

CAUTION

- **It is prohibited to use the 4 hooks on the top of the cab to lift the machine. This will damage the cab.**
  It is prohibited to use the transportation holes in the track frame to lift the machine. This will damage the track frame.

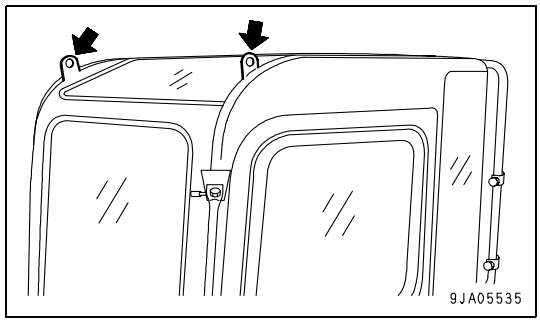

IMPORTANT

- **For the details on the machine weight, see the section of "5.1 SPECIFICATIONS".**
- **The lifting procedure applies to machines with standard specifications.**
  The method of lifting differs according to the attachments and options actually installed. In such cases, please contact your Komatsu Utility Dealer for information.

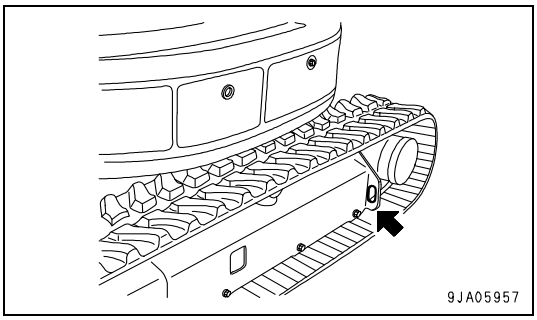

When lifting the machine, carry out the operation on flat ground as follows.

1. Start the engine, then swing the upper structure so that the work equipment is at sprocket (1) end with the track frame and upper structure set parallel.
2. Raise the blade fully.
3. Extend the bucket cylinder, arm cylinder, and boom cylinder fully.
4. When the boom swing has been operated to the left or right, operate the boom swing pedal to set the boom parallel to the track frame, then set the pedal lock to the LOCK position.

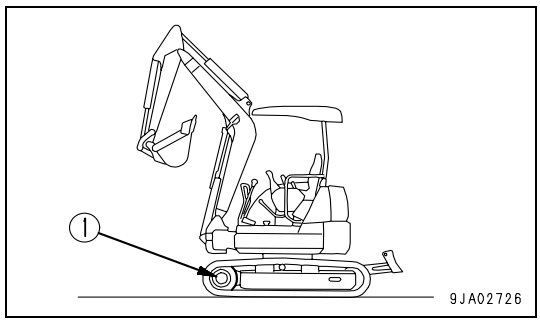

https://truckmanualshub.com/

5. Operate the safety lock lever to the LOCK position.

NOTE

- **For machines equipped with a cab, there is only a safety lock lever on the left.**

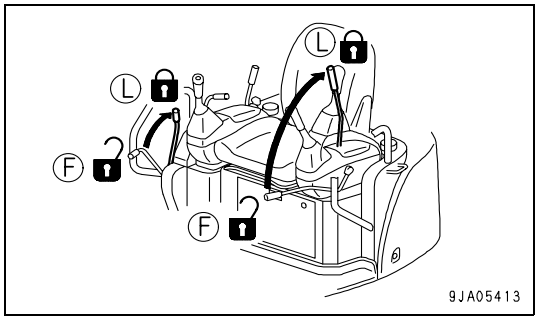

6. Stop the engine, check that there is nothing around the operator's compartment, then get off the machine.
   For cab specification machines, close the cab door and front glass securely.

7. Install shackles to the lifting holes (2 places) on both ends of the blade, then install the wire ropes.

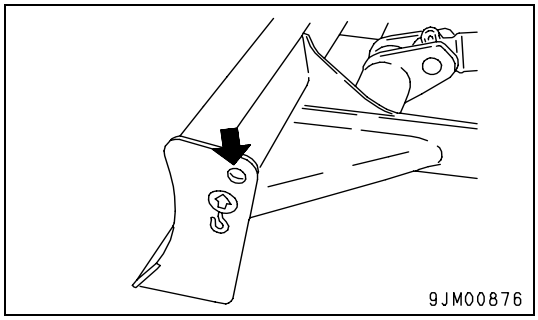

8. Pass the wire rope through the bracket on the boom (see diagram on right).

IMPORTANT

- **Be sure to use the three brackets.**
  Do not lift the machine with the boom or the upper structure swung.
- **Be careful not to get the hoses caught.**

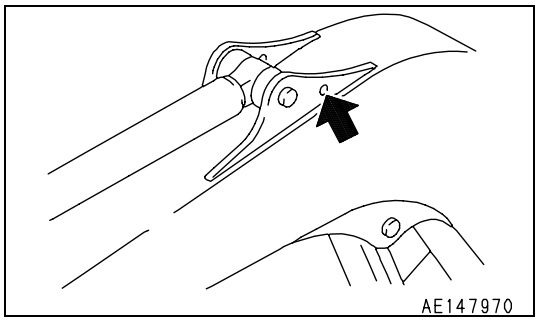

9. Set the lifting angle of the wire rope to 30° to 40°, then lift the machine slowly.
10. After the machine comes off the ground, check the hook condition and the lifting posture, and then lift slowly.

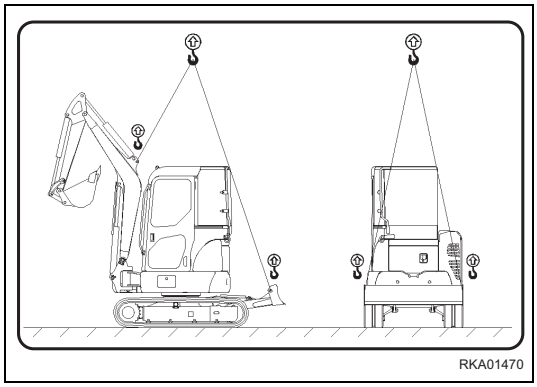

https://truckmanualshub.com/

3.5 COLD WEATHER OPERATION

3.5.1 COLD WEATHER OPERATION INFORMATION

If the temperature becomes low, it becomes difficult to start the engine, and the coolant may freeze, so do as follows.

3.5.1.1 FUEL AND LUBRICANTS

Change to fuel and oil with low viscosity for all components. For details of the specified visicosity, see "4.2 LUBRICANTS, COOLANT AND FILTERS".

3.5.1.2 COOLING SYSTEM COOLANT

⚠ WARNING

- **Antifreeze is toxic. Be careful not to get it into your eyes or on your skin. If it should get into your eyes or on your skin, wash it off with large amounts of fresh water and see a doctor at once.**
- **When changing the coolant or when handling coolant containing antifreeze that has been drained when repairing the radiator, please contact your Komatsu Utility Dealer. Antifreeze is toxic, so do not let it flow into drainage ditches or spray it on to the ground surface.**
- **Antifreeze is flammable, so do not bring any flame close. Do not smoke when handling antifreeze.**

IMPORTANT

- **Never use methanol, ethanol, or propanol-based antifreeze.**
- **Never use any water-leakage prevention agent or any antifreeze containing such an agent.**
- **Do not mix different types of antifreeze.**

For details of the antifreeze mixture when changing the coolant, see "4.9.1.b CLEAN INSIDE OF COOLING SYSTEM".
Use a Permanent Antifreeze (ethylene glycol mixed with corrosion inhibitor, antifoam agent, etc.) meeting the standard requirements as shown below. With permanent antifreeze, no change of coolant is required for a year. If it is doubtful that an available antifreeze meets the standard requirements, ask the supplier of that antifreeze for information.
Standard requirements for permanent antifreeze

- SAE J1034
- FEDERAL STANDARD O-A-548D

NOTE

- **In areas where permanent antifreeze is not available, it is possible to use antifreeze whose main component is ethylene glycol and does not contain any corrosion inhibitor. (Such antifreeze can be used for the winter season only.) However, in such a case, the cooling water must be changed twice a year (spring and fall), so use permanent antifreeze when possible.**

https://truckmanualshub.com/

3.5.1.3 BATTERY

WARNING

- **The battery generates flammable gas, so do not bring fire or sparks near the battery.**
- **Battery electrolyte is dangerous. If it gets in your eyes or on your skin, wash it off with a large amount of water and consult a doctor.**
- **Battery electrolyte dissolves paint. If it gets on the bodywork, wash it off immediately with water.**
- **If the battery electrolyte is frozen, do not charge the battery or start the engine with a different power source. There is danger that the battery may explode.**
- **Battery electrolyte is toxic, so do not let it flow into drainage ditches or spray it on to the ground surface.**

When the ambient temperature drops, the capacity of the battery will also drop. If the battery charge ratio is low, the battery electrolyte may freeze. Maintain the battery charge as close as possible to 100%, and insulate it against cold temperature so that the machine can be started easily the next morning.

NOTE

- **Measure the specific gravity and calculate the rate of charge from the following conversion table.**

Charging Rate (%)	Temperature (°C)			
	20	0	-10	-20
100	1.28	1.29	1.30	1.31
90	1.26	1.27	1.28	1.29
80	1.24	1.25	1.26	1.27
75	1.23	1.24	1.25	1.26

- As the battery capacity drops markedly in low temperatures, cover the battery or remove it from the machine, keep it in a warm place, and install it again the next morning.
- If the electrolyte level is low, add distilled water in the morning before beginning work. Do not add the water after the day's work so as to prevent fluid in the battery from freezing during the night.

3.5.2 CAB HEATER IN COLD WEATHER (Machines equipped with cab)

If the ambient temperature drops, use the operator's cab heater.
When using the heater, turn valve (1) on the water manifold counterclockwise to open it.
When leaving the heater unused for a long time, turn valve (1) clockwise to close it.

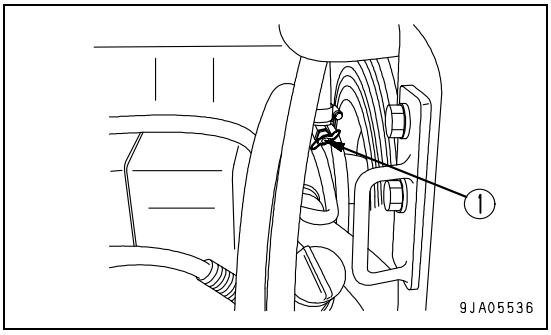

https://truckmanualshub.com/

3.5.3 AFTER DAILY WORK COMPLETION

WARNING

- **Performing idle-running of the tracks is dangerous, so stay well away from the tracks.**

To prevent mud, water, or the undercarriage from freezing and making it impossible for the machine to move on the following morning, always observe the following precautions.

- Remove all the mud and water from the machine body. In particular, wipe the hydraulic cylinder rod clean to prevent damage to the seal caused by mud or dirt on the rod surface getting inside the seal together with drops of water.
- Park the machine on hard, dry ground.
  If this is impossible, park the machine on wooden boards.
  The boards help protect the tracks from being frozen in soil so the machine can move next morning.
- Open the drain valve and drain any water collected in the fuel system to prevent it from freezing.
- After operation in water or mud, remove water from undercarriage as described below to extend undercarriage service life.

1. Swing 90° with engine at low idling and bring the work equipment to the side of the track.
2. Jack up the machine until the track is raised slightly from the ground. Rotate the track under no load. Repeat this procedure on both the left and right sides.

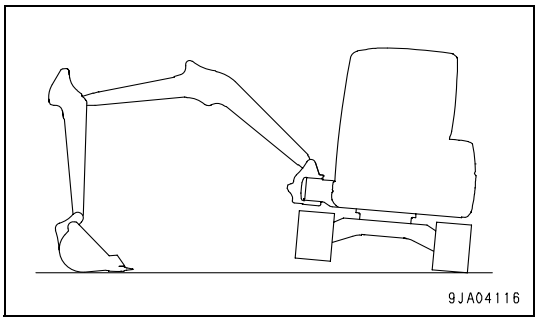

3.5.4 AFTER COLD WEATHER SEASON

When season changes and the weather becomes warmer, do as follows.

- Replace the fuel and oil for all parts with oil of the viscosity specified.
  For details, see "4.2 LUBRICANTS, COOLANT AND FILTERS".

https://truckmanualshub.com/

3.6 LONG TERM STORAGE

3.6.1 BEFORE STORAGE

IMPORTANT
- **To protect the hydraulic cylinder piston rod while in storage, keep the work equipment in the posture shown at right.**
  (This prevents rust from developing on the piston rod)

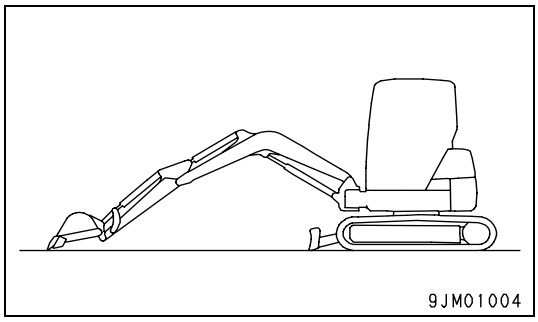

When keeping in long-term storage (more than one month), store as follows.

- Clean and wash all parts, then store the machine indoors. If the machine has to be stored outdoors, select level ground and cover the machine with a sheet.
- Fill the fuel tank to prevent moisture from accumulating.
- Completely fill the fuel tank, lubricate and change the oil before storage.
- Apply a thin coat of grease to the metal surface of the hydraulic piston rods.
- Disconnect the negative terminals of the battery and cover it, or remove it from the machine and store it separately.
- Lock each control lever and pedal with the safety lock lever and pedal lock.
- Set the selector valve on the machines which can install attachments to the “Crusher or general attachment“ position.

3.6.2 DURING STORAGE

⚠ WARNING

- **When it is necessary to perform the rust-preventive operation while the machine is indoors, open the doors and windows to improve ventilation and prevent gas poisoning.**

- During storage, always operate the machine once a month so that a new film of oil will be coated over movable parts and component surfaces. At the same time, also charge the battery.
- When operating the work equipment, wipe off all the grease from the hydraulic cylinder rod.
- If the machine is equipped with an air conditioner, operate it for 3 to 5 minutes once a month to lubricate each portion of its compressor. Be sure to idle the engine at low speed for this purpose. Also, check the quantity of refrigerant twice a year.

3.6.3 AFTER STORAGE

IMPORTANT
- **If the machine has been stored without the monthly rust prevention operation, consult your Komatsu Utility Dealer for service.**

When using the machine after long-term storage, do as follows before using it.

- Wipe off the grease from the hydraulic cylinder rods.
- Add oil and grease at all lubrication points.
- When the machine is stored for a long period, moisture in the air can contaminate the oil over time. Check the oil for presence of water before and after starting the engine. If there is water in the oil, change the oil.

https://truckmanualshub.com/

3.7 TROUBLES AND ACTIONS

3.7.1 RUNNING OUT OF FUEL

When starting the engine after running out of fuel, fill with fuel and bleed the air from the fuel system before starting.
For details of bleeding the air, see "4.9.3.c REPLACE FUEL FILTER CARTRIDGE" - " AIR BLEEDING".

3.7.2 PHENOMENA THAT ARE NOT FAILURES

Note that the following phenomena are not failures:

- When the arm control lever is operated to the IN position and the work equipment is lowered under no load from a high position, the arm speed will drop momentarily when the arm is more or less at the vertical position.

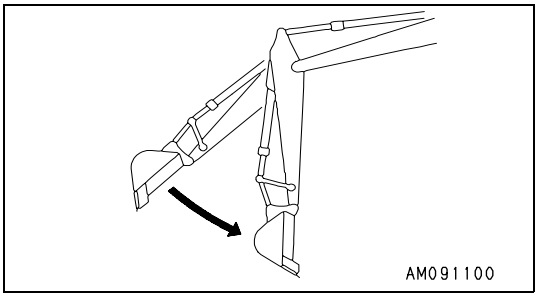

- When the bucket control lever is operated to the CURL position and the work equipment is lowered under no load from a high position, the bucket speed will drop momentarily when the bucket teeth are more or less at the horizontal position.
- When starting or stopping the swing, noise will be emitted from the brake valve.
- When going down a steep slope at low speed, a noise will be emitted from the travel motor brake valve.

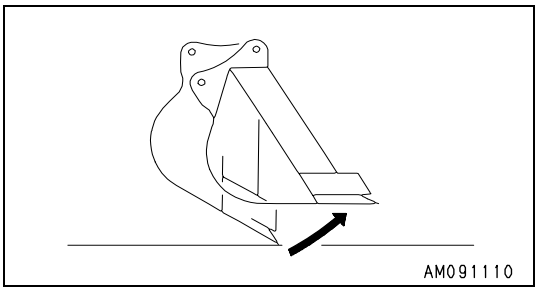

3.7.3 TOWING THE MACHINE

⚠ WARNING

- **When towing the machine, use a wire rope that has ample strength for the weight of the machine that is being towed.**
- **Do not apply a sudden load to the wire rope.**

When the machine is stuck in soft ground and cannot escape under its own power, or when towing a heavy machine, pass the wire rope through the front of the track frame as shown in the diagram on the right before carrying out towing.

Places pieces of wood between the wire ropes and the body to prevent the wire ropes from damaging the body.

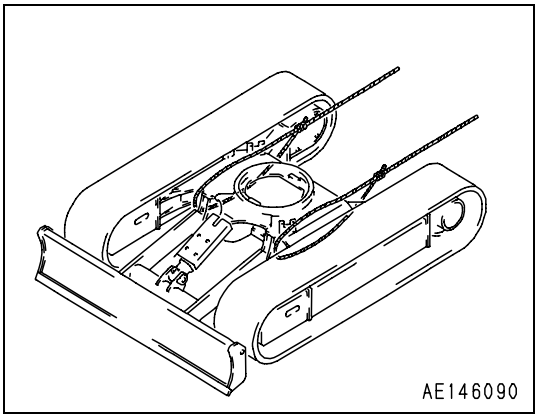

https://truckmanualshub.com/

3.7.4 SEVERE JOB CONDITION

- When digging in water, if the water gets on to the work equipment mounting pins, add grease to bucket links (A), (B), (C), (D) and (E) for each operation.
- When carrying out heavy duty digging and deep digging operations, add grease to bucket links (A), (B), (C), (D) and (E) (total: 5 points) before each operation.
  After greasing, operate the bucket several times, then add grease again.

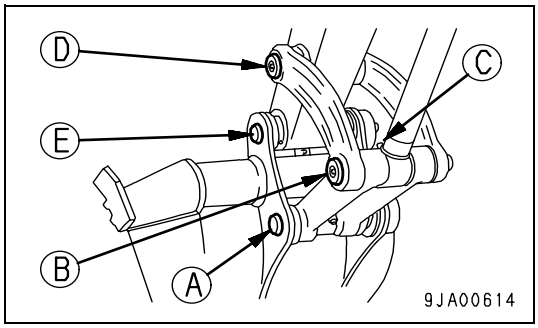

3.7.5 DISCHARGED BATTERY

⚠ WARNING

- **When checking or handling the battery, stop the engine and turn the starting switch key to the OFF position.**
- **The battery generates hydrogen gas, so there is a hazard of explosion. Do not bring lighted cigarettes near the battery, or do anything that will cause sparks.**
- **Battery electrolyte is dilute sulphuric acid, and it will attack your clothes and skin. If it gets on your clothes or on your skin, immediately wash it off with a large amount of water. If it gets in your eyes, wash it out with fresh water and consult a doctor.**
- **When handling batteries, always wear protective goggles and rubber gloves.**
- **When removing the battery, first disconnect the cable from the ground (normally the negative (-) terminal). When installing, install the positive (+) terminal first.**
  If a tool touches the positive terminal and the chassis, there is danger that it will cause a spark, so be extremely careful.
- **If the terminals are loose, there is danger that the defective contact may generate sparks that will cause an explosion.**
- **When removing or installing the terminals, check which is the positive (+) terminal and which is the negative (-) terminal.**

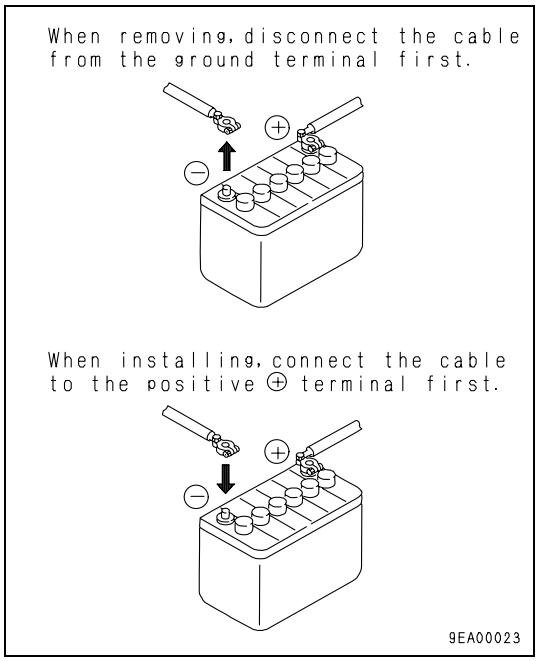

https://truckmanualshub.com/

3.7.5.1 BATTERY REMOVAL AND INSTALLATION

IMPORTANT

- **After securing the battery, check that it does not move. If it moves, tighten it again securely.**

- Before removing the battery, remove the ground cable (normally connected to the negative (-) terminal).
  If any tool touches between the positive terminal and the chassis, there is a hazard of sparks being generated.
- When installing the battery, connect the ground cable last.
- Install the battery securely to the determined place. When doing this, be careful not to let the clamps contact the terminals.
- When replacing the battery, fix the battery securely with battery clamp (1).
  Tightening torque for mounting bolt (2):
  4.90 to 5.88 Nm
- Make sure that the cover on top of the battery covers the battery completely. Do not let it roll back.
  If the cover is damaged, replace it immediately.
- If there is salt on the battery terminals, wash with water of a temperature of approx. 40°C (104°F), then dry completely and remove with a wire brush.

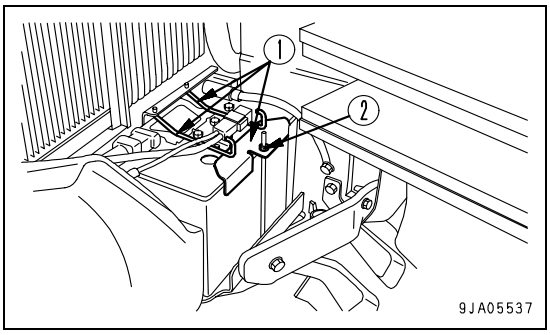

3.7.5.2 BATTERY CHARGES

When charging the battery, if the battery is not handled correctly, there is a hazard that the battery may explode. Always follow the instructions of "3.7.5 DISCHARGED BATTERY" and the instruction manual accompanying the charger, and do as follows.

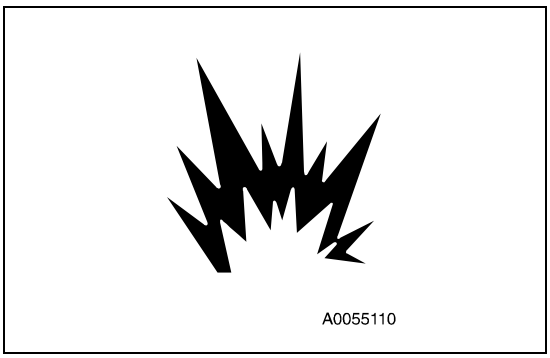

- Flammable hydrogen gas is generated when the battery is charged, so remove the battery from the chassis, take it to a well-ventilated place, and remove the battery caps before charging it.
- Tighten the battery caps securely. If any battery cap is damaged, replace it immediately.
- Set the voltage of the charger to match the voltage of the battery to be charged. If the correct voltage is not selected, the charger may overheat and cause an explosion.
- Connect the positive (+) charger clip of the charger to the positive (+) terminal of the battery, then connect the negative (-) charger clip of the charger to the negative (-) terminal of the battery. Be sure to fix the clips securely.
- Set the charging current to 1/10 of the value of the rated battery capacity; when carrying out rapid charging, set it to less than the rated battery capacity.
  If the charger current is too high, the electrolyte will leak or dry up, and this may cause the battery to catch fire and explode.
- If the battery electrolyte is frozen, do not charge the battery or start the engine with a different power source. There is a hazard that this will ignite the battery electrolyte and cause the battery to explode.
- Do not use or charge the battery if the battery electrolyte level is below the LOWER LEVEL line. This may cause an explosion. Always check the battery electrolyte level periodically and add distilled water to bring the electrolyte level to the UPPER LEVEL line.

https://truckmanualshub.com/

3.7.5.3 STARTING ENGINE WITH BOOSTER CABLES

When starting the engine with a booster cable, do as follows:

CONNECTING AND DISCONNECTING BOOSTER CABLES

⚠ WARNING

- **When connecting the cables, never contact the positive (+) and negative (-) terminals.**
- **When starting the engine with a booster cable, always wear safety glasses.**
- **Be careful not to let the normal machine and problem machine contact each other. This prevents sparks from generating near the battery which could ignite the hydrogen gas given off by the battery. If hydrogen gas explodes, it could cause serious injury.**
- **Be careful not to make a mistake when connecting a booster cable. In the last connection (to the upper structure frame), a spark will be caused, so connect the cable to a spot as far away from the battery as possible. (Avoid the work equipment, however, because it is not a good conductor)**
- **When removing the booster cable, exercise good care so that the booster cable clips may not contact each other, or they contact the chassis.**

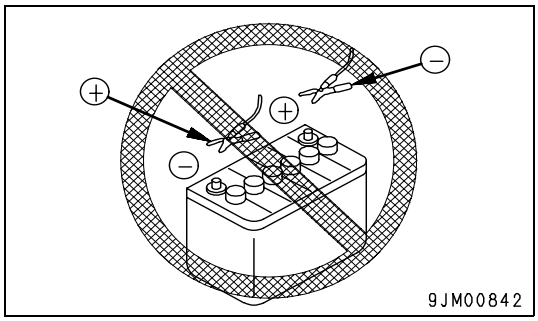

IMPORTANT

- **The size of the booster cable and clip should be suitable for the battery size.**
- **The battery of the normal machine must be the same capacity as that of the engine to be started.**
- **Check the cables and clips for damage or corrosion.**
- **Make sure that the cables and clips are firmly connected.**
- **Check that the safety lock levers and parking brake levers of both machines are in the LOCK position.**
- **Check that each lever is in the NEUTRAL position.**

BOOSTER CABLE CONNECTION

Keep the starting switch of the normal machine and problem machine in the OFF position.
Connect the booster cable as follows, in the order of the numbers marked in the diagram.

1. Connect one clip of booster cable (A) to the positive (+) terminal of the problem machine.
2. Connect the other clip of booster cable (A) to the positive (+) terminal of the normal machine.
3. Connect one clip of booster cable (B) to the negative (-) terminal of the normal machine.
4. Connect the other clip of booster cable (B) to the engine block of the problem machine.

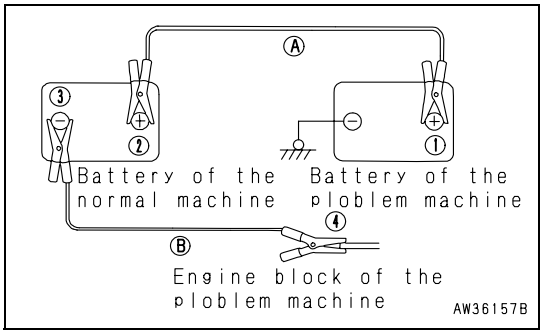

https://truckmanualshub.com/

STARTING THE ENGINE

⚠ CAUTION

- **Always check that the safety lock lever is set to the LOCK position, regardless of whether the machine is working normally or has failed. Check also that all the control levers are at the HOLD or neutral position.**

1. Make sure the clips are firmly connected to the battery terminals.
2. Start the engine of the normal machine and keep it running at high idle.
3. Turn the starting switch of the problem machine to the START position and start the engine.
   If the engine doesn't start at first, try again after 2 minutes or so.

BOOSTER CABLE DISCONNECTION

After the engine has started, disconnect the booster cables in reverse order of connection.

1. Remove one clip of booster cable (B) from the engine block of the problem machine.
2. Remove the other clip of booster cable (B) from the negative (-) terminal of the normal machine.
3. Remove one clip of booster cable (A) from the positive (+) terminal of the normal machine.
4. Remove the other clip of booster cable (A) from the positive (+) terminal of the problem machine.

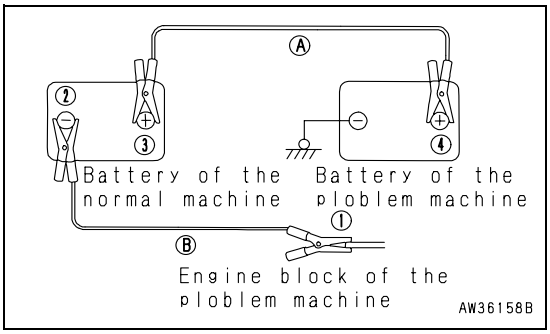

https://truckmanualshub.com/

3.7.6 OTHER TROUBLE

3.7.6.1 ELECTRICAL SYSTEM

- ( ): Always contact your Komatsu Utility Dealer when dealing with these items.
- In cases of abnormalities or causes which are not listed below, contact your Komatsu Utility Dealer for repairs.

Problem	Main causes	Remedy
Lamp dose not glow brightly even when the engine runs at high speed	• Defective wiring • Defective adjustment of fan belt tension • Blown fuse	(•) Check, repair loose terminals, disconnections • Adjust fan belt tension For details, see EVERY 500 HOURS SERVICE • Replace
Lamp flickers while engine is running		
Charge level monitor dose not go out even when engine is running	• Defective alternator • Defective wiring	(•) Replace (•) Check, repair
Abnormal noise is generated from alternator	• Defective alternator	(•) Replace
Starting motor dose not turn when starting switch is turned to ON	• Defective wiring • Insufficient battery charge • Blown fuse	(•) Check, repair • Charge • Replace
Starting motor pinion repeatedly moves in and out (makes rattling sound)	• Insufficient battery charge	• Charge
Starting motor turns engine sluggishly	• Insufficient battery charge • Defective starting motor	• Charge (•) Replace
Starting motor disengages before engine starts	• Defective wiring • Insufficient battery charge	(•) Check, repair • Charge
Pre-heating monitor dose not lights	• Defective wiring • Defective monitor	(•) Check, repair (•) Replace
Oil pressure monitor dose not light up when engine is stopped (starting switch at ON position)	• Defective monitor • Defective oil pressure switch	(•) Replace (•) Replace

https://truckmanualshub.com/

3.7.6.2 CHASSIS

- ( ): Always contact your Komatsu Utility Dealer when dealing with these items.
- In cases of abnormalities or causes which are not listed below, contact your Komatsu Utility Dealer for repairs.

Problem	Main causes	Remedy
Speed of travel, swing, boom, arm, bucket is slow	• Lack of hydraulic oil	• Add oil to specified level, see CHECK BEFORE STARTING
Pump generates abnormal noise	• Clogged element in hydraulic tank strainer	• Clean, see EVERY 2000 HOURS SERVICE
Excessive rise in hydraulic oil temperature	• Lack of hydraulic oil • Loose fan belt • Clogged radiator fins, oil cooler fins	• Add oil to specified level, see CHECK BEFORE STARTING • Adjust fan belt tension, EVERY 500 HOURS SERVICE • Clean or repair. For details, see EVERY 500 HOURS SERVICE
Track comes off	• Track too loose	• Adjust track tension, see WHEN REQUIRED
Abnormal wear of sprocket		

3.7.6.3 ENGINE

- ( ): Always contact your Komatsu Utility Dealer when dealing with these items.
- In cases of abnormalities or causes which are not listed below, contact your Komatsu Utility Dealer for repairs.

Problem	Main causes	Remedy
Engine oil pressure monitor flashes (buzzer sounds at same time)	• Engine oil pan oil level is low (sucking in air) • Clogged oil filter cartridge • Defective tightening of oil pipe joint, oil leakage from damaged part • Defective engine oil pressure sensor	• Add oil specified level, see CHECK BEFORE STARTING • Replace cartridge, see EVERY 500 HOURS SERVICE (•) Check, repair (•) Replace sensor
Steam is emitted from top part of rediator (pressure valve)	• Cooling waterlevel low, water leakage • Loosen fan belt • Dirt or scale accumulated in cooling system • Clogging radiator fin or damaged fin • Defective thermostat • Loosen radiator filler cap (high altitude operation) • Defective water level sensor	• Add cooling water,repair, see CHECK BEFORE STARTING • Adjust fan belt tension, see EVERY 500 HOURS SERVICE • Change cooling water, clean inside of cooling system, see WHEN REQUIRED • Clean or repair,see EVERY 500 HOURS SERVICE (•) Replace themostat • Tighten cap or replacem packing (•) Replace sensor
Engine water temperature gauge indicator is in red range (at same time, pilot lamp flashes and buzzer sounds)		
Even when engine is run for a long time, engine water temperature gauge indicator does not enter correct range	• Defective thermostat • Monitor defective	(•) Replace thermostat (•) Replace monitor)

https://truckmanualshub.com/

Problem	Main causes	Remedy
Even when water temperature gauge indicator is in correct range, pilot lamp flashes	• Defective thermostat	(•) Replace thermostat
Engine does not start when starting motor is turned	• Lack of fuel • Air in fuel system • Water in fuel system • Defective fuel injection pump or nozzle • Staring motor cracks engine sluggishly • Engine pre-heating monitor does not lights up • Defective compression • Defective valve clearance	• Add fuel, see CHECK BEFORE STARTING • Repair place where air is sucked in, see EVERY 500 HOURS SERVICE • Drain water from system, see WHEN REQUIRED and CHECK BEFORE STARTING (•) Replace pump or nozzle • See ELECTRICAL SYSTEM • See ELECTRICAL SYSTEM (•) Adjust valve clearance
Exhaust gas is whiter or blue	• Too mach oil in oil pan • Improper fuel	• Add oil specified level, see CHECK BEFORE STARTING • Change to specified fuel
Exhaust gas occasionally turns black	• Clogging air cleaner element • Defective nozzle • Defective compression	• Clean or repalce, see WHEN REQUIRED (•) Replace nozzles (•) See defective compression above
Combustion noise occasionally makes bresthing sound	• Defective nozzle	(•) Replace nozzle
Abnornal noise generated (combustion or mechanical)	• Low grade fuel being used • Overheating • Damage inside muffler • Excessive valve clearnce	• Change to specified fuel • See “Engine water temperature gauge indicator is in red range” • Replace muffler (•) Adjust valve clearance)

https://truckmanualshub.com/

PAGE INTENTIONALLY LEFT BLANK

https://truckmanualshub.com/

MAINTENANCE

https://truckmanualshub.com/

4.1 MAINTENANCE INFORMATION

Do not carry out any inspection and maintenance operation that is not found in this manual.

SERVICE METER READING

Check the service meter reading every day to see if the time has come for any necessary maintenance maintenance to be performed.

KOMATSU GENUINE REPLACEMENT PARTS

Use Komatsu genuine parts specified in the Parts Book as replacement parts.

KOMATSU GENUINE LUBRICANTS

Use Komatsu genuine oils and grease. Choose oils and grease with proper viscosities specified for ambient temperature.

WINDSHIELD WASHER FLUID

Use automobile window washer fluid, and be careful not to let any dirt get into it.

FRESH AND CLEAN LUBRICANTS

Use clean oil and grease. Also, keep the containers of the oil and grease clean. Keep foreign materials away from oil and grease.

CHECK DRAINED OIL AND USED FILTER

After oil is changed or filters are replaced, check the old oil and filters for metal particles and foreign materials. If large quantity of metal particles or foreign materials are found, always report to the person in charge, and carry out suitable action.

FUEL STRAINER

If your machine is equipped with a fuel strainer, do not remove it while fueling.

WELDING INSTRUCTIONS

- Turn off the engine ignition switch.
- Do not apply more than 200 V continuously.
- Connect grounding cable within 1 m (3.3 ft) of the area to be welded. If grounding cable is connected near instruments, connectors, etc., the instruments may malfunction.
- If a seal or bearing happens to come between the part being welded and grounding point, change the the grounding point to avoid such parts.
- Do not use the area around the work equipment pins or the hydraulic cylinders as the grounding point.

DO NOT DROP THINGS INSIDE MACHINE

- When opening inspection windows or the oil filler port of the tank to carry out inspection, be careful not to drop nuts, bolts, or tools inside the machine.
  If such things are dropped inside the machine, it may cause damage and/or malfunction of the machine, and will lead to failure. If you drop anything inside the machine, always remove it immediately.
- Do not put unnecessary things in your pockets. Carry only things which are necessary for inspection.

https://truckmanualshub.com/

DUSTY JOBSITE

When working at dusty worksites, do as follows:

- Inspect the air cleaner clogging monitor frequently to see if the air cleaner is clogged.
  Clean the air cleaner element at a shorter interval than specified.
- Clean the radiator core frequently to avoid clogging.
- Clean and replace the fuel filter frequently.
- Clean electrical components, especially the starting motor and alternator, to avoid accumulation of dust.
- When inspecting or changing the oil, move the machine to a place that is free of dust to prevent dirt from getting into the oil.

AVOID MIXING LUBRICANTS

If a different brand or grade of oil has to be added, drain the old oil and replace all the oil with the new brand or grade of oil. Never mix different brand or grade of oil.

COVER ON RIGHT SIDE OF THE MACHINE

If the cover on the right side of the machine is fully opened and the boom is swung to the right, there is danger that the boom may hit the cover and break it.
If the boom must be swung to the right with the cover open, set the cover so that it is half-open.

LOCKING THE INSPECTION COVERS

Lock inspection cover securely into position with the lock bar. If inspection or maintenance is performed with inspection cover not locked in position, there is a hazard that it may suddenly blown shut by the wind and cause injury to the worker.

HYDRAULIC SYSTEM - AIR BLEEDING

After repairing or replacing the hydraulic equipment or after removing the hydraulic piping, it is necessary to bleed the air from the circuit. For details, see "4.9.5.a CHANGE OIL IN HYDRAULIC TANK, CLEAN STRAINER".

HYDRAULIC HOSE INSTALLATION

- When removing parts at locations where there are O-rings or gasket seals, clean the mounting surface, and replace with new parts.
  When doing this, be careful not to forget to assemble the O-rings and gaskets.
- When installing the hoses, do not twist or bend them into loops with a small radius.
  This will cause damage to the hose and drastically reduce its service life.

https://truckmanualshub.com/

CHECKS AFTER INSPECTION AND MAINTENANCE WORKS

If you forget to perform the checks after inspection and maintenance, unexpected problems may occur, and this may lead to serious injury or property damage. Always do the following:

- Checks after operation (with engine stopped)
  - Have any inspection and maintenance points been forgotten?
  - Have all inspection and maintenance items been performed correctly?
  - Have any tools or parts been dropped inside the machine? It is particularly dangerous if parts are dropped inside the machine and get caught in the lever linkage mechanism.
  - Is there any coolant or oil leaks?
    Have all nuts and bolts been tightened?
- Checks when operating engine
  - For details of the checks when operating the engine, see "2.8.7 USE OF THE ENGINE DURING MAINTENANCE OPERATIONS" and pay careful attention to safety.
  - Are the inspection and maintenance items working properly?
  - Is there any leakage of fuel or oil when the engine speed is raised?

USE OF FUEL AND LUBRICANTS ACCORDING TO AMBIENT TEMPERATURE

It is necessary to decide the type of fuel and lubricants according to the ambient temperature.
For details, see Section "4.4 LUBRICANTS, FUEL AND COOLANT SPECIFICATIONS".

https://truckmanualshub.com/

4.2 LUBRICANTS, COOLANT AND FILTERS

4.2.1 HANDLING OIL, FUEL, COOLANT, AND PERFORMING OIL CLINIC

4.2.1.1 OIL

- Oil is used in the engine and hydraulic equipment under extremely severe conditions (high temperature, high pressure), and deteriorates with the use.
  Always use oil that matches the grade and maximum and minimum ambient temperatures recommended in the Operation and Maintenance Manual. Even if the oil is not dirty, always change the oil after the specified interval.
- Oil corresponds to blood in the human body, so always be careful when handling it to prevent any impurities (water, metal particles, dirt, etc.) from getting in.
- The majority of problems with machines are caused by the entry of such impurities.
- Take particular care not to let any impurities get in when storing or adding oil.
- Never mix oils of different grades or brands.
- Always add the specified amount of oil.
- Having too much oil or too little oil are both causes of problems.
- If the oil in the work equipment is not clear, there is probably water or air getting into the circuit. In such cases, please contact your Komatsu Utility Dealer.
- When changing the oil, always replace the related filters at the same time.
- We recommend you have an analysis made of the oil periodically to check the condition of the machine. For those who wish to use this service, please contact your Komatsu Utility Dealer.
- When using commercially available oil, it may be necessary to shorten the oil change interval.
  For this reason, we recommend making full use of the Komatsu oil clinic.

4.2.1.2 FUEL

- After completing the day's operations, fill the fuel tank to force out any air containing moisture. This will prevent the moisture from condensing and mixing with the fuel.
- The fuel pump is a precision instrument, and if fuel containing water or dirt is used, it cannot work properly.
- Be extremely careful not to let impurities get in when storing or adding fuel.
- Always use the fuel specified in the Operation and Maintenance Manual.
- Fuel may congeal depending on the temperature when it is used (particularly in low temperature below -15°C (5°F)). It is necessary to use the fuel that is suitable for the temperature.
- Before starting the engine, or when 10 minutes have passed after adding fuel, drain the sediment and water from the fuel tank.
- If the engine runs out of fuel, or if the filters have been replaced, it is necessary to bleed the air from the circuit.
- If there is any foreign material in the fuel tank, wash the tank and fuel system.

https://truckmanualshub.com/

4.2.1.3 COOLING SYSTEM COOLANT

- River water contains large amount of calcium and other impurities, so if it is used, scale will stick to the engine and radiator, and this will cause defective heat exchange and overheating.
  Do not use water that is not suitable for drinking.
- When using antifreeze, always observe the precautions given in the Operation and Maintenance Manual.
- Komatsu Utility machines are supplied with Komatsu original anti-freeze in the coolant when the machine is shipped.
  This anti-freeze is effective in preventing corrosion of the cooling system.
  The anti-freeze can be used continuously for two years or 4000 hours. Therefore, it can be used as it is even in hot areas.
- Antifreeze is flammable, so be extremely careful not to expose it to flame or fire.
- The proportion of anti-freeze to water differs according to the ambient temperature.
  For details of the mixing proportions, see "4.9.1.b CLEAN INSIDE OF COOLING SYSTEM".
- If the engine overheats, wait for the engine to cool before adding coolant.
- If the coolant level is low, it will cause overheating and will also cause problems with corrosion from the air in the coolant.

4.2.1.4 GREASE

- Grease is used to prevent twisting and noise at the joints.
- This construction equipment is used under heavy-duty conditions. Always use the recommended grease and follow the change intervals and recommended ambient temperatures given in this Operation and Maintenance Manual.
- The nipples not included in the maintenance section are nipples for overhaul, so they do not need grease.
- If any part becomes stiff after being used for long time, add grease.
- Always wipe off all of the old grease that is pushed out when greasing.
  Be particularly careful to wipe off the old grease in places where sand or dirt sticking in the grease would cause wear of the rotating parts.

https://truckmanualshub.com/

4.2.1.5 CARRYING OUT KOWA (KOMATSU OIL WEAR ANALYSIS)

The oil clinic samples the oil periodically and analyzes it. This is a preventive maintenance service, which provides early discovery of abnormal parts and wear of the drive parts of the machine. This then makes it possible to ensure prevention of failures and reduction in downtime.

Komatsu's long years of experience and rich supply of accumulated data make it possible to accurately determine the condition of your machine. This enables us to locate the problems and to recommend suitable and timely repair methods.

The oil clinic charges the customer only the actual costs, and provides an immediate report of the results of the analysis and recommendations for action to take. This low-cost service can save you high costs and inconvenience in the future, so we strongly recommend you to avail yourself of this service.

KOWA ANALYSIS ITEMS

- Analysis of metal wear particles
  This uses an ICP (Inductively Coupled Plasma) analyzer to measure the density of metal wear particles in the oil.

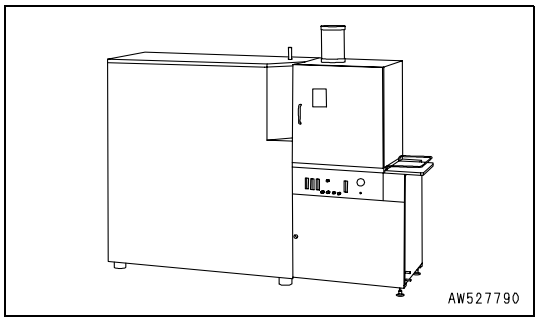

- Measurement of particle quantity
  This uses a PQI (Particle Quantifier Index) machine to measure the quantity of large iron particles in the oil.

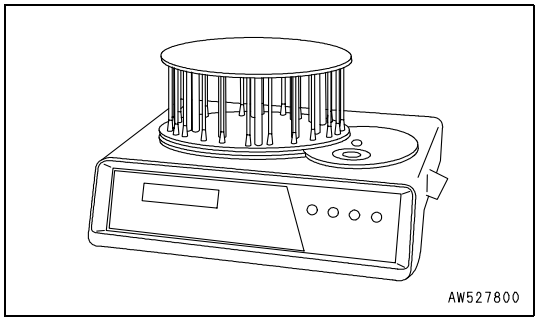

- Others
  Measurements are made of items such as the ratio of water or fuel in the oil, and the dynamic viscosity.

OIL SAMPLING

- Collection interval
  Every 500 hours: Engine and components other than engine
- Precautions when sampling
  - Make sure that the oil is well mixed before sampling.
  - Carry out sampling regularly at fixed intervals.
  - Do not carry out sampling on rainy or windy days when water or dust can get into the oil.

For further details of KOWA, please contact your Komatsu Utility Dealer.

https://truckmanualshub.com/

4.2.1.6 OIL AND FUEL STORAGE

- Keep indoors to prevent any water, dirt, or other impurities from getting in.
- When keeping drum cans for a long period, put the drum on its side so that the filler port of the drums is at the side to prevent moisture from being sucked in.
  If drums have to be stored outside, cover them with a waterproof sheet or take other measures to protect them.
- To prevent any change in quality during long-term storage, be sure to use in the order of first in - first out (use the oldest oil or fuel first).

4.2.1.7 FILTERS

- Filters are extremely important safety parts. They prevent impurities in the fuel and air circuits from entering important equipment and causing problems.
  Replace all filters periodically. For details, see the Operation and Maintenance Manual.
  However, when working in severe conditions, replace the filters at shorter intervals according to the oil and fuel (sulfur content) being used.
- Never try to clean the filters (cartridge type) and use them again. Always replace with new filters.
- When replacing oil filters, check if any metal particles are affixed to the old filter. If any metal particles are found, contact your Komatsu Utility Dealer.
- Do not open packs of spare filters until just before they are to be used.
- Always use Komatsu genuine filters.

https://truckmanualshub.com/

4.2.2 ELECTRIC SYSTEM MAINTENANCE

- It is extremely dangerous if the electrical equipment becomes wet or the covering of the wiring is damaged. This will cause an electrical short circuit and may lead to malfunction of the machine. Do not wash the inside of the operator's cab with water. When washing the machine, be careful not to let water get into the electrical components.
- Service relating to the electric system is checking fan belt tension, checking damage or wear to the fan belt and checking battery fluid level.
- Never install any electric components other than those specified by Komatsu Utility.
- External electro-magnetic interference may cause malfunction of the control system controller, so before installing a radio receiver or other wireless equipment, please contact your Komatsu Utility Dealer.
- When working at the seashore, carefully clean the electric system to prevent corrosion.
- When installing an operator's cab cooler or any other electrical equipment, connect it to an independent power source connector. The cables to supply power to the optional equipment must never be connected to the fuse, starting switch, or battery relay.

4.2.3 HANDLING HYDRAULIC SYSTEM

- Hydraulic equipment is at a high temperature during operations and immediately after operations. During operations, it is also under high pressure, so be careful of the following points when carrying out inspection and maintenance of hydraulic-related equipment.
    - Stop the machine on level ground, lower the bucket completely to the ground, and set so that there is no pressure on the cylinder circuits.
    - Always stop the engine.
    - Immediately after the engine is stopped, the hydraulic oil and lubricants are at a high temperature and high pressure. Wait for the temperature to go down before starting the maintenance operation.
      Even when the temperature goes down, the circuits may be under internal pressure, so when loosening plugs, screws, or hose connections, do not stand directly in front. Loosen gradually to release the internal pressure before removing.
    - Always release the air in the hydraulic tank to remove the internal pressure before carrying out inspection and maintenance of the hydraulic circuit.
- Inspection and maintenance works include checking the hydraulic system for oil level, replacement of filter elements and replacement of hydraulic oil.
- If high-pressure hoses have been removed, check that there is no damage to the O-rings. If any damage is found, replace the O-ring.
- It is necessary to bleed the air from the circuits when the hydraulic filter element or strainer have been replaced or washed, or when hydraulic equipment has been repaired or replaced, or when the hydraulic piping has been removed.

https://truckmanualshub.com/

4.3 WEAR PARTS

Replace wear parts such as the filter element or air cleaner element at the time of periodic maintenance or before they reach the wear limit. The wear parts should be replaced correctly in order to ensure more economic use of the machine. When replacing parts, always use Komatsu genuine parts.

As a result of our continuous efforts to improve product quality, the part number may change, so inform your Komatsu Utility Dealer of the machine serial number and check for the latest part number when ordering parts.

4.3.1 WEAR PARTS LIST

The parts in parentheses are to be replaced at the same time.

Item	Part No.	Part name	Q'ty	Replacement frequentcy
Engine oil filter	YM129150-35151	Cartridge	1	Every 500 hours service
Fuel filter	YM119802-55800	Cartridge	1	Every 500 hours service
Hydraulic filter	22L-60-22120	Element	1	Every 1000 hours service
Water separator	YM119802-55710	Element	1	-
Air cleaner	YM119808-12520	Element	1	-
Bucket	825011123 801015594 801920107	Tooth Screw Nut	AR AR AR	- - -

https://truckmanualshub.com/

4.4 LUBRICANTS, FUEL AND COOLANT SPECIFICATIONS

RESERVOIR	KIND OF FLUID	AMBIENT TEMPERATURE -30 -20 -10 0 10 20 30 40 50°C
Engine oil pan	OIL API CD	SAE 30 SAE 10W SAE 10W-30 SAE 15W-40
Final drive case	OIL API CD	SAE 30
Hydraulic system	OIL API CD	SAE 10W SAE 10W-30 SAE 15W-40
Hydraulic system with biodegradable oil	• See “4.4.1”	
Fuel tank	DIESEL FUEL	ASTM D975 N. 2 *1
Grease fitting	GREASE	HYPER WHITE GREASE
Cooling system	WATER	Add antifreeze

*1: ASTM D975 No.1

NOTE

- **Use only diesel fuel.**
  The engine mounted on this machine employs electronic control and a high-pressure fuel injection device to obtain good fuel consumption and good exhaust gas characteristics. For this reason, it requires high precision for the parts and good lubrication.
  If kerosene or other fuel with low lubricating ability is used, there will be a big drop in durability.

	Engine oil pan	Final drive case (each)	Hydraulic system		Fuel tank	Cooling system
			PC30MR	PC35MR		
Specified capacity (liters)	7.7	0.6	40	45	44	3.3
Refill capacity (liters)	7.2	0.6	20		-	-

https://truckmanualshub.com/

NOTE

- **When fuel sulphur content is less than 0.5%, change oil in the oil pan according to the periodic maintenance hours described in this manual.**
  Change oil according to the following table if fuel sulphur content is above 0.5%.
- **When starting the engine with an atmospheric temperature of lower than 0°C (32°F), be sure to use engine oil of SAE10W, SAE10W-30 and SAE15W-40, even though the atmospheric temperature goes up to 10°C (50°F) more or less during the day.**
- **Use API classification CD as engine oil and if API classification CC, reduce the engine oil change interval to half.**
- **There is no problem if single grade oil is mixed with multigrade oil (SAE10W-30, 15W-40), but be sure to add single grade oil that matches the temperature range in the table.**
- **We recommend Komatsu genuine oil which has been specifically formulated and approved for use in engine and hydraulic work equipment applications.**

Specified capacity: Total amount of oil including oil for components and oil in piping.

Refill capacity: Amount of oil needed to refill system during normal inspection and maintenance.

ASTM: American Society of Testing and Material
SAE: Society of Automotive Engineers
API: American Petroleum Institute

Fuel sulphur content	Change interval of oil in engine oil pan
0.5 to 1.0%	1/2 of regular interval
Above 1.0%	1/4 of regular interval

https://truckmanualshub.com/

No.	Supplier	Engine oil [CD o CE] SAE10W, 30, 40 10W30, 15W40 (The 15W40 oil marked * is CE)	Gear oil [GL-4 o GL-5] SAE80, 90, 140	Grease [Lithium-Base] NLGI No. 2	Anti-freeze Coolant [Ethylene Glycol Base] Permanent Type
1	KOMATSU	EO10-CD EO30-CD EO10-30CD EO15-40CD	GO90 GO140	G2-LI G2-LI-S	AF-ACL AF-PTL AF-PT (Winter, one season type)
2	AGIP	Diesel sigma S Super dieselmultigrade *Sigma turbo	Rotra MP	GR MU/EP	—
3	AMOCO	*Amoco 300	Multi-purpose gear oil	RYKON prenium grease	—
4	ARCO	*Arcofleet S3 plus	Arco HD gear oil	Litholine HEP 2 Arco EP moly D	—
5	BP	Vanellus C3	Gear oil EP Hypogear EP	Energrase LS-EP2	Antifeeze
6	CALTEX	*RPM delo 400 RPM delo 450	Universal thuban Universal thuban EP	Marfak all purpose 2 Ultra-duty grease 2	AF engine coolant
7	CASTROL	*Turbomax *RX super CRD	EP EPX Hypoy Hypoy B Hypoy C	MS3 Spheerol EPL2	Anti-freeze
8	CHEVRON	*Delo 400	Universal gear	Ultra-duty grease 2	—
9	CONOCO	*Fleet motor oil	Universal gear lubricant	Super-sta grease	—
10	ELF	Multiperformance 3C Performance 3C	—	Tranself EP Tranself EP type 2	Glacelf
11	EXXON (ESSO)	Essolube D3 *Essolube XD-3 *Essolube XD-3 Extra *Esso heavy duty Exxon heavy duty	Gear oil GP Gear oil GX	Beacon EP2	All season coolant
12	GULF	Super duty motor oil *Super duty plus	Multi-purpose gear lubricant	Gulfcrown EP2 Gulfcrown EP special	Antifreeze and coolant
13	MOBIL	Delvac 1300 *Delvac super 10W30, 15W-40	Mobilube GX Mobilube HD	Mobilux EP2 Mobilgrease 77 Mobilgrease special	—
14	PENNZOIL	*Supreme duty fleet motor oil	Multi-purpose 4092 Multi-purpose 4140	Multi-purpose white grease 705 707L White - bearing grease	Anti-freeze and summer coolant
15	PETROFINA	FINA kappa TD	FINA potonic N FINA potonic NE	FINA marson EPL2	FINA tamidor

https://truckmanualshub.com/

No.	Supplier	Engine oil [CD o CE] SAE10W, 30, 40 10W30, 15W40 (The 15W40 oil marked * is CE)	Gear oil [GL-4 o GL-5] SAE80, 90, 140	Grease [Lithium-Base] NLGI No. 2	Anti-freeze Coolant [Ethylene Glycol Base] Permanent Type
16	SHEEL	Rimula X	Spirax EP Spirax heavy duty	Alvania EP grease	—
17	SUN	—	Sunoco GL5 gear oil	Sunoco ultra prestige 2EP Sun prestige 742	Sunoco antifreeze and summer coolant
18	TEXACO	*Ursa super plus Ursa premium	Multigear	Multifak EP2 Starplex 2	Code 2055 startex antifreeze coolant
19	TOTAL	Rubia S *Rubia X	Total EP Total transmission TM	Multis EP2	Antigel/antifreeze
20	UNION	*Guardol	MP gear lube LS	Unoba EP	—
21	VEEDOL	*Turbostar *Diesel star MDC	Multigear Multigear B Multigear C	—	Antifreeze

https://truckmanualshub.com/

4.4.1 HOMOLOGATED HEES SYNTHETIC BIODEGRADABLE LUBRICANTS

Our machines can be filled with synthetic biodegradable hydraulic oil type HEES not of plant origin and therefore the use of the oils indicated in the following table is authorized and recommended :

SUPPLIER	HEES SYNTHETIC BIODEGRADABLE OIL
KOMATSU	BO 46 G4 (KES 07.872)
AGIP	—
ARAL	—
AVIA	—
BP	—
CONDAT	CONDAT D 46 K
ELF	—
ESSO	—
FINA	BIOYIDRAN SE 46
FUCHS	—
KENDALL	—
KUWAIT PETROLEUM K8	—
MOBIL	EAL SYNDRAULIC
MOBIL (USA)	—
PAKELO	—
PANOLIN	HLP SYNTH 46
SHELL	NATURELLE HFX-32
TAMOIL	—
TEXACO	—
TOTAL	HYDROBIO 46
VALVOLINE	—

⚠ CAUTION

- **It is not possible to mix the synthetic biodegradable oil type HEES with ordinary hydraulic oils, since when the temperature increases insoluble compounds are generated, which are deposited on the filters and clog them (the maximum concentration of ordinary oil cannot exceed 1% of the total quantity of oil).**
- **The synthetic biodegradable oil can be used only in the hydraulic system; it cannot be used for the endothermic motor, the transmissions, the braking system, etc.**
- **Before introducing the synthetic biodegradable oil in the hydraulic system, empty the system completely, disconnecting the cylinders and all the parts that may contain ordinary oil, and replace the drain filter with a new one.**
  Start the engine and let it idle without using the work equipment , wait until the oil reaches a temperature of at least 40°C, then start moving the equipment, so that all the parts of the system are filled with oil. Stop the engine and check the oil level (see "3.3.1.2 CHECKS BEFORE STARTING" - " CHECK OIL LEVEL IN HYDRAULIC TANK, ADD OIL").

https://truckmanualshub.com/

4.5 TIGHTENING TORQUE SPECIFICATIONS

4.5.1 TIGHTENING TORQUE LIST

⚠ CAUTION

- **If nuts, bolts, or other parts are not tightened to the specified torque, it will cause looseness or damage to the tightened parts, and this will cause failure of the machine or problems with operation.**
  Always pay careful attention when tightening parts.

Unless otherwise specified, tighten the metric nuts and bolts to the torque shown in the table below.

If it is necessary to replace any nut or bolt, always use a Komatsu genuine part of the same size as the part that was replaced.

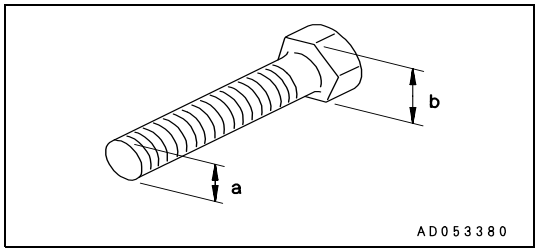

Thread diameter of bolt (a)(mm)	Width across flats (b)(mm)	Tightening torque			
		Target value		Service limit	
		Nm	kgm	Nm	kgm
6	10	13.2	1.35	11.8-14.7	1.2-1.5
8	13	31	3.2	27-34	2.8-3.5
10	17	66	6.7	59-74	6.0-7.5
12	19	113	11.5	98-123	10.0-12.5
14	22	172	17.5	153-190	15.5-19.5
16	24	260	26.5	235-285	23.5-29.5
18	27	360	37	320-400	33.0-41.0
20	30	510	52.3	455-565	46.5-58.0
22	32	688	70.3	610-765	62.5-78.0
24	36	883	90	785-980	80.0-100.0
27	41	1295	132.5	1150-1440	118.0-147.0
30	46	1720	175.0	1520-1910	155.0-195.0
33	50	2210	225.0	1960-2450	200.0-250.0
36	55	2750	280.0	2450-3040	250.0-310.0
39	60	3280	335.0	2890-3630	295.0-370.0

https://truckmanualshub.com/

4.6 LUBRICATION

4.6.1 LUBRICATION DIAGRAM

IMPORTANT

- **For the lubrication procedures for the single points, see "4.9.3.a LUBRICATING".**
- **The type of lubricant to be used is indicated in the lubricant table (See "4.4 LUBRICANTS, FUEL AND COOLANT SPECIFICATIONS").**

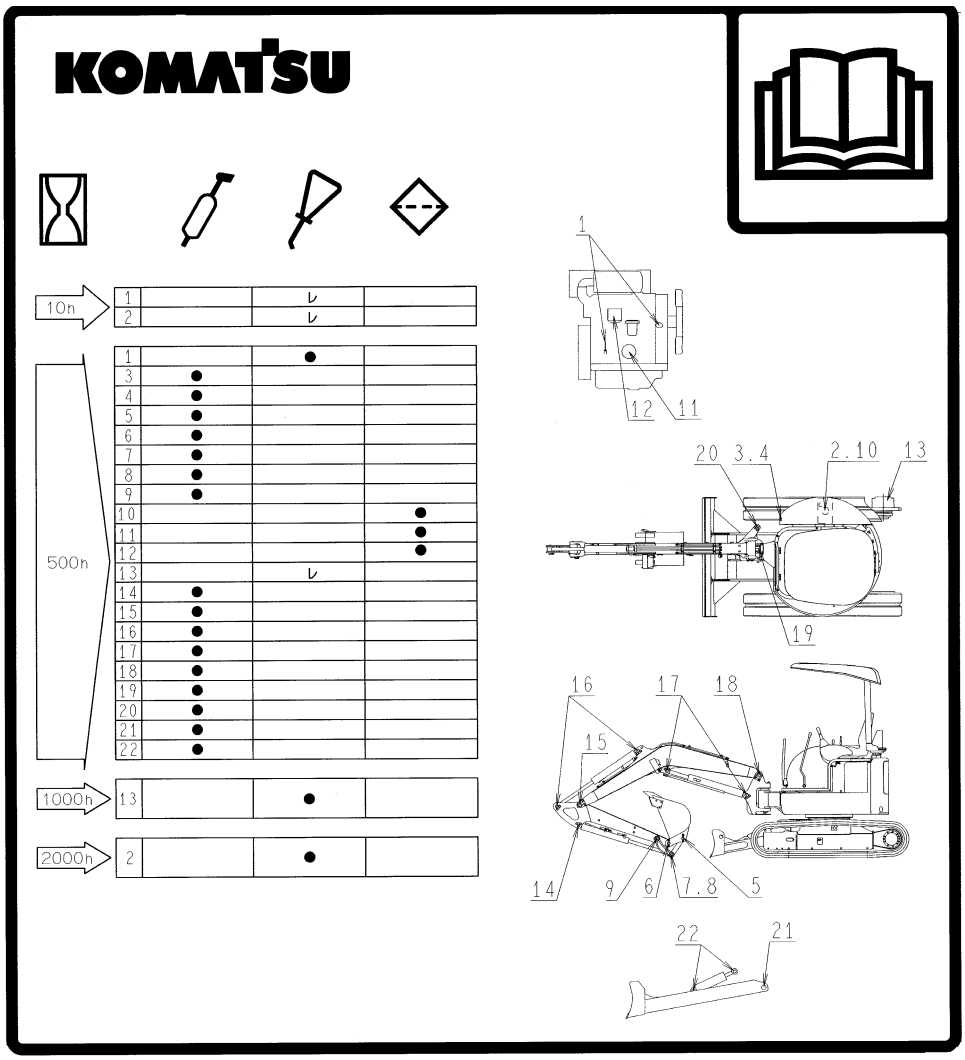

Grease

Oil

Filter

SWING CIRCLE GREASING POINT

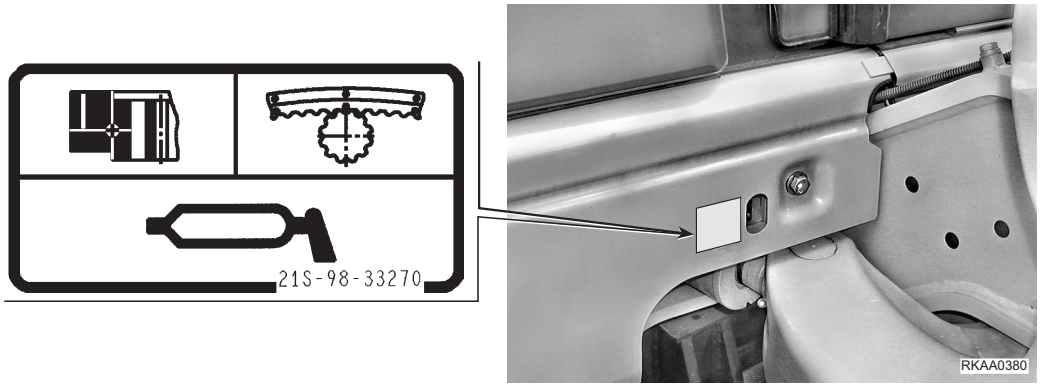

https://truckmanualshub.com/

4.7 SAFETY CRITICAL PARTS

To ensure safety at all times when operating or driving the machine, the user of the machine must always carry out periodic maintenance. In addition, to further improve safety, please contact your Komatsu Utility Dealer for periodic replacement of parts related to safety and fire prevention in the "4.7.1 SAFETY CRITICAL PARTS LIST" list.

Material quality of these parts can change as time passes and they are likely to wear our or deteriorate. However, it is difficult to determine the extent of wear or deterioration at the time of periodic maintenance. Hence it is required to replace them with new ones irrespective of their conditions after a certain period of usage. This is important to ensure that these parts maintain their full performance at all the time.

Furthermore, should anything abnormal be found on any of these parts, replace it with a new one even if the periodic replacement time for the parts has not yet arrived.

If any of the hose clamps show deterioration like deformation or crack, replace such a defective clamp with a new one together with a defective hose.

Also carry out the following checks with hydraulic hoses which need not be replaced periodically. Tighten a loosened clamp again or replace a defective hose, as such abnormality requires.

When replacing the hoses, always replace the O-rings, gaskets, and other such parts at the same time.

Ask your Komatsu Utility Dealer to replace the critical parts.

4.7.1 SAFETY CRITICAL PARTS LIST

No.	Safety critical parts for periodic replacement	Q'ty	Replacement interval
1	Fuel hose (fuel tank - water separator)	1	Every 2 years or 4000 hours, whichever comes sooner
2	Fuel hose (water separator - feed pump)	1	
3	Fuel hose (feed pump - fuel filter)	1	
4	Fuel hose (fuel filter - injection pump)	1	
5	Fuel hose (fuel filter - fuel tank)	1	
6	Spill hose (fuel filter - injection pump)	1	
7	Spill hose (between nozzles)	2	
8	Spill hose (nozzle - injection pump)	1	
9	Spill cap	1	
10	Hydraulic hose (main pump suction)	2	
11	Hydraulic hose (main pump delivery)	4	
12	Hydraulic hose (boom cylinder)	4	
13	Hydraulic hose (arm cylinder)	4	
14	Hydraulic hose (bucket cylinder)	4	
15	Hydraulic hose (swing cylinder)	2	
16	Seat belt	1	Every 3 years

https://truckmanualshub.com/

4.8 MAINTENANCE SCHEDULE

If the machine is equipped with a hydraulic breaker, the maintenance schedule for some parts will be different. For details, see "4.8.2 MAINTENANCE INTERVAL FOR HYDRAULIC BREAKER" to confirm the correct maintenance schedule when carrying out maintenance.

4.8.1 MAINTENANCE SCHEDULE CHART

WHEN REQUIRED

a. CHECK, CLEAN AND REPLACE AIR CLEANER ELEMENT 173
b. CLEAN INSIDE OF COOLING SYSTEM 175
c. CHECK LEVEL OF BATTERY ELECTROLYTE 177
d. CLEAN WATER SEPARATOR ELEMENT 179
e. DRAIN WATER AND SEDIMENT FROM FUEL TANK 179
f. CHECK AND TIGHTEN TRACK SHOE BOLTS (Machine equipped with road liner, steel shoe) 180
g. CHECK AND ADJUST TRACK TENSION (Machine equipped with road liner, steel shoe) 180
h. CHECK, RUBBER SHOES OR ROAD LINERS (Mechine equipped with rubber shoes, road liner) 182
i. CHECK AND ADJUST RUBBER SHOE TENSION (Machine equipped with rubber shoes) 184
j. REPLACE RUBBER SHOES (Machine equipped with rubber shoes) 186
k. REPLACE ROAD LINERS (Machine equipped with road liner) 188
l. CHECK WINDOW WASHER FLUID LEVEL, ADD FLUID 188
m. CHECK, CLEAN AND LUBRICATE CAB SLIDE DOOR RAIL AND ROLLER 189
n. LUBRICATING 189
o. BLEEDING AIR FROM HYDRAULIC SYSTEM 190

CHECKS BEFORE STARTING

..... 191

EVERY 500 HOURS MAINTENANCE

a. LUBRICATING 192
b. CHANGE OIL IN ENGINE OIL PAN, REPLACE ENGINE OIL FILTER CARTRIDGE 194
c. REPLACE FUEL FILTER CARTRIDGE 195
d. CHECK OIL LEVEL IN FINAL DRIVE CASE, ADD OIL 196
e. CLEAN AND INSPECT RADIATOR FINS AND OIL COOLER FINS 196
f. CHECK AND ADJUST COOLING FAN BELT TENSION 197

EVERY 1000 HOURS MAINTENANCE

a. REPLACE HYDRAULIC OIL FILTER ELEMENT 198
b. CHANGE OIL IN FINAL DRIVE CASE 200
c. CHECK ENGINE VALVE CLEARANCE, ADJUST 200

EVERY 2000 HOURS MAINTENANCE

a. CHANGE OIL IN HYDRAULIC TANK, CLEAN STRAINER 201
b. CHECK ALTERNATOR, STARTING MOTOR 202

https://truckmanualshub.com/

4.8.2 MAINTENANCE INTERVAL FOR HYDRAULIC BREAKER

For machine equipped with a hydraulic breaker, the hydraulic oil deteriorates faster than for normal bucket digging operations, so set the maintenance intervals as follows.

- **Replace hydraulic filter element**

  On a new machine, replace the element after the first 100 to 150 hours, then carry out further replacement of the element according to the table on the right.

- **Change oil in hydraulic tank**

  Change the oil according to the table on the right.

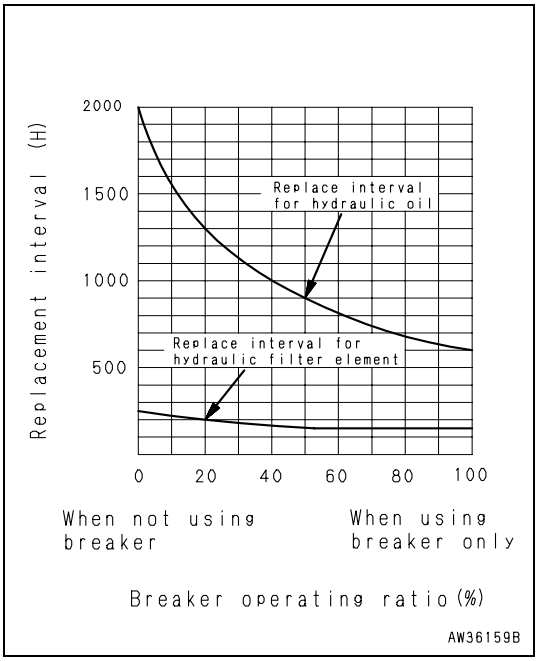

https://truckmanualshub.com/

4.9 MAINTENANCE PROCEDURE

4.9.1 WHEN REQUIRED

4.9.1.a CHECK, CLEAN AND REPLACE AIR CLEANER ELEMENT

WARNING

- **If inspection, cleaning, or maintenance is carried out with the engine running, dirt will get into the engine and damage it. Always stop the engine before carrying out these operations.**
- **When using compressed air, there is danger that dirt may be blown around and cause serious injury. Always use safety glasses, dust mask, and other protective equipment.**

Checking

1. Open the engine rear cover and cooling cover. For details, see Section "3.2.10 COOLING COVER".
2. If the dust indicator (1) shows red, clean the air cleaner element.

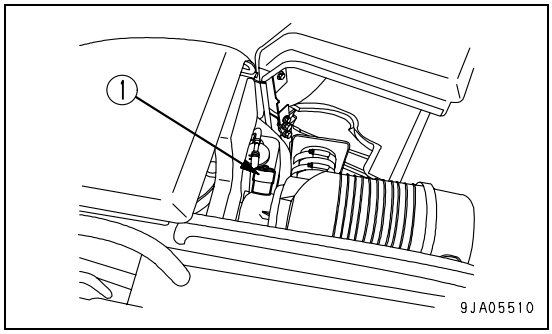

IMPORTANT

- **Do not clean the air cleaner element before the red piston in dust indicator (1) appears.**
  If the air cleaner element is cleaned frequently before the red piston in the dust indicator appears, the air cleaner cannot provide the proper performance and the cleaning efficiency is lowered.

Cleaning or replacing element

1. Open the engine rear cover and cooling cover. For details, see Section "3.2.10 COOLING COVER".
2. Remove clips (2), then remove dust cup (3).

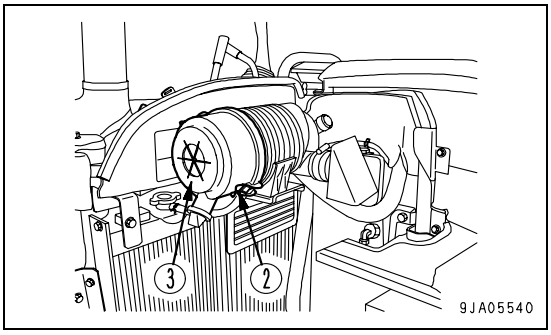

3. Take out element (4) and cover the air connector at the end of the air cleaner body with a clean cloth or tape.
4. Clean the inside of the air cleaner body, dust cap (3), and vacuator valve (5).

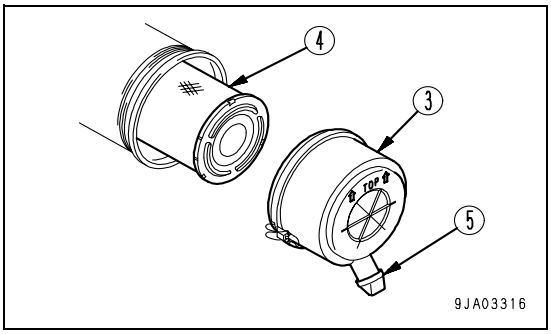

https://truckmanualshub.com/

5. Direct dry compressed air (Max. 0.69 MPa (7 kgf/cm2, 99.4 PSI)) from the inside of the outer element along its folds. Then direct the compressed air from the outside along the folds, and again from the inside.
6. Replace the element which has been cleaned 5 times repeatedly or used throughout a year.
7. Replace element when the dust indicator red piston appears soon after installing the cleaned element even though it has not been cleaned 6 times.
8. If small holes or thinner parts are found on the element when it is checked by shining a light through it after cleaning, replace the element.

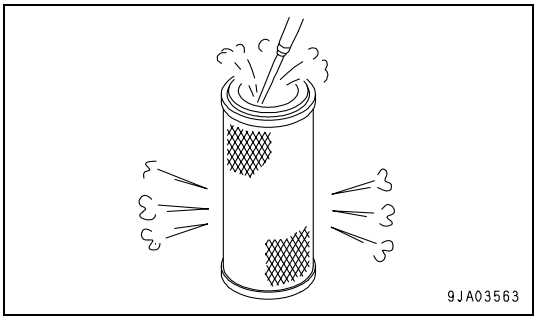

IMPORTANT

- **When cleaning the element, do not hit it or beat it against something .**
  Do not use an element whose folds or gasket or seal are damaged.
  Wrap unused element and store them in a dry place.

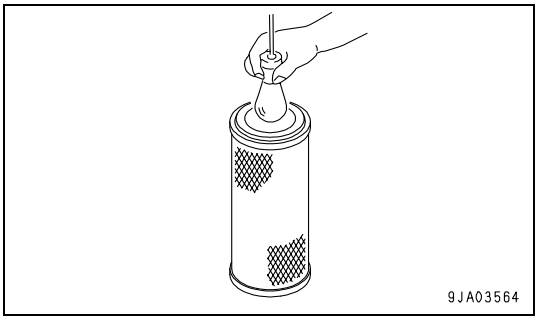

9. Remove the cloth or adhesive tape used to cover the air connector inside the air cleaner body.
10. Install cleaned element (4) or a new element.
11. Set dust cup (3) with the arow pointing up, then set it to the air cleaner body and secure it with clip (2).

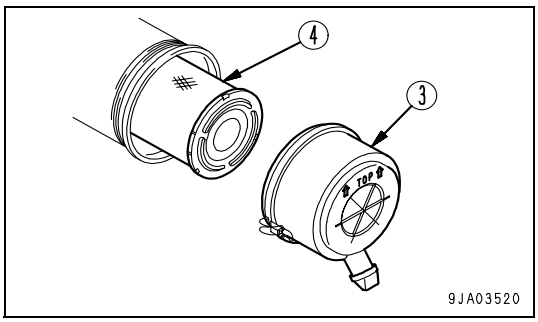

12. Press the button of dust indicator (1) to return the red piston to its original position.

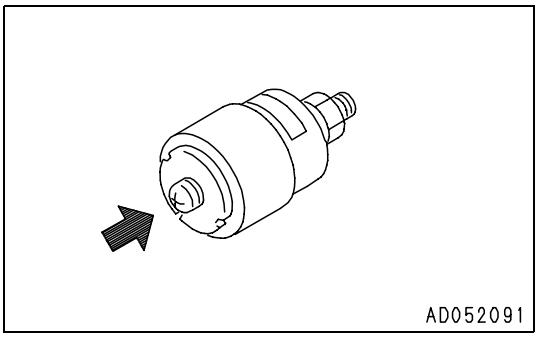

https://truckmanualshub.com/

4.9.1.b CLEAN INSIDE OF COOLING SYSTEM

⚠ WARNING

- **Immediately after the engine is stopped, the coolant is at a high temperature and the radiator is under high internal pressure. If the cap is removed to drain the coolant in this condition, there is a hazard of burns. Wait for the temperature to go down, then turn the cap slowly to release the pressure before removing it.**
- **Cleaning is carried out with the engine running. When standing up or leaving the operator's seat, set the safety lock lever to the LOCK position.**
- **For details of starting the engine, see "3.3.1 BEFORE STARTING ENGINE" and "3.3.1.5 STARTING ENGINE" in the "3.3 MACHINE OPERATIONS AND CONTROLS" section.**
- **The engine is operated when washing, so it is dangerous if the machine moves when you are standing behind it. Never stand behind the machine when the engine is running.**

Stop the machine on level ground when cleaning or changing the coolant.

Clean the inside of the cooling system, change the coolant and replace the corrosion resistor according to the table below.

Kind of coolant	Cleaning inside of cooling system and changing coolant	Adding corrosion resistor agent KI
Permanent type antifreeze (All season type)	Every year (autumn) or every 2000 hours whichever comes first	Every 1000 hours and when cleaning the inside of the cooling system and when changing coolant.
Non-permanent type antifreeze containing ethylene glycol (winter, one season type)	Every 6 months (spring and autumn) (Drain antifreeze in spring, add antifreeze in autumn)	
When not using antifreeze	Every 6 months or every 1000 hours whichever comes first	

Use a permanent type of antifreeze.

If, for some reason, it is impossible to use permanent type antifreeze, use an antifreeze containing ethylene glycol.

The proportion of the mixture differs according to the ambient temperature, but to obtain the corrosion resistance effect, a minimum of 30% by volume is necessary.

When deciding the ratio of antifreeze to water, check the lowest temperature in the past, and decide from the mixing rate table given below.

It is actually better to estimate a temperature about 10°C (18°F) lower when deciding the mixing rate.

Mixing rate of water and antifreeze

Min. atomspheric temperature	°C	Above -10	-15	-20	-25	-30
Amount of antifreeze	Liters	1.0	1.1	1.4	1.5	1.6
Amount of water	Liters	2.3	2.2	1.9	1.8	1.7

https://truckmanualshub.com/

WARNING

- **Antifreeze is flammable, so keep it away from flame.**
  Antifreeze is toxic. When removing the drain plug, be careful not to get water containing antifreeze on you. If it gets in your eyes, flush your eyes with large amount of fresh water and see a doctor at once.

Use city water for the cooling water.

If river water, well water or other such water supply must be used, contact your Komatsu Utility Dealer.

We recommend use of an antifreeze density gauge to control the mixing proportions.

Prepare a container with a capacity of at least 3.3 liters (0.87 US gal) to catch the coolant.

- Prepare a water inlet hose.

1. Open the engine rear cover and cooling cover. For details, see Section "3.2.10 COOLING COVER".
2. Check that the cooling water temperature has gone down enough to make it possible to touch the radiator cap surface by hand, then turn radiator cap (1) slowly until it contacts the stopper to release the pressure.
3. Following this, push radiator cap (1), turn it until it contacts the stopper, then remove it.

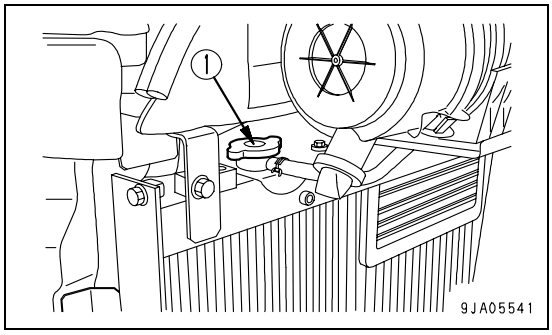

4. Place a container to catch the coolant under the drain hose installed to drain valve (2) and under coolant drain plug (3) on the engine block.
5. Open drain valve (2) and drain the water.
   Remove drain plug (3) from the engine cylinder block and drain the water.
6. After draining the antifreeze solution, close drain valve (2) and tighten drain plug (3), then fill with clean water. After the radiator is filled with water, start and run the engine at low idling speed. After the water temperature rises above 90°C (194°F), run the engine for about 10 minutes.
7. Stop the engine, then open drain valve (2) and remove drain plug (3) to drain the water.
8. Close drain valve (2). Wind seal tapes onto drain plug (3), then tighten it.
9. Decide the proportions of antifreeze and water according to the table for the mixing rate of water and antifreeze.
10. After the engine warming up, check that each gauge and caution lamp are in normal condition. If any abnormality is found, carry out adjustment or repairs.
    Operate the machine under a light load until the engine water temperature gauge (2) points to the white range (monitor panel spec.) or the green range (gauge panel spec.).
    To remove the air in the coolant, run the engine for 5 minutes at low idling, then for another 5 minutes at high idling. (While doing this, leave the radiator cap removed).

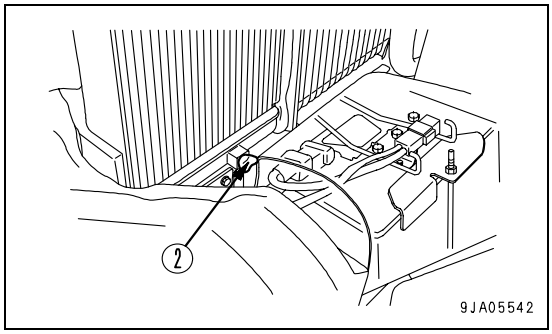

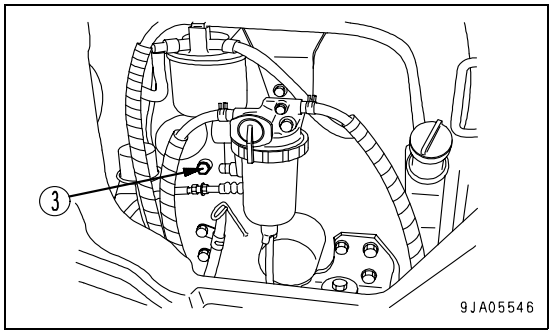

https://truckmanualshub.com/

11. After draining off the cooling water of reserve tank (3) , clean the inside of the reserve tank and refill the water between FULL and LOW level.
12. Stop the engine. About 3 minutes later, supply city water up to the water filler, then close radiator cap.

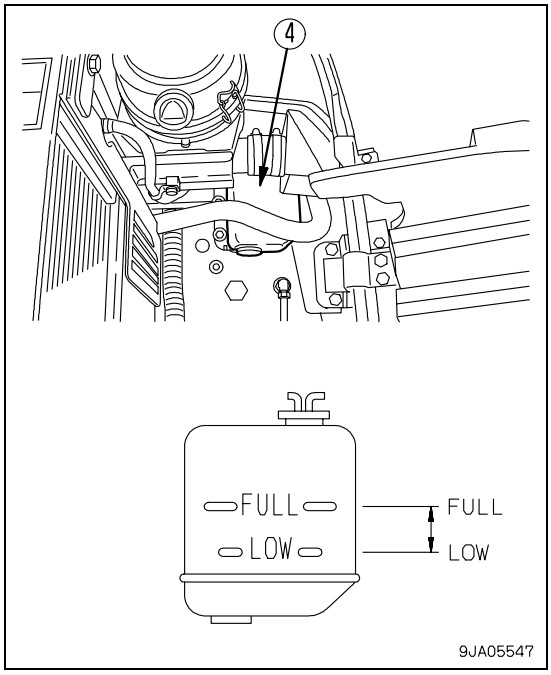

4.9.1.c CHECK LEVEL OF BATTERY ELECTROLYTE

Carry out this check before operating the machine.

⚠ WARNING

- **Do not use the battery if the battery electrolyte level is below the LOWER LEVEL line. This will accelerate deterioration of the inside of the battery and reduce the service life of the battery. In addition, it may also cause an explosion.**
- **The battery generates flammable gas and there is danger of explosion, so do not bring fire or sparks near the battery.**
- **Battery electrolyte is dangerous. If it gets in your eyes or on your skin, wash it off with a large amount of water and consult a doctor.**
- **When adding distilled water to the battery, do not allow the battery electrolyte to go above the UPPER LEVEL line. If the electrolyte level is too high, it may leak and cause damage to the paint surface or corrode other parts.**

IMPORTANT

- **When adding distilled water in cold weather, add it before starting operations in the morning to prevent the electrolyte from freezing.**

Inspect the battery electrolyte level at least once a month and follow the basic safety procedures given below.

When Checking Electrolyte Level from Side of Battery

If it is possible to check the electrolyte level from the side of the battery, check as follows.

1. Open the cover at the right side of the machine.
2. Use a wet cloth to clean the area around the electrolyte level lines and check that the electrolyte level is between the UPPER LEVEL (U.L.) and LOWER LEVEL (L.L.) lines.
   If the battery is wiped with a dry cloth, static electricity may cause a fire or explosion.

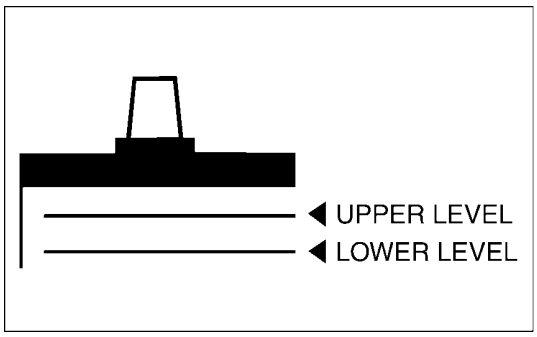

https://truckmanualshub.com/

3. If the electrolyte level is below the midway point between the U.L. and L.L. lines, remove cap (1) and add distilled water to the U.L. line.
4. After adding distilled water, tighten cap (1) securely.

NOTE

- **If distilled water is added to above the U.L. line, use a syringe to lower the level to the U.L. line. Neutralize the removed fluid with baking soda (sodium bicarbonate), then flush it away with a large amount of water or consult your Komatsu Utility Dealer or battery maker.**

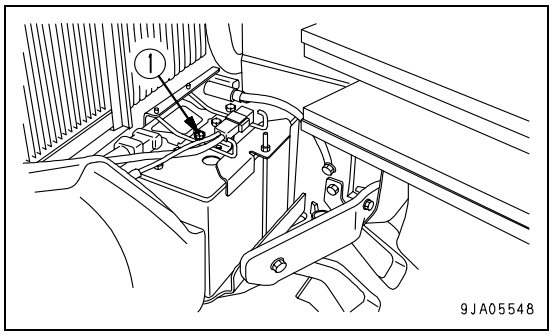

When It is Impossible to Check Electrolyte Level from Side of Battery

If it is impossible to check the electrolyte level from the side of the battery, or there is no display of the UPPER LEVEL line on the side of the battery, check as follows.

1. Open the engine rear cover and cooling cover. For details, see Section "3.2.10 COOLING COVER".
2. Remove cap (1) at the top of the battery, look through the water filler port, and check the electrolyte surface. If the electrolyte does not reach the sleeve, add distilled water so that the level reaches the bottom of the sleeve (UPPER LEVEL line) without fail.

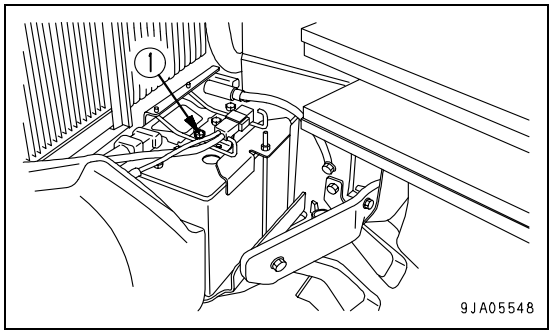

Use the diagram below for reference, and check if the electrolyte reaches the bottom of the sleeve.

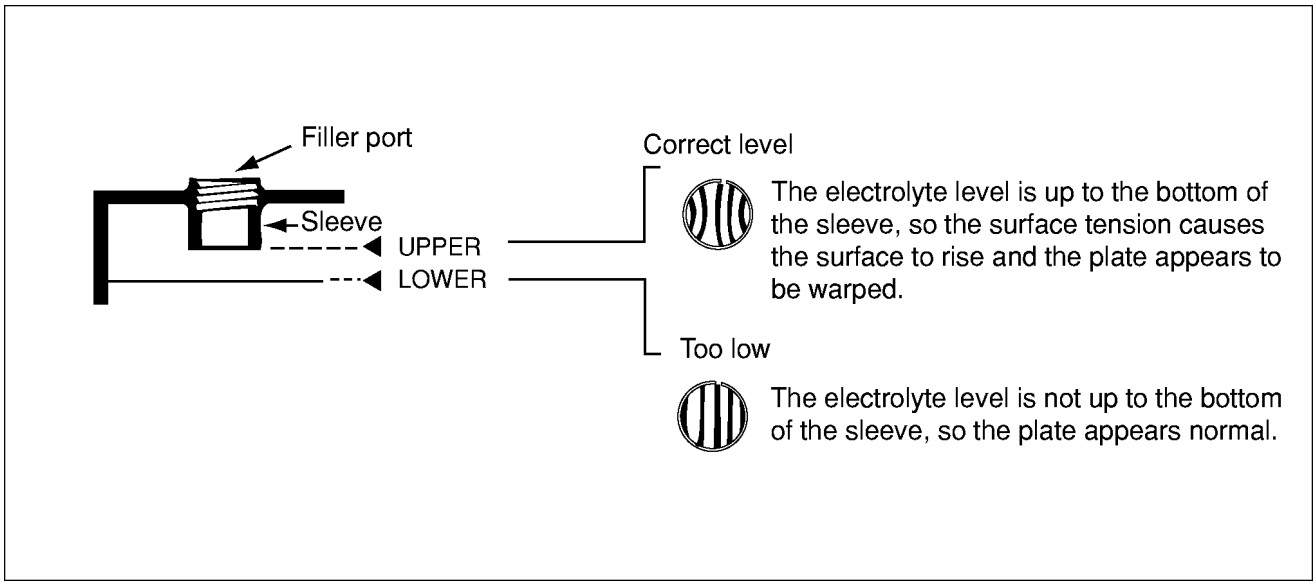

3. After adding distilled water, tighten cap (1) securely.

NOTE

- **If distilled water is added to above the bottom of the sleeve, use a syringe to lower the level to the bottom of the sleeve. Neutralize the removed fluid with baking soda (sodium bicarbonate), then flush it away with a large amount of water or consult your Komatsu Utility Dealer or battery maker.**

When It is Possible to Use Indicator to Check Electrolyte Level

If it is possible to use and indicator to check the electrolyte level, follow the instructions given.

https://truckmanualshub.com/

4.9.1.d CLEAN WATER SEPARATOR ELEMENT

⚠ WARNING

- **Do not bring any fire or flame close.**

- Prepare a filter wrench
- Prepare a container to catch the fuel that is drained.

1. Open the engine rear cover.
2. Set handle (1) of the water separator to CLOSED position (A).
3. Loosen drain plug (2) and drain the accumulated water into a container until red ring (3) reaches the bottom. Then tighten plug (2).
4. Use a filter wrench to loosen ring (4), take out element cup (5), then remove element (6).
   Be careful not to lose red ring (3) inside the cup.
5. Wash the inside of cup (5) and element (6) with diesel fuel or flushing oil.
6. After washing, install element (6).
7. Insert red ring (3) in element cup (5), fill with fuel, then install to the filter holder and tighten ring (4).
   Tightening torque: 14.7 to 19.6 Nm (1.5 to 2.0 kgf·m, 10.8 to 14.5 lb.ft.).
8. Set handle (1) of the water separator to OPEN position (B).
9. After washing the water separator, bleed the air.
   For details of the procedure for bleeding the air, see "4.9.3.c REPLACE FUEL FILTER CARTRIDGE" - " AIR BLEEDING".

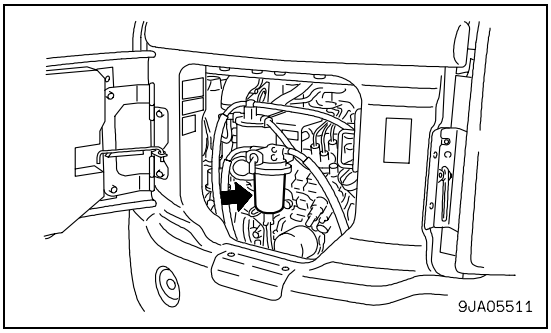

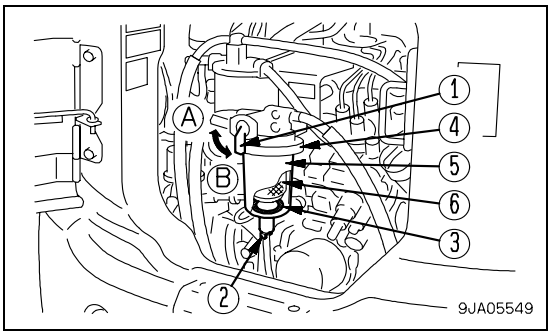

4.9.1.e DRAIN WATER AND SEDIMENT FROM FUEL TANK

IMPORTANT

- **Never use trichlene for washing the inside of the tank. Use diesel fuel only.**

Carry out this procedure before operating the machine.

- Prepare a container to catch the fuel that is drained.

1. Swing the upper structure so that drain valve (1) is between the tracks.
2. Open the engine rear cover and cooling cover. For details, see Section "3.2.10 COOLING COVER".
3. Open drain valve (1) and drain the sediment and water collected at the bottom together with the fuel.
   When doing this, be careful not to get fuel on yourself.
4. When only clean fuel comes out, tighten drain valve (3).

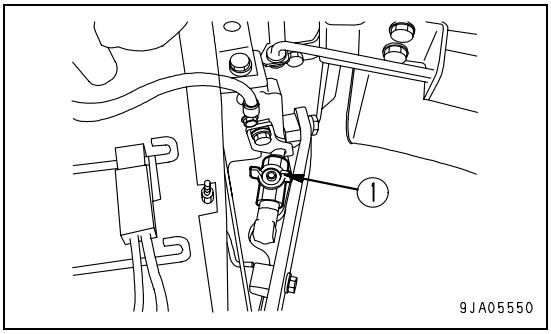

https://truckmanualshub.com/

4.9.1.f CHECK AND TIGHTEN TRACK SHOE BOLTS (Machine equipped with road liner, steel shoe)

If the machine is used with track shoe bolts (1) loose, they will break, so tighten any loose bolts immediately

ROAD LINER MOUNTING BOLT - CHECK/TIGHTEN

Tighten to a tightening torque of 127 to 142 Nm (13 to 14.5 kgf·m, 94 to 104.9 lb.ft.) then check that the nut and shoe are in close contact with the link contact surface.

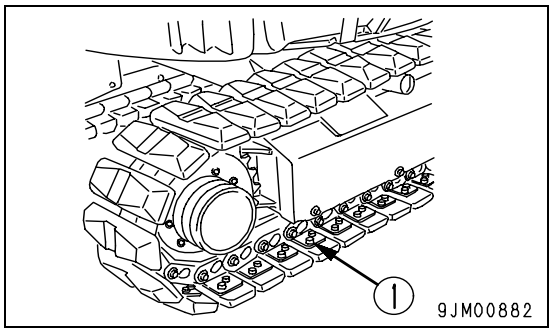

ORDER FOR TIGHTENING

Tighten the bolts in the order shown in the diagram on the right. After tightening, check that the nut and shoe are in close contact with the link mating surface.

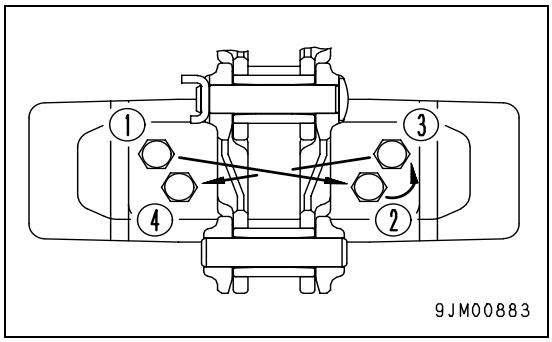

4.9.1.g CHECK AND ADJUST TRACK TENSION (Machine equipped with road liner, steel shoe)

The wear of the pins and bushings on the undercarriage will vary with the working conditions and type of soil, so inspect the track tension frequently in order to maintain the standard tension.

Stop the machine on firm, horizontal ground when carrying out the inspection and maintenance.

CHECKING

1. Run the engine at low idling, move the machine forward a distance equal to the length of track on ground, then stop the machine.
2. Choose wooden block (3) that will reach from idler (1) to carrier roller (2), then place it on top of the track.
3. Measure the maximum deflection between the top surface of the track and the bottom surface of the wooden block.
   - Standard deflection
     Deflection “a“ should be 5 to 15 mm (0.197 to 0.6 in.).

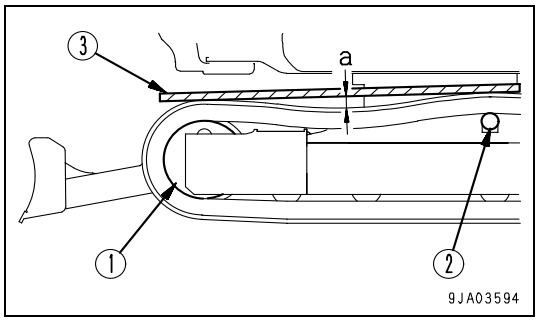

If the track tension is not at the standard value, adjust it in the following manner.

https://truckmanualshub.com/

ADJUSTMENT

WARNING

- **There is danger of plug (1) flying out under the high internal pressure of the grease. Never loosen plug (1) more than 1 turn.**
  Never loosen any part other than plug (1). Never put your face in the mounting direction of plug (1).
  If the track tension cannot be loosened with the procedure given here, please contact your Komatsu Utility Dealer.

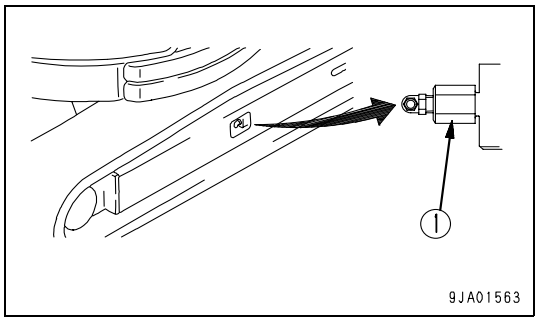

INCREASING TRACK TENSION

Prepare a grease gun.

1. Pump in grease through grease fitting (2) with a grease pump.
2. To check that the correct tension has been achieved, run the engine at low idling, move the machine slowly forwards (7 - 8 m), then stop the machine.
3. Check the track tension again, and if the tension is not correct, adjust it again.

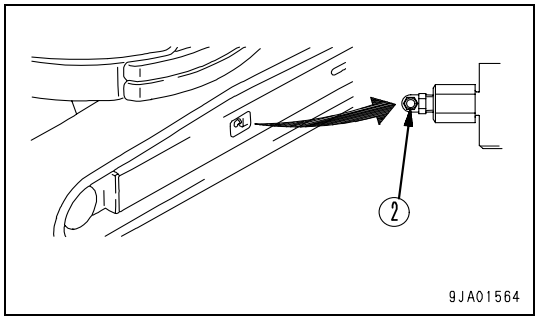

4. Continue to pump in grease until dimension S becomes zero (0). If the tension is still loose, the pin and bushing are excessively worn, so they must be either turned or replaced. Please contact your Komatsu Utility Dealer for repairs.

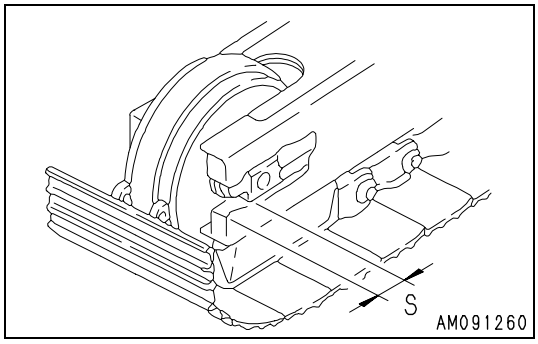

LOOSENING TRACK TENSION

WARNING

- **It is extremely dangerous to release the grease by any method except the procedure given below.**
  If the track tension is not relieved by this procedure, please contact your Komatsu Utility Dealer for repairs.

1. Loosen plug (1) gradually to release the grease.
2. When loosening plug (1), turn it a maximum of one turn.
3. If the grease does not come out smoothly, move the machine forwards and backwards a short distance.
4. Tighten plug (1).
5. To check that the correct tension has been achieved, run the engine at low idling, move the machine slowly forwards (7 - 8 m), then stop the machine.
6. Check the track tension again, and if the tension is not correct, adjust it again.

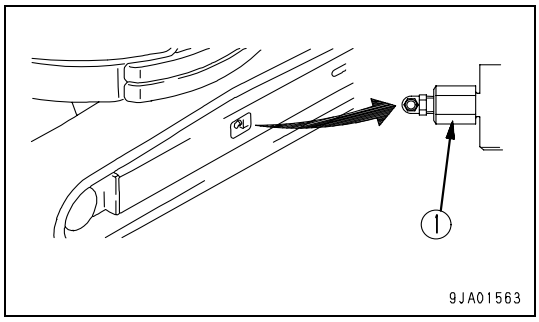

https://truckmanualshub.com/

4.9.1.h CHECK, RUBBER SHOES OR ROAD LINERS (Machine equipped with rubber shoes, road liner)

If the rubber shoes or road liner are in the following condition, they must be repaired or replaced, so please contact your Komatsu Utility Dealer for repairs or replacement.

LUG HEIGHT

- If lug height “a“ is reduced by wear, the drawbar pull will drop.
  If “a“ is less than 5 mm (0.2 in.), replace with a new part.

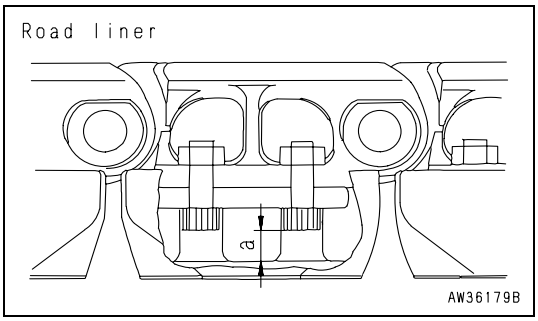

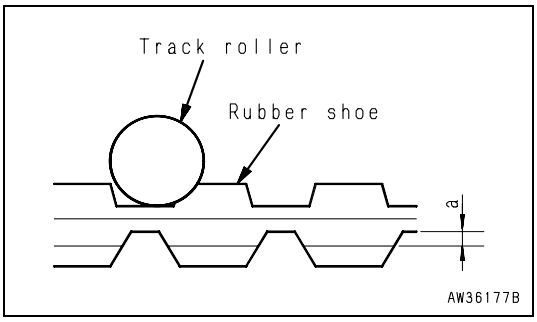

- If the lug wears and the steel cord inside the shoe is exposed for two links or more, replace with a new part.
  (Machine equipped with rubber shoes)

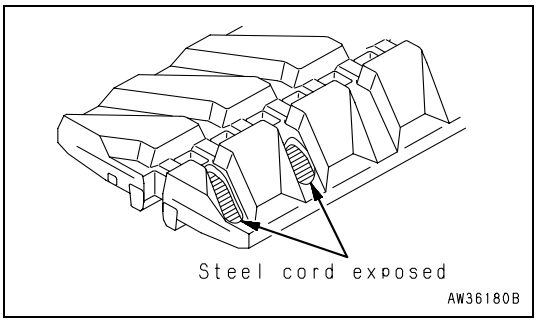

RUBBER SHOE STEEL CODE CUTS

If more than half of the steel cord layer on one side is cut, replace with a new part.

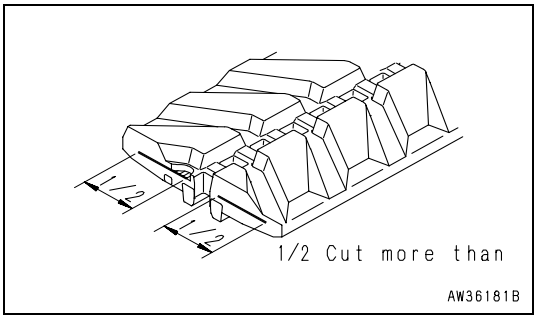

https://truckmanualshub.com/

RUBBER SHOE CORE SEPARATIONS

If the rubber core has separated at one place or more, replace with a new part.

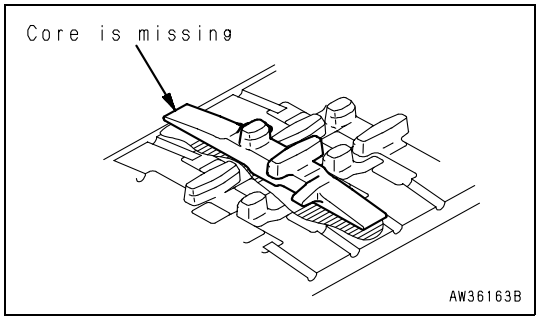

RUBBER SHOE TENSION

If the rubber shoe is still slack even when grease is pumped in, replace with a new part or replace the seal inside the cylinder.

If the track tension can only be increased to a level where the rubber shoe may come off, there may be not only elongation of the rubber shoe but also damage to the grease cylinder.

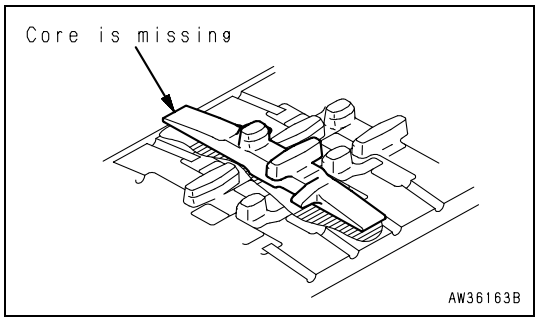

RUBBER SHOE CRACKS

If the cracks between the rubber shoe lugs increase to a size of approx. 60 mm (2.36 in.) the rubber shoe must be repaired. Even if the crack is small and short, if the steel cord can be seen inside, carry out repairs immediately.

If the length is less than 30 mm (1.18 in.) or the depth of the crack is less than 10 mm (0.39 in.), there is no particular need to carry out repairs.

When making judgement whether to replace, repair, or continue using rubber shoe and load liner, please contact your Komatsu Utility Dealer.

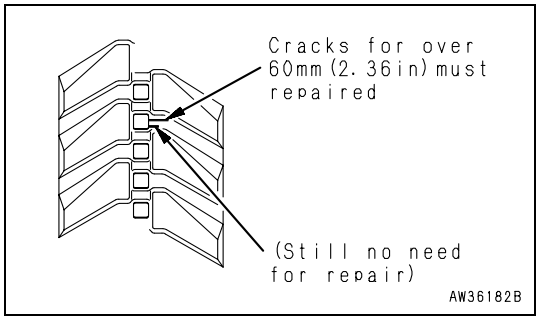

https://truckmanualshub.com/

4.9.1.i CHECK AND ADJUST RUBBER SHOE TENSION (Machine equipped with rubber shoes)

The wear of the rubber shoe will vary with the work conditions and type of soil, so inspect the wear and track tension whenever necessary. Stop the machine on firm, horizontal ground when carrying out the inspection and maintenance.
In particular, on new machines or after new tracks have been installed and the tension has been set to the specified value, the track tension will become loose in the first 5 to 30 hours when the machine has been used for a certain amount of repeated travel. If the track tension is adjusted frequently until the initial loosening no longer occurs, this will prevent the shoes from coming off due to insufficient track tension.
If operations are carried out when the rubber shoe is loose, the track will come off and it will cause premature wear of the core.

CHECKING

1. Run the engine at low idling, move the machine forward a distance equal to the length of track on ground, then stop the machine.
2. Choose wooden block (3) that will reach from idler (1) to carrier roller (2), then place it on top of the track.
3. Measure the maximum deflection between the top surface of the rubber shoe and the bottom surface of the wooden block.
   - Standard deflection
     Deflection “a“ should be 1 to 3 mm (0.039 to 0.118 in.).

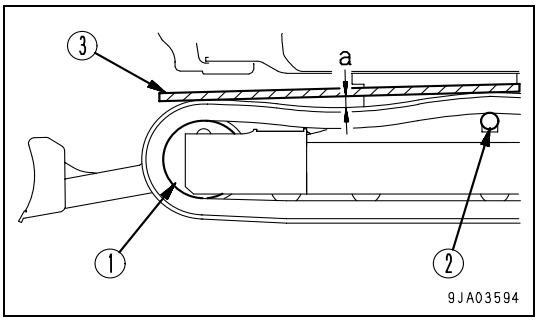

If the track tension is not at the standard value, adjust it in the following manner.

ADJUSTMENT

⚠ WARNING

- **There is danger of the plug flying out under the high internal pressure of the grease. When loosening plug (1), never loosen it more than one turn.**
  Never loosen any part other than plug (1). Never put your face in line with the mount of plug (1).
  If the Rubber shoe tension is not relieved by this procedure, please contact your Komatsu Utility Dealer.

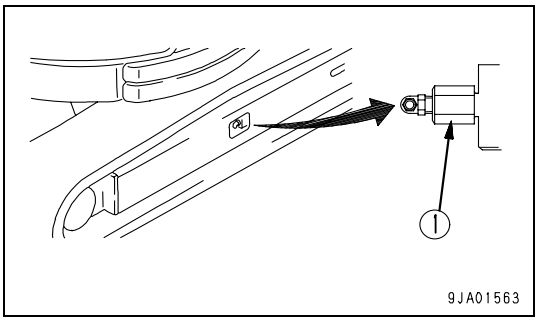

INCREASING TRACK TENSION

IMPORTANT
- **The standard value is low, so be careful not to tighten the rubber shoe too much.**

Prepare a grease gun.

1. Pump in grease through grease fitting (2) with a grease pump.
2. To check if the tension is correct, run the engine at low idling, move the machine slowly forward (by an amount equal to the length of track on ground), then stop the machine.
3. Check the rubber shoe tension again, and if the tension is not correct, adjust it again.
4. If the tension is still low after supplied grease, the rubber shoe needs to be replaced or the seal in the cylinder needs to be replaced. Ask your Komatsu Utility Dealer for replacement.

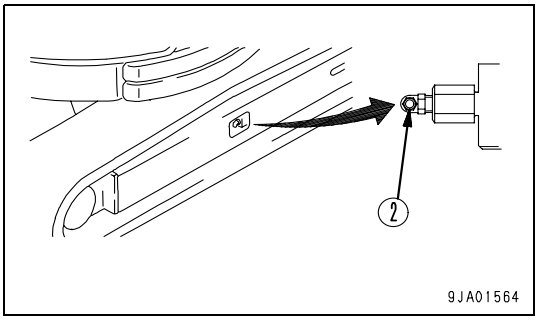

https://truckmanualshub.com/

LOOSENING TRACK TENSION

WARNING

- **It is extremely dangerous to release the grease by any method except the procedure given below. If the track tension is not relieved by this procedure, please contact your Komatsu Utility Dealer.**

1. Loosen plug (1) gradually to release the grease.
2. When loosening plug (1), turn it a maximum of one turn.
3. If the grease does not come out smoothly, move the machine forwards and backwards a short distance.
4. Tighten plug (1).
5. To check that the correct tension has been achieved, run the engine at low idling, move the machine slowly forwards (7 - 8 m), then stop the machine.
6. Check the rubber shoe tension again, and if the tension is not correct, adjust it again.
7. Check the track tension again, and if the tension is not correct, adjust it again.

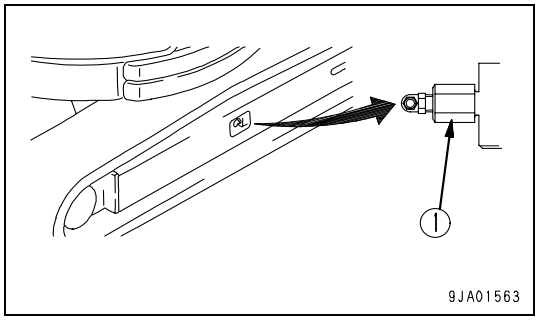

https://truckmanualshub.com/

4.9.1.j REPLACE RUBBER SHOES (Machine equipped with rubber shoes)

WARNING

- **Carry out this operation with two workers. The operator must move the machine in accordance with the signals from the other worker.**
- **The rubber shoes are replaced with the machine raised, so it is extremely dangerous if the machine is lowered by mistake during the replacement operation. During the replacement operation, never move the rubber shoe track except the rubber shoe track to be replaced.**
  In addition, never go under or put any part of your body under the rubber shoe or track frame during the replacement operation.
- **To check that the track tension is correct, run the engine at low idling, move the machine forward a distance equal to the length of track on ground, then stop the machine.**

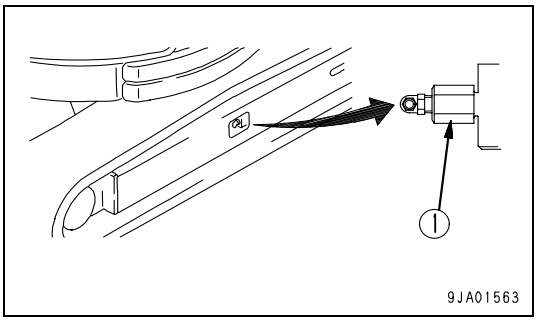

IMPORTANT

- **It is possible to change from the rubber shoe to the road liner and steel shoe. However, it is necessary to remove the idler guard and to carry out adjustment, so always contact your Komatsu Utility Dealer to have the replacement carried out.**

- Prepare a grease gun
- Prepare a steel pipe

RUBBER SHOES REMOVAL

WARNING

- **It is extremely dangerous to release the grease by any method except the procedure given below.**
  If the rubber shoe tension is not relieved by this procedure, please contact your Komatsu Utility Dealer for repairs.
- **Check that all the grease has been released before rotating the sprocket to remove the rubber shoe.**

1. Raise the chassis with the boom and arm.
   When doing this, operate the levers slowly.

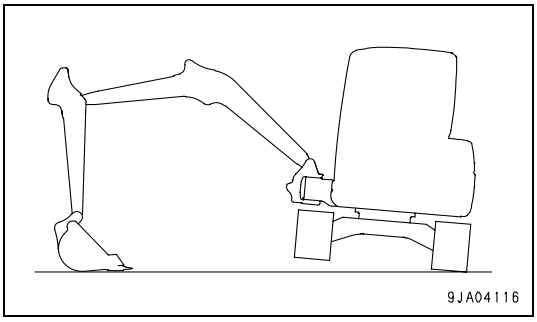

https://truckmanualshub.com/

2. Loosen plug (1) gradually to release the grease.
3. When loosening plug (1), turn it a maximum of one turn.

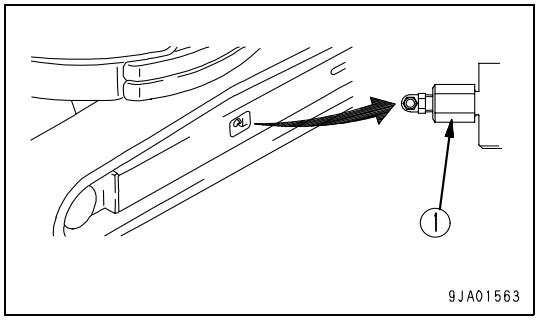

4. Fit the steel pipes inside the rubber shoe, rotate the sprocket in reverse, so that the steel pipes make the rubber shoe come up from the idler, then to the side to remove.

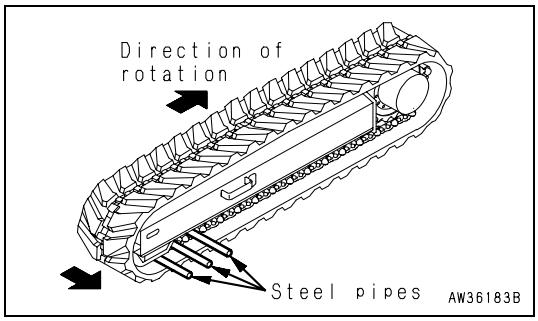

RUBBER SHOES INSTALLATION

1. Raise the chassis with the boom and arm.
   When doing this, operate the levers slowly.

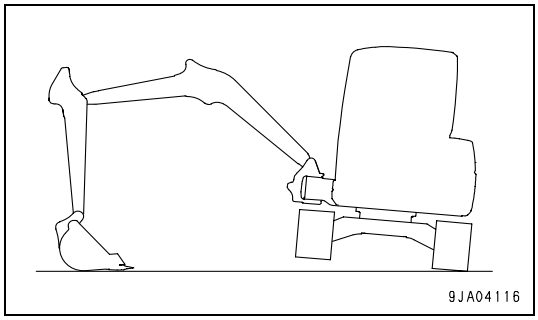

2. Mesh the rubber shoe with the sprocket and fit it over the idler.
3. Rotate the sprocket in reverse, then push in the rubber shoe and stop the rotation.

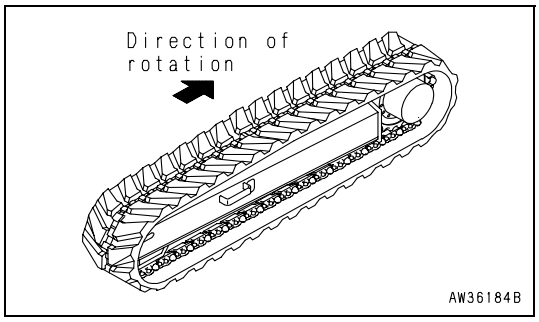

4. Fit a steel pipe in the rubber shoe, then rotate the sprocket again and fit the rubber shoe securely on the idler.

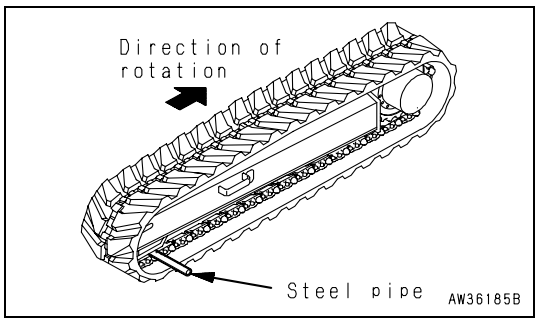

https://truckmanualshub.com/

5. Stop the rotation, and check that the rubber shoe is securely fitted to the sprocket and idler.
6. Adjust the tension of the rubber shoe.
   For details, see "4.9.1.i CHECK AND ADJUST RUBBER SHOE TENSION (Machine equipped with rubber shoes)".
7. Check that the track tension is correct and that the rubber shoe is correctly meshed on the sprocket and idler, then lower the machine to the ground.

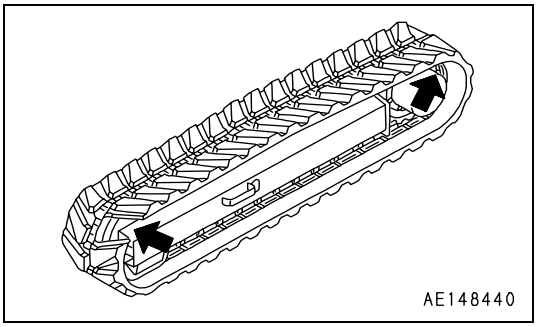

4.9.1.k REPLACE ROAD LINERS (Machine equipped with road liner)

When replacing all the road liner for the machine, please contact your Komatsu Utility Dealer to have the replacement carried out.

When replacing only part of the road liner, use the special road liner removal tool. Please order the tool from your Komatsu Utility Dealer.

4.9.1.l CHECK WINDOW WASHER FLUID LEVEL, ADD FLUID (Machine equipped with cab)

If there is air in the window washer fluid, check the level of the fluid in window washer tank. Add automobile window washer fluid if necessary.

At this time, take care that dust does not enter the tank.

NOTE
- **Open the engine rear cover and cooling cover. For details, see Section "3.2.10 COOLING COVER".**

When adding fluid, be careful not to let any dust get in.

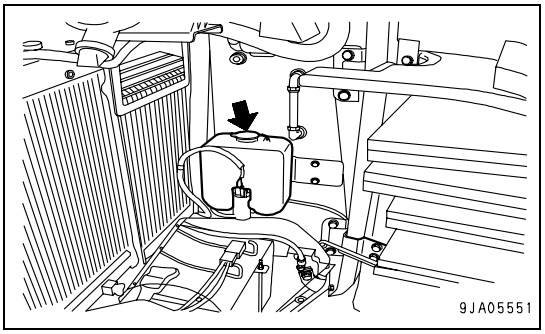

Mixture Ratio of Pure Washer Fluid and Water

The proportion differs according to the ambient temperature, so dilute the washer fluid with water to the following proportions before adding.

Area, season	Proportions	Freezing temperature
Normal	Washer fluid 1/3 Water 2/3	-10°C (14°F)
Winter in cold area	Washer fluid 1/2 Water 1/2	-20°C (-4°F)
Winter in extremely cold area	Pure washer fluid	-30°C (-22°F)

There are two types depending on the freezing temperature:
-10°C (14°F) (general use) and -30°C (-22°F) (cold area use), so select according to the area and season.

https://truckmanualshub.com/

4.9.1.m CHECK, CLEAN AND LUBRICATE CAB SLIDE DOOR RAIL AND ROLLER (Machine equipped with cab)

CHECKING

When opening or closing the slide door, if it is clogged with mud and does not move freely, clean and supply grease to roller (2) and rail (1) of the slide door.

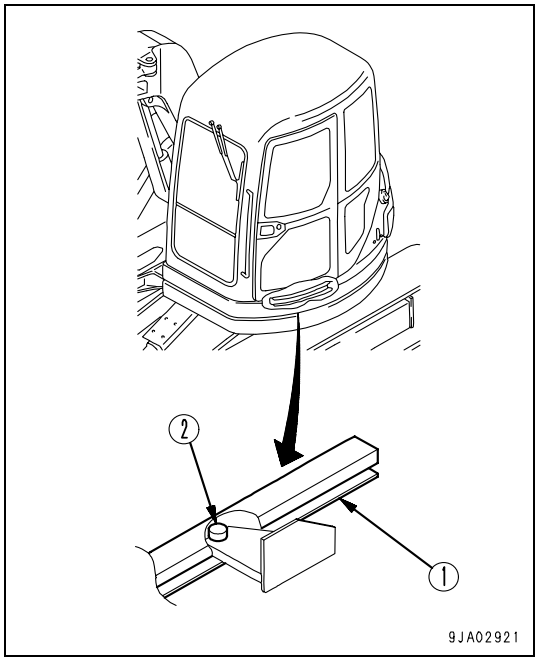

CLEANING

1. Open and close the door, and use a brush to remove any dirt from rail (1).
2. Use a cloth to wipe off any dirt from rail (1).

GREASING

IMPORTANT

- **Do not use high-viscosity oil for the lubricant. Use grease only.**

1. Spray rail (1) and roller (2) thoroughly with lubricant.
2. After spraying with lubricant, slide the door and check that the door opens and closes smoothly.
   If the movement is not smooth, contact your Komatsu Utility Dealer for repair.

4.9.1.n LUBRICATING

Boom swing cylinder foot pin (1 place)

- Prepare a grease gun

1. Using a grease gun, supply grease to the grease fitting is marked by arrows.
2. After greasing, wipe off any old grease that was pushed out.

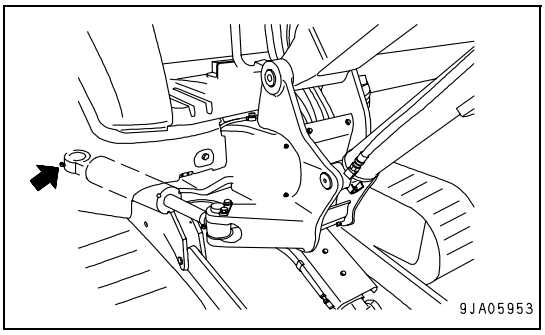

https://truckmanualshub.com/

4.9.1.o BLEEDING AIR FROM HYDRAULIC SYSTEM

IMPORTANT

- **If the pump is operated without filling the pump case with hydraulic oil, there is danger that the pump may be prematurely damaged. Be sure to bleed the air completely.**

1. Bleeding air from piston pump.
2. Remove 3 M10 bolts (1), then remove triangular cover (2).
3. Remove the oil filler cap from the hydraulic oil tank.

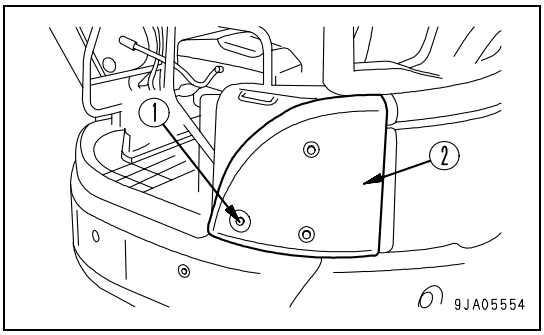

4. Loosen air bleed plug (3) and check that oil oozes out from the bleeder plug (completion of air bleeding).
5. After completion of the air bleeding operation, tighten the air bleed plug.
6. Tighten the oil filler cap of the hydraylic oil tank.
7. Install the cover.
8. Start the engine. For details, see "3.3.1.5 STARTING ENGINE". Run the engine at low idling for 10 minutes, then do as follows.
9. Bleeding air from cylinders

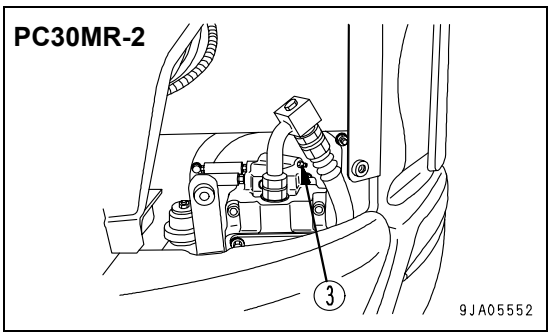

IMPORTANT

- **If the engine is run at high speed immediately after startup or a cylinder is pushed up to its stroke end, air taken inside the cylinder may cause damage to the piston packing.**

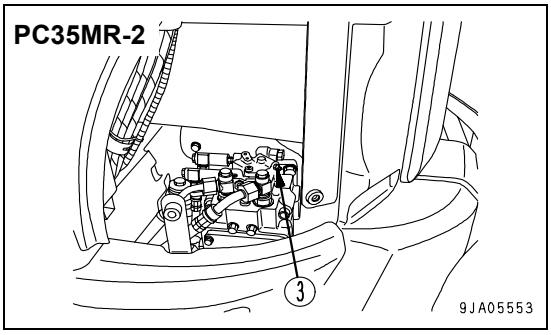

10. Run the engine at low idling, and extend and retract each cylinder 4 to 5 times, taking care so that a cylinder may not be brought up to its stroke end. (Stop the cylinder approx. 100 mm (3.9 in.) short of its stroke end).
11. Next, operate each cylinder 3 to 4 times to the end of its stroke.
12. Finally, operate each cylinder 4 to 5 times to the end of its stroke to completely remove the air.
13. Bleeding air from attachment (when installed)

IMPORTANT

- **If the method of bleeding the air from the attachment itself is specified by the manufacturer, bleed the air according to the specified procedure.**
- **After completing the air bleeding operation, stop the engine, and leave the machine for 5 minutes before starting operations. This will remove the air bubbles in the oil inside the hydraulic cylinders.**
- **Check that there is no leakage of oil and wipe off any oil that has been spilled.**

If a breaker or other attachment has been installed, run the engine at low idling and operate the attachment pedal repeatedly (approx. 10 times) until the air has been bled from the attachment circuit.

https://truckmanualshub.com/

4.9.2 CHECK BEFORE STARTING

For details of the following items, see "3.3.1.2 CHECKS BEFORE STARTING".

- Check coolant level, add coolant
- Check oil level in engine oil pan, add oil
- Check fuel level, add fuel
- Check oil level in hydraulic tank, add oil
- Check dust indicator
- Check water separator
- Check electric wirings
- Check function of horn

https://truckmanualshub.com/

4.9.3 EVERY 500 HOURS MAINTENANCE

4.9.3.a LUBRICATING

LUBRICATING SWING COMPONENTS

WARNING

- **When lubricating the swing circle and the swing pinion, do not swing the upper structure while carrying out the lubricating.**

NOTE

- **For the first 100 hours on new machines where the parts are settling in, carry out greasing every ten hours.**

- Prepare a grease gun

1. Using a grease pump, pump in grease through the grease fittings shown by arrows.
2. After greasing, wipe off any old grease that was pushed out.

(1) Swing pinion (1 place)

(2) Swing circle (1 place)

When lubricating the swing circle and swing pinion, turn the chassis little by little to change the position while carrying out the lubrication.

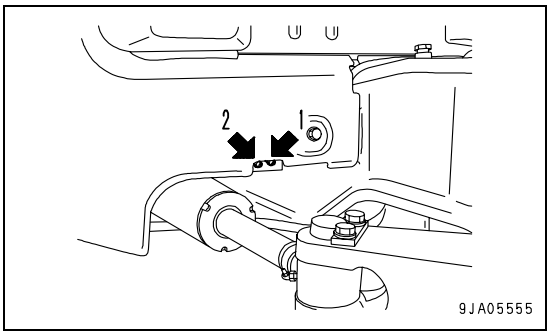

LUBRICATING WORK EQUIPMENT

IMPORTANT

- **When breaking in a new machine, carry out lubrication every 10 hours for the first 100 hours of operation.**
- **If any abnormal sound comes from the greasing point, carry out greasing regardless of the inspection and maintenance interval.**
- **After carrying out digging work in water, always lubricate the pins that were under water.**

- Prepare a grease gun

1. Set the machine to the greasing posture shown on the right diagram, lower the work equipment to the ground, then stop the engine.
2. Using a grease pump, pump in grease through the grease fittings shown by arrows.
3. After greasing, wipe off any old grease that was pushed out.

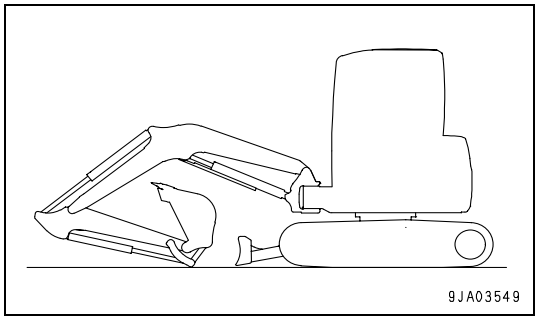

https://truckmanualshub.com/

(1) Bucket - Link connecting pins (1 place)
(2) Arm - Bucket connection pin (1 place)
(3) Arm - Link coupling pin (1 place)
(4) Bucket cylinder rod end (1 place)
(5) Link coupling pin (1 place)

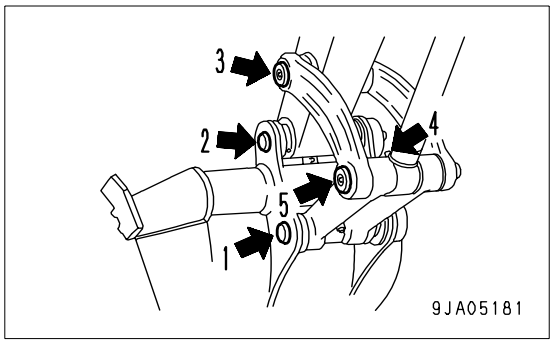

(6) Blade cylinder foot pin (1 place)
(7) Blade cylinder rod end (1 place)
(8) Blade foot pin (2 places)

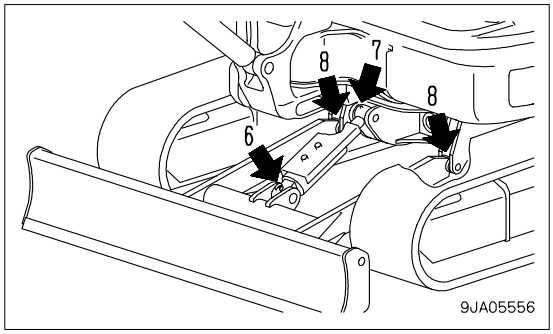

(9) Boom swing bracket pin (2 places)
(10) Boom swing cylinder rod end pin (1 place)
(11) Boom foot pin (2 places)
(12) Boom cylinder foot pin (1 place)

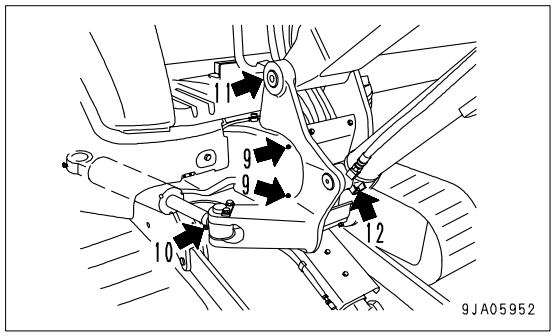

(13) Boom cylinder rod end (1 place)
(14) Arm cylinder foot pin (1 place)

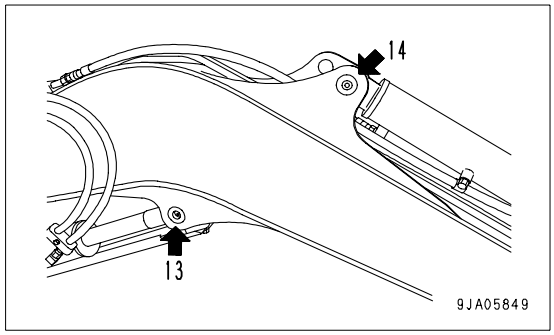

(15) Arm cylinder rod end (1 place)
(16) Boom - Arm connecting pins (1 place)
(17) Bucket cylinder foot pin (1 place)

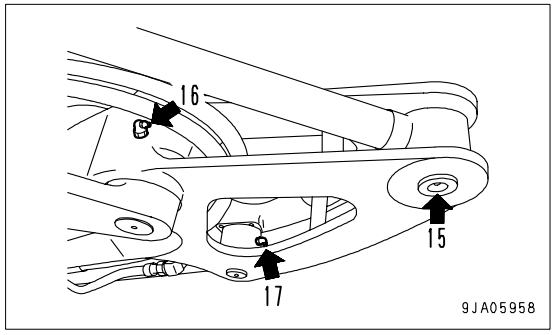

https://truckmanualshub.com/

4.9.3.b CHANGE OIL IN ENGINE OIL PAN, REPLACE ENGINE OIL FILTER CARTRIDGE

WARNING

- **Engine parts and oil are at high temperature immediately after the engine is stopped, and will cause serious burns. Wait for the temperature to cool down before starting the operation.**

- Refill capacity: 7.2 liters (1.9 US. gall.)
- Prepare a filter wrench

Change the oil and replace the cartridge once every 6 months, even if the engine has not been operated for 500 hours.
In the same way, change the oil and replace the cartridge once every 500 hours, even if the engine has not been operated for 6 months.

1. Set a container to catch the oil immediately under the drain plug (P) at the bottom of the machine.

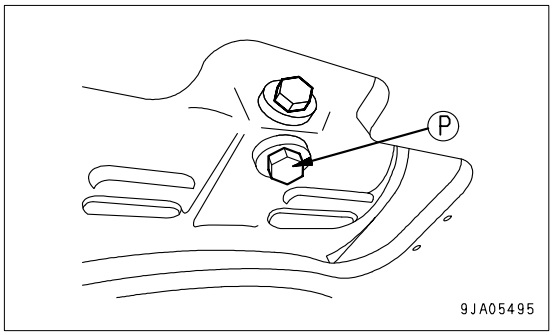

NOTE
- **An undercover is installed on the PC35MR, so remove the undercover before starting the operation.**

2. Remove drain plug (P) slowly to avoid getting oil on yourself, and drain the oil.
3. Check the drained oil, and if there are excessive metal particles or foreign material, please contact your Komatsu Utility Dealer.
4. Install drain plug (P).

NOTE
- **Install the undercover on the PC35MR.**

5. Open the engine rear cover.
6. Using a filter wrench, turn filter cartridge (1) counterclockwise to remove it.
7. Clean the filter holder, coat the new filter cartridge packing and threaded portion with clean oil (or coat thinly with grease), then install.

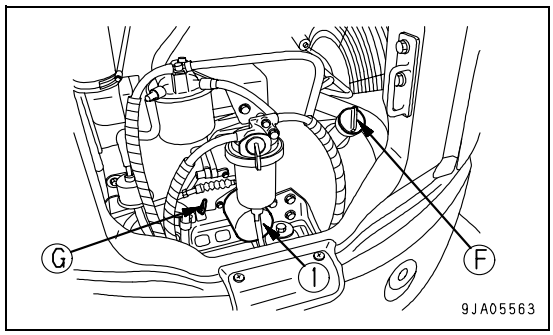

NOTE
- **Check that there is no old packing affixed to the filter holder. If there is any old packing affixed to the filter, it will cause leakage of oil.**

8. When installing; tighten until the packing surface contacts the seal surface of the filter holder, then tighten it up 1/2 to 3/4 of a turn.
9. After replacing the filter cartridge, add oil through oil filler (F) until the oil level is between the H and L marks on the dipstick (G).
10. Run the engine idle for a while, then stop the engine and confirm that the oil level is between the H and L lines according to "3.3.1.2 CHECKS BEFORE STARTING" - " CHECK OIL LEVEL IN ENGINE OIL PAN, ADD OIL".

https://truckmanualshub.com/

4.9.3.c REPLACE FUEL FILTER CARTRIDGE

⚠ WARNING

- **Engine is at high temperature immediately after the machine has been operated. Wait for engine to cool down before replacing the filter.**
- **Do not bring fire or sparks near the fuel.**

- Prepare a filter wrench
- Prepare for cloth.

1. Open the engine rear cover.
2. Spread the cloth beneath the filter cartridge.
3. Set handle (1) of the water separator to CLOSED position (A).
4. Using a filter wrench, turn filter cartridge (2) counterclockwise to remove it.
   If any fuel spills, wipe it up immediately with a cloth.
5. Clean the filter holder, fill the new filter cartridge with fuel, then coat the packing surface with fuel, and install to the filter holder.
6. When installing, turn to the right to tighten until the packing surface contacts the seal surface of the filter holder, then use a filter wrench to tighten approx. 1 turn.
   Tightening torque: 19.6 to 23.5 Nm (2.0 to 2.4 kgf·m, 14.5 to 17.4 lb.ft.).
7. Set handle (1) of the water separator to OPEN position (B).
8. After replacing the fuel filter element, bleed air.
   For details of the procedure, see “Air Bleeding“.

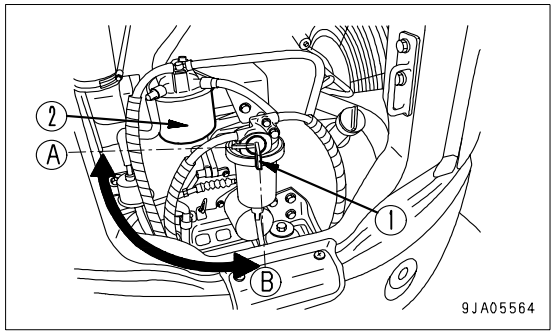

AIR BLEEDING

1. Fill the fuel tank with fuel.
2. Set handle (1) of the water separator to OPEN position (B).
3. Loosen air bleed bolt (2) of the water separator 2 or 3 turns.
4. When no more bubbles come out with the fuel from air bleed bolt (2), tighten air bleed bolt (2).

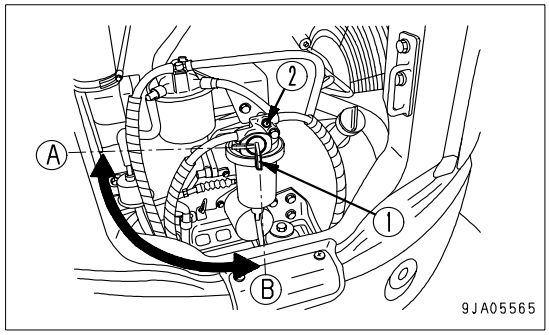

5. Turn the starting switch to the ON position, hold it there for 10 to 15 seconds, then return it to the OFF position.
   Air bleeding is carried out automatically by the automatic air bleed device.

NOTE

- **When the machine has run out of fuel, carry out the same procedure, to bleed the air.**

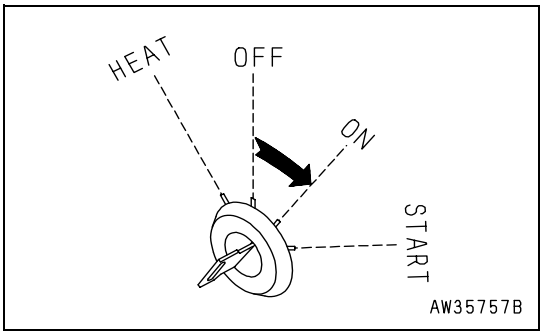

https://truckmanualshub.com/

4.9.3.d CHECK OIL LEVEL IN FINAL DRIVE CASE, ADD OIL

⚠ WARNING

- **The parts and oil are at high temperature immediately after the engine is stopped, and may cause serious burns. Wait for the temperature to go down before starting the operation.**
- **If there is still pressure remaining inside the case, the oil or plug may fly out. Loosen the plug slowly to release the pressure.**

- Prepare a container to catch drained oil.
- Prepare a hexagon wrench.

1. Set so that plug (G) is at the top, with plug (G) and plug (P) perpendicular to the ground.
2. Set the container to catch oil under plug (P).
3. Remove plug (G) with a hexagonal wrench. Oil level shouldbe near the bottom of the plug hole (G).
4. If the oil level is low, add oil through the hole in plug (G) until the oil overflows.
5. After checking, install plug (G).

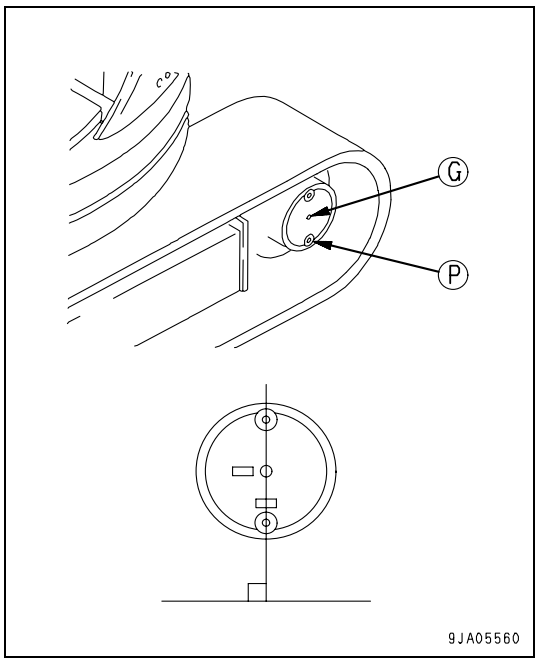

4.9.3.e CLEAN AND INSPECT RADIATOR FINS AND OIL COOLER FINS

⚠ WARNING

- **If compressed air, high-pressure water, or steam hit your body directly, or they cause dirt or dust to be blown up, there is a hazard of serious injury. Always use safety glasses, dust mask, or other protective equipment.**

IMPORTANT

- **When use the compressed air, keep a distance from air nozzle, to prevents damage to the fins. To prevent damage to the fins, apply compressed air from and appropriate distance. Damaged fins may cause water leakage or overheating. In a dusty site, check the fins daily, irrespective of the maintenance interval.**

1. Open the engine rear cover and cooling cover. For details, see Section "3.2.10 COOLING COVER".
2. Use compressed air, steam, or water to blow off the mud, dirt, and leaves clogging radiator fins and oil cooler fins (1).

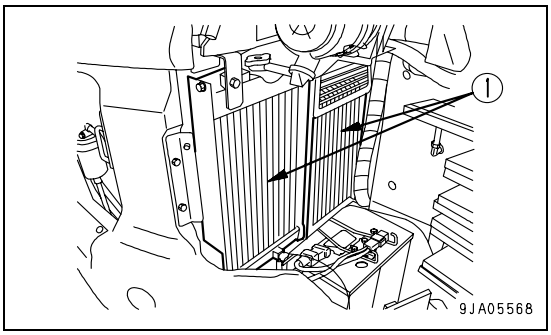

https://truckmanualshub.com/

4.9.3.f CHECK AND ADJUST COOLING FAN BELT TENSION

CHECKING

1. The deflection should be approx. 9 to 13 mm (0.355 to 0.5 in.) when pressed at a point midway between the crankshaft pulley and the fan pulley with a finger pressure of approx. 98 N (10 kgf).

NOTE

- **As a guideline, there is no problem if the deflection is approx. 13 mm (0.5 in).**

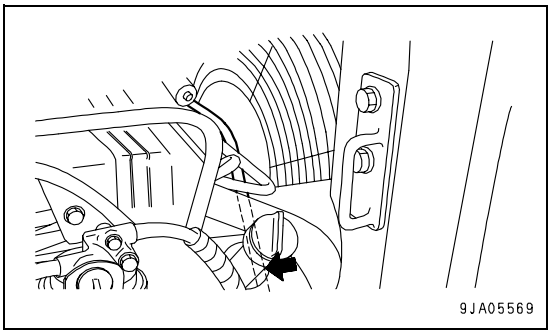

ADJUSTMENT

WARNING

- **When this maintenance is carried out, it is necessary to open (tilt) the floor.**
  Before starting the operation to open the floor refer to the explanation for each part in Section "3.2.12 METHOD OF OPENING (TILTING) FLOOR" when carrying out the operation. Or ask your Komatsu Utility Dealer to carry out the maintenance.
- **Immediately after the engine is stopped, the parts and oil are at a high temperature, and will cause burns. Wait for the temperature to go down before starting the operation.**

- Prepare a pinch bar.
- Prepare a wooden block.

1. When opening (tilting) the floor, see Section "3.2.12 METHOD OF OPENING (TILTING) FLOOR" - " When opening (tilt open)" for details.
2. Insert a bar between alternator (1) and the cylinder block to fix alternator (1) in position. When fixing alternator (1) in position, insert a wooden block between the bar and alternator (1) to prevent any damage to the alternator.
3. Loosen alternator adjustment bolt (2) and mounting bolts (3).
4. Move alternator (1) to adjust so that the belt tension is approx. 7 to 10 mm (0.276 to 0.4 in.) when pressed at a point midway between the alternator pulley and the fan pulley with a finger pressure of approx. 98 N (10 kgf).
5. Tighten adjustment bolt (2), then tighten mounting bolts (3) to secure alternator (1) in position.
6. Check for damage to the pulleys, and wear of the V-groove and V-belt. Be particularly careful to check that the V-belt is not in contact with the bottom of the V-groove.
7. If the belt is stretched, leaving no allowance for adjustment, or if it is cut or cracked, contact your Komatsu Utility Dealer for replacement.
8. After completing the adjustment, close the floor. For details, see Section "3.2.12 METHOD OF OPENING (TILTING) FLOOR" - " When closing (tilt close)".

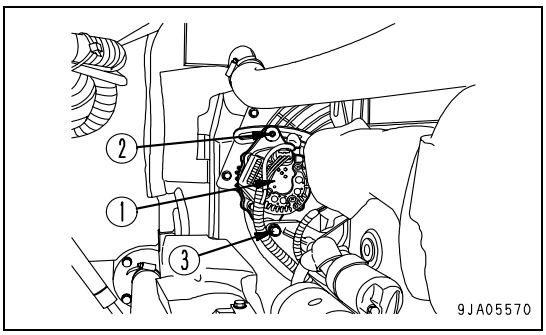

https://truckmanualshub.com/

4.9.4 EVERY 1000 HOURS MAINTENANCE

Carry out the maintenance for EVERY 500 HOURS SERVICE at the same time.

4.9.4.a REPLACE HYDRAULIC OIL FILTER ELEMENT

⚠ WARNING

- **The parts and oil are at high temperature after the engine is stopped, and may cause burns. Wait for the temperature to go down before starting the work.**
- **When removing the oil filler cap, turn it slowly to release the internal pressure, then remove it.**

IMPORTANT

- **If the machine is equipped with a hydraulic breaker, the hydraulic oil will deteriorate much faster than during normal bucket operations. For details, see "4.8.2 MAINTENANCE INTERVAL FOR HYDRAULIC BREAKER" when carrying out maintenance.**

1. Open dust cover (1) fully until it is secured in position. (For details of the method of opening and closing the cover with the lock, see "3.2.8 COVER WITH LOCK").

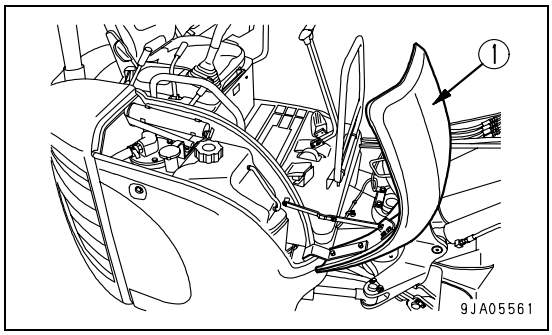

2. Loosen bolts (2), then remove plate (3) to the front.
3. Remove the cap from oil filler (F), and release the internal pressure.
4. Remove bolts (4), then remove cover (5). When this is done, the cover may fly off under the force of spring (6), so keep the cover pushed down when removing the bolts.
5. After removing spring (6) and valve (7), take out element (8).
6. Clean the removed parts in diesel oil.
7. Install the new element where old element (8) was installed.
   Inspect the O-ring set between the hydraulic tank and cover (5). If there are any scratches, replace the O-ring.
8. Set valve (7) and spring (6) on top of the element.
9. Set cover (5) in position, hold it down by hand, and tighten cover mounting bolts (4) to install cover (5).

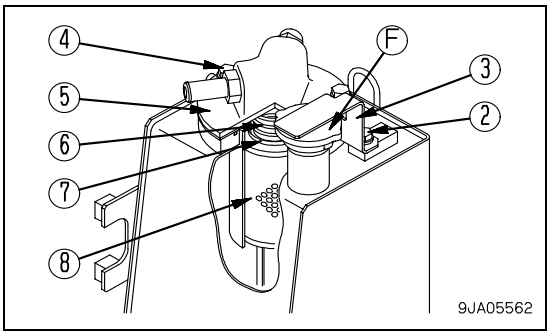

https://truckmanualshub.com/

10. Extend the boom, arm, and bucket cylinder fully as shown in the diagram on the right, remove the oil filler cap, then install the cap and pressurize the inside of the tank.

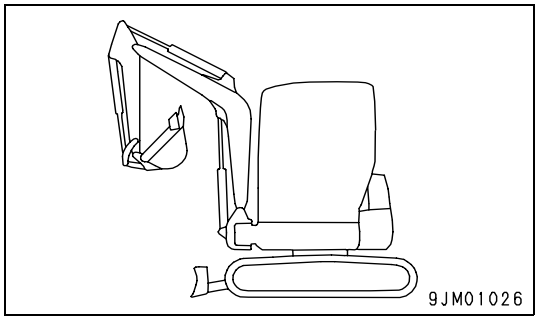

NOTE

- **Be sure to pressurize the hydraulic tank. If it is not pressurized, the pump will suck in air, and this will adversely affect the equipment.**

11. Close cover (1) at right side of the machine.

https://truckmanualshub.com/

4.9.4.b CHANGE OIL IN FINAL DRIVE CASE

WARNING

- **The parts and oil are at high temperature immediately after the engine is stopped, and may cause serious burns. Wait for the temperature to go down before starting the operation.**
- **If there is still pressure remaining inside the case, the oil or plug may fly out. Loosen the plug slowly to release the pressure.**

- Prepare a container to catch drained oil.
- Prepare a hexagon wrench.

1. Set so that plug (G) is at the top, with plug (G) and plug (P) perpendicular to the ground.
2. Set the container to catch oil under plug (P).
3. Using a hexagon wrench, remove plugs (P) and (G), and drain the oil.
4. Tighten plug (P).
5. Add the replacement amount of oil through the hole of plug (G).
6. When oil comes out from the hole of plug (G), install plug (G).

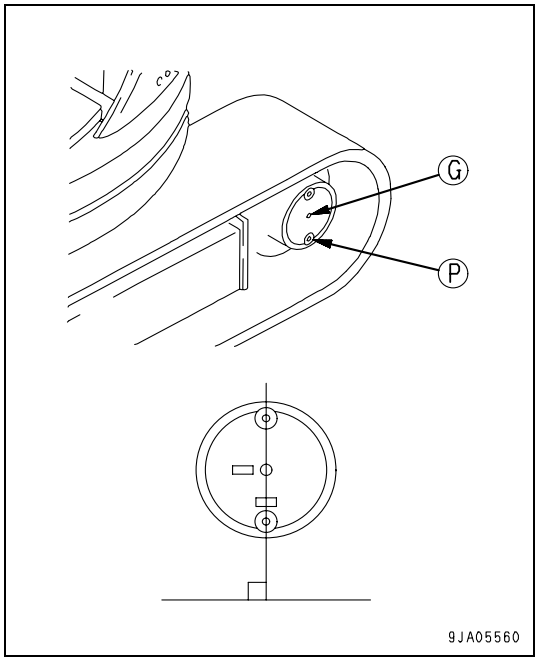

4.9.4.c CHECK ENGINE VALVE CLEARANCE, ADJUST

As special tool is required for removing and adjusting the parts, you shall request Komatsu Utility Dealer for service.

https://truckmanualshub.com/

4.9.5 EVERY 2000 HOURS MAINTENANCE

Carry out the maintenance for EVERY 500 HOURS, and EVERY 1000 HOURS SERVICE at the same time.

4.9.5.a CHANGE OIL IN HYDRAULIC TANK, CLEAN STRAINER

⚠ WARNING

- **When this maintenance is carried out, it is necessary to open (tilt) the floor.**
  Before starting the operation to open the floor, read the precautions and refer to the explanation for each part in Section "3.2.12 METHOD OF OPENING (TILTING) FLOOR" when carrying out the operation. Or ask your Komatsu distributor to carry out the maintenance.
- **Immediately after the engine is stopped, the parts and oil are at a high temperature, and will cause burns. Wait for the temperature to go down before starting the operation.**
- **When removing the oil filler cap, oil may spurt out, so turn it slowly to release the internal pressure before removing it.**

- Container to catch drained oil: Min. 20 liters (5.28 US gal) capacity
- Refill capacity: 20 liters (5.28 US gal)
- Prepare a handle (for the socket wrench).

1. Swing the upper structure so that the drain plug under the hydraulic tank will be between both tracks.

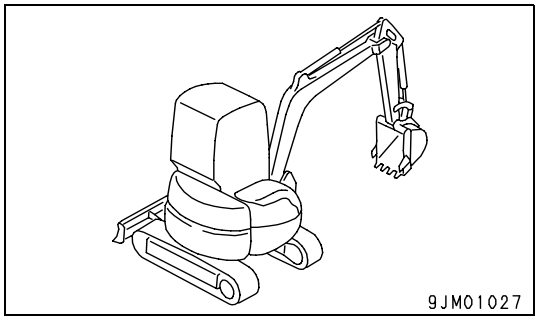

2. Retract the arm and bucket cylinders, then lower the boom and put the teeth in contact with the ground.
3. Lower the blade to the ground.

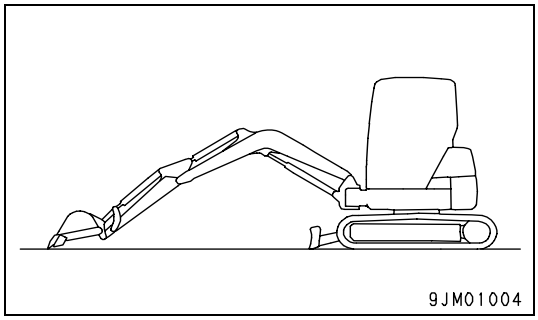

4. Set the safety lock lever to the LOCK position and stop the engine.

NOTE
- **For machines equipped with a cab, there is only a safety lock lever on the left.**

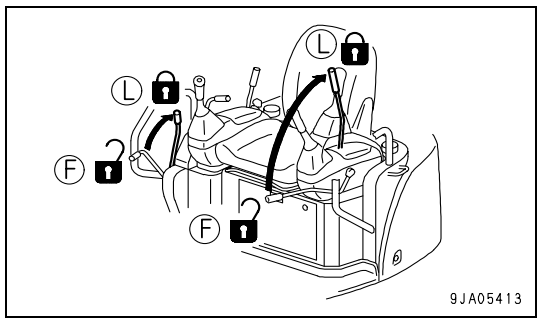

https://truckmanualshub.com/

5. Open dust cover (1) fully until it is secured in position. (For details of the method of opening and closing the cover with the lock, see Section "3.2.8 COVER WITH LOCK")
6. Loosen bolts (2), then remove plate (3) to the front.
7. Remove the cap from oil filler (F), and release the internal pressure.
8. Set the oil container under the drain plug under the machine. Using the handle, remove drain plug (P) and drain the oil. Check the O-ring installed to plug (P), and if it is damaged, replace the O-ring. After draining the oil, tighten drain plug (P).
   Tightening torque: 68.6 ± 9.81Nm (7 ± 1kgf·m, 50.6 ± 7.2 lb.ft.)

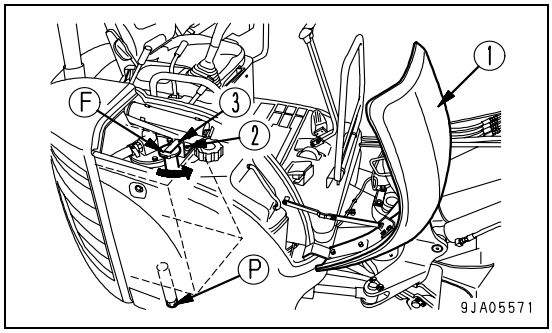

- Take care not to get oil on yourself when you remove drain plug (P).

.9. When opening (tilting) the floor, see Section "3.2.12 METHOD OF OPENING (TILTING) FLOOR" for details
10. Loosen hose clamp (4), remove hose (5), then remove bolt (6) and take out strainer (7).
11. Remove any dirt stuck to strainer (7), then wash it in clean diesel oil or flushing oil. If strainer (7) is damaged, replace it with a new one.
12. Secure strainer (7) with bolt (6), then install hose (5) and secure it in position with hose clamp (4).
13. After completing the adjustment, close the floor. For details, see Section "3.2.12 METHOD OF OPENING (TILTING) FLOOR".
14. Add the replacement amount of oil through oil filler (F). Check that the oil level is between the H and L lines on the sight gauge (G).

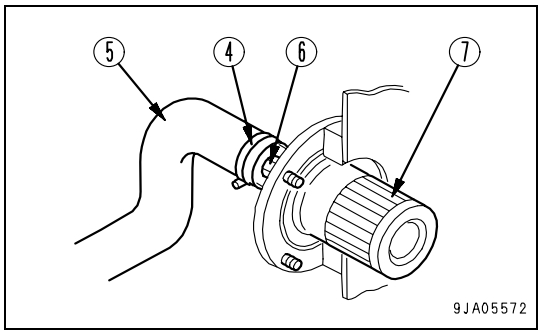

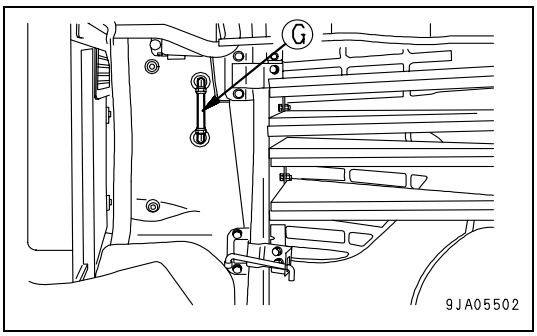

15. Extend the boom, arm, and bucket cylinder fully as shown in the diagram on the right, remove the oil filler cap, then install the cap and pressurize the inside of the tank.

IMPORTANT

- **Be sure to pressurize the hydraulic tank. If it is not pressurized, the pump will suck in air, and this will adversely affect the equipment.**

16. After replacing the oil, set each control lever to the neutral positionand run the engine idle at a low speed for 2 to 3 minutes, then start the normal work.

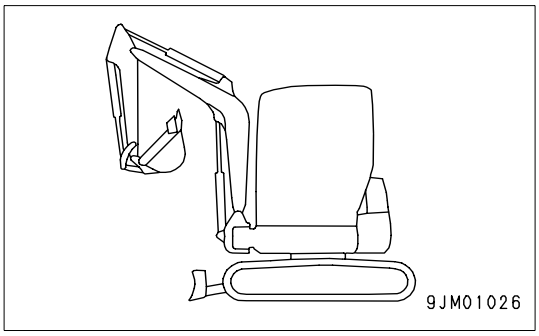

4.9.5.b CHECK ALTERNATOR, STARTING MOTOR

The brush may be worn or the bearing may have run out of grease. Contact your Komatsu Utility Dealer for inspection or repair.

If the engine is started frequently, carry out inspection every 1000 hours.

https://truckmanualshub.com/

TECHNICAL SPECIFICATIONS

https://truckmanualshub.com/

5.1 SPECIFICATIONS

	Item		Unit	PC30MR-2	PC35MR-2
	Operating weight	Canopy specified	kg	3200	3670
		Cab specified		3360	3800
	Bucket capacity		m3	0.09	0.11
	Name of engine		-	Komatsu 3D84E-5N diesel engine	Komatsu 3D88E-5P diesel engine
	Engine horsepower		KW (HP)/rpm	20.6(28)/2500	21.7(29.1)/2400
A	Overall length		mm	4630	4850
B	Overall height		mm	2530	
C	Overall width		mm	1550	1740
D	Track width		mm	300	
E	Radius of upper structure	Canopy specified	mm	855	950
		Cab specified		885	950
F	Length of track		mm	2105	
G	Tumbler center distance		mm	1650	
	Min. ground clearance		mm	320	290
	Travel speed (Low/High)		km/h (MPH)	2.6 (1.6)/4.6 (2.9)	2.8 (1.7)/4.6 (2.9)
	Continuous swing speed		rpm	9.3	9.0

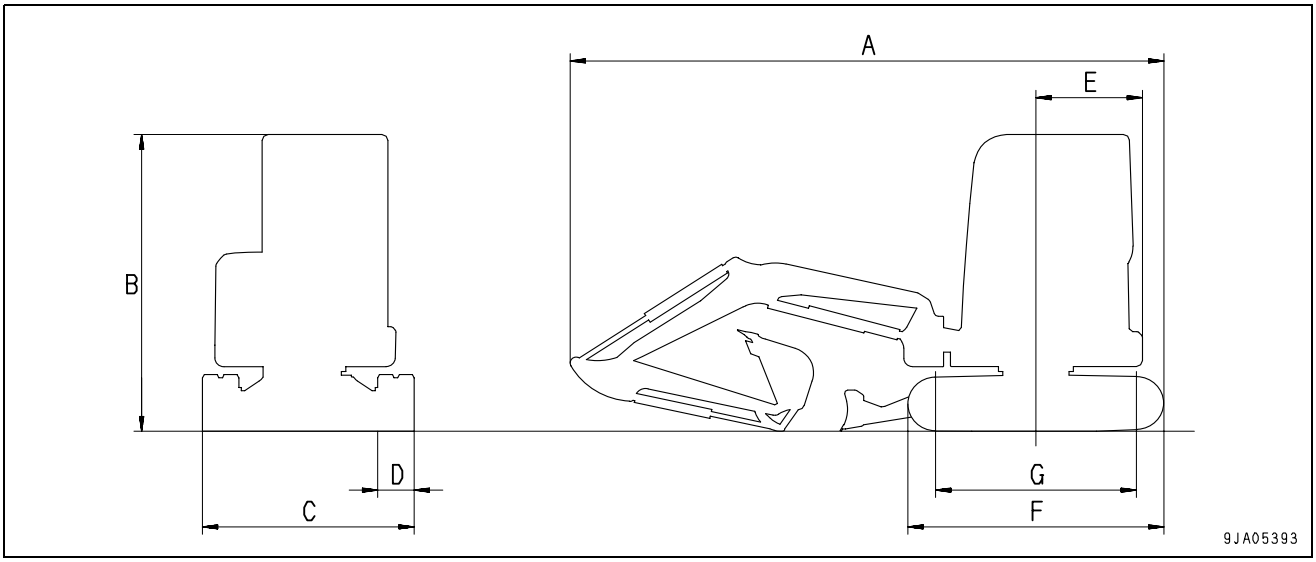

https://truckmanualshub.com/

	Working ranges		Unit	PC30MR-2	PC35MR-2
A	Max. digging reach		mm	5150	5360
B	Max. digging depth		mm	2910	3170
C	Max. digging height	Canopy specified	mm	4950	5010
		Cab specified	mm	4950	5010
D	Max. vertical wall depth		mm	2650	2720
E	Max. dumping height	Canopy specified	mm	3450	3530
		Cab specified	mm	3450	3530
F	Min. swing radius of work equipment		mm	2010	2080
	Min. swing radius of work equipment (At boom swing)		mm	1510	1590
G	Max. reach at ground level		mm	5060	5225
H	Max. blade lifting height		mm	360	360
I	Max. blade lowering depth		mm	310	390

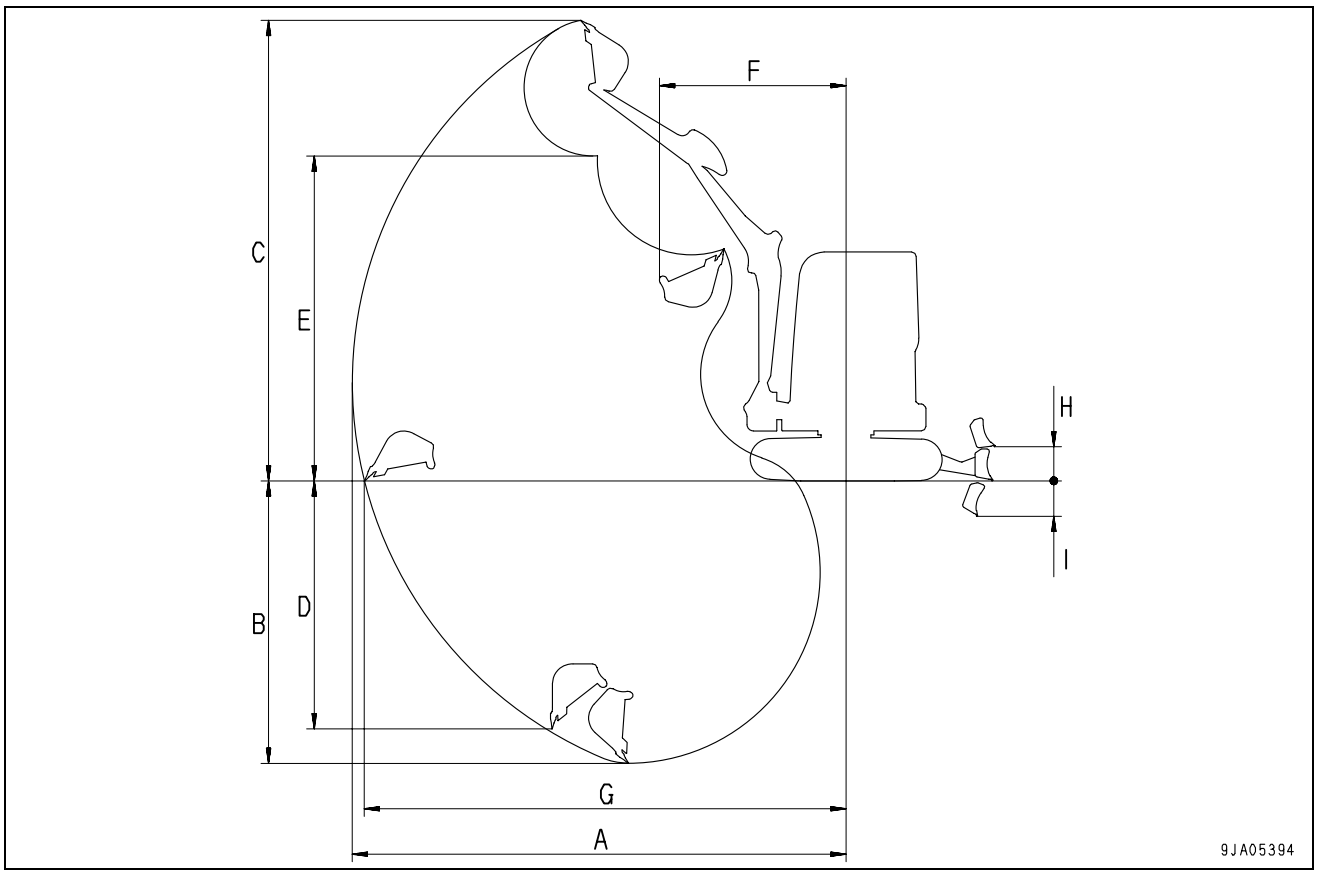

https://truckmanualshub.com/

5.2 LIFTING CAPACITIES

5.2.1 LIFTING CAPACITIES PC30MR-2 (WITH CANOPY)

⚠ DANGER

- **According to the standard EN474-5 (§ 4.1.7.5), this machine if not equipped with suitable devices is not allowed to lift more than 1000 kg.**
- **Do not attempt to lift loads unless the machine is standing on firm, level ground.**

NOTE

- **Loads do not exceed 87% of hydraulic capacity or 78% of tipping capacity.**

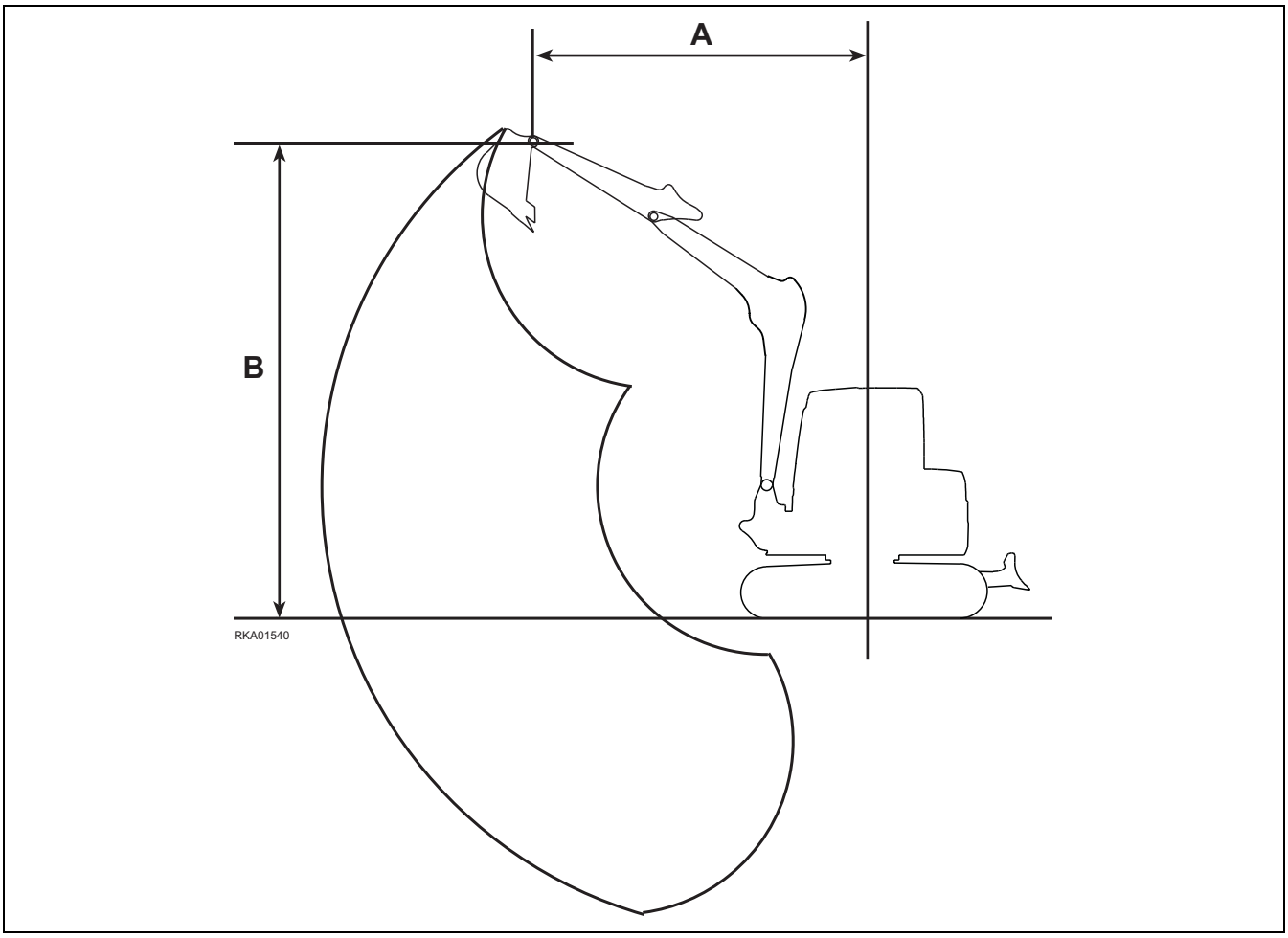

* Load limited by hydraulic capacity rather than tipping

STANDARD ARM + STANDARD WEIGHT + BLADE DOWN Unit: kg

A / B	2 m		3 m		4 m		Max.	
4.0 m							*875	550
3.0 m			*785	490			*805	320
2.0 m			*1005	470	*825	285	*805	255
1.0 m			*1325	435	*1000	335	*830	235
0 m	*2680	795	*1450	415	*940	270	*855	250
– 1.0 m	*2155	785	*1270	420			*870	310
– 2.0 m							*735	570

https://truckmanualshub.com/

STANDARD ARM + STANDARD WEIGHT + BLADE UP Unit: kg

A / B	2 m		3 m		4 m		Max.	
4.0 m							855	550
3.0 m			755	490			500	320
2.0 m			730	470	455	285	410	255
1.0 m			695	435	510	335	385	235
0 m	1335	795	675	415	440	270	405	250
– 1.0 m	1325	785	675	420			495	310
– 2.0 m							*735	570

STANDARD ARM + ADDED WEIGHT + BLADE DOWN Unit: kg

A / B	2 m		3 m		4 m		Max.	
4.0 m							*875	640
3.0 m			*785	570			*805	380
2.0 m			*1005	550	*825	345	*805	310
1.0 m			*1325	520	*1000	395	*830	290
0 m	*2680	930	*1450	500	*940	325	*855	305
– 1.0 m	*2155	925	*1270	500			*870	370
– 2.0 m							*735	670

STANDARD ARM + ADDED WEIGHT + BLADE UP Unit: kg

A / B	2 m		3 m		4 m		Max.	
4.0 m							*875	640
3.0 m			855	570			575	380
2.0 m			835	550	525	345	475	310
1.0 m			795	520	575	395	445	290
0 m	1520	930	775	500	505	325	470	305
– 1.0 m	1510	925	780	500			570	370
– 2.0 m							*735	670

LONG ARM + STANDARD WEIGHT + BLADE DOWN Unit: kg

A / B	2 m		3 m		4 m		Max.	
4.0 m							*695	400
3.0 m					*665	295	*685	265
2.0 m			*820	475	*725	290	*700	220
1.0 m	*2495	805	*1195	440	*850	275	*725	205
0 m	*2830	755	*1415	410	*930	265	*765	210
– 1.0 m	*2490	760	*1365	405	*855	260	*800	250
– 2.0 m	*1655	790	*925	420			*805	385

https://truckmanualshub.com/

LONG ARM + STANDARD WEIGHT + BLADE UP

Unit: kg

A / B	2 m		3 m		4 m		Max.	
4.0 m							625	400
3.0 m					465	295	425	265
2.0 m			740	475	460	290	355	220
1.0 m	1350	805	700	440	445	275	335	205
0 m	1290	755	670	410	430	265	350	210
– 1.0 m	1295	760	660	405	430	260	410	250
– 2.0 m	1330	790	675	420			620	385

LONG ARM + ADDED WEIGHT + BLADE DOWN

Unit: kg

A / B	2 m		3 m		4 m		Max.	
4.0 m							*695	475
3.0 m					*665	350	*685	320
2.0 m			*820	460	*725	345	*700	265
1.0 m	*2495	945	*1195	520	*850	330	*725	250
0 m	*2830	895	*1415	490	*930	320	*765	260
– 1.0 m	*2490	900	*1365	485	*855	320	*800	305
– 2.0 m	*1655	930	*925	500			*805	460

LONG ARM + ADDED WEIGHT + BLADE UP

Unit: kg

A / B	2 m		3 m		4 m		Max.	
4.0 m							*695	475
3.0 m					535	350	490	320
2.0 m			*820	460	525	345	415	265
1.0 m	1535	945	800	520	515	330	390	250
0 m	1480	895	770	490	500	320	410	260
– 1.0 m	1485	900	760	485	500	320	475	305
– 2.0 m	1515	930	780	500			710	460

https://truckmanualshub.com/

5.2.2 LIFTING CAPACITIES PC30MR-2 (WITH CABIN)

⚠ DANGER

- **According to the standard EN474-5 (§ 4.1.7.5), this machine if not equipped with suitable devices is not allowed to lift more than 1000 kg.**
- **Do not attempt to lift loads unless the machine is standing on firm, level ground.**

NOTE

- **Loads do not exceed 87% of hydraulic capacity or 78% of tipping capacity.**

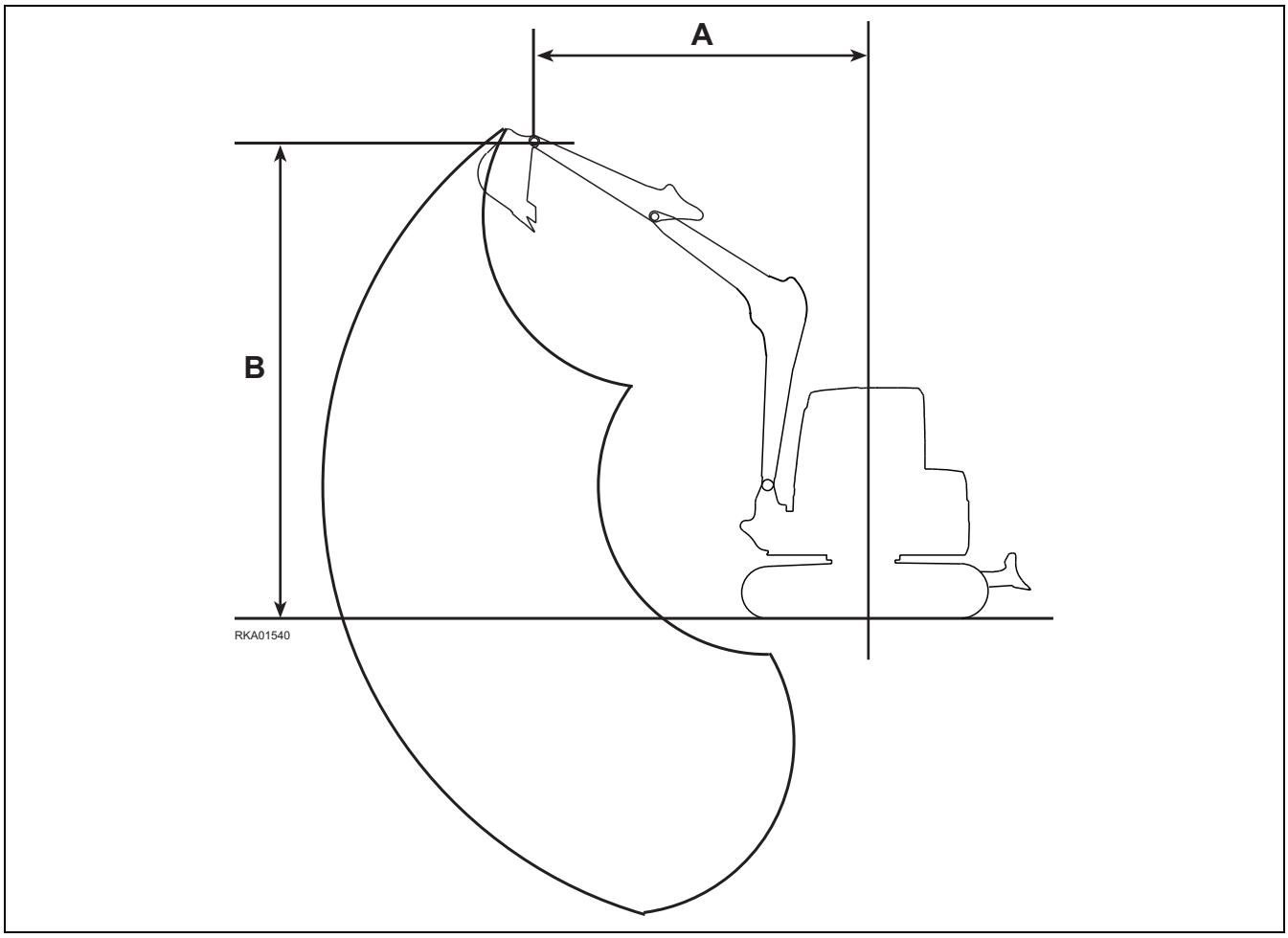

* Load limited by hydraulic capacity rather than tipping

STANDARD ARM + STANDARD WEIGHT + BLADE DOWN Unit: kg

A / B	2 m		3 m		4 m		Max.	
4.0 m							*875	595
3.0 m			*785	530			*805	350
2.0 m			*1005	510	*825	315	*805	280
1.0 m			*1325	475	*1000	365	*830	260
0 m	*2680	860	*1450	455	*940	300	*855	275
– 1.0 m	*2155	850	*1270	460			*870	340
– 2.0 m							*735	615

https://truckmanualshub.com/

STANDARD ARM + STANDARD WEIGHT + BLADE UP Unit: kg

A / B	2 m		3 m		4 m		Max.	
4.0 m							*875	595
3.0 m			*785	530			540	350
2.0 m			785	510	490	315	440	280
1.0 m			745	475	540	365	415	260
0 m	*2680	1425	725	455	470	300	435	275
– 1.0 m	*2155	1415	725	460			535	340
– 2.0 m							*735	615

STANDARD ARM + ADDED WEIGHT + BLADE DOWN Unit: kg

A / B	2 m		3 m		4 m		Max.	
4.0 m							*875	675
3.0 m			*785	600			*805	403
2.0 m			*1005	580	*825	365	*805	330
1.0 m			*1325	545	*1000	415	*830	305
0 m	*2680	985	*1450	530	*940	350	*855	320
– 1.0 m	*2155	975	*1270	530			*870	395
– 2.0 m							*735	705

STANDARD ARM + ADDED WEIGHT + BLADE UP Unit: kg

A / B	2 m		3 m		4 m		Max.	
4.0 m							*875	675
3.0 m			*785	600			605	403
2.0 m			870	580	550	365	495	330
1.0 m			835	545	605	415	470	305
0 m	1590	985	815	530	535	350	490	320
– 1.0 m	1580	975	815	530			600	395
– 2.0 m							*735	705

LONG ARM + STANDARD WEIGHT + BLADE DOWN Unit: kg

A / B	2 m		3 m		4 m		Max.	
4.0 m							*690	425
3.0 m					*660	310	*675	285
2.0 m			*815	505	*720	305	*695	235
1.0 m	*2490	855	*1190	465	*845	295	*720	215
0 m	*2820	805	*1410	435	*925	280	*755	225
– 1.0 m	*2480	810	*1360	430	*850	280	*795	265
– 2.0 m	*1650	840	*915	445			*800	410

https://truckmanualshub.com/

LONG ARM + STANDARD WEIGHT + BLADE UP

Unit: kg

A / B	2 m		3 m		4 m		Max.	
4.0 m							655	425
3.0 m					490	310	445	285
2.0 m			780	505	480	305	375	235
1.0 m	1420	855	735	465	465	295	355	215
0 m	1360	805	705	435	455	280	370	225
– 1.0 m	1365	810	695	430	450	280	435	265
– 2.0 m	1400	840	715	445			650	410

LONG ARM + ADDED WEIGHT + BLADE DOWN

Unit: kg

A / B	2 m		3 m		4 m		Max.	
4.0 m							*690	495
3.0 m					*660	370	*675	335
2.0 m			*815	585	*720	365	*695	280
1.0 m	*2490	990	*1190	545	*845	350	*720	265
0 m	*2820	945	*1410	520	*925	340	*755	275
– 1.0 m	*2480	950	*1360	510	*850	335	*795	320
– 2.0 m	*1650	975	*915	525			*800	485

LONG ARM + ADDED WEIGHT + BLADE UP

Unit: kg

A / B	2 m		3 m		4 m		Max.	
4.0 m							*690	495
3.0 m					555	370	510	335
2.0 m			*815	585	550	365	435	280
1.0 m	1605	990	835	545	535	350	410	265
0 m	1550	945	805	520	525	340	430	275
– 1.0 m	1555	950	800	510	520	335	500	320
– 2.0 m	1590	975	815	525			745	485

https://truckmanualshub.com/

5.2.3 LIFTING CAPACITIES PC35MR-2 (WITH CANOPY)

DANGER

- **According to the standard EN474-5 (§ 4.1.7.5), this machine if not equipped with suitable devices is not allowed to lift more than 1000 kg.**
- **Do not attempt to lift loads unless the machine is standing on firm, level ground.**

NOTE

- **Loads do not exceed 87% of hydraulic capacity or 78% of tipping capacity.**

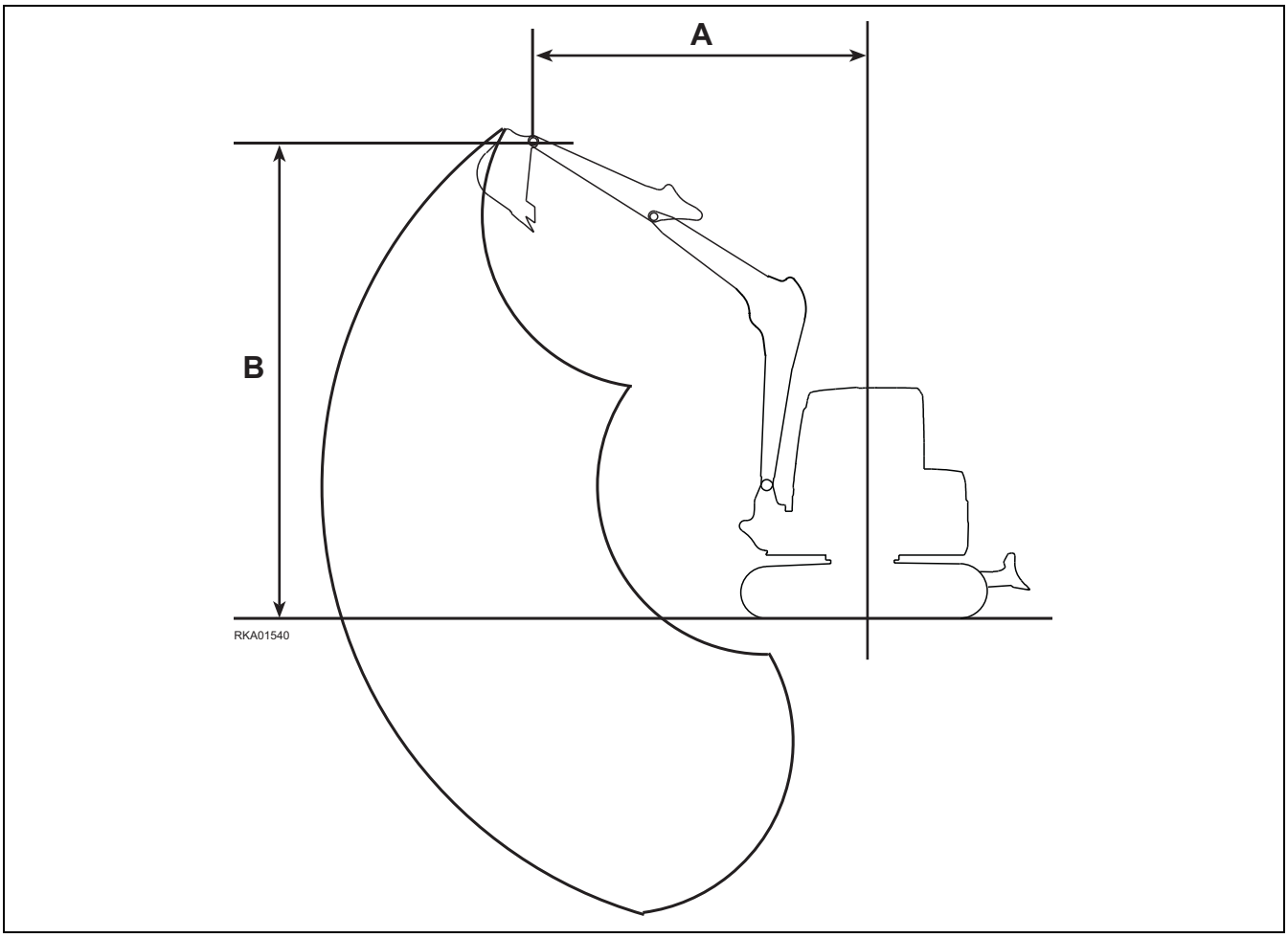

* Load limited by hydraulic capacity rather than tipping

STANDARD ARM + STANDARD WEIGHT + BLADE DOWN Unit: kg

A / B	2 m		3 m		4 m		Max.	
4.0 m								
3.0 m			*770	740	*750	450	*750	430
2.0 m			*1045	710	*815	445	*765	360
1.0 m			*1380	665	*925	430	*780	335
0 m	*2635	1205	*1495	640	*950	405	*810	350
– 1.0 m	*2230	1225	*1345	640	*835	420	*835	420
– 2.0 m							*915	755

https://truckmanualshub.com/

STANDARD ARM + STANDARD WEIGHT + BLADE UP Unit: kg

A / B	2 m		3 m		4 m		Max.	
4.0 m								
3.0 m			*770	740	555	450	530	430
2.0 m			875	710	550	445	445	360
1.0 m			830	665	535	430	420	335
0 m	1555	1205	805	640	505	405	440	350
– 1.0 m	1580	1225	805	640	525	420	525	420
– 2.0 m							*915	755

STANDARD ARM + ADDED WEIGHT + BLADE DOWN Unit: kg

A / B	2 m		3 m		4 m		Max.	
4.0 m								
3.0 m			*770	*770	*750	505	*750	485
2.0 m			*1045	790	*815	500	*765	410
1.0 m			*1380	745	*925	485	*780	385
0 m	*2635	1350	*1495	720	*950	460	*810	400
– 1.0 m	*2230	1370	*1345	725	*835	475	*835	475
– 2.0 m							*915	835

STANDARD ARM + ADDED WEIGHT + BLADE UP Unit: kg

A / B	2 m		3 m		4 m		Max.	
4.0 m								
3.0 m			*770	*770	615	505	*750	485
2.0 m			965	790	610	500	500	410
1.0 m			920	745	595	485	475	385
0 m	1725	1350	895	720	570	460	495	400
– 1.0 m	1745	1370	895	725	585	475	585	475
– 2.0 m							*915	835

LONG ARM + STANDARD WEIGHT + BLADE DOWN Unit: kg

A / B	2 m		3 m		4 m		Max.	
4.0 m							*635	495
3.0 m					*610	445	*630	355
2.0 m			*840	705	*700	435	*645	300
1.0 m			*1230	660	*845	415	*675	285
0 m	*2915	1190	*1395	585	*940	400	*705	290
– 1.0 m	*2565	1190	*1410	615	*900	395	*745	340
– 2.0 m							*765	480

https://truckmanualshub.com/

LONG ARM + STANDARD WEIGHT + BLADE UP Unit: kg

A / B	2 m		3 m		4 m		Max.	
4.0 m							610	495
3.0 m					550	445	445	355
2.0 m			*840	705	540	435	380	300
1.0 m			825	660	520	415	360	285
0 m	1540	1190	745	585	505	400	370	290
– 1.0 m	1545	1190	780	615	500	395	430	340
– 2.0 m							605	480

LONG ARM + ADDED WEIGHT + BLADE DOWN Unit: kg

A / B	2 m		3 m		4 m		Max.	
4.0 m							*635	555
3.0 m					*610	500	*630	405
2.0 m			*840	790	*700	490	*645	345
1.0 m			*1230	740	*845	470	*675	325
0 m	*2915	1330	*1395	665	*940	455	*705	335
– 1.0 m	*2565	1335	*1410	700	*900	450	*745	390
– 2.0 m							*765	545

LONG ARM + ADDED WEIGHT + BLADE UP Unit: kg

A / B	2 m		3 m		4 m		Max.	
4.0 m							*635	555
3.0 m					*610	500	500	405
2.0 m			*840	790	600	490	430	345
1.0 m			915	740	585	470	405	325
0 m	1705	1330	835	665	565	455	420	335
– 1.0 m	1710	1335	870	700	560	450	485	390
– 2.0 m							675	545

https://truckmanualshub.com/

5.2.4 LIFTING CAPACITIES PC35MR-2 (WITH CABIN)

⚠ DANGER

- **According to the standard EN474-5 (§ 4.1.7.5), this machine if not equipped with suitable devices is not allowed to lift more than 1000 kg.**
- **Do not attempt to lift loads unless the machine is standing on firm, level ground.**

NOTE

- **Loads do not exceed 87% of hydraulic capacity or 78% of tipping capacity.**

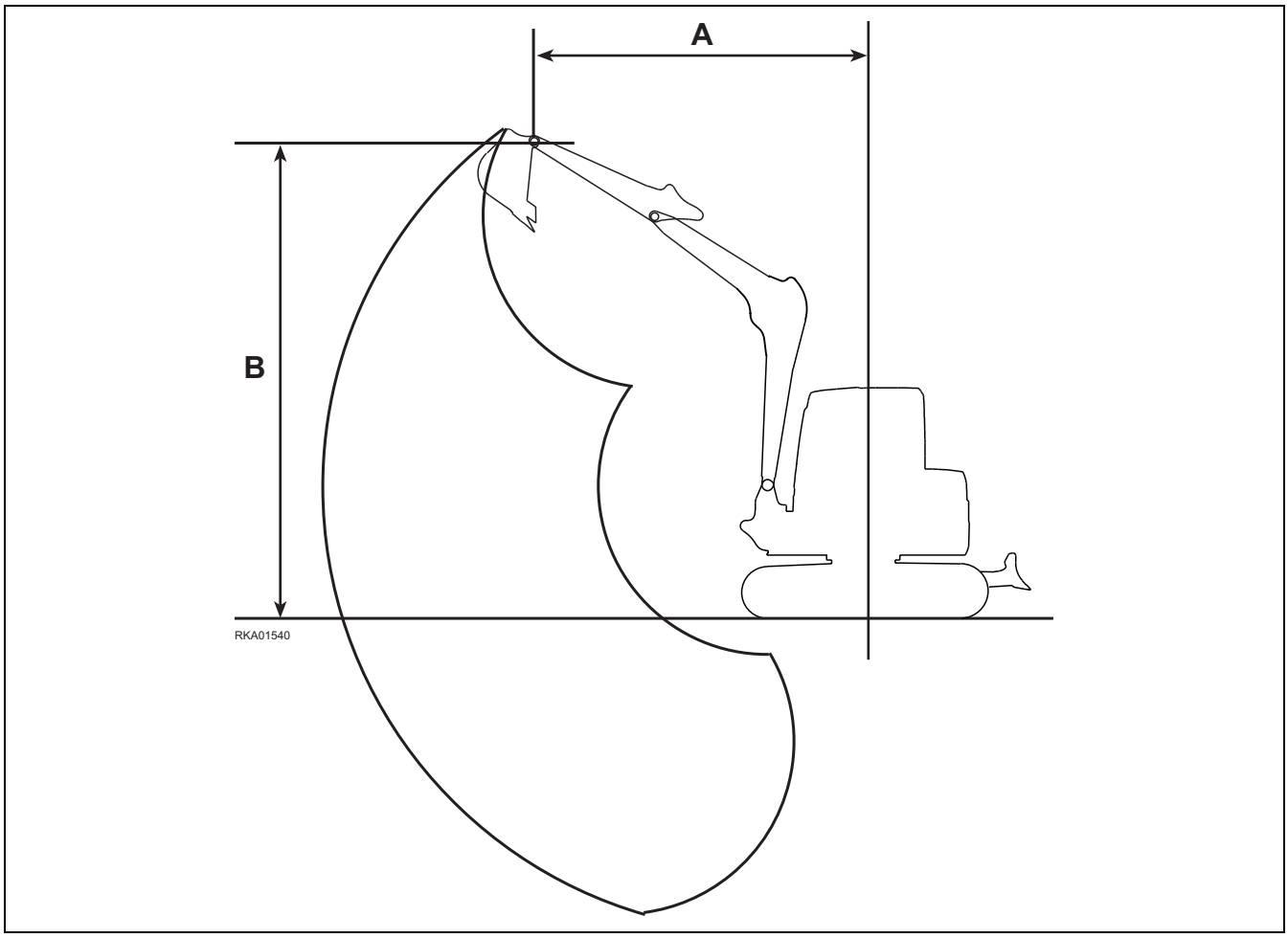

* Load limited by hydraulic capacity rather than tipping

STANDARD ARM + STANDARD WEIGHT + BLADE DOWN Unit: kg

A / B	2 m		3 m		4 m		Max.	
4.0 m								
3.0 m					*750	475	*750	450
2.0 m			*1045	745	*815	470	*765	380
1.0 m			*1380	700	*925	455	*780	355
0 m	*2635	1265	*1495	675	*950	425	*810	370
– 1.0 m	*2230	1285	*1345	675	*835	445	*835	445
– 2.0 m							*915	785

https://truckmanualshub.com/

STANDARD ARM + STANDARD WEIGHT + BLADE UP Unit: kg

A / B	2 m		3 m		4 m		Max.	
4.0 m								
3.0 m					580	475	555	450
2.0 m			915	745	575	470	470	380
1.0 m			865	700	560	455	445	355
0 m	1625	1265	840	675	535	425	465	370
– 1.0 m	1650	1285	840	675	550	445	550	445
– 2.0 m							*915	785

STANDARD ARM + ADDED WEIGHT + BLADE DOWN Unit: kg

A / B	2 m		3 m		4 m		Max.	
4.0 m								
3.0 m					*750	530	*750	505
2.0 m			*1045	825	*815	525	*765	430
1.0 m			*1380	780	*925	510	*780	405
0 m	*2635	1410	*1495	755	*950	485	*810	420
– 1.0 m	*2230	1470	*1345	755	*835	500	*835	500
– 2.0 m							*915	865

STANDARD ARM + ADDED WEIGHT + BLADE UP Unit: kg

A / B	2 m		3 m		4 m		Max.	
4.0 m								
3.0 m					645	530	615	505
2.0 m			1005	825	640	525	520	430
1.0 m			955	780	620	510	495	405
0 m	1795	1410	930	755	595	485	515	420
– 1.0 m	1815	1470	935	755	610	500	610	500
– 2.0 m							*915	865

LONG ARM + STANDARD WEIGHT + BLADE DOWN Unit: kg

A / B	2 m		3 m		4 m		Max.	
4.0 m							*635	520
3.0 m					*610	470	*630	375
2.0 m			*840	740	*700	460	*645	320
1.0 m			*1230	690	*845	440	*675	300
0 m	*2910	1250	*1395	620	*940	425	*705	310
– 1.0 m	*2565	1250	*1410	650	*900	420	*745	360
– 2.0 m							*765	510

https://truckmanualshub.com/

LONG ARM + STANDARD WEIGHT + BLADE UP Unit: kg

A / B	2 m		3 m		4 m		Max.	
4.0 m							*635	520
3.0 m					580	470	465	375
2.0 m			*840	740	565	460	400	320
1.0 m			860	690	545	440	380	300
0 m	1610	1250	785	620	530	425	390	310
– 1.0 m	1615	1250	815	650	525	420	450	360
– 2.0 m							635	510

LONG ARM + ADDED WEIGHT + BLADE DOWN Unit: kg

A / B	2 m		3 m		4 m		Max.	
4.0 m							*635	580
3.0 m					*610	525	*630	425
2.0 m			*840	820	*700	515	*645	365
1.0 m			*1230	775	*845	495	*675	345
0 m	*2910	1390	*1395	700	*940	480	*705	355
– 1.0 m	*2565	1395	*1410	730	*900	475	*745	410
– 2.0 m							*765	570

LONG ARM + ADDED WEIGHT + BLADE UP Unit: kg

A / B	2 m		3 m		4 m		Max.	
4.0 m							*635	580
3.0 m					*610	525	520	425
2.0 m			*840	820	630	515	450	365
1.0 m			950	775	610	495	425	345
0 m	1775	1390	875	700	590	480	430	355
– 1.0 m	1780	1395	910	730	585	475	505	410
– 2.0 m							705	570

https://truckmanualshub.com/

PAGE INTENTIONALLY LEFT BLANK

https://truckmanualshub.com/

AUTHORISED OPTIONAL EQUIPMENT

https://truckmanualshub.com/

6.1 ATTACHMENTS AND OPTIONS - GENERAL INFORMATION

6.1.1 SAFETY FIRST

If attachments or options other than those authorized by Komatsu Utility are installed, this will not only affect the life of the machine, but will also cause problems with safety.
When installing attachments not listed in this Operation and Maintenance Manual, contact your Komatsu Utility Dealer first.
If you do not contact Komatsu Utility, we cannot accept any responsibility for any accidents or failures.

⚠ WARNING

- **GENERAL PRECAUTIONS**
  - **Read the instruction manual for the attachment thoroughly, and do not use this attachment unless you are sure that you have understood the guides completely.**
    If you lose the instruction manual, always ask the manufacturer or your Komatsu Utility distributors for a new copy.
  - **Depending on the attachment, install the necessary front guard to the machine.**
  - **Depending on the attachment, the impact noise may make it difficult for fellow workers to transmit instructions for the operation. Before starting operation, decide a leader and determine the signals to be used.**
  - **Do not carry out swinging operations to the side with a heavy load on the attachment. This is particularly dangerous on slopes.**
  - **Comparing with a machine equipped with a bucket, a machine equipped with a breaker has a heavy load at the front of the work equipment and is unstable. To avoid a hazard of tipping over, do not carry out operations with the attachment swung to the side.**
  - **When an attachment is installed, the swing range and center of gravity of the machine are different, and the machine may move in an unexpected way. Be sure that you understand the condition of the machine properly.**
  - **Before starting operations, set up a fence around the machine to prevent people from entering.**
    Never operate the machine when there are people near the machine.
  - **To prevent serious accidents caused by misoperation, do not put your foot on the pedal except when operating the pedal.**
- **PRECAUTIONS FOR REMOVAL AND INSTALLATION OPERATIONS**
  - **When removing or installing the attachments, obey the following precautions and take care to ensure safety during the operation.**
  - **Carry out the removal and installation operation on a flat, firm ground surface.**
  - **When the operation is carried out by two or more workers, determine the signals and follow these during the operation.**
  - **When carrying heavy objects (more than 25 kg or 55 lb.), use a crane.**
  - **When removing heavy parts, always support the part before removing it.**
  - **When lifting such as heavy parts with a crane, always pay careful attention to the position of the center of gravity.**
  - **It is dangerous to carry out operations with the load kept suspended. Always set the load on a stand, and check that it is safe.**
  - **When removing or installing attachments, make sure that it is in a stable condition and will not fall over.**
  - **Never go under a load suspended from a crane.**
  - **Always stand in a position that is safe even if the load should fall.**

IMPORTANT

- **Qualifications are required to operate a crane. Never allow the crane to be operated by an unqualified person.**
  For details of removal and installation operations, contact your Komatsu Utility Dealer.

---

https://truckmanualshub.com/

6.1.2 ATTACHMENT INSTALLATION

⚠ WARNING

- **Long work equipment or heavy work equipment cause the machine to have poor stability, so there is danger of the machine losing its balance and tipping over when traveling down steep hills or when swinging on slopes.**
  Never do any of the following. They are extremely dangerous.
  Traveling downhill with the work equipment raised
  Traveling across slopes
  Swinging upper structure on slopes
  If heavy-load work equipment is installed, there will be excessive overrun when swinging (the distance from operating to stop the swing to the point where the swing stops completely), so there is danger of mistaking the distance and hitting other objects.
  Allow a margin to the stopping point when operating.
  In addition, the hydraulic drift (the gradual downward movement caused by the weight of the work equipment when the work equipment is stopped in a raised condition) will also increase.
  If the correct procedure is not used when installing the boom and arm, it may lead to serious damage. Please consult your Komatsu Utility Dealer.
  When long work equipment is installed, the working range will suddenly become larger, so there is danger of mistaking the distance and hitting other objects. Allow an ample margin between the work equipment and surrounding obstacles when operating.

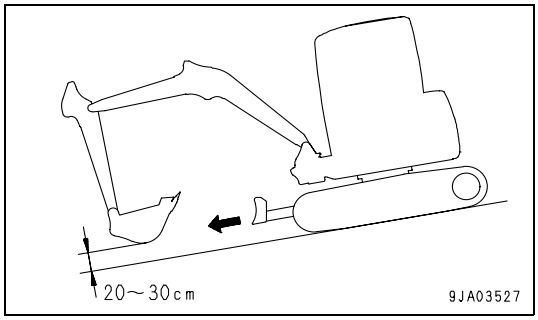

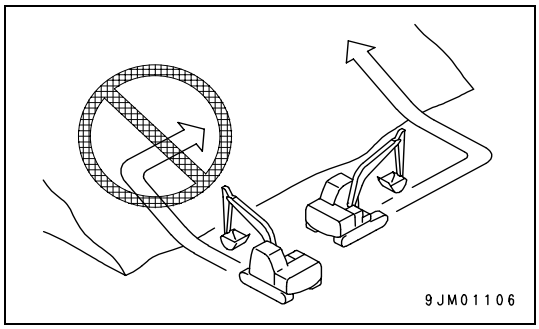

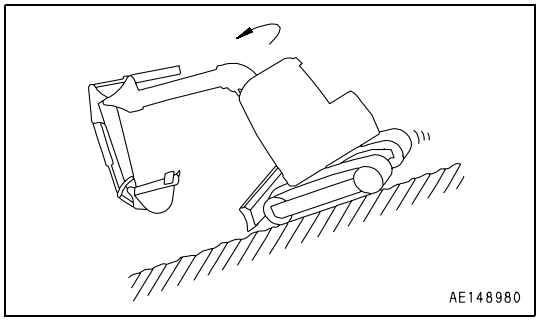

https://truckmanualshub.com/

6.1.3 CHARACTERISTICS OF THE OPTIONAL EQUIPMENT

6.1.3.1 FOR MODEL PC30MR-2 ONLY

(Specific weight of the handled material = 1.8 t/cu.m.)

EQUIPMENT	MAX. WEIGHT (kg)	MAX. DIMENSIONS		MAX. SAE CAPACITY (m^3)	MAX. OPERATING PRESSURE (bar)	MAX. FLOW RATE (l/min.)
		Width (mm)	Height (mm)			
Bucket	80	600	–	0.100	–	–
Ditch-cleaning bucket	70	1400	–	0.100	–	–
Ditch-digging bucket	80	1000	–	0.100	–	–
Clamshell bucket	130	450	1200	0.050	210	35
Hydraulic hammer	170	–	1250	–	120	50
Drill	130	✻ 300	● 2200	–	210	60

✻ Measure referred to the tool diameter

● Measure referred to the tool length

6.1.3.2 FOR MODEL PC35MR-2 ONLY

(Specific weight of the handled material = 1.8 t/cu.m.)

EQUIPMENT	MAX. WEIGHT (kg)	MAX. DIMENSIONS		MAX. SAE CAPACITY (m^3)	MAX. OPERATING PRESSURE (bar)	MAX. FLOW RATE (l/min.)
		Width (mm)	Height (mm)			
Bucket	90	750	–	0.120	–	–
Ditch-cleaning bucket	70	1400	–	0.100	–	–
Ditch-digging bucket	80	1000	–	0.100	–	–
Clamshell bucket	150	500	1250	0.070	210	35
Hydraulic hammer	240	–	1400	–	120	70
Drill	130	✻ 300	● 2200	–	210	60

✻ Measure referred to the tool diameter

● Measure referred to the tool length

https://truckmanualshub.com/

6.2 MACHINE READY FOR ATTACHMENT

6.2.1 LOCATIONS

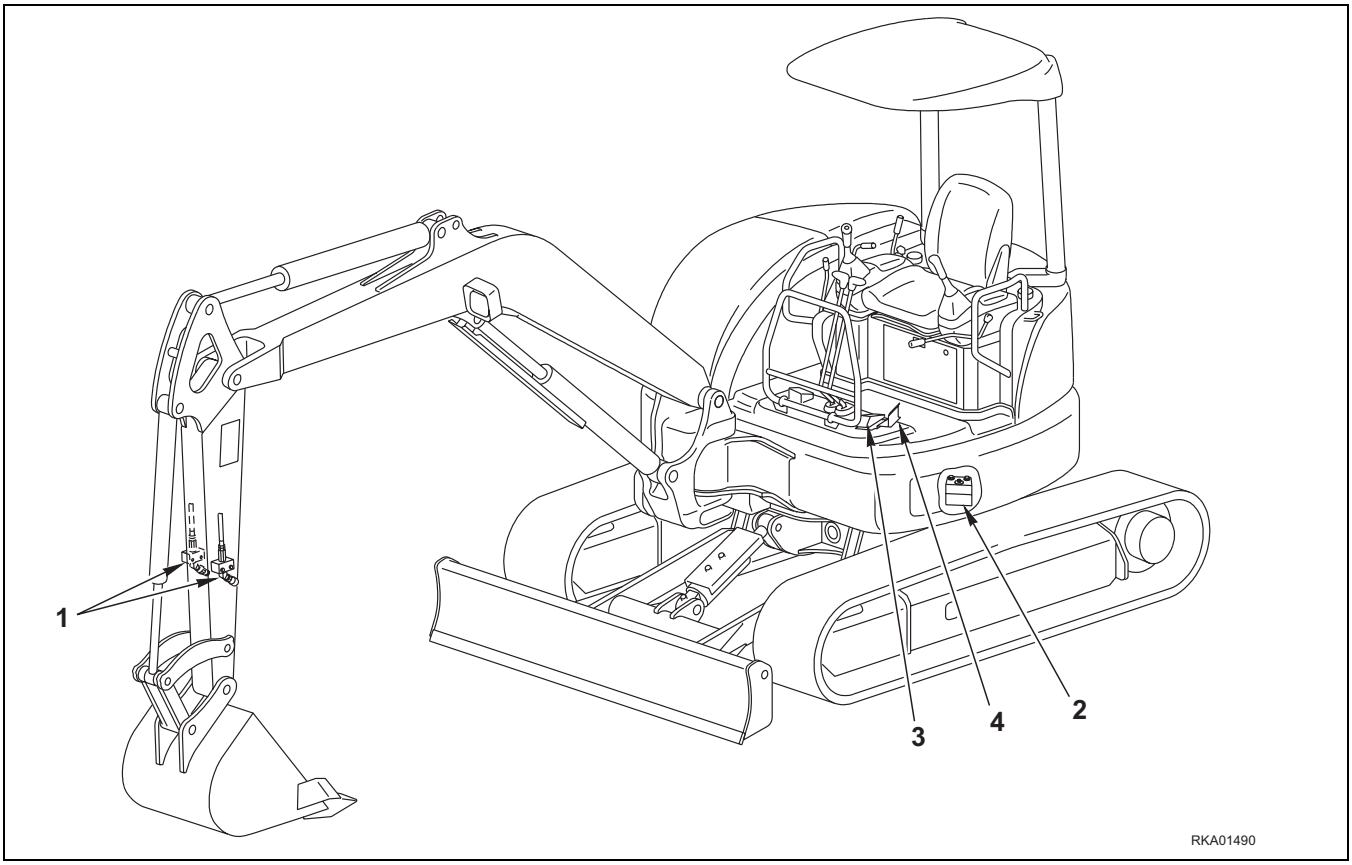

(1) Quick Coupler
(2) Selector Valve
(3) Attachment Control Pedal
(4) Pedal Lock (for attachment control pedal)

1. Quick Coupler

This quick coupler (1) is used to connect the piping equipped with quick coupler at the attachment end.

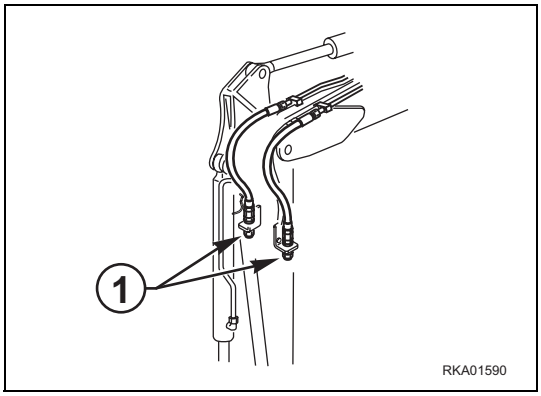

https://truckmanualshub.com/

2. Selector Valve

This valve (2) switches the flow of hydraulic oil.

- Position (a): When using breaker
- Turn spool (A) to the left until it is stopped by the stopper.
- Position (b): When using general attachment
- Turn spool (A) to the right until it is stopped by the stopper.

Width across face of square portion of spool (A): 9 mm (0.355 in.).

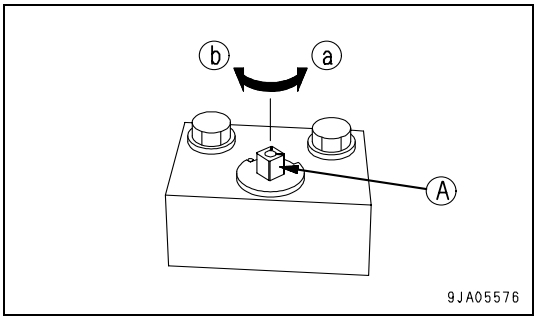

3. Attachment Control Pedal

This pedal (3) is used to operate the attachment.

Top of pedal depressed: Oil flows to right side of arm (hydraulic tank side).

Bottom of pedal depressed: Oil flows to left side of arm (operator's seat side).

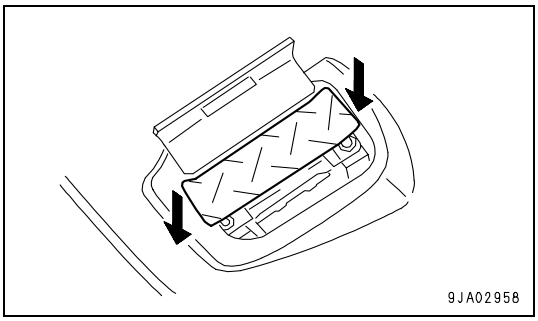

4. Pedal Lock
(for attachment control pedal)

WARNING

- **When attachment operation is not required, lock the attachment control pedal with the pedal lock.**
  If the attachment control pedal is accidentally pressed while it is not locked, a serious accident may occur.

This plate (4) is a device to lock the attachment control pedal.

When the pedal is covered by the plate, it is locked.

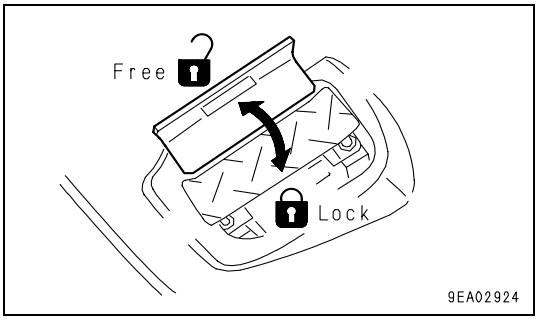

https://truckmanualshub.com/

6.2.2 HYDRAULIC CIRCUIT

6.2.2.1 ASSEMBLYING AND CONNECTING THE EQUIPMENT

DANGER

- **The machine must be parked on a level surface, with the equipment resting on the ground.**
- **When the coupling pins are removed or installed, chips may come off; always wear gloves, safety goggles and helmet.**
- **The change of the equipment must be carried out by two operators, who must decide together the words and signals to be used during operations.**
- **Do not use your fingers to center the holes, since they may be injured or even cut.**
- **Release the residual pressure that may be present in the pipes completely.**

For the installation of the equipment it is necessary to connect the mechanical constraints of the bucket as described in "3.3.13 CHANGING THE BUCKET" and to carry out the hydraulic connections using the pipes provided.
After connecting the mechanical constraints, carry out the hydraulic connections by proceeding as follows:

1 - Stop the engine and move the hydraulic controls in all directions, in order to completely release the residual pressures present in the circuits of the machine.

2 - Press the optional equipment control pedal to release the residual pressure present in the delivery pipe.

3 - Slowly loosen the hydraulic oil filling cap, in such a way as to release the residual pressure from the tank.

4 - Remove the sealing plugs of the machine rapid couplings and of the equipment rapid couplings.

5 - Connect the right (1) and left (2) pipes. The rapid couplings must be in compliance with the ISO 7241-1 series “B” standard.

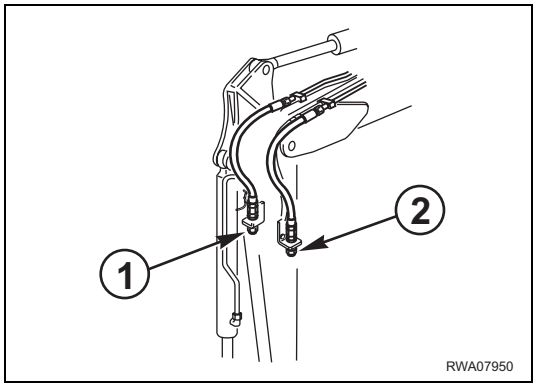

PC30MR-2

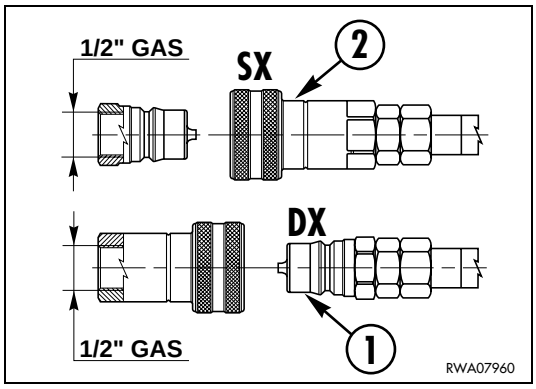

PC35MR-2

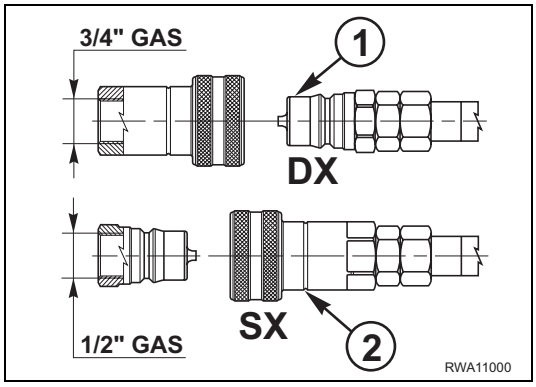

CAUTION

- **When connecting the pipes, take care to prevent any impurities from getting into them.**

6 - Start the machine and perform several manoeuvres with the equipment control pedal, in order to check the seals.

DANGER

- **Always wear thick gloves and safety goggles during this check.**
- **To check the system for leaks, use a piece of cardboard or a wooden board.**

https://truckmanualshub.com/

6.2.2.2 MAINTENANCE

The hydraulic system does not require any maintenance operation and inspection other than those prescribed for the machine.
For the maintenance operations required for the equipment, see the specific operation manuals.

6.2.2.3 BLEEDING AIR

After connecting the piping, bleed the air from the circuit.

1. Starting engine
   Start the engine according to "3.3.1.5 STARTING ENGINE" keep running the engine at low idling for 10 minutes, and carry out the following procedure.
2. Bleeding air from cylinders
   Operate each cylinder 3 or 4 times to the end of its stroke.

IMPORTANT
- **If, at first, the engine is run at high speed or the cylinder is operated to the end of its stroke, the air inside the cylinder may cause damage to the piston packing or other parts.**

---

3. Bleeding air from attachment (if equipped)
   For machine equipped with attachment such as the breaker, actuate the attachment pedal about 10 times to bleed the air completely from the attachment circuit while running the engine at low idling.

IMPORTANT
- **If the attachment bleeding procedure is specified by the manufacture, bleed the attachment according to such procedure.**

---

4. Operation.
5. After completion of bleeding the air, stop the engine, and wait for at least 5 minutes before starting operations. In this way, the air bubbles are removed from the oil inside the hydraulic tank.
6. Check for any leakage of oil, and wipe off any oil that has been spilled.

https://truckmanualshub.com/

6.3 ATTACHMENT OPERATIONS

WARNING

- **If you leave your foot resting on the pedal during operations and you depress the pedal by mistake, there is danger that the attachment will suddenly move and cause serious personal injury. Always lock the pedal with the lock plate except when operating the pedal.**

The operation of the attachment is as follows.

WHEN USING BREAKER

Depress the bottom of the pedal to operate the breaker.

NOTE

- **If it is necessary to adjust the oil flow, please ask your Komatsu Utility Dealer to carry out the adjustment.**

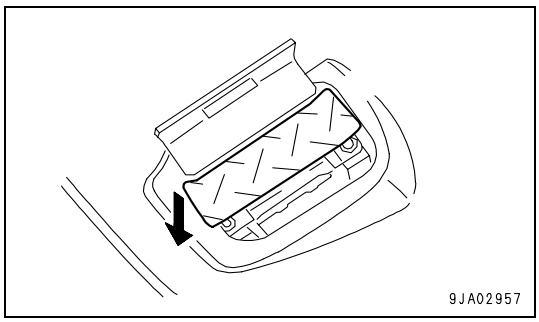

Precautions when Using

- Check that selector valve (1) is at the 1 WAY (breaker) position (a).
- When using the breaker, pull the fuel control lever back fully, then return it slightly and keep it in this position for operations. (The position for 80% of engine output).
  If the breaker is operated with the engine at full throttle, it will lead to failure.
- When using the breaker, the hydraulic oil deteriorates more and replace the element at a shorter interval.
  (For details, see "4.8.2 MAINTENANCE INTERVAL FOR HYDRAULIC BREAKER".)
- For details of pther precautions when handling the breaker, read and use correctly the instruction manual provided by the breaker manufacturer.

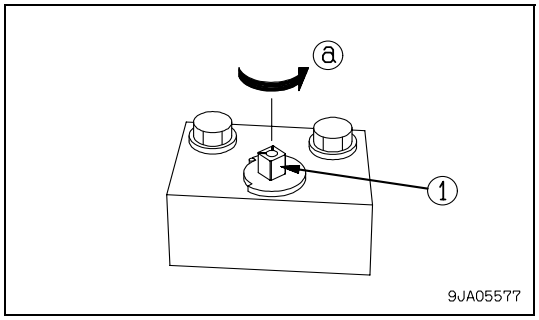

https://truckmanualshub.com/

WHEN USING GENERAL ATTACHMENT SUCH AS CRUSHER

When the pedal is depressed, the attachment is actuated.

Top of pedal depressed: Oil flows to right side of arm (hydraulic tank side).

Bottom of pedal depressed: Oil flows to left side of arm (operator's seat side).

NOTE

- **If it is necessary to adjust the oil flow, please ask your Komatsu Utility Dealer to carry out the adjustment.**

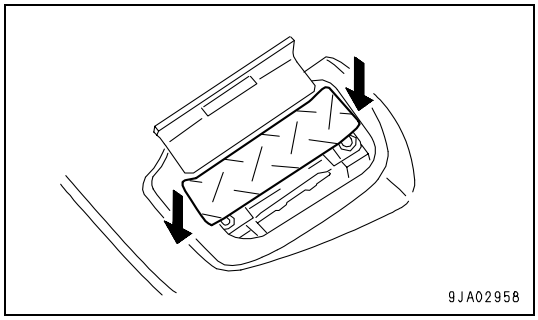

Precautions when Using

- Check that selector valve (1) is at the 2 WAY (crusher or other attachment) position (b).
- For details of other precautions when handling the attachment, read and use correctly the instruction manual provided by the attachment manufacturer.

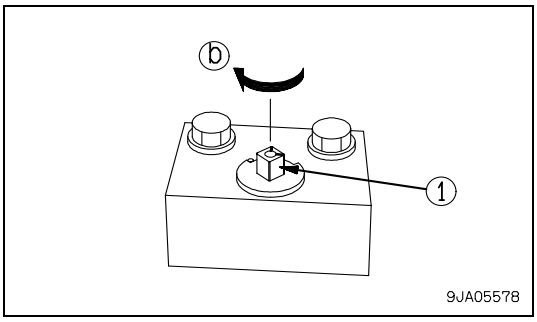

6.3.1 LONG TERM STORAGE

If the machine is not to be used for a long time, do as follows.

- Install the cap to the quick coupler.
- Set the selector valve to the position for general attachments such as the crusher.
- Lock the attachment control pedal with the pedal lock.

If the pedal is operated when a breaker or general attachment is not installed, it will cause overheating or other problems.

6.3.2 SPECIFICATIONS

Hydraulic Specifications

Hydraulic pressure takeoff	Quick coupler	
	PC30MR-2	PC35MR-2
Max. flow (engine speed)	50 liter/min (2500 rpm)	70 liter/min (2400 rpm)
Safety valve setting pressure	26.0 MPa	26.0 MPa

https://truckmanualshub.com/

6.4 ATTACHMENT GUIDE

⚠ WARNING

- **Please read the instruction manual for the attachment and the sections of this manual related to attachments and options.**
- **When installing any attachment or option, there may be problems with safety, so please contact your Komatsu Utility Dealer before installing.**
- **Installing attachments or options without consulting your Komatsu Utility Dealer may not only cause problems with safety, but may also have an adverse effect on the operation of the machine and the life of the equipment.**
- **Any injuries, accidents, or damage resulting from the use of unauthorized attachments or options will not be the responsibility of Komatsu Utility.**

6.4.1 ATTACHMENT COMBINATIONS

⚠ WARNING

- **Depending on the type or combination of work equipment, there is danger that the work equipment may hit the cab or machine body.**
  When using unfamiliar work equipment for the first time, check before starting if there is any danger of interference, and operate with caution.

This is the combination table for buckets to install to the standard arm and long arm.

If a long arm is installed, do not pull the bucket fully in towards the machine. It will hit the machine body.

When lowering the boom while digging diagonally, be careful not to let the bucket hit the undercarriage.

https://truckmanualshub.com/

6.5 RECOMMENDED ATTACHMENT OPERATIONS

Below described are instructions which must be followed without fail when doing the work using a hydraulic excavator equipped with an attachment.

IMPORTANT

- **Select the optimum model of attachment for a hydraulic excavator on which it is to be mounted. Depending on machine models of hydraulic excavator, the kind of attachments or the model of specific attachments that can be mounted will vary. Hence, consult your Komatsu Utility Dealer for the selection of optimum attachments.**

6.5.1 HYDRAULIC BREAKER

MAIN APPLICATIONS

- Crushed rock
- Demolition work
- Road construction

This attachment can be used for a wide range of applications including demolition of buildings, breaking up road surfaces or slag, tunnel work, rock crushing and breaking operations in quarries.

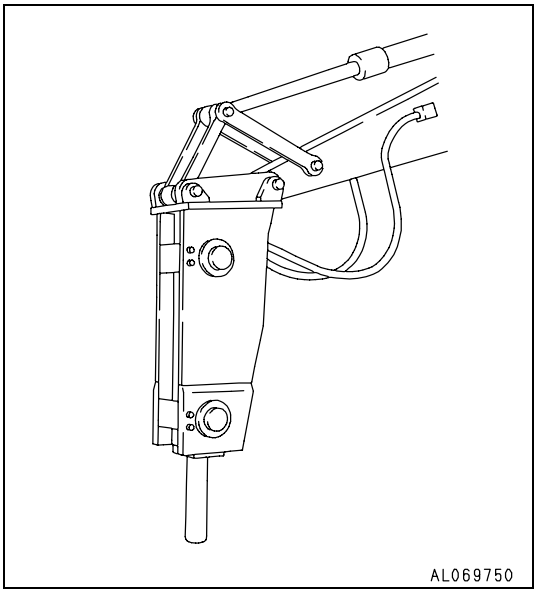

Keep the chisel pushed perpendicularly against the impact surface when carrying out breaking operations.

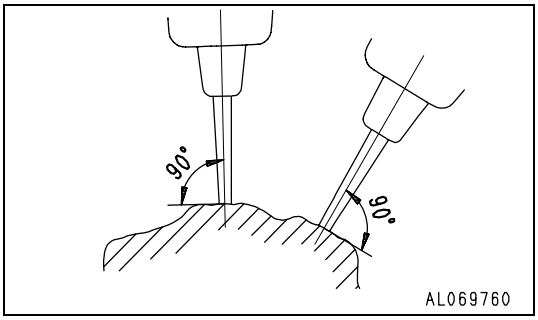

When applying impact, push the chisel against the impact surface and operate so that the chassis rises approx. 5 cm (2 in) off the ground. Do not let the machine come further off the ground than this amount.

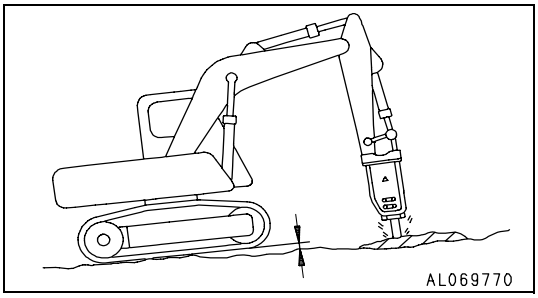

https://truckmanualshub.com/

When applying continuous impact to the same impact surface, if the chisel does not penetrate or break the surface within 1 minute, change the point of impact and carry out breaking operations closer to the edge.

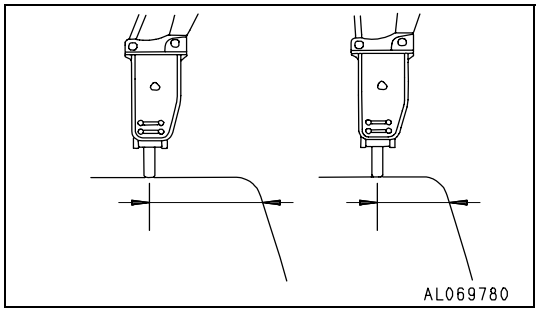

The direction of penetration of the chisel and the direction of the breaker body will gradually move out of line with each other, so always adjust the bucket cylinder to keep them aligned.

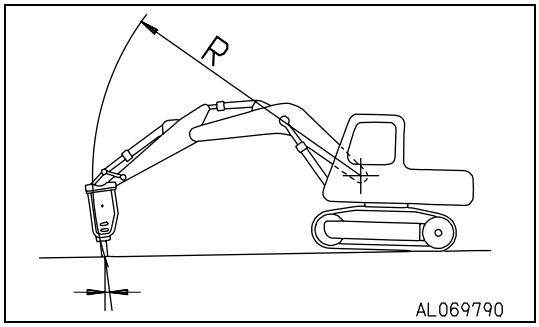

Always keep the chisel pressed against the impact surface properly to prevent using the impact force when there is no resistance.

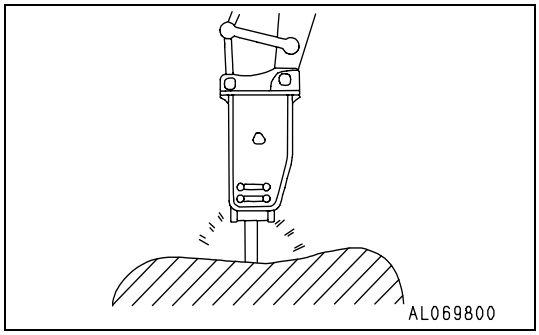

PROHIBITED WORKS

To ensure that the machine has a long life, and to ensure that operations are carried out in safety, do not operate the machine in any of the following ways.

- Do not operate all cylinders to the end of their strokes. Always leave approx. 5 cm (2 in) to spare.

Using the mount to gather in pieces of rock

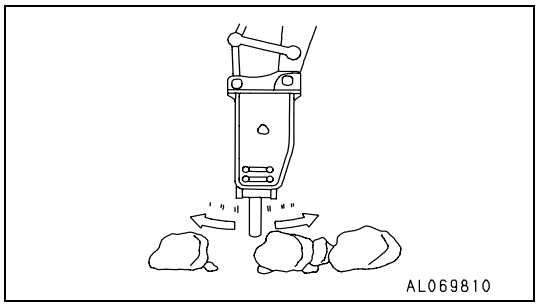

https://truckmanualshub.com/

Operations using the swing force

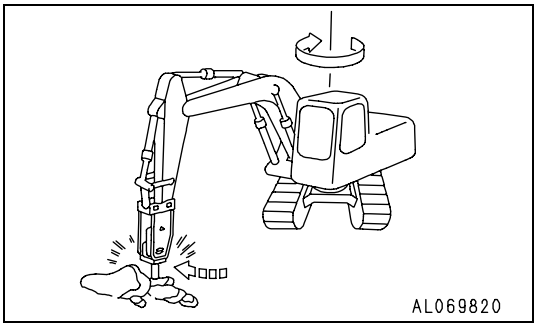

Moving the chisel while carrying out impacting operations

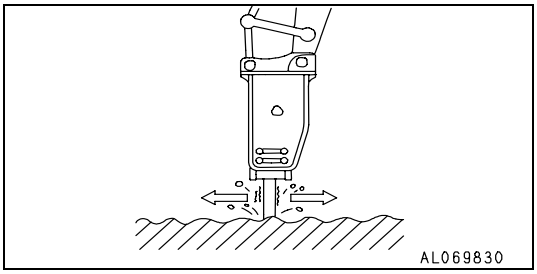

Holding the chisel horizontal or pointed up when carrying out impacting operations

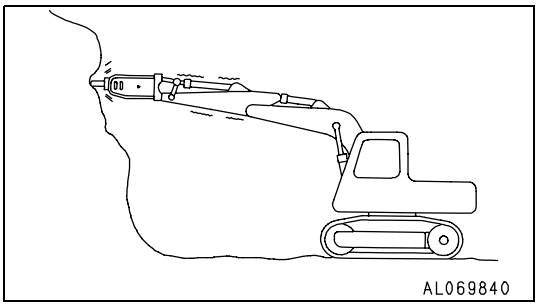

Twisting the chisel when it has penetrated the rock

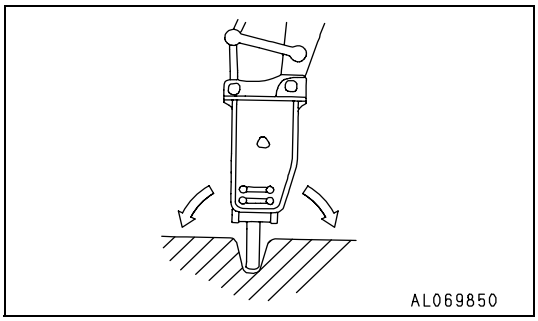

Pecking operations

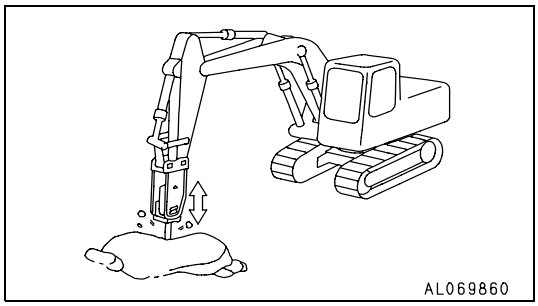

https://truckmanualshub.com/

Extending the bucket cylinder fully and thrusting to raise the machine off the ground

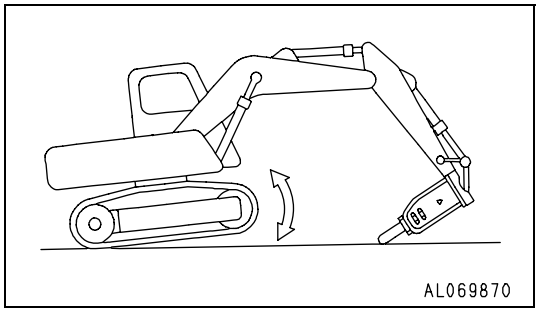

GREASING

Supply grease in the correct position.

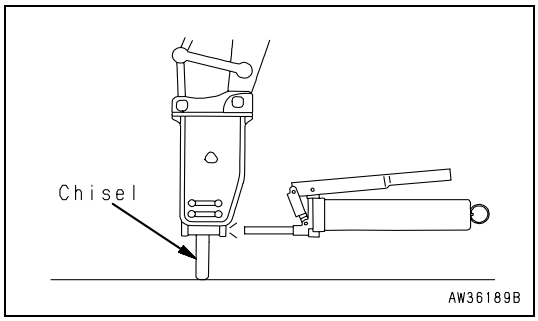

IMPORTANT

- **If the breaker is greased in an improper posture, it is filled with more grease than necessary. As a result, soil and sand will enter the hydraulic circuit and can damage the hydraulic components, while the breaker is in use. Therefore, be sure to grease the breaker, holding it in the right posture.**

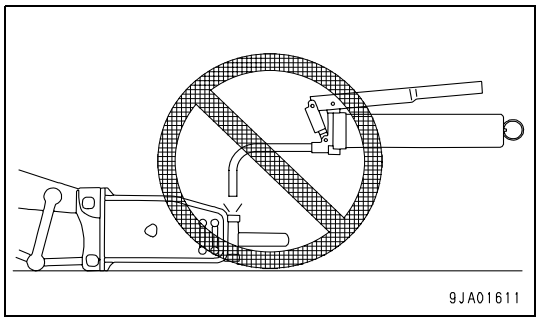

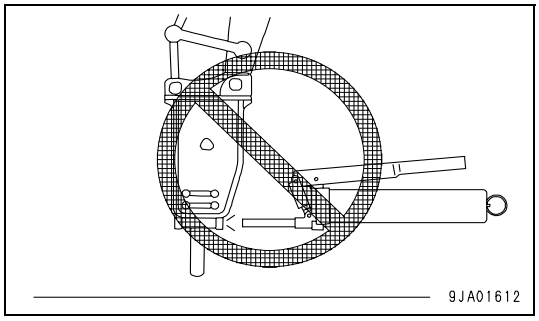

https://truckmanualshub.com/

https://truckmanualshub.com/

https://truckmanualshub.com/

© 2004 KOMATSU UTILITY EUROPE S.p.A.
All Rights Reserved
Printed in Europe