https://truckmanualshub.com/

Hydraulic Excavator

YUCHAI

YC 135

Operation and Maintenance Manual

YUCHAI ENGINEERING MACHINERY CO. LTD.
Issue: 2005

https://truckmanualshub.com/

https://truckmanualshub.com/

ATTENTION!!!

A dangerous use of the machine may cause serious injure to the operators and to the people near the working zone. So it is essential that, who will use the machine, follows all is written in the manual. The operators and the maintainers have to read this manual before to perform any services on the machine. This manual must be kept on board to allow to the operators further consultation and periodical reading by who will use the machine.
Is absolutely forbidden use the machine inside tunnels, mines and fields with slope that exceed 30 °.

Duplication, total or partial, with any device of this manual is forbidden because it is exclusive property of the Yuchai Engineering Machinery Co. Ltd.

INDEX

1. INTRODUCTION AND GENERAL INFORMATION 9
1.1 Machine serial number 12
1.2 Yuchai engineering machinery co. ltd. data 13
2. GENERAL PRECAUTION AND SAFETY MEASURES 15
3. PRECAUTION AND SAFETY MEASURES DURING WORK 23
3.1 Precautions before engine start 23
3.2 Precaution when the machine is working 26
3.3 Transport precaution 37
3.4 Precaution when operate with battery 38
3.5 Pulling precaution 39
4. MAINTENANCE PRECAUTIONS 41
4.1 Precautions before staring maintenance 41
4.2 Precaution during maintenance 44
5. MACHINE DESCRIPTION 49
5.1 Excavator main parts description 49
5.2 Data sheet 50
5.2.1. Transport blocked 51
5.3 Warning plates 52
5.4 Identification plate 54
6. INSTRUMENT AND COMMAND DESCRIPTION 55
6.1 Operators seat description 55
6.1.1. Lever and pedal 56
6.2 Instrument panel and switches 60
6.2.1. Instrument and Switches 60
6.2.2. Heating and air conditioning 66
6.3 Fuses 66
6.4 Operator seat 67
6.4.1. Operator seat adjusting 67
6.4.2. Seat belt 68
6.5 Cabin 68
6.5.1. Open / Close side door 68
6.5.2. Front window opening 69
6.5.3. Side window opening 70
6.5.4. Cab light 70
6.5.5. Emergency exit 70
7. STARTING MACHINE 71
7.1 Check before start 71
7.1.1. Check coolant, refill it 71
7.1.2. Check and replacing engine oil 72
7.1.3. Inspecting and adjusting the fan belt 72
7.1.4. Fuel level and refuelling 73

7.1.5. Check hydraulic oil and refill 73
7.1.6. Check air filter 74
7.1.7. Check electrical circuit 75
7.2 Starting 76
7.2.1. Precaution 76
7.2.2. Engine starting 76
7.2.3. Start engine in cold weather 77
7.3 Operations and controls after starting 77
7.3.1. Engine heating 77
7.3.2. Instrument panel check 78
7.3.3. Safety lock lever check 78
7.3.4. Noise and exhaust check 78
8. MACHINE MOVING RULES 79
8.1 Forward movement 79
8.2 Backwards movement 80
8.3 Changing direction (steering) 81
8.4 Machine stop and park 84
8.5 Swinging 85
8.6 Forbidden movement and forbidden use 86
8.7 Precaution for operating 89
8.8 Work possible using hydraulic excavator 92
8.8.1. Backhoe work 92
8.8.2. Ditching work 93
8.8.3. Loading work 93
8.8.4. Operations in confined spaces 93
8.9 How to escape from mud 94
9. COLD WEATHER OPERATION 96
9.1 Precaution for fuel, lubricants and coolant in low temperature 96
9.1.1. Fuel and lubricants 96
9.1.2. Coolant 96
9.1.3. Battery 97
9.2 Engine starting in cold weather 97
9.3 Precaution at work end in cold weather 97
9.4 Cabin heater 98
10. CHECK AFTER COMPLETION OF WORK 99
11. USING RUBBER SHOES (ONLY FOR MACHINE WITH RUBBER SHOES) 101
11.1 Rubber shoes guarantee 101
11.2 Precautions when using rubber shoes 102
12. TRANSPORTATION 105
12.1 Loading unloading work 105
12.2 Load precaution 107
12.3 Precaution for transportation 107

https://truckmanualshub.com/

13. MACHINE TOWING 109
14. LONG TERM STORAGE 111
14.1 Before storage 111
14.2 During storage 112
14.3 After storage 112
15. STARTING MACHINE WITH JUMP-START CABLES (BATTERY DISCHARGED!) 113
15.1 Precaution for jump-start cable connection and staring 116
15.2 Precaution for jump-start cables disconnecting 117
15.3 Precaution for battery charging while it is onboard 117
16. PHENOMENA THAT ARE NOT FAILURE 119
17. THE BUCKET 121
17.1 Bucket removing 121
17.2 Bucket assembling 123
18. MAINTENANCE 125
18.1 Guides to maintenance 125
18.2 Controls table and maintenance schedule 128
18.3 Maintenance during Breaking-in period 129
18.4 Lubricants (oil and grease), coolant, fuel characteristics 130
18.4.1. Engine oil and hydraulic oil 131
18.4.2. Fuel 131
18.4.3. Coolant 132
18.4.4. Grease 132
18.4.5. Oil and fuel storage 132
18.5 Filter 133
18.6 Electrical wiring 134
18.7 Maintenance tools and torque list 135
18.7.1. Needed tools for maintenance 135
18.7.2. Standard torque list 136
19. PERIODICAL REPLACEMENT OF SAFETY CRITICAL PARTS 137
19.1 Daily checking or every 10 hours 137
19.1.1. General check 137
19.1.2. Check, Clean and Replace air filter 138
19.1.3. Check coolant level and pipe preservation 139
19.1.4. Check bolt torque of the sprocket 139
19.1.5. Checking and adjusting rubber shoes tension (for machine with rubber shoes only) 139
19.1.6. Checking and adjusting steel track tension (for machine with steel track only) 146
19.2 Maintenance every 50 hours 149
19.2.1. Lubricating 149
19.2.2. Check electrolyte level 150
19.3 Maintenance every 100 hours 151

19.3.1. Cleaning fuel filter and water separator 151
19.3.2. Fan belt adjusting 152
19.4 Maintenance every 200 hours 153
19.4.1. Replacing oil engine and oil filter cartridge 153
19.4.2. Check and refill oil in the sprocket 155
19.4.3. Oil level in swing gear 156
19.4.4. Cleaning water separator filter 156
19.5 Maintenance every 400 hours 158
19.5.1. Check intake pressure 158
19.5.2. Fuel filter cartridge replacement 159
19.5.3. Check and clean radiator fins 159
19.5.4. Replacing the hydraulic oil return filter 160
19.5.5. Replacing pilot filter cartridge 161
19.5.6. Engine bolts supports tightening 162
19.5.7. Replacing the air filter cartridge 162
19.5.8. Sprocket bolts fastening 162
19.5.9. Oil level in the front idler 163
19.6 Maintenance every 800 hours 164
19.6.1. Cleaning and replacing cooling system 164
19.6.2. Replacing the hydraulic oil and cleaning the suction strainer 166
19.6.3. Replacing the travel motor gear oil 168
19.6.4. Replacing swing system oil 168
19.6.5. Check the engine valves clearance, adjusting them 168
20. HYDRAULIC SCHEME 169
21. ELECTRICAL SCHEME 171
22. TROUBLE SHOOTING 173
23. OPTIONAL ACCESSORIES 177
23.1 Safety precaution 177
24. NOTICE 179
25. ANALYTIC INDEX 181

https://truckmanualshub.com/

1. INTRODUCTION AND GENERAL INFORMATION

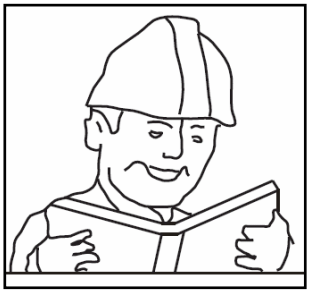

This manual provide regulations and orientations which will help you to use correctly your machine without any risk.
Keep the manual easy to read to allow all operators to read it periodically.
If the manual will miss or become unreadable, please ask for a copy to **YUCHAI ENGINEERING MACHINERY CO. LTD.**

If you sell the machine, deliver the manual to new owner.

Machine project improvement could cause changing on the machine without manual updating. Check from **YUCHAI ENGINEERING MACHINERY CO. LTD.** For the latest information about your machine o for any question about information inside this manual.

GENERAL INFORMATION

- **the improperly use and maintenance of the machine may cause hazards e could cause serious injury or death.**
- **Machine's operators and maintainers have to read this manual from the first to the last page, before to start any work.**
- **Some action relative the machine's functioning and maintenance may cause serious injures if they aren't carried out likewise is described in this manual.**
- **Procedure and precaution described in this manual are applicable only at the expected machine use. If you use the machine for any different scope here mentioned but doesn't specifically forbidden, you have to be sure that it is safe for you and all others.**
- **Never you can use the machine for any scope specifically forbidden in this manual.**

https://truckmanualshub.com/

Most of the accident and injuries that happens in the factories, agricultural firms, homes or on the roads are due to the lack of attention to any simple but basic rule of caution and safety. For this reason, most of them could be avoided: just forecast all predictable cause and act with the necessary caution.
With any kind of machine, anyhow projected and assembled, it is impossible to exclude an accident without negative interference on some essential characteristics (accessibility, efficient working, etc.).
Pay attention to all warnings written on the followed chapters and to all “PRECAUTION AND SAFETY MEASURES”.
An operator who pay attention at his work is the best guarantee against injuries.
The most representative of the safety rule is:
Never clean, lubricate or make service if the machine or part of it are working.

To avoid injuries read, comprehend and forward all precautions and warnings written in this manual and on board.
To identify the safety message, they will be highlight with the follows symbols.

DANGER

This picture is used where a residual risk with concrete possibility of permanent injury or death will remain. The messages describe safety cautions which have to be taken to avoid residual risk. The fail of comply with all is written here can, also, damage the machine.

ATTENTION

This picture is used where a residual risk with concrete possibility of moderate injury will remain.
This picture could be used also where the only residual risk is to damage the machine.

The **YUCHAI ENGINEERING MACHINERY CO. LTD.** cannot predict each circumstance which may cause a residual risk during work and/or maintenance, therefore the safety messages written in the manual can not include all safety precaution.
If you decide to make any action which is not specifically allowed o forbidden, you must evaluate every consequence to the action in order to avoid damages to people, machine or object around.
If the machine is used for a work which is not listed in this manual, the YUCHAI ENGINEERING MACHINERY CO. LTD. will not assume any responsibility about damage or injury to people and/or object.. All safety aspect in those action are under user responsibility.
All forbidden action in this manual <u>never have to be made</u> in any circumstance.

SPECIFIC USE:
This hydraulic excavator made by **YUCHAI ENGINEERING MACHINERY CO. LTD.** is drawing and realized to be used for followed jobs:
- Excavator jobs (ditches and/or canals, foundation excavation, etc.);
- Loading jobs.

The YUCHAI ENGINEERING MACHINERY CO. LTD. deny liability for possible damage to people and/or object due to different use from those above mentioned or anyway do not specifically mentioned in this manual.

MACHINE RUNNING IN PERIOD:
Your machine has been regulated and checked by **YUCHAI ENGINEERING MACHINERY CO. LTD.** Anyway, start with hard jobs and critical condition may have a negative influence on the machine's performance and reduce the lifetime.
Be sure to respect the running in period for the first 100 hours (like is showed on the hours meter).

During the running in period:
- do run the engine at the low idling speed for 5 minutes before start work;
- avoid jobs with heavy load or high speed;
- avoid starts, braking, manoeuvres and unexpected stop except for emergency.

1.1 MACHINE SERIAL NUMBER

Fill the serial number of your machine into the followed form. If you need assistance please contact the **YUCHAI ENGINEERING MACHINERY CO. LTD. service,** then specify model kind and serial number of you machine.

MACHINE KIND AND REGISTRATION NUMBER

KIND/MODEL:

REGISTRATION No.:

The plate where is written the machine registration number is installed on front side.

ENGINE KIND AND REGISTRATION NUMBER

KIND/MODEL:

REGISTRATION No.:

HYDRAULIC MOTORS KIND AND REGISTRATION NUMBER

TRAVELLING ENGINE

MODEL:

REGISTRATION No.:

ROTATING ENGINE

MODEL:

REGISTRATION No.:

1.2 YUCHAI ENGINEERING MACHINERY CO. LTD. DATA

YUCHAI ENGINEERING MACHINERY CO. LTD.

Manufacturing Base:
168 Tianqiao Road, Yulin, Guangxi, 537005 P.R. China

Export Department Office:
36 Cuizhu Road, Guilin, Guangxi, 541002 P.R. China

Tel: 0086-773-5588521 5588522 5588523
Fax: 0086-773-5588530
E-mail: export@yuchai-excavator.com
Web-site: www.yuchai-excavator.com

YUCHAI EUROPE:
Address: V. Del Fonditore, 14 40138 Bologna, Italy
Tel:0039
Fax:0039
E-mail: **europe@yuchai-excavator.com**

2. GENERAL PRECAUTION AND SAFETY MEASURES

FOLLOWS THE SAFETY REGULATIONS

- **ONLY** trained, qualified, and authorized operator can drive the machine and make maintenance.
- Follow all safety regulations, precaution and instruction written in this manual when you use or make service on the machine.
- When you work with a person who assigned to working zone traffic, be sure that he understand all hand signal used.

SAFETY CHARACTERISTICS

- Be sure that all protections and cover will be on their correct position. If the protections or cover are damaged they must be repaired and/or replaced.
- Use correctly all safety system and device installed on the machine, like the lock lever and the seat belt.
- **NEVER** remove any safety system and/or devices.
- Be sure that they will remain **EVER** in good condition.
- Unexpected use of the safety system and/or devices may cause serious injuries or death.

NON ALLOWED MODIFICATION

- Each modify made without **YUCHAI ENGINEERING MACHINERY CO. LTD.** authorization may cause risk.
- **YUCHAI ENGINEERING MACHINERY CO. LTD.** deny liability for possible injures or damage to people or objects due to non allowed modification.

https://truckmanualshub.com/

CLOTHES AND INDIVIDUAL PROTECTION DEVICES

- Avoid swirling clothes, jewels and streaming hair. They could trap themselves on the lever or floating part and cause serious injures. Also do not wear oiled clothes because they are flammable.

  When drive or make service on the machine, wear a tight cap, protective eyeglass, safety shoes, filter mask, and heavy gloves. Wear always safety glasses, hard hat and heavy gloves if your job entails metal flakes or tiny materials, specially when you are hammering a hinge or are cleaning the air filter with compressed air. Also make sure that nobody stand close the machine.

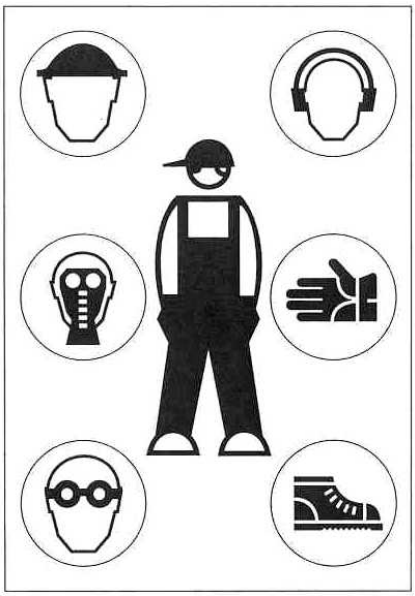

- In order that the machine work in total safety is necessary the full operator's attention. Do not wear headphones for radio or music during work.

INDIVIDUAL PROTECTION DEVICES (IPD)
If you do not follow these safety precautions it may cause severe accident.

SET THE SAFETY LOCK LEVER BEFORE LEAVING THE SEAT

- When you are leaving the operator's seat, set the safety lock lever securely to the lock position. If any controls should be touched accidentally when the safety lock lever has not be locked, the machine will move suddenly and cause severe injury or death.
- When you are leaving the operator's seat, low the bucket on the ground (see paragraph "MACHINE STOP AND PARK") then set the safety lock lever in lock position. Then turn off the engine and lock the cabin door (if your machine has a cabin). Take off the start key and keep it always with you.

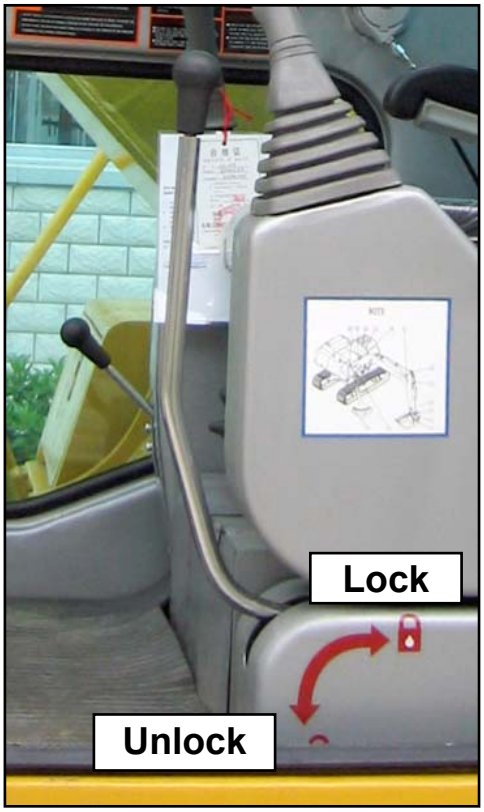

MOUNTING AND DISMOUNTING FROM THE MACHINE

- **NEVER** jump on or off the machine.
- **NEVER** attempt to mount or dismount from a moving machine.
- When mounting or dismounting the cab, always face the access system and maintain the contact with hand holds and steps while getting on or off the machine.
- Never use the safety lock lever or control levers as hand holds.
- Always maintain three contact with hand holds and steps.
- Always clean out oil or mud from hand holds and steps. If they are damaged then repair them, also close every bolt slackened.
- **NEVER** climb on the engine bonnet. It can put you in danger.

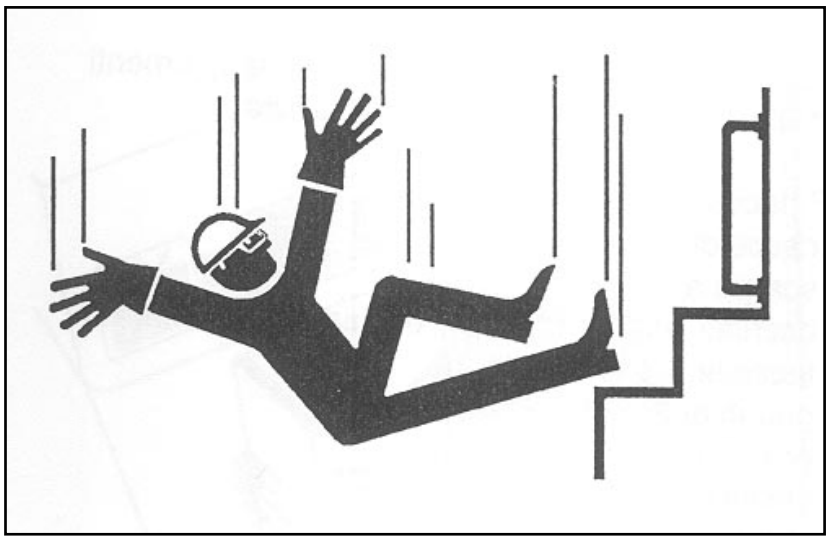

OIL AND FUEL FIRE PREVENTION

- Fuel, oil and antifreeze liquid may burst into flames if become in touch with a flame. Specially, the fuel can be very **DANGEROUS** because it is highly **FLAMMABLE**.
- Keep the flammable liquids off from the free flames.
- Turn off the engine and do not smoke while refuelling.
- Screw down as well the oil and fuel top.
- Fuel and oil refuelling must be done in well aired place.
- Take shelter oil and fuel and keep them out of reach of unauthorized people.

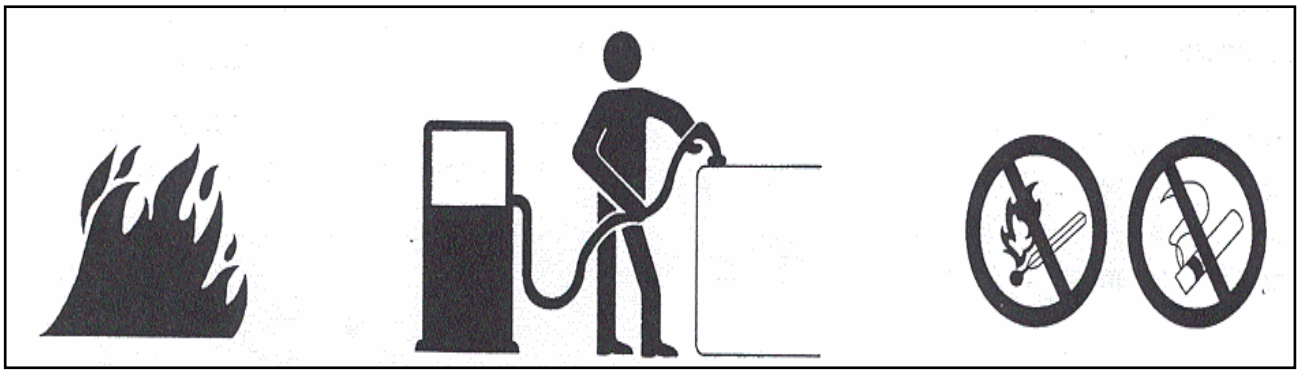

PREVENT ASBESTOS INHALATION HAZARD

Asbestos inhalation may cause lungs cancer.
If asbestos fibres are in your working area, follow these rules:

- **NEVER** use compressed air to clean anything.
- Use water to keep down the dust.
- If possible, work with blow wind from your rear.
- If possible, use a mouth-mask approved.

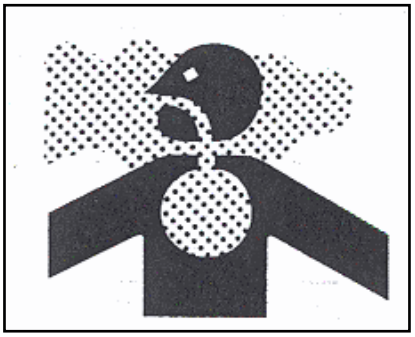

PRECAUTION WITH HIGH TEMPERATURE WORK

- The engine, muffler, radiator, hydraulic lines, sliding parts and many other parts of the machine are hot and under pressure directly after the engine is stopped. Touching these parts will cause burns so wait for the temperature drop before oil, fuel and water screw cap opening.

- To avoid hot water splash out:
  1. turn off the engine;
  2. waiting for the water temperature drop;
  3. slowly open the screw cap to reduce the internal pressure.

- To avoid hot oil splash out:
  1. turn off the engine;
  2. waiting for the oil temperature drop;
  3. slowly open the screw cap to reduce the internal pressure.

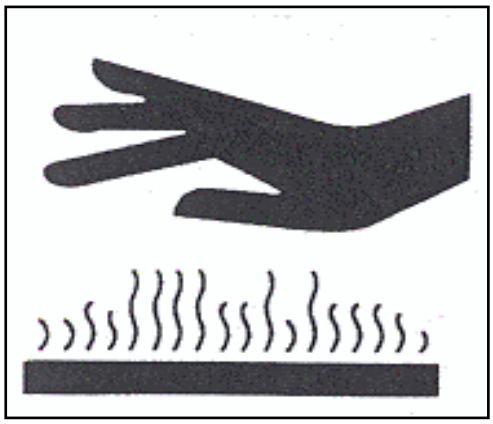

https://truckmanualshub.com/

PREVENT CUTTING AND/OR CRUSHING

- do not put you hands, arms or other body parts between moving parts. I.e. between work equipment and machine body or between cylinder and moving parts or between upper structure and undercarriage or tracks. If the work equipment is moving, the free space around it is changeable it may cause severe injure or death.

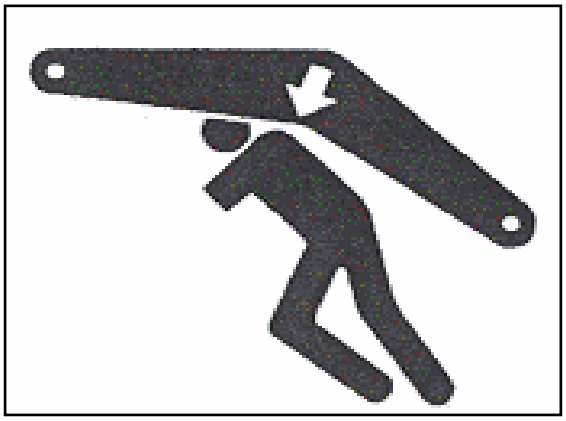

FIRE EXTINGUISHER AND FIRST AID KIT

- Make sure that fire extinguisher is on board and where it is located and make sure you are able to use it.
- Make sure that first aid kit is on board.
- Known how to do in case of fire.
- Make sure to know all phone number to contact emergency assistance and first aid help.

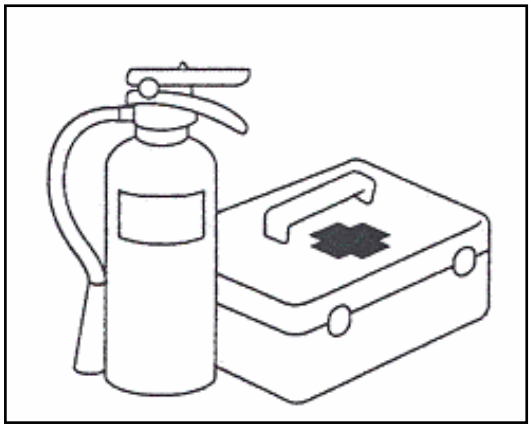

ACCESSORIES PRECAUTION

- When you will use an optional accessory, first read the accessory's operating manual and follow the instruction written in it.
- **NEVER** use accessories listed in this operating manual or do not authorized from **YUCHAI ENGINEERING MACHINERY CO. LTD.**. The non authorized accessories use may cause safety hazards and may have a negative influence on the machine's performance and reduce the lifetime.
- ***Each possible injury, accident or machine bad working due to use of the unauthorized accessory, will not be responsibility of the*** **YUCHAI ENGINEERING MACHINERY CO. LTD*.***

PAY ATTENTION DO NOT CRASH THE CABIN GLASS

If the cabin glass is damaged, it is dangerous use the machine. Always change the broken glass immediately.

3. PRECAUTION AND SAFETY MEASURES DURING WORK

3.1 PRECAUTIONS BEFORE ENGINE START

WORKING AREA SAFETY

- Before turning on the engine check the working area, evaluate if there are abnormal condition which cause hazardous.
- Before turning on the engine check the ground condition in the working area. Choose the best working method.
- Before start work, reduce the ground slope.
- Before start work under water or run through a river, check the depth and the water flow. **NEVER** immerse the machine in water if the depth exceed the allowed level.

- If your work is on the road or near people passing, put a rigid repair to protect people and object also appoint a person to control the working zone.

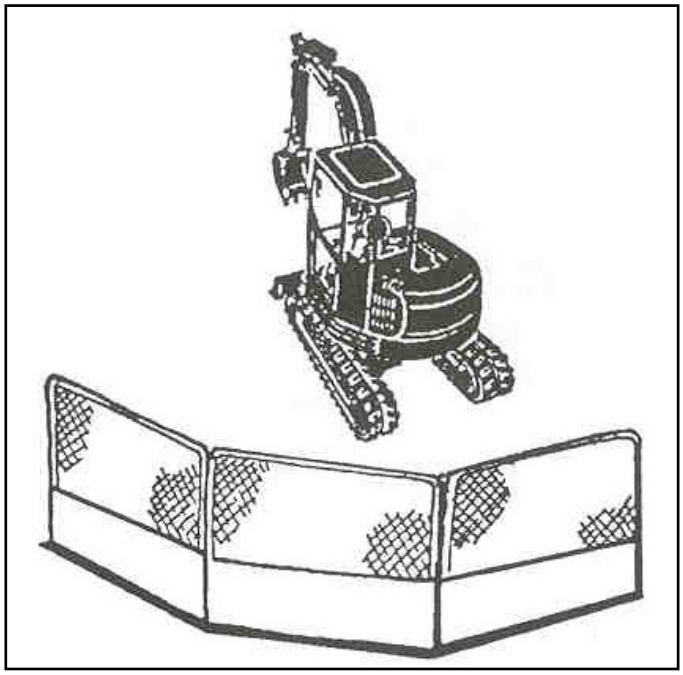

- If you know that water pipe, gas pipe or electrical line were been lay underground you have to contact the owner society to identify correctly the position. Pay attention: do not cut off the pipes.

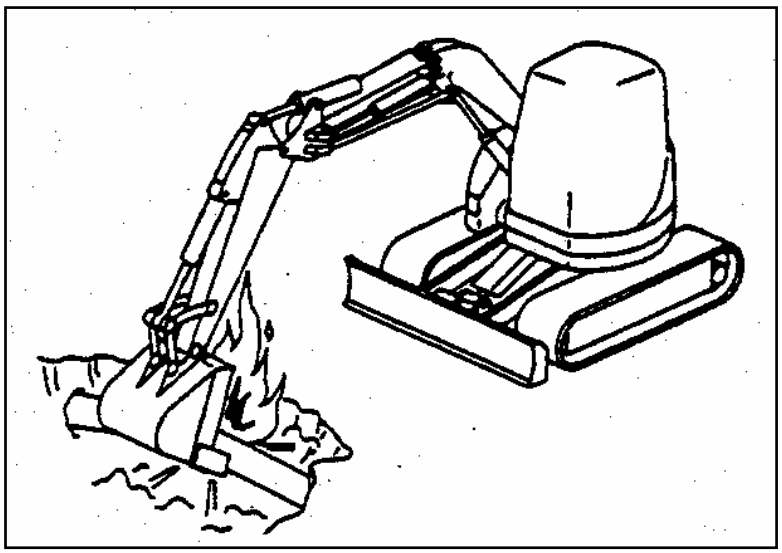

FIRE PREVENTION

- Remove wood splinter, leaves, paper and any flammable materials accumulated into the engine compartment. They may cause fire.
- Check if there are fuel, lubricant oil and/or hydraulic oil leakage. Use a clean sheet to dry oil, fuel excess or other flammable liquids escaped.
- Make sure that there is a fire extinguisher and that it works.

INSIDE THE CABIN

- Do not leave tools or spare parts on the cabin floor. They may damage or break the levers or instrument panel. Put them always into the tool box.
- Keep clean: cabin floor, instrument panel, steps, hands hold. Remove oil, grease and dirt accumulation.

https://truckmanualshub.com/

CLOSED WORKING ZONE VENTILATION

- If it necessary turn on the engine inside a room, provide to adequate ventilation. Exhaust gas can **KILL**.

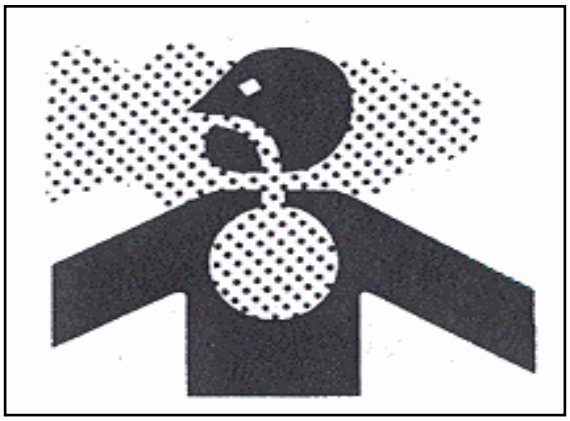

LIGHT AND WINDOWS PRECAUTION

- Clean out the windows and lights. Make sure to see well!
- Check if the headlamp are correctly installed for the job to do. Check if they work properly.

3.2 PRECAUTION WHEN THE MACHINE IS WORKING

WHEN TURN OF THE ENGINE

- before start work, walk around your machine to verify that no people or object are in the working zone.
- **NEVER** start the machine if any plate is put on the instrument panel.
- Play the horn before turn on the engine.
- Turn on and drive your machine from the operator's seat only, and after have fastened your seat belt.

- Do not allow anyone to ride on any part of the machine at any time while travelling.
- Do not allow anyone to be on any part of the machine while operating.

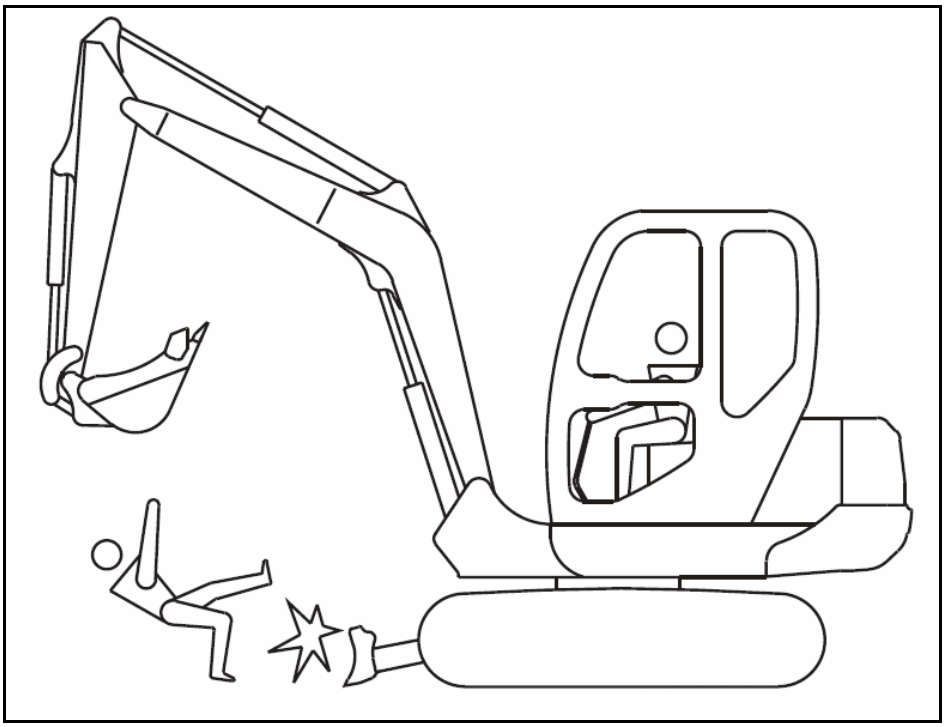

- Before start work, check the seat belt. If any part is damaged or worn, change the seat belt.
- Before start work, sit down on the operator seat and fast the seat belt.
- Stand on the seat with the seat belt fastened all the time, during work, to reduce injury if case of accident.

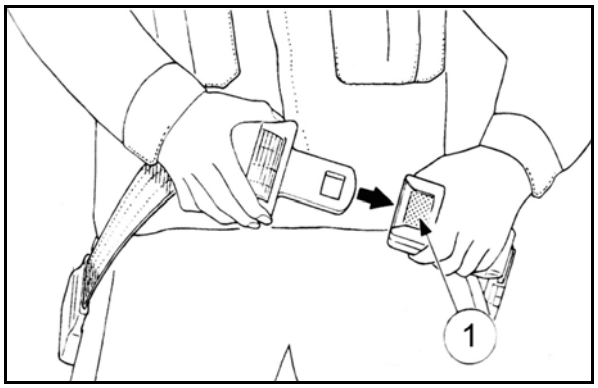

CHECK THE POSITION OF THE TRACKS BEFORE TRAVELLING

- Before operating the travel levers, check to make sure that the dozer blade is to the front of the operator's seat. **BE AWARE** that when the dozer blade is to the rear the travel lavers operate in the opposite direction to when the dozer blade in the front.

BEFORE GO TO THE REVERSE MOTION OR SWING, BE SURE THAT NOBODY IS AROUND THE WORKING ZONE

- In dangerous zone o where there is incomplete view, put always a signal.
- Make sure that nobody is inside the radius swing or rear the machine.
- Before start motion, play the horn to warn people standing or walking around the machine.
- There are blind spots to the rear of the machine, so swing the cab around before backing up to check that the area is safe and clear.

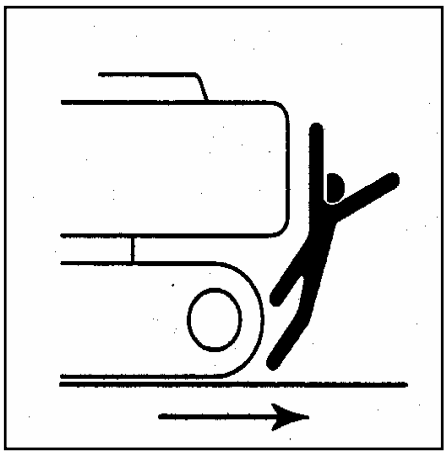

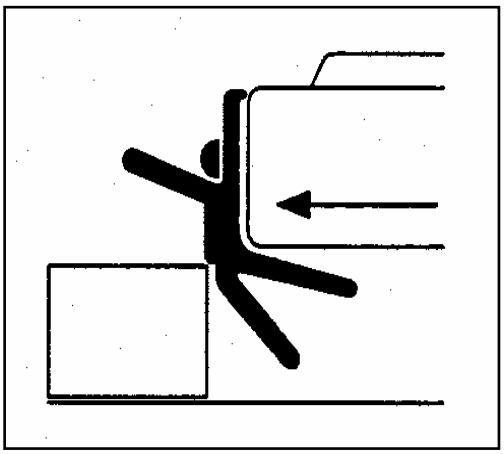

MOTION PRECAUTION

- Travel with the dozer blade folded as shown on the diagram and the bucket raised 40 ÷ 50 cm. from the ground.
- Do not slew (swing) while travelling. If you must operate the hoe attachment while travelling, operate at speeds slow enough so you have complete control at all times.
- On uneven ground, travel at low speed and avoid accelerating, stopping or changing directions abruptly.
- Avoid crossing over obstacles whenever possible. If you must do so, keep the hoe attachment close to the ground and travel slowly. Never cross obstacles if they will seriously tilt the machine (to an angle of 10° or greater).

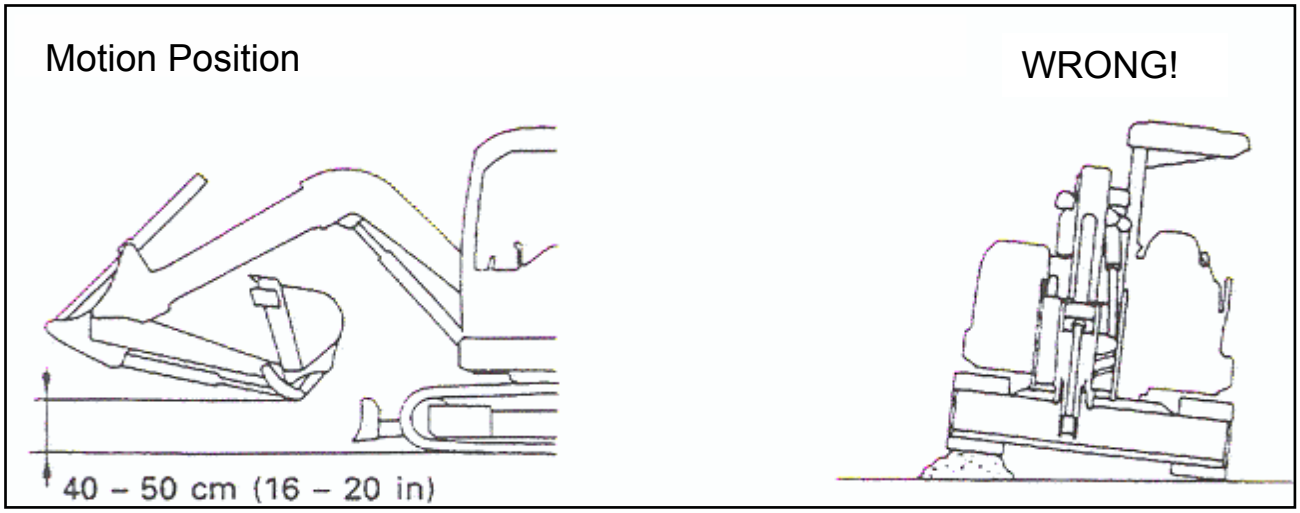

TRAVELLING ON SLOPES

- Motion up and down the hill with severe slope (greater then 30°) **IS FORBIDDEN**. Great slope may cause machine roll over or slide.
- When travelling on slopes or grades, lower the bucket to a height from 20 to 30 cm off the ground. In emergencies, lower the bucket to the ground and stop the machine.
- Do not change directions or cross slopes sideways. First return to a flat surface then redirect the machine.
- On grass, dead leaves, wet metal or frozen surfaces, the machine may slide sideways even on very gentle slopes. Make sure the machine never faces sideways with respect to the slopes.

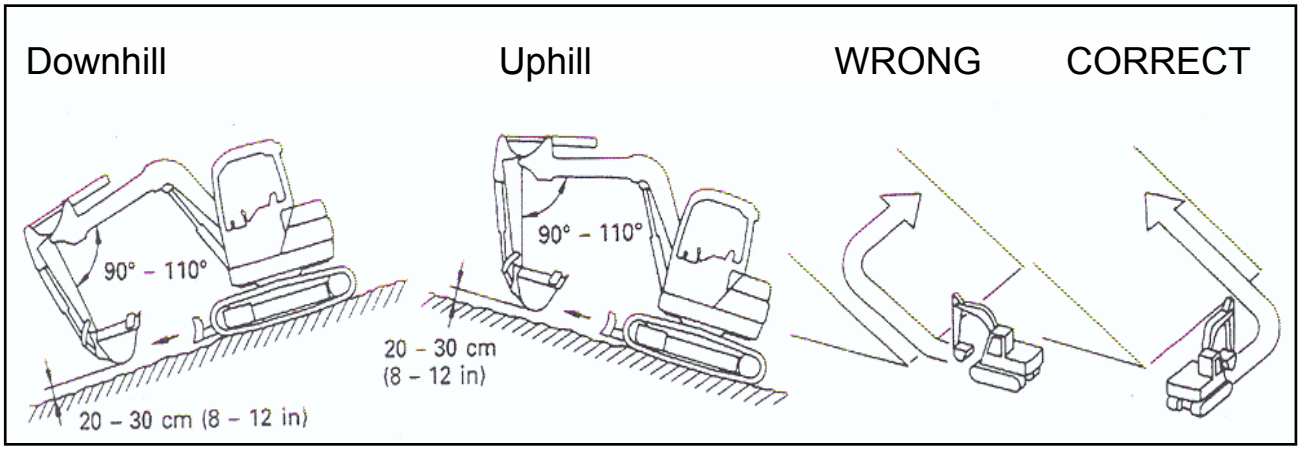

FORBIDDEN OPERATION

- Never undercut a high bank. Be particularly alert for the possibility of a cave-in.
- Do not operate in places where there is a danger of falling rocks.

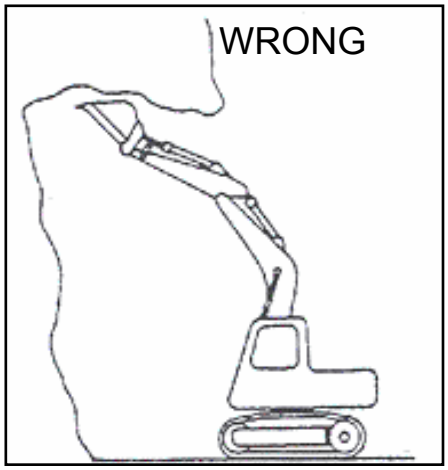

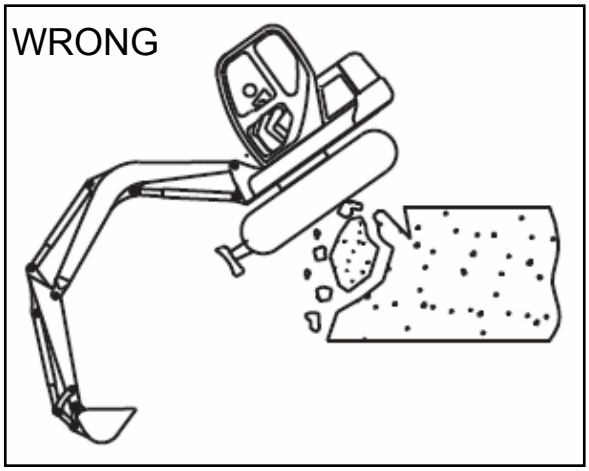

FORBIDDEN OPERATION

- Do not extend or move back the hydraulic cylinders for all them length, keep a small distance.
- Do not undercut when the trucks are not leant on the ground, otherwise you may damage the machine.
- Keep machine well back from the edge of an excavation. Avoid undercutting the machine.

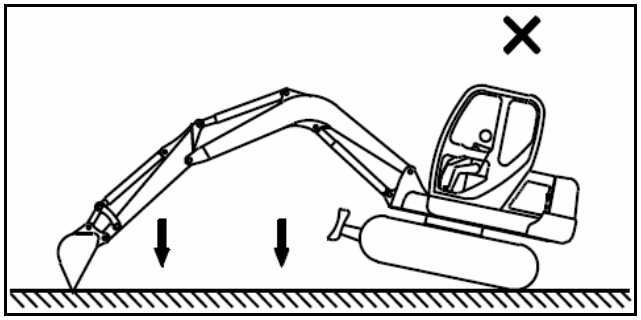

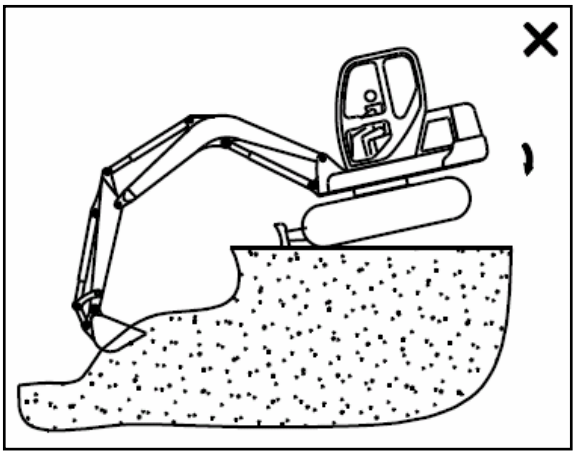

IS FORBIDDEN LIFTING LOADS

- Is forbidden to use the excavator lake a load's lifter.

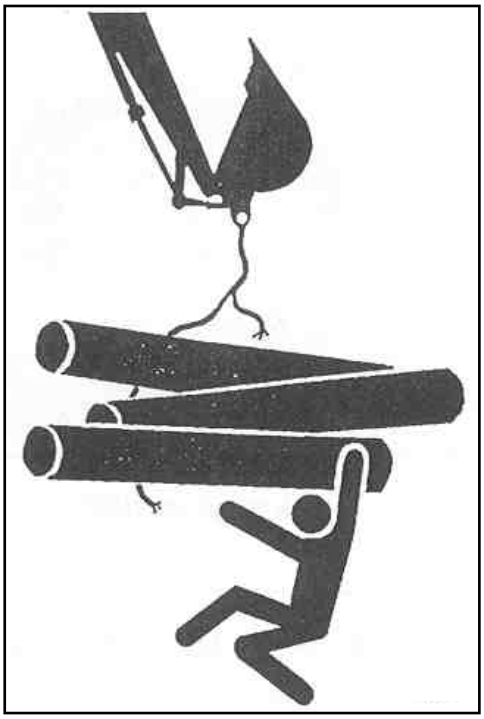

DO NOT PASS WITH THE BUCKET OVER PEOPLE

- Do not rise, move or swing the bucket over people or trucks cab. Materials which will drop off may cause severe injure to people or damage to the machine.

DO NOT APPROACH ELECTRICAL POWER LINE

- Touching electrical power line may will cause short circuit, so keep a safe distance between the machine and electrical line power.
- The follow rules may safe your life:
  1. Wear safety shoes with rubber sole;
  2. Put a signaller on the machine to alert you if the machine approach the electrical line power.
- If the machine should come in contact with a live electrical source, do not leave the operator's seat.
- Do not allow anyone to approach or touch the machine.
- Before start working check from the supply society the electrical line voltage.

Voltage (kV)	Safe clearance m
6,6	3
33	4
66	5
154	8
275	10

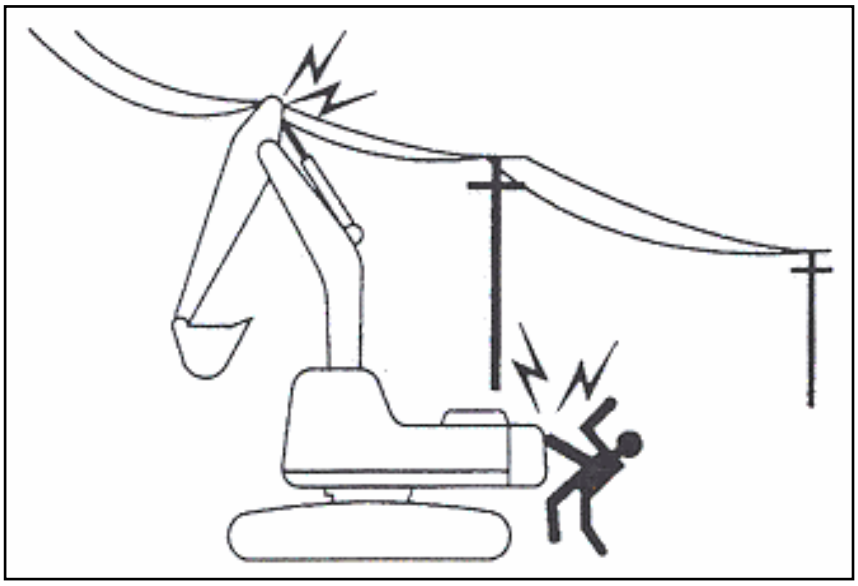

DO NOT HIT THE BOOM OR ARM

- When you work under bridge, in tunnels, near power lines or indoor be careful not to hit the boom or arm against overhead objects.

ENSURE GOOD VIEW

- When you work in dark place install work lamp and headlamp and regulate the working area lighting.
- In case of poor illumination, like it is foggy, cloudy, snowing or raining you must stop operating and waiting for weather clear up.

OPERATE ON SNOW OR ICE WITH EXTRA CARE

- When travelling on snow or frozen surface, keep the machine travel speed down and avoid accelerating, stopping or changing directions abruptly.
- Remember that the road shoulder, fences, etc. may be buried in the snow and not visible.

OPERATE ON RAMBLING SURFACE

- Keep the machine well back from crags, projections, depth ditch, etc. if the edge fall down the machine can fall itself and roll down it may cause severe injure or death. Remember that the ground is weak after rain or explosions.
- The ground near the rambling edge may collapse under the machine weight or operating vibrations.

OPERATE ON SLOPES

- When operate on slope surface, there is a risk of machine lose stability and tip over. Always pay attention when operate on slopes.
- Avoid swinging the loaded bucket in a downhill direction. This will reduce the machine stability (see follow design).
- If it is possible level off the working zone (see follow design).

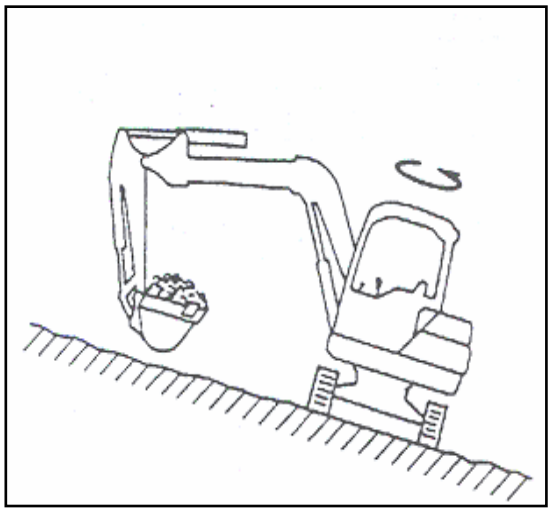

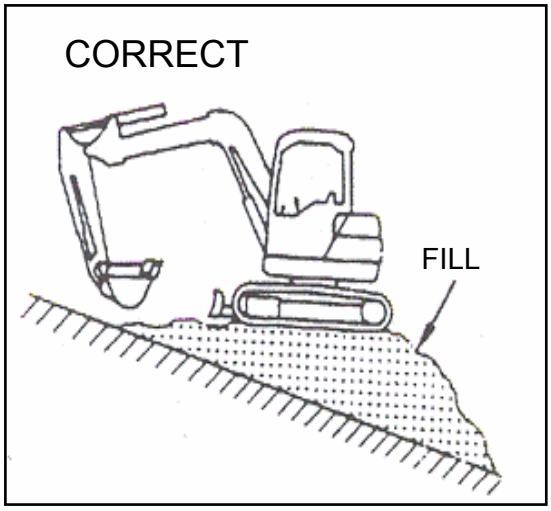

MACHINE PARK

- If possible, park the machine on firm, level ground, otherwise block the crawler, thrust the bucket in the ground.
- When parking on streets, use barriers, caution signs, lights, etc. so that the machine can easily be seen even at night to avoid collision with other vehicles.
- Before leave the machine lower the bucket and dozer blade to the ground, place the safety lock lever in the lock position, stop the engine and remove the key, lock the cab and covers.

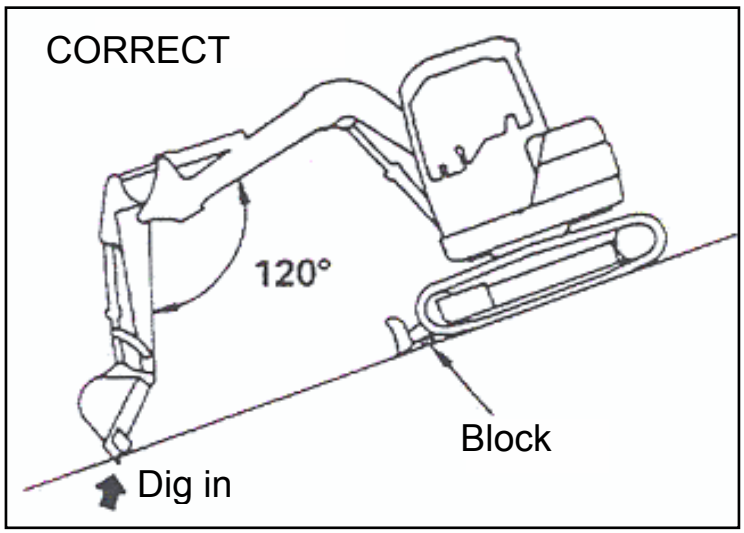

POSSIBILITY OF OBJECT FALLING DOWN

CRUSHING RISK

Is forbidden use the machine in zones where is a concrete risk of object falling down.

- **If is not possible avoid place with falling down object YUCHAI ENGINEERING MACHINERY CO. LTD. will reject any responsibility for operators injure or machine damage.**
- **So the owner will provide for suitable structure for operator' safety.**

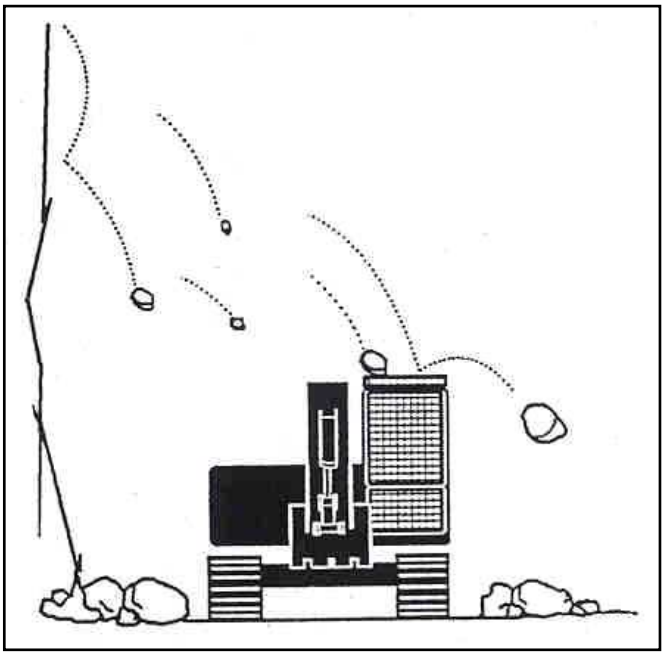

3.3 TRANSPORT PRECAUTION

LOAD AND UNLOAD

- Load and unload the machine into trucks may cause injure. Due to this you **ALWAYS MUST PAY ATTENTION**.
- During load or unload operation, put the engine at low idle then operate slowly with travelling levers.
- Load and/or unload the machine always on firm, level surface. Keep clearance from road edge.
- **ALWAYS** lock the trucks' tires with wood stoppers and put some strong piece of wood under the ramps (see the follow design).
- **ALWAYS** use loading ramps of adequate strength and size. Maintain the slope of loading ramps within 15°.
- Be sure that the ramps are been secured on the truck's bed.
- Keep the truck bed and ramps clean of oil, clay, ice, snow and other materials which can become slippery.
- **NEVER** correct you travelling on the ramps: the machine can tip over. If it necessary come back and restart the manoeuvre.
- Do not move cabin or arm on the trailer it may cause lose of stability.
- After machine load lock the crawler then fasten the machine with suitable belt.

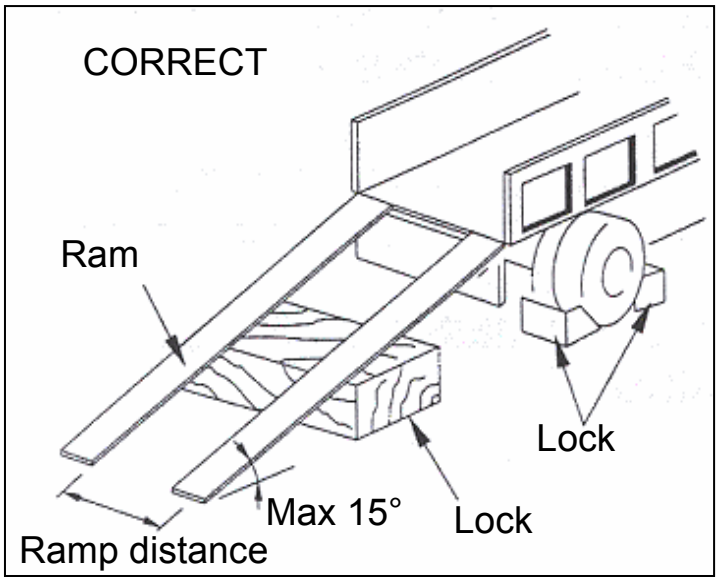

SENDING

- When send the machine on a trailer, you must know the Country legislation about the weight, width and length of the load. Obey to road code into force.
- When you choose the journey take in mind all machine dimension (weight, width and length).

3.4 PRECAUTION WHEN OPERATE WITH BATTERY

BATTERY RISK PREVENTION

- Batteries contain sulphuric acid which will damage eyes or skin on contact, and lungs on inhalation.
  - ✓ If acid contact eyes, flush immediately with clean water and get prompt medical attention.
  - ✓ If acid contact skin or clothes, wash off immediately with clean water and get prompt medical attention.
  - ✓ If acid is accidentally swallowed, drink large quantity of water or milk and call emergency first aid or anti poisoning unit immediately.
- Wear safety glass and gloves when work with batteries.
- Batteries generate flammable and **explosive** gasses (Hydrogen). Keep arcs, sparks, flames and lighting away.
- Stop engine and shut off electrical equipment while inspecting or handling batteries.
- Do not short circuit the battery posts with metal item.
- Loose battery's terminal may result in sparks. Be sure to fasten terminals tightly.
- Always unfasten the negative (-) battery cable first when disconnecting the battery. Always connect the negative (-) battery cable last when fastening the battery. Be sure which is negative cable (-) usually black and which is positive (+) cable usually red.
- Make sure the vent caps are tightened securely.

STARTING WITH ASSISTANCE CABLES

- When starting the machine with assistance cables wear **ALWAYS** safety glass.
- When use assistance cables connected to another vehicle avoid contact with both machines.
- When connect two batteries with assistance cables first connect the positive ones (+). When disconnect the batteries first remove the negative cable (–).
- If positive cable (+) and frame become in contact sparks will be generated. It is dangerous so pay attention in your work.
- When you two batteries to help starting make sure to connect the positive cable from one battery to the positive cable from the other ones.
- When connect the negative cable to the machine's frame make sure that it is the most far as it possible to the battery.

3.5 PULLING PRECAUTION

WHEN PULL THE MACHINE CONNECT THE CABLE ON THE FRAME

- If your machine will be pulled use **ALWAYS** a steel rope or cable with enough pull capability.
- **NEVER** pull a non-working machine on a slope.
- Do not use a steel rope twisted or worn.
- Do not ride on the rope or cable.
- When connect a truck and the machine do not allow nobody to cross or stay between two vehicle.
- Set the truck, the ropes and the machine in same line.
- Put a piece of wood between the ropes and the contact point to protect the machine from wearing o damaging.

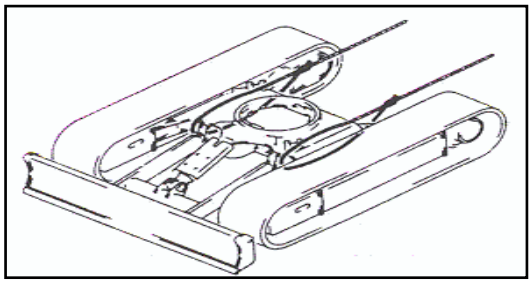

4. MAINTENANCE PRECAUTIONS

4.1 PRECAUTIONS BEFORE STARING MAINTENANCE

ATTENTION

- Before make any maintenance operation, regulation or reparation on machine with accessories hydraulically or mechanically driven, make sure that the accessory is lay on the ground. If it is necessary work under the accessory keep it lifted with auxiliary mechanical device different from machine commands.
- Be sure to block the machine crawls.
- **NEVER** work under the machine if you are not sure about how it is lifted.

WARNING PLATE

- If other people will start the machine while you are make the maintenance or are lubricating some part, you may suffer severe injure or die.
- Put always the **WARNING PLATE** on a command lever, inside the cab, to inform other people that you are working on the machine.
- These plates are available from **YUCHAI ENGINEERING MACHINERY CO. LTD.**

SUITABLE TOOLS

- Use only tools suitable for the job. To use damage or weakened tools or do not suitable may injure yourself.

PERIODICAL SAFETY PART SUBSTITUTION

- Replace periodically the follow part, which are related with fire hazard:
  1. Fuel pipeline: fuel sleeve (muff), tank cap.
  2. hydraulic pipeline: pump sleeve, pump derivations sleeves (from pump and back pump).
- Periodically replace these part with new ones, even they do not seem damaged, their physical characteristics go down with age.
- If you find out some defects replace or repair it, even they are not out of age.

STOP ENGINE BEFORE MAKE INSPECTION AND MAINTENANCE

- Always stop the machine on a solid and level ground, then stop the engine before make inspections and maintenance.
- If it is necessary that the engine runs during maintenance, i.e. radiator cleaning, set the safety lock lever in the lock position then take help from another operator. Operator who make maintenance must pay attention to avoid to be trapped between moving parts.

PRECAUTION WHEN REFILL OIL AND FUEL

- Keep clearance from sparks and flames when refuelling or refill oil.
- Oil or fuel leakage may slide you, so dry them with a cloth duster.
- Make sure to fasten tightly both tank cap and oil tank cap.
- **NEVER** use fuel to clean any part.
- Refill oil and fuel only in well aired place.

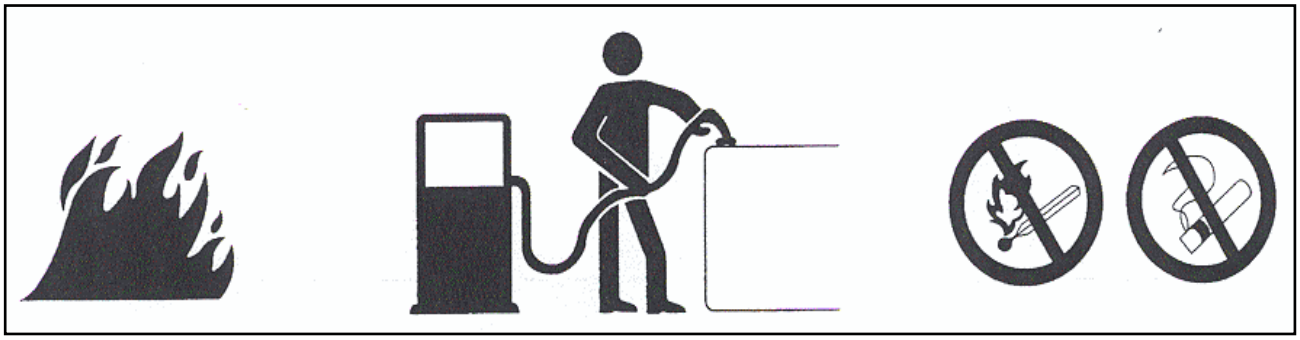

RADIATOR WATER LEVEL

- If it necessary add water inside the radiator. Before you open the cap wait for engine and water cooling.
- Unfasten slowly the cap to reduce the pressure inside the radiator.

LIGHTING TO USE

- When check fuel, oil, cooling liquid or battery acid always use ant explosive fixture and lights. These substances may explode or catch fire.

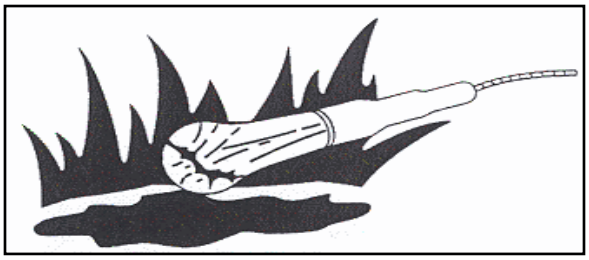

DO NOT STAY ON MOTOR COVER

- **NEVER** climb on the motor cover. You may slide or roll off.

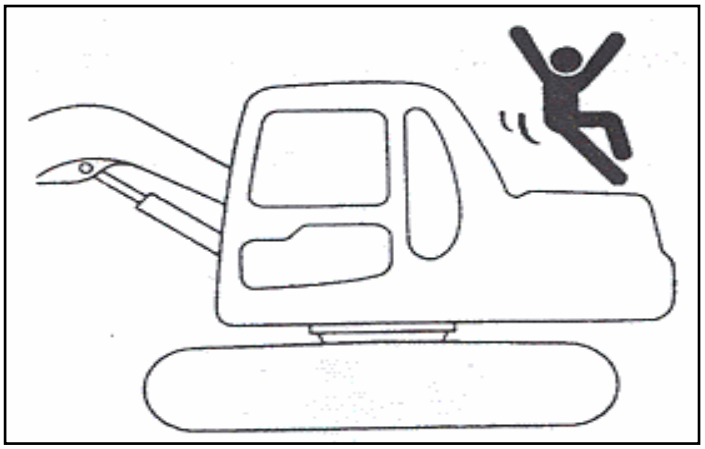

4.2 PRECAUTION DURING MAINTENANCE

OPERATORS

- Only authorized operators can make service on the machine. Particular attention must be used in welding or using a sledgehammer.

ACCESSORIES

- All parts you will remove from your machine must be put in a safe place to avoid to through them away or miss them. Also if they roll down may cause injuries to you or other people.

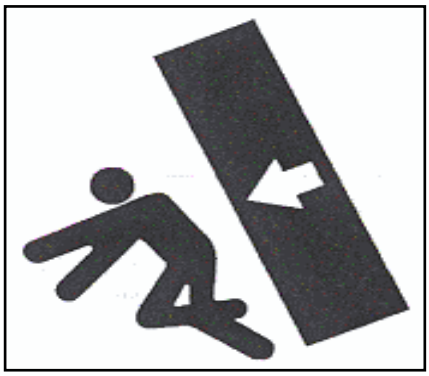

KEEP THE MACHINE CLEAN

- Oil or grease, tools and small parts scattered every where could stumble across them. Keep your machine clean and tidy.
- Cover electrical parts when washing the machine, water on electrical parts could cause short circuit or malfunctioning. Do not use water or steam to wash battery, sensors, connectors, or the operator' seat area.

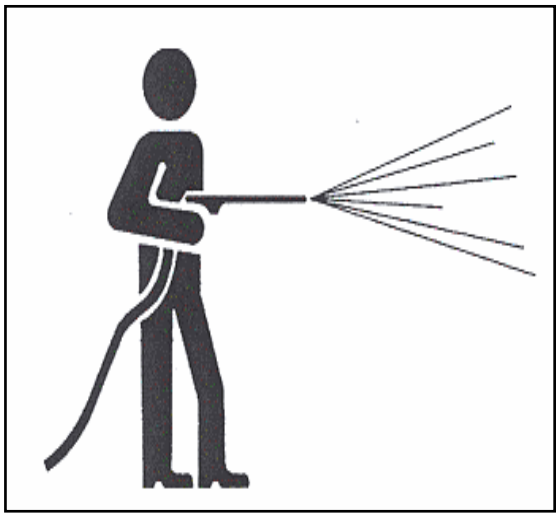

PRECAUTION WITH BATTERY

- When you have to repair some electrical part or have to make welding, disconnect the battery's negative cable (-) to stop current circulation.

MUFF UNDER HIGH PRESSURE HANDLING

- Do not bend and/or hit, with hard piece, muff under high pressure.
- Do not use any pipe, tube or muff bent or damaged. They may explode!
- Always replace every fuel or oil muff if it is damage and be sure to fast it tightly: fuel or oil leakage may cause fire.

PRECAUTION WITH OIL UNDER HIGH PRESSURE

- Do no forget that pipeline in arms and working accessories are under pressure.
- Realise all pressure before working on the hydraulic system.
- Hydraulic fluid under pressure can penetrate skin and eyes and cause injury, blindness or death. Use safety glass and heavy gloves.
- Fluid escaping from a small hole can be almost invisible so use a piece of paper to find leaks.
- If you will be hit from high pressure fluid call immediately a doctor.

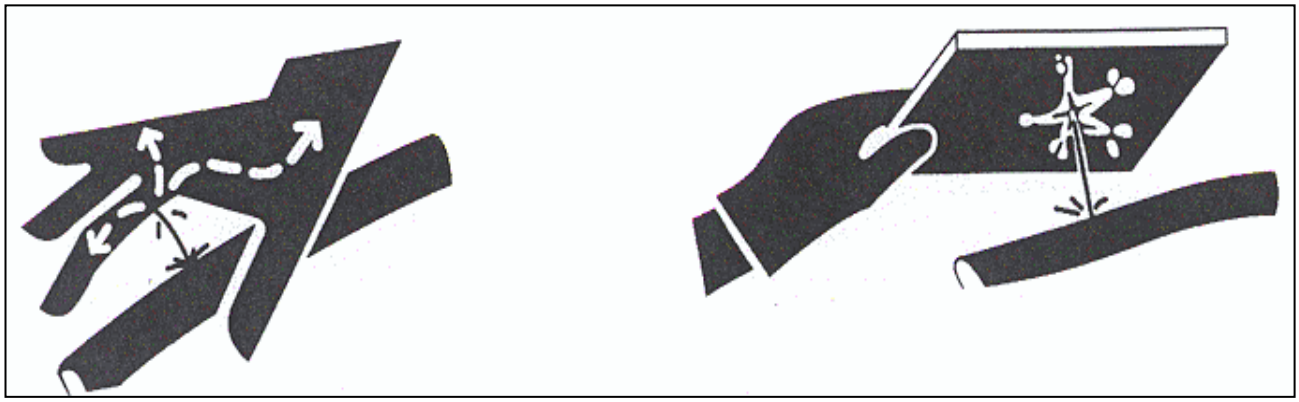

PRECAUTION WITH HOT OR PRESSURIZED COMPONENTS

- The engine, muffler, radiators, hydraulic lines, sliding parts and many other parts of the machine are hot directly after the engine is stopped. Touching these parts will cause burns. So after stopping the engine allow the machine to cool down before performing inspection and maintenance.

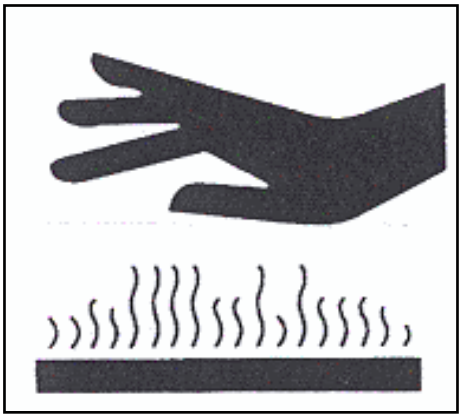

PRECAUTION WHEN USE PRESSURIZED GREASE TO SET CRAWLS TENSION

- In the pipeline of the crawls tension regulation, grease is pumped at high pressure. If the tension is adjusted without following the correct procedure, the grease discharge valve may fly off, resulting in injury.
- Loosen the grease discharge valve slowly. Do not unfasten it more than one full turn.
- Do not put your face, arms, legs or body in front of the grease discharge valve.

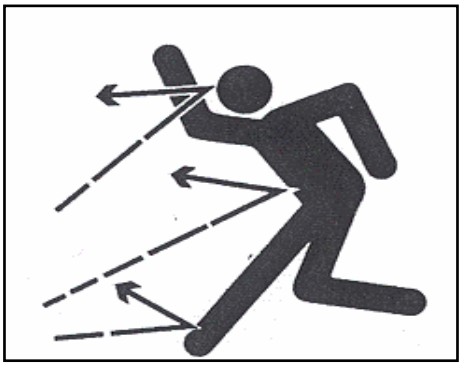

FAN AND “V” BELT

- Keep clear from moving and rotating parts, pay attention do not trap anything between them.
- Hand, arms, skin and clothes may be damaged by blade fan or fan belt so never touch them if they are moving.

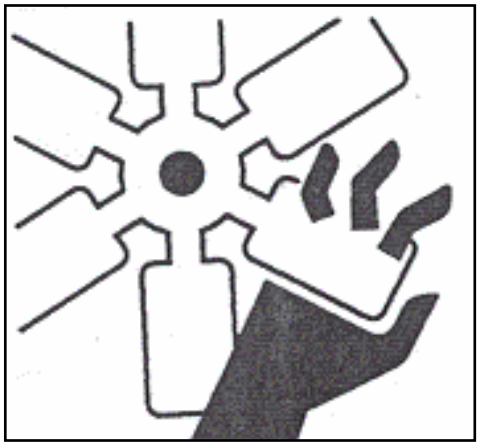

WASTE MATERIALS

- **NEVER** through away lubricant or hydraulic waste oil into seas, rivers, lakes and drain.
- **NEVER** drip waste oil in the ground always use a box to collect the oil.
- Follow law and normative to dispose of dangerous materials like waste oil, fuel, cooling liquid, solvent, filters, batteries, etc.

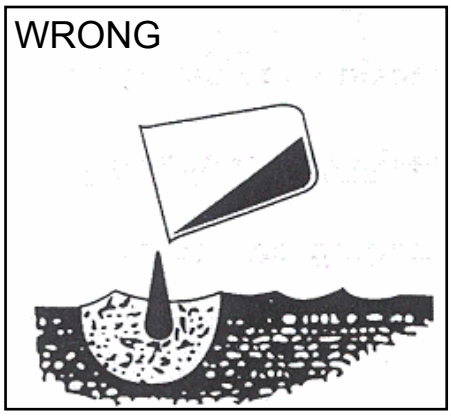

5. MACHINE DESCRIPTION

5.1 EXCAVATOR MAIN PARTS DESCRIPTION

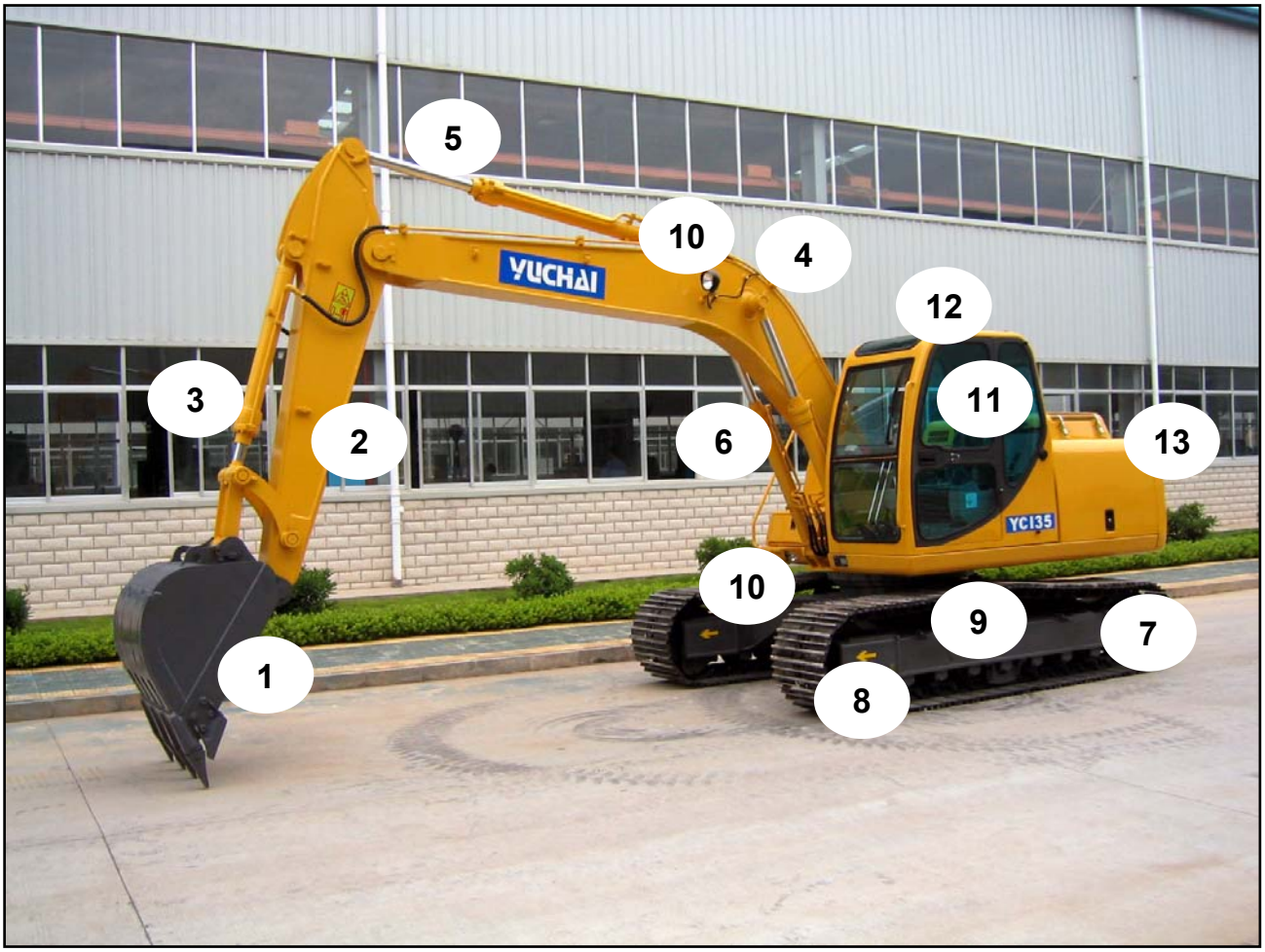

No	ITEM	No	ITEM
1	Bucket	8	Idler
2	Arm	9	Rubber crawler
3	Bucket cylinder	10	Work light
4	Boom	11	Operator seat
5	Arm cylinder	12	Canopy
6	Boom cylinder	13	Engine hood
7	Sprocket		

5.2 DATA SHEET

Model	YC 135
Machine weight (kg)	13300
Bucket capacity (m^3)	0.52
Maximum digging force (bucket) (kN)	80.4
Maximum digging force (arm) (kN)	69.6
Maximum slewing speed (rpm)	11
Maximum travelling speed (km/h)	4.6
Maximum pulling force (kN)	63
Grade ability (degree)	30
Pressure on ground (kPa)	38
Pump flow rate (l/min)	2 x 130
Working pressure (MPa)	31.9
Battery: voltage (V) / Current (Ah)	24 / 2 x 120
Noise emission on operator seat (dB)	83.1

Engine

Type	Diesel, 4 STROKES liquid coolant
Kind/Model	CUMMINS
Power (kW) / rpm	82 / 2200

5.2.1. Transport blocked

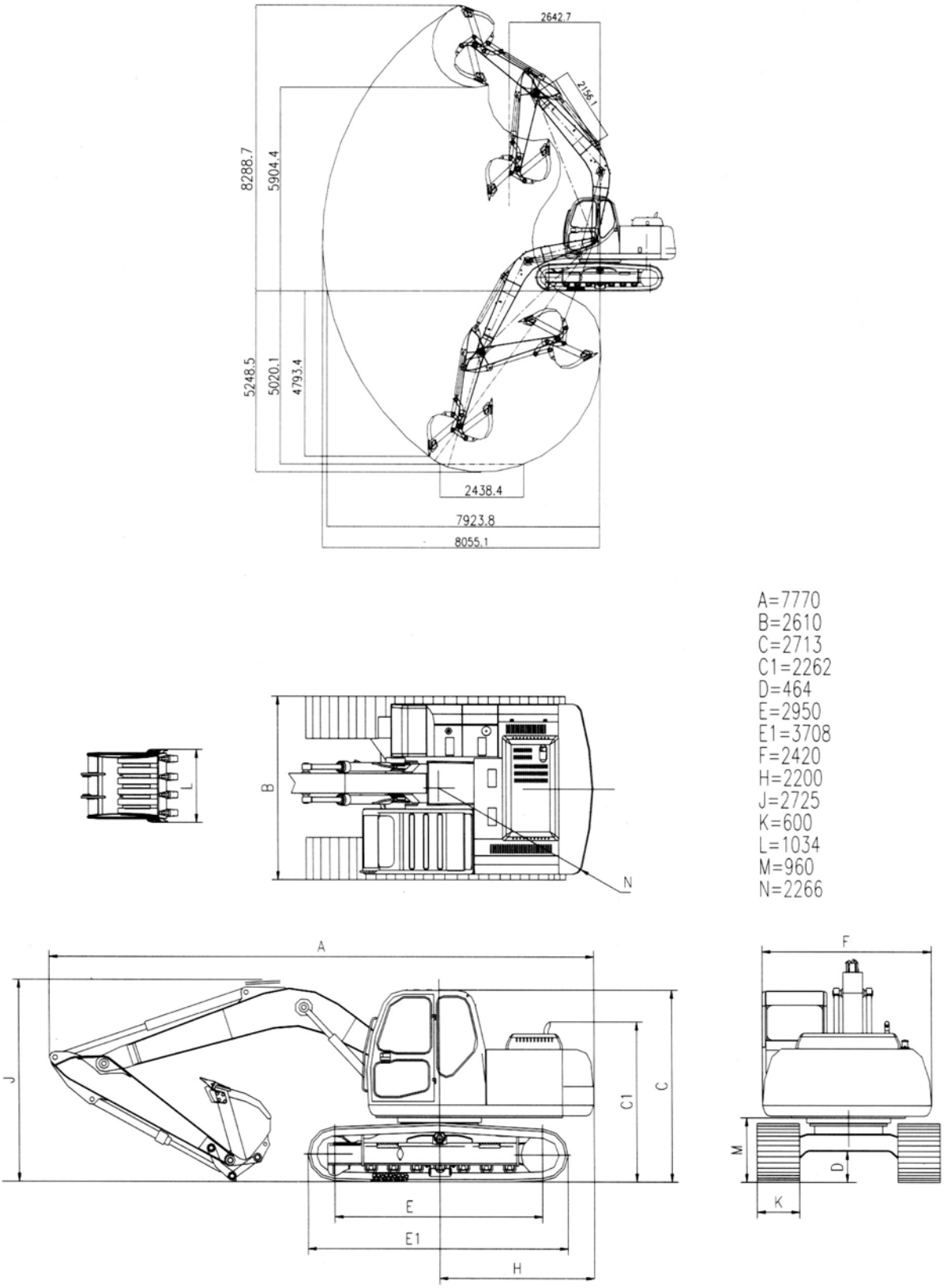

All dimensions are in mm, they may change without notice.

5.3 WARNING PLATES

Hit people danger during slewing

Make sure that people standing around working zone, keep enough clearance from the boom range, before starting work. Play the horn when start.

Run over people danger during reverse travelling

Make sure do not run over people standing in the working zone, during reverse movement. Play the horn before moving.

Hit people danger with bucket

Make sure that people around working zone, keep clearance from the bucked range, before moving it or other accessories. Play the horn before moving.

Fire extinguisher position

Inform you where is positioned the fire extinguisher.

Emergency exit

Inform you where you can escape in case of emergency. Usually you have to crash the window to run out.

Noise emission plate

Inform you about the acoustic power emitted L_{wA} from your machine during functioning. Noise is evaluate in conformity with the Directive 2000/14 CE.

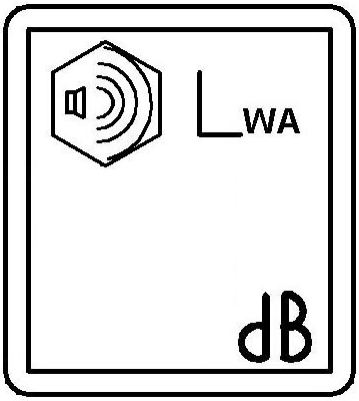

5.4 IDENTIFICATION PLATE

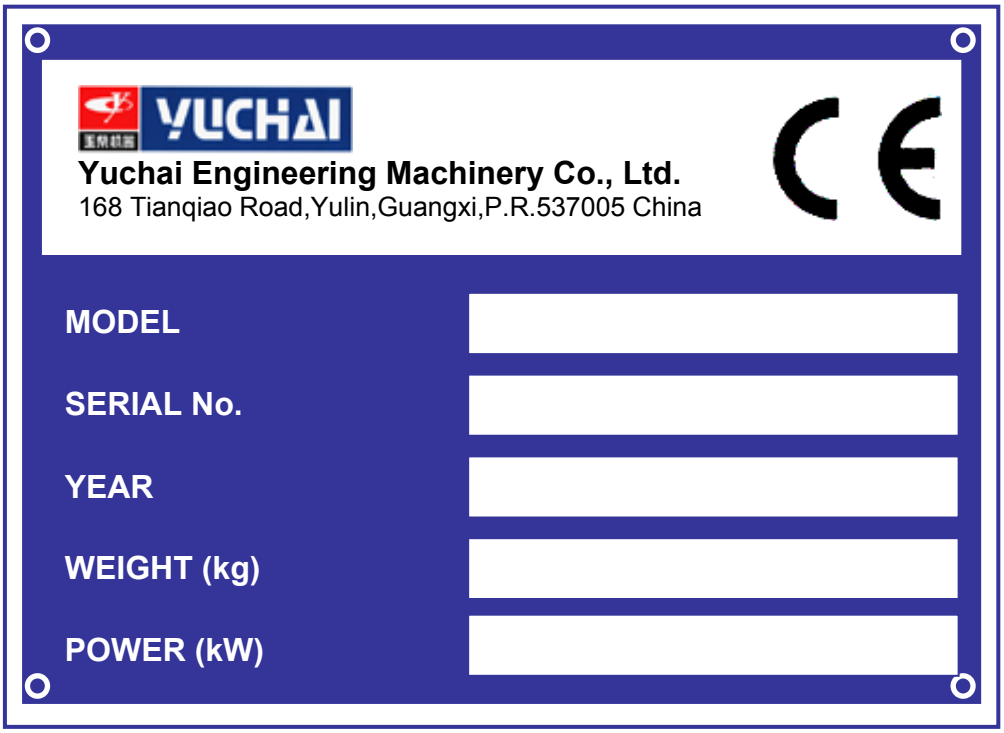

6. INSTRUMENT AND COMMAND DESCRIPTION

6.1 OPERATORS SEAT DESCRIPTION

No	ITEM
1	Throttle lever
2	Starter key
3	Right operating lever
4	Travel speed levers
5	Left operating lever
6	Safety lock lever
7	Door unlock lever
8	Slewing lock lever
9	Accessories pedal

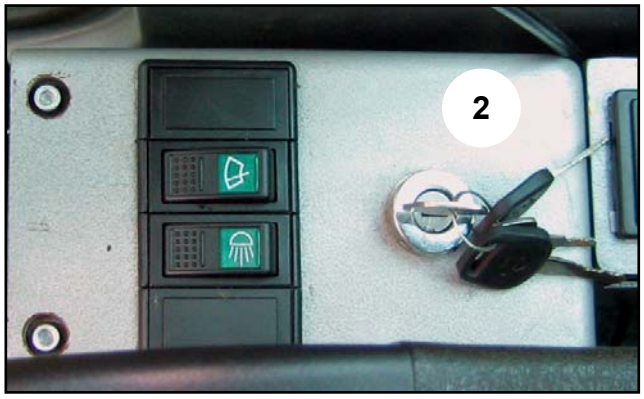

No	ITEM
2	Start key
10	Monitor

6.1.1. Lever and pedal

(7) SAFETY LOCK LEVER

this lever is necessary to prevent unexpected both machine or accessories movement during operators mounting and dismounting. This lever make impossible to use each command.

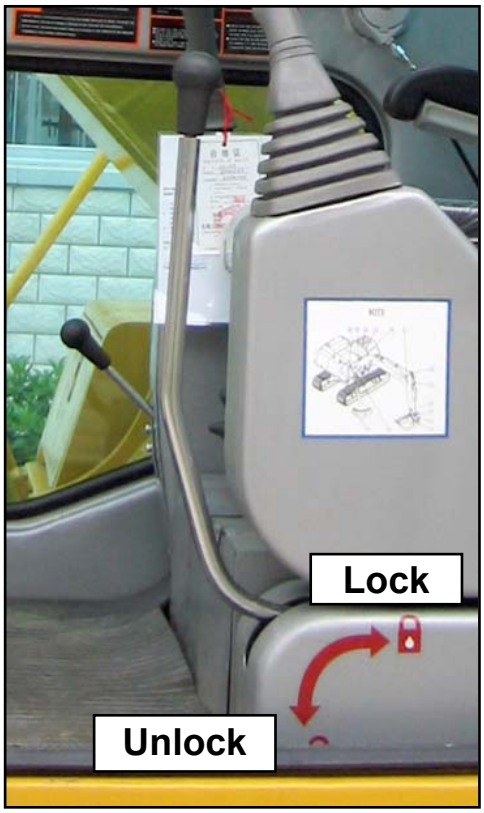

SAFETY LOCK LEVER USE

- **When park your machine, always lie down the bucket then put the safety lever lock in lock position.**
- **Before dismounting (for breakfast or end shift) turn off the engine, then put the safety lever lock in lock position.**
- **When load the machine on a truck put the safety lever lock in lock position.**
- **Be sure that the safety lock lever is in lock position before start the engine.**

(1) THROTTLE LEVER

This lever is used to adjust the engine speed.
(A) Accelerate: push forward the lever.
(B) Low idling: pull back the lever.

HORN

The horn switch is on the right operating lever. The horn will sound while you keep it pushed.

(4) TRAVELLING LEVERS

The travelling levers control the machine translation. Push forward the levers to move the machine in the blade direction, pull them back to move the machine in the sprocket direction.

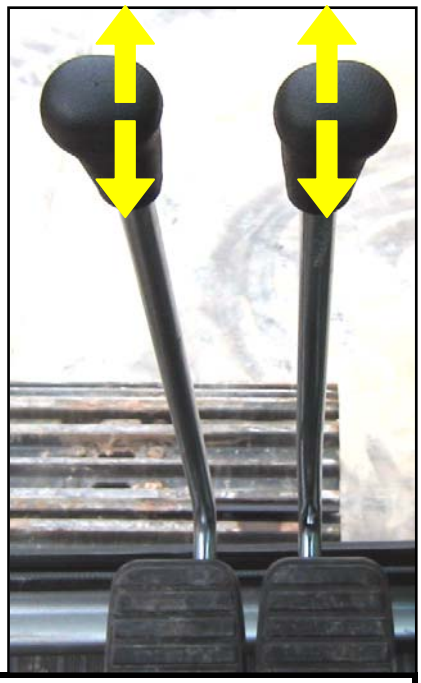

READ THE OPERATING MANUAL

Before operate with the travelling levers, read carefully the chapter "MACHINE MOVING RULES" e "PRECAUTION AND SAFETY MEASURES DURING WORK".

(8) SLEWING LOCK LEVER

This lever is used to lock the turret swing (slewing). This is useful when the machine will loaded on a truck for transport.
To lock slewing, align the turret with crawler, then insert this lock lever in the slot, so it will remain locked in this position.

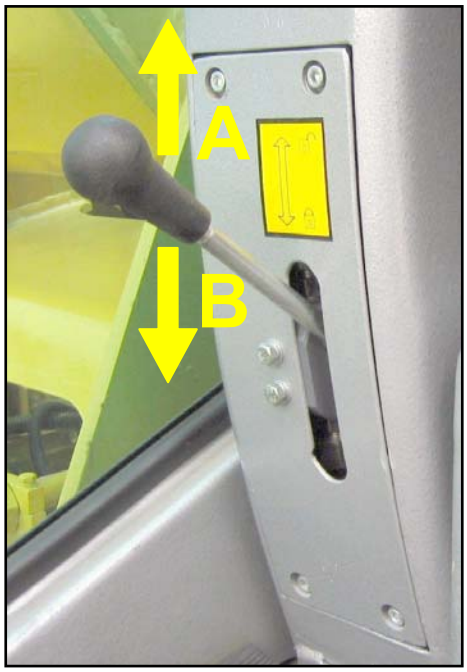

(9) ACCESSORIES PEDAL

This pedal is used when an additional accessory is connected to the machine at the power takeoff.

- If you use an accessory with double action (i.e. a bucket with a joint) you can control both movements pushing the pedal in both directions.
- If you use an accessory with single action (i.e. a hammer) you must push in one direction only.

(3, 5) OPERATING LEVERS

(5) LEFT LEVER

When the lever is in central position, the boom will remain in the start position.

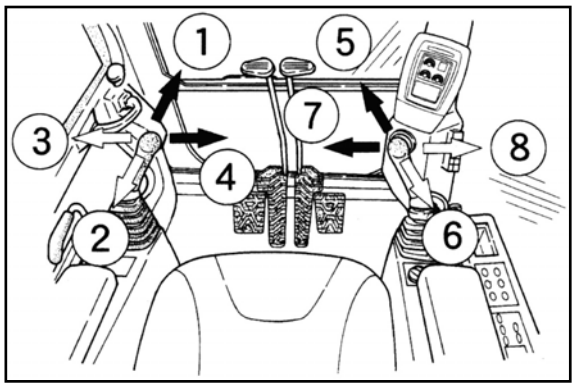

Digging arm movement:
(1) digging arm in.
(2) digging arm out.

Swinging movement:
(3) Turret left rotation.
(4) Turret right rotation.

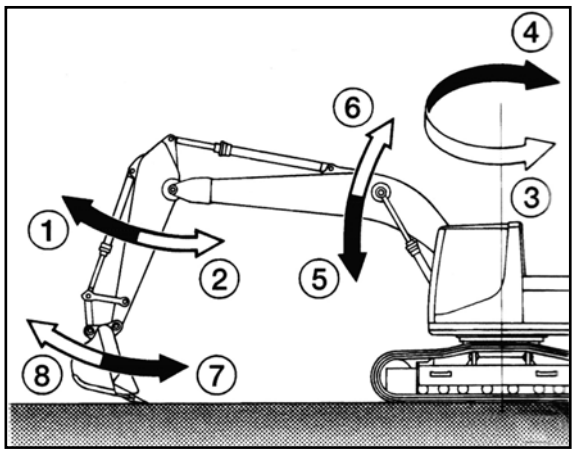

(3) RIGHT LEVER

When the lever is in central position, the boom will remain in the start position.

Arm movement:
(5) Boom lower.
(6) Boom raise.

Bucket movement:
(7) Bucket load.
(8) Bucket dump.

It is possible combine the previous movements sliding all levers in diagonal way.

6.2 INSTRUMENT PANEL AND SWITCHES

6.2.1. Instrument and Switches

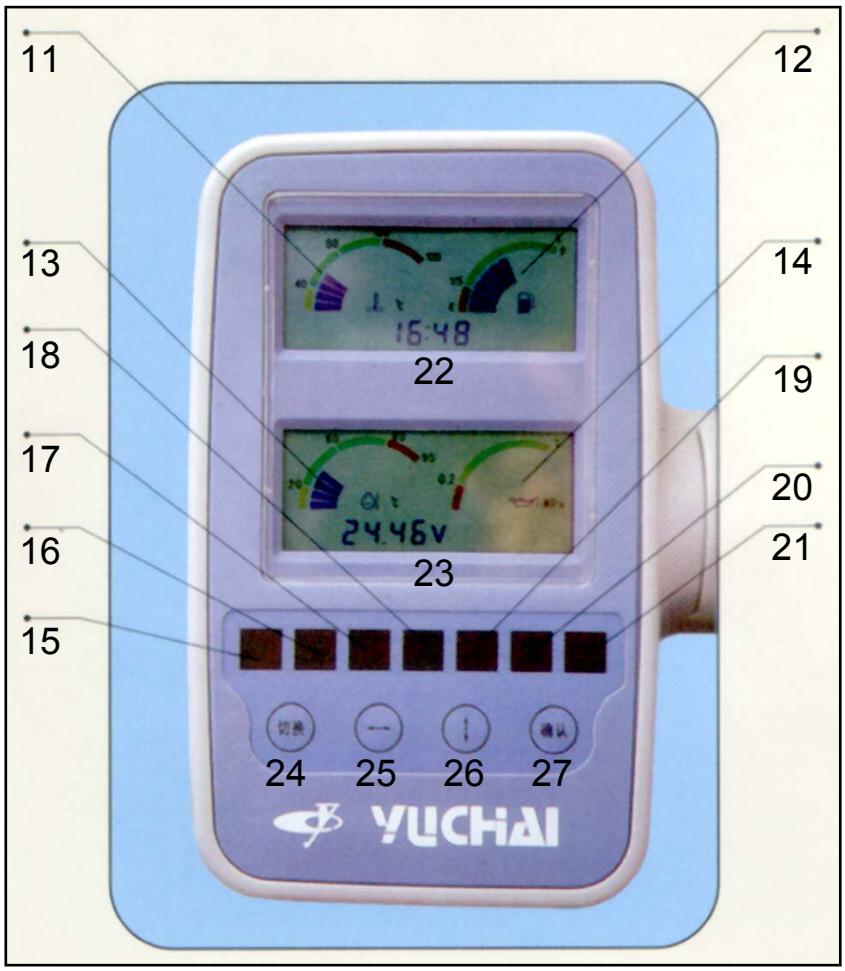

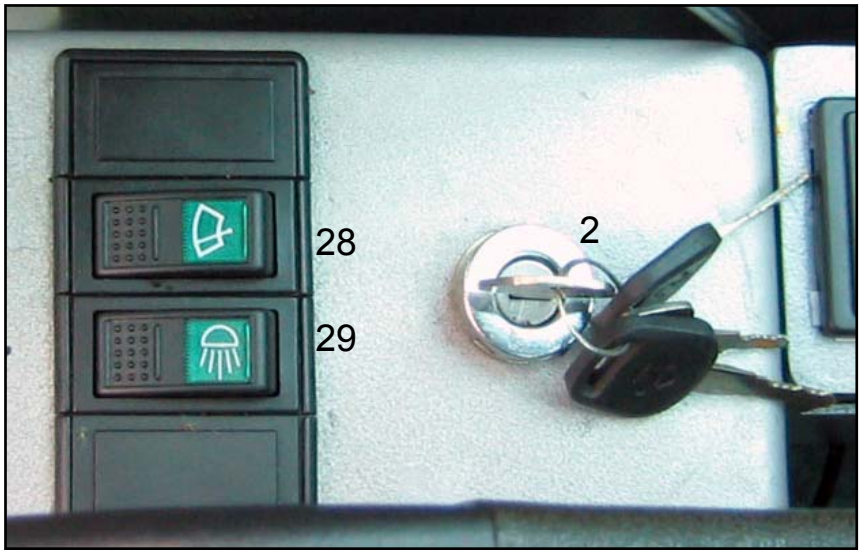

No	ITEM	No	ITEM
2	Start key	20	Hydraulic oil filter obstruction warning lamp
11	Coolant temperature warning gauge	21	Battery charge warning lamp
12	Fuel gauge	22	Hour meter
13	Hydraulic oil temperature gauge	23	Rev counter / voltmeter
14	Engine oil pressure gauge	24	Push button indication changer
15	Engine oil pressure warning lamp	25	Push button clock setup
16	Coolant temperature warning lamp	26	Push button clock setup
17	Hydraulic oil temperature warning lamp	27	Push button confirmation
18	Glow lamp	28	Light switch
19	Air filter obstruction warning lamp	29	Screen wiper switch

(11) COOLANT TEMPERATURE GAUGE

It indicates the engine coolant temperature. It works only with the start key in ON position. Under normal condition, when the engine run, le gauge bars must be in green zone. When the gauge bars are in yellow zone it means that the engine does not reach the normal temperature: so do not put the engine under heavy work. When the gauge bars are in red zone: the engine is in over heating, stop work and leave the engine run in idle until the gauge bars drop down the green zone.

(12) FUEL GAUGE

This gauge indicates the amount of fuel in the tank. Be sure to top off the tank to avoid running out the fuel.
Pay attention: refuelling with diesel fuel before the gauge reach the “E” (Empty).

(13) HYDRAULIC OIL TEMPERATURE GAUGE

This gauge indicates the hydraulic temperature. It works only with the start key in ON position. Under normal condition, when the engine run, le gauge bars must be in green zone. When the gauge bars are in yellow zone it means that the engine does not reach the normal temperature: so do not put the engine under heavy work. When the gauge bars are in red zone: the engine is in over heating, stop work and leave the engine run in idle until the gauge bars drop down the green zone.

(14) ENGINE OIL PRESSURE GAUGE

This gauge indicates the engine pressure. It works only with the start key in ON position. Under normal condition, when the engine run, le gauge bars must be in green zone. When the gauge bars are in red zone the engine oil has low level, lower then the minimum pressure allowed (0.2 MPa): stop the engine immediately.

(15) ENGINE OIL PRESSURE LAMP

It flash when the engine oil pressure is low. Suddenly stop the engine. Check the engine and the oil level. Under normal condition this lamp must be off.
NOTICE: Cold oil, low level or travel in heavy slope may cause lamp flash.

(16) COOLANT TEMPERATURE WARNING LAMP

This lamp flash in case of abnormal coolant malfunctioning. Under normal functioning with the engine turn on it must be off.
The lamp flash if the engine temperature raise too much, so turn off the engine and wait for cool down.
Carry out the checks listed in the trouble shooting table.

(17) HYDRAULIC OIL TEMPERATURE WARNING LAMP

This lamp flash in case of abnormal hydraulic oil temperature. Under normal functioning with the engine turn on it must be off.
The lamp flash if the hydraulic temperature raise too much, so turn off the engine and wait for cool down.
Carry out the checks listed in the trouble shooting table.

(18) GLOW LAMP

This lamp flash when the engine is in the preheating mode, alias when the start key is in HEAT mode, and turns off when the preheating is completed.

(19) AIR FILTER OBSTRUCTION WARNING LAMP

This lamp flash if the air filter is obstructed, so the air flow is too low. As soon as possible clean and/ or replace the air filter.

(20) HYDRAULIC OIL FILTER OBSTRUCTION WARNING LAMP

I This lamp flash if the air filter is obstructed, so the oil flow to the pump is too low. As soon as possible clean and/ or replace the air filter.

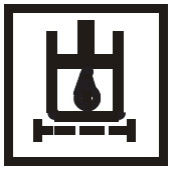

(21) BATTERY CHARGE LAMP

This lamp flashes if a problem arises in the charging system while the engine is running. Under normal condition the lamp flash for some seconds, when the start key is in ON position.

(22) HOUR METER / CLOCK

This 6 figures' meter indicates the amount of worked hours of the machine or the clock, also it may be used to see coolant temperature and the hours worked in failure check.
It will count any hour in which the engine is turned on.
When the meter show the clock the time is expressed in 24 hours.

(23) REV COUNTER / VOLTMETER

This 4 figures' meter indicates the engine rpm or the battery voltage. Also it is used to see the hydraulic oil temperature or the Error code in failure check.

(24) PUSH BUTTON INDICATION CHANGER

Push this button until the meter (22) or (23) will show the information that you are searching. All possible combination are: time and rev counter, hour meter and Volt meter, coolant and hydraulic oil temperature.

(25) E (26) CLOCK SETUP PUSH BUTTON

This two push button allow you to set p the clock, or to see the failure code list.

Clock setup
Push the (25) button to change from hours to minutes and vice versa.
Push the (26) button to increase the value.
Push the (27) button to confirm the set up.

Failure list
To see the failure list, push more times the (24) button until you can see the failure code on the meter.
To choose the failure code type (Er 0x-5x) push more time the (25) button. To scroll the list type (x0-x9) push the (24) button.
The failure code list is showed forward.

(27) PUSH BUTTON CONFIRMATION
Push this button 2 times within 3 s, to confirm the time in clock set up, otherwise the time will not change.

FAILURE CODE LIST
For each kind of failure mode are stored the 10 last vents. If more the 10 events are occurred the first ones are overwrited.

Code	Failure mode
Er00–Er09	Hydraulic oil pressure
Er10–Er19	Electrical circuit over voltage
Er20–Er29	Coolant temperature
Er30–Er39	Hydraulic oil temperature
Er40–Er49	Hydraulic oil filter
Er50–Er59	Air filter

If a lot of failure occurred carry out the controls listed in the trouble shooting table (Chap. 22).

(28) ARM LIGHT SWITCHES

When the start key is in ON position, each switch will control the arm and roof light ON/OFF.
NOTICE: Do not leave the light turned ON for too much time with the engine OFF otherwise the battery will discharge.

(29) WINDOW WIPER SWITCH

When the key is in ON position, this switch control the window wiper on the front cabin's window. (It is not present for canopy setting).
NOTICE: Do not turn ON the window wiper when the window is dry, otherwise the rubber will be damaged.

(2) START KEY

OFF Position (0):
In this set the machine is totally OFF, so you can remove the key from the socket.

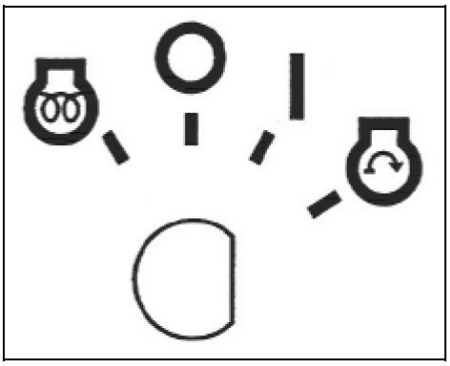

Run Position:
In **a** position the current may through in the line and the buzzer ring.

ON Position (I):
After starting, the key came back in I position; meanwhile the engine is running, leave the key in ON position.

Preheating position (HEAT):

Before start the engine, specially in winter, put the key in position so the preheating lamp (21) will flash. Leave the key in this position until the lamp turn off, then start the engine.

Start Position:

To start the engine move the key in position. While staring the engine keep the key in this position, when the engine run suddenly release the key, which came back in **I** position.

BATTERY DISCONNECTING SWITCH

To disconnect the battery from the electrical circuit, move this switch in 0 position. Before use the machine be sure that the switch will be in I position.

6.2.2. Heating and air conditioning

TEMPERATURE CONTROL
Move the selector to regulate the temperature inside the cab: towards blue zone to keep fresh air; towards red zone to warm the cab. All position from side to side are allowed.

FAN SWITCH
Move the selector to regulate the fan speed: it is possible choose some different speed and it is possible stop it at all, by putting the selector in 0 position (OFF).

6.3 FUSES

Fuses protect electrical equipments and line from overloaded and/or sudden change in voltage or current.
To inspect the fuses box is necessary open the cover near the hydraulic oil tank, in the right side of the machine.
Replace the fuse if it is “open”, if it is corroded or if see white dust. Replace the fuse with an equivalent one, but be sure to eliminate the cause.

REPLACING FUSE

Before replace the fuses, be sure to put the start key in 0 position.

FUSE CAPABILITY

ITEM	Capability
Starter switch	10 A
Electromagnet	20 A
Top lamp	5 A
Main circuit	40 A
Starter motor	20 A
Horn	5 A
Lights	10 A
Wiper	5 A

6.4 OPERATOR SEAT

6.4.1. Operator seat adjusting

SEAT ADJUSTING

Before start job or every time change the operator be sure that the seat is in suitable position for you figure.

The seat allow three setting to ensure operator complete comfort:

1. longitudinal position set
2. front side seat's vertical set
3. back side seat's vertical set
4. backrest reclining set
5. reclining arm

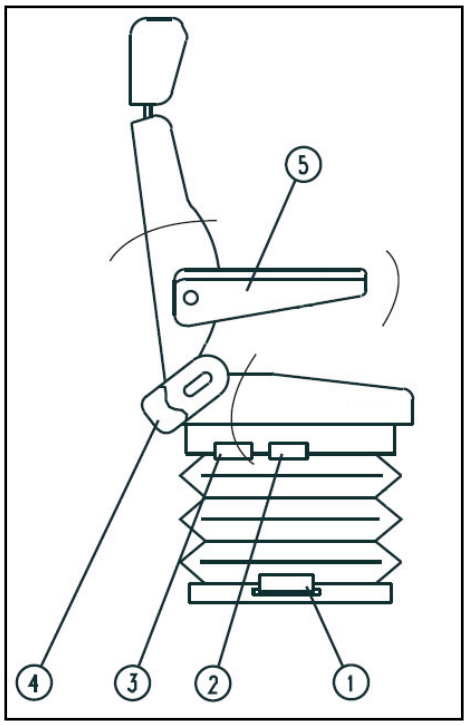

It is possible that your excavator does not have all these setup.
The seat can not be adjusted while the excavator is travelling.
The seat comfort has main important for job daily course. So that, it is necessary keep it in good condition, with weekly and useful maintenance. Specially often check all fastened screws and fasten them tightly if it necessary.

6.4.2. Seat belt

SEAT BELT

Use the seat belt when the machine travel. Before start, check belt, buckle and fixing point. Replace then if necessary and do not use the machine without seat belt.

Pay attention that the seat belt is not twisted. Pull slowly the belt to be sure that the buckle is well fixed. Set the belt to avoid clearance between it and body.
Push button (1) to open the belt.

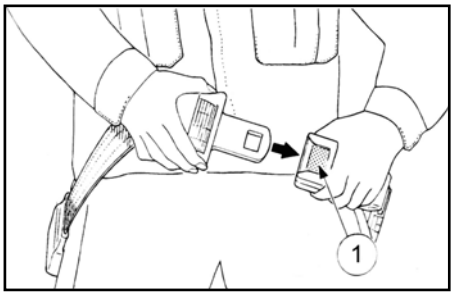

6.5 CABIN

6.5.1. Open / Close side door

From outside:

1. Lift the small cover, insert the key in the socket and rotate it to unlock the door.
2. Pull the external handle to open the door completely up to the cabin screen.

3. Unlock the door pulling knob, close the door, lift the small cover, insert the key and rotate it clockwise to lock the socket again.

From inside:

1. Pull the inside handle to open the door.

6.5.2. Front window opening

1. Stop the machine on a level round, lower down the bucket, turn off the engine.
2. Put the safety lock lever in lock position.
3. To open the window unlock the pins (A) in the upper front window's corner.

4. Using the handle, pull the window the do slide the roller inside the guide until the window reach the roof; for more safety rotate the pins (B) to lock the window in this position.

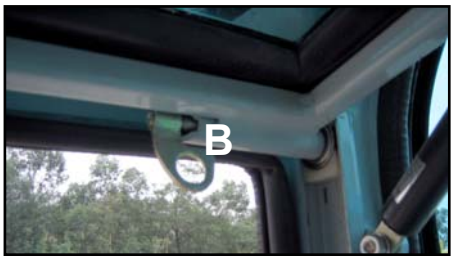

FRONT WINDOW OPENING

When you open the front window, keep both hands on the handle and lift it. If you use only one hand, it may slide and remain trapped.

WINDOW LOCK

If the machine travel with the front window open it may fall down so always lock it with the pins (B).

To close the from upper window, follow the previous procedure in reverse order.

6.5.3. Side window opening

1. Keep the handle and at same time push the small lever to unlock the window.
2. Slide the side window.

To close the side window slide it reverse direction and lock the handle.

6.5.4. Cab light

Move the switch up or down to turn on/off inside the cab.

6.5.5. Emergency exit

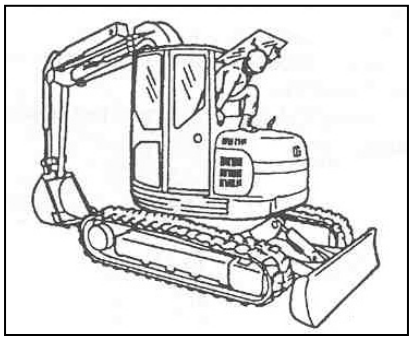

In EMERGENCY, if you can not run out the cab through the door, you can go out through the side window.

If necessary break out the window using a hammer or similar.

7. STARTING MACHINE

7.1 CHECK BEFORE START

Daily check all parts below listed before start the machine.

7.1.1. Check coolant, refill it

1. Open the engine hood, unlocking it with the lever inside the cab. A shock absorber keep it open.

BURNS

The radiator top may be hot. Wait until the engine cool down then open the radiator top.

2. Check if liquid level is between the lines LOW and FULL. If it is under the LOW line, add some coolant through the top up to the correct level.
3. Screw down the top tightly.
4. If the reserve tank is completely empty, inspect for fluid leakage, the inspect the radiator coolant level. If it is slow, add water to the radiator first, then to the reserve tank.

7.1.2. Check and replacing engine oil

1. Open the engine hood.
2. Remove the dipstick (1) dry it with a clean duster.
3. Insert the dipstick completely in is tube then remove it again.
4. On the dipstick you must check the oil level it have to be in middle between two line. If the oil level is under the low line (A), replace the oil up to the middle by put it through the oil muff (2).

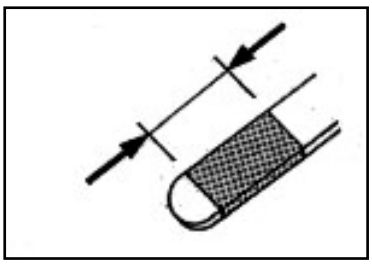

5. If the oil is over the upper line, drain the oil in a pan unfasten the drain plug. Then check the level again.
6. When oil level is correct insert the dipstick and fast the drain plug tightly, then close the engine hood.

NOTICE: If the engine has run, wait for 15 minutes before check oil level. If the machine is on a slope, travel it on a level round before check the oil level.

7.1.3. Inspecting and adjusting the fan belt

1. Open the engine hood.
2. Press at the centre of the fan pulley and alternator pulley and check the tension.
   Pressure: about 10 kg.
   The slack should be about 10 -15 mm.
3. Replace the fan belt if:
   - there are cuts or crack;
   - the belt is worn and touches the bottom of the V groove in the pulley;
   - the belt stretches and cannot be adjusted.

To adjust the tension see the paragraph “FAN BELT ADJUSTING”.

7.1.4. Fuel level and refuelling

REFUELLING

When refuelling do not drain it off the tank, it may cause a fire. If some gasoline drain off dry it immediately with a duster.

1. Insert the key in the socket the move it in ON position.
2. Check the fuel level in the fuel gauge. If the indicator bars are in red zone you must refuel the machine.
3. Unlock the top with the key and rotate the top in anti clockwise to open the tank.
4. Put some diesel inside, then fast the top tightly and close it with the key.

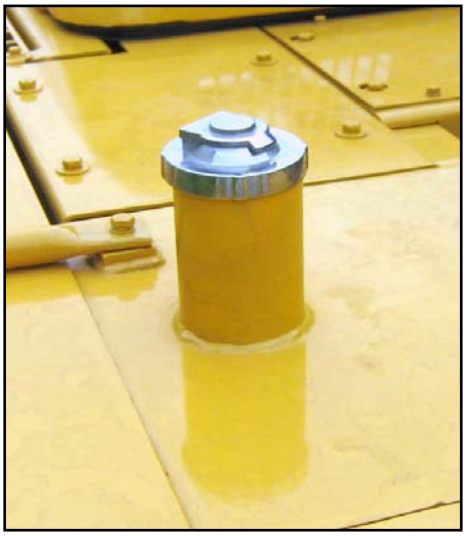

7.1.5. Check hydraulic oil and refill

REPLACING HYDRAULIC OIL

- **When remove the hydraulic oil top, unscrew it slowly, in order to reduce the pressure inside the tank.**
- **If to much oil is filled in, stop the engine wait for cooling down then drain the excess oil.**

1. Park the machine on a level ground.
2. Lower down the bucket, start the engine and leave it run at low idle for some minutes, then lower the blade and contract the arm and buck after this lower the boom until the bucket teeth touch the ground.
3. Leave the engine run for 5 minutes then stop it.

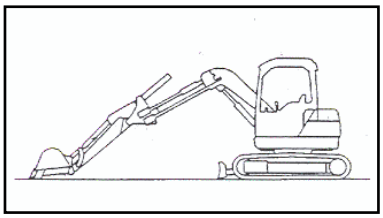

4. Check the oil level and watch if it visible in the circular indicator in the internal side of the tank. If you can not see the oil you must replace it through the top under the right armrest. Do not replace oil if you can see it in the indicator. It may damage the hydraulic accessories and will cause oil leakage.

5. If you must replace oil, unscrew the top on right side of the machine then fill in the oil through the muff.
6. Check again the oil level if it is good, fast the top tightly.

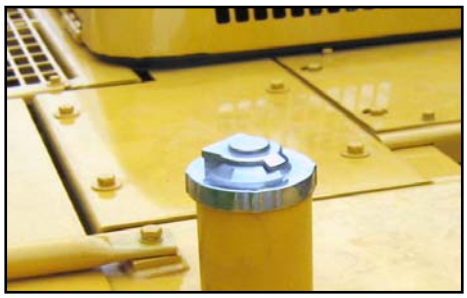

NOTICE: The oil level can change by oil temperature. So be carefully:

- When oil temperature is near environment temperature (10 ÷ 30 °C) the oil level can approach the minimum level.
- When oil temperature is 50 ÷ 80 °C, the oil level can approach the upper level.

7.1.6. Check air filter

See the instruction listed in the paragraph “CHECK, CLEAN AND REPLACE AIR FILTER”.

7.1.7. Check electrical circuit

ELECTRICAL CABLE

Is fuses burn often or if cable are damaged (burned) you must find out the cause. You may ask to assistance service by YUCHAI ENGINEERING MACHINERY CO. LTD.

Check that fuses are not damaged and look for damage or disconnected cable. Also check terminal and fast them all.
Anyway check these items:

- Liquid battery level (10÷15 mm over electrode);
- Starter;
- Alternator.

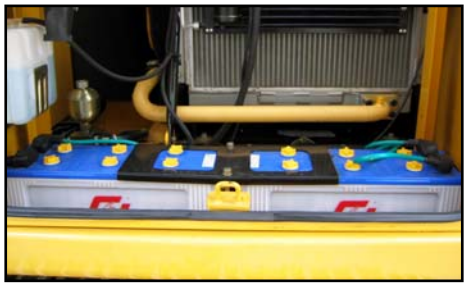

Rotate the start key in **a** position the check the follow items:

- Instrument panel with care for fuel gauge and warning lamps (contact insert, water temperature engine oil).
- Verify if buzzer works properly.
- Verify if all switches work properly and also all light.

Contact **YUCHAI ENGINEERING MACHINERY CO. LTD.** to solve any trouble with instrument panel.

7.2 STARTING

7.2.1. Precaution

1. Verify the safety lock lever is in lock position.
2. Verify that all levers are in neutral position.
3. Check warning lamps in this way: rotate the start key in position, so the buzzer ring, the lamp Contact insert, battery charge and engine oil pressure flashes.
4. Adjust the operator's seat to reach lever and pedal correctly. Operator backside must be leant against the backrest. Fast the seat belt.

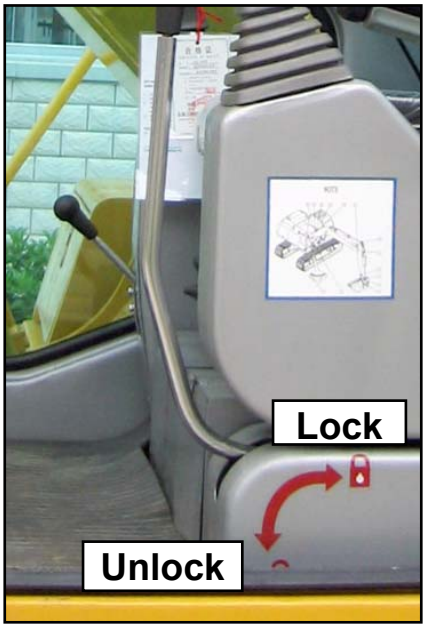

STARTING PRECAUTION

Verify that nobody were in the working zone, play horn then start the machine.

7.2.2. Engine starting

1. Rotate the key in start position . The engine will start.

STARTER

Do not run the starter more then 10 seconds. In engine does not start rotate the key in OFF position, wait for 30 seconds then try to start the engine again. After a false start do not rotate the key until the engine is still. (the starter may damage).

2. When the engine start, release the key, it came back in work position **I**.

7.2.3. Start engine in cold weather

PRECAUTION TO WORK IN COLD WEATHER

Be sure nobody stand in working zone, then play horn and start engine.

When start the machine in cold weather follow these rules:

1. Keep the key in preheating position .
2. when the preheating procedure is completed (lamp off), then start engine by rotating the key in position: the engine will start.
3. Move the throttle lever to regulate the engine speed.

ALLOWED WORKING TEMPERATURE

Maximum air temperature	40 °C
Minimum air temperature	-20 °C
Coolant temperature	95 °C
Engine oil temperature	88 °C
Hydraulic oil temperature	75 – 80 °C

7.3 OPERATIONS AND CONTROLS AFTER STARTING

After you starter the engine do not travel or move the boom or arm. First of all let the machine rise temperature (engine, hydraulic oil, ect.) then follow the rules listed below.

7.3.1. Engine heating

Move the throttle lever in accelerate position then let the engine run at medium speed for some minutes without any load.

NOTICE:
Do not accelerate the engine suddenly before the heating time is gone.
The heating time depends by air temperature, like showed below:

Environment temperature (°C)	Heating time (min)
≤ –20	5
–20 / –10	2
– 10 / +5	1
≥ +5	0.5

NOTICE:
working hydraulic oil temperature is 50 ÷ 60 °C. If oil temperature is under 20 °C do not operate with the hydraulic accessories (boom, arm, bucket, etc.)

7.3.2. Instrument panel check

1. The bar gauge must be in centre of the scale.
2. Alternator lamp must be off.
3. Engine oil pressure lamp must be off.

7.3.3. Safety lock lever check

Put the safety lock lever in lock position then check that moving levers or pedal no action will result in any hydraulic parts neither the machine can travel.

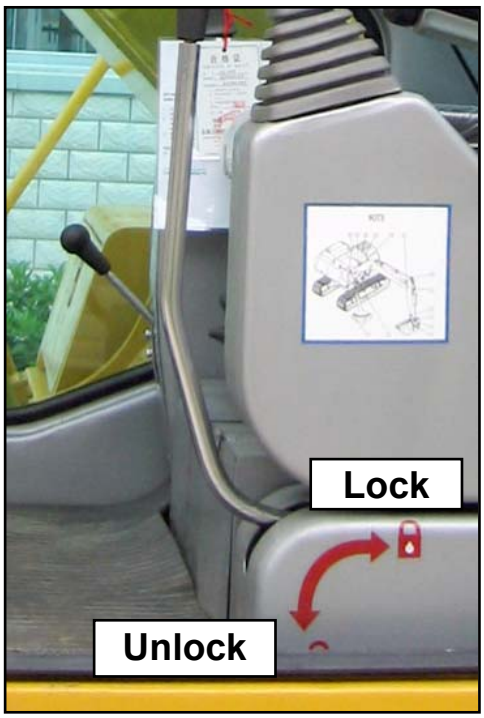

7.3.4. Noise and exhaust check

1. Put the safety lock lever in unlock position then pull up the bucket.
2. Operate slowly the bucket lever control and expand totally the cylinder. Leave the bucket in this position for 5 minutes.
3. Check if exhaust has bad colour, or engine emit strange noise or vibrating.

   Exhaust:
- Colourless or light blue: normal (complete combustion);
- Black: abnormal (incomplete combustion);
- White: abnormal (oil drains through cylinders).

8. MACHINE MOVING RULES

8.1 FORWARD MOVEMENT

PRECAUTION BEFORE MACHINE OPERATING

- **Before operating the travel levers, check to make sure that the dozer blade is to the front of the operator's seat. BE AWARE that when the dozer blade is to the rear the travel lavers operate in the opposite direction to when the dozer blade in the front.**
- **Before operating the travel levers, check that nobody stands in the working zone, then play horn.**

1. Act the throttle lever to accelerate the engine.
2. Put the safety lock lever in unlock position. Bend the arms like showed in side drawing the pull it up for 40 ÷ 50 cm.
3. Pull up the dozer blade, acting the appropriate lever.

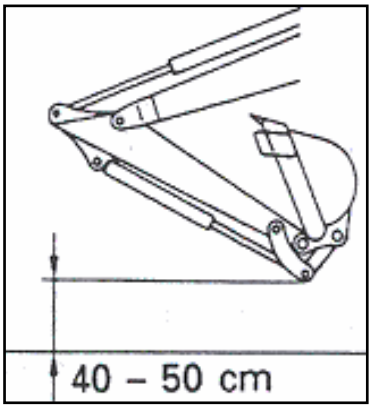

4. Act the travel levers (left and right) as written below:

- **If the dozer blade is in front side of the machine.** Push forward slowly the travel levers to move the machine forward.

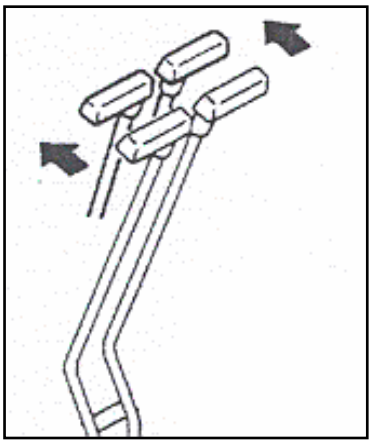

- **If the dozer blade is in back side of the machine.**

Pull rearwards slowly the travel levers to move the machine backwards.

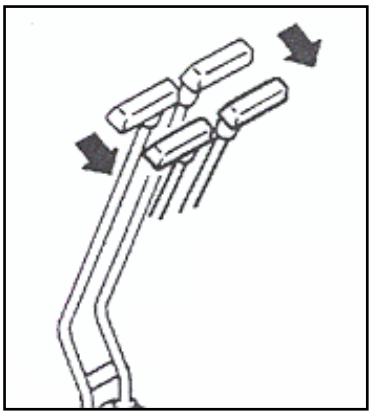

8.2 BACKWARDS MOVEMENT

PRECAUTION BEFORE MACHINE OPERATING

- **Be careful when travel backwards, there are blind spots to the rear of the machine. Before act travel levers check the dozer blade position, when the dozer blade is to the rear the travel lavers operate in the opposite direction to when the dozer blade in the front.**
- **Before operating the travel levers, check that nobody stands in the working zone, then play horn.**

1. Act the throttle lever to accelerate the engine.
2. Put the safety lock lever in unlock position. Bend the arms like showed in side drawing the pull it up for 40 ÷ 50 cm.
3. Pull up the dozer blade, acting the appropriate lever.

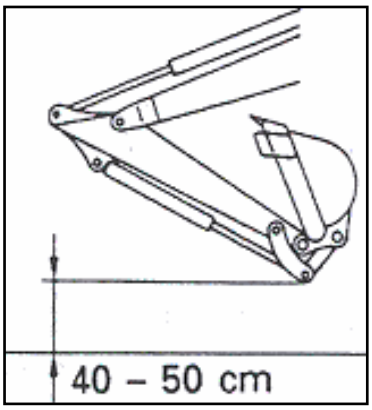

4. Act the travel levers (left and right) as written below:

- **If the dozer blade is in rear side of the machine.**
  Pull backward slowly the travel levers to move the machine forward.

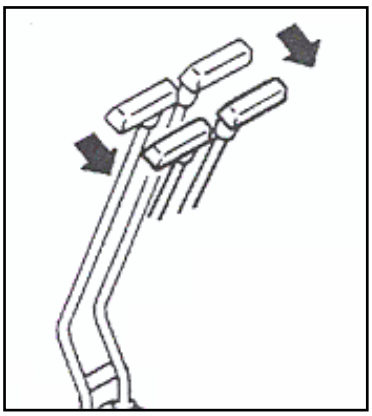

- **If the dozer blade is in rear side of the machine.**
  Push forward slowly the travel levers to move the machine backward.

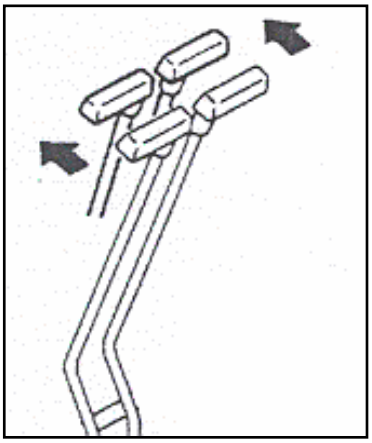

8.3 CHANGING DIRECTION (STEERING)

PRECAUTION BEFORE MACHINE OPERATING

Be careful when travel backwards, there are blind spots to the rear of the machine. Before act travel levers check the dozer blade position, when the dozer blade is to the rear the travel lavers operate in the opposite direction to when the dozer blade in the front.

Act the travel levers to change direction.
If it is possible, avoid sudden direction change, also before start a rotation in one direction wait for the machine is stopped.

- **When the machine still:**
  LEFT TURNING:
  If the machine is travelling forward and you want turn left push the right travel lever.
  Vice versa, to turn left when the machine is travelling backwards pull the right travelling lever.

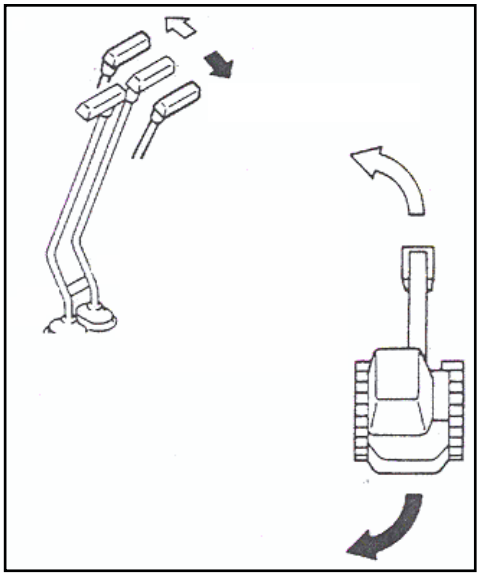

  RIGHT TURNING:
  If the machine is travelling forward and you want turn right push the left travel lever.
  Vice versa, to turn right when the machine is travelling backwards pull the left travelling lever.

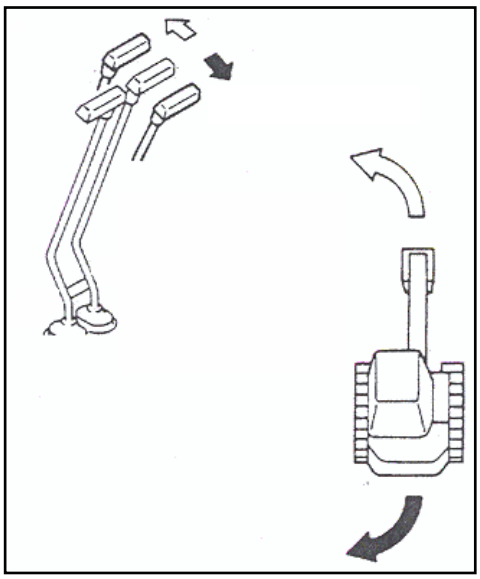

- **When the machine is travelling (both travelling lever acted at the same time):**
  LEFT TURNING:
  If the machine is travelling forward release the left travel lever to neutral position.

  RIGHT TURNING:
  If the machine is travelling forward release the right travel lever to neutral position.

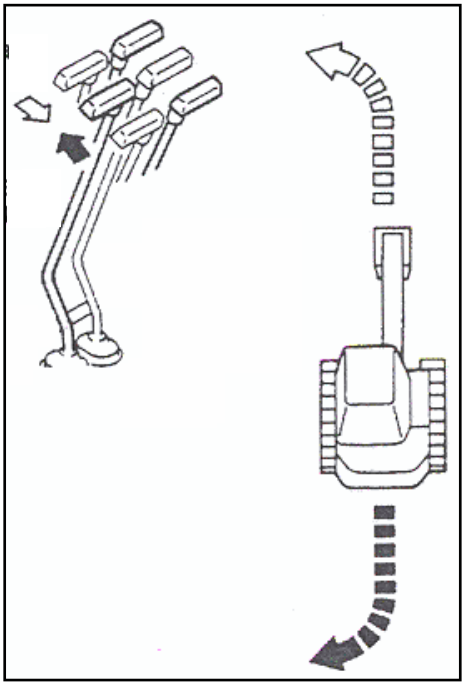

- **Rapid direction change (spin turn):**
  LEFT TURNING:
  When turning left using counter-rotation, pull the left travelling and steering lever back and push the right travelling and steering lever forwards.

  RIGHT TURNING:
  When turning right using counter-rotation, pull the right travelling and steering lever back and push the left travelling and steering lever forwards.

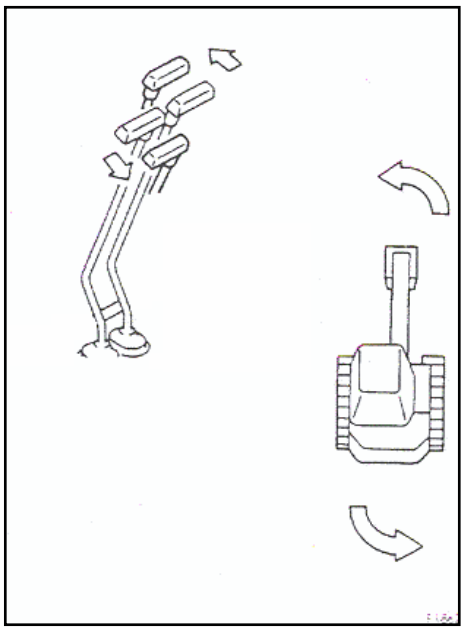

8.4 MACHINE STOP AND PARK

MACHINE STOP AND PARK

- **Avoid abruptly stop. Keep enough space when you want stop the machine.**
- **When park the machine choose a level and heavy ground and avoid dangerous place. If you must park the machine one slope, put some pieces of wood under crawlers, then thrust the bucket under ground.**

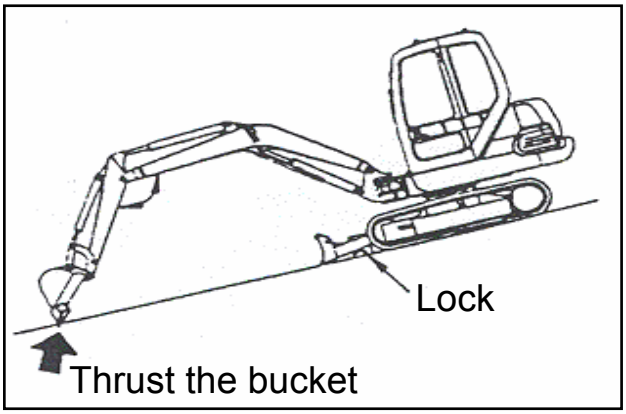

1. If it is possible park the machine on a level ground.
2. Lower bucket and dozer blade on the ground.
3. put all levers in neutral position.
4. Put the safety lock lever in the lock position, otherwise accidental action on a lever may cause sudden machine movement and it may cause injury or death.

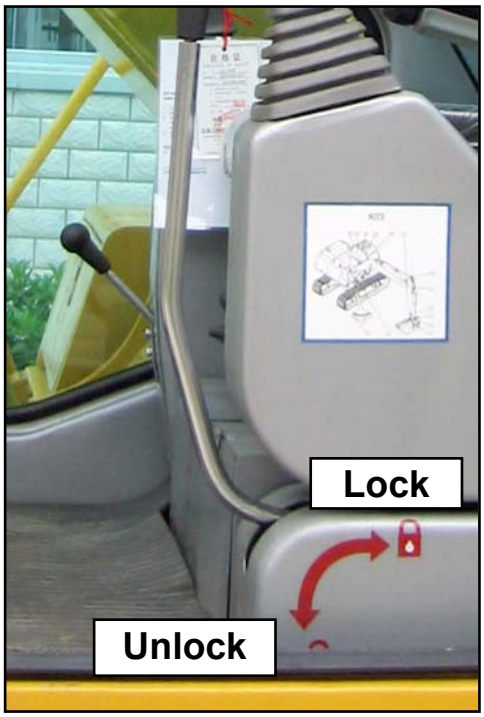

5. Put the throttle lever in low idle.

6. Rotate the start key in anti clockwise, in **0** position.

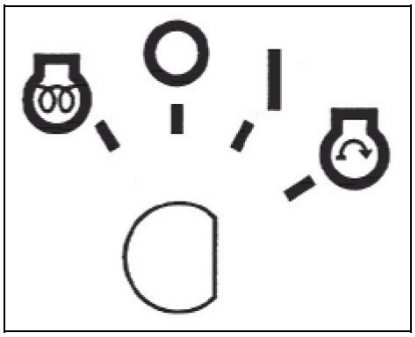

NOTICE: Model YC 35-6 has got a lever to stop the engine.

ENGINE STOP

Do not stop the engine abruptly before it is cool enough, it may cause fast aging. Only for emergency you can stop it suddenly. Particularly if the engine is over heated let it run at medium speed for some minutes then stop it.

7. Remove the start key.
8. Close all windows and cabin door.
9. Close all covers and hood.

8.5 SWINGING

PRECAUTION FOR SWINGING

- **When arm or turret swing, always check the clearance around the machine: make sure nobody and anything are in machine range.**
- **Check the swing lock lever (11) is in unlock position.**

To swing the turret act the left operating lever as is described in paragraph 6.1.1.

8.6 FORBIDDEN MOVEMENT AND FORBIDDEN USE

PRECAUTION IN WORK

If you must act the operating accessory while the machine is travelling, you have to stop the machine before act the operating lever.

FORBIDDEN OPERATIONS USING SWING FORCE

Do not use the swing force to compact soil or break earth mounds or walls.

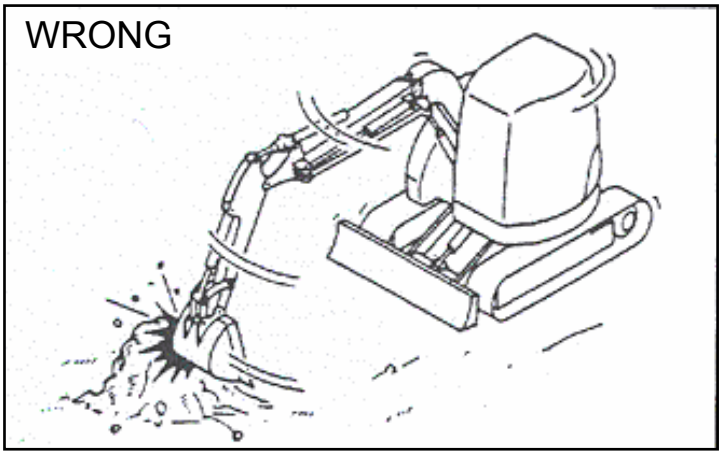

FORBIDDEN OPERATIONS USING TRAVEL FORCE

Do not leave the bucket dug into the round and use the travel force to excavate.

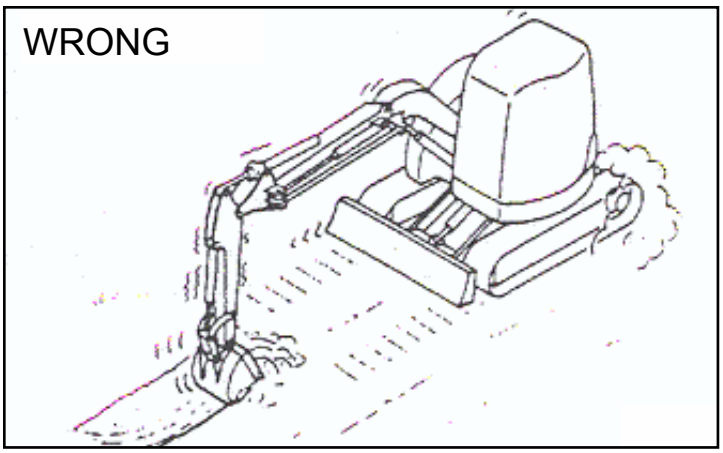

PRECAUTIONS WHEN OPERATING HYDRAULIC CYLINDERS TO END OF STROKE

If the cylinder is operated to the end of its stroke during operations, force will be brought to bear on the stopper inside the cylinder, and this will reduce the life of the machine. To prevent this, always leave a small safety margin when operating the cylinder.

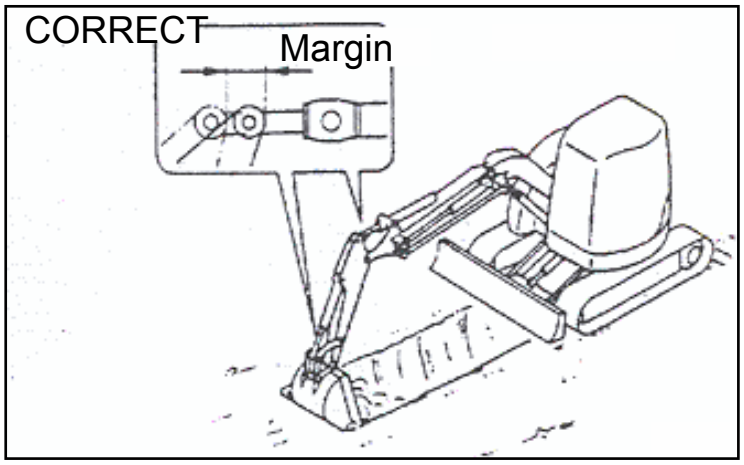

FORBIDDEN OPERATIONS USING DROPPING FORCE OF BUCKET

Do not using the dropping force of the bucket as a pickaxe, breaker, or pile driver. This will bring excessive force to bear on the rear of the machine, and will not only damage the machine, but is also dangerous.

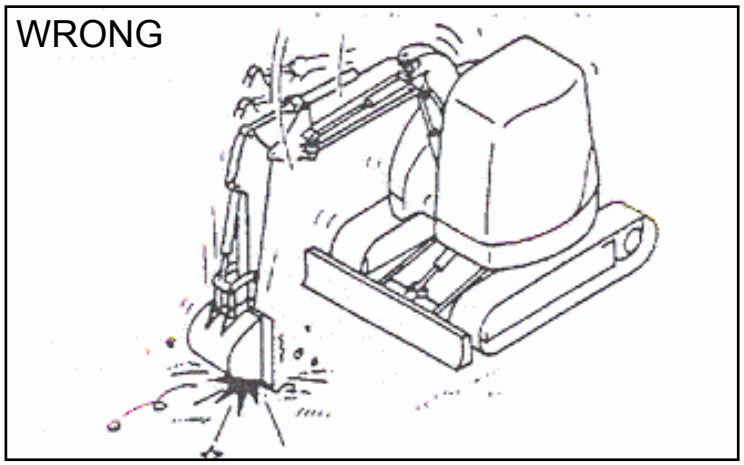

FORBIDDEN OPERATIONS USING DROPPING FORCE OF MACHINE

Do not use the dropping force of the machine for digging. It is better to excavate hard rocky ground after breaking it up by some others means. This will not only reduce damage to the machine but make for better economy.

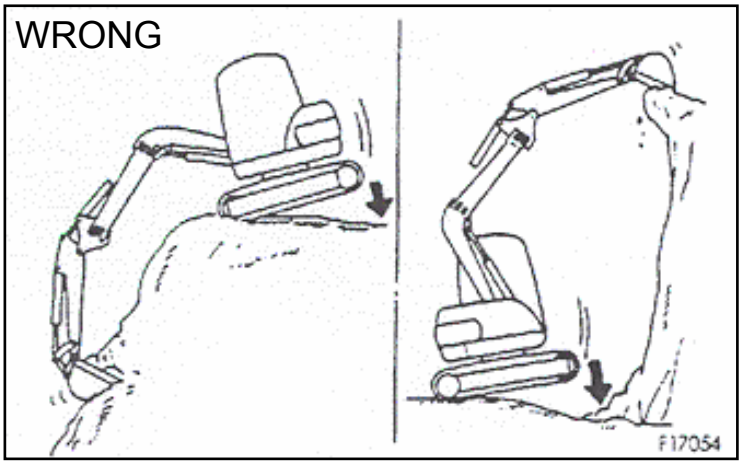

AVOID HITTING BLADE

Be careful not to hit the blade against rocks or boulders. This will cause premature damage to the blade or cylinder.

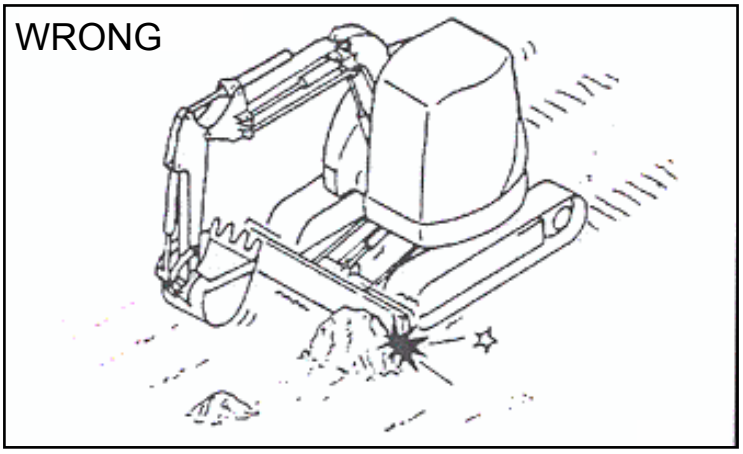

8.7 PRECAUTION FOR OPERATING

TRAVELLING OVER OBSTACLE

When travelling over obstacle such as boulders or tree stumps, the machine (in particular the undercarriage) is subjected to a large shock, so reduce the travel speed and travel over the obstacle at the centre f the tracks. As far as possible, remove such obstacle or avoid travelling over them.

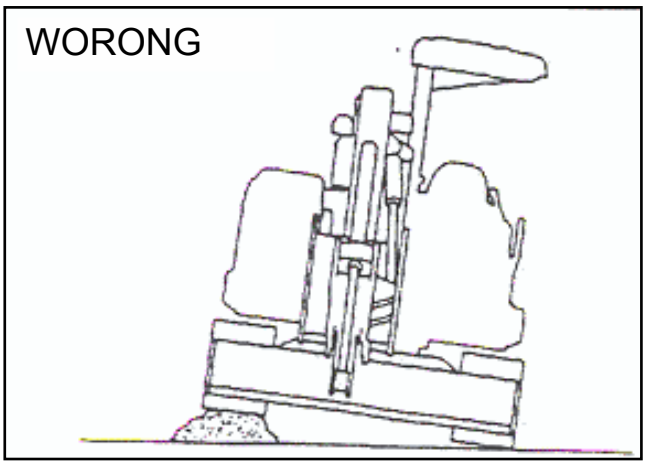

PERMISSIBLE WATER DEPTH

When driving the machine out of water, if the angle of the machine exceeds 15°, the rear of the upper structure will go under water, and water will be thrown up by the radiator fan. This may cause the fan break. Be extremely careful when driving the machine out of water.

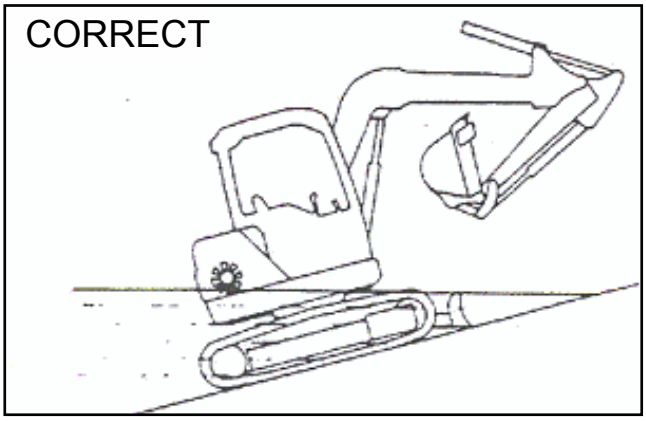

PERMISSIBLE WATER DEPTH

Do not immerse the machine in water by more then the permissible depth (under centre of carrier roller (1)).
Also, for parts that have been immersed in water for long time, pump in grease until the old grease comes out from the bearings (around the bucket pins).

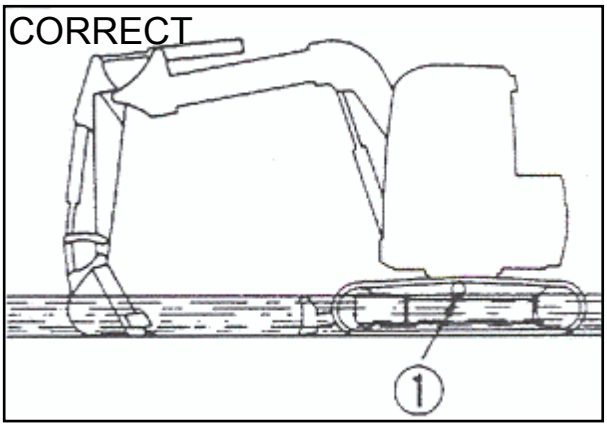

PRECAUTIONS WHEN TRAVELLING UP OR DOWN HILLS

- **When travelling, raise the bucket approx. 20 ÷ 30 cm from the ground.**
- **If the machine slide down or loss stability, lower down the bucket and brake the machine.**

PRECAUTIONS WHEN TRAVELLING UP OR DOWN HILLS

- **Do not travelling downhill in reverse.**
- **IT IS DANGEROUS to turns on slopes or to travel across slopes. Always go down to a flat place to perform these operations.**
- **Turning or operating the work equipment when working on slopes may cause the machine to lose its balance and turn over, so avoid such operations. It is particularly dangerous to swing downhill when the bucket is loaded. If such operations have to be carried out, pile soil to make platform on the slope so that the machine can be kept horizontal when operating.**
- **Do not travel on slopes of over 25° as there is danger that the machine may overturn.**

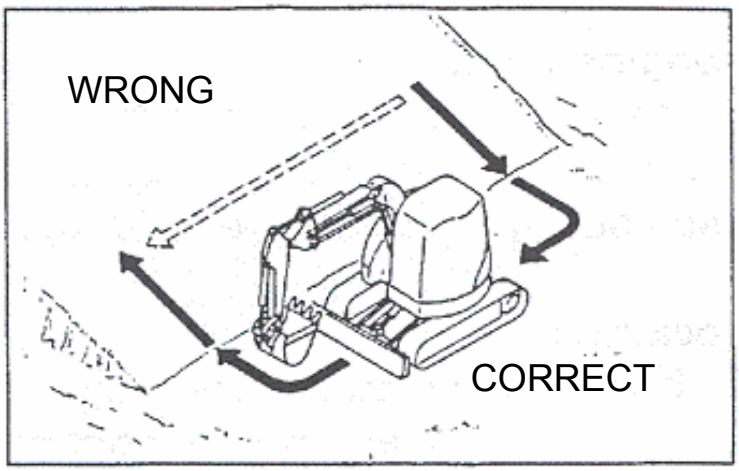

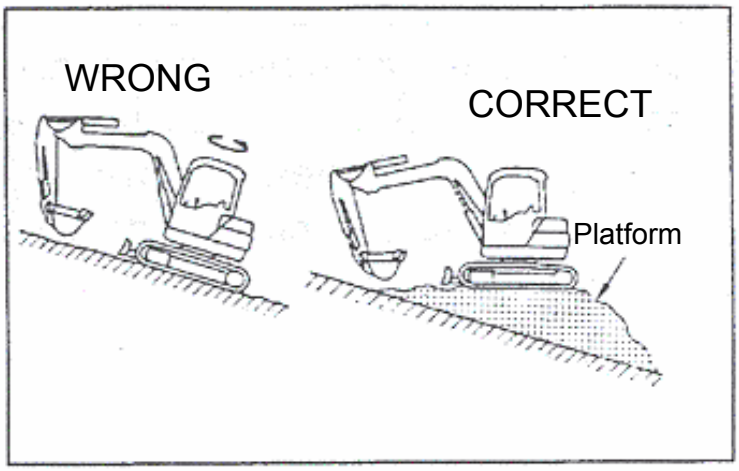

When travelling down steep hills, use the travel lever and fuel control lever to keep the travel speed low. When travelling down slope of more than 15°, set work equipment in the posture shown in the figure on the right, and lower the engine speed.

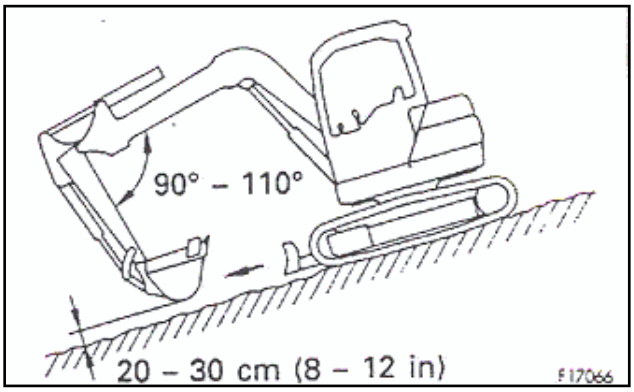

When travelling up a steep hill of more than 15°, set the work equipment in the posture shown in the diagram on the right.

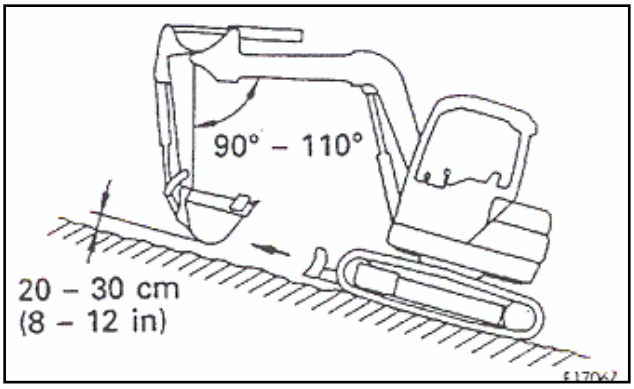

Braking when travelling downhill:
to brake the machine during downhill runs, put the travel lever in the neutral position. This will cause the brake to be automatically applied.

If shoes slip:
when travelling uphill, if the shoes slip or it is impossible to travel uphill using the force of the track only, it is possible to use the pulling force of the arm to help the machine travel uphill.

If engine stops:
if the engine stops when travelling uphill, move the travel levers to neutral position, lower the bucket to the ground, stop the machine, then start the engine again.

TRAVELLING UP OR DOWN HILLS

If engine stops when the machine is on slope never use the left operating lever to make swinging operations.

8.8 WORK POSSIBLE USING HYDRAULIC EXCAVATOR

8.8.1. Backhoe work

When condition of the machine is as shown in the diagram at right, each cylinders maximum pushing excavation force is obtained when the bucket cylinder and link, arm cylinder and arm t 90°. When excavating, use this angle effectively to optimize your work efficiency.
The range for excavating with the arm is from a 45° angle away from the machine to a 30° toward the machine.
There may be some differences depending on the excavation depth, but try to use within the above range rather than going all the way to the extreme end of the cylinder stroke.

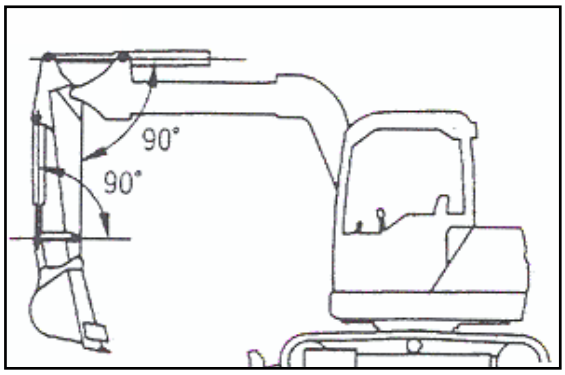

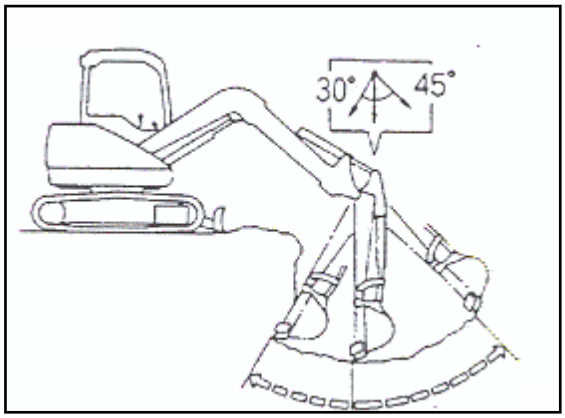

8.8.2. Ditching work

Ditching work can be performed efficiently by attaching a bucket to much the width of the ditch and then setting the tracks parallel to the line of the ditch to be excavated.
To excavate a wide ditch, first dig out both sides and then finally remove the centre portion.

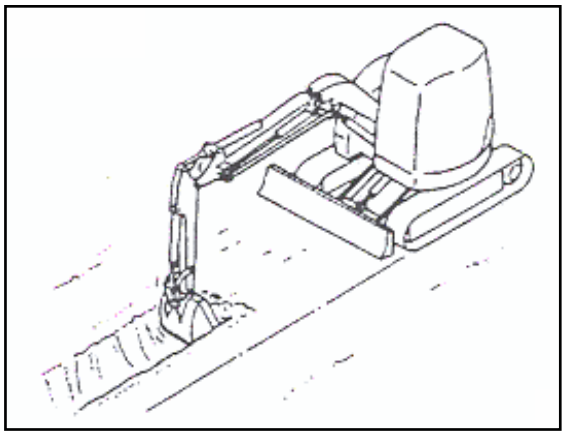

8.8.3. Loading work

In places where the swing angle is small, work efficiency can be enhanced by locating the dump truck in a place easily visible to the operator.
Loading is easier and capacity greater if you begin from the front of the dump truck body than if loading is done from the side.

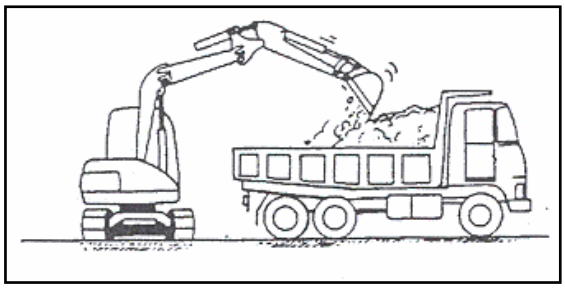

8.8.4. Operations in confined spaces

When operating in confined space, set the work equipment in the posture showed in side figure. This will allow the machine, to swing freely in any area where it is possible for the tracks to enter.

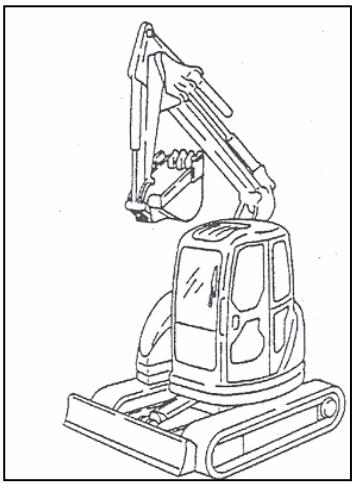

Moreover you can increase the machine capability, by using different accessories.
For this excavator are available some original optional, like: drill, jointed bucket, pickaxe, etc. For more information please contact the assistant service by **YUCHAI ENGINEERING MACHINERY CO. LTD.**

8.9 HOW TO ESCAPE FROM MUD

Always operate carefully to avoid getting stuck in mud. if the machine does get stuck in mud, use the following procedures to get the machine out.

When only one side in stuck:
Use the bucket to raise the track, then lay boards or logs and drive the machine out. If necessary, put a board under the bucket also.

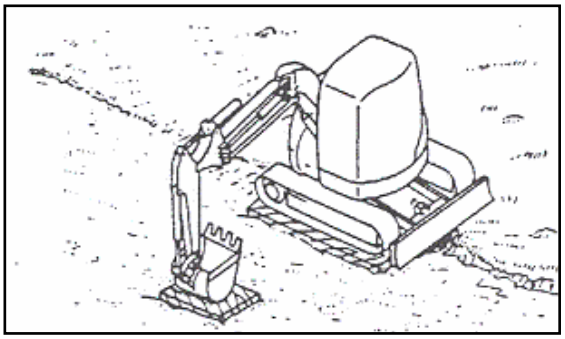

SOLLEVAMENTO DELLA MACCHINA

Quando usate il braccio e l'asta per sollevare la macchina, assicuratevi che la parte della benna a contatto con il terreno non sia la parte iniziale (denti). Verificate, inoltre, che l'angolo fra il braccio e l'asta sia compreso tra 90° e 110°.

When both side are stuck:
If the machine will not move, lay boards as explained above and dig the bucket into the ground in front. Then pull in the arm as in normal digging operations and put the travel levers in the forward position to pull the machine out.

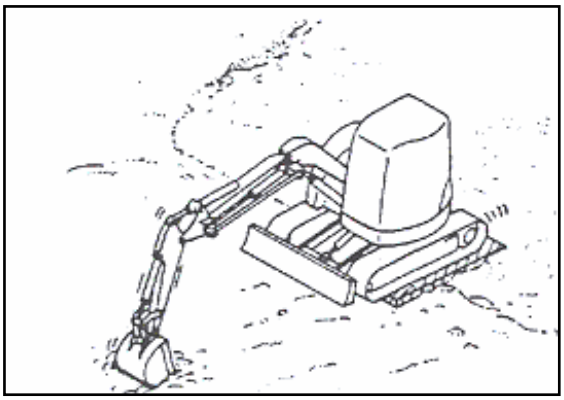

9. COLD WEATHER OPERATION

9.1 PRECAUTION FOR FUEL, LUBRICANTS AND COOLANT IN LOW TEMPERATURE

If the temperature becomes low, it becomes difficult to start the engine, and the coolant may freeze, so do as follows.

9.1.1. Fuel and lubricants

Change fuel and oils with low viscosity for all components.

- Gasoline viscosity:

Class (JIS)	Viscosity at °C
JIS nr.2 light oil	-10
JIS nr.3 light oil	-20
JIS special nr.3 light oil	-30

- Use lubrcant oil with viscosity less then 5 °C at ambient temperature.

9.1.2. Coolant

IS ABSOLUTELY FORBIDDEN

- **Keep the liquid coolant near free flames.**
- **Smoke meanwhile operate with coolant.**
- **Using coolant with methanol, ethanol, propane.**
- **Using any water leak preventing agent irrespective of whether it is used independently or mixed with an antifreeze.**

Use permanent antifreeze so you do not must change it for a year.
For any doubt about your antifreeze coolant refer to your supply.
Where no permanent antifreeze is available, an ethylene glycol antifreeze without corrosion inhibitor may be used only for the cold season. In this case, clean the cooling system twice a year. When refilling the cooling system, add antifreeze in autumn but do not add anything in spring.

DO NOT MIX DIFFERENT LIQUID

Never mix an antifreeze with another different.

9.1.3. Battery

PRECAUTION WITH BATTERY

- **Never approach the battery with flames and sparks.**
- **Acid inside the battery is dangerous. If it drops is your eyes or skin wash with large quantity of water and call medical emergency suddenly.**

When the ambient temperature drops, the capacity of battery will also drop. If the battery charge ratio is low, the battery electrolyte may freeze. Maintain the battery charge as close as possible to 100%, and insulate it against cold temperature so that the machine can be started easily the next morning.

Measure the specific gravity and calculate the rate of charge from the following conversion table.

Fluid temperature	20 °C	0 °C	-10 °C	-20 °C
Rate of charge				
100%	1.28	1.29	1.30	1.31
90%	1.26	1.27	1.28	1.29
80%	1.24	1.25	1.26	1.27
75%	1.23	1.24	1.25	1.26

9.2 ENGINE STARTING IN COLD WEATHER

To start engine in cold weather, proceed according to write in the paragraph “START ENGINE IN COLD WEATHER”.

9.3 PRECAUTION AT WORK END IN COLD WEATHER

To avoid that water and mud will freeze on tracks or on other parts, making machine travelling impossible, follows these rules:

- Dry carefully hydraulic pistons.
- Remove completely water and mud on the machine frame. Ice and mud may damage gaskets.
- Park the machine on solid and dry ground. If it is impossible part it on boards.
- Open the drain valve to remove water in fuel pipe to avoid that will freeze.
- Cover up the battery or take it out the machine and put it indoor. Remember that battery performance drops when temperature drops.

- If electrolyte level is low add distillate water only next morning. Never add water in the evening at the end of the work.

9.4 CABIN HEATER

When ambient temperature drops use the cabin heater to warm it up.
To start the cabin heater:

1. Rotate in anti clockwise the water pipe valve.
2. Push the fan switch as is described in paragraph 6.2.2

In spring and summer close the pipe valve, rotating it in clockwise.

https://truckmanualshub.com/

10. CHECK AFTER COMPLETION OF WORK

1. Walk around the machine and check all parts: bucket, arm, boom, tracks, frame, etc. Also check if there are any oil or water leakage. If you find out any problem call the assistant service by **YUCHAI ENGINEERING MACHINERY CO. LTD.**

PROBLEM FOUND OUT

Do not use the machine if find out some problem and put a warning plate on the instrument panel.

2. Refuel the tank.
3. Check the engine compartment and remove paper, death leaves, etc.
4. Remove any clod of earth from the track.

11. USING RUBBER SHOES (ONLY FOR MACHINE WITH RUBBER SHOES)

Rubber shoes have excellent properties that are not found in metal shoes. However do not use rubber shoes like metal ones, this use cannot be made of their advantage.

Rubber shoes vs. Metal shoes:

	Rubber shoes	Metal shoes
Small vibration	Excellent	Medium
Smooth travel	Excellent	Good
Low noise	Excellent	Medium
No damage to paved surface	Excellent	Medium
Easy to handle	Excellent	Medium
Easily damaged	Medium	Excellent
Strong drawbar pull	Excellent	Excellent

Their weak point is lack of strength. Therefore it is important to understand the advantages of rubber shoes and to follow the precaution regarding handling and forbidden work.

11.1 RUBBER SHOES GUARANTEE

Rubber shoes have not to be used with pavement which may damage them, like steel board, U cracks, obstacles, rocks, etc. if the customer carries out prohibited work or does not follow precautions for operation, the damage resulting from the customer’s mistaken use of the machine shall not be included in the scope of the warranty.

11.2 PRECAUTIONS WHEN USING RUBBER SHOES

FORBIDDEN WORK AND USE WITH RUBBER SHOES

- **Carrying out operations and steering on crushed rock, extremely rough hard rock, steel beams, scrap iron or near the edges of steel plates will cause damage to the rubber shoes.**
- **In places such as riverbeds where there are large numbers of large and small boulders, the stones may get caught and damage the rubber shoes or make the shoes come off. If dozing operations are carried out when the shoes slip, this will also reduce the life of the rubber shoes.**
- **Be careful not to get oil, fuel or chemical solvent on the rubber shoes. If such a substance should get on the shoes, remove it immediately, furthermore do not travel on road surfaces where oil has collected.**
- **When putting the machine into long-term storage (3 months or more) store the machine indoors where t is protected from direct sunlight or rain.**
- **Do not move the machine with the crawler on one side raised using the work equipment. This will cause damage to the rubber shoes and may cause the shoes to come off.**

Be careful of the following points when carrying out work:

- Avoid carrying out counter rotation turns on concrete surfaces.
- Avoid making sudden changes in direction. This may cause premature wear or damage to the rubber shoes.
- Avoid operating the steering when travelling over places where there is a big difference in height. When travelling over obstacles or places where there is a difference in height, drive the machine at right angles to the obstacles to prevent the shoes from coming off.
- If the machine has been raised using the bucket, lower it slowly.
- Avoid doing work with materials that will attack the adhesion of the steel core such as salt, ammonium sulphate, potassium chloride, potassium sulphate, calcium super phosphate, or wash the machine after use.
- The adhesion of the core will be attacked by salt, so avoid using the machine in coastal areas.
- Do not carry out works that involves scraping against walls or concrete embankments.

- Rubber shoes slip extremely easily on snow or frozen roads. Be careful not to sleep when travelling or working on slopes.
- The properties of rubber shoes change when working in extremely cold place, and this will reduce the life of the rubber shoes.
- Because of the properties of rubber, use the rubber shoes within a range of –25 °C ÷ +55 °C.
- When working, be careful not to damage the rubber shoes with the bucket. To prevent the shoes from coming off, always maintain the correct tension. If the tracks are slack, the shoes will come off under the following condition. Even when the tension is correct, be extremely careful when carrying out these operations:

- When travelling over curbs, rocks or places where there is a big difference in level (approx. 20 cm), do not turn the machine. When travelling over such objects, always travel at right angles to the object.

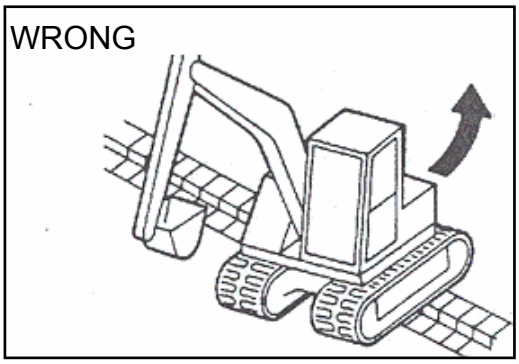

- When travelling in reverse up a slope, do not turn when moving from flat ground onto the slope. If it is necessary to turn on slopes, be sure to turn gradually.

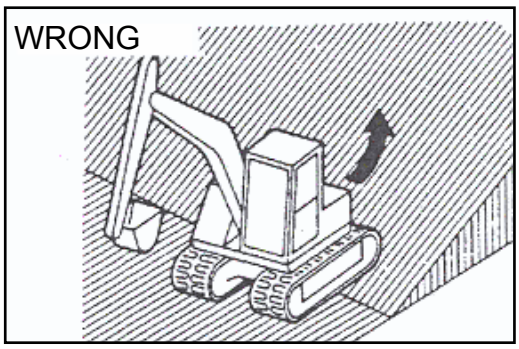

- Avoid travelling along the edge of a slope or on rough ground with the track on one side raised (with the machine tilting at angle of more than approx. 10°) and one side on the flat ground. To avoid damage to the rubber shoes, travel with both tracks on flat ground.

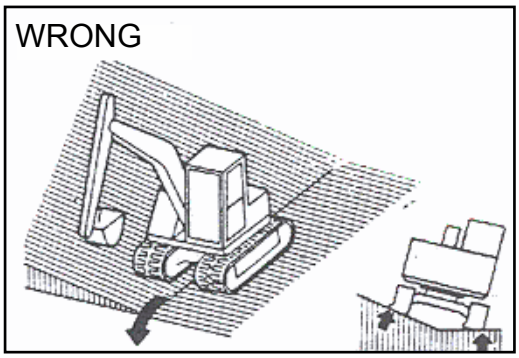

- If the rubber track is loose, avoid turning as is showed in side figure, when travel on obstacles.

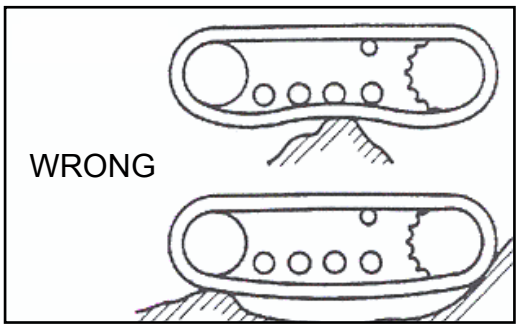

- When travelling over an obstacle, a gap is formed between the track roller and the rubber shoe. In this condition, the rubber shoe may come off.

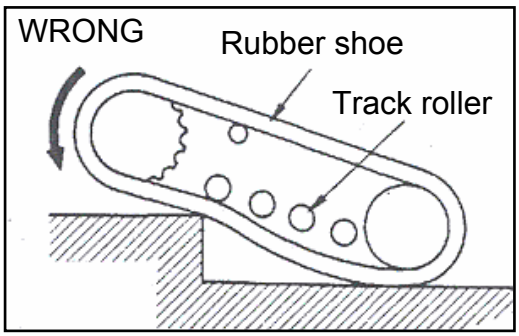

- if the machine travels further in reverse, a gap is formed among the track roller, idler and the rubber shoe.

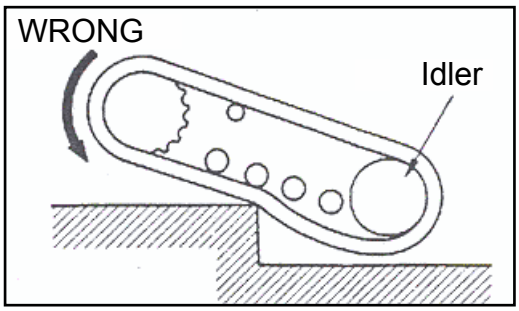

- If the machine travels in reverse in this condition, the rubber shoe may come off.

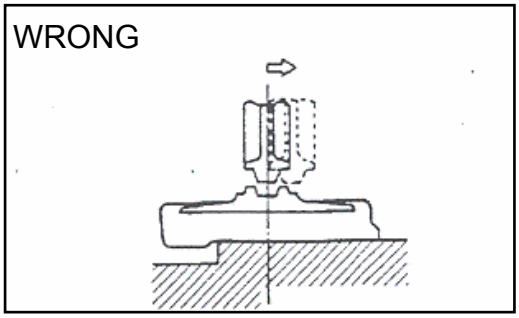

- If the machine is turned in this condition, the rubber shoe may come off.

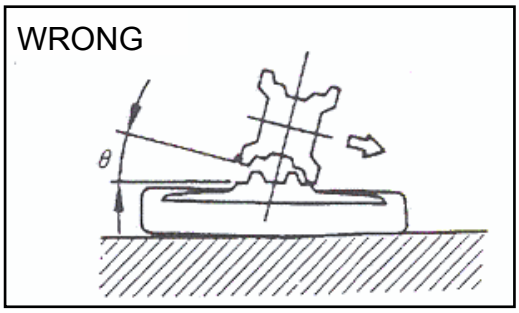

12. TRANSPORTATION

12.1 LOADING UNLOADING WORK

MACHINE LOAD / UNLOAD

Load and unload the machine is a dangerous operation so be particularly careful.

MACHINE LOAD / UNLOAD

- **Make sure the ramp has sufficient width, length and thickness to enable the machine to be safely loaded and unloaded. If ramps sag appreciably reinforce them with blocks.**
- **When loading or unloading the machine, run the engine at the idling speed then travel slowly.**
- **When loading or unloading the machine, park the trailer on a flat, firm roadbed. Keep a fairly long distance between the road shoulder and the machine.**
- **Remove the mud from the under carriage to prevent the machine from slipping to the side on slopes.**
- **Never change the direction of travel when on the ramps. If it is necessary drive off the ramps and correct the direction, then drive on to the ramps again.**
- **When turning the machine on trailer, the machine's footing is unstable, so carry out the operation slowly.**
- **Ever check if the cabin door is locked (open or closed). Never open or close the door when travel on ramps it may cause a sudden stability change.**

To load or unload the machine, use always ramps or a platform and follows these rules:

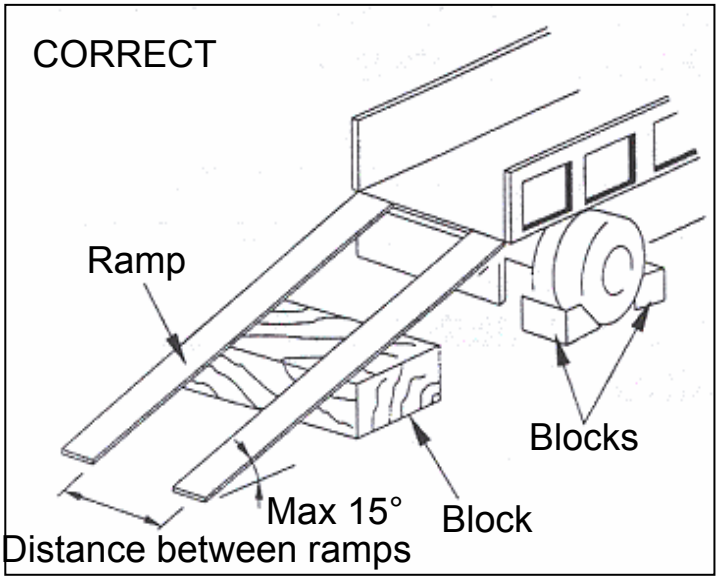

1. Properly apply the brakes on the trailer and insert blocks beneath the tires to ensure that it does not move.
2. Fix ramps in line with the centres of the trailer and the machine. Be sure that the two sides are at the same level as one another.
3. Make the angle of the gangplank a maximum of 15°. Set the distance between the ramps to match the centre of the tracks.
4. Lower the engine speed using the throttle lever.
5. Set the swing lock lever to the lock position.
6. set in direction of the ramps, lower the work equipment as far as possible without letting it hit the trailer, then travel slowly to load or unload the machine.

If the work equipment is installed to the machine, load from the front; if the work equipment is not installed then load from the rear.

NOTICE: when you are on the ramps do not operate any lever than the travel one.

7. Load the machine correctly in the specified position on the trailer.

12.2 LOAD PRECAUTION

After machine load, on a truck, keep it still as written below:

1. Lover down the blade.
2. Extend the bucket and arm cylinders completely, then lower down the arm slowly.
3. Stop the engine and remove the start key.
4. Put the safety lock lever in lock position.
5. Insert a big beam under the bucket cylinder, to avoid the contact with the floor.

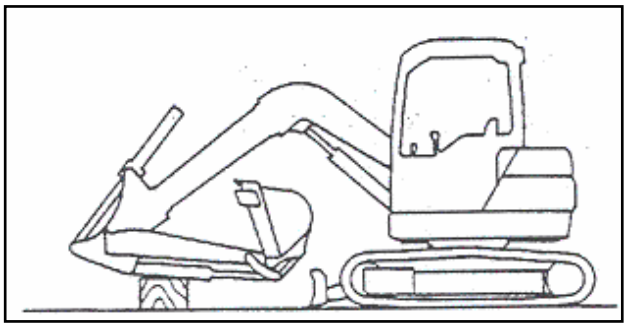

6. Place rectangular timber underneath the front and rear track shoes to prevent the machine from moving about. Also, hold it down with chains or ropes. Be particularly careful to ensure that the machine does not slip sideways.

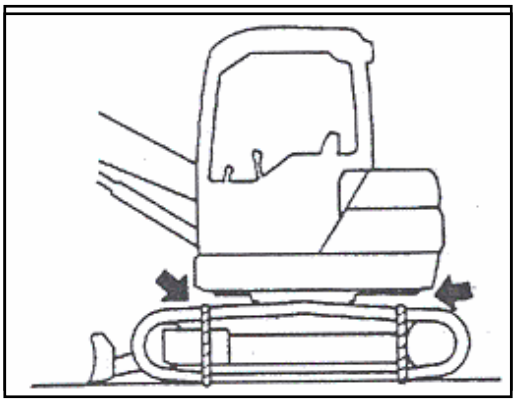

12.3 PRECAUTION FOR TRANSPORTATION

PRECAUTION FOR TRANSPORTATION

- **Obey all state and local laws governing the weight, width and length of a load. Observe all regulations governing wide loads.**
- **Always check if the door is lock in one position: open or closed.**
- **Always remember to retract the car radio antenna.**

https://truckmanualshub.com/

13. MACHINE TOWING

PRECAUTION FOR TOWING

- **When towing the machine, use a wire rope that has ample strength for the weight of the machine that is being towed.**
- **Do not tow the machine with steel rope damaged.**

If the machine sinks in mud and cannot get out under its own power, or if the drawbar pull of the excavator is being used to tow a heavy object, use a rope as shown in beside figure.

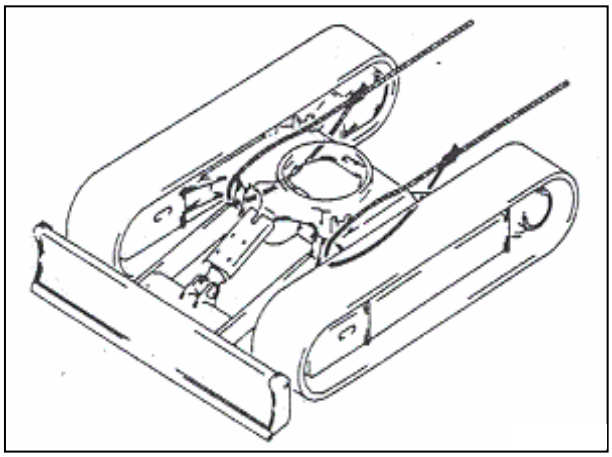

14. LONG TERM STORAGE

14.1 BEFORE STORAGE

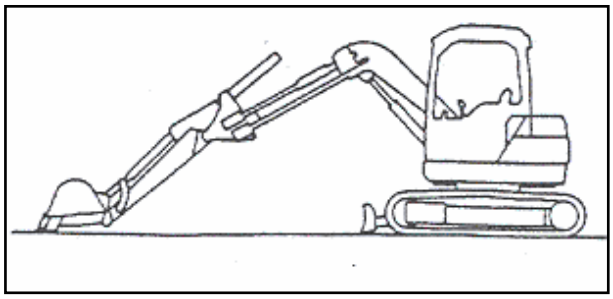

To protect the cylinders rod when the machine is not being used, set the work equipment as showed in beside figure. This to prevent rusting of the cylinder rod.

When putting the machine in storage for a long time, do as follow:

- After every part is washed and dried, the machine shall be housed in a dry building. Never leave it outdoors.
- In case it is indispensable to leave it outdoors, park the machine on the well-drained concrete and cover it with canvas etc.
- Completely fill the fuel tank, lubricate and change the oil before storage.
- Apply a thin coat of grease to metal surface of the hydraulic piston rods.
- Disconnect the negative terminals of the battery and cover it, or remove it from the machine and store it separately.
- If the ambient temperature is expected to drop below 0 °C, always add antifreeze to the cooling water.
- Lock each control lever and pedal with the lock lever and pedal lock.

14.2 DURING STORAGE

Every month do as follow:

- Start the engine and travel the machine for a short stretch, so a thin coat of grease will cover the moving parts.
- Charge the battery.
- Clean the grease on a cylinder rod and operate with the working equipment. After moving the working equipment put some grease on it again.

EXHAUST GAS

- **Do the previous operations outdoors.**
- **If you cannot go out, open windows and doors to improve the ventilation and prevent gas poisoning.**

14.3 AFTER STORAGE

When you start the machine after a long term storage, do as follow:

- Remove the excess grease with a duster from cylinder rods.
- Add oil and grease to all places.

15. STARTING MACHINE WITH JUMP-START CABLES (BATTERY DISCHARGED!)

OPERATING WITH BATTERY

- **Before operating battery, stop the engine and turn the starting key to the 0 position.**
- **When handling battery, always wear protective gloves and eyeglass.**
- **When removing the battery, first disconnect the cable from the ground and remember which is which.**
- **When installing the battery, first connect the positive cable. Be careful because the sudden contact between positive pole and frame will cause sparks.**

OPERATING WITH BATTERY

- **Battery electrolyte is dilute by sulphuric acid, it will attack skin and clothes. If sulphuric acid drop on your clothes immediately take them off and clean the skin with a large quantity of cold water. If sulphuric acid drop on your skin immediately clean the skin with a large quantity of cold water and call for medical emergency.**
- **If the terminal are loose there is danger that the detective contact may generate sparks that will cause an explosion. When installing the terminals, install them tightly.**

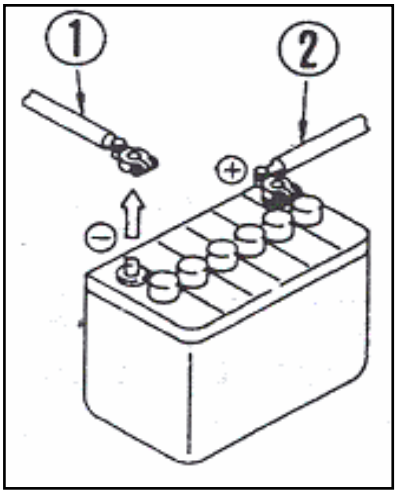

Disconnect

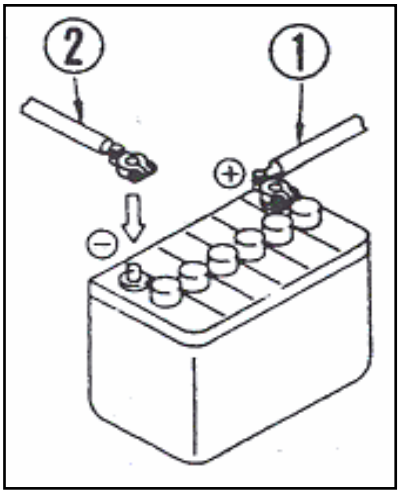

Connect

- When remove the battery first disconnect the negative cable (1).
- When install the battery first connect the positive cable (2).

NOTICE: Never change cables polarity.

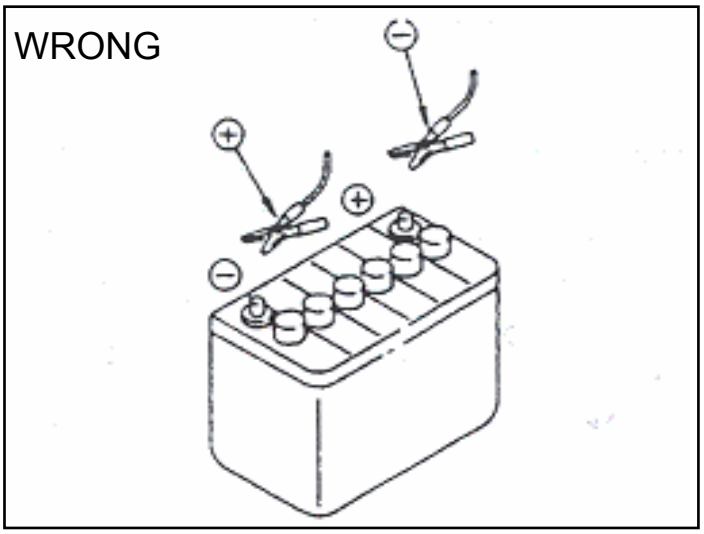

STARING MACHINE WITH JUMP-START CABLES

- **When connect the cables be sure to prevent contact between them.**
- **When start engine with jump-start cables wear always protective eyeglass.**
- **Be sure that both vehicles will not touch each other, to avoid sparks near the battery, which may catch fire the sulphur acid gas. Sulphur acid explosion will cause severe injuries.**
- **Be sure do not make mistake in cables installing.**
- **Use care when removing cables from the machine that has been starter. Do not allow the cable ends to contact each other or the machine, to avoid hydrogen explosion.**
- **Jump-start cable must be useful for the purpose.**
- **Battery used for starting must have the same capacity of the discharged battery.**
- **Be sure that cables and terminals are not worn or damaged.**
- **Be sure that cables and terminals are tightly fastened.**

15.1 PRECAUTION FOR JUMP-START CABLE CONNECTION AND STARING

1. Make sure that the starting switches and key are in OFF position, in both vehicles.
2. Connect jump-start cables as follow:
   - connect one clip of jump-start cable (1) to the positive terminal (+) of the problem machine,
   - connect one clip of jump-start cable (2) to the positive terminal (+) of the normal machine,
   - connect one clip of jump-start cable (3) to the negative terminal (-) of the problem machine,
   - connect one clip of jump-start cable (4) to the engine block of the problem machine.

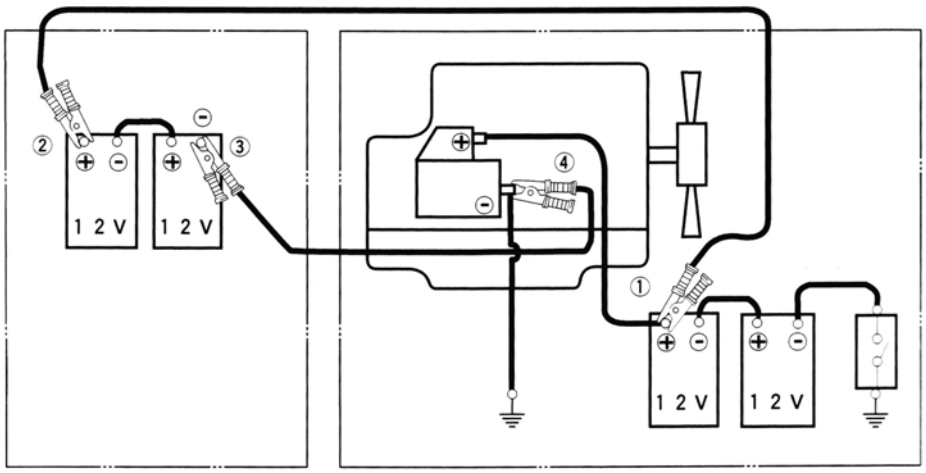

3. Make sure the clips are firmly connected to the terminals.
4. Start the normal machine engine and keep it at high idling speed.
5. turn on the starting switch of the problem machine and start the engine. If it does not work try again not more than 2 minutes.

15.2 PRECAUTION FOR JUMP-START CABLES DISCONNECTING

After the engine has starter, disconnect the jump-start cables in the reverse order in which they were connected:

1. disconnect one clip of jump-start cable (4) to the engine block of the problem machine,
2. disconnect one clip of jump-start cable (3) to the negative terminal (-) of the problem machine,
3. disconnect one clip of jump-start cable (2) to the positive terminal (+) of the normal machine,
4. disconnect one clip of jump-start cable (1) to the positive terminal (+) of the problem machine.

15.3 PRECAUTION FOR BATTERY CHARGING WHILE IT IS ONBOARD

BATTERY CHARGING

- **Remove the cables from battery terminals, otherwise the alternator can be damaged from extra voltage.**
- **To allow gas produced while charging escape, take off all top from battery.**
- **If battery over heat (electrolyte exceed 45 °C) suspend charging for a while.**
- **Stop immediately charging when battery is well charged. If you leave battery under charge too much it may happen:**
  a) battery overheat,
  b) electrolyte level drop down,
  c) battery problem may come in.
- **When connect the battery make sure to connect the cables correctly. Never mix the cable (+ with -) it will damage the electrical components and battery.**

https://truckmanualshub.com/

16. PHENOMENA THAT ARE NOT FAILURE

Pay attention at follow phenomena that are not failure:

1. When the arm is pulled in, the speed of movement drop momentarily when the arm is more o less vertical.

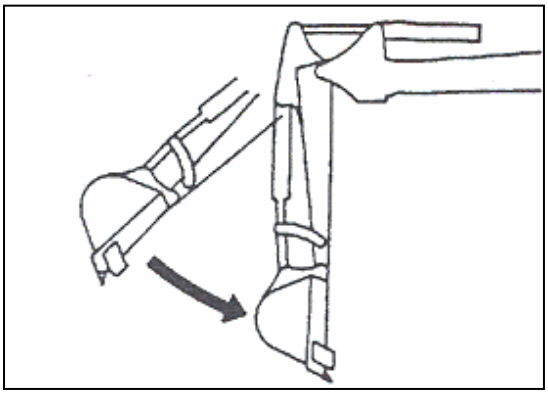

2. The arm speed will drop momentarily when the bucket teeth are more or less horizontal.

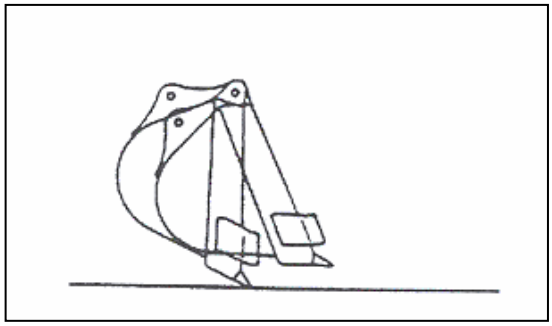

3. When starting or stopping the swing, noise will be emitted from the brake valve.
4. When going down a steep slope at low speed, a noise will be emitted from the travel motor.

17. THE BUCKET

17.1 BUCKET REMOVING

Standard bucket capacity (m^3)	0.52

1. Stop the machine on a firm and solid round.
2. Lower the working equipment with the bucket reverse bent.

BUCKET POSITION

Lower the bucket on round softly, more is ground contact pressure more difficult is remove the pins from the bucket.

3. Remove the split-pin from pins, the spacer and then the O-ring anti clearance.
4. Remove bucket pins (2) and (1), in this order.

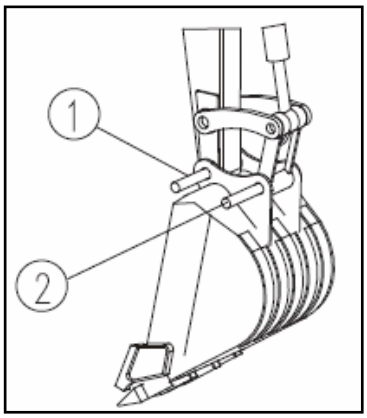

INDIVIDUALS SAFETY DEVICES

When you hit the pins with hammer to extract them, splinters may be produced and hit you. It may cause severe injure and permanent damage in your eyes. So use protective eyeglasses and heavy gloves.

5. Lift the working equipment to remove the bucket.

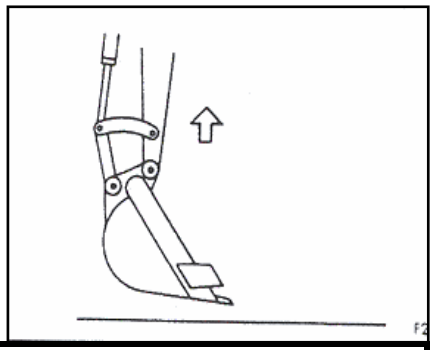

SAFETY DEVICES

Be sure that spacers and O-rings will not drop down and/or will not result damaged.

REMOVED BUCKET STORAGE

When remove the bucket from the working equipment put it in a stable position and recover it in a place where only allowed people can come in.

17.2 BUCKET ASSEMBLING

1. Dry the hub with a clean and dry cloth-duster, take off mud and all other dusts.
2. Lubricate the sliding pins parts with oil or grease with MoS_2 (molybdenum sulphide) (NLGI no 1 or similar).
3. Lower the working equipment aligning the arm's hub hole with the bucket hub to insert the bucket pin (1).

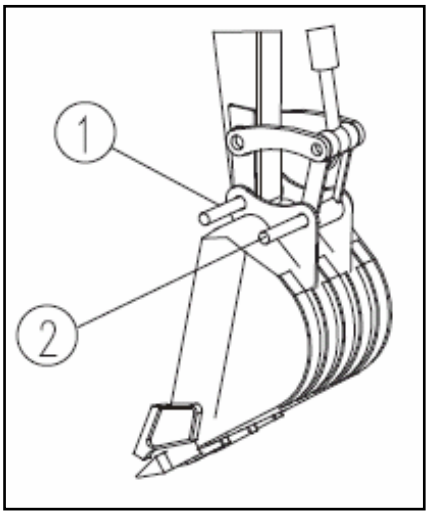

4. Insert the pin (1) inside the bucket hub, the spacer and the O-rings, in this order.
5. Lock the pin (1) with the side split-pin.
6. Lift slowly the bucket to be sure that all components are in the correct position.

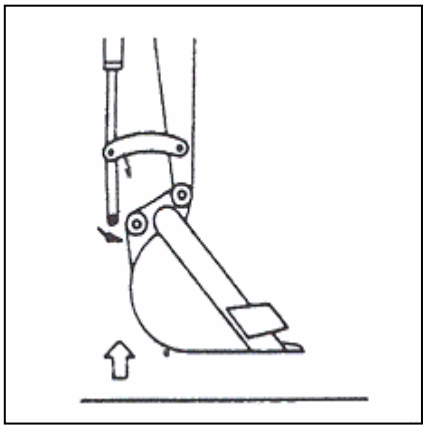

7. Extend the bucket cylinder to align the fixing joint pin (2). (Do not insert the O-ring now!).
8. Insert the pin (2) inside the bucket hub, the spacer, the O-rings and the joint, in this order. Then insert the pin (2) inside the O-rings (1) and the bucket hub.
9. Lock the pin (2) with the side split-pin.

18. MAINTENANCE

18.1 GUIDES TO MAINTENANCE

MAINTENANCE OPERATIONS

- **Do not carry out any inspection or maintenance operation that is not given in this manual.**
- **Perform maintenance in hard, flat ground.**

Check hour meter:
Every day check the hour meter, to see if the time has come out for any necessary maintenance to be carried out. Carry out all operations with method and schedule written in this manual. The maintenance carried out following the instruction given in this manual will prolong the machine life and performance, reducing problem and operating costs.

Missed respect of the instructions and scheduled operation, also maintenance performed by inexperienced or not allowed operators, will lapse the guarantee.

Warning plate:
Put the warning plate on the start key or on some lever where you are sure that it will be seen, so to avoid that other operator who, do not know you are performing maintenance, start the machine.

Use only original spare parts by YUCHAI ENGINEERING MACHINERY CO. LTD.:

Do not using original spare parts will lapse the guarantee.

Use only original lubricants by YUCHAI ENGINEERING MACHINERY CO. LTD.:
Choose oil and grease with useful characteristics for ambient temperature. Keep any other material out from oil and grease.
Do not using original oil and grease will lapse the guarantee.

Cleaner fluid:
Use only fluid useful to clean car windows and pay attention that impurity will not came in.

Keep the machine clean:
Keep always the machine clean. It make easier to inspect and check the machine. Also keep clean grease fittings, breathers and oil level gauges.

Precaution when washing machine:
- Never spray stream or water directly on the connectors and electrical components.
- Do not allow water to get on the monitor and controllers inside the operator's cab.
- Never spray stream or water directly on the radiator or oil cooler portions.

Pay attention to hot water and oil:
It is dangerous drain oil and/or coolant or unscrew top and filter immediately after engine stop. Let the temperature cool down!

Checking foreign materials in drained oil:
After oil is changed or filter are replaced, check oil and filters for metallic particles and foreign materials. If large quantity of them are found ask to **YUCHAI ENGINEERING MACHINERY CO. LTD.**

Fuel strainer:
if your machine is equipped with fuel strainer, do not remove it while refuelling.

Oil change:
check or change oil in a place where dust is scarce to keep foreign materials away from oils.

Avoid oil mixing:
Do not mix different kind of oil. If you have got some oil different from which is inside the machine do not add it but change it all.

Welding instruction:
1. Put the start key in 0 position.
2. do not apply more than 200 V continuously.
3. Connect grounding welder cable within 1 m from the area to be welded.
4. Avoid seals or bearings from being between the area to be welded and the position of grounding point.
5. Do not use the area around the work equipment pins or hydraulic cylinders as the grounding point.

Anti fire precautions:
during maintenance use not flames substance to remove grease or oil.

Checking undercarriage:
when working in rocky areas, check for damage to the undercarriage and for looseness, flaws, wear and damage in bolts and nuts. Loosen the track tension a little when working in such areas.

Pre and post work checks:
before starting work in mud, rain, snow or at seashore, check plugs and valves for tightness. Wash the machine immediately after work to protect components from rusting. Lubricate components more frequently then usual. Be sure to lubricate work equipment pins daily if they are submerged in water.

Dusty worksites:
When working at dusty worksites, do as follow:
1. Clean the air cleaner at shorter intervals than specified.
2. Clean the radiator core frequently to avoid clogging.
3. Clean and replace the fuel filter frequently.
4. Clean electrical components, especially the starting motor and alternator, to avoid accumulation of dust.

Objects in your pocket:
Keep your pockets free of loose objects which can fall out and drop into the machinery, especially when you work on the machinery while bending over it.

18.2 CONTROLS TABLE AND MAINTENANCE SCHEDULE

	Items to check	Maintenance intervals					
		Total worked hours					
		10	50	100	200	400	800
General	Oil, water, fuel leakage	●					
	Machine cleaning and pipeline inspections	●					
	Bolts and hydraulic connections fastening	●					
	Lamps, gauges and light	●					
	Engine conditions	●					
Fuel circuit	Fuel level and refuelling	●					
	Fuel tank cleaning			●			
	Admission pressure check					●	
	Fuel filter cleaning				●		
	Replacing cartridge fuel filter					●	
Cooling circuit	Check the rubber hoses and clamps	●					
	Check coolant level	●					
	Clean radiator fins					●	
	Replace coolant		△				●
Hydraulic system	Check the hydraulic oil level	●					
	Check the hydraulic oil, clean the suction filter						●
	Replace the oil filter cartridge				△	●	
Engine	Check engine oil level and refilling	●					
	Replacing engine oil		△		●		
	Replacing filter cartridge		△		●		
	Check V fan belt tension		△	●			
	Check valves clearance					△	●
	Check engine support tightness		△			●	
Air filter	Empty the dust collector	●					
	Cleaning core filter			●			
	Replace core filter					●	

● Ordinary maintenance operation.
△ First maintenance in breaking-in period.

	Items to check	Maintenance intervals					
		Total worked hours					
		10	50	100	200	400	800
Battery	Electrolyte level check and replace		●				
	Charge check and electrolyte density check					●	
Travel engine	Oil level check and replace				●		
	Oil replace						●
	Bolts and hydraulic connections fastening	●					
Crawler	Tension check	●					
Sprocket and roller idler	Sprocket bolts fastening		△			●	
	Oil level check and replace					●	
Lubrication	Grease fitting lubrication		●				
Controls and levers	Controls check	●					
	Levers check	●					
	Throttle lever check	●					
	Pedal check	●					

● Ordinary maintenance operation.
△ First maintenance in breaking-in period.

18.3 MAINTENANCE DURING BREAKING-IN PERIOD

Breaking-in period is 100 hours long as recommended; meanwhile you must pay attention to avoid over forcing the engine, working equipment and travel engine, to keep machine life and reliability as long.
Start working only when the engine has reached the correct temperature and hydraulic oil is up to 20 °C.
Do all maintenance operations with care during breaking-in period, in the intervals scheduled above and noted with △.

18.4 LUBRICANTS (OIL AND GREASE), COOLANT, FUEL CHARACTERISTICS

If do not differently specified, use only oil, fuel and coolant used for shipping by **YUCHAI ENGINEERING MACHINERY CO. LTD.**
When add oil never mix with other different.

<table>
<tr><th rowspan="2">TANKS</th><th rowspan="2">FLUID</th><th colspan="5">TEMPERATURE (°C)</th></tr>
<tr><th>-10</th><th>0</th><th>10</th><th>20</th><th>30</th></tr>
<tr><td rowspan="4">Engine oil pan</td><td rowspan="4">Engine oil</td><td colspan="2"></td><td colspan="3">SAE 30</td></tr>
<tr><td colspan="3">SAE 10W</td><td></td><td></td><td></td></tr>
<tr><td colspan="5">SAE 10W-30</td></tr>
<tr><td></td><td colspan="4">SAE 15W-40</td></tr>
<tr><td>Swing machinery case

Travel device</td><td>Oil</td><td colspan="5">SAE 80W-90</td></tr>
<tr><td rowspan="3">Hydraulic work equipment</td><td rowspan="3">Hydraulic oil</td><td colspan="5">SAE 10W</td></tr>
<tr><td colspan="5">SAE 10W-30</td></tr>
<tr><td></td><td colspan="4">SAE 15W-40</td></tr>
<tr><td rowspan="2">Fuel tank</td><td rowspan="2">Diesel</td><td>JIS 3</td><td colspan="4"></td></tr>
<tr><td></td><td colspan="4">JIS 2</td></tr>
<tr><td>Cooling system</td><td>Water</td><td colspan="2">Antifreeze super coolant (AF-ACL) 41%</td><td colspan="3"></td></tr>
</table>

TANK CAPACITY:

Fuel tank (l)	180
Engine oil (with filter) (l)	11
Hydraulic circuit (l)	210
Hydraulic oil tank (l)	120
Slewing system (l)	2.2
Travel engine (l)	2 x 2.5

18.4.1. Engine oil and hydraulic oil

- Engine and working equipment oil, are used in critical conditions (high temperature and high pressure), so they will deteriorate with use. Therefore use always oil useful for real temperature and pressure like as written in this manual. If the oil is not dirty, replace it at the interval scheduled in this manual.
- Pay attention to avoid foreign materials (water, particles, dusts, etc.) drop into the oil. Most of the problem that will come out depends on contaminant in oil. Be careful when manipulate oil to storage it or add in the machine.
- Never mix different kind of oil.
- Add only the right quantity of oil. To much oil or lack oil will cause damage.
- If hydraulic oil is not clear, maybe some air or water drop in it. In this case please contact **YUCHAI ENGINEERING MACHINERY CO. LTD.**
- When change oil, always change relative filter.

18.4.2. Fuel

- Fuel pump is a precision instruments. If fuel contain water or dust, it may not work properly.
- Be sure that no impurity will contaminate fuel when storage it or refuelling.
- Always use fuel specified in this manual.

! ATTENZIONE	LOW TEMPERATURE
Fuel may freeze below -15 °C, so is necessary change it with one useful for low temperature. **Never add antifreeze materials to the fuel.**	

- To avoid air condensation inside the fuel tank, refuelling it all ever day, when stop work.
- If engine will remain without fuel, or if filters are changed, you must breath the air inside.

18.4.3. Coolant

- Water from river, aqueduct, etc. contain a lot of calcium, so if you use it engine tube and radiator may are damaged. It will reduce efficiency heat exchange and engine over heating.
- When use antifreeze fluid, follow always the instruction written in this manual.
- Machine made by **YUCHAI ENGINEERING MACHINERY CO. LTD.** are sent with original antifreeze **YUCHAI ENGINEERING MACHINERY CO. LTD.** mixed with coolant. This antifreeze is also useful to reduce the system corrosion. Antifreeze fluid can be used for 2 years or 4000 worked hours.
- Antifreeze fluid is inflammable, be careful when handle it.
- Antifreeze fluid quantity mixed with water depends on the ambient temperature, to know the exact rate see the fluid characteristics.
- If coolant level is low, engine may raise to much the temperature and will damage.

18.4.4. Grease

- Grease is used to avoid scratch wear and noise emission from jointed part.
- Grease fitter do not included in maintenance section, are used for reviewing operation, so they do not need grease. When refill new grease the old one come out, so clean it with a cloth duster, to avoid that it will mix with dust or sand and damage rotating parts.

18.4.5. Oil and fuel storage

- Keep them always indoors, to avoid that some water or impurity will contaminate them.
- If you must put the tank outdoors, cover them with waterproof coat, or something else useful.

18.5 FILTER

- Filter are protection device very important. They prevent impurity drop in fuel, oils, air circuit damaging some important equipments.
- Replace filter, with timing and method written in this manual. If the machine works in critical areas or extreme weather condition, maybe it is necessary replace filter more often then is written in the manual, so do that.

FILTERS REPLACEMENT

- **Never try to clean filters with cartridge to use them again.**
- **Always replace filters with new ones.**

- When you replace oil filter, check if there are some foreign material (metal) inside. If is the case please contact **YUCHAI ENGINEERING MACHINERY CO. LTD.**
- Do not open the filter pack to much time before use. Always use original filter made by **YUCHAI ENGINEERING MACHINERY CO. LTD.**

18.6 ELECTRICAL WIRING

ELECTRICAL WIRING MODIFICATIONS

- **Do not remove or change electrical devices installed on the machine.**
- **Do not install any electrical device different from the ones from YUCHAI ENGINEERING MACHINERY CO. LTD.**

- If cables become damp or will damage, the electrical wiring may reduce machine safety and acting.
- If you wash the machine, be careful to prevent electrical wiring wets.
- To avoid radio interference between control device and walkie-talkie or radio system please check from **YUCHAI ENGINEERING MACHINERY CO. LTD.** before install anything.
- If you work near the seashore, keep clean the electrical wiring o avoid corrosion.
- If you install a fan or other electrical device connect it to an independent connector.
- Assistance operations on electrical wiring are:
  1. alternator belt tension;
  2. alternator belt wear;
  3. battery electrolyte level.

18.7 MAINTENANCE TOOLS AND TORQUE LIST

18.7.1. Needed tools for maintenance

The tools showed below are needed to make maintenance.

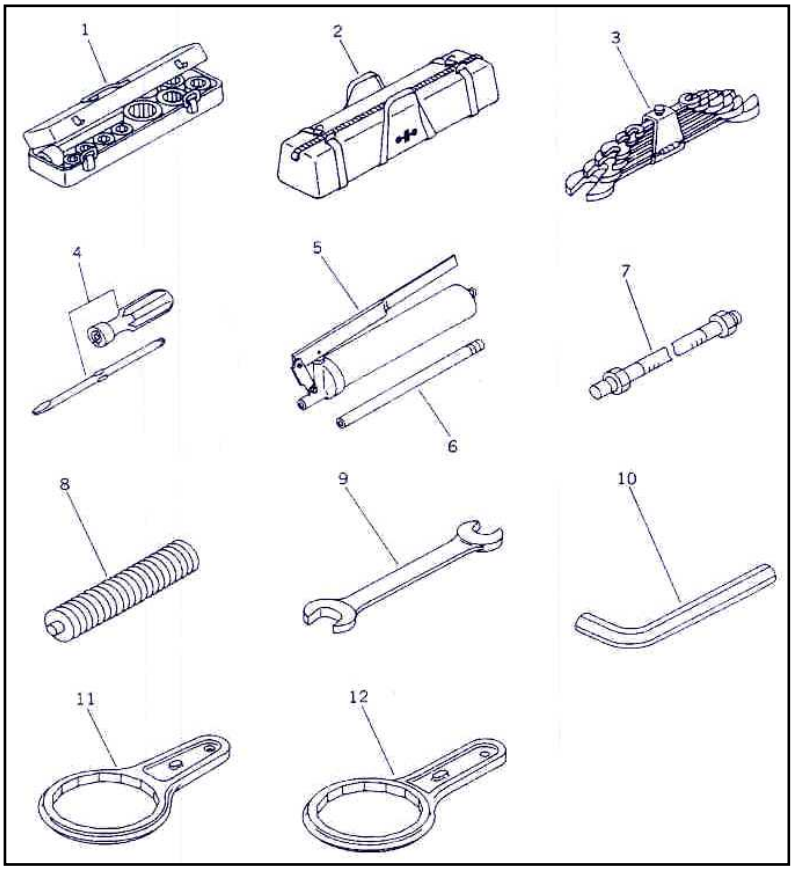

No	Tool
1	Socket wrenches (10 ÷ 24 mm) with extension and handle.
2	Bag tool.
3	Wrench set (8 ÷ 32 mm).
4	Screwdriver with interchangeable head.
5	Grease pump.
6	Nozzle.
7	Nozzle for rubber shoes.
8	Grease cartridge.
9	Wrench set (36 e 41 mm).
10	L wrench for socket hexagonal.
11	Wrench engine fuel filter
12	Wrench engine oil filter

18.7.2. Standard torque list

Unless otherwise specified, tighten the metric bolts and nuts to the torque shown in the table. The tightening torque is determined by the width across the flats (b) of the buts and bolts.
If it is necessary to replace any nut or bolt, always use an original spare part by **YUCHAI ENGINEERING MACHINERY CO. LTD.** and of the same size as the part that was replaced.

Thread diameter of bolt (mm) (a)	Width across flat (mm) (b)	Tighten torque (kg · m)	
		Nominal value	Admissible value
M6	10	1.35	1.2-1.5
M8	13	3.2	2.8-3.5
M10	17	6.7	6.0-7.5
M12	19	11.5	10.0-12.5
M14	22	18.0	16.0-20.0
M16	24	28.5	25.0-31.5
M18	27	39.0	35.0-43.5
M20	30	56.0	50.0-62.0
M22	32	76.0	67.5-84.5
M24	36	94.5	84.0-105.0
M27	41	135.0	120.0-150.0
M30	46	175.0	155.0-195.0
M33	50	225.0	200.0-250.0
M36	55	280.0	250.0-310.0
M39	60	335.0	295.0-370.0

NOTICE:
When tightening panels or other parts having tightening fixture made plastics, be careful not to use excessive tightening torque: doing so will damage the plastic parts.

19. PERIODICAL REPLACEMENT OF SAFETY CRITICAL PARTS

To ensure safety at all times when operating or driving the machine, the user of the machine must always carry out periodic maintenance. In addition to further improve safety, the user should carry out periodic replacement of the parts given in the table. These parts are particularly closely connected to safety and fire prevention.
The materials changes as time passed, or they easily wear or deteriorate. However, it is difficult to judge the condition of the parts simply by periodic maintenance, so they should always be replaced after a fixed time has passed, regardless of their condition. This is necessary to ensure that they always maintain their function completely. However, if these parts show any abnormality before the replacement interval has passed, they should be repaired or replaced immediately.
If the hose clamps show any deterioration, such as deformation or cracking, replace the clamps at the same as the hoses.
When replacing the hoses, always replace the O-rings, gaskets and other such parts at the same time.

Ask to **YUCHAI ENGINEERING MACHINERY CO. LTD.** to replace critical parts.

19.1 DAILY CHECKING OR EVERY 10 HOURS

19.1.1. General check

- Check for oil, water and fuel leakage (if the case refill all fluid after you eliminated the defect)
- Check for cutting, cracks or deformations on connection, muffs, accessories and machine frame.
- Check for tightening and connection of hydraulic equipments.
- Clean and check all controls (lever and pedal), lights and gauges.
- Check engine state, particularly for exhaust colour and noise emission.
- Check fuel level and refuel if necessary.
- Check hydraulic oil level and refill it if necessary.
- Check engine oil level and refill it if necessary.

19.1.2. Check, Clean and Replace air filter

AIR FILTER CLEANING

- **Do not clean or replace air filter while engine is running.**
- **If use compressed air to clean air filter always use protective eyeglasses.**

Clean and check:

Upper advanced filter

1. Go up the hood, on the machine rear, unscrew the top and remove the advanced filter.

2. Take out the filtering element then use a clean cloth duster to close the air tube to prevent dust entering. Clean the external pan.
3. Clean the filtering element (5). To do this blow compressed dried air (less then 700 kPa, 7 kg/cm^2, 7 bar) starting from internal element alongside the holes, the blow the air outside the element along the creases.

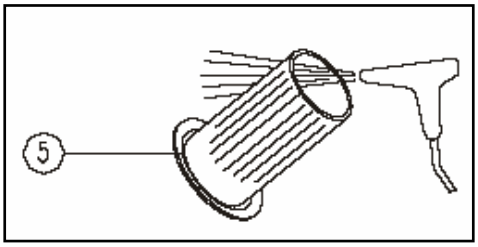

NOTICE:
When you clean the element, do not hit or beat it with anything.
Replace the element that has cleaned 4 times or which has been used for 400 h. Replace the elements if you find out small holes or spoiled part. Do not use an element which has creases, holes or gaskets damaged.

4. Remove the cloth used like top at point 2.
5. Put the cleaned element inside the case then close the top with his clip.

Internal filter

6. Unscrew the bolt which holds the filter inside the engine hood.

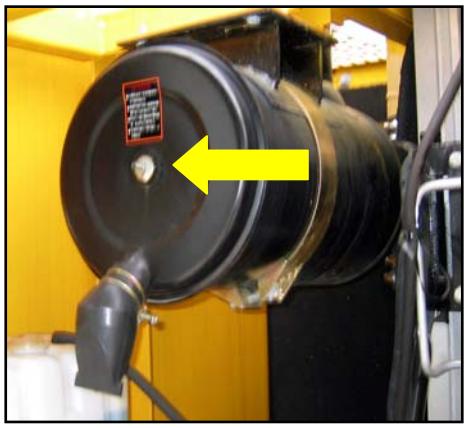

7. Follow the instruction from 2 to 5.

19.1.3. Check coolant level and pipe preservation

When the engine is cold check the coolant level as is specified in paragraph 7.1.1 and the preservation of coolant pipeline.

19.1.4. Check bolt torque of the sprocket

Using a dynamometric wrench, check the correct torque of the nuts which fix together machine frame and sprocket in both machine side. The torque value is 330 ÷ 430 Nm.

19.1.5. Checking and adjusting rubber shoes tension (for machine with rubber shoes only)

If rubber shoes are in the following condition must be repaired so contact **YUCHAI ENGINEERING MACHINERY CO. LTD.** for repairing or replacing.

Height of lug:

If lug height “a” is reduced by wear, the drawbar pull will drop. If “a” is less then 5 mm, replace with a new part.

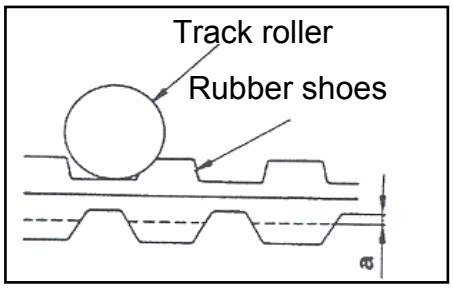

If the lug wear and the steel cord inside the shoe is exposed for two links or more, replace with a new part.

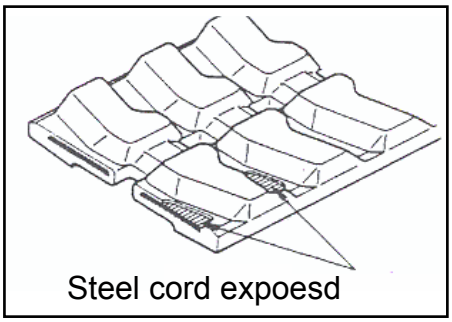

If more the half of the steel cord layer on one side is cut, replace with a new part.

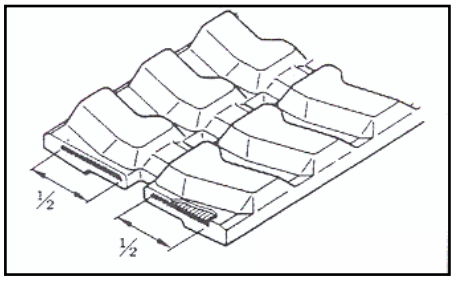

If the rubber core has separated at one place or more, replace with a new part.

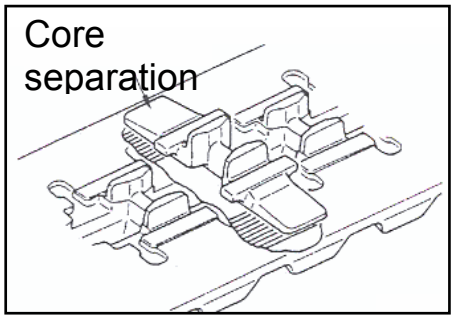

Rubber shoe tension:
If the rubber shoes is still slack even when grease is pumped in, replace with a new part or replace the seal inside the cylinder.

When you want to know if your rubber shoes must be replaced, repaired or you can use them again please contact **YUCHAI ENGINEERING MACHINERY CO. LTD.**

If cracks between the rubber shoe lugs increase to a size of approax. 60 mm the rubber shoes must be repaired. Even if the track is small and short, if the steel cord can be seen inside, carry out repairs immediately.

CHECK AND ADJUSTING TRACK TENSION:

MACHINE LIFTING

- **Two operators must carry out these operations. One must travel the machine according to signal from the other. The track tension cam be verified only when the track is lifted.**
- **Be careful do not low down the machine while the operator is checking the tension.**

The wear of the rubber shoe will vary with the working conditions and type of soil. Therefore, it is necessary to inspect the wear and track tension frequently.
After fitting new parts, be sure to carry out the first inspection after 30 hours of use. In this while, ad just frequently the tension until the initial slack is complete, to avoid rubber shoe falling down.

Tension adjustment:

1. Park the machine on a level and solid ground.
2. Put the dozer blade on the machine's rear, then extend the blade cylinder completely until the track will lift a little.

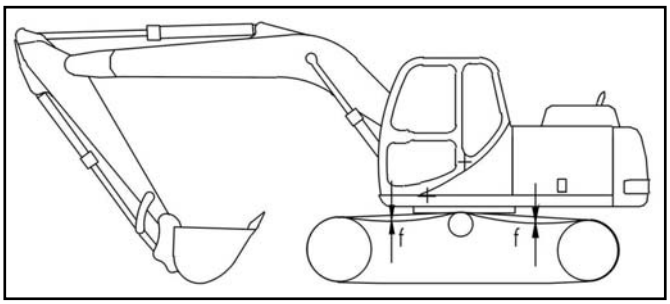

The standard tension is optimal when the clearance between the roller surface of the track shoe and the track roller tread at the second track roller from the sprocket is as showed in the table below:

Clearance	**Standard value**	20 – 40 mm
	Slack track	min. 40 mm

SLACKS TRACKS

If the machine works with slack tracks they may drop off or wear too fast.

Tension adjusting:

GREASE UNDER PRESSURE

Grease inside the adjusting mechanism is under high pressure, if it coming out from lubricator point can penetrate or hit your body causing injury or death. For this reason:

- **do not loosen lubricator (1) more then one turn,**
- **do not loosen any other part than lubricator.**

If the tension is different from what is specified above, do as follow:

Increasing the tension:

1. Prepare a grease gun, remove the lubricator top (1), pump in grease through lubricator hole (2).

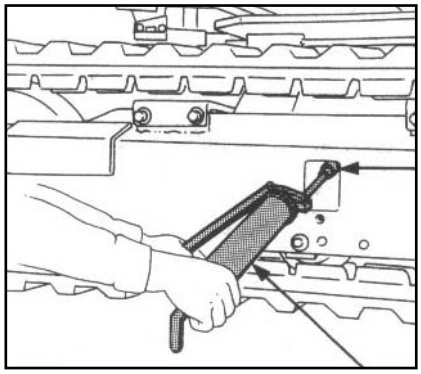

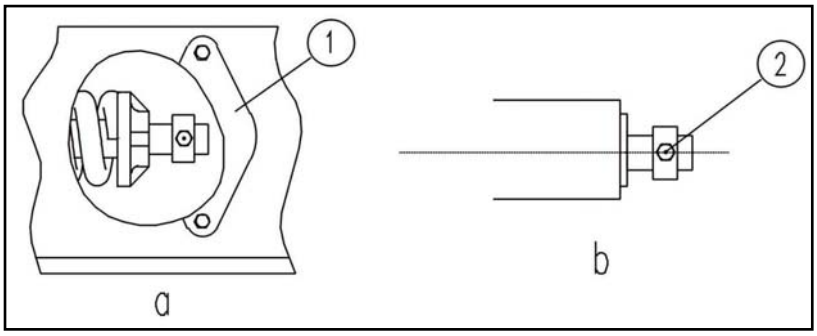

2. Travel the machine backwards and forwards to check if the track tension has been achieved.
3. If can not ad just the correct tension with this procedure please contact **YUCHAI ENGINEERING MACHINERY CO. LTD.**

Decrease the tension:

GREASE UNDER PRESSURE

Remove the grease from the strain crawl cylinder only as shown in procedure below.

1. Open the top (1) then loosen the lubricator (2) gradually on the strain crawl cylinder to realise the grease.
2. Turn the lubricator a maximum of one turn.
3. If the grease does not come out smoothly, move the machine backwards and forwards.
4. Tighten the lubricator.
5. Travel the machine backwards and forwards to check if the track tension has been achieved.

REPLACE RUBBER SHOES

MACHINE LIFTING

- **Two operators must carry out these operations. One must travel the machine according to signal from the other. The track tension cam be verified only when the track is lifted.**
- **Be careful do not low down the machine while the operator is checking the tension.**

GREASE UNDER PRESSURE

Grease inside the adjusting mechanism is under high pressure, if it coming out from lubricator point can penetrate or hit your body causing injury or death. For this reason:

- **do not loosen lubricator (1) more then one turn,**
- **do not loosen any other part than lubricator.**

What prepare:

- Grease gun;
- Steel pipe.

Removal of rubber shoe:

GREASE UNDER PRESSURE

- **Remove the grease from the strain crawl cylinder only as shown in procedure below.**
- **Check that all the grease has been released before rotate the sprocket to remove the rubber shoe (item 4).**

1. Park the machine on a level and solid ground.
2. Put the dozer blade on the machine's rear, then extend the blade cylinder completely until the track will lift a little.

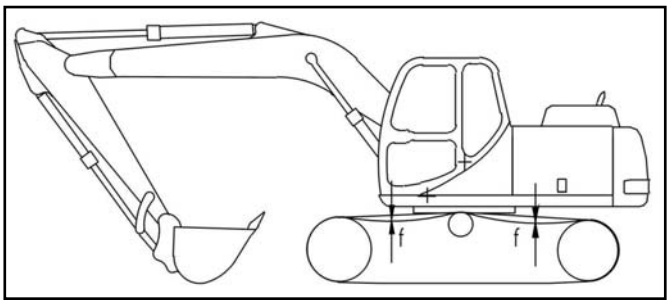

3. Lower down the bucket then extend the boom until the machine frame will lift a little. When do it operate with the lever slowly.
4. Loosen the lubricator the train crawl cylinder slowly, to drain the grease. Turn the lubricator a maximum of one turn.
5. Insert the steel pipes inside the rubber shoes, rotate the sprocket in reverse, so that the steel pipes make the rubber shoes come up from the idler, then slide to the side to remove.

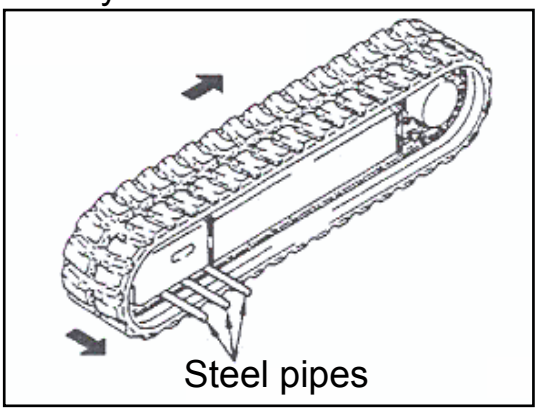

Installation of rubber shoes

1. Park the machine on a level and solid ground.
2. Put the dozer blade on the machine's rear, then extend the blade cylinder completely until the track will lift a little.
3. Lower down the bucket then extend the boom until the machine frame will lift a little. When do it operate with the lever slowly.
4. Mesh the rubber shoes with the sprocket and fit it over the idler.
5. Rotate the sprocket in reverse, then push in the rubber shoe and stop the rotation.

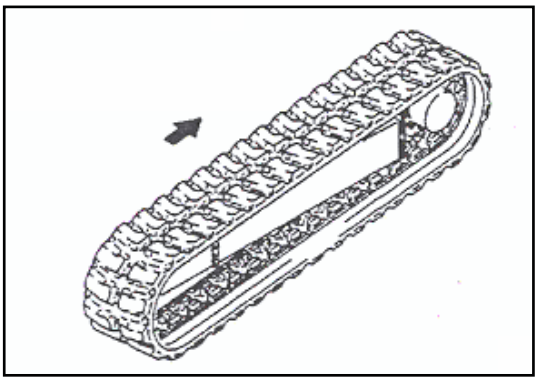

https://truckmanualshub.com/

6. Mesh the steel pipes with the rubber shoe, then rotate the sprocket again and fit the rubber shoe securely on the idler.

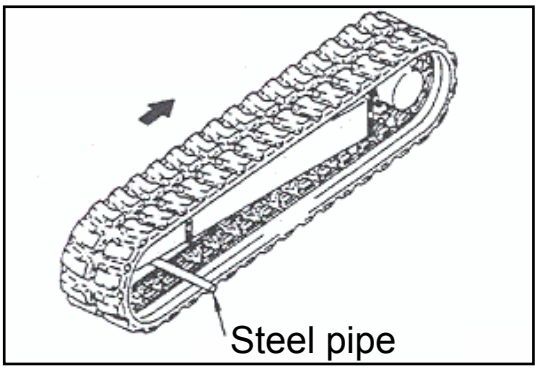

7. Stop the rotation and check that the rubber shoe is securely fitted to the sprocket and idler.

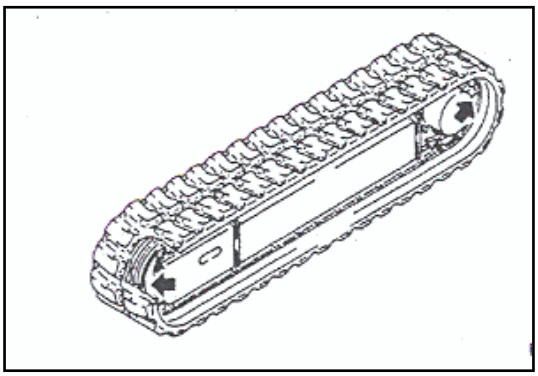

8. Adjust the tension of the rubber shoes.
9. Check that the track tension is correct and that the rubber shoe is correctly meshed on the sprocket and idler, then lower the machine to the ground.

19.1.6. Checking and adjusting steel track tension (for machine with steel track only)

CHECK AND ADJUSTING TRACK TENSION:

MACHINE LIFTING

- **Two operators must carry out these operations. One must travel the machine according to signal from the other. The track tension cam be verified only when the track is lifted.**
- **Be careful do not low down the machine while the operator is checking the tension.**

The wear of pins and bushings on the undercarriage will vary with the working conditions and soil properties. Therefore is necessary check the wear and tension of the tracks.

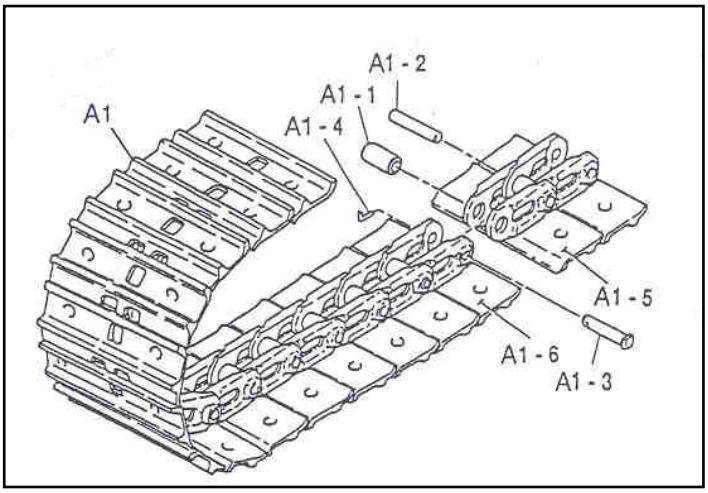

Tension adjustment:

1. Park the machine on a level and solid ground.
2. Put the dozer blade on the machine's rear, then extend the blade cylinder completely until the track will lift a little.
3. Lower down the bucket then extend the boom until the machine frame will lift a little. When do it operate with the lever slowly.

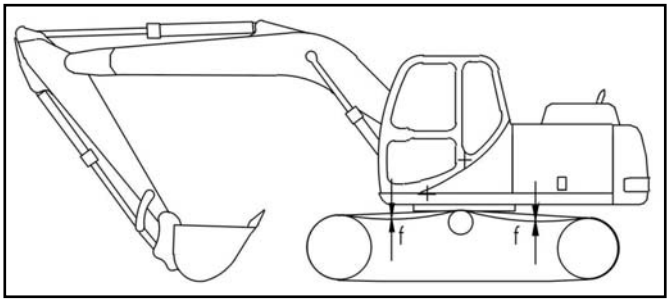

The standard tension is a clearance of 20 ÷ 40 mm between the roller surface of the track shoe and the track roller tread at the second track roller from the sprocket.

Tension adjusting:

GREASE UNDER PRESSURE

Grease inside the adjusting mechanism is under high pressure, if it coming out from lubricator point can penetrate or hit your body causing injury or death. For this reason:

- **do not loosen lubricator (1) more then one turn,**
- **do not loosen any other part than lubricator.**

If the tension is different from what is specified above, do as follow:

Increasing the tension:

1. Prepare a grease gun, remove the lubricator top (1), pump in grease through lubricator hole (2).

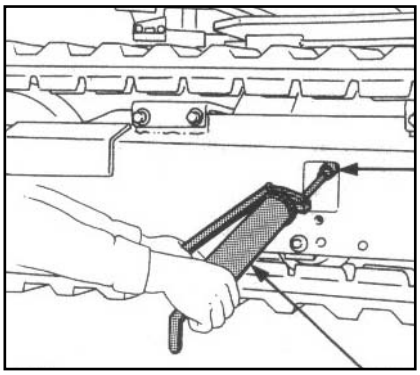

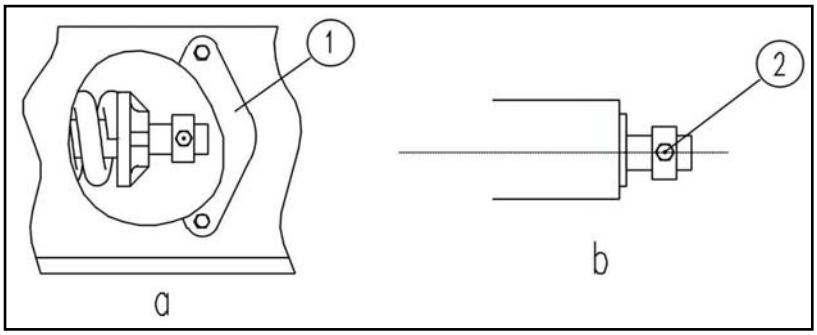

2. Travel the machine backwards and forwards to check if the track tension has been achieved.
3. Go on with grease pumping until S become 0 mm. If the tension is too low, then the pin and the bearing are too worn, so replace them. Please contact **YUCHAI ENGINEERING MACHINERY CO. LTD.** to purchase the new parts.

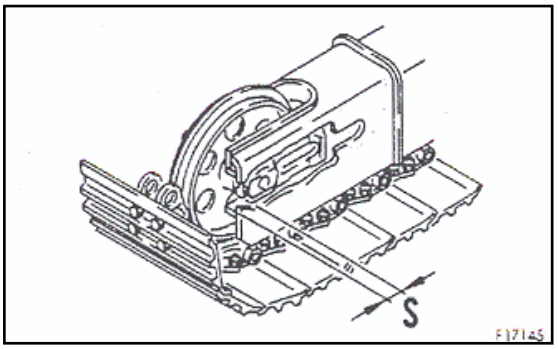

https://truckmanualshub.com/

Decrease the tension:

GREASE UNDER PRESSURE

Remove the grease from the strain crawl cylinder only as shown in procedure below.

1. Open the top (1) then loosen the lubricator (2) gradually on the strain crawl cylinder to realise the grease.
2. Turn the lubricator a maximum of one turn.
3. If the grease does not come out smoothly, move the machine backwards and forwards.
4. Tighten the lubricator.
5. Travel the machine backwards and forwards to check if the track tension has been achieved.

19.2 MAINTENANCE EVERY 50 HOURS

The maintenances scheduled every 10 hours must be done together with maintenances every 50 hours.

19.2.1. Lubricating

PRECAUTIONS WHILE LUBRICATING

All lubricating operations must be done with the engine turned off.

What prepare:

- Grease gun.

1. Bend the work equipment as is showed in picture beside, the low it down and stop the engine.

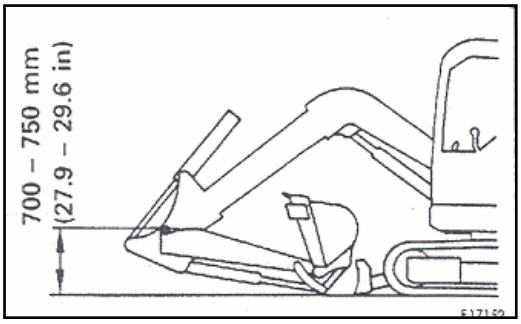

2. Clean the grease fittings.
3. Using a grease pump, pump in grease through the grease fittings.
4. After greasing, wipe off any old grease that was pushed out.

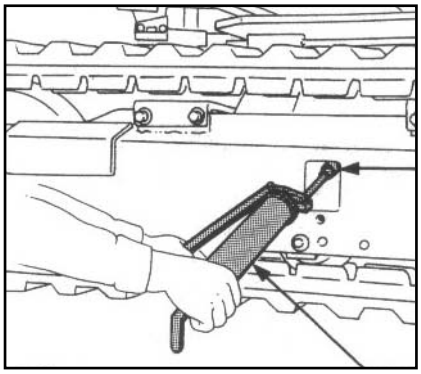

Grease fittings position:

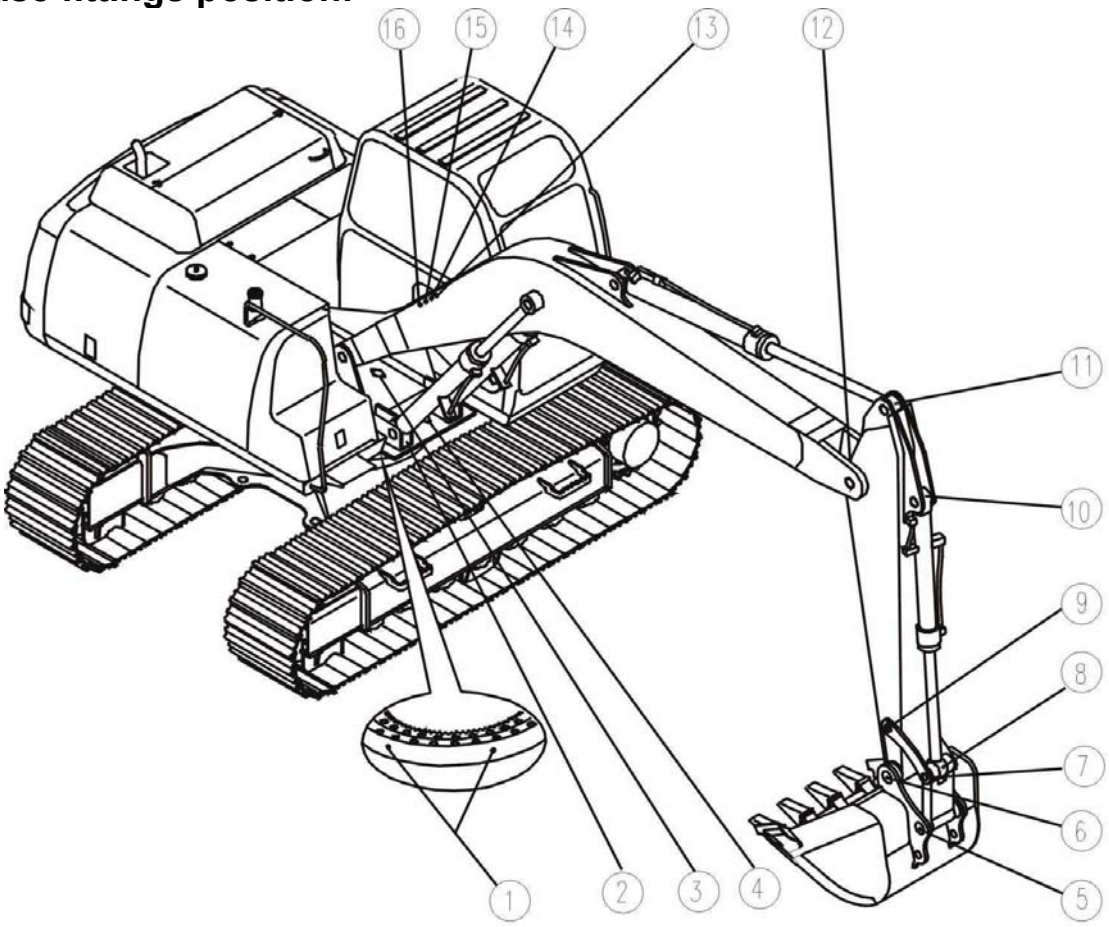

19.2.2. Check electrolyte level

1. Wipe off any dust from battery covers, to prevent dust come in.
2. Remove the caps of the battery's elements.
3. Electrolyte level must be 10 ÷ 15 mm over the electrode plates.
4. Add only distilled water.
5. Put on the caps.

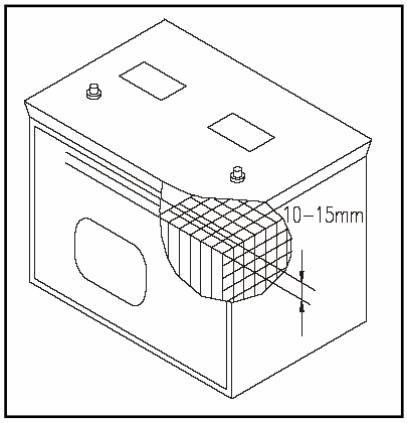

19.3 MAINTENANCE EVERY 100 HOURS

The maintenances scheduled every 10 and 50 hours must be done together with maintenances every 100 hours.

19.3.1. Cleaning fuel filter and water separator

What prepare:

- a pan to collect drained fuel;
- a wrench for hexagonal nuts.

1. Put the pan under the drain plug (3) which is under the tank.
2. Open the plug and drain dust and water accumulated in tank bottom.
3. When clean fuel start to drain, close the plug (3).
4. Remove the top (1) and the filter on the refuelling muff (2).
5. Clean the filter (2) and put it on again.
6. Check the fuel level in the pipe gauge, and if is necessary rueful.
7. Close the top (1).

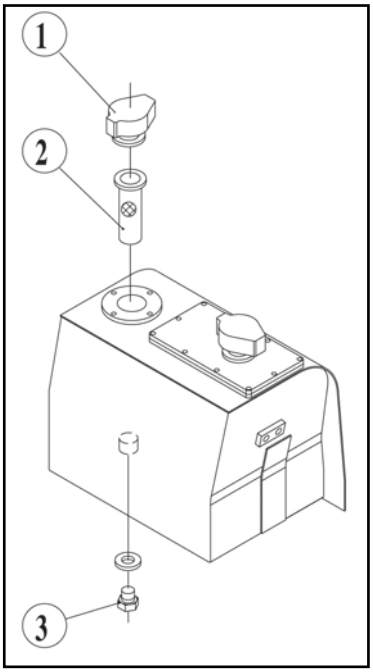

PRECAUTIONS WITH FUEL HANDLING

Be careful to prevent fuel drop on you.

19.3.2. Fan belt adjusting

Check the fan belt tension:
the belt tension should normally deflect by 10 ÷ 15 mm when pressed with the finger at a point midway between alternator pulley and fan pulley.

Adjusting the fan belt tension:
What prepare:
- a metal bar;
- a piece of wood.

1. Put the metal bar between the alternator (3) and the engine, to keep the alternator fixed. Put the piece of wood between the metal bar and the alternator, to prevent the latest may be damaged.

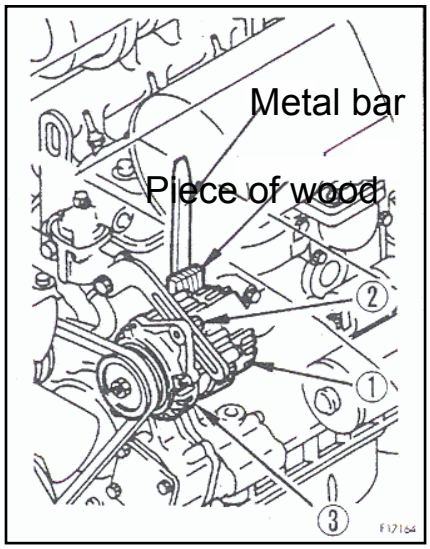

2. Loose bolt (1)and nuts (2).
3. Move the alternator (3) so that the fan belt deflect is in 10 ÷ 15 mm.
4. Tighten bolts and nuts (1) e (2) to fix the alternator (3).

Check that all pulleys are not damaged, also that the V rut is not damaged. Particularly, check if the belt do not touch the bottom of the V rut.
If the belt can not be adjusted, or if it cut or damaged please contact **YUCHAI ENGINEERING MACHINERY CO. LTD.** to replace it.

19.4 MAINTENANCE EVERY 200 HOURS

The maintenances scheduled every 10, 50 and 100 hours must be done together with maintenances every 200 hours.

19.4.1. Replacing oil engine and oil filter cartridge

PRECAUTION WITH PARTS AT HIGH TEMPERATURE

When the engine run, the oil is at high temperature, so wait for the temperature cool down before operate.

What prepare:

- a wrench for engine oil cartridge filter.
- a pan to collect drained oil.

1. Put the pan under the drain plug below the oil sump.
2. Unscrew the drain plug slowly, to avoid that oil drop on you, the wait for oil draining.
3. Remove the top and the gasket-tight.
4. Check the drained oil and if there are excessive metal particles or foreign material, please contact **YUCHAI ENGINEERING MACHINERY CO. LTD.**
5. Put on the gasket-tight then screw the drain plug.
6. Using a filter wrench, turn filter cartridge (1) in anticlockwise. If this operation is carried out immediately after stopping the engine a large amount of oil will come out, so wait for 10 minutes before starting the operation.
7.

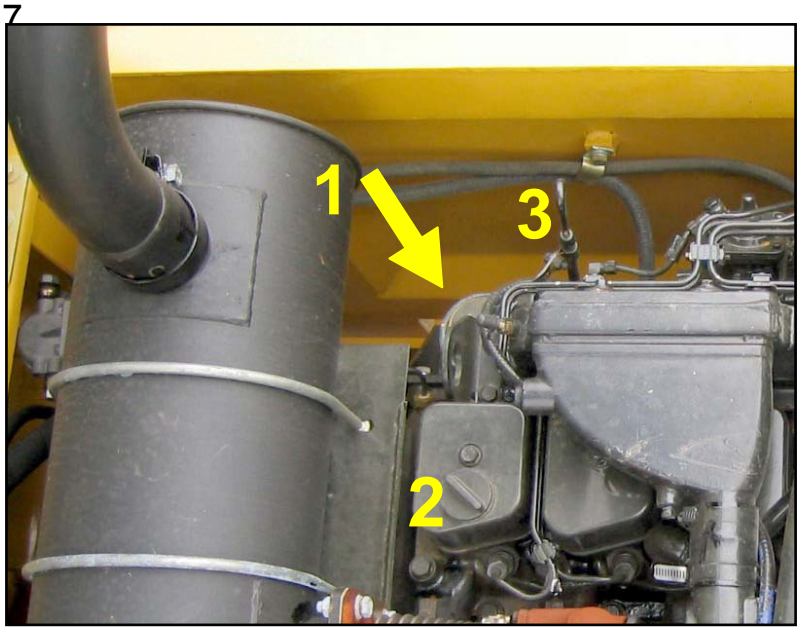

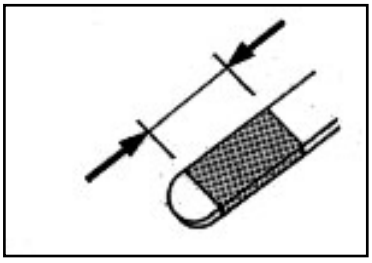

Clean the filter holder.

8. Coat the packing surface of a new filter cartridge with engine oil (or coat it thinly with grease), then install it to the filter holder. When installing, tighten until the packing surface contacts the seal surface of the filter holder, then tighten it up ½ o ¾ of a turn.
9. After replacing the filter cartridge, add engine oil through oil filler (2) until the oil level on the dipstick (3) is between the two reference lines.
10. Let run the engine at idling for a short time, then stop it and check that the oil level is between the two reference lines.

FILTER REPLACING

Even the machine does not work for 200 hours, then oil and cartridge must be replaced after 6 months.

19.4.2. Check and refill oil in the sprocket

PRECAUTION WITH OIL AT HIGH TEMPERATURE

After the machine worked, oil is at high temperature, so wait for temperature cool down before operate.

What prepare:

- a hexagonal wrench.
- a pan to collect drained oil.

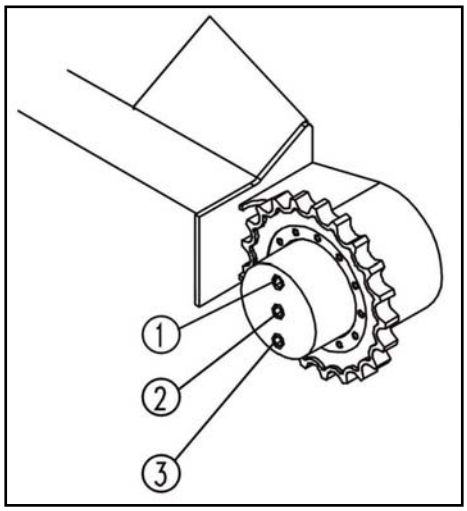

1. Park the machine on a level and solid ground, also keep the sprocket in the position showed beside.
2. Put a container (pan) under the drain plug (2).
3. Using the hexagonal wrench remove the breathe plug (1) and leave the pressure goes down.
4. Close the breathe hole and check that the oil level is near the bottom of the plug hole.
5. If the oil level is low, add engine oil through the filling hole (3). Add engine oil until the oil flows out from level plug hole (2).
6. Screw the plugs (2).

19.4.3. Oil level in swing gear

PRECAUTION WITH OIL AT HIGH TEMPERATURE

After the machine worked, oil is at high temperature, so wait for temperature cool down before operate.

What prepare:

- a pan to collect drained oil.

1. Put a container (pan) under the reduction unit.
2. Check the oil level with the lipstick.
3. If the oil level is low, add it through the filling hole.
4. Clean the lipstick and check the oil level again.

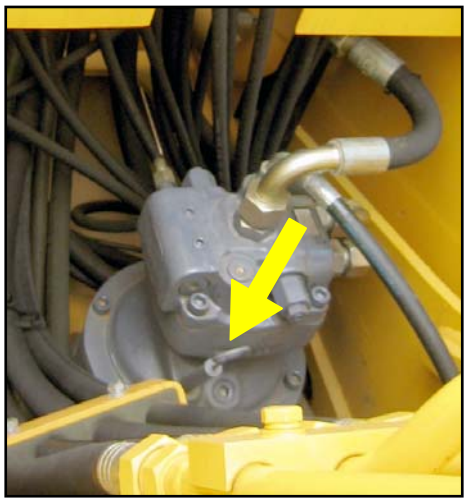

19.4.4. Cleaning water separator filter

The water separator filter is installed in the fuel pipeline.

If the ring (A) of the water separator is at the bottom of case there is no water.

If the ring (A) is floating (B), there is water up to the bottom of the ring, so drain the water as follows.

1. Close the tap (C).
2. Unfasten the ring (D), then remove the case and throw out the water inside.
3. Set the case in position then tighten the ring (D) to install it.
4. St the tap (C) in open position.

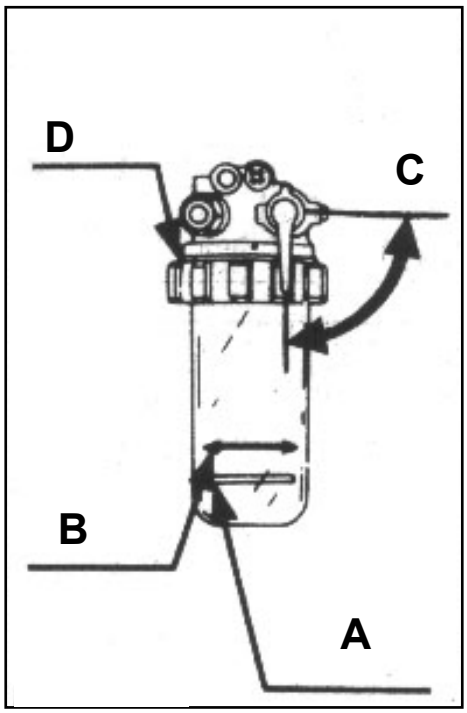

Procedure to breath out the air

1. Check the tightening of the all gaskets in the fuel pipeline.
2. Loosen the draining screws (3) on the fuel filter.
3. Turn on the clean pump (1) pushing several times until no air bubbles come out from the draining screws.
4. Tighten the drain screws. (3).

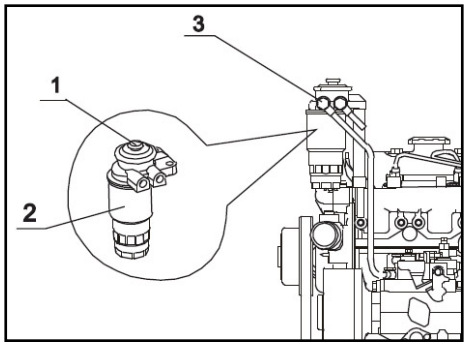

FUEL LEAKAGE

After water separator filter changing start the engine and check for fuel leakage.

NOTICE: If the engine has run without fuel, make the same procedure.

19.5 MAINTENANCE EVERY 400 HOURS

The maintenances scheduled every 10, 50,100 and 200 hours must be done together with maintenances every 400 hours.

19.5.1. Check intake pressure

Engine efficiency is due to the injector's nozzle state, so keep under control the follows signal of injector bad working:

- Abnormal noise from one or more cylinder.
- Engine over heating.
- Efficiency reduction.
- Black smoke out the muffler.
- Increasing of fuel consumption.

The trouble above mentioned can come out from:

- Bad tight of the suction / exhaust valves.
- Bad setting of the injection pump.
- Dust inside the fuel filter.
- Bad fuel quality.
- To much water inside the fuel tank.

To inspect and ad just the intake pressure of the injector, or to solve the problem listed above please contact **YUCHAI ENGINEERING MACHINERY CO. LTD.** which has got special tools and know-how to repair the machine.

19.5.2. Fuel filter cartridge replacement

What prepare:

- a pan to collect the drained fuel.

1. Open the engine hood.
2. Put the pan under the fuel filter to prevent fuel ground drain.
3. Using the appropriate key unlock the ring, then remove the pan to extract the filter and his O-ring.
4. Clean the filter holder and put inside a new filter.
5. After fuel filter replacing breath out the air from the fuel pipeline.

Procedure to breath out the air is described in paragraph 19.4.3.

FUEL LEAKAGE

Check fuel leakage after fuel filter replacing, by starting the engine.

19.5.3. Check and clean radiator fins

1. Open the engine hood.
2. Use compressed air to remove mud, dust, leaves etc. which obstruct the radiator fins.

PRECAUTION WHEN USE COMPRESSED AIR

Do not point air gun to yourself, it may cause injuries. corpo, c'è pericolo di lesione. Wear always protective eyeglasses, gloves and protective shoes.

PRECAUTION WHEN USE COMPRESSED AIR

To prevent fins damage, keep enough distance between air gun and fins. If fins will be damaged water leakage is possible and/or engine over heating.

19.5.4. Replacing the hydraulic oil return filter

PRECAUTION WITH OIL AT HIGH TEMPERATURE

- **After the machine operated, hydraulic oil is at high temperature, so wait for temperature cool down.**
- **Unfasten the top slowly to reduce the pressure inside the oil tank.**

1. Park the machine on a level and solid ground.
2. Start the engine and keep it at he low idling, lower down the dozer blade, then raise the boom and extend the arm and bucket cylinders, until the machine will be as showed beside.

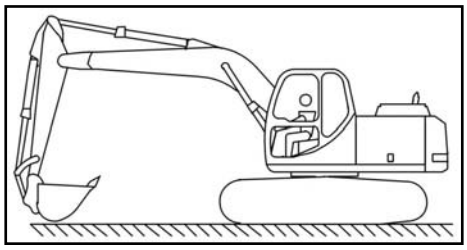

3. Let the engine run for 5 minutes, then stop it.
4. Demount the 4 bolt on the oil tank top (1).
5. Unscrew the cover (2) of oil tank.
6. Remove the hood (3) of the hydraulic oil tank.
7. Remove the spring (4), the valve (5) and the return filter from the tank.

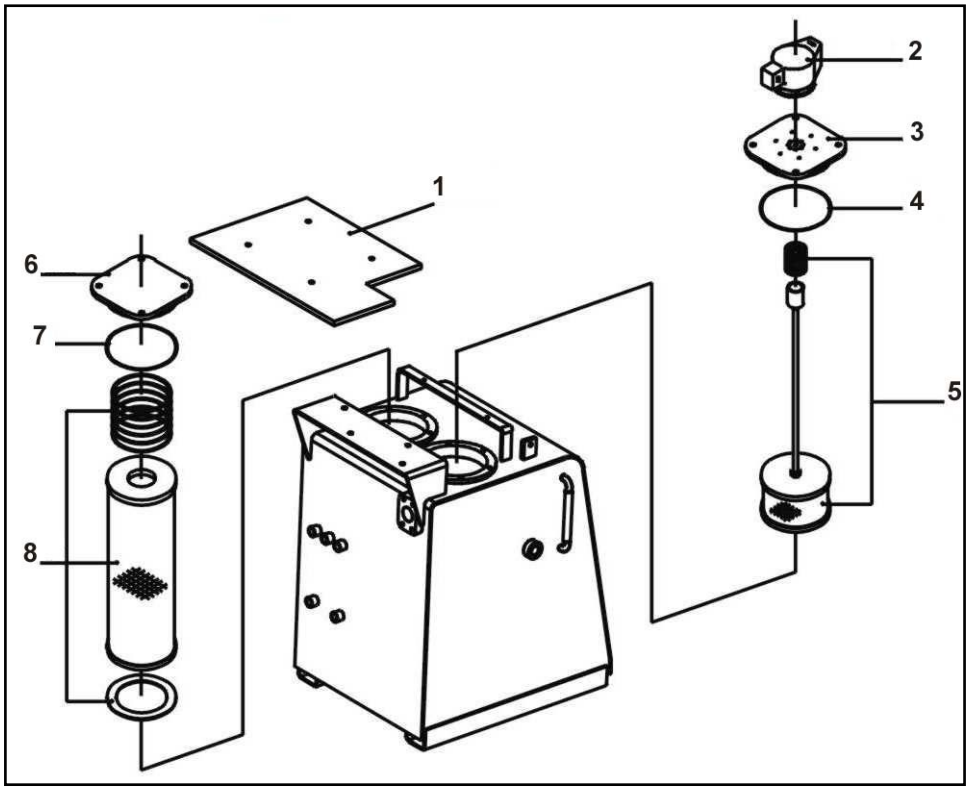

8. Clean the dismantle pieces with the grease remover fluid, install a new filter.
9. Turn on the engine and move all arms slowly.
10. Check the oil level through the gauge and refill if it is necessary.

19.5.5. Replacing pilot filter cartridge

REPLACING THE PILOT FILTER

Before replacing filter make sure to breathe out the air and reduce the pressure.

- a wrench for engine oil cartridge.
- a pan to collect the drained oil.

1. Park the machine on a level and solid ground.
2. Start the engine and keep it at he low idling, lower down the dozer blade, then raise the boom and extend the arm and bucket cylinders, until the machine will be as showed below.

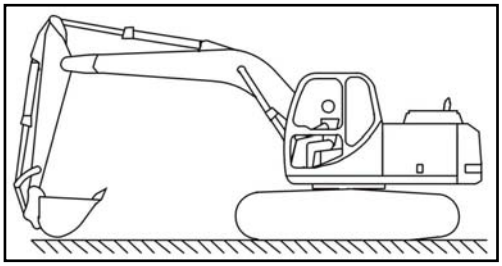

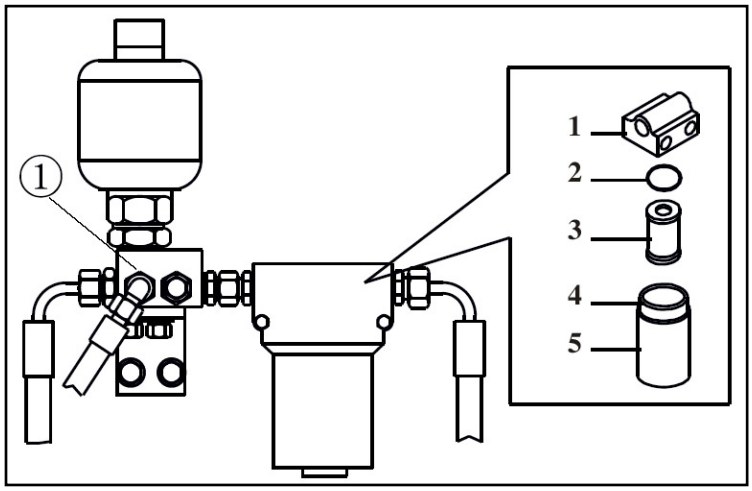

3. Let the engine run for 5 minutes, then stop it.
4. Unscrew and dismantle the cartridge (5) with its wrench.
5. Clean the keeping cartridge and put a new O-ring (2).
6. Insert a new cartridge (3).
7. Put thin layer of oil on the contact surface and screw by hand.
8. Tight with torque about 25 ÷ 35 Nm.
9. Pressurize the hydraulic tank. To do this start the engine and run it at low speed, operate the boom, arm and bucket cylinders then let the engine run for 3 minutes. Refill the oil if necessary.

19.5.6. Engine bolts supports tightening

With a dynamometric wrench check the correct torque of the engine supports. The nominal value is in the range 45 ÷ 55 Nm.

19.5.7. Replacing the air filter cartridge

REPLACING THE AIR FILTER

Do not operate on air filter while the engine runs.

Replacing:

Upper advanced filter

1. Go up the hood, on the machine rear, unscrew the top and remove the advanced filter.

Internal filter

2. Unscrew the bolt which holds the filter inside the engine hood.

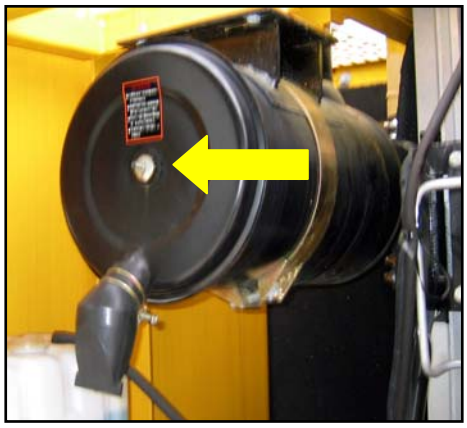

3. Install a new filter.

19.5.8. Sprocket bolts fastening

With a dynamometric wrench check the correct torque of the sprocket bolts. The nominal value is 180 ÷ 210 Nm.

19.5.9. Oil level in the front idler

PRECAUTION WITH OIL AT HIGH TEMPERATURE

- **After the machine operated, oil is at high temperature, so wait for temperature cool down.**

What prepare:

- a pan to collect the drained oil.

1. Park the machine on a level and solid ground.
2. Unfasten the bolt (1) and the drain plug (2) for each idler.
3. Unfasten the pin (3) of the front wheels.
4. Check the oil level is just below the refilling hole.
5. Fasten all demounted parts.

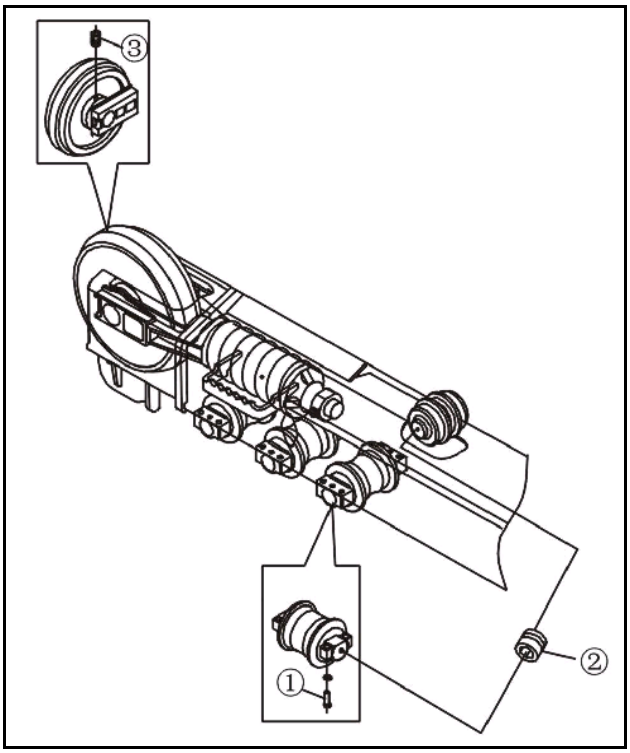

19.6 MAINTENANCE EVERY 800 HOURS

The maintenances scheduled every 10, 50,100, 200 and 400 hours must be done together with maintenances every 800 hours.

19.6.1. Cleaning and replacing cooling system

COOLING SYSTEM CLEANING

- **The engine, muffler, radiator and many other parts of the machine are hot directly after the engine is stopped.**
- **When performing maintenance, be sure to keep your body and clothing away from moving part. Standing at the back of the machine while the engine is running is extremely dangerous, as the machine could move suddenly. NEVER stand at the back of the machine while the engine is running.**
- **Never remove the radiator cap or drain plugs when the coolant is hot. Stop the engine let the engine and radiator cool and loosen the radiator cap or drain plugs slowly.**

Clean the cooling system, replace the coolant and anti corrosive fluid s is showed in table below:

Coolant	System cleaning and fluid replacing schedule	Add anticorrosive fluid KI
Permanent antifreeze (for all seasons)	Every year (autumn) Or every 800 hours	Every 800 hours or when clean the inner cooling system and when replace the coolant.
Non permanent antifreeze, with ethylene glycol (winter , cold season).	Every 6 months (spring, autumn) (remove antifreeze in spring, add it in autumn).	
Quando non si usa l'antigelo.	Every 6 months Or every 400 hours.	

When clean the system or replace the coolant stop the machine on level ground. Use permanent antifreeze, if it is impossible use antifreeze within ethylene glycol.

To choose the water/antifreeze ratio you must know the minimum working ambient temperature and determine the ratio as showed in table below. Set a temperature less then 10 °C when decide the mixing ratio.

Mixing water/antifreeze ratio:

Minimum ambient temperature	°C	-5	-10	-15	-20	-25	-30
Antifreeze quantity	l	1.9	2.4	2.9	3.3	3.8	4.0
Water quantity	l	6.1	5.6	5.1	4.7	4.2	4.0

PRECAUTION WHEN HANDLED ANTIFREEZE

Antifreeze can catch fire, keep it away from flames.

Use water from aqueduct. If it is not available and you must use water from rivers, lakes etc. please contact **YUCHAI ENGINEERING MACHINERY CO. LTD.**

What prepare:

- a pan to collect the coolant drained;
- a flexible pipe to refill water.

1. Open the engine hood and unscrew the radiator cop slowly.
2. Put a pan to collect the fluid under the drain plug (3).
3. To drain the coolant open the tap.
4. After the coolant is drained completely, close the tap (3), then fill the radiator with water.
5. Start the engine ad let him run at low idling, open the tap (3) a wait for 10 minutes while the water running, to clean the system. Meanwhile regulate the water running in and out the system to keep the radiator full. Be careful to avoid the water pipe fly off the radiator cap (1).
6. After 10 minutes stop the engine and drain all the water inside the system.
7. Close the drain tap (3).
8. Add coolant for radiators up the radiator opening.

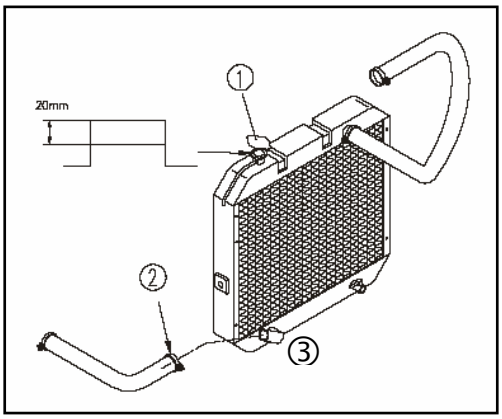

9. to remove air inside the system start the engine and let him run for 10 minutes with the radiator cap open (1).
10. Stop the engine, wait for 3 minutes, check the coolant level and if it is necessary fill up to 20 mm under the cap line, then fasten the cap tightly.
11. Refill also the reserve tank of the coolant.

19.6.2. Replacing the hydraulic oil and cleaning the suction strainer

PRECAUTION WITH OIL AT HIGH TEMPERATURE

- **After the machine operated, hydraulic oil is at high temperature, so wait for temperature cool down.**
- **When drain the hydraulic oil be careful to prevent drop on yourself.**

What prepare:

- a pan to collect the drained oil.

1. Park the machine on a level and solid ground.
2. Start the engine and keep it at he low idling, lower down the dozer blade, then raise the boom and extend the arm and bucket cylinders, until the machine will be as showed beside.

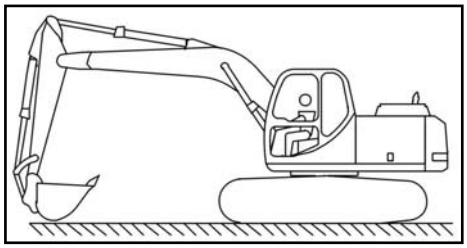

3. Let the engine run for 5 minutes, then stop it.
4. unscrew the drain plug slowly to breathe out the air, to reduce the pressure.
5. Dismantle the hydraulic oil cover like is written before.
6. Put a pan big enough to collect all the oil and drain it with a pump.
7. Unscrew the drain plug (2) to drain the tank completely.
8. Clean the tank from the dust on the bottom.

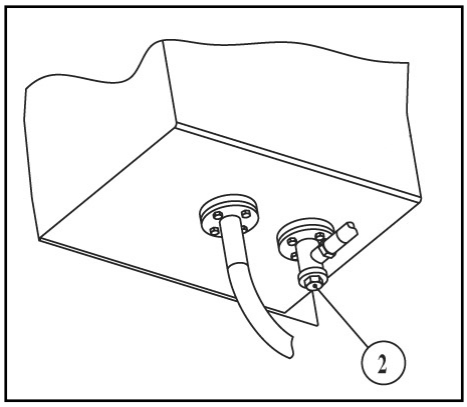

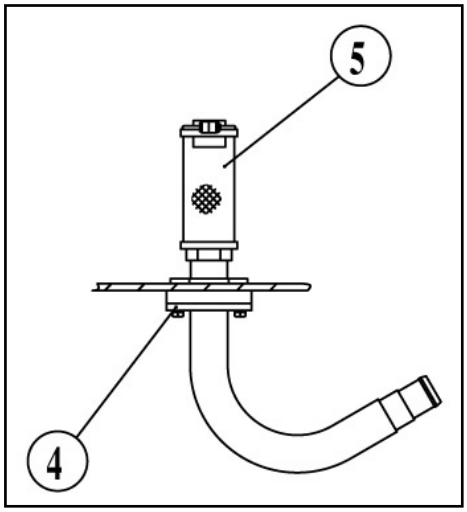

9. Dismantle the suction filter (5) by unscrewing the 4 bolt and clean the dust on the filter, the wash it with a useful liquid.
10. Set up the cleaned filter or a new one if it is damaged.
11. Check the gasket then fasten the drain plug (2)
12. Refill the hydraulic oil tank (see the capacity table) up the maximum level signed on the gauge.
13. Set all parts demounted.
14. Turn on the engine and operate the arms.
15. Check the oil level through the gauge and refill if it is necessary.

Procedure to breathe out the air

Breathe out the pump

1. Unscrew the top which is over the pump and refill with hydraulic oil. Then fasten the top.
2. Start the engine and let it run at 1000 rpm then move each cylinder and each motor 5 times, then wait at idle for 8 minutes.
3. Unscrew the top slowly until bubble come out, when liquid start to come out fasten the top.
4. Use a torque to 65 Nm to fasten the top.

Breathe out the hydraulic circuit

1. Start the engine, leave it at idle and move all cylinders and motor for 15 minutes to breathe out the air.
2. Park the machine as is showed in the previous page and stop the engine.
3. Check the hydraulic oil level and refill if it necessary.

NOTICE: If a **sledgehammer** is installed, hydraulic oil will degenerate faster then bucket is used. So replace the hydraulic oil as often as you use the sledgehammer.

19.6.3. Replacing the travel motor gear oil

PRECAUTION WITH OIL AT HIGH TEMPERATURE

After the machine operated, hydraulic oil is at high temperature, so wait for temperature cool down.

What prepare:
- a hexagonal wrench.
- a pan to collect drained oil.

1. Park the machine on a level and solid ground, also keep the sprocket down.
2. Put a container (pan) under the drain plug (1).
3. Using the hexagonal wrench remove the top (1 and 2) and drain the oil.
4. Close the drain plug (1) fill until the oil flows out from level hole (2).
5. Screw the plugs (1) e (2).

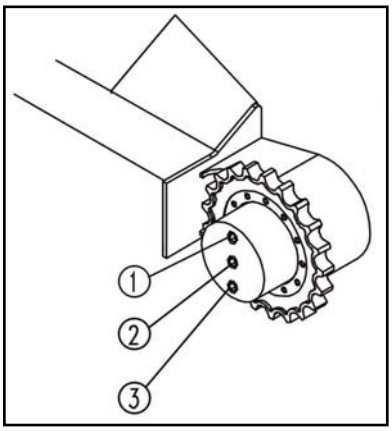

19.6.4. Replacing swing system oil

What prepare:
- a hexagonal wrench.
- a pan to collect drained oil.

1. Put a container (pan) under the machine.
2. Unscrew the drain plug, and wait until the tank is empty, then fasten the drain plug.
3. Remove the top and add the oil through the filling hole (1) until it flows out from level plug hole (2).
4. Fasten both top.

19.6.5. Check the engine valves clearance, adjusting them

To inspect and adjust the engine valves, ask to **YUCHAI ENGINEERING MACHINERY CO. LTD.** which has got special tools and know-how to repair the machine.

20. HYDRAULIC SCHEME

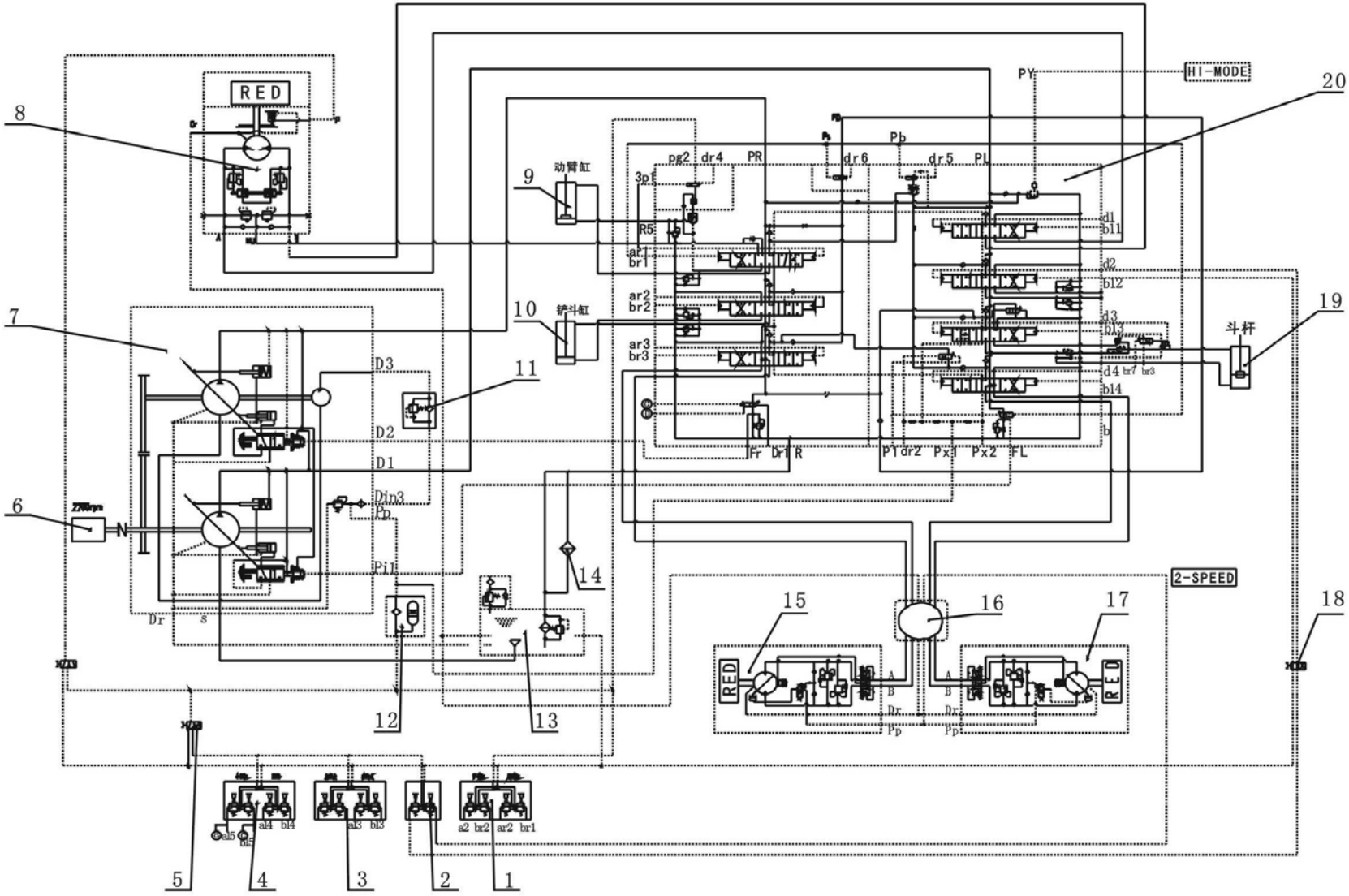

https://truckmanualshub.com/

No	Item
1	Right pilot valve
2	Pilot valve pedal
3	Throttle valve
4	Left pilot valve
5	Rotating valve
6	Motor
7	Hydraulic oil pump
8	Slewing motor
9	Boom cylinder
10	Bucket cylinder

No	Item
11	Pilot filter
12	Accumulator
13	Hydraulic oil tank
14	Radiator
15	Left pilot motor
16	Rotating centre
17	Right pilot motor
18	Multi gear valve
19	Arm cylinder
20	Pump

21. ELECTRICAL SCHEME

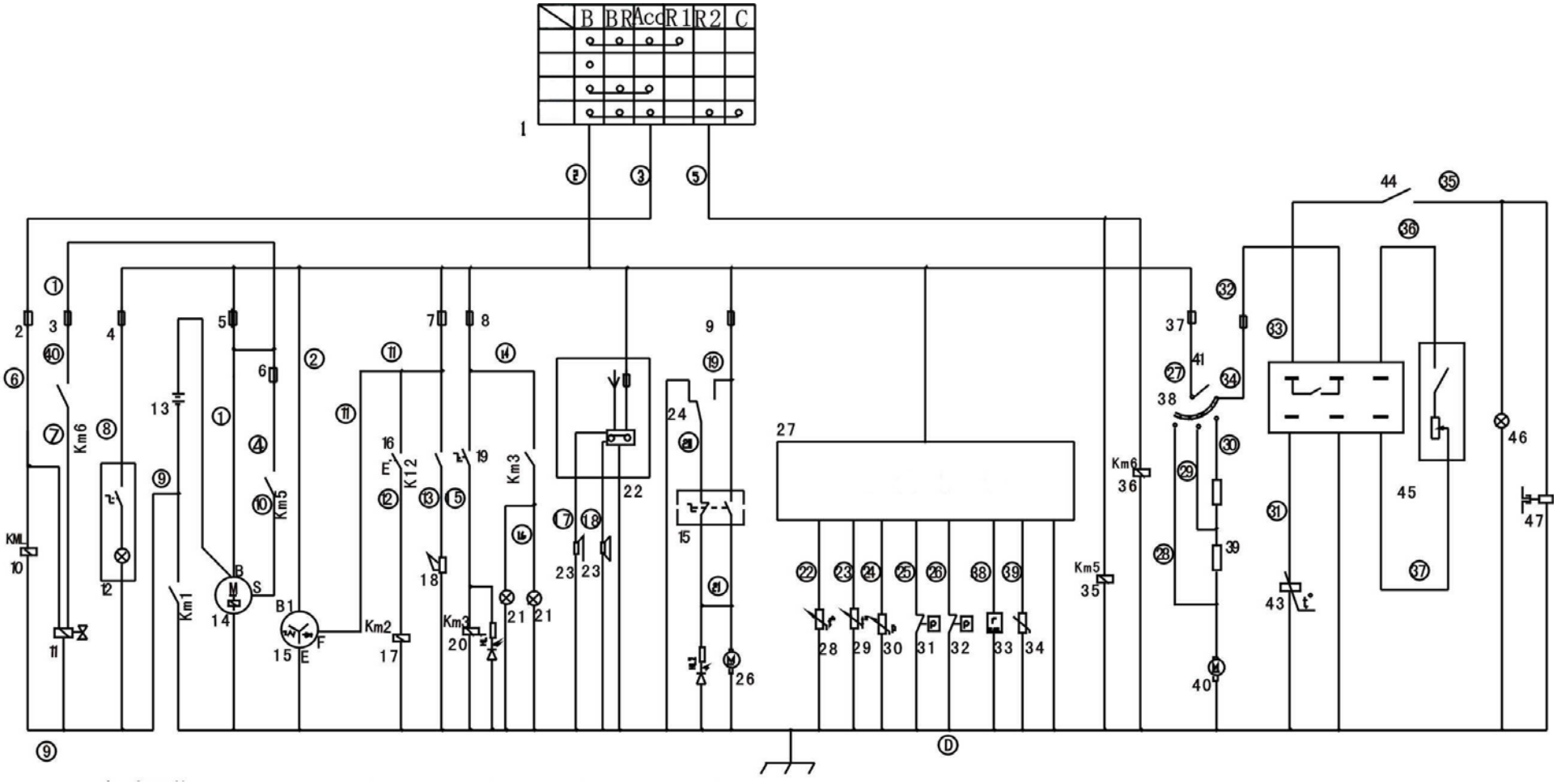

No	Item
1	Starting switch
2	Main switch fuse 10A
3	Parking electromagnetism fuse 20A
4	Wall lamp fuse 5A
5	Main electric 40A
6	Start motor fuse 20A
7	Horn fuse 5A
8	Light fuse 10A
9	Wiper fuse 5A
10	Main switch relay
11	Parking electromagnetism
12	Top lamp
13	Battery
14	Start motor
15	Alternator
16	Horn button
17	Horn relay
18	Horn
19	Work lamp switch
20	Light relay
21	Work lamp
22	Player
23	Speaker
24	Wiper reposition device

No	Item
25	Wiper switch
26	Wiper
27	Assemble meter
28	Water temperature
29	Hydraulic oil temperature sensor
30	Engine oil pressure
31	Warning lamp air filter
32	Warning lamp hydraulic oil filter
33	Turning speed sensor
34	Fuel level sensor
35	Start relay
36	Parking electromagnetism start relay
37	Air conditioning fuse
38	Evaporator fan speed switch
39	Evaporator resistor
40	Evaporator
41	Magnifier fuse
42	Magnifier
43	Temperature control resistor
44	High low voltage switch air conditioning
45	Air conditioning switch
46	Cooler gauge
47	Air conditioning clutch

22. TROUBLE SHOOTING

TROUBLE	MAIN CAUSE	SOLUTION
Engine couldn't be started or started difficultly	• There is some trouble with starter.	• Replace or repair starter.
	• Battery isn't charged enough.	• Charge or replace battery.
	• Warm-up circuit or the plug is incorrectly used.	• Repair or replace warm-up plug.
	• Injection time incorrect.	• **Contact assistant service.**
	• There is water, dust or air in fuel system.	• Clean or replace fuel filter.
	• injecting nib is dirty or injection pressure is too low.	• **Contact assistant service.**
	• Injection pump is trouble.	• **Contact assistant service.**
	• Fuel leakage.	• **Contact assistant service.**
	• Air intake and exhaust system is plugged.	• Clean the air intake and exhaust system.
Engine shocking, running irregularly or stopping.	• Fuel filter is plugged.	• Clean the filter.
	• There is waste or air in the fuel system.	• Exhaust and clean fuel circuit.
	• Oil filter is plugged, injecting nib is dirty or trouble.	• **Contact assistant service.**
	• Accelerator joining can't be adjusted.	• Replace the high-pressure oil tube.
	• Injecting pump is trouble.	• **Contact assistant service.**
	• Injection timing is incorrect or injecting nibs are plugged.	• **Contact assistant service.**
The power of the engine lowered.	• There is some gets mix in the fuel.	• Empty the fuel tank and clean filters.
	• Fuel circuit supply is blocked.	• Check and cleaning filters and pipes
	• Injection timing is incorrect.	• **Contact assistant service.**
	• Injectors do not work properly.	• **Contact assistant service.**
	• Air filter is plugged.	• Clean filter core.
	• The clearance of air intake and exhaust valve is wrong or valves are not sealed.	• **Contact assistant service.**
	• Washer of cylinder is damaged, gas leakage.	• **Contact assistant service.**
	• Injecting pump badly works.	• **Contact assistant service.**

TROUBLE	MAIN CAUSE	SOLUTION
The power of the engine lowered.	• Engine is over hot.	• Check if coolant is used correct, and if the pump and the belt is loosen, if so, repair or replace and clean the block object in the watercourse.
Black smoke come out from exhaust tube	• Fuel bad quality	• Use the suitable fuel.
	• The air filter is blocked.	• Replace the core filter.
	• Injection timing is incorrect.	• **Contact assistant service.**
	• Injecting nibs are plugged.	• **Contact assistant service.**
White smoke come out from exhaust tube	• Fuel bad quality	• Use the suitable fuel.
	• The engine oil is overmuch.	• Make the regular level.
	• The piston's gasket is damaged.	• **Contact assistant service.**
	• There is water in the cylinder or in the fuel.	• Check and replace the fuel.
Engine over hot	• The coolant level is too low.	• Refill.
	• Temperature sensor is trouble.	• Replace the sensor.
	• Air filter is plugged.	• Clean the core filter.
	• Fan belt is loosen or damaged.	• Tighten or replace.
	• Cooling system dirty.	• Clean the cooling system.
	• Radiator's fins are blocked or damaged.	• Clean or repair the fins.
	• The engine oil has bad quality or is overmuch.	• Replace the engine oil with better quality and check the correct level.
Engine oil pressure is too low.	• The oil level is too low.	• Refill.
	• Oil filter is plugged.	• Clean the core filter.
	• Oil circuit leakage.	• Tighten all bolts and replace gaskets.
	• The temperature of cooling water is too high.	• Make the mixture rate of the coolant correctly or consult with agent.
The key in the starting position, but the starter does not work.	• Circuit is broken.	• Check and repair.
	• There are some problems with the switch.	• Replace the switch.
	• The battery is not charge enough.	• Charge or replace battery.
Battery can't be charged	• Terminals are loosen or rust.	• Clean or tighten the terminals.
	• Alternator belt is loosen or damaged.	• Adjust the tension or replace the belt.

TROUBLE	MAIN CAUSE	SOLUTION
	• Alternator broken.	• **Contact assistant service.**
The lamps are dark when the engine is running.	• Alternator faulty.	• **Contact assistant service.**
	• The electric loop is trouble.	• Check the loop, connect and repair.
Every part of the hydraulic system work too slow.	• Hydraulic oil is cold.	• Operate with hydraulic equipments to increase the oil temperature.
	• The hydraulic pump speed is too low.	• **Contact assistant service.**
The temperature of the hydraulic oil is too high.	• Oil circuit is blocked.	• **Contact assistant service.**
	• Hydraulic oil filter is plugged.	• Clean or replace the filter.
	• Oil pump is worn.	• **Contact assistant service.**
	• Oil radiator is blocked.	• Clean.
	• Main safety valve and over load valve or over fall valve pressure is too high.	• **Contact assistant service.**
	• Oil is too dirty.	• Drain the oil and refill.
Hydraulic oil is emulsified or there is foams in the oil.	• Leakage between oil tank and pump.	• Check and tighten pipe connection.
	• There is water in hydraulic oil.	• Replace oil.
	• Oil level is too low.	• Refill.
Oil pressure is too low or no pressure.	• Safety valve is broken.	• **Contact assistant service.**
	• Oil level is too low.	• **Refill.**
	• Hydraulic pump is damaged.	• Replace the pump.
Every cylinder or motor work difficulty or can't work.	• Hydraulic pump is damaged.	• Replace the pump..
	• Main safety valve pressure is low.	• **Contact assistant service.**
	• Oil level is too low.	• Refill.
	• Oil intake filter is plugged.	• Clean the intake filter.
	• Gaskets damaged.	• Replace gaskets.
	• Pilots are damaged and result in oil leakage.	• Repair or replace the damaged pilot.
Both travel units don't work.	• Oil mixed in the slewing joints central.	• **Contact assistant service.**
One of the travel unit doesn't work.	• Travel unit is damaged.	• **Contact assistant service.**
Abnormal travelling.	• Crawler is too tightly or loosen.	• Adjust crawlers tension.
	• Capability of the Oil pump lowered.	• **Contact assistant service.**
	• Crawler frame is damaged.	• Repair or replace.

TROUBLE	MAIN CAUSE	SOLUTION
Abnormal travelling.	• There is rock or crushed in the crawler chain.	• Remove foreign parts.
	• Leakage in control valve.	• **Contact assistant service.**
	• Capability of motor lowered.	• **Contact assistant service.**
	• Front idler, tension unit or lower roller is trouble.	• **Contact assistant service.**
Abnormal Slewing.	• Capability of oil pump lowered.	• **Contact assistant service.**
	• Slewing motor is damaged.	• **Contact assistant service.**
	• Slewing gear is worn.	• **Contact assistant service.**
	• The slewing support or the bead is damaged.	• **Contact assistant service.**
	• Oil leakage.	• **Contact assistant service.**
	• Oil leakage in control valve.	• **Contact assistant service.**

23. OPTIONAL ACCESSORIES

23.1 SAFETY PRECAUTION

FORBIDDEN WORK DURING ACCESSORIES USE

Is absolutely forbidden install on the machine any accessory which are not listed in this manual and do not authorized by YUCHAI ENGINEERING MACHINERY CO. LTD. Because this may reduce the machine work life and may cause its loss of minimum safety requirements.

The YUCHAI ENGINEERING MACHINERY CO. LTD. deny liability for possible damage to people and/or object due to installation of non authorized accessories on the machine.

If you need to install different accessories from which are listed in this manual please contact **YUCHAI ENGINEERING MACHINERY CO. LTD.**

FORBIDDEN BEHAVIOUR WHEN WORK WITH ACCESSORIES

A long equipment will reduce the machine stability, so the machine may loss balance and tip over.
The follow operations are particularly dangerous, so NEVER work with the machine as follow:

- **travel downhill with work equipment raised;**
- **travel be sure the machine never faces sideways with respect to the slopes;**
- **swinging the turret on the slopes.**

PRECAUTION INSTALL AND UNINSTALL THE ACCESSORIES

- **Before install and uninstall accessories park the machine on level, solid ground.**
- **If two or more operators will install or uninstall accessories first define who give orders and who receive orders.**
- **If you must move heavy objects use crane with enough loading capacity.**
- **Clamp on a crane the heavy objects before uninstall them.**
- **When clamp on a crane the heavy objects be careful to them centre of gravity.**
- **NEVER walk under lifted loads. Stand always in a "safety" position far from falling point.**
- **It is dangerous operate with lifted loads. Always check the correct clamping then put objects in balanced and safety position before leave work area.**
- **When install or uninstall accessories, be sure they are in balance position to prevent drop over.**

PRECAUTION FOR WORKING OPERATION WITH ACCESSORIES

If heavy equipment is installed, the overrun of the swing become greater, that is the distance from the point where the operator operates the control levels to stop the swing to the point where the upper structure stop completely, so there is danger of mistaking the distance and hitting something.

- **If long work equipment is installed, the working range will suddenly become larger, so there is danger of mistaking the distance and hitting something.**
- **Always keep enough clearance between the work equipment and any objects standing in the working area.**

https://truckmanualshub.com/

24. NOTICE

25. ANALYTIC INDEX

B

Backhoe work; 92
Backwards movement; 80
Battery charge lamp; 63

C

Cabin; 68
Changing direction (steering); 81
Check after completion of work; 99
Check before start; 71
Check hydraulic oil and refill; 73
Cold weather operation; 96
Coolant temperature warning lamp; 62

D

Daily checking or every 10 hours; 137
Data sheet; 50
Ditching work; 93

E

Electrical circuit; 75
Emergency exit; 70
Engine heating; 77
Engine oil pressure lamp; 62
Excavator main parts description; 49

F

Filter; 133
Forbidden movement and forbidden use; 86
Forward movement; 79
Fuse; 66

G

Glow lamp; 62
Guides to maintenance; 125

H

Hour meter; 63
How to escape from mud; 94

I

Identification plate; 54
Inspecting and adjusting the fan belt; 72
Instrument and command description; 55
Instrument panel and switches; 60
Instrument panel check; 78
Introduction and general information; 9

L

Left lever; 59
Lever and pedal; 56
Load precaution; 107
Loading work; 93
Long term storage; 111
Lubricants, coolant, fuel characteristics; 130
Lubricating; 149

M

Machine description; 49
Machine serial number; 12
Machine stop and park; 84
Machine towing; 109
Maintenance every 100 hours; 151
Maintenance every 200 hours; 153
Maintenance every 400 hours; 158
Maintenance every 50 hours; 149
Maintenance every 800 hours; 164

N

Needed tools for maintenance; 135
Noise and exhaust check; 78

O

Operating levers; 59
Operations in confined spaces; 93
Operator seat; 67
Optional accessories; 177

P

Periodical replacement of safety critical parts; 137
Phenomena that are not failure; 119
Precaution and safety measures; 15
Precaution at work end in cold weather; 97
Precaution during maintenance; 44
Precaution for operating; 89
Precaution when operate with battery; 38
Precaution when the machine is working; 26
Precautions before engine start; 23
Precautions before staring maintenance; 41

https://truckmanualshub.com/

Pulling precaution; 39

R

Right lever; 59

S

Safety lock lever; 56
Seat belt; 68
Standard torque list; 136
Start engine in cold weather; 77
Start key; 65
Starting; 76
Starting machine; 71
Starting machine with jump-start cables; 113
Swinging; 85

T

The bucket; 121
Throttle lever; 57
Transport precaution; 37
Transportation; 105
Travelling levers; 58
Trouble shooting; 173

U

Using rubber shoes; 101

W

Warning plates; 52

Y

Yuchai engineering machinery co., ltd; 13

YUCHAI ENGINEERING MACHINERY CO., LTD.
Manufacturing Base:
168 Tianqiao Road, Yulin, Guangxi, 537005 P.R. China

Export Department Office:
36 Cuizhu Road, Guilin, Guangxi, 541002 P.R. China

Tel: 0086-773-5588521 5588522 5588523
Fax: 0086-773-5588530
E-mail: export@yuchai-excavator.com
Web-site: www.yuchai-excavator.com

YUCHAI EUROPE:
Address: V. Del Fonditore, 14 40138 Bologna, Italy
Tel:0039
Fax:0039
E-mail: Europe@yuchai-excavator.com