https://truckmanualshub.com/

AICHI TZ20C1FS

SKYMASTER

class 20 m

Max. floor height **19.7m** - Max. working radius **10.9m**

Max. load capacity **1000kg**

① The highest model of AICHI TZ-series

⇒Achieves the same 1000kg maximum load capacity of the other TZ models but at a platform height of 19.7m.

② Easy operations boost efficiency

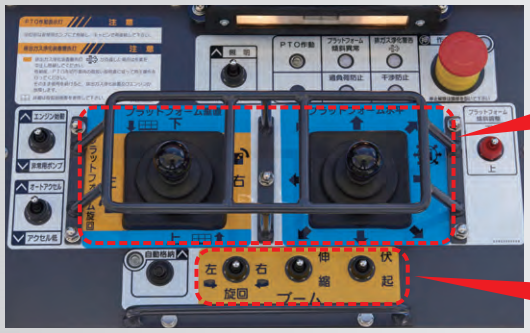

⇒Introducing special "vertical / horizontal movement" levers for straight-line vertical / horizontal / diagonal movements. Move anywhere with one-touch operation.

③Safer at night too! Illuminated control panels

⇒Outrigger controls, upper controls and lower control are all illuminated as a standard feature.

*Japanese model pictured

https://truckmanualshub.com/

FUNCTIONS

VERTICAL / HORIZONTAL MOVEMENT

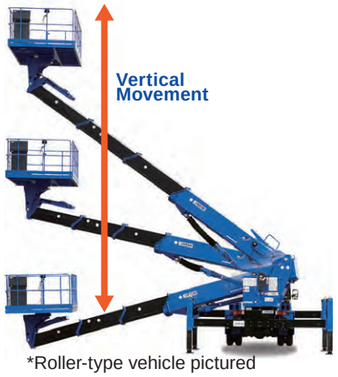

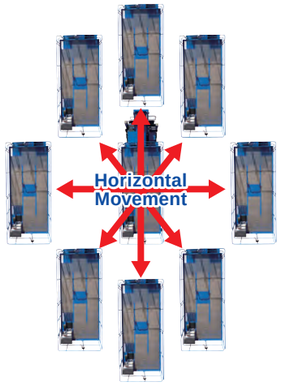

*Roller-type vehicle pictured

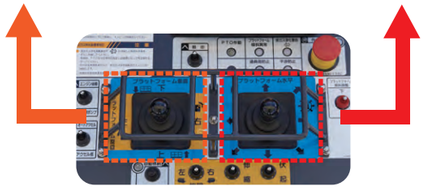

Special levers

This movement increases work efficiency along continuous surfaces such as tunnel walls or during horizontal work under bridges.

AUTOMATIC PLATFORM STOWAGE

Stows by fully automatic control of platform and boom functions.

VOICE ALARM SYSTEM

Boom and platform movements and limitations are notified by voice recording.

* Volume is adjustable (4 levels)

OPTIONS

EXCEEDING VEHICLE WIDTH PREVENTION SYSTEM

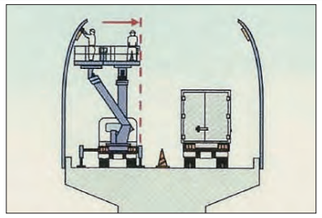

This system prevents contact and collision accidents with vehicles passing alongside.
It prevents the platform from moving beyond the outrigger.

*Japanese model pictured

UPPER WORKING LIGHT

Specifications
-70W
-halogen
-diffusion lens

OUTRIGGER MARKER LAMPS

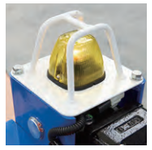

Flashing lamps fitted on each jack urge personnel in the area to be alert.

PERFORMANCE

TZ20C1FS WORKING RANGE DIAGRAMS

	SIDE VIEW	OVERHEAD VIEW
OUTRIGGER WIDTH MAX	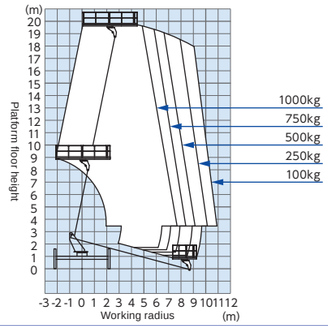	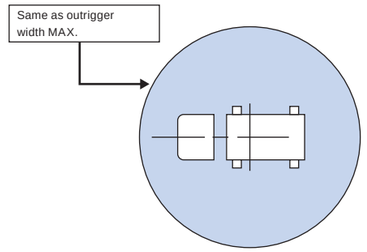 *Working radius is same regardless of rotation angle.
OUTRIGGER WIDTH MID2	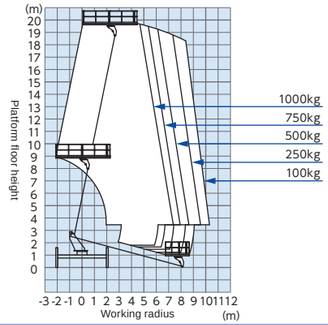	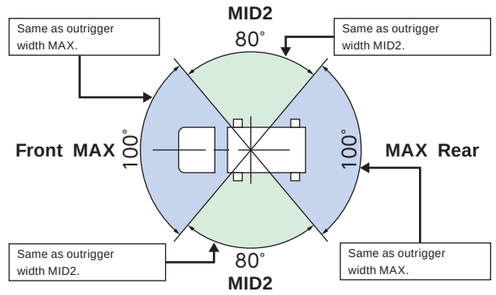
OUTRIGGER WIDTH MID1	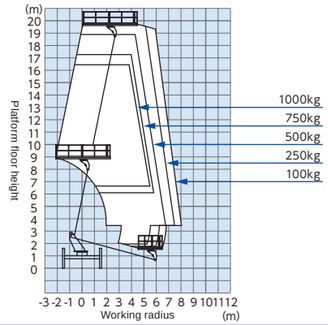	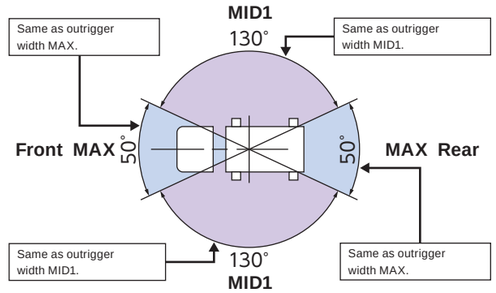
OUTRIGGER WIDTH MIN	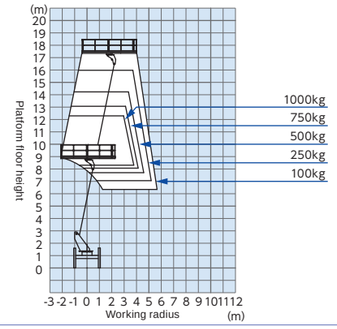	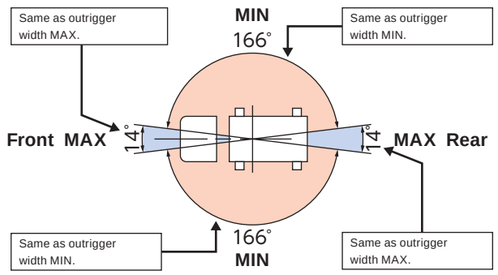

note 1 - Working range diagrams do not include boom deflection.
2 - Working range diagrams assume that the jacks are set on a firm surface.
3 - Working range varies based on outrigger width and boom rotation angle.
4 - Minimum boom elevation angle varies by boom rotation angle to avoid interference between cabin/outriggers and boom/platform.

https://truckmanualshub.com/

SPECIFICATIONS

DATA & FEATURES

AERIAL DEVICE	
Model	TZ20C1FS
Type	Truck-mounted heavy loading type aerial work platform
PLATFORM	
Max. load capacity	1,000kg
Max. floor height*	19.7m (ground to bottom of platform)
Max. working radius	10.9m at 100kg load (centerline of rotation to platform interior)
	7.68m at 1000kg load (centerline of rotation to platform interior)
Outside dimensions	(W) 1.94 × (D) 4.40 × (H) 1.02m
Rotation angle	360° continuous
BOOM	
Type	4 stages telescopic
Length	5.39 to 16.39m
Extension stroke	10.99m
Elevation angle	−15° to 79°
Elevation speed	Up: 55sec / Down: 55sec
Extension speed	Extend: 55sec / Retract: 55sec
ROTATION DEVICE	
Rotation angle	360° continuous
Rotation speed	0.8 rpm
OUTRIGGER	
Outrigger width	1.99 to 4.42m
Outrigger stroke	1.215m
Jack stroke	0.645m
MAXIMUM JACK PRESSURE	
	5,100kg

SAFETY DEVICES

Hydraulic safety devices (hydraulic safety valve, jack extension safety device, boom elevation safety device, platform leveling safety device)、Boom/platform interference prevention system、Boom/cabin interference prevention system、Voice alarm system、Boom interlock system、Jack interlock system、Moment sensing system、Elevation/rotation speed control system、Emergency stop switch、Emergency pump、Control lever guard、Foot pedal、Outrigger lock device

Others

Vertical/Horizontal movement system、Automatic platform stowage system、Engine start / stop system、Automatic accelerator、Pre-operation check system、Control panel light、Rotation gear covers、Sweepers of boom part、Spirit level

Options

Outrigger marker lamps、Upper working light、Exceeding vehicle width prevention system

STANDARD ACCESSORIES

Wheel chocks (4 pcs.)、Jack bases (4 pcs.)

*Height may vary depending on the specifications of the vehicle the aerial device is mounted on.

VEHICLE DIMENSIONS

Under figure is a Japanese model. Dimensions vary depend on a chassis.

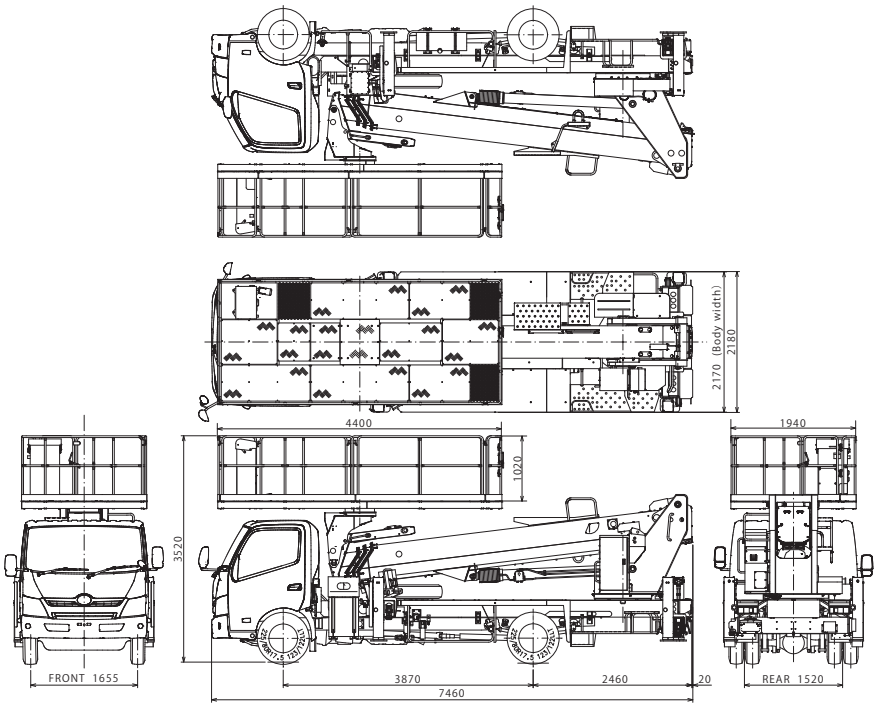

*Figure units : mm.

EXTENSION / OCCUPANCY DIAGRAM

Extension width images

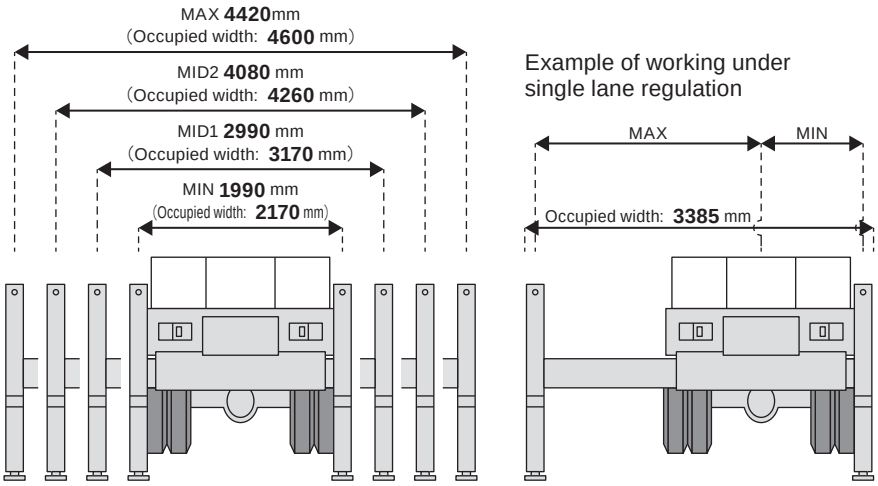

*Extension width: Distance from center of left outrigger to a center of right outrigger
*Occupied width: Distance from edge of left outrigger pad-base to edge of right outrigger pad-base

AICHI CORPORATION
1152-10 Ryoke Ageo Saitama 362-8550 Japan
TEL:+81-48-781-6813 URL:http://www.aichi-corp.jp

DISTRIBUTOR

Safety instructions

- Operator of the machine must receive safety training to ensure safe operations. Incorrect use of the machine can cause serious injury or death. All personnel are requested to receive safety training and only trained and authorized personnel are permitted to operate the machine.
- Ultimate compliance to national safety regulations is the responsibility of the user and their employer.
- All owners and users of the machine must read, understand, and comply with all applicable regulations.

*Due to continuous product improvements, we reserve the right to make specification and/or equipment changes without prior notice.

*The photos and/or drawings in this brochure are for illustrative puropose only.

*This information, while believed to be completely reliable, is not to be taken as a warranty for which we assume legal responsibility.

TP1705-300①

TZ20C1FS SKYMASTER