https://truckmanualshub.com/

Cx Series

C12x, C16x, C24x, C30x

Operator's Manual

CMW®

Issue 3.0
Original Instruction

053-2869

https://truckmanualshub.com/

Overview

Chapter Contents

Serial Number Location 2

Intended Use 3

Equipment Modification 3

Machine Components 4

Operator Orientation 5

Operating Area 5

About This Manual 6

- Bulleted Lists 6
- Numbered Lists 6

California Proposition 65

WARNING The engine exhaust from this product contains chemicals known to the State of California to cause cancer, birth defects, and other reproductive harm. www.P65warnings.ca.gov.

https://truckmanualshub.com/

Serial Number Location

Record serial numbers and date of purchase in spaces provided. Serial number is located as shown.

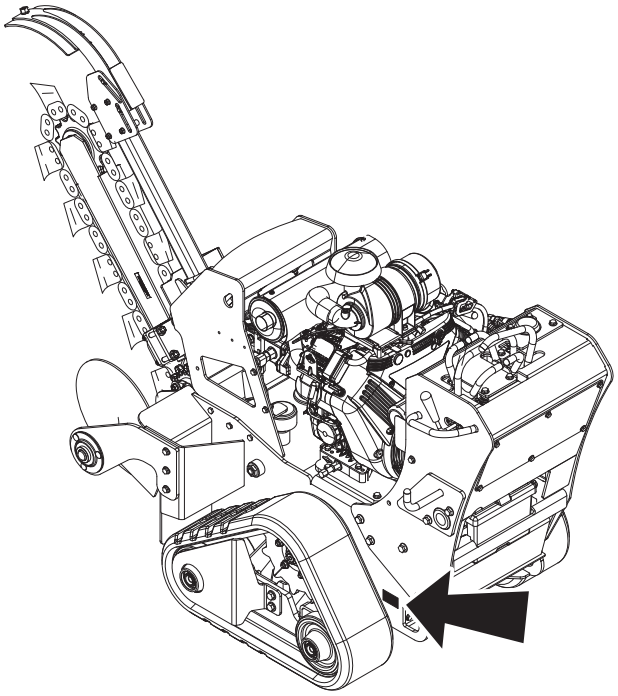

t47om001h.eps

Item	
Date of manufacture	
Date of purchase	
Machine serial number	
Trailer serial number	

https://truckmanualshub.com/

Intended Use

The C12x, C16x, C24x, and C30x pedestrian trenchers are designed to install buried service lines.

Model	Max depth	Max width
C12x	24" (610mm)	6" (150mm)
C16x	36" (915mm)	6" (150mm)
C24x	36" (915mm)	6" (150mm)
C30x	48" (1.2m)	6" (150mm)

This machine is intended for operation only according to the instructions in this manual. Operate machine in ambient temperatures from 15° to 115°F (-9° to 46°C) for electric start machines and 20° to 115°F (-7° to 46°C) for rope start machines. Contact your Ditch Witch® dealer for provisions required for operating in extreme temperatures. Use in any other way is considered contrary to the intended use.

These machines should be used with genuine Ditch Witch® chain, teeth, and sprockets. They should be operated, serviced, and repaired only by professionals familiar with their particular characteristics and acquainted with the relevant safety procedures.

Equipment Modification

This equipment was designed and built in accordance with applicable standards and regulations. Modification of equipment could mean that it will no longer meet regulations and may not function properly or in accordance with the operating instructions. Modification of equipment should only be made by competent personnel possessing knowledge of applicable standards, regulations, equipment design functionality/requirements and any required specialized training.

https://truckmanualshub.com/

Machine Components

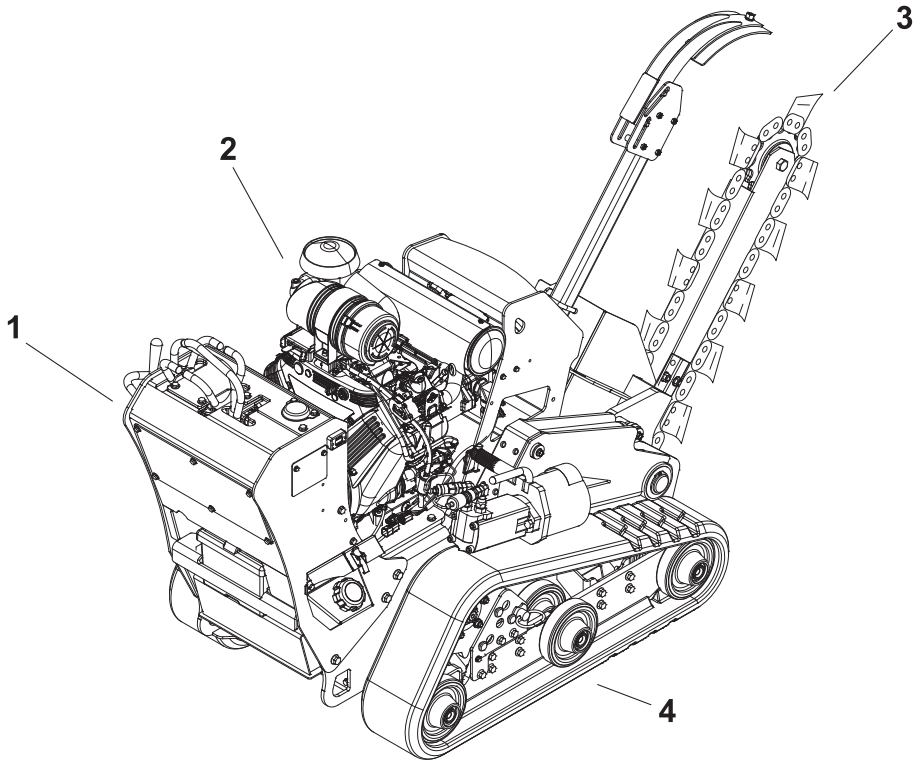

t47om002h.eps

1. Control console
2. Engine
3. Digging boom and chain
4. Tracks

https://truckmanualshub.com/

Operator Orientation

IMPORTANT: Top view of machine is shown.

1. Front
2. Right side
3. Rear
4. Left side

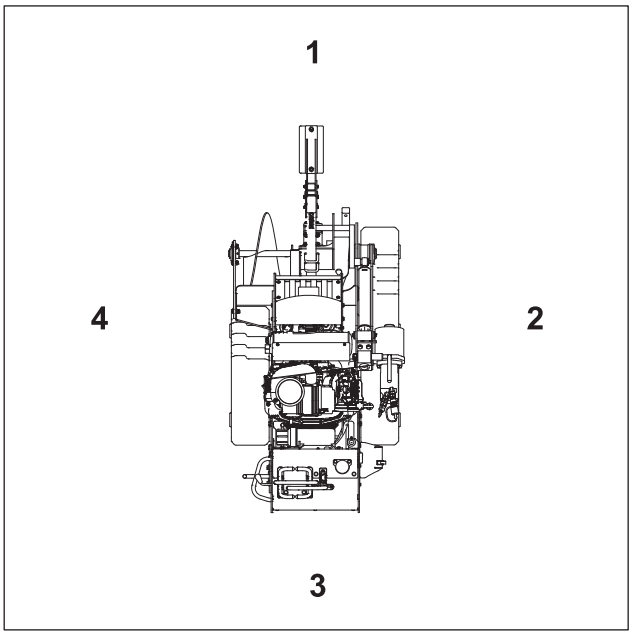

t47om003h.eps

Operating Area

IMPORTANT: Top view of machine is shown.

Operator should stand only in the location shown.

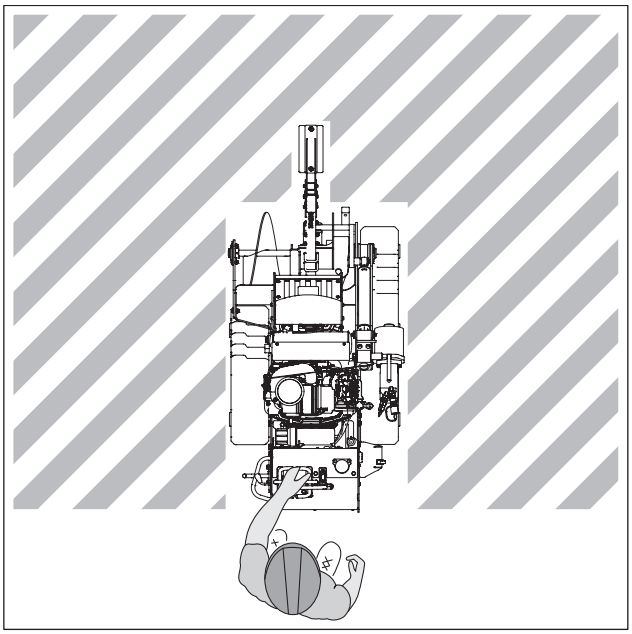

t47om004h.eps

https://truckmanualshub.com/

About This Manual

This manual contains information for the proper use of this machine. Cross references such as "See page 50" will direct you to detailed procedures.

Bulleted Lists

Bulleted lists provide helpful or important information or contain procedures that do not have to be performed in a specific order.

Numbered Lists

Numbered lists contain illustration callouts or list steps that must be performed in order.

https://truckmanualshub.com/

Foreword

This manual is an important part of your equipment. It provides safety information and operation instructions to help maintain your Ditch Witch® equipment.

Read this manual before using your equipment. Keep it with the equipment at all times for future reference. If you sell your equipment, be sure to give this manual to the new owner.

If you need a replacement copy, contact your Ditch Witch dealer. If you need assistance in locating a dealer, visit our website at www.ditchwitch.com or write to the following address:

The Charles Machine Works, Inc.
ATTN: Marketing Department
PO Box 66
Perry, OK 73077-0066
USA

The descriptions and specifications in this manual are subject to change without notice. The Charles Machine Works, Inc. reserves the right to improve equipment. Some product improvements may have taken place after this manual was published. For the latest information on Ditch Witch equipment, see your Ditch Witch dealer.

Thank you for buying and using Ditch Witch equipment.

https://truckmanualshub.com/

Cx Series
Operator's Manual

C12x, C16x, C24x, C30x

Issue number 3.0/OM-09/19
Part number 053-2869

Copyright 2016, 2017, 2019
by The Charles Machine Works, Inc.

Ditch Witch® and Ditch Witch are registered trademarks of The Charles Machine Works, Inc.

This product and its use may be covered by one or more patents at http://patents.charlesmachine.works.

https://truckmanualshub.com/

Contents

Overview 1

Machine serial number, information about the type of work this machine is designed to perform, basic machine components, and how to use this manual

Foreword 7

Part number, revision level, and publication date or this manual, and factory contact information

Safety Awareness 11

Machine safety alerts and emergency procedures

Prepare 21

Procedures for preparing jobsite, preparing operator, and preparing equipment

Controls 29

Machine controls, gauges, and indicators and how to use them

Drive 41

Procedures for startup, cold start, driving, and shutdown

Transport 47

Procedures for lifting, hauling, and retrieving

Trench 53

Procedures for trenching

Drill 57

Procedures for drilling

Systems and Equipment 69

Chain, teeth, sprockets, and optional equipment

Complete the Job 75

Procedures for restoring the jobsite and rinsing and storing equipment

https://truckmanualshub.com/

Service 77

Service intervals and instructions for this machine including lubrication, replacement of wear items, and basic maintenance

Specifications 103

Machine specifications including weights, measurements, power ratings, and fluid capacities

Support 121

The warranty policy for this machine and procedures for obtaining warranty consideration and training

https://truckmanualshub.com/

Safety Awareness

Chapter Contents

For additional precautions, see "Prepare" chapter.

Guidelines 12

Emergency Procedures 13

- Electric Strike Description 13
- If an Electric Line is Damaged 14
- If a Gas Line is Damaged 14
- If a Fiber Optic Cable is Damaged 14
- If Machine Catches on Fire 14

Safety Alert Classification 15

Machine Safety Alerts 16

https://truckmanualshub.com/

Guidelines

WARNING Misuse of machine can cause death or serious injury. Read and understand operator's manual and all other safety instructions before use. Know how to use all controls.

Follow these guidelines before operating any jobsite equipment:

- Complete proper training.
- Read and understand operator's manual before using equipment.
- Wear personal protective equipment. See "Prepare Operator" in "Prepare" chapter.
- Mark proposed path with white paint and have underground utilities located before working. In the US or Canada, call 811 (US) or 888-258-0808 (US and Canada). Also contact any local utilities that do not participate in the One-Call service. In countries that do not have a One-Call service, contact all local utility companies to have underground utilities located.
- Classify jobsite based on its hazards and use correct tools and machinery, safety equipment, and work methods for jobsite.
- Mark jobsite clearly and keep spectators away.
- Review jobsite hazards, safety and emergency procedures, and individual responsibilities with all personnel before work begins. Safety videos are available from your Ditch Witch® dealer or at www.ditchwitch.com/safe. Safety Data Sheets (SDS) are available at www.ditchwitch.com/support.
- Fully inspect equipment before operating. Repair or replace any worn or damaged parts. Replace missing or damaged safety shields and safety alert signs. Contact your Ditch Witch dealer for assistance.
- Follow instructions on all safety alert signs on machine.
- Use equipment carefully per the instructions in this manual. Stop operation and investigate anything that does not look or feel right.
- Do not operate machine where flammable gas may be present.
- Only operate equipment in well ventilated areas.
- Always tie down equipment and properly stow accessories, even if traveling short distances.
- Contact your Ditch Witch dealer if you have any questions about operation, maintenance, or equipment use.
- Complete the equipment checklist located at www.ditchwitch.com/safe.

https://truckmanualshub.com/

Emergency Procedures

WARNING Underground utilities. Contact can cause death or serious injury. Locate and verify underground utilities before digging or drilling.

Before operating any equipment, review emergency procedures and check that all safety precautions have been taken.

EMERGENCY SHUTDOWN: Shut off machine or press remote engine stop button (if equipped).

Electric Strike Description

When working near electric cables, remember the following:

- Electricity follows all paths to ground, not just path of least resistance.
- Pipes, hoses, and cables will conduct electricity back to all equipment.
- Low voltage current can injure or kill. Many work-related electrocutions result from contact with less than 440 volts.

Most electric strikes are not noticeable, but indications of a strike include:

- power outage
- smoke
- explosion
- popping noises
- arcing electricity

If any of these occur, assume an electric strike has occurred.

https://truckmanualshub.com/

If an Electric Line is Damaged

If you suspect an electric line has been damaged, DO NOT MOVE and DO NOT TOUCH ANY EQUIPMENT. Take the following actions. The order and degree of action will depend on the situation.

- If you are **operating machine,** immediately RELEASE CONTROLS.
- If you must leave the area, take small steps with feet close together to reduce the hazard of being shocked from one foot to another.
- Warn people nearby that an electric strike has occurred. Instruct them to leave the area.
- Have someone contact electric company to shut off power.
- If you leave the area, do not return to jobsite or allow anyone into area until given permission by utility company.

If a Gas Line is Damaged

If you suspect a gas line has been damaged, take the following actions. The order and degree of action will depend on the situation.

- Immediately shut off engine(s), if this can be done safely and quickly.
- Remove any ignition source(s), if this can be done safely and quickly.
- Warn others that a gas line has been cut and that they should leave the area.
- After warning others to leave the area, leave jobsite as quickly as possible.
- Immediately call your local emergency phone number and utility company.
- If jobsite is along street, stop traffic from driving near jobsite.
- Do not return to jobsite until given permission by emergency personnel and utility company.

If a Fiber Optic Cable is Damaged

Do not look into cut ends of fiber optic or unidentified cable. Vision damage can occur. Contact utility company.

If Machine Catches on Fire

Perform emergency shutdown procedure and then take the following actions. The order and degree of action will depend on the situation.

- Immediately move battery disconnect switch (if equipped and accessible) to disconnect position.
- If fire is small and fire extinguisher is available, attempt to extinguish fire.
- If fire cannot be extinguished, leave area as quickly as possible and contact emergency personnel.

https://truckmanualshub.com/

Safety Alert Classifications

These classifications and the icons defined on the following pages work together to alert you to situations which could be harmful to you, jobsite bystanders, or your equipment. When you see these words and icons in the book or on the machine, carefully read and follow all instructions. YOUR SAFETY IS AT STAKE.

When you see this safety alert sign, carefully read and follow all instructions.
YOUR SAFETY IS AT STAKE. Read this entire section before using your equipment.

Watch for the three safety alert levels: **DANGER**, **WARNING**, and **CAUTION**. Learn what each level means.

DANGER indicates a hazardous situation that, if not avoided, will result in death or serious injury. This signal word is to be limited to the most extreme situations.

WARNING indicates a hazardous situation that, if not avoided, could result in death or serious injury.

CAUTION indicates a hazardous situation that, if not avoided, could result in minor or moderate injury.

Watch for two other words: ***NOTICE*** and **IMPORTANT**.

NOTICE indicates information considered important, but not hazard-related (e.g., messages relating to property damage).

IMPORTANT can help you do a better job or make your job easier in some way.

https://truckmanualshub.com/

Machine Safety Alerts

C12x

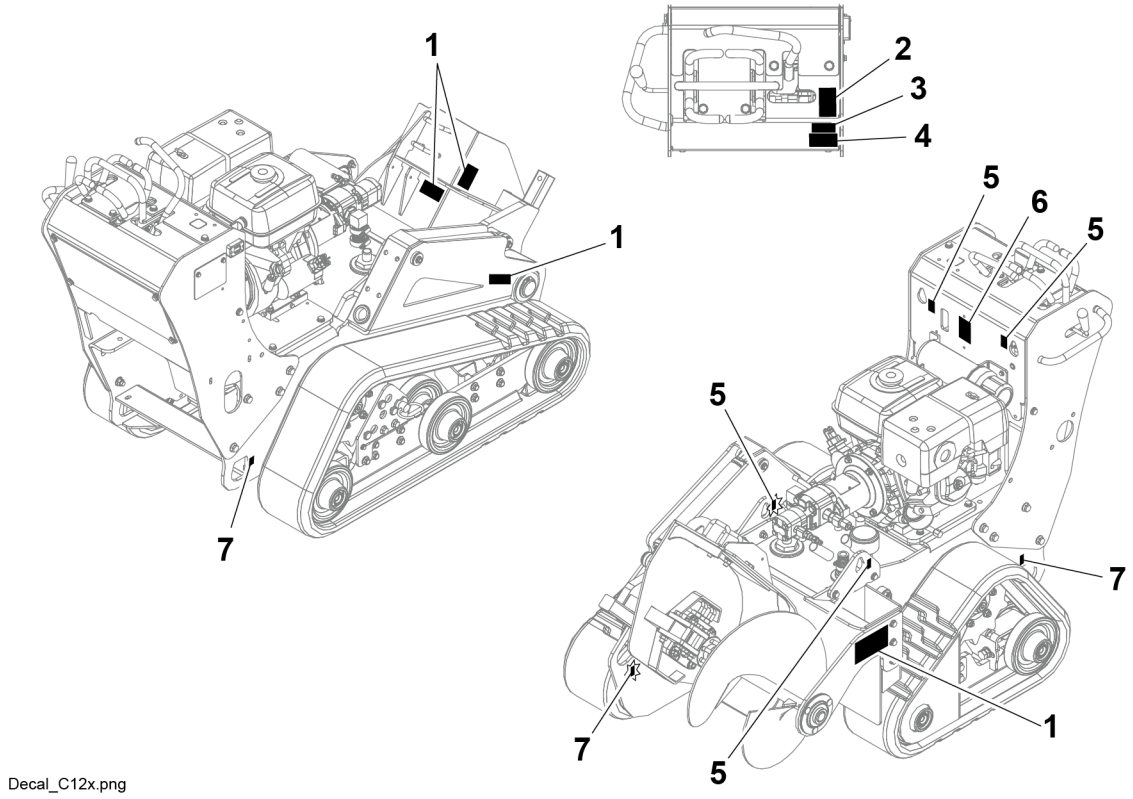

Decal_C12x.png

1		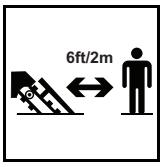	**DANGER** Moving digging teeth. Contact will cause death or serious injury. Stay at least 6' (2m) away.
2			**CAUTION** High noise levels. Exposure can cause hearing loss. Wear hearing protection.
3			**WARNING** Underground utilities. Contact can cause death or serious injury. Locate and verify underground utilities before digging or drilling.

https://truckmanualshub.com/

4	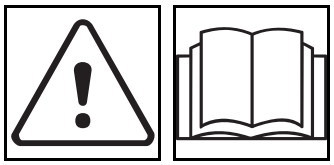	**WARNING** Misuse of machine can cause death or serious injury. Read and understand operator's manual and all other safety instructions before use. Know how to use all controls.
5		Lift point. See Transport chapter for more information.
6	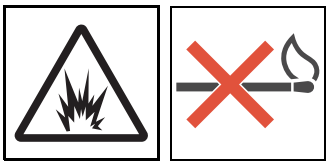	**WARNING** Gasoline. Fire or explosion can cause death or serious injury. Keep heat, flames, sparks and other ignition sources away.
7		Tiedown location. See Transport chapter for more information.

https://truckmanualshub.com/

C16x/C24x/C30x

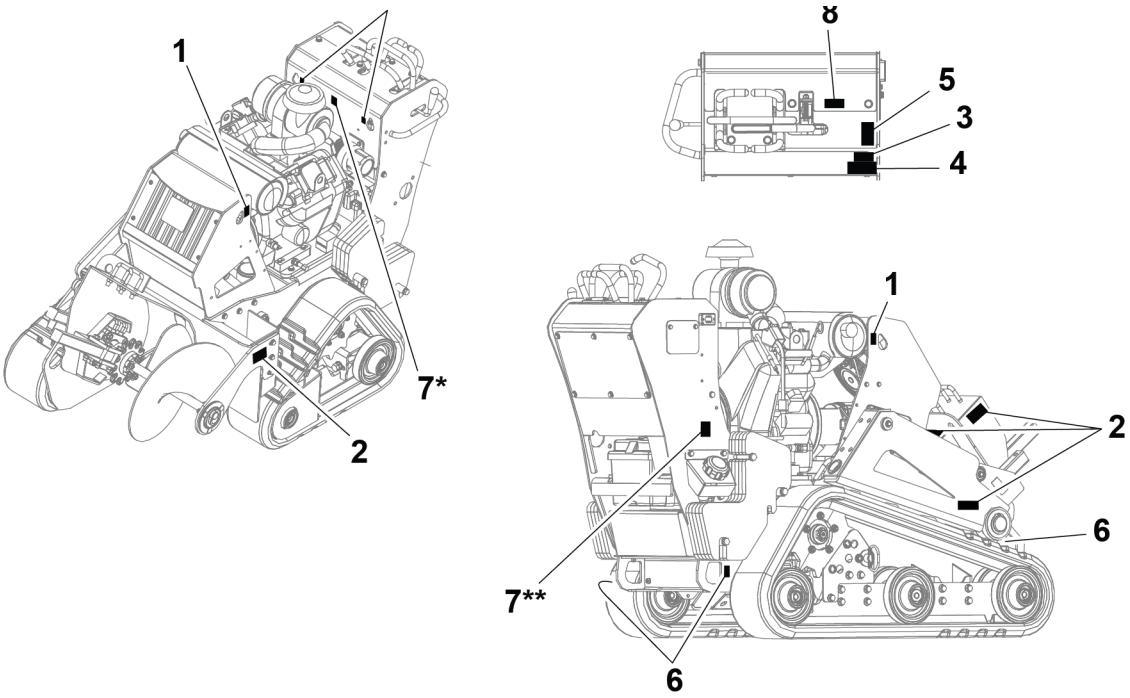

Decal_C30x_C24x_C16x.png

1		Lift point. See Transport chapter for more information.
2		**DANGER** Moving digging teeth. Contact will cause death or serious injury. Stay at least 6' (2m) away.
3		**WARNING** Underground utilities. Contact can cause death or serious injury. Locate and verify underground utilities before digging or drilling.
4		**WARNING** Misuse of machine can cause death or serious injury. Read and understand operator's manual and all other safety instructions before use. Know how to use all controls.

https://truckmanualshub.com/

5		**CAUTION** High noise levels. Exposure can cause hearing loss. Wear hearing protection.
6		Tiedown location. See Transport chapter for more information.
7	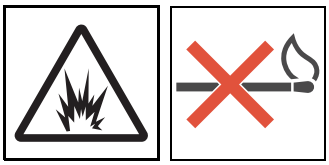	**WARNING** Gasoline. Fire or explosion can cause death or serious injury. Keep heat, flames, sparks and other ignition sources away. * C16x, ** C24x, C30x

https://truckmanualshub.com/

Attachment Safety Alerts

Roto Witch® Drilling Attachment

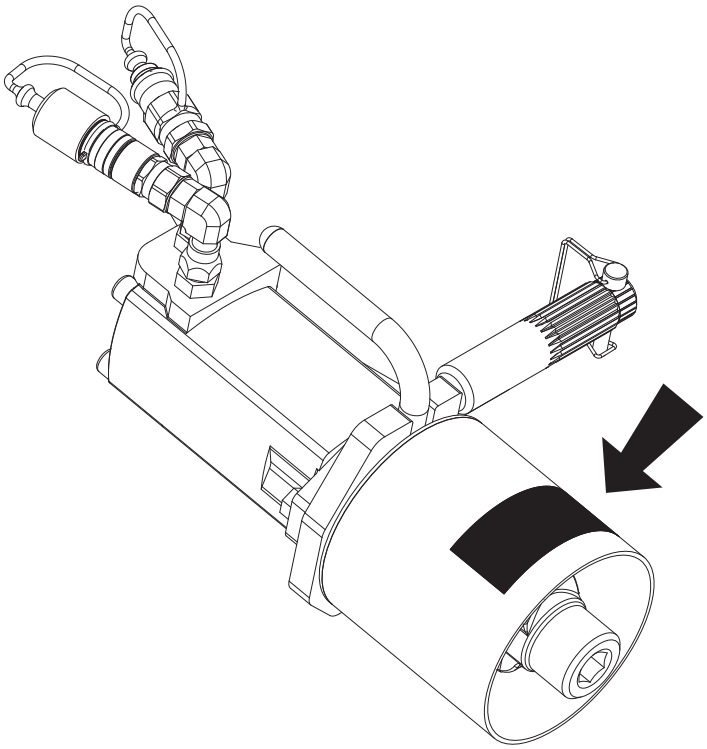

t47om046h.eps

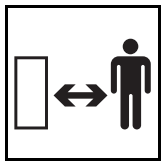

DANGER Rotating shaft. Crushing will cause death or serious injury. Stay away.

https://truckmanualshub.com/

Prepare

Chapter Contents

For additional precautions, see "Safety Awareness" chapter.

Prepare Jobsite 22

- Review Job Plan 22
- Select Start and End Points 22
- Identify Hazards 23
- Locate Utilities 24
- Classify Jobsite 25
- Arrange for Traffic Control 26

Prepare Operator. 27

Prepare Equipment 28

- Check Supplies 28
- Check Equipment 28
- Assemble Accessories 28

https://truckmanualshub.com/

Prepare Jobsite

WARNING Underground utilities. Contact can cause death or serious injury. Locate and verify underground utilities before digging or drilling.

To help avoid injury:

- Expose lines by careful hand digging or soft excavation before operating equipment. Use appropriate equipment and procedures for exposing utility lines.
- Classify jobsite and follow precautions based on classification.
- Follow local regulations for digging near utilities.

A successful job begins before working. The first step in planning is reviewing information already available about the job and jobsite.

Review Job Plan

Review blueprints or other plans. Check for information about existing or planned structures, elevations, or proposed work that may be taking place at the same time.

Select Start and End Points

Select one end to use as a starting point. Consider the following when selecting a starting point:

Slope

Equipment should be parked on a level site. Consider how slope will affect setup and operation. Assess the risks on each slope to determine if factors affecting risks create an unsafe condition for working. See "Slope Guidelines" on page 44.

Space

Check that starting and ending points allow enough space for working.

Comfort

Consider shade, wind, fumes, and other site features.

https://truckmanualshub.com/

Identify Hazards

Inspect jobsite before transporting equipment. Check for the following:

- overall grade or slope
- changes in elevation such as hills or open trenches
- obstacles such as buildings, railroad crossings, or streams
- signs of utilities

  - "buried utility" notices
  - gas or water meters
  - drop boxes
  - manhole covers
  - utility facilities without overhead lines
  - junction boxes
  - light poles
  - sunken ground

- traffic
- access
- soil type and condition
- loose material such as fencing or cable

https://truckmanualshub.com/

Locate Utilities

Notify One-Call Services

Mark proposed path with white paint and have underground utilities located before working.

- In the US or Canada, call 811 (US) or 888-258-0808 (US and Canada). Also contact any local utilities that do not participate in the One-Call service.
- In countries that do not have a One-Call service, contact all local utility companies to have underground utilities located.

Verify Underground Utilities

Have an experienced locating equipment operator sweep area within 20' (6 m) to each side of proposed excavation to verify previously marked line and cable locations. Mark location of all buried utilities and obstructions.

Locate Overhead Lines

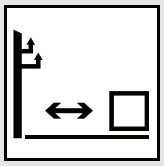

DANGER Overhead electrical lines. Contact will cause death or serious injury. Know location of lines. Stay away.

Note location and height of all overhead lines in jobsite and ensure that equipment maintains proper distance from live lines.

https://truckmanualshub.com/

Classify Jobsite

Select a Classification

Jobsites are classified according to underground hazards present, not by line being installed. Jobsite may have more than one classification.

If working . . .	then classify jobsite as . . .
within 10' (3m) of a buried electric line	electric
within 10' (3m) of a natural gas line	natural gas
in concrete, sand, or granite which is capable of producing crystalline silica dust	crystalline silica dust
within 10' (3m) of any other hazard	other

Classify jobsite as electric if jobsite is in question or if the possibility of unmarked electric utilities exists.

Apply Precautions

WARNING Underground utilities. Contact can cause death or serious injury. Locate and verify underground utilities before digging or drilling.

Once classified, precautions appropriate for jobsite must be taken. Follow US Department of Labor regulations on excavating and trenching (Part 1926, Subpart P) and other similar regulations.

Electric Jobsite Precautions

Use one or both of these methods:

- Expose line by careful hand digging or soft excavation.
- Have service shut down while work is in progress. Have electric company test lines before returning them to service.

https://truckmanualshub.com/

Natural Gas Jobsite Precautions

Position equipment upwind from gas lines and use one or both of these methods:

- Expose line by careful hand digging or soft excavation.
- Have service shut down while work is in progress. Have gas company test lines before returning them to service.

Crystalline Dust Jobsite Precautions

CAUTION Silica dust. Exposure can cause lung disease or cancer. Use breathing protection.

Crystalline silica dust is a naturally occurring substance found in soil, sand, concrete, granite, and quartz.

To reduce exposure when cutting, drilling, or working these materials:

- Use water spray or other means to control dust.
- Refer to US Occupational Safety and Health Administration (OSHA) guidelines or other applicable regulating guidelines for appropriate breathing protection or dust control methods.

Other Jobsite Precautions

You may need to use different methods to safely avoid other underground hazards. Talk with those knowledgeable about hazards present at each site to determine which precautions should be taken or if job should be attempted.

Clear objects such as landscaping fabric, cable, and wire from the work area. These objects may be underground or partially buried.

Arrange for Traffic Control

Vehicle and pedestrian traffic must be a safe distance from equipment. Evaluate jobsite and allow an appropriate buffer zone around equipment. If working near a road or other traffic area, contact local authorities about safety procedures and regulations.

https://truckmanualshub.com/

Prepare Operator

WARNING Jobsite hazards. Exposure can cause death or serious injury. Use correct equipment and work methods. Use and maintain appropriate safety equipment.

To help avoid injury:

- Wear personal protective equipment including hard hat, safety eye wear, foot protection, hearing protection, and gloves (except when near rotating equipment).
- Remove jewelry.
- Wear close-fitting, high visibility clothing.
- Have other personal protective equipment, such as insulated boots and gloves, breathing protection, and face shield, etc. available for use depending on jobsite hazards or requirements.

Follow these guidelines before operating any jobsite equipment:

- Complete proper training and read operator's manual before using equipment.
- Plan for emergency services. Have the telephone numbers for local emergency and medical facilities on hand. Check that you will have access to a telephone.
- Review jobsite hazards, safety and emergency procedures, and individual responsibilities with all personnel before work begins. Safety videos are available from your Ditch Witch® dealer or at www.ditchwitch.com/safe. Safety Data Sheets (SDS) are available at www.ditchwitch.com/support.
- Use equipment carefully. Stop operation and investigate anything that does not look or feel right.

https://truckmanualshub.com/

Prepare Equipment

Check Supplies

- fuel
- keys
- marking flags or paint
- notepad and pencil
- spare fuses
- lubricants

Check Equipment

Fluid Levels

- fuel
- engine oil
- hydraulic fluid
- engine coolant

Condition and Function

- all controls

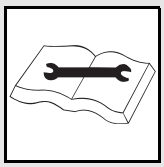

WARNING Improper control function. Use can cause death or serious injury. If control does not work as described in instructions, stop machine and have it serviced.

- battery
- hoses and valves
- pumps and motors
- tires or tracks
- signs, guards, and shields
- filters (air, oil, hydraulic)
- belts

Assemble Accessories

If required, mount fire extinguisher near the power unit but away from possible points of ignition. The fire extinguisher should always be classified for both oil and electric fires. It should meet legal and regulatory requirements.

https://truckmanualshub.com/

Controls

Chapter Contents

C12x Engine 30

C16x Engine 32

C24x Engine 34

C30x Engine 36

Console 38

https://truckmanualshub.com/

C12x Engine

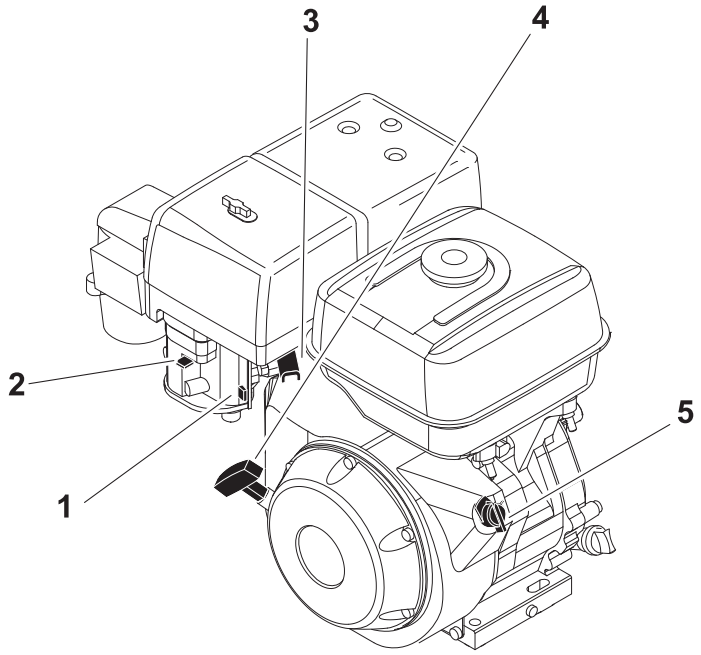

t27om005h.eps

1. Fuel shut-off valve
2. Choke
3. Throttle
4. Rope start
5. Ignition switch

Item	Description	IMPORTANT
1. Fuel shut-off valve 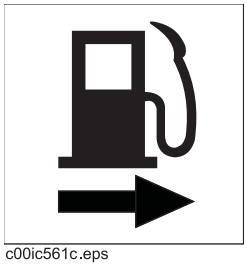 c00ic561c.eps	To close, move left. To open, move right.	Close valve: • to transport machine to or from jobsite • to park machine • if machine tips over

https://truckmanualshub.com/

Item	Description	IMPORTANT
2. Choke 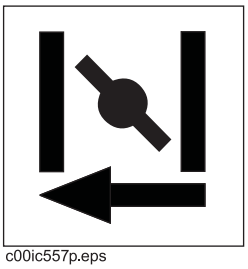 c00ic557p.eps	To close, move left. To open, move right.	Close choke to help start a cold engine. Wait until engine warms to gradually open choke.
3. Throttle 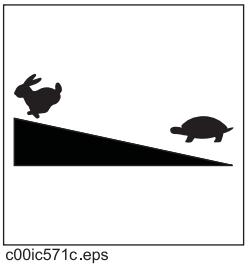 c00ic571c.eps	To increase engine speed, move left. To decrease, move right.	
4. Rope start 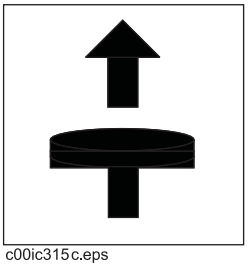 c00ic315c.eps	To start engine, pull starter grip lightly until resistance is felt, then pull briskly.	
5. Ignition switch 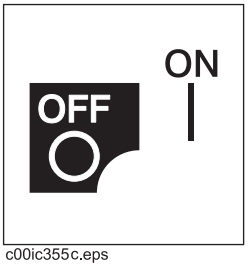 c00ic355c.eps	To enable engine startup, turn right. To shut off machine, turn left.	

https://truckmanualshub.com/

C16x Engine

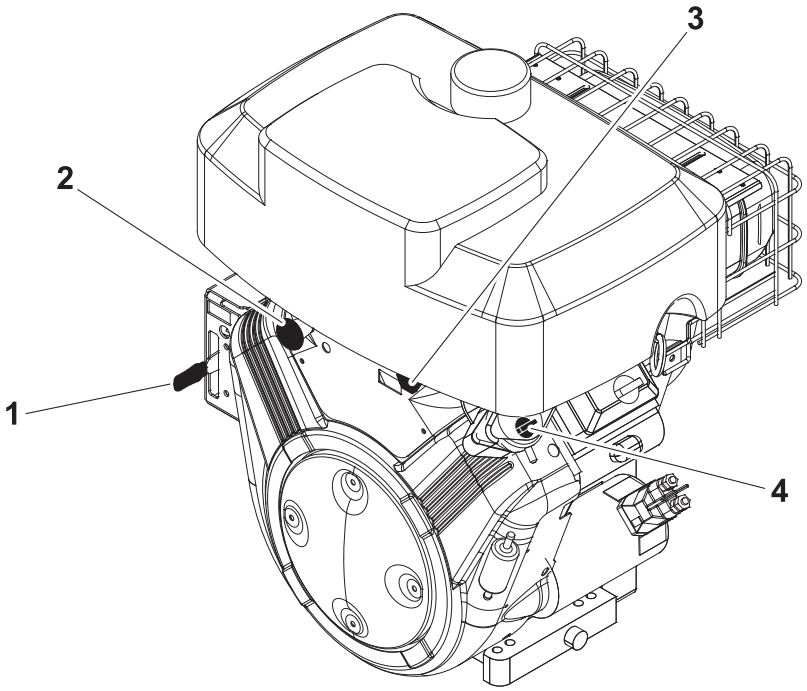

t47om007h.eps

1. Throttle
2. Choke
3. Ignition switch
4. Fuel shut-off valve

Item	Description	IMPORTANT
1. Throttle 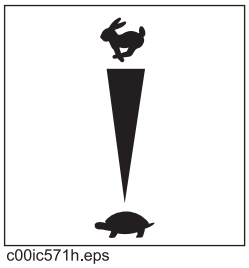 c00ic571h.eps	To increase engine speed, move up. To decrease, move down.	

https://truckmanualshub.com/

Item	Description	IMPORTANT
2. Choke 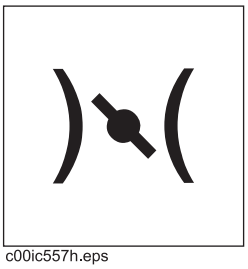 c00ic557h.eps	To close, pull. To open, push.	Close choke to help start a cold engine. Wait until engine warms to gradually open choke.
3. Ignition switch 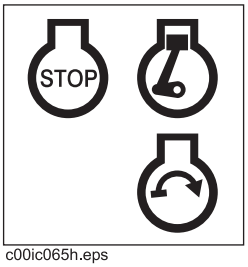 c00ic065h.eps	To activate accessories, turn right. To start engine, turn right and hold. To shut off machine, turn left.	
4. Fuel shut-off valve 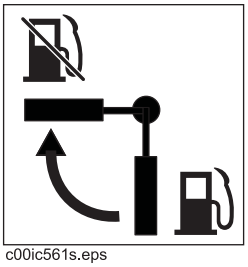 c00ic561s.eps	To close, move left. To open, move right.	Close valve: • to transport machine to or from jobsite • to park machine • if machine tips over

https://truckmanualshub.com/

C24x Engine

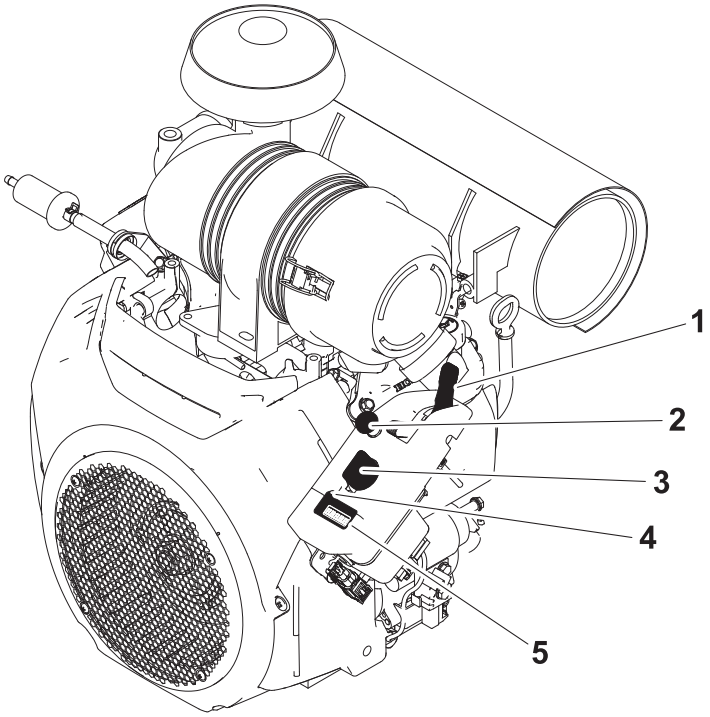

t47om008h.eps

1. Throttle
2. Choke
3. Ignition switch
4. Oil pressure indicator
5. Hourmeter

Item	Description	IMPORTANT
1. Throttle 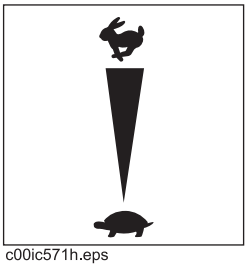 c00ic571h.eps	To increase engine speed, move up. To decrease, move down.	

https://truckmanualshub.com/

Item	Description	IMPORTANT
2. Choke 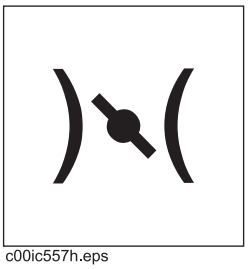 c00ic557h.eps	To close, pull. To open, push.	Close choke to help start a cold engine. Wait until engine warms to gradually open choke.
3. Ignition switch 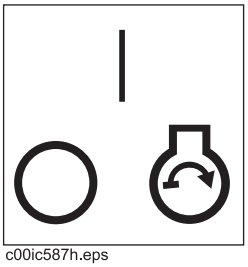 c00ic587h.eps	To activate accessories, turn right. To start engine, turn right and hold. To shut off machine, turn left.	
4. Oil pressure indicator 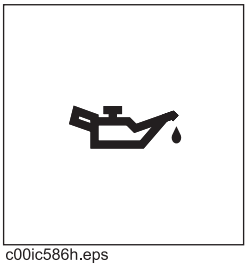 c00ic586h.eps	Lights when oil pressure is too low.	Engine will not start.
5. Hourmeter 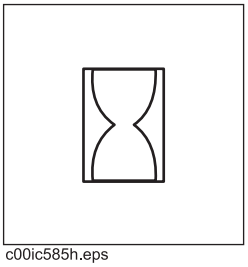 c00ic585h.eps	Displays engine operating time.	Use these times to schedule service.

https://truckmanualshub.com/

C30x Engine

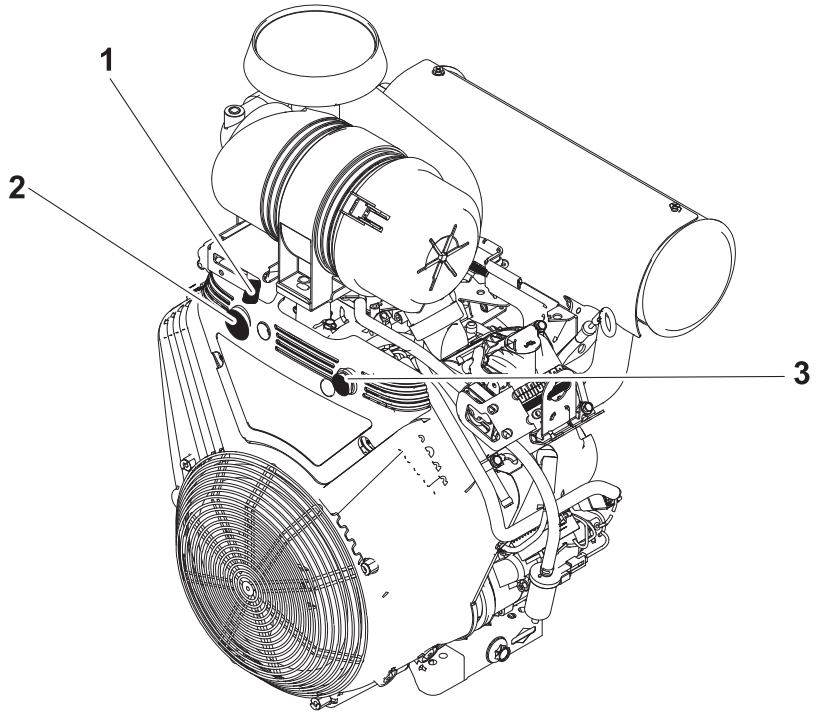

t47om006h.eps

1. Throttle
2. Choke
3. Ignition switch

Item	Description	IMPORTANT
1. Throttle 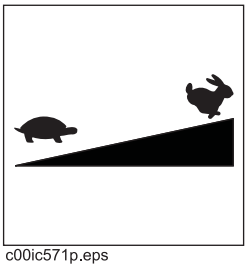 c00ic571p.eps	To increase engine speed, move right. To decrease, move left.	

https://truckmanualshub.com/

Item	Description	IMPORTANT
2. Choke 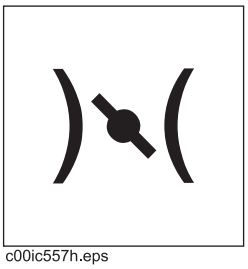 c00ic557h.eps	To close, pull. To open, push.	Close choke to help start a cold engine. Wait until engine warms to gradually open choke.
3. Ignition switch 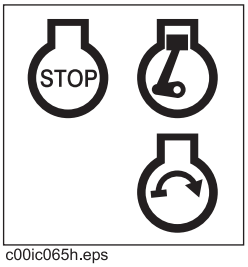 c00ic065h.eps	To activate accessories, turn right. To start engine, turn right and hold. To shut off machine, turn left.	

https://truckmanualshub.com/

Console

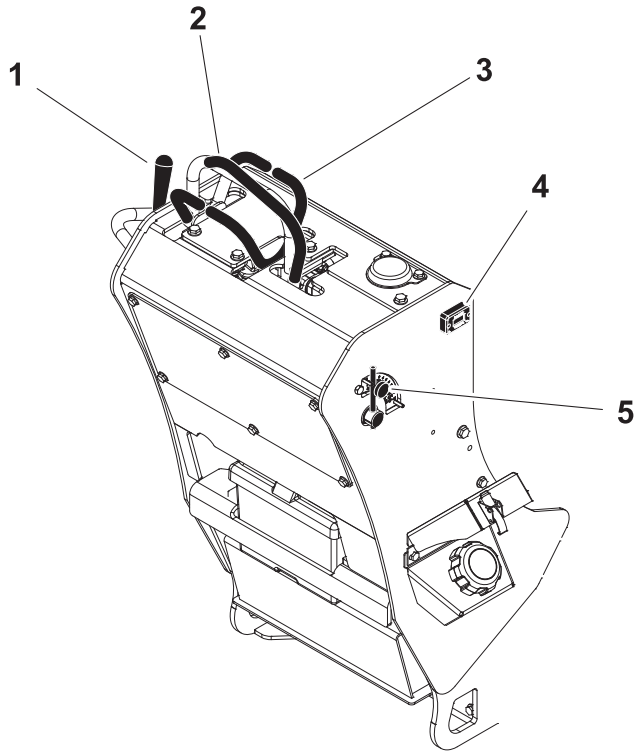

t47om005h.eps

1. Boom lift control
2. Digging chain/Roto Witch® control
3. Speed/Direction controls
4. Hourmeter/Tachometer *
5. Variable speed control **

* C16x and C30x only
** C16x only

Item	Description	IMPORTANT
1. Boom lift control 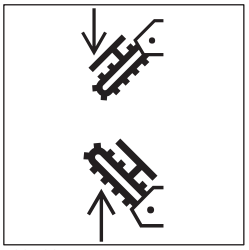 c00ic004c.eps	To lower, move up. To raise, move down.	

https://truckmanualshub.com/

Item	Description	IMPORTANT
2. Digging chain control 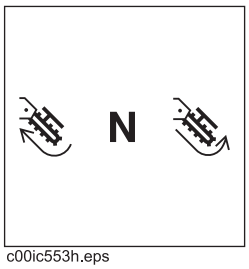 c00ic553h.eps **3. Roto Witch® control** 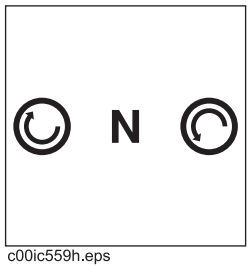 c00ic559h.eps	To start chain, move back and then move left. To reverse chain, move back and then move right. To rotate clockwise, move up. To rotate counterclockwise, move back.	***NOTICE:*** Operate digging chain in reverse only to dislodge a rock or other obstruction. Control changes function when equipped with optional Roto Witch drilling attachment. Trenching movement is always backward (toward you).
4. Speed/Direction controls 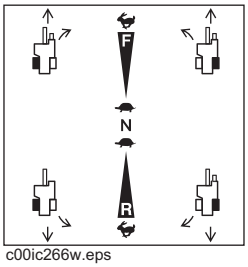 c00ic266w.eps	To drive straight forward, move both controls up. To drive straight in reverse, move both controls back. To turn left, move right control for forward or reverse. To turn right, move left control for forward or reverse. To go faster in any direction, move farther from neutral position.	
5. Hourmeter/Tachometer 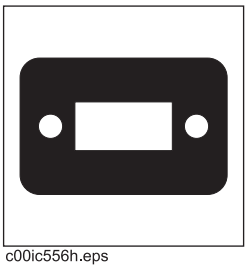 c00ic556h.eps	Displays engine operating time and engine speed.	Use engine operating times to schedule service.

https://truckmanualshub.com/

Item	Description	IMPORTANT
6. Variable speed control 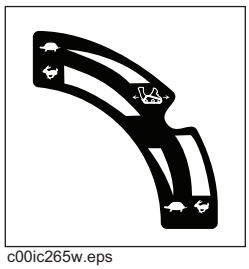 c00ic265w.eps	To increase digging chain speed and decrease ground drive speed, loosen knob, move control up, then tighten knob. To decrease digging chain speed and increase ground drive speed, loosen knob, move control down, then tighten knob.	

https://truckmanualshub.com/

Drive

Chapter Contents

For additional precautions, see "Safety Awareness" and "Prepare" chapters.

IMPORTANT: For more information on how to operate controls, see "Controls" chapter.

Start **42**

Operate **43**

- Slope Guidelines 44
- Reduce Track Wear 45

Shut Down **45**

https://truckmanualshub.com/

Start

EMERGENCY SHUTDOWN: Release all controls and stop engine.

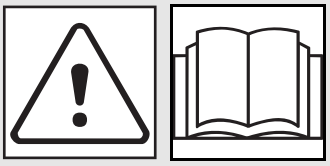

WARNING Misuse of machine can cause death or serious injury. Read and understand operator's manual and all other safety instructions before use. Know how to use all controls.

To help avoid injury:

- Allow hydraulic fluid time to warm before operating in cold weather. Cold hydraulic fluid can lengthen ground drive stopping time.
- For starting in extreme temperatures, contact your Ditch Witch® dealer.

NOTICE: If engine turns but does not start within 5 seconds, allow starter to cool. Wait at least one minute and try again.

1. Ensure all controls are in neutral.
2. If necessary, close choke valve.
3. Insert key and activate accessories using ignition switch.
4. **If starting machine in normal conditions,**
   1. Start engine and run at low throttle under light load for at least three minutes before applying heavier load.
   2. Gradually open choke valve after engine warms.

   If starting machine in cold weather:
   1. Start engine.
   2. Warm engine and hydraulic fluid by gradually increasing engine speed for up to 30 minutes.
   3. After warmup, carefully operate all hydraulic controls at low throttle until controls operate as described in controls chapter.
   4. Gradually open choke valve after engine warms.

https://truckmanualshub.com/

Operate

NOTICE:

- Drive carefully in congested areas. Know machine's clearance and turning radius.
- Survey field of vision when operating machine.

1. Remove parking pin from parking position (2) and insert it in drive position (1).
2. Raise digging boom.
3. Set throttle to 3/4 open.
4. Move machine in direction of preferred travel.

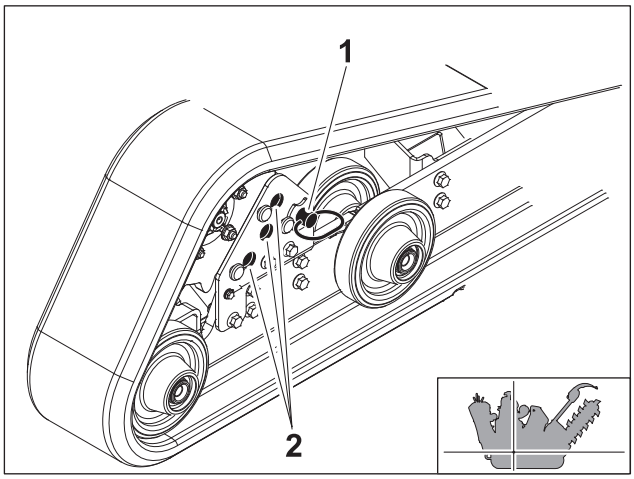

t47om045h.eps

https://truckmanualshub.com/

Slope Guidelines

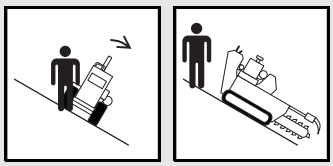

WARNING Tipover. Crushing can cause death or serious injury. Follow procedure in operator's manual. Drive cautiously.

To help avoid injury:

- Operate at slow speed when on rough terrain.
- Avoid driving across slopes.
- Never jerk control levers. Use a steady, even motion.
- Always operate from the uphill side of the machine.
- Always drive with attachment low to the ground.
- If tipover occurs, shut engine off if possible.

Operating safely on a slope depends upon many factors including:

- distribution of machine weight (can change due to configuration)
- even or rough ground conditions
- potential for ground giving way causing unplanned tilt forward, backward or sideways
- nearness of ditches, ruts, stumps or other obstructions and sudden changes in slope
- speed
- turning
- operator skill

These varying factors make it impractical to specify a maximum safe operating angle in this manual. It is therefore important for the operator to be aware of these conditions and adjust operation accordingly. Maximum engine angle is an absolute limits which must never be exceeded. This maximum is stated below since it is a design limit. **These design limits usually exceed the operating limits and must never be used alone to establish safe operating angle for variable conditions**.

Maximum engine lubrication angle: 20°

https://truckmanualshub.com/

Reduce Track Wear

Rubber tracks are best suited at soil-based jobsites with minimal rocks and debris. To reduce track wear drive slowly and make wide turns. Avoid the following:

- spinning tracks under heavy load
- turning on sharp objects such as stones, broken concrete, or debris
- quick turns on asphalt or concrete
- driving over curbs or ledges
- driving with track edges pressed against hard walls or curbs
- operating on corrosive materials such as salt or fertilizer

Shut Down

1. When job is complete, move machine to level ground.
2. Stop machine movement.
3. Lower boom, if space allows.
4. Return all controls to neutral.
5. Set to low throttle.
6. Shut off machine.
7. Insert parking pin (1) in parking position (2).

   IMPORTANT: Stopping position of gear (3) determines parking position.

8. Close fuel shutoff valve, if equipped.
9. If leaving machine unattended, remove key, if equipped.

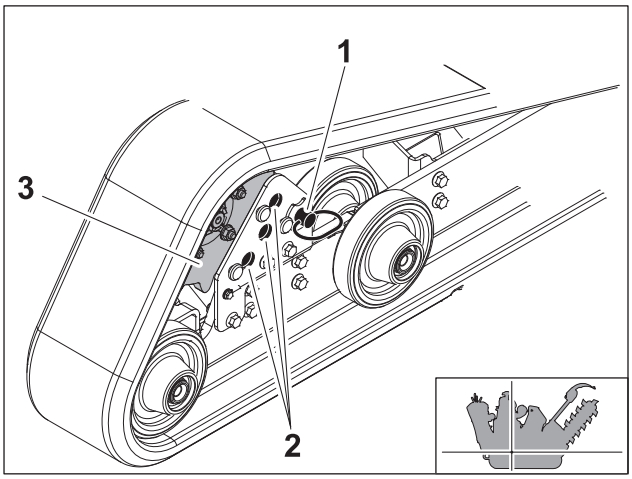

t47om038h.eps

https://truckmanualshub.com/

https://truckmanualshub.com/

Transport

Chapter Contents

For additional precautions, see "Safety Awareness" and "Prepare" chapters.

IMPORTANT: For more information on how to operate controls, see "Controls" chapter.

Lift 48

- Points 48
- Procedure 48

Haul 49

- Inspect Trailer 49
- Load 50
- Tie Down 51
- Unload 52

Retrieve 52

https://truckmanualshub.com/

Lift

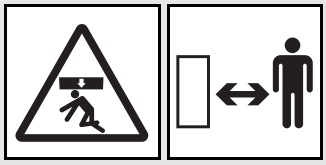

WARNING Lifted load. Crushing weight can cause death or serious injury. Stay away from lifted load and its range of movement.

Points

Lifting points are identified by lifting decals. Lifting at other points is unsafe and can damage machinery.

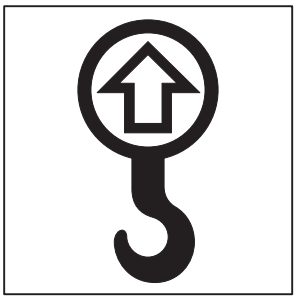

ic1319a.eps

Procedure

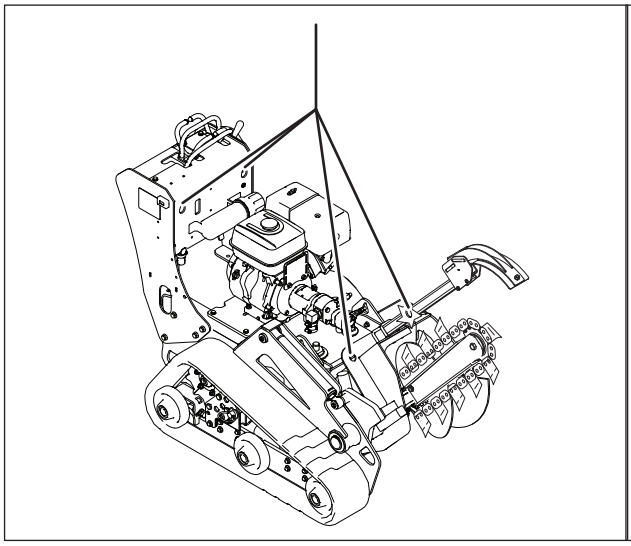

t57om001w.eps

C12x

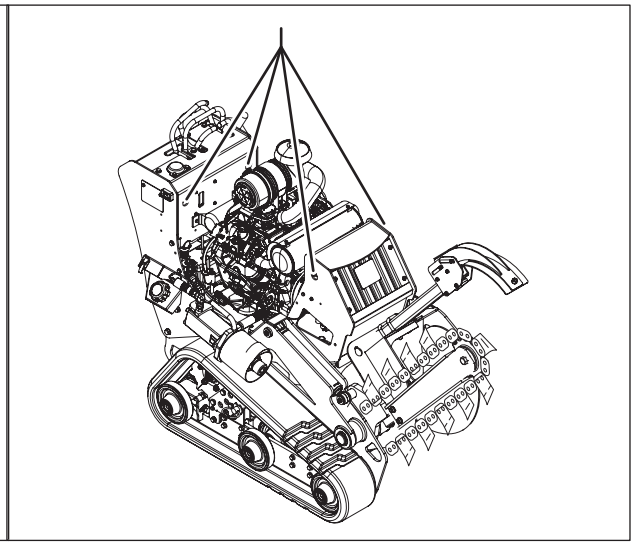

t47om009h.eps

C16x/C24x/C30x

Use equipment capable of supporting machine's size and weight. See "Specifications" on page 103 or measure and weigh equipment before lifting.

https://truckmanualshub.com/

Haul

WARNING Misuse of machine can cause death or serious injury. Read and understand operator's manual and all other safety instructions before use. Know how to use all controls.

To help avoid injury:

- Read trailer operator's manual before loading or transporting machine.
- Ensure tow vehicle has proper tow capacity rating.
- Attach trailer to vehicle before loading or unloading.
- Load and unload trailer on level ground.
- To help prevent trailer sway, load trailer so that 10-15 percent of total vehicle weight (equipment plus trailer) is on tongue.
- If loading onto tilt-bed trailer, be prepared for trailer to tilt.

Inspect Trailer

- Check hitch for wear and cracks.
- Check battery for 12V charge.
- Inspect lights for cleanliness and correct operation.
- Inspect reflectors and replace if needed.
- Check tire pressure.
- Check lug nut torque.
- Ensure trailer brakes are adjusted to come on with tow vehicle brakes.
- Check trailer bed for cracks.

https://truckmanualshub.com/

Load

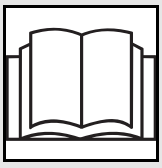

WARNING Horizontal movement. Crushing can cause death or serious injury. Read and understand operator's manual and all safety instructions before use.

CAUTION Tipover. Crushing can cause injury. When loading/unloading, run at low throttle. Keep boom low.

1. If equipped, put backfill blade in stowed position. See "Backfill Blade" on page 73.
2. Remove parking pin from parking position.
3. Start engine.
4. Set to low throttle.
5. Raise boom clear of trailer, but keep it low.
6. Move machine to rear of trailer and align with ramps.

   IMPORTANT: Boom should be facing ramps.

7. Drive forward slowly to move machine onto trailer until tiedown position is reached.

   NOTICE: If loading onto tilt-bed trailer, be prepared for trailer to tilt. Load trencher as far to the front of trailer as possible.

8. Lower boom to trailer bed, if space allows.
9. Ensure all controls are in neutral position.
10. Shut off machine.
11. Insert parking pin in parking position.
12. Tie down machine.

https://truckmanualshub.com/

Tie Down

Points

Tiedown points are identified by tiedown decals. Securing to truck or trailer at other points is unsafe and can damage machinery.

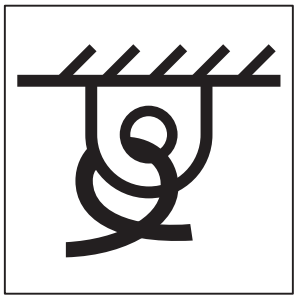

ic1320a.eps

Procedure

Loop a transport chain around each tie down point. Ensure tiedowns are tight before transporting.

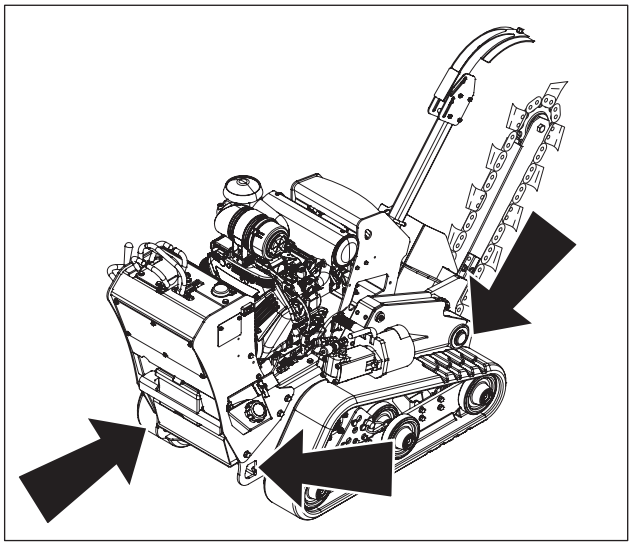

t47om010h.eps

https://truckmanualshub.com/

Unload

CAUTION Tipover. Crushing can cause injury. When loading/unloading, run at low throttle. Keep boom low.

1. Prepare trailer and ramps for unloading.
2. Remove tiedowns.
3. If equipped, open fuel shutoff valve.
4. Remove parking pin from parking position.
5. Start engine.
6. Set to low throttle.
7. Raise boom clear of trailer, but keep it low.
8. Slowly back machine down trailer or ramps.

NOTICE: If unloading from tilt-bed trailer, be prepared for trailer to tilt.

Retrieve

Under normal conditions, machine should not be towed. If machine becomes disabled and retrieval is necessary:

- Tow for no more than 200yd (180m) at less than 1mph (1.6km/hr).
- Use towing chains appropriately rated for maximum towing force.
- Attach tow line to all available tiedown points facing towing vehicle.
- Steering will be difficult.

https://truckmanualshub.com/

Trench

Chapter Contents

For additional precautions, see "Safety Awareness" and "Prepare" chapters.

IMPORTANT: For more information on how to operate controls, see "Controls" chapter.

Set Up 54

Operate 55

Finish Job 56

https://truckmanualshub.com/

Set Up

1. Ensure machine is shut off.
2. Ensure restraint bar is installed correctly:

   IMPORTANT: Trench cleaner shown installed on restraint bar is optional.

   - The word "DANGER" must be facing up, as shown.
   - Restraint bar must be in correct position. See "Restraint Bar" on page 100.
3. If equipped, remove backfill blade. See "Backfill Blade" on page 73.
4. Install correct counterweight configuration. See "Counterweights" on page 74.
5. Start engine.
6. Drive to starting point. Move in line with planned trench.

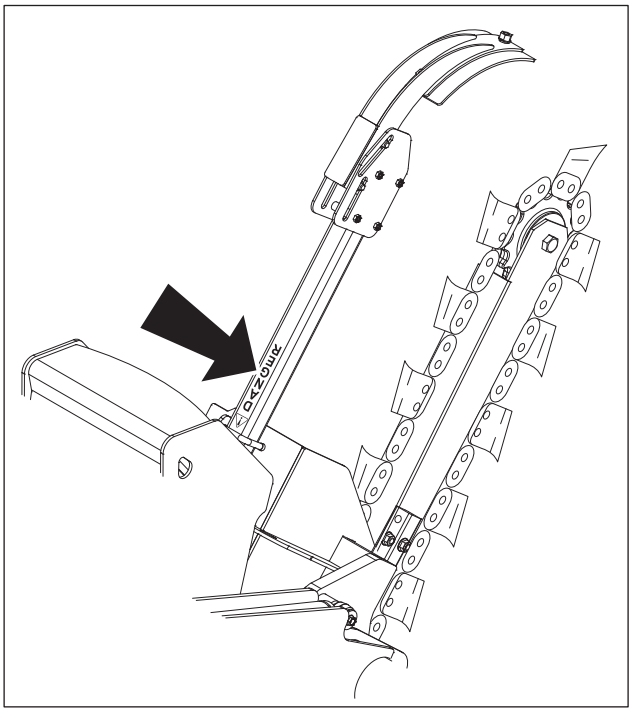

t47om040h.eps

https://truckmanualshub.com/

Operate

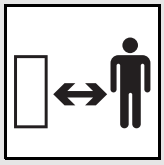

WARNING Thrown objects. Impact can cause death or serious injury. Stay away.

To help avoid injury:

- Keep everyone at least 6' (2m) from machine, attachments, and their range of movement.
- Know soil conditions and adjust digging speed accordingly.

1. Set throttle to half open.
2. Lower digging boom to just above ground.
3. Lift trench cleaner, if equipped.
4. Move digging chain control to dig position. DIGGING CHAIN WILL MOVE.

DANGER Moving digging teeth. Contact will cause death or serious injury. Stay at least 6' (2m) away.

To help avoid injury:

- Allow 3' (914mm) between digging teeth and obstacle. Machine may jerk when digging starts.
- Keep everyone at least 6' (2m) from machine, attachments, and their range of movement.
- Stand back from console and hold controls loosely. Digging chain can catch on root or rock, forcing handlebar down suddenly.
- Trench cave-in or material caught in digging chain can result in contact with digging teeth.

5. If using trench cleaner, lower after moving forward about 1' (30cm).

NOTICE:

- Never start trench with trench cleaner in working position.
- Never back up with trench cleaner in working position.

6. Slowly lower digging boom to desired trench depth.

https://truckmanualshub.com/

7. Slowly move to desired speed.

IMPORTANT:

- Trenching movement is toward you.
- Always start trenching at low speed. Increase ground drive speed only as soil conditions permit.

8. Operate engine at full throttle when working.

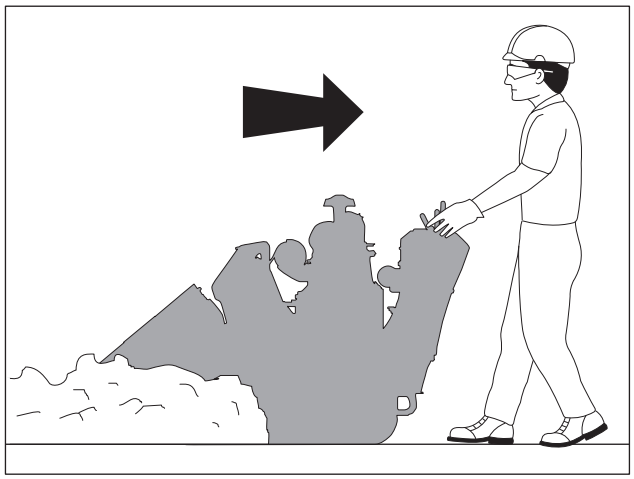

t47om011h.eps

Finish Job

1. When trench is complete, stop movement.
2. Set throttle to half open.
3. Raise boom.
4. Stop digging chain.
5. Raise trench cleaner, if equipped.
6. Install backfill blade and backfill, if desired.
7. Drive a short distance away from work site.
8. Shut off machine.

https://truckmanualshub.com/

Drill

Chapter Contents

For additional precautions, see "Safety Awareness" and "Prepare" chapters.

IMPORTANT: For more information on how to operate controls, see "Controls" chapter.

Set Up 58

- Dig Approach Trench 58
- Dig Target Trench 58
- Install Drilling Attachment 59
- Connect Hydraulic Lines 59
- Install Drill String 60

Operate 61

- Drill 61
- Add Rod 63
- Backream 65
- Install Product 66
- Remove Rod 67

Finish Job 68

- Disassemble Drill String 68
- Remove Drilling Attachment 68

https://truckmanualshub.com/

Set Up

WARNING Underground utilities. Contact can cause death or serious injury. Locate and verify underground utilities before digging or drilling.

To help avoid injury: Only operate drilling attachment if bore path is more than 10' (3m) from any underground hazard.

Dig Approach Trench

1. Mark planned bore path and all located utility lines with flags or paint.
2. Dig approach trench (1) along intended bore path.

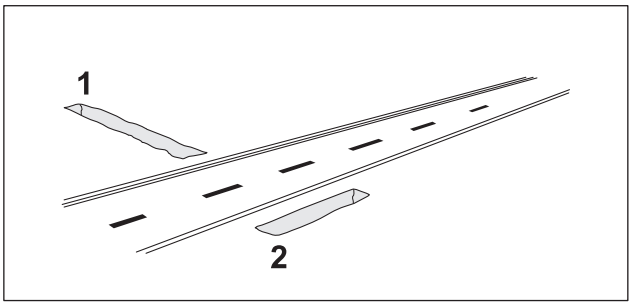

Drill_Attchmnt_Prep_Job.eps

IMPORTANT: Ensure approach trench is:

- deep enough for pipe to lay flat and to enter soil at correct angle,
- at least half the total length of drill string, and
- at least 4" (10cm) wide.

Dig Target Trench

1. Select completion point for the bore.
2. Dig target trench (2) **across** intended completion point.

IMPORTANT: Ensure that trench is:

- deep enough for drill bit to enter slightly above the trench floor, and
- long enough to allow for drift of unguided drill string. Accuracy of bore decreases with length and varies with soil conditions.

https://truckmanualshub.com/

Install Drilling Attachment

The operating position of the drilling attachment is on the right side of the machine.

1. Shut off machine.
2. Remove attachment from storage position. See "Remove Drilling Attachment" on page 68.
3. Fully insert mount pin (3) in cylinder of attachment plate (1), aligning drilling attachment with drill string.
4. Secure assembly with pin (2).

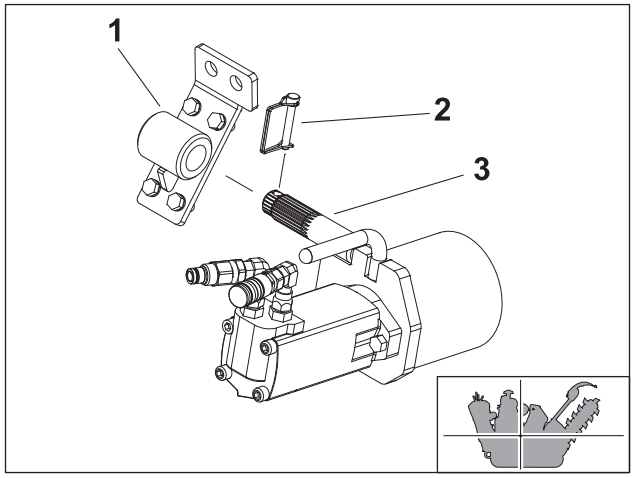

t47om043h.eps

Connect Hydraulic Lines

1. Remove dust covers from connectors (A, B).
2. Disconnect hydraulic connector (1) and connect with connector (A).
3. Disconnect hydraulic connector (2) and connect with connector (B).

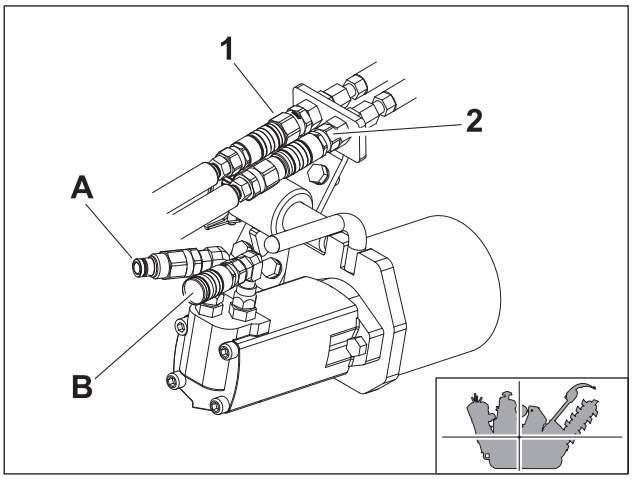

t47om042h.eps

https://truckmanualshub.com/

Install Drill String

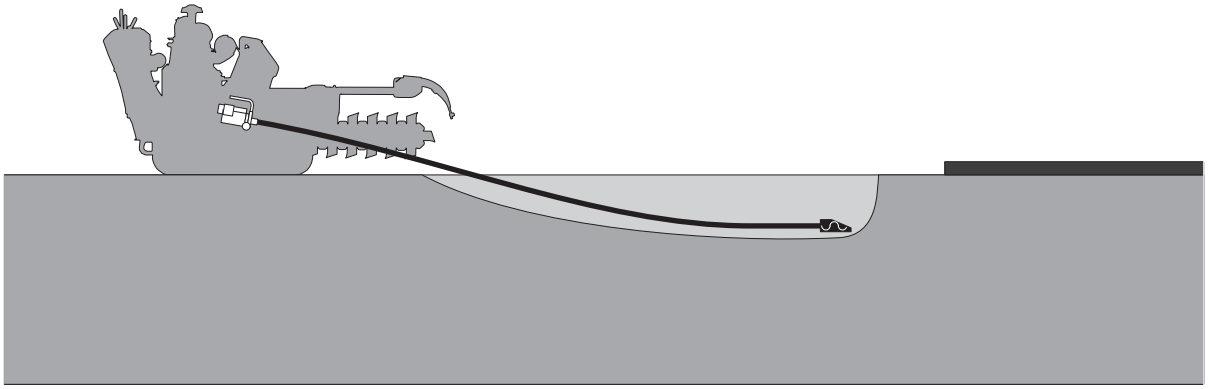

t47om012h.eps

1. Check condition and function of equipment:
   - Ensure rod sections are not bent.
   - Ensure slip latches are functioning properly.
   - Ensure bits are in good condition.
2. Assemble at least 20' (6m), but no more than 30' (9m), of drill rod.

> ***NOTICE:*** Incorrect installation can cause rod sections to bend. Ensure at least half of drill string length is inside trench.

3. Install drill bit.
4. Put drill string in approach trench.
5. Start engine.
6. Align machine with drill string and intended bore path.
7. Shut off machine.
8. Attach drill string to drilling attachment.

https://truckmanualshub.com/

Operate

WARNING Misuse of machine can cause death or serious injury. Read and understand operator's manual and all other safety instructions before use. Know how to use all controls.

To help avoid injury:

- Never alter controls. Improper control function can cause serious injury.
- Never tape or tie down switch or lever.

Drill

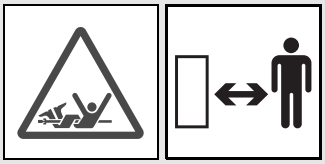

DANGER Rotating shaft. Crushing will cause death or serious injury. Stay away.

To help avoid injury:

- Keep everyone at least 10' (3m) away from drill string and machine unless drill string guide is needed.
- Never force drilling process. Drilling bit will drift off course and rod sections may bow or break. Proceed slowly and carefully.
- Never drill with bent rod section.

1. Evaluate jobsite conditions. If drill string needs guidance have Helper (trained on equipment operation and associated hazards) use drill string guide to align drill string as it enters the soil. See "Start Bore with Drill String Guide" on page 62.
2. Start engine.
3. Set to low throttle.
4. Operate drilling attachment controls to start clockwise rotation.
5. Slowly move machine forward while maintaining rotation.

   IMPORTANT: Always use lowest speed necessary. Increase speed only if more than 5' (1.5m) of rod is in the ground and other conditions allow.

6. Carefully monitor progress of bore:
   - If rod section starts to bow, stop forward movement of machine and reverse slightly until rod straightens.

https://truckmanualshub.com/

- If drilling becomes obstructed, stop rotation immediately.

7. When drill bit enters target trench, stop rotation immediately.

IMPORTANT: After initial bore is complete, backream to enlarge bore or install product.

- See "Backream" on page 65.
- See "Install Product" on page 66.

Start Bore with Drill String Guide

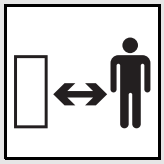

DANGER Rotating shaft. Crushing will cause death or serious injury. Stay away.

To help avoid injury:

- Use only the approved Ditch Witch® drill string guide (p/n 118-079).
- Never straddle trench or drill string.
- Never enter trench.
- Keep hands and feet away from drill string and drilling attachment.
- Never use drill string guide during backreaming or when drill string is being pulled back.
- Only use drill string guide on left side of approach trench.

If drill string needs guidance have Helper follow the instructions below to operate the drill string guide at start of bore.

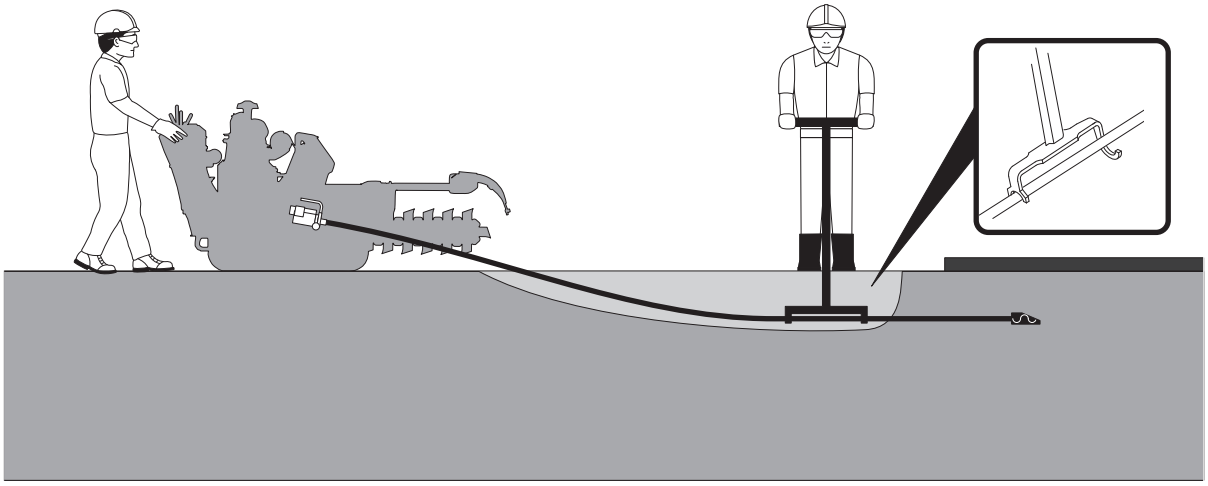

t47om013h.eps

1. Stand on **left** side of approach trench.
2. Put drill string guide in correct position:

https://truckmanualshub.com/

- at least 3' (1m) behind drill bit
- hook side toward bore
- cradle side toward machine

3. When drill string guide is in correct position, signal machine operator to start bore.
4. Use drill string guide to control the first 5' (1.5m) of the bore path.
5. When 5' (1.5m) of rod is in the ground, signal machine operator to stop rotation of drilling attachment.
6. When drill string has stopped, remove drill string guide and leave area.

Add Rod

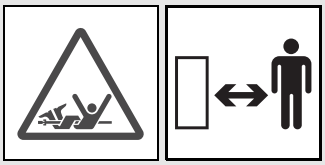

DANGER Rotating shaft. Crushing will cause death or serious injury. Stay away.

To help avoid injury: Only access drilling attachment once rotation has fully stopped.

If more length is needed, ask a Helper to add a rod section.

Disconnect Drill String from Drilling Attachment

1. Stop rotation of drilling attachment.
2. Operate ground drive controls to move machine in reverse 6" (15cm) to loosen drill string in ground.
3. Disconnect drill string from drilling attachment. Special tool (p/n 351-272) may be used. See "Disassemble Drill String" on page 68.
4. Move machine in reverse 10' (3.05m), about the length of a rod section.

https://truckmanualshub.com/

Add Rod Section

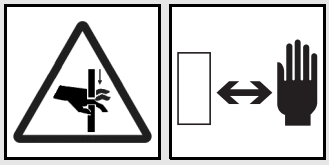

WARNING Pinch point. Crushing will cause serious injury. Stay away.

To help avoid injury:

- Keep hands at least 6" (15cm) from ends of rod.
- Support rods from underneath with open palms. Never grip rods.

1. Have Helper connect new rod section to drill string.
2. Slowly move machine forward until new rod section and drilling attachment are about 1" (2.5cm) apart.
3. Have Helper lightly hold new rod section.
4. Rotate drilling attachment to align slip latches of new rod section and drilling attachment if needed.
5. Move machine forward slowly. As soon as new rod section engages drilling attachment, have Helper move hands clear.
6. Slightly move forward until slip latch connection is correctly latched.

https://truckmanualshub.com/

Backream

Sometimes it is necessary to drill a pilot hole first, then enlarge the hole to accommodate larger product. As a general rule, the final hole should be 1.5 times larger than the diameter of the product being installed. The number of passes needed depends on soil conditions.

NOTICE:

- Do not try to increase hole size too much in one pass. Make several passes using successively larger reamers.
- Keep drill string straight and aligned with drilling attachment. Sharp bends can cause rod failure.
- Ensure no more than 30' (9m) of exposed rod is outside the bore. Remove rods as necessary. See "Remove Rod" on page 67.

1. Shut off machine.
2. Remove drill bit and install appropriate reamer.
3. Start engine.
4. Begin clockwise rotation.

   NOTICE: Always rotate clockwise during backreaming. Rotate counterclockwise only if reamer is blocked in bore.

5. Slowly drive in reverse while maintaining rotation. When reamer exits approach trench, stop rotation immediately.

https://truckmanualshub.com/

Install Product

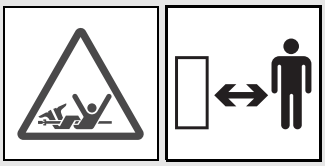

DANGER Rotating shaft. Crushing will cause death or serious injury. Stay away.

To help avoid injury: Ensure no one is in target trench or near product being installed. If swivel malfunctions, material can rotate.

To install product, pull through the bore after drilling or at final pass of backreaming.

1. Shut off machine.
2. Remove drill bit and attach appropriate swivel (2) to drill string (1) or reamer. Ensure swivel functions correctly.
3. Use shackle (3) to attach pipe pulling adapter (4) or pulling grip (5) to swivel.
4. Attach material to pipe pulling adapter or pulling grip.
5. Start engine.
6. Set to low throttle.
7. Slowly drive in reverse while maintaining rotation. When product exits approach trench, stop rotation immediately.

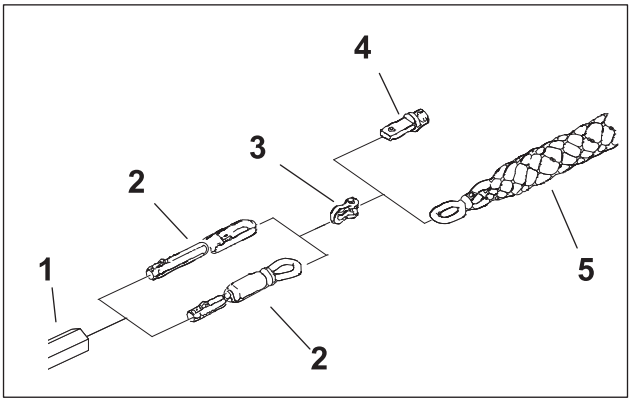

RW_PullingTools.eps

https://truckmanualshub.com/

Remove Rod

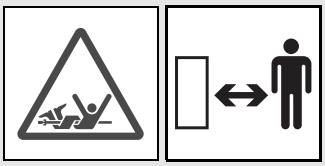

DANGER Rotating shaft. Crushing will cause death or serious injury. Stay away.

To help avoid injury: Only access drilling attachment once rotation has fully stopped.

If the length of rod outside the bore reaches 30' (9m), or as required by space, use a Helper to remove rod sections as needed.

Remove Rod Section

1. Stop rotation of drilling attachment.
2. Disconnect and remove first rod. Special tool (p/n 351-272) may be used. See "Disassemble Drill String" on page 68.

Reconnect Drill String

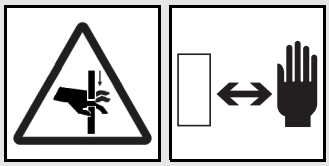

WARNING Pinch point. Crushing will cause serious injury. Stay away.

To help avoid injury:

- Keep hands at least 6" (15cm) from ends of rod.
- Support rods from underneath with open palms. Never grip rods.

1. Slowly move machine forward until rod section and drilling attachment are about 1" (2.5cm) apart.
2. Have Helper lightly hold new rod section.
3. Rotate drilling attachment to align slip latches of new rod section and drilling attachment if needed.
4. Move machine forward slowly. As soon as new rod section engages drilling attachment, have Helper move hands clear.
5. Slightly move forward until slip latch connection is correctly latched.

https://truckmanualshub.com/

Finish Job

Disassemble Drill String

1. Shut off machine.
2. Disconnect drill string from drilling attachment.
3. Remove drill bit.
4. Disconnect rod sections:
   - Press tab through hole in female side of joint (1) using special tool (p/n 351-272).
   - Pull rod sections apart (2).

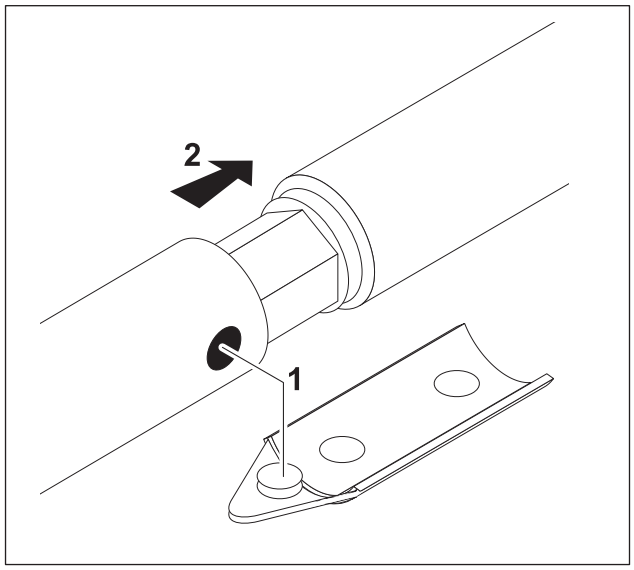

Drill_Attchmnt_RodJoints.eps

Remove Drilling Attachment

When not in use, install the drilling attachment in storage position on left side of console.

1. Shut off machine.
2. Disconnect hydraulic lines.
3. Install dust covers on hydraulic connectors of drilling attachment.
4. Insert mount pin (3) in bore of console (1).
5. Secure assembly with pin (2).

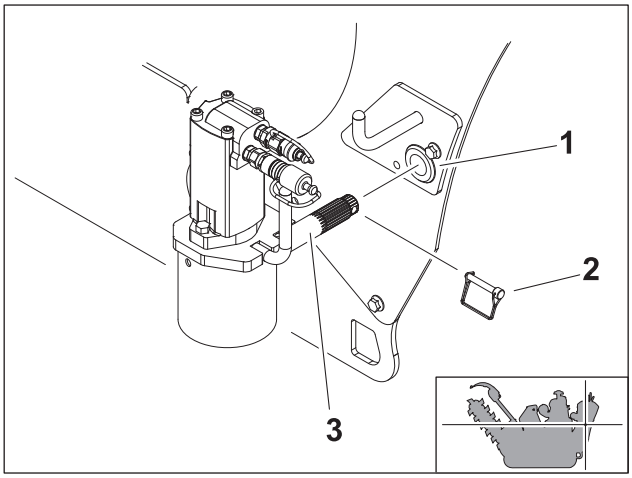

t47om041h.eps

https://truckmanualshub.com/

Systems and Equipment

Chapter Contents

For additional precautions, see "Safety Awareness" and "Prepare" chapters.

Chain, Teeth, and Sprockets 70

- Chain and Tooth Maintenance 70
- Chain Types 70
- Chain Selection 71

Optional Equipment 72

Backfill Blade 73

- Stowed Position 73
- Work Position 73

Counterweights 74

https://truckmanualshub.com/

Chain, Teeth, and Sprockets

Chain and Tooth Maintenance

- Always replace sprockets at the same time as the digging chain. Sprockets and chain are designed to work together. Replacing one without the other will cause premature wear of the new part.
- Keep digging chain sharp. Using dull, worn teeth will decrease production and increase shock load to other trencher components. It can also cause chain stretch, which leads to premature wear and failure.
- Maintain proper amount of tension on digging chain. Overtightening will cause chain stretch and loss of machine performance. For correct tightening procedure, see "Digging Chain" on page 88.
- Use tooth pattern most appropriate for digging conditions. If conditions change, contact your Ditch Witch® dealer for information about the most effective chain type and tooth pattern.

Chain Types

Chain Type	Features
4-pitch	Standard chain
2-pitch	More teeth for smoother cutting
Alternating side bar	Prevents soil compaction on chain
Bolt-on adapters	Allows easy configuration changes
Shark® Chain II	Versatile, little to no maintenance
Combination	Provides pick and shovel effect

https://truckmanualshub.com/

Chain Selection

These charts are meant as a guideline only. No one chain type works well in all conditions. Contact your Ditch Witch® dealer for soil conditions and chain recommendations for your area. Ask for the latest Chain, Teeth, and Sprockets Parts Catalog.

- 1 = best
- 2 = better
- 3 = good
- 4 = not recommended

Soil	Description
Sandy soil	Sugar sand, blow sand, or other soils where sand is the predominant component
Soft soil	Sandy loam
Medium soil	Loams, loamy clays
Hard soil	Packed clays, gumbo, all compacted soils
Rocky soil	Chunk rock, glacial till, cobble, rip rap, gravel
Sticky soil	Gumbo, sticky clays

Chain	Sandy Soil	Soft Soil	Medium Soil	Hard Soil	Rocky Soil	Sticky Soil
4-pitch cup tooth	3	1	2	3	4	1
2-pitch cup tooth	2	3	1	1	3	4
Bolt-on adapter, 2-pitch	4	3	2	1	2	4
Bolt-on adapter/cup tooth combo	4	3	2	1	2	4
Shark® Chain II	4	3	2	1	1	4
Alternating side bar	4	4	4	4	4	1

https://truckmanualshub.com/

Optional Equipment

Contact your Ditch Witch® dealer for more information about the following optional equipment.

Equipment	Description
Booms	Provide depth options of 18" (457mm), 24" (610mm), 30" (760mm), 36" (915mm) or 48" (1220mm)
Mechanical trench cleaner	Removes spoils from the trench floor
Backfill blade	Returns spoils to trench
Drilling attachment	Drills under sidewalks and driveways
10-tooth sprocket	Slows digging chain speed to allow teeth time to penetrate into the ground and increase performance in rocky or extremely hard soil

https://truckmanualshub.com/

Backfill Blade

The optional backfill blade can be used to return spoils to the trench.

Stowed Position

IMPORTANT: Completely remove backfill blade for trenching.

Install backfill blade in stowed position for transport and drilling.

1. Shut off machine.
2. Insert backfill blade in upright position onto mounting stub (2).
3. Secure with pin (1).

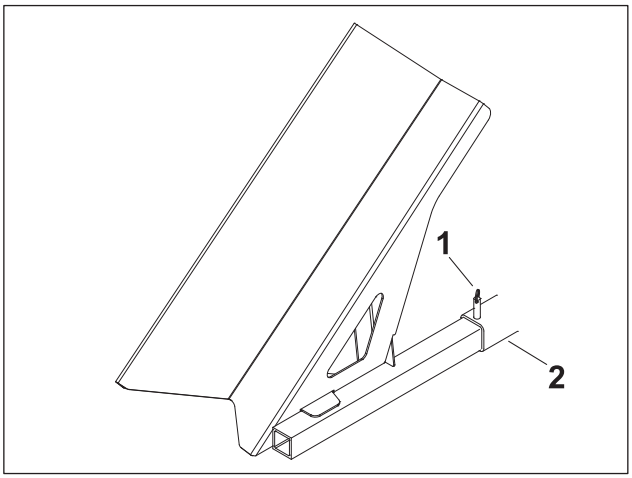

t27om045h.eps

Work Position

Install backfill blade in work position only for backfilling.

1. Shut off machine.
2. Insert backfill blade in work position on mounting stub (2).
3. Secure with pin (1).

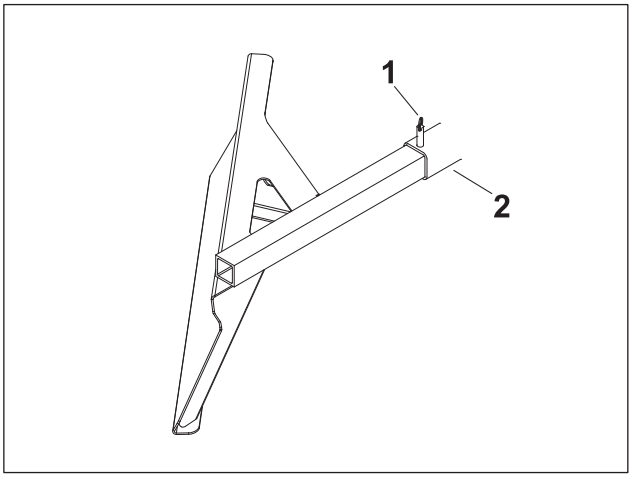

t27om044h.eps

https://truckmanualshub.com/

Counterweights

IMPORTANT: Configurations not listed require no counterweighting.

Use counterweight charts to determine the correct number of counterweights. Install appropriate counterweight configuration on console as shown.

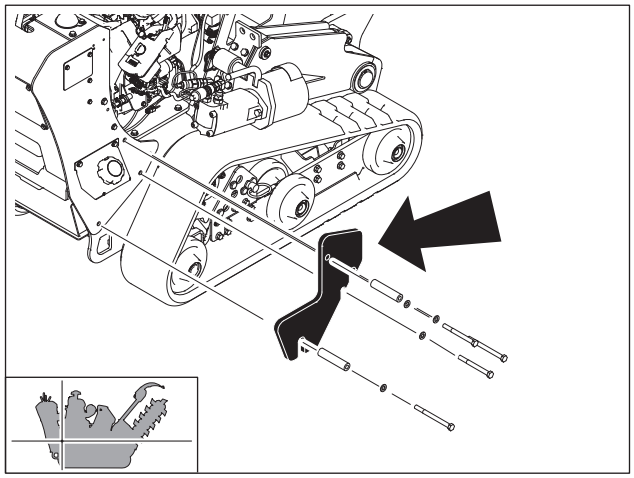

t47om014h.eps

C12x

No counterweighting is required.

C16x and C24x

Chain Type	Boom Length	Tooth Type	Counterweight Required
35K	36" (915mm)	Shark® Chain II, 4" (102mm) and 6" (152mm) widths	8 (4 left, 4 right)

C30x

Chain Type	Boom Length	Tooth Type	Counterweight Required
35K	36" (915mm)	Shark Chain II, 4" (102mm) and 6" (152mm) widths	8 (4 left, 4 right)
	48" (1.2m)	Duratooth Cup	9 (4 left, 5 right)
		Duratooth Combos (Shark/Alligator)	9 (4 left, 5 right)
		Shark Chain II, 4" (102mm) and 6" (152mm) widths	12 (6 left, 6 right)

https://truckmanualshub.com/

Complete the Job

Chapter Contents

⚠	For additional precautions, see "Safety Awareness" and "Prepare" chapters.

Restore Jobsite 76

Rinse Equipment 76

Stow Tools 76

https://truckmanualshub.com/

Restore Jobsite

After product is installed, return spoils to the trench with optional backfill blade, shovels, or small earth-moving equipment. See "Backfill Blade" on page 73.

Rinse Equipment

NOTICE:

- Do not spray water onto operator console or electrical center in engine compartment. Water can damage electrical components. Wipe down instead.
- Ensure all mud and debris is rinsed from tracks before parking machine overnight.

Spray water onto equipment to remove dirt and mud.

Stow Tools

Ensure all tools and accessories are loaded and properly secured on trailer.

https://truckmanualshub.com/

Service

Chapter Contents

For additional precautions, see "Safety Awareness" and "Prepare" chapters.

IMPORTANT: For more information on how to operate controls, see "Controls" chapter.

Service Precautions 78

- Refueling Precaution 79
- Welding Precaution 80
- Washing Precaution 80

Recommended Lubricants 80

- Engine Oil Temperature Charts 81
- Approved Fuel 82

Service Interval Chart 83

Procedures 84

https://truckmanualshub.com/

Service Precautions

WARNING Jobsite hazards. Exposure can cause death or serious injury. Use correct equipment and work methods. Use and maintain appropriate safety equipment.

To help avoid injury:

- Wear personal protective equipment including hard hat, safety eye wear, foot protection, hearing protection, and gloves (except when near rotating equipment).
- Remove jewelry.
- Wear close-fitting, high visibility clothing.
- Have other personal protective equipment, such as insulated boots and gloves, breathing protection, and face shield, etc. available for use depending on jobsite hazards or requirements.

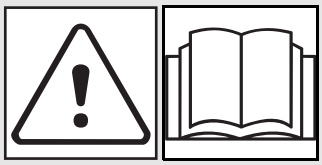

WARNING Misuse of machine can cause death or serious injury. Read and understand operator's manual and all other safety instructions before use. Know how to use all controls.

To help avoid injury:

- Unless otherwise instructed, all service should be performed with the engine off and cool.
- Lower unsecured, raised components before servicing equipment.
- Unless otherwise instructed, all service should be performed with machine parked on level surface.
- Refer to US Occupational Safety and Health Administration (OSHA) guidelines for appropriate lockout-tagout procedures.

https://truckmanualshub.com/

Refueling Precaution

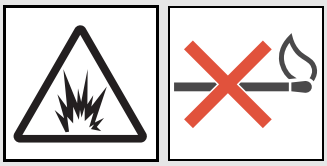

WARNING Gasoline. Fire or explosion will cause death or serious injury. Keep heat, flames, sparks and other ignition sources away.

To help avoid injury:

- Touch a metal surface away from fuel tank to discharge any static electricity.
- Ensure anyone near open fuel tank has discharged any static electricity.

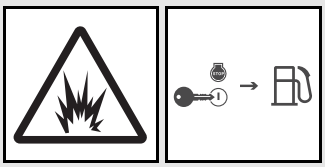

DANGER Gasoline. Fire or explosion will cause death or serious injury. Shut down engine before refueling.

To help avoid injury:

- Ensure engine has completely cooled before removing fuel cap.
- Always hold grips on fuel tank cap and loosen slowly to relieve any pressure in tank.
- Ensure fuel nozzle is inserted securely into filler neck before refueling.

NOTICE: Clean spilled fuel immediately.

https://truckmanualshub.com/

Welding Precaution

NOTICE: Welding can damage electronics.

- Welding currents can damage electronic components. Always disconnect the ECU ground connection from the frame, harness connections to the ECU, and other electronic components prior to welding on machine or attachments.
- Connect welder ground close to welding point and make sure no electronic components are in the ground path.
- Failure to disconnect battery will cause damage to battery.

Washing Precaution

NOTICE: Water can damage electronics. When cleaning equipment, do not spray electrical components with water.

Recommended Lubricants

Item	Description
GEO	Gasoline engine oil meeting or exceeding API SJ See oil temperature chart for recommended viscosity grade for each model.
MPL	Multipurpose gear oil meeting API GL-5 (SAE 80W90)
THF	Tractor hydraulic fluid, Phillips 66® PowerTran Fluid, Mobilfluid® 432, Chevron® Tractor Hydraulic Fluid, Texaco® TDH Oil, or equivalent

Proper lubrication and maintenance protects Ditch Witch® equipment from damage and failure. Service intervals listed are for minimum requirements. In extreme conditions, service machine more frequently. Use only genuine Ditch Witch parts, filters, approved lubricants, TJC, and approved coolants to maintain warranty. Fill to capacities listed in "Specifications" on page 103.

For more information on engine lubrication and maintenance, see your engine manual.

https://truckmanualshub.com/

Engine Oil Temperature Charts

C12x

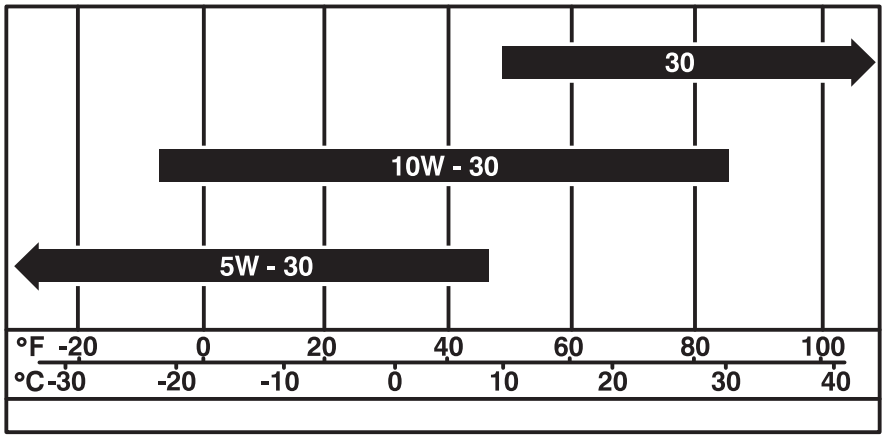

t27om060h.eps

Temperature range anticipated before next oil change

C16x & C30x

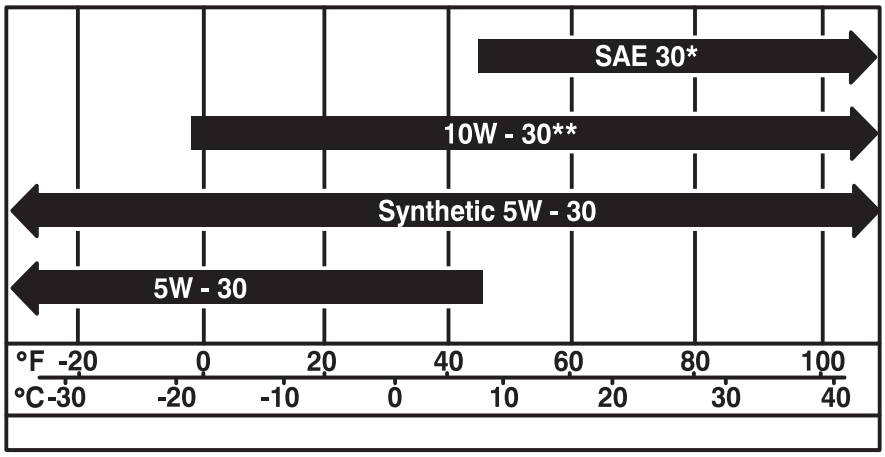

t27om036h.eps

Temperature range anticipated before next oil change

* Below 40°F (4°C), the use of SAE 30 will result in hard starting.

** Above 80°F (27°C), the use of 10W30 may cause increased oil consumption. Check oil level more frequently.

https://truckmanualshub.com/

C24x

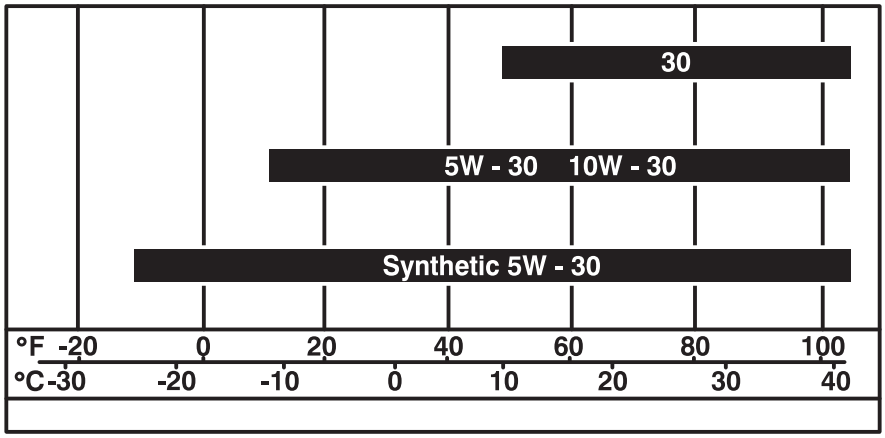

t27om054h.eps

Temperature range anticipated before next oil change

Approved Fuel

NOTICE: Incorrect fuel will damage the engine. Use only approved fuel.

This engine is designed to run on unleaded gasoline. Use only high quality fuel meeting ASTM D4814, EN228, or equivalent. Ethanol blends up to 10% (E10) are approved for use in this machine.

Minimum octane rating:

- 87 pump octane number [(R+M)/2]
- 91 research octane number (RON)

At altitudes above 5000' (1524m), lower octane fuels may be acceptable. Carburetors may also require adjustment. Consult engine operator's manual, your Ditch Witch® dealer, or authorized engine servicing dealer for more information.

https://truckmanualshub.com/

Service Interval Chart

IMPORTANT: Chart indicates first instance of repeated service procedures. See detailed information below.

▽ Adjust, service, or test	□ Change, initial	○ Lube, initial
▲ Check	■ Change	● Lube

Service	Startup	5 Hours	10 Hours	20 Hours	50 Hours	100 Hours	500 Hours	As Needed
Battery			▲					▽
Boom mounting bolts					▲			
Cooler, hydraulic fluid	▲							
Digging chain			▲					■
Digging chain tension			▲					▽
Dust ejector valve (C24x & C30x)	▲		▲					
Filter, air	▲					■		
Filter, engine oil (see Oil, engine)								
Filter, hydraulic fluid (see Fluid, hydraulic)								
Fluid, hydraulic	▲						■	
Hydraulic hoses	▲		▲					
Oil, engine (C12x & C24x)	▲			□		■		
Oil, engine (C16x)	▲	□			■			
Oil, engine (C30x)	▲			□		■		
Restraint bar			▲					
Track lug nuts	▲							
Track tension					▲			▽
Trench cleaner			▲					

https://truckmanualshub.com/

Procedures

Battery

CAUTION Corrosive fluid. Contact can cause death or serious injury. Avoid contact. Wear appropriate gloves. See Safety Data Sheet (SDS) for more information.

To help avoid injury:

- Never attempt to charge a battery that is leaking, bulging, heavily corroded, frozen, or otherwise damaged.
- Refer to Safety Data Sheet (SDS) for additional information regarding battery.

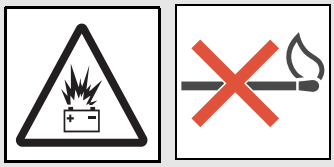

CAUTION Explosive hydrogen gas. Fire or explosion can cause death or serious injury. Keep heat flames, sparks, and other sources of ignition away.

To help avoid injury:

- Use a single 12V maximum source for charging. Never connect to rapid chargers or dual batteries.
- Never lean over battery when making connections.
- Never allow vehicles to touch when charging.
- Never short-circuit battery terminals for any reason or strike battery posts or cable terminals.
- Refer to Safety Data Sheet (SDS) for additional information regarding battery.

NOTICE:

- Electronic components can be easily damaged by electrical surges. Jump starting can damage electronics and electrical systems, and is not recommended. Try to charge the battery instead. Use quality large diameter jumper cables capable of carrying high currents (400 amps or more). Low quality cables may not allow enough current flow to charge a dead/discharged battery.
- Read all steps thoroughly and review illustration before performing procedure.

Check battery every 10 hours. Charge as needed.

https://truckmanualshub.com/

Check

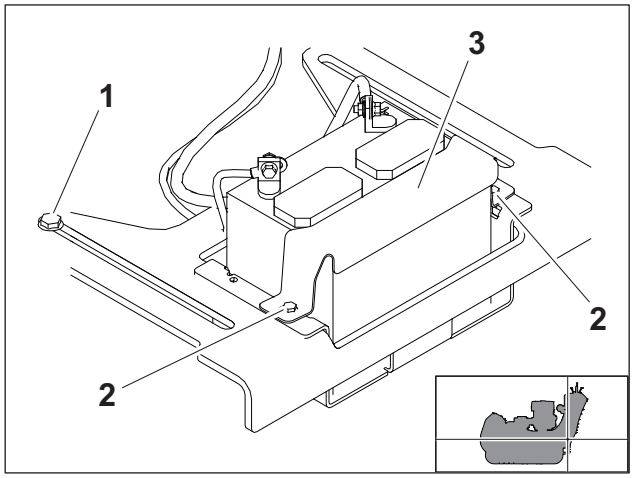

t57om002w.eps

1. Disconnect battery at battery disconnect switch, if equipped.
2. Ensure no ignition sources are near battery.
3. Remove screw (1).
4. Pull battery tray out.
5. Remove bolts (2) to remove battery hold-down (3).
6. Loosen and remove battery cable clamps carefully, negative (-) cable first.
7. Clean cable clamps and terminals to remove dull glaze.
8. Check for signs of internal corrosion in cables.
9. Connect battery cable clamps, positive (+) cable first.
10. Tighten any loose connections.
11. Install battery hold-down.
12. Loosely tighten bolts.
13. Push tray back into storage position.
14. Tighten screw.
15. Turn battery disconnect, if equipped, on.

https://truckmanualshub.com/

Charge

1. Park service vehicle close to disabled equipment but do not allow vehicles to touch.
2. Set parking brake in both, if equipped.
3. Turn both off.
4. Disconnect machine controller, if equipped.
5. Inspect battery in disabled machine (B) for signs of cracking, bulging, leaking, or other damage.
6. Connect red positive (+) jumper cable clamp to positive (+) post of battery (2) in disabled machine.

> **IMPORTANT:** Some equipment may have a positive jumper cable terminal (1) located externally. If so equipped, connect red positive (+) jumper cable clamp to terminal.

7. Connect the other red positive (+) jumper cable clamp to positive (+) post of battery in service vehicle (A).
8. Connect black negative (-) cable clamp to negative (-) post of battery in service vehicle.

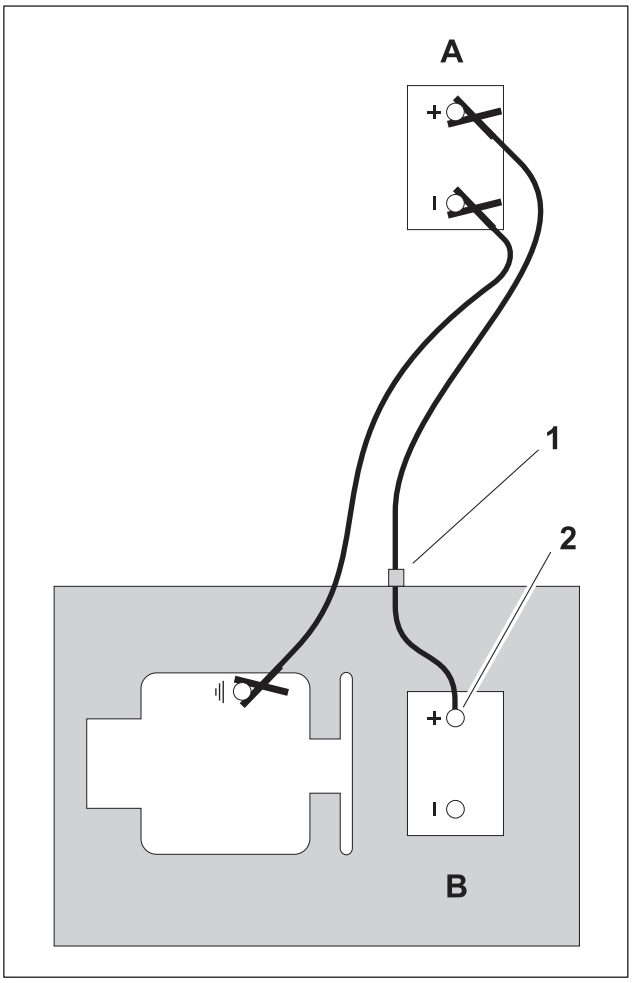

Battery_Jumpstart_B.eps

9. Connect the other black negative (-) cable clamp to engine or frame ground on disabled machine, at least 12" (305 mm) from failed battery, as shown.
10. Operate service vehicle engine at 1500-2000 rpm for a few minutes to build an electrical charge in failed battery.
11. Stop engine in service vehicle.
12. Remove jumper cables from service vehicle, black negative (-) clamp first. Do not allow clamps to touch.
13. Remove black negative (-) cable clamp from disabled engine or frame ground.
14. Remove red positive (+) cable clamp from disabled machine.
15. Reconnect machine controller, if equipped.
16. Start disabled machine.

https://truckmanualshub.com/

Boom Mounting Bolts

Check bolts (shown) every 50 hours. Tighten to 220ft•lb (300N•m) as needed.

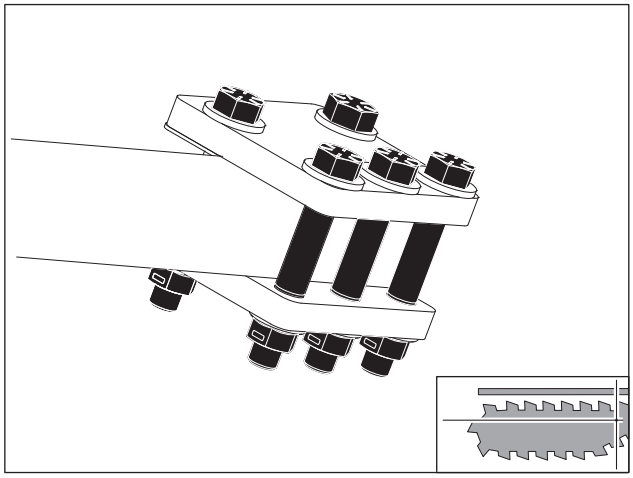

BoomBolts_Check.eps

Cooler, Hydraulic Fluid

IMPORTANT: C16x, C24x, and C30x only.

Check before startup. Clean as needed.

1. Check fluid cooler (shown) for dirt and debris.
2. Clean fins with compressed air or spray wash.

NOTICE: Do not use high-pressure air or water.

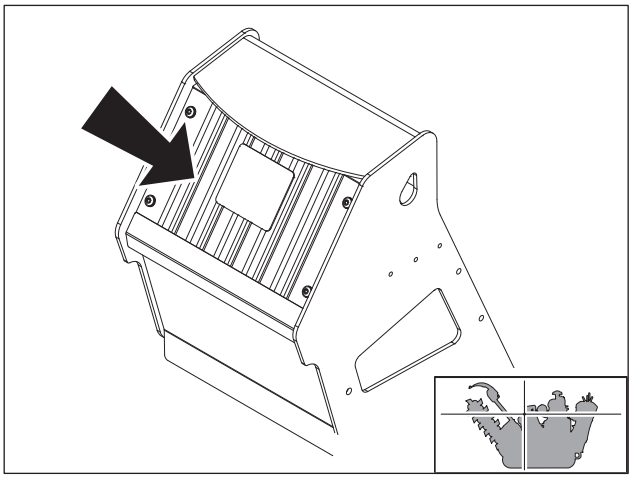

t57om015w.eps

https://truckmanualshub.com/

Digging Chain

WARNING Contents under pressure. Impact can cause death or serious injury. Relieve pressure before opening.

To help avoid injury:

- Service digging boom grease cylinder only while standing on opposite side of boom.
- Cover connection with heavy cloth when relieving pressure in cylinder.

Check every 10 hours. Change components as needed.

Check

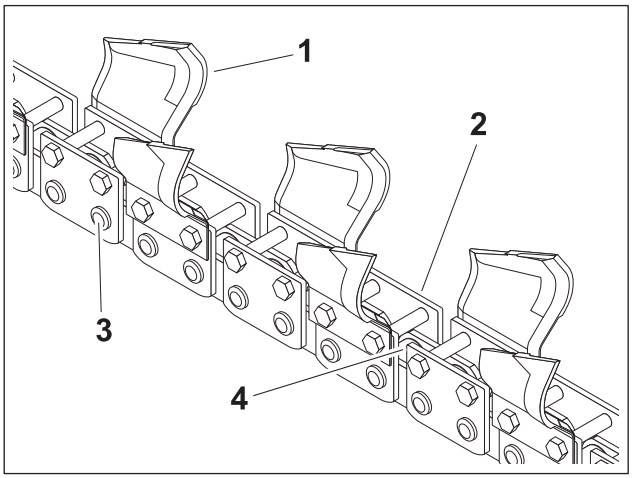

Digging_Chain_Check.eps

Bits

1. If using rock chain bits, check that bits rotate freely.
2. Clean chain and check bits after each use.
3. Replace bit when carbide cap or insert is worn.

Pins and Bushings

Check pins and bushings for wear by measuring distance between chain pins (3) and comparing it with a new chain.

Rollers

Check rollers (4) for wear. If rollers are worn, replace chain and sprockets.

Sidebars

If sidebars (2) are bent or loose on chain pins, chain spacers should be used to join sidebars.

Teeth

Check teeth (1) for wear.

NOTICE: Replace worn teeth using Ditch Witch® replacement parts and maintaining original tooth pattern.

https://truckmanualshub.com/

Change

NOTICE: Do not overtighten chain. Overtightening will cause chain stretch, loss of machine performance, and possible premature chain failure.

Remove

1. Start engine.
2. Move digging chain until digging chain connector pin is on top of boom.
3. Lower boom to ground.
4. Shut off machine.
5. Insert parking pin in parking position.
6. Secure chain by clamping links on either side of connector pin with chain jaw. Squeeze jaws to reduce pressure on connector pin as shown.

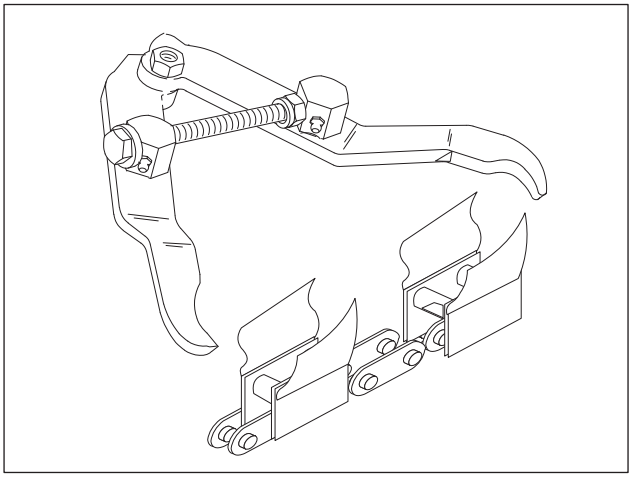

Digging_Chain_Remove_01.eps

7. Loop cable through links nearest connector pin.

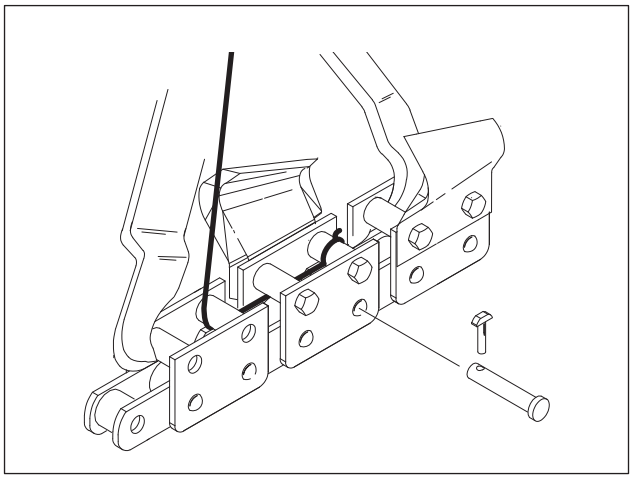

Digging_Chain_Remove_02.eps

8. Loosen plug on grease cylinder or turn tension adjustment screw counterclockwise to relieve chain tension.
9. Stand clear of chain and remove lock key from connector pin. Drive connector pin out of link.

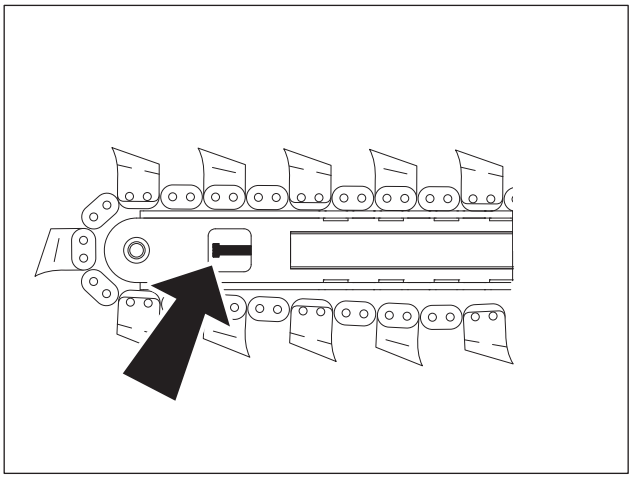

Digging_Chain_Remove_TensionScrew.eps

https://truckmanualshub.com/

10. Unclamp links. Slowly release cable and lower chain to ground with teeth facing down.

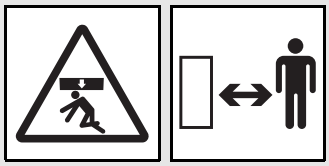

WARNING Raised component. Crushing can cause death or serious injury. Stay away. Use correct equipment and procedures.

Install

1. Lay chain on ground with teeth down and pointed toward machine.
2. Start engine.
3. Remove parking pin from parking position.
4. Move machine backward until chain extends past headshaft about 1' (305mm).
5. Move ground drive control to neutral.
6. Lower boom to horizontal position.
7. Shut machine off.
8. Insert parking pin.
9. Pull rear end of chain over tail roller or sprocket by about 10" (260mm).
10. Move chain down boom until chain connector pin and lock key can be installed. Install connector pin and lock key.
11. Turn tension adjustment screw clockwise or add grease to tighten digging chain.

https://truckmanualshub.com/

Digging Chain Tension

Check every 10 hours. Adjust as needed.

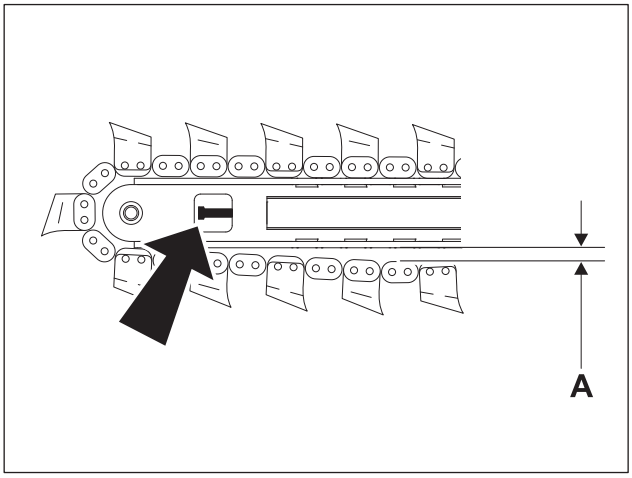

DiggingChainTension_Screw2.eps

Check

1. Move boom to horizontal position.
2. Measure distance (A) from bottom of boom to chain:
   - 19K chain: 1-1.5" (25-38mm)
   - 35K chain: 1.5-2.0" (38-51mm)

Adjust

NOTICE: Do not overtighten chain. Overtightening will cause chain stretch, loss of machine performance, and possible premature chain failure.

Adjustment Screw

1. Loosen jam nut on adjustment screw (shown).
2. To tighten digging chain, turn adjustment screw clockwise. To loosen, turn screw counterclockwise.
3. When proper tension is reached, tighten jam nut.

Grease Cylinder

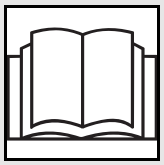

WARNING Contents under pressure. Impact can cause death or serious injury. Relieve pressure before opening.

To help avoid injury:

- Service digging boom grease cylinder only while standing on opposite side of boom.
- Cover connection with heavy cloth when relieving pressure in cylinder.

1. Loosen plug on grease cylinder.
2. To tighten digging chain, add grease. To loosen, release grease.
3. When proper tension is reached, tighten plug.

https://truckmanualshub.com/

Dust Ejector Valve

IMPORTANT: C24x and C30x only.

Check valve (shown) before startup and every 10 hours. Ensure that valve is not inverted, damaged, plugged, or cracked.

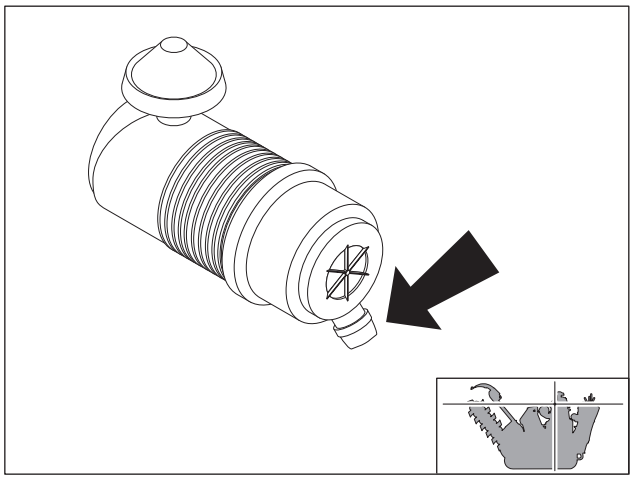

t47om037h.eps

Filter, Air

Check before startup. Change every 100 hours.

C12x

1. Remove wing nut (1) to remove air filter cover (2).
2. Remove wing nut (3) to remove primary (4) and secondary (5) filter elements.
3. Wipe inside of housing and wash cover.
4. Inspect elements. Replace if needed.
5. Insert secondary element and ensure it is seated correctly.
6. Insert primary element.
7. Install wing nut.
8. Install cover and secure with wing nut.

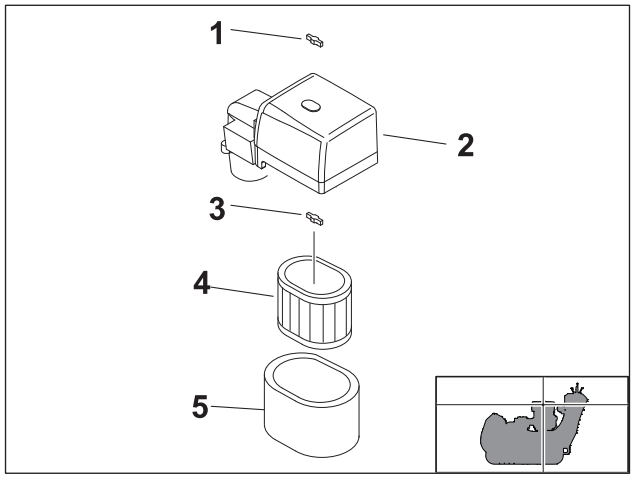

t57om010w.eps

https://truckmanualshub.com/

C16x

1. Remove wing nuts to remove cover.
2. Wipe inside of housing and wash cover.
3. Inspect element (shown). Replace if needed.
4. Insert element and ensure it is seated correctly.
5. Install cover and secure with wing nuts.

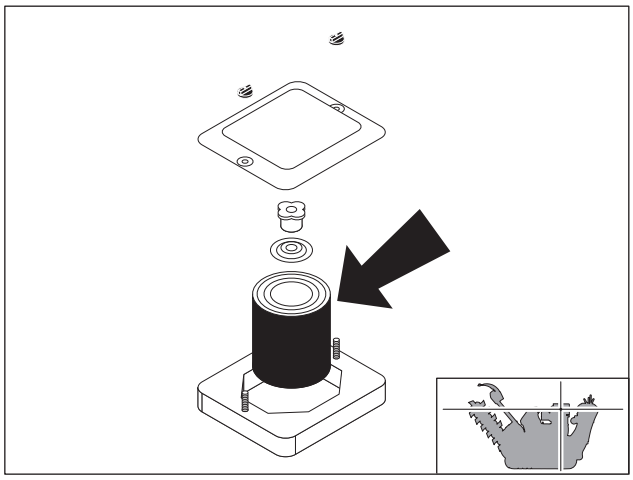

t47om018h.eps

C24x & C30x

1. Remove air filter cover (4).
2. Remove primary (2) and secondary (3) elements.
3. Wipe inside of housing (1) and wash cover.
4. Inspect elements. Replace if needed.
5. Insert secondary element and ensure it is seated correctly.
6. Insert primary element.
7. Replace cover with dust ejector (5) facing down.

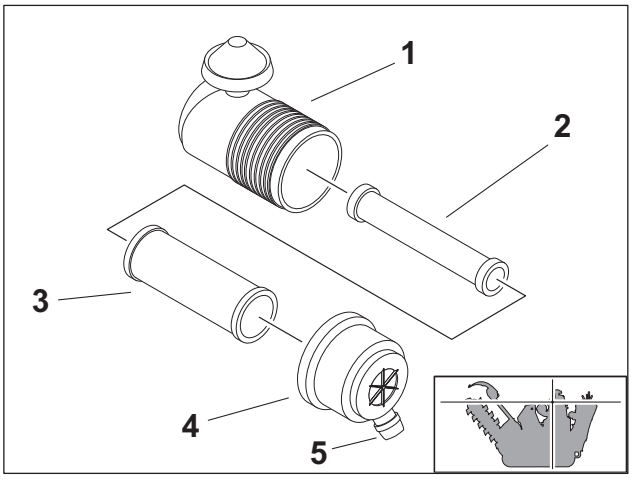

t57om014w.eps

https://truckmanualshub.com/

Fluid, Hydraulic

Check before startup. Change every 500 hours.

Check

1. Check level at sight glass (1).
2. Add THF at fill (2) as needed to keep level at halfway point on sight glass.

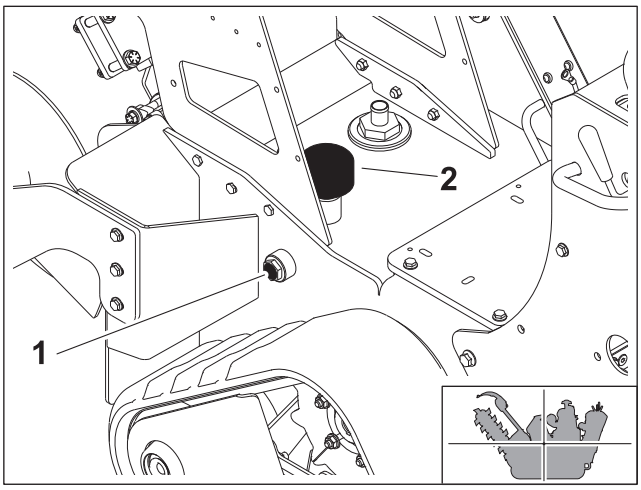

t47om020h.eps

Change

1. Remove plug (3) to drain.
2. Install plug.
3. Change filter.
4. Add THF at fill until level is at halfway point on sight glass.

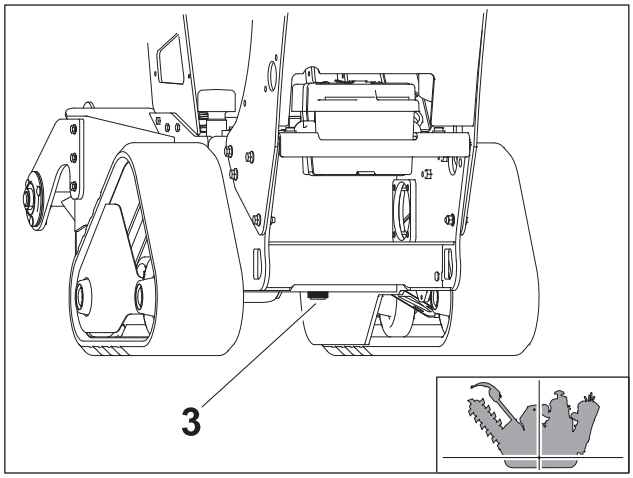

t47om049h.eps

https://truckmanualshub.com/

Hydraulic Hoses

WARNING Pressurized fluid or air. Injection can cause death or serious injury. Refer to operator's manual for correct use.

To help avoid injury:

- Use a piece of cardboard or wood, rather than hands, to check for leaks.
- Before disconnecting a hydraulic line, turn engine off and operate all controls to relieve pressure.
- Lower, block, or support any raised component with a hoist.
- Cover connection with heavy cloth and loosen connector nut slightly to relieve residual pressure. Catch all fluid in a container.
- Before using system, check that all connections are tight and all lines are undamaged.
- If you are injured, seek immediate medical attention from a doctor familiar with this type of injury.

Check for leaks where shown before startup and every 10 hours.

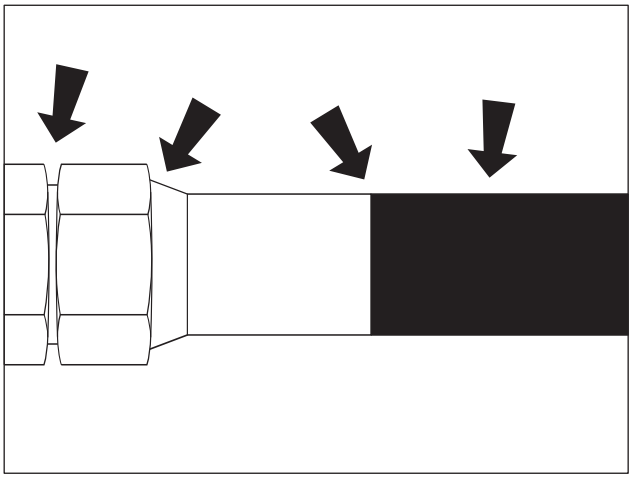

CheckHoses.eps

https://truckmanualshub.com/

Oil, Engine

C12x

Check before startup. Change at 20 hours and every 100 hours thereafter.

Check

1. Check level at dipstick (3).
2. Add GEO at fill (2) as needed to keep level at highest line on dipstick.

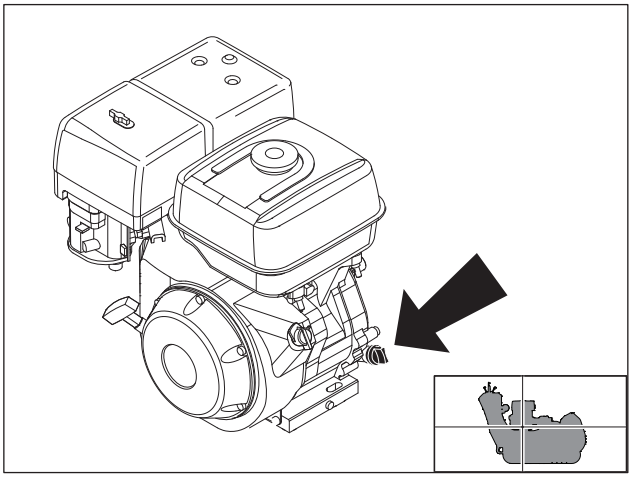

t57om006w.eps

Change

1. While oil is warm, remove plug (1) to drain.
2. Install plug.
3. Add GEO at fill to keep level at highest line on dipstick.

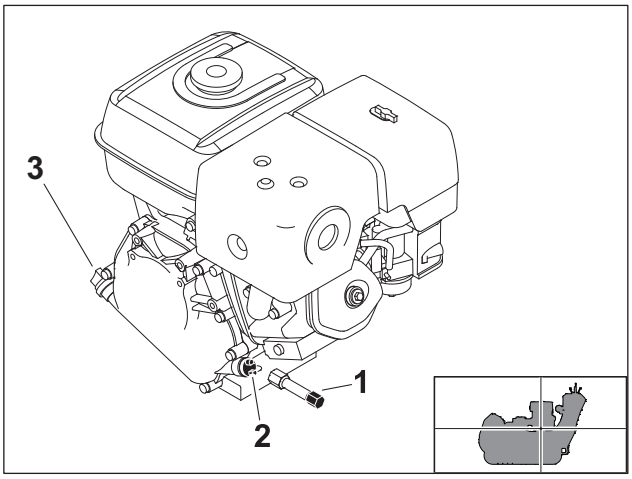

t57om008w.eps

https://truckmanualshub.com/

C16x

Check before startup. Change at 5 hours and every 50 hours thereafter.

Check

1. Check level at dipstick (2).
2. Add GEO at fill (1) as needed to keep level at highest line on dipstick.

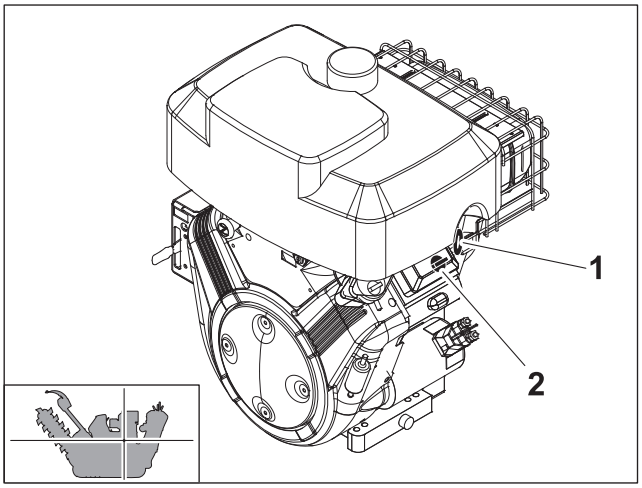

t47om015h.eps

Change

1. While oil is warm, remove drain plug (4) and drain.
2. Install plug.
3. Replace filter (3) each time oil is changed.
4. Add GEO at fill (1) to keep level at highest line on dipstick.

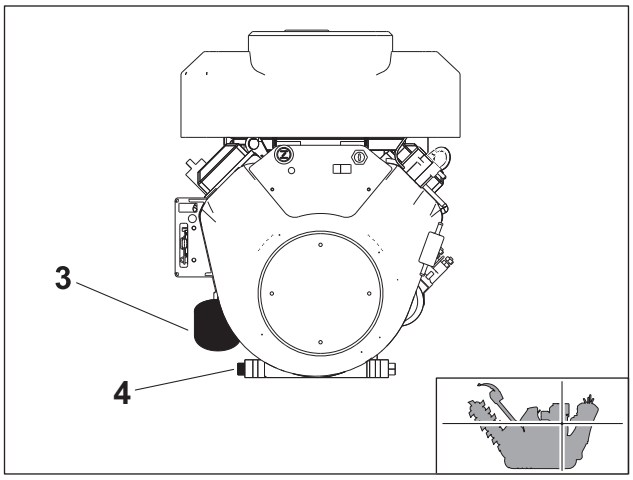

t47om024h.eps

https://truckmanualshub.com/

C24x

Check before startup. Change at 20 hours and every 100 hours thereafter.

Check

1. Check level at dipstick (1) before each use.
2. Add GEO at fill (2) as needed to keep level at highest line on dipstick.

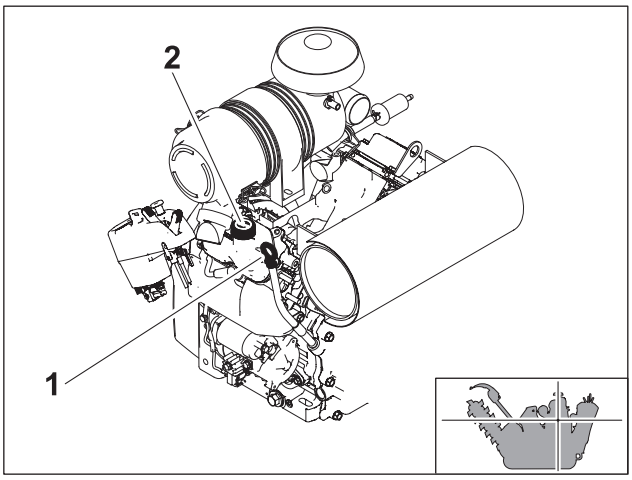

t47om016h.eps

Change

1. While oil is warm, remove plug (4) and drain.
2. Install plug.
3. Replace filter (3) each time oil is changed.
4. Add GEO at fill to keep level at highest line on dipstick.

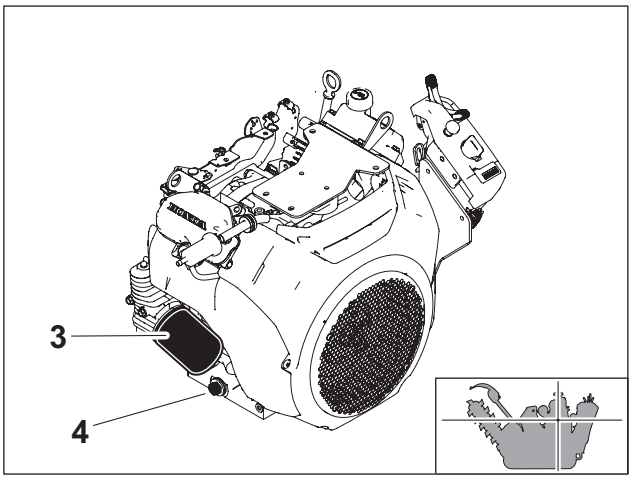

t47om025h.eps

https://truckmanualshub.com/

C30x

Check before startup. Change at 5 hours and every 100 hours thereafter.

Check

1. Check level at dipstick (1) before each use.
2. Add GEO at fill (2) as needed to keep level at highest line on dipstick.

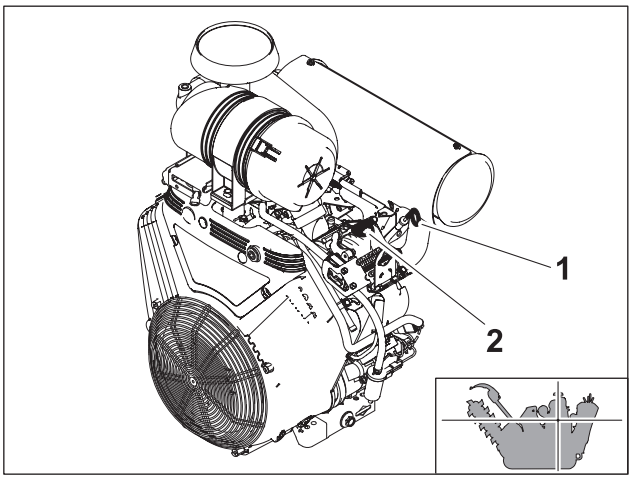

t47om017h.eps

Change

1. While oil is warm, remove plug (4) and drain.
2. Install plug.
3. Replace filter (3) each time oil is changed.
4. Add GEO at fill to keep level at highest line on dipstick.

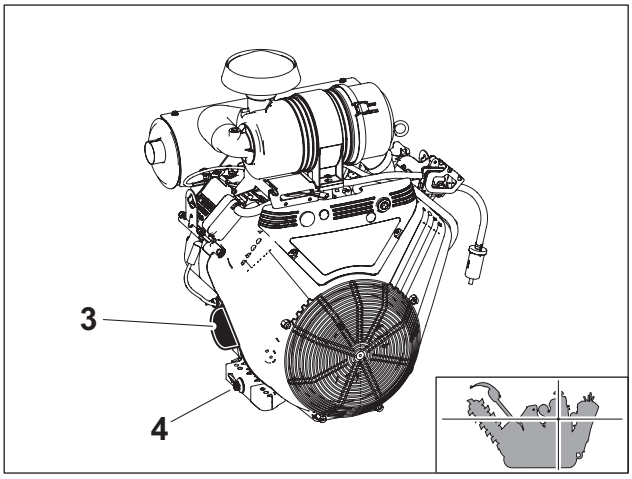

t47om026h.eps

https://truckmanualshub.com/

Restraint Bar

Check position every 10 hours or anytime digging chain is adjusted or replaced. Ensure end of bar extends between the center of the tail roller/ sprocket and the end of the digging chain (A).

Check all bolts securing restraint bar to arm (4 on each side, shown) and arm to boom every 10 hours.

1. Check for looseness or wear.
2. Apply Loctite® 271.
3. Tighten to 400ft•lb (542N•m).

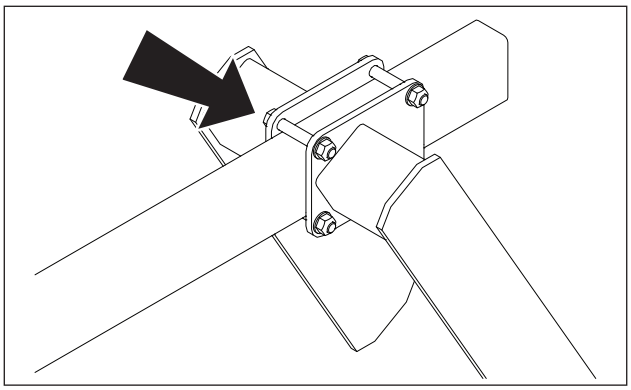

RestraintBarTrenchCleaner.eps

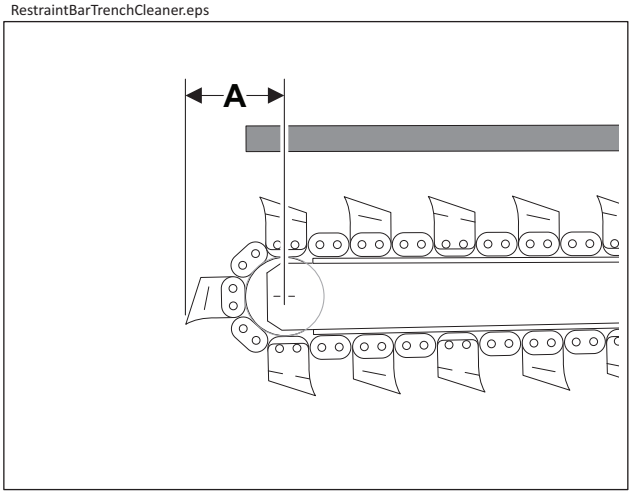

RestraintBarPosition.eps

Track Lug Nuts

Check lug nuts (shown) before startup. Tighten to 65ft•lb (88N•m) as needed.

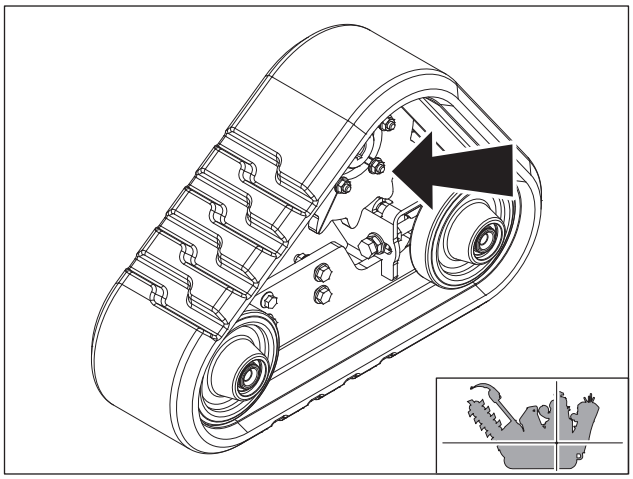

t47om022h.eps

https://truckmanualshub.com/

Track Tension

Check every 50 hours. Adjust as needed.

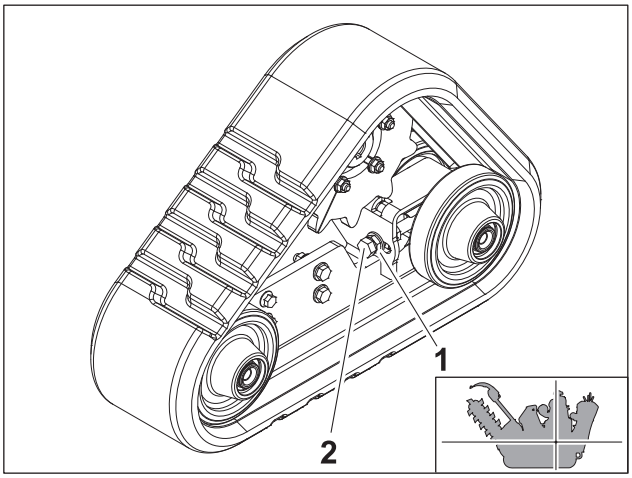

t47om032h.eps

Check

1. Place straightedge across front track span from idler to sprocket.
2. Measure distance from top edge of bottom of track to straightedge. Distance should be 0.25" (6mm).

Adjust

1. Loosen jam nut (1).
2. Turn bolt (2) counterclockwise until distance between track and straight edge is 0.25" (6mm).
3. Tighten jam nut.
4. Start engine.
5. Drive straight forward one machine length.
6. Shut machine off and let cool.
7. Check track tension and adjust if needed.

Trench Cleaner

Check position (if equipped) every 10 hours or anytime digging chain is adjusted or replaced. Ensure there is 3-4in (76-102mm) between the digging teeth and the inside of the trench cleaner shoe (A).

Check bolts securing trench cleaner to machine.

1. Apply Loctite® 271.
2. Tighten to 350ft•lb (475N•m).

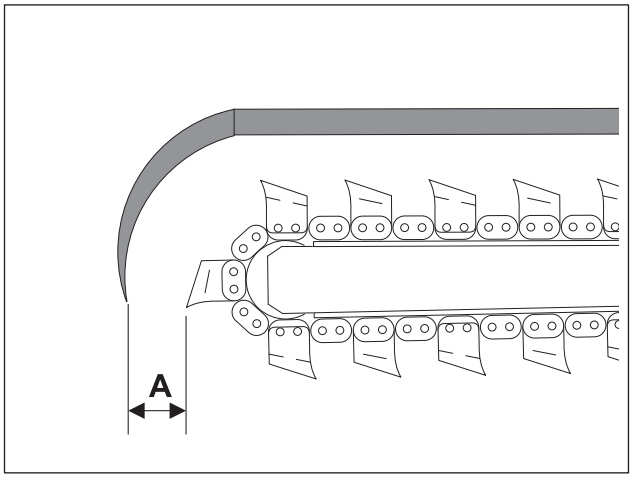

TrenchCleanerPosition.eps

https://truckmanualshub.com/

https://truckmanualshub.com/

Specifications

Chapter Contents

C12x 104

C16x 108

C24x 112

C30x 116

Declaration of Conformity 120

https://truckmanualshub.com/

C12x

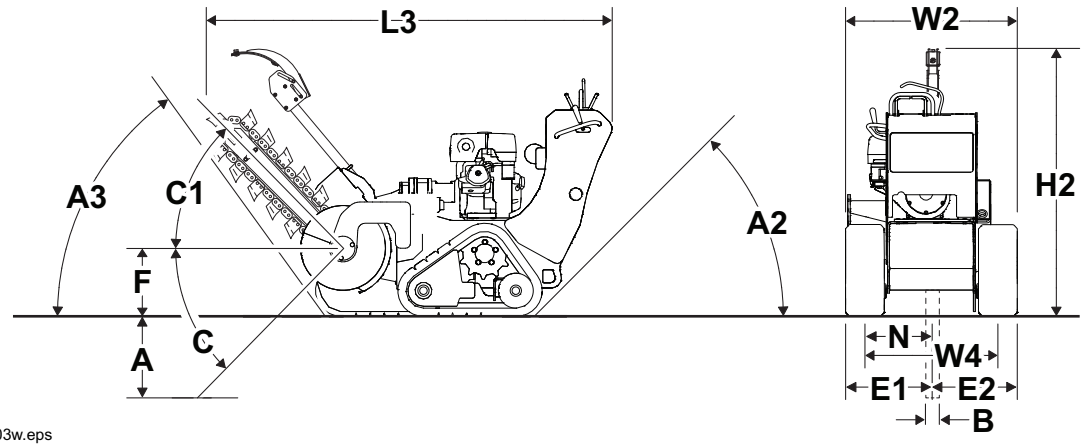

Dimensions		US	Metric
A	Trench depth, max	24”	610mm
A2	Angle of departure	45°	45°
A3	Angle of approach	52°	52°
B	Trench width	4-6”	102-150mm
C	Boom travel down	63°	63°
C1	Boom travel up	60°	60°
E1	Centerline trench to outside edge of machine, left	17.2”	437mm
E2	Centerline trench to outside edge of machine, right	18.6”	472mm
F	Headshaft height, digging chain	13.7”	348mm
H2	Height	57”	1450mm
L3	Length, max	94”	2390mm
N	Spoil discharge reach	14.1”	358mm
W2	Width	35.8”	909mm
W4	Tread	27”	686mm

Unless otherwise noted, dimensions are based on 24” (610mm) boom in transport position.

https://truckmanualshub.com/

Operation		US	Metric
Vehicle speeds			
	Max transit forward	120fpm	36.6m/min
	Max transit reverse	120fpm	36.6m/min
Digging chain speed			
	35K	253fpm	77m/min
Spoils handling, single, open-end auger			
	Outer diameter	17"	432mm
Max operating weight		1360lb	617kg

Engine		US	Metric
Engine: Honda® iGX390			
	Fuel	Gasoline	
	Cooling medium	Air	
	Number of cylinders	1	
	Displacement	27.3in³	389cm³
	Bore	3.5"	88mm
	Stroke	2.5"	64mm
Manufacturer's net power rating @3600rpm (per SAE J1940)		11.7hp	8.7kW
Rated speed		3600rpm	3600rpm
Fuel consumption		0.92gph	3.5L/h
Max tilt angle*		20°	20°

* Exceeding these operational angles will cause engine damage. This DOES NOT IMPLY machine is stable to maximum angle of safe engine operation.

https://truckmanualshub.com/

Power Train		US	Metric
Hydraulic ground drive: infinitely variable from zero to maximum, speed and direction controlled with dual levers			
Digging chain drive: hydraulic direct drive, lever-operated, one speed forward and reverse			
Trencher drive: hydraulic direct drive			
Pump drive: direct drive from engine			
Spoils handling drive: mechanical, attached to and rotates with headshaft			
Track			
	Width	7.9in	200mm
	Ground pressure	3.3psi	23kPa

Hydraulic System		US	Metric
Dual pump total capacity @ 3600rpm		7.5gpm	28.4L/min
Pump characteristics @ 3600rpm to ground drive:			
	Pressure, relief valve setting	2500psi	172bar
	Capacity	1.5gpm	5.7L/min
Pump characteristics @ 3600rpm to digging drive:			
	Pressure, relief valve setting	3500psi	241bar
	Pressure	6gpm	22.7 L/min

Fluid Capacities	US	Metric
Fuel tank	1.6gal	6.05L
Engine oil, with filter	1.2 qt	1.1L
Hydraulic reservoir	11gal	41.6L
Hydraulic system	11.5gal	43.5L

Noise Level
This machine can generate sound levels exceeding 80dBA. Always wear appropriate hearing protection when operating machine. Find sound power and pressure information at www.ditchwitch.com, or contact customersupport@ditchwitch.com.

https://truckmanualshub.com/

Vibration Levels
Vibration at the operator's hand during normal operation is less than 2.5m/sec^2.

Specifications are called out according to SAE recommended practices. Specifications are general and subject to change without notice. If exact measurements are required, equipment should be weighed and measured. Due to selected options, delivered equipment may not match that shown.

https://truckmanualshub.com/

C16x

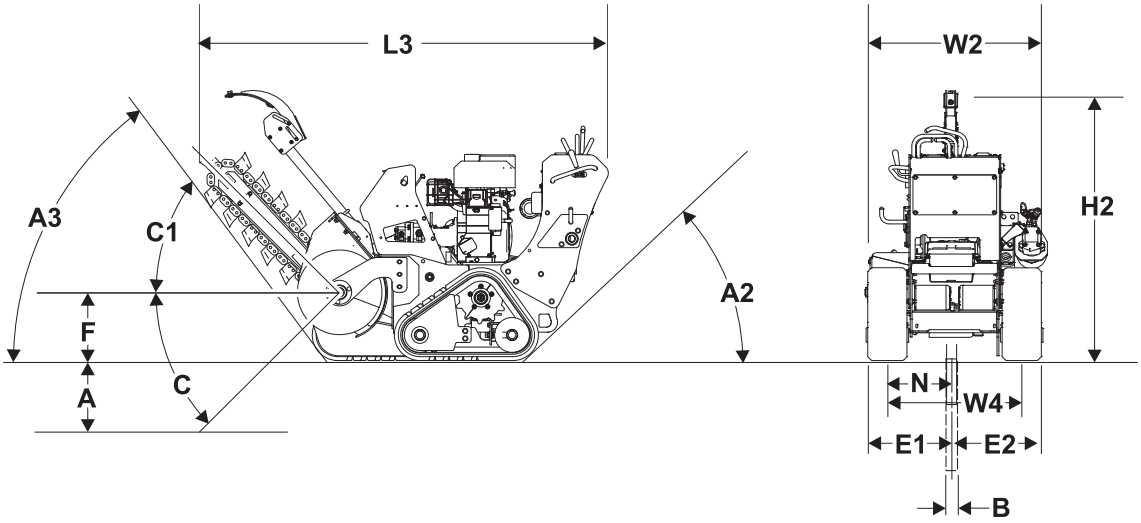

t47om034h.eps

Dimensions		US	Metric
A	Trench depth, max	36”	915mm
A2	Angle of departure	45°	45°
A3	Angle of approach	52°	52°
B	Trench width	4.3-6”	110-150mm
C	Boom travel down	63°	63°
C1	Boom travel up	60°	60°
E1	Centerline trench to outside edge of machine, left	17.2”	437mm
E2	Centerline trench to outside edge of machine, right	18.6”	472mm
F	Headshaft height, digging chain	13.7”	348mm
H2	Height	57”	1450mm
L3	Length, max	94”	2390mm
N	Spoil discharge reach	14.1”	358mm
W2	Width	35.8”	909mm
W4	Tread	27”	686mm

Unless otherwise noted, dimensions are based on 36” (915mm) boom in transport position.

https://truckmanualshub.com/

Operation		US	Metric
Vehicle speeds			
	Max transit forward	120fpm	36.6m/min
	Max transit reverse	120fpm	36.6m/min
Digging chain speed			
	19K	366fpm	111.6m/min
	35K	309fpm	94.2m/min
Spoils handling, single, open-end auger			
	Outer diameter	17"	432mm
Max operating weight		1895lb	860kg

Engine		US	Metric
Engine: Briggs & Stratton® Vanguard™ 16.0 small block, V-twin horizontal shaft			
	Fuel	gasoline	
	Cooling medium	air	
	Number of cylinders	2	
	Displacement	29.23in³	479cm³
	Bore	2.68"	68mm
	Stroke	2.6"	66mm
Manufacturer's net power rating @3600rpm (per SAE J1940)		16hp	11.9kW
Rated speed		3600rpm	3600rpm
Fuel consumption		1.33gph	5L/h
Max tilt angle*		20°	20°

* Exceeding these operational angles will cause engine damage. This DOES NOT IMPLY machine is stable to maximum angle of safe engine operation.

Battery
310 CA, 12V, reserve capacity 30 min

https://truckmanualshub.com/

Power Train		**US**	**Metric**
Hydraulic ground drive: infinitely variable from zero to maximum, speed and direction controlled with dual levers			
Digging chain drive: hydraulic direct drive, lever-operated, one speed forward and reverse			
Trencher drive: hydraulic direct drive			
Pump drive: direct drive from engine			
Spoils handling drive: mechanical, attached to and rotates with headshaft			
Track			
	Width	7.9in	200mm
	Ground pressure	4.5psi	31kPa

Hydraulic System		**US**	**Metric**
Dual pump total capacity @ 3600rpm		11.5gpm	43.5L/min
Pump characteristics @ 3600rpm to ground drive:			
	Pressure, relief valve setting	2200psi	152bar
	Capacity	1.5gpm	5.7L/min
Pump characteristics @ 3600rpm to digging drive:			
	Pressure, relief valve setting	3500psi	241bar
	Pressure	10gpm	37.9 L/min

Fluid Capacities	**US**	**Metric**
Fuel tank	2.3gal	6.5L
Engine oil	47oz	1.47L
Hydraulic reservoir	11gal	41.6L
Hydraulic system	11.5gal	43.5L

Noise Level
This machine can generate sound levels exceeding 80dBA. Always wear appropriate hearing protection when operating machine. Find sound power and pressure information at www.ditchwitch.com, or contact customersupport@ditchwitch.com.

https://truckmanualshub.com/

Vibration Levels
Vibration at the operator's hand during normal operation is less than 2.5m/sec^2.

Specifications are called out according to SAE recommended practices. Specifications are general and subject to change without notice. If exact measurements are required, equipment should be weighed and measured. Due to selected options, delivered equipment may not match that shown.

https://truckmanualshub.com/

C24x

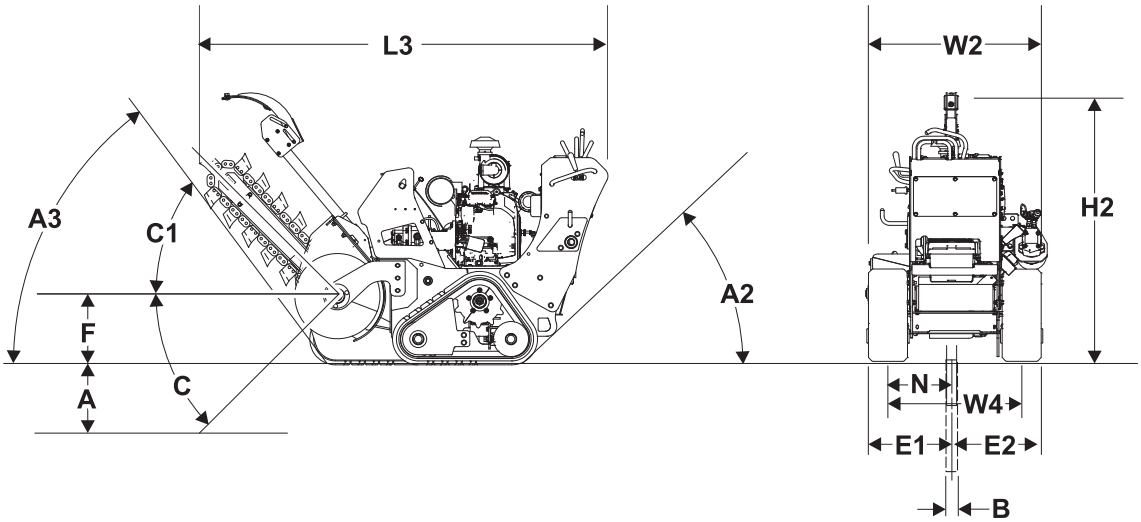

t47om035h.eps

Dimensions		US	Metric
A	Trench depth, max	36”	915mm
A2	Angle of departure	45°	45°
A3	Angle of approach	52°	52°
B	Trench width	4.3-6”	110-150mm
C	Boom travel down	63°	63°
C1	Boom travel up	60°	60°
E1	Centerline trench to outside edge of machine, left	17.2”	437mm
E2	Centerline trench to outside edge of machine, right	18.6”	472mm
F	Headshaft height, digging chain	13.7”	348mm
H2	Height	57”	1450mm
L3	Length, max	94”	2390mm
N	Spoil discharge reach	14.1”	358mm
W2	Width	35.8”	909mm
W4	Tread	27”	686mm

Unless otherwise noted, dimensions are based on 36” (915mm) boom in transport position.

https://truckmanualshub.com/

Operation		US	Metric
Vehicle speeds			
	Max transit forward	176fpm	53.6m/min
	Max transit reverse	136fpm	41.5m/min
Digging chain speed			
	19K	366fpm	111.6m/min
	35K	309fpm	94.2m/min
Spoils handling, Single, open-end auger			
	Outer diameter	17"	432mm
Max operating weight		1915lb	869kg

Engine		US	Metric
Engine: Honda® GX690			
	Fuel	gasoline	
	Cooling medium	air	
	Number of cylinders	2	
	Displacement	42in³	688cm³
	Bore	3.07"	78mm
	Stroke	2.83"	72mm
Manufacturer's net power rating @3600rpm (per SAE J1940)		22.1hp	16.5kW
Rated speed		3600rpm	3600rpm
Fuel consumption		1.77gph	6.7L/h
Max tilt angle*		20°	20°

* Exceeding these operational angles will cause engine damage. This DOES NOT IMPLY machine is stable to maximum angle of safe engine operation.

Battery
310 CA, 12V, reserve capacity 30 min

https://truckmanualshub.com/

Power Train		US	Metric
Hydraulic ground drive: infinitely variable from zero to maximum, speed and direction controlled with dual levers			
Digging chain drive: hydraulic direct drive, lever-operated, one speed forward and reverse			
Trencher drive: hydraulic direct drive			
Pump drive: direct drive from engine			
Spoils handling drive: mechanical, attached to and rotates with headshaft			
Track			
	Width	7.9in	200mm
	Ground pressure	4.5psi	31kPa

Hydraulic System		US	Metric
Dual pump total capacity @ 3600rpm		13gpm	49.2L/min
Pump characteristics @ 3600rpm to ground drive:			
	Pressure, relief valve setting	2500psi	172bar
	Capacity	3gpm	11.4L/min
Pump characteristics @ 3600rpm to digging drive:			
	Pressure, relief valve setting	3500psi	241bar
	Pressure	10gpm	37.9L/min

Fluid Capacities	US	Metric
Fuel tank	6gal	22.7L
Engine oil, with filter	1.8 qt	1.7L
Hydraulic reservoir	11gal	41.6L
Hydraulic system	11.5gal	43.5L

Noise Level
This machine can generate sound levels exceeding 80dBA. Always wear appropriate hearing protection when operating machine. Find sound power and pressure information at www.ditchwitch.com, or contact customersupport@ditchwitch.com.

https://truckmanualshub.com/

Vibration Levels
Vibration at the operator's hand during normal operation is less than 2.5m/sec^2.

Specifications are called out according to SAE recommended practices. Specifications are general and subject to change without notice. If exact measurements are required, equipment should be weighed and measured. Due to selected options, delivered equipment may not match that shown.

https://truckmanualshub.com/

C30x

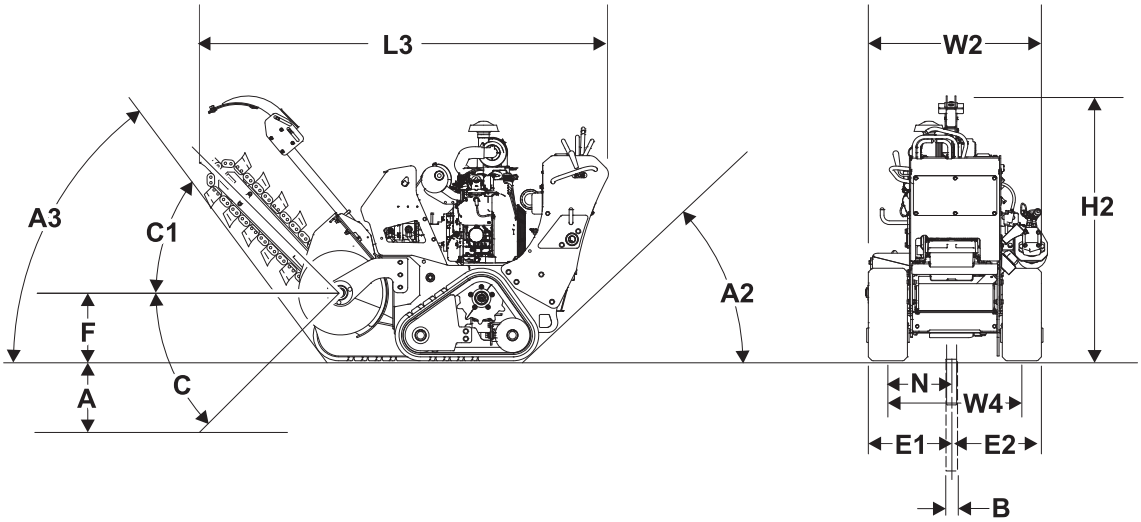

t47om036h.eps

Dimensions		US	Metric
A	Trench depth, max	48”	1.2m
A2	Angle of departure	45°	45°
A3	Angle of approach	51°	51°
B	Trench width	4.3-6”	110-150mm
C	Boom travel down	63°	63°
C1	Boom travel up	60°	60°
E1	Centerline trench to outside edge of machine, left	17.2”	437mm
E2	Centerline trench to outside edge of machine, right	18.6”	472mm
F	Headshaft height, digging chain	13.7”	348mm
H2	Height	66”	1680mm
L3	Length, max	101”	2570mm
N	Spoil discharge reach	14.1”	358mm
W2	Width	35.8”	909mm
W4	Tread	27”	686mm

Unless otherwise noted, dimensions are based on 48” (1220mm) boom in transport position.

https://truckmanualshub.com/

Operation		US	Metric
Vehicle speeds			
	Max transit forward	176fpm	53.6m/min
	Max transit reverse	136fpm	41.5m/min
Digging chain speed			
	19K	366fpm	111.6m/min
	35K	309fpm	94.2m/min
Spoils handling, single, open-end auger			
	Outer diameter	17"	432mm
Max operating weight		2100lb	953kg

Engine		US	Metric
Engine: Briggs & Stratton® Vanguard™ 31.0 big block, V-twin horizontal shaft			
	Fuel	gasoline	
	Cooling medium	air	
	Number of cylinders	2	
	Displacement	54.68in³	896cm³
	Bore	3.37"	86mm
	Stroke	3.07"	78mm
Manufacturer's net power rating @3600rpm (per SAE J1940)		31hp	23.1kW
Rated speed		3600rpm	3600rpm
Fuel consumption		2.49gph	9.4L/h
Max tilt angle*		20°	20°

* Exceeding these operational angles will cause engine damage. This DOES NOT IMPLY machine is stable to maximum angle of safe engine operation.

Battery
310 CA, 12V, reserve capacity 30 min

https://truckmanualshub.com/

Power Train		US	Metric
Hydraulic ground drive: infinitely variable from zero to maximum, speed and direction controlled with dual levers			
Digging chain drive: hydraulic direct drive, lever-operated, one speed forward and reverse			
Trencher drive: hydraulic direct drive			
Pump drive: direct drive from engine			
Spoils handling drive: mechanical, attached to and rotates with headshaft			
Track			
	Width	7.9in	200mm
	Ground pressure	5psi	34.5kPa

Hydraulic System		US	Metric
Dual pump total capacity @ 3600rpm		13gpm	49.2L/min
Pump characteristics @ 3600rpm to ground drive:			
	Pressure, relief valve setting	2500psi	172bar
	Capacity	3gpm	11.4L/min
Pump characteristics @ 3600rpm to digging drive:			
	Pressure, relief valve setting	3500psi	241bar
	Pressure	10gpm	37.9L/min

Fluid Capacities	US	Metric
Fuel tank	6gal	22.7L
Engine oil	78oz	2.3L
Hydraulic reservoir	11gal	41.6L
Hydraulic system	11.5gal	43.5L

Noise Level
This machine can generate sound levels exceeding 80dBA. Always wear appropriate hearing protection when operating machine. Find sound power and pressure information at www.ditchwitch.com, or contact customersupport@ditchwitch.com.

https://truckmanualshub.com/

Vibration Levels
Vibration at the operator's hand during normal operation is less than 2.5m/sec^2.

Specifications are called out according to SAE recommended practices. Specifications are general and subject to change without notice. If exact measurements are required, equipment should be weighed and measured. Due to selected options, delivered equipment may not match that shown.

https://truckmanualshub.com/

Declaration of Conformity

Countries in the European Union should have received a Declaration of Conformity (DOC) with this machine similar to the example below.

The Charles Machine Works, Inc.
PO Box 661959 West Fir Avenue
Perry, Oklahoma, USA 73077-0066
Phone: 580 572 3784
FAX: 580 572 3525

Declares that the product:

Model: **Ditch Witch® XXXX**
Type: (Machine Type)
Engine Power: xxx kW
Serial Number: CMWXXXXXXXXXXXXXX

Conforms to the requirements of:

2006/42/EC Machinery Directive
2004/108/EC Electromagnetic Compatibility Directive
2000/14/EC Noise Emission Directive
Measured sound power level (Annex V): **XXXdBA**
Guaranteed sound power level (Annex V): **XXXdBA**

The Technical Construction File is maintained at the manufacturer's location.

The manufacturer's European representative is:

Ditch Witch Barcelona
International Underground Systems, S.L.
C/EL PLA, 130 *Poligon Industrial EI Pla
08980 Sant Feliu De Llobregat *Spain
Phone: +34 93 632 7344
FAX: +34 93 632 7343

https://truckmanualshub.com/

Support

Registration

If your equipment was purchased through a Ditch Witch® dealer, it is already registered. If you purchased from any other source, please email productsupportwarrantyadmin@ditchwitch.com or fill out the registration card located in the back of the parts manual. Registration enables you to receive updates on this equipment as well as information on new products of interest.

Procedure

Notify your dealer immediately of any malfunction or failure of Ditch Witch® equipment.

Always give model, serial number, and approximate date of your equipment purchase. This information should be recorded and placed on file by the owner at the time of purchase.

Return damaged parts to dealer for inspection and warranty consideration if in warranty time frame.

Order genuine Ditch Witch replacement or repair parts from your authorized Ditch Witch dealer. Use of another manufacturer's parts may void warranty consideration.

Resources

Publications

Contact your Ditch Witch dealer for publications and videos covering safety, operation, service, and repair of your equipment.

Ditch Witch® Training

For information about on-site individualized training, contact your Ditch Witch dealer.

https://truckmanualshub.com/

Warranty

Ditch Witch® Equipment and Replacement Parts Limited Warranty Policy

Subject to the limitation and exclusions herein, free replacement parts will be provided at any authorized Ditch Witch dealership for any Ditch Witch equipment or parts manufactured by the Ditch Witch factory that fail due to a defect in material or workmanship within one (1) year of first commercial use. Free labor will be provided at any authorized Ditch Witch dealership for installation of parts under this warranty during the first year following "initial commercial" use of the serial-numbered Ditch Witch equipment on which it is installed. The customer is responsible for transporting their equipment to an authorized Ditch Witch dealership for all warranty work.

Exclusions from Product Warranty

- All incidental or consequential damages.
- All defects, damages, or injuries caused by misuse (including, but not limited to, rollover), abuse, improper installation, alteration, neglect, or uses other than those for which products were intended.
- All defects, damages, or injuries caused by improper training, operation, or servicing of products in a manner inconsistent with manufacturer's recommendations.
- All engines and engine accessories (these are covered by original manufacturer's warranty).
- Tires, belts, and other parts which may be subject to another manufacturer's warranty (such warranty will be available to purchaser).
- ALL IMPLIED WARRANTIES NOT EXPRESSLY STATED HEREIN, INCLUDING ANY WARRANTY OF FITNESS FOR A PARTICULAR PURPOSE AND MERCHANTABILITY.

IF THE PRODUCTS ARE PURCHASED FOR COMMERCIAL PURPOSES, AS DEFINED BY THE UNIFORM COMMERCIAL CODE, THEN THERE ARE NO WARRANTIES WHICH EXTEND BEYOND THE FACE HEREOF AND THERE ARE NO IMPLIED WARRANTIES OF ANY KIND WHICH EXTEND TO A COMMERCIAL BUYER. ALL OTHER PROVISIONS OF THIS LIMITED WARRANTY APPLY INCLUDING THE DUTIES IMPOSED.

Ditch Witch products have been tested to deliver acceptable performance in most conditions. This does not imply they will deliver acceptable performance in all conditions. Therefore, to assure suitability, products should be operated under anticipated working conditions prior to purchase.

Defects will be determined by an inspection within thirty (30) days of the date of failure of the product or part by Ditch Witch Product Support (DWPS) or its authorized dealer. DWPS will provide the location of its inspection facilities or its nearest authorized dealer upon inquiry. DWPS reserves the right to supply remanufactured replacements parts under this warranty as it deems appropriate.

Extended warranties are available upon request from your local Ditch Witch dealer or the Ditch Witch factory.

Some states do not allow exclusion or limitation of incidental or consequential damages, so above limitation of exclusion may not apply. Further, some states do not allow exclusion of or limitation of how long an implied warranty lasts, so the above limitation may not apply. This limited warranty gives product owner specific legal rights and the product owner may also have other rights which vary from state to state.

For information regarding this limited warranty, contact the DWPS department, P.O. Box 66, Perry, OK 73077-0066, or contact your local dealer.

First version: 1/91; Latest version: 7/19