https://truckmanualshub.com/

Husqvarna

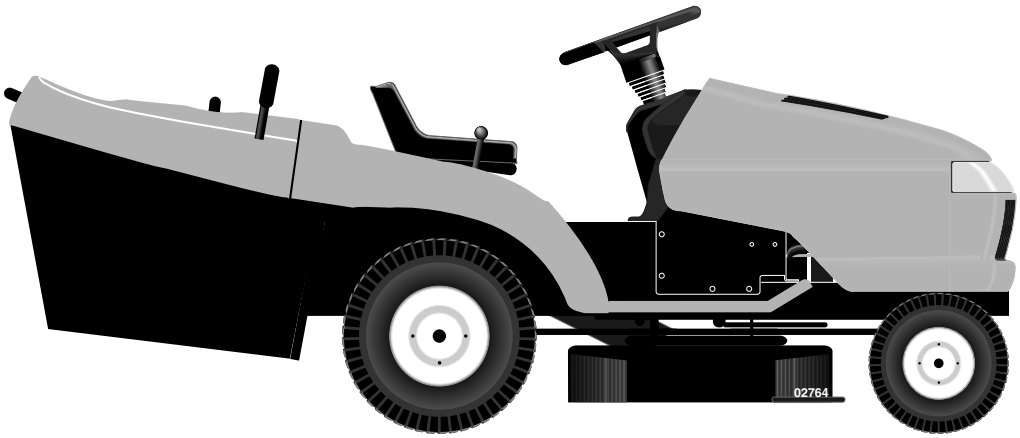

CTH151 XP

Owner's Manual

https://truckmanualshub.com/

SAFETY RULES

Safe Operation Practices for Ride-On Mowers

IMPORTANT: THIS CUTTING MACHINE IS CAPABLE OF AMPUTATING HANDS AND FEET AND THROWING OBJECTS. FAILURE TO OBSERVE THE FOLLOWING SAFETY INSTRUCTIONS COULD RESULT IN SERIOUS INJURY OR DEATH.

WARNING: In order to prevent accidental starting when setting up, transporting, adjusting or making repairs, always disconnect spark plug wire and place wire where it cannot contact spark plug.

WARNING: Do not coast down a hill in neutral, you may lose control of the tractor.

WARNING: Tow only the attachments that are recommended by and comply with specifications of the manufacturer of your tractor. Use common sense when towing. Operate only at the lowest possible speed when on a slope. Too heavy of a load, while on a slope, is dangerous. Tires can lose traction with the ground and cause you to lose control of your tractor.

I. GENERAL OPERATION

- Read, understand, and follow all instructions on the machine and in the manual before starting.
- Do not put hands or feet near rotating parts or under the machine. Keep clear of the discharge opening at all times.
- Only allow responsible adults, who are familiar with the instructions, to operate the machine.
- Clear the area of objects such as rocks, toys, wire, etc., which could be picked up and thrown by the blades.
- Be sure the area is clear of bystanders before operating. Stop machine if anyone enters the area.
- Never carry passengers.
- Do not mow in reverse unless absolutely necessary. Always look down and behind before and while backing.
- Never direct discharged material toward anyone. Avoid discharging material against a wall or obstruction. Material may ricochet back toward the operator. Stop the blades when crossing gravel surfaces.
- Do not operate machine without the entire grass catcher, discharge guard, or other safety devices in place and working.
- Slow down before turning.
- Never leave a running machine unattended. Always turn off blades, set parking brake, stop engine, and remove keys before dismounting.
- Disengage blades when not mowing. Shut off engine and wait for all parts to come to a complete stop before cleaning the machine, removing the grass catcher, or unclogging the discharge guard.
- Operate machine only in daylight or good artificial light.
- Do not operate the machine while under the influence of alcohol or drugs.
- Watch for traffic when operating near or crossing roadways.
- Use extra care when loading or unloading the machine into a trailer or truck.
- Always wear eye protection when operating machine.
- Data indicates that operators, age 60 years and above, are involved in a large percentage of riding mower-related injuries. These operators should evaluate their ability to operate the riding mower safely enough to protect themselves and others from serious injury.
- Follow the manufacturer's recommendation for wheel weights or counterweights.
- Keep machine free of grass , leaves or other debris build-up which can touch hot exhaust / engine parts and burn. Do not allow the mower deck to plow leaves or other debris which can cause build-up to occur. Clean any oil or fuel spillage before operating or storing the machine. Allow machine to cool before storage.

II. SLOPE OPERATION

Slopes are a major factor related to loss of control and tip-over accidents, which can result in severe injury or death. Operation on all slopes requires extra caution. If you cannot back up the slope or if you feel uneasy on it, do not mow it.

- Mow up and down slopes, not across.
- Watch for holes, ruts, bumps, rocks, or other hidden objects. Uneven terrain could overturn the machine. Tall grass can hide obstacles.
- Choose a low ground speed so that you will not have to stop or shift while on the slope.
- Do not mow on wet grass. Tires may lose traction. Always keep the machine in gear when going down slopes. Do not shift to neutral and coast downhill.
- Avoid starting, stopping, or turning on a slope. If the tires lose traction, disengage the blades and proceed slowly straight down the slope.
- Keep all movement on the slopes slow and gradual. Do not make sudden changes in speed or direction, which could cause the machine to roll over.
- Use extra care while operating machine with grass catchers or other attachments; they can affect the stability of the machine. Do no use on steep slopes.
- Do not try to stabilize the machine by putting your foot on the ground.
- Do not mow near drop-offs, ditches, or embankments. The machine could suddenly roll over if a wheel is over the edge or if the edge caves in.

https://truckmanualshub.com/

SAFETY RULES

Safe Operation Practices for Ride-On Mowers

III. CHILDREN

Tragic accidents can occur if the operator is not alert to the presence of children. Children are often attracted to the machine and the mowing activity. *Never* assume that children will remain where you last saw them.

- Keep children out of the mowing area and in the watchful care of a responsible adult other than the operator.
- Be alert and turn machine off if a child enters the area.
- Before and while backing, look behind and down for small children.
- Never carry children, even with the blades shut off. They may fall off and be seriously injured or interfere with safe machine operation. Children who have been given rides in the past may suddenly appear in the mowing area for another ride and be run over or backed over by the machine.
- Never allow children to operate the machine.
- Use extra care when approaching blind corners, shrubs, trees, or other objects that may block your view of a child.

IV. TOWING

- Tow only with a machine that has a hitch designed for towing. Do not attach towed equipment except at the hitch point.
- Follow the manufacturer's recommendation for weight limits for towed equipment and towing on slopes.
- Never allow children or others in or on towed equipment.
- On slopes, the weight of the towed equipment may cause loss of traction and loss of control.
- Travel slowly and allow extra distance to stop.

V. SERVICE

SAFE HANDLING OF GASOLINE

To avoid personal injury or property damage, use extreme care in handling gasoline. Gasoline is extremely flammable and the vapors are explosive.

- Extinguish all cigarettes, cigars, pipes, and other sources of ignition.
- Use only approved gasoline container.
- Never remove gas cap or add fuel with the engine running. Allow engine to cool before refueling.
- Never fuel the machine indoors.
- Never store the machine or fuel container where there is an open flame, spark, or pilot light such as on a water heater or other appliances.
- Never fill containers inside a vehicle or on a truck or trailer bed with plastic liner. Always place containers on the ground away from your vehicle when filling.
- Remove gas-powered equipment from the truck or trailer and refuel it on the ground. If this is not possible, then refuel such equipment with a portable container, rather than from a gasoline dispenser nozzle.
- Keep the nozzle in contact with the rim of the fuel tank or container opening at all times until fueling is complete. Do not use a nozzle lock-open device.
- If fuel is spilled on clothing, change clothing immediately.
- Never overfill fuel tank. Replace gas cap and tighten securely.

GENERAL SERVICE

- Never operate machine in a closed are.
- Keep all nuts and bolts tight to be sure the equipment is in safe working condition.
- Never tamper with safety devices. Check their proper operation regularly.
- Keep machine free of grass, leaves, or other debris build-up. Clean oil or fuel spillage and remove any fuel-soaked debris. Allow machine to cool before storing.
- If you strike a foreign object, stop and inspect the machine. Repair, if necessary, before restarting.
- Never make any adjustments or repairs with the engine running.
- Check grass catcher components and the discharge guard frequently and replace with manufacturer's recommended parts, when necessary.
- Mower blades are sharp. Wrap the blade or wear gloves, and use extra caution when servicing them.
- Check brake operation frequently. Adjust and service as required.
- Maintain or replace safety and instruction labels, as necessary.

- Be sure the area is clear of bystanders before operating. Stop machine if anyone enters the area.
- Never carry passengers.
- Do not mow in reverse unless absolutely necessary. Always look down and behind before and while backing.
- Never carry children, even with the blades shut off. They may fall off and be seriously injured or interfere with safe machine operation. Children who have been given rides in the past may suddenly appear in the mowing area for another ride and be run over or backed over by the machine.
- Keep children out of the mowing area and in the watchful care of a responsible adult other than the operator.
- Be alert and turn machine off if a child enters the area.
- Before and while backing, look behind and down for small children.
- Mow up and down slopes (15° Max), not across.
- Be alert and turn machine off if a child enters the area.
- Choose a low ground speed so that you will not have to stop or shift while on the slope.
- Avoid starting, stopping, or turning on a slope. If the tires lose traction, disengage the blades and proceed slowly straight down the slope.
- If machine stops while going uphill, disengage blades, shift into reverse and back down slowly.
- Do not turn on slopes unless necessary, and then, turn slowly and gradually downhill, if possible.

https://truckmanualshub.com/

PRODUCT SPECIFICATIONS

Gasoline Capacity and type:	2.0 Gallons Unleaded Regular
Oil Type (API-SG-SL):	SAE 30 (above 32°F) SAE 5W-30 (below 32°F)
Oil Capacity:	W/ Filter: 3.8 Pints W/O Filter: 3.2 Pints
Spark Plug: (Gap: .030")	Champion RCJ8Y
Ground Speed (MPH):	Forward: 0 – 5.5 Reverse: 0 – 2.4
Tire Pressure:	Front: 14 PSI Rear: 10 PSI
Charging System:	16 AMPS @ 3600 RPM
Battery:	AMP/HR: 35 MIN. CCA: 280 CASE SIZE: U1R
Blade Bolt Torque:	27-35 FT. LBS.

CONGRATULATIONS on your purchase of a new tractor. It has been designed, engineered and manufactured to give you the best possible dependability and performance.

Should you experience any problem you cannot easily remedy, please contact your nearest authorized service center. We have competent, well-trained technicians and the proper tools to service or repair this tractor.

Please read and retain this manual. The instructions will enable you to assemble and maintain your tractor properly. Always observe the "SAFETY RULES".

CUSTOMER RESPONSIBILITIES

- Read and observe the safety rules.
- Follow a regular schedule in maintaining, caring for and using your tractor.
- Follow the instructions under the "Maintenance" and "Storage" sections of this owner's manual.

WARNING: This tractor is equipped with an internal combustion engine and should not be used on or near any unimproved forest-covered, brush-covered or grass-covered land unless the engine's exhaust system is equipped with a spark arrester meeting applicable local or state laws (if any). If a spark arrester is used, it should be maintained in effective working order by the operator.

In the state of California the above is required by law (Section 4442 of the California Public Resources Code). Other states may have similar laws. Federal laws apply on federal lands.

TABLE OF CONTENTS

SAFETY RULES 2-3
PRODUCT SPECIFICATIONS 4
CUSTOMER RESPONSIBILITIES 4
ASSEMBLY 6-10
OPERATION 11-17
MAINTENANCE SCHEDULE 18
MAINTENANCE 18-21
SERVICE AND ADJUSTMENTS 22-26
STORAGE 27
TROUBLESHOOTING 28-29
REPAIR PARTS - TRACTOR 32-46

https://truckmanualshub.com/

UNASSEMBLED PARTS

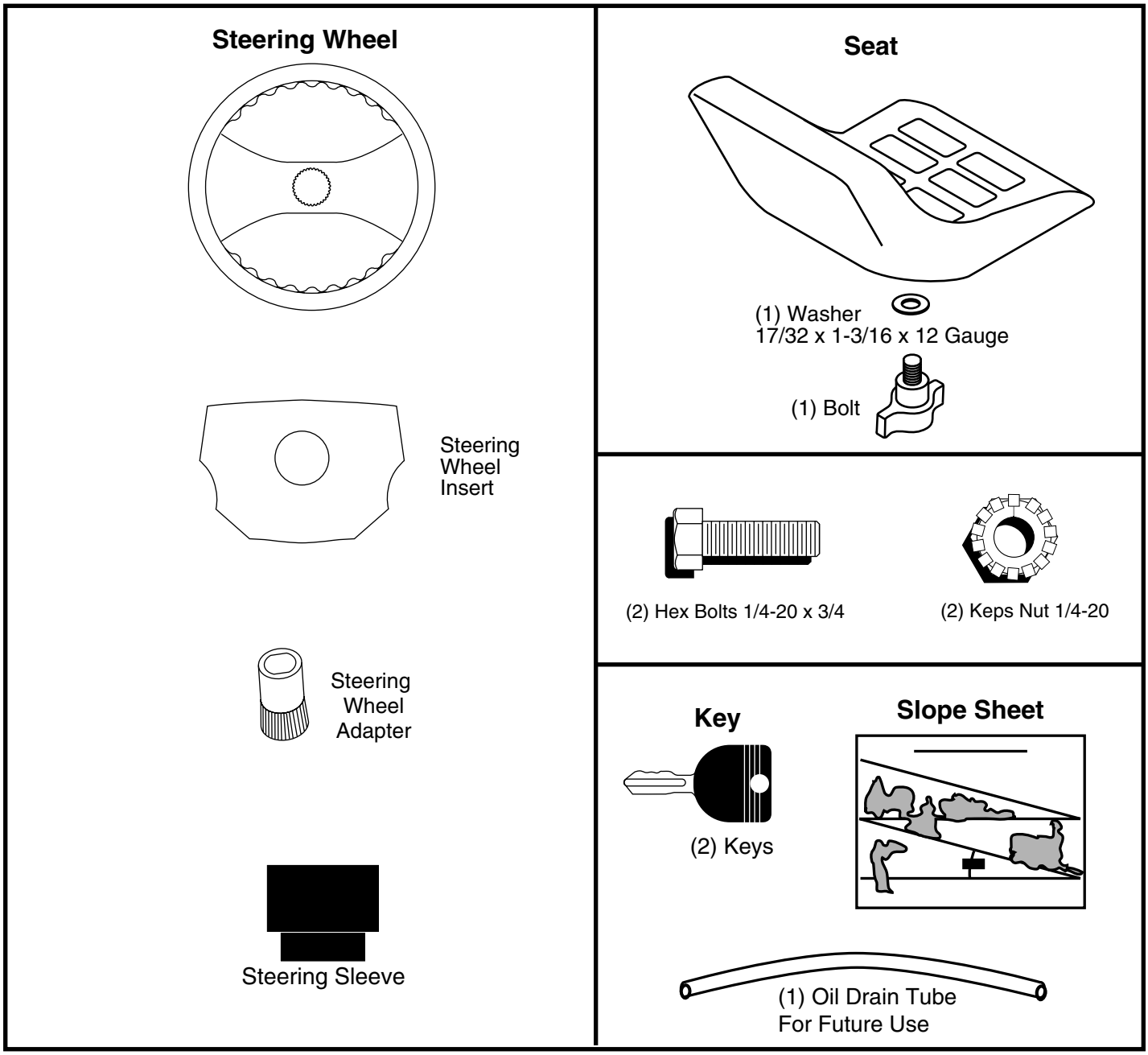

https://truckmanualshub.com/

ASSEMBLY

Your new tractor has been assembled at the factory with exception of those parts left unassembled for shipping purposes. To ensure safe and proper operation of your tractor all parts and hardware you assemble must be tightened securely. Use the correct tools as necessary to insure proper tightness.

TOOLS REQUIRED FOR ASSEMBLY

A socket wrench set will make assembly easier. Standard wrench sizes are listed.

(2) 7/16" wrenches	Utility knife
(1) 3/4" wrenches	Tire pressure gauge
(1) 3/4" socket w/drive ratchet	Pliers

When right or left hand is mentioned in this manual, it means when you are in the operating position (seated behind the steering wheel).

TO REMOVE TRACTOR FROM CARTON

UNPACK CARTON

- Remove all accessible loose parts and parts cartons from carton.
- Cut along dotted lines on all four panels of carton. Remove end panels and lay side panels flat.
- Check for any additional loose parts or cartons and remove.

BEFORE REMOVING TRACTOR FROM SKID

ATTACH STEERING WHEEL (See Fig. 1)

- Remove locknut and large flat washer from steering shaft.
- Position front wheels of the tractor so they are pointing straight forward.
- Slide the steering sleeve over the steering shaft.
- Position steering wheel so cross bars are horizontal (left to right) and slide onto steering wheel adapter.
- Secure steering wheel to steering shaft with locknut and large flat washer previously removed. Tighten securely.
- Snap steering wheel insert into center of steering wheel.
- Remove protective materials from tractor hood and grill.

IMPORTANT: CHECK FOR AND REMOVE ANY STAPLES IN SKID THAT MAY PUNCTURE TIRES WHERE TRACTOR IS TO ROLL OFF SKID.

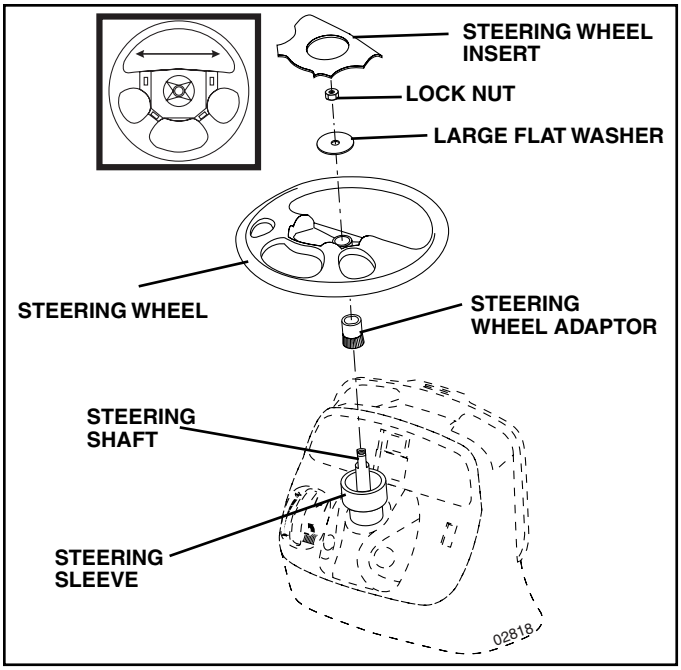

FIG. 1

CONNECT BATTERY (See Figs. 2)

CAUTION: Do not short battery terminals by allowing a wrench or any other object to contact both terminals at the same time. Before connecting battery, remove metal bracelets, wristwatch bands, rings, etc.

Positive terminal must be connected first to prevent sparking from accidental grounding.

- If this battery is put into service after month and year indicated on label (label located between terminals) charge battery for minimum of one hour at 6-10 amps. (See "BATTERY" in the Maintenance section of this manual for charging instructions).
- Remove battery cover.
- Remove terminal protective caps and discard.
- First connect RED battery cable to positive (+) terminal with hex bolt and keps nut as shown. Tighten securely.
- Connect BLACK grounding cable to negative (-) terminal with remaining hex bolt and keps nut. Tighten securely.
- Replace battery cover.

Open battery cover for:

- Inspection for secure connections (to tighten hardware).
- Inspection for corrosion.
- Testing battery.
- Jumping (if required).
- Periodic charging .

https://truckmanualshub.com/

ASSEMBLY

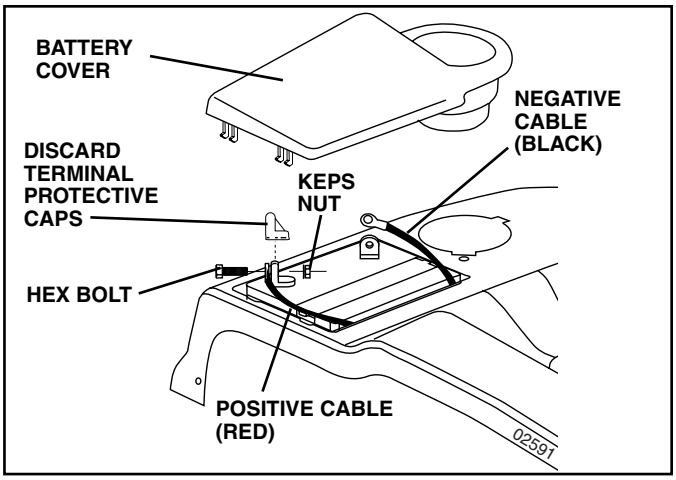

FIG. 2

INSTALL SEAT (See Fig. 3)

Adjust seat before tightening adjustment knob.

- Remove adjustment knob and flat washer securing seat to cardboard packing and set aside for assembly of seat to tractor.
- Pivot seat upward and remove from the cardboard packing. Remove the cardboard packing and discard.
- Place seat on seat pan so head of shoulder bolt is positioned over large slotted hole in pan.
- Push down on seat to engage shoulder bolt in slot and pull seat towards rear of tractor.
- Pivot seat and pan forward and assemble adjustment knob and flat washer loosely. Do not tighten.
- Lower seat into operating position and sit on seat.
- Slide seat until a comfortable position is reached which allows you to press clutch/brake pedal all the way down.
- Get off seat without moving its adjusted position.
- Raise seat and tighten adjustment knob securely.

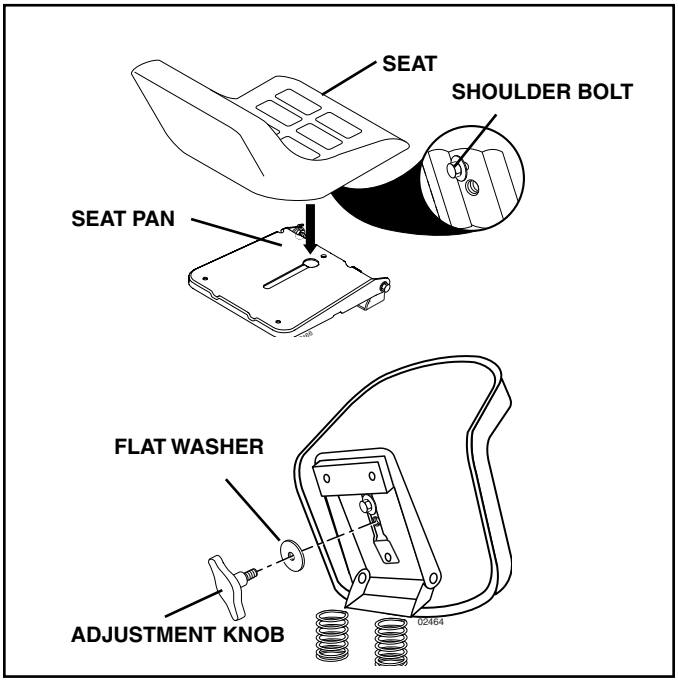

FIG. 3

NOTE: You may now roll or drive your tractor off the skid. Follow the appropriate instruction below to remove the tractor from the skid.

TO ROLL TRACTOR OFF SKID (See Operation section for location and function of controls)

- Press lift lever plunger and raise attachment lift lever to its highest position.
- Release parking brake by depressing clutch/brake pedal.
- Place freewheel control in "transmission disengaged position" (See “TO TRANSPORT” in the Operation section of this manual).
- Roll tractor forward off skid.
- Remove banding holding the deflector shield up against tractor.

TO DRIVE TRACTOR OFF SKID (See Operation section for location and function of controls)

WARNING: Before starting, read, understand and follow all instructions in the Operation section of this manual. Be sure tractor is in a well-ventilated area. Be sure the area in front of tractor is clear of other people and objects.

- Be sure all the above assembly steps have been completed.
- Check engine oil level and fill fuel tank with gasoline.
- Place freewheel control in "transmission engaged" position (see "TO TRANSPORT" in Operation section of this manual).
- Sit on seat in operating position, depress clutch/brake pedal and set the parking brake.
- Place motion control lever in neutral (N) position.
- Press lift lever plunger and raise attachment lift lever to its highest position.
- Start the engine. After engine has started, move throttle control to idle position.
- Release parking brake.
- Slowly move the motion control lever forward and slowly drive tractor off skid.
- Apply brake to stop tractor, set parking brake and place motion control lever in neutral position.
- Turn ignition key to "STOP" position.

Continue with the instructions that follow.

https://truckmanualshub.com/

ASSEMBLY

TO INSTALL BAGGER COMPONENTS TO TRACTOR (See Figs. 4A-4D)

- Remove discharge chute from rear of tractor. Unhook the two (2) straps and pull chute out and away from tractor.
- Remove the two (2) 3/8 nuts and flat washers from the bolts at the tractor back plate.

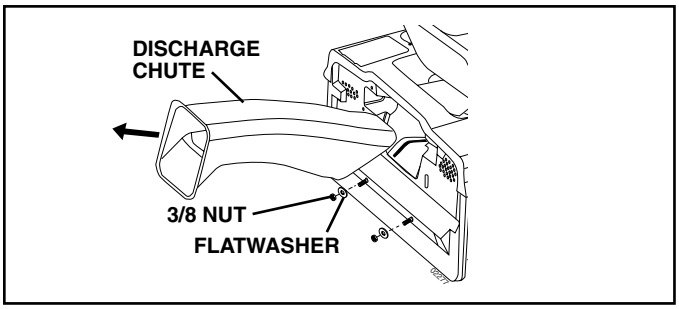

FIG. 4A

- Using the nuts and flat washers removed from tractor back plate, install the bagger support tube to the back plate as shown. Tighten securely.

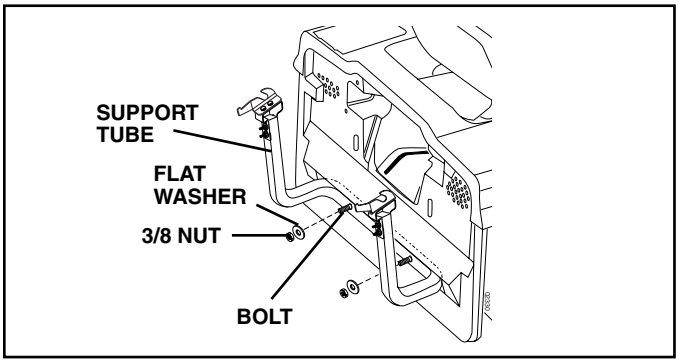

FIG. 4B

- Install the two upper support brackets through the back plate and to the chassis, using the 10 x 19 mm (3/8"x3/4") carriage bolts and locknuts supplied. Tighten securely.
- Assemble both support brackets to the outside of the baggger support tube using two each 3/8 x 63,5mm hex bolts13/32" I.D. flat washers and 3/8 locknuts from parts bag. Tighten securely.
- Replace discharge chute into rear opening of tractor. Secure the chute with the two hook straps.

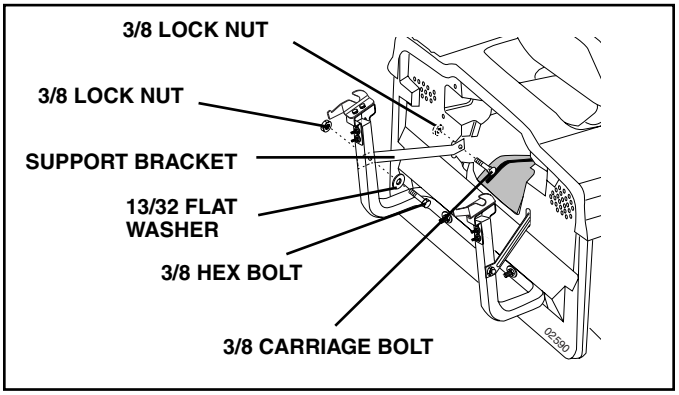

FIG. 4C

NOTE: The strap hook must go through the discharge chute only. Do not allow the hook to enter the slot in the tractor back plate. This will allow the discharge chute to float with the mower deck when moving on uneven terrain.

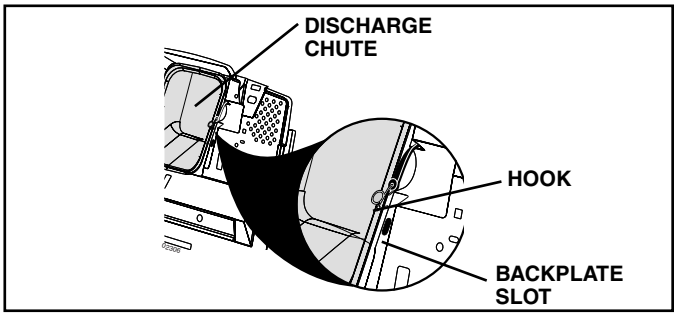

FIG. 4D

TO ASSEMBLE BAGGER (See Figs. 5 & 6)

NOTE: For ease of assembly, you may wish to obtain the assistance of another person when putting the bagger together.

- Holes in front bagger tube are at an angle. Place front bagger tube against lower bagger tube and check for proper hole alignment before assembling bolts.
- Assemble front and lower bagger tubes using four (4) 1/4 x 50,8mm carriage bolts and lock nuts supplied. Tighten securely.

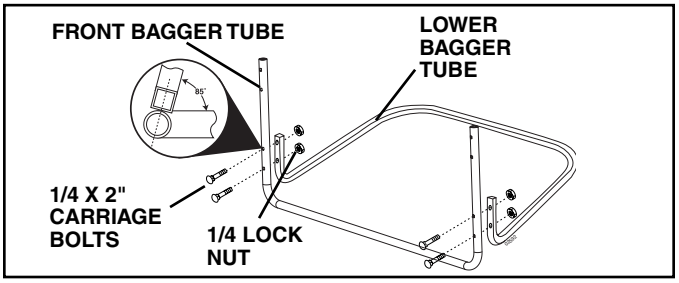

FIG. 5

- Slide front and lower bagger tube assembly into the bagger assemby.
- Assemble front and upper bagger tubes using four (4) 1/4 x 50,8mm carraige bolts and lock nuts supplied. Tighten securely.
- Slip all the vinyl bindings over the bagger tubes.
- Slide the bagger dump handle through the hole in the bagger top, install the clevis pin and secure with retainer spring.
- Push cap over end of bagger dump handle.

NOTE: For future use, the clevis pin may be removed in order to use the handle to clear the chute in the event it has become clogged.

https://truckmanualshub.com/

ASSEMBLY

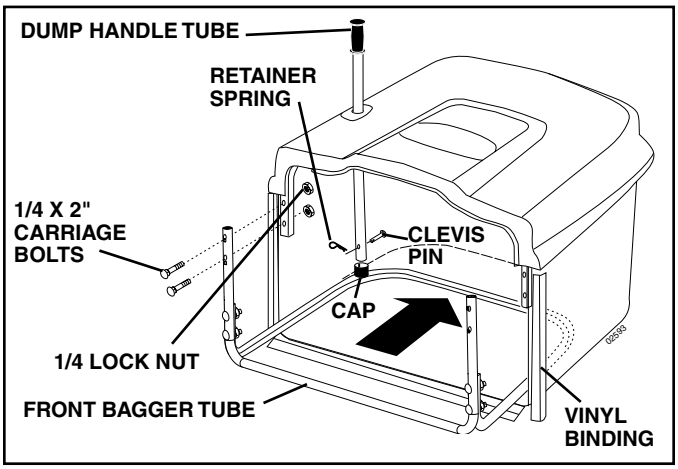

FIG. 6

BAGGER ADJUSTMENT (See Fig. 7)

For proper bag function and appearance, it may be necessary to adjust the bagger assembly. There should be 6mm (1/4")-9mm (3/8") gap between the bagger top and fender and the bagger top surface should be even with the top surface of the fender. To adjust bagger position:

HORIZONTAL ADJUSTMENT

- Slightly loosen the nuts securing the bagger RH and LH horizontal adjustment brackets. Loosen only enough so the brackets keep their position, but allow them to be moved.
- Move the brackets the amount forward or backward you wish the bag assembly to move. Retighten the nuts securely.

VERTICAL ADJUSTMENT

- Slightly loosen the nuts securing the vertical adjustment brackets. Loosen only enough so the brackets keep their position, but allow them to be moved.
- Move the brackets the amount up or down you wish the bag assembly to move. Retighten the nuts securely.
- Reinstall the bagger assembly and check the bagger to fender fit. If necessary, repeat the procedure until proper fit is attained.

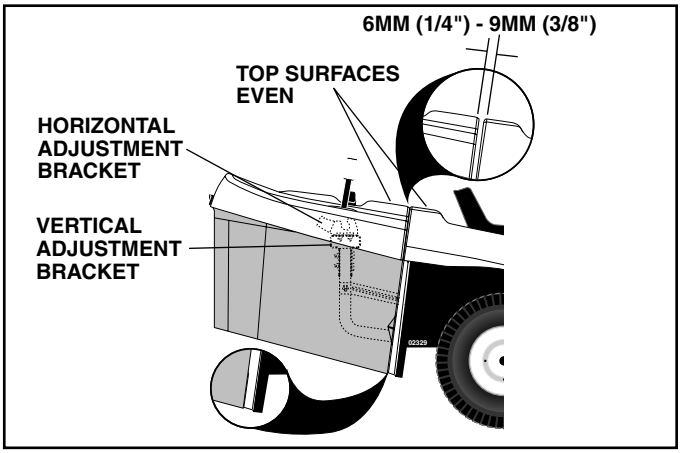

FIG. 7

TO ASSEMBLE AND INSTALL MULCHER PLUG (See Fig. 8)

- Remove spring retainer and pin from handle.
- Insert plug into handle. Make sure that the letter "A" on both the plug and handle are on the same side and that they can both be seen from the top when laying on the ground.
- Secure with pin and retainer spring provided. For installation see "To Convert Mower" in Section 5 of this manual.

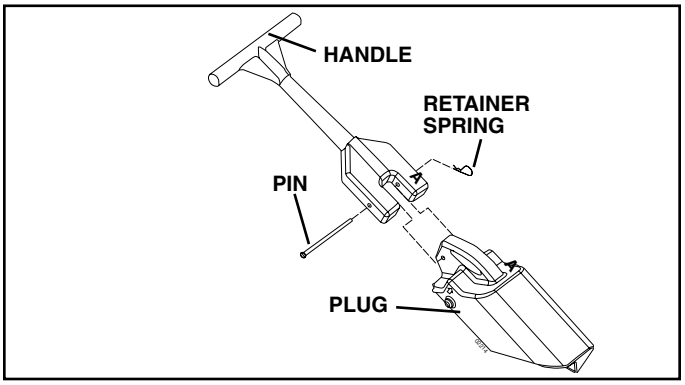

FIG. 8

https://truckmanualshub.com/

ASSEMBLY

CHECK TIRE PRESSURE

The tires on your tractor were overinflated at the factory for shipping purposes. Correct tire pressure is important for best cutting performance.

- Reduce tire pressure to PSI shown in “PRODUCT SPECIFICATIONS” section of this manual.

CHECK DECK LEVELNESS

For best cutting results, mower housing should be properly leveled. See “TO LEVEL MOWER HOUSING” in the Service and Adjustments section of this manual.

CHECK FOR PROPER POSITION OF ALL BELTS

See the figures that are shown for replacing motion and mower blade drive belts in the Service and Adjustments section of this manual. Verify that the belts are routed correctly.

CHECK BRAKE SYSTEM

After you learn how to operate your tractor, check to see that the brake is properly adjusted. See “TO ADJUST BRAKE” in the Service and Adjustments section of this manual.

✓ CHECKLIST

BEFORE YOU OPERATE AND ENJOY YOUR NEW TRACTOR, WE WISH TO ASSURE THAT YOU RECEIVE THE BEST PERFORMANCE AND SATISFACTION FROM THIS QUALITY PRODUCT.

PLEASE REVIEW THE FOLLOWING CHECKLIST:

- ✓ All assembly instructions have been completed.
- ✓ No remaining loose parts in carton.
- ✓ Battery is properly prepared and charged. (Minimum 1 hour at 6 amps).
- ✓ Seat is adjusted comfortably and tightened securely.
- ✓ All tires are properly inflated. (For shipping purposes, the tires were overinflated at the factory).
- ✓ Be sure mower deck is properly leveled side-to-side/ front-to-rear for best cutting results. (Tires must be properly inflated for leveling).
- ✓ Check mower and drive belts. Be sure they are routed properly around pulleys and inside all belt keepers.
- ✓ Check wiring. See that all connections are still secure and wires are properly clamped.
- ✓ Before driving tractor, be sure freewheel control is in drive position.

WHILE LEARNING HOW TO USE YOUR TRACTOR, PAY EXTRA ATTENTION TO THE FOLLOWING IMPORTANT ITEMS:

- ✓ Engine oil is at proper level.
- ✓ Fuel tank is filled with fresh, clean, regular unleaded gasoline.
- ✓ Become familiar with all controls - their location and function. Operate them before you start the engine.
- ✓ Be sure brake system is in safe operating condition.
- ✓ It is important to purge the transmission before operating your tractor for the first time. Follow proper starting and transmission purging instructions (See “TO START ENGINE” and “PURGE TRANSMISSION” in the Operation section of this manual).

https://truckmanualshub.com/

OPERATION

These symbols may appear on your tractor or in literature supplied with the product. Learn and understand their meaning.

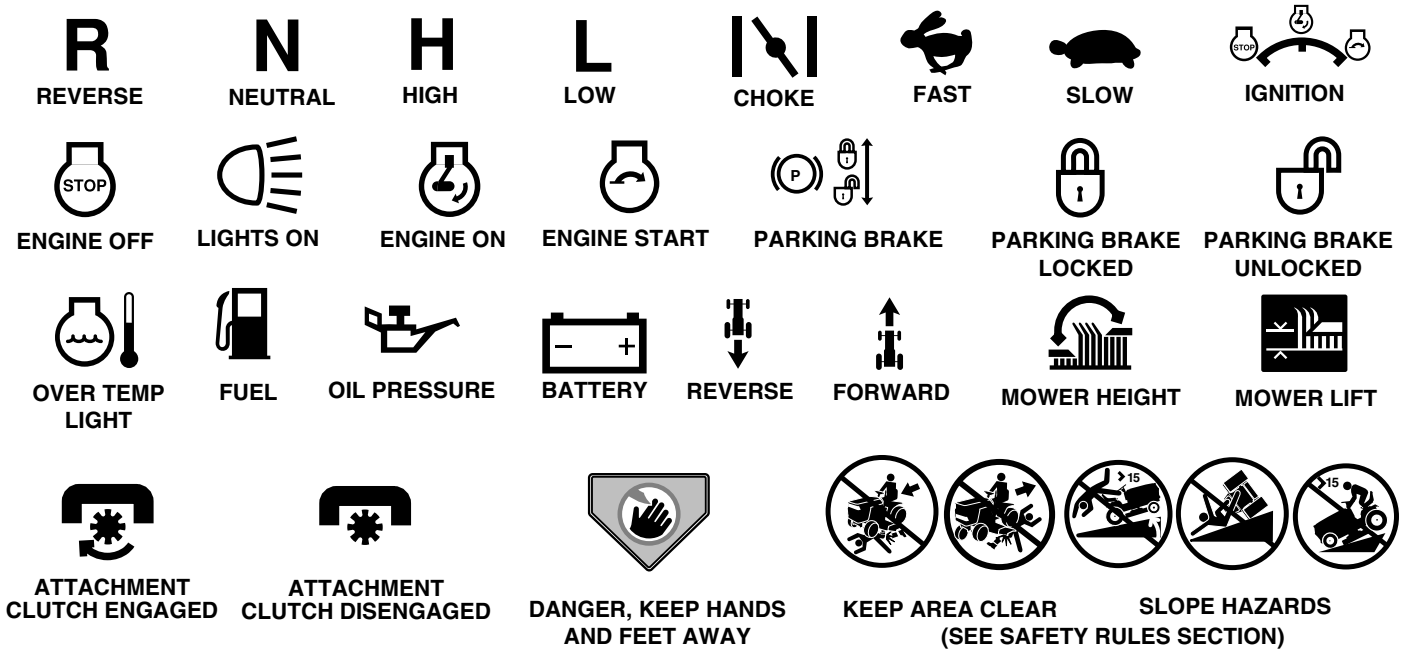

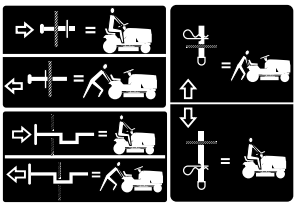

FREE WHEEL
(Automatic Models only)

Failure to follow instructions could result in serious injury or death. The safety alert symbol is used to identify safety information about hazards which can result in death, serious injury and/or property damage.

DANGER indicates a hazard which, if not avoided, **will result in death or serious injury.**

WARNING indicates a hazard which, if not avoided, **could result in death or serious injury.**

CAUTION indicates a hazard which, if not avoided, **might result in minor or moderate injury.**

CAUTION when used **without** the alert symbol, indicates a situation that **could result in damage to the tractor and/or engine.**

HOT SURFACES indicates a hazard which, if not avoided, **could result in death, serious injury and/or property damage.**

FIRE indicates a hazard which, if not avoided, **could result in death, serious injury and/or property damage.**

https://truckmanualshub.com/

OPERATION

KNOW YOUR TRACTOR

READ THIS OWNER'S MANUAL AND SAFETY RULES BEFORE OPERATING YOUR TRACTOR

Compare the illustrations with your tractor to familiarize yourself with the locations of various controls and adjustments. Save this manual for future reference.

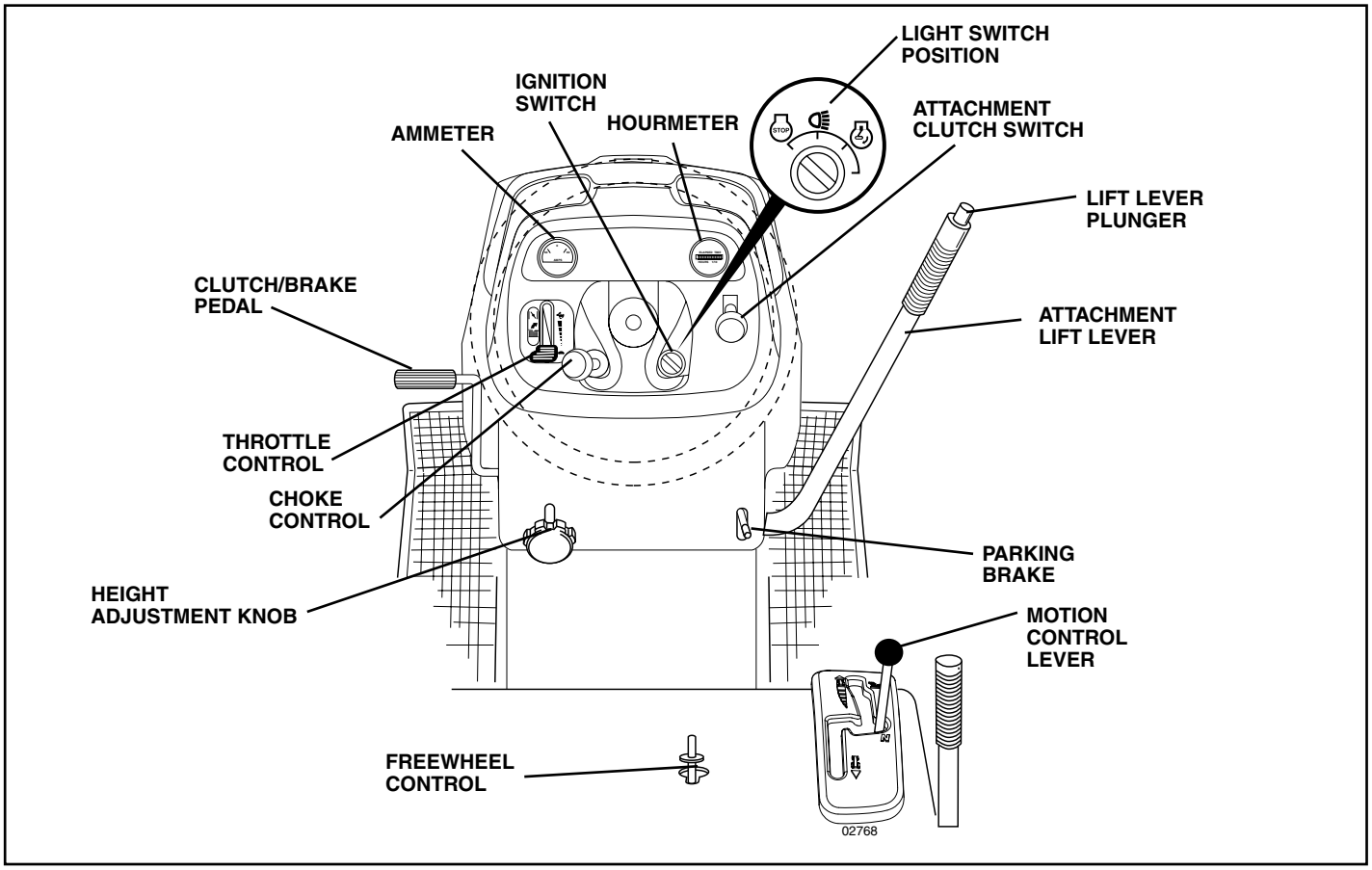

FIG. 9

Our tractors conform to the safety standards of the American National Standards Institute.

AMMETER - Indicates charging (**+**) or discharging (**-**) of battery.

ATTACHMENT CLUTCH SWITCH - Used to engage the mower blades, or other attachments mounted to your tractor.

ATTACHMENT LIFT LEVER - Used to raise and lower the mower deck or other attachments mounted to your tractor.

CHOKE CONTROL - Used when starting a cold engine.

CLUTCH/BRAKE PEDAL - Used for declutching and braking the tractor and starting the engine.

FREEWHEEL CONTROL - Disengages transmission for pushing or slowly towing the tractor with the engine off.

HEIGHT ADJUSTMENT KNOB - Used to adjust the mower cutting height.

HOURMETER - Indicates hours of operation.

IGNITION SWITCH - Used for starting and stopping the engine.

LIFT LEVER PLUNGER - Used to release attachment lift lever when changing its position.

LIGHT SWITCH POSITION - Turns the headlights on and off.

MOTION CONTROL LEVER - Selects the speed and direction of tractor.

PARKING BRAKE - Locks clutch/brake pedal into the brake position.

THROTTLE CONTROL - Used to control engine speed.

https://truckmanualshub.com/

OPERATION

The operation of any tractor can result in foreign objects thrown into the eyes, which can result in severe eye damage. Always wear safety glasses or eye shields while operating your tractor or performing any adjustments or repairs. We recommend a wide vision safety mask over spectacles or standard safety glasses.

HOW TO USE YOUR TRACTOR

TO SET PARKING BRAKE (See Fig. 10)

Your tractor is equipped with an operator presence sensing switch. When engine is running, any attempt by the operator to leave the seat without first setting the parking brake will shut off the engine.

- Depress clutch/brake pedal into full “BRAKE” position and hold.
- Place parking brake lever in “ENGAGED” position and release pressure from clutch/brake pedal. Pedal should remain in “BRAKE” position. Make sure parking brake will hold tractor secure.

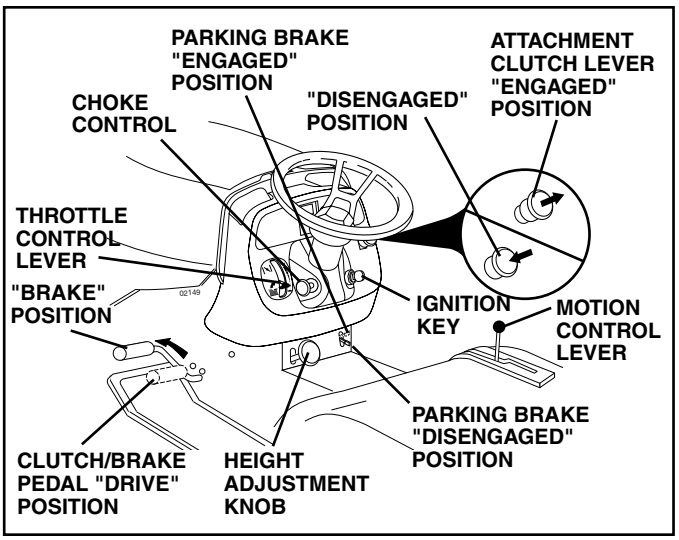

FIG. 10

STOPPING (See Fig. 10)

MOWER BLADES -

- To stop mower blades,move attachment clutch switch to “DISENGAGED” position.

GROUND DRIVE -

- To stop ground drive, depress clutch/brake pedal into full “BRAKE” position..
- Move motion control lever to neutral (N) position.

IMPORTANT: THE MOTION CONTROL LEVER DOES NOT RETURN TO NEUTRAL (N) POSITION WHEN THE CLUTCH/BRAKE PEDAL IS DEPRESSED.

ENGINE -

- Move throttle control between half and full speed (fast) position.

NOTE: Failure to move throttle control between half and full speed (fast) position, before stopping may cause engine to “backfire”.

- Turn ignition key to “STOP” position and remove key. Always remove key when leaving tractor to prevent unauthorized use.
- Never use choke to stop engine.

IMPORTANT: LEAVING THE IGNITION SWITCH IN ANY POSITION OTHER THAN "STOP" WILL CAUSE THE BATTERY TO BE DISCHARGED, (DEAD).

NOTE: Under certain conditions when tractor is standing idle with the engine running, hot engine exhaust gases may cause “browning” of grass. To eliminate this possibility, always stop engine when stopping tractor on grass areas.

CAUTION: Always stop tractor completely, as described above, before leaving the operator's position; to empty grass catcher, etc.

TO USE THROTTLE CONTROL (See Fig. 10)

Always operate engine at full throttle.

- Operating engine at less than full throttle reduces the battery charging rate.
- Full throttle offers the best bagging and mower performance.

TO USE CHOKE CONTROL (See Fig. 10)

Use choke control whenever you are starting a cold engine. Do not use to start a warm engine.

- To engage choke control, pull knob out. Slowly push knob in to disengage.

TO MOVE FORWARD AND BACKWARD (See Fig. 10)

The direction and speed of movement is controlled by the motion control lever.

- Start tractor with motion control lever in neutral (N) position.
- Release parking brake.
- Slowly move motion control lever to desired position.

TO ADJUST MOWER CUTTING HEIGHT (See Fig. 10)

The cutting height is controlled by turning the height adjustment knob in desired direction.

- Turn knob clockwise (↻) to raise cutting height.
- Turn knob counterclockwise (↺) to lower cutting height.

The cutting height range is approximately 1-1/2" to 4". The heights are measured from the ground to the blade tip with the engine not running. These heights are approximate and may vary depending upon soil conditions, height of grass and types of grass being mowed.

- The average lawn should be cut to approximately 2-1/2 inches during the cool season and to over 3 inches during hot months. For healthier and better looking lawns, mow often and after moderate growth.
- For best cutting performance, grass over 6 inches in height should be mowed twice. Make the first cut relatively high; the second to desired height.

https://truckmanualshub.com/

TO ADJUST GAUGE WHEELS (See Fig. 11)

Gauge wheels are properly adjusted when they are slightly off the ground when mower is at the desired cutting height in operating position. Gauge wheels then keep the deck in proper position to help prevent scalping in most terrain conditions.

NOTE: Adjust gauge wheels with tractor on a flat level surface.

- Adjust mower to desired cutting height (See "TO ADJUST MOWER CUTTING HEIGHT" in the Operation section of this manual).
- With mower in desired height of cut position, gauge wheels should be assembled so they are slightly off the ground. Install gauge wheel in appropriate hole with shoulder bolt, 3/8 washer, and 3/8-16 locknut and tighten securely.
- Repeat for opposite side installing gauge wheel in same adjustment hole.

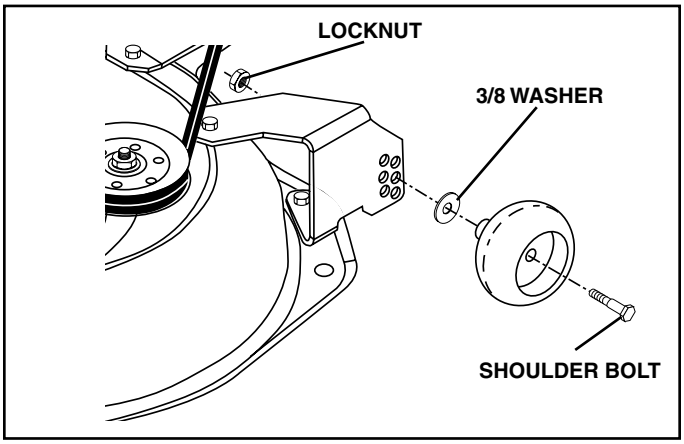

FIG. 11

TO OPERATE MOWER (See Fig. 12)

Your tractor is equipped with an operator presence sensing switch. Any attempt by the operator to leave the seat with the engine running and the attachment clutch engaged will shut off the engine. You must remain fully and centrally positioned in the seat to prevent the engine from hesitating or cutting off when operating your equipment on rough, rolling terrain or hills.

- Select desired height of cut.
- Lower mower with attachment lift control.
- Start mower blades by engaging attachment clutch control.
- TO STOP MOWER BLADES - disengage attachment clutch control.

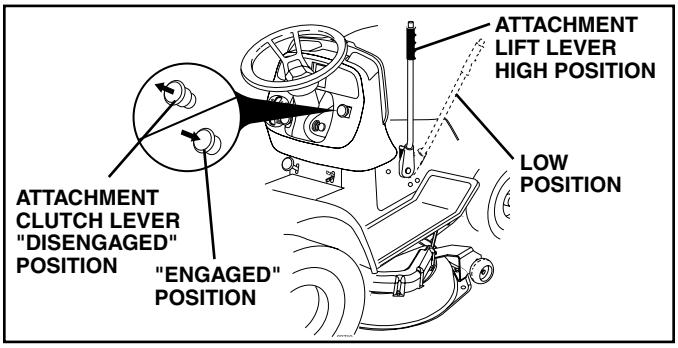

FIG. 12

CAUTION: Do not operate the mower without either the entire grass catcher, on mowers so equipped, or the deflector shield in place.

TO OPERATE ON HILLS

WARNING: Do not drive up or down hills with slopes greater than 15° and do not drive across any slope.

- Choose the slowest speed before starting up or down hills.
- Avoid stopping or changing speed on hills.
- If slowing is necessary, move throttle control lever to slower position.
- If stopping is absolutely necessary, push clutch/brake pedal quickly to brake position and engage parking brake.
- Move motion control lever to neutral (N) position.

IMPORTANT: THE MOTION CONTROL LEVER DOES NOT RETURN TO NEUTRAL (N) POSITION WHEN THE CLUTCH/BRAKE PEDAL IS DEPRESSED.

- To restart movement, slowly release parking brake and clutch/brake pedal.
- Slowly move motion control lever to slowest setting.
- Make all turns slowly.

TO TRANSPORT (See Figs. 9 and 13)

When pushing or towing your tractor, be sure to disengage transmission by placing freewheel control in freewheeling position. Free wheel control is located under the seat.

- Raise attachment lift to highest position with attachment lift control.
- Raise seat and pull freewheel control up and back into the slot and release so it is held in the disengaged position.
- Do not push or tow tractor at more than two (2) MPH.
- To reengage transmission, reverse above procedure.

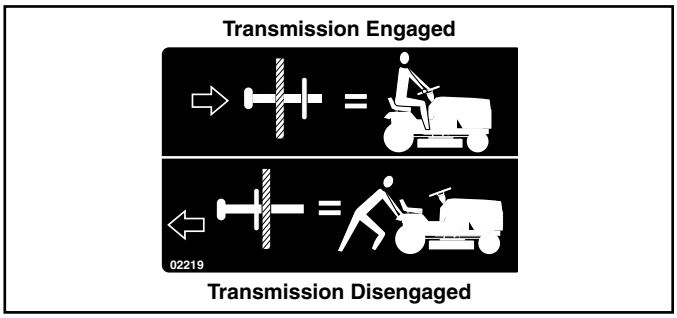

FIG. 13

NOTE: To protect hood from damage when transporting your tractor on a truck or a trailer, be sure hood is closed and secured to tractor. Use an appropriate means of tying hood to tractor (rope, cord, etc.).

TOWING CARTS AND OTHER ATTACHMENTS

Tow only the attachments that are recommended by and comply with specifications of the manufacturer of your tractor. Use common sense when towing. Too heavy of a load, while on a slope, is dangerous. Tires can lose traction with the ground and cause you to lose control of your tractor.

https://truckmanualshub.com/

OPERATION

BEFORE STARTING THE ENGINE

CHECK ENGINE OIL LEVEL

The engine in your tractor has been shipped, from the factory, already filled with summer weight oil.

- Check engine oil with tractor on level ground.
- Remove oil fill cap/dipstick and wipe clean, reinsert the dipstick and screw cap tight, wait for a few seconds, remove and read oil level. If necessary, add oil until "FULL" mark on dipstick is reached. Do not overfill.
- For cold weather operation you should change oil for easier starting (See "OIL VISCOSITY CHART" in the Maintenance section of this manual).
- To change engine oil, see the Maintenance section in this manual.

ADD GASOLINE

- Fill fuel tank to bottom of filler neck. Do not overfill. Use fresh, clean, regular unleaded gasoline with a minimum of 87 octane. (Use of leaded gasoline will increase carbon and lead oxide deposits and reduce valve life). Do not mix oil with gasoline. Purchase fuel in quantities that can be used within 30 days to assure fuel freshness.

CAUTION: Wipe off any spilled oil or fuel. Do not store, spill or use gasoline near an open flame.

IMPORTANT: WHEN OPERATING IN TEMPERATURES BELOW32°F(0°C), USE FRESH, CLEAN WINTER GRADE GASOLINE TO HELP INSURE GOOD COLD WEATHER STARTING.

CAUTION: Alcohol blended fuels (called gasohol or using ethanol or methanol) can attract moisture which leads to separation and formation of acids during storage. Acidic gas can damage the fuel system of an engine while in storage. To avoid engine problems, the fuel system should be emptied before storage of 30 days or longer. Drain the gas tank, start the engine and let it run until the fuel lines and carburetor are empty. Use fresh fuel next season. See Storage Instructions for additional information. Never use engine or carburetor cleaner products in the fuel tank or permanent damage may occur.

TO START ENGINE (See Fig. 9)

When starting the engine for the first time or if the engine has run out of fuel, it will take extra cranking time to move fuel from the tank to the engine.

- Be sure freewheel control is in the transmission engaged position.
- Sit on seat in operating position, depress clutch/brake pedal and set parking brake.
- Place motion control lever in neutral (N) position.
- Move attachment clutch to "DISENGAGED" position.
- Move throttle control to fast position
- Pull choke control out for a cold engine start attempt. For a warm engine start attempt the choke control may not be needed.

NOTE: Before starting, read the warm and cold starting procedures below.

- Insert key into ignition and turn key clockwise to "START" position and release key as soon as engine starts. Do not run starter continuously for more than fifteen seconds per minute. If the engine does not start after several attempts, push choke control in, wait a few minutes and try again. If engine still does not start, pull the choke control out and retry.

WARM WEATHER STARTING (50° F and above)

- When engine starts, slowly push choke control in until the engine begins to run smoothly. If the engine starts to run roughly, pull the choke control out slightly for a few seconds and then continue to push the control in slowly.
- The attachments and ground drive can now be used. If the engine does not accept the load, restart the engine and allow it to warm up for one minute using the choke as described above.

COLD WEATHER STARTING (50° F and below)

- When engine starts, slowly push choke control in until the engine begins to run smoothly. Continue to push the choke control in small steps allowing the engine to accept small changes in speed and load, until the choke control is fully in. If the engine starts to run roughly, pull the choke control out slightly for a few seconds and then continue to push the control in slowly. This may require an engine warm-up period from several seconds to several minutes, depending on the temperature.

AUTOMATIC TRANSMISSION WARM UP

- Before driving the unit in cold weather, the transmission should be warmed up as follows:
  - Be sure the tractor is on level ground.
  - Place the motion control lever in neutral. Release the parking brake and let the clutch/brake slowly return to operating position.
  - Allow one minute for transmission to warm up. This can be done during the engine warm up period.
- The attachments can be used during the engine warm-up period after the transmission has been warmed up and may require the choke control be pulled out slightly.

NOTE: If at a high altitude (above 3000 feet) or in cold temperatures (below 32 F) the carburetor fuel mixture may need to be adjusted for best engine performance. See "TO ADJUST CARBURETOR" in the Service and Adjustments section of this manual.

PURGE TRANSMISSION

CAUTION: Never engage or disengage freewheel lever while the engine is running.

To ensure proper operation and performance, it is recommended that the transmission be purged before operating tractor for the first time. This procedure will remove any trapped air inside the transmission which may have developed during shipping of your tractor.

IMPORTANT: SHOULD YOUR TRANSMISSION REQUIRE REMOVAL FOR SERVICE OR REPLACEMENT, IT SHOULD BE PURGED AFTER REINSTALLATION BEFORE OPERATING THE TRACTOR.

https://truckmanualshub.com/

- Place tractor safely on level surface with engine off and parking brake set.
- Disengage transmission by placing freewheel control in freewheeling position (See "TO TRANSPORT" in this section of manual).
- Sitting in the tractor seat, start engine. After the engine is running, move throttle control to slow position. With motion control lever in neutral (N) position, slowly disengage clutch/brake pedal.
- Move motion control lever to full forward position and hold for five (5) seconds. Move lever to full reverse position and hold for five (5) seconds. Repeat this procedure three (3) times.

NOTE: During this procedure there will be no movement of drive wheels. The air is being removed from hydraulic drive system.

- Move motion control lever to neutral (N) position. Shut-off engine and set parking brake.
- Engage transmission by placing freewheel control in driving position (See "TO TRANSPORT" in this section of manual).
- Sitting in the tractor seat, start engine. After the engine is running, move throttle control to half (1/2) speed. With motion control lever in neutral (N) position, slowly disengage clutch/brake pedal.
- Slowly move motion control lever forward, after the tractor moves approximately five (5) feet, slowly move motion control lever to reverse position. After the tractor moves approximately five (5) feet return the motion control lever to the neutral (N) position. Repeat this procedure with the motion control lever three (3) times.
- Your transmission is now purged and now ready for normal operation.

MOWING TIPS

- Mower should be properly leveled for best mowing performance. See "TO LEVEL MOWER HOUSING" in the Service and Adjustments section of this manual.
- The left hand side of mower should be used for trimming.
- Drive so that clippings are discharged onto the area that has been cut. Have the cut area to the right of the machine. This will result in a more even distribution of clippings and more uniform cutting.
- When mowing large areas, start by turning to the right so that clippings will discharge away from shrubs, fences, driveways, etc. After one or two rounds, mow in the opposite direction making left hand turns until finished (See Fig. 14).

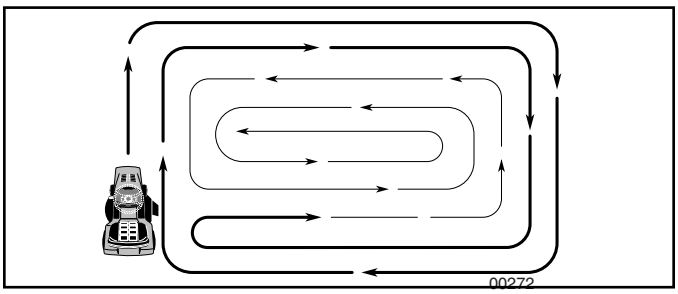

FIG. 14

- If grass is extremely tall, it should be mowed twice to reduce load and possible fire hazard from dried clippings. Make first cut relatively high; the second to the desired height.
- Do not mow grass when it is wet. Wet grass will plug mower and leave undesirable clumps. Allow grass to dry before mowing.
- **Always operate engine at full throttle when mowing** to assure better mowing performance and proper discharge of material. Regulate ground speed by selecting a low enough gear to give the mower cutting performance as well as the quality of cut desired.
- When operating attachments, select a ground speed that will suit the terrain and give best performance of the attachment being used.

MULCHING MOWING TIPS

IMPORTANT: FOR BEST PERFORMANCE, KEEP MOWER HOUSING FREE OF BUILT-UP GRASS AND TRASH. CLEAN AFTER EACH USE.

- The special mulching blade will recut the grass clippings many times and reduce them in size so that as they fall onto the lawn they will disperse into the grass and not be noticed. Also, the mulched grass will biodegrade quickly to provide nutrients for the lawn. Always mulch with your highest engine (blade) speed as this will provide the best recutting action of the blades.
- Avoid cutting your lawn when it is wet. Wet grass tends to form clumps and interferes with the mulching action. The best time to mow your lawn is the early afternoon. At this time the grass has dried the newly cut area will not be exposed to direct sunlight.
- For best results, adjust the mower cutting height so that the mower cuts off only the top one-third of the grass blades (See Fig. 15). For extremely heavy mulching, reduce your width of cut on each pass and mow slowly.

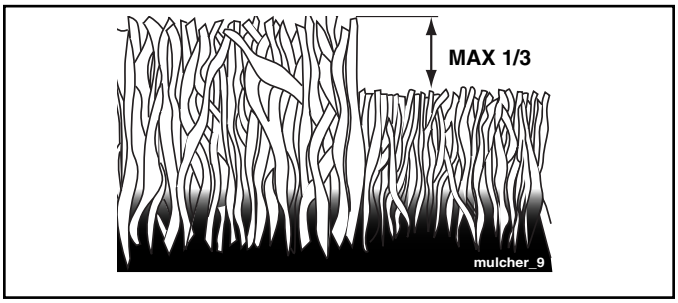

FIG. 15

- Certain types of grass and grass conditions may require that an area be mulched a second time to completely hide the clippings. When doing a second cut, mow across (perpendicular) to the first cut path.
- Change your cutting pattern from week to week. Mow north to south one week then change to east to west the next week. This will help prevent matting and graining of the lawn.

https://truckmanualshub.com/

OPERATION

TO DUMP BAGGER (See Fig.16)

Your tractor is equipped with a Dump Bag Alarm. To turn off the alarm disengage the attachment clutch switch.

- Position tractor in location you wish to dump bagger.
- Place motion control lever in Neutral position and set parking brake.
- Raise dump handle to its highest position. Pull handle forward to raise bagger and dump clippings.
- To continue mowing, be sure bagger is down and in proper operating position which will allow mower to operate.

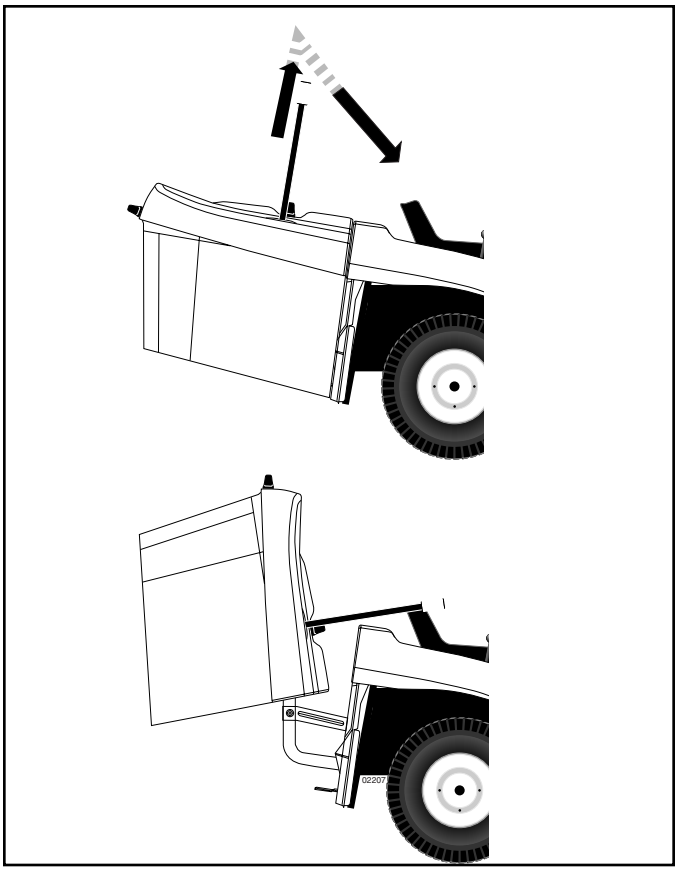

FIG. 16

TO CONVERT MOWER (See Fig.17)

(Converting to mulching or rear discharging will require a mulcher plug and discharge deflector)

MULCHING (Requires mulcher plug)

- Place deck into the high cut position.
- Remove bagger or optional rear discharge deflector.
- Unhook the two (2) straps and remove discharge chute
- Insert mulcher plug and handle assembly through back plate and onto the mower deck chute adaptor.
- Secure the plug assembly by connecting the two straps over the handle and hook into the holes provided .
- Replace bagger or optional rear discharge deflector to allow mower to operate.

You are now ready to begin mulching.

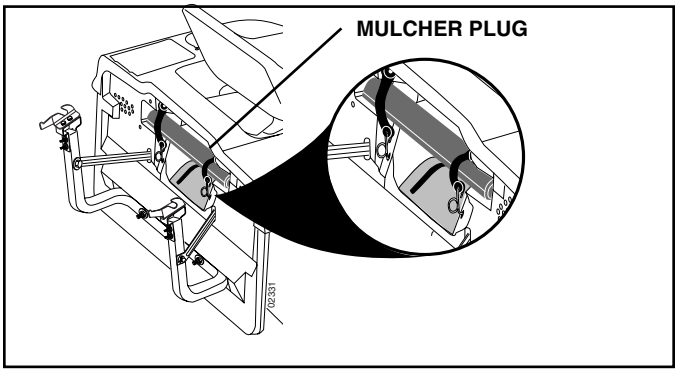

FIG. 17

BAGGING (See Fig.18)

- Place deck into the high cut position.
- Remove the rear discharge deflector or mulching plug.
- Insert the discharge chute into the opening in the backplate and onto the mower deck adaptor.
- Attach the chute to the tractor by hooking the two straps to the flange of the chute.

NOTE: The strap hook must go through the discharge chute only. Do not allow the hook to enter the slot in the tractor back plate. If it does, the discharge chute will not float with the mower deck when mowing on uneven terrain.

- Install bagger onto tractor.

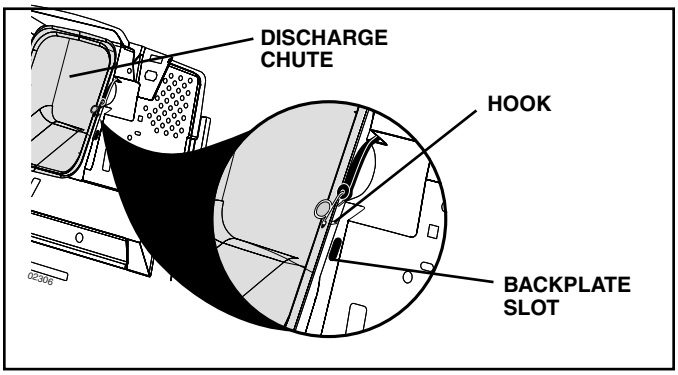

FIG. 18

REAR DISCHARGING (optional accessory required)

- Place deck into the high cut position.
- Remove bagger and mulching plug (if installed).
- Depress rear door and install discharge chute through opening in backplate and slide over deck adaptor.
- Attach the chute by hooking the two straps into the holes in the flange of the chute.

NOTE: The strap hook must go through the discharge chute only. Do not allow the hook to enter the slot in the tractor back plate. If it does, the discharge chute will not float with the mower deck when mowing on uneven terrain.

- Install the discharge deflector to the backplate by screwing the four (4) wing screws into the threaded inserts located in the backplate.
- Tighten the wing screws securely.

https://truckmanualshub.com/

MAINTENANCE

MAINTENANCE SCHEDULE

FILL IN DATES
AS YOU COMPLETE
REGULAR SERVICE

		BEFORE EACH USE	EVERY 8 HOURS	EVERY 25 HOURS	EVERY 50 HOURS	EVERY 100 HOURS	EVERY SEASON	BEFORE STORAGE	SERVICE DATES		
TRACTOR	Check Brake Operation	✔	✔								
	Check Tire Pressure	✔	✔								
	Check Operator Presence and Interlock Systems	✔									
	Check for Loose Fasteners	✔				✔ 5		✔			
	Sharpen/Replace Mower Blades			✔ 3							
	Lubrication Chart			✔				✔			
	Check Battery Level			✔ 4							
	Clean Battery and Terminals			✔				✔			
	Check Transaxle Cooling			✔							
	Check V-Belts					✔					
ENGINE	Check Engine Oil Level	✔	✔								
	Change Engine Oil (with oil filter)				✔ 1,2			✔			
	Change Engine Oil (without oil filter)			✔ 1,2				✔			
	Clean Air Filter			✔ 2							
	Clean Air Screen			✔ 2							
	Inspect Muffler/Spark Arrester				✔						
	Replace Oil Filter (If equipped)					✔ 1, 2					
	Clean Engine Cooling Fins					✔ 2					
	Replace Spark Plug					✔	✔				
	Replace Air Filter Paper Cartridge					✔ 2					
	Replace Fuel Filter						✔				

maint_sch-tractore.new1

1 - Change more often when operating under a heavy load or in high ambient temperatures.
2 - Service more often when operating in dirty or dusty conditions.
3 - Replace blades more often when mowing in sandy soil.
4 - Not required if equipped with maintenance-free battery.
5 - Tighten front axle pivot bolt to 35 ft.-lbs. maximum. Do not overtighten.

GENERAL RECOMMENDATIONS

The warranty on this tractor does not cover items that have been subjected to operator abuse or negligence. To receive full value from the warranty, operator must maintain tractor as instructed in this manual.

Some adjustments will need to be made periodically to properly maintain your tractor.

At least once a season, check to see if you should make any of the adjustments described in the Service and Adjustments section of this manual.

- At least once a year you should replace the spark plug, clean or replace air filter, and check blades and belts for wear. A new spark plug and clean air filter assure proper air-fuel mixture and help your engine run better and last longer.

BEFORE EACH USE

- Check engine oil level.
- Check brake operation.
- Check tire pressure.
- Check operator presence and interlock systems for proper operation.
- Check for loose fasteners.

LUBRICATION CHART

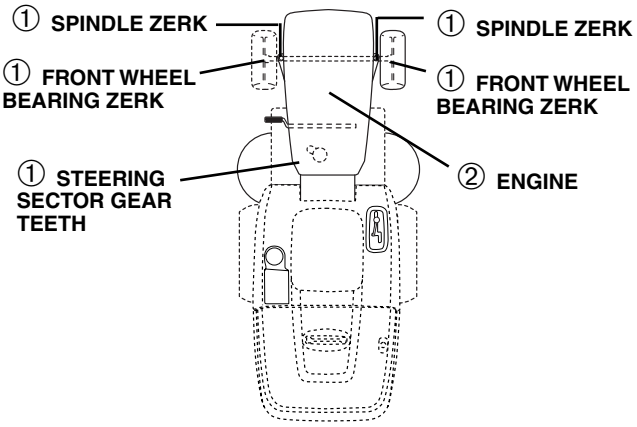

① General Purpose Grease
② Refer to Maintenance “ENGINE” Section

IMPORTANT: DO NOT OIL OR GREASE THE PIVOT POINTS WHICH HAVE SPECIAL NYLON BEARINGS. VISCOUS LUBRICANTS WILL ATTRACT DUST AND DIRT THAT WILL SHORTEN THE LIFE OF THE SELF-LUBRICATING BEARINGS. IF YOU FEEL THEY MUST BE LUBRICATED, USE ONLY A DRY, POWDERED GRAPHITE TYPE LUBRICANT SPARINGLY.

https://truckmanualshub.com/

MAINTENANCE

TRACTOR

Always observe safety rules when performing any maintenance.

BRAKE OPERATION

If tractor requires more than five (5) feet to stop at highest speed in highest gear on a level, dry concrete or paved surface, then brake must be checked and adjusted, then brake must be adjusted. (See "TO ADJUST BRAKE" in the Service and Adjustments section of this manual).

TIRES

- Maintain proper air pressure in all tires (See "PRODUCT SPECIFICATIONS" section of this manual).
- Keep tires free of gasoline, oil, or insect control chemicals which can harm rubber.
- Avoid stumps, stones, deep ruts, sharp objects and other hazards that may cause tire damage.

NOTE: To seal tire punctures and prevent flat tires due to slow leaks, tire sealant may be purchased from your local parts dealer. Tire sealant also prevents tire dry rot and corrosion.

OPERATOR PRESENCE SYSTEM

Be sure operator presence and interlock systems are working properly. If your tractor does not function as described, repair the problem immediately.

- The engine should not start unless the clutch/brake pedal is fully depressed and attachment clutch control is in the disengaged position.
- When the engine is running, any attempt by the operator to leave the seat without first setting the parking brake should shut off the engine.
- When the engine is running and the attachment clutch is engaged, any attempt by the operator to leave the seat should shut off the engine.
- The attachment clutch should never operate unless the operator is in the seat.
- When the engine is running and the bagger or optional deflector are not installed the mower should not operate.

BLADE CARE

For best results mower blades must be kept sharp. Replace bent or damaged blades.

IMPORTANT: THE BLADES ON YOUR MOWER ARE NOT THE SAME AND MUST BE INSTALLED ON THE CORRECT SIDE. IT IS SUGGESTED THAT YOU WORK ON ONE BLADE AT A TIME TO ENSURE PROPER ASSEMBLY OF COMPONENTS.

CAUTION: Use only a replacement blade approved by the manufacturer of your tractor. Using a blade not approved by the manufacturer of your tractor is hazardous, could damage your tractor and void your warranty.

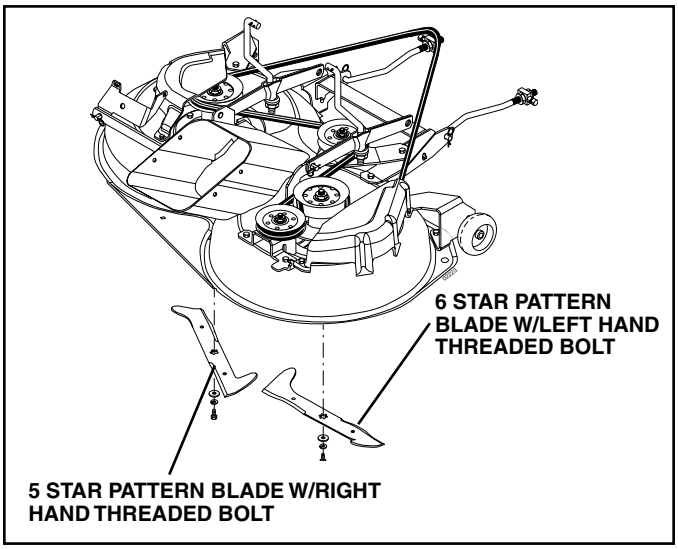

FIG.19

5 STAR PATTERN BLADE

The center of this blade has a five (5) star pattern. The bolt that attaches this blade has normal **Right Hand threads** that loosens by turning (↶) counterclockwise and tightens by turning (↷) clockwise.

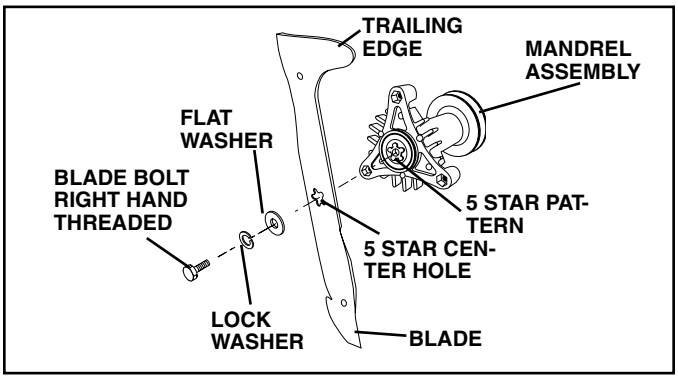

FIG.20

6 STAR PATTERN BLADE

The center of this blade has a 6 star pattern. The bolt attaching this blade has **Left Hand threads** that loosens by turning (↷) clockwise and tighten by turning (↶) counterclockwise.

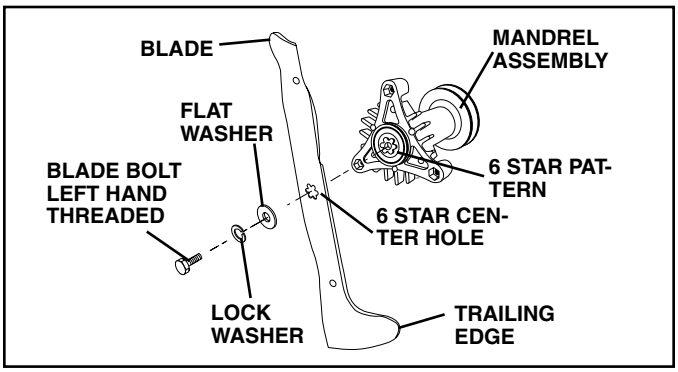

FIG. 21

https://truckmanualshub.com/

MAINTENANCE

BLADE REMOVAL

- Raise mower to highest position to allow access to blades.
- Remove blade bolt, lock washer and flat washer securing blade.
- Install new or resharpened blade with trailing edge up towards deck as shown.

IMPORTANT: To ensure proper assembly, center hole in blade must align with star on mandrel assembly.

- Reassemble blade bolt, lock washer and flat washer in exact order as shown.
- Tighten blade bolt securely (27-35 Ft. Lbs. torque).

IMPORTANT: Blade bolt is grade 8 heat treated

BATTERY

Your tractor has a battery charging system which is sufficient for normal use. However, periodic charging of the battery with an automotive charger will extend its life.

- Keep battery and terminals clean.
- Keep battery bolts tight.
- Keep small vent holes open.
- Recharge at 6-10 amperes for 1 hour.

NOTE: The original equipment battery on your tractor is maintenance free. Do not attempt to open or remove caps or covers. Adding or checking level of electrolyte is not necessary.

TO CLEAN BATTERY AND TERMINALS

Corrosion and dirt on the battery and terminals can cause the battery to “leak” power.

- Remove battery cover.
- Disconnect BLACK battery cable first then RED battery cable and remove battery from tractor.
- Rinse the battery with plain water and dry.
- Clean terminals and battery cable ends with wire brush until bright.
- Coat terminals with grease or petroleum jelly.
- Reinstall battery (See “CONNECT BATTERY” in the Assembly section of this manual).

V-BELTS

Check V-belts for deterioration and wear after 100 hours of operation and replace if necessary. The belts are not adjustable. Replace belts if they begin to slip from wear.

TRANSAXLE COOLING

The transmission fan and cooling fins should be kept clean to assure proper cooling.

Do not attempt to clean fan or transmission while engine is running or while the transmission is hot. To prevent possible damage to seals, do not use high pressure water or steam to clean transaxle.

- Inspect cooling fan to be sure fan blades are intact and clean.
- Inspect cooling fins for dirt, grass clippings and other materials. To prevent damage to seals, do not use compressed air or high pressure sprayer to clean cooling fins.

TRANSAXLE PUMP FLUID

The transaxle was sealed at the factory and fluid maintenance is not required for the life of the transaxle. Should the transaxle ever leak or require servicing, contact your nearest authorized service center/department.

ENGINE

LUBRICATION

Only use high quality detergent oil rated with API service classification SG-SL. Select the oil’s SAE viscosity grade according to your expected operating temperature.

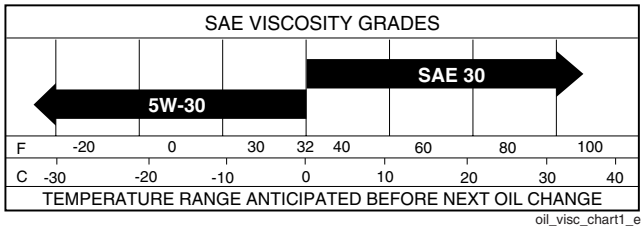

NOTE: Although multi-viscosity oils (5W30, 10W30 etc.) improve starting in cold weather, these multi-viscosity oils will result in increased oil consumption when used above 32°F. Check your engine oil level more frequently to avoid possible engine damage from running low on oil.

Change the oil after every 50 hours of operation or at least once a year if the tractor is not used for 50 hours in one year.

Check the crankcase oil level before starting the engine and after each eight (8) hours of operation. Tighten oil fill cap/dipstick securely each time you check the oil level.

TO CHANGE ENGINE OIL (See Figs. 22)

Determine temperature range expected before oil change. All oil must meet API service classification SG-SL.

- Be sure tractor is on level surface.
- Oil will drain more freely when warm.
- Catch oil in a suitable container.
- Remove oil fill cap/dipstick. Be careful not to allow dirt to enter the engine when changing oil.
- Remove yellow cap from bottom fitting of drain valve and install the drain tube onto the fitting.

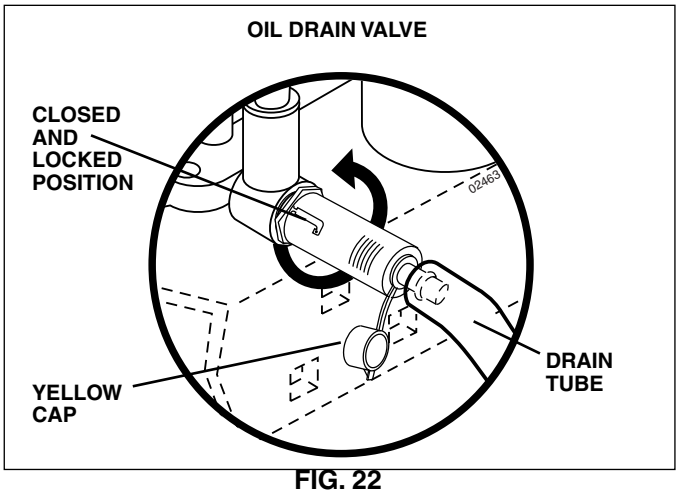

FIG. 22

https://truckmanualshub.com/

- Unlock drain valve by pushing inward and turning counterclockwise.
- To open, pull out on the drain valve.
- After oil has drained completely, close and lock the drain valve by pushing inward and turning clockwise until the pin is in the locked position as shown.
- Remove the drain tube and replace the cap onto to the bottom fitting of the drain valve.
- Refill engine with oil through oil fill dipstick tube. Pour slowly. Do not overfill. For approximate capacity see "PRODUCT SPECIFICATIONS" section of this manual.
- Use gauge on oil fill cap/dipstick for checking level. For accurate reading, insert dipstick into the tube and push down firmly into place before removing. Keep oil up to, but not over, the "FULL" line on dipstick. Push dipstick down firmly into the tube when finished.

CLEAN AIR SCREEN

Air screen must be kept free of dirt and chaff to prevent engine damage from overheating. Clean with a wire brush or compressed air to remove dirt and stubborn dried gum fibers. See engine manual.

AIR FILTER

Your engine will not run properly using a dirty air filter. Clean the foam pre-cleaner after every 25 hours of operation or every season. Service paper cartridge every 50 hours of operation or every season, whichever occurs first. See engine manual.

MUFFLER

Inspect and replace corroded muffler and spark arrester (if equipped) as it could create a fire hazard and/or damage.

SPARK PLUGS

Replace spark plugs at the beginning of each mowing season or after every 100 hours of operation, whichever occurs first. Spark plug type and gap setting are shown in "PRODUCT SPECIFICATIONS" section of this manual.

ENGINE OIL FILTER

Replace the engine oil filter every season or every other oil change if the tractor is used more than 100 hours in one year. See engine manual.

IN-LINE FUEL FILTER (See Fig. 23)

The fuel filter should be replaced once each season. If fuel filter becomes clogged, obstructing fuel flow to carburetor, replacement is required.

- With engine cool, remove filter and plug fuel line sections.
- Place new fuel filter in position in fuel line with arrow pointing towards carburetor.
- Be sure there are no fuel line leaks and clamps are properly positioned.
- Immediately wipe up any spilled gasoline.

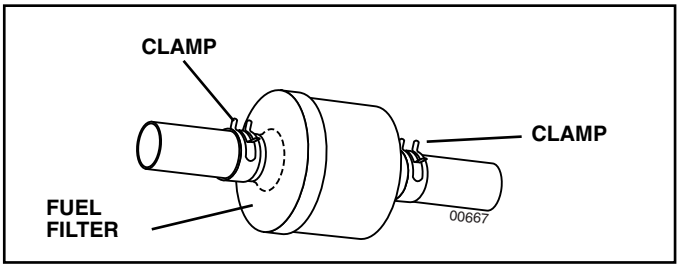

FIG. 23

CLEANING

- Clean engine, battery, seat, finish, etc. of all foreign matter.
- Keep finished surfaces and wheels free of all gasoline, oil, etc.
- Protect painted surfaces with automotive type wax.

We do not recommend using a garden hose or pressure washer to clean your tractor unless the engine and transmission are covered to keep water out. Water in engine or transmission will shorten the useful life of your tractor. Use compressed air or a leaf blower to remove grass, leaves and trash from tractor and mower.

https://truckmanualshub.com/

SERVICE AND ADJUSTMENTS

WARNING: TO AVOID SERIOUS INJURY, BEFORE PERFORMING ANY SERVICE OR ADJUSTMENTS:
- **Depress clutch/brake pedal fully and set parking brake.**
- **Place motion control lever in neutral (N) position.**
- **Place attachment clutch in "DISENGAGED" position.**
- **Turn ignition key to "STOP" and remove key.**
- **Make sure the blades and all moving parts have completely stopped.**
- **Disconnect spark plug wire from spark plug and place wire where it cannot come in contact with plug.**

TRACTOR

TO REMOVE MOWER (See Fig. 24)

Mower will be easier to remove from the right side of tractor.

- Place attachment clutch control in "DISENGAGED" position.
- Move attachment lift lever forward to lower mower to its lowest position.
- Roll belt off clutch pulley.
- Disconnect anti-sway bar from chassis bracket by removing retainer spring.
- Disconnect suspension arms from rear deck brackets by removing retainer springs.
- Disconnect front links from deck by removing retainer springs.
- Raise lift lever to raise suspension arms. Slide mower out from under tractor.

IMPORTANT: IF AN ATTACHMENT OTHER THAN THE MOWER DECK IS TO BE MOUNTED ON THE TRACTOR, REMOVE THE FRONT LINKS.

TO INSTALL MOWER (See Fig. 24)

Be sure tractor is on level surface and mower suspension arms are raised with attachment lift control. Engage parking brake.

- Slide mower under tractor.

IMPORTANT: Check belt for proper routing in all mower pulley grooves.

- Install belt into clutch pulley groove.
- Install left front link into the left hand front mower bracket (retain with single loop retainer springs as shown).
- Slide right side of mower back and install right front link into right hand front mower bracket (retain with single loop retainer springs).
- Place the suspension arms on mower pins, if necessary, rock and raise front of mower to align mower pins with the holes in suspension arms. Retain with double loop retainer spring, loop down as shown.
- Connect anti-sway bar to chassis bracket under left footrest and retain with double loop retainer spring.
- Raise deck to highest position.

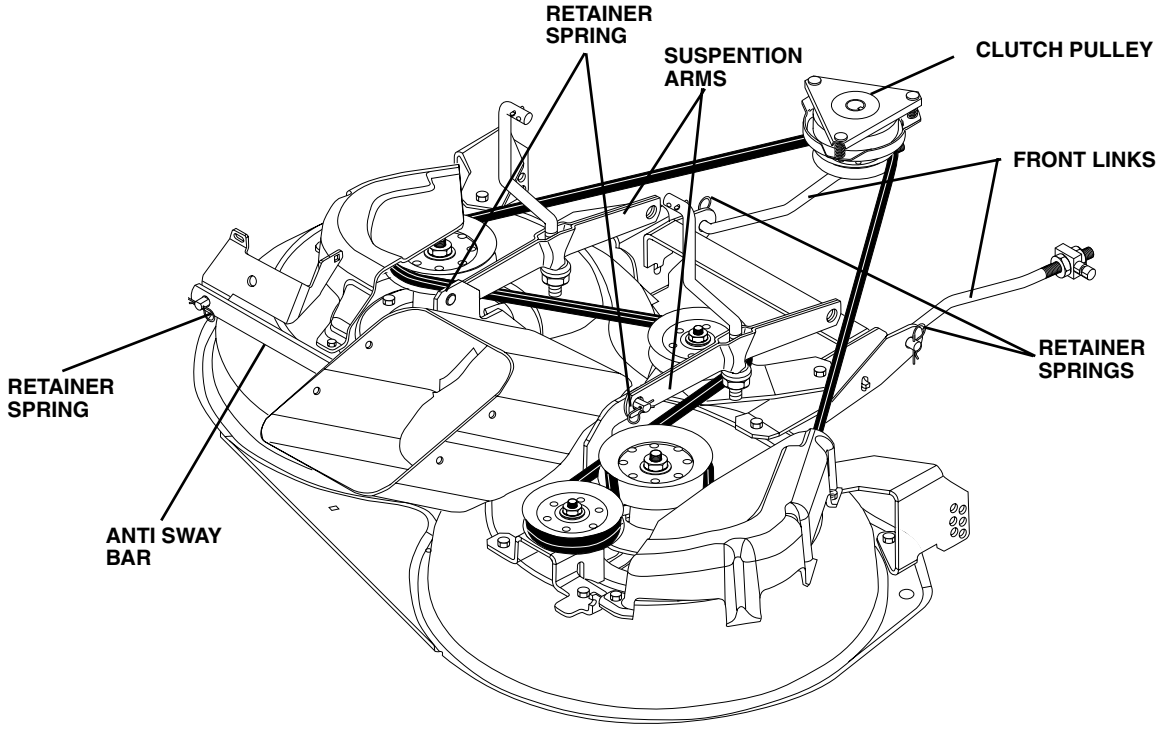

FIG. 24

https://truckmanualshub.com/

TO LEVEL MOWER HOUSING

Adjust the mower while tractor is parked on level ground or driveway. Make sure tires are properly inflated (See "PRODUCT SPECIFICATIONS" section of this manual). If tires are over or underinflated, you will not properly adjust your mower.

SIDE-TO-SIDE ADJUSTMENT (See Figs. 25 and 26)

- Raise mower to its highest position.
- At the midpoint of both sides of mower, measure height from bottom edge of mower to ground. Distance "A" on both sides of mower should be the same or within 1/4" of each other.
- If adjustment is necessary, make adjustment on one side of mower only.
- To raise one side of mower, tighten lift link adjustment nut on that side.
- To lower one side of mower, loosen lift link adjustment nut on that side.

NOTE: Three full turns of adjustment nut will change mower height about 1/8".

- Recheck measurements after adjusting.

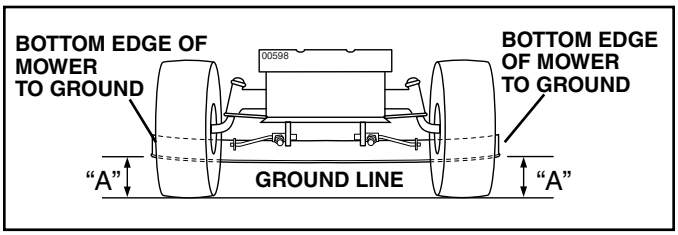

FIG. 25

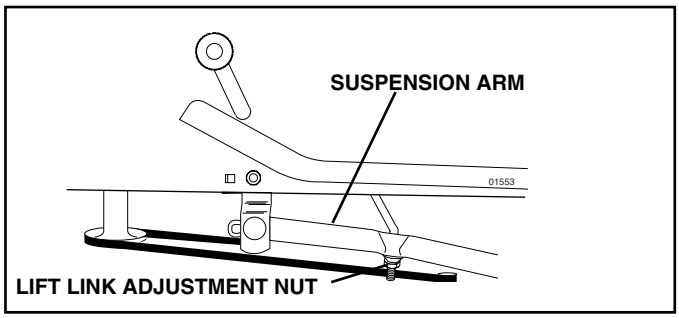

FIG. 26

FRONT-TO-BACK ADJUSTMENT (See Figs. 27 and 28)

IMPORTANT: DECK MUST BE LEVEL SIDE-TO-SIDE. IF THE FOLLOWING FRONT-TO-BACK ADJUSTMENT IS NECESSARY, BE SURE TO ADJUST BOTH FRONT LINKS EQUALLY SO MOWER WILL STAY LEVEL SIDE-TO-SIDE.

To obtain the best cutting results, the mower housing should be adjusted so that the front is approximately 1/8" to 1/2" lower than the rear when the mower is in its highest position.

Check adjustment on right side of tractor. Measure distance "D" directly in front and behind the mandrel at bottom edge of mower housing as shown.

- Before making any necessary adjustments, check that both front links are equal in length.
- If links are not equal in length, adjust one link to same length as other link.
- To lower front of mower loosen nut "E" on both front links an equal number of turns.
- When distance "D" is 1/8" to 1/2" lower at front than rear, tighten nuts "F" against trunnion on both front links.
- To raise front of mower, loosen nut "F" from trunnion on both front links. Tighten nut "E" on both front links an equal number of turns. The two front links must remain equal in length.
- When distance "D" is 1/8" to 1/2" lower at front than rear, tighten nut "F" against trunnion on both front links.
- Recheck side-to-side adjustment.

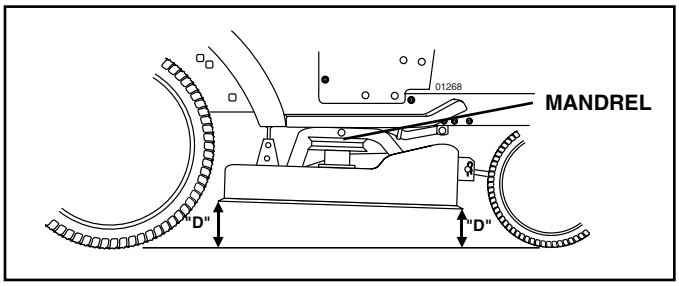

FIG. 27

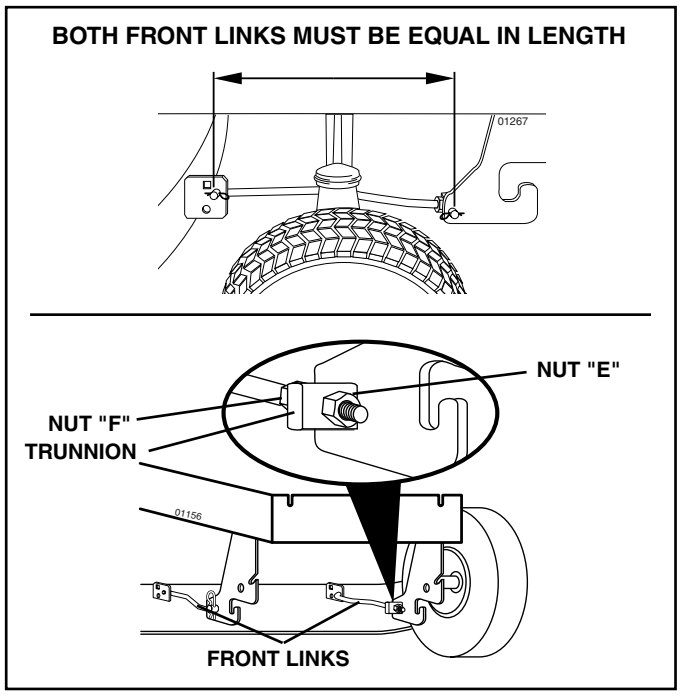

FIG. 28

https://truckmanualshub.com/

TO REPLACE MOWER BLADE DRIVE BELT (See Fig. 29)

Park the tractor on level surface. Engage parking brake.

BELT REMOVAL -

- Remove mower from tractor (See “TO REMOVE MOWER” in this section of this manual).
- Remove screws from RH mandrel cover and remove cover.
- Remove screws from LH mandrel cover and remove cover.
- Work belt off both mandrel pulleys and idler pulleys.
- Pull belt away from mower.

BELT INSTALLATION -

- Install new belt in reverse order of removal. See belt routing decal located on right mandrel cover.
- Make sure belt is in all pulley grooves and inside all belt guides.
- Install left and right mandrel covers and tighten securely. Make sure belt is in mandrel pulley cover.
- Install mower (see "To install mower" in this section of this manual).

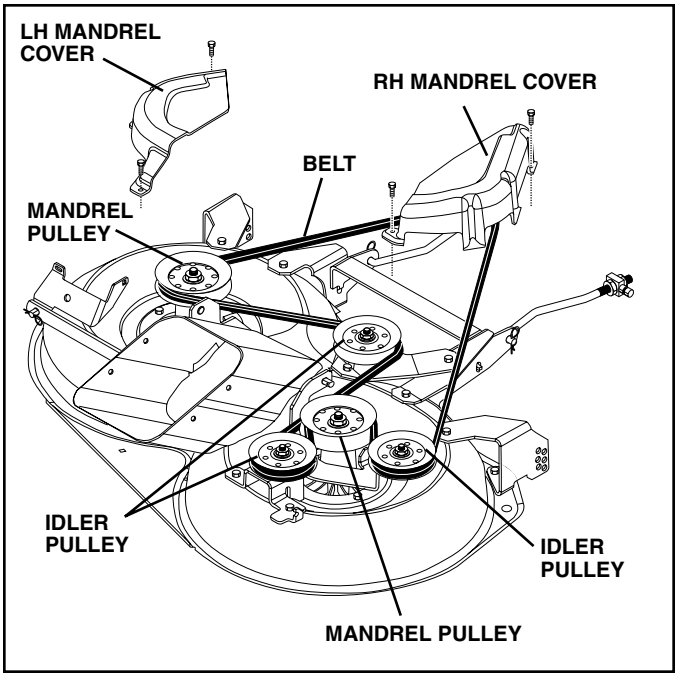

FIG. 29

TO CHECK AND ADJUST BRAKE (See Fig. 30)

Your tractor is equipped with an adjustable brake system which is mounted on the right side of the transaxle.

If tractor requires more than five (5) feet to stop at highest speed in highest gear on a level, dry concrete or paved surface, then brake must be checked and adjusted.

TO CHECK BRAKE

- Park tractor on a level, dry concrete or paved surface, depress clutch/brake pedal all the way down and engage parking brake.
- Disengage transmission by placing freewheel control in “transmission disengaged” position. Pull freewheel control out and into the slot and release so it is held in the disengaged position.

The rear wheels must lock and skid when you try to manually push the tractor forward. If the rear wheels rotate, the brake needs to be adjusted or the pads need to be replaced.

TO ADJUST BRAKE

- Depress clutch/brake pedal all the way down and engage parking brake.
- Measure distance between brake operating arm and nut “A” on brake rod.
- If distance is other than 1-9/16", loosen jam nut and turn nut “A” until distance becomes 1-9/16". Retighten jam nut against nut “A”.
- Engage transmission by placing freewheel control in “transmission engaged” position.
- Road test tractor for proper stopping distance as stated above. Readjust if necessary. If stopping distance is still greater than five (5) feet in highest gear, further maintenance is necessary. Replace brake pads or contact a qualified service center.

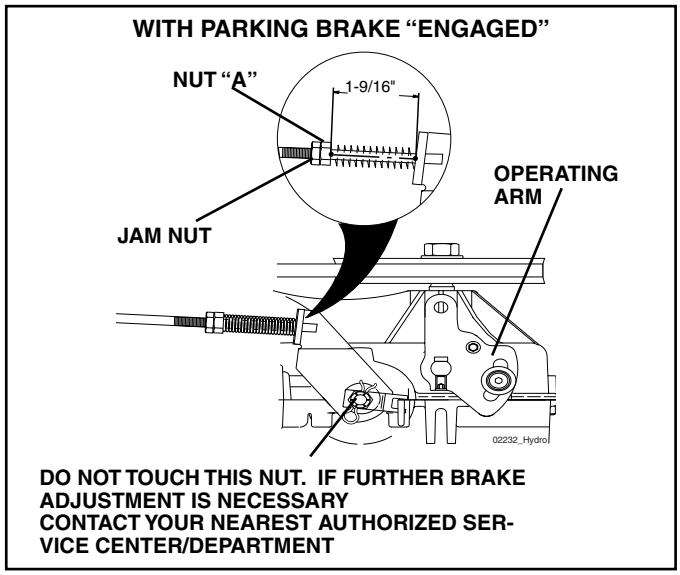

FIG. 30

https://truckmanualshub.com/

SERVICE AND ADJUSTMENTS

TO REPLACE MOTION DRIVE BELT (See Fig. 31)

Park the tractor on level surface. Engage parking brake. For assistance, there is a belt installation guide decal on bottom side of left footrest.

BELT REMOVAL -

- Remove mower (See "TO REMOVE MOWER" in this section of manual).

NOTE: Observe entire motion drive belt and position of all belt guides and keepers.

- Disconnect clutch wire harness.
- Remove clutch locator.
- Remove belt from clutching idler and all stationary idlers.
- Remove belt downward from engine pulley and around electric clutch.
- Pull belt slack toward rear of tractor. Carefully remove belt upwards from transmission input pulley and over cooling fan blades.

BELT INSTALLATION -

- Carefully work new belt down around transmission cooling fan and onto the input pulley.
- Pull belt toward front of tractor and roll belt around electric clutch and onto engine pulley.
- Install belt through all stationary idlers and clutching idler.
- Reinstall clutch locator and tighten nut securely.
- Reconnect clutch harness.
- Make sure belt is in all pulley grooves and inside all belt guides and keepers.
- Install mower (See "TO INSTALL MOWER" in this section of manual).

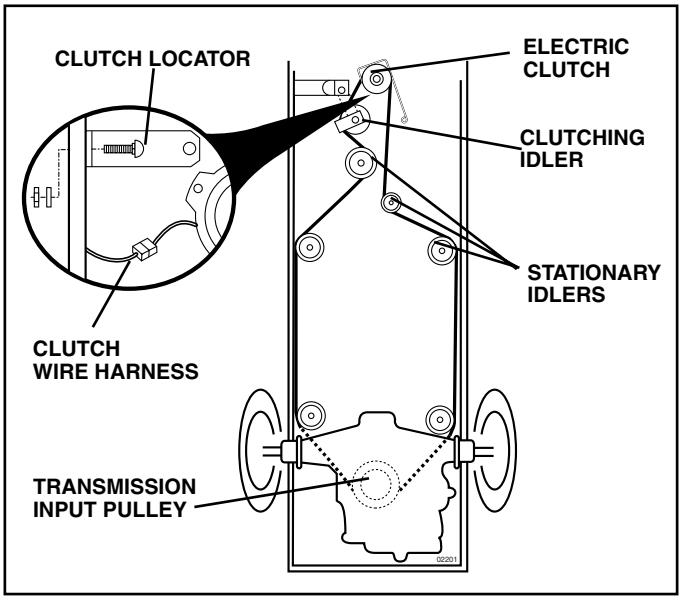

FIG. 31

TRANSMISSION REMOVAL/REPLACEMENT

Should your transmission require removal for service or replacement, it should be purged after reinstallation and before operating the tractor. See "PURGE TRANSMISSION" in the Operation section of this manual.

TRANSAXLE MOTION CONTROL LEVER NEUTRAL ADJUSTMENT(See Fig. 32)

The motion control lever has been preset at the factory and adjustment should not be necessary.

- Loosen adjustment bolt in front of the right rear wheel, and lightly tighten.
- Start engine and move motion control lever until tractor does not move forward or backward.
- Hold motion control lever in that position and turn engine off.
- While holding motion control lever in place, loosen the adjustment bolt.
- Move motion control lever to the neutral (N) (lock gate) position.
- Tighten adjustment bolt securely.

NOTE: If additional clearance is needed to get to adjustment bolt, move mower deck height to the lowest position.

After above adjustment is made, if the tractor still creeps forward or backward while motion control lever is in neutral position, follow these steps:

- Loosen the adjustment bolt.
- Move the motion control lever 1/4 to 1/2 inch in the direction it is trying to creep.
- Tighten adjustment bolt securely.
- Start engine and test.
- If tractor still creeps, repeat above steps until satisfied.

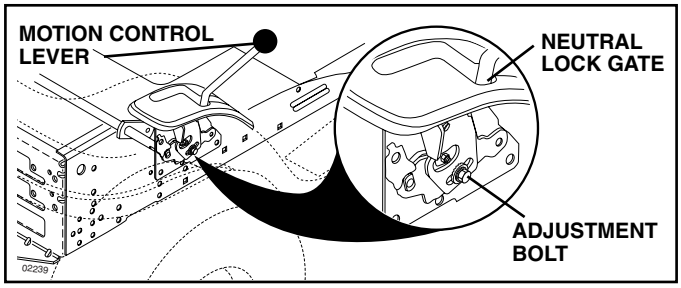

FIG. 32

TO ADJUST STEERING WHEEL ALIGNMENT

If steering wheel crossbars are not horizontal (left to right) when wheels are positioned straight forward, remove steering wheel and reassemble per instructions in the Assembly section of this manual.

FRONT WHEEL TOE-IN/CAMBER

The front wheel toe-in and camber are not adjustable on your tractor. If damage has occurred to affect the front wheel toe-in or camber, contact your nearest authorized service center/department.

https://truckmanualshub.com/

TO REMOVE WHEEL FOR REPAIRS (See Fig. 33)

- Block up axle securely.
- Remove axle cover, retaining ring and washers to allow wheel removal (rear wheel contains a square key - Do not lose).
- Repair tire and reassemble.
- On rear wheels only: align grooves in rear wheel hub and axle. Insert square key.
- Replace washers and snap retaining ring securely in axle groove.
- Replace axle cover.

NOTE: To seal tire punctures and prevent flat tires due to slow leaks, tire sealant may be purchased from your local parts dealer. Tire sealant also prevents tire dry rot and corrosion.

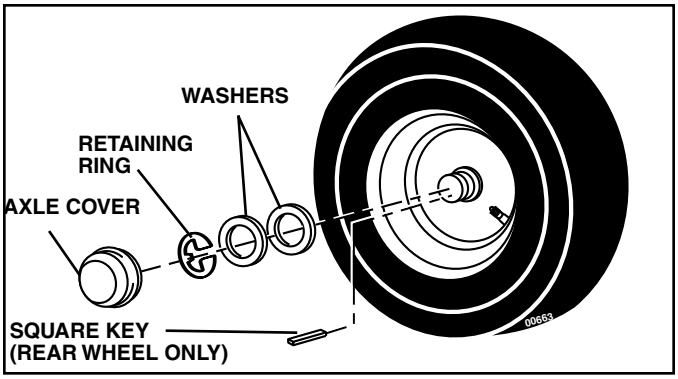

FIG. 33

TO START ENGINE WITH A WEAK BATTERY (See Fig. 34)

WARNING: **Lead-acid batteries generate explosive gases. Keep sparks, flame and smoking materials away from batteries. Always wear eye protection when around batteries.**

If your battery is too weak to start the engine, it should be recharged. (See "BATTERY" in the MAINTENANCE section of this manual).

If “jumper cables” are used for emergency starting, follow this procedure:

IMPORTANT: YOUR TRACTOR IS EQUIPPED WITH A 12 VOLT SYSTEM. THE OTHER VEHICLE MUST ALSO BE A 12 VOLT SYSTEM. DO NOT USE YOUR TRACTOR BATTERY TO START OTHER VEHICLES.

TO ATTACH JUMPER CABLES -

- Connect one end of the RED cable to the POSITIVE (+) terminal of each battery(A-B), taking care not to short against tractor chassis.
- Connect one end of the BLACK cable to the NEGATIVE (-) terminal (C) of fully charged battery.
- Connect the other end of the BLACK cable (D) to good chassis ground, away from fuel tank and battery.

TO REMOVE CABLES, REVERSE ORDER -

- BLACK cable first from chassis and then from the fully charged battery.
- RED cable last from both batteries.

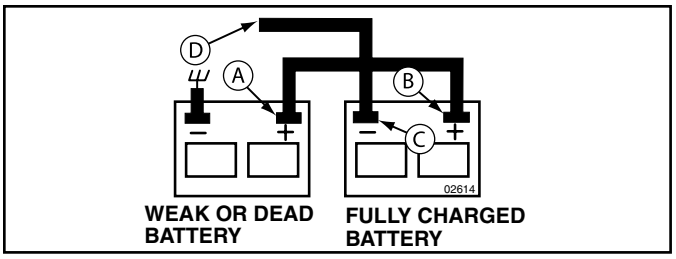

FIG. 34

TO REPLACE HEADLIGHT BULB

- Raise hood.
- Pull bulb holder out of the hole in the backside of the grill.
- Replace bulb in holder and push bulb holder securely back into the hole in the backside of the grill.
- Close hood.

INTERLOCKS AND RELAYS

Loose or damaged wiring may cause your tractor to run poorly, stop running, or prevent it from starting.

- Check wiring. See electrical wiring diagram in the Repair Parts section.

TO REPLACE FUSE

Replace with 20 amp automotive-type plug-in fuse. The fuse holder is located behind the dash.

TO REMOVE HOOD AND GRILL ASSEMBLY (See Fig. 35)

- Raise hood.
- Unsnap headlight wire connector.
- Stand in front of tractor. Grasp hood at sides, tilt toward engine and lift off of tractor.
- To replace, reverse above procedure.

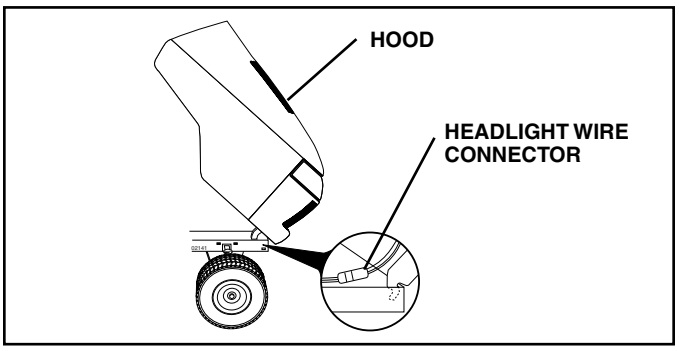

FIG. 35

ENGINE

TO ADJUST THROTTLE CONTROL CABLE

The throttle control has been preset at the factory and adjustment should not be necessary. If adjustment is necessary, see engine manual.

TO ADJUST CARBURETOR

The carburetor has been preset at the factory and adjustment should not be necessary. However, minor adjustment may be required to compensate for differences in fuel, temperature, altitude or load. If the carburetor does need adjustment, see engine manual.

https://truckmanualshub.com/

STORAGE

Immediately prepare your tractor for storage at the end of the season or if the tractor will not be used for 30 days or more.

WARNING: Never store the tractor with gasoline in the tank inside a building where fumes may reach an open flame or spark. Allow the engine to cool before storing in any enclosure.

TRACTOR

Remove mower from tractor for winter storage. When mower is to be stored for a period of time, clean it thoroughly, remove all dirt, grease, leaves, etc. Store in a clean, dry area.

- Clean entire tractor (See "CLEANING" in the Maintenance section of this manual).
- Inspect and replace belts, if necessary (See belt replacement instructions in the Service and Adjustments section of this manual).
- Lubricate as shown in the Maintenance section of this manual.
- Be sure that all nuts, bolts and screws are securely fastened. Inspect moving parts for damage, breakage and wear. Replace if necessary.
- Touch up all rusted or chipped paint surfaces; sand lightly before painting.

BATTERY

- Fully charge the battery for storage.
- After a period of time in storage, battery may require recharging.
- To help prevent corrosion and power leakage during long periods of storage, battery cables should be disconnected and battery cleaned thoroughly (see "TO CLEAN BATTERY AND TERMINALS" in the Maintenance section of this manual).
- After cleaning, leave cables disconnected and place cables where they cannot come in contact with battery terminals.
- If battery is removed from tractor for storage, do not store battery directly on concrete or damp surfaces.

ENGINE

FUEL SYSTEM

IMPORTANT: IT IS IMPORTANT TO PREVENT GUM DEPOSITS FROM FORMING IN ESSENTIAL FUEL SYSTEM PARTS SUCH AS CARBURETOR, FUEL FILTER, FUEL HOSE, OR TANK DURING STORAGE. ALSO, EXPERIENCE INDICATES THAT ALCOHOL BLENDED FUELS (CALLED GASOHOL OR USING ETHANOL OR METHANOL) CAN ATTRACT MOISTURE WHICH LEADS TO SEPARATION AND FORMATION OF ACIDS DURING STORAGE. ACIDIC GAS CAN DAMAGE THE FUEL SYSTEM OF AN ENGINE WHILE IN STORAGE.

- Empty the fuel tank by starting the engine and let it run until the fuel lines and carburetor are empty.
- Never use engine or carburetor cleaner products in the fuel tank or permanent damage may occur.
- Use fresh fuel next season.

NOTE: Fuel stabilizer is an acceptable alternative in minimizing the formation of fuel gum deposits during storage. Add stabilizer to gasoline in fuel tank or storage container. Always follow the mix ratio found on stabilizer container. Run engine at least 10 minutes after adding stabilizer to allow the stabilizer to reach the carburetor. Do not empty the gas tank and carburetor if using fuel stabilizer.

ENGINE OIL

Drain oil (with engine warm) and replace with clean engine oil. (See "ENGINE" in the Maintenance section of this manual).

CYLINDER(S)

- Remove spark plug(s).
- Pour one ounce of oil through spark plug hole(s) into cylinder(s).
- Turn ignition key to "START" position for a few seconds to distribute oil.
- Replace with new spark plug(s).

OTHER

- Do not store gasoline from one season to another.
- Replace your gasoline can if your can starts to rust. Rust and/or dirt in your gasoline will cause problems.
- If possible, store your tractor indoors and cover it to give protection from dust and dirt.
- Cover your tractor with a suitable protective cover that does not retain moisture. Do not use plastic. Plastic cannot breathe which allows condensation to form and will cause your tractor to rust.

IMPORTANT: NEVER COVER TRACTOR WHILE ENGINE AND EXHAUST AREAS ARE STILL WARM.

https://truckmanualshub.com/

TROUBLESHOOTING POINTS

PROBLEM	CAUSE	CORRECTION
Will not start	1. Out of fuel. 2. Engine not “CHOKED” properly. 3. Engine flooded. 4. Bad spark plug. 5. Dirty air filter. 6. Dirty fuel filter. 7. Water in fuel. 8. Loose or damaged wiring. 9. Carburetor out of adjustment. 10. Engine valves out of adjustment.	1. Fill fuel tank. 2. See “TO START ENGINE” in Operation section. 3. Wait several minutes before attempting to start. 4. Replace spark plug. 5. Clean/replace air filter. 6. Replace fuel filter. 7. Empty fuel tank and carburetor, refill tank with fresh gasoline and replace fuel filter. 8. Check all wiring. 9. See “To Adjust Carburetor” in Service Adjustments section. 10. Contact an authorized service center/department.
Hard to start	1. Dirty air filter. 2. Bad spark plug. 3. Weak or dead battery. 4. Dirty fuel filter. 5. Stale or dirty fuel. 6. Loose or damaged wiring. 7. Carburetor out of adjustment. 8. Engine valves out of adjustment.	1. Clean/replace air filter. 2. Replace spark plug. 3. Recharge or replace battery. 4. Replace fuel filter. 5. Empty fuel tank and refill tank with fresh, clean gasoline. 6. Check all wiring. 7. See “To Adjust Carburetor” in Service Adjustments section. 8. Contact an authorized service center/department.
Engine will not turn over	1. Brake pedal not depressed. 2. Attachment clutch is engaged. 3. Weak or dead battery. 4. Blown fuse. 5. Corroded battery terminals. 6. Loose or damaged wiring. 7. Faulty ignition switch. 8. Faulty solenoid or starter. 9. Faulty operator presence switch(es).	1. Depress brake pedal. 2. Disengage attachment clutch. 3. Recharge or replace battery. 4. Replace fuse. 5. Clean battery terminals. 6. Check all wiring. 7. Check/replace ignition switch. 8. Check/replace solenoid or starter. 9. Contact an authorized service center/department.
Engine clicks but will not start	1. Weak or dead battery. 2. Corroded battery terminals. 3. Loose or damaged wiring. 4. Faulty solenoid or starter.	1. Recharge or replace battery. 2. Clean battery terminals. 3. Check all wiring. 4. Check/replace solenoid or starter.
Loss of power	1. Cutting too much grass/too fast. 2. Throttle in “CHOKE” position. 3. Build-up of grass, leaves and trash under mower. 4. Dirty air filter. 5. Low oil level/dirty oil. 6. Faulty spark plug. 7. Dirty fuel filter. 8. Stale or dirty fuel. 9. Water in fuel. 10. Spark plug wire loose. 11. Dirty engine air screen/fins. 12. Dirty/clogged muffler. 13. Loose or damaged wiring. 14. Carburetor out of adjustment. 15. Engine valves out of adjustment.	1. Raise cutting height/reduce speed. 2. Adjust throttle control. 3. Clean underside of mower housing. 4. Clean/replace air filter. 5. Check oil level/change oil. 6. Clean and regap or change spark plug. 7. Replace fuel filter. 8. Empty fuel tank and refill tank with fresh, clean gasoline. 9. Empty fuel tank and carburetor, refill tank with fresh gasoline and replace fuel filter. 10. Connect and tighten spark plug wire. 11. Clean engine air screen/fins. 12. Clean/replace muffler. 13. Check all wiring. 14. See “To Adjust Carburetor” in Service Adjustments section. 15. Contact an authorized service center/department.
Excessive vibration	1. Worn, bent or loose blade. 2. Bent blade mandrel. 3. Loose/damaged part(s).	1. Replace blade. Tighten blade bolt. 2. Replace blade mandrel. 3. Tighten loose part(s). Replace damaged parts.

https://truckmanualshub.com/

TROUBLESHOOTING POINTS

PROBLEM	CAUSE	CORRECTION
Engine continues to run when operator leaves seat with attachment clutch engaged	1. Faulty operator-safety presence control system.	1. Check wiring, switches and connections. If not corrected, contact an authorized service center/ department.
Poor cut - uneven	1. Worn, bent or loose blade. 2. Mower deck not level. 3. Buildup of grass, leaves, and trash under mower. 4. Bent blade mandrel. 5. Clogged mower deck vent holes from buildup of grass, leaves, and trash around mandrels.	1. Replace blade. Tighten blade bolt. 2. Level mower deck. 3. Clean underside of mower housing. 4. Replace blade mandrel. 5. Clean around mandrels to open vent holes.
Mower blades will not rotate	1. Obstruction in clutch mechanism. 2. Worn/damaged mower drive belt. 3. Frozen idler pulley. 4. Frozen blade mandrel.	1. Remove obstruction. 2. Replace mower drive belt. 3. Replace idler pulley. 4. Replace blade mandrel.
Poor grass discharge	1. Engine speed too slow. 2. Travel speed too fast. 3. Wet grass. 4. Mower deck not level. 5. Low/uneven tire air pressure. 6. Worn, bent or loose blade. 7. Buildup of grass, leaves and trash under mower. 8. Mower drive belt worn. 9. Blades improperly installed. 10. Improper blades used. 11. Clogged mower deck vent holes from buildup of grass, leaves, and trash around mandrels.	1. Place throttle control in “FAST” position. 2. Shift to slower speed. 3. Allow grass to dry before mowing. 4. Level mower deck. 5. Check tires for proper air pressure. 6. Replace/sharpen blade. Tighten blade bolt. 7. Clean underside of mower housing. 8. Replace mower drive belt. 9. Reinstall blades sharp edge down. 10. Replace with blades listed in this manual. 11. Clean around mandrels to open vent holes.
Headlight(s) not working (if so equipped)	1. Light switch is “OFF”. 2. Bulb(s) or lamp(s) burned out. 3. Faulty light switch. 4. Loose or damaged wiring. 5. Blown fuse.	1. Turn light switch “ON”. 2. Replace bulb(s) or lamp(s). 3. Check/replace light switch. 4. Check wiring and connections. 5. Replace fuse.
Battery will not charge	1. Bad battery cell(s). 2. Poor cable connections. 3. Faulty regulator (if so equipped). 4. Faulty alternator.	1. Replace battery. 2. Check/clean all connections. 3. Replace regulator. 4. Replace alternator.
Loss of drive	1. Freewheel control in “disengaged” position. 2. Motion drive belt worn, damaged, or broken. 3. Air trapped in transmission during shipment or servicing.	1. Place freewheel control in “engaged” position. 2. Replace motion drive belt. 3. Purge transmission.
Engine “backfires” when turning engine “OFF”	1. Engine throttle control not set between half and full speed (fast) position before stopping engine.	1. Move throttle control between half and full speed (fast) position before stopping engine.
Mower will not operate	1. Bagger or optional rear discharge deflector is not installed correctly.	1. Check bagger or optional rear discharge deflector for proper installation

https://truckmanualshub.com/

SERVICE NOTES

https://truckmanualshub.com/

TRACTOR- -MODEL NO. CTH151 XP (HAUCT15H36F), PRODUCT NO. 954 17 02-30

SCHEMATIC

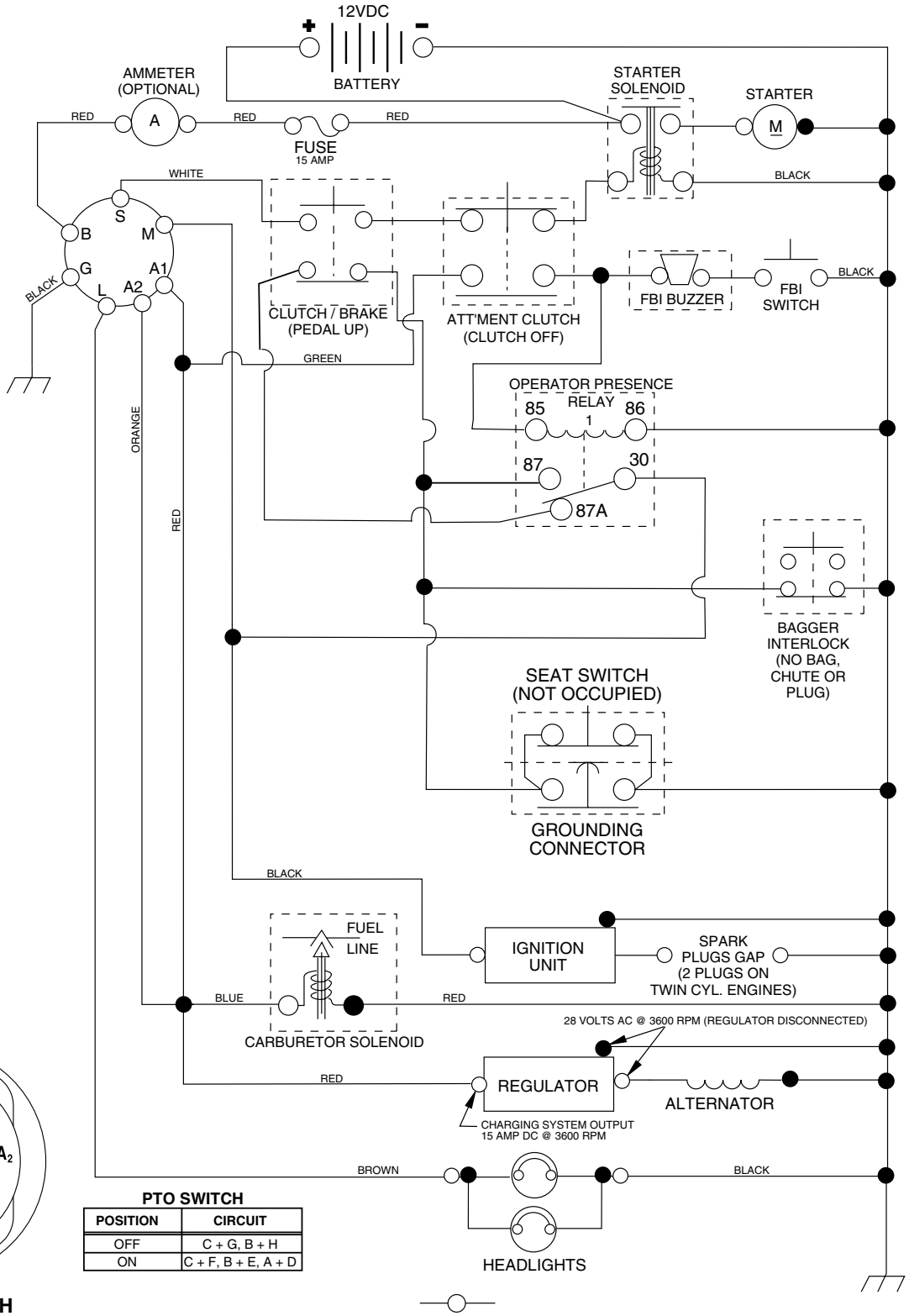

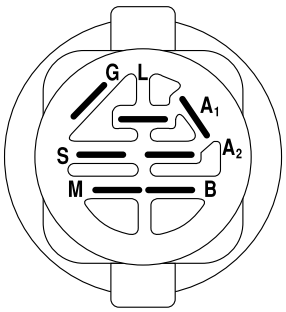

IGNITION SWITCH

POSITION	CIRCUIT	"MAKE"
OFF	M+G+A1	NONE
RUN/LIGHT	B+A1	A2+L
RUN	B+A1	NONE
START	B + S + A1	NONE

PTO SWITCH

POSITION	CIRCUIT
OFF	C + G, B + H
ON	C + F, B + E, A + D

WIRING INSULATED CLIPS
NOTE: IF WIRING INSULATED CLIPS WERE REMOVED FOR SERVICING OF UNIT, THEY SHOULD BE REPLACED TO PROPERLY SECURE YOUR WIRING.

REMOVABLE CONNECTIONS

NON-REMOVABLE CONNECTIONS

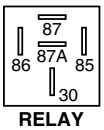

RELAY

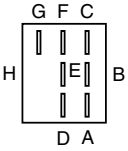

02752

https://truckmanualshub.com/

REPAIR PARTS

TRACTOR- -MODEL NO. CTH151 XP (HAUCT15H36F), PRODUCT NO. 954 17 02-30

ELECTRICAL

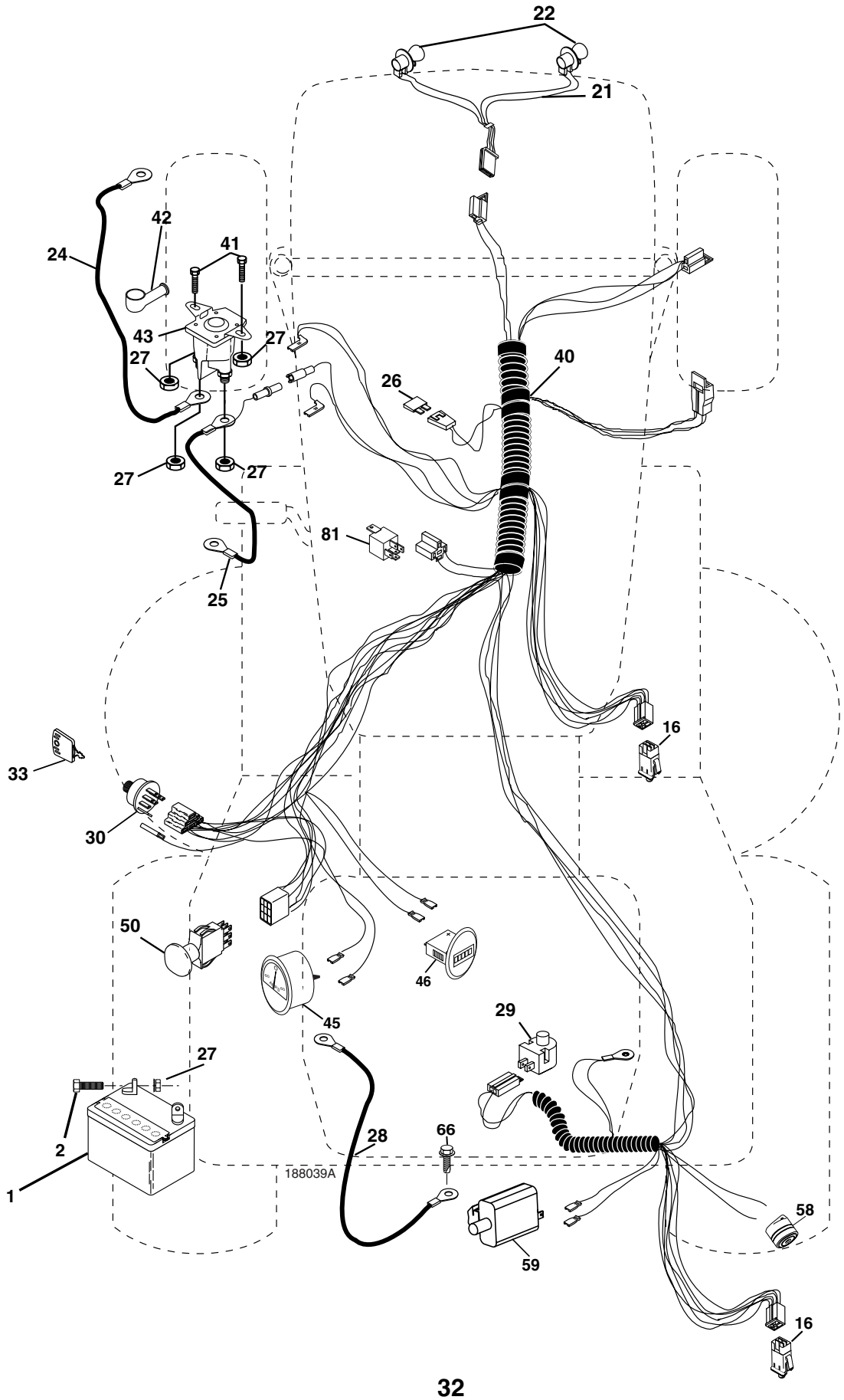

https://truckmanualshub.com/

REPAIR PARTS

TRACTOR- -MODEL NO. CTH151 XP (HAUCT15H36F), PRODUCT NO. 954 17 02-30

ELECTRICAL

KEY NO.	PART NO.	DESCRIPTION
1	532 14 49-27	Battery
2	874 76 04-12	Bolt Hex Hd 1/4-20 unc x 3/4
16	532 17 61-38	Switch Interlock
21	532 17 56-88	Harness Asm Light W/4152J
22	532 00 41-52	Bulb Light
24	532 12 47-80	Cable Starter 6 Ga. 11" Red
25	532 16 59-87	Cable Battery Crd 56" Red
26	532 17 51-58	Fuse
27	873 51 04-00	Nut Keps Hex 1/4-20 unc
28	532 12 77-25	Cable Ground 6 Ga. 18" Black
29	532 12 13-05	Switch Plunger Normal NC Gray
30	532 17 55-66	Switch Ignition
33	532 14 04-01	Key Ign
40	532 18 80-39	Harness Ign
41	871 11 04-08	Bolt Flk Fin Hex 1/4-20 unc x 1/2
42	532 13 15-63	Cover Terminal Red
43	532 17 88-61	Solenoid
45	532 17 75-00	Ammeter
46	532 17 75-01	Meter Hour Round
50	532 17 46-51	Switch PTO
58	532 16 94-19	Buzzer Crd
59	532 18 03-79	Switch FBI CRD
66	817 49 06-08	Screw Thdrol 3/8-16 x 1/2 Ty-Tt
79	532 17 52-42	Socket Asm. Bulb
81	532 10 97-48	Relay Asm

NOTE: All component dimensions given in U.S. inches.
1 inch = 25.4 mm.

https://truckmanualshub.com/

REPAIR PARTS

TRACTOR- -MODEL NO. CTH151 XP (HAUCT15H36F), PRODUCT NO. 954 17 02-30

CHASSIS AND ENCLOSURES

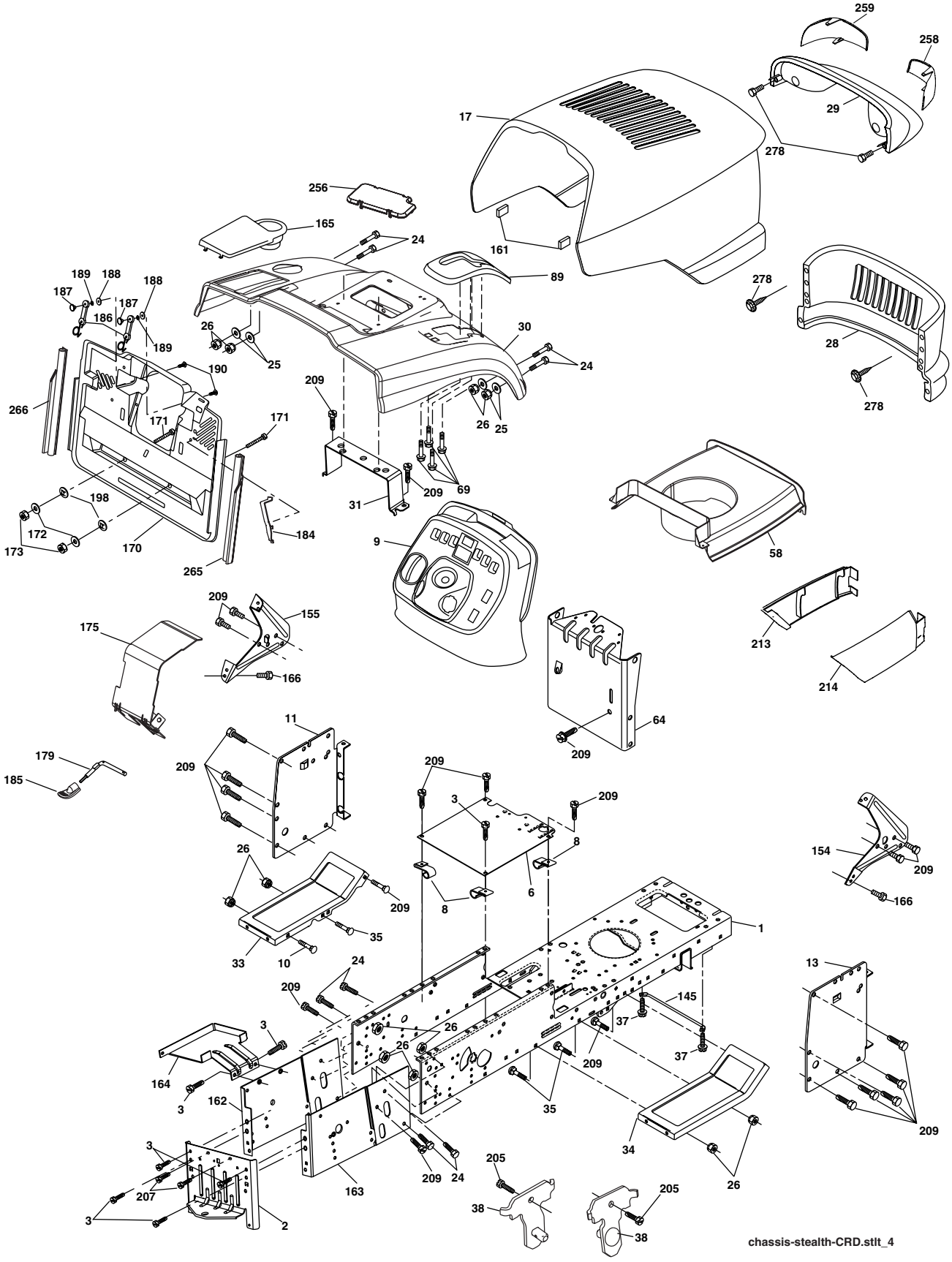

https://truckmanualshub.com/

REPAIR PARTS

TRACTOR- -MODEL NO. CTH151 XP (HAUCT15H36F), PRODUCT NO. 954 17 02-30

CHASSIS AND ENCLOSURES

KEY NO.	PART NO.	DESCRIPTION
1	532 17 46-20	Chassis
2	532 18 03-84	Drawbar
3	817 06 06-12	Screw 3/8-16 x 3/4
6	532 18 44-19	Saddle
8	532 12 64-71	Clip Insulator 13/32 Mtg. Hole
9	**532 19 58-86**	Dash
10	872 14 06-08	Bolt, Carriage 3/8-16 x 3/4
11	532 16 72-03	Panel, Dash, L.H.
13	532 17 82-98	Panel, Asm. Dash R.H.
17	532 19 00-55	Hood
24	874 78 06-16	Bolt
25	819 13 13-12	Washer 13/32 x 13/16 x 12 Ga.
26	873 80 06-00	Nut
28	532 18 28-73	Grille
29	532 18 82-12	Light box Asm. (Includes key nos. 258 & 259)
30	532 17 96-45	Fender
31	532 16 51-56	Bracket, Fender Support
33	532 18 10-57	Footrest, L.H.
34	532 18 10-58	Footrest, R.H.
35	872 11 06-06	Bolt
37	817 49 05-08	Screw Thdrol 5/16-18 x 1/2 TYT
38	532 18 17-48	Bracket Asm Pivot Mower Rear
58	532 18 98-75	Duct Air Engine
64	532 18 43-40	Bracket Dash Lower
69	532 14 24-32	Screw Hex Wsh
89	532 18 10-99	Console
145	532 15 65-24	Rod Pivot Chassis/Hood
154	532 18 39-25	Bracket Dash RH
155	532 18 39-26	Bracket Dash LH
161	532 16 46-55	Bumper Extrusion
162	532 18 03-82	Bracket Exten Chassis Lh CRD
163	532 18 03-83	Bracket Exten Chassis Rh CRD
164	532 16 56-05	Support Battery CRD
165	532 18 11-00	Cover Battery
170	532 17 88-62	Backplate Asm CRD
171	872 14 06-20	Bolt Rdhd Sqnk 3/8-16 x 2-1/2 Gr. 5
172	819 13 20-16	Washer 13/32 x 1-1/4 x 16 Ga.
173	873 51 06-00	Nut, Keps Hex 3/8-16 unc
175	532 18 82-03	Door Trap
179	532 18 82-02	Rod Pivot FBI CRD
184	532 17 46-62	Bracket Actuator Bagger CRD
185	532 18 11-01	Knob Rod Brake Parking
186	532 16 07-93	Latch Asm Mulch/Bagger
187	532 12 50-04	Nut Weld
188	819 06 12-16	Washer #10
189	810 07 10-00	Washer Lock #10
190	871 08 10-10	Screw Pan Hd Phillip 10-24 x 5/8
198	532 16 89-37	Nut, Push
205	817 49 06-08	Screw Thdrol 3/8-16 x 1/2
207	817 67 05-08	Screw Thdrol 5/16-18 x 1/2
209	817 00 06-12	Screw Hex Wsh Thdr 3/8-16 x 3/4
213	532 17 75-87	Skirt Grille LH
214	532 17 75-86	Skirt Grille RH
256	532 18 13-61	Cover Fender Rack CRD
258	532 16 18-42	Lens RH
259	532 16 18-41	Lens LH
265	532 18 57-04	Seal RH Side Bagger
266	532 18 57-03	Seal LH Side Bagger
278	**532 19 16-11**	Screw 10 x 3/4 Single lead Hex
- -	**532 19 39-35**	Plug Switch Light

NOTE: All component dimensions given in U.S. inches. 1 inch = 25.4 mm.

https://truckmanualshub.com/

REPAIR PARTS

TRACTOR- -MODEL NO. CTH151 XP (HAUCT15H36F), PRODUCT NO. 954 17 02-30

DRIVE

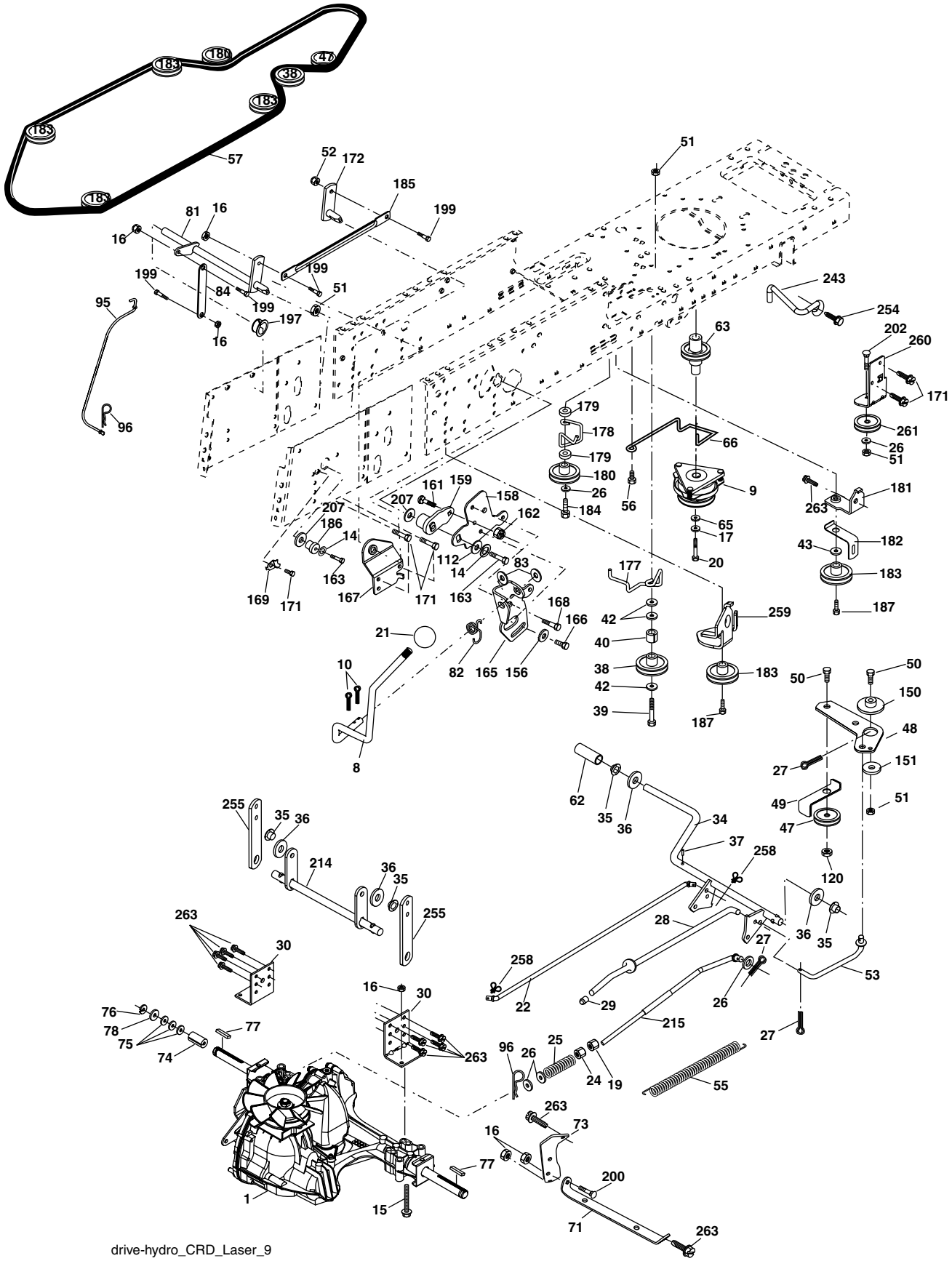

drive-hydro_CRD_Laser_9

https://truckmanualshub.com/

REPAIR PARTS

TRACTOR- -MODEL NO. CTH151 XP (HAUCT15H36F), PRODUCT NO. 954 17 02-30

DRIVE

KEY NO.	PART NO.	DESCRIPTION
1	- - - - - - -	Transaxle Hydro Gear 321-0510 (Order parts from transaxle manufacturer)
8	532 16 56-19	Rod, Shift Fender Adjust Lt
9	532 18 02-20	Clutch Ele
10	876 02 04-16	Pin, Cotter 1/8 x 1
14	810 04 04-00	Washer, Lock Hvy Helical
15	874 49 05-44	Bolt Hex FGHD 5/16-18 x Gr. 5
16	873 80 05-00	Nut, Lock Hex w/Ins 5/16-18 unc
17	532 12 61-97	Washer 1-1/2 OD x 15/32 ID x .250
19	873 80 06-00	Nut Lock Hex w/Ins 3/8-16 unc
20	532 17 39-37	Bolt, Hex 7/16-20 x 4 Gr. 5
21	532 12 12-74	Knob Duckhead 1/4-13 unc Blk
22	532 17 56-07	Rod, Brake
24	873 35 06-00	Nut
25	532 19 20-36	Spring, Rod, Brake
26	819 13 13-16	Washer 13/32 x 7/8 x 16 Ga.
27	876 02 04-12	Pin, Cotter 1/8 x 3/4
28	532 17 57-65	Rod, Parking Brake
29	532 07 16-73	Cap, Parking Brake
30	532 16 95-92	Bracket, Mfg. Transaxle
34	532 17 55-78	Shaft, Asm Pedal Foot CRD
35	532 12 01-83	Bearing, Nylon
36	819 21 16-16	Washer 21/32 x 1 x 16 Ga.
37	532 12 49-63	Pin, Roll 3/16 x 1"
38	532 16 59-36	Pulley Flat Composite 3.06"
39	874 76 06-44	Bolt Fin Hex 3/8-16 unc x 2-3/4
40	532 12 49-65	Spacer, Split 395 x 59 Bzp
42	819 13 13-12	Washer 13/32 x 13/16 x 12 Ga.
43	819 11 10-12	Washer 11/32 x 5/8 x 12 Ga.
47	532 12 77-83	Pulley, Idler, V Groove Plasitc
48	532 15 44-07	Bellcrank Clutch Grnd Drv
49	532 12 32-05	Retainer, Belt Style Spring
50	872 11 06-12	Bolt Carr. SH 3/8-16 x 1-1/2 Gr. 5
51	873 68 06-00	Nut, Crownlock 3/8-16 unc
52	873 68 05-00	Nut Crownlock 5/16-18
53	532 10 57-10	Link, Clutch 7.66
55	532 10 57-09	Spring, Return, Clutch
56	817 06 06-20	Screw 3/8-16 x 1-1/4
57	532 17 01-40	V-Belt Kev 112" 0650 CRD
62	532 12 35-33	Cover, Pedal
63	532 18 03-97	Pulley, Engine
65	810 04 07-00	Washer
66	532 15 47-78	Keeper, Belt Engine F-Proof
71	532 16 91-83	Strap, Torque, Lh
73	532 16 91-82	Strap, Torque, Rh
74	532 13 70-57	Spacer, Split
75	532 12 17-49	Washer 25/32 x 1-1/4 x 16 Ga.
76	812 00 00-01	Ring, E
77	532 12 35-83	Key, Square
78	532 12 17-48	Washer 25/32 x 1-5/8 x 16 Ga.
81	532 17 00-06	Asm, Shaft
82	532 16 57-11	Spring, Torsion
83	819 17 12-16	Washer 17/32 x 3/4 x 16 Ga.
84	532 17 00-07	Link, Transaxle
95	532 17 00-15	Control Asm Bypass Hydro
96	532 12 47-88	Spring, Retainer 1”
112	819 09 12-10	Washer 9/32 x 3/4 x 10 Ga.
116	872 14 06-08	Bolt RDHD SQNK 3/8-16 x 1
120	873 90 06-00	Nut Lock Flg. 3/8-16 unc
150	532 16 58-50	Bushing, Bellcrank Grnd Dr
151	819 13 32-10	Washer 13/32 x 2 x 10 Ga.
156	532 16 60-02	Washer Srrted 5/16ID x 1.125
158	532 16 55-89	Bracket Shift Mount
159	532 18 39-00	Hub Shift
161	872 14 04-06	Bolt Rdhd Sqnk 1/4-20 x 3/4 Gr. 5
162	873 68 04-00	Nut Crownlock 1/4-20 unc
163	874 78 04-16	Bolt Hex Fin 1/4-20 unc x 1 Gr. 5
165	532 16 56-23	Bracket Pivot Lever
166	817 49 05-10	Screw 5/16-18 x 5/8
167	532 16 55-88	Bracket Support Shift CRD
168	532 16 54-92	Bolt Shoulder 5/16-18 x .561
169	532 16 55-80	Plate Fastening Lt
171	817 49 06-08	Screw Thdrol 3/8-16 x 1/2 Ty-Tt
172	532 17 02-71	Shaft Asm Shifter Frt CRD
177	532 16 59-32	Keeper Flat Idler 3.06" CRD
178	532 16 59-33	Keeper Belt Idler 1.88" CRD
179	532 12 09-58	Washer Sintered
180	532 16 56-30	Pulley, Idler, Flat 1.88"CRD
181	532 18 02-11	Bracket Idler Ground Drive CRD
182	532 18 26-82	Keeper Belt 2.5" Od V-Idler CRD
183	532 18 60-07	Pulley V-Idler 2.50" Od CRD
184	817 49 06-44	Screw Hexwsh Thdrol 3/8-16 x 2-3/4
185	532 17 00-08	Link Shift
186	532 16 56-14	Hub Tapered Round CRD
187	817 58 05-20	Screw Thdrol 5/16-18 x 1.25
197	532 16 96-13	Nyliner Snap-In 5/8
199	532 16 96-12	Bolt Shoulder 5/16-18 unc
200	872 14 05-08	Bolt RDHD SQNK 5/16-18 x 1
202	872 11 06-14	Bolt Carr. Sh. 3/8-16 x 1-3/4 Gr. 5
207	532 16 98-45	Washer Nylon Rear
212	532 14 52-12	Nut Hex Flange Lock
214	532 17 56-09	Shaft Asm. Brake
215	532 17 56-52	Rod Brake Hydro
243	532 19 07-36	Bracket Anti-Rotation
255	532 17 56-08	Brace Shaft Brake Mtg.
258	532 17 80-62	Clip Retainer
259	532 18 02-12	Bracket Pulley IDL Hydro Grd. Dr.
260	532 18 17-81	Bracket Idler Chassis
261	532 13 14-94	Pulley Idler flat
263	817 00 06-12	Screw Hxwsh Thdrol 3/8-16 x 3/4 Blk
254	817 00 06-16	Screw 3/8-16 x 1

NOTE: All component dimensions given in U.S. inches
1 inch = 25.4 mm

https://truckmanualshub.com/

REPAIR PARTS

TRACTOR- -MODEL NO. CTH151 XP (HAUCT15H36F), PRODUCT NO. 954 17 02-30

STEERING ASSEMBLY

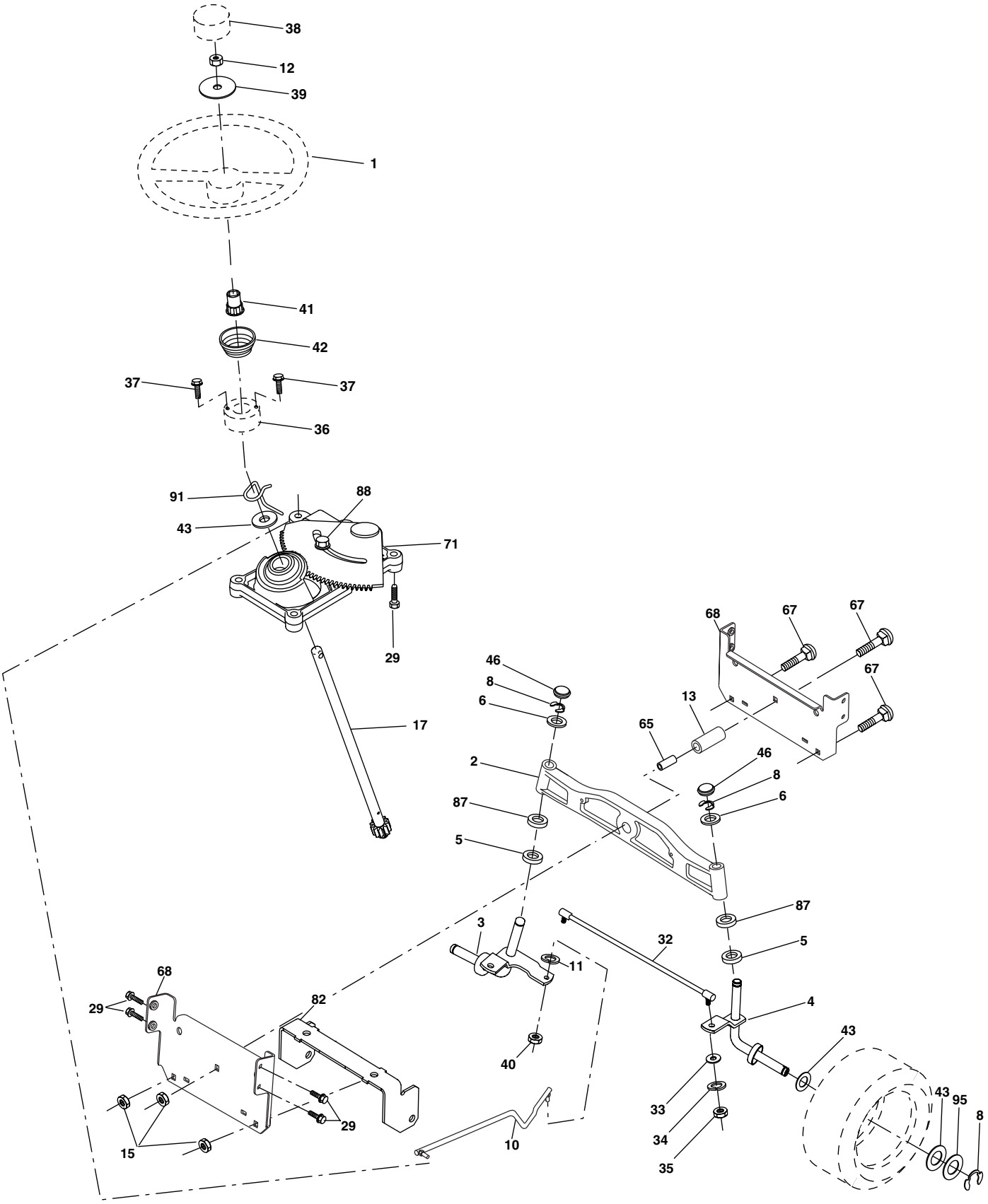

steering_stealth_prem_11

https://truckmanualshub.com/

REPAIR PARTS

TRACTOR- -MODEL NO. CTH151 XP (HAUCT15H36F), PRODUCT NO. 954 17 02-30

STEERING ASSEMBLY

KEY NO.	PART NO.	DESCRIPTION
1	532 19 36-51	Steering Wheel
2	532 18 47-06	Front Axle Assembly
3	532 16 98-40	Spindle Assembly, L.H.
4	532 16 98-39	Spindle Assembly, R.H.
5	532 12 49-31	Bearing, Race, Thrust, Hardened
6	532 12 17-48	Washer 25/32 x 1-5/8 x 16 Ga.
8	812 00 00-29	Ring, Klip
10	532 17 51-21	Link, Drag
11	810 04 06-00	Washer, Lock
12	873 94 08-00	Nut Hex Jam Toplock 1/2-20 unf
13	532 13 65-18	Spacer Axle
15	532 14 52-12	Nut Hex Flange Lock
17	532 17 78-83	Shaft Assembly, Steering
29	817 00 06-12	Screw 3/8-16 x 3/4
32	532 17 18-88	Rod, Tie
33	819 11 12-16	Washer 11/32 x 3/4 x 16 Ga.
34	810 04 05-00	Washer Lock Hvy Hlcl Spr 5/16
35	873 54 05-00	Crownlock Nut 5/16-24 unf
36	532 14 52-07	Bushing, Steering
37	532 15 29-27	Screw TT #I0-32 x 5 x 3/8 Flange
38	532 19 36-52	Cap Wheel Steer
39	**819 18 38-12**	Washer ID x 2-3/8 OD 12 Ga. Zin
40	873 54 06-00	Nut Crownlock 3/8-24
41	532 18 67-37	Adaptor, Steering Wheel
42	532 19 01-12	Boot, Steering
43	532 12 17-49	Washer 25/32 x 1-1/4 x 16 Ga.
46	**532 19 56-02**	Cap, Spindle
65	532 16 03-67	Spacer Axle
67	872 11 06-18	Bolt Rdhd Sq 3/8-16 x 2-1/4
68	532 16 98-27	Brace Axle
71	532 17 51-46	Steering Asm.
82	532 16 98-35	Bracket Susp. Chassis Front
87	532 17 39-66	Washer Flat .781 x 1-1/2 x .14
88	532 17 51-18	Bolt Shoulder 7/16-20 unc
91	532 17 55-53	Clip Steering
95	532 18 89-67	Washer

NOTE: All component dimensions given in U.S. inches.
1 inch = 25.4 mm.

https://truckmanualshub.com/

REPAIR PARTS

TRACTOR- -MODEL NO. CTH151 XP (HAUCT15H36F), PRODUCT NO. 954 17 02-30

SEAT ASSEMBLY

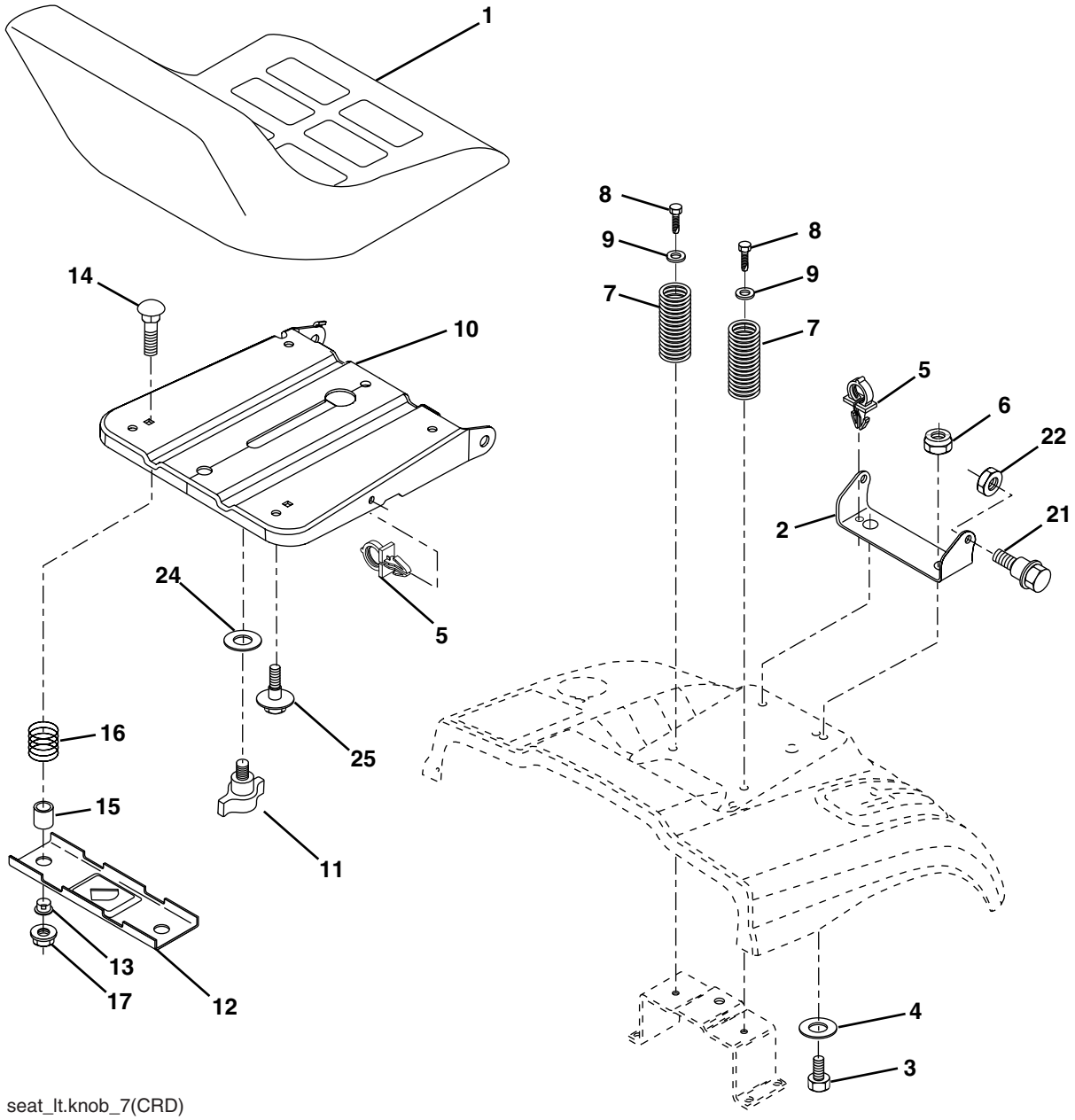

seat_lt.knob_7(CRD)

KEY NO.	PART NO.	DESCRIPTION
1	**532 18 87-15**	Seat
2	532 14 05-51	Bracket Pnt Pivot Seat (blk)
3	871 11 06-16	Bolt Fin Hex 3/8-16 x 1 Blk
4	819 13 16-10	Washer Flat 13/32 x 1 x 10 Ga.
5	532 14 50-06	Clip Push In Hinged
6	873 80 06-00	Nut Lock Hex w/Insert 3/8-16
7	532 12 41-81	Spring Seat Cprsn 2 250 Blk Zi
8	817 00 06-16	Screw 3/8-16 x 1.5
9	819 13 16-14	Washer 13/32 x 1 x 14 Ga.
10	532 18 24-93	Pan Pnt Seat
11	532 16 63-69	Knob Seat Adj. Wingnut
12	532 12 12-46	Bracket Pnt Mounting Switch
13	532 12 12-48	Bushing Snap Blk Nyl 50 Id
14	872 05 04-12	Bolt Rdhd Sht Nk 1/4-20 x 1-1/2
15	532 12 12-49	Spacer Split
16	532 12 37-40	Spring Cprsn
17	532 12 39-76	Nut Lock 1/4 Lge Flg Gr. 5 Zinc
21	532 17 18-52	Bolt Shoulder 5/16-18 unc-2A
22	873 80 05-00	Nut Hex Lock w/Ins 5/16-18
24	819 17 19-12	Washer 17/32 x 1-3/16 x 12 Ga.
25	532 12 70-18	Bolt Shoulder 5/16-18 x 62

NOTE: All component dimensions given in U.S. inches.
1 inch = 25.4 mm

https://truckmanualshub.com/

REPAIR PARTS

TRACTOR- -MODEL NO. CTH151 XP (HAUCT15H36F), PRODUCT NO. 954 17 02-30

DECALS

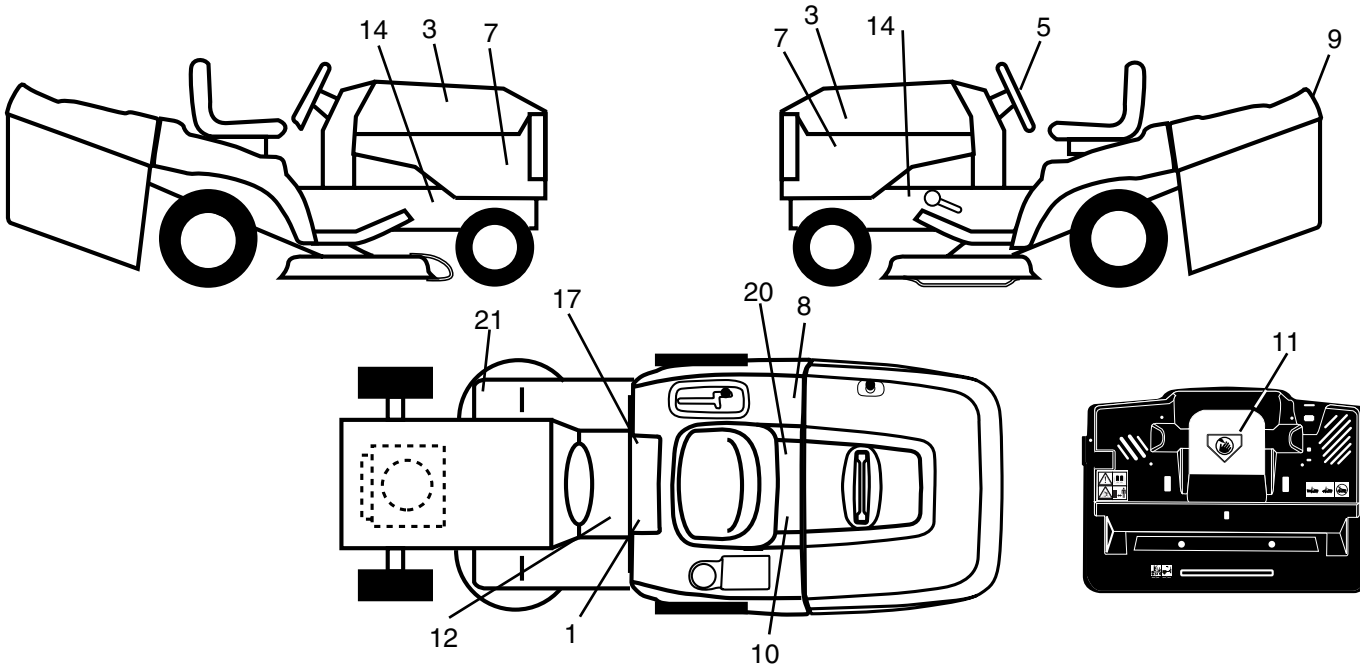

KEY NO.	PART NO.	DESCRIPTION
1	532 14 54-98	Decal Read Owner's Manual Sym
3	532 18 89-21	Decal Hood
5	532 18 89-25	Decal Wheel Steering
7	532 19 11-58	Decal Panel Side
8	532 16 88-69	Decal Tick Mark
9	532 18 99-12	Decal Fender Logo
10	532 14 50-05	Decal Bat Dan/Poi P/L Sym Wpn
11	532 18 21-66	Decal Mower Cut Finger Symbol
12	532 15 97-37	Decal Brake/Clutch Symbol Lt
14	532 15 97-36	Decal Chassis Hot Muffler
17	532 14 08-37	Decal Saddle Brake Parking
20	532 16 69-60	Decal Bypass Fender CRD
21	532 16 62-86	Decal Hex Belt Sch 92 CRD
- -	**532 18 04-35**	Decal Rear plate CRD Symbols
- -	532 18 26-21	Decal Bagger Frame
- -	532 18 10-90	Pad Footrest RH
- -	532 18 10-91	Pad Footrest LH
- -	**532 19 56-29**	Manual Owner's (Eng)

WHEELS & TIRES

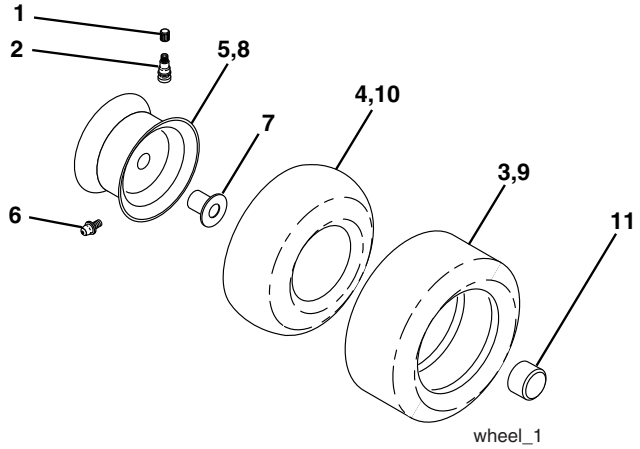

KEY NO.	PART NO.	DESCRIPTION
1	532 05 91-92	Cap Value Tire
2	532 06 51-39	Stem Value
3	532 10 62-22	Tire F Ts 15 x 6.0 - 6 Service
4	532 05 99-04	Tube Inner Front #35060
5	532 13 83-36	Rim Asm 6" front Silver Service
6	532 12 49-57	Fitting Grease
7	532 12 49-59	Bearing Flange
8	532 13 83-37	Rim Asm 8" rear Silver Service
9	532 12 20-82	Tire R Ts 20 x 10-8 Service
10	532 12 49-26	Tube Rear 9.5 x 8 Service
11	532 17 50-39	Cap Axle Blk 1 50 x 1 00
- -	532 14 43-34	Sealant, Tire (10 oz. tube)

NOTE: All component dimensions given in U.S. inches
1 inch = 25.4 mm

https://truckmanualshub.com/

REPAIR PARTS

TRACTOR- -MODEL NO. CTH151 XP (HAUCT15H36F), PRODUCT NO. 954 17 02-30

ENGINE

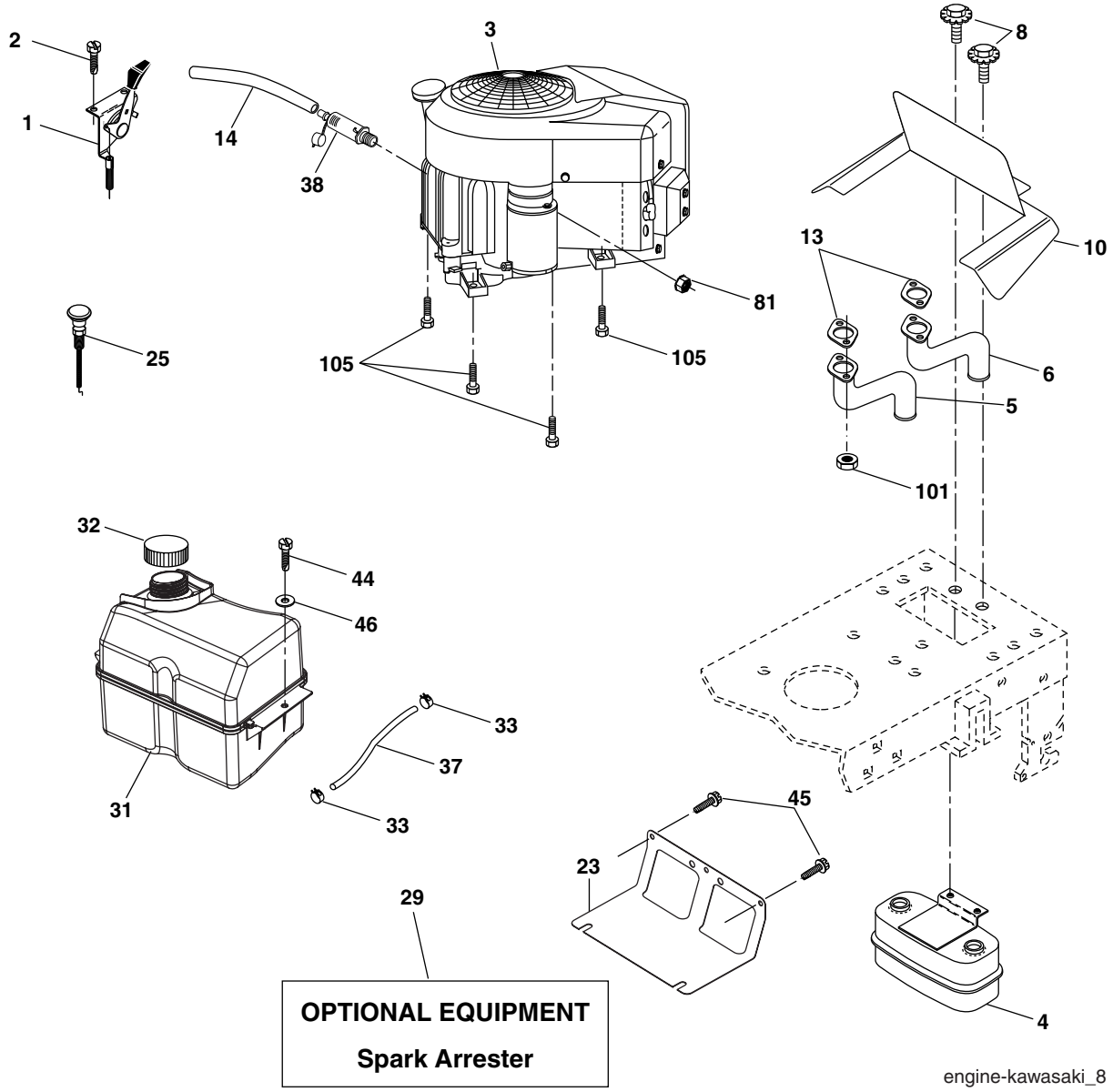

KEY NO.	PART NO.	DESCRIPTION
1	532 17 83-85	Control Throttle
2	532 17 18-75	Screw Hwhd Hi-Lo #13-16 x 5/8
3	- - - - - - - - - -	Engine Kawa FH430V (Order parts from engine manufacturer)
4	532 14 97-23	Muffler Twin Lo-Twin
5	532 18 14-44	Tube, Exhaust Lh
6	532 18 14-42	Tube, Exhaust Rh
8	532 17 18-77	Bolt 5/16-18 unc x 3/4 w/Sems
10	532 14 66-29	Shield Browning Intek
13	- - - - - - - - - -	Gasket Muffler (Order parts from engine manufacturer)
14	532 14 84-56	Tube Drain Oil Easy
23	532 16 98-37	Shield Brn/Dbr Guard
25	532 19 15-96	Choke Control
29	532 13 71-80	Kit Spark Arrestor (Flat Scrn)
31	532 18 55-34	Tank Fuel 2.00
32	532 14 05-27	Cap Asm Fuel W/sym Vented
33	532 12 34-87	Clamp Hose Blk
37	532 13 70-40	Line Fuel
38	- - - - - - - - - -	Plug Drain Oil Easy (Order parts from engine manufacturer)
44	817 67 04-12	Screw Hexwsh Thdrol 1/4-20 x 3/4
45	817 00 06-12	Screw Hexwsh Thdrol 3/8-16 x 3/4
46	819 09 14-16	Washer 9/32 x 7/8 x 16 Ga.
81	873 5104-00	Nut Keps Hex 1/4-20 unc
101	532 18 43-62	Nut Flange M8-1.25
105	817 12 06-16	Screw 3/8-16 x 1 SMGML TAP/R

NOTE: All component dimensions given in U.S. inches
1 inch = 25.4 mm

https://truckmanualshub.com/

REPAIR PARTS

TRACTOR- -MODEL NO. CTH151 XP (HAUCT15H36F), PRODUCT NO. 954 17 02-30

MOWER LIFT

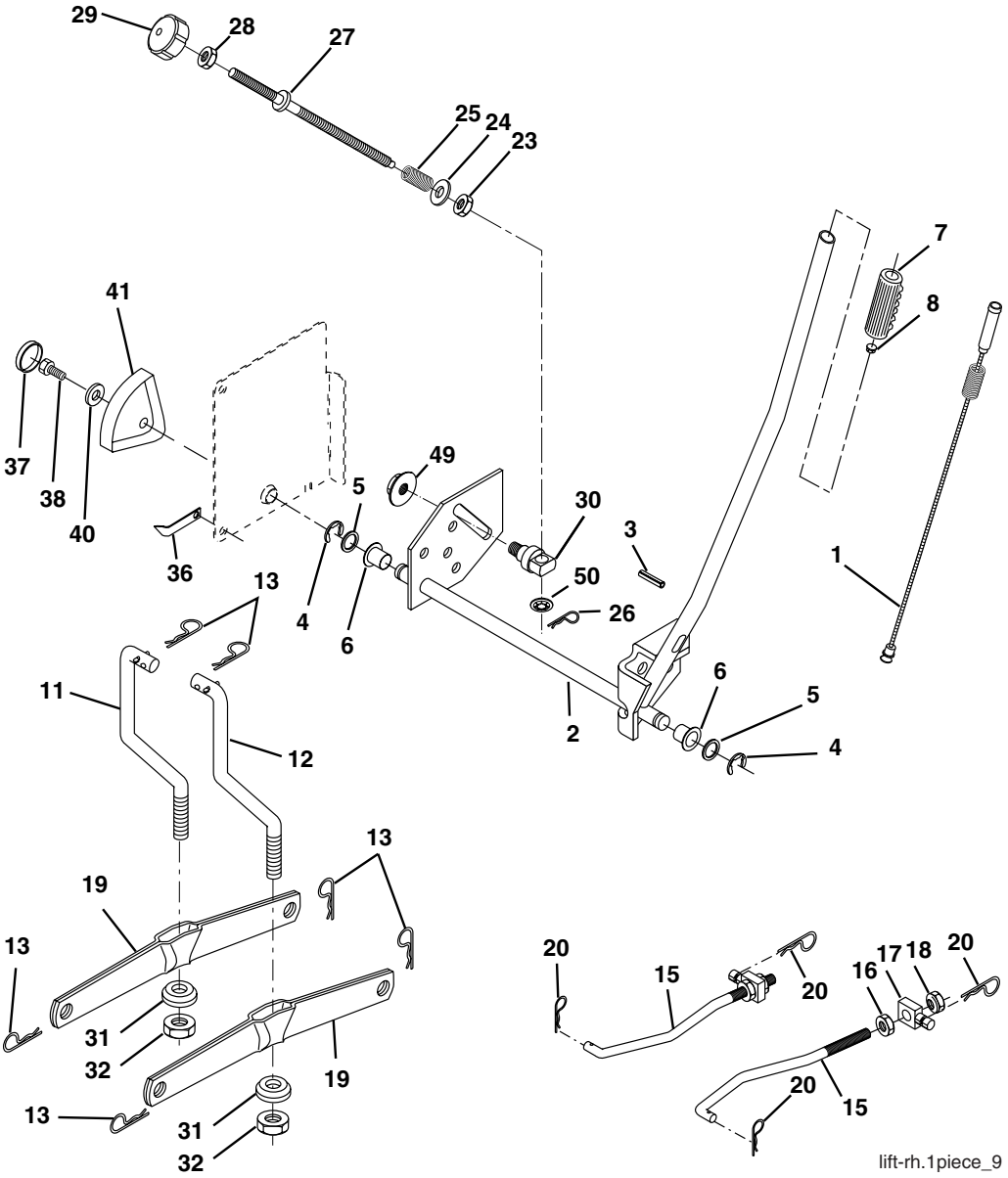

KEY NO.	PART NO.	DESCRIPTION
1	532 15 94-61	Washer Asm Inner Spring W/Plunger
2	532 15 94-76	Shaft Asm. Lift
3	532 18 88-22	Pin Groove
4	812 00 00-02	E Ring #5133-62
5	819 21 16-21	Washer 21/32 x 1 x 21 Ga.
6	532 12 01-83	Bearing Nylong
7	532 12 56-31	Grip Handle Fluted
8	532 12 45-26	Button Plunger Black
11	532 16 58-29	Link Asm Lift L.H.
12	532 16 58-31	Link Asm Lift R.H.
13	532 12 46-70	Retainer Spring
15	532 17 32-88	Link Front
16	873 35 08-00	Nut Jam Hex 1/2-13 unc
17	532 17 56-89	Trunnion Blk Zinc
18	873 80 08-00	Nut Lock w/wsh 1/2-13 unc
19	532 13 98-68	Arm Suspension Mower
20	532 16 35-52	Retainer Spring
23	532 11 08-07	Nut Special

KEY NO.	PART NO.	DESCRIPTION
24	819 13 10-16	Washer 13/32 x 5/8 x 16 Ga.
25	532 13 71-50	Spring
26	532 16 94-84	Retainer Clip
27	532 13 71-67	Rod Adj Lift
28	873 35 06-00	Nut Hex Jam 3/8-16 unc
29	532 13 80-57	Knob Inf 3/8-16 Unc Blk w/sym
30	532 15 02-33	Trunnion Infin Height
31	532 16 98-65	Bearing, Pvt. Lift.
32	873 54 06-00	Nut Crownlock 3/8-24
36	532 15 50-97	Pointer Height Indicator
37	532 12 39-35	Plug Hole Blk 1.485/1.515 Dia
38	817 06 05-16	Screw 5/16-18 x 1
40	819 11 24-10	Washer 11/32 x 1-1/2 x 10 Ga.
41	532 12 39-34	Scale Ind Height Blk
49	532 14 52-12	Nut hex Flange Lock
50	532 11 04-52	Nut Push Phos & Oil

NOTE: All component dimensions given in U.S. inches
1 inch = 25.4 mm

https://truckmanualshub.com/

REPAIR PARTS

TRACTOR- -MODEL NO. CTH151 XP (HAUCT15H36F), PRODUCT NO. 954 17 02-30

MOWER

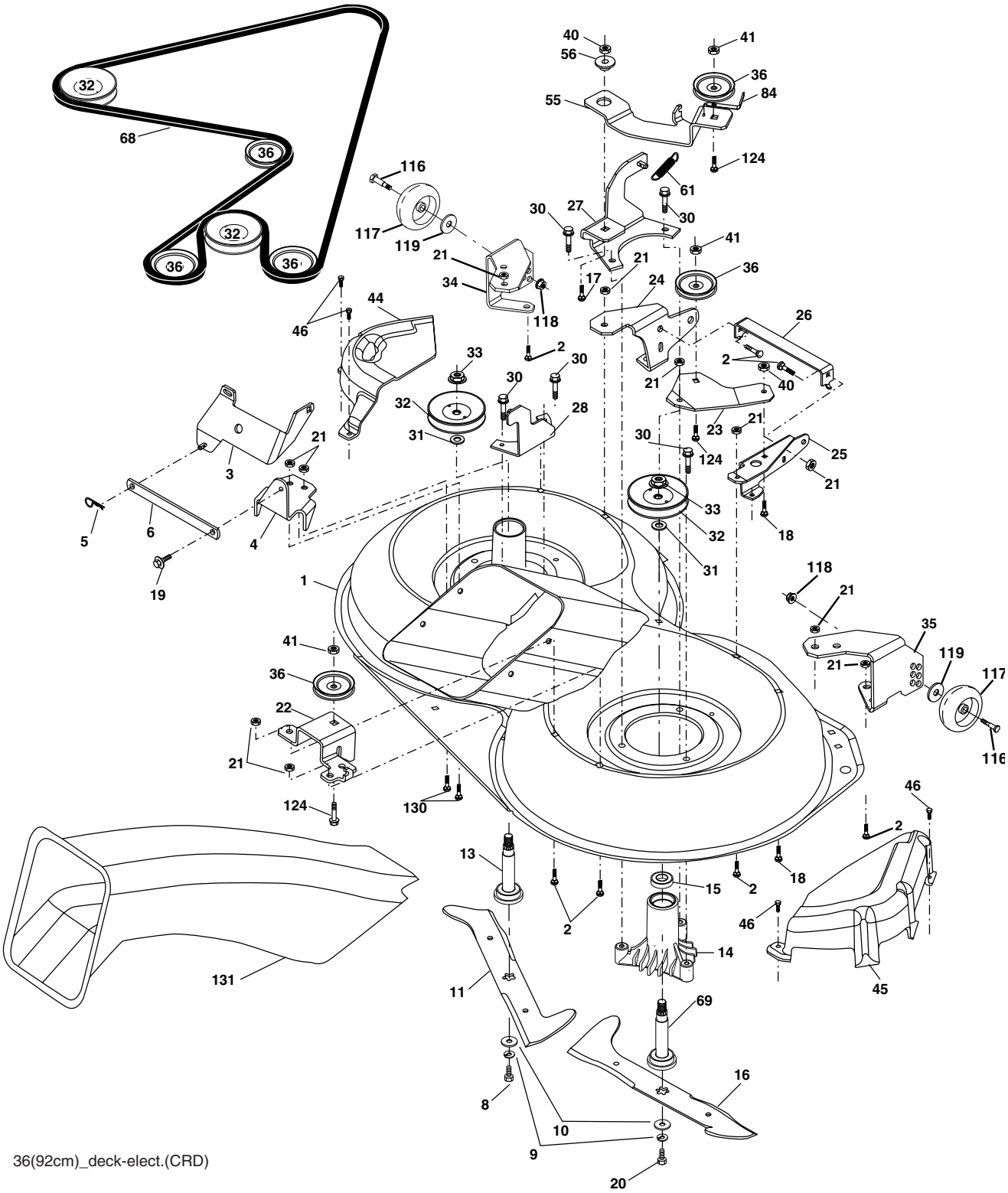

36(92cm)_deck-elect.(CRD)

https://truckmanualshub.com/

REPAIR PARTS

TRACTOR- -MODEL NO. CTH151 XP (HAUCT15H36F), PRODUCT NO. 954 17 02-30

MOWER

KEY NO.	PART NO.	DESCRIPTION
1	532 16 55-52	Housing Asm. Mower
2	872 14 05-06	Bolt Rdhd Sqnk 5/16-18 unc x 3/4
3	532 16 55-69	Bracket Asm. S-Bar Chass
4	532 16 55-58	Bracket Bar Sway Deck
5	532 12 46-70	Retainer Spring
6	532 16 55-57	Bar Sway
8	532 18 17-12	Bolt 3/8-24 x 1.25 Gr. 8 Patched
9	810 03 06-00	Washer Lock Hvy 3/8 Unplated
10	532 14 02-96	Washer Head Blade Mower
11	532 18 63-85	Blade 3-1 Lh
13	532 13 76-45	Shaft Asm. W/Lower Bearing
14	532 12 87-74	Housing Mandrel Vented (Machd)
15	532 11 04-85	Bearing Ball Mandrel
16	532 18 63-86	Blade 3-1 Rh
17	872 14 06-10	Bolt Carriage 3/8-16 x 1-1/4
18	872 11 06-06	Bolt Rdhd Sqnk 3/8-16 x 3/4
19	532 13 28-27	Bolt Shoulder 5/16-18 Thd Form
20	532 18 17-13	Bolt 3/8-24 x 1.25 Gr. 8 Ptch Lhthd
21	873 68 05-00	Nut Crown Lock 5/16-18
22	532 16 52-43	Bracket Idler Sprt RR
23	532 16 54-46	Bracket Idler Sprt RF
24	532 16 52-42	Bracket Suspension LF
25	532 16 52-44	Bracket Suspension RF
26	532 16 52-37	Brace Support Susp Frt CRD
27	532 16 55-68	Bracket Asm. Susp RR
28	532 16 55-67	Bracket Asm. Susp LR
30	532 17 39-84	Screw Thd Rolling Washer Head
31	532 18 76-90	Washer Spacer
32	532 15 35-31	Mandrel Pulleys 36 & 46
33	532 17 83-42	Nut Flg Top Lock
34	532 16 52-39	Bracket Gauge Wheel Lf
35	532 16 52-38	Bracket Gauge Wheel Rf
36	532 14 67-63	Pulley Idler V-Groove Dim 4.25
40	873 68 06-00	Nut Crownlock 3/8-16 unc
41	873 90 06-00	Nut Crownlock 3/8-16 unc
44	532 17 55-38	Cover Mandrel Lh
45	532 17 55-39	Cover Mandrel Rh
46	532 13 77-29	Screw Thd Roll 1/4-20 x 5/8
55	532 16 54-45	Arm Idler
56	532 16 57-23	Spacer Retainer PM Mower
61	532 16 59-45	Spring Tension Belt
68	532 18 02-17	Hex-Belt 92 Mower
69	532 16 54-82	Shaft Asm W/Lwr Brg Rh Thd CRD
84	532 15 60-85	Keeper Belt Idler
116	532 18 42-19	Bolt Shoulder
117	532 13 39-57	Wheel Gage Donut Wide
118	873 93 06-00	Nut Centerlock 3/8-16 unc
119	819 12 14-14	Washer 3/8 x 7/8 x 14 Ga.
124	872 11 06-12	Bolt Carr Sh 3/8-16 x 1-1/2 Gr. 5
130	872 11 05-06	Bolt Rdhdsqnk 5/16-18 unc x 3/4
131	532 16 56-61	Chute Bagger CRD
--	532 18 18-57	Mandrel Asm Service
--	532 18 18-58	Mandrel Asm CRD Lh Threads SVC
--	532 18 99-49	Replacement Mower Complete- - (Std. deck Order separately gauge wheel components Key Nos. 116-119)

NOTE: All component dimensions given in U.S. inches
1 inch = 25.4 mm

https://truckmanualshub.com/

REPAIR PARTS

TRACTOR- -MODEL NO. CTH151 XP (HAUCT15H36F), PRODUCT NO. 954 17 02-30

BAGGER

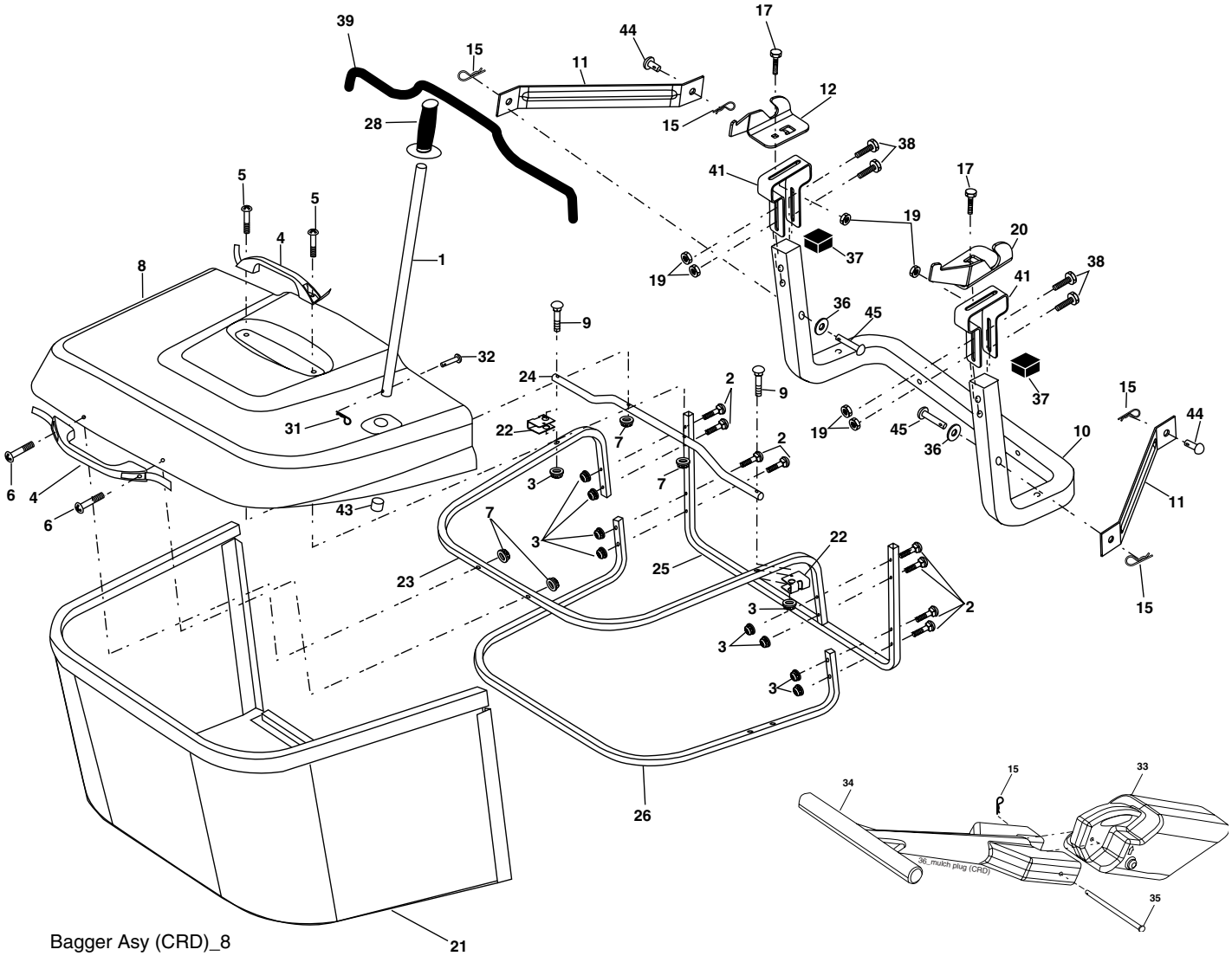

Bagger Asy (CRD)_8

KEY NO.	PART NO.	DESCRIPTION
1	532 16 52-49	Tube Handle Bagger CRD
2	872 14 04-16	Bolt Carriage 1/4-20 x 2.0 Gr. 5
3	532 12 39-76	Nut Lock 1/4 Lge Flg Gr. 5 Zinc
4	532 16 99-16	Handle Bagger w/Lvrs Blk CRD
5	874 98 10-24	Screw Pan Head #10-24 x 1.50 Blk
6	874 98 10-32	Screw Pan Hd
7	873 40 10-00	Nut Wiz Lock Hex Serr/Hd 10-24
8	532 18 10-95	Cover Bagger
9	872 14 04-18	Bolt Carriage 1/4-20 x 2.25 d x Gr. 5
10	532 18 12-82	Tube Support Bagger CRD
11	532 16 57-19	Bracket Support Upper Bag CRD
12	532 18 88-48	Bracket Pivot Lh
15	532 12 46-70	Retainer Spring
17	872 14 05-06	Bolt Rdhd Sht Sqnk 5/16 -18 unc x 3/4
19	873 90 05-00	Nut Lock Hex Flange 5/16-18
20	532 18 88-47	Bracket Pivot Rh
21	532 18 08-80	Bag Asm CRD
22	532 16 57-81	Bracket Side Bagger CRD
23	532 16 57-82	Tube Upper Bagger CRD
24	532 16 57-83	Tube Pivot Bagger CRD
25	532 18 01-24	Tube Front Bagger CRD
26	532 16 57-85	Tube Lower Bagger CRD
28	532 16 57-87	Grip Handle Black
31	532 16 94-84	Retainer Clip
32	532 12 68-75	Rivet Rd Hd Drilled 3/8 Dia
33	532 16 55-71	Plug Mulcher 92 CRD
34	532 16 55-70	Handle Mulcher
35	532 16 55-72	Pin Mulcher
36	**819 13 20-12**	Washer 13/32 x 1-1/4 x 12 Ga.
37	532 17 54-01	Plug Support Bagger CRD
38	872 01 05-20	Bolt 5/16-18 x 2-1/2
39	532 18 09-85	Seal Trim
41	532 16 96-83	Bracket Pnt Adj Pvt Bagger CRD
43	532 17 40-83	Plug Tubing End
44	**532 19 33-12**	Pin Clevis 3/8 x 11/16
45	**532 19 33-13**	Pin Clevis 3/8 x 2.00

NOTE: All component dimensions given in U.S. inches
1 inch = 25.4 mm

https://truckmanualshub.com/

Husqvarna

WARRANTY STATEMENT

SECTION 1: LIMITED WARRANTY

Husqvarna Forest & Garden Company ("Husqvarna") warrants Husqvarna product to the original purchaser to be free from defects in material and workmanship from the date of purchase for the "Warranty Period" of the product as set forth below:

Lifetime Warranty: All tiller tines against breakage, trimmer shafts, ignition coils and modules on hand held product.

3 Year Warranty: Spindles (on Zero Turn Riders and Commercial Walk-Behinds)

2 Year COMMERCIAL-Warranty: Husqvarna Commercial Turf Equipment—zero turn riders, wide area walks, and ground engaging commercial equipment.

2 Year NON-COMMERCIAL Warranty: Automatic Mower, Riding lawn mowers, yard and garden tractors, walk behind mowers, tillers, chain saws, trimmers, brushcutters, clearing saws, snow blowers, handheld blowers, backpack blowers, hedge trimmers, electrical products and power-assist collection systems for noncommercial, nonprofessional, noninstitutional or nonincome producing use, except as herein stated.

Emission control system components necessary to comply with CARB-TIER-II and EPA regulations, except for those components which are part of engine systems manufactured by third party engine manufacturers for which the purchaser has received a separate warranty with product information supplied at time of purchase.

1 Year Warranty: Power cutters, stump grinder, pole pruners and pole saws for non-commercial, non-professional, non-institutional or non-income producing use. All trimmers, brushcutters, clearing saws, hovering trimmers, stick edgers, backpack blowers, hand held blowers, hedge trimmers, power-assist collection systems used for commercial, institutional, professional or income producing purposes or use.

Batteries have a one-year prorated limited warranty with 100% replacement during the first 6 months.

90 Day Warranty: Automatic Mower, Chain saws, power cutters, stump grinders, pole saws, pole pruners, snow throwers, model series 580 & 600 walk-behind mowers and commercial turf equipment or any Husqvarna product used for commercial, institutional, professional, or income producing purposes or use except as otherwise provided herein.

Husqvarna Safety Apparel carries a 90-day warranty from the date of the customer's original purchase for defects in material and workmanship. Normal wear, tear or abuse is not covered under warranty. Product must be returned to Charlotte with a warranty claim form. All care and maintenance instructions must be followed as stated by the manufacturer on the care label. The fit of the protective apparel/boot is not covered under warranty.

30 Day Warranty: Replacement parts, accessories including bars and chains, tools and display items.

SECTION 2: HUSQVARNA'S OBLIGATIONS UNDER THE WARRANTY

Husqvarna will repair or replace defective components without charge for parts or labor if a component fails because of a defect in material or workmanship during the warranty period.

SECTION 3: ITEMS NOT COVERED BY THIS WARRANTY

The following items are not covered by this warranty:

(1)Normal customer maintenance items which become worn through normal regular use, including, but not limited to, belts, blades, blade adapters, bulbs, filters, guide bars, lubricants, rewind springs, saw chain, spark plugs, starter ropes and tines;

(2)Natural discoloration of material due to ultraviolet light;

(3)Engine and drive systems not manufactured by Husqvarna; these items are covered by the respective manufacturer's warranty as provided in writing with the product information supplied at the time of purchase; all claims must be sent to the appropriate manufacturer;

(4)Lawn and garden attachments are covered by a third party which gives a warranty, all claims for warranty should be sent to the manufacturer; and

(5)Emission Control System components necessary to comply with CARB-TIER-II and EPA regulations which are manufactured by third party engine manufacturer.

SECTION 4: EXCEPTIONS AND LIMITATIONS

This warranty shall be inapplicable to defects resulting from the following:

(1)Accident, abuse, misuse, negligence and neglect, including stale fuel, dirt, abrasives, moisture, rust, corrosion, or any adverse reaction due to incorrect storage or use habits;

(2)Failure to operate or maintain the unit in accordance with the Owner's/Operator's manual or instruction sheet furnished by Husqvarna;

(3)Alterations or modifications that change the intended use of the product or affects the product's performance, operation, safety, or durability, or causes the product to fail to comply with any applicable laws; or:

(4)Additional damage to parts or components due to continued use occurring after any of the above.

REPAIR OR REPLACEMENT AS PROVIDED UNDER THIS WARRANTY IS THE EXCLUSIVE REMEDY OF THE PURCHASER. HUSQVARNA SHALL NOT BE LIABLE FOR ANY INCIDENTAL OR CONSEQUENTIAL DAMAGES FOR BREACH OF ANY EXPRESS OR IMPLIED WARRANTY ON THESE PRODUCTS EXCEPT TO THE EXTENT PROHIBITED BY APPLICABLE LAW. ANY IMPLIED WARRANTY OF MERCHANTABILITY OR FITNESS FOR A PARTICULAR PURPOSE ON THESE PRODUCTS IS LIMITED IN DURATION TO THE WARRANTY PERIOD AS DEFINED IN THE LIMITED WARRANTY STATEMENT. HUSQVARNA RESERVES THE RIGHT TO CHANGE OR IMPROVE THE DESIGN OF THE PRODUCT WITHOUT NOTICE, AND DOES NOT ASSUME OBLIGATION TO UPDATE PREVIOUSLY MANUFACTURED PRODUCTS.

Some states do not allow the exclusion of incidental or consequential damages, or limitations on how long an implied warranty lasts, so the above limitations or exclusions may not apply to you. This warranty gives you specific legal rights, and you may also have other rights which vary from state to state.

SECTION 5: CUSTOMER RESPONSIBILITIES

The product must exhibit reasonable care, maintenance, operation, storage and general upkeep as written in the maintenance section of the Owner's/Operator's manual. Should an operational problem or failure occur, the product should not be used, but delivered as is to an authorized Husqvarna dealer for evaluation. Proof of purchase, as explained in section 6, rests solely with the customer.

SECTION 6: PROCEDURE TO OBTAIN WARRANTY CONSIDERATION

It is the Owner's and Dealer's responsibility to make certain that the Warranty Registration Card is properly filled out and mailed to Husqvarna Forest & Garden Company. This card should be mailed within ten (10) days from the date of purchase in order to confirm the warranty and to facilitate post-sale service.

Proof of purchase must be presented to the authorized Husqvarna dealer in order to obtain warranty service. This proof must include date purchased, model number, serial number, and complete name and address of the selling dealer.

To obtain the benefit of this warranty, the product believed to be defective must be delivered to an authorized Husqvarna dealer in a timely manner, no later than thirty (30) days from date of the operational problem or failure. The product must be delivered at the owner's expense. Pick-up and delivery charges are not covered by this warranty. An authorized Husqvarna dealer can be normally located through the "Yellow Pages" of the local telephone directory or by calling 1-800-HUSKY62 for a dealer in your area.

HUSQVARNA
7349 Statesville Road
Charlotte, NC 28269

531 83 81-23 2002

https://truckmanualshub.com/

SUGGESTED GUIDE FOR SIGHTING SLOPES FOR SAFE OPERATION

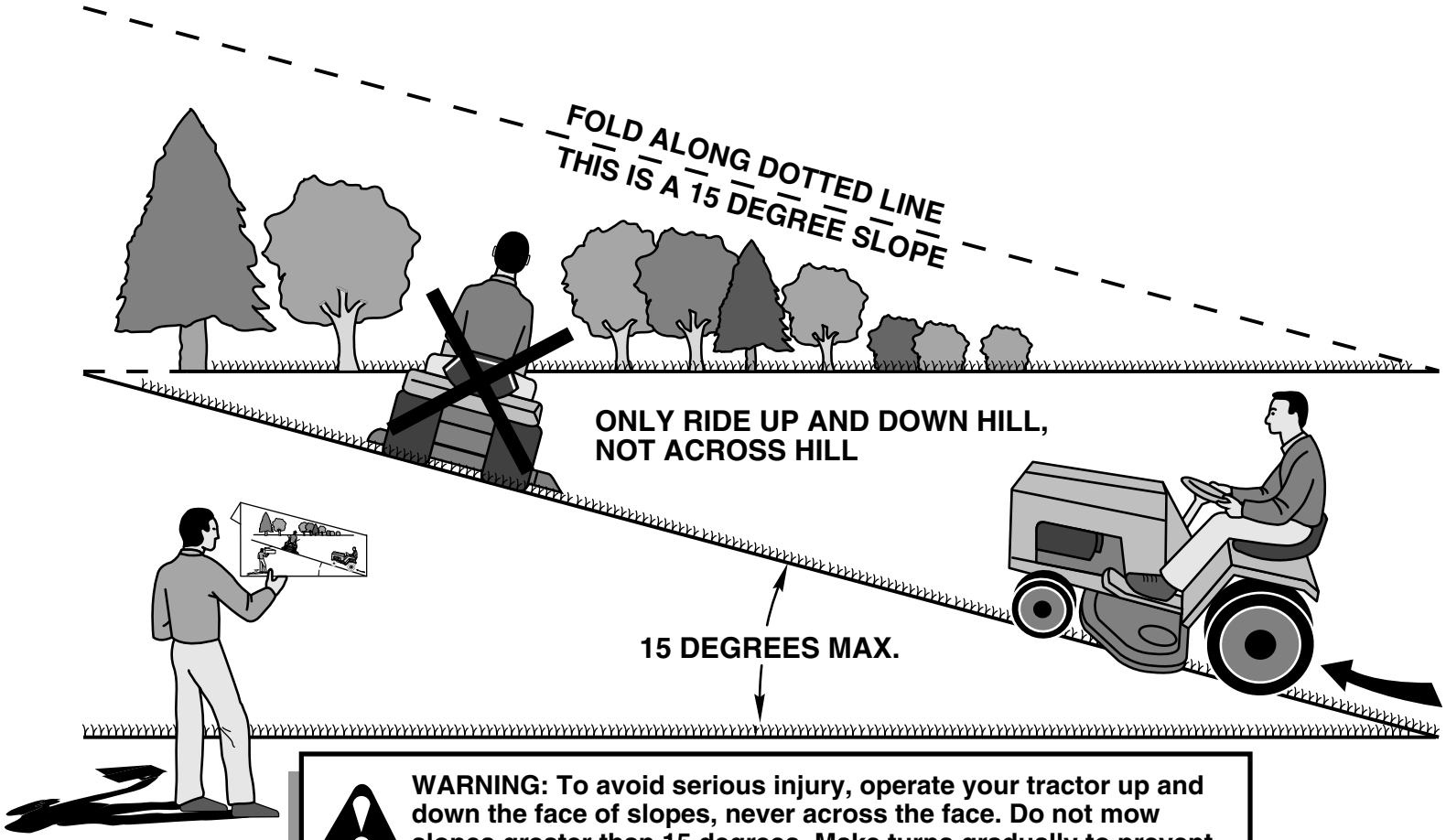

WARNING: To avoid serious injury, operate your tractor up and down the face of slopes, never across the face. Do not mow slopes greater than 15 degrees. Make turns gradually to prevent tipping or loss of control. Exercise extreme caution when changing direction on slopes.

1. Fold this page along dotted line indicated above.
2. Hold page before you so that its left edge is vertically parallel to a tree trunk or other upright structure.
3. Sight across the fold in the direction of hill slope you want to measure.
4. Compare the angle of the fold with the slope of the hill.

532 19 56-29 1.12.05 RD

Husqvarna

Printed in U.S.A.