https://truckmanualshub.com/

HIDROMEK

HMK 220LC 220LC LR

GEN SERIES

https://truckmanualshub.com/

HEAVY DUTY TYPE

HMK 220LC has been designed by HİDROMEK engineers after careful evaluation of working conditions and operator demands and has been released on the market afterward as a crawler excavator that meets all expectations of users. All fabricated parts including boom, arm, bucket, undercarriage, lower and upper frames have been designed and produced as heavy duty type. HMK 220LC offers its operator maximum efficiency by providing trouble-free and continuous operating performance even in the toughest of working conditions. When such rigorous care at the design stage of HMK 220LC is combined with worldwide approved components and state-of-the-art production technologies, the outcome has been a high performance, durable, comfortable, and well-balanced product with low maintenance and operation costs.

https://truckmanualshub.

CAB

HMK 220LC excavator cabin has been designed to allow the operator to work comfortably even under the hardest conditions.

Cabin entrance is large enough to enable the operator to enter the cab easily with plenty of clearance. Opening windscreen is designed to give the operator a perfect visibility. It is possible to open the windscreen by sliding it towards the roof. Rear window may be removed and kept under the operator seat. Other features enhancing operator's comfort are the ergonomic seat and front console. The standard operator seat of the HMK 220LC can be adjusted in 9 different positions and is designed to enable operator to work without fatigue and comfortably with high performance for long hours. Besides, the joystick console and seat can move independently from each other which lets the operator to adjust the most suitable position for him.

The seat is equipped with seat belt as a safety precaution. The cab is supported by 6 silicon viscose mounts that dampen the effects of noise, shock and vibrations regardless of working conditions of the machine and the optional attachment on it. Also a high capacity air conditioning system is located on the cab to create the optimum working environment for the operator.

https://truckmanualshub.com/

ENGINE

“An Extraordinary Engine”

An extraordinary engine…

The Isuzu engine fitted in the HMK 220LC is specially developed for excavator applications. It is a turbo diesel engine, complies with the U.S and EU Emission Regulations, with 4 cylinders, 4 cycles, water-cooling, turbocharger and intercooler. High performance, long life and reliability of the engine under all working conditions have been proved in many different markets.

Low fuel consumption…

The direct fuel injection and intercooler features not only provide less fuel consumption but also increase the power and torque produced by the engine by providing more efficient combustion.

More than standard…

HİDROMEK always offers more than what is expected from any construction equipment. Some of the standard features offered along with HMK 220LC model are:

- Air pre-heating function to start-up engine easily in cold weather conditions
- Diesel fuel/water separator
- No disturbance for the environment and operator due to low exhaust gas emission and sound level.

https://truckmanualshub.com/

“Reinforced Heavy Duty Type Construction”

SUB-FRAME & UNDERCARRIAGE

X’ box type sub-frame

‘X’ shape box type sub-frame has perfect resistance against bending forces and vibration stress since it homogeneously distributes the stress exposed on it.

Resistance

The lower rollers are connected to the sub-frame by pentagon shape fittings enhance the strength of the frame and lifetime of the frame, too. Modern production technologies and precise quality control systems make “zero-error” production possible.

The standard long track maximizes the balance of the machine by providing a durable platform for the machine to work on. Two roller housings in each track keep track chains in straight direction and therefore prevent corrosion of lower rollers.

The upper roller, lower rollers and front idlers are suitable for heavy-duty working conditions. They have been sealed with life-time seals which are maintenence-free.

Track pins and bushings are greased and sealed, thus reducing chain noise and extending track life.

600,700,800 mm wide track links with triple grouser are able to self-clean through their holes.

https://truckmanualshub.com/

TECHNICAL SPECIFICATIONS

Opera Control System

- Perfect control
- Fuel economy
- Long component life
- Low noise level and exhaust gas emission
- Operator comfort
- Warning and protection (security) features
- Malfunction / fault indication feature
- Auxiliary functions

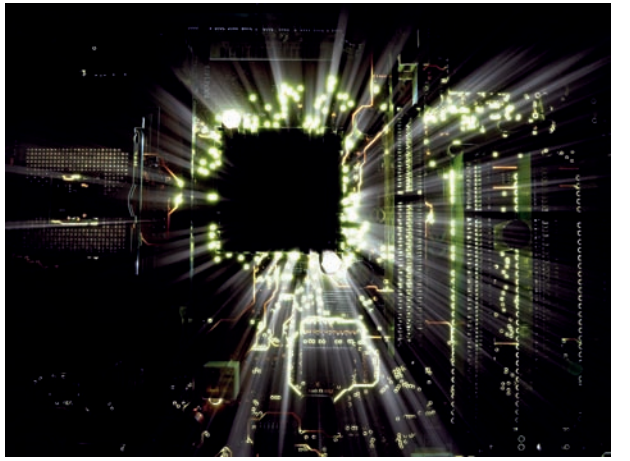

Opera Control System ,consists of 4 power modes and 3 working modes, helps operator to choose the most suitable working conditions in accordance with requirements of work through perfect matching with diesel engine and hydraulic pump.

MODE SELECTIONS

A-Power Mode Selection

POWER MODE	
F (Sensitive Mode)	This mode is used for light works requiring sensitive movements
E (Economy Mode)	This mode is for light work in which low fuel consumption is desired.
P (Power Mode)	This mode is for general digging and loading works.
HP (High Power Mode)	This mode is for heavy and high speed required

B- Working Mode Selection

WORKING MODE	
D (Digging Mode)	It is designed for normal digging operations.
B (Breaking Mode)	It is designed for breaking operations.
O (Optional attachment Mode)	It is designed to work with optional attachment.

WARNING AND PROTECTION FEATURES

Continuous Monitoring:
Opera Control System, continuously monitors the most important parameters of machine and warns the operator in case of any abnormality in three ways:

- Audio warning
- Warning lights
- Indicators

Overheating Prevention Function:
If engine water temperature and hydraulic oil temperature exceeds certain limits, electronic control system decreases the pump flow rate and engine rpm to enable the machine work continuosly.

Automatic preheating :
Automatic preheating provides reaching machine to optimum working temperatures by measuring air intake temparature , cooling water temperature and hydraulic oil temperature of diesel engine. Machine control unit removes engine rpm from idling to 1200 rpm when engine cooling water is lower than 30°C or hydraulic oil temperature is lower than 0°C and stay on this rpm until warm up . By this way early wearing of main components beginning engine in the first place is prevented. However if there is emergency and machine is required to be moved quickly , such function can be cancelled by pressing button on display panel.

Automatic Malfunction Indication:
When machine displays any malfunction, code representing such malfunction appears on display panel for warning purpose.

Malfunction Messages Memory:
Opera Control System has feature of keeping occured malfunctions in the machine in its memory.

Fuel filter Congestion Warning:
Notifies water in fuel filter to operator by view.

Manuel Mode Selection:
In case of any malfunction in control system of the machine, it is possible to switch to manual mode and continue operation by means of a button located near fuse box. Hydraulic pump flow rate is fixed and also engine rpm can be set between 900 rpm and maxinumum rpm manually.

Component Information and Main Setting Values:
Information regarding serial numbers of the components of the machine can be loaded on the control unit and may be recalled when required. It is also possible to read the required malfunction information on the display panel through the control unit during fault searching.

Program Loading and Modification:
There are computer connection ports on control unit of the machine. By means of such ports, programs of which parameters are either the same or different can be loaded on the machine.

AUXILIARY FEATURES

Automatic Powerboost:
When more power than normal working conditions is needed, electronic control system allows working at high performans through increasing system pressure.

Automatic Powershift:
If more power is needed during digging and travel , required power is obtained by mounting engine rpm and pump flow rate above setup value

Automatic Idling:
While levers are in the middle position, in case of no movements at levers, electronic control system decreases engine rpm to 1200 rpm and then decrease to idling in order to prevent redundant fuel consumption . Automotic Idling function can be activated also at any time determined by operator. When operator touches to lever , engine rpm and pump flow rate of previously selected mode is restored . This function can be canceled by operator if he desires. By this way desired power from engine can be obtained.

Condition Information:
Many parameters such as; battery voltage , engine load, pump pressures , cooling water temperature, and hydraulic oil temprature can be monitored

Maintenance Information:
There is warning system that informs operator about periodic maintenance time automotically. Also parameters related with machine maintenance can be monitored on control panel.

Operation Hours:
Detail working hours of machine , such as working hours, travel hours, attachment hours , breaking hours, are kept on the memory.

Anti-Theft System:
Anti-theft system is set up by defining private code for each operator.

Language Selection:
Selection of multi-language on the remote control panel.

https://truckmanualshub.com/

Since the very first phase of its design, the new generation GEN Series Excavators has been developed so that the user could control the machine with an extraordinary ease, in an environment of total comfort, feeling himself like in his own office.

That is why, GEN - the new generation of excavators HİDROMEK, for first time in its class, has been equipped with OPERA (HİDROMEK Operator Interface).

OPERA user interface, especially developed for the GEN series HİDROMEK excavators, which integrates all the control devices on an aesthetically designed and ergonomically located console. The system consists of a high resolution (HD) coloured TFT screen , an Electronic Control Unit and the Opera Control Unit.

With OPERA it is extraordinary easy to manage functions such as:

- Engine RPM control
- Navigate in the menus
- Choose the most appropriate working mode
- Control the lights and wipers
- Manage radio/MP3
- Start-Stop the engine to ensure maximum fuel economy.
- Control of the cameras – rear view and on the arm (optional)
- Monitoring the machine conditions, such as hydraulic pressure, engine coolant and hydraulic oil temperature, turbo boost pressure, fuel pressure, atmosphere pressure and others.
- Error Codes
- Times of work - as a time of excavating, work with attachments (breakers etc), travel, etc.
- Time to the next maintenance
  among others.

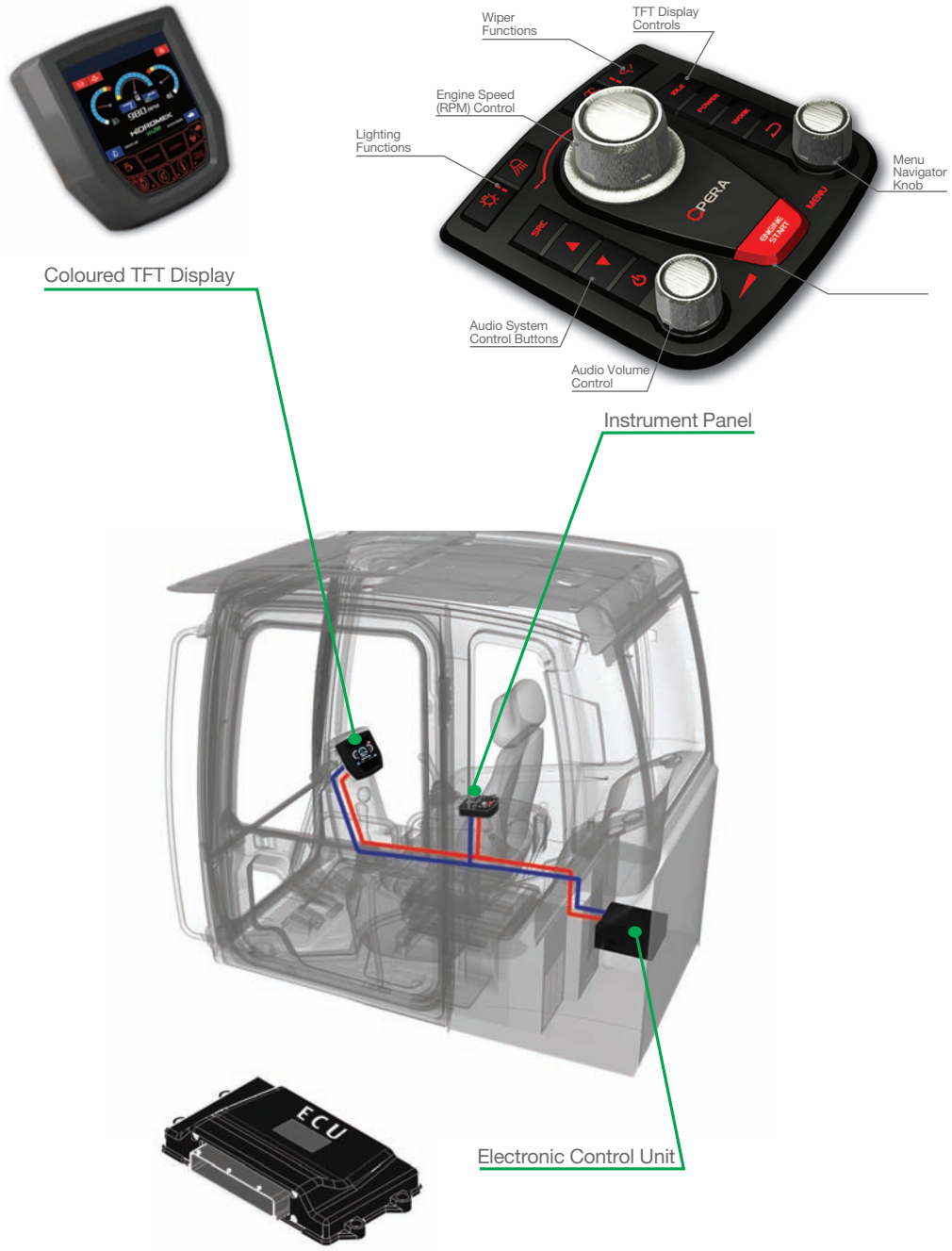

https://truckmanualshub.com/

HYDRAULIC SYSTEM

Features:
- Easy to control
- High efficiency
- Generation of required flow rate when needed (negative control)
- Continuous control of power generation depending on increasing load
- Maximum performance under all sorts of working conditions due to functional power modes
- Priority allowance in attachment movements
- Regeneration of flow rate in main control valve

Main Hydraulic Pump

Machine performance and pump life have been maximized by using two axial pistons and variable displacement hydraulic pumps from Kawasaki, a worldwide leading hydraulic pump manufacturer. It is possible to generate the necessary flow rate when required thanks to the negative control feature. By matching the power generated from diesel engine and the power required by the hydraulic pump under increase load, engine stalls is prevented. The best matching of the engine and pump flow rate is achieved with the power mode modulation depending on working conditions. By this way;
- High efficiency
- High quality
- Long and trouble-free operating life is achieved.

Main Control Valve

The main control valve ensures sensitive and vibration free operation in each combined movement. The operator is able to focus only on his work since the priority at the arm, boom and swing movements are provided automatically by the control valve, thus maximizing efficiency. The re-generative system prevents cavitations during boom, arm and bucket movements and increases both the life of the hydraulic system and speed of the machine.
Holdin valves on the boom and arm are supplied as standard equipments in order to balance the interior leakage between spool and body so the potential leakage problem at the attachments is avoided.
Thanks to the two-staged main relief valve, it is possible to increase the power whenever is required.
Inside the main control valve, there is straight travel valves. Due to the featured structure of the main valve block, it is possible to join the oil produced by both pumps within the valve group.
There is no need for an external pipe or hose for such operation.

An additional valve section is available for breaker or other optional attachments.

Swing Hydromotor and Gearbox

An axial piston type hydromotor with high torque is used together with a heavy duty type gearbox.
The hydromotor features shock absorbing valves specially designed to provide smooth and vibration free swing movement. The braking of the swing movement is provided by an oil type spring-driven park brake system.

Other features

The hydraulic accumulator which enables lowering of the attachments in case of emergency (i.e. diesel engine or main hydraulic pump failure) is located in the pilot line.
The advanced hydraulic system provides easy maintenence and thus decreases spare part costs.
Hydraulic cylinders are designed with a cushioning system to provide a vibration and shock free operation.
The entire hydraulic system is fitted with high capacity filters so ensure absolute cleanliness.
Different types of breakers may be fitted by selecting desired flow rate and pressure on the control unit.

https://truckmanualshub.com/

ENGINE

Emission Class	: Stage III-A (Tier 3)	: Stage III-B (Tier 4 interim)
Brand, Model	: ISUZU AI-4HK1X	: ISUZU AI-4HK1X
Type	: Water cooled diesel engine, 4 cycles, 4 cylinders, line- type, direct injection, turbocharger and intercooler	: Water cooled diesel engine, 4 cycles, 4 cylinders, line-type, direct injection, turbocharger and intercooler
Power	: 162 HP (120.7 kW) at 2000 rpm SAE J1349 (Net)	: 162 HP (120.7 kW) at 2000 rpm SAE J1349 (Net)
	: 172 HP (128 kW) at 2000 rpm SAE J1995 (Gross)	: 172 HP (128 kW) at 2000 rpm SAE J1995 (Gross)
Maximum Torque	: 656 Nm at 1500 rpm (Net)	: 653 Nm at 1500 rpm (Net)
	: 677 Nm at 1500 rpm (Gross)	: 674 Nm at 1500 rpm (Gross)
Displacement	: 5193 cc	: 5193 cc
Bore x Stroke	: 115 mm x 125 mm	: 115 mm x 125 mm
This new engine complies with the Emission Regulations U.S EPA Tier III and EU Stage III-A		This new engine complies with the Emission Regulations U.S EPA Tier 4 interim and EU Stage III-B

HYDRAULIC SYSTEM

Main Pump	
Type	: 2 axial piston type pumps with double variable displacement and inclined plate
Max. Flow Rate	: 2 x 234 lt/min
Pilot Pump	: Gear type, 20 L/m (10 cc/rev)
Working Pressures	220LC
Cylinders	: 330 kgf/cm²
Power Boost	: 350 kgf/cm²
Travel	: 350 kgf/cm²
Swing	: 240 kgf/cm²
Pilot	: 40 kgf/cm²

* Hydraulic pressures are boom lifting down 150kgf/cm² arm closure 240kgf/cm², bucket opening and closure 240 kgf/cm²

Cylinders	
Boom	: 2 x ø 125 x ø 85 x 1,325 mm
Arm	: 1 x ø 140 x ø 100 x 1,640 mm
Bucket	: 1 x ø 125 x ø 85 x 1,060 mm
Bucket (220LC LR)	: 1 x ø 110 x ø 70 x 910 mm

SUB-FRAME

Construction	: "X" type lower frame, pentagon box type side frame
Shoe	: Triple grouser
No. of Shoes	: 2 x 49 units
No. of Lower Rollers	: 2 x 9 units
No. of Upper Rollers	: 2 x 2 units
Track Tensioning	: Hydraulic type with spring cushioning

SWING SYSTEM

Motor	: Axial piston motor with integrated super shock absorbing valve,with fixed displacement and inclined plate
Reduction	: 2 stage planetary gear type
Swing Brake	: Hydraulic, disc type with warning
Swing Speed	: 10,8 rpm

CAB

- Improved operator's all round visibility
- Increased cabin internal space
- Use of six viscomount cabin mountings that dampen the vibrations
- High capacity A/C
- Cooled storage room
- Glass holder, book and object storage pockets
- Pool type floor mat
- Improved operator's comfort through versatile adjustable seat
- Ergonomically redesigned cabin through relocated switch board, and re-styled travel pedals and levers

ELECTRICAL SYSTEM

Voltage	: 24 V
Battery	: 2 x 12 V / 100 Ah
Alternator	: 24 V / 50 A
Starting Motor	: 24 V / 5,0 kw

FILLING CAPACITIES

Fuel Tank	: 354 lt	Engine Oil	: 20.5 lt
Hydraulic Tank	: 150 lt	Swing Reducer	: 5 lt
Hydraulic System	: 295 lt	Travel Reducer	: 2x5.3 lt
Engine Cooling Sys.	: 29.3lt		

TRAVEL AND BRAKES

Travel	: Fully hydrostatic
Travel Motor	: Axial piston motor with 2 speed stages and inclined plate
Reduction	: Planetary gear system with 2 stages
Travel Speed	
High Speed	: 5.9 km/h
Low Speed	: 3.8 km/h
Max Traction	: 18.435 kgf
Gradeability	: 35° (70%)
Parking Brake	: Hydraulic, disc type with automatic warning
Ground pressure (600mm) 220LC	: 0.49 kgf/cm²
Ground pressure (500mm) 220NLC	: 0.58 kgf/cm²
Ground pressure (600mm)220LC LR	: 0.52 kgf/cm²

OPERA CONTROL SYSTEM

• Easy-to-use control panel and menu	• Automatic preheater
• Improved fuel economy and productivity	• Auto-Idle and automatic deceleration system
• Maximum efficiency by selection of power and work modes	• Automatic powershift to improve performance
• Automatic powerboost switch-on and switch-off	• Selection of multi-language on control panel.
• Overheat prevention and protection system without interrupting the work	• Real time monitoring of operational parameters such as pressure, temperature, engine load
• Automatic electric cut-off	• Anti-theft system with personal code
• Maintenance information and warning system	• Possibility to register 26 different operating hours
• Error mode registry and warning system	• Rear-view, arm-view camera (Optional)
• GPRS satellite tracking system (Optional)	

LUBRICATION

A central lubrication system is available in order to lubricate difficult-to-reach points such as boom and arm.

WEIGHT

Standard machine operating weight (220LC)	: 22.950 kg
Standard machine operating weight (220NLC)	: 22.700 kg
Standard machine operating weight (220LCLR)	: 24.800 kg

https://truckmanualshub.com/

HMK 220LC EXCAVATOR GEN SERIES

ACCESSORIES

HEAVY DUTY TYPE

STANDARD BUCKET

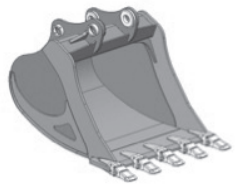

Width		1.190 mm
Capacity		*1.00 m³
Weight		800 kg
Number of teeth		5
ARM	*2.92 m	B
	2.40 m	A

* Standard

OPTIONAL BUCKET SELECTION DIAGRAM

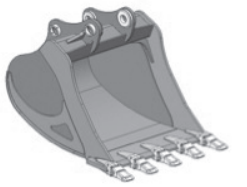

Width	600 mm	750 mm	900 mm	1050 mm	1190 mm	1400 mm	600 mm	750 mm	900 mm	1030 mm	1110 mm	1370 mm
Capacity	0.40 m³	0.54 m³	0.69 m³	0.82 m³	1.00 m³	1.20 m³	0.40 m³	0.54 m³	0.67 m³	0.82 m³	0.90 m³	1.20 m³
Weight	510 kg	570 kg	640 kg	690 kg	800 kg	970 kg	510 kg	570 kg	650 kg	730 kg	760 kg	800 kg
Number of teeth	3	3	4	4	5	5	3	3	4	4	4	5
ARM *2.92 m	A	A	A	A	A	B	A	A	A	A	A	B
ARM 2.40 m	A	A	A	A	B	A	A	A	A	A	A	C

Note: Single radius buckets and rock type buckets are available

BREAKOUT FORCES

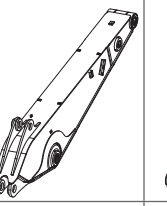

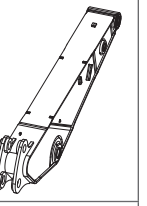

SAE	Arm length	*2.92 m	2.40 m
SAE	Bucket digging force (power boost)	13.900 (14.800) kgf	13.900 (14.800) kgf
SAE	Arm breakout force (power boost)	11.200 (11.900) kgf	12.800 (13.600) kgf
ISO	Bucket digging force (power boost)	15.800 (16.700) kgf	15.300 (16.700) kgf
ISO	Arm breakout force (power boost)	11.600 (12.300) kgf	13.200 (14.000) kgf

* Standard

HMK 220LC LR EXCAVATOR GEN SERIES

HEAVY DUTY TYPE

STANDARD BUCKET

DITCH CLEANING BUCKETS

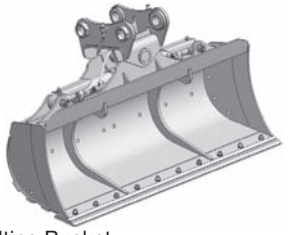

*Tilting Bucket

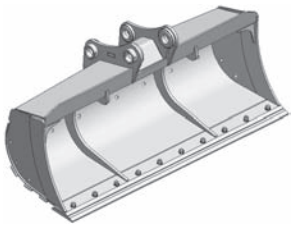

Width		780 mm	1.500 mm	1.500 mm
Capacity		0.45 m³	0.45 m³	0.45 m³
Weight		420 kg	530 kg	370 kg
Number of teeth		3	-	-
ARM	6.1 m	A	A	A

* Tilt angle 2 x 35°

BREAKOUT FORCES

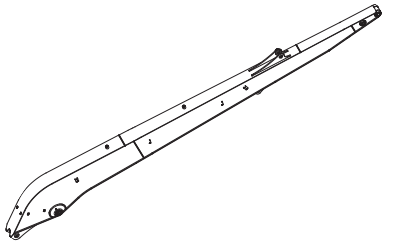

SAE	Arm length	6.1 m
SAE	Bucket digging force	6.500 kgf
SAE	Arm breakout force	4.600 kgf
ISO	Bucket digging force	7.300 kgf
ISO	Arm breakout force	4.700 kgf

A- Material density less than 2.000 kg/m³
B- Material density less than 1.800 kg/m³
C- Material density less than 1.500 kg/m³
D- Material density less than 1.200 kg/m³

WARNING
- Optional attachment and accessory standards offered with machines may differ according to countries.
- Please consult your authorized dealer to provide attachments and accessories.

https://truckmanualshub.com/

LIFTING CAPACITIES

HMK 220LC Boom: 5.8 m, Arm: 2.92 m, Bucket: 1.00 m³ (SAE), Shoe: 600 mm												:Front	:Side	
A, m	Load Unit	1.5		3.0		4.5		6.0		7.5		Maximum Reach		
B, m														A,m
7.5	kg											*3200	*3200	6.74
6.0	kg									*3800	3450	*3050	*3050	7.78
4.5	kg							*4550	*4550	*4200	3350	*3050	2650	8.43
3.0	kg			*11300	*11300	*7000	*7000	*5400	4700	*4600	3200	*3200	2350	8.77
1.5	kg			*5650	*5650	*8700	6750	*6250	4350	4950	3000	*3550	2250	8.84
0 (Ground)	kg			*6850	*6850	*9750	6300	6850	4100	4800	2850	3800	2250	8.65
- 1.5	kg	*6350	*6350	*10100	*10100	*10000	6150	6700	3950	4750	2800	4150	2450	8.18
- 3.0	kg	*9950	*9950	*13900	12500	*9450	6150	6700	3950			4900	2900	7.38
- 4.5	kg			*11450	*11450	*8000	6350	*5650	4100			*5500	4000	6.10

HMK 220LC LR Boom: 8.5 m, Arm: 6.1 m, Bucket: 0.45 m³, Shoe: 700 mm												:Front	:Side
A, m	Load Unit	3.0		6.0		9.0		12		Maximum Reach			
B, m													R,m
9.0	kg							*900	*900	*700	*700	12.18
6.0	kg							*1900	1900	*700	*700	13.52
3.0	kg			*3850	*3850	*2700	*2700	*2200	1700	*750	*750	14.11
0 (Ground)	kg	*2300	*2300	*5500	4500	*3350	2500	*2500	1500	*950	*950	14.04
- 3.0	kg	*3350	*3350	*6200	3950	3750	2200	2450	1350	*1250	1100	13.29
- 6.0	kg	*5000	*5000	*6000	3900	3700	2100			*2000	1400	11.75
- 9.0	kg	*7100	*7100	*4750	4200					*2850	2300	9.01

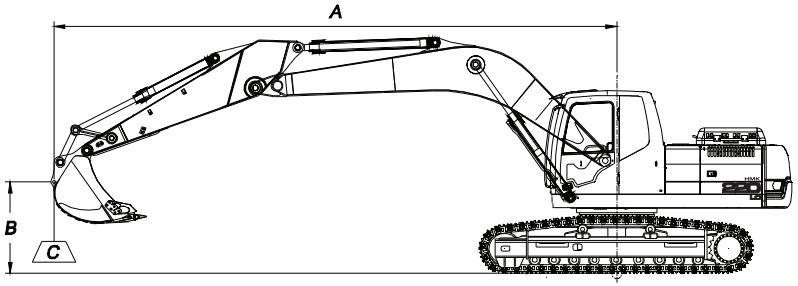

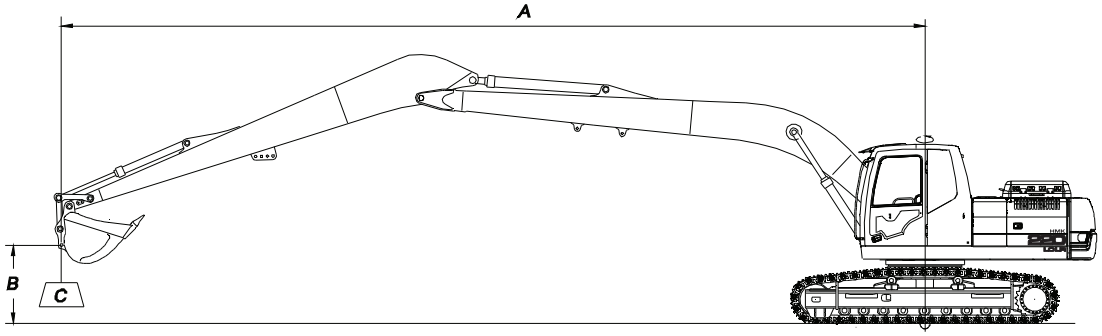

A Load Radius
B Load Point Height
C Lifting Capacity

Notes

1. Lifting capacities are according to SAE J1097 and ISO 10567
2. Load point is on the bucket.
3. Lifting capacity cannot exceed 75% of tip over capacity or 87% of total hydraulic capacity.
4. Values marked with (*) are limited by hydraulic capacity.
5. Not includid bucket weight.

WARNING
HİDROMEK has the right to modify the specifications and design of the model indicated on this brochure without prior notice.

https://truckmanualshub.com/

DIMENSIONS

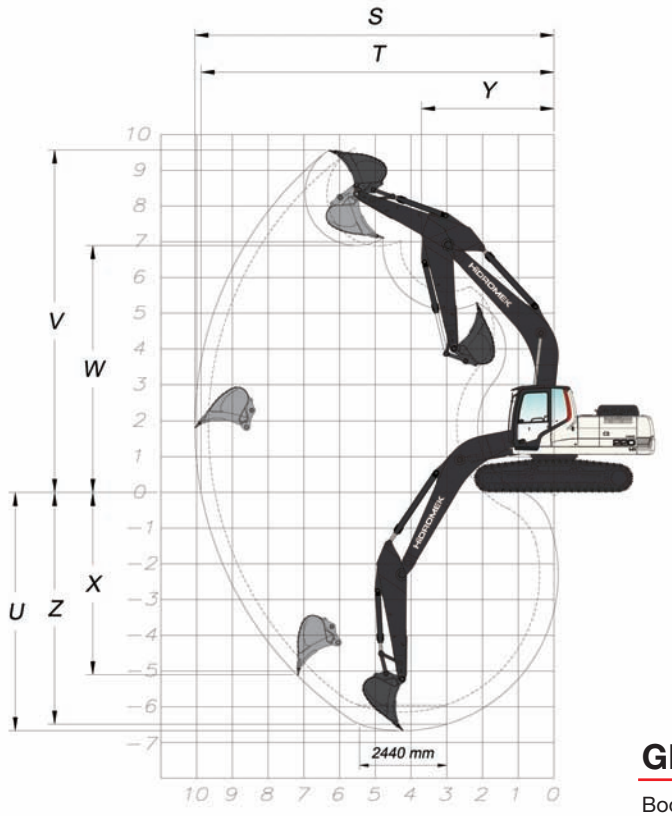

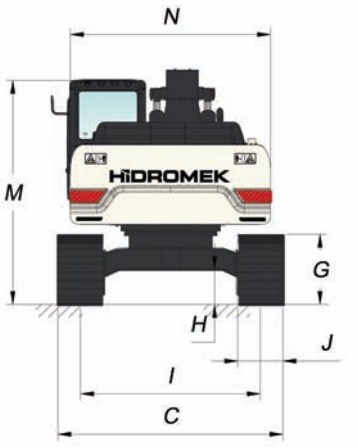

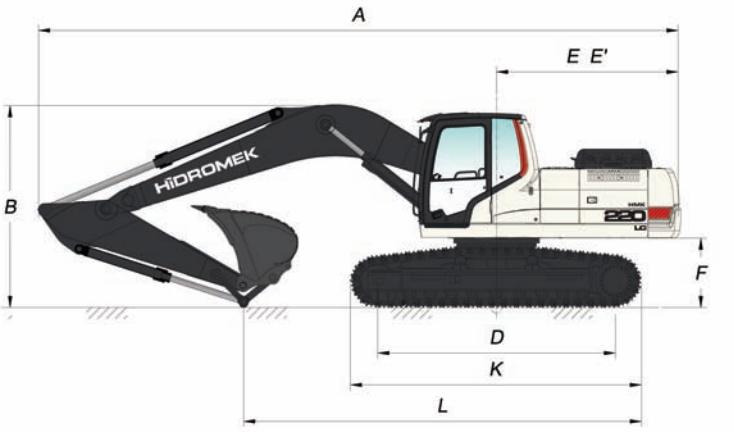

GENERAL DIMENSIONS

Boom Dimension	5.800 mm	
Arm Dimension	2.400 mm	*2.920 mm
A - Overall Length	9.800 mm	9.790 mm
B - Boom (Shipping) Height	3.150 mm	3.090 mm
C - Lower Frame Width (LC)	*2.990 / 3.090 / 3.190 mm	
C´ - Lower Frame Width (NLC)	2.540 mm	
D - Track Base Length	3.640 mm	
E - Counterweight Distance	2.820 mm	
E´ - Countweight Turning Radius	2.850 mm	
F - Upper Chasis to Ground Clearance	1.060 mm	
G - Crawler Height	940 mm	
H - Ground Clearance	470 mm	
I T- rack Gauge (NLC/LC)	2.040 mm / 2.390 mm	
J - Shoe Width (LC)	*600 / 700 / 800 mm	
J - Shoe Width (NLC)	500 mm	
K - Lower Chasis Length (from shoe)	4.460 mm	
L - Shipping Length	5.420 mm	
M - Cab Height	2.985 mm	
N - Upper Frame Width	2.660 mm	

* Standard

WORKING DIMENSIONS

Boom Dimension	5.800 mm	
Arm Dimension	2.400 mm	*2.920 mm
S - Maximum Reach Distance	9.640 mm	10.050 mm
T - Maximum Reach at Ground Level	9.460 mm	9.880 mm
U - Maximum Digging Depth	6.150 mm	6.670 mm
V - Maximum Digging Height	9.530 mm	9.550 mm
W - Maximum Unloading Height	6.810 mm	6.890 mm
X - Maximum Vertical Wall Digging Depth	5.070 mm	5.250 mm
Y - Minimum Swing Radius	3.790 mm	3.750 mm
Z - Maximum Digging Depth (2440 mm level)	5.950 mm	6.490 mm

* Standard

https://truckmanualshub.com/

220LC LR DIMENSIONS

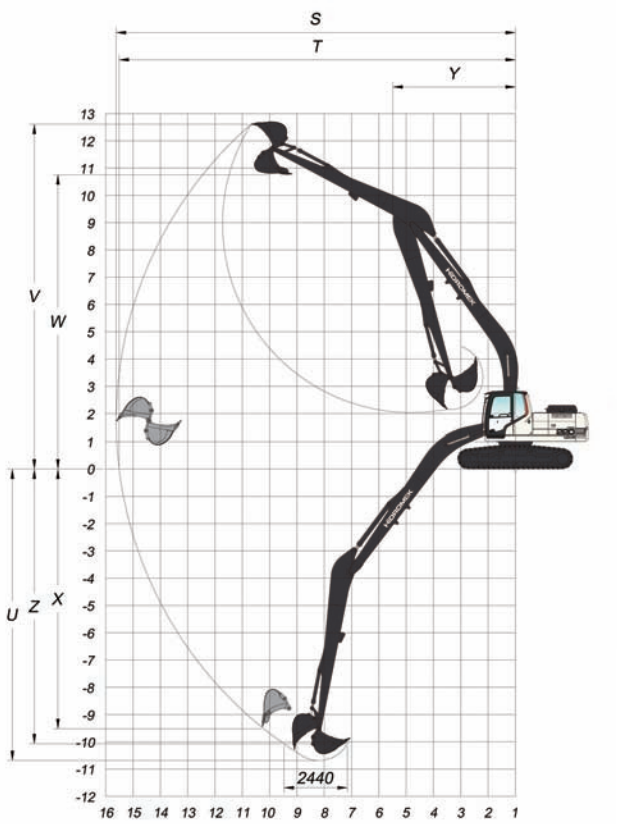

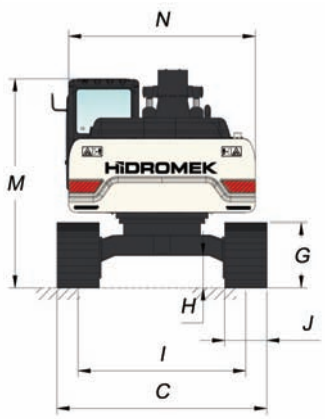

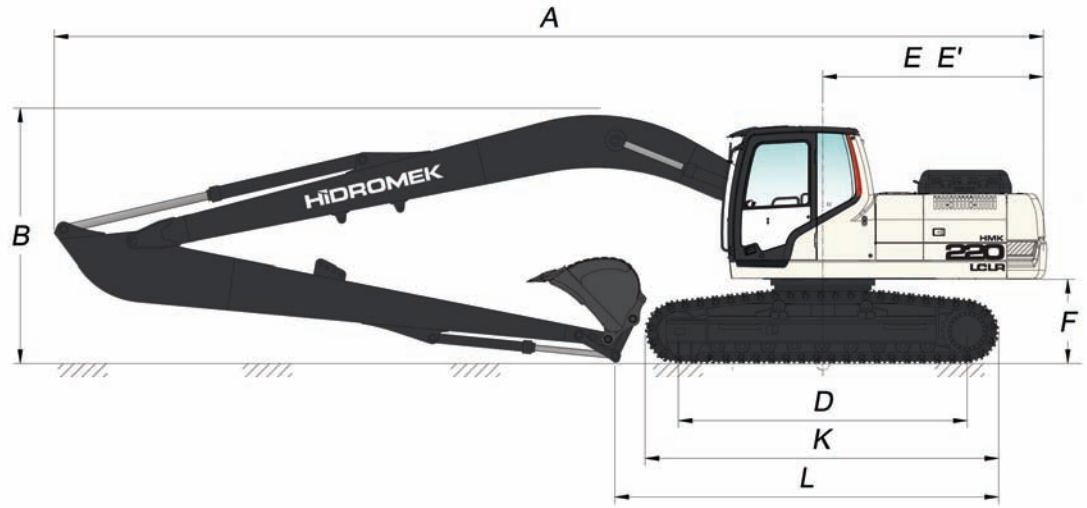

GENERAL DIMENSIONS

Boom Dimension	8.500 mm
Arm Dimension	6.100 mm
A - Overall Length	12.470 mm
B - Boom (Shipping) Height	3.200 mm
C - Lower Frame Width (Track Width)	2.990 / *3.090 / 3.190 mm
D - Track Base Length	3.640 mm
E - Counterweight Distance	2.890 mm
E´ - Countweight Turning Radius	2.920 mm
F - Upper Chasis to Ground Clearance	1.060 mm
G - Crawler Height	940 mm
H - Ground Clearance	470 mm
I - Track Gauge	2.390 mm
J - Shoe Width	600 / *700 / 800 mm
K - Lower Chasis Length (from shoe)	4.460 mm
M - Cab Height	2.985 mm
N - Upper Frame Width	2.660 mm

* Standard

WORKING DIMENSIONS

Boom Dimension	8.500 mm
Arm Dimension	6.100 mm
S - Maximum Reach Distance	15.170 mm
T - Maximum Reach at Ground Level	15.060 mm
U - Maximum Digging Depth	11.240 mm
V - Maximum Digging Height	13.170 mm
W - Maximum Unloading Height	10.850 mm
X - Maximum Vertical Wall Digging Depth	9.270 mm
Y - Minimum Swing Radius	3.520 mm
Z - Maximum Digging Depth (2440 mm level)	11.130 mm

* Standard

https://truckmanualshub.com/

DETAILS

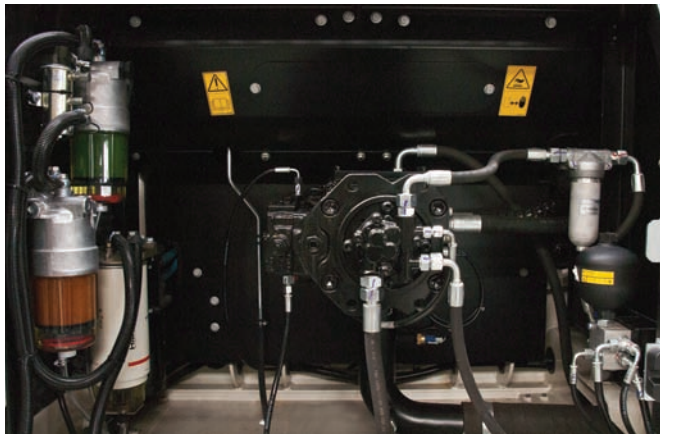

https://truckmanualshub.com/

Special Equipment List

- 2.4m arm
- Various size buckets
- Automatic lubrication system
- Rotator line
- Boom safety valve
- Arm safety valve
- Overload warning system
- Beacon lamp
- 700, 800 mm track
- Hydraulic breaker
- Hydraulic Quick Coupler
- Ripper
- Windscreen protective netting
- Headlights
- HİDROMEK Smart Link
- Rotational moving hydraulic shear installation

Standard Equipment List

- Radio/MP3
- Air conditioner
- Cab heating system
- Cab conforming to FOPS tests
- Computer connection port
- Oil and dust seal ring in chain pins
- Long life lubricating in rollers and direction wheel
- Fuel transfer pump
- Front air filter
- Double air filter
- Automatic idling
- Engine pre-heating facility
- Overheating, low engine pressure, air filter clogging indicators
- Battery charge warning system
- Hydraulic breaker line
- Camera
- Tool box
- Working ligth on counterweigth
- Additional working lamp at the front
- Additional working lamp at the rear

https://truckmanualshub.com/

HİDROMEK

www.hidromek.com

[EN] December 2016

Head Office
Ayaş Yolu 25. Km 1. Organize Sanayi Bölgesi Osmanlı Caddesi, No: 1
06935 Sincan - ANKARA/TURKEY
Telephone: +90 312 267 12 60 Fax: +90 312 267 12 39
Mail: export@hidromek.com.tr

HİDROMEK WEST
Address: C/De la Maquina 14, Polígono Industrial El Regás, 08850 – Gavá (Barcelona)
Tel: +34 93 638 84 65 Fax: +34 93 638 07 14
Mail: contact@hidromek.es

HİDROMEK RUS
Address: 72, Zhivopisnaya str., village Oktyabrskiy, Krasnodar, Russia, 350032
Tel: +7 861 290 3007 Mail: Hidromekrus@hidromek.ru

Hidromek Construction Equipment (Thailand) Ltd.
Hidromek Construction Equipment (Thailand) Ltd.
Address: Amata Nakorn Industrial Estate Phase 7, 700/669 Moo 1, T.Phanthong A.Phanthong, Chonburi 20160, Thailand
Tel: +66 38 447 349 Fax: +66 38 447 355

Your Local Distributor:

Warning

HİDROMEK has the right to modify the specifications and design of the model indicated on this brochure without prior notice