https://truckmanualshub.com/

ORIGINAL INSTRUCTIONS

OPERATOR'S MANUAL

E37C

Mini Excavator

Part number 90436684
1st edition English
January 2021

NEW HOLLAND
CONSTRUCTION

https://truckmanualshub.com/

Contents

1 GENERAL INFORMATION

Note to the Owner 1-1
Intended use 1-2
Electro-Magnetic Compatibility (EMC) 1-2
Telematics (optional) 1-2
Note to the Owner 1-3
Product identification 1-5
Operator's manual storage on the machine 1-8
Machine orientation 1-9
Machine components 1-10
Emissions overview 1-14

2 SAFETY INFORMATION

Signal word definitions 2-1
Safety rules - Utility precautions 2-2
Safety rules 2-3
Ecology and environment 2-12
Hand signals 2-13
Safety signs 2-17

3 CONTROLS AND INSTRUMENTS

Access to operator's platform

Door and steps 3-1

Operator's seat

Operator's seat 3-4

Forward controls

Forward controls 3-6
Windshield 3-13

Left-hand side controls

Left-hand side controls 3-14
Safety lock lever 3-16
Engine speed control 3-16
Emergency exit hammer 3-17
Windshield washer reservoir 3-18

Right-hand side controls

Right-hand side controls 3-19
Dozer blade control lever 3-22
Instrument cluster 3-24
Air conditioning control 3-29

https://truckmanualshub.com/

Ventilation and heating 3-31

Rearward controls
Storage compartment 3-33

Overhead controls
Cab internal lighting 3-34
Radio 3-35

Exterior controls
Side doors 3-46
Rear view mirrors 3-48
Battery disconnect switch 3-50
Fuel tank 3-51

4 OPERATING INSTRUCTIONS

Starting the unit
Anti-theft protection 4-1
Starting the engine 4-3
Bringing the machine up to operating temperature 4-5
Operating the machine in hot or cold weather 4-6
Operating the machine 4-7
Lowering the attachment in the event of a failure 4-11
Bucket replacement 4-12
Hydraulic control lever operating pattern 4-13
Caution while using rubber tracks 4-16

Stopping the unit
Stopping the engine 4-20

Moving the unit
Machine travel 4-21

Parking the unit
Parking the machine 4-27

5 TRANSPORT OPERATIONS

Road transport
Loading the machine onto a transport trailer 5-1

Preparing for road transport
Tie downs for shipping 5-3
Unloading the machine from a transport trailer 5-4

https://truckmanualshub.com/

Shipping transport

Handling the machine 5-5

Recovery transport

Towing the machine 5-7

6 MAINTENANCE

General information

Basic instructions 6-1
General specifications - Biodiesel fuels 6-4
Fluids and lubricants 6-6
Releasing pressure in the hydraulic system 6-10
Fuel system bleeding 6-15
Protecting the electronic and electrical systems during battery charging or welding 6-16

Maintenance planning

Maintenance chart 6-17

Break-in period

Tightening torques 6-19
Engine oil and filter 6-19
Fuel filter 6-19
Hydraulic oil return filter 6-19
Pilot line filter 6-19
Travel reduction gears 6-19
Boom swing cylinder 6-20
Grease points (Bucket) 6-20
Grease points (Boom and arm) 6-20
Grease points (Blade) 6-20

Every 10 hours

Engine oil level 6-21
Engine coolant level 6-22
Hydraulic oil level 6-23
Fuel filter water separator 6-24
Fan and alternator drive belt 6-25
Air-conditioning compressor drive belt 6-27

Every 50 hours

Grease points (Bucket) 6-28
Grease points (Blade) 6-29
Swing ring gear 6-31
Track tension 6-32
Fuel tank drain 6-34

https://truckmanualshub.com/

Every 100 hours

Fuel filter water separator 6-35

Every 250 hours

Battery 6-37
Swing bearing 6-40
Boom swing cylinder 6-41
Grease points (Boom and arm) 6-42
Tightening torques 6-43

Every 500 hours

Engine oil and filter 6-44
Fuel filter 6-46
Air cleaner 6-48
Radiator and coolers 6-51

Every 1000 hours

Hydraulic oil return filter 6-52
Pilot line filter 6-53
Travel reduction gears 6-54
Valve clearance 6-54
Injection nozzle 6-54

Every 2000 hours

Air cleaner 6-55
Engine coolant 6-58
Hydraulic oil suction filter 6-61
Hydraulic hoses 6-62
Valve seat 6-62
Injection timing 6-62
Injection pump 6-62
Biodegradable hydraulic oil 6-63

Every 5000 hours

Hydraulic oil 6-65

When necessary

Cab and working lights 6-67
Cab air filter 6-70
Fuel tank strainer 6-71
Control levers 6-72
Plastic and resin parts 6-72
Air-conditioning system 6-73

Fuse and relay locations

Fuses 6-76

https://truckmanualshub.com/

Storage

Preparing for storage 6-77
Periodic checks 6-78
Starting up the machine after storage 6-79

7 TROUBLESHOOTING

Fault code resolution

Engine - Troubleshooting 7-1
Electrical systems - Troubleshooting 7-2
Other systems - Troubleshooting 7-3

8 SPECIFICATIONS

Machine specifications 8-1
Dimensions 8-4
Weights 8-7

9 ACCESSORIES

Direct fit buckets 9-1
Klac type buckets 9-3
Standard buckets with mechanical coupler 9-4
Standard buckets with Hydraulic pin grabber coupler 9-6
Auxiliary hydraulic circuits 9-8
Hydraulic oil - breaker/auger 9-26
Quick coupling system - Klac type 9-27
Quick coupling system - Mechanical pin-grabber type 9-34
Quick coupling system - Hydraulic pin-grabber type 9-39
Load handling 9-47
Thumb bracket 9-51
Rotating beacon 9-52
Fire extinguisher 9-53

https://truckmanualshub.com/

1 - GENERAL INFORMATION

Note to the Owner

Improper operation of this machine can cause injury or death. Before using this machine, make certain that every operator:

- Is instructed in safe and proper use of the machine.
- Reads and understands the Manual(s) pertaining to the machine.
- Reads and understands ALL Safety Decals on the machine.
- Clears the area of other persons.
- Learns and practices safe use of machine controls in a safe, clear area before operating this machine on a job site.

It is your responsibility to observe pertinent laws and regulations and follow NEW HOLLAND CONSTRUCTION instructions on machine operation and maintenance.

Your machine has been designed and built to the highest standards of quality. It conforms to all current safety regulations. However, the risk of accidents can never be completely excluded. That is why it is essential to observe elementary safety rules and precautions.

Read this manual carefully, paying particular attention to the instructions concerning safety, operation and maintenance so as to avoid the risk of injury while operating or servicing the machine.

The standard attachments and tools of this machine are designed to carry out earthmoving and rehandling operations. If you want to use this machine to handle a load (pipes, culverts, formwork, etc.), make sure that it is designed to carry out this kind of work. For this type of application, the machine must be equipped with safety valves, an overload indicator, a load handling chart corresponding to the type of machine and its attachment, and a load fixing point. All legal requirements must also be strictly observed.

Do not use this machine for any application or purpose other than those described in this manual. If the machine is to be used for work involving the use of special attachments, accessories, or equipment, consult your NEW HOLLAND CONSTRUCTION Dealer in order to make sure that any adaptations or modifications made are in keeping with the machine's technical specifications and with prevailing safety requirements.

Any modification or adaptation which is not approved by NEW HOLLAND CONSTRUCTION may invalidate the machine's initial conformity with safety requirements.

The machine must undergo regular inspections, the frequency of which varies according to the type of use. Consult your NEW HOLLAND CONSTRUCTION Dealer.

NOTICE: *The engine and fuel system on your machine is designed and built to government emissions standards. Tampering by dealers, customers, operators and users is STRICTLY PROHIBITED BY LAW. Failure to comply could result in government fines, rework charges, invalid warranty, legal action and possible confiscation of the machine until rework to original condition is completed. Engine service and/or repairs must be done by a certified technician only.*

Your NEW HOLLAND CONSTRUCTION Dealer is at your disposal for any further information. They will also provide any after-sales service you may require, and genuine NEW HOLLAND CONSTRUCTION spare parts, your guarantee of quality and match.

NEW HOLLAND CONSTRUCTION customer assistance is also available. Go to www.newholland.com

You can obtain manuals on the operation, maintenance and repair of your machine from your NEW HOLLAND CONSTRUCTION Dealer. To ensure quick and efficient service, consult your NEW HOLLAND CONSTRUCTION Dealer for assistance in ordering the correct manuals for your machine.

Always give the type and the Product Identification Number (PIN) of your machine so that your NEW HOLLAND CONSTRUCTION Dealer can supply you with the right manuals for your machine.

NEW HOLLAND CONSTRUCTION reserves the right to make changes in the specification and design of the machine without prior notice and without incurring any obligation to modify units previously sold.

https://truckmanualshub.com/

The description of the models shown in this manual has been made in accordance with the technical specifications known as of the date of design of this document.

All data given in this manual is subject to production variations. Dimensions and weights are provided with approximate values and the machine fitting shown in the illustrations may not correspond with standard models. For precise information on specific machine models and versions, please consult your NEW HOLLAND CONSTRUCTION Dealer.

Intended use

⚠ WARNING

IMPROPER OPERATION OF THIS MACHINE CAN CAUSE DEATH OR SERIOUS INJURY.
MAKE SURE THAT EVERY OPERATOR:
-learns and practices the safe use of machine controls in a safe, clear area before operating the machine on a job site.
-clears the work area of all bystanders.
-observes pertinent laws and regulations.
-follows the instructions in this operator's manual.
Failure to comply could result in death or serious injury.

W0189A

NOTICE: *do not use the excavator for operations which are foreign to its specifications and not included in this operator's manual. NEW HOLLAND CONSTRUCTION and NEW HOLLAND CONSTRUCTION dealer are not responsible for damage caused by improper use.*

The excavator has been designed to carry out digging and earth-moving operations through the use of a bucket. Operations that involve the use of hydraulic hammers are also possible. Other operations, such as moving suspended loads, are only possible if the specific variant approved by the NEW HOLLAND CONSTRUCTION is present.

Using the excavator and its equipment for different operations, such as towing, transporting and lifting people, is considered inappropriate and is prohibited.

Electro-Magnetic Compatibility (EMC)

Interference may arise as a result of add-on equipment that may not necessarily meet the required standards. As such interference can result in serious malfunction of the unit and/or create unsafe situations, you must observe the following:

- The maximum power of emission equipment (radio, telephones, etc.) must not exceed the limits imposed by the national authorities of the country where you use the machine
- The electro-magnetic field generated by the add-on system should not exceed **24 V/m** at any time and at any location in the proximity of electronic components
- The add-on equipment must not interfere with the functioning of the on board electronics

Failure to comply with these rules will render the NEW HOLLAND CONSTRUCTION warranty null and void.

Telematics (optional)

NOTE: *the NEW HOLLAND CONSTRUCTION**FleetForce™** website (www.newhollandfleetforce.com) will not be accessible until the NEW HOLLAND CONSTRUCTION**FleetForce™** subscription for this machine is registred by an authorized NEW HOLLAND CONSTRUCTION dealer. Contact an authorized NEW HOLLAND CONSTRUCTION for details.*

This machine can be equipped with a telematics system. This is an asset-monitoring system that combines Internet, cellular, and GPS technologies. A transponder unit is mounted on the equipment that wirelessly communicates with the user interface NEW HOLLAND CONSTRUCTION**FleetForce™** at www.newhollandfleetforce.com. Using cellular technology, the transponder can send equipment data, including location, on/off status, usage and production metrics, diagnostic data, movement alarms, and unauthorized usage to the interface. The system will help cut costs and keep accurate records. See the furnished guide for operating your telematics system.

https://truckmanualshub.com/

Note to the Owner

Introduction to this manual

This manual gives information about the use of your NEW HOLLAND CONSTRUCTION machine as intended and under the conditions foreseen by NEW HOLLAND CONSTRUCTION during normal operation, routine service, and maintenance.

This manual does not contain all the information that relates to periodic service, conversions, and repairs that only trained service personnel can perform. Some of these activities may require appropriate facilities, technical skills, and/or tools that NEW HOLLAND CONSTRUCTION does not supply with the machine.

The manual contains the chapters as shown on the Contents pages. See the Index at the end of this manual to locate specific items about your NEW HOLLAND CONSTRUCTION machine.

Normal operation

Normal operation consists of the use of this machine for the purpose NEW HOLLAND CONSTRUCTION intends by an operator that:

- Is familiar with the machine and any mounted equipment or towed equipment
- Complies with the information on operation and safe practices as specified by NEW HOLLAND CONSTRUCTION in this manual and by the signs on the machine

Normal operation includes:

- Preparation and storage of the machine
- Addition and removal of ballast
- Connection and disconnection of mounted equipment and/or towed equipment
- Adjustment and configuration of the machine and equipment for the specific conditions of the job site, field, and/or crop
- Movement of components into and out of working positions

Routine service and maintenance

Routine service and maintenance consists of the daily activities necessary to maintain the proper machine function. The operator must:

- Be familiar with the machine characteristics
- Comply with the information on routine service and safe practices as specified by NEW HOLLAND CONSTRUCTION in this manual and by the signs on the machine

Routine service can include:

- Fueling
- Cleaning
- Washing
- Topping up fluid levels
- Greasing
- Replacing consumable items such as light bulbs

Periodic service, conversions, and repairs

Periodic service consists of activities that are necessary to maintain the expected life of the NEW HOLLAND CONSTRUCTION machine. These activities have defined intervals.

Trained service personnel familiar with the machine characteristics must perform these activities at the defined intervals. Trained service personnel must comply with the information on periodic service and safe practices as partly specified by NEW HOLLAND CONSTRUCTION in this manual and/or other company literature.

Periodic service includes:

- Oil change service for the engine, hydraulic circuits, or transmission
- Periodic exchange of other substances or components as required

Conversion activities rebuild the NEW HOLLAND CONSTRUCTION machine in a configuration that is appropriate for a specific job site, crop, and/or soil conditions. Conversion activities must be done:

- By trained service personnel familiar with the machine characteristics
- By trained service personnel that comply with the information on conversion as partly specified by NEW HOLLAND CONSTRUCTION in this manual, assembly instructions, and/or other company literature

Repair activities restore proper function to a NEW HOLLAND CONSTRUCTION machine after a failure or degradation of performance. Dismantling activities occur during the scrapping and/or dismantling of the machine.

Trained service personnel familiar with the machine characteristics must perform these activities. Trained service personnel must comply with the information for repair as specified by NEW HOLLAND CONSTRUCTION in the service manual.

Before you operate

Read this manual before you start the engine or operate this NEW HOLLAND CONSTRUCTION machine.
Contact your NEW HOLLAND CONSTRUCTION dealer if:

- You do not understand any information in this manual
- You need more information

https://truckmanualshub.com/

- You need assistance

All persons training to operate, or who will operate this NEW HOLLAND CONSTRUCTION machine should be old enough to possess a valid local vehicle operating permit (or meet other applicable local age requirements). These persons must demonstrate the ability to operate and service the NEW HOLLAND CONSTRUCTION machine in a correct and safe manner.

https://truckmanualshub.com/

Product identification

Your machine is a hydraulic excavator. It consists of an undercarriage fitted with tracks and a swing bearing which supports the upper-structure frame. The upper-structure frame supports the attachment at the front end of the machine, plus the engine, hydraulics and the cab/canopy. When the operator works the controls, the engine-driven pump delivers hydraulic fluid to the control valves. The control valves distribute the hydraulic fluid to the various cylinders and hydraulic motors employed. A cooling system maintains the hydraulic fluid at normal operating temperature.

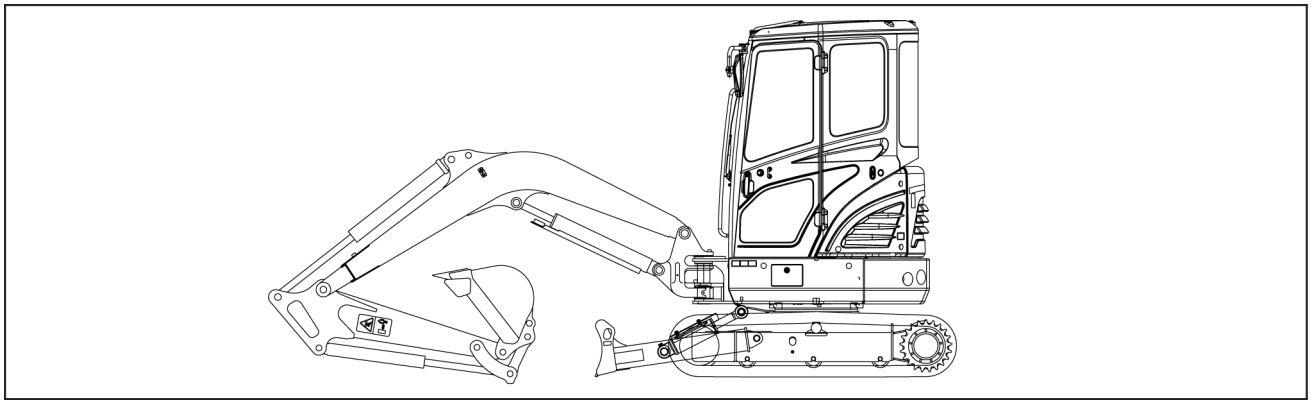

SMIL18MEX0107EA 1

Cab version

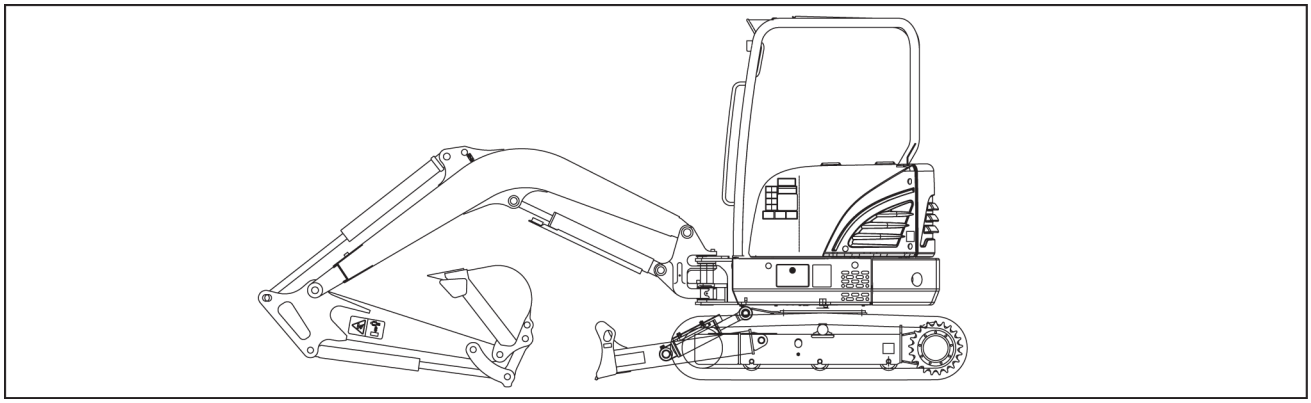

SMIL18MEX0108EA 2

Canopy version

When ordering parts, obtaining information, or seeking assistance, always supply your NEW HOLLAND CONSTRUCTION Dealer with the type and Product Identification Number (PIN) of your machine or accessories.

Write the following in the spaces below:

- Machine Type
- Machine PIN
- Machine year of manufacture
- Serial numbers of hydraulic and mechanical components

https://truckmanualshub.com/

Machine

The machine Product Identification Number (PIN) plate **(A)** is located in the front left-hand side of the upper frame.

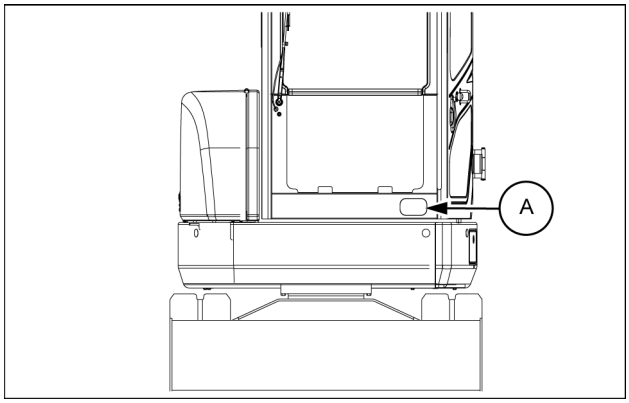

SMIL19MEX0675AB 3

(1) Product Identification Number (PIN)_____

(2) Type/Model & designation_____

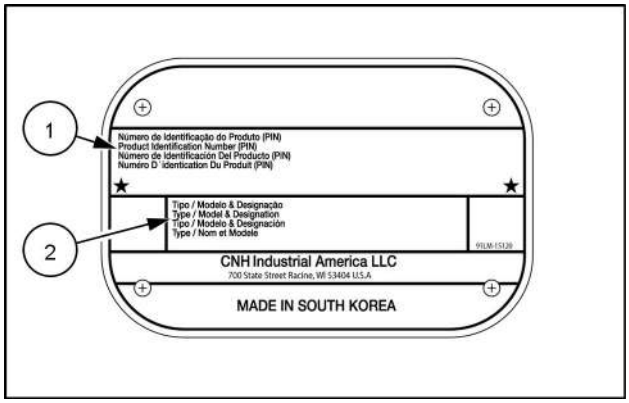

SMIL16MEX3219AA 4

Engine

The engine serial number **(A)** is located on the engine name plate.

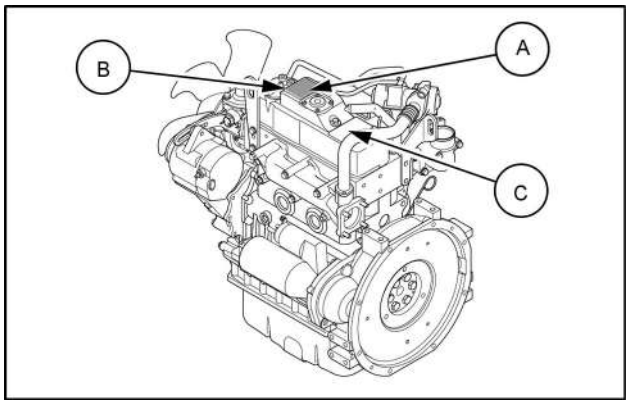

SMIL16MEX1461AB 5

ID label

The ID label **(B)** is attached on the cylinder head cover.

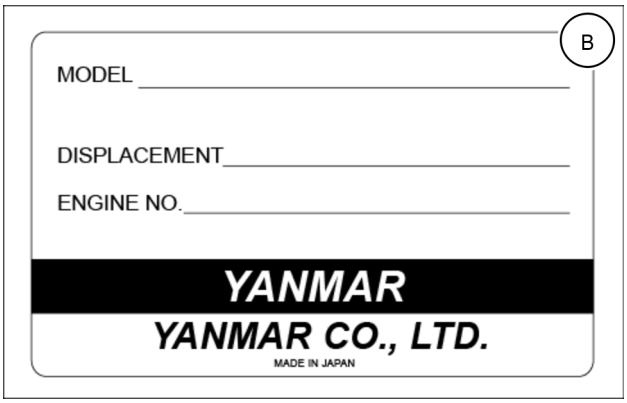

SMIL16MEX1290AA 6

https://truckmanualshub.com/

Emission decal

The emission decal **(C)** is located on the engine. A further emission decal is located inside the engine compartment or inside the cab. It describes important details for using the engine. Make sure to read before using the engine. Also, the emission decal describes details regarding the engine only.

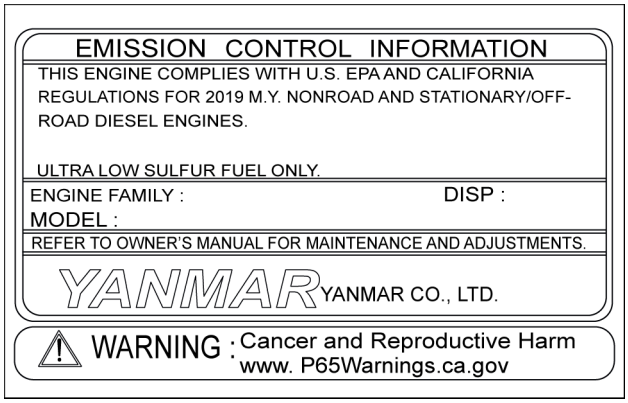

SMIL19MEX0700AA 7

Roll Over Protective Structure (ROPS)

(1) Machine Models

(2) Product Part Number

(3) Maximum machine mass

(4) ISO compliant

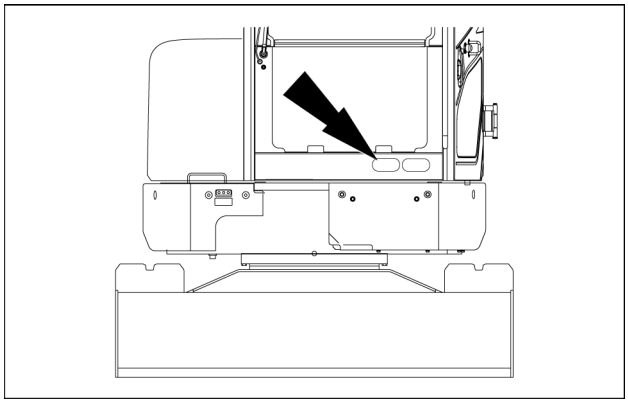

SMIL19MEX0677AA 8

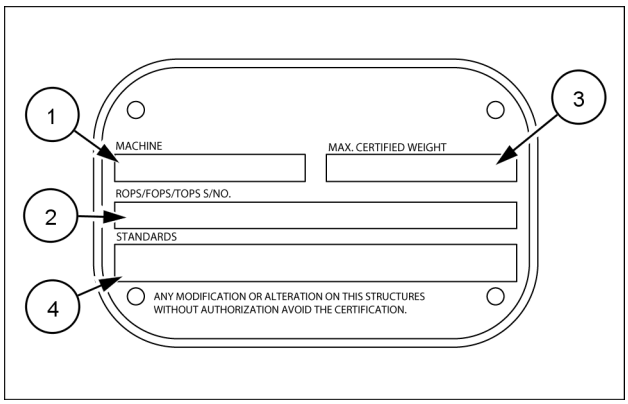

SMIL18MEX0422AA 9

Component serial numbers

Hydraulic pump:

Swing reduction gear:

Travel reduction gears:

Travel control valve:

Attachment control valve:

Swing control valve:

https://truckmanualshub.com/

Operator's manual storage on the machine

Always keep the manual in the location provided for that purpose (below the operator’s seat, in the storage compartment).

NOTE: *for the canopy version, you can store the manual in the storage compartment located behind the operator's seat.*

Make sure it is always complete and in good condition. If you wish to obtain extra copies, or copies in languages other than that of the country of use, consult your NEW HOLLAND CONSTRUCTION Dealer.

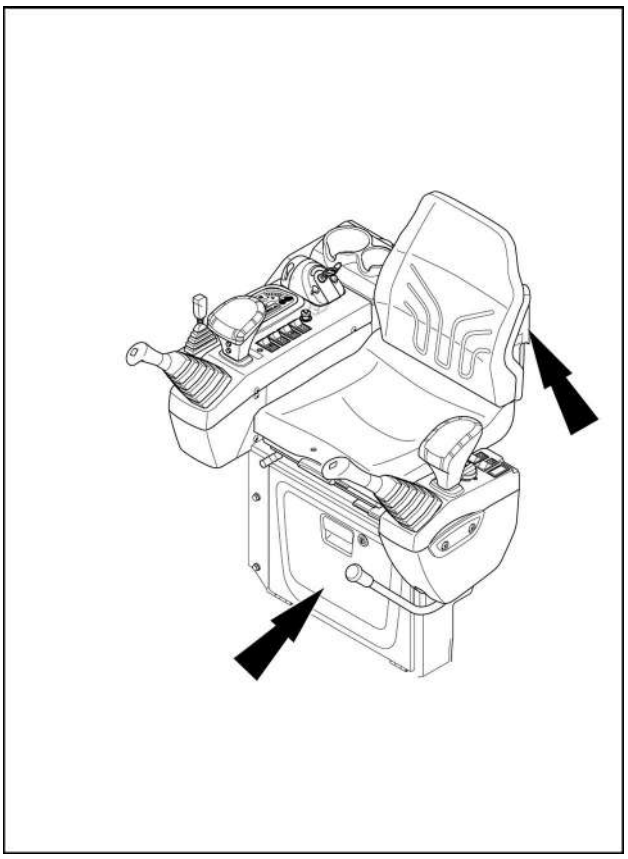

SMIL19MEX0757BA 1

https://truckmanualshub.com/

Machine orientation

The terms "Right-hand", "Left-hand", "Front" and "Rear" are used in this manual to indicate the sides as they are seen from the operator's seat when the travel motors are positioned at the rear and the operator is facing the direction in which the machine advances (forward).

A. Front

B. Rear

C. Right-hand side

D. Left-hand side

E. Travel motor

F. Idler wheel

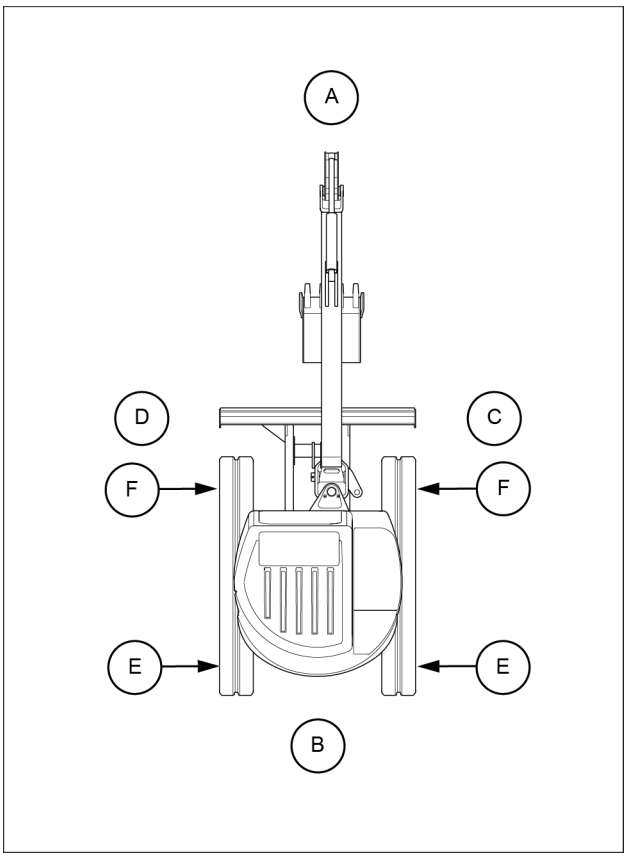

SMIL16MEX0357BB 1

https://truckmanualshub.com/

Machine components

Standard version

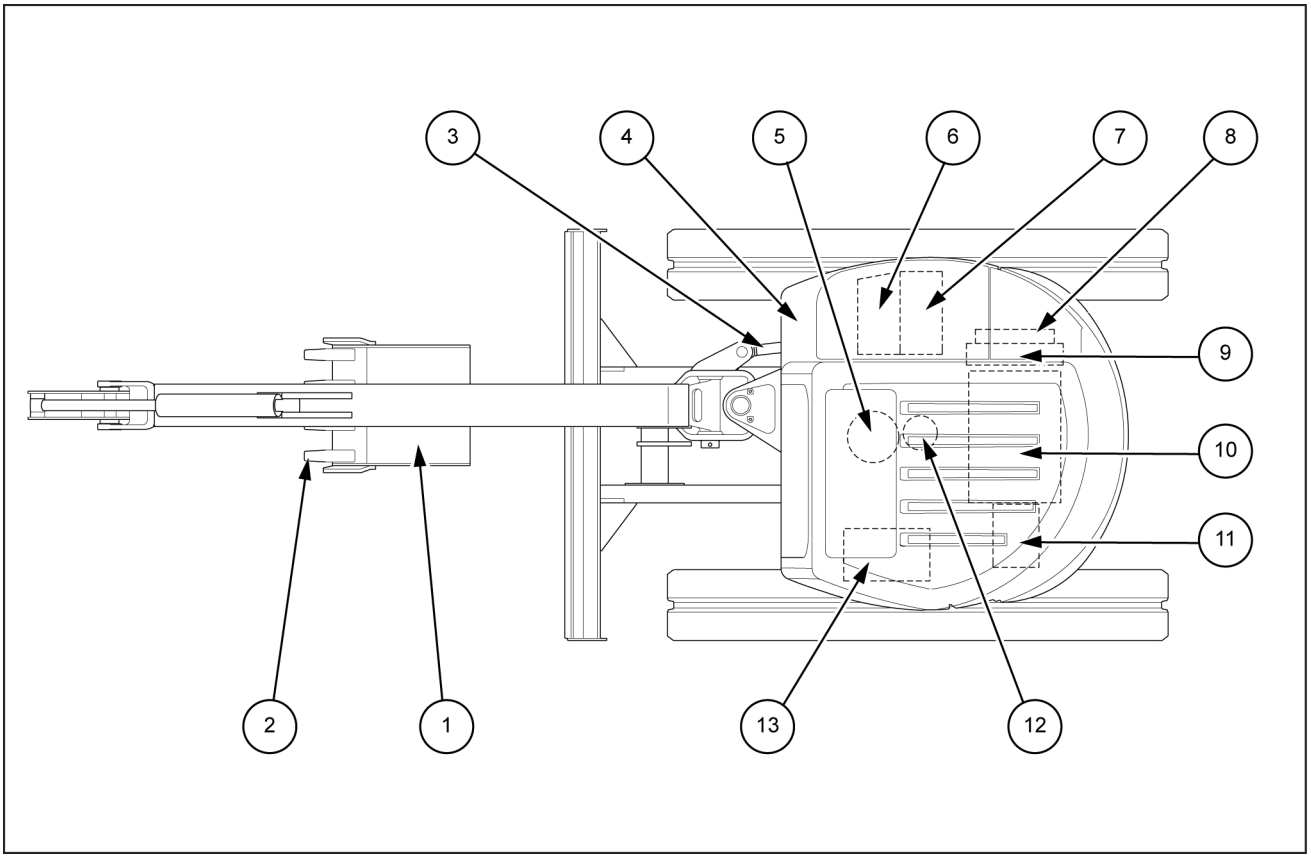

SMIL18MEX0105FB 1

1. Bucket
2. Bucket tooth
3. Boom swing cylinder
4. Tool box
5. Swing motor
6. Fuel tank
7. Hydraulic oil tank
8. Oil cooler
9. Radiator
10. Engine
11. Main pump
12. Hydraulic central joint
13. Main control valve

https://truckmanualshub.com/

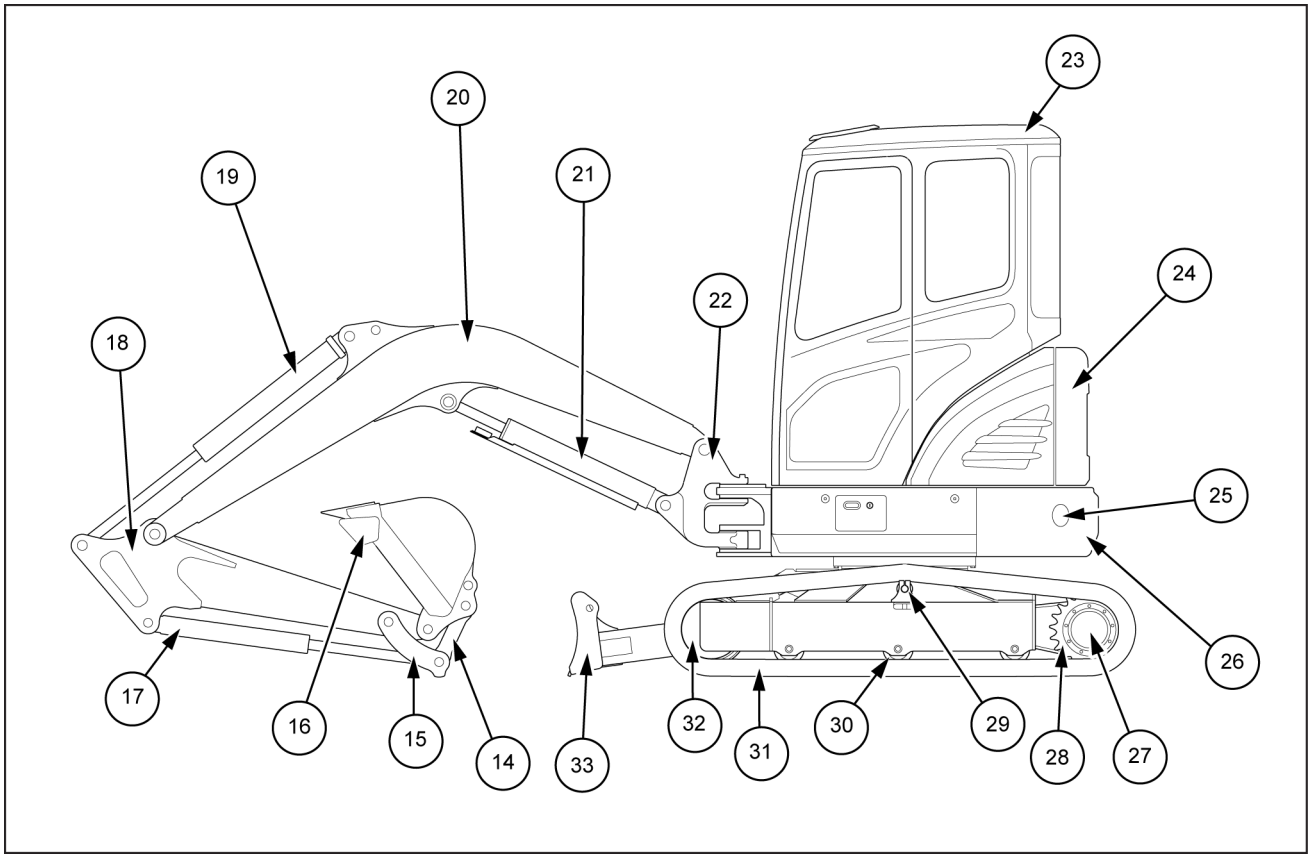

SMIL16MEX0047FB 2

14. Bucket control rod
15. Bucket control link
16. Side cutter
17. Bucket cylinder
18. Dipper
19. Dipper cylinder
20. Boom
21. Boom cylinder
22. Swing post
23. Cab/Canopy
24. Muffler
25. Muffler pipe
26. Counterweight
27. Travel motor
28. Sprocket
29. Upper roller
30. Lower roller
31. Track
32. Idler wheel
33. Dozer blade

Angle blade version

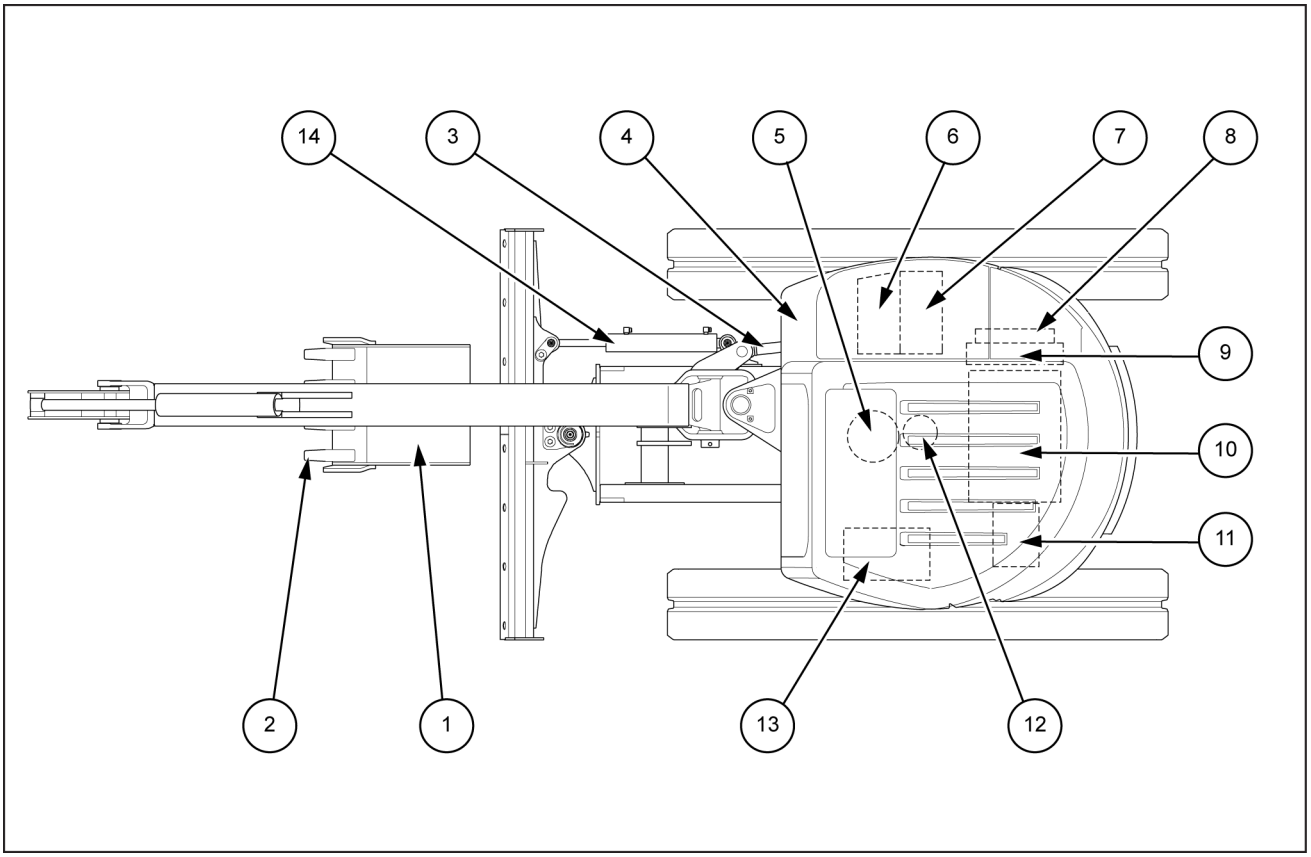

SMIL18MEX0106FB 3

1. Bucket
2. Bucket tooth
3. Boom swing cylinder
4. Tool box
5. Swing motor
6. Fuel tank
7. Hydraulic oil tank
8. Oil cooler
9. Radiator
10. Engine
11. Main pump
12. Hydraulic central joint
13. Main control valve
14. Angle blade cylinder

https://truckmanualshub.com/

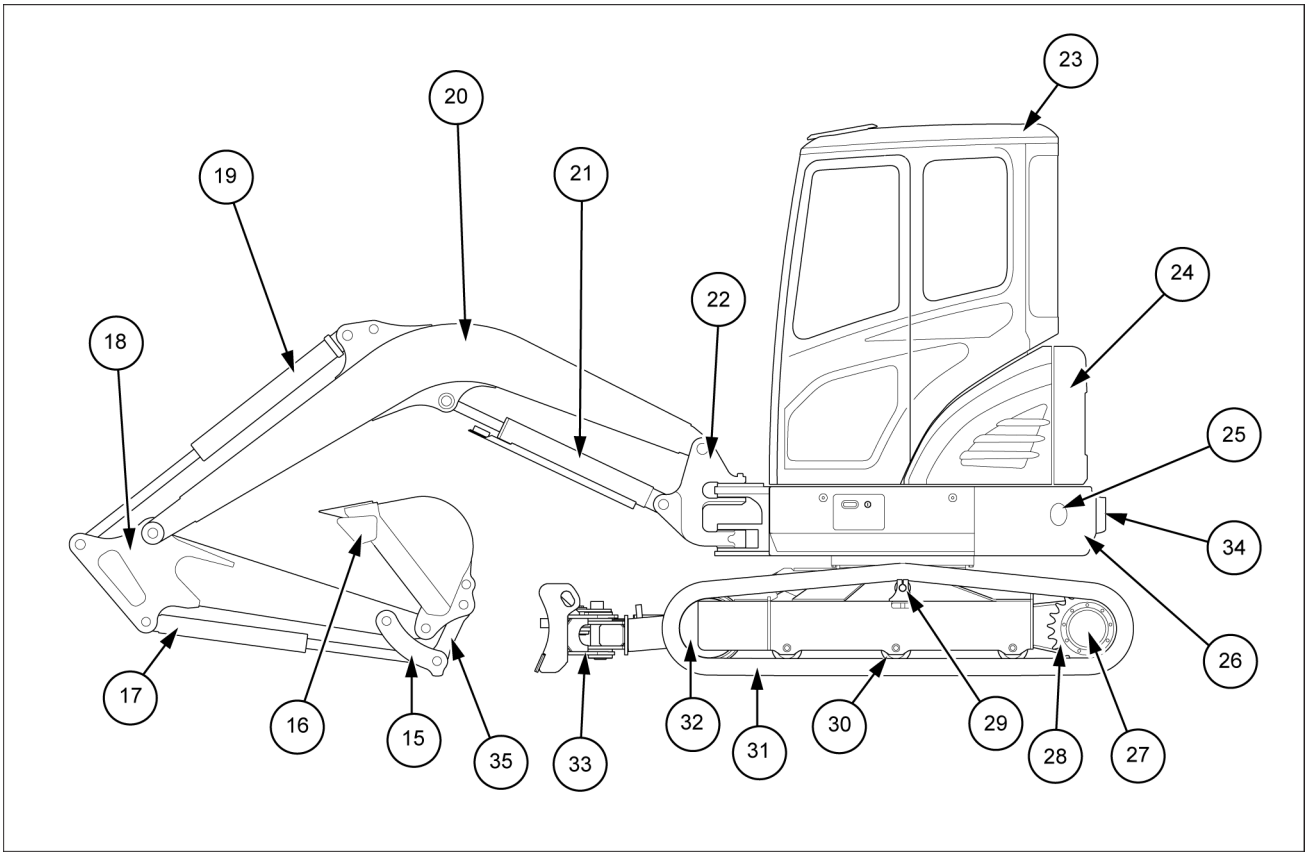

SMIL19MEX0422FB 4

15. Bucket control link
16. Side cutter
17. Bucket cylinder
18. Dipper
19. Dipper cylinder
20. Boom
21. Boom cylinder
22. Swing post
23. Cab/Canopy
24. Muffler
25. Muffler pipe
26. Counterweight
27. Travel motor
28. Sprocket
29. Upper roller
30. Lower roller
31. Track
32. Idler wheel
33. Angle dozer blade
34. Additional counterweight
35. Bucket control rod

https://truckmanualshub.com/

Emissions overview

YANMAR CO., LTD. EMISSION CONTROL SYSTEM WARRANTY - USA ONLY

Your Warranty Rights and Obligations:

The California Air Resources Board (CARB), the United State Environmental Protection Agency (EPA) and YANMAR CO., LTD. hereafter referred to as YANMAR, are pleased to explain the emission control system warranty on your 2016, 2017, or 2018 model year industrial compression-ignition engine. California-certified, new off-road compression-ignition engines must be designed, built and equipped to meet the State's stringent anti-smog standards. In the remaining forty nine (49) states, new non-road compression-ignition engines must be designed, built and equipped to meet the United States EPA emissions standards. YANMAR must warrant the emission control system on your engine for the periods of time listed below provided there has been no abuse, neglect or improper maintenance of your engine.

Your emission control system may include parts such as the fuel injection system, the air induction system, the electronic control system, EGR (Exhaust Gas Recirculation) system and the diesel particulate filter system. Also included may be hoses, belts, connectors and other emission-related assemblies.

Where a warrantable condition exists, YANMAR will repair your off-road compression-ignition engine at no charge to you including diagnosis, parts and labor.

Manufacturer's Warranty Period:

2016, 2017, or 2018 model year off-road compression-ignition engines are warranted for the periods listed below. If any emission-related part on your engine is found to be defective during the applicable warranty period, the part will be repaired or replaced by YANMAR.

If your engine is certified as	And its maximum power is	And its rated speed is	Then its warranty period is
Variable speed or constant speed	Less than **19.0 kW** (**25.8 Hp**)	Any speed	1,500 hours or two (2) years whichever comes first. In the absence of a device to measure the hours of use, the engine has a warranty period of two (2) years.
Constant speed	**19.0 – 37.0 kW** (**25.8 – 50.3 Hp**)	**3000 RPM** or higher	1,500 hours or two (2) years whichever comes first. In the absence of a device to measure the hours of use, the engine has a warranty period of two (2) years.
Constant speed	**19.0 – 37.0 kW** (**25.8 – 50.3 Hp**)	Less than **3000 RPM**	3,000 hours or five (5) years whichever comes first. In the absence of a device to measure the hours of use, the engine has a warranty period of five (5) years.
Variable speed	**19.0 – 37.0 kW** (**25.8 – 50.3 Hp**)	Any speed	3,000 hours or five (5) years whichever comes first. In the absence of a device to measure the hours of use, the engine has a warranty period of five (5) years.
Variable speed or constant speed	Greater than **37.0 kW** (**50.3 Hp**)	Any speed	3,000 hours or five (5) years whichever comes first. In the absence of a device to measure the hours of use, the engine has a warranty period of five (5) years.

Warranty Coverage:

This warranty is transferable to each subsequent purchaser for the duration of the warranty period. YANMAR recommends that repair or replacement of any warranted part will be performed at an authorized YANMAR dealer.

Warranted parts not scheduled for replacement as required maintenance in the owner's manual shall be warranted for the warranty period. Warranted parts scheduled for replacement as required maintenance in the owner's manual are warranted for the period of time prior to the first scheduled replacement. Any warranted parts scheduled for replacement as required maintenance that are repaired or replaced under warranty shall be warranted for the remaining period of time prior to the first scheduled replacement. Any part not scheduled for replacement that is repaired or replaced under warranty shall be warranted for the remaining warranty period.

During the warranty period, YANMAR is liable for damages to other engine components caused by the failure of any warranted part during the warranty period.

https://truckmanualshub.com/

Any replacement part which is functionally identical to the original equipment part in all respects may be used in the maintenance or repair of your engine, and shall not reduce YANMAR's warranty obligations. Add-on or modified parts that are not exempted may not be used. The use of any non-exempted add-on or modified parts shall be grounds for disallowing a warranty.

Warranted Parts:

This warranty covers engine components that are a part of the emission control system of the engine as delivered by YANMAR to the original retail purchaser. Such components may include the following:

A. Fuel injection system (including Altitude compensation system)

B. Cold start enrichment system

C. Intake manifold and Air intake throttle valve

D. Turbocharger systems

E. Exhaust manifold and exhaust throttle valve

F. Positive crankcase ventilation system

G. Charge Air Cooling systems (only 3TNV86CHT, 4TNV86CHT, 4TNV94CHT)

H. Exhaust Gas Recirculation (EGR) systems

I. Exhaust gas after treatment (diesel particulate filter system)

J. Electronic Control units, sensors, solenoids and wiring harnesses used in above systems

K. Hoses, belts, connectors and assemblies used in above systems

L. Emission Control Information Labels

Since emissions related parts may vary slightly between models, certain models may not contain all of these parts and other models may contain the functional equivalents.

Exclusions:

Failures other than those arising from defects in material or workmanship are not covered by this warranty. The warranty does not extend to the following: malfunctions caused by abuse, misuse, improper adjustment, modification, alteration, tampering, disconnection, improper or inadequate maintenance, or use of non-recommended fuels and lubricating oils; accident-caused damage and replacement of expendable items made in connection with scheduled maintenance. YANMAR disclaims any responsibility for incidental or consequential such as loss of time, inconvenience, loss of use of equipment/engine or commercial loss.

Owner's Warranty Responsibilities:

As the off-road compression-ignition engine owner, you are responsible for the performance of the required maintenance listed in your owner's manual. YANMAR recommends that you retain all documentation, including receipts, covering maintenance on your off-road compression-ignition engine, but YANMAR cannot deny warranty solely for the lack of receipts, or for your failure to ensure the performance of all scheduled maintenance.

YANMAR may deny your warranty coverage if your off-road compression-ignition engine or a part has failed due to abuse, neglect, improper maintenance or unapproved modifications.

Your engine is designed to operate on diesel fuel only. Use of any other fuel may result in your engine no longer operating in compliance with CARB and EPA emissions requirements.

You are responsible for initiating the warranty process. You are responsible for presenting your engine to an authorized YANMAR dealer or distributor as soon as a problem exists. The warranty repairs should be completed by the dealer as expeditiously as possible. If you have any questions regarding your warranty rights and responsibilities, or would like information on the nearest YANMAR dealer or authorized service center, you should contact YANMAR America Corporation.

Website: https://www.yanmar.com
E-mail: CS_support@yanmar.com
Toll free telephone number: 1-800-872-2867, 1-855-416-7091

https://truckmanualshub.com/

What the Emergency Stationary Type Engine Owner must Do:

The engines for emergency stationary type generators certified by Federal Law (40 CFR Part60) are limited to emergency use only, and the operation for maintenance checks and verification test for functions is required. The total operating hours for maintenance and verification test for functions should not exceed 100 hours per year. However, there is no limitation on the operating hours for emergency use. Keep a log of the number of hours the engine is operated for both emergency use and non-emergency use. Also, note the reason for the operation.

https://truckmanualshub.com/

2 - SAFETY INFORMATION

Signal word definitions

Personal safety

This is the safety alert symbol. It is used to alert you to potential personal injury hazards. Obey all safety messages that follow this symbol to avoid possible death or injury.

Throughout this manual you will find the signal words DANGER, WARNING, and CAUTION followed by special instructions. These precautions are intended for the personal safety of you and those working with you.

Read and understand all the safety messages in this manual before you operate or service the machine.

⚠ DANGER indicates a hazardous situation that, if not avoided, will result in death or serious injury.

⚠ WARNING indicates a hazardous situation that, if not avoided, could result in death or serious injury.

⚠ CAUTION indicates a hazardous situation that, if not avoided, could result in minor or moderate injury.

FAILURE TO FOLLOW DANGER, WARNING, AND CAUTION MESSAGES COULD RESULT IN DEATH OR SERIOUS INJURY.

Machine safety

NOTICE: *Notice indicates a situation that, if not avoided, could result in machine or property damage.*

Throughout this manual you will find the signal word Notice followed by special instructions to prevent machine or property damage. The word Notice is used to address practices not related to personal safety.

Information

NOTE: *Note indicates additional information that clarifies steps, procedures, or other information in this manual.*

Throughout this manual you will find the word Note followed by additional information about a step, procedure, or other information in the manual. The word Note is not intended to address personal safety or property damage.

https://truckmanualshub.com/

Safety rules - Utility precautions

YOU MUST FOLLOW safety precautions when you work near buried utility lines.

During operation, it is likely that you will be working around or near buried utility lines that may include, but are not limited to:

- Electrical power line
- Gas line
- Water line
- Communication line - telephone or cable television
- Sewer line

NOTE: *Before construction work begins it is your responsibility to be aware of all utility lines in the area of your project and to avoid them.*

ALWAYS have all local utility companies mark the location of their lines.

In U.S.A. and Canada call one of many One Call System Director services. If you do not know the local number, call the national number (U.S.A. and Canada only): 1-888-258-0808. This number will direct you to the state or regional utility that assists with excavation activity.

NOTE: *Check with local authorities for laws, regulations, and/or strict penalties requiring you to locate and avoid existing utilities.*

Call all utility companies before you perform any machine operation

After you locate any buried utility lines, carefully dig a hole to the utility line by hand and/or with automatic vacuum equipment. Verify the location and depth of the line.

Where applicable, know the utility color code.

Electric	Red
Gas, Oil, or Petroleum	Yellow
Communication, Telephone, Television	Orange
Water	Blue
Sewer	Green or Brown
Proposed Excavation	White
Surveying	Pink
Reclaimed Water and Slurry	Purple

Coordinate all excavation activity with the proper authorities and professionals before beginning.

https://truckmanualshub.com/

Safety rules

General safety rules

Use caution when you operate the machine on slopes. Raised equipment, full tanks and other loads will change the center of gravity of the machine. The machine can tip or roll over when near ditches and embankments or uneven surfaces.

Never permit anyone other than the operator to ride on the machine.

Never operate the machine under the influence of alcohol or drugs, or while you are otherwise impaired.

When digging or using ground-engaging attachments, be aware of buried cables. Contact local utilities to determine the locations of services.

Pay attention to overhead power lines and hanging obstacles. High voltage lines may require significant clearance for safety.

Hydraulic oil or diesel fuel leaking under pressure can penetrate the skin, causing serious injury or infection.

- DO NOT use your hand to check for leaks. Use a piece of cardboard or paper.
- Stop the engine, remove the key, and relieve the pressure before you connect or disconnect fluid lines.
- Make sure that all components are in good condition. Tighten all connections before you start the engine or pressurize the system.
- If hydraulic fluid or diesel fuel penetrates the skin, seek medical attention immediately.
- Continuous long term contact with hydraulic fluid may cause skin cancer. Avoid long term contact and wash the skin promptly with soap and water.

Keep clear of moving parts. Loose clothing, jewelry, watches, long hair, and other loose or hanging items can become entangled in moving parts.

Wear protective equipment when appropriate.

DO NOT attempt to remove material from any part of the machine while it is being operated or while components are in motion.

Make sure that all guards and shields are in good condition and properly installed before you operate the machine. Never operate the machine with shields removed. Always close access doors or panels before you operate the machine.

Dirty or slippery steps, ladders, walkways, and platforms can cause falls. Make sure these surfaces remain clean and clear of debris.

A person or pet within the operating area of a machine can be struck or crushed by the machine or its equipment. DO NOT allow anyone to enter the work area.

Raised equipment and/or loads can fall unexpectedly and crush persons underneath. Never allow anyone to enter the area underneath raised equipment during operation.

Never operate the engine in enclosed spaces as harmful exhaust gases may build up.

Before you start the machine, be sure that all controls are in neutral or park lock position.

Start the engine only from the operator's seat. If you bypass the safety start switch, the engine can start with the transmission in gear. Do not connect or short across terminals on the starter solenoid. Attach jumper cables as described in the manual. Starting in gear may cause death or serious injury.

Always keep windows, mirrors, all lighting clean to provide the best possible visibility while you operate the machine.

Operate controls only when seated in the operator's seat, except for those controls expressly intended for use from other locations.

Before you leave the machine:

1. Park the machine on a firm, level surface.
2. Lower the attachment to the ground.
3. Put all controls in neutral position.
4. Place the gate lock lever in central position.
5. Turn off the engine and remove the key.

General maintenance safety

Keep the area used for servicing the machine clean and dry. Clean up spilled fluids.

Service the machine on a firm, level surface.

Install guards and shields after you service the machine.

Close all access doors and install all panels after servicing the machine.

Do not attempt to clean, lubricate, clear obstructions, or make adjustments to the machine while it is in motion or while the engine is running.

Always make sure that working area is clear of tools, parts, other persons and pets before you start operating the machine.

https://truckmanualshub.com/

Unsupported hydraulic cylinders can lose pressure and drop the equipment, causing a crushing hazard. Do not leave equipment in a raised position while parked or during service, unless the equipment is securely supported.

Jack or lift the machine only at jack or lift points indicated in this manual.

Incorrect towing procedures can cause accidents. When you tow a disabled machine follow the procedure in this manual. Use only rigid tow bars.

Stop the engine, remove the key, and relieve pressure before you connect or disconnect fluid lines.

Stop the engine and remove the key before you connect or disconnect electrical connections.

Scalding can result from incorrect removal of coolant caps. Cooling systems operate under pressure. Hot coolant can spray out if you remove a cap while the system is hot. Allow the system to cool before you remove the cap. When you remove the cap, turn it slowly to allow pressure to escape before you completely remove the cap.

Replace damaged or worn tubes, hoses, electrical wiring, etc.

The engine, transmission, exhaust components, and hydraulic lines may become hot during operation. Take care when you service such components. Allow surfaces to cool before you handle or disconnect hot components. Wear protective equipment when appropriate.

When welding, follow the instructions in the manual. Always disconnect the battery before you weld on the machine. Always wash your hands after you handle battery components.

⚠ Fire and explosion prevention ⚠

Fuel or oil that is leaked or spilled on hot surfaces or electrical components can cause a fire.

Crop materials, trash, debris, bird nests, or flammable material can ignite on hot surfaces.

Always have a fire extinguisher on or near the machine.

Make sure that the fire extinguisher(s) is maintained and serviced according to the manufacturer's instructions.

At least once each day and at the end of the day, remove all trash and debris from the machine especially around hot components such as the engine, transmission, exhaust, battery, etc. More frequent cleaning of your machine may be necessary depending on the operating environment and conditions.

At least once each day, remove debris accumulation around moving components such as bearings, pulleys, belts, gears, cleaning fans, etc. More frequent cleaning of your machine may be necessary depending on the operating environment and conditions.

Inspect the electrical system for loose connections and frayed insulation. Repair or replace loose or damaged parts.

Do not store oily rags or other flammable material on the machine.

Do not weld or flame cut any items that contain flammable material. Clean items thoroughly with non-flammable solvents before welding or flame-cutting.

Do not expose the machine to flames, burning brush, or explosives.

Promptly investigate any unusual smells or odors that may occur during operation of the machine.

Before performing maintenance for electrical systems or electric welding, always place the key of the battery master switch in "O" (Off) position or disconnect the negative — terminal of the batteries, in order to cut off the electric circuit.

⚠ General battery safety ⚠

Always wear eye protection when you work with batteries.

Do not create sparks or have open flame near a battery.

Ventilate the area when you charge a battery or use a battery in an enclosed area.

Disconnect the negative — terminal first and reconnect the negative — terminal last.

When you weld on the machine, disconnect both terminals of the battery.

Do not weld, grind, or smoke near a battery.

When you use auxiliary batteries or connect jumper cables to start the engine, use the procedure shown in the operator's manual. Do not short across terminals.

Follow the manufacturer's instructions when you store and handle batteries.

Battery post, terminals, and related accessories contain lead and lead compounds. Wash hands after handling.

Battery acid causes burns. Batteries contain sulfuric acid. Avoid contact with skin, eyes, or clothing. Antidote (external): Flush with water. Antidote (eyes): flush with water for 15 minutes and seek medical attention immediately.

https://truckmanualshub.com/

Antidote (internal) : Drink large quantities of water or milk. Do not induce vomiting. Seek medical attention immediately.

Keep out of reach of children and other unauthorized persons.

⚠ Seat belts ⚠

Seat belts must be worn at all times.

Seat belt inspection and maintenance:

- Keep seat belts in good condition.
- Keep sharp edges and items than can cause damage away from the belts.
- Periodically check belts, buckles, retractors, tethers, slack take-up system, and mounting bolts for damage and wear.
- Replace all parts that have damage or wear.
- Replace belts that have cuts that can make the belt weak.
- Check that bolts are tight on the seat bracket or mounting.
- If the belt is attached to the seat, make sure that the seat or seat brackets are mounted securely.
- Keep seat belts clean and dry.
- Clean belts only with soap solution and warm water.
- Do not use bleach or dye on the belts because this can make the belts weak.

⚠ Operator protective structure ⚠

Your machine is equipped with an operator protective structure, such as: a Roll Over Protective Structure (ROPS), Falling Objects Protective Structure (FOPS), or a cab with a ROPS. A ROPS may be a can frame or a two-posted or four-posted structure used for the protection of the operator to minimize the possibility of serious injury. The mounting structure and fasteners forming the mounting connection with the machine are part of the ROPS.

The protective structure is a special safety component of your machine.

DO NOT attach any device to the protective structure for pulling purposes. DO NOT drill holes to the protective structure.

The protective structure and interconnecting components are a certified system. Any damage, fire, corrosion, or modification will weaken the structure and reduce your protection. If this occurs, THE PROTECTIVE STRUCTURE MUST BE REPLACED so that it will provide the same protection as a new protective structure. Contact your dealer for protective structure inspection and replacement.

After an accident, fire, tip over, or roll over, the following MUST be performed by a qualified technician before returning the machine to field or job-site operations:

- The protective structure MUST BE REPLACED.
- The mounting or suspension for the protective structure, operator's seat and suspension, seat belts and mounting components, and wiring within the operator's protective system MUST be carefully inspected for damage.
- All damaged parts MUST BE REPLACED.

DO NOT WELD, DRILL HOLES, ATTEMPT TO STRAIGHTEN, OR REPAIR THE PROTECTIVE STRUCTURE. MODIFICATION IN ANY WAY CAN REDUCE THE STRUCTURAL INTEGRITY OF THE STRUCTURE, WHICH COULD CAUSE DEATH OR SERIOUS INJURY IN THE EVENT OF FIRE, TIP OVER, ROLL OVER, COLLISION, OR ACCIDENT.

Seat belts are part of your protective system and must be worn at all times. The operator must be held to the seat inside the frame in order for the protective system to work.

⚠ Air-conditioning system ⚠

The air-conditioning system is under high pressure. Do not disconnect any lines. The release of high pressure can cause serious injury.

The air-conditioning system contains gases that are harmful to the environment when released into the atmosphere. Do not attempt to service or repair the system.

Only trained service technicians can service, repair, or recharge the air-conditioning system.

⚠ Personal Protective Equipment (PPE) ⚠

Wear Personal Protective Equipment (PPE) such as hard hat, eye protection, heavy gloves, hearing protection, protective clothing, etc.

https://truckmanualshub.com/

⚠ Do Not Operate tag ⚠

Before you start servicing the machine, attach a 'Do Not Operate' warning tag to the machine in an area that will be visible.

⚠ Hazardous chemicals ⚠

If you are exposed to or come in contact with hazardous chemicals you can be seriously injured. The fluids, lubricants, paints, adhesives, coolant, etc. required for the function of your machine can be hazardous. They may be attractive and harmful to domestic animals as well as humans.

Material Safety Data Sheets (MSDS) provide information about the chemical substances within a product, safe handling and storage procedures, first aid measures, and procedures to take in the event of a spill or accidental release. MSDS are available from your dealer.

Before you service your machine check the MSDS for each lubricant, fluid, etc. used in this machine. This information indicates the associated risks and will help you service the machine safely. Follow the information in the MSDS, and on manufacturer containers, as well as the information in this manual, when you service the machine.

Dispose of all fluids, filters, and containers in an environmentally safe manner according to local laws and regulations. Check with local environmental and recycling centers or your dealer for correct disposal information.

Store fluids and filters in accordance with local laws and regulations. Use only appropriate containers for the storage of chemicals or petrochemical substances.

Keep out of reach or children or other unauthorized persons.

Applied chemicals require additional precautions. Obtain complete information from the manufacturer or distributor of the chemicals before you use them.

⚠ Utility safety ⚠

When digging or using ground-engaging equipment, be aware of buried cables and other services. Contact your local utilities or authorities, as appropriate, to determine the locations of services.

Make sure that the machine has sufficient clearance to pass in all directions. Pay special attention to overhead power lines and hanging obstacles. High voltage lines may require significant clearance for safety. Contact local authorities or utilities to obtain safe clearance distances from high voltage power lines.

Retract raised or extended components, if necessary. Remove or lower radio antennas or other accessories. Should a contact between the machine and an electric power source occur, the following precautions must be taken:

- Stop the machine movement immediately.
- Apply the parking brake, stop the engine, and remove the key.
- Check if you can safely leave the cab or your actual position without contact with electrical wires. If not, stay in your position and call for help. If you can leave your position without touching lines, jump clear of the machine to make sure that you do not make contact with the ground and the machine at the same time.
- Do not permit anyone to touch the machine until power has been shut off to the power lines.

⚠ Electrical storm safety ⚠

Do not operate machine during an electrical storm.

If you are on the ground during an electrical storm, stay away from machinery and equipment. Seek shelter in a permanent, protected structure.

If an electrical storm should strike during operation, remain in the cab. Do not leave the cab or operator's platform. Do not make contact with the ground or objects outside the machine.

⚠ Mounting and dismounting ⚠

Mount and dismount the machine only at designated locations that have hand-holds, steps, and/or or ladders.

Do not jump off of the machine.

Make sure that steps, ladders, and platforms remain clean and clear of debris and foreign substances. Injury may result from slippery surfaces.

Face the machine when you mount and dismount the machine.

https://truckmanualshub.com/

Maintain a three-point contact with steps, ladders, and handholds.

Never mount or dismount from a moving machine.

Do not use the controls or accessories as hand-holds when you enter or exit the cab.

⚠ Working at heights ⚠

When the normal use and maintenance of the machine requires you to work at heights:

- Correctly use installed steps, ladders, and railings.
- Never use ladders, steps, or railings while the machine is moving.
- Do not stand on surfaces that are not designated as steps or platforms.

Do not use the machine as a lift, ladder, or platform for working at heights.

⚠ Lifting and overhead loads ⚠

Never use loader buckets, forks, etc. or other lifting, handling, or digging equipment to lift persons.

Do not use raised equipment as a work platform.

Know the full area of movement of the machine and equipment and do not enter or permit anyone to enter the area of movement while the machine is in operation.

Never enter or permit anyone to enter the area underneath raised equipment. Equipment and/or loads can fall unexpectedly and crush persons underneath it.

Do not leave equipment in raised position while parked or during service, unless securely supported. Hydraulic cylinders must be mechanically locked or supported if they are left in a raised position for service or access.

Loader buckets, forks, etc. or other lifting, handling, or digging equipment and its load will change the center of gravity of the machine. This can cause the machine to tip on slopes or uneven ground.

Load items can fall off the loader bucket or lifting equipment and crush the operator. Care must be taken when lifting a load. Use proper lifting equipment.

Do not lift load higher than necessary. Lower loads to transport. Remember to leave appropriate clearance to the ground and other obstacles.

Equipment and associated loads can block visibility and cause an accident. Do not operate with insufficient visibility.

⚠ Before using the machine⚠

- Avoid loose fitting clothing, loose or uncovered long hair, jewelry or any other items which could get caught up in machinery.
- Different types of job will require different types of protective equipment. Items such as hard hats, safety shoes, heavy gloves, reflector type jackets, respirators, ear protection and eye protection may be required. Before starting a job, determine what protective equipment will be necessary. Use this equipment at all times.
- Do not attempt to operate this machine unless you have first read and perfectly understood the safety messages and instructions appearing in this manual.
- Operating the machine requires full attention and care on the part of the operator. Get to know the machine's possibilities and limitations and the working space required. There are areas of poor visibility in the working range of the machine. Have someone guide you for all areas where visibility is not adequate.
- Grease, oil, mud or (in winter) ice on the steps and access handles can cause accidents. Make sure they are kept clean at all times.
- Every day, inspect the machine to detect any signs of hydraulic fluid leakage. Tighten the connections or replace any defective components as necessary.
- Remove any obstructions which hinder visibility. Keep the windshield, rear view mirror and windows clean at all times.
- Make sure the windshield wiper works correctly.
- Make sure you are familiar with hand signals in daily use on the work-site so as to be able to obtain help with tight maneuvers or when carrying out operations where visibility is poor.
- Before undertaking any travel or working operations during hours of darkness, make sure the lighting and signaling equipment is fully operative.
- Before any travel operation, make sure that the doors and hoods are properly latched.
- Check that no tools or other items have been left on the machine (be it on the undercarriage or the upperstructure) or in the operator's compartment.
- The operator must be alone on the machine at all times. Do not allow anyone to stand on or around the machine.
- To get in or out of the cab, it is imperative that the upperstructure frame is in line with the undercarriage.
- When exiting or getting into the operator's compartment, always face the machine and use the steps and access handles.

https://truckmanualshub.com/

- Be sure you know the position and function of each control. Incorrect operation of the controls can cause serious injuries.
- Check all controls and safety devices in a safe, open area before starting work.
- Keep away from dangerous areas such as ditches, overhangs, rocky areas, etc. Make a survey of the work-site and determine the possible dangers before using the machine.
- Before parking the machine, make sure that the ground is stable. Plan the work-site so that the ground is flat, hard and level.
- Before moving the machine to work in a new area, walk around to determine all possible causes of accidents there. Holes, obstacles, debris, and other danger risks in the working area can cause serious injury.
- Be ready to meet emergencies. Always carry a first aid kit and if possible, fire extinguisher (not supplied) within easy reach on board. Make sure the fire extinguisher is regularly serviced in conformance with the manufacturer's instructions.
- Check the fastening of the main components: counterweight, swing bearing, and operator's compartment. In the event of problems, consult your NEW HOLLAND CONSTRUCTION Dealer.
- Make sure you understand the symbols used on the machine safety signs. Keep the signs clean so that they are completely legible at all times.
- Work out a means of convenient escape from the machine (emergency exit via the windshield or the rear window glass) in the event of the machine turning over or tipping over or the cab door being jammed.
- Make sure you are familiar with traffic regulations and special safety equipment requirements before transporting this machine on a public highway.
- When loading trucks, never swing the load over the truck cab.
- Before undertaking any travel on the job site, make sure the itinerary to be followed is safe. If bridges are to be crossed, make sure they are capable of supporting the weight of the machine.
- Always steer round large obstacles such as boulders, big trees, etc.

Quick coupler (optional)

- Every day, check that the locking bar functions correctly and that it is not fouled by foreign matter. Clean the locking system if necessary.
- If you must use the quick coupler with buckets not manufactured by NEW HOLLAND CONSTRUCTION, make sure the diameter of the pins and the width between the bucket lugs meet the dimensions needed to fit the quick coupler (pins, washers, bushings, etc.). Consult your NEW HOLLAND CONSTRUCTION Dealer.

⚠ Operating the machine ⚠

- When working on a public highway, use standard traffic signs and take into consideration the working range of the upperstructure and its attachments. Local or national regulations stipulate the number, type, and location of reflector strips.
- Avoid running the engine in a confined space. If there is no alternative, proper ventilation must be provided at all times.
- Do not allow anyone else on the machine. The passenger could fall or cause an accident.
- Never operate the working or travel controls unless you are properly seated in the operator’s seat with the seat belt correctly fastened.
- Before starting the engine, check the direction of travel (in forward drive, the reduction gears should be to the rear of the machine).
- Do not work near overhead high-voltage electric lines without checking beforehand that all necessary measures have been taken to respect the minimum distances:
  Less than 57000 volts: **3 m** (**9.8 ft**).
  More than 57000 volts: **5 m** (**16.4 ft**).
- Study the position of any existing pipelines or conduits before starting work. Electrical cables, gas and water pipes, and other underground installations can cause serious injury.
- Always make allowance for working conditions (sloping or rough ground), the site, and weather conditions when driving the machine.
- Do not allow anyone to stand in the machine working area. Accidental operation of the upperstructure swing control or of an attachment control could cause an accident. Stop all operations until everyone has moved away.
- Before operating the dozer blade (if equipped) make sure that there is no one in the working area of the dozer blade.
- Operate all controls gradually to ensure smooth machine operation.
- Whenever load handling operations are to be carried out, it is imperative to adhere strictly to the instructions given in this manual and local legislation.
- It is forbidden to use the machine to carry out tasks other than those for which it is intended. Never use the equipment for sweeping the ground to level out rubble or push objects (these actions cause transversal stress on the attachment).
- Stop the engine and remove the ignition key when the machine is not in use, even for short periods of time.

https://truckmanualshub.com/

- The working area of the end attachment that is mounted may interfere with the machine. Interference may be caused due to the type of end attachment or installation of parts such as a cab guard. Always maintain a safe margin of distance. (Be careful of tool swing or accidental operations.)
- To access or exit the operator’s compartment, the left-hand control arm must be in the raised position. Never forget this basic requirement.
- Never leave the operator's compartment while the engine is running.
- To get in or out of the cab, it is imperative that the upperstructure frame is in line with the undercarriage.
- Dust, smoke, or mist can reduce visibility and cause an accident. Reduce speed or come to a complete halt until visibility has improved.
- Never jump down from the machine. When you exit the machine or the upperstructure, always face the machine and use the steps and access handles.
- In the event of an operating problem or failure, move the machine to a safe place, lower the attachment to the ground, shut down the engine, and remove the ignition key. Locate the problem, report it if necessary, and take the necessary steps to warn others not to attempt to operate the machine.
- Before tilting the seat back forward, it is mandatory to raise the armrests to avoid any accidental operation of the control levers.
- Never turn the key of the battery master switch to “O” (Off) position when engine is running. The electrical systems can be damaged.
- When the engine is stopped, always wait three minutes minimum before you place the key of the battery master switch in “O” (Off) position, otherwise the program of the machine controllers will not exit successfully.

⚠ Preventing risks caused by vibrations ⚠

The machine's vibration affects the comfort and in some cases the health and safety of the operator. To reduce vibration risks to a minimum:

1. Make sure that the machine, the equipment, and the tool are suitable for the work to be carried out.
2. Make sure that the machine is in good condition and that servicing intervals are complied with.
3. Check the track tension adjustment and the play in equipment linkages.
4. Make sure that the operator's seat and adjustment controls are in good condition and then adjust the seat to suit the operator's size and weight.

During work:

1. Operate all controls gradually to ensure smooth machine operation.
2. Modify the machine's operation to suit the working conditions.
3. During travel, adjust the machine's speed, reducing it if necessary.
4. Make sure that the machine's operating radius is in good condition, and free of obstacles and holes.

⚠ Quick coupler (optional) ⚠

- Never place the control switch in the unlocked position when the machine is working.
- Each time a bucket is installed on the quick coupler, close the bucket and raise the attachment so as to be able to make a visual check that the bucket pin is correctly engaged in the latching hook.
- The quick coupler modifies the working range of the machine. In certain attachment positions the tool may damage the machine. Always leave a safe distance between the quick coupler and the machine..
- Never carry out load handling using the front or rear anchoring points used to install the tool on the quick coupler.
- Never put your hands inside the quick coupler. Never attempt to adjust or repair the quick coupler if the engine is running.

⚠ Parking the machine ⚠

When parking the machine, proceed as follows:

1. Position the machine on flat, level ground, away from soft ground, excavations, or poorly shored cavities.
2. Place the upper-structure and the attachment in line with the undercarriage, retract the attachment, and dig the bucket into the ground.
3. Lower the dozer blade (if equipped) until it rests on the ground.
4. Place the gate lock lever in central position before leaving the operator’s compartment.
5. Stop the engine and remove the ignition key.
6. Lock the cab door.
7. Make sure that the hoods and doors are properly latched.

https://truckmanualshub.com/

8. Check that no part of the machine is encroaching on the highway. If this cannot be avoided, install the necessary regulation signaling equipment.

⚠ Maintenance and adjustments ⚠

- Do not try to service this machine unless you have first read and understood the safety messages and instructions featuring in this manual.
- When carrying out service work always wear suitable attire. Avoid loose-fitting clothing.
- Release pressure completely in the hydraulic system before disconnecting the hydraulic lines. Hydraulic oil escaping under pressure can cause serious injury.
- Before doing maintenance work on the machine, shut down the engine and allow it to cool down. Otherwise, you could be burned.
- Before commencing any work on the machine, place a "Do not operate" tag on the right-hand control arm.
- Always wear eye protection when using a tool that might project metal particles. Use a hammer with a soft face, such as copper, for installing pins.
- Poorly carried out maintenance or adjustments can cause serious injuries. If you do not understand a servicing or adjustment procedure, consult your NEW HOLLAND CONSTRUCTION Dealer.
- If the attachment is raised or if the machine moves without an operator, serious injury can result. Before carrying out maintenance on this machine, proceed as follows:
  Park the machine on flat, level ground.
  Lower the attachment until it is resting on the ground.
  Lower the dozer blade (if equipped) until it rests on the ground.
  Stop the engine and remove the ignition key.
  Lock the tracks to prevent any machine movement.
- Any unauthorized modifications made to this machine can cause serious injury. Do not undertake any modifications without first consulting your NEW HOLLAND CONSTRUCTION Dealer. Any modifications made must be in conformity with the technical specifications of the machine and any current safety legislation requirements.
- Certain components of the machine are subject to type approval. When replacing such components, it is mandatory to make sure that they conform to regulations. Use only genuine NEW HOLLAND CONSTRUCTION parts.
- Pressurized hydraulic fluid or grease that penetrates the skin can cause serious injury. Take the necessary safety precautions (safety clothing and protection for face and hands) to avoid such risks. Also, before using these products, read the manufacturer's instructions concerning their use. If hydraulic fluid penetrates the skin, call a doctor immediately.
- Coolant solution is toxic.
  Avoid contact with skin, eyes, and clothing.
  Antidote:
  External: rinse thoroughly with water and remove soiled clothes.
  Internal: do not induce vomiting. Rinse the mouth out with water. Seek medical advice.
  Eyes: rinse thoroughly with water and seek medical advice.
- The pressure in the track tension cylinders is high. Follow the procedure described in this manual carefully for increasing or reducing track tension.
- When carrying out a welding operation on the undercarriage or upper-structure carriage as authorized by NEW HOLLAND CONSTRUCTION and in accordance with the instructions, disconnect the batteries, disconnect the alternator B+ and D+ terminal wires, and connect the welding apparatus ground cable to the component on which the welding operation is to be performed. Never connect the welding apparatus to the undercarriage when welding on the upper-structure (or vice-versa). Never connect the welding apparatus ground to a component of the hydraulic system.
- When using compressed air, take the necessary precautions to protect your face.
- Clean the machine regularly. Accumulations of grease, dirt, and debris can cause injuries or damage the machine.
- Periodically inspect the fastening of the main components, as part of the machine maintenance program: counterweight, swing bearing, and operator's compartment. In the event of problems, consult your NEW HOLLAND CONSTRUCTION Dealer.
- If the accumulator is not functioning correctly, consult your NEW HOLLAND CONSTRUCTION Dealer. Never try to carry out any servicing operation on the accumulator. If this instruction is not followed serious injury can result.
- The accumulator is charged with nitrogen under high pressure. Do not weld or allow flames to come near to the accumulator.
- There is high pressure fuel in the feed line when the engine is running and immediately after it has been shut down. Wait for two minutes after engine shut down before you do any maintenance or inspections to allow the pressure to drop in the line.
- High-voltage is charged to the controller and/or to the injector while the engine is running and immediately after it has been shut down.
  Do not touch the controller or the injector.
  If it is necessary to touch them for maintenance purposes, consult your NEW HOLLAND CONSTRUCTION Dealer.

https://truckmanualshub.com/

⚠ Using an Implement other than a bucket ⚠

- When using a special implement (hydraulic breaker, cutter crusher etc.), refer to the operator's manual provided with the implement.

⚠ Implement operation and maintenance ⚠

- For the implement operation and maintenance, refer to the operator's manual provided with the implement.

⚠ Safety area ⚠

The safety area is the space necessary for the machine to operate at the maximum range of the tool and at full swing **360°** plus **2 m** (**6.56 ft**).

(1) Working area.

(2) Safety area.

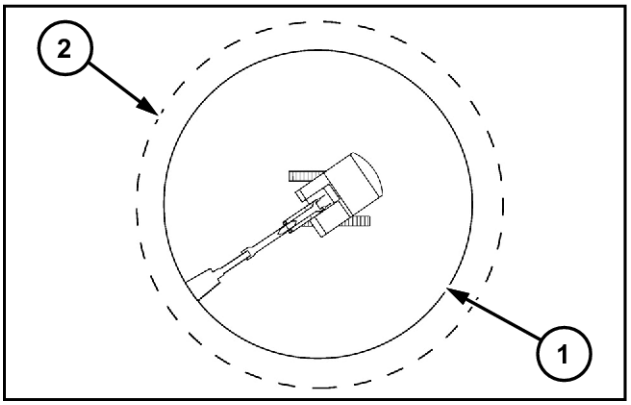

SMIL13CEX2517AB 1

https://truckmanualshub.com/

Ecology and environment

Soil, air, and water quality is important for all industries and life in general. When legislation does not yet rule the treatment of some of the substances that advanced technology requires, sound judgment should govern the use and disposal of products of a chemical and petrochemical nature.

Familiarize yourself with the relative legislation applicable to your country, and make sure that you understand this legislation. Where no legislation exists, obtain information from suppliers of oils, filters, batteries, fuels, anti-freeze, cleaning agents, etc., with regard to the effect of these substances on man and nature and how to safely store, use, and dispose of these substances. Your NEW HOLLAND CONSTRUCTION dealer can also provide assistance.

Helpful hints

- Avoid the use of cans or other inappropriate pressurized fuel delivery systems to fill tanks. Such delivery systems may cause considerable spillage.
- In general, avoid skin contact with all fuels, oils, acids, solvents, etc. Most of these products contain substances that may be harmful to your health.
- Modern oils contain additives. Do not burn contaminated fuels and or waste oils in ordinary heating systems.
- Avoid spillage when you drain fluids such as used engine coolant mixtures, engine oil, hydraulic fluid, brake fluid, etc. Do not mix drained brake fluids or fuels with lubricants. Store all drained fluids safely until you can dispose of the fluids in a proper way that complies with all local legislation and available resources.
- Do not allow coolant mixtures to get into the soil. Collect and dispose of coolant mixtures properly.
- Do not open the air-conditioning system yourself. It contains gases that should not be released into the atmosphere. Your NEW HOLLAND CONSTRUCTION dealer or air-conditioning specialist has a special extractor for this purpose and can recharge the system properly.
- Repair any leaks or defects in the engine cooling system or hydraulic system immediately.
- Do not increase the pressure in a pressurized circuit as this may lead to a component failure.

Battery recycling

Batteries and electric accumulators contain several substances that can have a harmful effect on the environment if the batteries are not properly recycled after use. Improper disposal of batteries can contaminate the soil, groundwater, and waterways. NEW HOLLAND CONSTRUCTION strongly recommends that you return all used batteries to a NEW HOLLAND CONSTRUCTION dealer, who will dispose of the used batteries or recycle the used batteries properly. In some countries, this is a legal requirement.

NHIL14GEN0038AA 1

Mandatory battery recycling

NOTE: *The following requirements are mandatory in Brazil.*

Batteries are made of lead plates and a sulfuric acid solution. Because batteries contain heavy metals such as lead, CONAMA Resolution 401/2008 requires you to return all used batteries to the battery dealer when you replace any batteries. Do not dispose of batteries in your household garbage.

Points of sale are obliged to:

- Accept the return of your used batteries
- Store the returned batteries in a suitable location
- Send the returned batteries to the battery manufacturer for recycling

https://truckmanualshub.com/

Hand signals

When operating the machine, always work with a signalman when you carry out tasks that require fine control and/or require you to work in areas with poor or impaired visibility. Make sure that you and the signalman understand the signals to be used.

Start the engine

PDE0002ATBP1 1

Shut down the engine

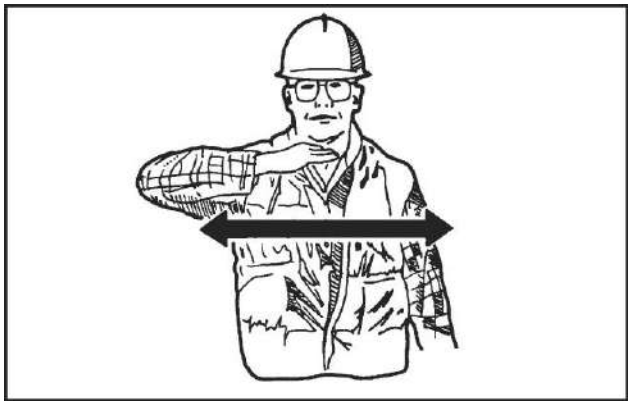

PDE0002TBP1 2

Come to me

Wave hands back and forth (palms inwards).

PDE0003ATBP1 3

Move away from me

Wave hands back and forth (palms outwards).

PDE0003TBP1 4

Go this far

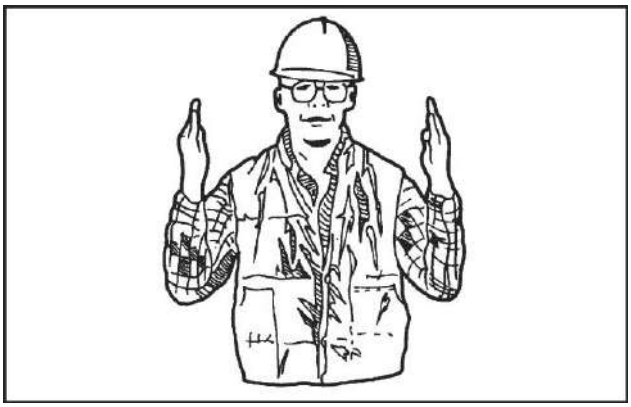

PDE0004ATBP1 5

All stop and hold

PDE0004TBP1 6

https://truckmanualshub.com/

Stop

Wave one hand back and forth.

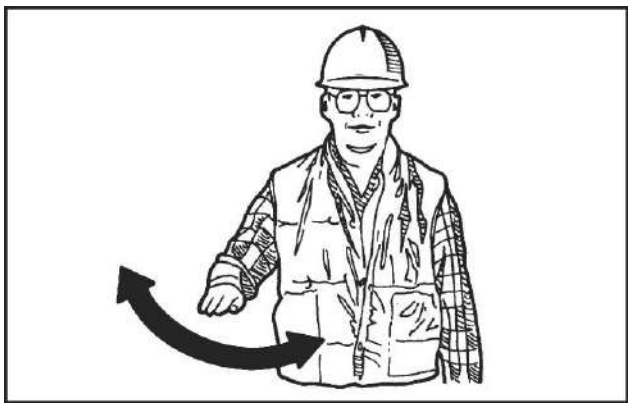

PDE0005ATBP1 7

Emergency stop

Wave hands back and forth.

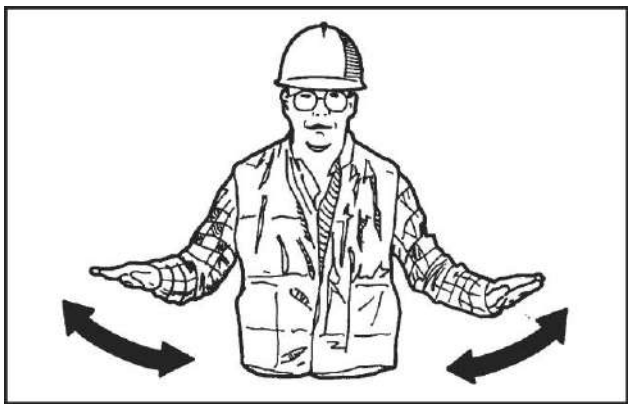

PDE0005TBP1 8

Raise load or tool

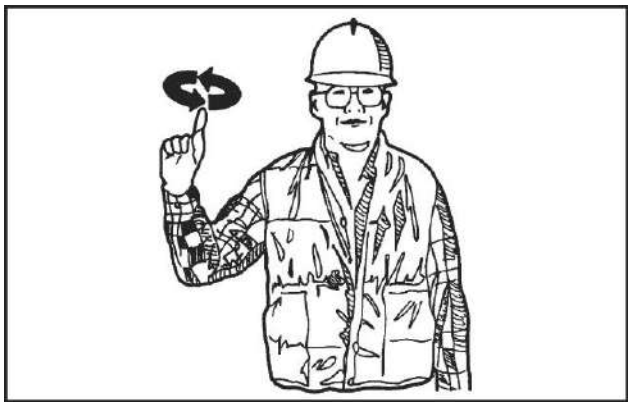

PDE0006ATBP1 9

Lower load or tool

PDE0006TBP1 10

Slowly raise the load or tool

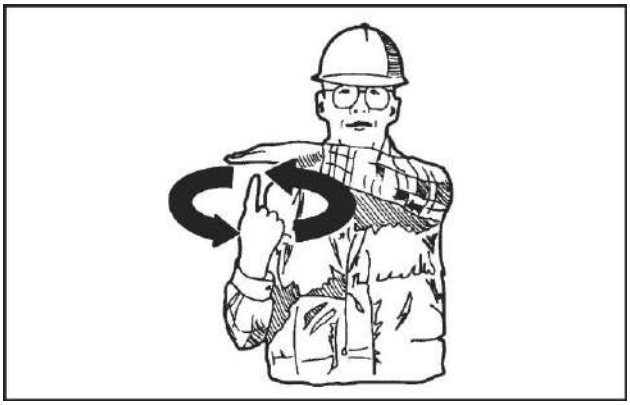

PDE0007ATBP1 11

Slowly lower the load or tool

PDE0007TBP1 12

https://truckmanualshub.com/

Turn machine left (swing load left)

To stop movement, stop moving hand and clench fist.

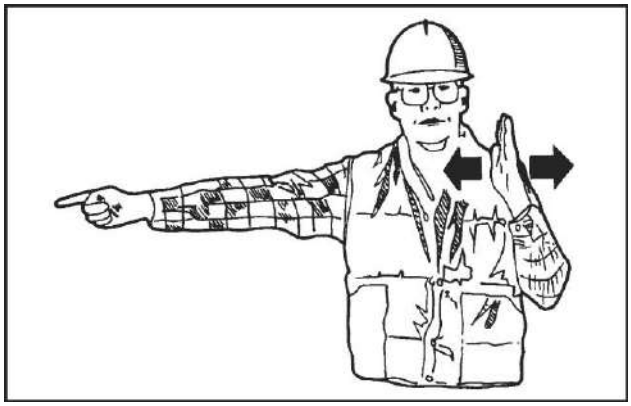

PDE0008ATBP1 13

Turn machine right (swing load right)

To stop movement, stop moving hand and clench fist.

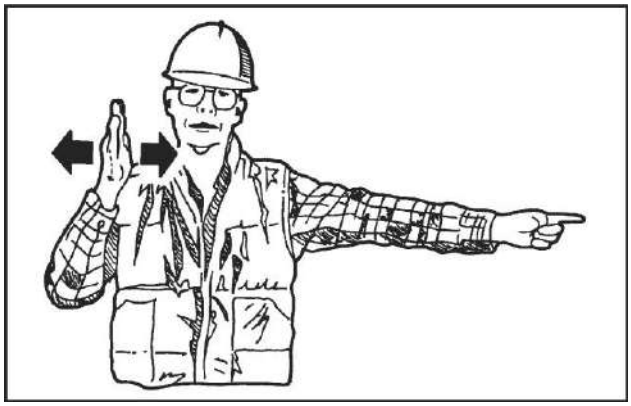

PDE0008TBP1 14

Raise tool

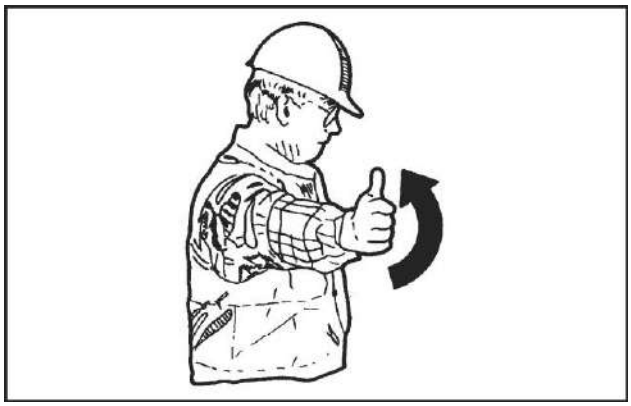

PDE0009ATBP1 15

Lower tool

PDE0009TBP1 16

Lift boom

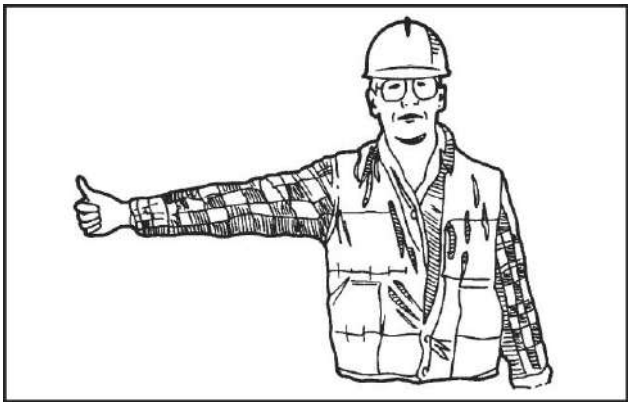

PDE0010ATBP1 17

Lower boom

PDE0010TBP1 18

https://truckmanualshub.com/

Retract dipper

PDE0011ATBP1 19

Extend dipper

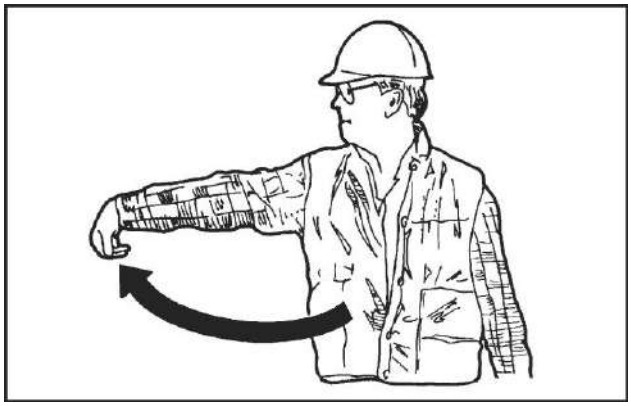

PDE0011TBP1 20

Fill tool

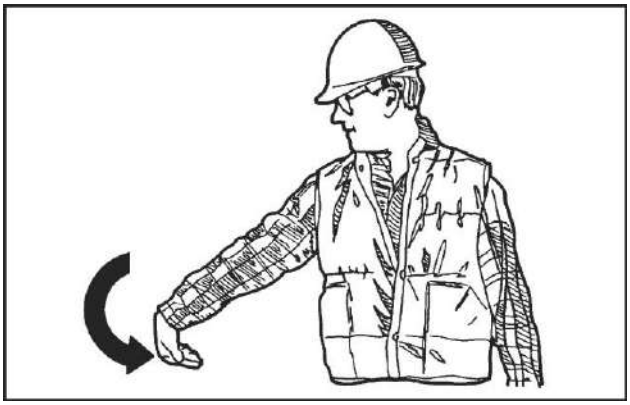

PDE0012ATBP1 21

Empty tool

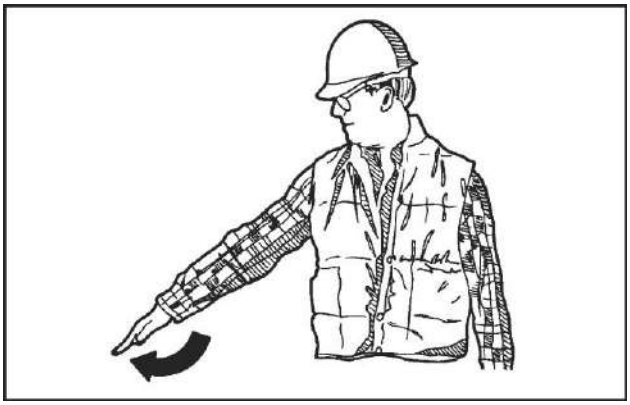

PDE0012TBP1 22

https://truckmanualshub.com/

Safety signs

⚠ WARNING

Avoid injury!
An illegible or missing decal can have far-reaching consequences. Inspect decals daily.
Failure to comply could result in death or serious injury.

W0228A

⚠ WARNING

Avoid injury!
Make sure decals are perfectly legible. Clean decals regularly. Replace all damaged, missing, painted over, or illegible decals. See your dealer for replacement decals. When replacing parts bearing decals, be sure to put new decals on each new part.
Failure to comply could result in death or serious injury.

W0229A

The following safety signs are on your machine as a guide for your safety and for the safety of those working with you. Walk around the machine and note the content and the location of all safety signs before you operate your machine.

Keep all safety signs clean and legible. Clean safety signs with a soft cloth, water, and gentle detergent.

NOTICE: *do not use solvent, gasoline, or other harsh chemicals. Solvents, gasoline, and other harsh chemicals may damage or remove safety signs.*

Replace all safety signs that are damaged, missing, painted over, or illegible. If a safety sign is on a part you or your NEW HOLLAND CONSTRUCTION dealer replaces, make sure that you or your NEW HOLLAND CONSTRUCTION dealer install the safety sign on the new part. See your NEW HOLLAND CONSTRUCTION dealer for replacement safety signs.

Safety signs that display the "Read operator's manual" symbol direct you to the operator's manual for further information regarding maintenance, adjustments, or procedures for particular areas of the machine. When a safety sign displays this symbol, consult the appropriate page of the operator's manual.

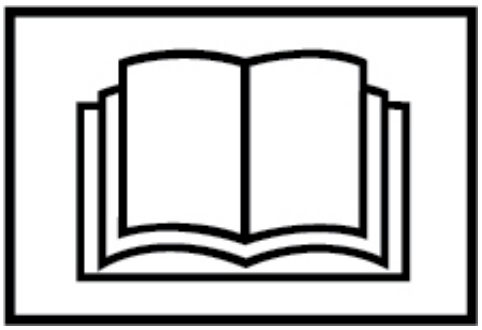

Safety signs that display the "Read service manual" symbol direct you to the service manual. If you doubt your ability to perform service operations, contact your NEW HOLLAND CONSTRUCTION dealer.

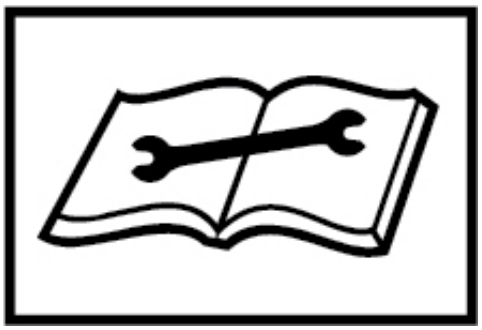

https://truckmanualshub.com/

Signs positions

When you replace a safety sign or other machine sign, make sure you position it as shown below.

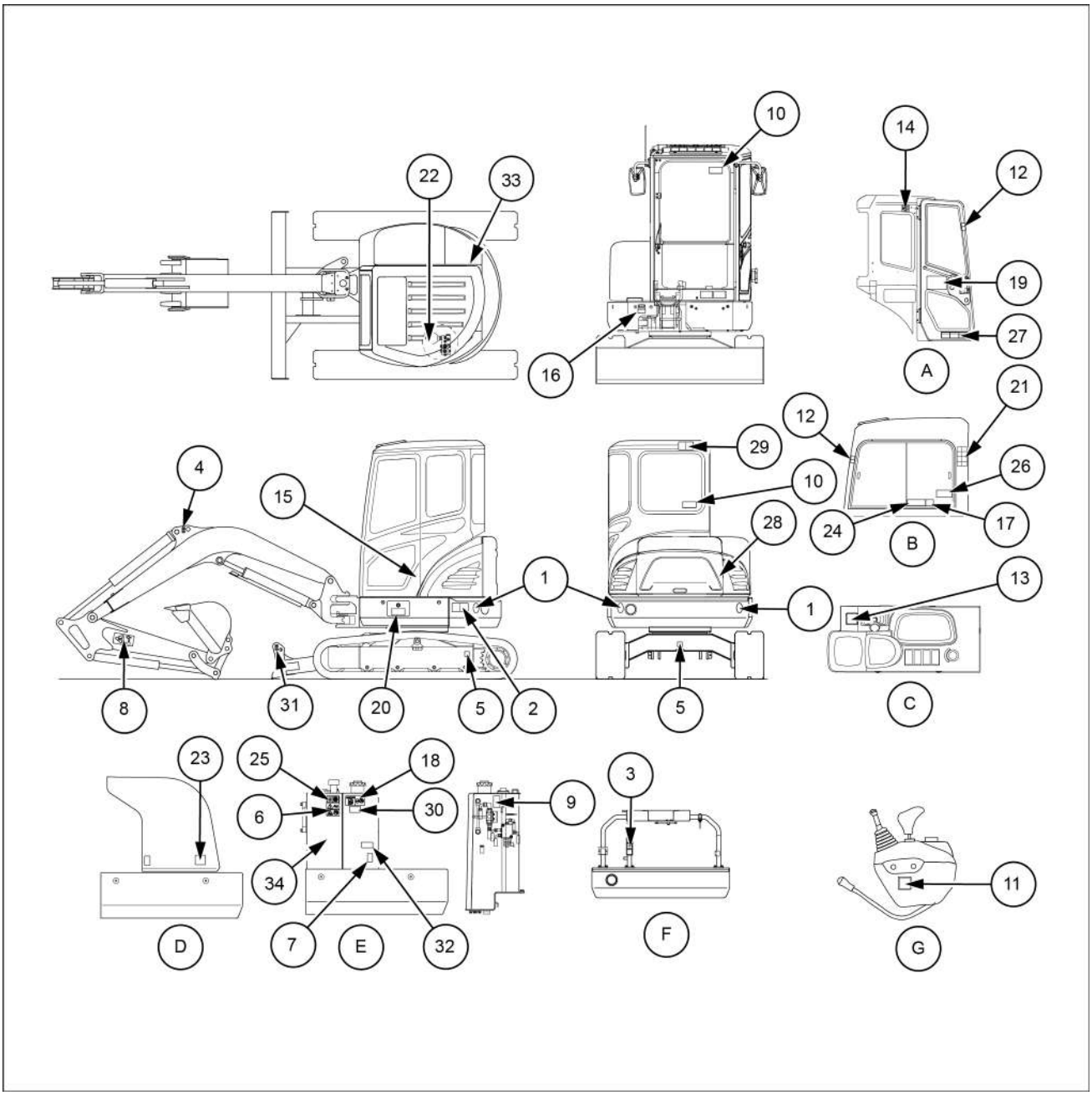

SMIL18MEX0917GB 1

Cab version

A. Cab door
B. Cab window - Right-hand
C. Console box - Right-hand
D. Tool box cover
E. Hydraulic tank and fuel tank
F. Cowl support (engine compartment)
G. Console box - Left-hand

https://truckmanualshub.com/

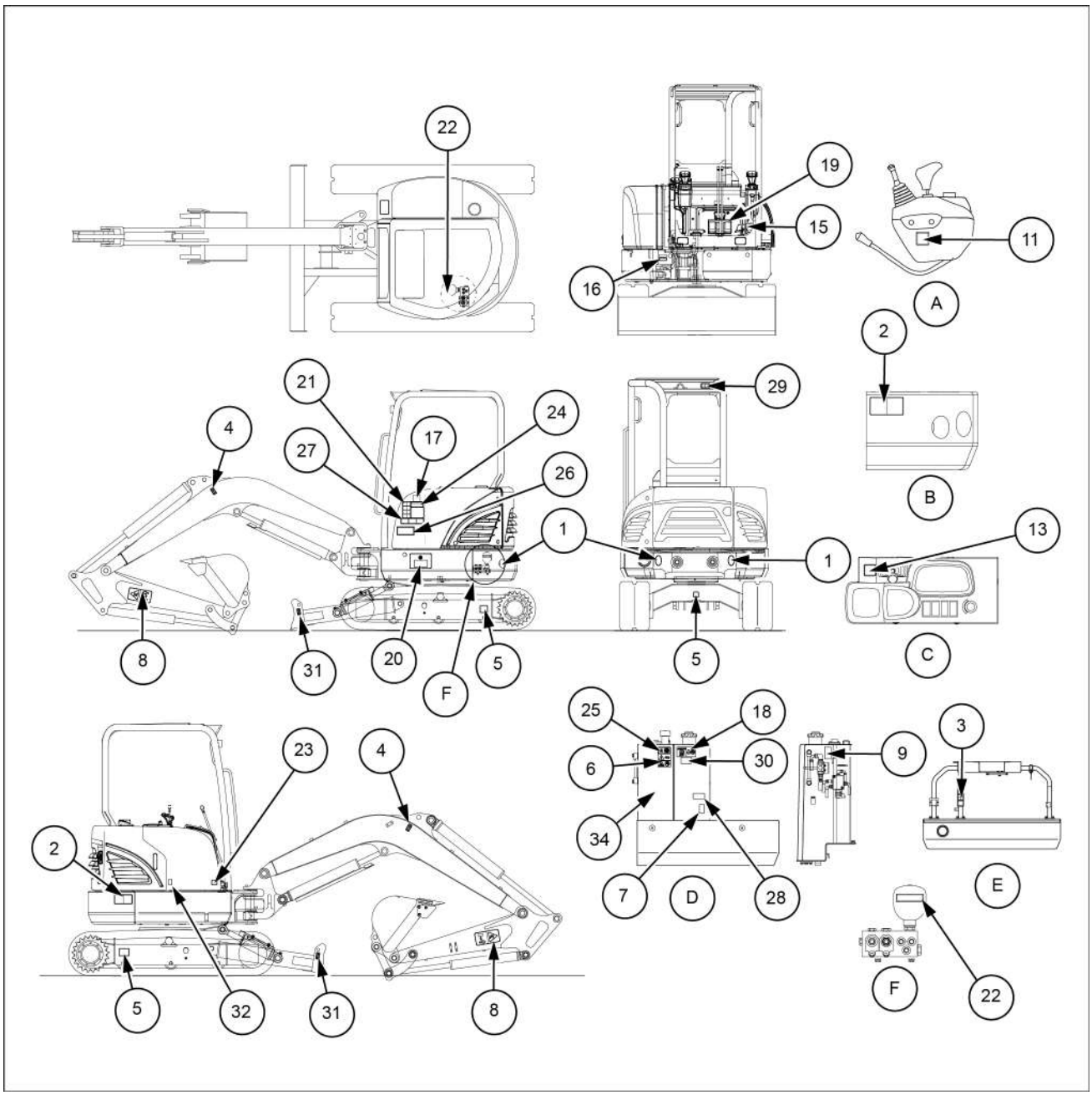

SMIL18MEX0918GB 2

Canopy version

A. Console box - Left hand
B. Counterweight
C. Console box - Right-hand
D. Hydraulic tank and fuel tank
E. Cowl support (engine compartment)
F. Accumulator of the solenoid valve

https://truckmanualshub.com/

(1) Reflecting sign

Location: the two reflecting signs are located in the rear side of the machine, on the counterweight.

Quantity: 2

Part number: 91M9-04020

The reflecting sign increases the night-time visibility.

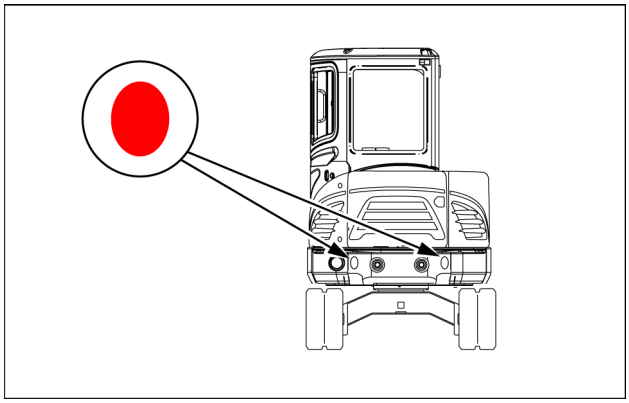

SMIL19MEX0709AA 3

(2) Keep out of work range of upper structure

⚠ DANGER

Avoid injury!
Keep clear of the swing area. Ensure that any person near the working site is outside the swing area before you start or operate the machine. Sound the horn before you start or operate the machine.
Failure to comply will result in death or serious injury.

D0123A

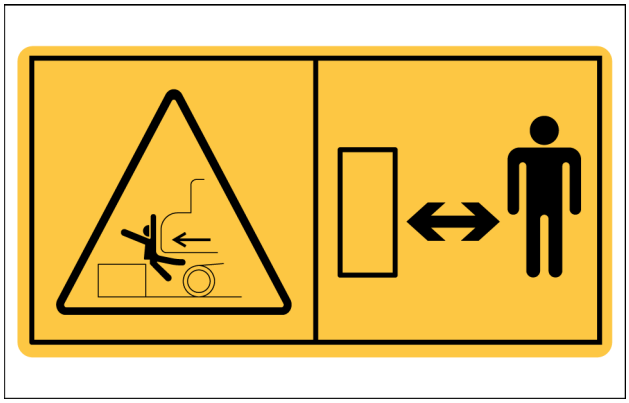

SMIL19MEX0710AA 4

Location: this signs is located on the counterweight.

Quantity: 2

Part number: 98MJ-07370

This sign cautions the operator that entry into the work range of the upper structure is forbidden while the engine is running.

(3A) Engine access door support caution - Stop the engine

⚠ WARNING

Entanglement hazard!
Always stop the engine and engage the parking brake, unless otherwise instructed in this manual, before checking and/or adjusting any drive belt or chain.
Failure to comply could result in death or serious injury.

W0097A

SMIL19MEX0701AA 5

Location: this sign is located on the engine access door support.

Quantity: 1

Part number: 91M8-07111

This sign indicates that you should stop the engine before opening the access door.

https://truckmanualshub.com/

(3B) Engine access door support caution - High pressure hoses and radiator

⚠ WARNING

Burn hazard!
Before performing any service on the hydraulic system, you must allow it to cool. Hydraulic fluid temperature should not exceed 40 °C (104 °F).
Failure to comply could result in death or serious injury.

W0241A

⚠ WARNING

Pressurized system!
Never attempt to drain fluids or remove filters when the engine is running. Turn off the engine and relieve all pressure from pressurized systems before servicing the machine.
Failure to comply could result in death or serious injury.

W0905A

⚠ WARNING

Escaping fluid!
Hydraulic fluid or diesel fuel leaking under pressure can penetrate the skin and cause infection or other injury. To prevent personal injury: Relieve all pressure before disconnecting fluid lines or performing work on the hydraulic system. Before applying pressure, make sure all connections are tight and all components are in good condition. Never use your hand to check for suspected leaks under pressure. Use a piece of cardboard or wood for this purpose. If injured by leaking fluid, see your doctor immediately.
Failure to comply could result in death or serious injury.

W0178A

Location: this sign is located on the engine access door support.

Quantity: 1

Part number: 91M8-07111

This sign warns you not to loosen the high pressure hoses, not to touch the radiator, and not to remove the radiator cap before the temperature of the cooling system drops.
Start working after the cooling system is sufficiently cooled down.

SMIL19MEX0702BA 6

https://truckmanualshub.com/

(3C) Engine access door support caution - Hot surfaces

⚠ WARNING

Burn hazard!
Exhaust surfaces are hot! Always wear protective gloves when cleaning or working on the muffler, catalytic converter, or exhaust stack.
Failure to comply could result in death or serious injury.

W0329A

SMIL19MEX0703AA 7

Location: this sign is located on the engine access door support.

Quantity: 1

Part number: 91M8-07111

This sign warns to never touch the engine or the muffler when they are still hot.

(4) Lifting location

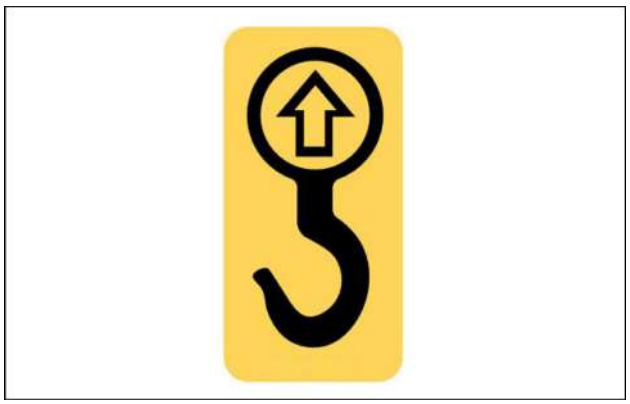

SMIL18MEX0602AA 8

Location: these signs are located on the boom.

Quantity: 2

Part number: 91M8-05110

This sign shows the location where a sling is attached to handle the excavator.

Never use any location other than the lifting location that this sign shows.

(5) Lashing point sign

SMIL16MEX0007AA 9

Location: these signs are located on the under-carriage.

Quantity: 3

Part number: 91N6-05120

This sign shows the coupling location when the machine has to be transported on a trailer.

https://truckmanualshub.com/

(6) Hydraulic oil

⚠ WARNING

Burn hazard!
Before performing any service on the hydraulic system, you must allow it to cool. Hydraulic fluid temperature should not exceed 40 °C (104 °F).
Failure to comply could result in death or serious injury.

W0241A

⚠ WARNING

Pressurized system!
Never attempt to drain fluids or remove filters when the engine is running. Turn off the engine and relieve all pressure from pressurized systems before servicing the machine.
Failure to comply could result in death or serious injury.

W0905A

SMIL19MEX0706AA 10

Location: this sign is located on the right-hand side of the hydraulic oil tank.

Quantity: 1

Part number: 91N6-03112

This sign warns you not to open the filler cap while engine running or at high hydraulic oil temperature.
This sign warns you to loosen the cap slowly and release the internal pressure completely.
This sign warns you not to mix with different brand oils.

https://truckmanualshub.com/

(7) Batteries

⚠ WARNING

Battery acid causes burns. Batteries contain sulfuric acid.
Avoid contact with skin, eyes or clothing. Antidote (external): Flush with water. Antidote (eyes): flush with water for 15 minutes and seek medical attention immediately. Antidote (internal): Drink large quantities of water or milk. Do not induce vomiting. Seek medical attention immediately.
Failure to comply could result in death or serious injury.

W0111A

⚠ WARNING

Explosive gas!
Batteries emit explosive hydrogen gas and other fumes while charging. Ventilate the charging area. Keep the battery away from sparks, open flames, and other ignition sources. Never charge a frozen battery.
Failure to comply could result in death or serious injury.

W0005A

⚠ WARNING

Improper operation or service of this machine can result in an accident.
Before working on any component(s) of the electrical circuit, put the ignition key in the off (shut down) position. When disconnecting batteries, always disconnect the negative (-) cable first. When reconnecting batteries, always connect the negative (-) cable last.
Failure to comply could result in death or serious injury.

W0943A

SMIL19MEX0722BA 11

Location: this sign is located on the battery cover.

Quantity: 1

Part number: 91N6-02122

This sign shows that it is necessary to consult this manual before handling the batteries.

https://truckmanualshub.com/

(8) Keep out of work range of attachment

⚠ WARNING

Falling object hazard!
Loss of hydraulic pressure or movement of a control can cause raised equipment to fall. Never work under an implement or attachment supported only by the hydraulic system. Always use suitable equipment to support an implement or attachment that must be serviced in a raised position.
Failure to comply could result in death or serious injury.

W0325A

SMIL19MEX0704AA 12

Location: these signs are located on both sides of the arm.

Quantity: 2

Part number: 91M8-06111

This sign warns the operator that entry into the work range of the attachment is forbidden while the engine is running.

(9) Combined hydraulic attachment sign

Location: this sign is located on the hydraulic oil tank.

Quantity: 1

Part number: 97MK-03110

This sign indicates how position the three-way valve to select the single action hydraulic attachment circuit or the double action hydraulic attachment circuit.

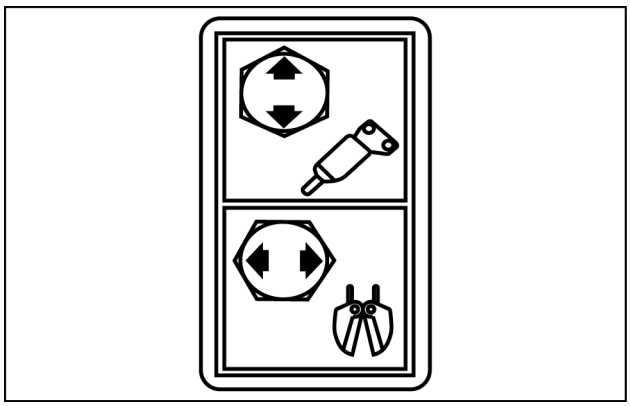

48018208 13

(10) Break the glass to exit

Location: these signs are located on the front window and on the rear window.

Quantity: 2

Part number: 9KM9-07260

This sign warns you that in case of emergency with the cab door locked, break the glass to exit.

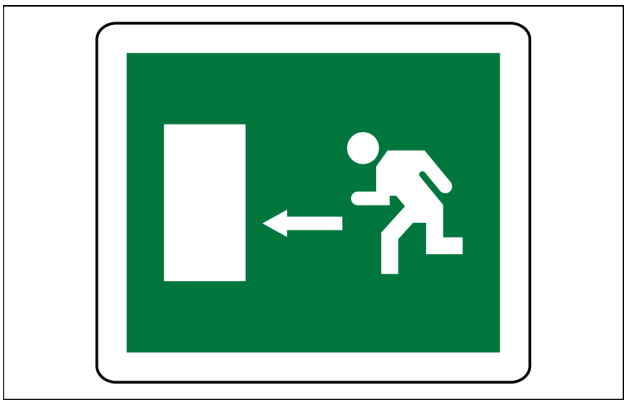

SMIL19MEX0724AA 14

https://truckmanualshub.com/

(11) Parking the machine

Location: this sign is located on the left-hand console box.

Quantity: 1

Part number: 91M8-07300

To prevent unauthorized and unintended movement of the machine, always do the following before you leave the operator's compartment:

1. Lower the bucket to the ground completely.
2. Place the safety lock lever in the raised position.
3. Stop the engine.
4. Remove the key.

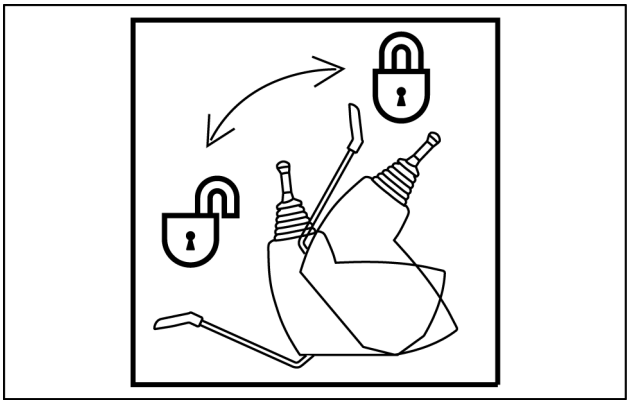

SMIL16MEX0015AA 15

(12) Safety front window

Location: these signs are located on the both side window of the cab.

Quantity: 2

Part number: 97MH-07351

Be careful that the front window may be promptly closed. During the machine movements the window could fall injuring the operator.

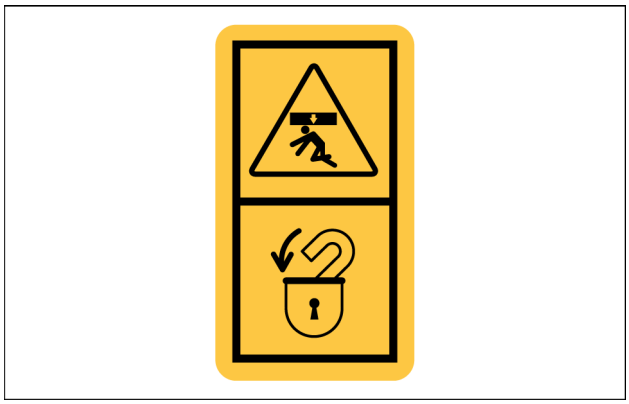

SMIL19MEX0708AA 16

(13) Dozer blade operation

Location: this sign is located on the right-hand console box.

Quantity: 1

Part number: 91M9-07391

This sign describes the blade operations.

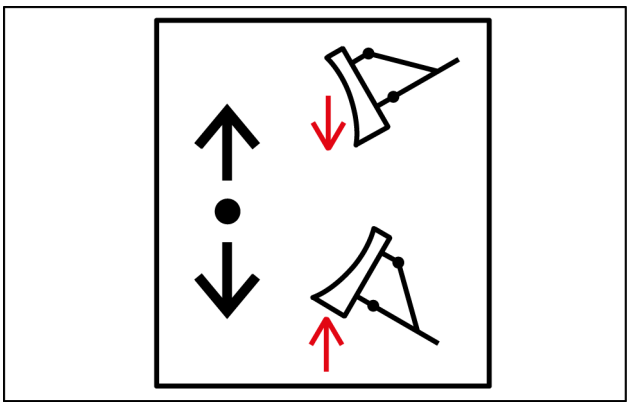

SMIL16MEX0010AA 17

https://truckmanualshub.com/

(14) Emergency exit

⚠ WARNING

Avoid injury!
A safety sign indicates which window to use as an emergency exit. Remove this window only in an emergency. Do not place any object that could be an obstacle in case of evacuation in front of this window.
Failure to comply could result in death or serious injury.

W1435A

SMIL16MEX0012AA 18

Location: this sign is located on the cab door.

Quantity: 1

Part number: 91MK-07281

This sign shows the position of and how to use the emergency exit (right-hand side window).
In case of emergency, use the hammer to break the right-hand side window of the cab.

(15) Emergency stop of the engine

Location: this sign is located on the left-hand side of the cab, next to the windshield washer reservoir.

Quantity: 1

This sign indicates that, only in case of emergency, the operator can stop the engine by operating the switch upwards.

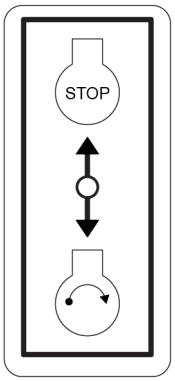

SMIL16MEX0644AA 19

(16) Greasing point

Location: this sign is located in front of the cab/canopy, close to the greasing points.

Quantity: 1

Part number: 91MJ-04110

This sign identifies the greasing points.

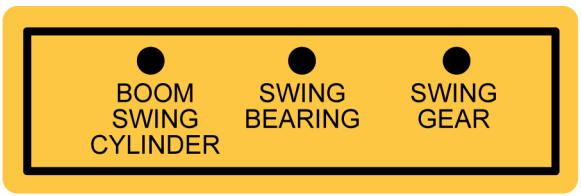

SMIL19MEX0723AA 20

https://truckmanualshub.com/

(17) Angle dozer blade operation

Location: this sign is located on the right-hand side of the cab.

Quantity: 1

Part number: 94MH-07370

This sign describes the angle blade operations.

NOTICE: *never jack up or lift the machine with the angle blade placed at an angle.*

NOTICE: *stability of the machine is affected with blade at angle, keep at neutral position.*

NOTICE: *before start the working operations or traveling up or down on a slope, position and keep the angle blade at neutral position.*

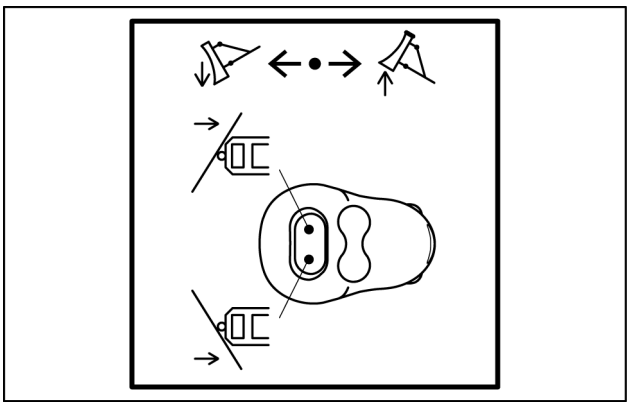

SMIL18MEX0112AA 21

(18) Fuel tank

⚠ CAUTION

Fuel vapors are explosive and flammable.
Do not smoke while handling fuel. Keep fuel away from flames or sparks. Shut off engine and remove key before servicing. Always work in a well-ventilated area. Clean up spilled fuel immediately.
Failure to comply could result in minor or moderate injury.

C0195A

Location: this sign is located on the right-hand side of the fuel tank.

Quantity: 1

Part number: 91MJ-01140

This sign shows the position of the fuel tank and the fuel to use.
This sign warns you to stop the engine when refueling and to keep all lights or flames at a safe distance while refueling.

SMIL19MEX0726AA 22

(19) Service instructions

Location: this sign is located on the left-hand side in the cab.

Quantity: 1

This sign describes the service locations and the service intervals.

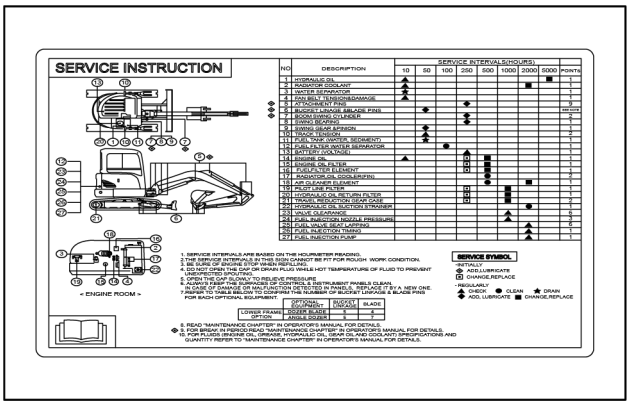

SMIL19MEX0752AA 23

https://truckmanualshub.com/

(20) Machine control pattern

⚠ WARNING

Unexpected machine movement!
Pilot controls have two different machine control patterns. Before you operate the machine, check which pattern is active.
Failure to comply could result in death or serious injury.

W1577A

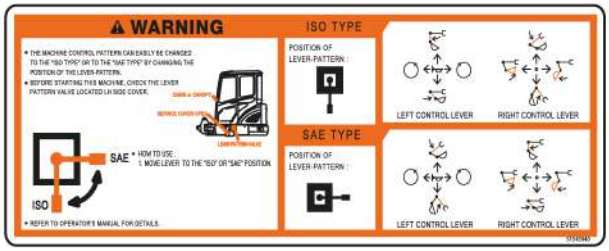

51543940 24

The machine control pattern can easily be changed to the "ISO type" or to the "SAE type" by changing the position of the lever-pattern.

How to use:

1. Move the lever to the “ISO” or “SAE” position.

Location: this sign is located on the left-hand side door of the cab/canopy.

Quantity: 1

https://truckmanualshub.com/

(21) Danger electric line - Interference with attachments

⚠ WARNING

Fold zone!
The booms may hit the cab when folding. Use extra care during manual boom folding and unfolding.
Failure to comply could result in death or serious injury.

W0032A

⚠ CAUTION

Electrocution hazard!
Contact with overhead power lines can cause severe electrical burns or death from electrocution. Make sure there is enough clearance between equipment and overhead power lines.
Failure to comply could result in minor or moderate injury.

C0103A

Cab location: this sign is located on the right-hand side window of the cab.

Canopy location: this sign is located on the right-hand side of the canopy.

Quantity: 1

Part number: 91M9-07243

This sign shows that work near overhead high-voltage electric lines must not be done without checking beforehand that all necessary measures have been taken to respect the minimum distances.

The cab/canopy and/or the boom may collide with the arm or the bucket (at the end of the attachment) depending upon the length of the arm, the size of the bucket, the angle of the boom swing, or the installation of a quick coupler or other attachment. Be sure to avoid abrupt operation and secure proper clearance in order to prevent collision with the cab/canopy and the boom.

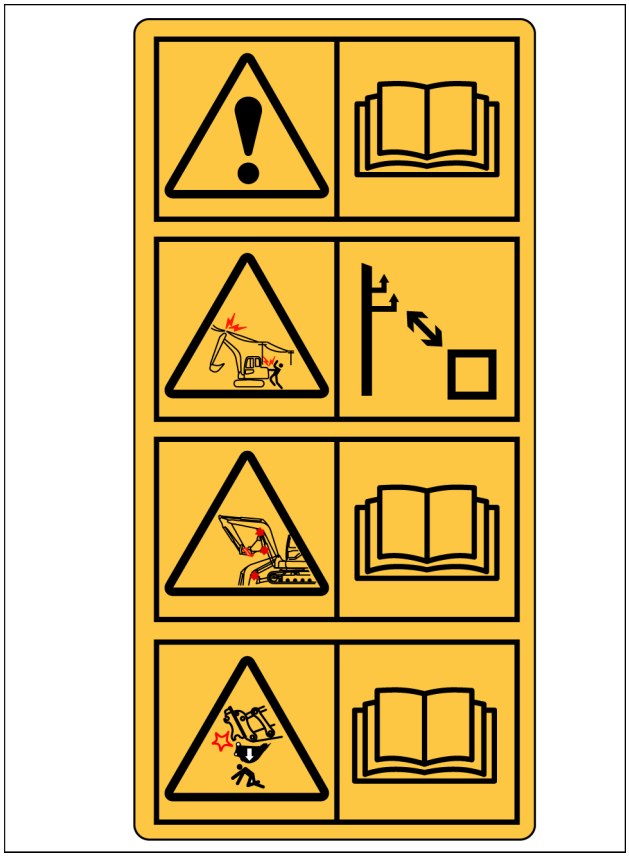

SMIL19MEX0705BA 25

https://truckmanualshub.com/

(22) Accumulator

⚠ WARNING

Pressurized system!
Do not drop the accumulator. A charged accumulator contains nitrogen compressed to 31 bar (450 psi). If the charging valve breaks away from the accumulator, the escaping nitrogen will propel the accumulator at a dangerous rate of speed.
Failure to comply could result in death or serious injury.

W0957A

⚠ WARNING

Pressurized system!
Do not expose the accumulator to temperatures above 49 °C (120 °F). A charged accumulator contains nitrogen compressed to 31 bar (450 psi). High heat will cause the safety plug to blow out of the accumulator, and the escaping nitrogen will propel the accumulator at a dangerous rate of speed.
Failure to comply could result in death or serious injury.

W0958A

Location: this sign is located on the accumulator of the solenoid valve.

Quantity: 1

Part number: 91N6-03201

This sign warns that accumulator is filled with high pressure gas so that near-by fire activity or welding is prohibited.

Consult the NEW HOLLAND CONSTRUCTION Dealer for the service.

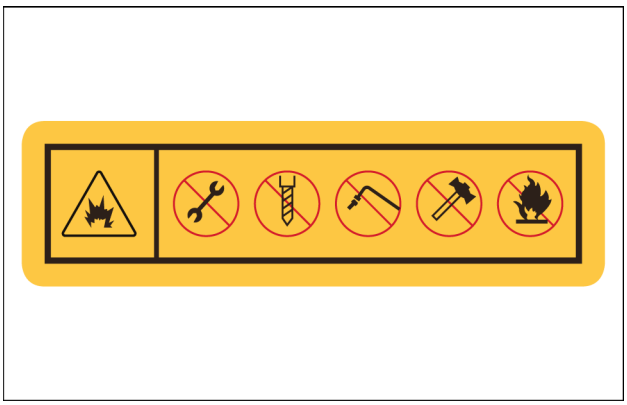

SMIL19MEX0707AA 26

(23) Battery position

Location: this sign is located on the right-hand side door.

Quantity: 1

Part number: 91MJ-02110

This sign indicates the position of the battery.

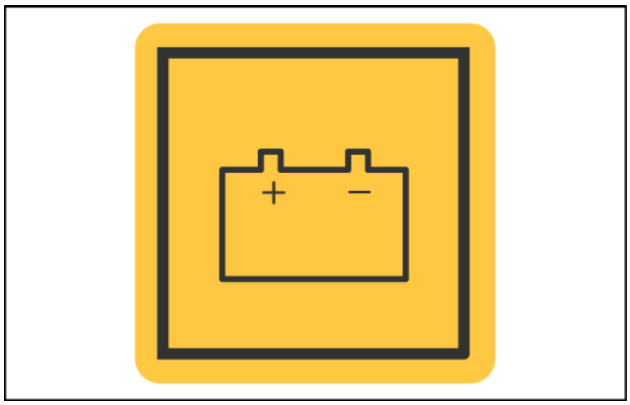

SMIL16MEX0016AA 27

https://truckmanualshub.com/

(24A) Functions of operation levers

Cab location: this sign is located in right-hand window of the cab.

Canopy location: this sign is located on the right-hand side of the canopy.

Quantity: 1

Cab part number: 97MK-07220

Canopy part number: 97MK-07230

This sign describes the functions of operation levers.

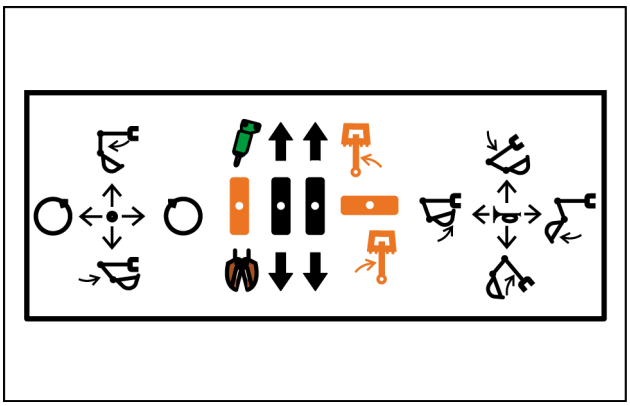

SMIL16MEX0022AA 28

(24B) Functions of operation levers

Cab location: this sign is located in right-hand window of the cab.

Canopy location: this sign is located on the right-hand side of the canopy.

Quantity: 1

Cab part number: 97MK-07281

Canopy part number: 97MK-07291

This sign describes the functions of operation levers.

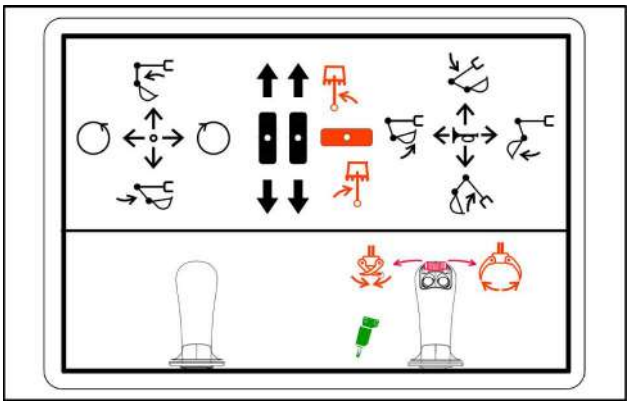

SMIL17MEX2754AA 29

(24C) Functions of operation levers

Cab location: this sign is located in right-hand window of the cab.

Canopy location: this sign is located on the right-hand side of the canopy.

Quantity: 1

Cab part number: 94MH-07220

Canopy part number: 94MH-07230

This sign describes the functions of operation levers.

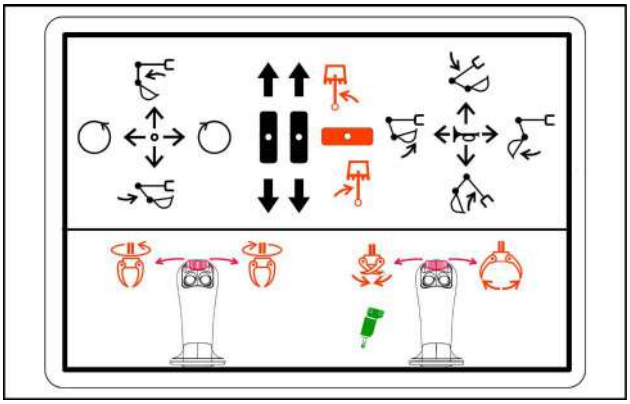

SMIL17MEX2755AA 30

(25) Hydraulic tank

Location: this sign is located on the hydraulic tank.

Quantity: 1

Part number: 91Q6-03230

This sign warns you to fill only hydraulic oil and not to not fill the diesel fuel.

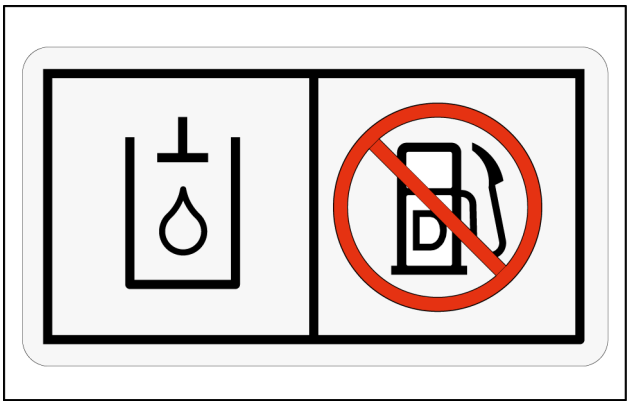

SMIL16MEX0014AA 31

https://truckmanualshub.com/

(26) Compliant to Canadian Regulation ICES-002

Cab location: this sign is located on the right-hand side window of the cab.

Canopy location: this sign is located on the right-hand side of the canopy.

Quantity: 1

Part number: 91K4-14150

This sign shows compliance to Canadian Regulation ICES-002 (vehicles, boats and other devices propelled by an internal combustion engine, electrical means or both).

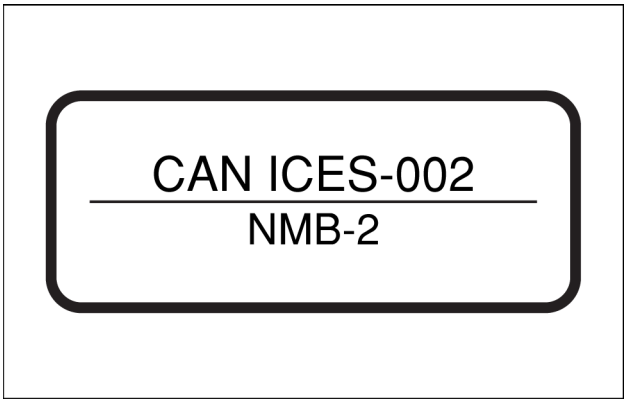

SMIL19MEX0725AA 32

(27) Frame general warning

Cab location: this sign is located on the left-hand side of the cab.

Canopy location: this sign is located on the right-hand side of the canopy.

Quantity: 1

Part number: 97MJ-04100

This sign warns you to refill the recommended hydraulic oil up to the specified level.

When lift the excavator, ensure that the wire rope is proper size. Follow the instructions in this manual.

This sign indicates that you always need to read the operator's manual before you transport the machine.

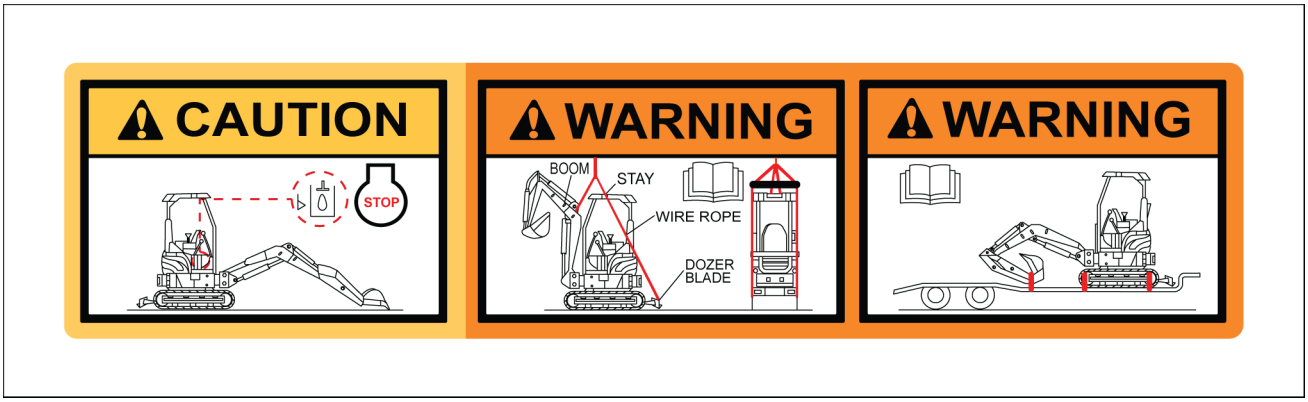

SMIL19MEX0732EA 33

https://truckmanualshub.com/

(28) Air conditioning refrigerant

⚠ WARNING

Explosion hazard!
Air-conditioning refrigerant boils at -26 °C (-15 °F)!
-NEVER expose any part of the air-conditioning system to a direct flame or excessive heat.
-NEVER disconnect or disassemble any part of the air-conditioning system.
Discharging refrigerant gas into the atmosphere is illegal in many countries.
Failure to comply could result in death or serious injury.

W0340B

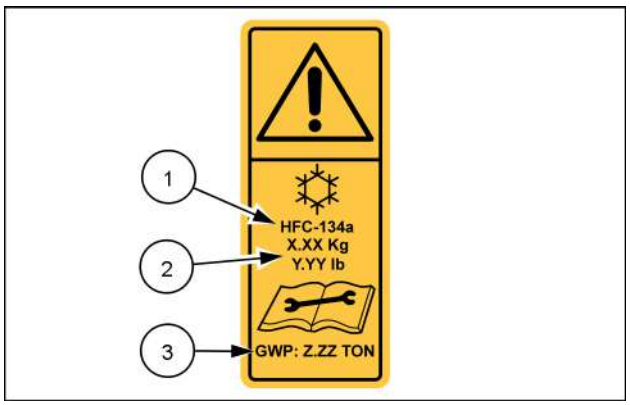

SMIL19MEX0718AA 34

Cab location: this sign is located in the engine compartment, adjacent to the service point for changing the gas.

Quantity: 1

Part number: 91K7-07310

This sign indicates that the vehicle uses a fluorinated greenhouse gas and shows:

(1) The designation for such gas.

(2) The quantity of the gas included on the air conditioning system.

(3) The Global Warming Potential (GWP) of the gas.

- **1 kg** (**2.2 lb**) of R134a is equal to **1.43 t** of GWP.

(29) Beacon light

Location: this sign is located on the rear outside of the cab/canopy.

Quantity: 1

Part number: 91MK-02221

This sign indicates to make sure that the beacon light maintains a vertical position.
A horizontal position can result in a decrease in life time of the lamp due to the infiltration of foreign substances such as dust or water.
During the machine transfer, change the position of the lamp to the horizontal position.

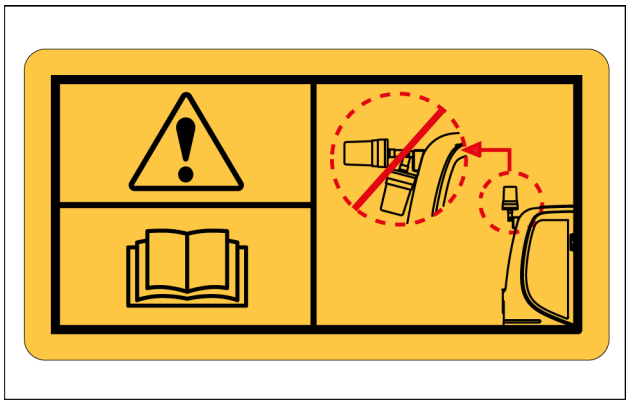

SMIL19MEX0711AA 35

https://truckmanualshub.com/

(30) Ultra low sulfur fuel

Location: this sign is located on the right-hand side of the fuel filler neck.

Quantity: 1

Part number: 98Q6-07390

This sign indicates to use low sulfur fuel only (sulfur content < **15 ppm**).

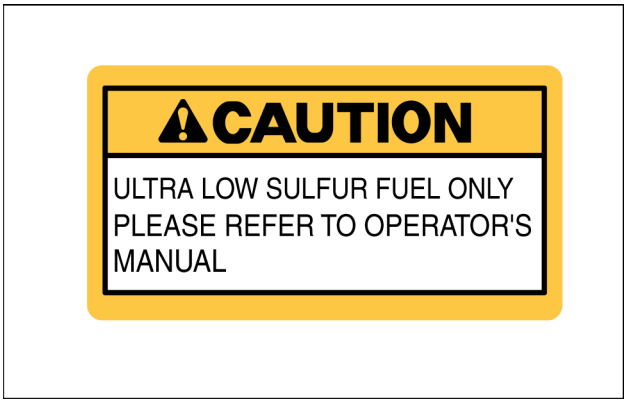

SMIL19MEX0712AA 36

(31) Lifting point

Location: these signs are located on the dozer blade.

Quantity: 2

Part number: 91MJ-05110

This sign shows the location where a sling is attached to handle the excavator and the coupling location when the machine has to be transported on a trailer.

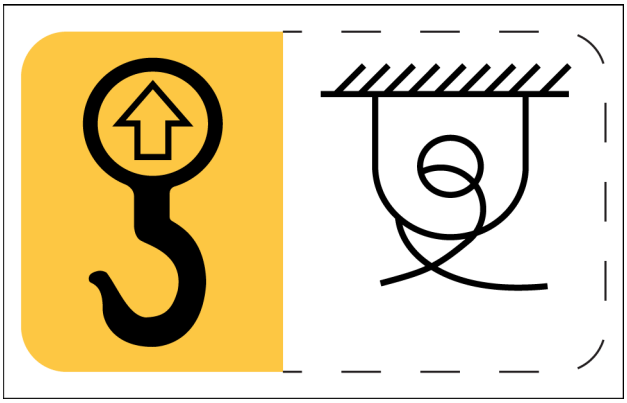

SMIL19MEX0713AA 37

(32) Battery disconnect switch

Location: this sign is located near the battery disconnect switch, inside the hydraulic tank compartment.

Quantity: 1

Part number: 97MJ-05120

This sign warns to read the operator's manual before disconnect the battery.

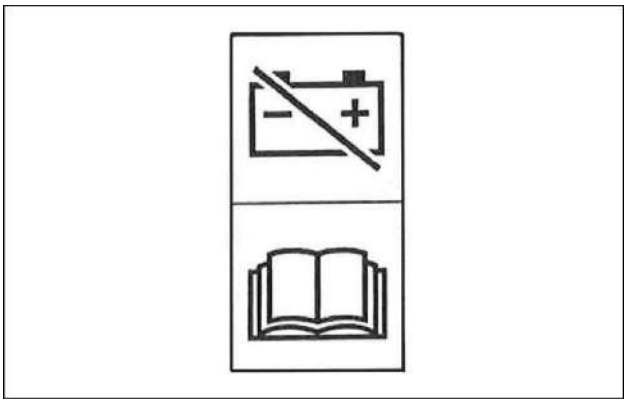

SMIL16MEX0942AA 38

(33) Load handling (optional)

Cab location: this sign is located on the left-hand side of the cab.

Canopy location: this sign is located on the left-hand side of the canopy.

Quantity: 1

The load handling indicates the rated lift capacities that shall be considered at different distances from the swing axis.

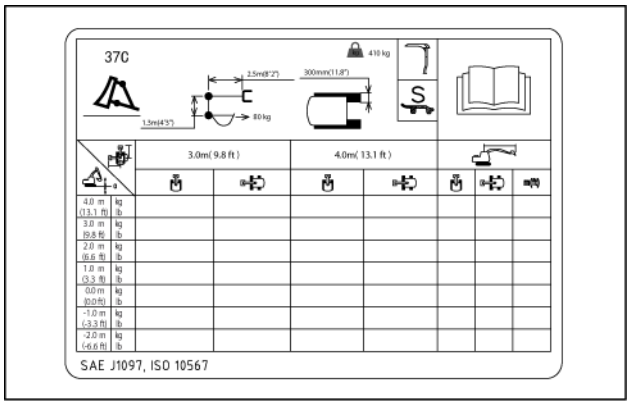

SMIL17MEX0057AA 39

https://truckmanualshub.com/

(34) Biodegradable hydraulic oil

Location: this sign is located on the hydraulic tank.

Quantity: 1

This sign indicates that the vehicle can use biodegradable hydraulic oil.

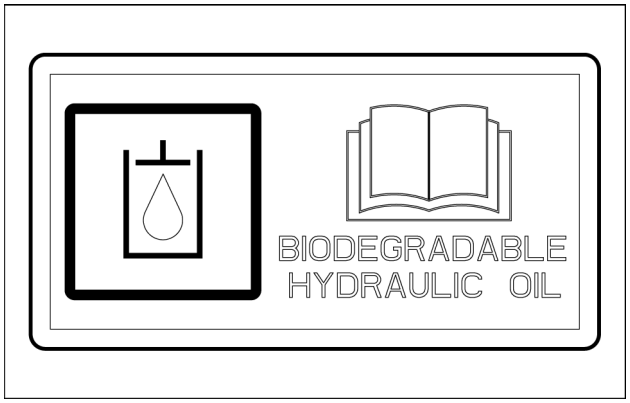

SMIL19MEX0729AA 40

https://truckmanualshub.com/

3 - CONTROLS AND INSTRUMENTS

Access to operator's platform

Door and steps

Cab door

⚠ CAUTION

Pinch hazard!
Be careful not to get your hand, clothes, etc. caught in the door when closing it.
Failure to comply could result in minor or moderate injury.

C0046A

To open the door, use the handle **(1)** from the outside and use the handle **(2)** from the inside.

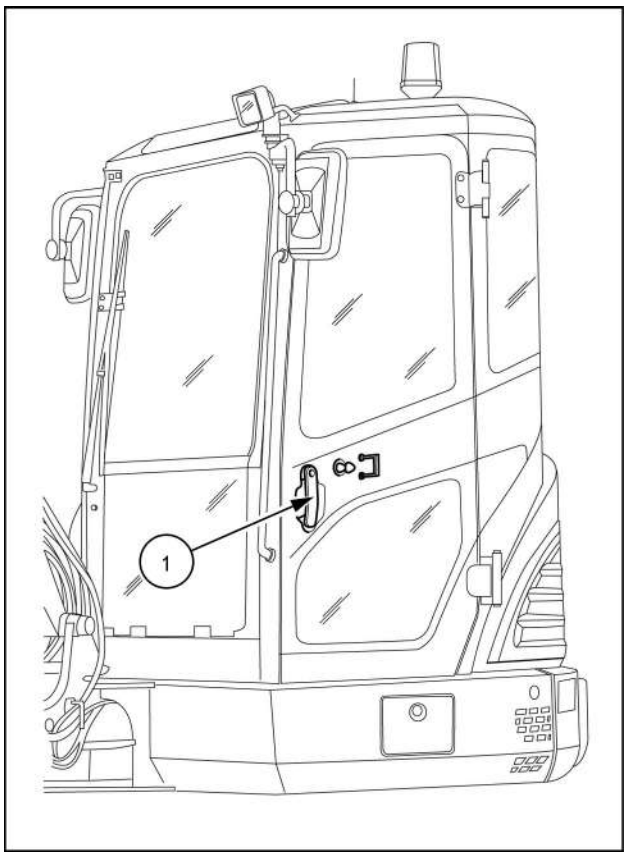

SMIL16MEX0364BA 1

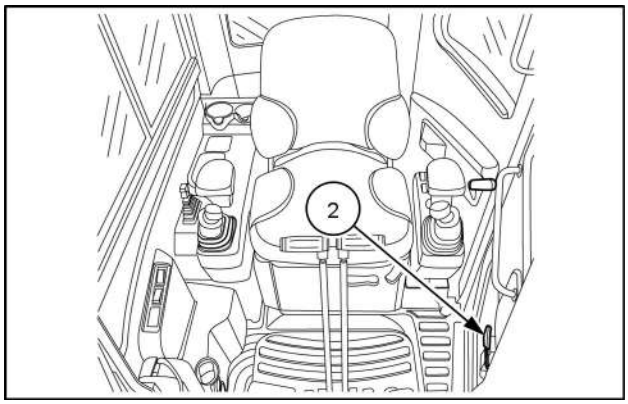

SMIL18MEX0118AA 2

https://truckmanualshub.com/

The door can be latched in completely open position. To latch or unlatch the door, operate the lever **(3)**.

NOTICE: *do not leave the door half-open. Fix it in a latched position. Before performing work with the door open, lock it securely.*

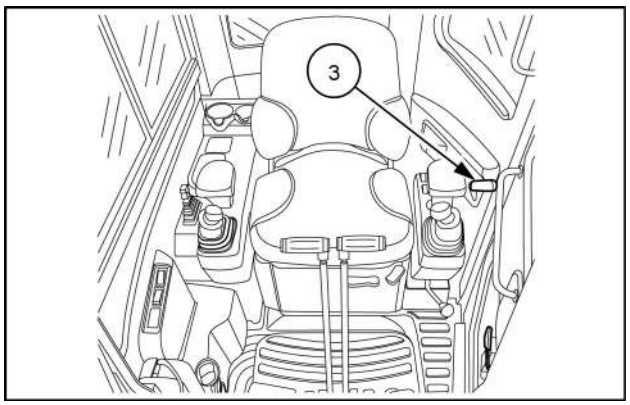

SMIL18MEX0118AA 3

https://truckmanualshub.com/

Steps and access handles

⚠ WARNING

Fall hazard!
Clean the steps and access handles to remove all traces of grease, oil, mud, and ice (in winter).
Failure to comply could result in death or serious injury.

W0139A

⚠ WARNING

Fall hazard!
Jumping on or off the machine could cause an injury. Always face the machine, use the handrails and steps, and get on or off slowly. Maintain a three-point contact to avoid falling: both hands on the handrails and one foot on the step, or one hand on the handrail and both feet on the steps.
Failure to comply could result in death or serious injury.

W0141A

⚠ WARNING

Fall hazard!
When entering or exiting the cab, never use the control levers as handholds. Always mount and dismount the machine in a safe way. Maintain a three-point contact with steps, ladders, and/or handholds.
Failure to comply could result in death or serious injury.

W1340B

To get in or out of the machine always face the machine and use the handrails and track shoes.

Ensure safety by always maintaining at least three-point contact of hands and feet with the handrails, and track shoes.
If grasping the door handrail when mounting or dismounting or moving on the track, open and lock the door securely in the open position. Otherwise, the door may move suddenly, causing you to loose balance and fall.

Cab version

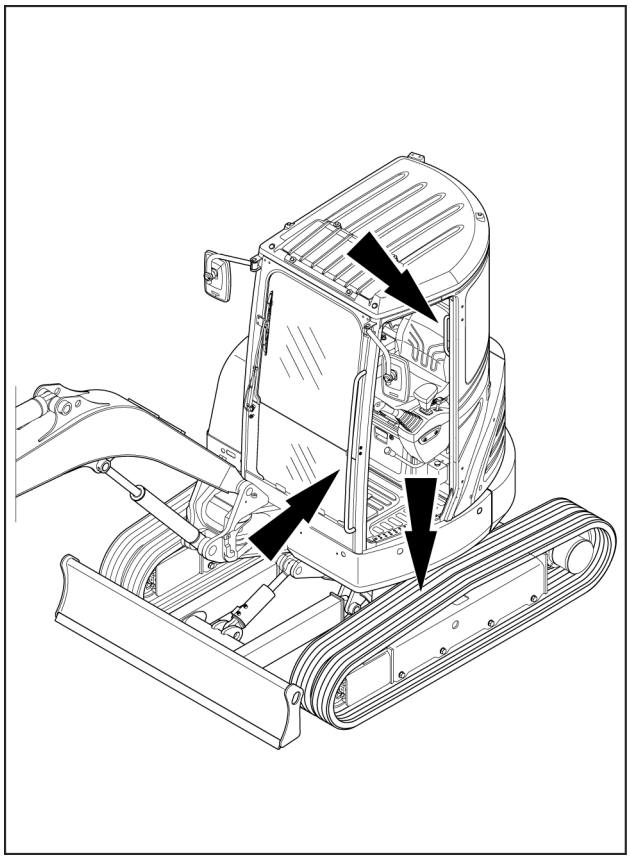

SMIL18MEX0119BA 4

Canopy version

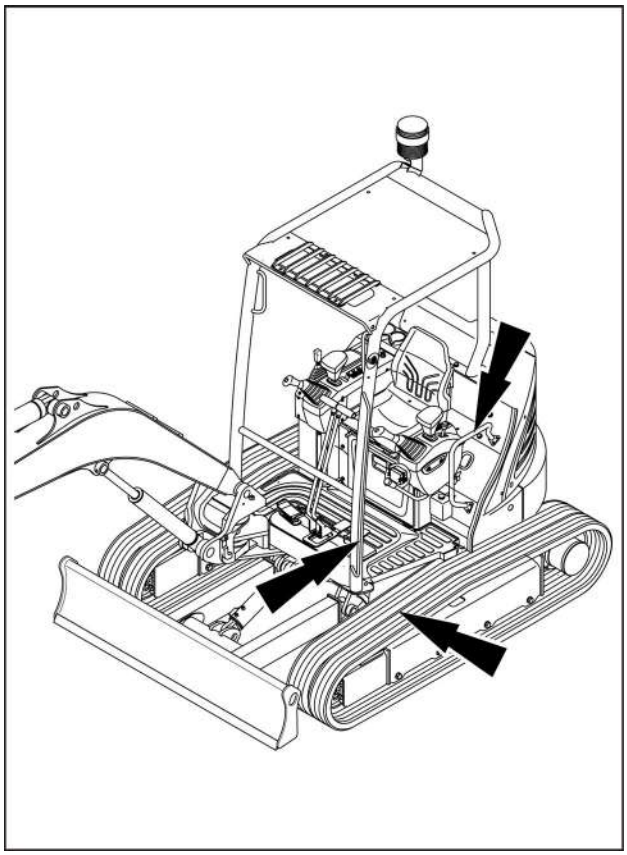

SMIL18MEX0120BA 5

Operator's seat

Operator's seat

In order to operate the machine correctly and with maximum efficiency and comfort, adjust the seat to suit the weight and size of the operator.

Fore and aft adjustment

- Hold the lever **(A)** in the raised position.
- Slide the seat to the required position.
- Release the lever **(A)**.

  NOTE: *the seat can be positioned over a range of* ***52 mm*** *(****2 in****).*

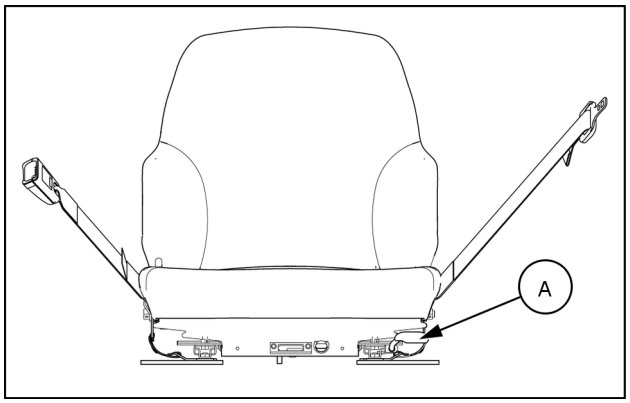

SMIL18MEX0121AA 1

Seat back angle adjustment

- Hold the lever **(B)** in the raised position.
- Move with the seat-back to the desired position.
- Release the lever **(B)**.

  NOTE: *the seat back can be adjusted over a range of* ***-5 – 25°****, with 18 locking positions.*

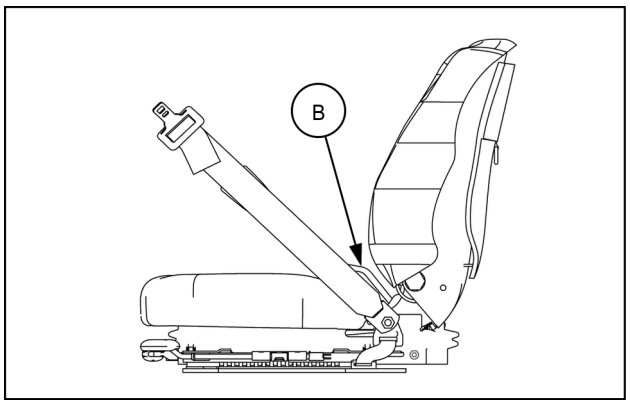

SMIL18MEX0122AA 2

Weight adjustment

- Lower the lever **(C)** to decrease the rigidity of the suspension.
- Raise the lever **(C)** to obtain harder suspension.

  NOTE: *the weight adjustment is for all operator weights between* ***45 – 136 kg*** *(****99 – 300 lb****).*

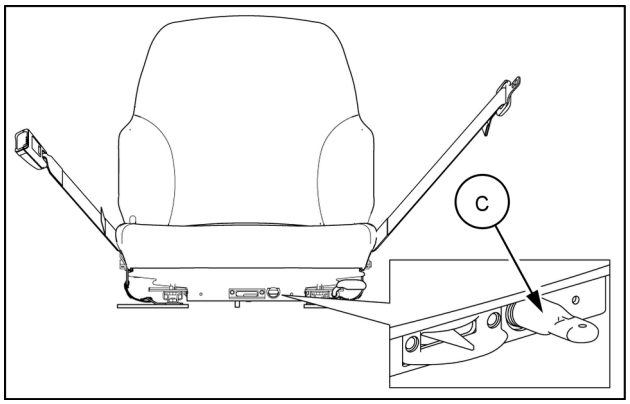

SMIL18MEX0123AA 3

https://truckmanualshub.com/

Seat belt

⚠ WARNING

Equipment failure could cause accident or injury!
Always fasten the seat belt securely before you operate the machine. Inspect seat belt parts for wear and damage. Replace any and all worn or damaged parts of the seat belt prior to operation.
Failure to comply could result in death or serious injury.

W0046C

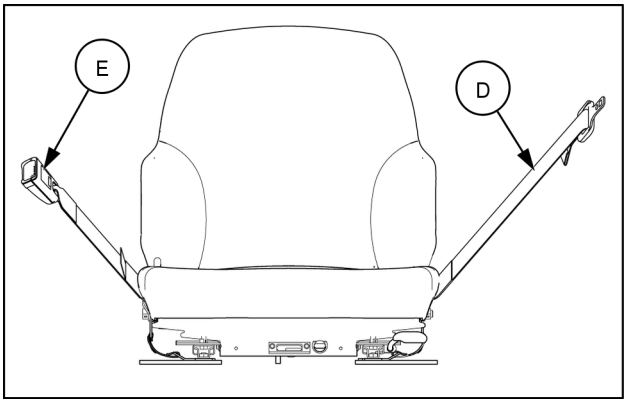

SMIL18MEX0121AA 4

- Sit comfortably on the operator's seat.
- Pull out a long section of belt **(D)**.
- Engage the belt in the fastening system **(E)**.

NOTE: *if the section of belt pulled out is not long enough, release it, so it rolls up and then pull it out again.*

To release the seat belt press down the releasing lever of the fastening system **(E)**.

NOTICE: *the seat belt must be kept clean. Use only soap and water to clean the belt, do not use bleach or dyes.*

https://truckmanualshub.com/

Forward controls

Forward controls

⚠ WARNING

Unexpected machine movement!
Pilot controls have two different machine control patterns. Before you operate the machine, check which pattern is active.
Failure to comply could result in death or serious injury.

W1577A

This machine is equipped with a lever pattern valve that allows the operator to select between the “ISO type” controls pattern or the “SAE Type” controls pattern by changing the position of the valve.
Before starting machine operation, select the desired controls pattern, and change the position of the valve accordingly. Refer to page **4-13**.

Control levers

Pattern: ISO type

Left-hand control lever:

1. The dipper arm extends.
2. The dipper arm retracts.
3. The upper structure swings to the left–hand side.
4. The upper structure swings to the right–hand side.

NOTE: *the movement speed of the arm or of the swing depends on the control lever tilt angle. In the intermediate position two movements can be obtained simultaneously.*

NOTE: *when the upper structure swing control is released, the upper structure may continue to rotate due to the force of inertia. In this event, make allowance for the extra movement by releasing the control slightly earlier.*

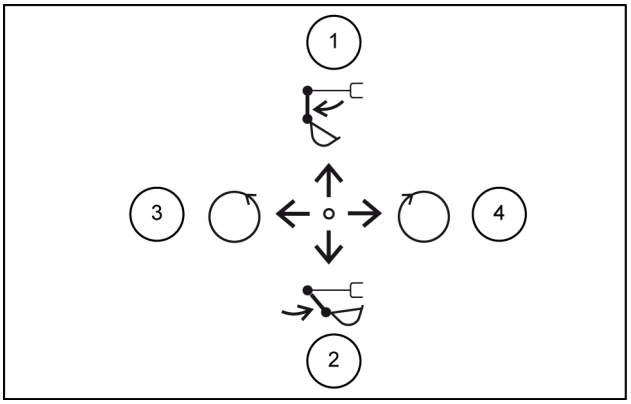

SMIL16MEX3075AB 1

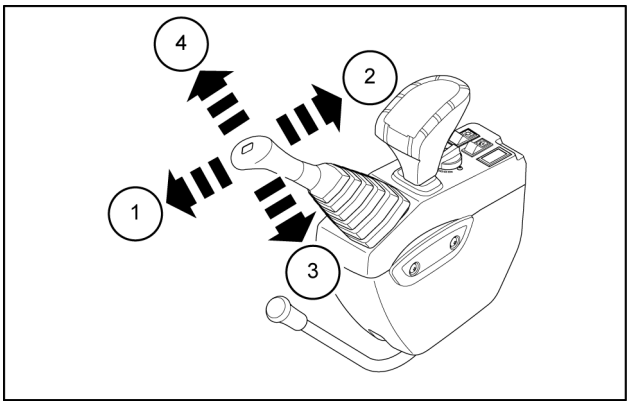

SMIL16MEX1462AB 2

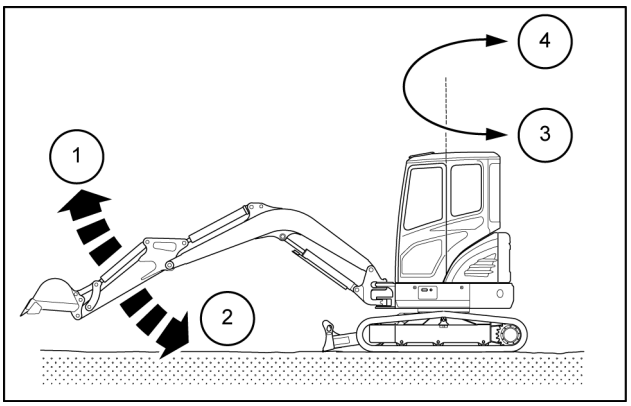

SMIL18MEX0124AB 3

https://truckmanualshub.com/

Right-hand control lever:

5. The boom lowers.
6. The boom raises.
7. The bucket retracts (filling).
8. The bucket extends (dumping).

NOTE: *the movement speed of the boom or of the bucket depends on the control lever tilt angle. In the intermediate position two movements can be obtained simultaneously.*

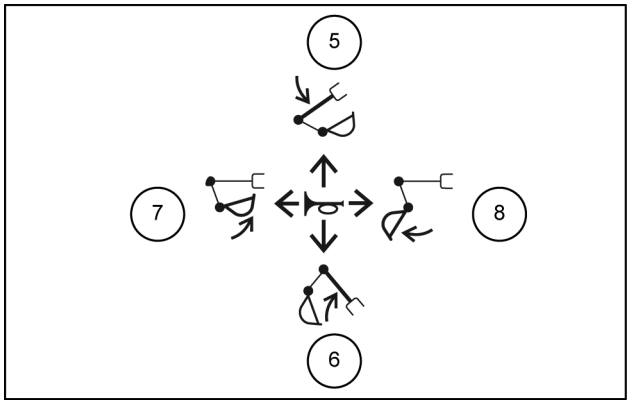

SMIL16MEX3076AB 4

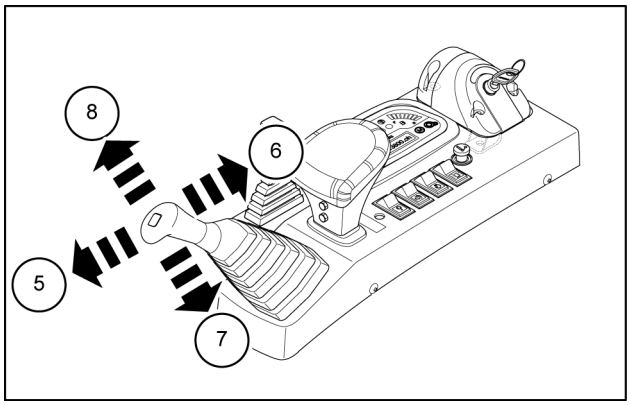

SMIL16MEX1463AB 5

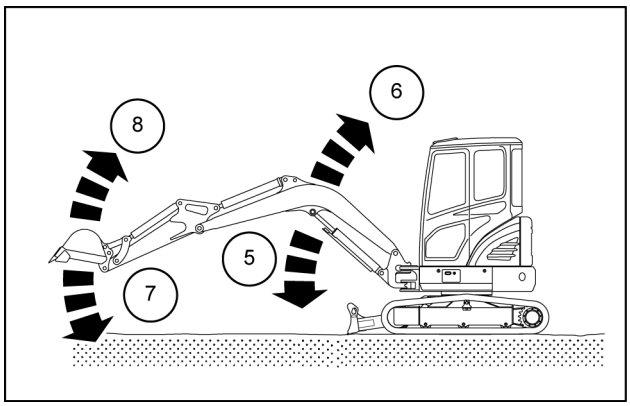

SMIL18MEX0125AB 6

https://truckmanualshub.com/

Pattern: SAE type

Left-hand control lever:

1. The boom lowers.
2. The boom raises.
3. The upper structure swings to the left–hand side.
4. The upper structure swings to the right–hand side.

NOTE: *the movement speed of the arm or of the swing depends on the control lever tilt angle. In the intermediate position two movements can be obtained simultaneously.*

NOTE: *when the upper structure swing control is released, the upper structure may continue to rotate due to the force of inertia. In this event, make allowance for the extra movement by releasing the control slightly earlier.*

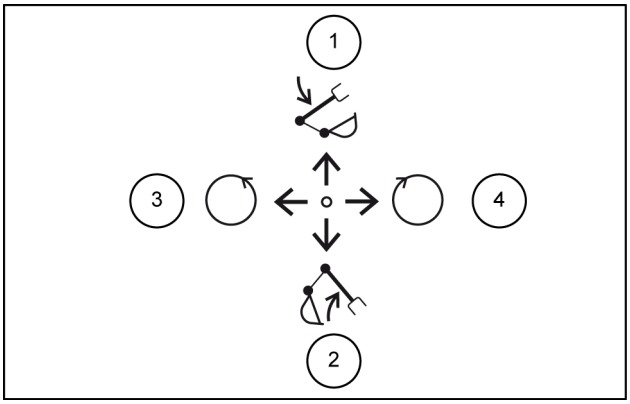

SMIL16MEX3077AB 7

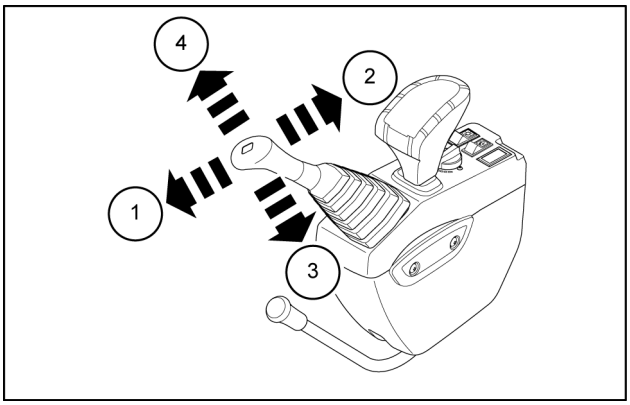

SMIL16MEX1462AB 8

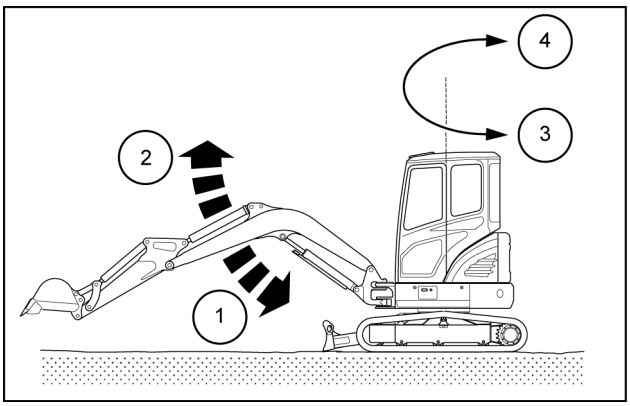

SMIL18MEX0126AB 9

https://truckmanualshub.com/

Right-hand control lever:

5. The dipper arm extends.
6. The dipper arm retracts.
7. The bucket retracts (filling).
8. The bucket extends (dumping).

NOTE: *the movement speed of the boom or of the bucket depends on the control lever tilt angle. In the intermediate position two movements can be obtained simultaneously.*

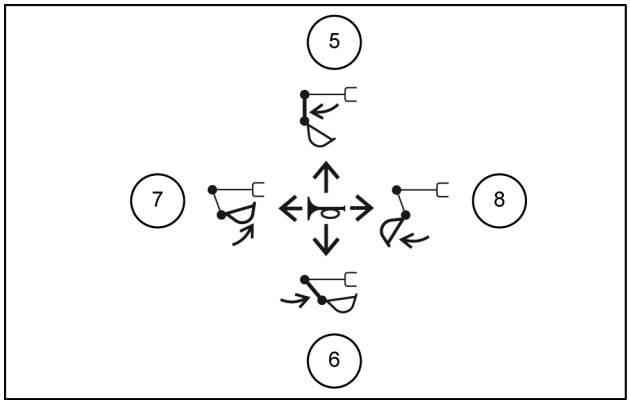

SMIL16MEX3079AB 10

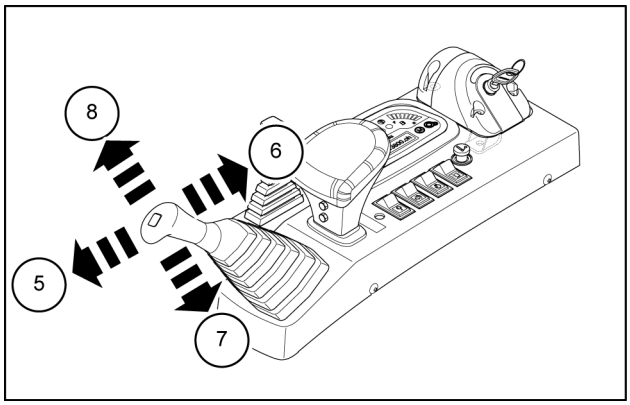

SMIL16MEX1463AB 11

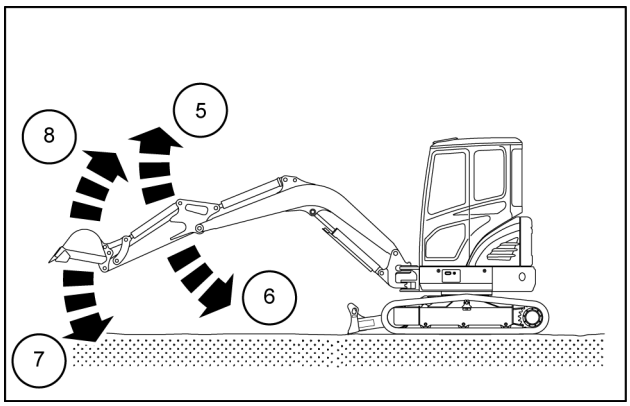

SMIL18MEX0127AB 12

https://truckmanualshub.com/

Travel control levers and pedals

The travel control levers and pedals are used to move the machine.

(N): neutral

(a) + **(b)**: machine moves forward.

(c) + **(d)**: machine moves backward.

(b) + **(c)**: opposite simultaneous rotation of the tracks with consequent counterclockwise rotation of the machine around its center axis.

(a) + **(d)**: opposite simultaneous rotation of the tracks with consequent clockwise rotation of the machine around its center axis.

(a), **(b)**, **(c)**, **(d)**: positions to move one track only. Consequently the machine steers pivoting on the stationary track.

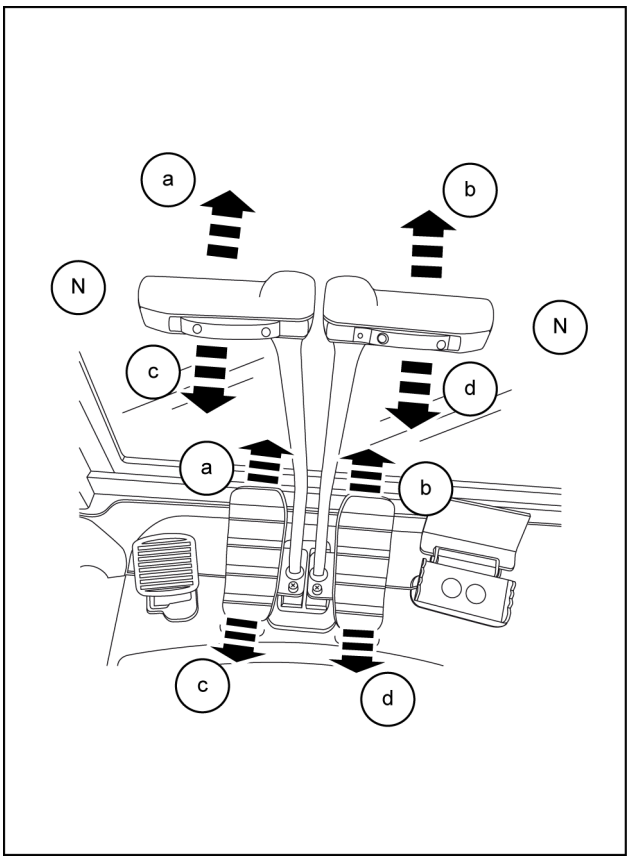

SMIL16MEX0915BA 13

Travel mode selector switch

The travel mode selector switch allows to set two different travel speed ranges:

- Low speed range: **0 – 2.4 km/h** (**0.0 – 1.5 mph**)
- High speed range: **0 – 4.3 km/h** (**0.0 – 2.7 mph**)

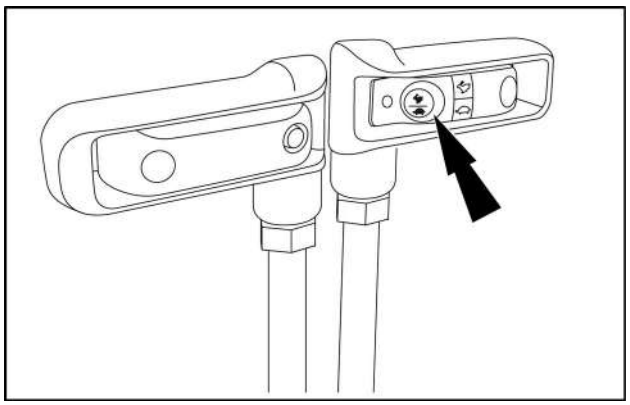

SMIL16MEX1499AA 14

https://truckmanualshub.com/

Boom swing pedal

This pedal is used to swing the boom to the right-hand and left-hand direction.
Move the lock cover **(A)** to unlock position by foot.
Press the pedal to right-hand side **(1)** to swing the boom to the right-hand direction.
Press the pedal to left-hand side **(2)** to swing the boom to the left-hand direction.

NOTICE: *make particular attention when swing the boom to the left-hand side: the attachment may collide with the cab/canopy.*

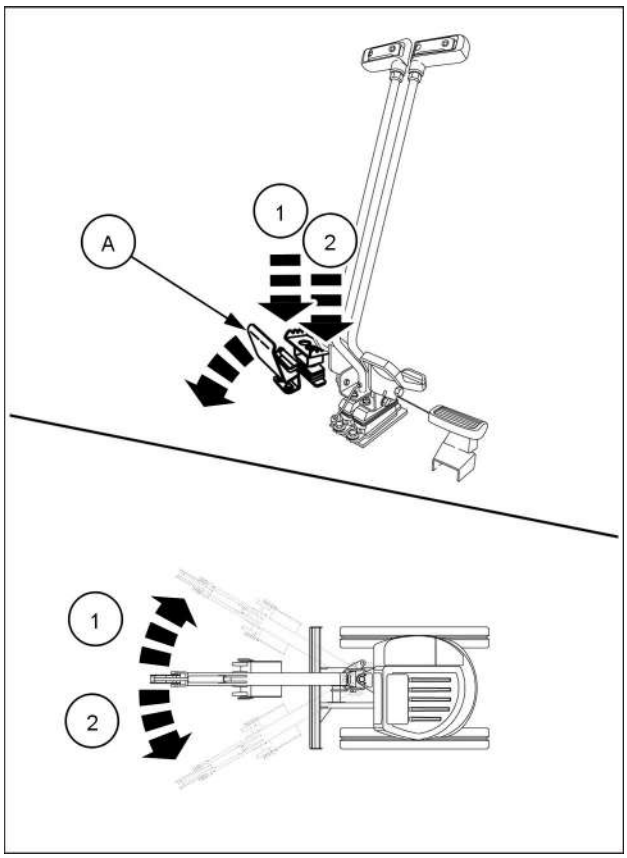

SMIL19MEX0754BA 15

Auxiliary pedal (if equipped)

The auxiliary pedal **(A)** allows to control the main auxiliary hydraulic circuit. This circuit is intended to operate attachments like hydraulic breakers or hydraulic clamshells.

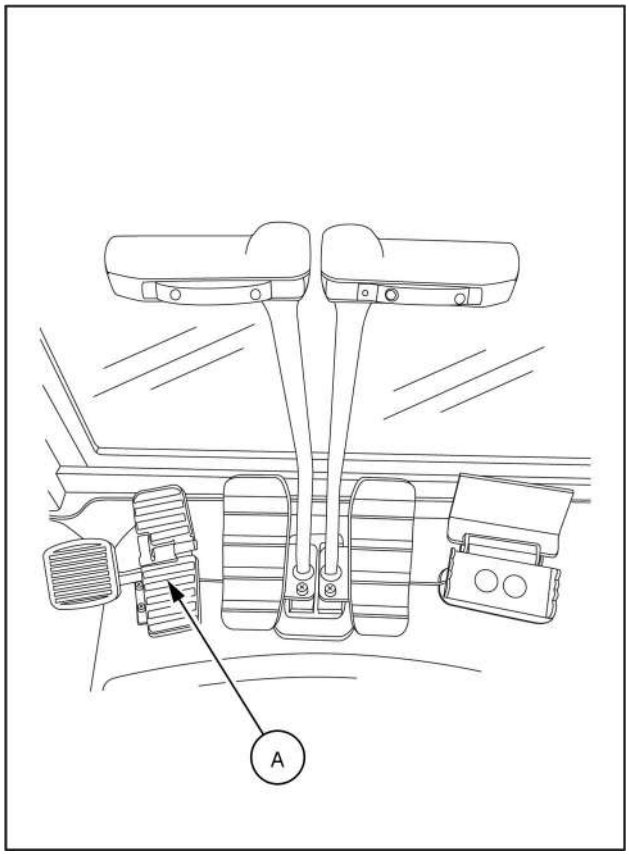

SMIL19MEX0775BA 16

https://truckmanualshub.com/

Footrest

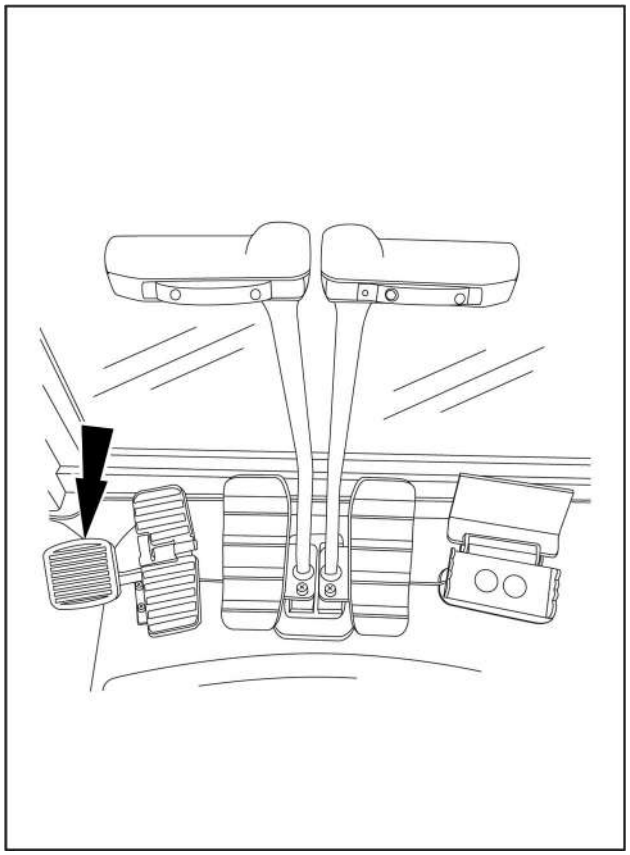

SMIL19MEX0775BA 17

https://truckmanualshub.com/

Windshield

⚠ CAUTION

Pinch hazard!
Make sure you correctly follow the instructions in this manual when handling the windshield. If you do not handle the windshield correctly, it could slip and injure your fingers or hands.
Failure to comply could result in minor or moderate injury.

C0045A

Opening

Hold the grips **(1)** located on both sides of the windshield frame.

Move the grips **(1)** to the inside to release the lock latches.

Hold both grips **(1)** and push the windshield upward.

Hold both grips **(1)** and back into the storage position. Release both grips carefully until the lock latches are in the locked position.

NOTICE: *be carefull of USB key when open the front window. It is recommended to use a nano USB key. It is recommended to use a nano USB key with overall maximum length as reported to page* ***Radio*** *.*

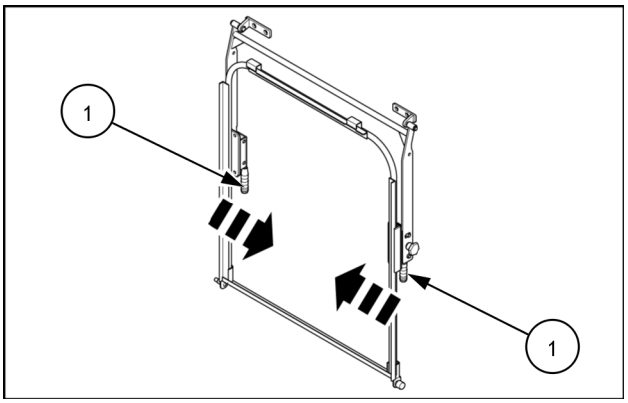

SMIL16MEX0035AB 1

Closing

Hold the grips **(1)** located on both sides of the windshield frame.

Move the grips **(1)** to the inside to release the lock latches.

Hold both grips **(1)** and push the windshield downward.

Hold both grips **(1)** and back into the storage position. Release both grips carefully until the lock latches are in the locked position.

Left-hand side controls

Left-hand side controls

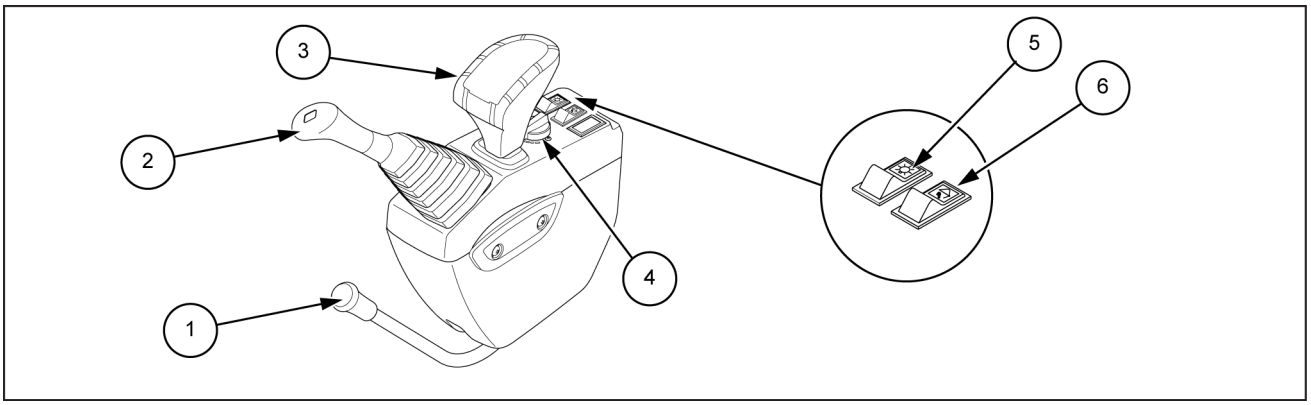

SMIL16MEX1489EB 1

(1) Safety lock lever (refer to page **3-16**)

(2) Left-hand control lever (refer to page **3-6**)

(3) Armrest

(4) Engine speed control switch (refer to page **3-16**)

(5) Main light switch. This switch activates the head light and the work light in two steps.

The first step activates the head light and the cluster illumination lamp.
The second step activates the work light and the indicator lamp on the switch.

(6) Hydraulic quick coupling system switch (optional)

https://truckmanualshub.com/

Hydraulic quick coupling system switch (optional)

The hydraulic quick coupling system switch **(6)** is used to engage or disengage the hydraulic quick coupling system.

This switch has a sliding mechanism **(A)** for preventing erroneous switch operation. Slide the sliding mechanism **(A)** in the direction of the arrow to lock or unlock the device.

The buzzer sounds when the hydraulic quick coupling system switch is pressed to disengage the moving hook. The buzzer stops when the switch is released to engage the moving hook.

To connect or disconnect an attachment, proceed as follows:

1. Place the attachment in full curled position for disconnecting.
2. Slide the switch mechanism, then press and hold the hydraulic quick coupling switch **(6)** in release position.
3. Operate the hand control lever in bucket-in position in order to activate the pins of the quick coupler.
4. Tilt the hand control lever for disconnecting the attachment.
5. Release the switch.

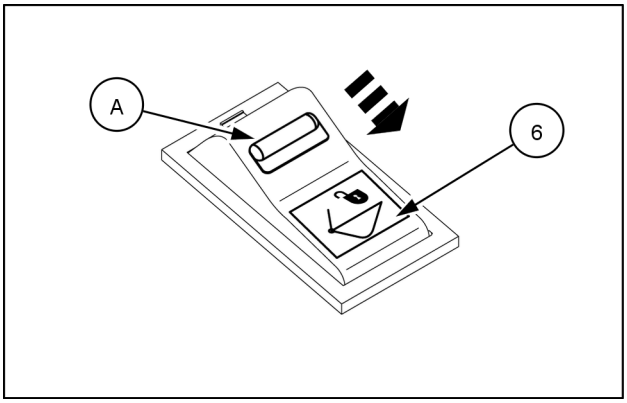

SMIL16MEX3181AA 2

https://truckmanualshub.com/

Safety lock lever

⚠ WARNING

Unexpected machine movement!
When you must leave the operator's seat, always place the safety lever in the LOCKED position. If the safety lever is unlocked and the control lever is moved unexpectedly, a serious accident could result.
Failure to comply could result in death or serious injury.

W1241A

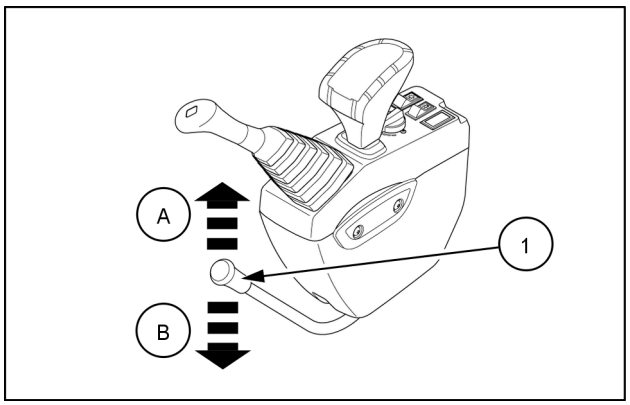

SMIL16MEX2743AA 1

The safety lever operates on two positions:

A. Locked position: when the safety lever **(1)** is in locked position **(A)**, all the functions are disabled.

   NOTICE: *never use the safety lock lever as a handhold when get in or out the machine.*

B. Unlocked position: when the safety lever **(1)** is in unlocked position **(B)**, the machine is operative.

Engine speed control

The knob **(1)** is used to increase or decrease the rotation speed of engine (RPM).

See the relevant decal locate on the left hand console.

Rotate the knob clockwise **(A)** to increase engine RPM.

Rotate the knob counterclockwise **(B)** to decrease engine RPM.

NOTE: *when stop the engine, rotate the engine speed control in low idle position and turn the starter key OFF.*

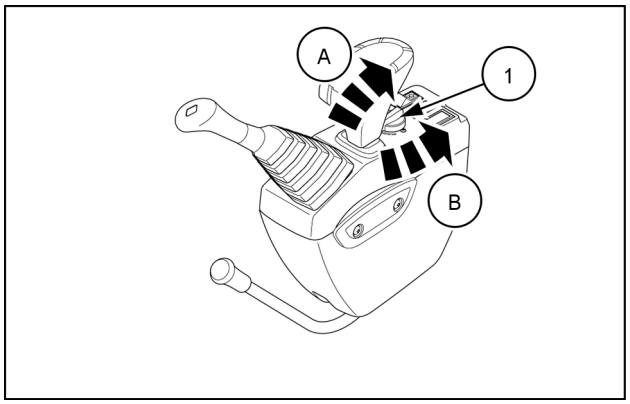

SMIL16MEX2743AA 1

https://truckmanualshub.com/

Emergency exit hammer

Only in case of emergency, use the installed safety hammer **(1)** for breaking the windshield of the cab, and then exit carefully.

Consult your NEW HOLLAND CONSTRUCTION dealer for windshield installation.

NOTICE: *do not break the windshield of the cab except when it is absolutely necessary, such as to escape in an emergency.*

⚠ WARNING

Avoid injury!
A safety sign indicates which window to use as an emergency exit. Remove this window only in an emergency. Do not place any object that could be an obstacle in case of evacuation in front of this window.
Failure to comply could result in death or serious injury.

W1435A

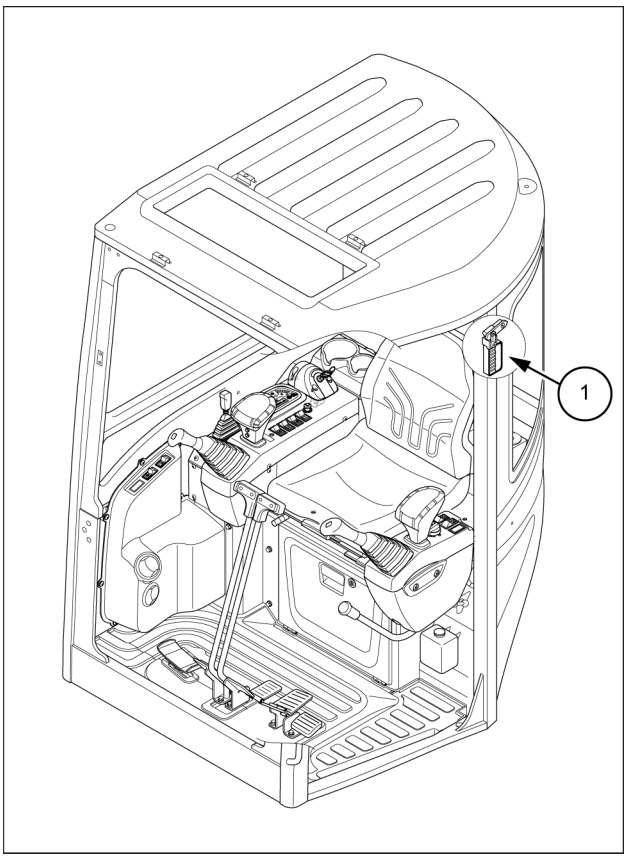

SMIL19MEX0786BB 1

https://truckmanualshub.com/

Windshield washer reservoir

This reservoir, located in the left-hand side of the cab, is equipped with an electric pump which is operated from the wiper and washer switch.

NOTICE: *never operate the windshield washer control when the reservoir is empty. This could cause damage to the electric pump.*

Remove the cap to add windshield washing fluid.

NOTICE: *in cold weather, add anti-freeze to the windshield washer water.*

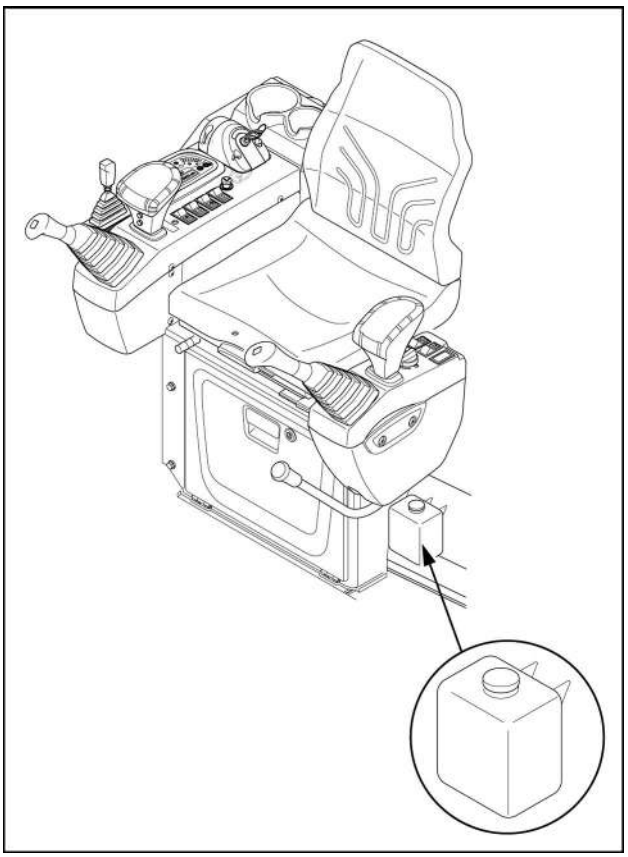

SMIL19MEX0755BA 1

Right-hand side controls

Right-hand side controls

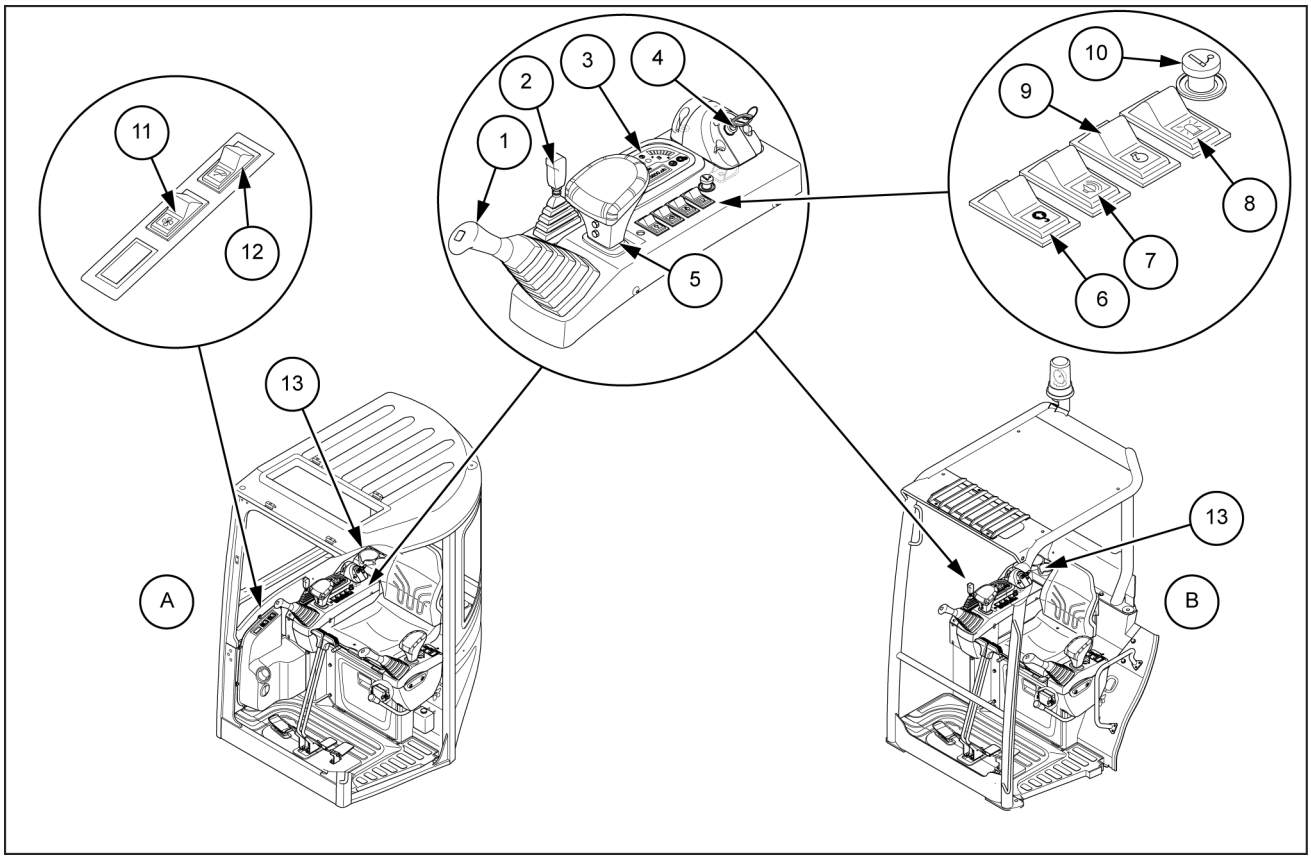

SMIL16MEX1478FB 1

(A) Cab version

(B) Canopy version

(1) Right–hand control lever (refer to page **3-6**) and horn push–button. Press and maintain pressed the push-button to activate the horn.

(2) Dozer blade control lever (standard version) or angle blade control lever (angle blade version) (refer to page **3-22**)

(3) Instrument cluster (refer to page **3-24**)

(4) Starter switch

(5) Armrest

(6) Overload warning switch (optional)

(7) Travel alarm switch (optional)

(8) Rotating beacon (optional) (refer to page **9-52**)

(9) Auto idle

(10) Cigarette lighter and **12 V** power supply socket: the device is active with the starter key in ON position, or while the engine is running.
To operate the cigarette lighter, push it down to engage its heating position.

NOTICE: *if you continuously push in the cigarette lighter, you can cause serious damage to the device and the machine electrical system.*

NOTICE: *connect only **12 V**, **120 W** devices to the socket. Connecting devices functioning at different voltage can cause damages to the device itself and to the electrical system.*

(11) Heater switch (cab version only) (refer to page **3-31**)

(12) Washer/wiper switch (cab version only)

(13) Beverage cup holder

NOTICE: *do not use high pressure water on electric and electronic parts (such as cluster and right-hand side console).*

https://truckmanualshub.com/

Overload warning switch (optional)

The overload warning switch **(6)**, when pressed, activates the overload warning function. When the machine is overloaded, a buzzer sounds and the red warning light in the instrument cluster is ON.

When the overload warning switch is depressed, the buzzers stops sounds and the red warning light in the instrument cluster is OFF.

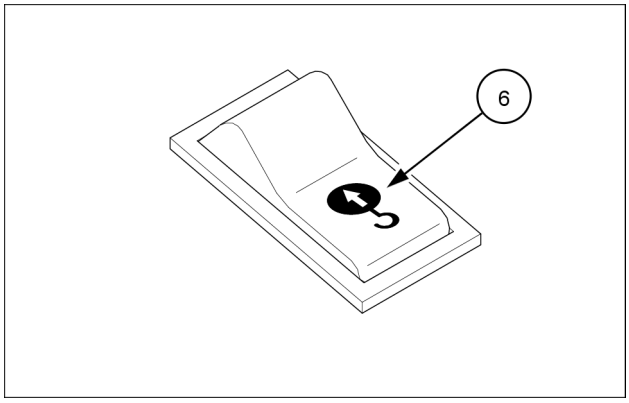

SMIL16MEX0390AA 2

Travel alarm switch (optional)

The travel alarm switch **(7)**, when pressed, activates a buzzer to alarm surrounding the machine when the machine travels forward and backward.

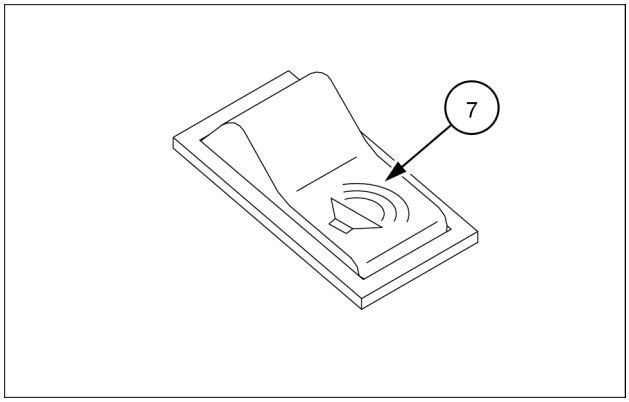

SMIL16MEX0391AA 3

Auto idle switch

The auto idle switch **(9)** is used to actuate or cancel the auto idle function. When the switch actuated and all control levers and pedals are at neutral position, engine speed will be lowered automatically to save fuel consumption.

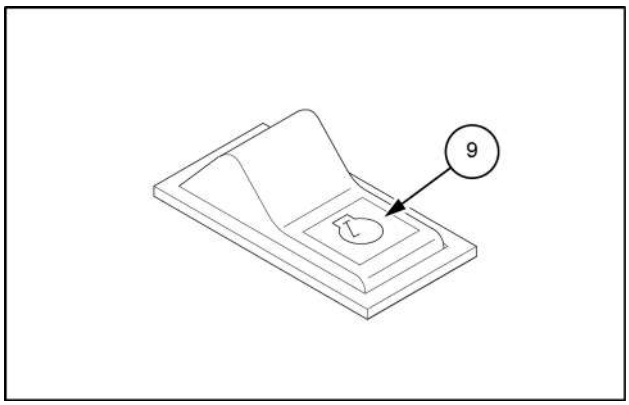

SMIL16MEX1436AB 4

https://truckmanualshub.com/

Starter switch

The starter switch has the following positions:

(1) OFF: engine shut–down. The electrical circuits are not activated.

(2) ON: contact, all the systems of the machine operate. The buzzer sounds for **1 s**.

NOTICE: *if this alarm does not sound, the electric circuit is abnormal. Contact your NEW HOLLAND CONSTRUCTION dealer for inspection and maintenance.*

(3) START: engine ignition.

NOTE: *if the weather temperature is below **10 °C** (**50 °F**), turn the starter switch to ON position and wait the preheat pilot lamp turns off. Then start the engine by turning the starter switch to the START position.*

NOTE: *the starter key is also used to lock the cab door, the side hoods, and the storage compartment.*

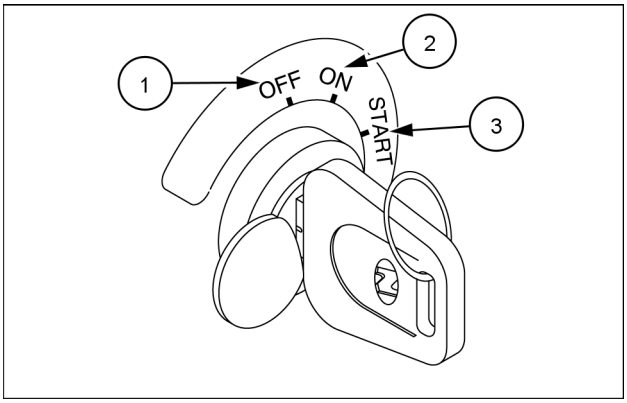

SMIL19MEX0717AA 5

Washer/wiper switch (cab version only)

The washer/wiper switch **(12)** activates the wiper and the washer in two steps.

First step: wiper activation.

Second step: washer activation. The washer liquid is sprayed and the wiper is operative only while the switch is pressed. If the washer/wiper switch is released, it returns to first step.

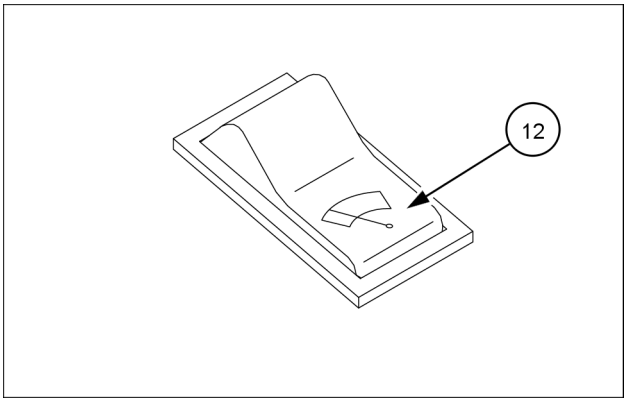

SMIL16MEX0392AA 6

https://truckmanualshub.com/

Dozer blade control lever

⚠ WARNING

Hazard to bystanders!
ALWAYS make sure the work area is clear of bystanders and domestic animals before starting this procedure. Know the full area of movement of the machine. Do not permit anyone to enter the area of movement during this procedure.
Failure to comply could result in death or serious injury.

W0245A

Standard version

The dozer blade control lever is located on the right-hand console.
The basic operation of dozer blade control lever are the following:

- push the dozer blade control lever forward **(A)** to lower the dozer blade.
- pull the dozer blade control lever rearward **(B)** to raise the dozer blade.

The operation of the dozer blade stops when the lever is released. The lever returns to the neutral position.

Use the blade only for light work such as dozing of soft soil or mud.

Do not forcibly push down or dig deeply with the blade.

When operating in an area with many rocks and stones, pay attention not to damage the blade.

NOTICE: *during blade operations, avoid application of concentrated or lateral load to the blade. Severe damages may be caused to the blade structure.*

When the blade is used as an outrigger during the operation, check that the ground has the sufficient strength, and be sure that the edge surface of the blade is contacting the ground uniformly. Severe damages may be caused to the blade structure if the machine is supported only at one side of the blade.

NOTICE: *make sure to lower the blade to the ground before stopping machine operation.*

If the engine is stopped with the blade in raised position, it is still possible to lower the blade proceeding as follows:

1. Turn the starter key to ON position.
2. Set the safety lock lever in forward position.
3. Push the blade control lever to lower the dozer blade.

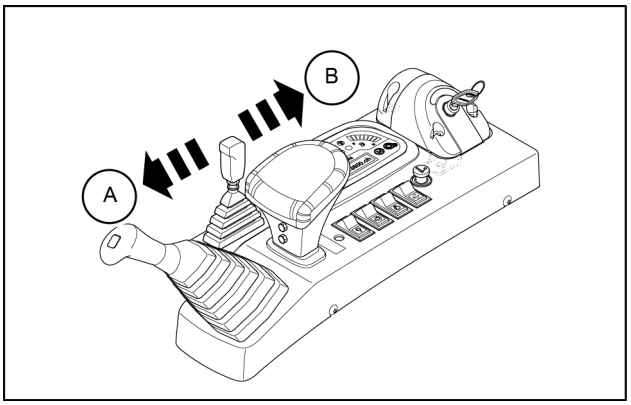

SMIL16MEX1466AB 1

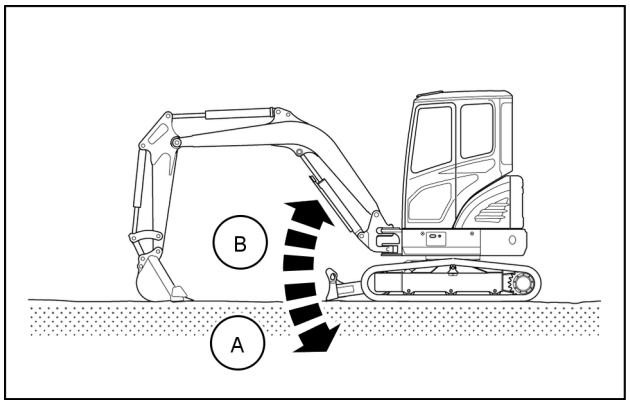

SMIL18MEX0128AA 2

https://truckmanualshub.com/

Angle blade version

The angle blade control lever is located on the right-hand console.

The basic operation of angle blade control lever are the following:

- push the angle blade control lever forward **(A)** to lower the dozer blade
- pull the angle blade control lever rearward **(B)** to raise the dozer blade
- move left-hand the slider to tilt the dozer blade leftward **(C)** (maximum angle: **25°**)
- move right-hand the slider to tilt the dozer blade right-ward **(D)** (maximum angle: **25°**).

NOTICE: *never jack up or lift the machine with the angle blade placed at an angle.*

NOTICE: *stability of the machine is affected with blade at angle, keep at neutral position.*

NOTICE: *before start the working operations or traveling up or down on a slope, position and keep the angle blade at neutral position.*

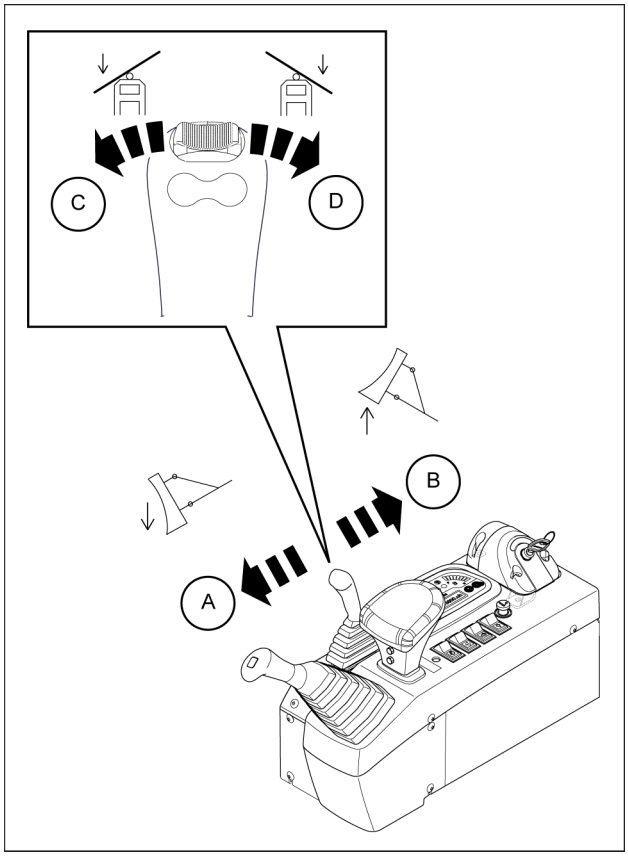

SMIL19MEX0454BB 3

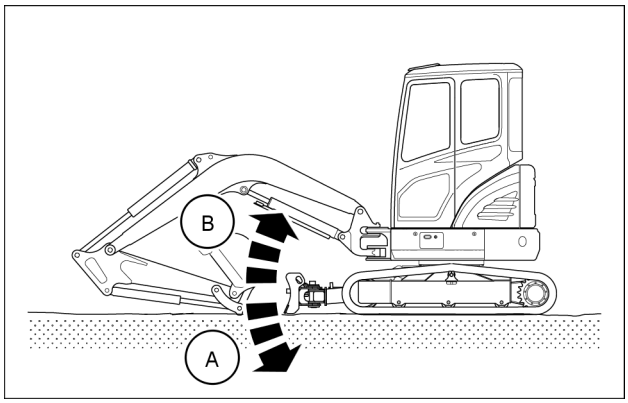

SMIL18MEX0149AA 4

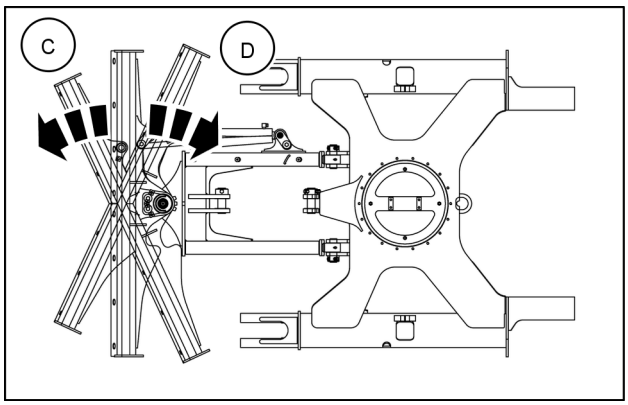

SMIL18MEX0130AA 5

https://truckmanualshub.com/

Instrument cluster

The instrument cluster consists of gauges and lights as shown below, to warn the operator in case of abnormal machine operation or conditions for the appropriate operation and inspection.

Gauges: indicate operating status of the machine.

Warning lights: indicate abnormality of the machine (red).

Pilot lights : indicate operating status of the machine.

NOTE: *the cluster installed on this machine does not entirely guarantee the condition of the machine. Daily inspection should be performed. When the cluster provides a warning, immediately check the problem and perform the required action*

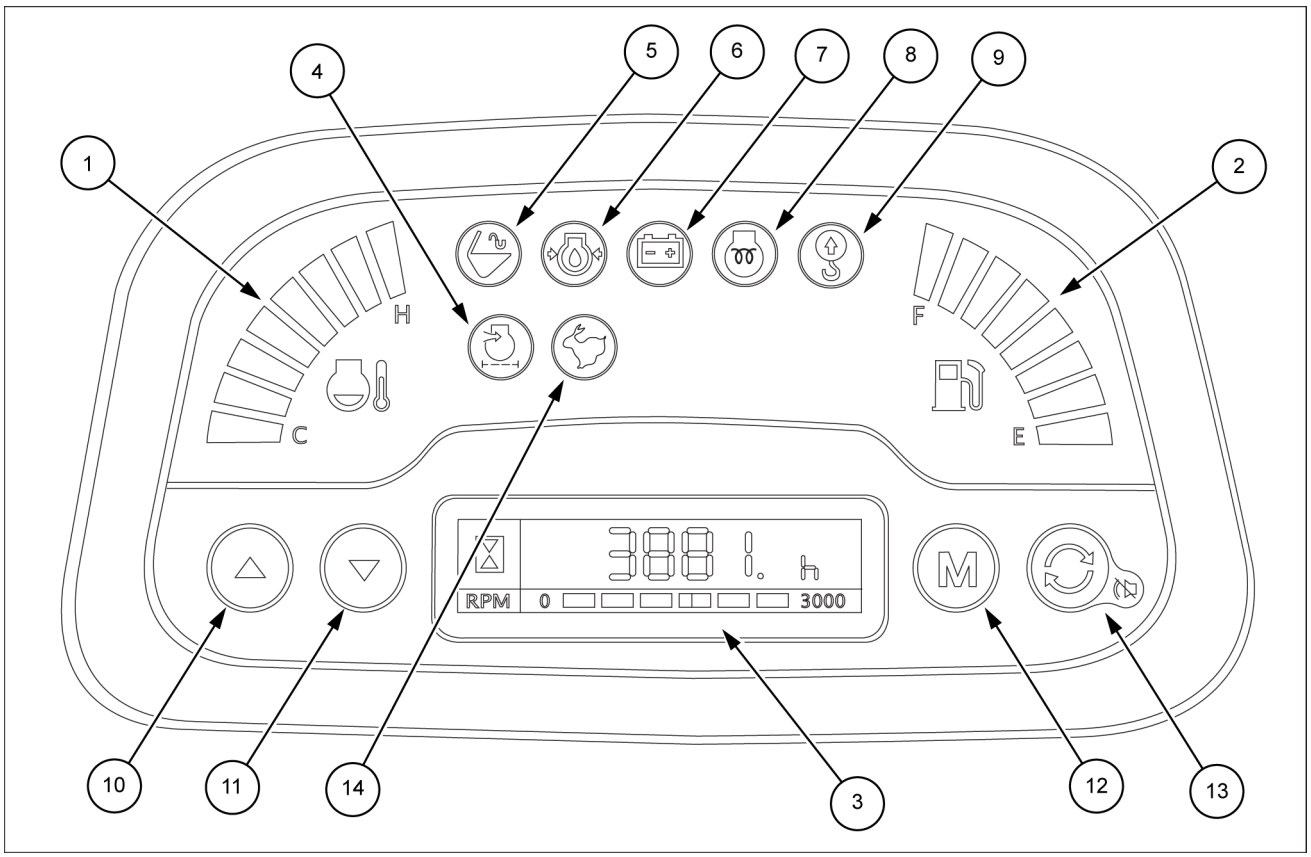

SMIL19MEX0730FB 1

1. Engine coolant temperature gauge
2. Fuel gauge
3. Main display
4. Air cleaner warning light
5. Hydraulic quick coupler unlock pilot light
6. Engine oil pressure warning light
7. Battery charging warning light
8. Engine pre-heat pilot light
9. Overload warning light
10. Up/left–hand button
11. Down/right–hand button
12. Menu button
13. Enter and buzzer stop button
14. High speed travel light

NOTICE: *do not use high pressure water on electric and electronic parts (such as cluster and right-hand side console).*

https://truckmanualshub.com/

1. Engine coolant temperature gauge

The engine coolant temperature gauge indicates the temperature of the coolant.

The red range **(A)** lights on when the temperature is above **115 °C** (**239 °F**)

The warning light **(B)** appears and a buzzer sounds when the temperature is above **115 °C** (**239 °F**).

When the red range **(A)** and the warning light **(B)** are ON, do not stop abruptly the engine, but run the engine at medium speed to allow it to cool gradually, then stop the engine.

NOTICE: *if the engine is stopped without cooled down running, the temperature of engine parts will rise suddenly, and this can cause severe engine trouble.*

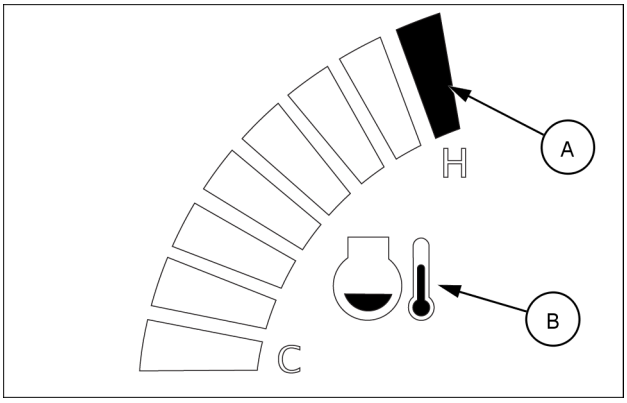

SMIL16MEX0379AA 2

2. Fuel gauge

The fuel gauge indicates the amount of fuel in the fuel tank.

The red range **(A)** and the warning light **(B)** turn ON and a buzzer sounds when the level of fuel is below **5.5 L** (**1.5 US gal**).

Fill the fuel when the red range **(A)** shows and the warning light **(B)** is ON.

NOTICE: *if the fuel gauge lights up the red range or the warning light is ON even though the machine is on the normal condition, check the electric device as that can be caused by the poor connection of electricity or sensor.*

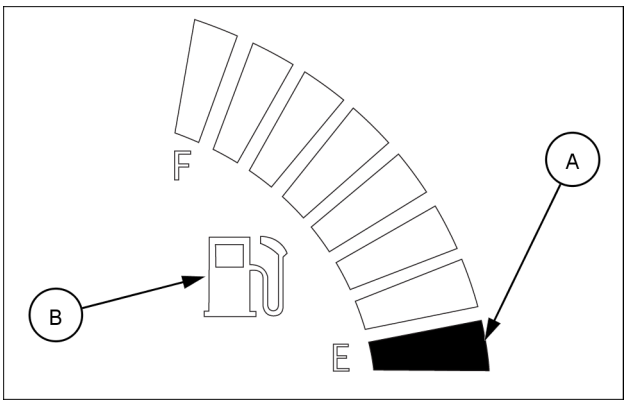

SMIL16MEX0380AA 3

3. Main display

The service meter **(1)** shows the total operation hours of the machine.

NOTE: *always ensure the operating condition of the service meter during the machine operation.*

The engine RPM **(2)** displays the engine speed.

The engine run status **(3)** displays the engine run status.

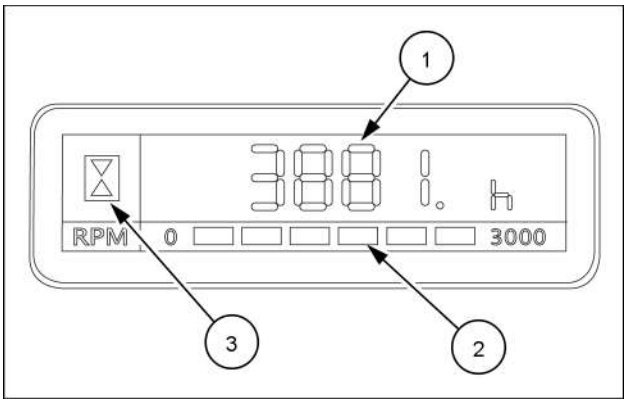

SMIL16MEX0381AA 4

https://truckmanualshub.com/

4. Air cleaner warning light

The air cleaner warning red light **(4)** is ON when the filter of the air cleaner is clogged.

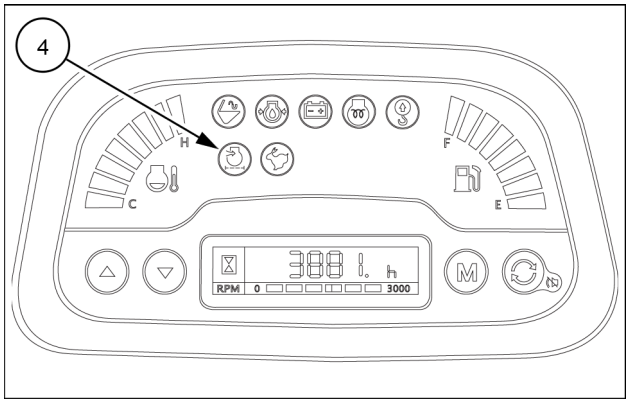

SMIL19MEX0731AA 5

5. Hydraulic quick coupler unlock pilot light

The hydraulic quick coupler unlock pilot red light **(5)** is ON and the buzzer sounds when the activation switch of the hydraulic quick coupling system is turned ON.

When the activation switch is turned OFF, the red light **(5)** turns OFF and the buzzer stops.

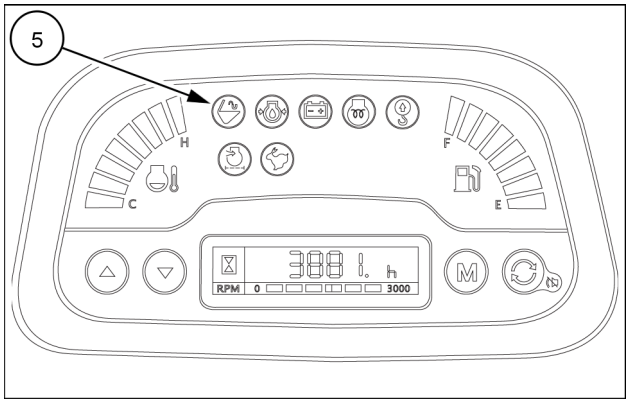

SMIL19MEX0731AA 6

6. Engine oil pressure warning light

The engine oil pressure warning red light **(6)** is ON and the buzzer sounds when the oil pressure is low.

If the red light **(6)** is ON during engine operation, stop the engine immediately.

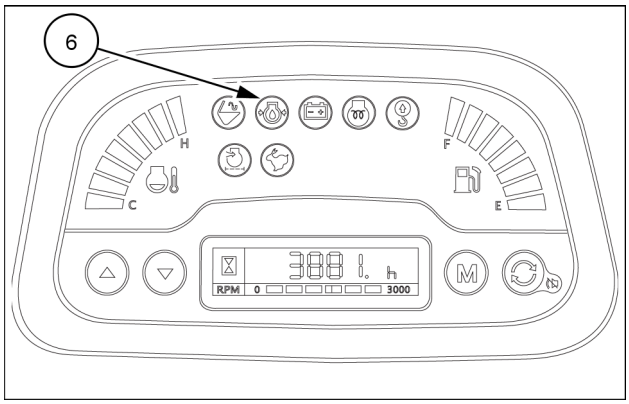

SMIL19MEX0731AA 7

7. Battery charging warning light

The battery charging warning red light **(7)** is ON and the buzzer sounds when the starter switch is ON. The red light **(7)** will turn OFF after starting the engine.

Check the battery charging circuit when this light blinks during engine operation.

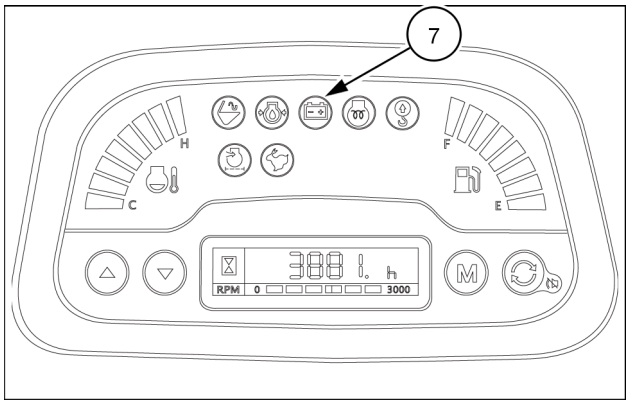

SMIL19MEX0731AA 8

https://truckmanualshub.com/

8. Engine pre-heat pilot light

When the weather temperature is below **10 °C** (**50 °F**) and the starter switch is turned in ON, the engine pre-heat orange pilot light **(8)** is ON.

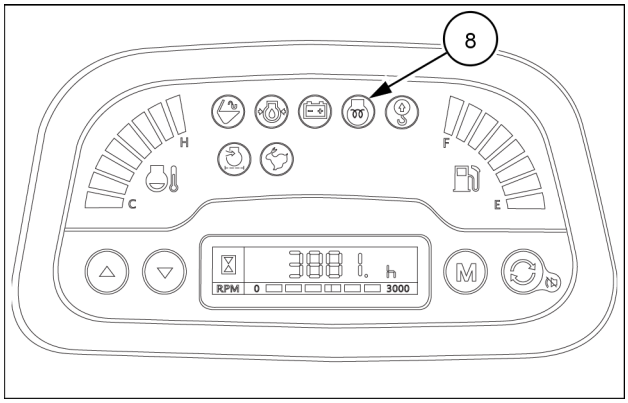

SMIL19MEX0731AA 9

9. Overload warning light

The overload warning red light **(9)** is ON when the machine is overloaded. The overload warning alarm is intended to avoid lifting of excessive loads.

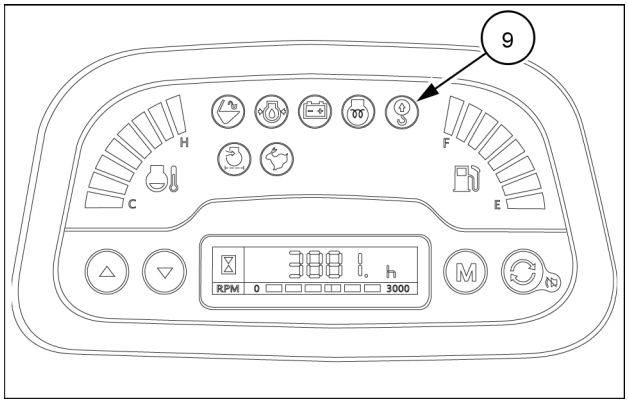

SMIL19MEX0731AA 10

10. Up/left–hand button

Press the button **(10)** to navigate up or left within the display, and to increase an input value.

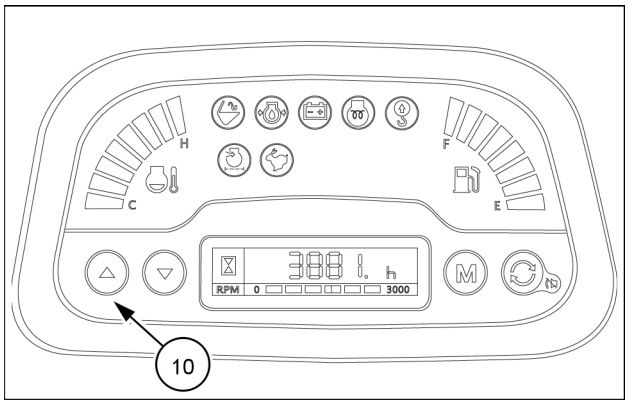

SMIL19MEX0731AA 11

11. Down/right–hand button

Press the button **(11)** to navigate down or right within the display, and to decrease an input value.

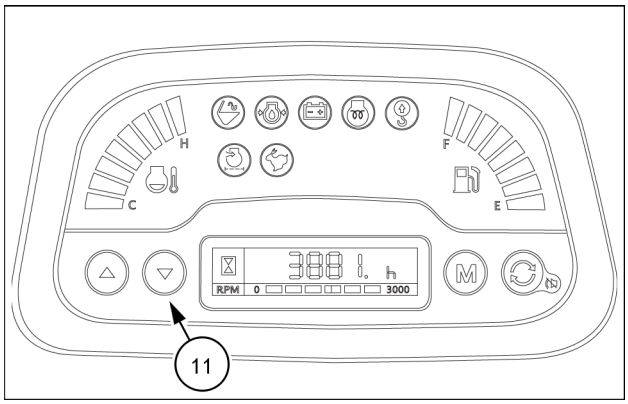

SMIL19MEX0731AA 12

https://truckmanualshub.com/

12. Menu button

Press the button **(12)** to show the next display on the main display.

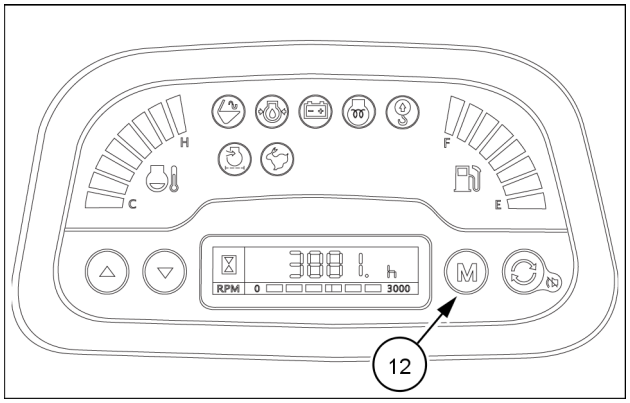

SMIL19MEX0731AA 13

13. Enter and buzzer stop button

Press the button **(13)** to select the menu.

Press the button **(13)** to stop the buzzer when the buzzer sounds.

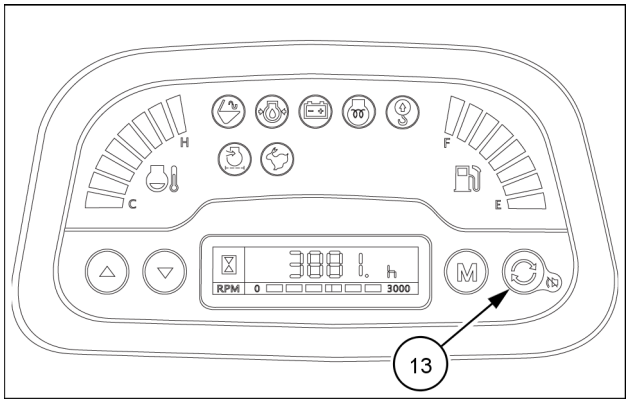

SMIL19MEX0731AA 14

14. High speed travel light

The high speed travel light **(14)** is ON when the high speed mode is selected by means of the travel mode selector switch located on the right-hand travel lever.

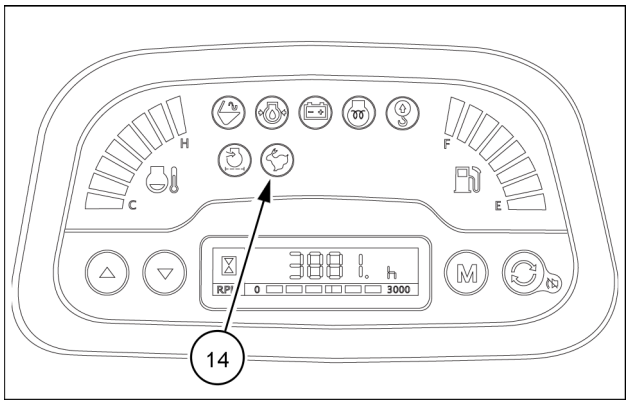

SMIL19MEX0731AA 15

https://truckmanualshub.com/

Air conditioning control

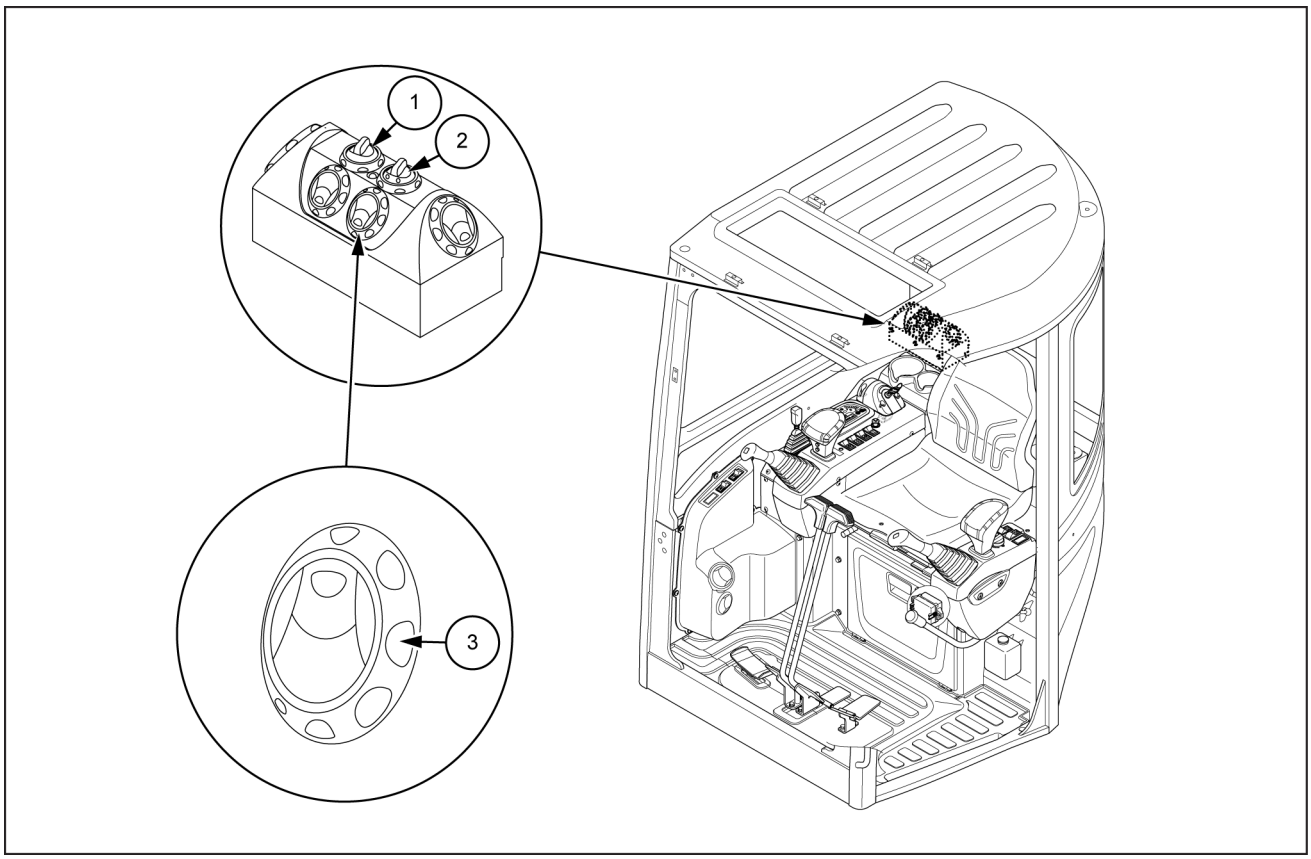

SMIL16MEX2336FB 1

(1) Fan switch

(2) Temperature control switch

(3) Outlet control louver (air conditioner only)

https://truckmanualshub.com/

Fan switch

The fan switch **(1)** controls the fan velocity with four steps:

- OFF
- Low
- Medium
- High

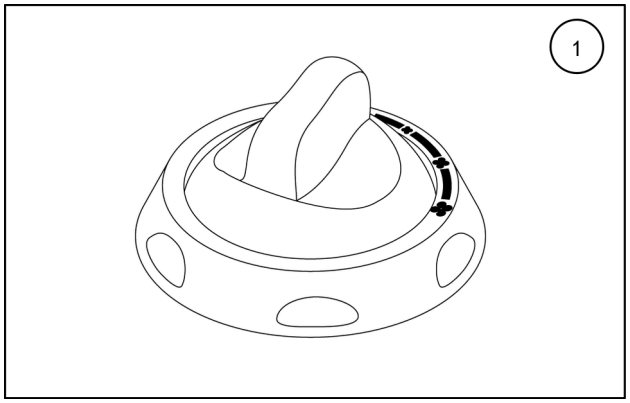

SMIL16MEX2337AA 2

Temperature control switch

The temperature control switch **(2)** controls the temperature of the air blown from the outlet control louver.

To decrease the air temperature, turn clockwise the temperature control switch.

To increase the air temperature, turn counterclockwise the temperature control switch.

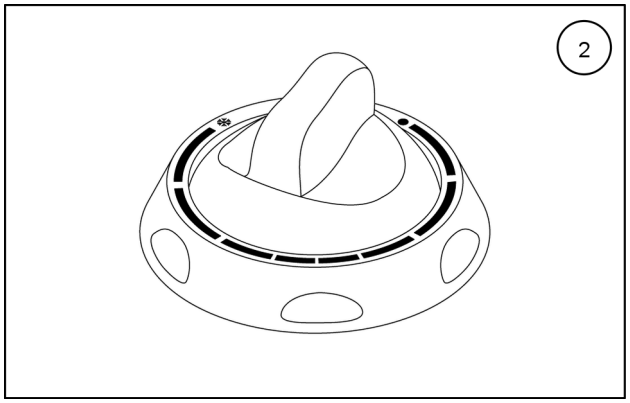

SMIL16MEX2338AA 3

Outlet control louver

The outlet control louver **(3)** can be closed when the air conditioning system is OFF in order to avoid the contamination of the air duct by insects or powder.

When the air conditioning system is ON, the outlet control louver can be open in order to control the air flow direction.

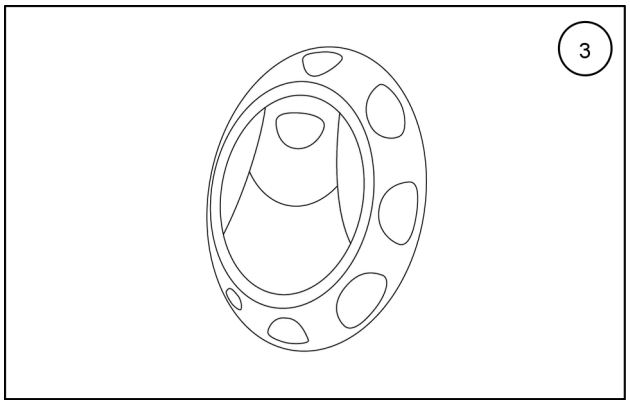

SMIL16MEX2339AA 4

https://truckmanualshub.com/

Ventilation and heating

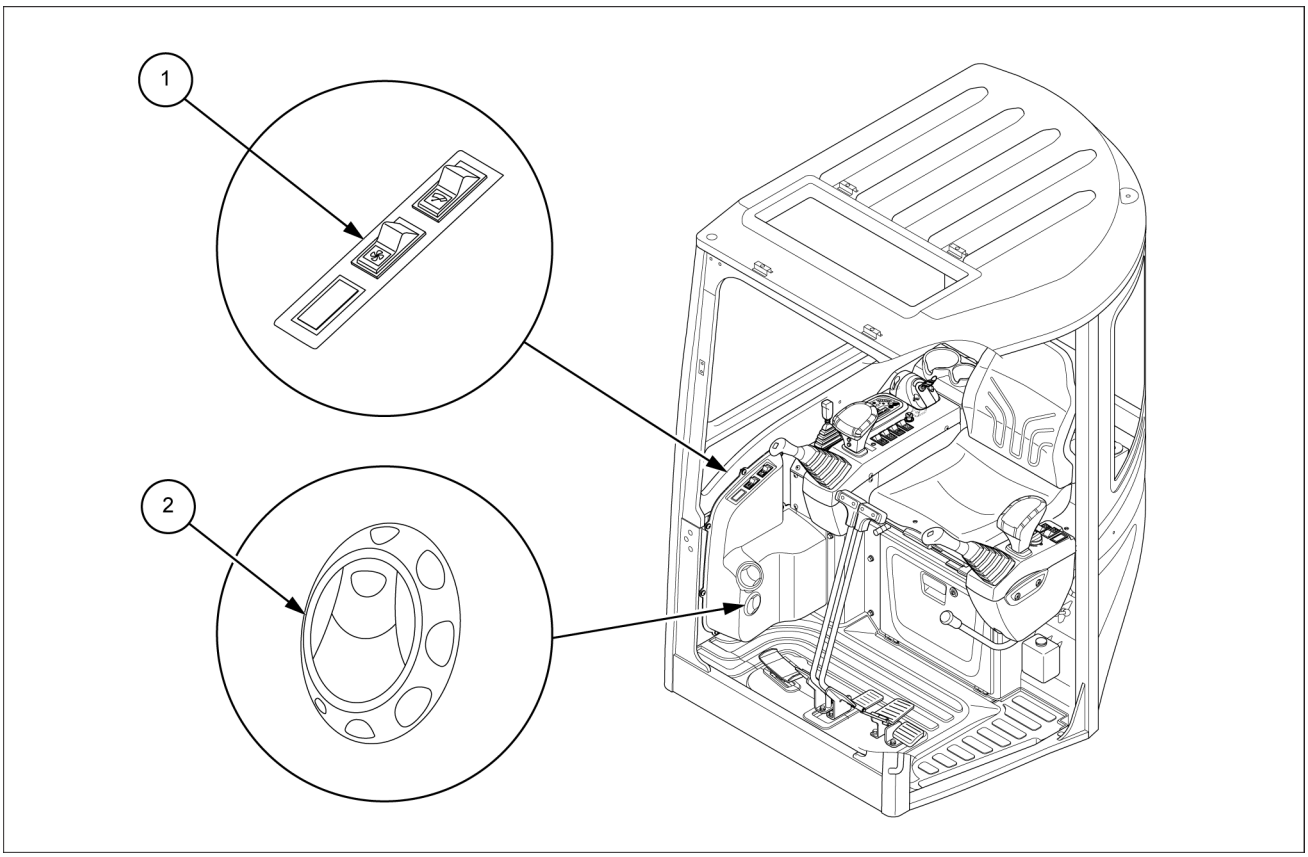

SMIL19MEX0789FB 1

The heater switch **(1)** activates two different speeds of ventilation.
The first step activates the low fan speed of ventilation.
The second step activates the high fan speed of ventilation.

The outlet control louvers **(2)**, if open, allows you to control the direction of air. Furthermore, it can be closed in order to avoid air duct contamination by insects or powder.

https://truckmanualshub.com/

The heater use a valve to cut off hot coolant flow to the heater heat exchanger during summer operation. For winter operation you have to open the valve to get hot coolant to circulate through the heater core.
A = winter position
B = summer position

NOTE: *turn the heater valve clockwise to close the valve.*

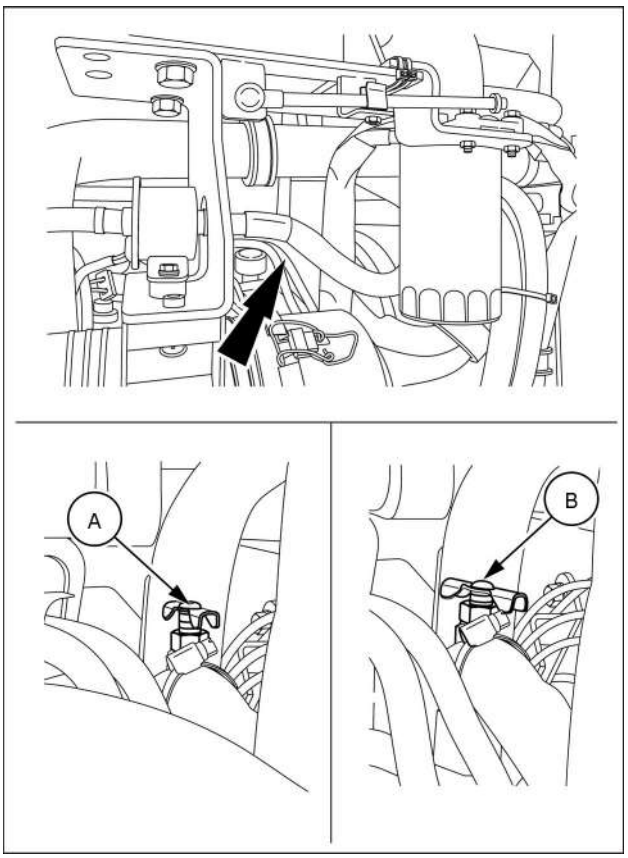

SMIL19MEX0392BA 2

https://truckmanualshub.com/

Rearward controls

Storage compartment

Located below the operator's seat, this compartment is used to store various objects.

Lock and unlock the storage compartment with the starter key.

NOTE: *for the canopy version, there is a storage compartment located behind the operator's seat.*

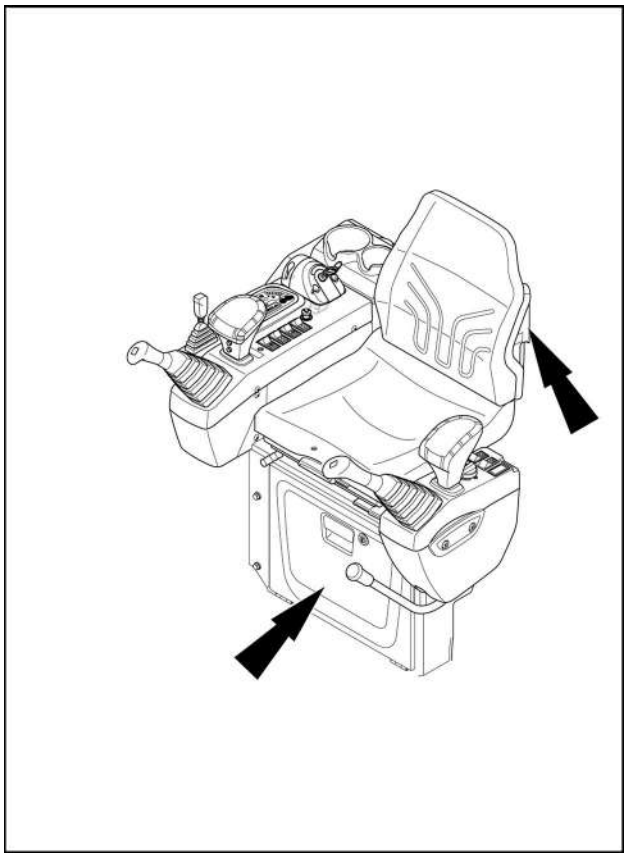

SMIL19MEX0757BA 1

https://truckmanualshub.com/

Overhead controls

Cab internal lighting

The room light **(A)** can turn ON and OFF as you open and close the door.

The room light selection switch is equipped to select either one of the following status:

- OFF: the light is turned off always.
- ON: the light is turned on always.

NOTICE: *make sure that the cab internal lighting is turned off after using it. Leaving it turned on may drain out the battery.*

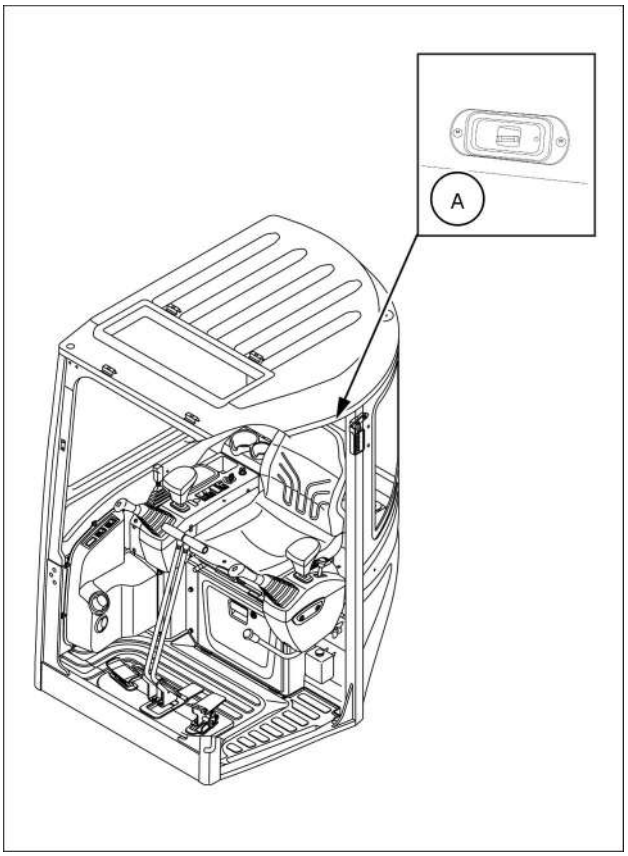

SMIL16MEX1428BA 1

Radio

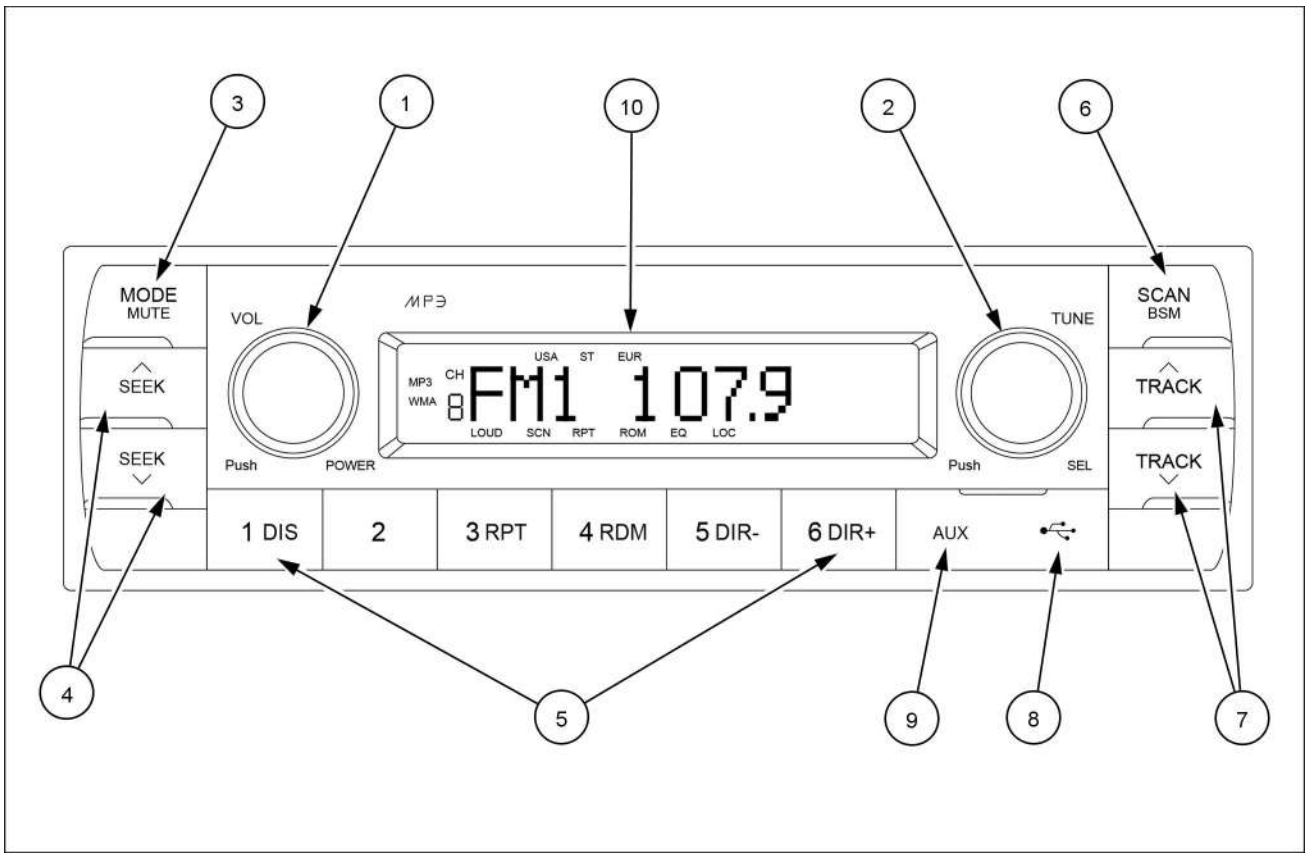

SMIL17MEX3035FA 1

(1) Power and volume knob

(2) Audio selection knob, file search and (SEL) button

(3) MODE button / Audio mute / Radio button

(4) UP/DOWN radio seek buttons

(5) Pre-set memory buttons

(6) Pre-set scan (SCAN) / Best Station Memory (BSM) button

(7) UP/DOWN track buttons

(8) USB function

(9) Auxiliary (AUX IN) function

(10) Liquid Crystal Display (LCD) screen

https://truckmanualshub.com/

General

Area selection

To select an area, press and hold related buttons at FM1 band for about 3 seconds.

- USA Area: press and hold MODE **(3)** and 1DIS **(5)** buttons for **3 s**.
- Europe Area: press and hold MODE **(3)** and “2” buttons for **3 s**.
- Asia Area: press and hold MODE **(3)** and “3RPT” buttons for **3 s**.
- Latin Area: press and hold MODE **(3)** and “4RDM” buttons for **3 s**.

(1) Power and volume knob

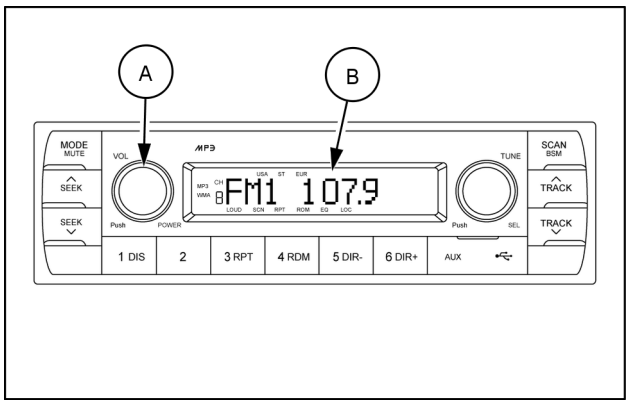

SMIL17MEX2806AA 2

Power ON/OFF button

Press the power button **(A)** to turn the unit ON or OFF shortly. When the power is ON, the previous mode (last memory) will appear.

Volume up / down control

Turn the volume up/down button **(A)** right-hand to increase the volume level. The level will be shown in VOLUME xx on the LCD screen **(B)**.

Turn the volume up/down button **(A)** left-hand to decrease the volume level. After **5 s** of volume indication, the LCD screen **(B)** will return to the previous mode.

Initial volume level set up

I-VOL is the volume level the unit will play at when next turned on. To adjust the I-VOL level, press and hold VOL button **(A)** for longer than **2 s**.

The current volume level displays on the display panel.

Turn button **(A)** right-hand or left-hand to set the volume level as the I-VOL level.

Clock ON/OFF control

The CLOCK was default at off status.

To turn CLOCK ON, press and hold the button **(A)** for longer than **2 s**to display I-VOL, then short press button **(A)** again, turn knob **(A)** while CLOCK OFF display, then the CLOCK ON will be displayed.

Due to time tolerance, the clock display on the Audio unit might have little difference.

https://truckmanualshub.com/

Clock adjustment

With CLOCK ON selected, press button **(A)** again after CLOCK ON display, the hour will blink, turn knob **(A)** right-hand or left-hand to adjust hour. Simply press button **(A)** again, the minute will blink, turn knob **(A)** to adjust minute.

Press button **(A)** again to confirm the clock once finished.

(2) Audio selection knob, file search and (SEL) button

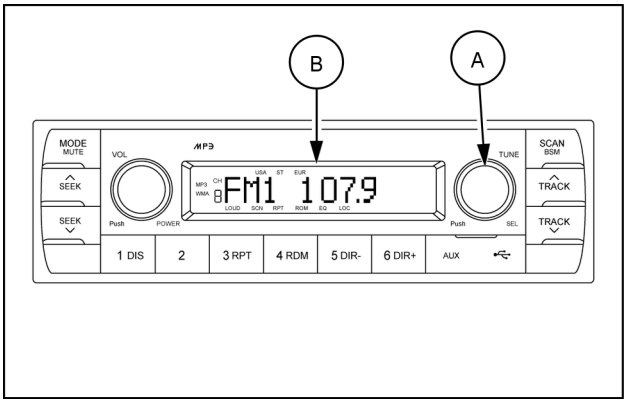

SMIL17MEX2806AA 3

The audio selection knob **(A)** allows you to adjust the sound. Each time you press SEL button **(A)** shortly, the LCD screen **(B)** shows each mode as follows:

- BASS
- TREBLE
- BAL L=R (Balance)
- FAD F=R (Fader)
- EQ (Equalizer)
- Loud on
- Beep 2ND

NOTE: *when the button **(A)** is pressed, LCD screen **(C)** shows the selected function for **5 s** and then returns back to the previous mode. On selected function, level can be controlled by turning this button. The display will automatically return to normal indication in **5 s** after the last adjustment is made or when another function is activated.*

BASS control

To adjust the bass level, first select the bass mode by pressing the SEL button **(A)** until BASS indication appears on the LCD screen **(B)**.

Within **5 s** of choosing the BASS mode, turn the selection knob **(B)** right-hand/left-hand to adjust the bass level as desired. The BASS level will be shown on the LCD screen **(B)** from a minimum of BASS –7 to a maximum of BASS +7.

The LCD screen **(B)** will automatically return to the normal indication in **5 s** after the last adjustment or when another function is activated.

TREBLE control

To adjust the TREBLE level, first select the TREBLE mode by pressing the SEL button **(A)** until TREBLE indication appears on the LCD screen **(B)**.

Within **5 s** of choosing the TREBLE mode, turn the selection knob **(A)** right-hand/left-hand to adjust the TREBLE level as desired. The TREBLE level will be shown on the LCD screen **(B)** from a minimum of TREBLE -7 to a maximum of TREBLE +7.

The LCD screen **(B)** will automatically return to the normal indication in **5 s** after the last adjustment or when another function is activated.

https://truckmanualshub.com/

BALANCE control

To adjust the left-hand/right-hand speaker balance, first select the BALANCE mode by pressing the SEL button **(A)** until the BAL indication appears on the LCD screen **(B)**.

Within **5 s** of choosing the BALANCE mode, turn the selection knob **(B)** right-hand/left-hand to adjust the BALANCE as desired. The balance position will be shown on the LCD screen **(B)** from BAL 10L (full left) to BAL 10R (full right). When the volume level between the left-hand and the right-hand speakers is equal, BAL L=R will be shown on the LCD screen **(B)**.

The LCD screen **(B)** will automatically return to the normal indication in **5 s** after the last adjustment or when another function is activated.

FADER control

To adjust the front/rear speaker balance, first select the FADER mode by pressing the SEL button **(A)** until the FAD indication appears on the LCD screen **(B)**.

Within **5 s** of choosing the FADER mode, turn the selection knob **(A)** right-hand/left-hand to adjust the FADER as desired. The fader position will be shown on the LCD screen **(B)** from FAD 10F (full front) to FAD 10R (full rear).

The LCD screen **(B)** will automatically return to the normal indication in **5 s** after the last adjustment or when another function is activated.

Equalizer (EQ) control

You can select an equalizer curve designed for four music types (CLASSIC, POP, ROCK, JAZZ) by pressing the button **(A)** until EQ is displayed on the LCD screen **(B)**. Turn the selection knob **(A)** right-hand/left-hand to select the desired equalizer curve.

Within **5 s** of choosing the EQ mode, turn the selection knob **(B)** to select an equalizer curve as desired.

When the EQ mode is activated, the BASS and TREBLE modes are not displayed.

Loud control

When listening to music at low volume levels, this feature will boost the bass and treble response.

This action will compensate for the reduction in bass and treble performance experienced at low volume.

To select the loudness feature, press the button **(A)** until LOUD ON or LOUD OFF is displayed, then turn the selection knob **(A)** right-hand/left-hand to activate or deactivate loudness.

https://truckmanualshub.com/

Beep control

To adjust the BEEP control, first select the BEEP mode by pressing the button **(A)** repeatedly until the BEEP indication appears on the LCD screen **(B)**.

Turn the selection knob **(A)** right-hand/left-hand to select the activate BEEP 2ND or BEEP ON or deactivate BEEP OFF.

- BEEP 2ND: You will only hear the beep sound when the buttons are held down for more than **2 s**.
- BEEP ON: You can hear the beep sound each time you press the buttons.
- BEEP OFF: You can not hear the sound beep when you press the buttons.

(3) Mode, audio mute and radio button

Mode button

Press the mode button **(A)**to select RADIO (FM1, FM2, AM) / USB / AUX /BT MUSIC.

If there is no USB, AUX, Bluetooth Phone connected, it would not display USB, AUX, BT when you press mode button **(A)**.

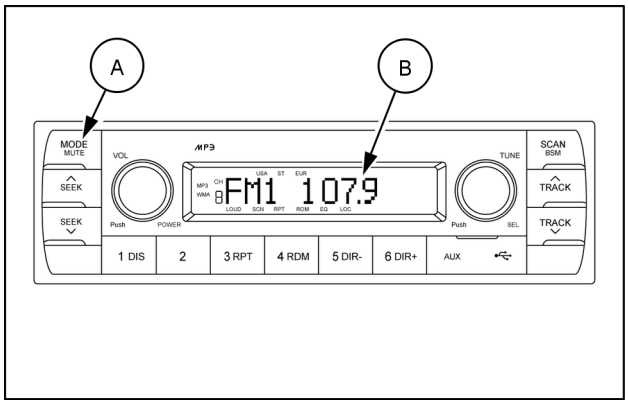

SMIL17MEX2806AA 4

Audio mute button

Press and hold the audio mute button **(A)** for **2 s** to mute volume and MUTE mark will blink on the LCD screen.

Press the audio mute button **(A)** again to return to the mode in use before the mute mode was activated.

Radio

Radio button

Repeat press the mode button **(A)** to change and select the radio band (FM1, FM2 or AM).

Each time the selection button **(A)** is pressed, the LCD screen **(B)** shows the bands as follows :

- FM1
- FM2
- AM

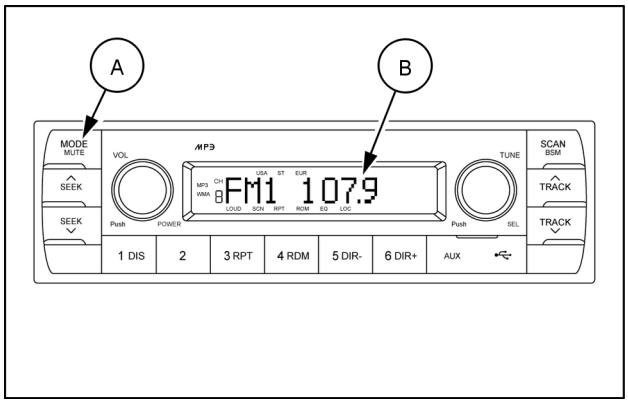

SMIL17MEX2806AA 5

(4) UP/DOWN radio seek buttons

To automatically select a radio station, momentarily press the up tune seek button **(A)** or down tune seek button **(B)**.

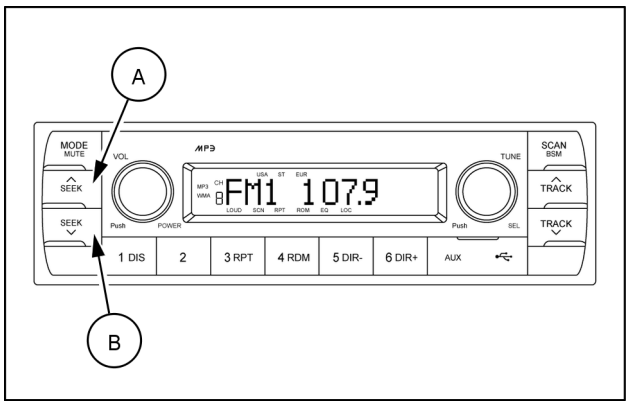

SMIL17MEX2806AA 6

(5) Pre-set memory buttons

1. Pre-set memory button 1, DISP ID3 v2 display
2. Pre-set memory button 2
3. Pre-set memory button 3, RPT Repeat play selector
4. Pre-set memory button 4, RDM Random play selector
5. Pre-set memory button 5, D- Directory down
6. Pre-set memory button 6, D+ Directory up

Pressing these buttons **(A)** shortly will recall your favorite pre-set radio stations.

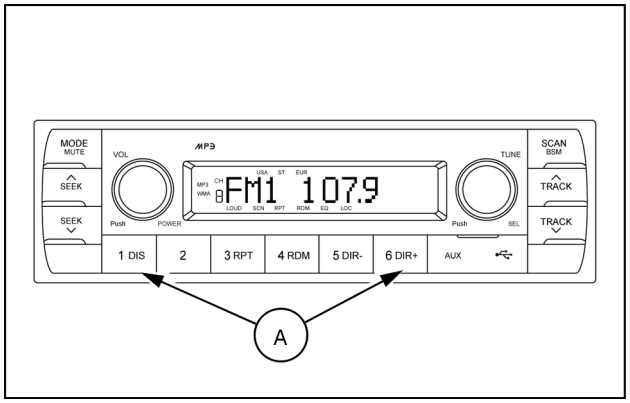

SMIL17MEX2806AA 7

To store your favorite stations into any of the 6 pre-set memories in each band (AM/FM), use the following procedure :

A. Turn the radio ON and select the desired band.

B. Select the first station to be pre-set using the automatic seek tuning control button.

C. Press the chosen pre-set button to store your selected station into and continue to hold it in for more **2 s**. The beep sound will be momentarily heard and the pre-set number will appear on the LCD screen indicating that the station is now set into that pre-set memory position and can be recalled at any time, by pressing that pre-set button.

https://truckmanualshub.com/

(6) Pre-set scan (SCAN) / Best Station Memory (BSM) button

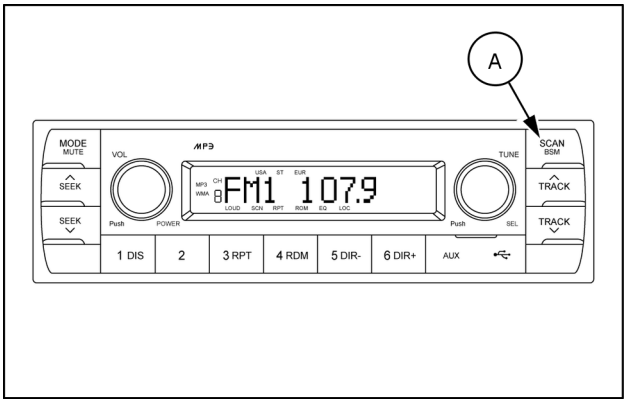

SMIL17MEX2806AA 8

Pre-set scan (SCAN).

Press the SCAN button **(A)** momentarily to scan the 6 pre-set station stored the memories on each band (AM/FM).

The unit will stop at each pre-set station (the pre-set number on the LCD screen will flash during pre-set scan operation) and remain on the selected frequency.

Press the SCAN button **(A)** momentarily again to remain on the station currently being heard.

Best station memory (BSM)

Press the BSM button **(A)** for longer than **2 s** to activate the BSM tuning feature which will automatically scan and enter each station into memory.

If you have already set the pre-set memories to your favorite stations, activating the BSM tuning feature will erase those stations and enter the new ones.

This BSM feature is most useful when traveling in a new area where you are not familiar with the local stations.

https://truckmanualshub.com/

USB player

(8) USB function

Open the cover **(A)** of the USB port, connect a USB device and push the MODE button **(B)** to switch the USB mode if you want to listen to MP3 files stored in a USB device.

The radio will play automatically MP3 files in the USB device while the LCD screen will show “READING USB”.

If there are no files in the USB device, playback will revert back to the previous mode after displaying “NO FILE”.

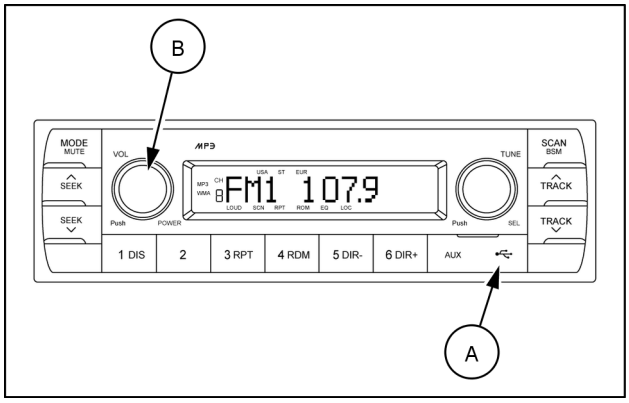

SMIL17MEX2806AA 9

NOTICE: *be carefull of USB key when open the front window. It is recommended to use a nano USB key with overall maximum length (L) =* ***27 mm*** *(****1.06 in****).*

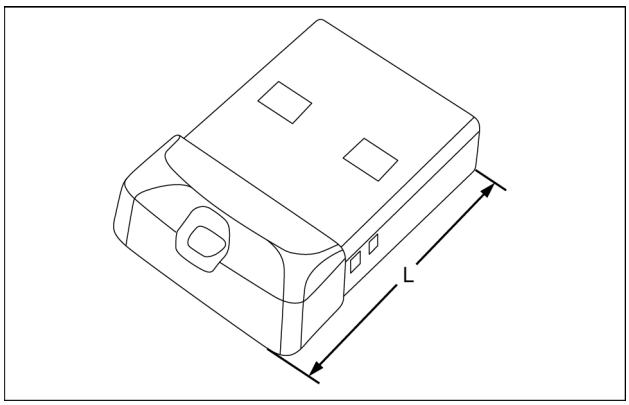

SMIL18MEX0051AA 10

(7) UP/DOWN track buttons

File selection function

This button is used to select file up / down.

Each time the up track file select **(A)** is pressed, file number is increased.

Each time the down track file select **(B)** is pressed, file number is decreased.

Cue / review functions

High-speed audible search of file on a USB can be made by this button (the cue and review functions).

Press and hold the up track button **(A)** to advance rapidly in the forward direction or the down track button **(B)** to advance rapidly in the backward direction.

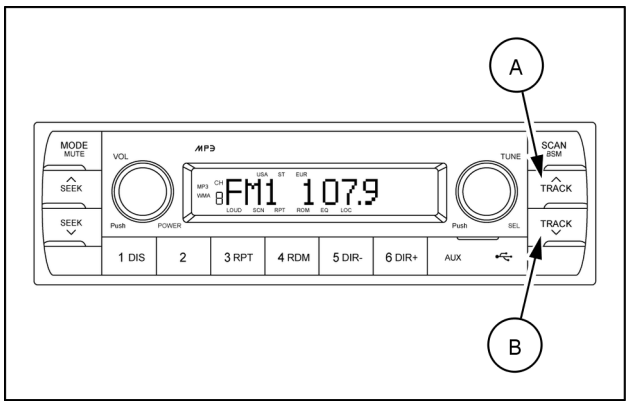

SMIL17MEX2806AA 11

MP3 directory/file searching

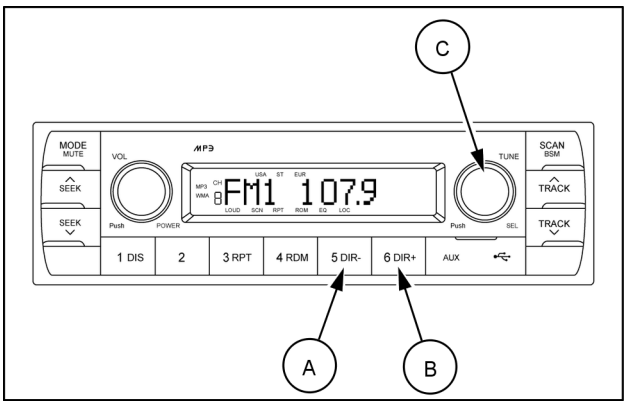

SMIL17MEX2806AA 12

The DIR- button **(A)** and the DIR+ button **(B)** are used to select a particular directory and file.

Press simply DIR- / DIR+ buttons to select the previous / next directory (if available in the device).

Turn right-hand / left-hand the selection knob **(C)** to search the directory. Press the button when you find the wanted directory.

For example, the directory search generally changes in two methods depending on the order of writing as follows.

Method 1 : ROOT, Dir01, Dir02, Dir03, Dir04, Dir05, Dir06, Dir07, ROOT

If the USB device does not contain directories, it would play MP3/WMA tracks at 10- file when you press DIR- button **(A)**, and play MP3/WMA tracks at 10+ file when you press DIR+ **(B)** button.

If you want to search the file in the located directory, turn right-hand / left-hand the selection knob **(C)** consecutively. Press the selection button **(C)** when you find the wanted file. The unit will then play the selected file.

For instance, the file search changes in Dir01 as follows.

File01, File02, File03, File04, File01

MP3 directory / file configuration

ROOT												
Directory01												
File01	File02	File03	File04	Dir02			Dir03			Dir04		
				File05	File06	Dir05	File07	File08	Dir06	File09	File10	Dir07

ID3 v2 display (DIS)

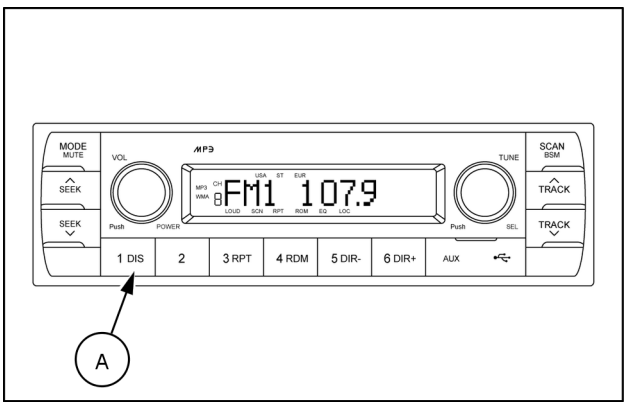

SMIL17MEX2806AA 13

DIS button **(A)** is used to change the display information.

While playing an MP3 file, you can change the file information shown on the LCD screen.

Each time you press DIS (display) **(A)**, the display changes to show the following.

NOTE: *if the MP3 disc does not have any ID3 information, the display will show NO ID3 on LCD screen.*

Directory name / file name (normal mode)

Album name / performer / title

File scan (SCAN)

During USB play, press SCAN button **(A)** to play the first **10 s** of each track.

When a desired file is reached, press SCAN button **(A)** again to cancel the function.

The unit will then play the selected file.

NOTE: *in case of playing MP3 file, when the SCAN button is pressed and held for longer than **2 s**, the SCAN mark will blink on the LCD screen and all files in the selected directory will be introduced until the file scan mode is cancelled by pressing the SCAN button **(A)** again.*

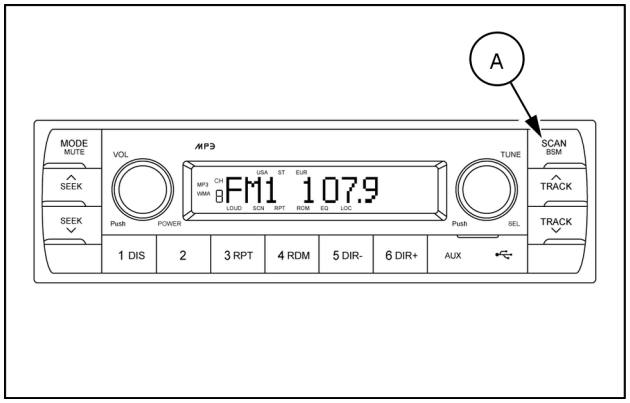

SMIL17MEX2806AA 14

Repeat play selector (RPT)

During USB play, press RPT button **(A)** to play the selected file repeatedly (RPT will appear on the LCD screen).

Play of the file will continue to repeat until this button **(A)** is pressed again and the RPT disappears from the LCD screen.

NOTE: *if you press the RPT button and hold the button for more than **2 s** while you play an MP3 file, "RPT" will flash on the display. The system will play all the files in the selected directory on repeat until you cancel repeat mode. To cancel repeat mode, press the RPT button again, or activate the scan or random modes. "RPT" will no longer flash on the display.*

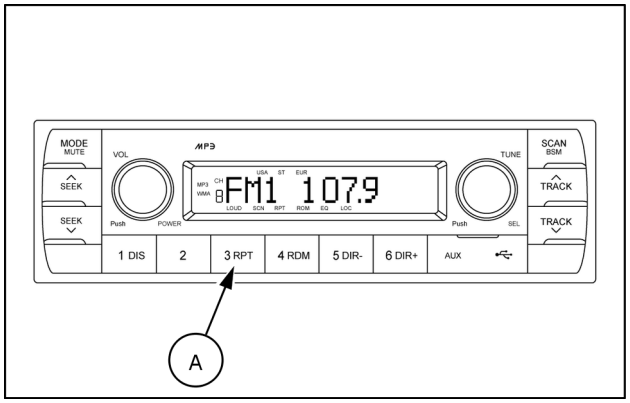

SMIL17MEX2806AA 15

Random play selector (RDM)

During USB play, press RDM button **(A)** to play the files on the USB in a random shuffled order (RDM will appear on the LCD screen). The file select function will also select file in the random order instead of the normal process.

To cancel random play mode, press the RDM button **(A)** again.

NOTE: *in case of MP3 file, when the random button is pressed and held longer than **2 s**, the RDM mark will blink on the LCD screen and play all files in directory randomly until the directory random mode is cancelled by pressing the random button again or by activating the scan or repeat functions (RDM mark will disappear from LCD screen).*

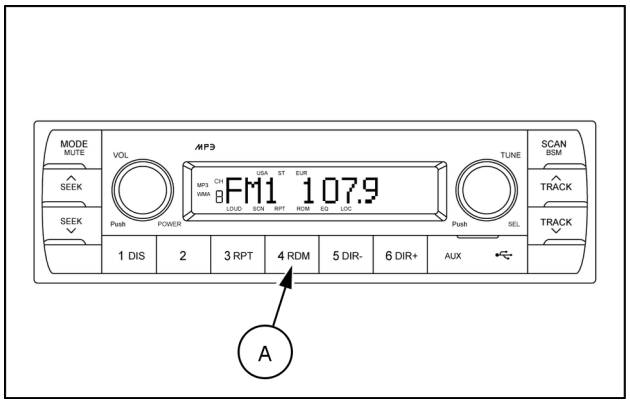

SMIL17MEX2806AA 16

https://truckmanualshub.com/

(9) Auxiliary function (AUX IN)

If you want to listen to music from an external audio device, open the cover **(A)** of the AUX IN function, connect the external audio device using the AUX cable **3,5 mm** an push the MODE button **(B)** to switch the AUX IN mode.

If an audio file from an external Audio device is playing, the music sounds through the speakers of the cab.

Push the MODE button **(B)** to switch other radio modes and leave the AUX IN mode.

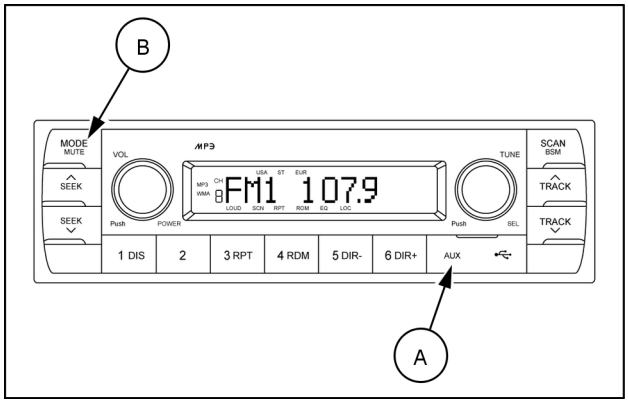

SMIL17MEX2806AA 17

https://truckmanualshub.com/

Exterior controls

Side doors

⚠ WARNING

Moving parts!
Make sure all entry and mechanical access doors are properly closed before operating the machine.
Failure to comply could result in death or serious injury.

W0238A

Side hood

The side hood **(A)** allows to access to the compartment including the hydraulic oil tank, the fuel tank, the filling plug of the radiator coolant, and the battery disconnect switch.

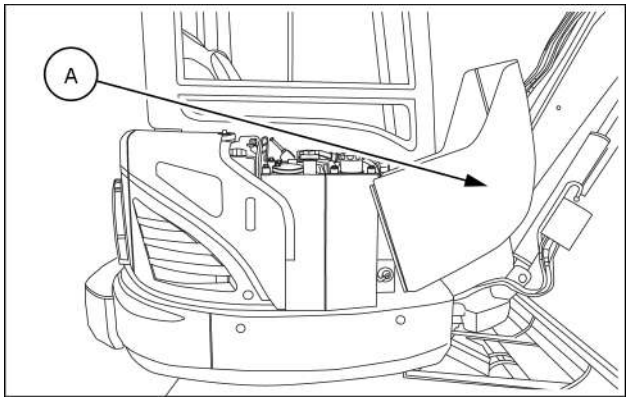

SMIL16MEX1451AA 1

Engine access door

The engine access door **(B)** allows to access to the engine compartment including the filling plugs of the engine oil and the air cleaner.

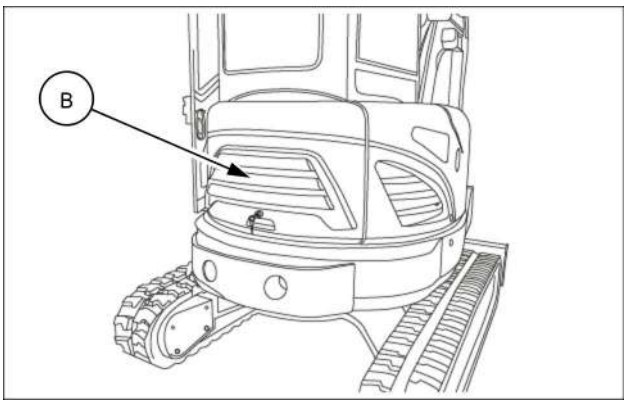

SMIL16MEX1450AA 2

https://truckmanualshub.com/

Opening

1. Use the starter key to unlock the engine door.
2. Use the hook to gently lift up the hood and use the lifting stem **(1)** to secure the hood.

NOTICE: *while lifting the hood, make sure the hood does not contact the cab. Machine damage could result.*

NOTICE: *never leave tools inside the compartment.*

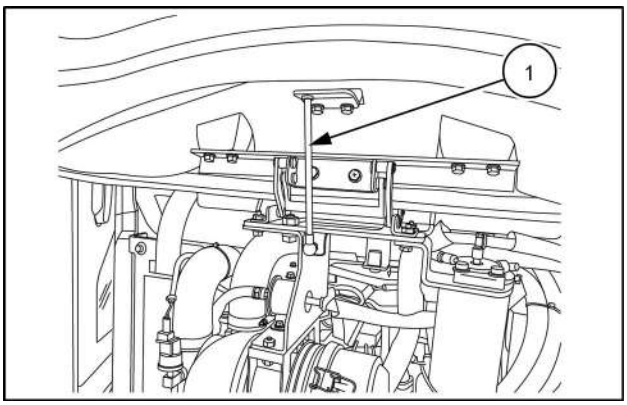

SMIL16MEX1438AA 3

Closing

1. Lightly lift up the side hood, lower the lifting stem and use the handle to lower the side hood gently.

   NOTICE: *when you lower the hood, make sure that the hood does not contact the cab. Machine damage could result.*
2. Make sure to close the side hood firmly.
3. Use the starter key to lock the hood.

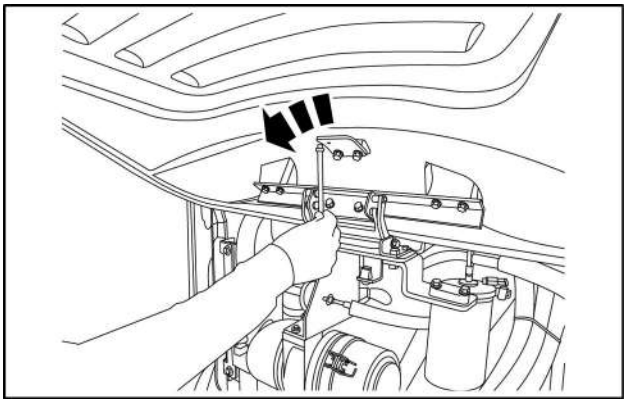

SMIL16MEX1455AA 4

4. Pull the hook in order to unlock the engine access door.
5. Use the handle and close the engine door firmly.
6. Use the starter key to lock the door.

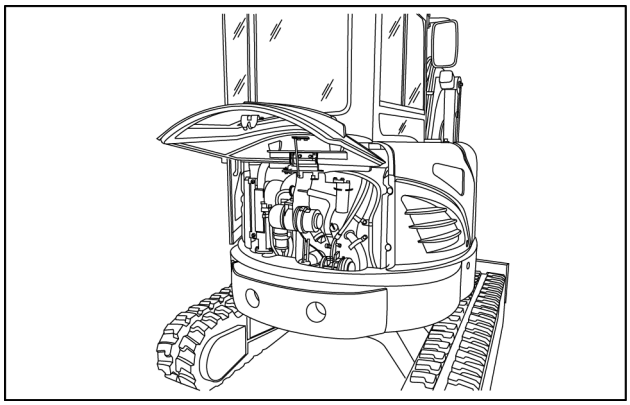

SMIL16MEX1437AA 5

https://truckmanualshub.com/

Rear view mirrors

⚠ WARNING

Avoid injury and/or machine damage!
Keep the mirrors clean and properly adjusted.
Failure to comply could result in death or serious injury.

W1078A

Left-hand side mirror

Position the mirror **(A)** on the bracket **(B)** as shown in the figure aside.

Horizontally adjust the mirror location in order to maximize visibility. The mirror inclination depends on the height both of the seat and the operator.

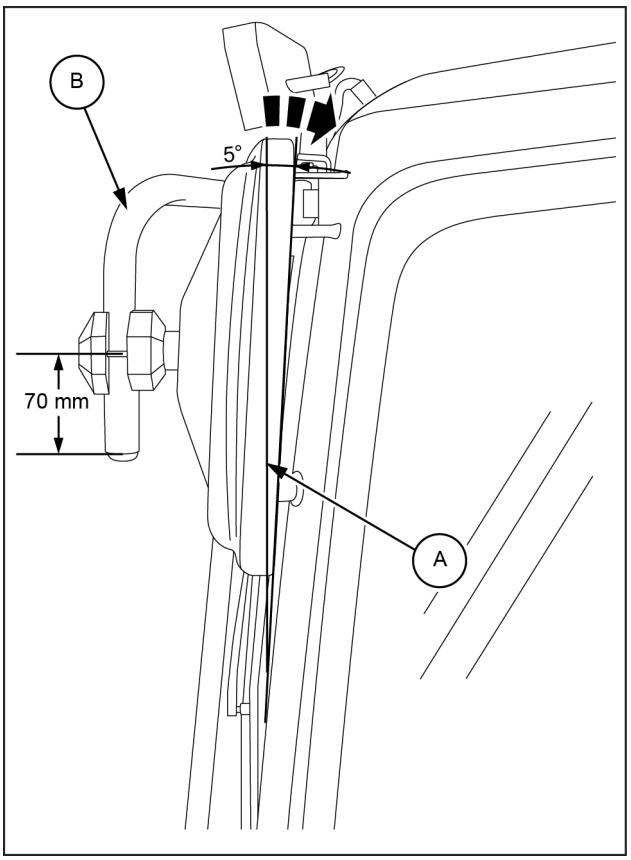

SMIL16MEX1510BB 1

Vertically adjust the mirror location so that the left-rear end of the machine may be visible from the operator's seat. Operate both the mirror **(A)** and the bolt **(C)**.

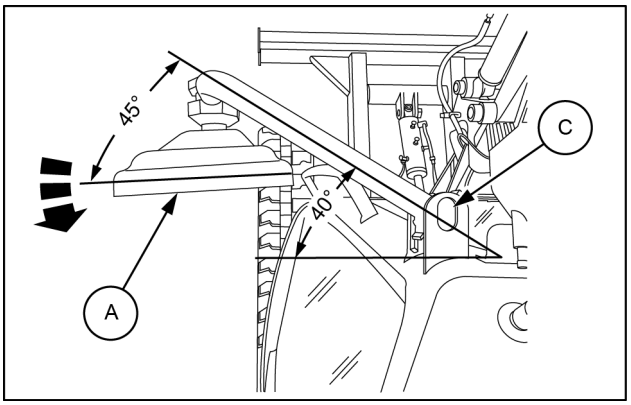

SMIL16MEX1508AB 2

https://truckmanualshub.com/

Right-hand side mirror

Position the mirror **(D)** on the bracket **(E)** as shown in the figure aside.

Horizontally adjust the mirror location in order to maximize visibility. The mirror inclination depends on the height both of the seat and the operator.

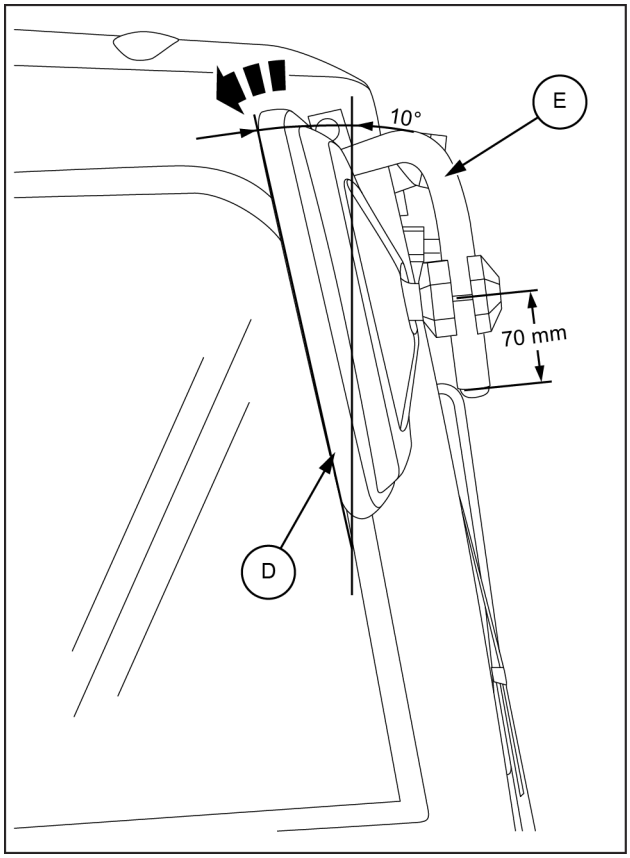

SMIL16MEX1511BB 3

Vertically adjust the mirror location so that the right-rear end of the machine may be visible from the operator's seat. Operate the mirror **(D)**.

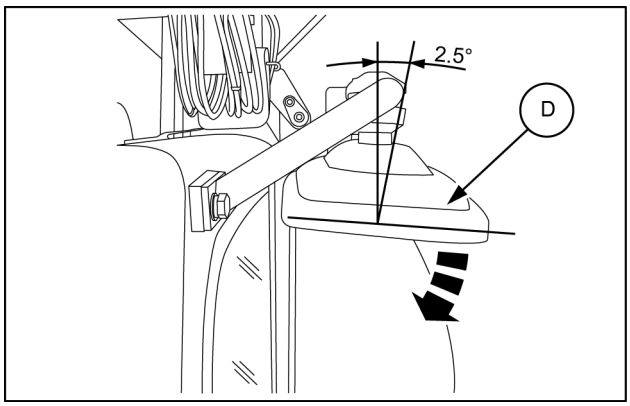

SMIL16MEX1509AB 4

https://truckmanualshub.com/

Battery disconnect switch

NOTICE: *never turn the battery disconnect switch to* ***(O)*** *position with the engine running. This could damage the electrical system.*

NOTICE: *never turn the battery disconnect switch to* ***(O)*** *position within* ***3 min*** *after the starter key is turned off. The machine control system and the engine control system will be damaged.*

The battery disconnect switch **(1)** is located on the right-hand side of the machine. Open the right-hand side hood to access to the battery disconnect switch.

The battery disconnect switch allows to cut off any power supply in the electrical system of the machine.

NOTE: *when the switch is turned to OFF position, all electrical circuits are cut off and the stations stored on the radio presets and the time set for the clock will be cleared.*

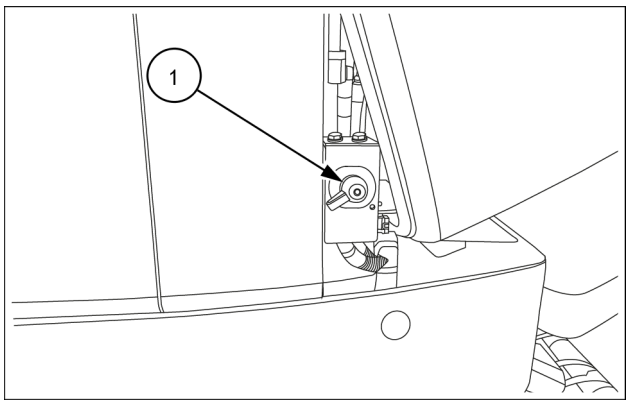

SMIL16MEX1439AA 1

Place the battery disconnect switch in the **(I)** position during normal operation.

Place the battery disconnect switch in the **(O)** position only during the following operations:

1. Battery removal
2. Electrical system connector removal
3. Electrical system service
4. Long-term storage
5. As required for inspections and repairs
6. Welding

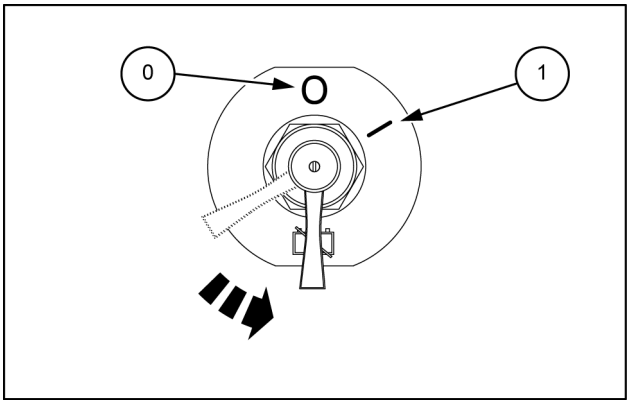

SMIL16MEX1440AB 2

https://truckmanualshub.com/

Fuel tank

⚠ WARNING

Fire hazard!
When handling diesel fuel, observe the following precautions:
1. Do not smoke.
2. Never fill the tank when the engine is running.
3. Wipe up spilled fuel immediately.
Failure to comply could result in death or serious injury.

W0099A

Use the starter key to unlock the door **(1)** located in the upper part of the side hood.

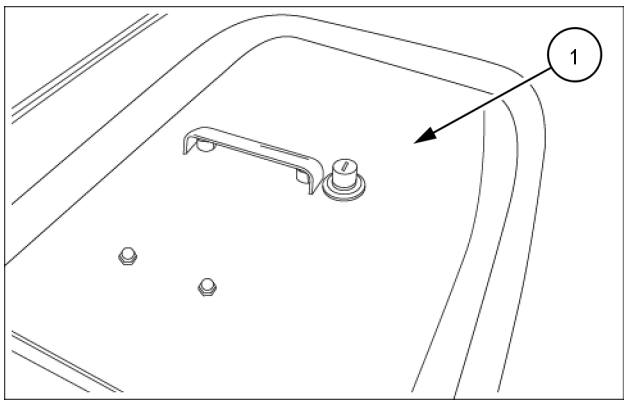

SMIL16MEX1435AA 1

Open the door to access to the filling cap **(2)** of the fuel tank.

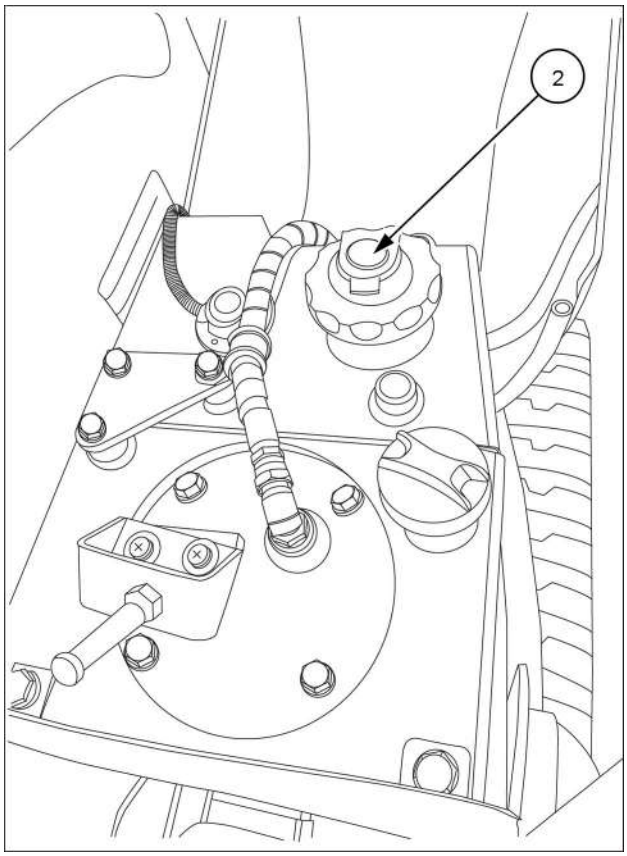

SMIL16MEX1471BA 2

https://truckmanualshub.com/

You can also gain access to the fuel tank **(4)** by opening the side hood.
Use the starter key to unlock the side hood.
Use suitable fuel.

NOTE: *clean around the fuel cap* ***(3)*** *before refueling and do not remove the filter in the neck of the fuel tank.*

NOTICE: *do not put a moisture elimination product (water draining agent) in the fuel tank because It may damage the engine.*

NOTE: *in cold weather, use fuel corresponding to the ambient temperature.*

NOTICE: *in cold weather, fill the fuel tank after each working day to prevent the formation of condensation.*

When install the fuel cap **(3)**, be sure to fit it in the neck accurately and then turn it all the way to the stopper to lock it.
The fuel tank is equipped with a maximum level visual gauge **(5)**.

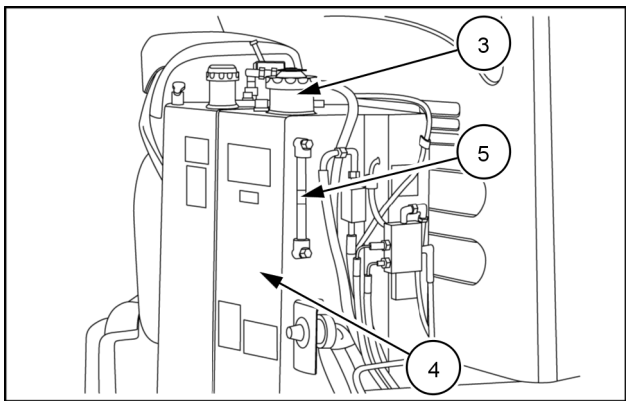

SMIL16MEX1534AA 3

https://truckmanualshub.com/

4 - OPERATING INSTRUCTIONS

Starting the unit

Anti-theft protection

Engine Starting Limit (ESL) mode setting

ESL mode is designed to be a theft deterrent and prevent the unauthorized operation of the machine.
If the ESL mode is selected in “Always” mode, the password is required when the starter switch is turned ON.

- Disabled mode: the ESL function is not used.
- Always mode: the password is required whenever the operator start the engine.
- Interval mode: the password is required when the operator starts the engine first. The operator can restart the engine within the interval time without inputting the password. The interval time can be set maximum 2 days.

For example, if the operator sets 5 minutes interval time, the ESL system is re-activated after 5 minutes time.
If the engine is running, after 5 minutes the engine does not need to be restarted, but the password will be required starting from the subsequent engine start.

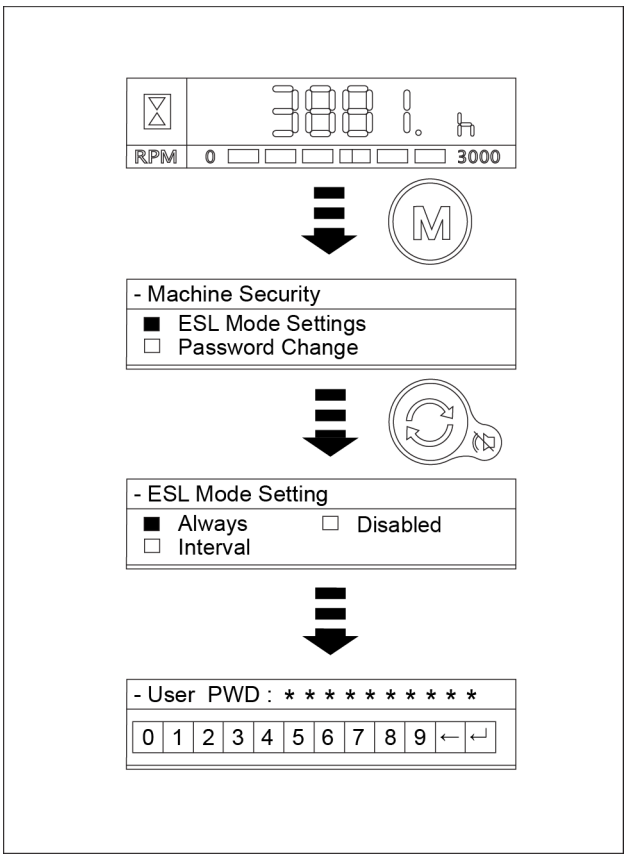

SMIL16MEX0383AA 1

https://truckmanualshub.com/

Password change

To change the password, input 5 to 10 digits and press Enter.

1. Delete
2. Enter

NOTE: *the default password is 00000*

NOTICE: *If the operator forgot or lost the password contact your authorized NEW HOLLAND CONSTRUCTION dealer.*

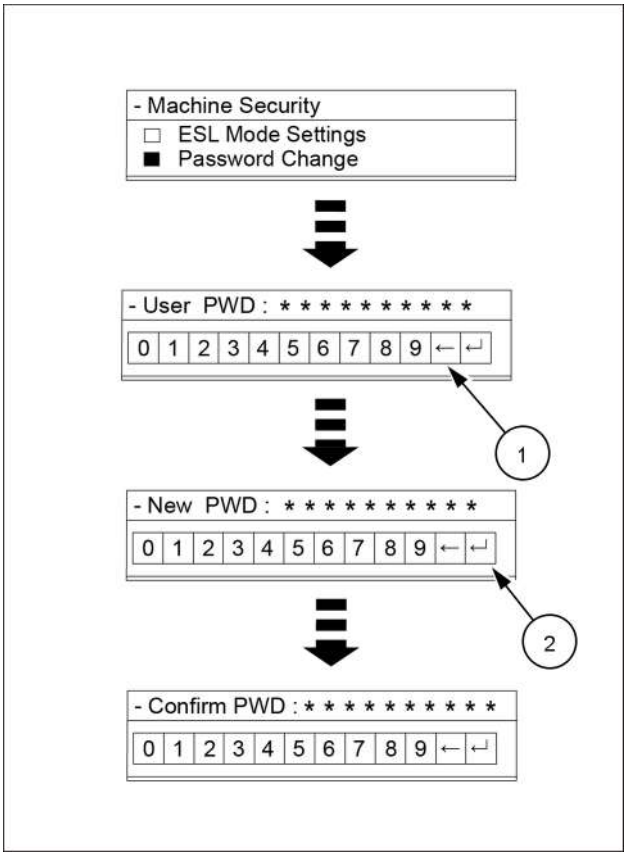

SMIL16MEX0384AA 2

https://truckmanualshub.com/

Starting the engine

⚠ WARNING

Avoid injury!
Before starting the engine, securely fasten the seat belt. The seat belt can help ensure your safety if it is properly used and maintained. Never wear a seat belt loosely or with slack in the belt system. Never wear the belt if it is twisted or pinched between the seat structures.
Failure to comply could result in death or serious injury.

W0142A

⚠ WARNING

Hazard to bystanders!
Make sure the area surrounding the machine is clear of all persons before starting the engine.
Failure to comply could result in death or serious injury.

W0090A

⚠ WARNING

Toxic gas and asphyxiation hazard!
Diesel exhaust contains dangerous compounds. Never operate the engine in a closed building or area. Proper ventilation is required under all circumstances.
Failure to comply could result in death or serious injury.

W1302A

1. Check that there is no abnormality in the machine.
2. Confirm that the engine access door and the side hood are closed and locked.
3. Confirm that the engine speed control knob **(1)** is in low idle position.
4. Confirm that the safety lock lever **(2)** is in LOCK position (rearward position).
5. Set each operation lever in neutral.
6. Securely fasten the seat belt.

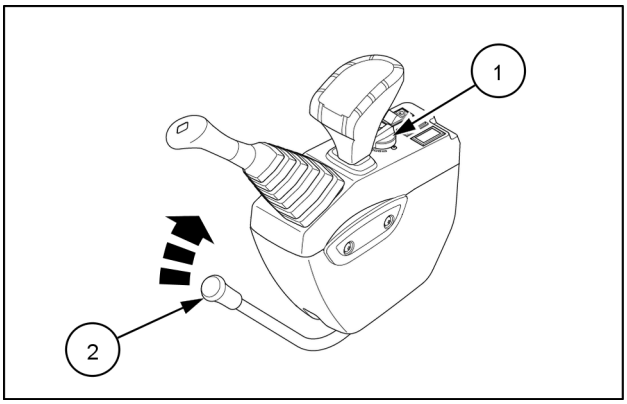

SMIL16MEX1441AA 1

7. Turn the starter key **(3)** to the ON position, and check that all the lights on the instrument cluster turn ON and the buzzer sounds for six seconds.

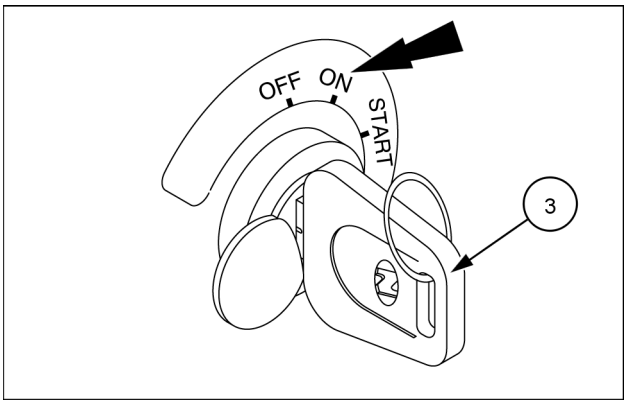

SMIL19MEX0717AA 2

https://truckmanualshub.com/

8. After two seconds, check that all the lights on the instrument cluster turn OFF, except the engine oil pressure warning light **(4)** and the battery charging warning light **(5)**.
9. If the ESL mode is set to the Always, enter the password to start the engine.
   If the password has failed 5 times, please wait **10 min** before re-attempting to enter the password.
   (Refer to page **4-1**)

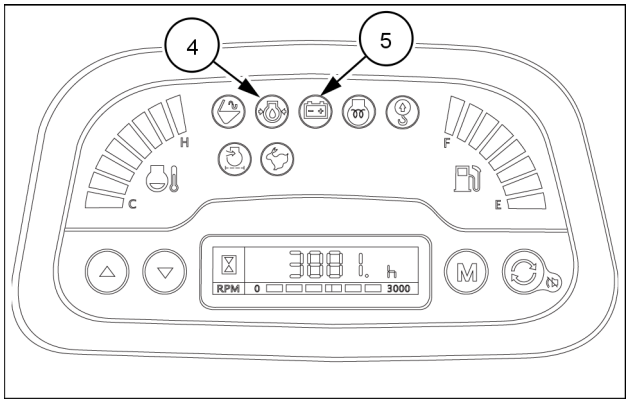

SMIL19MEX0731AA 3

NOTE: *if the weather temperature is below **10 °C** (**50 °F**), turn the starter switch **(3)** to ON position and wait the engine preheat lamp turns off. Then start the engine by turning the starter switch to the START position.*

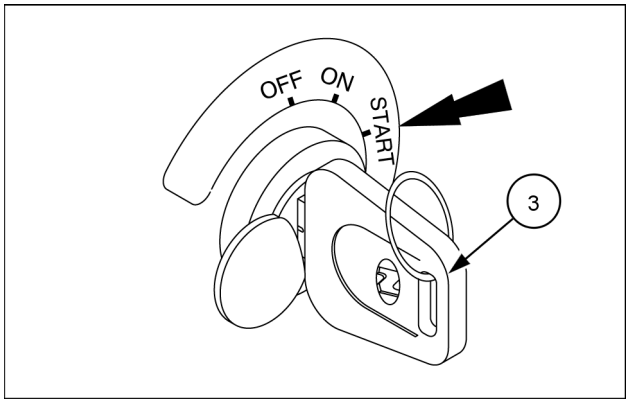

SMIL19MEX0717AA 4

10. Sound the horn with the button on the right–hand control lever to warn that the machine is starting up.
11. Turn the starter key to START position when the engine preheat light **(6)** disappears.
    The engine running takes approximately **1 s** to stabilize after it has been cranked up.
    Release the starter key as soon as the engine is running regularly.

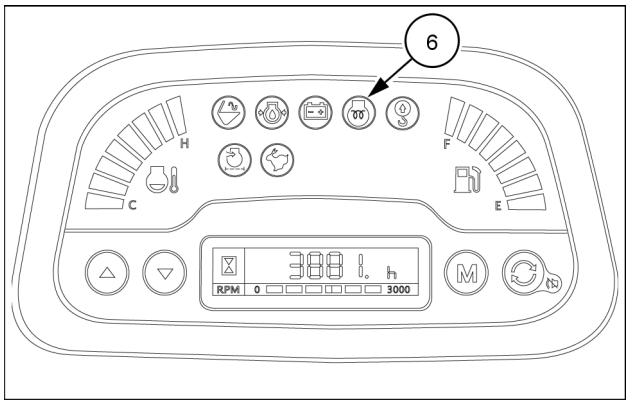

SMIL19MEX0731AA 5

NOTICE: *the cranking up of the engine may be difficult in severe winter climates. If the engine does not start after **10 s** of operation of the starter motor, turn the key to OFF position and wait **2 min** before attempting a new cranking.*

NOTICE: *when the engine is started in severe winter climates, moisture vapor may be temporarily generated resulting in a whitened smoke.*

NOTICE: *immediately after the engine is started, the engine sound is louder compared to the sound after the engine is warmed up, and also the color of the exhaust smoke becomes more whitened or more blackened than the smoke emitted during the normal operation. The engine sound and the color of the exhaust smoke get smoothed after the engine is warmed up.*

NOTICE: *due to resonance, vibration might increase while the engine is running at low speed. Increasing slightly the engine speed reduces the vibration.*

https://truckmanualshub.com/

Bringing the machine up to operating temperature

Before starting operation, allow the main systems to warm up to their normal operating temperature.

NOTE: *the normal operating temperature for the hydraulic fluid is* ***50 – 80 °C*** *(****122 – 176 °F****).*

NOTICE: *do not operate the machine if the temperature of the hydraulic fluid is below* ***25 °C*** *(****77 °F****).*

The warm-up procedure is necessary for proper and safe machine usage. Proper warm-up allows for the best possible machine performance and fuel efficiency.

NOTICE: *the warm-up of the machine is mandatory when operating in severe winter climates.*

NOTICE: *the warm-up of the machine prevents wear and severe damages to the engine, to the fuel system, and to the hydraulic system.*

NOTICE: *the exhaust pipe becomes extremely hot while the engine is idling. Make sure that there is no flammable material such as plants, dried grass, paper waste, oil and old tires close to the exhaust pipe before starting warm-up procedure.*

NOTICE: *never cover the grids of the radiators with flammable materials.*

1. Start the engine and let it run for approximately **5 – 10 min** with no load.
2. Set the engine speed lever to mid-range speed.
3. Set the safety lock lever to UNLOCK position (frontward position).
4. Operate the bucket control lever for **5 min**.

   NOTICE: *do not operate any control lever except the bucket control lever.*
5. Set the engine speed lever to high speed.
6. Operate the bucket control lever and the arm lever for approximately **5 – 10 min** with no load.

   NOTICE: *operate only the bucket control lever and the arm control lever.*
7. Complete the warm-up procedure by operating the controls for all cylinders, travel, and swing for 3 to 4 times to circulate warmed hydraulic fluid into the whole circuit.

Check the following items after reaching normal operating temperature of the fluids:

- Exhaust gas is normal.
- No unusual noise or vibration.
- No leak of oil, fuel or water.
- No unusual noise when activating the hydraulic equipment.
- Inspection of the horn, buzzer, working light, and instrument cluster.
- Proper display of the engine coolant temperature gauge.
- Check the visibility from the view mirrors before operation. Adjust and clean up dirt as necessary.
- Check each operation (travel, front equipment, and swing).

If any of the following occurs during the warm-up procedure, stop the engine immediately.

- Engine speed increases or decreases rapidly.
- Engine sound and exhaust gas color are abnormal.
- The display screen displays any message and warning sound beeps.

Operating the machine in hot or cold weather

In cold weather

- Make sure to use fluids and lubricants which have specifications suitable for operation at low ambient temperatures.
- Check the batteries for full charge state.
- Fill up the fuel tank after completing the work, and then drain water before starting work on the next day in order to prevent dew condensation and invasion of water to the fuel system.
- Use fuel which is rated to the outside air temperature, or proper anti-freeze in order to prevent crystal generation at **-2 °C** (**28 °F**).

  NOTICE: *before transporting the machine to a cold region, fill the tank with fuel that has a low freezing temperature.*

In hot weather

- Make sure to use fluids and lubricants which have specifications suitable for operation at high ambient temperatures.
- Keep the coolant at the correct level in the coolant reservoir and in the radiator.
- Use the correct solution of **OAT EXTENDED LIFE COOLANT/ANTIFREEZE** in the cooling system.
- Test the radiator cap before hot weather starts. Replace the cap as required.
- Clean all dirt and debris from the radiator, cooler and engine area.
- Check the condition of the fan drive belt.

Operation under dusty and sandy conditions

- Frequently inspect the element of the air cleaner and clean or replace the element and the dust cup regardless of service due.
- Tightly close the breather cap of the hydraulic tank to prevent invasion of sand and dust to the hydraulic circuits.
- Make sure to thoroughly clean the grease fittings before greasing any lubrication point of each pin and bush.
- Make sure to clean the radiator fin and oil cooler fin and the radiator grid.

Operation on seashore

- Inspect tightness of the plugs/cocks/bolts in each point in order to prevent salt corrosion.
- Thoroughly wash the machine after the work, especially take good care of the electrical equipment, hydraulic cylinder and track tension cylinder to prevent corrosion.
- Inspect and lubricate more frequently. Supply sufficient grease to replace all old grease in bearings which have been submerged in water for a long time.

Operation in mud, water, or rain work sites

- Keep the machine as dry as possible during operation and make sure to carry out regular lubrication. Moisture and muddy water cause deterioration and corrosion of paints/wiring/metal components.
- After completing operations, clean mud, rocks or debris from the machine. Inspect for damage, cracked welds or loosened parts.
- If the operations are in salt water or other corrosive materials, make sure to flush the affected equipment with fresh water.

Operation in rocky work sites

- Check for damage to the undercarriage and for looseness, flaws, wear and damage in bolts and nut.
- Loosen the track tension a little (not over than **10 mm** (**0.4 in**)) when working in such areas.
- Do not turn the undercarriage directly over the sharp edge rock.

https://truckmanualshub.com/

Operating the machine

⚠ WARNING

Misuse hazard!
Follow the operating instructions in this chapter. Any other practice that has not received the prior approval of the manufacturer is considered to be strictly forbidden.
Failure to comply could result in death or serious injury.

W0281A

⚠ WARNING

Hazard to bystanders!
Always know the location of all workers in your area. Warn them before you start working on the machine. Always keep all unauthorized bystanders clear of the area.
Failure to comply could result in death or serious injury.

W0176A

- Before you operate the machine, take notice of the job site ground conditions and characteristics. Take notice of the local climate.
- Inspect the job site for potential risks before operating the machine. Holes on working site, obstructions and hazardous materials such as debris are subject to cause serious accident.
- Pay attention to location of pipes and cables before commencing work. Electric cables, gas pipes, water pipes and underground installations may cause serious injury. If the work takes place adjacent to high voltage power lines make sure to check the following work range:
  Less than **57000 V**: **4 m** (**13.1 ft**)
  57000 V or more: **5 m** (**16.4 ft**)
- Sit on the operator's seat, adjust it so as to be able to easily reach the console, and then fasten the seat belt.
- Check that the cab door is tightly secured at position of open or close.
- Sound the horn to warn other workers in the proximity of the machine.
- Start up the engine.
- Check all the indicator lights and gauges are operating properly.
- Push the safety lock lever forward.

NOTICE: *perform the following operations to avoid damage to the machine.*

- Do not use weight of the machine as an impact force for excavation.
- Do not use traveling force of the machine for excavation.
- Avoid abrupt change of swing direction when swinging the upper structure.
- Never hit or push objects with side of the bucket. Do not sweep ground with the bucket to level rubbles.
- Open and close the bucket for several times to loosen soil and mud when soil and mud are tightly packed in the bucket.
- After work, remove mud from the machine and clean it.

https://truckmanualshub.com/

Normal operation of the machine

When rolling in the arm, the roll-in movement stops momentary at point **(X)** as shown, then recovers speed again after passing point **(X)**.

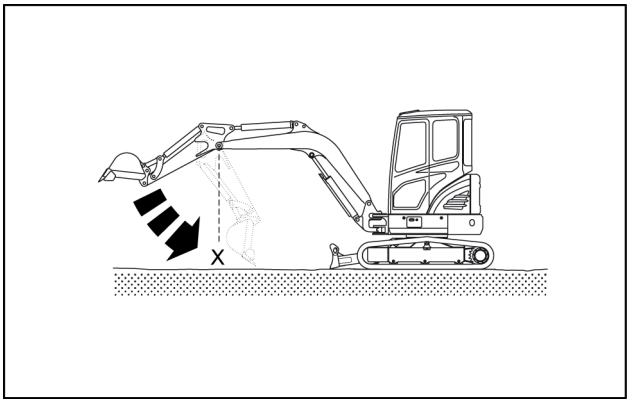

SMIL18MEX0131AB 1

The reason is that the movement by the arm weight is faster than the speed of oil flow into the cylinder. When lowering the boom, a sound may be heard continuously. This is caused by the oil flow in the valve.

If the machine is overloaded, a sound is caused by the relief valves, which protect the hydraulic systems.

NOTICE: *do not exceed the machine performance. It may result in accident or failure.*

NOTICE: *perform lifting operations within the specified load limit.*

The upper-structure swings when the left control lever is moved rightward or leftward. The swinging speed is determined by the stroke of the lever.

- When moving the left control lever leftward, the upper-structure swings leftward.
- When moving the left control lever rightward, the upper-structure swings rightward.
- When returning the left control lever centrally (neutral position) the upper-structure stops moving.

When you stop swinging the machine, a noise near the swing motor may be heard. The noise is generated by the brake valve.

NOTICE: *before start the work or when travelling up or down a slope, position and keep the angle blade (if equipped) at neutral position.*

https://truckmanualshub.com/

Operating the machine on sloping ground

⚠ WARNING

Driving hazard!
Hillside operations can be dangerous. Rain, snow, ice, loose gravel, or soft ground, etc. can change the ground conditions. You must make a judgment if it is safe to operate your machine on any hillside or ramp.
Failure to comply could result in death or serious injury.

W0144A

⚠ WARNING

Overturning hazard!
Before parking the machine, make sure the ground is stable. Plan the worksite so that the ground is flat, hard, and level.
Failure to comply could result in death or serious injury.

W0258A

When working on a sloping ground, the machine becomes unstable, unbalanced, and difficult to control. Therefore, the following operating prescriptions shall be strictly respected.

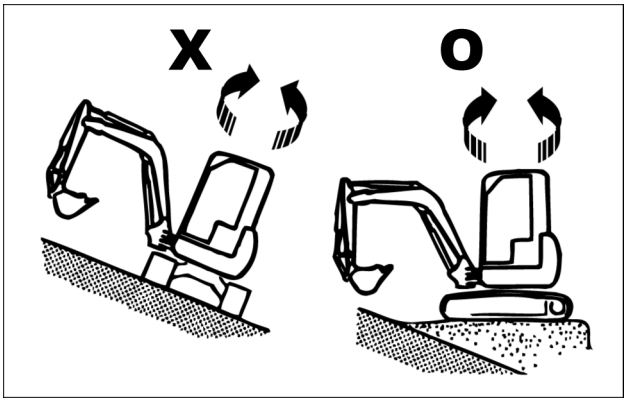

SMIL16MEX3166AB 2

If the intended job site is located on a sloping ground, a hard horizontal area shall be prepared as operating base for the machine. Never work on slopes steeper then **10°**.

Travel along slopes up to **20°** is allowed only to reach a specific work area. Refer to “Machine travel - Precautions for travelling on slopes” in order to understand proper operating practices and precautions for traveling along slopes.

NOTICE: *The machine grade ability is **30° (58%)**. Never operate the engine when the incline of the machine is **30°** or more. The engine or the hydraulic system may be damaged.*

Work with the undercarriage oriented along the slope, never across. Always keep the travel reduction gears pointing down towards the bottom of the slope. Lower and indent the blade into the ground.

Make sure to define a safe working area around the machine, which shall be equal to the maximum reach of the front equipment plus **2 m** (**6.6 ft**). It is recommended to have a supplementary guiding operator on the ground out of the safe working area, in order to provide proper indications and prompt warnings to the machine operator.

Maintain the maximum engine speed.

Make sure that the low speed travel mode is selected.

Operate the control levers smoothly in order to prevent sudden movements that may cause the machine to slip or tip over.

Avoid full boom raising, as well as swing operation towards the bottom of the slope with the bucket loaded, or swing operation with any heavy attachment installed, in order not to affect the balance of the machine.

https://truckmanualshub.com/

Digging and loading operations

Set the tracks parallel to the line of the ditch to be excavated when digging a ditch. Do not swing while digging.

1. Do the digging work by arm.

Use the pulling force of arm for digging and use together with the digging force of the bucket if necessary.

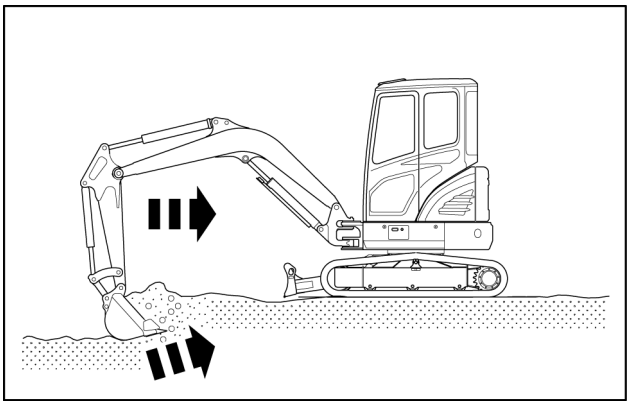

SMIL18MEX0132AB 3

2. The digging resistance and wearing of tooth can be reduced by putting the end of bucket tooth to the digging direction.

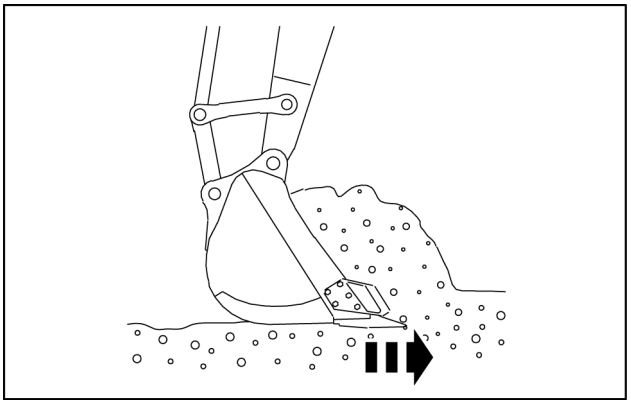

SMIL16MEX1541AB 4

3. Do not use the dropping force of the work equipment for digging.

NOTICE: *the machine can be damaged by the impact.*

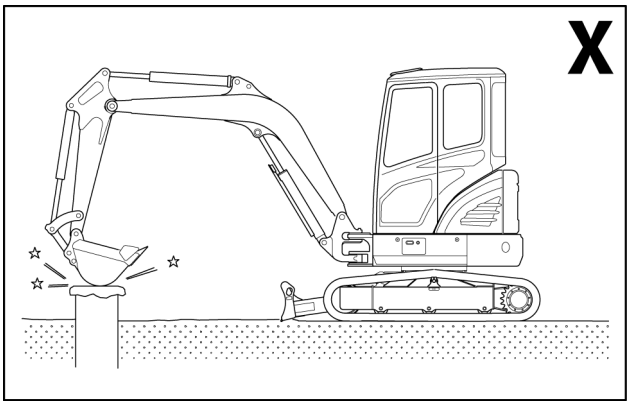

SMIL18MEX0133AB 5

4. Do not use the bucket to crack hard objects like concrete or rocks.

NOTICE: *this may break a tooth or pin, or bend boom.*

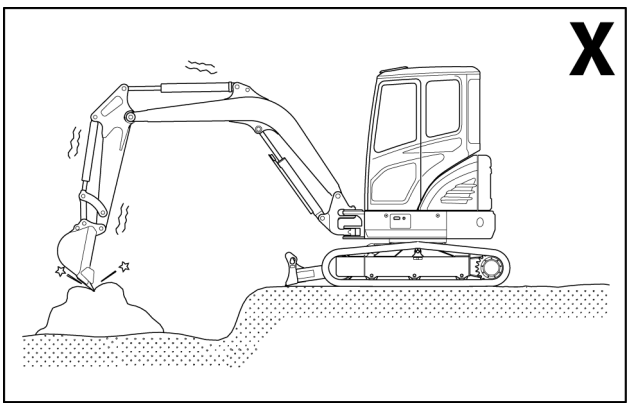

SMIL18MEX0134AB 6

https://truckmanualshub.com/

Lowering the attachment in the event of a failure

⚠ WARNING

Unexpected machine movement!
Only use the following procedure in case of machine failure. Always use extreme caution during operations. Keep other persons away from the bucket, attachment, and boom. The bucket or attachment can move unexpectedly during operations due to weight of the bucket, attachment, arm, or boom.
Failure to comply could result in death or serious injury.

W1364A

⚠ WARNING

Crushing hazard!
Keep away from the space under the bucket or attachment when lowering the bucket or attachment.
In cases where the machine fails and the engine stops, lower the attachment using the procedure described in this manual.
Failure to comply could result in death or serious injury.

W1468A

NOTICE: *the procedure should be completed within five minutes after the engine stops. The accumulator pressure will gradually fall, which will disable the ability to lower the attachment.*

If the engine breaks down, use the following procedure to lower the attachment:

1. Turn the starter key to ON position.

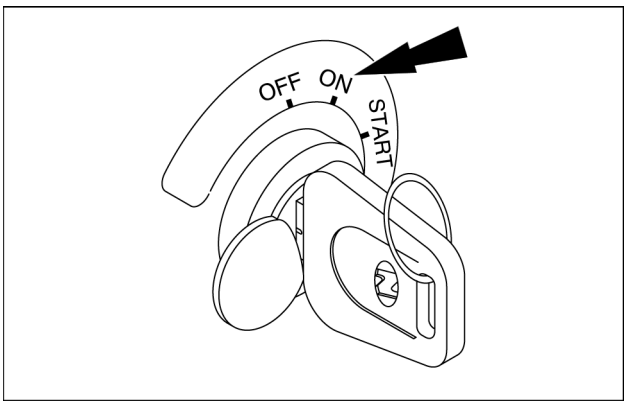

SMIL19MEX0717AA 1

2. Set the safety lock lever in forward position (UNLOCK position).
3. Slowly operate the control levers to lower the attachment to the ground.

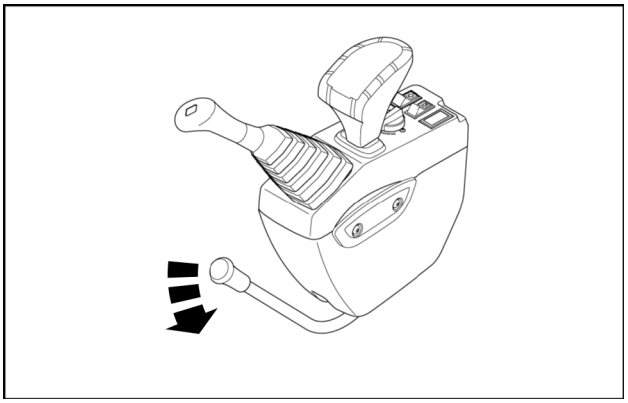

SMIL16MEX2743AA 2

https://truckmanualshub.com/

Bucket replacement

⚠ WARNING

Flying object!
Always wear eye or full face protection when performing this procedure.
Failure to comply could result in death or serious injury.

W0313A

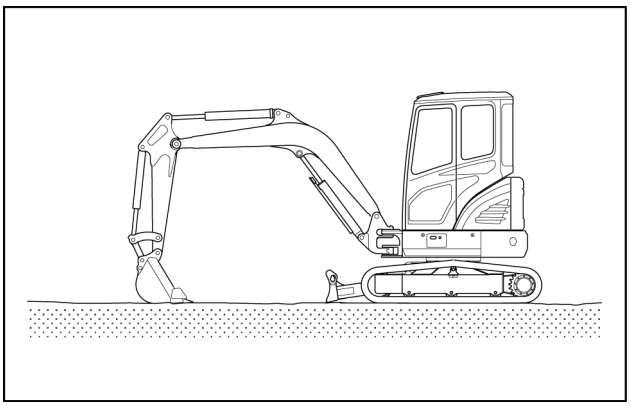

SMIL18MEX0128AA 1

1. Lower the bucket to the ground.

   NOTE: *place the bucket in light contact with the ground. If the bucket is lowered strongly to the ground, the resistance will be increased and it will be difficult to remove the pins*

2. Put the safety lever in LOCK position (safety lever in rearward position), and stop the engine.

3. Remove the stopper bolts **(1)** and the nuts **(2)**, then remove the pins **(3)** from the arm **(B)** and the pin **(4)** from the link **(C)**.

4. Remove the bucket **(A)**.

   NOTE: *after the removal of the pins, make sure that they are not contaminated with sand or mud and that the seals of the bushing on both sides are not damaged.*

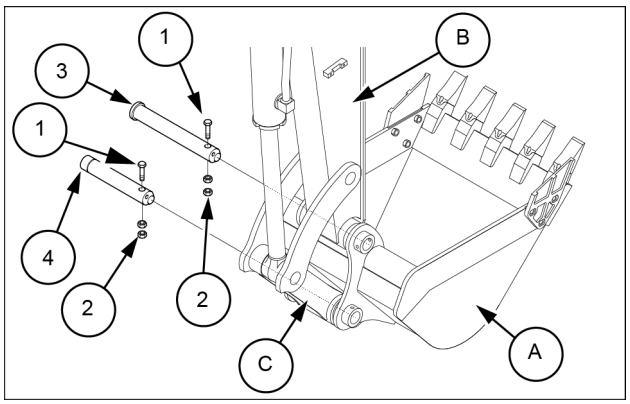

SMIL16MEX0041AB 2

5. Align the arm **(B)** with the holes **(D)** and the link **(C)** with the holes **(E)**, then coat with grease and install the pins **(3)** and **(4)**.

6. When installing the bucket, the O-rings **(5)** are easily damaged, so fit the O-rings **(5)** on the boss of the bucket.

7. After knocking the pins, move the O-ring down to the regular groove. Install the stopper bolts **(1)** and the nuts **(2)** for each pin, then grease the pin.

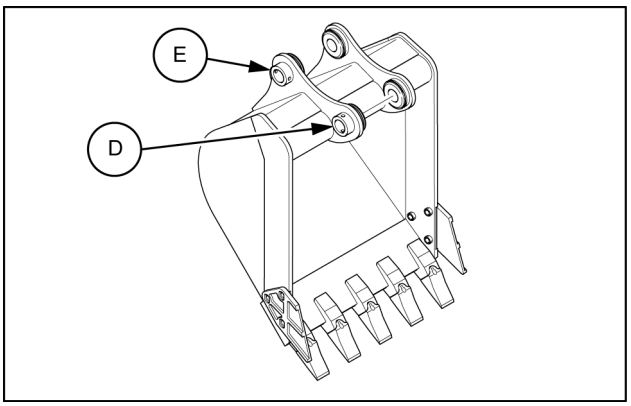

SMIL16MEX0042AB 3

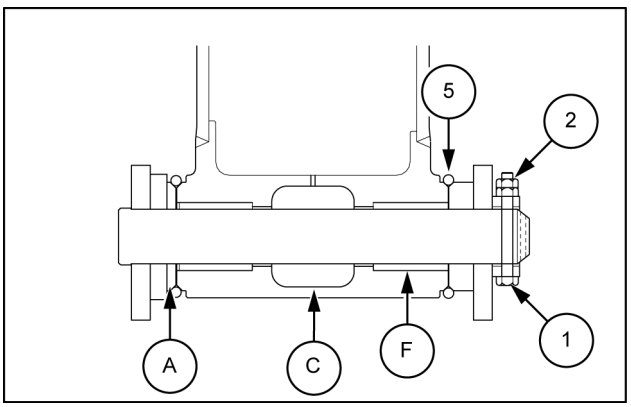

SMIL16MEX0043AB 4

https://truckmanualshub.com/

Hydraulic control lever operating pattern

⚠ WARNING

Unexpected machine movement!
Pilot controls have two different machine control patterns. Before you operate the machine, check which pattern is active.
Failure to comply could result in death or serious injury.

W1577A

NOTICE: *before starting the machine, make sure about the position of the lever of the machine control pattern valve.*

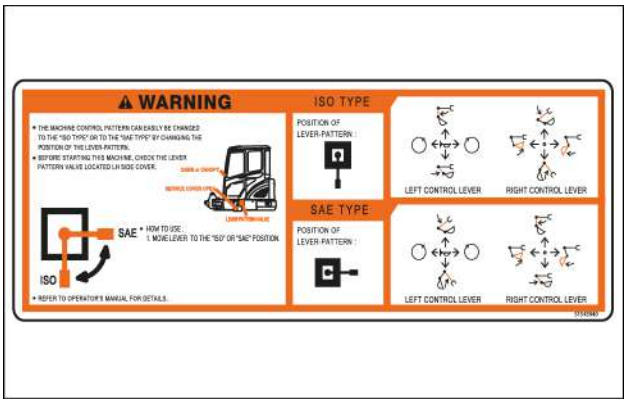

51543940 1

Use the starter key to open the panel located in the left-hand side of the cab.

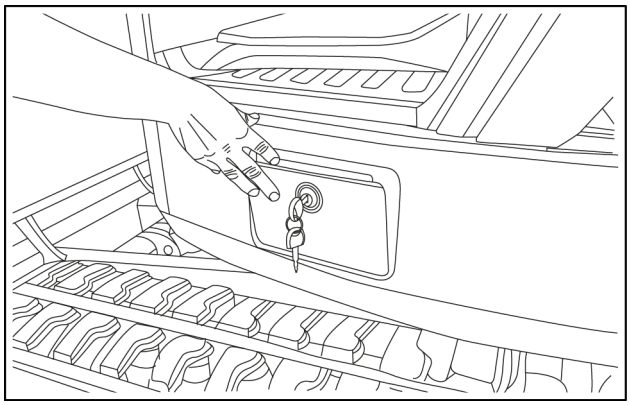

SMIL16MEX1536AA 2

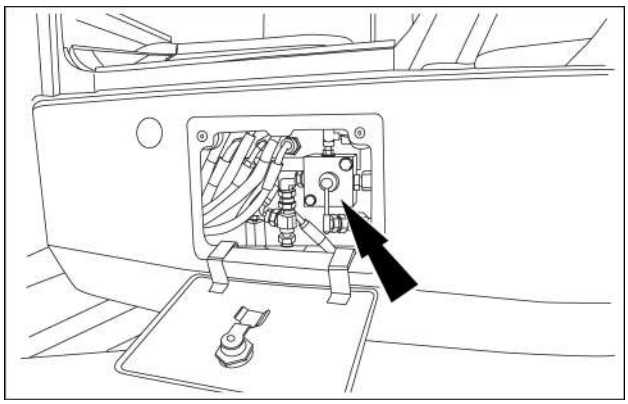

SMIL16MEX1128AA 3

https://truckmanualshub.com/

⚠ WARNING

Avoid injury!
Inspect the work area or job site to make sure that machine operation can be done safely. Confirm that the lever operation is the same as indicated on the control pattern labels. If not, immediately change the machine control pattern or the label displayed to match the machine control pattern.
Failure to comply could result in death or serious injury.

W1339A

The machine control pattern can easily be changed to the “ISO” type **(I)** or the “SAE” type **(A)** by changing the position of the lever-pattern **(1)** located on the pattern change valve **(V)**.
To change the pattern, perform the following operations.

1. Rotate the lever **(1)** from the “ISO” type pattern **(I)** to the “SAE” type pattern **(A)** or vice versa.

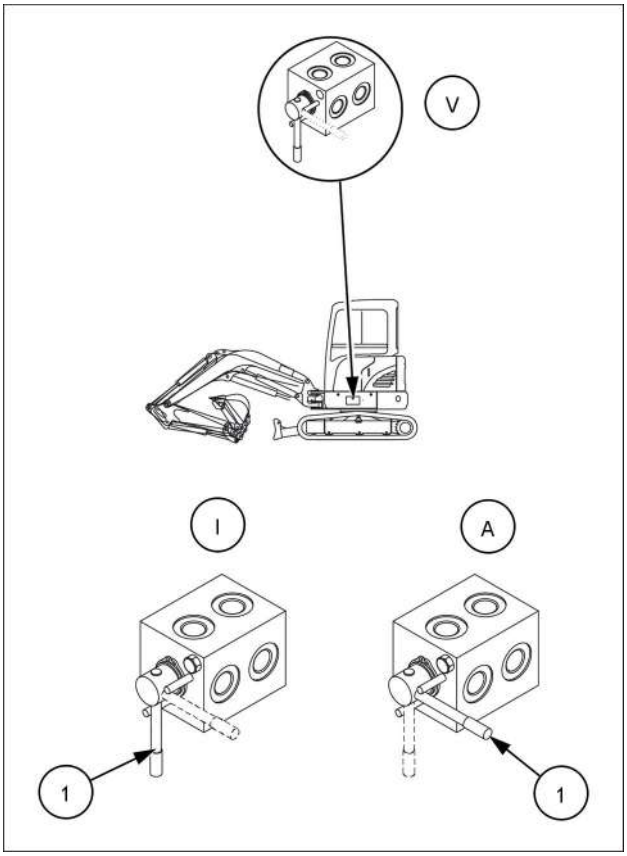

SMIL18MEX0743BA 4

Pattern: ISO type

Left–hand control lever control function

1. Arm out
2. Arm in
3. Swing left-hand
4. Swing right-hand

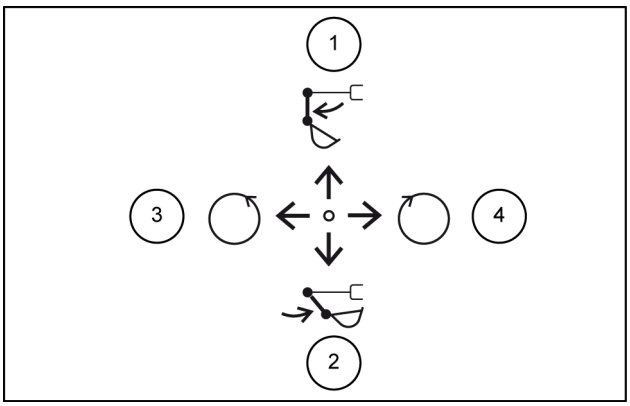

SMIL16MEX3075AB 5

Right–hand control lever control function

5. Boom lowering
6. Boom raising
7. Bucket in
8. Bucket out

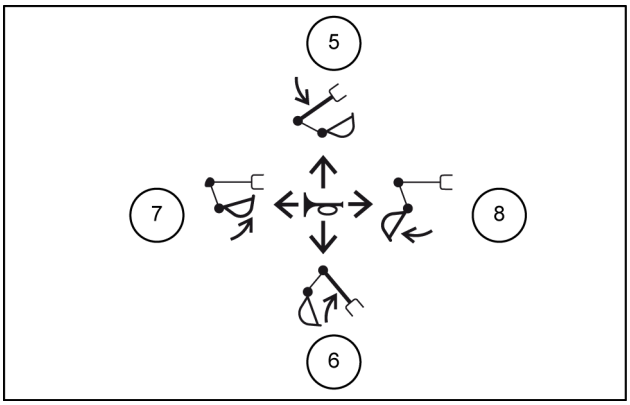

SMIL16MEX3076AB 6

https://truckmanualshub.com/

Pattern: SAE type

Left–hand control lever control function

1. Boom lowering
2. Boom raising
3. Swing left-hand
4. Swing right-hand

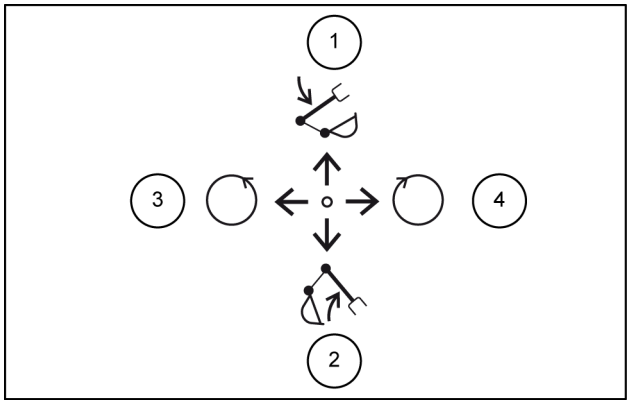

SMIL16MEX3077AB 7

Right–hand control lever control function

5. Arm out
6. Arm in
7. Bucket in
8. Bucket out

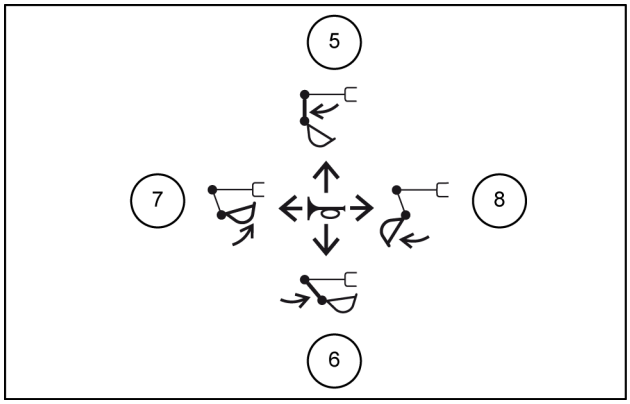

SMIL16MEX3079AB 8

https://truckmanualshub.com/

Caution while using rubber tracks

Proper usage

The rubber tracks offer excellent features which steel tracks do not possess.
However, if they are used the same way as the steel tracks, then their advantages cannot be fully exploited. Operation of the machine varies upon working site and conditions.

Although the rubber track offers many advantages thanks to the properties of its material, it also has disadvantages in terms of strength. As a consequence, it is necessary to be familiar with the characteristics of this kind of track.

	Rubber belt
Less vibration	⊗
Smooth operation	⊗
Low noise	⊗
Harmless for paved road	⊗
Easy handling	⊗
Resistant	Δ
Large traction force	⊗
⊗: Excellent O: Good	Δ: Normal

Rubber track warranty

The warranty does not cover such damages to the rubber tracks resulting from improper working or if their tension is inaccurate.

Forbidden operations

Do not carry out the following operations:

Do not travel nor work on following surfaces:

- Gravel.
- Rugged and solid rock bed.
- Reinforced concrete.
- Steel plate edges.

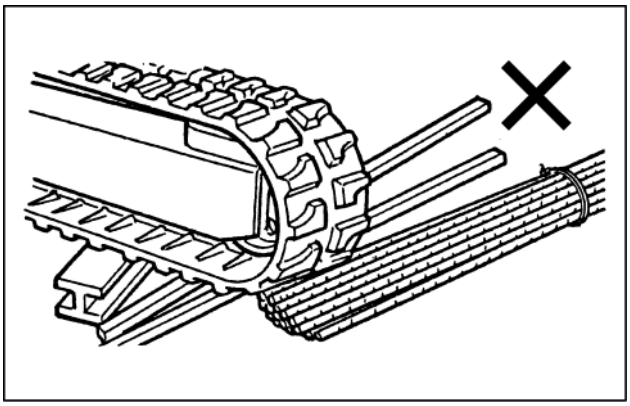

LELI11E0259AA 1

Do not operate and/or travel in such places as river beds where there are lots of stones of different sizes. Rocks may get caught into the grooves of the rubber tracks, thus damaging the track or causing it to come off. The life of rubber track is shorter, if it skids or rubs against the soil.

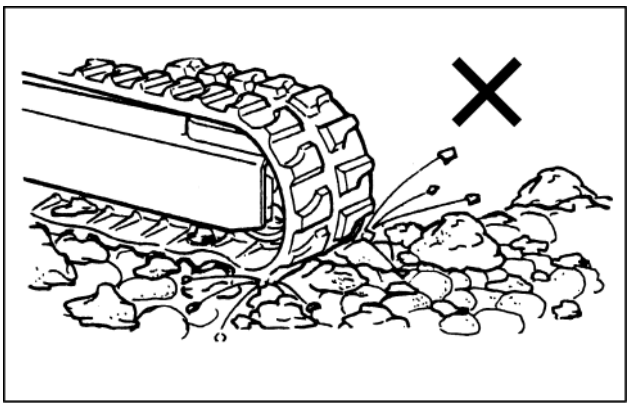

LELI11E0260AA 2

https://truckmanualshub.com/

Do not let oil, fuel, solvents, etc., come in contact with rubber shoes. If this happens, wipe off tracks with a cloth immediately.

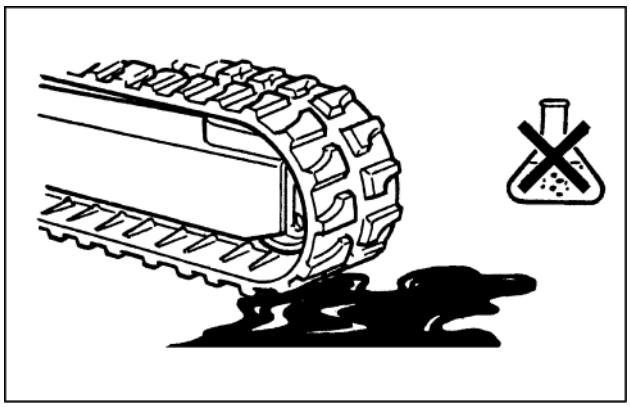

LELI11E0261AA 3

Do not enter such hot places as an open-air fire, or a steel plate left in the open sun.
Do not work in asphalt leveling.

When storing the machine for a long period (more than three months), keep it in a closed room where it will not be exposed to direct sunshine or rain.

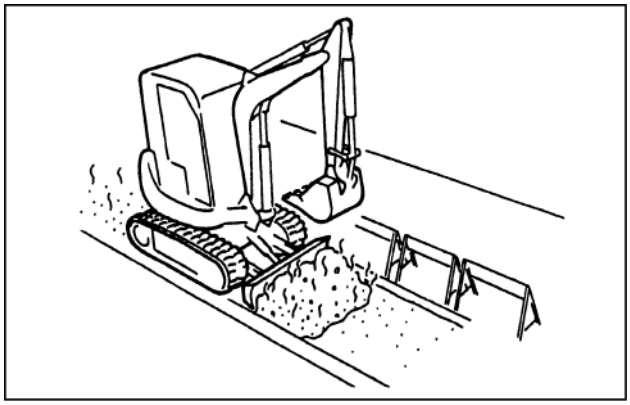

LELI11E0262AA 4

When the machine travels only on one side of the track, and keeps the other side floating, the track may come off of the rollers or get damaged.

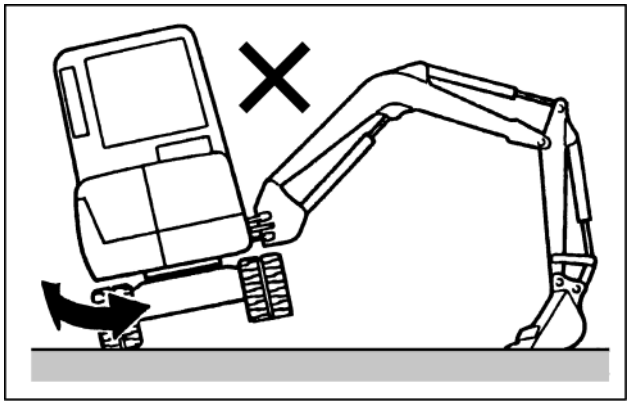

LELI11E0263AB 5

Precautions for use

Use care of the following when working.

Rubber tracks slip easily on icy surfaces.
Take the necessary safety precautions.

Avoid making a spin turn on concrete surfaces.

Avoid abrupt changes of direction as this will cause an early wear or damage of the rubber tracks.

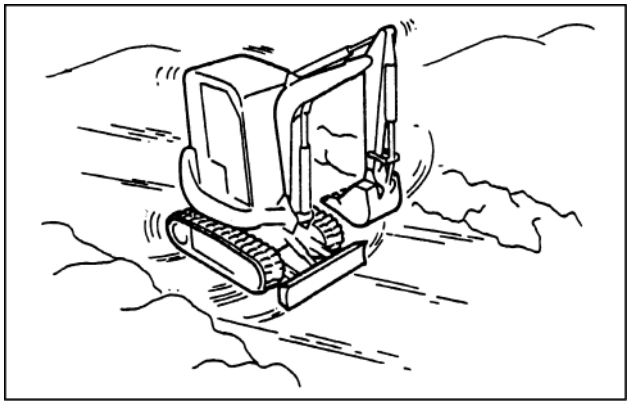

LELI11E0264AA 6

https://truckmanualshub.com/

Use care so that the bucket does not damage the rubber track while working.

Do not move the machine pressing the bucket against a concrete surface or walls.

Lower the machine slowly, if it had previously been lifted by means of the attachment.

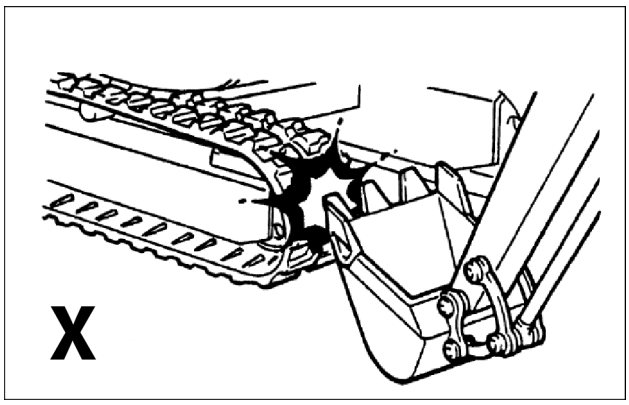

LELI11E00265AA 7

If the machine is operated in salty corrosive places, the core metal can detach easily. Do not use the rubber track under such circumstances. If the rubber tracks come in contact with these substances wash them with water.

The rubber tracks have to be used with a temperature range between **-25 °C** (**-13 °F**) and **+55 °C** (**131 °F**).

NOTE: *Use the rubber tracks under proper tension, to prevent them from coming off the rollers. Operate the rubber track carefully even when tensioning is proper.*

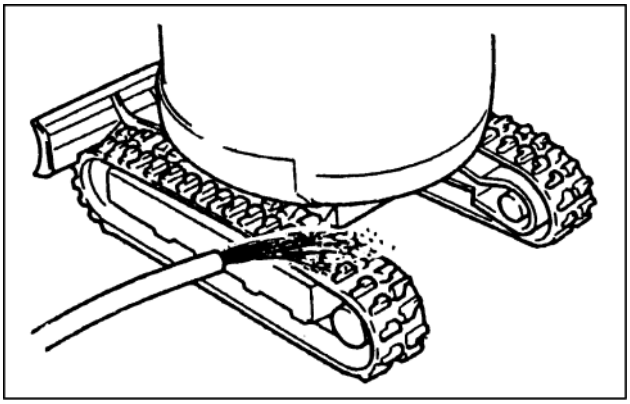

LELI11E0266AA 8

Avoid changing direction of the machine on places with different level (about **20 cm** (**7.87 in**)). To overcome the gap, place the machine perpendicular to the obstacle.

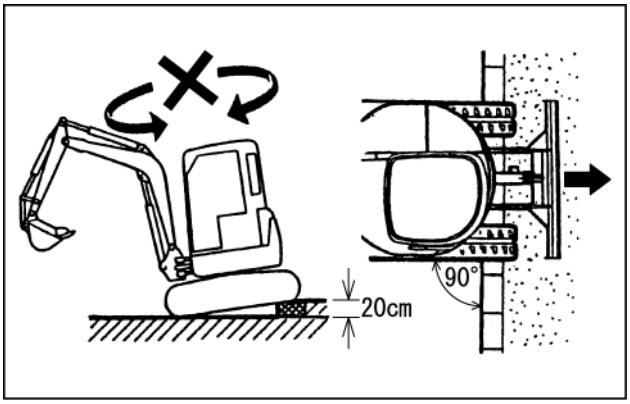

LELI11E0267AB 9

If approaching a slope in reverse is unavoidable, make sure not to make turns and not to change the travel direction while climbing between the level ground and the slope.

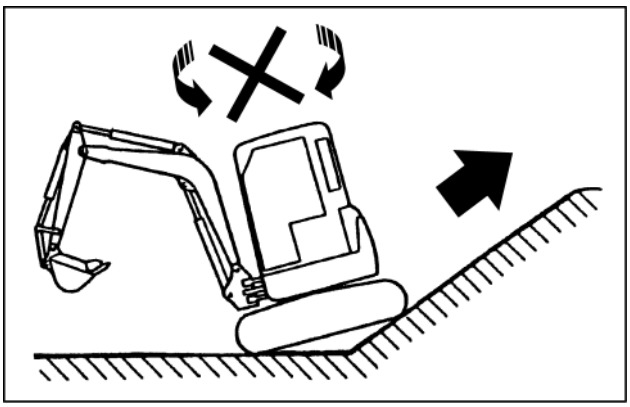

LELI11E0268AB 10

https://truckmanualshub.com/

If you travel on a slope with the machine higher at one side, this will risks to damage the rubber track. Both machine sides must travel at the same level.

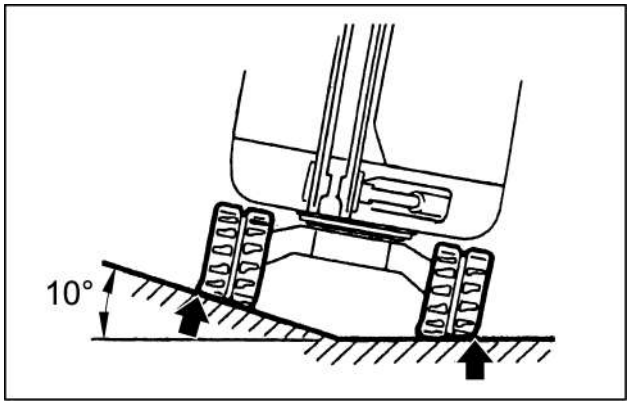

LELI11E0269AB 11

Do not change the direction of the machine with the rubber tracks positioned on earth heaps, as this could cause the rubber track to come off or get damaged.

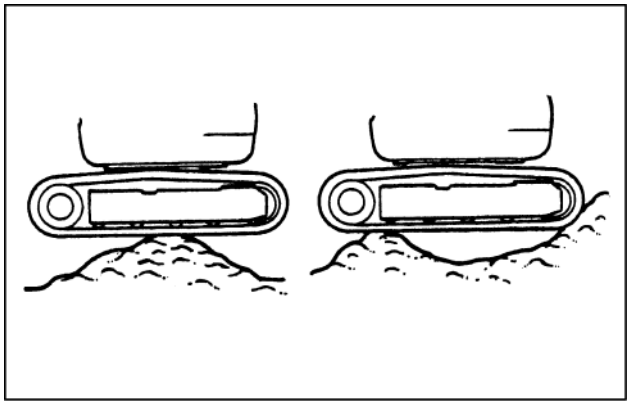

LELI11E0270AA 12

https://truckmanualshub.com/

Stopping the unit

Stopping the engine

1. Lower the attachment until it is resting on the ground.
2. Set the safety lever backward (LOCK position).
3. Set the engine speed lever to low idle position and let the engine run for about **5 min**.

   NOTICE: *run the engine in idling for about* ***5 min****. Stopping the engine immediately after operating may cause a failure such as the engine seizing. Stop the engine after the engine temperature has dropped.*

   NOTICE: *make sure to run the engine in idling status before completely stopping it except for emergency.*
4. Turn the starter key to the OFF position.
5. Remove the starter key to prevent other people using the machine.

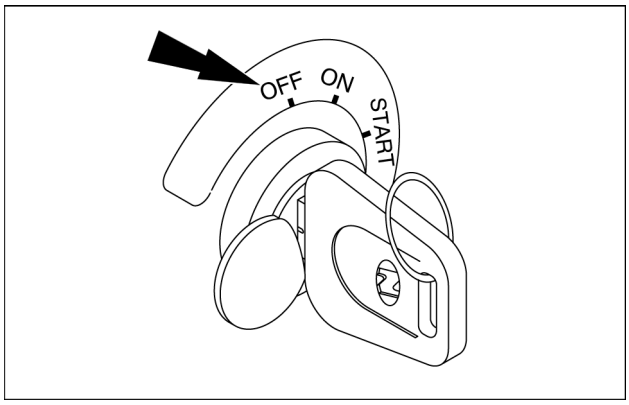

SMIL19MEX0717AA 1

Emergency stop of the engine

Only in case of emergency the engine can be stopped by operating the switch **(1)** located on the left-hand side of the cab, next to the windshield washer reservoir.

1. Lift up the red toggle **(1)**.
2. Operate the switch **(2)** upwards.

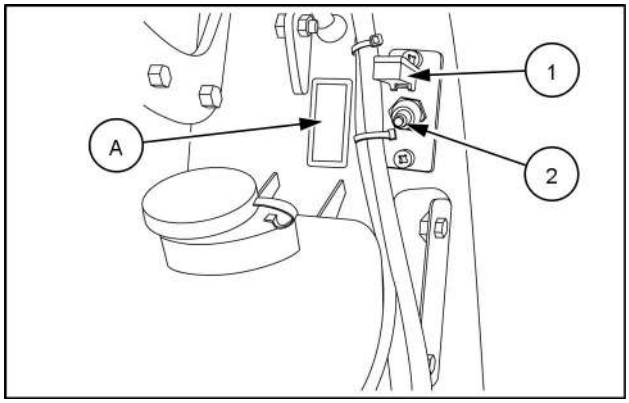

SMIL16MEX0912AA 2

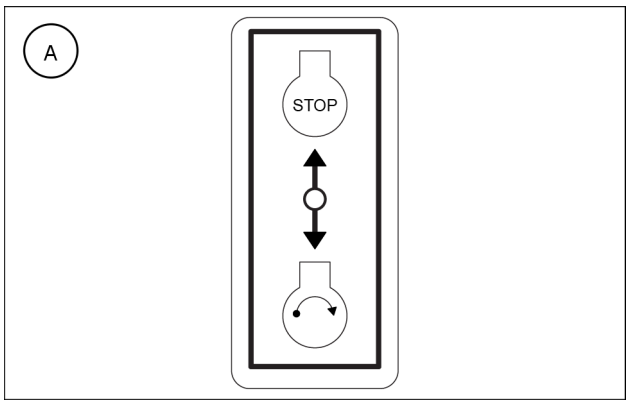

SMIL16MEX0644AA 3

https://truckmanualshub.com/

Moving the unit

Machine travel

⚠ WARNING

Controls can be reversed!
In the normal travel position, the operator's compartment is above the idler wheels and the travel reduction gears are to the rear of the upper structure. If the upper structure is turned 180 degrees in relation to the undercarriage, the controls are reversed.
Failure to comply could result in death or serious injury.

W0289A

⚠ WARNING

Hazard to bystanders!
Always sound the horn before starting the machine. Make sure the work area is clear of other persons, domestic animals, tools, etc. before you operate the machine. Never allow anyone in the work area during machine operation.
Failure to comply could result in death or serious injury.

W0304A

NOTE: *increase the engine speed before you start traveling. In order to maximize visibility, fully retract the arm and completely close the bucket.*

NOTICE: *before start traveling, make sure to fully raise the blade in order not to stick on the ground while traveling.*

NOTICE: *before start the work or when travelling up or down a slope, position and keep the angle blade (if equipped) at neutral position.*

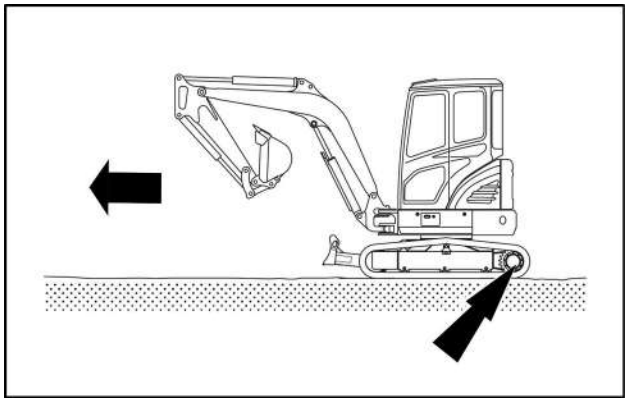

SMIL18MEX0135AA 1

Selection of travel speed

⚠ WARNING

Loss of control hazard!
Avoid pressing the travel speed button while traveling. Avoid shifting to FAST speed when traveling downhill or when loading/unloading from a trailer.
Failure to comply could result in death or serious injury.

W0390A

Before start traveling, make sure to select the proper travel mode between "Turtle" (slow) and "Rabbit" (fast).

As the travel mode is selected, the travel speed varies with the tilting angle of the travel control levers and pedals.

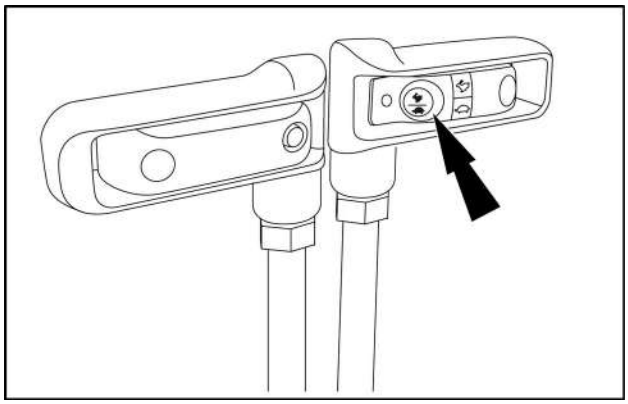

SMIL16MEX1499AA 2

Travel alarm (optional)

The travel alarm is active when the travel alarm switch is turned ON.

A buzzer sounds continuously when the machine starts traveling forward or backward.

https://truckmanualshub.com/

Straight line travel (forward travel)

Press the two pedals (or push the two levers) forward at the same time.

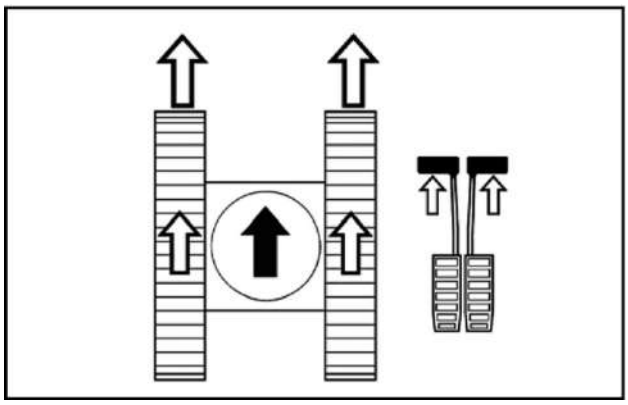

SMIL13CEX2679AB 3

Straight line travel (reverse travel)

Press the two pedals (or pull the two levers) rearwards at the same time.

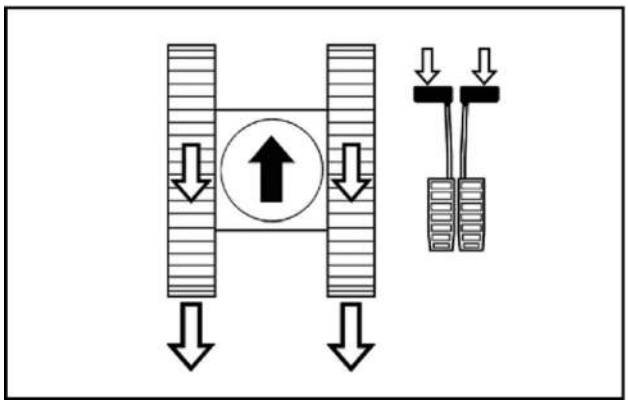

SMIL13CEX2680AB 4

Turning to the left (forward travel)

Press the right-hand pedal or push the right-hand lever forwards.

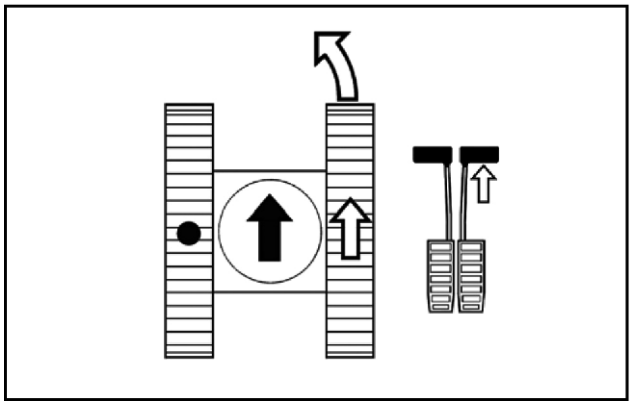

SMIL13CEX2681AB 5

Turning to the right (forward travel)

Press the left-hand pedal or push the left-hand lever forwards.

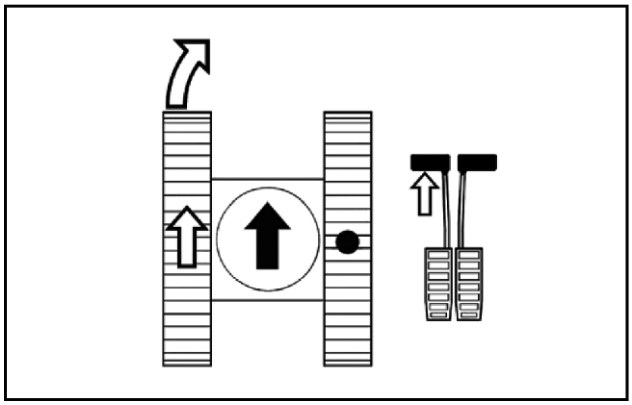

SMIL13CEX2682AB 6

https://truckmanualshub.com/

Turning to the left (reverse travel)

Press the right-hand pedal or pull the right-hand lever rearwards.

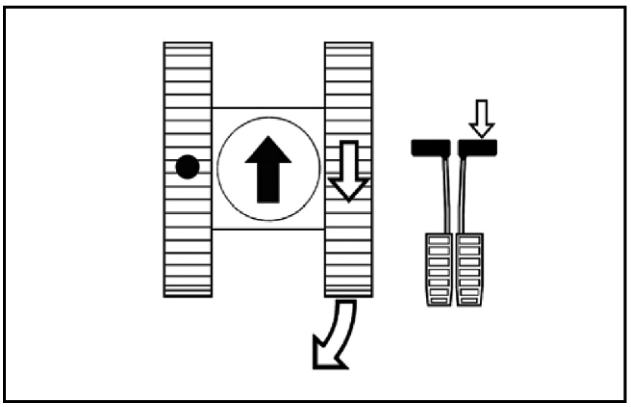

SMIL13CEX2683AB 7

Turning to the right (reverse travel)

Press the left-hand pedal or pull the left-hand lever rearwards.

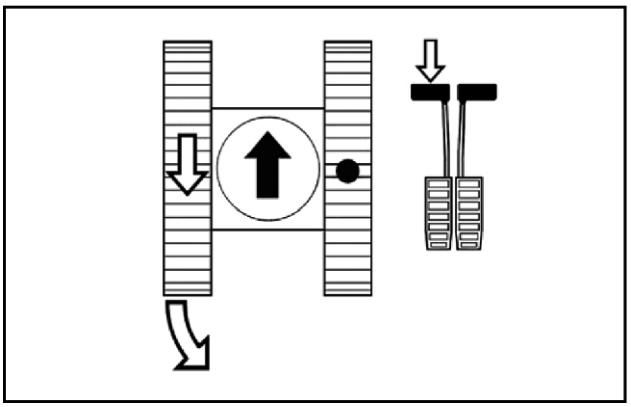

SMIL13CEX2684AB 8

Turning on the spot, to the right

Press the left-hand pedal or push the left-hand lever forwards and at the same time press the right-hand pedal or pull the right-hand lever rearwards.

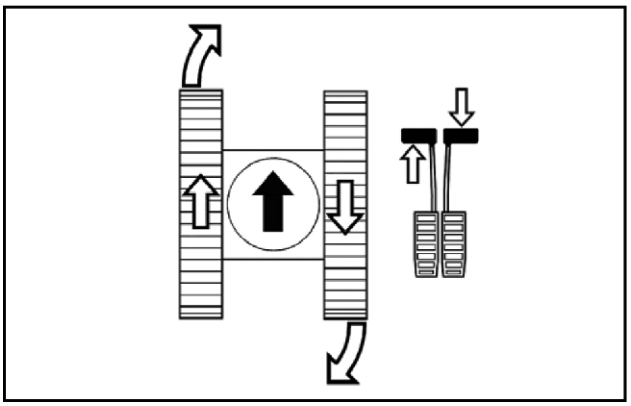

SMIL13CEX2685AB 9

Turning on the spot, to the left

Press the right-hand pedal or push the right-hand lever forwards and at the same time press the left-hand pedal or pull the left-hand lever rearwards.

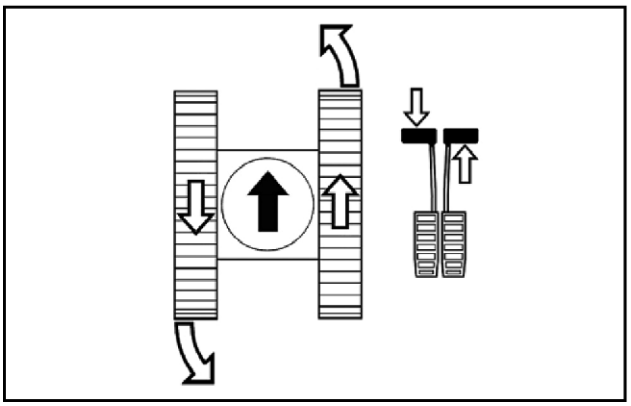

SMIL13CEX2686AB 10

https://truckmanualshub.com/

Gradual turn on the move

Press one of the pedals or push one of the levers and, at the same time, press the other pedal or push the other lever in the same direction, but slightly harder.

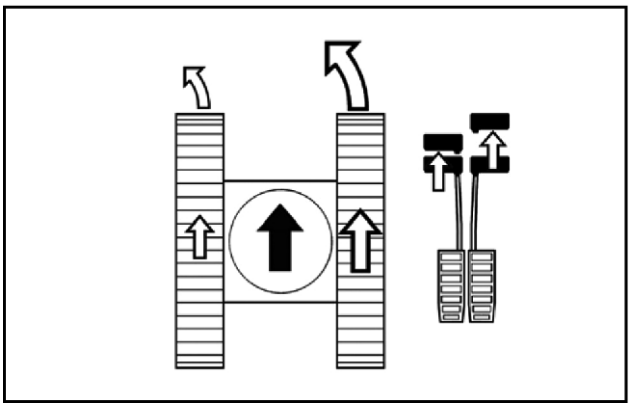

SMIL13CEX2687AB 11

Stopping travel

To come to a complete halt, release the levers or pedals and they will return to neutral.

NOTICE: *allow as much time as possible to stop the machine.*

NOTICE: *avoid abrupt stopping as much as practicable.*

NOTICE: *park or stop the machine on level solid ground in safe area.*

Cautions for traveling

1. Check the location of the travel unit before you start traveling.
2. Select ground as flat and solid as possible for traveling.
3. Bypass obstructions during travel.
4. Travel with decreased traveling speed on rough ground.
5. Encourage a large turn for changing direction and avoid abrupt pivoting turns or spinning turns as much as possible.
6. Check the route to travel in advance.
7. Prepare a person to signal the operator whenever moving the machine in a location with poor visibility.
   Pay attention to permissible weight of bridge when crossing the bridge.
8. Take necessary measures such as placing plates so as not to damage surface of paved road.
9. Slow down and loosen tension of the track shoes when traveling on place with gravels and cobbles.

https://truckmanualshub.com/

Precautions for travelling on slopes

When traveling on a sloping ground, the machine becomes unstable, unbalanced, and difficult to control. Therefore, the following operating prescriptions shall be strictly respected.

Always travel with the undercarriage oriented along the slope, never across. Never travel along a slope steeper than **20°**.

If going across a slope is needed to reach a specific work place, make sure to follow an alternative path that is made by traveling along the slope, as outlined in the pictures.

Always select the slow speed travel mode, and operate the travel controls in order not to suddenly increase or decrease the speed of the machine.

NOTICE: *never shift the travel mode to the fast speed range while traveling on slopes, as this suddenly increases the speed and makes the machine unstable and difficult to control.*

NOTICE: *when the hydraulic oil is not sufficiently warm, the machine may not be able to develop its full performance. Before traveling on a steep slope, make sure to carry out a complete preheat of the machine main systems.*

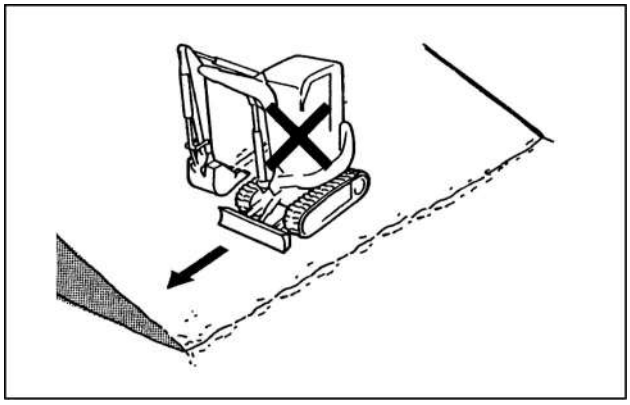

LELI11E0219AB 12

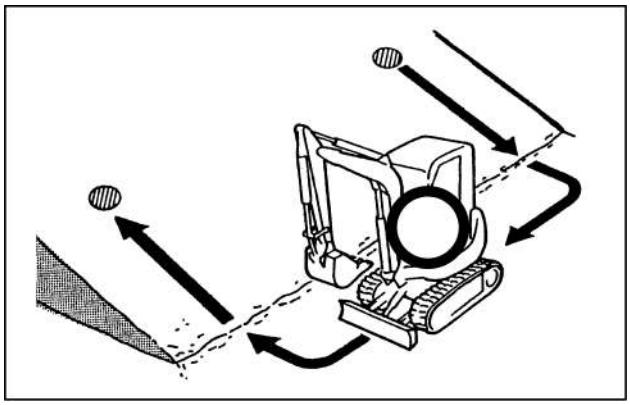

LELI11E0218AB 13

For uphill and downhill travel, approach the slope as outlined in the pictures.

The undercarriage shall be oriented along the slope, with the blade facing the direction of travel, and with the travel reduction gears on the back side.

The upper-structure shall be aligned to the undercarriage, and shall be oriented in order to grant straight visibility to the direction of travel.

The front equipment shall be aligned to the direction of travel, and shall be positioned in order to have the arm in vertical position, and the bottom side of the bucket **20 – 30 cm** (**7.9 – 11.8 in**) from the ground.

When traveling along a slope, never swing the upperstructure or the boom from the straight position. In particular during uphill travel, never attempt to swing the upper structure towards the bottom of the slope: the machine could tip over.

If the machine starts to slide or loses stability when traveling along a slope, immediately lower the bucket to the ground and release the travel controls.

Never make turns when traveling along a slope in order not to affect the balance of the machine. If changing of the travel direction is needed, make sure to reach a horizontal area in order to complete the turning movement.

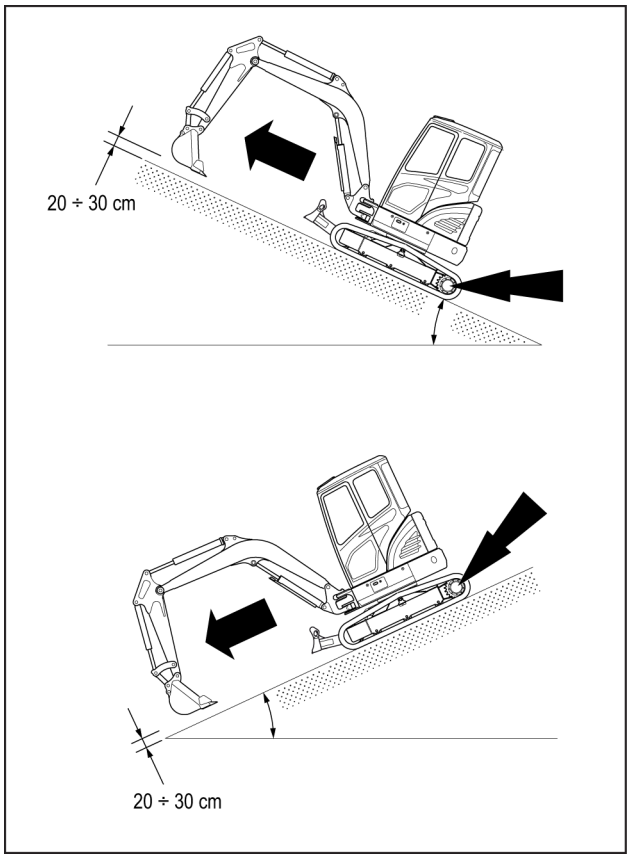

SMIL18MEX0136BB 14

https://truckmanualshub.com/

If the engine stops when traveling along a slope, immediately lower and indent the bucket **(1)** and the dozer blade **(2)** into the ground. Release all the controls, set the safety lever to the LOCK position, set the engine speed throttle to the low idle position, and then start the engine again.

If the engine does not start, remove the starter key, and place the "Do not operate" tag on the machine controls. Get off the operator's compartment, and close the cab door. Block both tracks by means of wedges **(3)**, and define a safe area of at least **3 m** (**9.8 ft**) around the machine, cleaning this area from obstacles and bystanders. Call the NEW HOLLAND CONSTRUCTION dealer for assistance.

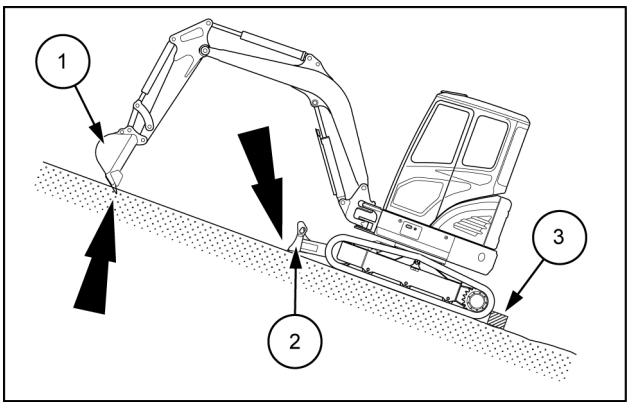

SMIL18MEX0137AB 15

https://truckmanualshub.com/

Parking the unit

Parking the machine

⚠ WARNING

Fall hazard!
Jumping on or off the machine could cause an injury. Always face the machine, use the handrails and steps, and get on or off slowly. Maintain a three-point contact to avoid falling: both hands on the handrails and one foot on the step, or one hand on the handrail and both feet on the steps.
Failure to comply could result in death or serious injury.

W0141A

- Always park the machine on a level and firm ground.
- Orient the upper structure frame parallel to the undercarriage. The front equipment shall be positioned on the same side of the blade, as indicated in the picture.
- Align the front equipment parallel to the upper structure.
- Lower the bucket to the ground.
- Lower the dozer blade to the ground.

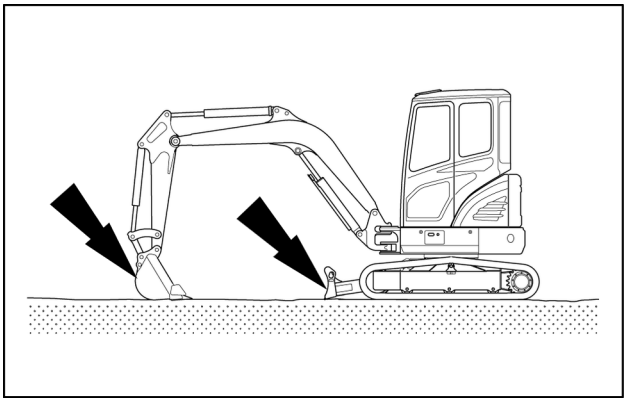

SMIL18MEX0128AA 1

- Move both travel control levers **(1)** to the neutral position.
- Set the throttle knob **(2)** to LOW IDLING.

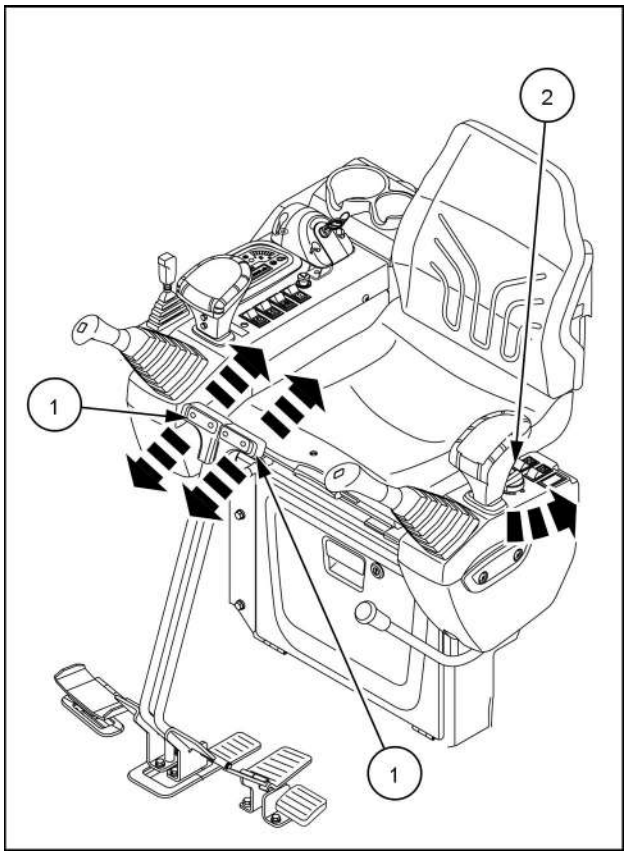

SMIL19MEX0787BA 2

https://truckmanualshub.com/

- Set the safety lever to the LOCK position **(A)**.
- Stop the engine, and remove the starter key.

  NOTICE: *do not shut off the engine when running at full speed, but let it run at low idle speed for* ***5 min*** *in order to cool it down.*
- Block both tracks by means of wedges.
- Close all windows of the cab.
- Using the starter key, lock the cab door, the engine guards, the cooler cover, and the fuel filler cover.

NOTE: *make sure that no part of the machine is interfering with any public road. Install appropriate traffic signs if any portion interferes public road.*

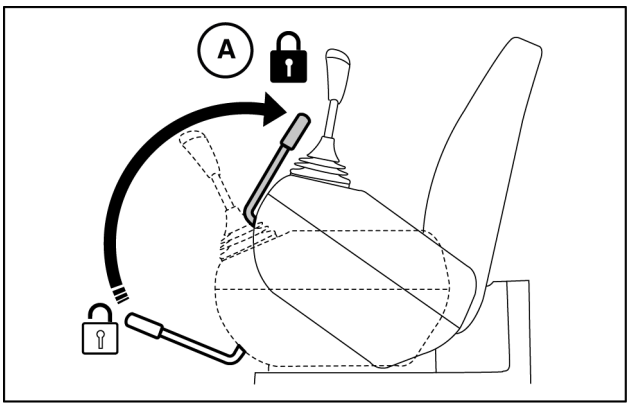

LELI11E0241AB 3

If parking on a slope is unavoidable, orient the undercarriage along the slope, and lower and indent the bucket **(1)** and the dozer blade **(2)** into the ground. Follow the parking procedure described above, and then make sure to block both tracks by means of wedges **(3)** as outlined in the picture.

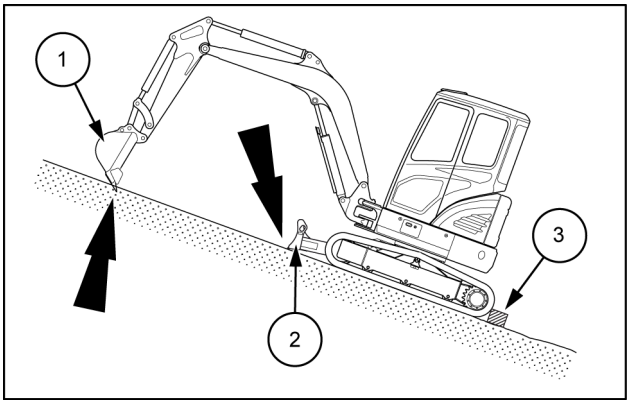

SMIL18MEX0137AB 4

If the machine is parked after an emergency stop, remove the starter key, and place the "Do not operate" tag on the machine controls. Get off the operator compartment, and close the cab door. Block both tracks by means of wedges, and define a safe area of at least **3 m** (**9.8 ft**) around the machine, cleaning this area from obstacles and bystanders. Call the NEW HOLLAND CONSTRUCTION dealer for assistance.

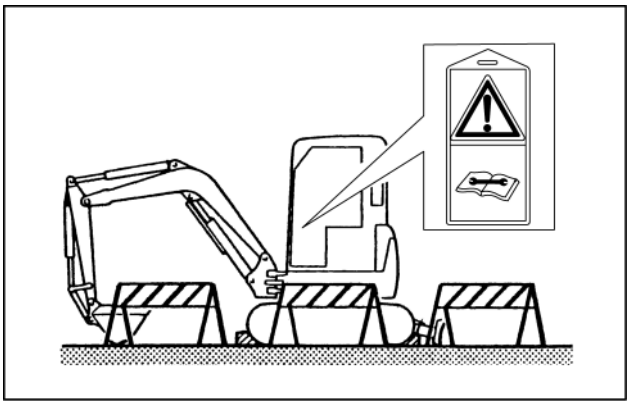

LELI11E0243AA 5

https://truckmanualshub.com/

5 - TRANSPORT OPERATIONS

Road transport

Loading the machine onto a transport trailer

⚠ WARNING

Improper operation or service of this machine can result in an accident.
Assign a supervisor to direct worksite operations. Agree on all safety measures, procedures, and suitable hand signals.
Failure to comply could result in death or serious injury.

W0287A

⚠ WARNING

Transport hazard!
The machine can slip or fall from a ramp or trailer. Make sure the ramp and trailer are not slippery. Remove all oil, grease, ice, etc. Move the machine on or off the trailer with machine centered on the trailer or ramp.
Failure to comply could result in death or serious injury.

W0152A

Make sure to check the total weight, length, width and height of the machine to be transported. Refer to Chapter 8.

Make sure to use a trailer with a rated capacity and dimensions sufficient to transport the machine. If a rear loading type trailer is used for road transport, make sure that ramps are available to climb onto the trailer bed. Use ramps which have sufficient width, length, thickness and strength. The ramp slope should be **15°** or less.

Investigate beforehand the conditions of the road to be traveled, weight and size limits, and special local traffic regulations. Obtain any permits required from proper government agencies for machine transportation.

Trailer setup

1. Position the trailer on firm and level ground.
2. Put blocks to the tires of the trailer to prevent trailer from moving.
3. If a rear loading type trailer is used for road transport, prepare the loading ramps. If the ramps are included in the trailer frame, lower them to the ground. If the ramps are external to the trailer, match them to the rear edge of the trailer avoiding any bump between trailer bed and external ramps.

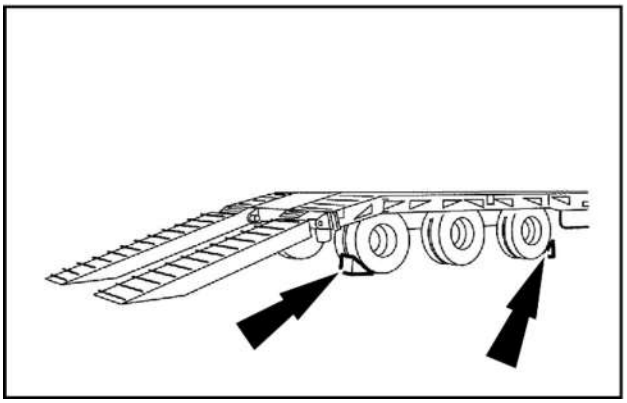

SMIL13CEX2717AB 1

Machine setup

1. Clean the machine undercarriage and tracks to prevent mud or debris from skidding during transport.
2. Select the low travel speed.
3. Lock the boom swing pedal.
4. Fully raise the dozer blade.

https://truckmanualshub.com/

Loading the machine on a rear loading type trailer

1. Align the machine to the trailer, so as the travel motors are in the rear.
2. Slowly travel on the trailer bed to reach the resting position, giving particular attention to the attachment so as not to touch the trailer bed.

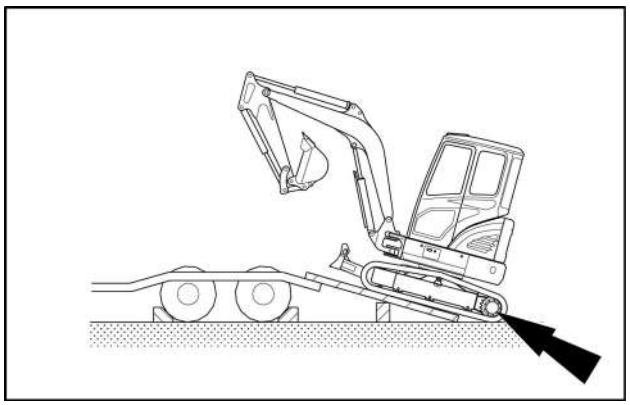

SMIL18MEX0138AA 2

3. Stop loading when the machine is located horizontally in the trailer, within the rear wheel of the trailer.

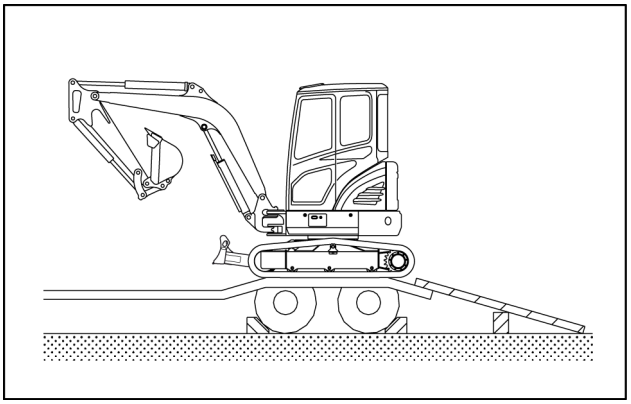

SMIL18MEX0139AA 3

4. Slowly turn the upper structure **180°**.

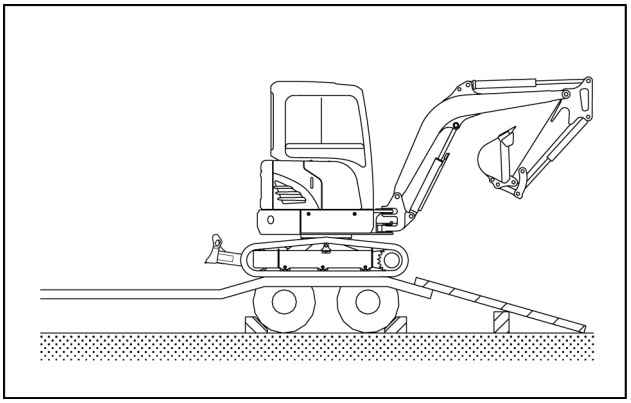

SMIL18MEX0140AA 4

5. Lower the working equipment and the dozer blade.

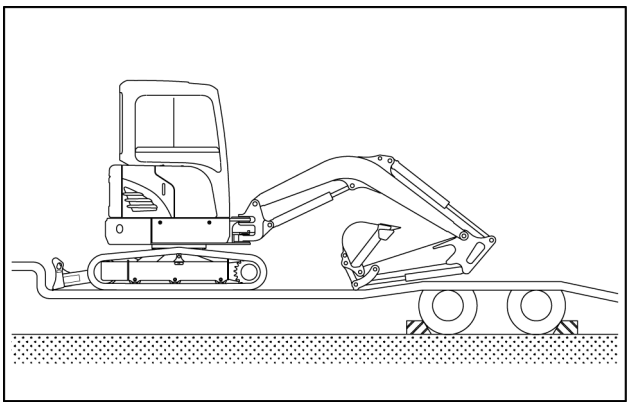

SMIL18MEX0141AA 5

https://truckmanualshub.com/

Preparing for road transport

Tie downs for shipping

1. Set the machine in the position for transport: fully retract the arm and curl the bucket slowly.
2. Lower the dozer blade.
3. Check the overall height between the ground and the highest point of the machine and check the overall width of the machine. Make sure to be within the size limits defined on the documents and permissions of the local traffic regulations.
4. Set the safety lever to rearward position (LOCK position)
5. Turn off the engine and remove the starter key.
6. Get off the machine.
7. Use the starter key to close and secure the cab door, the engine access door, the tool box, and the service door.
8. Check the condition of the tie-down points on the trailer.
9. Secure the machine onto the trailer using wire ropes **(A)** to prevent the machine from swaying (oscillation) during transport.
10. Carry out a final check of the tie-down condition.
11. If a rear loading type trailer is used for road transport, lift or remove the loading ramps.
12. Remove blocks from the tires of the trailer.

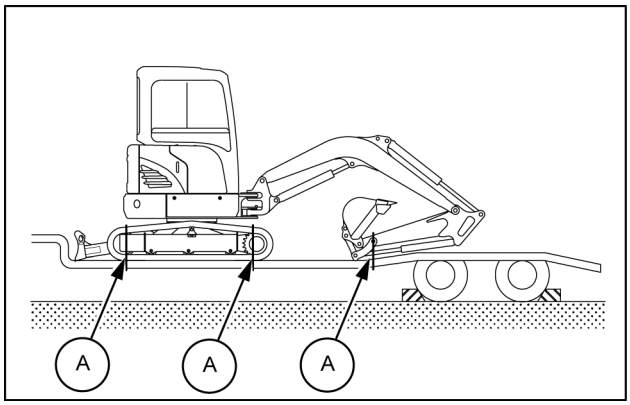

SMIL18MEX0142AB 1

https://truckmanualshub.com/

Unloading the machine from a transport trailer

Rear loading type transport trailer

1. Position the trailer on firm and level ground. Put blocks at the tires of trailer to prevent trailer from moving.
2. Remove wire ropes, chocks, blocks and other devices used to secure the machine during road transport.
3. Prepare the loading ramps. If the ramps are included in the trailer frame, lower them to the ground. If the ramps are external to the trailer, match them to the rear edge of the trailer avoiding any bump between trailer bed and external ramps.

   NOTICE: *the ramp slope should be* ***15°*** *or less.*
4. Get on the machine and start the engine.
5. Select the low travel mode.
6. Raise the dozer blade and operate the arm and bucket controls so the bottom of the bucket is about **20 cm** (**7.9 in**) above the trailer bed.

   NOTICE: *in this position, traveling and steering control become opposite to each other.*
7. Travel slowly towards the back of the trailer and stop as you reach the ramps. Operate the boom and the arm softly in order to get the bucket close to the ground ahead of the ramps.

   NOTICE: *avoid fully extending the bucket cylinder to prevent damaging it due to accidental impacts with the ground.*
8. Move down on ramps with extreme care while operating the boom and the arm softly in order to keep the bucket close to the ground and so to grant machine stability.
9. Pass through the ramps completely and stop the machine once it gets on the ground.

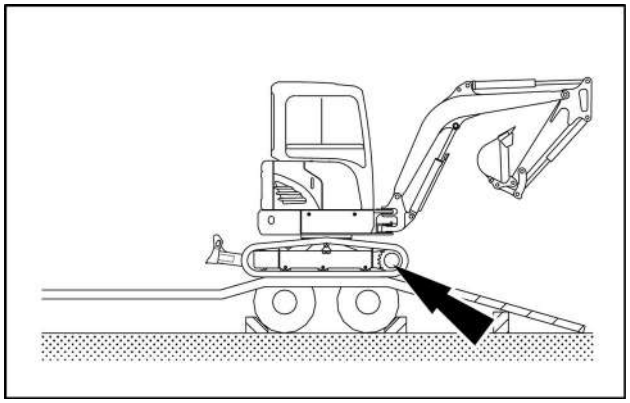

SMIL18MEX0140AA 1

https://truckmanualshub.com/

Shipping transport

Handling the machine

⚠ WARNING

Improper operation or service of this machine can result in an accident.
Assign a supervisor to direct worksite operations. Agree on all safety measures, procedures, and suitable hand signals.
Failure to comply could result in death or serious injury.

W0287A

⚠ WARNING

Crushing hazard!
The lifting systems must be operated by qualified personnel who are aware of the correct procedures to follow. Make sure all lifting equipment is in good condition, and all hooks are equipped with safety latches.
Failure to comply could result in death or serious injury.

W0256A

⚠ WARNING

Crushing hazard!
This operation may be dangerous. You are advised to wear suitable clothing and respect all relevant safety messages.
Failure to comply could result in death or serious injury.

W0283A

⚠ WARNING

Hazard to bystanders!
ALWAYS make sure the work area is clear of bystanders and domestic animals before starting this procedure. Know the full area of movement of the machine. Do not permit anyone to enter the area of movement during this procedure.
Failure to comply could result in death or serious injury.

W0245A

https://truckmanualshub.com/

1. Check the weight, length, width and height of the machine referring to the chapter 2, specification when you are going to hoist the machine.
2. Use long wire rope and stay to keep the distance with the machine as it should avoid touching with the machine.
3. Put a rubber plate contact with wire rope and machine to prevent damage.
4. Place crane on the proper place.
5. Install the wire rope and stay like the illustration.
6. The maximum angle of the front wire rope must not exceed 60 degrees and the angle of the rear wire rope 45 degrees.

   NOTE: *If there is no stay, keep the angle of the rear wire rope below 15 degrees to avoid interference with the machine.*

   NOTICE: *it is imperative to use the sling points indicated by the machine decals.*

   NOTICE: *the machine must be handled very slowly and horizontally.*

   NOTICE: *keep the wire rope lifting angle below 45°.*

(A) Wire rope

(B) Stay

(C) Boom hoisting point

(D) Dozer blade hoisting point

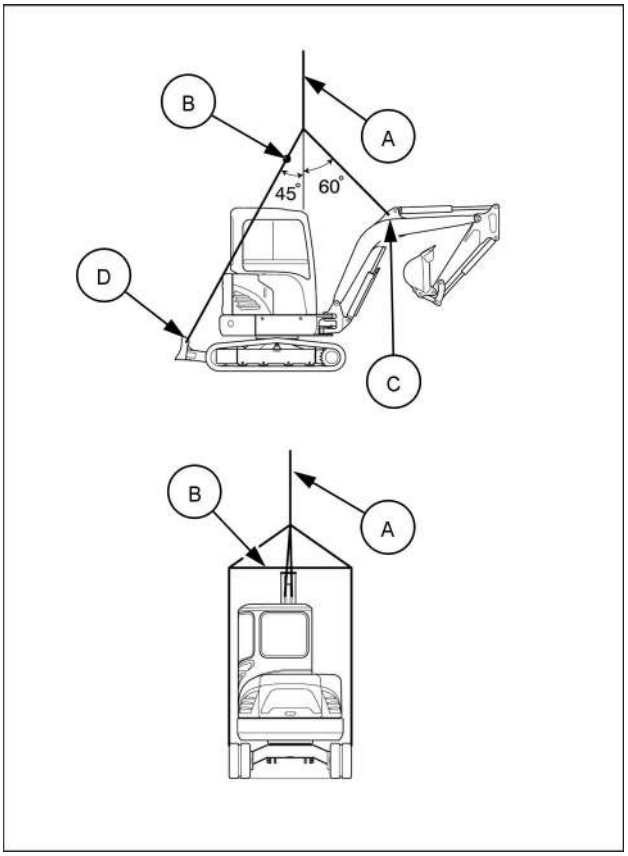

SMIL19MEX0782BA 1

https://truckmanualshub.com/

Recovery transport

Towing the machine

⚠ WARNING

Misuse hazard!
Towing is a delicate maneuver that is always carried out at the risk of the user. The manufacturer's warranty does not apply to incidents or accidents that occur during towing. Where possible, carry out the repairs at the site.
Failure to comply could result in death or serious injury.

W0286A

⚠ WARNING

Hazard to bystanders!
The operator must be the only person on the machine when towing. Make sure that nobody else is on the machine or within its working range.
Failure to comply could result in death or serious injury.

W0259A

As far as possible try to carry out repairs on spot or consult your NEW HOLLAND CONSTRUCTION Dealer.

NOTICE: *the machine must be towed very slowly, over a short distance and only if it is really unavoidable. Always tow the machine in alignment with the undercarriage.*

If the machine is stuck, it must be towed as follows:

1. Make sure that it can be towed without risk of further damage.
2. Make sure that the shackles, chains and tackle are in perfect condition and strong enough to move the load.
3. Attach the shackles, chains and tackle to the under-carriage taking care to protect any protruding angles.
4. Pull the machine without jerking, very slowly and in alignment with the undercarriage.

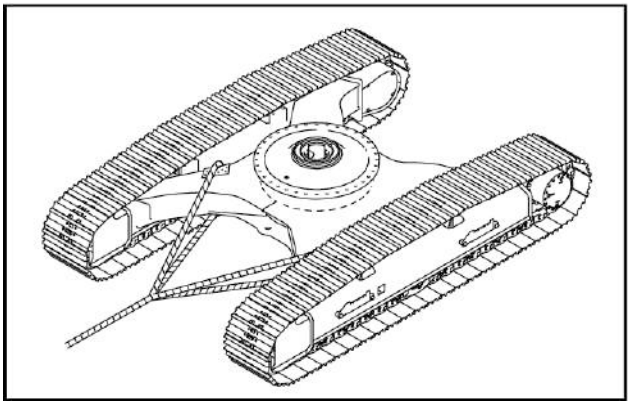

SMIL13CEX2731AA 1

https://truckmanualshub.com/

https://truckmanualshub.com/

6 - MAINTENANCE

General information

Basic instructions

⚠ WARNING

Improper operation or service of this machine can result in an accident.
If you do not understand a maintenance procedure, or doubt your ability to perform a maintenance procedure correctly, see your authorized dealer.
Failure to comply could result in death or serious injury.

W0157A

⚠ WARNING

Improper operation or service of this machine can result in an accident.
Raised equipment or machine movement without an operator can cause serious injury. Always do the following before performing any maintenance:
Park the machine on flat, level ground.
Lower the attachment to the ground.
Shut down the engine and remove the ignition key.
Lock the tracks.
Failure to comply could result in death or serious injury.

W0944D

⚠ WARNING

Falling object hazard!
Risk of injury from FALLING ENGINE HOOD. Latch the hood in the fully open position prior to working within the engine compartment.
Failure to comply could result in death or serious injury.

W1090B

NOTICE: *be sure all the service operations in this section are carried out punctually at the intervals given, in order to ensure optimum performance levels and maximum safety when using the machine.*

NOTICE: *while any company can perform necessary maintenance or repairs on your equipment, NEW HOLLAND CONSTRUCTION strongly recommends that you use only authorized NEW HOLLAND CONSTRUCTION dealers and products that meet given specifications. Improperly or incorrectly performed maintenance and repair voids the equipment warranty and may affect service intervals.*

- Respect the maintenance intervals by checking the hour meter every day. Before starting maintenance, park the machine on flat, firm ground, away from any obstacles, with the arm retracted and the bucket on the ground. Lower the dozer blade (if equipped) until it rests on the ground. Unless otherwise specified, all maintenance operations must be carried out with the engine stopped and the key removed from the starter switch. Wait for all circuits to cool down before starting work.
- Clean the grease fittings before lubrication. Clean around plugs and filler holes before adding fluid. No dust or dirt must enter the components or the circuits. Wear suitable clothing and remember to use the necessary safety equipment.
- When carrying out service work on the machine, place a "Do not operate" tag on the instrument panel. Never climb down from the operator's compartment leaving the engine running.
- Remove the necessary lower panels during maintenance of certain machine components. Make sure the lower panels are properly closed before operating the machine.

Any modification to the machine without prior authorization could cause serious injury. Do not make any modifications without authorization. Consult your NEW HOLLAND CONSTRUCTION Dealer.

NOTICE: *if you use your machine in particularly harsh conditions (dusty or corrosive atmosphere, etc.), the servicing intervals should be reduced accordingly.*

NOTICE: *take particular care to replace all filters regularly. Clean filters mean longer engine running life.*

https://truckmanualshub.com/

NOTE: *oil and fluid should not be thrown on the ground. They must be stored and removed by a company which is responsible for their recycling or their disposal.*

Hourmeter

The hourmeter enables service operations to be scheduled. Its hourly indications are the same as those of a clock when the engine is running. Servicing intervals are carefully calculated to ensure safe and efficient machine operation. Be sure to carry out all the servicing operations properly as defined in this manual.

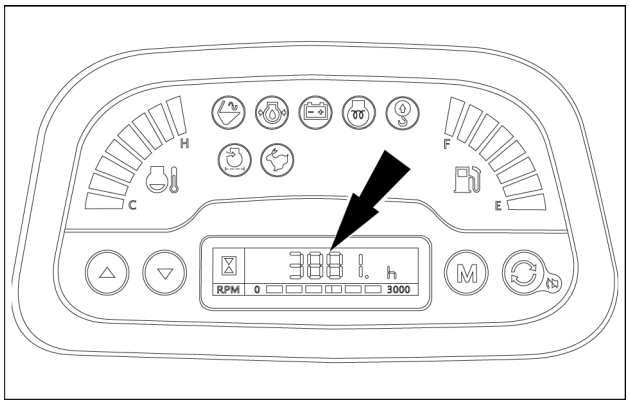

SMIL19MEX0731AA 1

Daily inspections

Every day, before starting work, it is necessary to inspect the machine and service certain of its components.

General remarks

- Check signs of leaking oil or water.
- Check that all screws and nuts are correctly tightened.
- Wipe off any dust (engine, operator's compartment etc.).
- Check for any signs of damage.

Engine

- Check the oil level and change the oil if necessary.
- Check the coolant level.
- Check the radiator for signs of clogging or deterioration.
- Check the radiator fan belt tension.
- Check the air filter is clean and not restricted.
- Check the components for signs of leaking oil or water.
- Check the condition of all lines.

Undercarriage

- Check the pad hardware.
- Check the condition of the tracks.
- Check that the upper and lower track rollers and the idler wheels are not leaking oil.

Upperstructure

- Check the fuel tank level.
- Check the hydraulic tank level.
- Check that the hydraulic oil is clean.
- Check the components for signs of leaking oil or water.
- Check the condition of all lines.
- Make sure there are no electrical short circuits.
- Check the battery connections are properly tightened.
- Adjust the rear view mirrors.

https://truckmanualshub.com/

Attachment

- Check that the cylinders are not leaking oil.
- Check the condition of all lines.
- Check the condition of the bucket teeth.

After starting the engine

- Did the engine start correctly? Are the exhaust fumes normal? Any strange noises?
- Check for abnormal noise on the hydraulic components.
- Check the components for signs of leaking oil or water.
- Check the audible alarm devices, working lights and windshield wipers.
- Check that all circuits (travel, swing and tool) are functioning correctly.

NOTICE: *if the slightest defect is found, repair it immediately before using the machine or consult your NEW HOLLAND CONSTRUCTION Dealer.*

General specifications - Biodiesel fuels

Biodiesel usage in NEW HOLLAND CONSTRUCTION products

Introduction to Fatty Acid Methyl Ester (FAME) biodiesel

FAME biodiesel, called biodiesel fuel in the following section, consists of a family of fuels derived from vegetable oils treated with methyl esters.

There are two main biodiesel fuel types: Rapeseed Methyl Ester (RME) and Soybean Methyl Ester (SME). RME is a blend of rapeseed and sunflower methyl ester, and is the preferred crop in Europe. SME is the preferred crop in the United States.

Biodiesel fuel is a renewable alternative fuel source. Its use and development is promoted worldwide, especially in Europe and in the United States.

NOTICE: *Your emissions control system is compatible with up to **7%** biodiesel fuel (B7). Be aware that the use of biodiesel fuel that does not comply with the standards mentioned in this section could lead to severe damage to the engine, fuel system or after treatment system of your machine. The use of non-approved fuels may void NEW HOLLAND CONSTRUCTION Warranty coverage.*

Biodiesel fuel can be used to run diesel engines as pure biodiesel fuel or when blended with standard diesel fuel:

- B7 : indicates the blend of **7%** biodiesel and **93%** diesel fuels.

NOTICE: *Never use biodiesel blends higher than B7.*

Biodiesel fuel has several positive features in comparison with diesel fuel:

- Biodiesel fuel adds lubricity to the fuel, which is beneficial in many circumstances, particularly as sulfur and aromatics are removed from the fuel.
- Biodiesel has a greater cetane number and burns cleaner.
- Biodiesel produces less particulate matter and reduces smoke emissions.
- Biodiesel is fully biodegradable and non-toxic.

Diesel and biodiesel fuel specifications

TIER IV FINAL AND STAGE V diesel fuel specifications are covered by the following:

- **ASTM D975**, Standard Specification for Diesel Fuel Oils. (15 ppm sulfur maximum.)

Biodiesel blends are covered by:

- United States Diesel Fuel Specification **ASTM D975** allows up to **7%** biodiesel since 2009. United States fuel suppliers are allowed to use up to **7%** biodiesel fuel (B7) to supply the network.
- United States Biodiesel Fuel Specification **ASTM D7467** provides specifications for biodiesel blends from B6 to B20.

Pure biodiesel (B100) specification is covered by the following requirements:

- **ASTM D6751** - Standard specification for biodiesel fuel blend stock (B100) for middle distillate fuels.

Before raw oil can be converted into usable biodiesel fuel, it must undergo transesterification to remove glycerides. During the transesterification process, the oil reacts with an alcohol to separate the glycerine from the fat or vegetable oil. This process leaves behind two products: methyl ester (the chemical name for biodiesel) and glycerine (a byproduct usually sold for use in soaps or other products).

NOTICE: *Biodiesel fuels approved for use in the NEW HOLLAND CONSTRUCTION equipment must be transesterified and comply with the North America Standard **ASTM D6751**.*

NOTICE: *Cold Pressed Biodiesel, Cold Pressed Oil, Straight Vegetable Oil (SVO), or more generally unrefined vegetable oils used as motor fuel, are fuels that are normally made from Rapeseed oil or similar high oil content crops. These kinds of fuel are not transesterified, so they do not fulfil the **ASTM D6751** requirements. There is no recognized quality standard available for these types of fuel. Therefore the use of Cold Pressed Biodiesel, Cold Pressed Oil, Straight Vegetable Oil (SVO), or more generally unrefined vegetable oils used as motor fuel are NOT APPROVED at any blend in any NEW HOLLAND CONSTRUCTION product.*

NOTICE: *Any engine and fuel injection equipment fitted to a NEW HOLLAND CONSTRUCTION vehicle found to have run with any blend of NON-APPROVED fuel (fuel not fulfilling the specification described in the requirement **ASTM D6751**) will no longer be covered for Warranty by NEW HOLLAND CONSTRUCTION.*

Biodiesel fuel usage conditions

You must stringently follow the biodiesel fuel usage conditions. Incorrect application of the biodiesel fuel usage conditions could lead to severe damage to the engine, fuel injection equipment and aftertreatment system.

The main concerns related to operation with biodiesel fuels are:

- Filters and injector blockage caused by poor fuel quality.
- Wear and corrosion of internal components due to water content, which affects lubricity.
- Deterioration of some rubber sealing compounds in the fuel system.

https://truckmanualshub.com/

- Biodiesel oxidation, which can lead to the formation of deposits that can harm the fuel injection system.

NOTICE: *Any problem in the engine fuel injection equipment associated with non-compliance to the following conditions for biodiesel fuel handling and maintenance will not be covered for Warranty by NEW HOLLAND CONSTRUCTION.*

Purchase biodiesel fuel from a trusted supplier who understands the product and maintains acceptable fuel quality. It is highly recommended that you use biodiesel from BQ 9000 accredited suppliers to maintain the quality and consistency of the fuel. The BQ 9000 Quality Management Program is accredited by the National Biodiesel Board for producers and marketers of biodiesel fuel. See the National Biodiesel Board website at www.biodiesel.org for more information.

Storage

The machine should not be stored for long periods without changing the diesel fuel in the fuel system.

NOTICE: *Biodiesel is highly hygroscopic and tends to collect water more than diesel fuel. This increases the risk of algae and bacteria growth which can cause severe damage to the fuel injection system. Keep the machine fuel tanks and on-site storage tanks as full as possible to limit the amount of air and water vapors inside the tank. Drain water from the tanks at least once a week.*

If the machine should be stored for long periods, make sure to replace the diesel fuel every three months at most.

Fluids and lubricants

System	Quantity	Fluid	NEW HOLLAND CONSTRUCTION specification	Reference specification
Fuel tank	**40 L** (**10.6 US gal**)	—	—	**ASTM D975** **EN 590**
Engine oil	**6.7 L** (**1.8 US gal**)	**ENGINE OIL 15W-40** Temperate climates (****)	**MAT3622**	**SAE 15W-40** **API CK-4**
		ENGINE OIL 10W-30 Cold climates (***)	**MAT3622**	**SAE 10W-30** **API CK-4**
Travel reduction unit	**0.5 L** (**0.13 US gal**) x2	**HYPOID GEAR OIL EXTREME PRESSURE 80W-90**	**MAT3516-A**	**SAE 80W90** **API GL-5**
Engine coolant	**5 L** (**1.3 US gal**)	**OAT EXTENDED LIFE COOLANT/ANTIFREEZE** CONCENTRATE (**)	**MAT3724**	**ASTM D6210** TYPE I-FF
		OAT EXTENDED LIFE COOLANT/ANTIFREEZE 50/50 PREMIXED	**MAT3724**	**ASTM D6210** TYPE III-FF
Hydraulic oil tank (*)	**37 L** (**9.8 US gal**)	**PREMIUM HYDRAULIC OIL HV46 MULTI-GRADE ANTIWEAR**	MAT3530-B	ISO 6743-4 L-HV 46
		BIODEGRADABLE OIL ISO VG 46 (*****)	—	ISO 6743-4 L-HEES 46
Grease (Attachment)	—	**MULTI-PURPOSE MOLY GREASE EXTREME PRESSURE AND ANTI-WEAR NGLI-2**	MAT3555-C	**NLGI 2**
Grease (Swing bearing)	—	**MULTI-PURPOSE GREASE EXTREME PRESSURE AND ANTI-WEAR NLGI 2**	MAT3555-A	**NLGI 2**

(*) The total capacity of the hydraulic system is **75 L** (**19.8 US gal**).

(**) Concentrate antifreeze to be mixed 50/50 with distilled (deionized) water.

(***) Cold climates - Temperature operating range: **-25 – +25 °C** (**-13 – +77 °F**)

(****) Temperate climates - Temperature operating range: **-15 – +40 °C** (**+5 – +104 °F**)

(*****) For NEW HOLLAND CONSTRUCTION genuine lubricating oil please contact NEW HOLLAND CONSTRUCTION dealers.

NOTICE: *when operating the machine in ambient temperatures outside the above mentioned range, consult your NEW HOLLAND CONSTRUCTION dealer for specific machine provision and for specific fluids and lubricants to be used.*

NOTICE: *using any lubricating oils other than NEW HOLLAND CONSTRUCTION genuine products may lead to a deterioration of performance and cause damage to major components.*

NOTICE: *do not mix NEW HOLLAND CONSTRUCTION genuine oil with any other lubricating oil as it may result in demage to the systems of major components.*

NOTICE: *if the machine was bought filled with mineral hydraulic oil and you want to change to biodegradable hydraulic oil, this operation must be carried out by the Dealer personnel. In fact, it is necessary to thoroughly drain mineral oil and flush the entire hydraulic system. Remember that mineral hydraulic oil must not be mixed with biodegradable hydraulic oil.*

https://truckmanualshub.com/

Engine coolant

NEW HOLLAND CONSTRUCTION requires the use of a fully formulated Organic Acid Technology (OAT) based coolant. **OAT EXTENDED LIFE COOLANT/ANTIFREEZE** is the reference genuine product.

NOTICE: *use of different coolant brands is not recommended.*

NOTICE: *never add Supplemental Coolant Additives (SCA) when using* ***OAT EXTENDED LIFE COOLANT/ANTIFREEZE****.*

NOTICE: *never mix* ***OAT EXTENDED LIFE COOLANT/ANTIFREEZE*** *coolant with conventional coolant. Mixing OAT based coolant with conventional coolant will reduce the effectiveness of OAT coolant.*

NOTICE: *if only conventional coolant is available, a complete changeover of the fluid into the cooling system shall be carried out.*

the engine cooling system shall always be refilled with coolant solution made by mixture of antifreeze and distilled (deionized) water.

NOTICE: *never refill the cooling system with only antifreeze. Never refill the cooling system with only water.*

Using **OAT EXTENDED LIFE COOLANT/ANTIFREEZE**, a 50/50 mixture of antifreeze and distilled (deionized) water grants proper performance of the engine cooling system in the above mentioned operating temperature range of the machine.

OAT EXTENDED LIFE COOLANT/ANTIFREEZE is available as:

- 50/50 PREMIXED coolant solution ready for usage.
- CONCENTRATE antifreeze to be mixed 50/50 with distilled (deionized) water.

NOTICE: *if operating in extreme winter climate, a coolant solution made by 60/40 antifreeze/distilled (deionized) water mixture shall be used in order to grant proper performance of the engine cooling system.*

NOTICE: *never use coolant solution with more than* ***60%*** *of antifreeze. This affects the cooling capacity of the mixture.*

When the coolant solution is prepared starting from the CONCENTRATE product, the antifreeze concentration in the mixture of antifreeze and distilled (deionized) water can be determined with a refractometer designed to measure ethylene glycol content.

If distilled (deionized) water is not available, use water for dilution with the following properties:

Property	Maximum limit
Total Solids	**340 ppm**
Total Hardness	**340 ppm**
Chloride (Cl)	**340 ppm**
Sulfate (SO4)	**100 ppm**
Acidity pH	5.5 to 9.0

NOTICE: *never use hard water, sea water and softened sea water that has been conditioned with salt. The minerals and salts present in potable water can cause corrosion and deposits resulting in shortened engine life.*

https://truckmanualshub.com/

Fuel

For Europe only: use only Ultra-Low Sulfur Diesel (S10) that meets **EN 590** specifications.

For North America only: use only No. 2-D Ultra-Low Sulfur Diesel (S15) that meets **ASTM D975** specifications.

Using other types of fuel may lead to stalled engine output or deterioration in fuel economy.

NOTICE: *the warranty shall be invalid if any serious defect is caused by usage of any other fuel. Using fuel other than recommended may cause damage to the fuel injection pump, injector, and other fuel supply system or the engine. NEW HOLLAND CONSTRUCTION may not be responsible to any of such damages.*

If the temperature drops below the fuel cloud point, output deficiency or engine start problems may occur due to wax crystals.

For North America only: during cold weather, lower than **-7 °C** (**19.4 °F**), it is temporarily acceptable to use a mixture of No. 1-D (S15) and No. 2-D (S15).

NOTICE: *if operating in severe winter climate, consult the fuel supplier or the NEW HOLLAND CONSTRUCTION dealer for specific diesel fuel to be used.*

The diesel fuel to be used on the machine shall:

- be free from dust particles, even minute ones.
- have the proper viscosity.
- have a high cetane number.
- present great fluidity at low temperatures.
- have low sulfur content.
- have very little residual carbon.

NOTICE: *never use a mix of diesel fuel and old engine oil. The fuel injection system and the exhaust after treatment system will be severely damaged.*

NOTICE: *consult the fuel supplier or the NEW HOLLAND CONSTRUCTION dealer regarding appropriate use of fuel additives.*

NOTICE: *in order to prevent condensation during cold weather, fill the fuel tank to full after completing the day's work.*

Fuel storage:

Long storage can lead to the accumulation of impurities and condensation in the fuel. Engine trouble can often be traced to the presence of water in the fuel. The storage tank must be placed outside and the temperature of the fuel should be kept as low as possible. Drain off water and impurities regularly.

https://truckmanualshub.com/

Disposal of fluids, lubricants, and spare parts

Fluids, lubricants and spare parts used on the machine are not fully compatible with the environment. Make sure to carry out all maintenance operations using appropriate tools, in order to avoid any risk of damaging the environment.

NOTE: *for example, make sure that the receptacle for collecting oil to be replaced is not leaking.*

Never spread fluids or lubricants on the ground or into water. Consult the NEW HOLLAND CONSTRUCTION dealer or the Local Environmental Agency in order to obtain information on the correct method of disposing fluids and lubricants used on the machine.

Never throw away spare parts as filters or batteries. Consult the NEW HOLLAND CONSTRUCTION dealer or the Local Environmental Agency in order to obtain information on the correct method of disposing filters, batteries or other spare parts used on the machine.

https://truckmanualshub.com/

Releasing pressure in the hydraulic system

⚠ WARNING

Pressurized system!
System is still under pressure. Release pressure according to instructions in this manual.
Failure to comply could result in death or serious injury.

W1044A

1. Place the machine on a flat and level ground. Lower the attachment to the ground and stop the engine.
2. Switch the starter key to the ON position.
3. Put the safety lever in UNLOCK position (forward position).

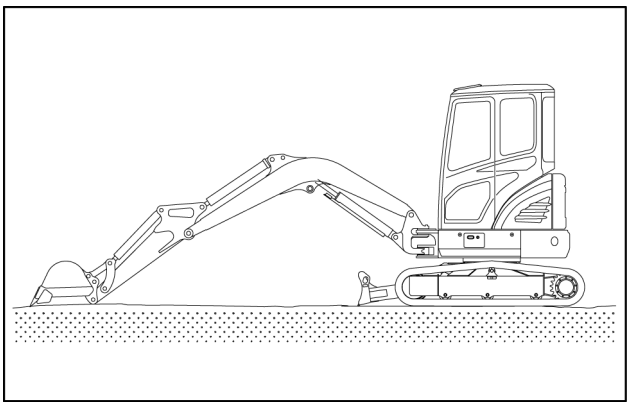

SMIL18MEX0143AA 1

4. Operate the control levers from right–hand to left-hand and front to rear a dozen times approximately.

   NOTE: *this procedure does not completely release the pressure, so when operate on the hydraulic system, loosen the connections slowly and do not stand in the direction where the oil drains out.*

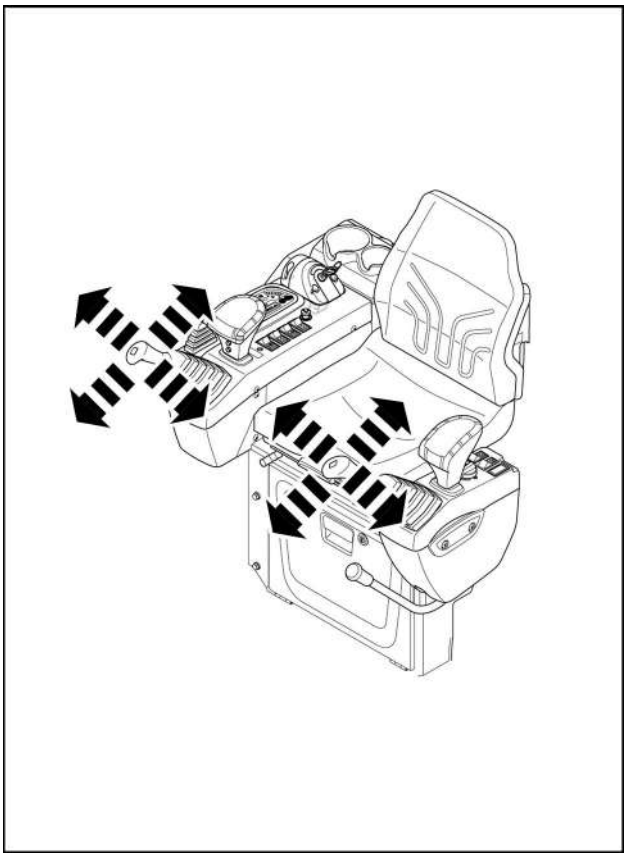

SMIL19MEX0757BA 2

https://truckmanualshub.com/

5. Operate the dozer blade control lever a dozen times approximately.

   NOTE: *this procedure does not completely release the pressure, so when operate on the hydraulic system, loosen the connections slowly and do not stand in the direction where the oil drains out.*

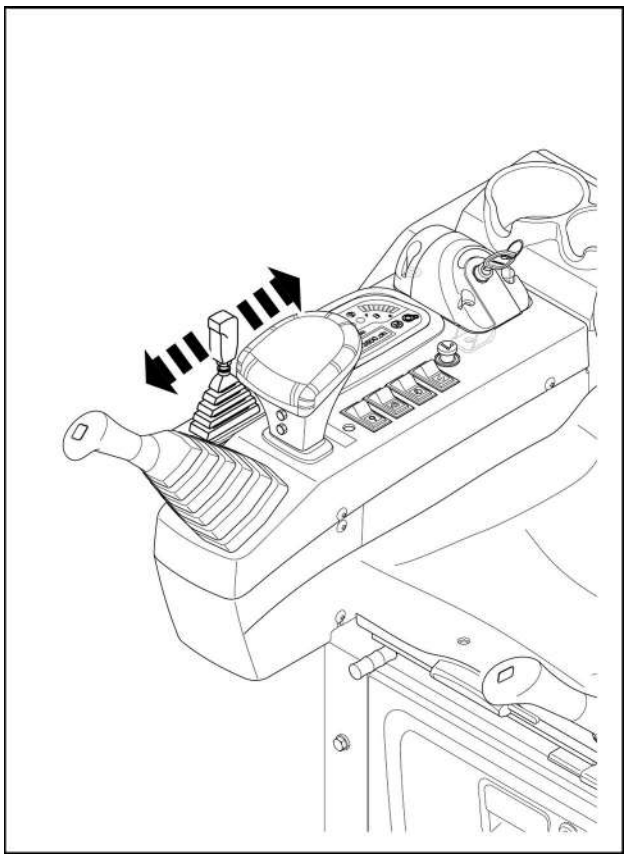

SMIL19MEX0783BA 3

6. Operate the travel levers from front to rear a dozen times approximately.

   NOTE: *this procedure does not completely release the pressure, so when working on the hydraulic system, loosen the connections slowly and do not stand in the direction where the oil drains out.*

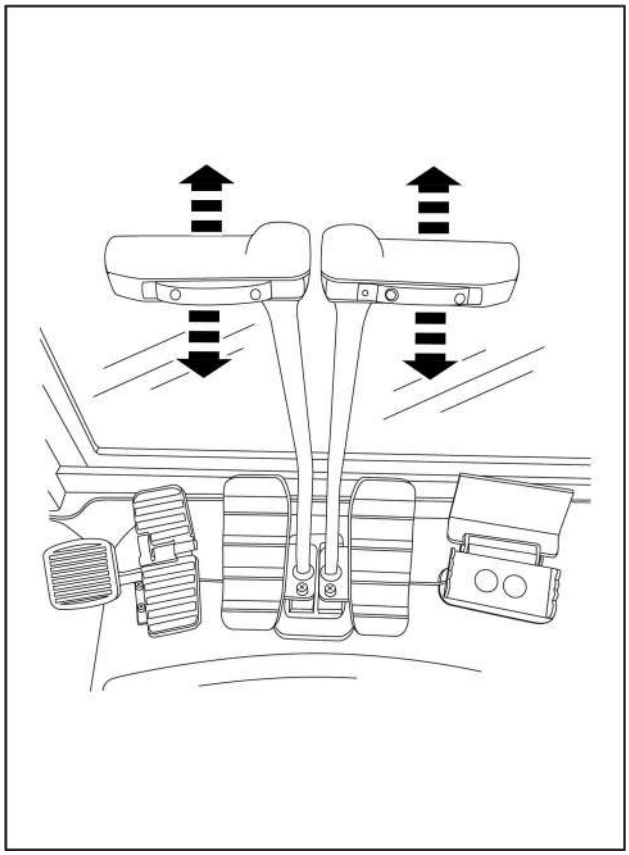

SMIL19MEX0775BA 4

https://truckmanualshub.com/

Auxiliary hydraulic circuits – pressure release

First and second auxiliary hydraulic circuits are high pressure hydraulic systems. Always release the pressure before connecting or disconnecting the hydraulic hoses between the machine and the attachment.

1. Place the machine on a flat and level ground. Lower the attachment to the ground and stop the engine.
2. Switch the starter key to the ON position.
3. Put the safety lever in UNLOCK position (forward position).

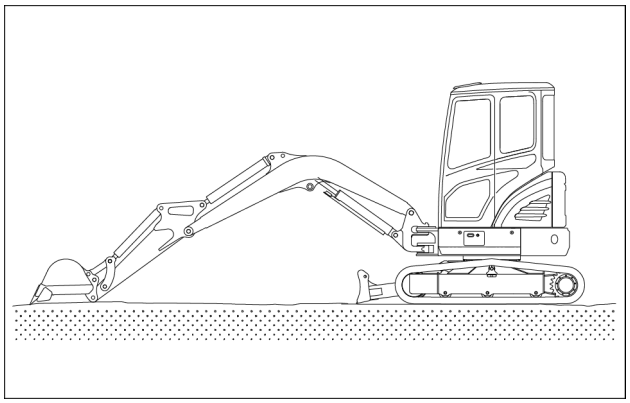

SMIL16MEX0376AA 5

For the first auxiliary circuit proceed as follow:

4. If the machine is equipped with the auxiliary pedal, push it forward and rearward three times approximately to release the pressure.

   NOTE: *this procedure does not completely release the pressure, so when operate on the hydraulic system, loosen the connections slowly and do not stand in the direction where the oil drains out.*

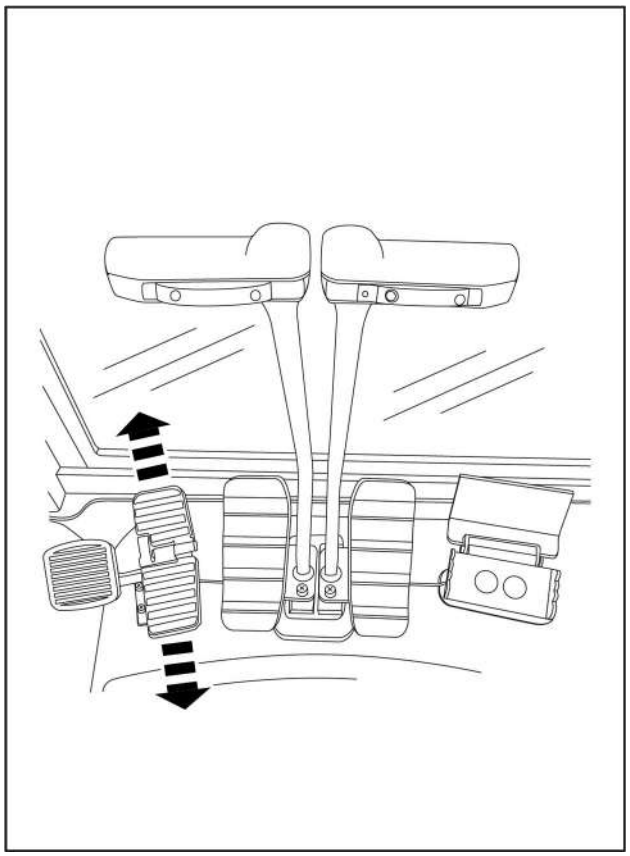

SMIL19MEX0775BA 6

https://truckmanualshub.com/

5. Otherwise, if the machine is equipped with the proportional switch on the right-hand control lever, slide it to left-hand and right-hand three times approximately to release the pressure.

   NOTE: *this procedure does not completely release the pressure, so when operate on the hydraulic system, loosen the connections slowly and do not stand in the direction where the oil drains out.*

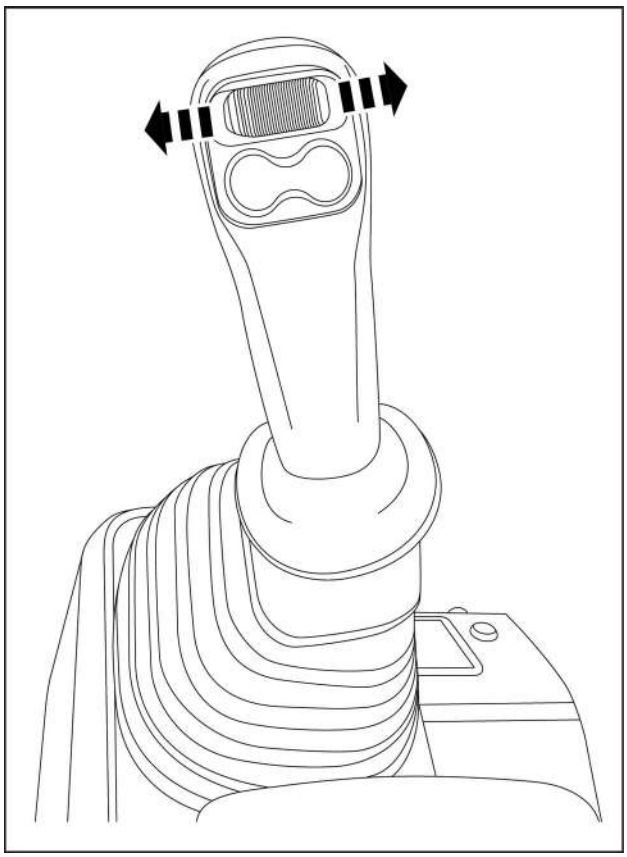

SMIL19MEX0128BA 7

For the second auxiliary circuit proceed as follow:

6. If the machine is equipped with the left proportional switch, slide it to left-hand and right-hand three times approximately to release the pressure.

   NOTE: *this procedure does not completely release the pressure, so when operate on the hydraulic system, loosen the connections slowly and do not stand in the direction where the oil drains out.*

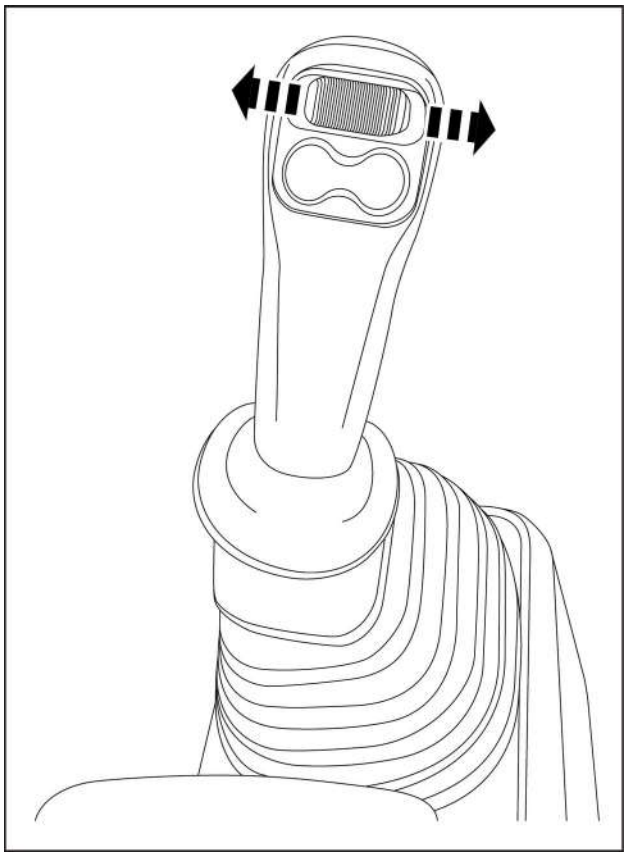

SMIL19MEX0129BA 8

https://truckmanualshub.com/

7. If the machine is equipped with the angle blade control lever operate the lever from front to rear a dozen times approximately and move the slider to left-hand and right-hand three times approximately to release the pressure.

   NOTE: *this procedure does not completely release the pressure, so when operate on the hydraulic system, loosen the connections slowly and do not stand in the direction where the oil drains out.*

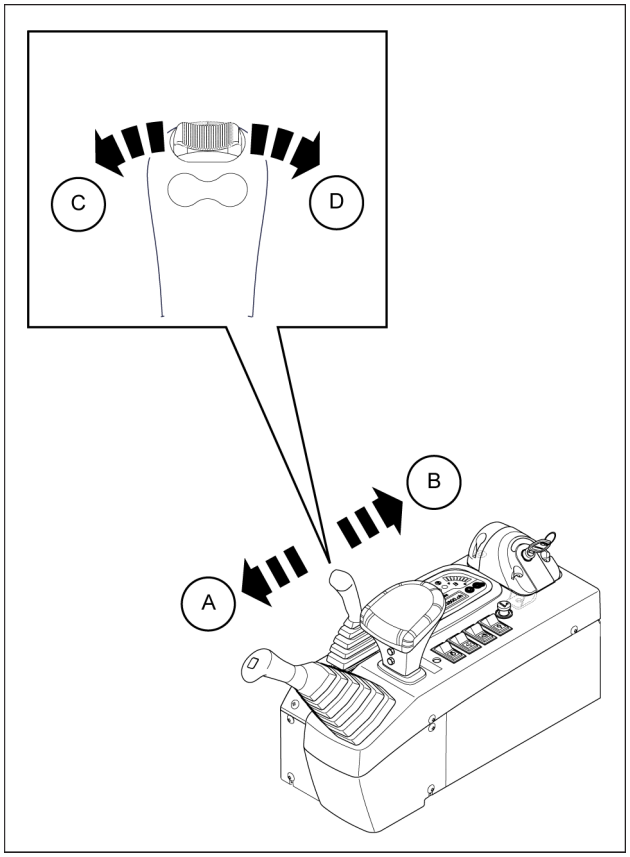

SMIL19MEX0455BB 9

https://truckmanualshub.com/

Fuel system bleeding

In the following cases, drainage from the fuel system is required:

- The tank has become empty completely.
- The fuel filter is replaced.
- The components of the fuel system are removed for service or repair.
- The machine has been stored for longer than one month.

1. Locate the water separator **(1)** and the fuel filter **(2)** inside the engine compartment.
2. Fill the fuel tank with suitable fuel.

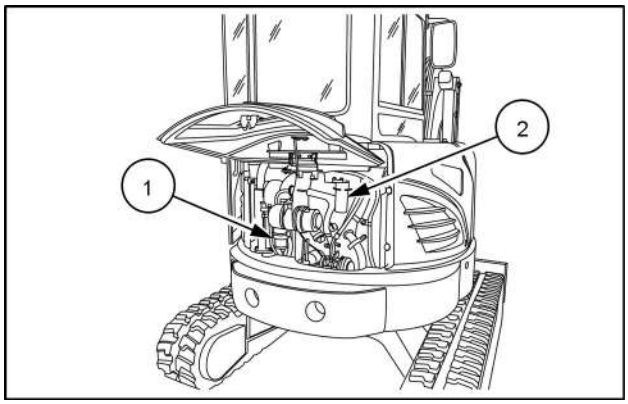

SMIL16MEX1437AA 1

3. Open the vavle **(3)** located on the water separator **(1)**.
4. Loosen the air vent plug **(4)** located on the water separator **(1)**.

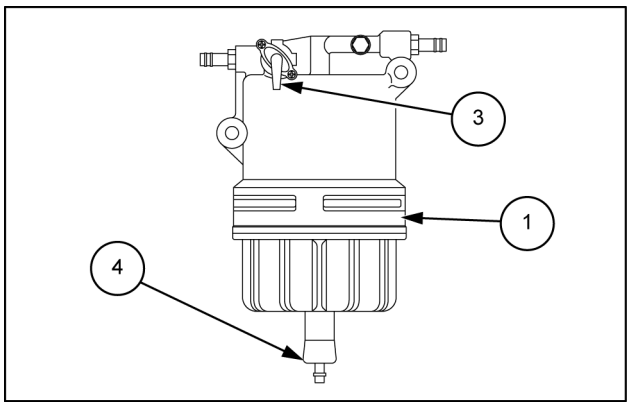

SMIL16MEX3172AB 2

5. Loosen the air vent plug **(5)** located on the fuel filter **(2)**.
6. Tighten the air vent plugs **(4)** and **(5)** when bubbles do not come up any more.
7. Open the air vent cock located on top of the fuel injection pump **(6)**.
8. Turn the starter switch to ON position and hold it in the position for **10 – 15 s** to operate the fuel injection pump **(6)**.
9. Turn the starter switch to OFF position.
10. Close the air vent cock located on top of the fuel injection pump **(6)**.
11. Close the air vent cock **(1)** located on the water separator **(2)** after air bleeding.

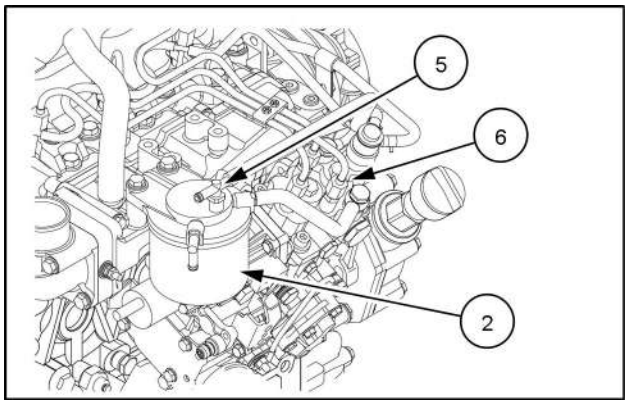

SMIL16MEX1473BA 3

NOTICE: *always keep the air vent cock located on the fuel injection pump* ***(6)*** *closed except during fuel system bleeding, or it may cause the engine stop.*

https://truckmanualshub.com/

Protecting the electronic and electrical systems during battery charging or welding

⚠ DANGER

Improper operation or service of this machine can result in an accident.
Any unauthorized modifications made to this machine can have serious consequences. Consult an authorized dealer on changes, additions, or modifications that may be required for this machine. Do not make any unauthorized modifications.
Failure to comply will result in death or serious injury.

D0030A

⚠ WARNING

Battery acid causes burns. Batteries contain sulfuric acid.
Avoid contact with skin, eyes or clothing. Antidote (external): Flush with water. Antidote (eyes): flush with water for 15 minutes and seek medical attention immediately. Antidote (internal): Drink large quantities of water or milk. Do not induce vomiting. Seek medical attention immediately.
Failure to comply could result in death or serious injury.

W0111A

Whenever carrying out a welding operation on the undercarriage or upper-structure carriage as authorized by NEW HOLLAND CONSTRUCTION and in accordance with their instructions, disconnect the batteries, disconnect the alternator B+, D+ terminal wires, and the instrument cluster connector and connect the welding apparatus ground cable to the component on which the welding operation is to be performed. Never connect the welding apparatus to the undercarriage when welding on the upper-structure (or vice-versa). Never connect the welding apparatus ground to a component of the hydraulic system.

To avoid damage to the electronic/electrical systems, always observe the following:

- Never make or break any of the charging circuit connections, including the battery connections, when the engine is running.
- Never short any of the charging components to ground.
- Make sure to set the battery disconnect switch to O position (OFF position) in advance or cut-off the connection of the ground cable when executing arc welding to the machine.
- Always disconnect the negative cable from the battery when charging the battery in the machine with a battery charger.

NOTICE: *position the welder ground clamp as close to the welding area as possible. If welding in close proximity to a computer module, then the module should be removed from the machine. Never allow welding cables to lay on, near or across any electrical wiring or electronic component while welding is in progress.*

NOTICE: *if welding must be performed on the unit, either the machine, the battery ground cable must be disconnected from the machine battery. The electronic monitoring system and charging system will be damaged if this is not done.*

Maintenance planning

Maintenance chart

Maintenance action	Check	Change fluid	Replace	Grease	Charging	Cleaning	Adjust	Drain fluid	Page no.
Break-in period									
Tightening torques	x								**6-19**
Engine oil and filter		x							**6-19**
Fuel filter			x						**6-19**
Hydraulic oil return filter			x						**6-19**
Pilot line filter			x						**6-19**
Travel reduction gears		x							**6-19**
Boom swing cylinder				x					**6-20**
Grease points (Bucket)				x					**6-20**
Grease points (Boom and arm)				x					**6-20**
Grease points (Blade)				x					**6-20**
Every 10 hours									
Engine oil level	x								**6-21**
Engine coolant level	x								**6-22**
Hydraulic oil level	x								**6-23**
Fuel filter water separator					x				**6-24**
Fan and alternator drive belt						x			**6-25**
Air-conditioning compressor drive belt						x			**6-27**
Every 50 hours									
Grease points (Bucket)				x					**6-28**
Grease points (Blade)				x					**6-29**
Swing ring gear				x					**6-31**
Track tension	x								**6-32**
Fuel tank drain					x				**6-34**
Every 100 hours									
Fuel filter water separator							x		**6-35**
Every 250 hours									
Battery	x								**6-37**
Swing bearing				x					**6-40**
Boom swing cylinder				x					**6-41**
Grease points (Boom and arm)				x					**6-42**
Tightening torques	x								**6-43**
Every 500 hours									
Engine oil and filter		x							**6-44**
Fuel filter			x						**6-46**
Air cleaner							x		**6-48**
Radiator and coolers							x		**6-51**
Every 1000 hours									
Hydraulic oil return filter			x						**6-52**
Pilot line filter			x						**6-53**
Travel reduction gears		x							**6-54**
Valve clearance	x								**6-54**
Injection nozzle	x								**6-54**
Every 2000 hours									
Air cleaner			x						**6-55**
Engine coolant							x		**6-58**
Hydraulic oil suction filter							x		**6-61**

https://truckmanualshub.com/

Maintenance action	Check	Change fluid	Replace	Grease		Drain fluid	Adjust	Cleaning	Charging	Page no.
Hydraulic hoses	x									**6-62**
Valve seat						x				**6-62**
Injection timing	x									**6-62**
Injection pump	x									**6-62**
Biodegradable hydraulic oil		x								**6-63**
Every 5000 hours										
Hydraulic oil		x								**6-65**
When necessary										
Cab and working lights			x							**6-67**
Cab air filter							x			**6-70**
Fuel tank strainer							x			**6-71**
Control levers				x						**6-72**
Plastic and resin parts							x			**6-72**
Air-conditioning system									x	**6-73**

Break-in period

Tightening torques

Check the tightening torques after the first **50 h** of service, then check the tightening torques every **250 h**.

To check the tightening torques, see page **6-43**.

Engine oil and filter

Replace the engine oil and the engine oil filter after the first **250 h**.

To replace the engine oil and the engine oil filter perform the operations described on page **Engine oil and filter**.

Fuel filter

Replace the fuel filter after the first **250 h** of service, then replace the fuel filter every **500 h**.

To replace the fuel filter perform the operations described on page **6-46**.

Hydraulic oil return filter

Replace the hydraulic oil return filter after the first **250 h** of service, then replace the hydraulic oil return filter every **1000 h**.

To replace the hydraulic oil return filter perform the operations described on page **6-52**.

NOTE: *replace the hydraulic oil return filter every **200 h** of service if hydraulic breaker is used continuously.*

Pilot line filter

Replace the pilot line filter after the first **250 h** of service, then replace the pilot line filter every **1000 h**.

To replace the pilot line filter perform the operations described on page **6-53**.

NOTE: *replace the pilot line filter every **200 h** of service if hydraulic breaker is used continuously.*

Travel reduction gears

Replace the travel reduction gears oil after the first **250 h** of service, then replace the travel reduction gears oil every **1000 h**.

To replace the travel reduction gears oil perform the operations described on page **6-54**.

https://truckmanualshub.com/

Boom swing cylinder

Grease the boom swing cylinder every **10 h** within the first **50 h**, then grease every **250 h**.

To grease the boom swing cylinder refer to page **Boom swing cylinder**.

Grease points (Bucket)

Lubricate the bucket linkage (arm-bucket connection and arm-bucket link connection) and the bucket cylinder pin (rod side) every **10 h** within the first **50 h**, then lubricate every **50 h**.

Lubricate the bucket cylinder pin (head side) every **10 h** within the first **100 h**, then lubricate every **250 h**.

To lubricate the bucket linkage and the bucket cylinder pin (rod side) refer to page **6-28**.

To lubricate the bucket cylinder pin (head side) refer to page **6-42**.

Grease points (Boom and arm)

Grease the boom, the arm, and the boom swing post every **10 h** within the first **100 h**, then grease every **250 h**.

To grease the boom, the arm, and the boom swing post refer to page **6-42**.

Grease points (Blade)

Grease the blade every **10 h** within the first **50 h**, then grease every **50 h**.

To grease the blade refer to page **6-29**.

https://truckmanualshub.com/

Every 10 hours

Engine oil level

Check the engine oil level every **10 h** or every day.
Lubricant: **ENGINE OIL 15W-40**

1. Park the machine on a flat and level place. Stop the engine, and remove the starter key.
2. After stopping the engine for **15 min** or more, open the engine door.

   Remove the dipstick **(1)**, and wipe oil off the dipstick with a clean cloth.

   Reinsert the dipstick **(1)** into the guide tube as far as it will go, and then take it out.
3. The engine oil level is optimal when the level is between the lower (minimum) **(B)** and the upper (maximum) **(A)** marks.
4. If the oil level is at or below the lower mark on the dipstick **(1)**, remove the fill plug **(2)** and pour in oil until the level reaches the upper mark.

NOTE: *make sure that the oil level is not above the upper mark (maximum)* ***(A)*** *on the dipstick* ***(1)****. Doing so will cause such problems as poor fuel economy and an abnormal rise in coolant temperature.*

5. Install the fill plug **(2)**.

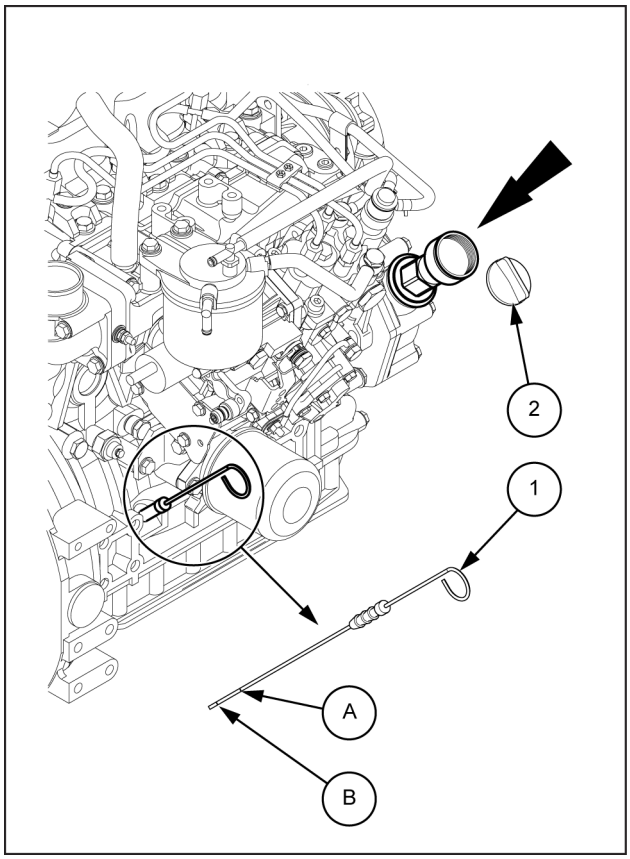

SMIL16MEX1493BB 1

https://truckmanualshub.com/

Engine coolant level

⚠ WARNING

Hazardous chemicals!
Coolant can be toxic. Avoid contact with skin, eyes, and clothing. Antidotes:
EXTERNAL - Rinse thoroughly with water. Remove soiled clothing.
INTERNAL - Rinse the mouth with water. DO NOT induce vomiting. Seek immediate medical attention.
EYES - Flush with water. Seek immediate medical attention.
Failure to comply could result in death or serious injury.

W0282A

⚠ CAUTION

Burn hazard!
Take care if removing the filler cap while the system is hot. Before removing the cap: completely cover the cap using a thick cloth, and slowly open the filler cap to allow the pressure to escape. Do not add cold water to a hot coolant reservoir.
Failure to comply could result in minor or moderate injury.

C0031A

Check the coolant level in the reserve tank every **10 h** or every day
Fluid: **OAT EXTENDED LIFE COOLANT/ANTIFREEZE**

1. Park the machine on a flat and level place. Stop the engine, and remove the starter key.
2. Open the side hood **(1)**.

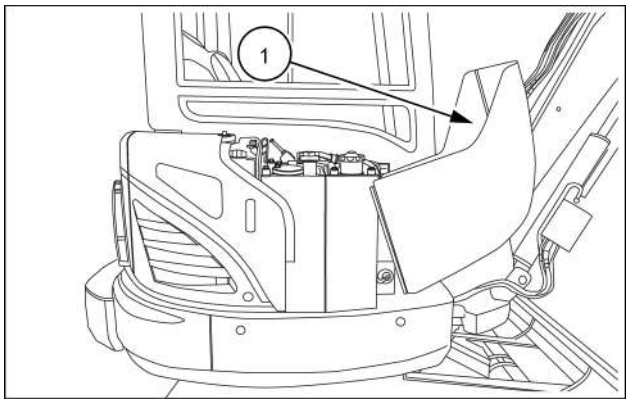

SMIL16MEX1451AA 1

3. Check that the level of reserve tank is between the FULL **(1)** mark and the LOW **(2)** mark.

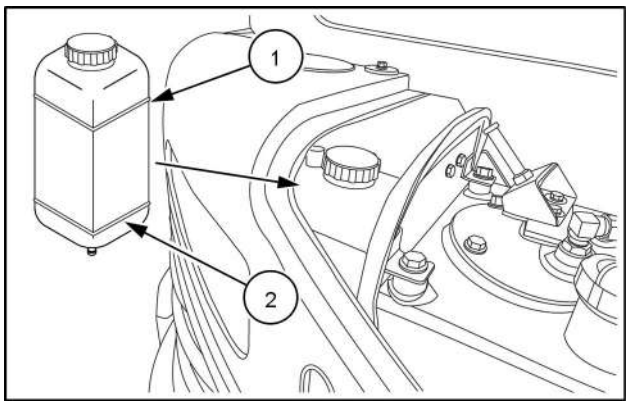

SMIL16MEX1535AA 2

https://truckmanualshub.com/

Hydraulic oil level

⚠ WARNING

Burn hazard!
Before performing any service on the hydraulic system, you must allow it to cool. Hydraulic fluid temperature should not exceed 40 °C (104 °F).
Failure to comply could result in death or serious injury.

W0241A

Check the hydraulic oil level every **10 h** or every day
Fluid: **PREMIUM HYDRAULIC OIL HV46 MULTI-GRADE ANTIWEAR**

1. Park the machine on a flat and level place, and arrange the attachment as shown in the figure. Stop the engine, and remove the starter key.

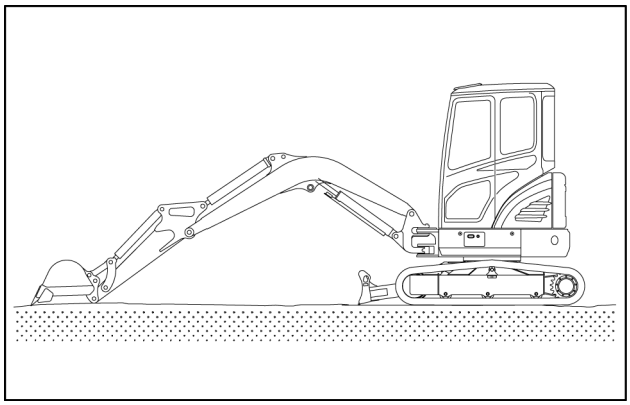

SMIL18MEX0143AA 1

2. Open the side hood to access the hydraulic oil tank **(3)**. The oil level is normal if between the red lines of the level gauge **(1)**.
3. If the hydraulic oil level is not in the correct range proceed as follows:
   - Release all pressure in the hydraulic tank. Refer to page **6-10**.
   - Clean the cap **(2)** and the area around the cap.
   - Remove the cap **(2)**, and supply hydraulic fluid to the hydraulic oil tank.
   - Install the cap **(2)**.

NOTICE: *make sure that no contaminant (water, sand etc.) enters the reservoir during filling.*

4. Start the engine after filling and operate the work equipment several times.
5. Check the oil level after engine stops. Close the side hood.

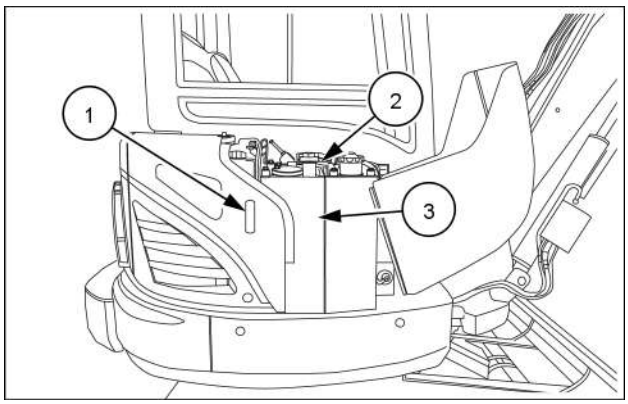

SMIL16MEX1451AA 2

https://truckmanualshub.com/

Fuel filter water separator

Drain water and sediment from the fuel filter water separator every **10 h** or every day.
Clean the filter element of the fuel filter water separator every **200 h**.

Drain water

1. Open the engine hood to access to the fuel filter water separator and place a container with an appropriate capacity under the fuel filter water separator **(1)**.

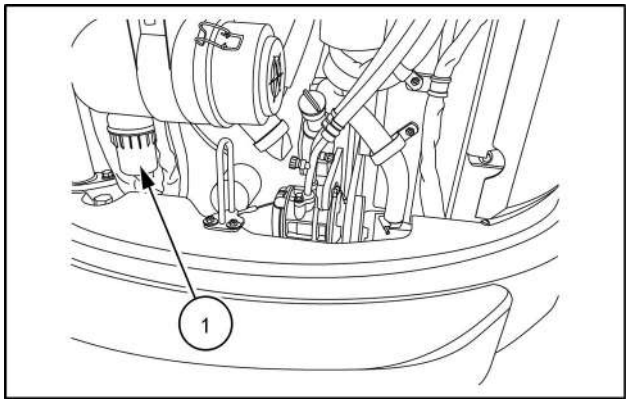

SMIL16MEX1445AA 1

2. Rotate clockwise the fuel cock **(2)** located on the fuel filter water separator **(1)** to close the fuel flow.
3. Loosen the drain plug **(3)** located at the bottom of the fuel filter water separator.
4. Drain the water collected inside.
5. Tighten the drain plug **(3)** to **1 – 2 N·m** (**0.7 – 1.5 lb ft**)
6. Open the fuel cock **(2)**.
7. Prime the fuel system.
8. Check for leaks.

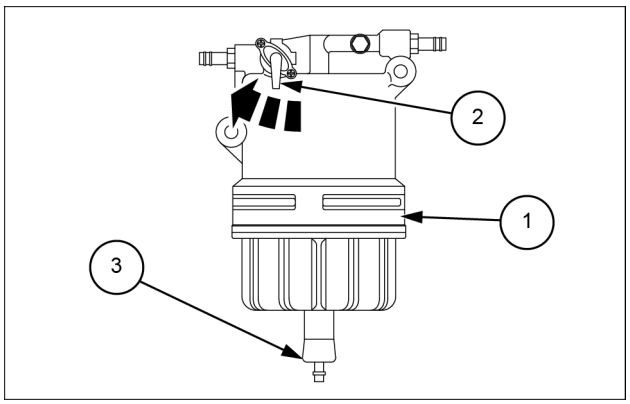

SMIL16MEX0600AB 2

Priming the fuel system

1. Turn the starter switch to ON position for **10 – 15 s**. The electric fuel pump prime the fuel system.

NOTE: *never use the starter motor to crank the engine in order to prime the fuel system. This may cause the starter motor to overheat and damage the coils, the pinion and/or the ring gear.*

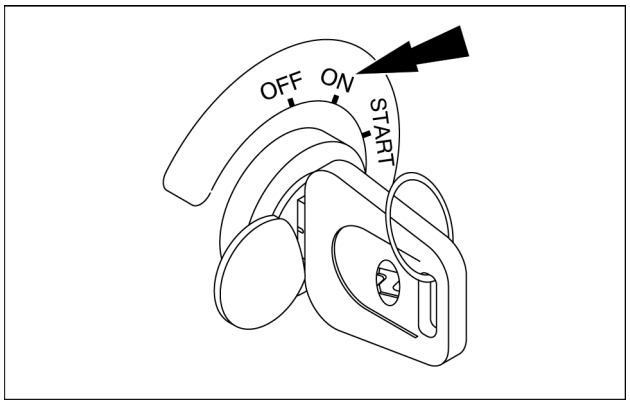

SMIL19MEX0717AA 3

https://truckmanualshub.com/

Fan and alternator drive belt

Inspection of fan

Inspect the fan every **10 h** or every day.

Perform a visual inspection of the fan every **10 h** or every day. Check for cracks, loose rivets, and bent or loose blades.

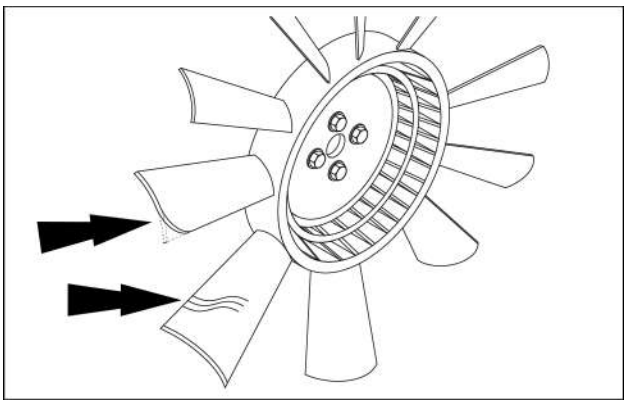

SMIL16MEX0436AA 1

Inspection of belt tension

Check the belt tension every **10 h** or every day.

NOTICE: *operating the engine with loosened belt may cause over heat of the engine or insufficient charging of the battery due to slipping belt in its housing.*

1. Press the belt down with your thumb with a force of approximately **98 N·m** (**72 lb ft**) to check the deflection. There are three positions to check for belt tension **(A)**, **(B)** and **(C)**. You can check the tension at whichever position is the most accessible. The proper deflection of a used belt at each position is:

Used belt tension	
(A)	**10 – 14 mm** (**0.4 – 0.6 in**)
(B)	**7 – 10 mm** (**0.3 – 0.4 in**)
(C)	**9 – 13 mm** (**0.4 – 0.5 in**)

NOTE: *check any indication of damage on the pulley or belt due to wear. Check thoroughly to make sure that the belt is correctly engaged to groove of the pulley. The belt must be replaced if it is elongated, it has cracks or it is worn out.*

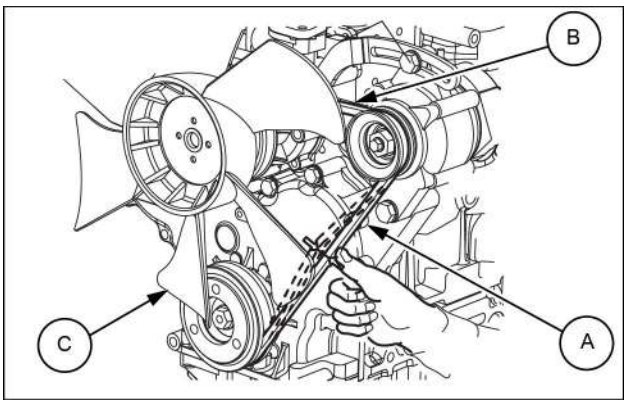

SMIL16MEX3356AB 2

Adjustment of belt tension

1. Loosen the adjusting bolt **(1)** and the other related bolts and/or nuts, then move the alternator **(2)** with a pry bar **(3)** to tighten the belt to the desired tension. Then tighten the adjusting bolts and/or nuts.

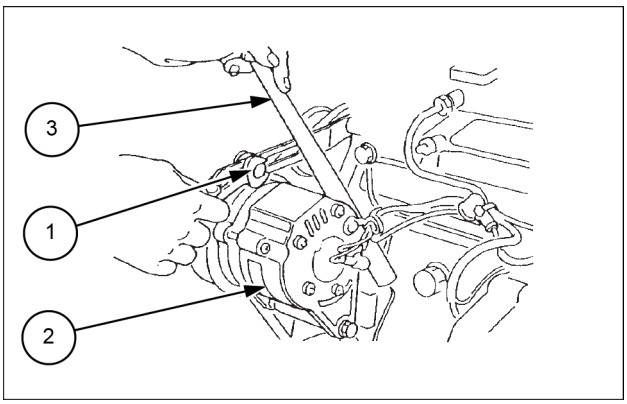

SMIL16MEX3376AB 3

https://truckmanualshub.com/

2. Tighten the belt to the proper tension. There must be clearance **(1)** between the belt and the bottom of the pulley groove. If there is no clearance **(2)** between the belt and the bottom of the pulley groove, replace the belt.
3. Check the belt for cracks, oil or wear. If any of these conditions exist, replace the belt.

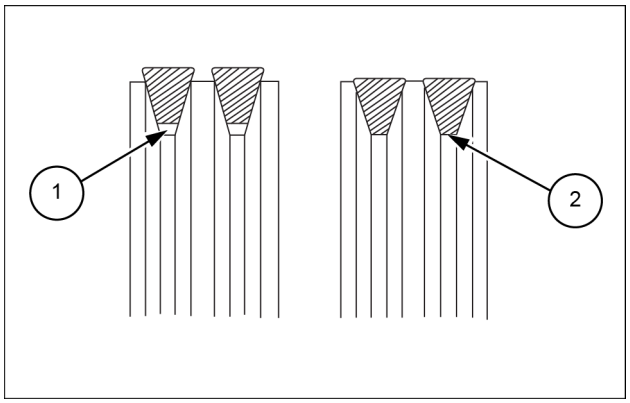

SMIL16MEX3301AB 4

https://truckmanualshub.com/

Air-conditioning compressor drive belt

Check the air-conditioning compressor drive belt tension every **10 h** or every day.

Adjustment of tension

1. To adjust the tension of the V-belt **(1)** use the belt tension gauge indicated in figure.
2. Position the belt tension gauge on the V-belt **(1)** between air-conditioning compressor and engine crankshaft.
3. Stretch the V-belt **(1)** until the belt tension gauge reach the value of **50.0 kg** (**110.2 lb**).

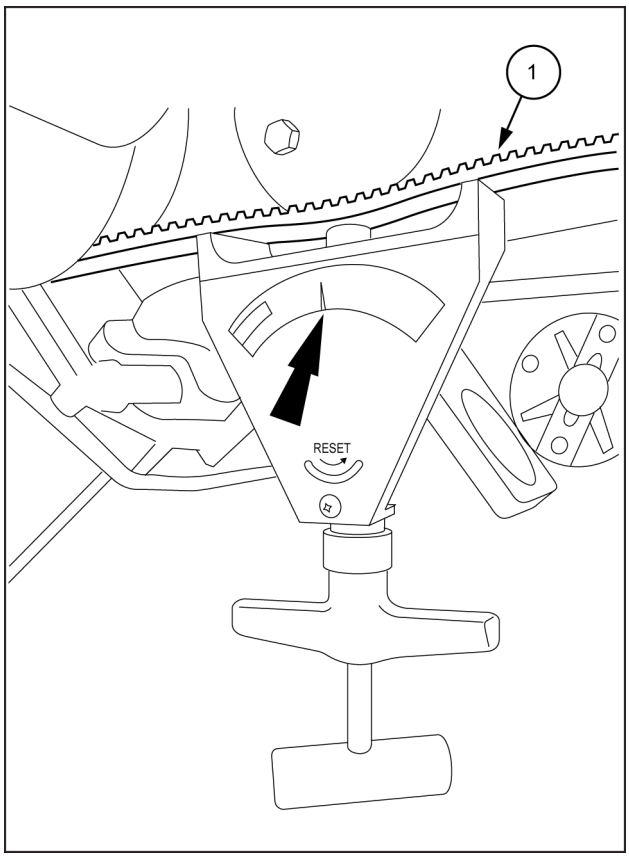

SMIL17MEX2913BB 1

4. Install the air conditioning compressor **(1)** on the bracket and then use a wrench [**13 mm**] to tighten the bolts **(2)**.

   Tighten the bolts **(2) 19.7 – 29.4 N·m** (**14.5 – 21.7 lb ft**)

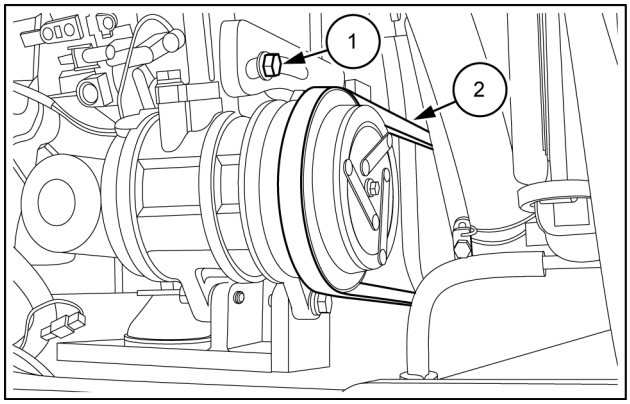

SMIL17MEX2914AB 2

5. Close the engine hood.

https://truckmanualshub.com/

Every 50 hours

Grease points (Bucket)

Grease the bucket linkage every **50 h** (after the break-in period).
Lubricant: **MULTI-PURPOSE MOLY GREASE EXTREME PRESSURE AND ANTI-WEAR NGLI-2**

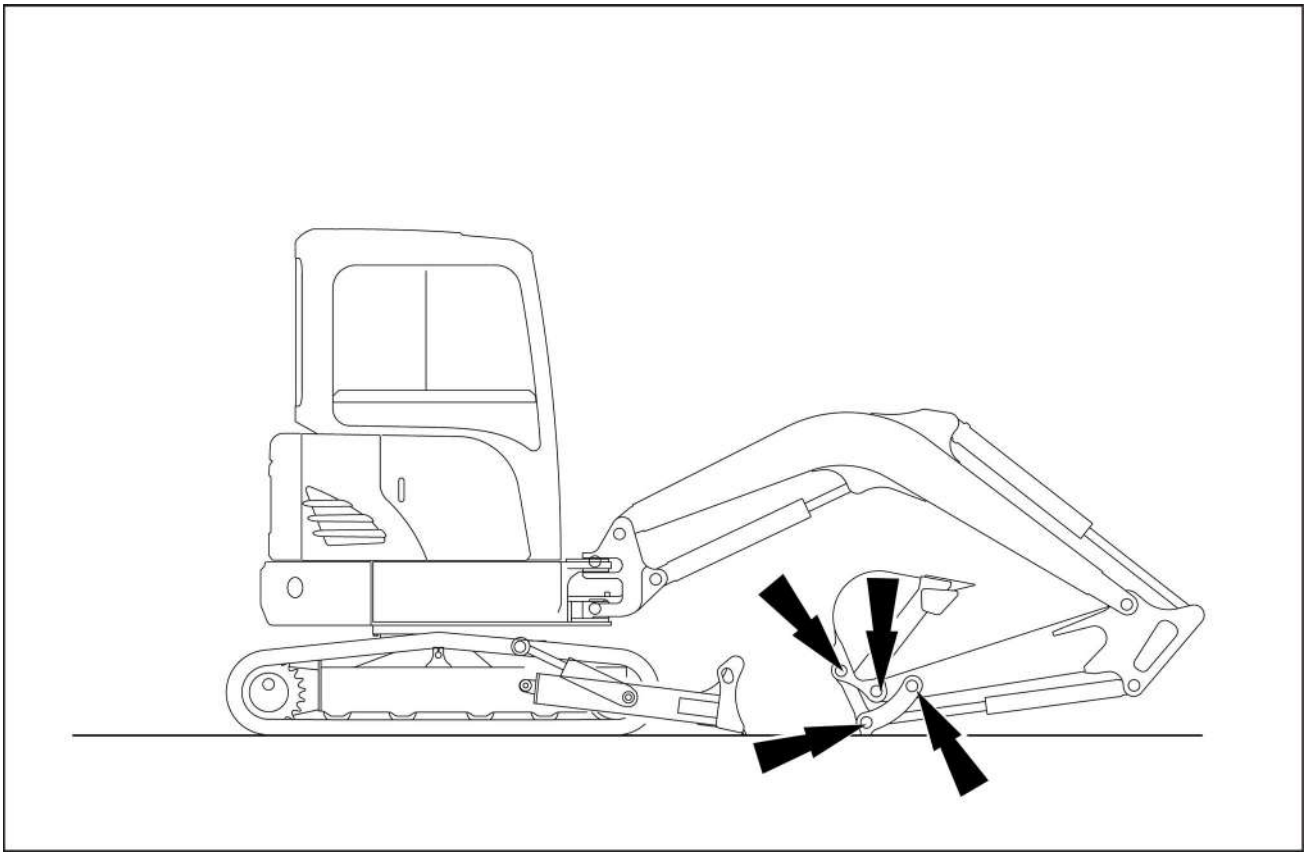

SMIL18MEX0144FA 1

Bucket cylinder pin (rod side): one grease fitting

Bucket link (control rod): one grease fitting

Arm and bucket connection pin: one grease fitting

Arm and control link connection pin: one grease fitting

NOTICE: *if you operate the machine in water or mud, you must lubricate the bucket linkage every* ***10 h****.*

NOTICE: *if you operate the machine with any attachment other than a bucket, you must lubricate the bucket linkage every* ***10 h****.*

https://truckmanualshub.com/

Grease points (Blade)

Grease the blade every **50 h** (after the break-in period).
Lubricant: **MULTI-PURPOSE MOLY GREASE EXTREME PRESSURE AND ANTI-WEAR NGLI-2**

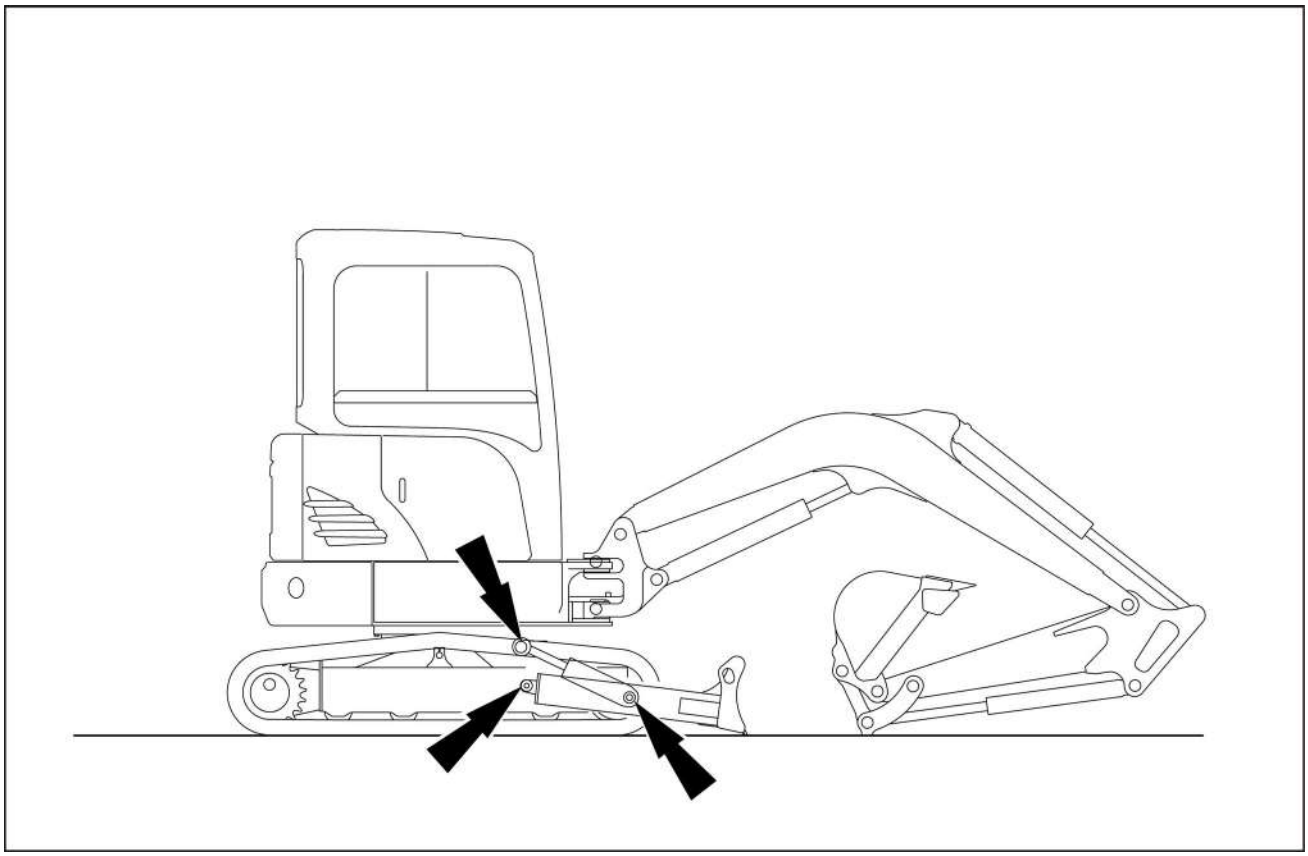

SMIL18MEX0144FA 1

Standard version

Dozer blade connection pin: three grease fittings

Dozer blade cylinder pin: two grease fittings

NOTICE: *if you operate the machine in water or mud, you must lubricate the dozer blade connection pin and the dozer blade cylinder pin every* ***10 h****.*

https://truckmanualshub.com/

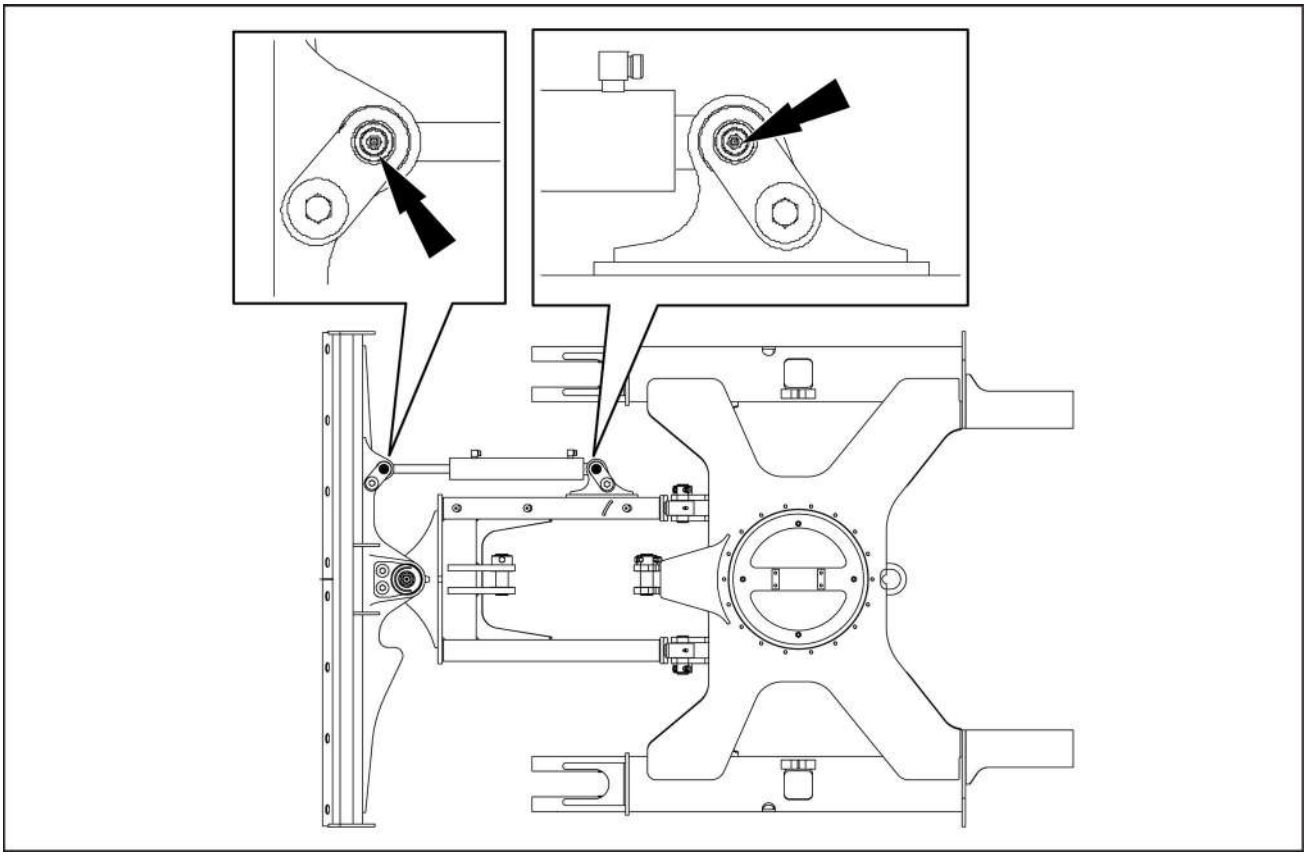

SMIL18MEX0145FA 2

Angle blade version

Dozer angle blade cylinder pin (if equipped): two grease fittings

NOTICE: *if you operate the machine in water or mud, you must lubricate the dozer blade connection pin and the dozer blade cylinder pin every* ***10 h****.*

https://truckmanualshub.com/

Swing ring gear

Grease the swing ring gear every **50 h**.
Lubricant: **MULTI-PURPOSE GREASE EXTREME PRESSURE AND ANTI-WEAR NLGI 2**

Swing ring gear: one grease fittings
Using a grease gun, inject grease of the specified type in the grease points shown in figure.

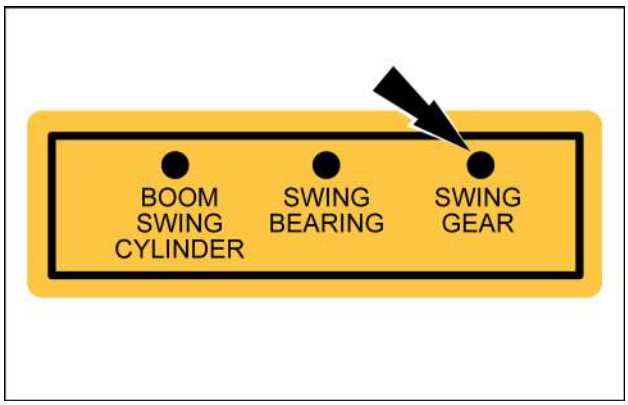

SMIL19MEX0723AA 1

Swing ring gear greasing point

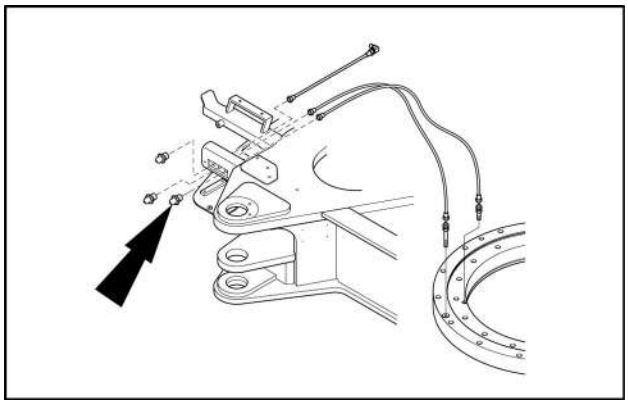

SMIL18MEX0756AA 2

https://truckmanualshub.com/

Track tension

⚠ WARNING

Tip-over hazard!
Only raise the track as little as necessary.
Failure to comply could result in death or serious injury.

W0276A

Check the track tension every **50 h**

NOTICE: *if the tracks are too tight, they wear quickly. If tracks are not tight enough, they wear quickly and can catch on the sprocket wheel or slide off the idler wheel or the sprocket wheel. Clean the tracks after work.*

To check the tracks tension, proceed as follows:

1. Swing the upper structure perpendicular to the undercarriage. Lower the attachment to the ground, then lower the boom until the track is raised off the ground. Place a block under the undercarriage and raise the attachment off the ground.
2. Set the engine speed lever to the maximum speed position.
3. Operate the travel control lever to move the raised track forward and backward and shake off the mud.
4. Repeat the same operations for the other track.

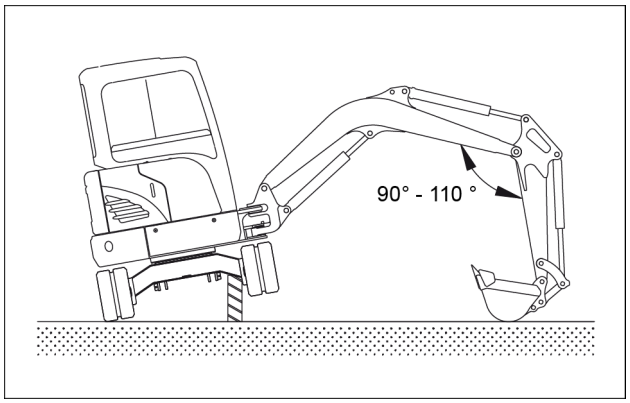

SMIL16MEX0422AB 1

Checking the tension

1. Stop the engine, then remove the key from the starter switch.
2. At the center of the track, measure the slack **(L)** between the bottom of the lower roller **(A)** and the rubber track shoe **(B)**.

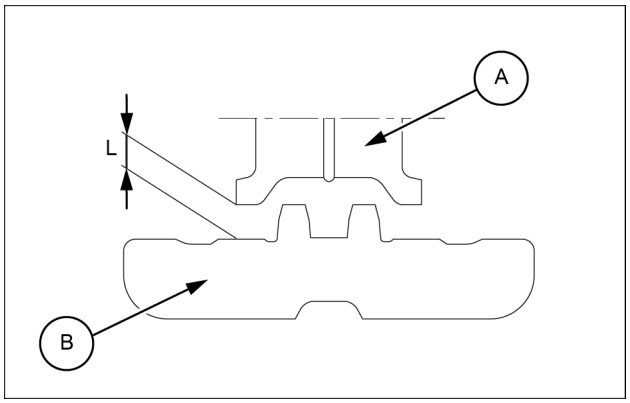

SMIL16MEX0423AB 2

3. If the rubber track has the stamping that you can see in the figure aside, the value of the slack must be within **20 – 25 mm** (**0.8 – 1.0 in**).
   In the others case the value of the slack must be within **5 – 10 mm** (**0.2 – 0.4 in**).
4. Adjust the tension as necessary, then lower the track to the ground.
5. Repeat the same operations for the other track.

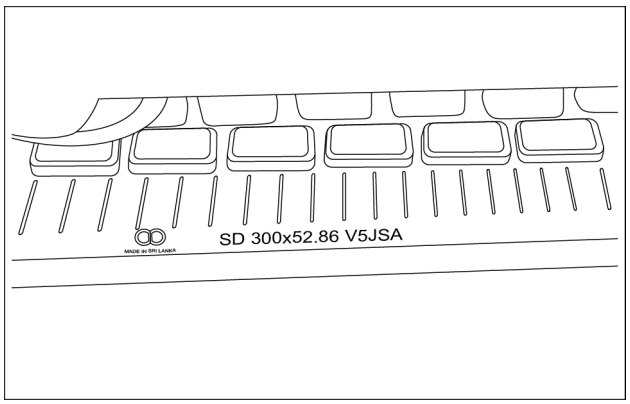

SMIL18MEX0574AA 3

https://truckmanualshub.com/

Adjusting the tension

To increase the tension:

1. Clean the grease fitting adapter and the grease fitting.
2. Connect the grease pump. Inject the grease to obtain the right amount of track tension.
3. Remove the grease pump and clean the grease fitting.
4. Repeat the same operations for the other track.

⚠ WARNING

Pressurized fluid can penetrate the skin and cause severe injuries.
The grease in the cylinder is under high pressure. Never loosen the grease fitting adaptor completely in order to speed up the flow of grease.
Failure to comply could result in death or serious injury.

W0261A

To reduce the tension:

1. Loosen the grease fitting adapter and drain grease from the cylinder.
2. When the track tension is correct, tighten the grease fitting adapter.
3. Clean the grease fitting adapter, then lower the track to the ground.
4. Repeat the same operations for the other track.

NOTICE: *if the grease fitting adapter is damaged, grease may leak out. Check the condition of the grease fitting adapter regularly and replace it if necessary.*

https://truckmanualshub.com/

Fuel tank drain

⚠ WARNING

Fire hazard!
When handling diesel fuel, observe the following precautions:
1. Do not smoke.
2. Never fill the tank when the engine is running.
3. Wipe up spilled fuel immediately.
Failure to comply could result in death or serious injury.

W0099A

Drain water and sediment from the fuel tank every **50 h**.

NOTE: *take all necessary precautions during the following operations; no foreign matter must enter the fuel system.*

1. Place a receptacle of a suitable capacity under the drain plug.
2. Open the drain plug located at the bottom of the tank and drain the accumulated sediment and water.
3. After draining, close the drain plug.

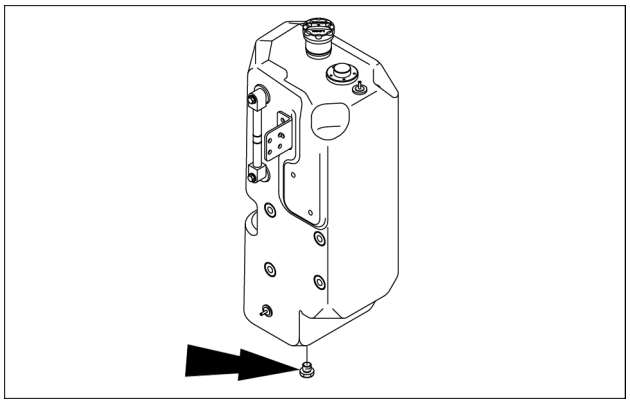

SMIL16MEX0416AA 1

https://truckmanualshub.com/

Every 100 hours

Fuel filter water separator

Drain water and sediment from the fuel filter water separator every **10 h** or every day.
Clean the filter element of the fuel filter water separator every **200 h**.

1. Open the engine hood to access to the fuel filter water separator and place a container with an appropriate capacity under the fuel filter water separator **(1)**.

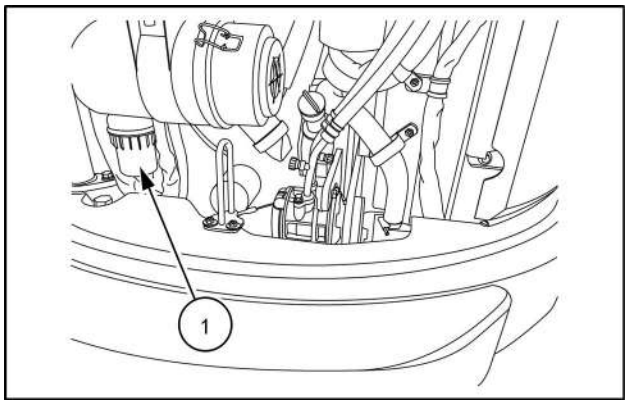

SMIL16MEX1445AA 1

A. IN (to the fuel injector pump)
B. OUT(from the fuel injector pump)
C. Air vent out

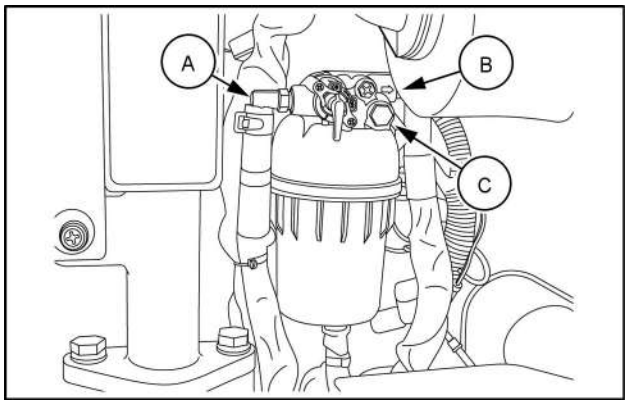

SMIL18MEX0535AB 2

2. Rotate clockwise the fuel cock **(2)** located on the fuel filter water separator **(1)** to close the fuel flow.
3. Loosen the drain plug **(3)** located at the bottom of the fuel filter water separator.
4. Drain the water collected inside.
5. Tighten the drain plug **(3)** to **1 – 2 N·m** (**0.7 – 1.5 lb ft**)
6. Open the fuel cock **(2)**.
7. Prime the fuel system.
8. Check for leaks.

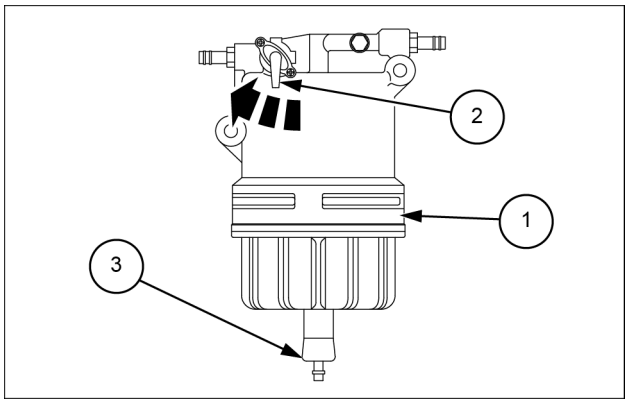

SMIL16MEX0600AB 3

https://truckmanualshub.com/

Priming the fuel system

1. Turn the starter switch to ON position for **10 – 15 s**. The electric fuel pump prime the fuel system.

NOTE: *never use the starter motor to crank the engine in order to prime the fuel system. This may cause the starter motor to overheat and damage the coils, the pinion and/or the ring gear.*

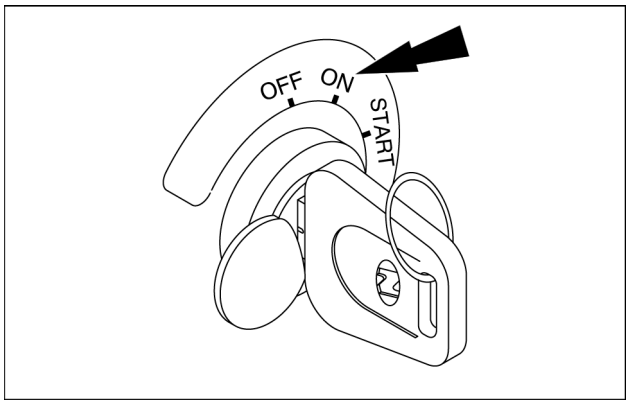

SMIL19MEX0717AA 4

Replace element

1. Rotate clockwise the fuel cock **(2)** located on the fuel-water separator filter **(1)** to close the fuel flow.
2. Remove the cup **(4)** from the fuel-water separator filter.
3. Carefully hold the cup **(4)** to prevent fuel spilling. Clean spilled fuel.
4. Remove the floating ring **(5)** from the cup.
5. Remove the filter element **(6)**, clean and replace if necessary
6. Empty the cup **(4)** and rinse the inside with kerosene.
7. Install a new floating ring **(5)** in the cup **(4)**.
8. Tighten the cup **(4)** to **27.5 – 33.4 N·m** (**20.3 – 24.6 lb ft**).
9. Close the drain cock.
10. Rotate counterclockwise the fuel cock **(2)** to open the fuel flow.
11. Prime the fuel system.
12. Check for leaks.

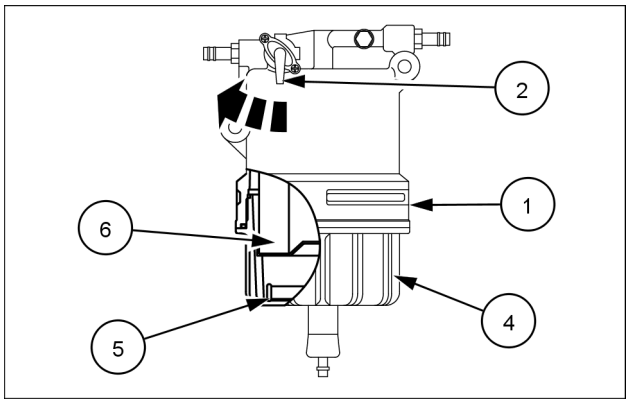

SMIL16MEX0601AA 5

https://truckmanualshub.com/

Every 250 hours

Battery

⚠ WARNING

Improper operation or service of this machine can result in an accident.
Before working on any component(s) of the electrical circuit, put the ignition key in the off (shut down) position. When disconnecting batteries, always disconnect the negative (-) cable first. When reconnecting batteries, always connect the negative (-) cable last.
Failure to comply could result in death or serious injury.

W0943A

⚠ WARNING

Battery acid causes burns. Batteries contain sulfuric acid.
Avoid contact with skin, eyes or clothing. Antidote (external): Flush with water. Antidote (eyes): flush with water for 15 minutes and seek medical attention immediately. Antidote (internal): Drink large quantities of water or milk. Do not induce vomiting. Seek medical attention immediately.
Failure to comply could result in death or serious injury.

W0111A

⚠ WARNING

Battery gas can explode!
To prevent an explosion: 1. Always disconnect the negative (-) battery cable first. 2. Always connect the negative (-) battery cable last. 3. Do not short circuit the battery posts with metal objects. 4. Do not weld, grind, or smoke near a battery.
Failure to comply could result in death or serious injury.

W0011A

⚠ WARNING

Explosive gas!
Batteries emit explosive hydrogen gas and other fumes while charging. Ventilate the charging area. Keep the battery away from sparks, open flames, and other ignition sources. Never charge a frozen battery.
Failure to comply could result in death or serious injury.

W0005A

Check the battery voltage every **250 h**.

The battery is located in the right-hand side of the machine.

To access the battery proceed as follow:

1. Remove the bolts **(1)** that fix the right-hand side panel **(2)**.
2. Remove the right-hand side panel **(2)**.

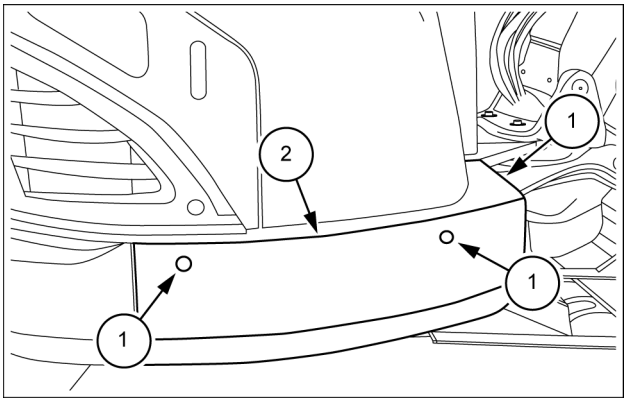

SMIL16MEX2707AB 1

https://truckmanualshub.com/

Cleaning of the battery

1. Wash the terminal with hot water, and apply grease to the terminals after washing.

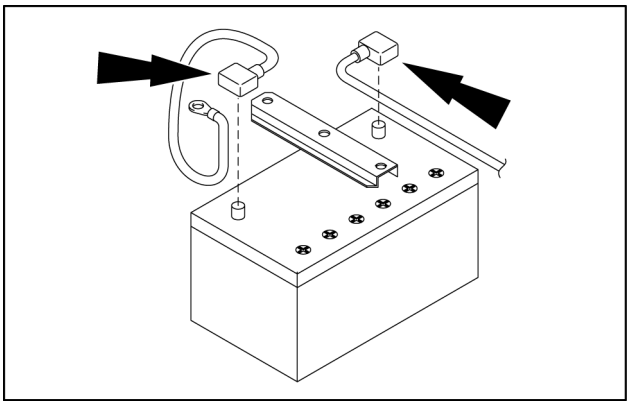

SMIL16MEX2521AB 2

Battery voltage check

NOTICE: *if the machine is to be operated for a short time without battery (using a slave battery for starting), use additional current (lights) while engine is running and insulate terminal of battery. If this advice is disregarded, damage to alternator and regulator may result.*

1. Stop the engine.
2. Measure the voltage with a circuit tester between the battery terminals.
3. If the battery voltage is less than the factory specification, check the battery specific gravity and recharge the battery.
   Battery voltage: more than **12 V**
   - **(1)** Positive terminal.
   - **(2)** Negative terminal.

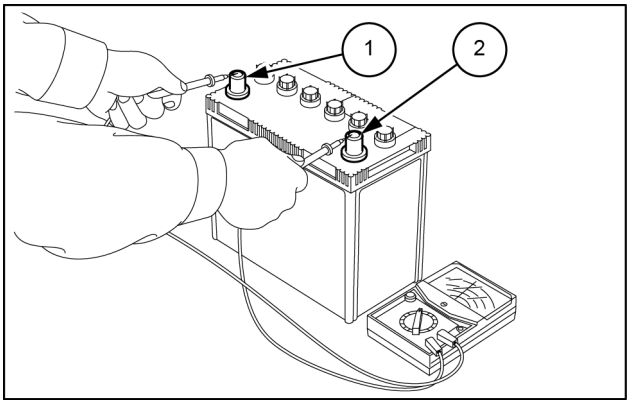

SMIL16MEX0771AB 3

Replacement of the battery

To replace the batteries proceed as follows:

1. Set the battery disconnect switch to the OFF position. Cut-off the negative-terminal cable **(-)**. Next, cut-off the positive-terminal cable **(+)**.
2. Remove the support bracket.
3. Install a new battery.
4. Clean the cables and the battery terminals, and apply grease.
5. Connect the positive **(+)** and the negative **(-)** cable to the positive and the negative terminal of the battery respectively. Set the battery disconnect switch to the ON position.

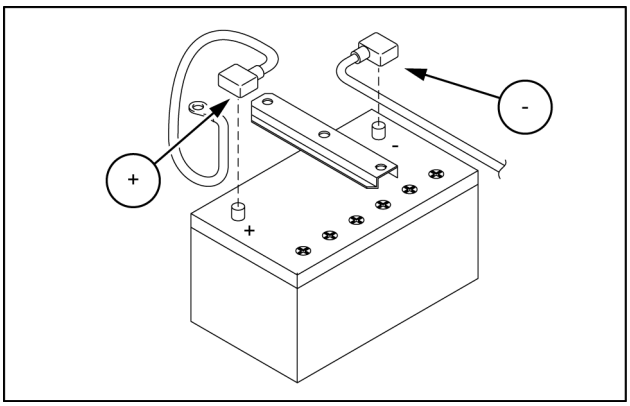

SMIL16MEX2522AB 4

https://truckmanualshub.com/

Starting the engine with booster cable

⚠ WARNING

Improper operation or service of this machine can result in an accident.
An error connecting auxiliary starting cables or short-circuiting battery terminals can cause an accident. Connect auxiliary starting cables as instructed in this manual.
Failure to comply could result in death or serious injury.

W0263A

Connection of booster cable

Make sure that the booster battery voltage corresponds to the voltage system of the machine.
Make sure that the starter key is in OFF position and the safety lock lever in rearward position (LOCK position).
Make sure to use supply cables of appropriate dimensions.
Make sure that the starter key of the machine with the charged battery is in OFF position.

1. Connect the red terminals **(R)** of booster cable to the battery **(+)** terminals between exhausted battery positive terminal **(1)** and new battery positive terminal **(2)**.
2. Connect the black terminal **(B)** of the booster cable to the battery **(-)** terminals between new battery negative terminal **(3)** and chassis **(4)** of the machine with the exhausted battery.
3. Connection order: **(1)**, **(2)**, **(3)**, **(4)**

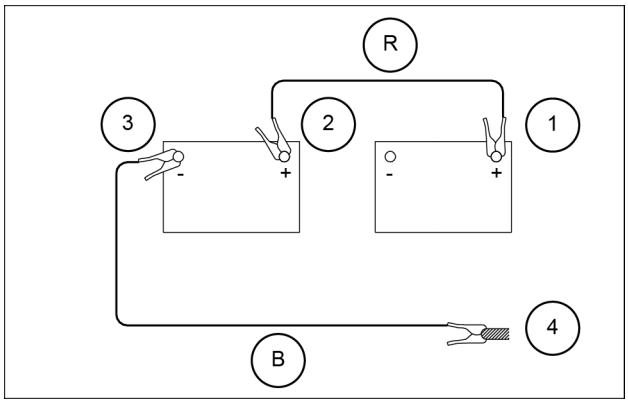

SMIL16MEX0459AB 5

Starting the engine of the machine

1. Start the engine of the machine with the charged battery and keep it to run at high RPM.
2. Start the engine of the machine with the exhausted battery
3. If the engine does not start, restart after two minutes.

Disconnection of booster cable

1. Disconnection order: **(4)**, **(3)**, **(2)**, **(1)**
2. Remove the black booster cable **(B)**.
3. Remove the red booster cable **(R)**.
4. Run the engine at high RPM.

https://truckmanualshub.com/

Swing bearing

Grease the swing bearing every **250 h**.
Lubricant: **MULTI-PURPOSE GREASE EXTREME PRESSURE AND ANTI-WEAR NLGI 2**

Swing bearing: one grease fittings
Using a grease gun, inject grease of the specified type in the grease points shown in figure.

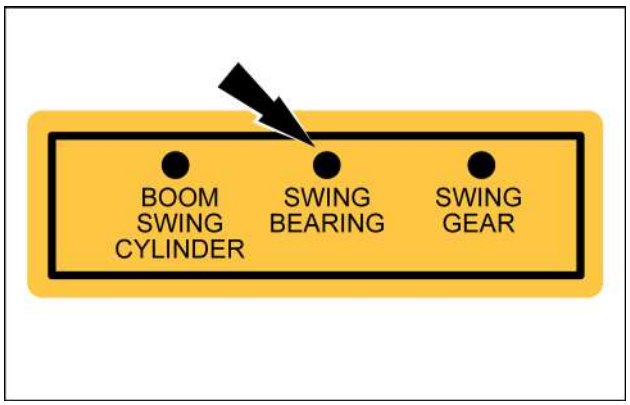

SMIL19MEX0723AA 1

Swing bearing greasing point

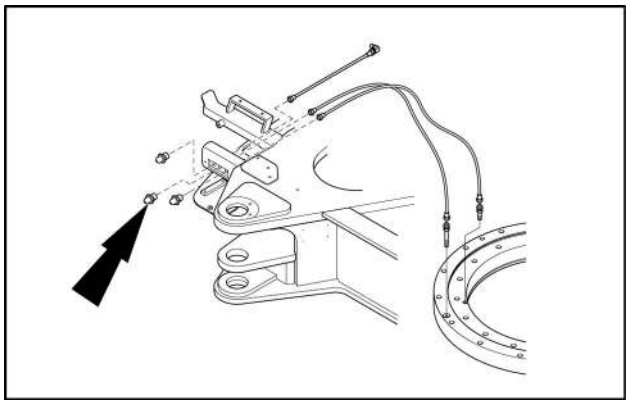

SMIL18MEX0756AA 2

https://truckmanualshub.com/

Boom swing cylinder

Grease the boom swing cylinder every **250 h** (after the break-in period).
Lubricant: **MULTI-PURPOSE MOLY GREASE EXTREME PRESSURE AND ANTI-WEAR NGLI-2**

Boom swing cylinder: one grease fitting
Using a grease gun, inject grease of the specified type in the grease points shown in figure.

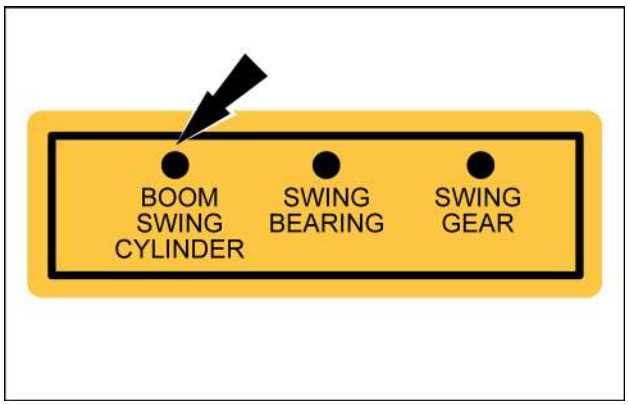

SMIL19MEX0723AA 1

Boom swing cylinder greasing point

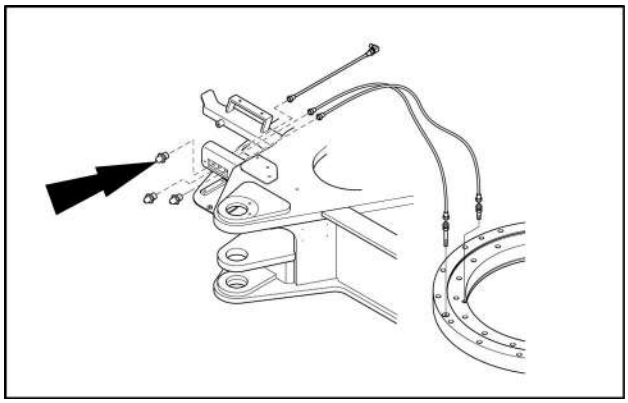

SMIL18MEX0756AA 2

https://truckmanualshub.com/

Grease points (Boom and arm)

Grease the boom, the arm, the bucket cylinder pin (head side), and the boom swing post every **250 h** (after the break-in period).

Lubricant: **MULTI-PURPOSE MOLY GREASE EXTREME PRESSURE AND ANTI-WEAR NGLI-2**

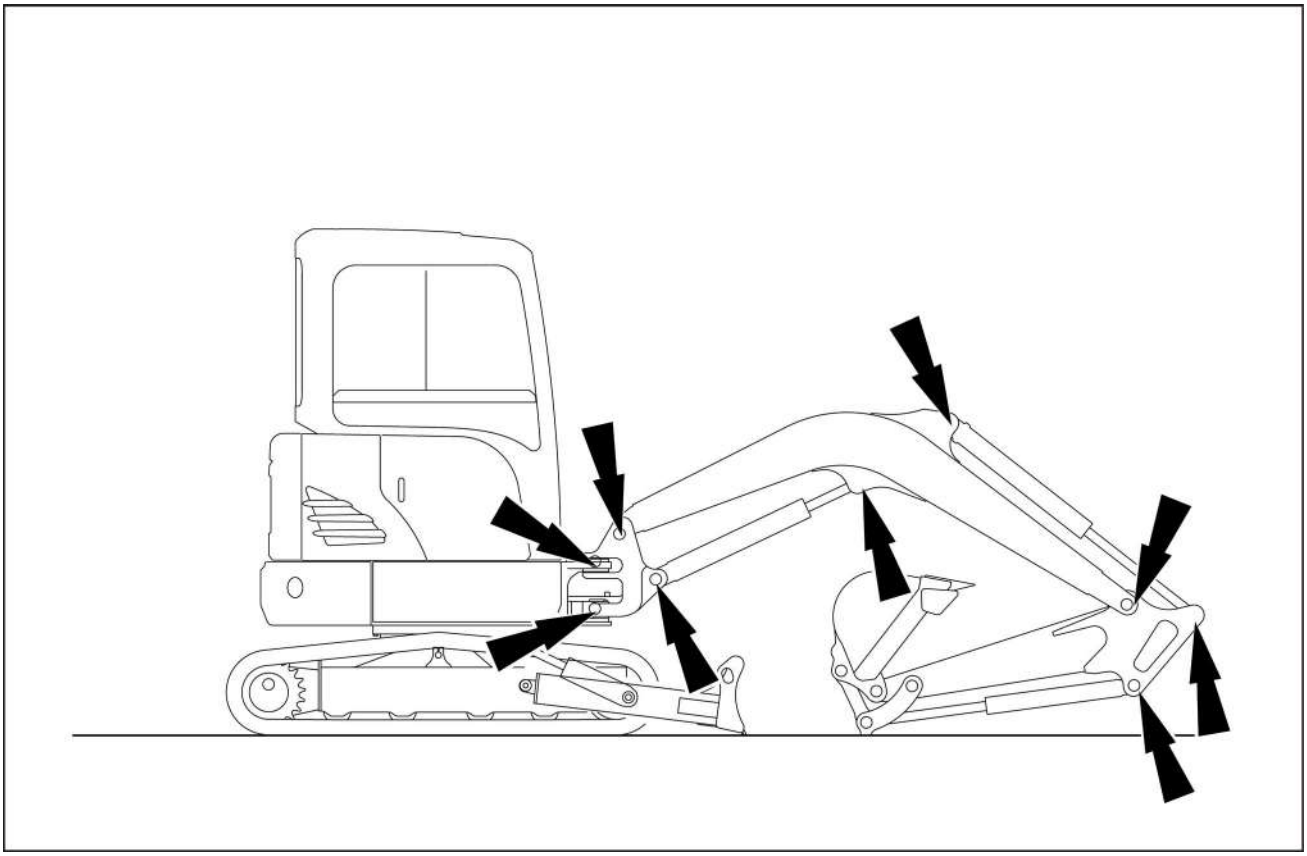

SMIL18MEX0144FA 1

Boom cylinder (head and rod side): two grease fittings

Arm cylinder pin (head and rod side): two grease fittings

Boom connection pin: one grease fittings

Boom and arm connection pin: one grease fitting

Boom swing post - upper frame connection: two grease fittings

Bucket cylinder pin (head side): one grease fitting

NOTICE: *if you operate the machine in water or mud, you must lubricate the boom, the arm, the bucket cylinder pin (head side), and the swing system every* ***10 h****.*

https://truckmanualshub.com/

Tightening torques

Check the tightening torques every **250 h** (after the break-in period).

Component	Bolt size	Torque setting
Engine mounting bolt (engine–bracket)	M10 x 1.25	**54.2 – 81.3 N·m** (**40 – 60 lb ft**)
Engine mounting bolt (bracket-frame)	M12 × 1.75	**96.3 – 155.9 N·m** (**71 – 115 lb ft**)
Main pump	M12 × 1.75	**74.6 – 112.5 N·m** (**55 – 83 lb ft**)
Hydraulic swivel	M10 x 1.5	**54.2 – 81.3 N·m** (**40 – 60 lb ft**)
Swing motor	M14 x 2.0	**164.1 – 221 N·m** (**121 – 163 lb ft**)
Swing bearing (upper)	M12 × 1.75	**110.8 – 150.1 N·m** (**81.7 – 110.7 lb ft**)
Swing bearing (lower)	M12 × 1.75	**106.4 – 145.8 N·m** (**78.5 – 107.5 lb ft**)
Travel motor	M12 × 1.75	**125.8 – 145.3 N·m** (**92.8 – 107.2 lb ft**)
Sprocket	M12 × 1.75	**108.9 – 132.5 N·m** (**80.3 – 97.7 lb ft**)
Carrier roller	M12 × 1.75	**108.9 – 132.5 N·m** (**80.3 – 97.7 lb ft**)
Track roller	M18 × 2.0	**366.2 – 444.6 N·m** (**270.1 – 327.9 lb ft**)
Counterweight	M20 x 2.5	**482.8 – 653.4 N·m** (**356.1 – 481.9 lb ft**)
Operator’s seat (bolt)	M8 x 1.25	**20 – 30 N·m** (**15 – 22 lb ft**)

https://truckmanualshub.com/

Every 500 hours

Engine oil and filter

Replace the engine oil and the engine oil filter every **500 h** (after the break-in period).
Lubricant: **ENGINE OIL 15W-40**
Quantity: **6.7 L** (**1.8 US gal**)

NOTICE: *if engine is used with High Sulfur Fuel [* ***0.05%*** *(* ***500 ppm****) ≤ Sulfur Content ≤* ***0.5%*** *(* ***5000 ppm****)], change the engine oil at shorter intervals (approximately half).*

NOTICE: *if engine is used with High Sulfur Fuel [* ***0.5%*** *(* ***5000 ppm****) ≤ Sulfur Content ≤* ***1%*** *(* ***10000 ppm****)], change the engine oil and oil filter at shorter intervals (approximately half).*

NOTE: *replace the oil while the engine is warm, but not hot. Doing so helps the oil in flowing.*

1. Park the machine on a flat and level place. Stop the engine, remove the starter key.
2. Place a container with a capacity of **10 L** (**2.6 US gal**) under the drain plug.
3. Remove the cover of drain plug **(2)** and connect the special tool (Part Number 51477132) **(1)**.
4. Open the engine hood, remove the filling cap and drain the oil.

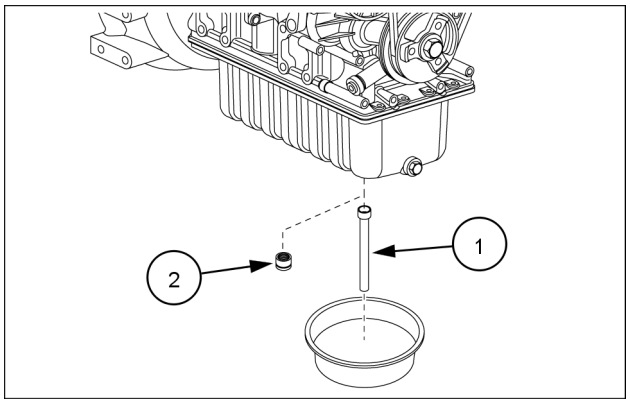

SMIL18MEX0578AA 1

5. Clean around the filter head, remove the filter **(1)** with a filter wrench and clean the gasket surface.
   A. Open
   B. Close

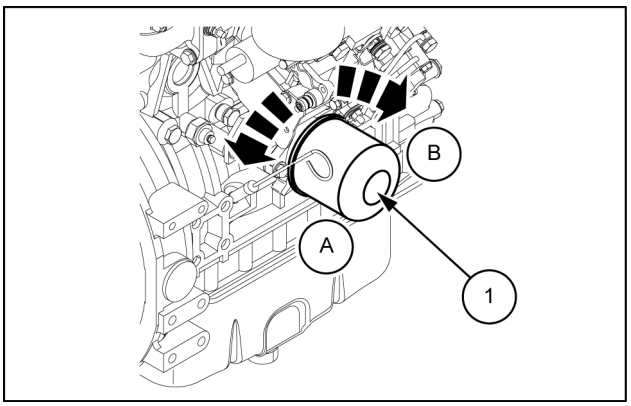

SMIL16MEX1443AB 2

6. Apply an oil film finely to the seal of a new filter.

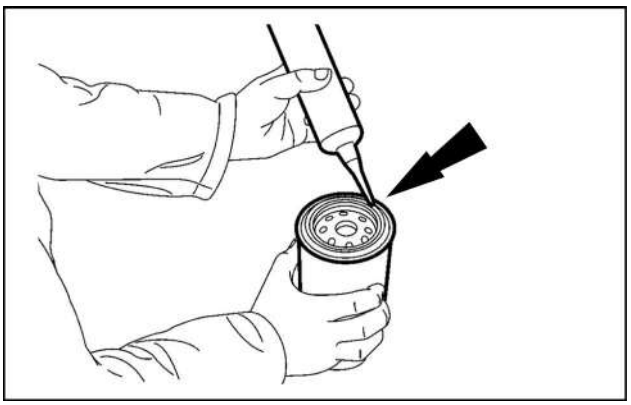

SMIL14CEX2751AA 3

https://truckmanualshub.com/

7. Attach a new filter. Turn the filter until the seal touches the filter head, and then tighten it further a half turn by hand.

NOTE: *do not use a filter wrench for tightening the filter. Overtightening can damage the filter and its seal.*

   A. Open
   B. Close

8. Install the cover drain plug.

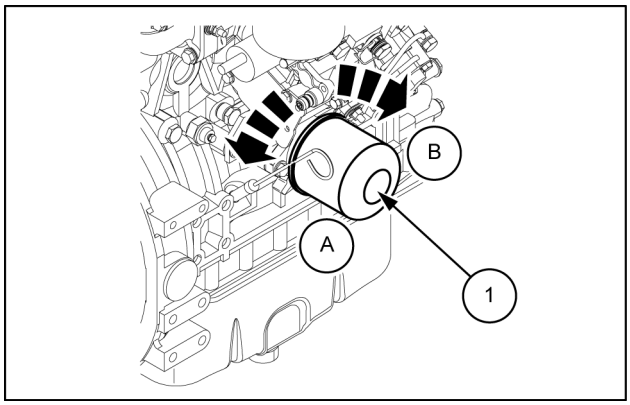

SMIL16MEX1443AB 4

9. Add new engine oil to the engine. Install the fill cap.
10. Run the engine for several minutes to check that there are no leaks at the filter and at the drain plug.
11. Stop the engine and check the oil level with the dipstick. Add oil if necessary.

NOTE: *always wait **15 min** to allow the oil to return to the sump before checking the oil level.*

12. Install the cover of the drain plug.

https://truckmanualshub.com/

Fuel filter

⚠ WARNING

Fire hazard!
When handling diesel fuel, observe the following precautions:
1. Do not smoke.
2. Never fill the tank when the engine is running.
3. Wipe up spilled fuel immediately.
Failure to comply could result in death or serious injury.

W0099A

Replace the fuel filter element every **500 h** (after the break-in period).

NOTICE: *do not work in any environment in which anything other than fuel will get into fuel lines. (Sites with strong wind, blowing dust, etc.). Wash hands before operations. Do not use gloves. Do not open the packaging for the filter kit until you start the installation work. Do not reuse any fuel remaining within the cover. For persistent dirt within the cover, wipe it off with a clean rag, then clean with clean diesel fuel. Do not use parts cleaner because it could affect the case cover. Do not touch the inside of the element. Completely wipe off any spilled fuel after changing the filter element.*

1. Open the engine door to access to the fuel filter **(1)**.
2. Close the fuel cock **(2)** on the water separator.
3. Clean the area around the fuel filter body and place a container with a capacity of **2 L** (**0.5 US gal**) under the fuel filter.

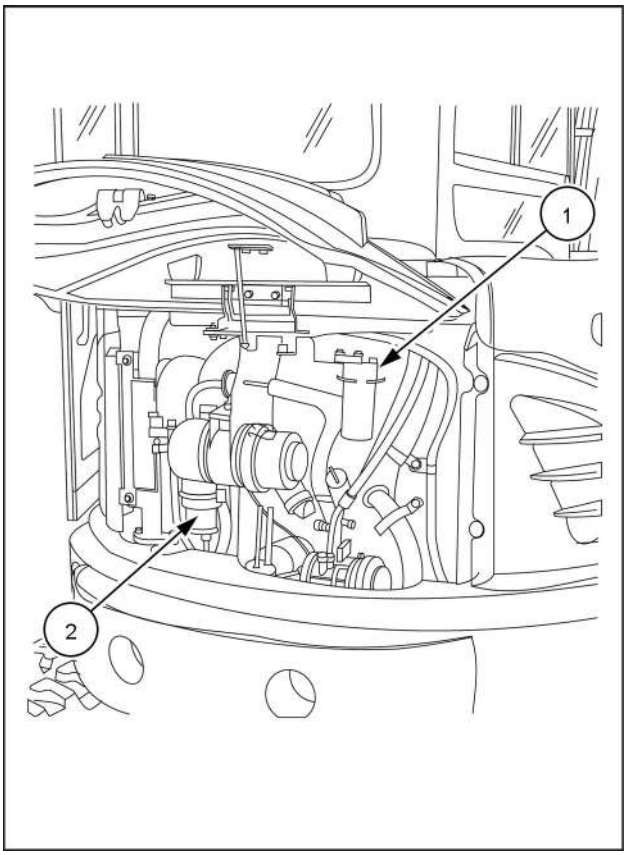

SMIL16MEX1533BA 1

https://truckmanualshub.com/

A. OUT (to the fuel injector pump)
B. IN (from the fuel injector pump)
C. IN (from the fuel feed pump)
D. OUT (to the fuel tank)

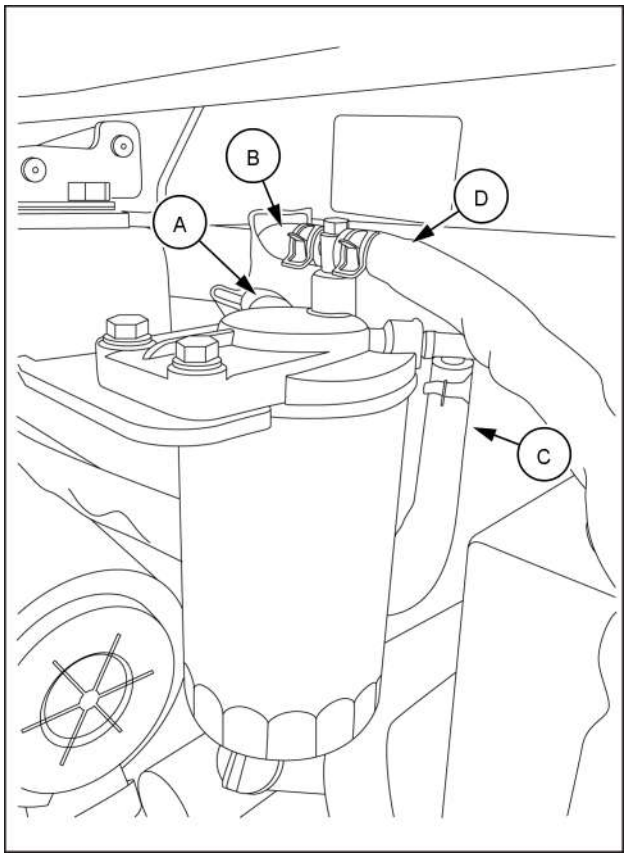

SMIL18MEX0534BA 2

4. Remove the fuel filter **(1)** with a filter wrench, turning it to the left. When removing the fuel filter, carefully hold it to prevent spilling of fuel. Wipe up all spilled fuel.
5. Apply a thin film of fuel to the surface of the new fuel filter gasket before tighten it.
6. Install the new fuel filter **(1)**. Turn to the right and tighten to **20.0 – 24.0 N·m** (**14.8 – 17.7 lb ft**)
7. Open the fuel cock on the fuel-water separator filter. Start the engine and check for fuel leakage.
8. Bleed the fuel system. Refer to page **6-15**.

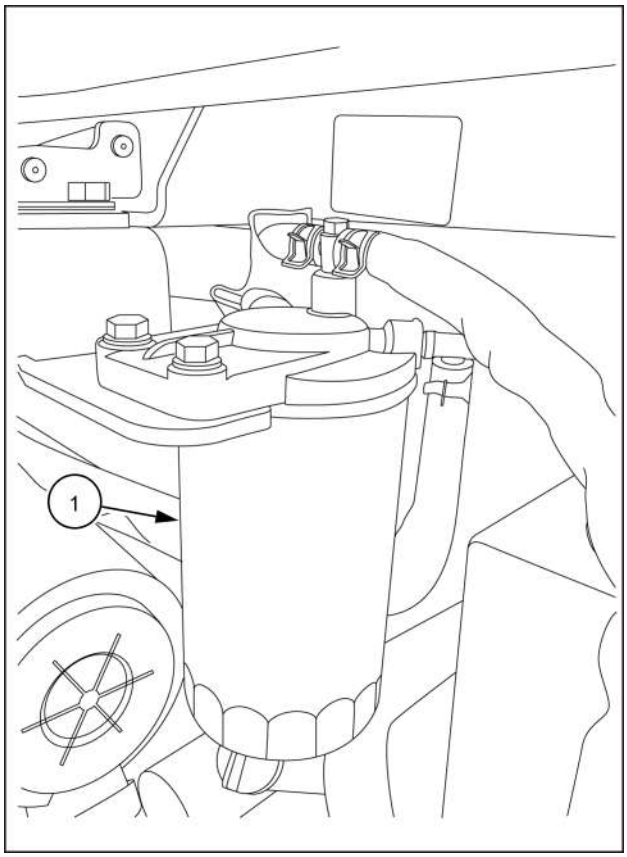

SMIL18MEX0534BA 3

https://truckmanualshub.com/

Air cleaner

⚠ CAUTION

Flying debris!
Compressed air can propel dirt, rust, etc. into the air. Wear eye and face protection when using compressed air.
Failure to comply could result in minor or moderate injury.

C0049A

Clean the air filter every **500 h** or when the “air cleaner warning light” appears on the instrument cluster. Replace the primary air filter element after four times cleaning. Replace the secondary air filter element only when the primary element is cleaned for the four times.

1. Open the engine access door to access to the air cleaner **(1)**.

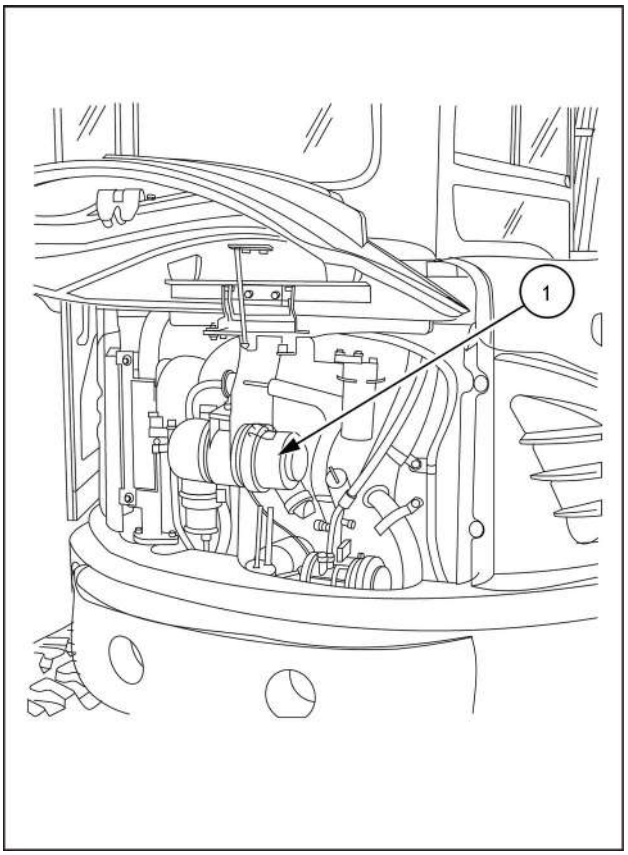

SMIL16MEX1533BA 1

2. Unlock the two fasteners **(1)**.

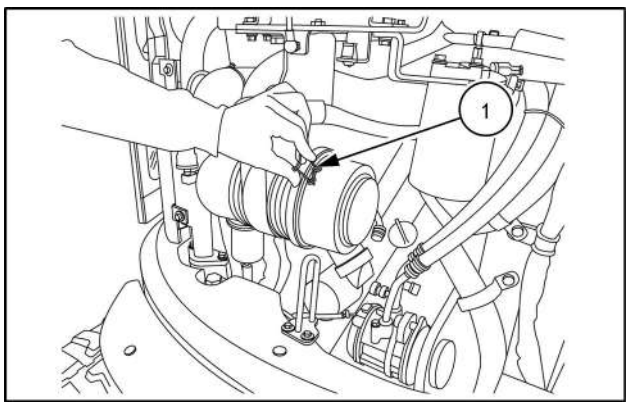

SMIL16MEX1529AA 2

https://truckmanualshub.com/

3. Remove the cover **(2)** of the air cleaner **(3)**.

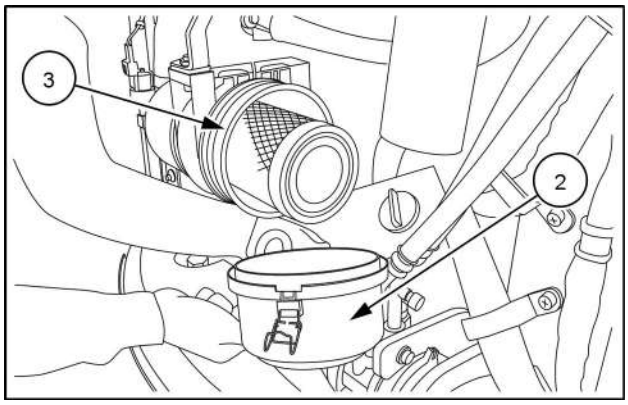

SMIL16MEX1530AA 3

4. Remove the primary element **(4)**.
5. Clean the primary element **(4)**.

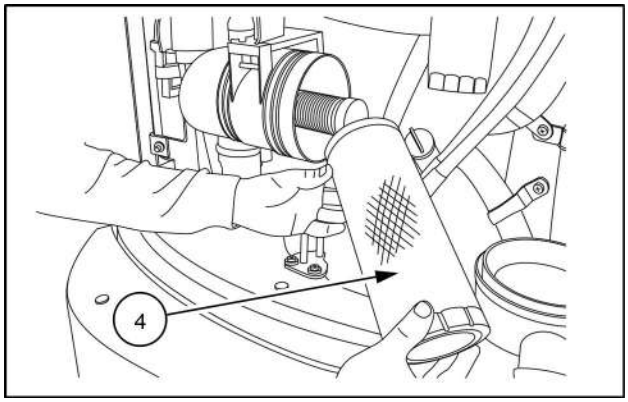

SMIL16MEX1531AA 4

When the primary element is dry:
Blow compressed air at very low pressure from the inside to the outside.
Hold the compressed air nozzle at a position at least **3 cm** (**1.181 in**) away from the inside wall of the element. When no more dust comes out of the primary element, cleaning is complete.

NOTE: *be sure to keep the compressed air pressure below* ***3 bar*** *(****44 psi****).*

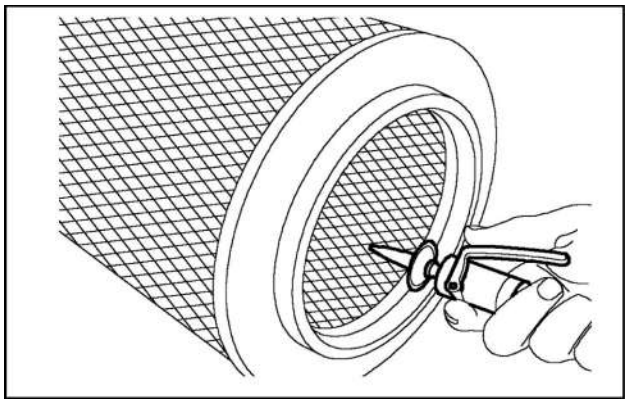

SMIL14CEX2795AA 5

NOTE: *do not use compressed air if there is oil or soot in the element.*

If the cartridge is greasy:
Clean it in water, with suitable detergent. (Consult your NEW HOLLAND CONSTRUCTION dealer).
Instructions for using the detergent are printed on the package.

NOTE: *dry the element out completely before installing it. It is advisable to keep a clean spare element ready that can be installed on the air cleaner while the cleaned element is drying.*

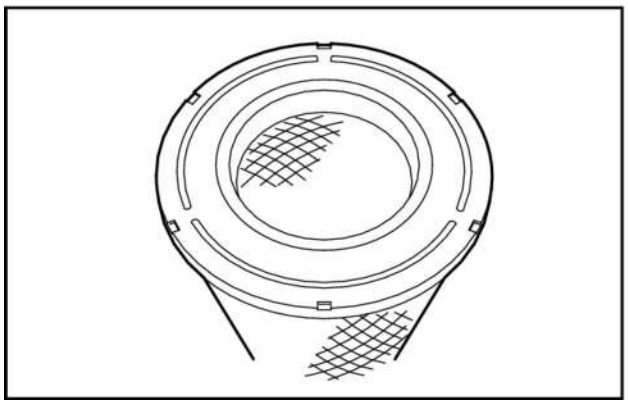

SMIL13CEX2757AA 6

https://truckmanualshub.com/

Inspecting the element

Check the element for damage by placing an inspection light inside the element.

NOTE: *change the element if light can be seen through a hole, however small.*

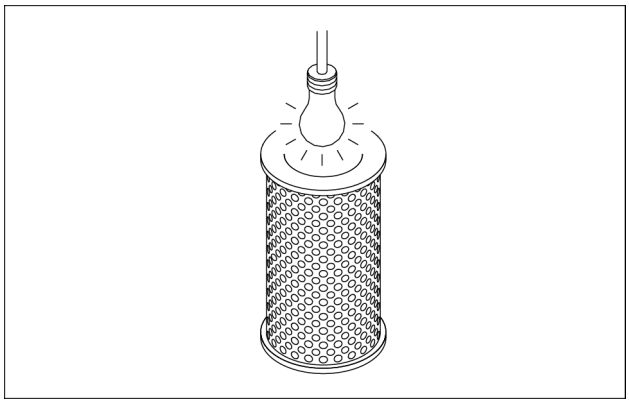

SMIL16MEX0434AA 7

6. Remove the secondary element **(5)**.

NOTE: *the secondary element **(5)** cannot be cleaned and must be changed.*

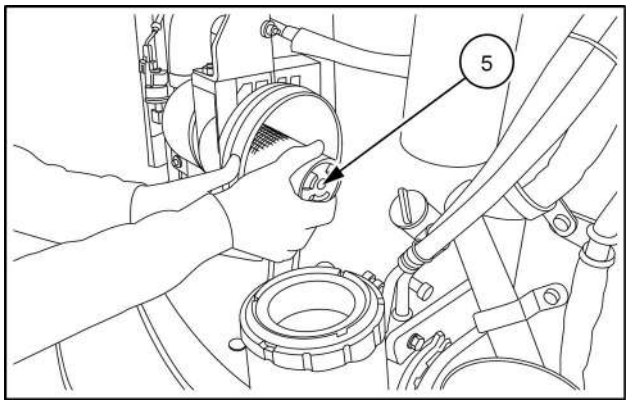

SMIL16MEX1532AA 8

7. Install the secondary element and the primary element into the air cleaner.
8. Install the cover **(1)**.

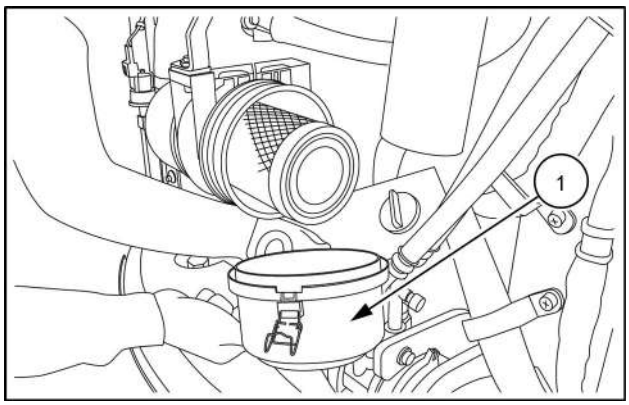

SMIL16MEX1530AA 9

9. Lock the two fasteners **(2)**.

NOTICE: *the air flow sensor is installed on the inlet duct of the air cleaner. Pay attention not to allow dust to enter the inlet duct when replacing the air cleaner element.*

NOTE: *if, after cleaning, smoke exhaust is abnormal, be sure to replace the primary element of the air cleaner.*

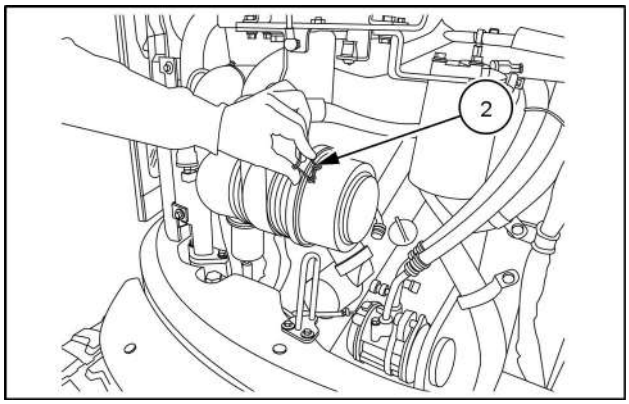

SMIL16MEX1529AA 10

https://truckmanualshub.com/

Radiator and coolers

⚠ CAUTION

Flying debris!
Compressed air can propel dirt, rust, etc. into the air. Wear eye and face protection when using compressed air.
Failure to comply could result in minor or moderate injury.

C0049A

Clean the radiator every **500 h**.

1. Stop the engine and remove the starter key.
2. Open the engine access door.
3. Visually inspect the radiator for clogged radiator fins.

NOTICE: *overheat may occur if the radiator fin, or the oil cooler fin is clogged.*

NOTE: *after working in a dusty place, clean radiator more frequently.*

4. Use compressed air to blow away mud or dirt that have clogged the radiator fin. Blow the air in the opposite direction of the fan air flow.

NOTICE: *in presence of greasy or oily dust, consult your NEW HOLLAND CONSTRUCTION dealer in order to carry out a special cleaning operation.*

NOTICE: *use compressed air pressure of maximum* ***550 kPa*** *(****79.8 psi****).*

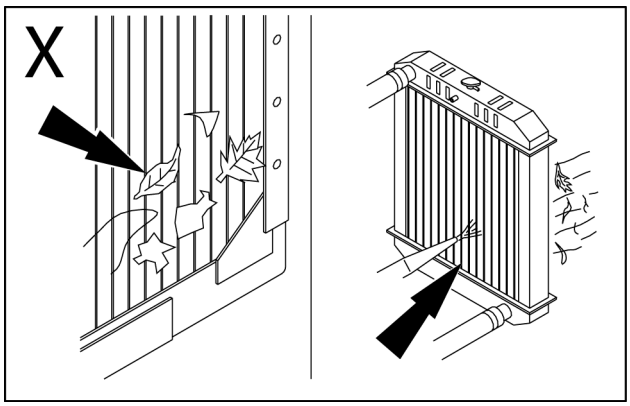

SMIL16MEX1454AB 1

5. Visually inspect the radiator for bent or broken fins.
6. Visually inspect the radiator for core and gasket leaks.

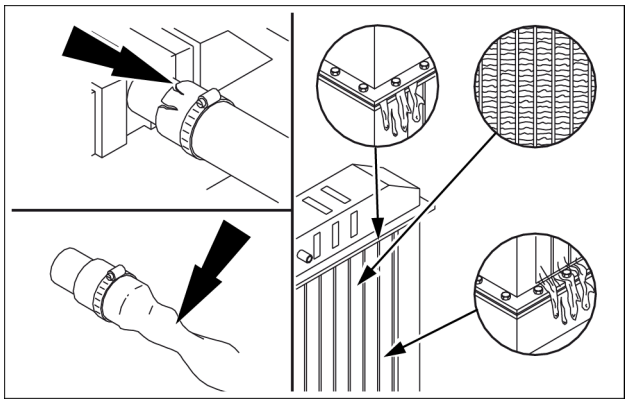

SMIL16MEX0431AA 2

https://truckmanualshub.com/

Every 1000 hours

Hydraulic oil return filter

⚠ WARNING

Burn hazard!
Before performing any service on the hydraulic system, you must allow it to cool. Hydraulic fluid temperature should not exceed 40 °C (104 °F).
Failure to comply could result in death or serious injury.

W0241A

⚠ WARNING

Pressurized system!
Never attempt to drain fluids or remove filters when the engine is running. Turn off the engine and relieve all pressure from pressurized systems before servicing the machine.
Failure to comply could result in death or serious injury.

W0905A

Replace the hydraulic oil return filter every **1000 h**.

NOTICE: *when the machine is a new vehicle, or when the main components of the hydraulic system are already overhauled or replaced, replace the oil return filter after **250 h** of operation. After that, replace the filter at specified intervals.*

1. Release all the pressure in the hydraulic tank. Refer to page **6-10**.
2. Clean the top of the hydraulic oil tank, and clean the cover of the return filter.
3. Remove the bolts **(1)**, the cover **(2)** and the O-ring **(3)**.
4. Take out the spring **(4)**, the by-pass valve **(5)**, and the return filter **(6)**.
5. Install a new filter **(6)**.
6. Clean and install the spring **(4)** and the by-pass valve **(5)**. Check the O-ring **(3)**, and replace it if any wear or damage is found.
7. Install the cover **(2)** and lock with the bolts **(1)**. Tighten the bolts **(1)** to **55 – 83 N·m** (**40.6 – 61.2 lb ft**).
8. Check the hydraulic fluid level, and fill it if necessary.

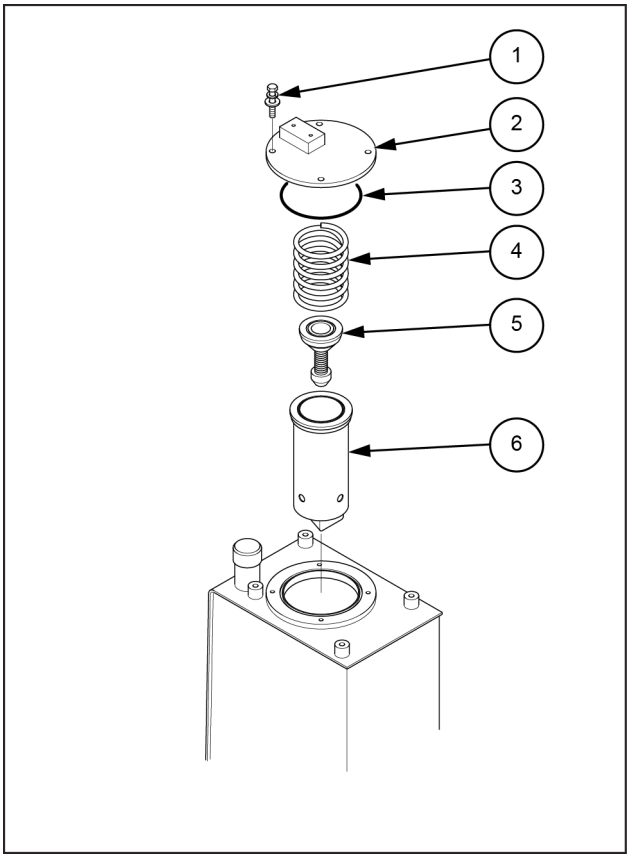

SMIL16MEX1474BB 1

https://truckmanualshub.com/

Pilot line filter

⚠ WARNING

Burn hazard!
Before performing any service on the hydraulic system, you must allow it to cool. Hydraulic fluid temperature should not exceed 40 °C (104 °F).
Failure to comply could result in death or serious injury.

W0241A

⚠ WARNING

Pressurized system!
Never attempt to drain fluids or remove filters when the engine is running. Turn off the engine and relieve all pressure from pressurized systems before servicing the machine.
Failure to comply could result in death or serious injury.

W0905A

Replace the pilot line filter every **1000 h** (after the break-in period).

NOTICE: *when the machine is a new vehicle, or when the main components of the hydraulic system are already overhauled or replaced, replace the oil return filter after* ***250 h*** *of operation. After that, replace the filter at specified intervals.*

1. Release all the pressure in the hydraulic tank. Refer to page **6-10**.
2. Open the side hood and locate the pilot line filter.
3. Loosen the nut positioned on the filter body.
4. Pull out the pilot line filter element and clean the filter housing.
5. Install the new filter and tighten.

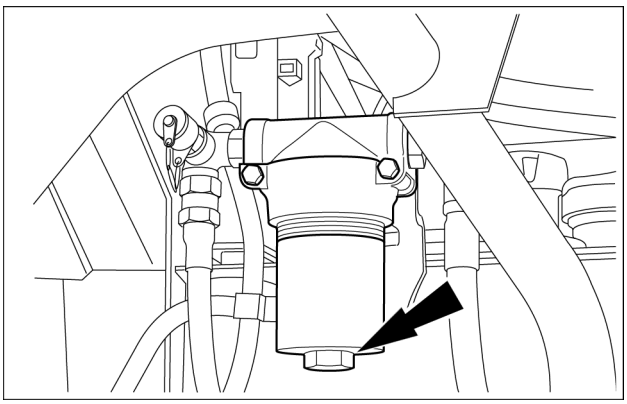

SMIL16MEX1162AA 1

https://truckmanualshub.com/

Travel reduction gears

Replace the travel reduction gears oil every **1000 h** (after the break-in period).
Lubricant: **HYPOID GEAR OIL EXTREME PRESSURE 80W-90**
Quantity: **0.5 L** (**0.1 US gal**) (per travel reduction gear)

1. Park the machine on flat, horizontal ground.
2. Move the machine so that the drain plug **(1)** comes down to the lowest position.
3. Stop the engine, and remove the starter key.
4. Place a container with an appropriate capacity under the travel reduction gear.
5. Remove the level plug **(2)**.
6. Remove the drain plug **(1)**.

NOTE: *check the condition of the drained oil. If there are pieces of metal or foreign objects in the oil, consult the NEW HOLLAND CONSTRUCTION dealer.*

7. Replace the O-ring seal of the drain plug **(1)**.
8. Insert the drain plug **(1)** with seal tape wrapped around it.
9. Replace the O-ring seal of the level plug **(2)** and the O-ring seal of the fill plug **(3)**. Insert the level plug **(2)** with seal tape wrapped around it, then do the same for the fill plug **(3)**.
10. Add oil through fill port **(3)** until the oil comes up to the bottom edge of the port **(2)**.
11. Repeat steps **2** to **10** for the other travel reduction gear.
12. Run the machine slowly to check that there are no leaks.

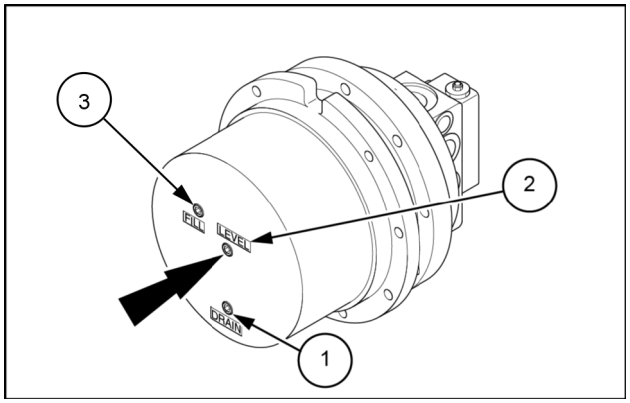

SMIL16MEX1456AA 1

Valve clearance

Check the valve clearance every **1000 h**.

NOTICE: *to check the valve clearance refer to your NEW HOLLAND CONSTRUCTION dealer.*

Injection nozzle

Check the injection nozzle pressure every **1000 h**.

NOTICE: *to check the injection nozzle pressure refer to your NEW HOLLAND CONSTRUCTION dealer.*

https://truckmanualshub.com/

Every 2000 hours

Air cleaner

Replace the air cleaner every **2000 h**.

1. Open the engine access door to access to the air cleaner **(1)**.

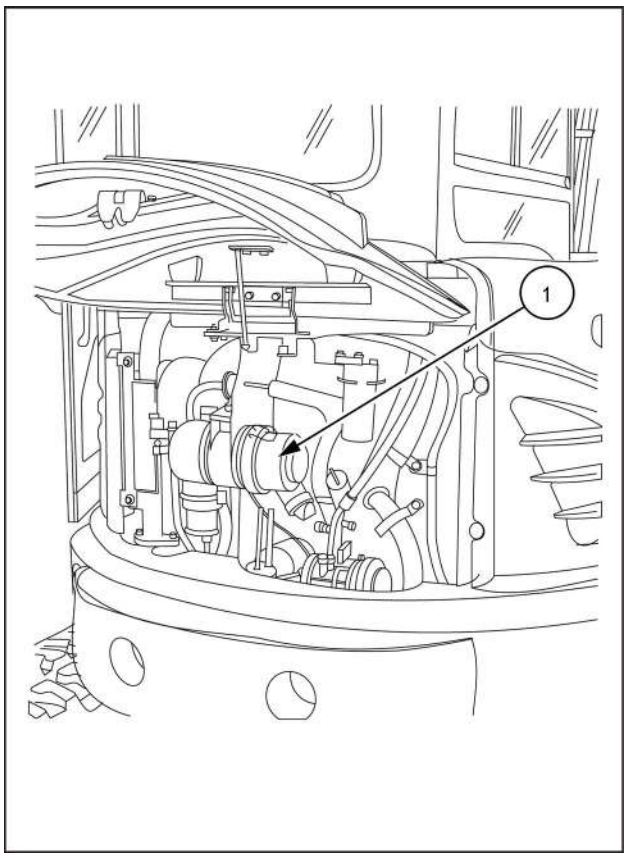

SMIL16MEX1533BA 1

2. Unlock the two fasteners **(1)**.

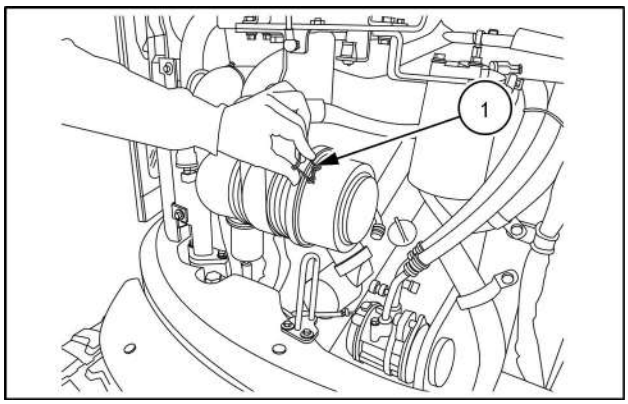

SMIL16MEX1529AA 2

https://truckmanualshub.com/

3. Remove the cover **(2)** of the air cleaner **(3)**.

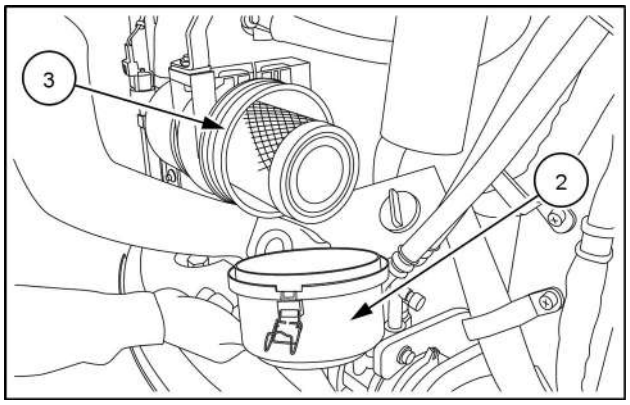

SMIL16MEX1530AA 3

4. Remove the primary element **(4)**.

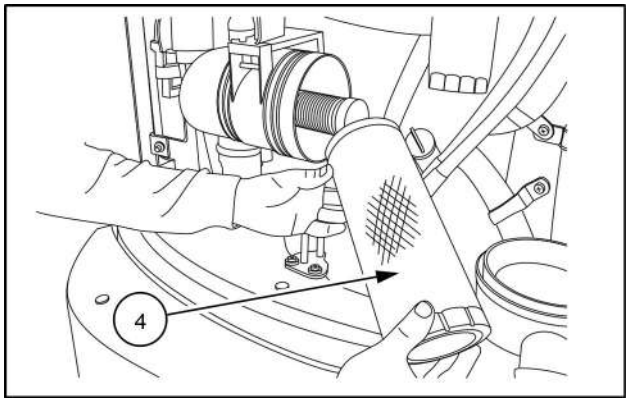

SMIL16MEX1531AA 4

5. Remove the secondary element **(5)**.

NOTE: *the secondary element **(5)** cannot be cleaned and must be changed.*

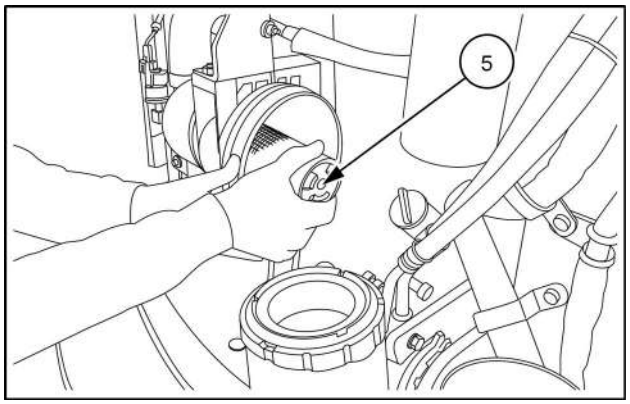

SMIL16MEX1532AA 5

6. Install the secondary element and the primary element into the air cleaner.
7. Install the cover **(1)**.

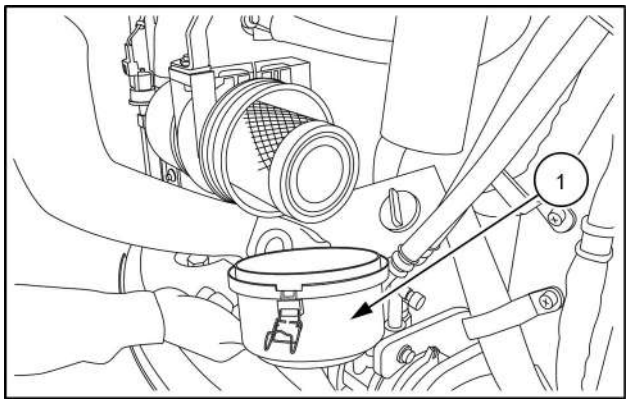

SMIL16MEX1530AA 6

https://truckmanualshub.com/

8. Lock the two fasteners **(2)**.

NOTICE: *the air flow sensor is installed on the inlet duct of the air cleaner. Pay attention not to allow dust to enter the inlet duct when replacing the air cleaner element.*

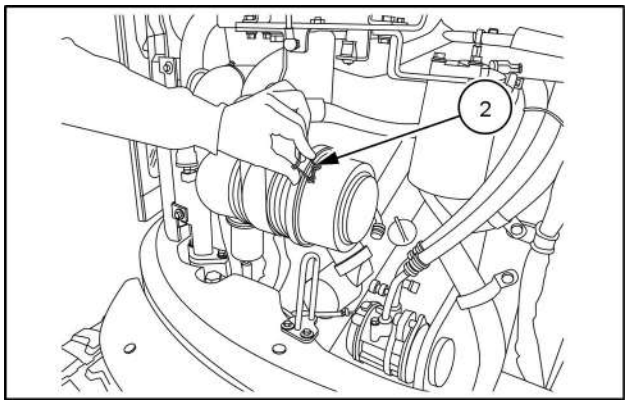

SMIL16MEX1529AA 7

https://truckmanualshub.com/

Engine coolant

⚠ WARNING

Hazardous chemicals!
Coolant can be toxic. Avoid contact with skin, eyes, and clothing. Antidotes:
EXTERNAL - Rinse thoroughly with water. Remove soiled clothing.
INTERNAL - Rinse the mouth with water. DO NOT induce vomiting. Seek immediate medical attention.
EYES - Flush with water. Seek immediate medical attention.
Failure to comply could result in death or serious injury.

W0282A

⚠ WARNING

Burn hazard!
Hot coolant can spray out if you remove the filler cap while the system is hot. After the system has cooled, turn the filler cap to the first notch and wait for all pressure to release before proceeding.
Failure to comply could result in death or serious injury.

W1469A

Replace the engine coolant every **2000 h**.
Fluid: **OAT EXTENDED LIFE COOLANT/ANTIFREEZE**
Quantity (antifreeze/water mixture): **5 L** (**1.3 US gal**)

Draining the system

1. Open the right-hand side access cap to access to the radiator.
2. Remove the radiator cap.

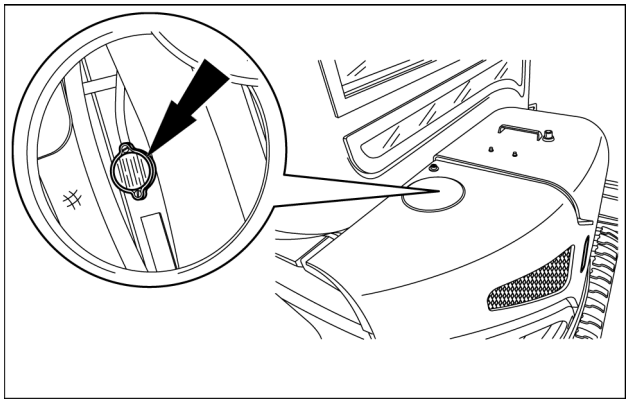

SMIL19MEX0426AA 1

3. Place a container with a capacity of **11 L** (**2.9 US gal**) under the radiator drain plug.

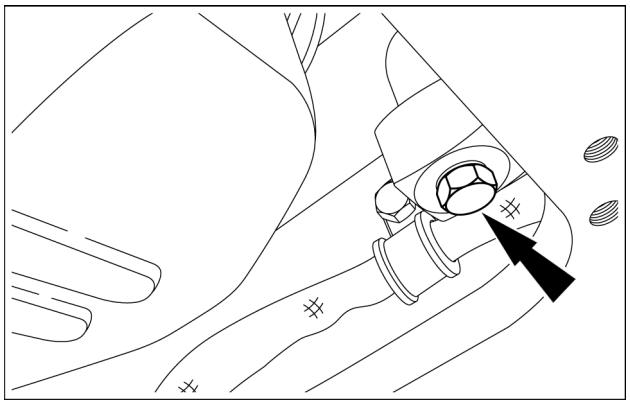

SMIL19MEX0425AA 2

https://truckmanualshub.com/

4. Open the valve heater (only for cab version).
5. Drain the engine coolant by opening the drain plug. Use a wrench **17 mm**
6. Tighten the drain plug to **18 – 22 N·m** (**13 – 16 lb ft**)

NOTICE: *after draining coolant, do not start the engine with no water in the radiator. Failure to observe this causes damage to the engine.*

NOTE: *drained coolant should be disposed of by the specified method.*

7. Before refill proceed to flushing the system.

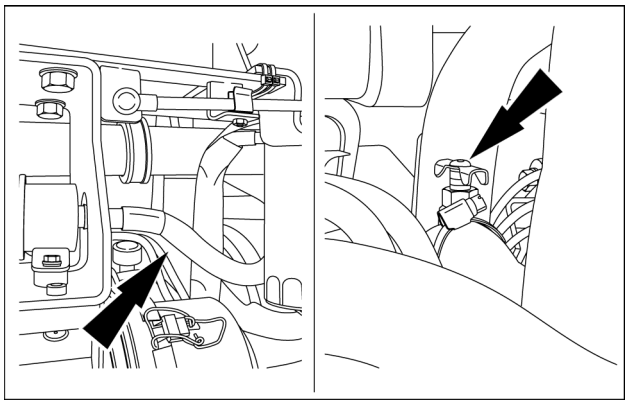

SMIL19MEX0423AA 3

https://truckmanualshub.com/

Flushing the system

8. Fill the system with a mixture of sodium carbonate and water (or a commercially available equivalent).

NOTE: *use **0.5 kg** (**1.1 lb**) of sodium carbonate for every **23 L** (**6.1 US gal**) of water.*

9. Do not install the radiator cap. The engine is to be operated without the cap for this process.
10. Operate the engine for **5 min** and let the coolant temperature arrives above **80 °C** (**176 °F**).
11. Stop the engine and drain the cleaning mixture.
12. Fill the cooling system with clean water.

NOTE: *be sure to vent the engine and radiator for complete filling. Do not install the radiator cap or new coolant filter.*

13. Operate the engine for **5 min** and let the coolant temperature arrives above **80 °C** (**176 °F**).
14. Stop the engine, and drain the cooling system.

NOTE: *if the water being drained is still dirty, the system must be flushed again until the water is clean.*

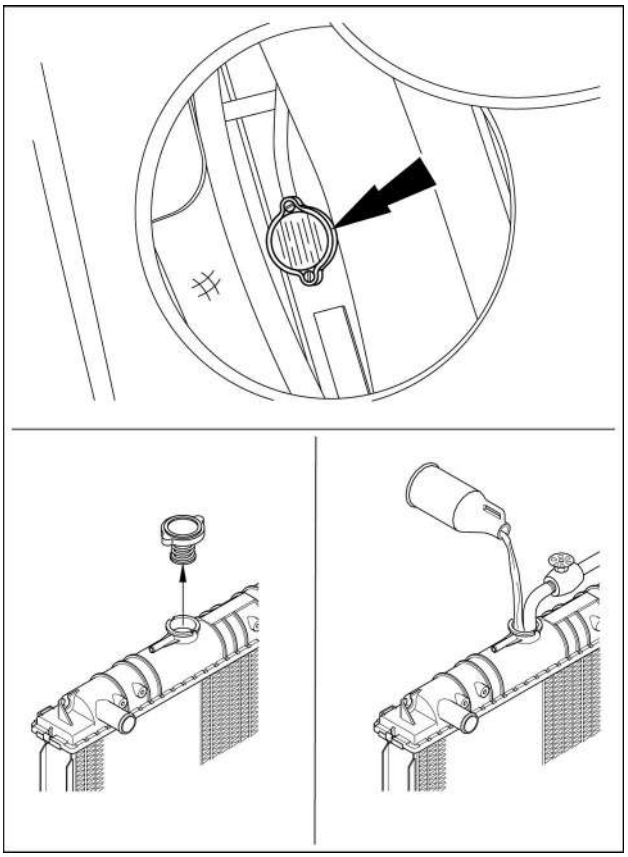

SMIL19MEX0428BA 4

Filling the system

15. Fill the cooling system with coolant.

NOTE: *the system has a maximum fill rate of **14 L/min** (**3.7 US gpm**). Do not exceed this fill rate.*

16. The system must be filled slowly to prevent air locks. Supply coolant up to the FULL mark of the reserve tank.
17. During filling, air must be vented from the engine coolant passage.
18. Install the radiator cap.
19. Start the engine until it reaches a temperature of **80 °C** (**176 °F**), and check for coolant leaks.
20. Check the coolant level again to make sure the system is full of coolant.

https://truckmanualshub.com/

Hydraulic oil suction filter

⚠ WARNING

Burn hazard!
Before performing any service on the hydraulic system, you must allow it to cool. Hydraulic fluid temperature should not exceed 40 °C (104 °F).
Failure to comply could result in death or serious injury.

W0241A

⚠ WARNING

Pressurized system!
Never attempt to drain fluids or remove filters when the engine is running. Turn off the engine and relieve all pressure from pressurized systems before servicing the machine.
Failure to comply could result in death or serious injury.

W0905A

Clean the hydraulic oil suction filter every **2000 h**.

NOTICE: *do not remove the hydraulic oil suction filter from the hydraulic tank before the hydraulic tank was empty.*

1. Clean the top of the hydraulic tank, and clean the cover of the inlet filter.
2. Remove the four bolts **(1)**, and the suction cover **(2)** from the hydraulic oil tank.
3. Remove the oil suction filter **(3)**, and clean it with a solvent.
4. Let it dry completely, and check for damage. If any damage is found on its surface, replace it with a new component.
5. Install a new O-ring **(4)**, and install the oil suction filter on the suction cover **(2)**. Lock the suction cover **(2)** with the four bolts **(1)**.
   Tighten the bolts **(1)** to **55 – 83 N·m** (**40.6 – 61.2 lb ft**).
6. Check the hydraulic fluid level, and add if necessary.

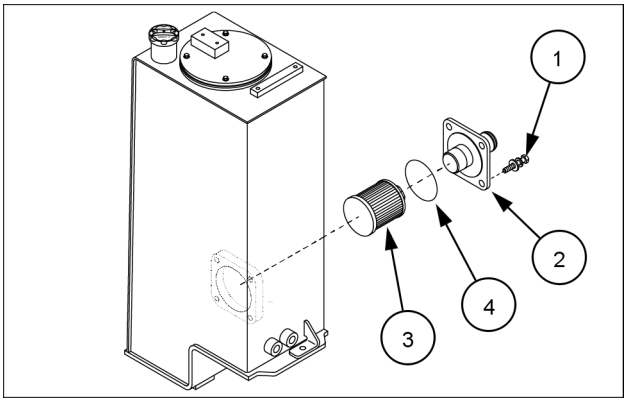

SMIL16MEX0438AA 1

https://truckmanualshub.com/

Hydraulic hoses

⚠ WARNING

Escaping fluid!
Hydraulic fluid or diesel fuel leaking under pressure can penetrate the skin and cause infection or other injury. To prevent personal injury: Relieve all pressure before disconnecting fluid lines or performing work on the hydraulic system. Before applying pressure, make sure all connections are tight and all components are in good condition. Never use your hand to check for suspected leaks under pressure. Use a piece of cardboard or wood for this purpose. If injured by leaking fluid, see your doctor immediately.
Failure to comply could result in death or serious injury.

W0178A

Check fuel, coolant and hydraulic hoses every 2 years or every **2000 h** (whichever comes first).

Checking fuel, coolant and hydraulic hoses

Make sure there are no leaks from the hydraulic system hoses (fuel, coolant, hydraulic), plugs, connections and fittings. Check that all nuts and screws are correctly tightened. In the event of problems, repair, change or tighten the components concerned.

Valve seat

Adjust the valve seat every **2000 h**.

NOTICE: *to adjust the valve seat refer to your NEW HOLLAND CONSTRUCTION dealer.*

Injection timing

Check the injection timing every **2000 h**.

NOTICE: *to check the injection timing refer to your NEW HOLLAND CONSTRUCTION dealer.*

Injection pump

Check the injection pump every **2000 h**.

NOTICE: *to check the injection pump refer to your NEW HOLLAND CONSTRUCTION dealer.*

https://truckmanualshub.com/

Biodegradable hydraulic oil

⚠ WARNING

Burn hazard!
Before performing any service on the hydraulic system, you must allow it to cool. Hydraulic fluid temperature should not exceed 40 °C (104 °F).
Failure to comply could result in death or serious injury.

W0241A

⚠ WARNING

Pressurized system!
Never attempt to drain fluids or remove filters when the engine is running. Turn off the engine and relieve all pressure from pressurized systems before servicing the machine.
Failure to comply could result in death or serious injury.

W0905A

⚠ WARNING

Escaping fluid!
Hydraulic fluid or diesel fuel leaking under pressure can penetrate the skin and cause infection or other injury. To prevent personal injury: Relieve all pressure before disconnecting fluid lines or performing work on the hydraulic system. Before applying pressure, make sure all connections are tight and all components are in good condition. Never use your hand to check for suspected leaks under pressure. Use a piece of cardboard or wood for this purpose. If injured by leaking fluid, see your doctor immediately.
Failure to comply could result in death or serious injury.

W0178A

Replace the hydraulic oil every **2000 h**
Fluid: BIODEGRADABLE OIL ISO VG 46
Quantity: **37 L** (**9.8 US gal**)

NOTICE: *when using the hydraulic breaker, reduce the interval of the hydraulic oil replacement. Refer to page* ***9-26***

1. Release all the pressure in the hydraulic tank. Refer to page **6-10**.
2. Lower the bucket on the ground pulling the arm and bucket cylinder to the maximum cylinder extension.

https://truckmanualshub.com/

3. Open the side hood and loosen the filling cap.

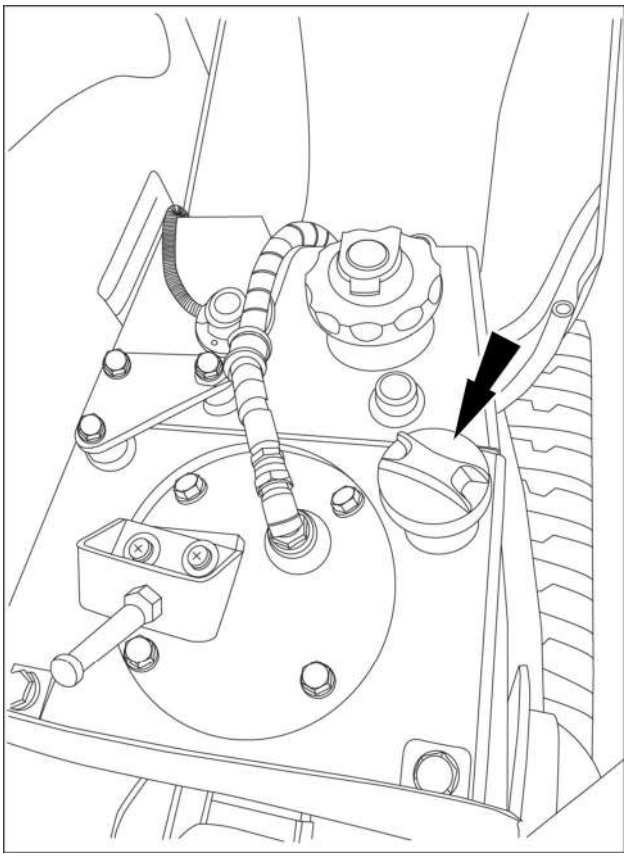

SMIL16MEX1471BA 1

4. Place a container with a capacity of **40 L** (**10.6 US gal**) under the drain plug. Loosen the drain plug at the bottom of the hydraulic oil tank.
5. When the hydraulic oil is drained, clean the hydraulic oil suction filter, refer to page **6-61**.
6. Tighten the drain plug.
7. Add new hydraulic oil to the tank.
8. Tighten the filling cap on the hydraulic oil tank.
9. Using a solvent, clean the periphery of the air bleed plug at top of the hydraulic pump. Loosen the air bleed plug. If no fluid comes out, remove the plug, and fill the pump with new clean hydraulic fluid.
10. Tighten the air bleed plug on the hydraulic pump.
11. Start the engine, and run it with no load for about **5 min**.
12. Move each control several times to remove all air from the system.
13. Park the machine at the specified position, and then stop the engine.
14. Check the oil level of the hydraulic tank, refill it with oil as necessary. Check that there are no bubbles in the hydraulic tank.
15. Loosen the air bleed plug on the pump, and check that air free fluid comes out from the bleed port.

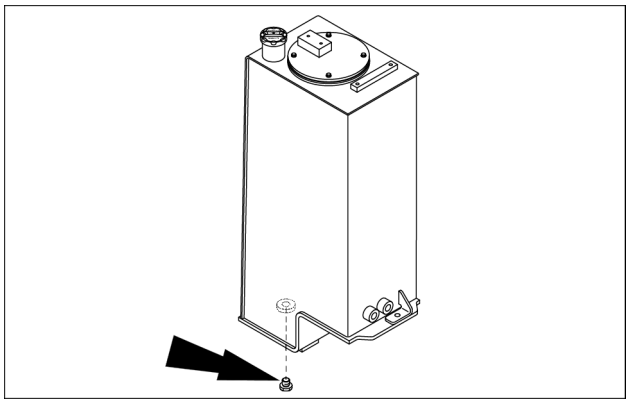

SMIL16MEX0437AA 2

https://truckmanualshub.com/

Every 5000 hours

Hydraulic oil

⚠ WARNING

Burn hazard!
Before performing any service on the hydraulic system, you must allow it to cool. Hydraulic fluid temperature should not exceed 40 °C (104 °F).
Failure to comply could result in death or serious injury.

W0241A

⚠ WARNING

Pressurized system!
Never attempt to drain fluids or remove filters when the engine is running. Turn off the engine and relieve all pressure from pressurized systems before servicing the machine.
Failure to comply could result in death or serious injury.

W0905A

⚠ WARNING

Escaping fluid!
Hydraulic fluid or diesel fuel leaking under pressure can penetrate the skin and cause infection or other injury. To prevent personal injury: Relieve all pressure before disconnecting fluid lines or performing work on the hydraulic system. Before applying pressure, make sure all connections are tight and all components are in good condition. Never use your hand to check for suspected leaks under pressure. Use a piece of cardboard or wood for this purpose. If injured by leaking fluid, see your doctor immediately.
Failure to comply could result in death or serious injury.

W0178A

Replace the hydraulic oil every **5000 h**
Fluid: **PREMIUM HYDRAULIC OIL HV46 MULTI-GRADE ANTIWEAR**
Quantity: **37 L** (**9.8 US gal**)

NOTICE: *when using the hydraulic breaker, reduce the interval of the hydraulic oil replacement. Refer to page* ***Hydraulic oil - breaker/auger***

1. Release all the pressure in the hydraulic tank. Refer to page **6-10**.
2. Lower the bucket on the ground pulling the arm and bucket cylinder to the maximum cylinder extension.

https://truckmanualshub.com/

3. Open the side hood and loosen the filling cap.

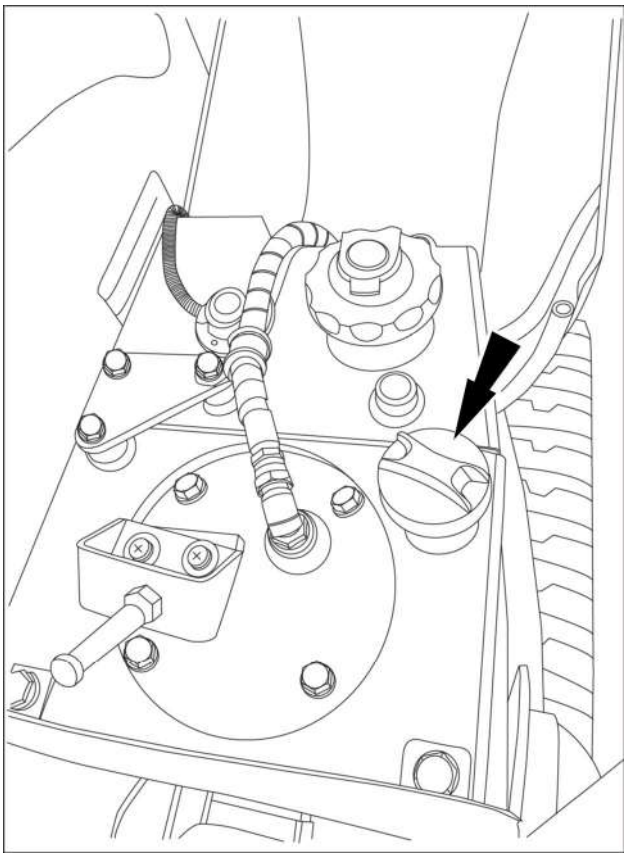

SMIL16MEX1471BA 1

4. Place a container with a capacity of **40 L** (**10.6 US gal**) under the drain plug. Loosen the drain plug at the bottom of the hydraulic oil tank.
5. When the hydraulic oil is drained, clean the hydraulic oil suction filter, refer to page **6-61**.
6. Tighten the drain plug.
7. Add new hydraulic oil to the tank.
8. Tighten the filling cap on the hydraulic oil tank.
9. Using a solvent, clean the periphery of the air bleed plug at top of the hydraulic pump. Loosen the air bleed plug. If no fluid comes out, remove the plug, and fill the pump with new clean hydraulic fluid.
10. Tighten the air bleed plug on the hydraulic pump.
11. Start the engine, and run it with no load for about **5 min**.
12. Move each control several times to remove all air from the system.
13. Park the machine at the specified position, and then stop the engine.
14. Check the oil level of the hydraulic tank, refill it with oil as necessary. Check that there are no bubbles in the hydraulic tank.
15. Loosen the air bleed plug on the pump, and check that air free fluid comes out from the bleed port.

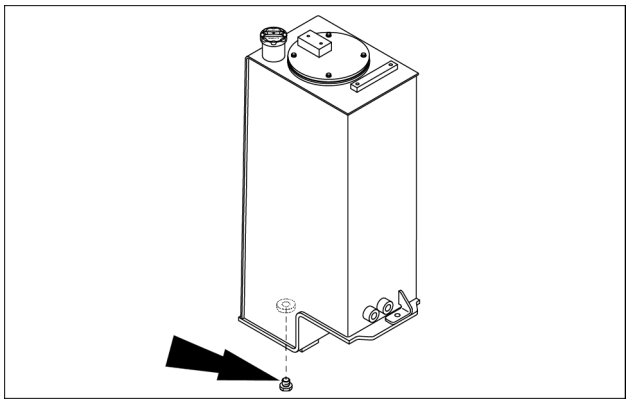

SMIL16MEX0437AA 2

https://truckmanualshub.com/

When necessary

Cab and working lights

Cab light

1. Remove the two retaining screws.

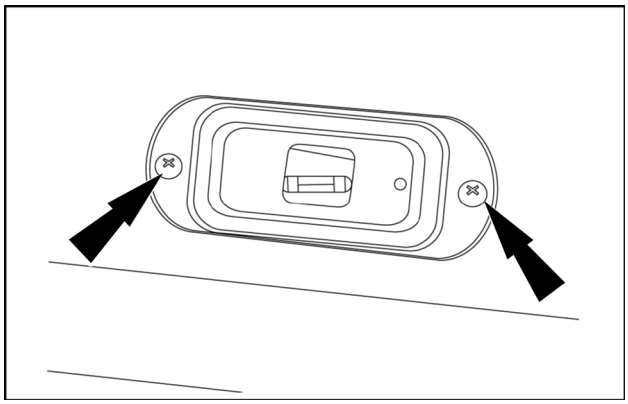

SMIL16MEX0921AA 1

2. Extract the ceiling light **(1)** and pull out the bulb **(2)**.

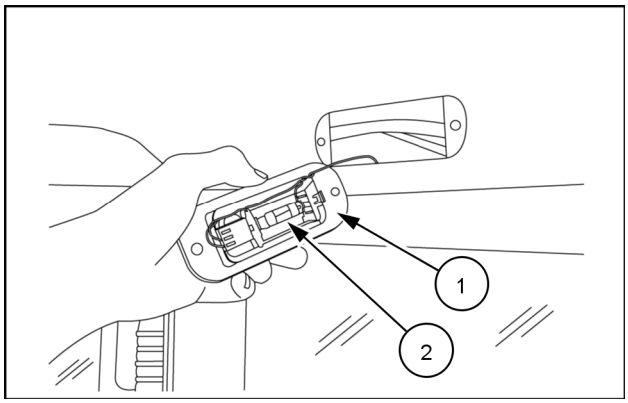

SMIL16MEX0922AA 2

3. Install a new **5 W** bulb in the ceiling light.
4. Put the ceiling light back into position and tighten by means of the two retaining screws.

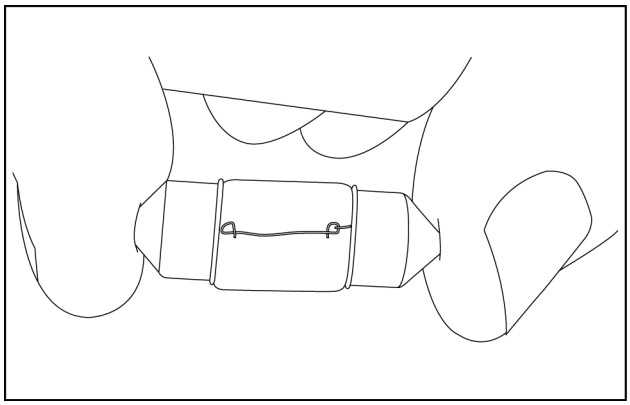

SMIL16MEX0934AA 3

https://truckmanualshub.com/

Halogen working lights

1. Remove the two retaining screws.

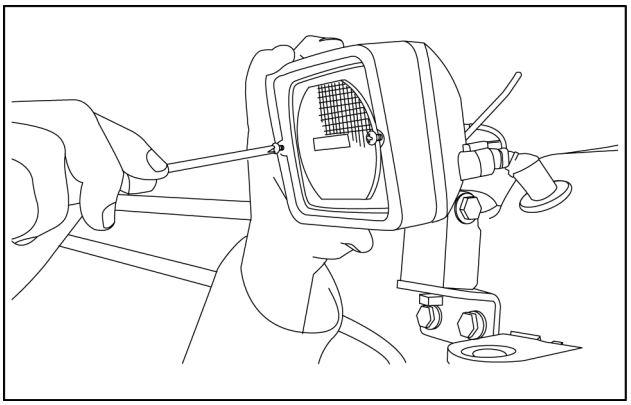

SMIL16MEX0939AA 4

2. Extract the working light **(1)** and disconnect the bulb plug **(2)**.

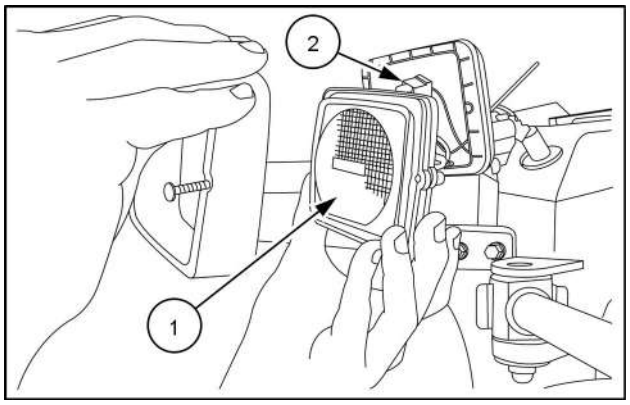

SMIL16MEX0935AA 5

3. Pull the clip outwards **(1)** and remove the bulb **(2)**.

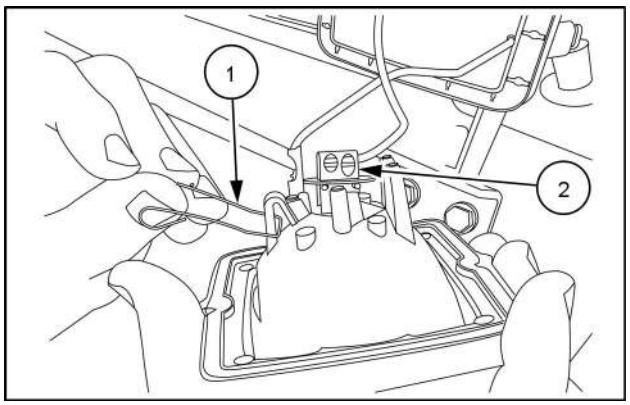

SMIL16MEX0937AA 6

4. Install a new **55 W** bulb in the working light.

NOTE: *make sure of the correct position of the bulb.*

5. Push the clip inwards in order to lock the bulb.
6. Connect the bulb plug.
7. Put the working light back into position and tighten by means of the two retaining screws.

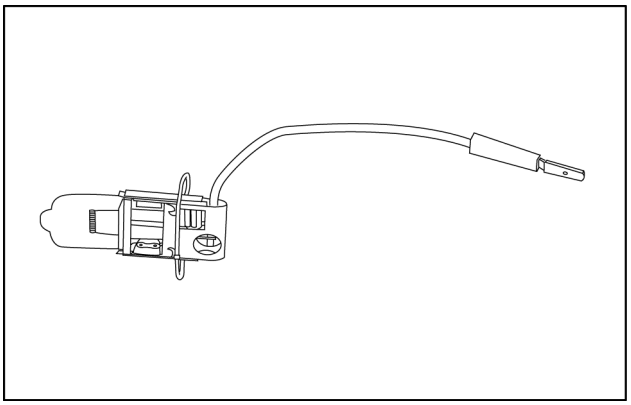

SMIL16MEX0938AA 7

https://truckmanualshub.com/

LED working lights

LED lights are located on both the cab **(1)** and the arm **(2)** of the machine.

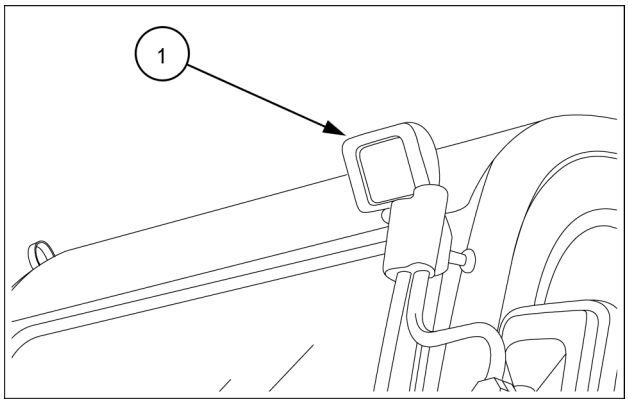

SMIL19MEX0279AA 8

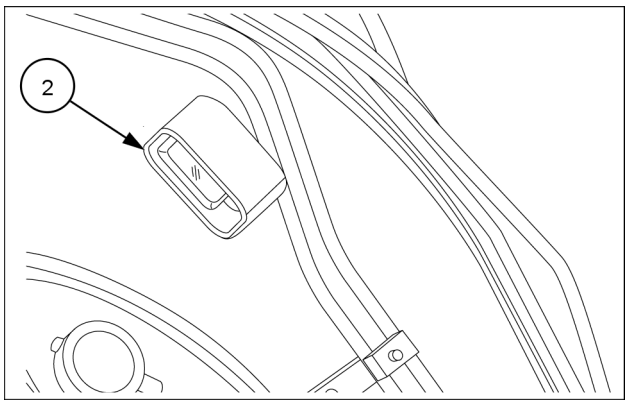

SMIL19MEX0278AA 9

To change the LED lights proceed as follows:

1. Disconnect the power connector **(1)**.
2. Loosen the M8 self-locking nut **(2)** and replace the LED light **11 W (3)**.

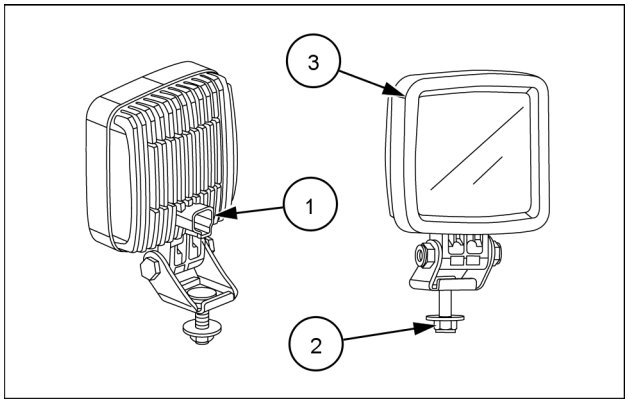

SMIL19MEX0290AA 10

3. Tighten the M8 self-locking nut **25 N·m** (**18.4 lb ft**) **(1)**.
4. Connect the power connection **(2)**.

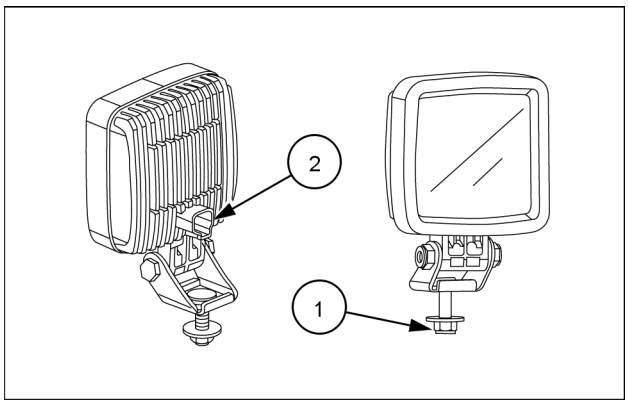

SMIL19MEX0290AA 11

https://truckmanualshub.com/

Cab air filter

⚠ CAUTION

Flying debris!
Compressed air can propel dirt, rust, etc. into the air. Wear eye and face protection when using compressed air.
Failure to comply could result in minor or moderate injury.

C0049A

Clean the cab heater filter when necessary.

1. Stop the engine before remove the cab heater filter.
2. Remove the screws **(1)** and the heater cover **(2)** on the right-hand side of cabin.
3. Remove the cab heater filter **(3)**.
4. Clean the cab heater filter using compressed air. Inspect the cab heater filter after cleaning. If it is damaged or badly contaminated, replace it.
5. Install the cleaned filter in the housing, insert the heater cover **(2)** and lock with the screws **(1)**.

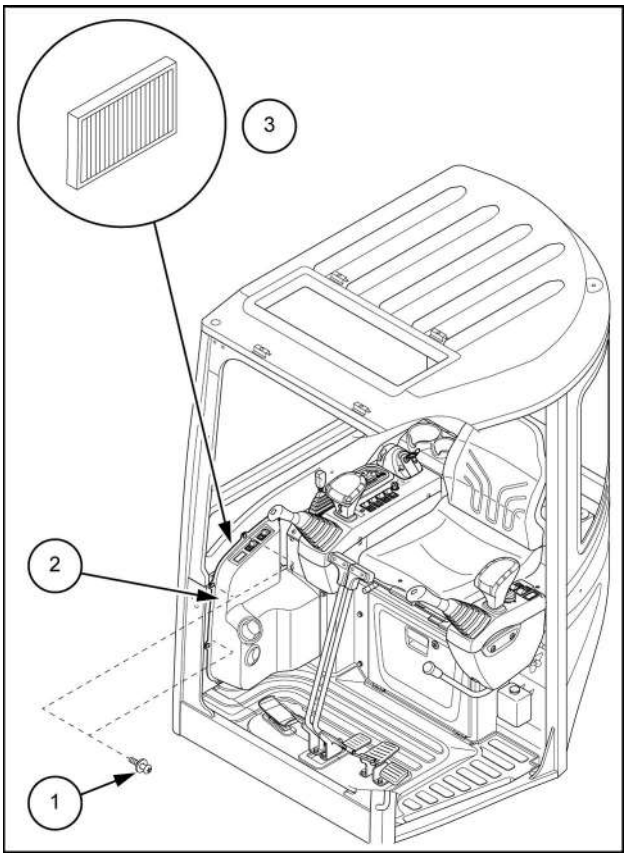

SMIL19MEX0788BB 1

https://truckmanualshub.com/

Fuel tank strainer

Clean the fuel tank strainer periodically

1. Remove the fuel cap.
2. Remove the fuel tank strainer located inside the fuel filler neck.
3. Inspect the fuel tank strainer for damage. If damaged, discard and replace. If in good condition, clean it in an environmentally safe manner.

NOTE: *diesel fuel is a preferred cleaning agent. Fuel must not be added to the tank unless the strainer is in place and in good working condition.*

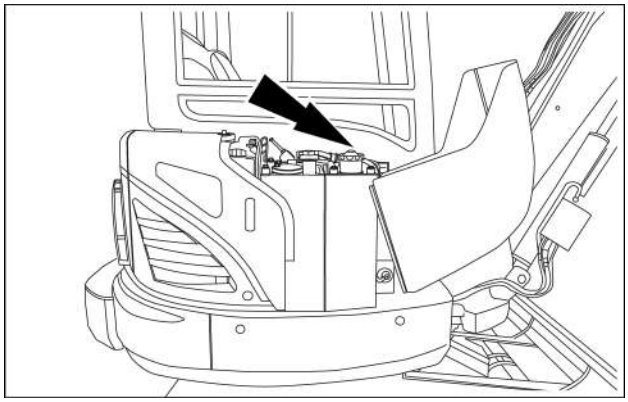

SMIL16MEX1451AA 1

https://truckmanualshub.com/

Control levers

Grease the hydraulic control levers when necessary
Fluid: **MULTI-PURPOSE GREASE EXTREME PRESSURE AND ANTI-WEAR NLGI 2**

1. Remove the bellow **(A)** from the control lever.
2. Use a grease gun and grease the joint part **(X)** and the sliding parts **(Y)**.
3. Repeat the same operation for the other hydraulic control lever.

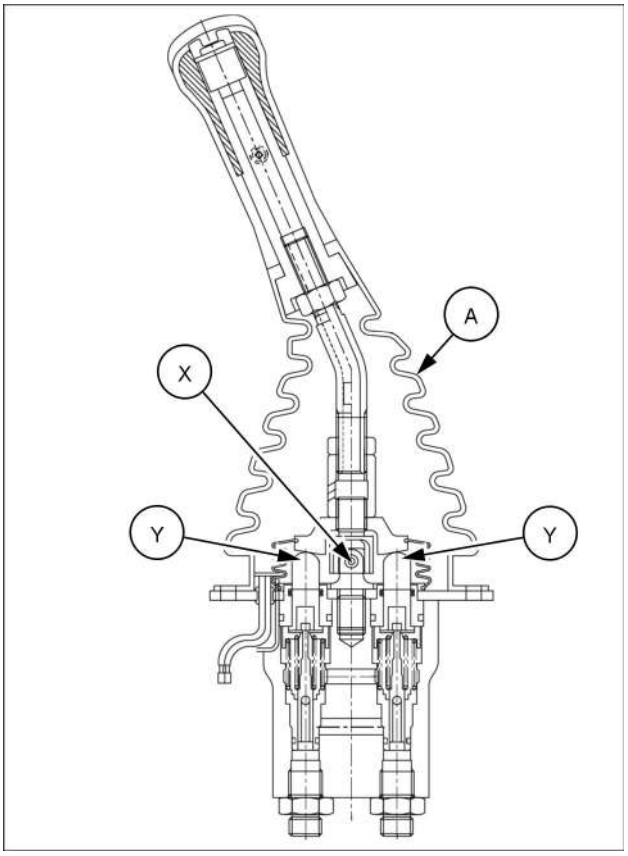

SMIL16MEX0443BA 1

Plastic and resin parts

Use a soft, slightly humid, cloth to clean the panels, the consoles, and the switches. Use a soft, dry cloth to clean the instrument cluster.

NOTICE: *do not use gasoline, kerosene, paint solvents. The use of gasoline, kerosene, paint solvents, etc. will cause discoloration, cracks or deformation of the parts.*

https://truckmanualshub.com/

Air-conditioning system

⚠ WARNING

Avoid chemical burns!
Wear protective goggles and non-permeable gloves when working with the fluorescent dye and leak testing an air-conditioning system.
Failure to comply could result in death or serious injury.

W0918A

⚠ WARNING

Maintenance hazard!
Never try to service the air-conditioning system yourself. Contact your dealer for service.
Failure to comply could result in death or serious injury.

W0268A

⚠ WARNING

Explosion hazard!
Air-conditioning refrigerant boils at -26 °C (-15 °F)!
-NEVER expose any part of the air-conditioning system to a direct flame or excessive heat.
-NEVER disconnect or disassemble any part of the air-conditioning system.
Discharging refrigerant gas into the atmosphere is illegal in many countries.
Failure to comply could result in death or serious injury.

W0340B

⚠ WARNING

Avoid injury!
Avoid breathing air-conditioning refrigerant, lubricant vapor or mist. If accidental system discharge occurs, ventilate the work area before resuming service.
Failure to comply could result in death or serious injury.

W1000B

⚠ WARNING

Avoid chemical burns!
Wear protective goggles and non-permeable gloves when working with the fluorescent dye and leak testing an air-conditioning system.
Failure to comply could result in death or serious injury.

W0918A

Check and charge when necessary the air-conditioning system

Safety regulations

The device for discharging and charging refrigerant is exclusively for professionally trained operators who must be familiar with refrigerating systems, refrigerant gases and the damage that the pressurised equipment can cause.

Before connecting the station to the system, make sure that all valves are closed.

Before disconnecting the station, check that the cycle has completed and that all valves are closed, this prevents refrigerant gas escaping into the atmosphere.

The station must operate in a well-ventilated area.

Do not tamper the safety valve and the control system settings.

Do not use cylinders or other containers which are not type-approved or equipped with safety valves.

https://truckmanualshub.com/

Never charge the cylinders over 80% of maximum capacity.

Do not leave the unit powered up if you do not intend to use it immediately. Cut off the mains power supply when it is not planned to use the equipment.

Charging of the air-conditioning system

1. Use a suitable station for air-conditioning systems with refrigerant **R134A**.
2. Locate the high and low pressure sockets on the station.
   - RED = high pressure
   - BLUE = low pressure

SMIL17MEX2490A 1

3. Disconnect the two caps of the pipe fittings from the hoses **(1)** and **(2)**.
4. Locate the high and low pressure sockets on the machine.
   - H = high pressure
   - L = low pressure
5. Connect the relevant pipe fittings of the station to the machine.
6. Follow the instructions of the air-conditioning system to recharge the air-conditioning system.

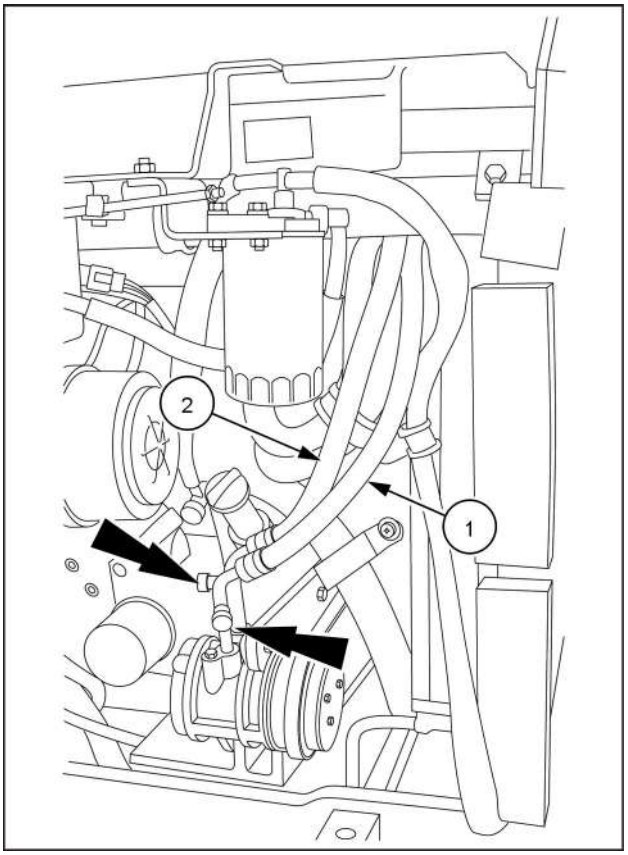

SMIL17MEX2115BA 2

https://truckmanualshub.com/

7. Charge the system with the quantity of **R134A** indicated in the air-conditioning decal **(1)** that you have on your machine.

   Quantity of **R134A**: **0.6 kg** (**1.32 lb**)

NOTE: *the air-conditioning decal **(1)** is located in the engine compartment.*

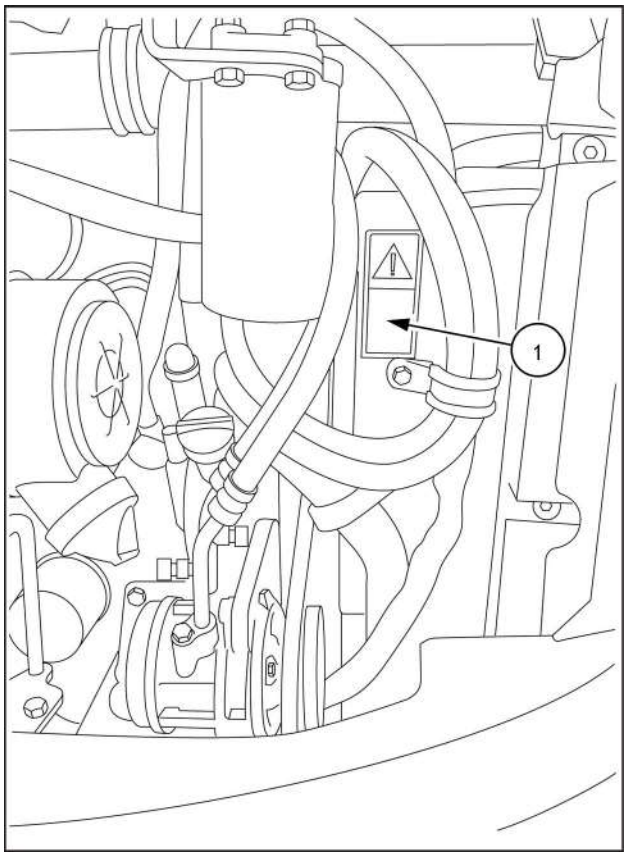

SMIL17MEX2431BB 3

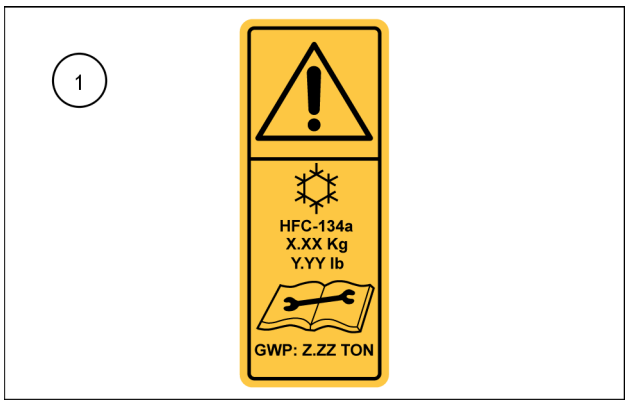

SMIL19MEX0718AA 4

https://truckmanualshub.com/

Fuse and relay locations

Fuses

To access the fuse box **(1)**, open the door **(2)** located below the operator's seat.
The fuse box cover indicates the function and amperage of each fuse.

NOTICE: *before changing fuses or relays, turn the starter key to the OFF position.*

NOTICE: *never replace a fuse with a fuse of a different amperage.*

NOTE: *use the provided fuse puller to remove and install the fuses.*

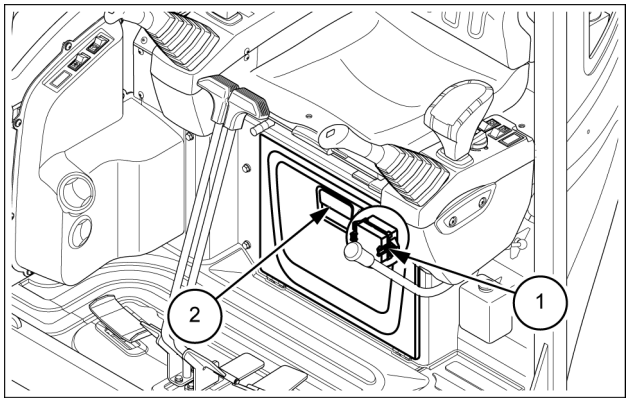

SMIL18MEX0520AB 1

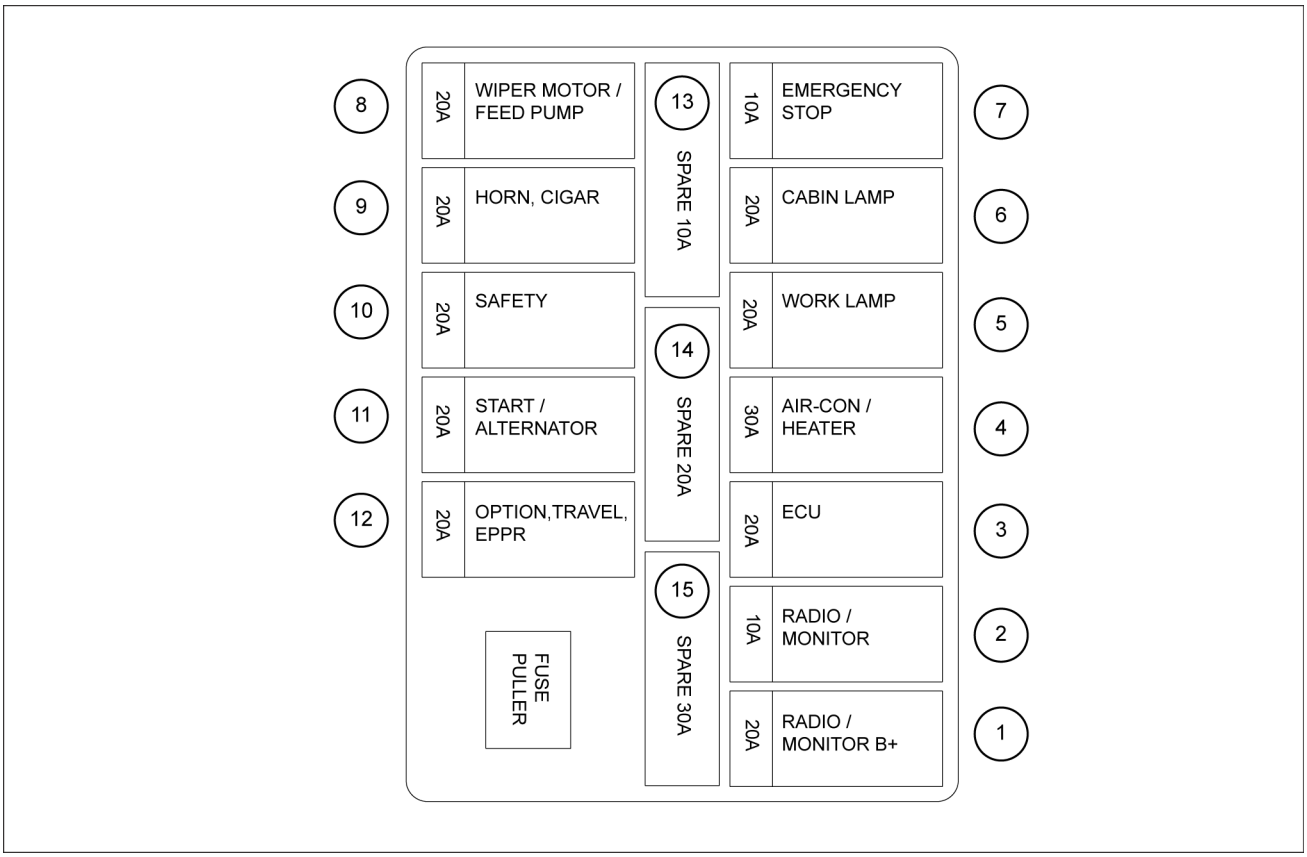

SMIL18MEX0519FB 2

Fuse functions

(1) Radio/Monitor B+ **20 A**	**(9)** Horn/Cigar **20 A**
(2) Radio/Monitor **10 A**	**(10)** Safety **20 A**
(3) ECU **20 A**	**(11)** Start/Alternator **20 A**
(4) Air-conditioning/Heater **30 A**	**(12)** Option/Travel/EPPR **20 A**
(5) Work lamp **20 A**	**(13)** Spare **10 A**
(6) Cabin lamp **20 A**	**(14)** Spare **20 A**
(7) Emergency stop **10 A**	**(15)** Spare **30 A**
(8) Wiper motor/Feed pump **20 A**	

https://truckmanualshub.com/

Storage

Preparing for storage

- The following procedure applies when the machine is to be stored for a month or more. Store the machine on flat, level ground, inside a building or, if not possible, outside and covered with a tarpaulin. Before storing the machine, carry out the following operations:

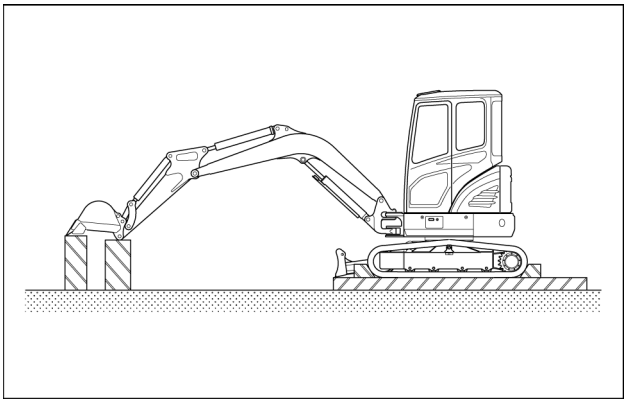

SMIL19MEX0727AA 1

1. Clean the machine.
2. Make sure that the machine has no damaged or missing parts. Replace them if necessary.
3. Retract the cylinder rods as for as possible and lower the boom until the attachment is resting on the ground. Lower the dozer blade to the ground.
4. Grease the machine thoroughly. The exposed surfaces of the cylinder rods should be greased or covered with a protective film. Consult your NEW HOLLAND CONSTRUCTION Dealer.

NOTE: *when the machine resumes service, the film will disappear automatically.*

5. While the engine is still warm, drain the oil sump, replace the oil filter and fill with specified oil. Check the oil level and add more if necessary.
6. Clean or replace the air filter element.
7. Check the level of coolant solution. If the machine is within **100 h** of the next scheduled coolant change, change the coolant now.
8. Remove the battery, clean the battery housing, and check that there is no adhesion of battery fluid. Store the battery safely in a cool and dry place where temperature is **0 °C** (**32 °F**) or more. Alternatively, cut-off the cable from the negative (-) terminal of the battery, or turn the battery disconnect switch to the OFF position.
9. Plug the air cleaner inlet and the exhaust pipe.
10. Remove the starter key, put the decal "NO OPERATION" on the console, and set the safety lock lever to rearward position (LOCK position).
11. Lock the engine door, and the cab door.
12. Prevent dust and moisture by keeping the machine dry. Store the machine setting wood on the ground.

https://truckmanualshub.com/

Periodic checks

⚠ WARNING

Inhalation hazard! Risk to operators and bystanders.
Avoid running the engine in confined areas. Make sure there is adequate ventilation at all times.
Failure to comply could result in death or serious injury.

W0156A

Every month, check:

1. The battery charge and recharge the batteries if required.
2. The levels and top up if necessary.
3. The condition of all lines, connectors and clamps (rust). Grease if necessary.
4. The condition of the paintwork. Apply a coat of anti-rust treatment where necessary.
5. Unplug the air filter inlet and the exhaust pipe.
6. Run the engine at low speed following the starting up procedure and operate the attachment, swing and travel controls.
7. The grease on the cylinder rods.
8. Plug the air filter inlet and the exhaust pipe.

https://truckmanualshub.com/

Starting up the machine after storage

⚠ WARNING

Unexpected machine movement!
Before starting the engine, make sure all controls are in the neutral position.
Failure to comply could result in death or serious injury.

W0311A

⚠ WARNING

Inhalation hazard! Risk to operators and bystanders.
Avoid running the engine in confined areas. Make sure there is adequate ventilation at all times.
Failure to comply could result in death or serious injury.

W0156A

1. Drain the fuel tank and clean the fuel filter. Replace the filter element as required.
2. Fill the fuel tank with suitable fuel.
3. Install the batteries or reconnect the cable to the negative (-) terminal.
4. Grease the machine thoroughly.
5. Check the condition of the fan drive belt and replace it if necessary.
6. Check the condition of the air conditioning drive belt and replace it if necessary (if equipped).
7. Check the cooling system level and add more coolant if necessary.
8. Check the hydraulic fluid level, and supply it as necessary.
9. Check the gear oil level of the travel reduction gear and that of the swing reduction gear, and supply it as necessary.
10. Clean the cylinder rod.
11. Remove the lid of the air cleaner inlet and that of the exhaust pipe.
12. Remove the "Do not operate" label, and start the engine following the engine starting procedure.
13. Check all the indicators and lights carefully.

NOTICE: *check the machine and the engine for leaks or for any parts that are broken, defective or missing.*

https://truckmanualshub.com/

https://truckmanualshub.com/

7 - TROUBLESHOOTING

Fault code resolution

Engine - Troubleshooting

NOTE: *This chapter describes the easy diagnostic methods for engine-related problems and the remedies for them. If you cannot find the cause of a problem or solve a problem, consult the NEW HOLLAND CONSTRUCTION dealer.*

Problem	Possible Cause	Correction
The engine oil pressure indicator light appears when the engine speed is raised after completion of warm up	Low oil level	Add the oil to the specified level
	Clogging in oil filter	Replace the oil filter cartridge
	Oil leaks	Check the correct tightening torque of pipes and joints
	Defect in cluster	See your authorized dealer
Steam is emitted from the top part of the radiator (the pressure valve). Coolant level warning light appears.	Low coolant level	Supply the coolant and check leakage
	Incorrect tension of fan belt	Adjust fan belt tension
	Dirty cooling system	Wash out inside of cooling system
	Dirty or damage on radiator fin	Clean the radiator fin or see your authorized dealer.
	Defect on thermostat	See your authorized dealer
	Incorrect tightening torque of radiator cap	Tighten the radiator cap firmly or replace the packing of it
	Defect in cluster	See your authorized dealer
The engine does not start when the starting motor is turned over	Low fuel level	Add fuel
	Air leaking in the fuel system	See your authorized dealer
	Defect or damage in the fuel injection pump or in the nozzle	See your authorized dealer
	Incorrect valve clearance	See your authorized dealer
	Incorrect engine compression pressure	See your authorized dealer
Exhaust gas is white or blue	Wrong oil quantity	Adjust to specified oil quantity
	Wrong fuel	Replace with specified fuel
Exhaust gas occasionally turns black	Air cleaner element dirty or damaged	Clean or replace the air cleaner element
	Defect in nozzle	See your authorized dealer
	Wrong engine compression pressure	See your authorized dealer
Combustion noise occasionally changes to breathing sound	Defect in nozzle	See your authorized dealer
Unusual combustion noise or mechanical noise	Wrong fuel	Check with specified fuel
	Over-heating	Check over-heating
	Defect in muffler	See your authorized dealer
	Incorrect valve clearance	See your authorized dealer

https://truckmanualshub.com/

Electrical systems - Troubleshooting

NOTE: *this chapter describes the easy diagnostic methods for electrical system-related problems and the remedies for them. If you cannot find the cause of a problem or solve a problem, consult the NEW HOLLAND CONSTRUCTION dealer.*

Problem	Possible Cause	Correction
Instrument cluster lights does not glow brightly even when engine runs at high speed. Lights flicker while engine runs	Terminals loosened or open circuit	See your authorized dealer
	Incorrect belt tension	Adjust belt tension
Battery charging light does not go out even when engine runs at high speed	Damaged alternator	See your authorized dealer
	Damaged wiring	See your authorized dealer
Unusual noise is emitted from the alternator	Damaged alternator	See your authorized dealer
Starter motor does not turn when starter switch is turned to START	Damaged wiring	See your authorized dealer
	Battery not charged	Charge the battery
	Damaged starter motor	See your authorized dealer
	Damaged safety relay	See your authorized dealer
The pinion of the starter motor keeps going in and out	Battery not charged	Charge the battery
	Damaged safety relay	See your authorized dealer
Starter motor turns the engine sluggishly	Battery not charged	Charge the battery
	Damaged starter motor	See your authorized dealer
The starter motor disengages before the engine starts up	Damaged wiring	See your authorized dealer
	Battery not charged	Charge the battery
The engine oil pressure light does not appear when engine is stationary (when the starter switch is in ON position)	Damaged engine oil pressure switch	See your authorized dealer
	Damaged instrument cluster	See your authorized dealer
Battery charging light does not appear when the engine is stationary. (when the starter switch is in ON position)	Damaged instrument cluster	See your authorized dealer
	Damaged wiring	See your authorized dealer

https://truckmanualshub.com/

Other systems - Troubleshooting

NOTE: *this chapter describes the easy diagnostic methods for generic problems and the remedies for them. If you cannot find the cause of a problem or solve a problem, consult the NEW HOLLAND CONSTRUCTION dealer.*

Problem	Possible Cause	Correction
Track slip out of place. Excessive wear of the sprocket	Incorrect tension of track	Adjust tension of track
Bucket either rises slowly or not at all	Low oil level	Add oil to specified level
Slow speed of travel, swing, boom, arm and bucket	Low oil level	Add oil to specified level
Unusual noise emitted from pump	Hydraulic tank strainer clogged or dirty	Clean the hydraulic tank strainer
Excessive oil temperature rise of hydraulic oil	Dirty oil cooler	Clean the oil cooler
	Incorrect fan belt tension	Adjust fan belt tension
	Low oil level	Add oil to specified level

https://truckmanualshub.com/

8 - SPECIFICATIONS

Machine specifications

Engine

Model	Yanmar 3TNV88F-ESHYB
Type	4-cycle vertical overhead valve, diesel fuel
Cooling method	Water cooling
Number of cylinders and arrangement	3 cylinders, in-line
Firing order	1 - 3 - 2
Combustion chamber type	Direct injection type
Cylinder bore x stroke	**88 mm** (**3.46 in**) x **90 mm** (**3.54 in**)
Piston displacement	**1642 cm³** (**100.2 in³**)
Compression ratio	19.1 : 1
Rated gross horse power (ISO 14396)	**18.2 kW** (**24.7 Hp**) at **2200 RPM**
Maximum torque at **1320 RPM**	**84.3 – 94.1 N·m** (**62.2 – 69.4 lb ft**)
Engine oil quantity	**6.7 L** (**1.8 US gal**)
Dry weight	**172 kg** (**379 lb**)
High idling speed	**2350 – 2380 RPM**
Low idling speed	**1200 – 1230 RPM**
Rated fuel consumption	177 g/Hp·hr at **2200 RPM**
Starting motor	**12 V**, **2.3 kW**
Alternator	**12 V**, **55 A**
Battery	1 x **12 V** x **70 A·h** (**20 h** rating)

Main pump (P1 / P2)

Type	Variable displacement tandem axis piston pumps
Capacity	2 x **17 cm³/rev** (**1.0 in³/rev**)
Maximum pressure	**22553 kPa** (**3271 psi**)
Rated oil flow	2 x **37.4 L/min** (**9.9 US gpm**)
Rated speed	**2200 RPM**

Gear pump / Pilot pump (P3 / P4)

Type	Fixed displacement gear pump single stage
Capacity	**10.5 cm³/rev** (**0.6 in³/rev**) / **4.5 cm³/rev** (**0.3 in³/rev**)
Maximum pressure	**20105 kPa** (**2916 psi**) / **3923 kPa** (**569 psi**)
Rated oil flow	**23.1 L/min** (**6.1 US gpm**) / **9.9 L/min** (**2.6 US gpm**)

Main control valve

Type	Sectional, 10 spools (11 blocks)
Operating method	Hydraulic pilot system
Main relief valve pressure : P1, P2 / P3	**20105 – 22553 kPa** (**2916 – 3271 psi**)
Overload relief valve pressure	**24518 kPa** (**3556 psi**)

https://truckmanualshub.com/

Swing motor

Type	Fixed displacement axial piston motor
Capacity	**22 cm³/rev** (**1.3 in³/rev**)
Relief pressure	**19616 kPa** (**2845 psi**)
Braking system	Automatic, spring applied hydraulic released
Braking torque	**90.2 N·m** (**66.5 lb ft**)
Brake release pressure	**1958 – 6378 kPa** (**284 – 925 psi**)
Reduction gear type	2 - stage planetary

Travel motor

Type	Variable displacement axial piston motor
Relief pressure	**22553 kPa** (**3271 psi**)
Reduction gear type	2-stage planetary
Braking system	Automatic, spring applied hydraulic released
Brake release pressure	**1200 kPa** (**174 psi**)
Braking torque	**38 N·m** (**28 lb ft**)

Remote control valve

Type		Pressure reducing type
Operating pressure	Minimum	**490 kPa** (**71 psi**)
	Maximum	**2013 kPa** (**292 psi**)
Single operation stroke	Lever	**637.42 – 833.58 kPa** (**92.45 – 120.90 psi**)

Cylinder

Boom cylinder	Bore diameter x Rod diameter x Stroke	**85 mm** (**3.3 in**) x **45 mm** (**1.8 in**) x **540 mm** (**21.3 in**)
	Cushion	Extend only
Arm cylinder	Bore diameter x Rod diameter x Stroke	Ø **80 mm** (**3.1 in**) x Ø **45 mm** (**1.8 in**) x **585 mm** (**23.0 in**)
	Cushion	Extend and retract
Bucket cylinder	Bore diameter x Rod diameter x Stroke	Ø **70 mm** (**2.8 in**) x Ø **45 mm** (**1.8 in**) x **510 mm** (**20.1 in**)
	Cushion	-
Boom swing cylinder	Bore diameter x Rod diameter x Stroke	Ø **80 mm** (**3.1 in**) x Ø **45 mm** (**1.8 in**) x **400 mm** (**15.7 in**)
	Cushion	-
Dozer cylinder	Bore diameter x Rod diameter x Stroke	Ø **95 mm** (**3.7 in**) x Ø **50 mm** (**2.0 in**) x **152 mm** (**6.0 in**)
	Cushion	-
Angle blade cylinder (if equipped)	Bore diameter x Rod diameter x Stroke	Ø **65 mm** (**2.6 in**) x Ø **30 mm** (**1.2 in**) x **331 mm** (**13 in**)

NOTE: *discoloration of cylinder rod can occur when the friction reduction additive of lubrication oil spreads on the rod surface.*
Discoloration does not cause any harmful effect on the cylinder performance.

Shoe

Shoe width	Steel	**300 mm** (**11.8 in**)
	Rubber	**300 mm** (**11.8 in**)
Ground pressure	Steel	**34.34 kPa** (**4.98 psi**)
	Rubber	**33.37 kPa** (**4.84 psi**)
Overall width	Steel	**1740 mm** (**68.5 in**)
	Rubber	**1740 mm** (**68.5 in**)

https://truckmanualshub.com/

Number of rollers and shoes on each side

Upper roller	1
Lower roller	4
Track shoes	44

Dimensions

Cab version

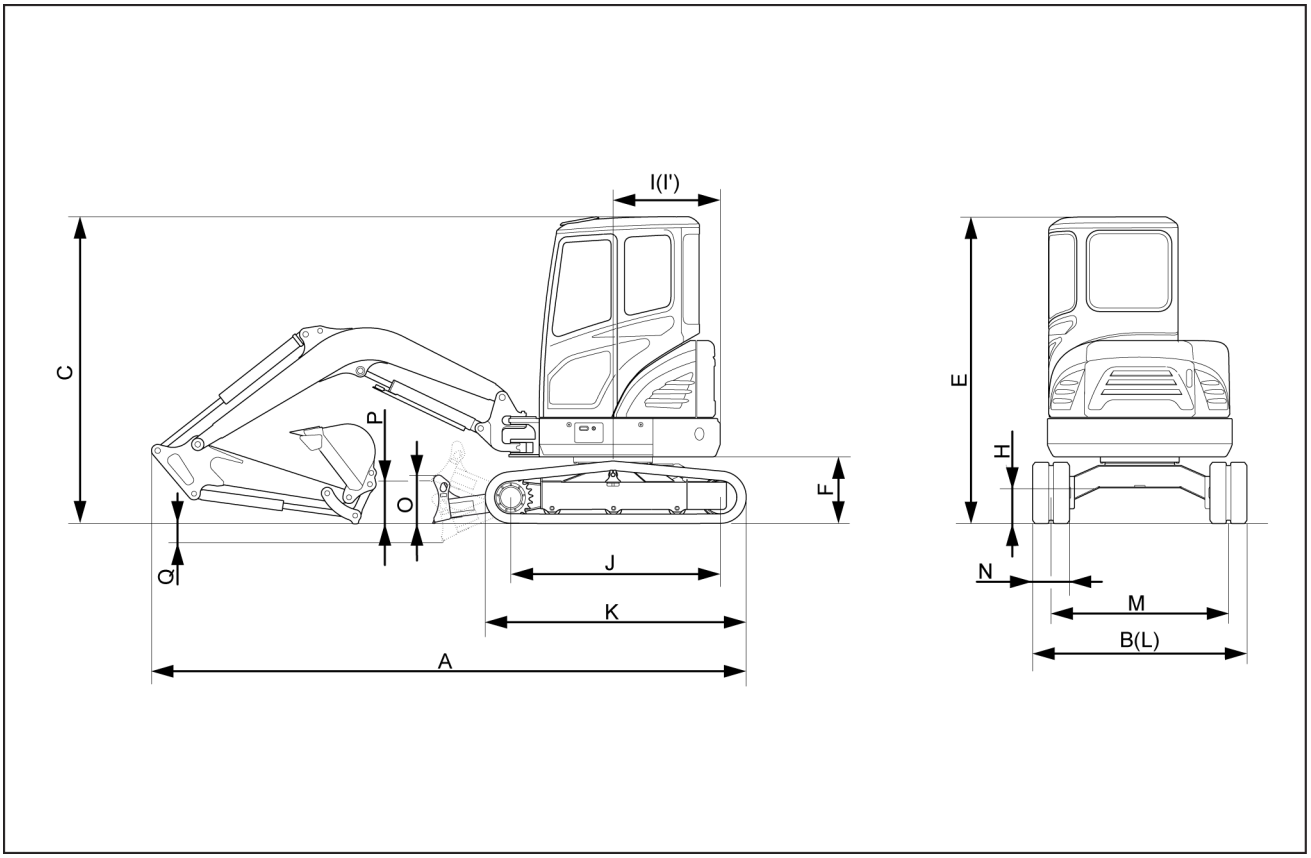

SMIL18MEX0146FA 1

(A) Overall length	**4790 mm** (**188.6 in**)
(B) Overall width, with **300 mm** (**11.8 in**) shoe	**1740 mm** (**68.5 in**)
(C) Overall height	**2500 mm** (**98.4 in**)
(E) Overall height of cab	**2500 mm** (**98.4 in**)
(F) Ground clearance of counterweight	**540 mm** (**21.3 in**)
(H) Minimum ground clearance	**290 mm** (**11.4 in**)
(I) Rear-end distance	**870 mm** (**34.3 in**)
(I') Rear-end swing radius	**870 mm** (**34.3 in**)
(J) Distance between tumblers	**1700 mm** (**66.9 in**)
(K) Undercarriage length	**2130 mm** (**83.9 in**)
(L) Undercarriage width	**1740 mm** (**68.5 in**)
(M) Track gauge	**1440 mm** (**56.7 in**)
(N) Track shoe width, standard	**300 mm** (**11.8 in**)
(O) Height of blade	**370 mm** (**14.6 in**) / **(*) 405 mm** (**15.9 in**)
(P) Ground clearance of blade up	**375 mm** (**14.8 in**) / **(*) 430 mm** (**16.9 in**)
(Q) Depth of blade down	**390 mm** (**15.4 in**) / **(*) 440 mm** (**17.3 in**)

Boom length: **2.5 m** (**98.425 in**)
Arm length: **1.3 m** (**51.181 in**)
With boom swing post

***NOTE: (*)**: angle blade version (**25°** left-hand and right-hand angle)*

https://truckmanualshub.com/

Canopy version

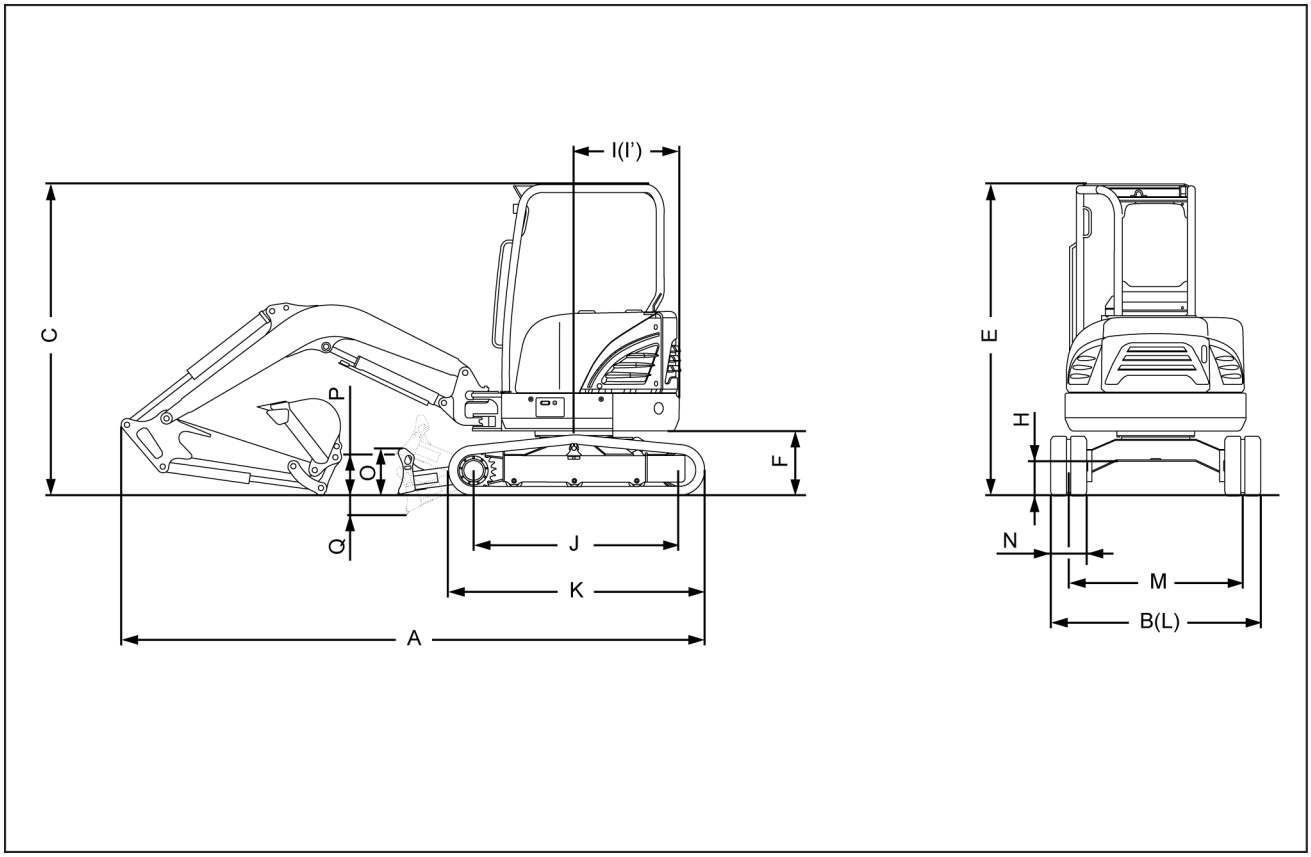

SMIL18MEX0147FA 2

(A) Overall length	**4790 mm** (**188.6 in**)
(B) Overall width, with **300 mm** (**11.8 in**) shoe	**1740 mm** (**68.5 in**)
(C) Overall height	**2500 mm** (**98.4 in**)
(E) Overall height of cab	**2500 mm** (**98.4 in**)
(F) Ground clearance of counterweight	**540 mm** (**21.3 in**)
(H) Minimum ground clearance	**290 mm** (**11.4 in**)
(I) Rear-end distance	**870 mm** (**34.3 in**)
(I') Rear-end swing radius	**870 mm** (**34.3 in**)
(J) Distance between tumblers	**1700 mm** (**66.9 in**)
(K) Undercarriage length	**2130 mm** (**83.9 in**)
(L) Undercarriage width	**1740 mm** (**68.5 in**)
(M) Track gauge	**1440 mm** (**56.7 in**)
(N) Track shoe width, standard	**300 mm** (**11.8 in**)
(O) Height of blade	**370 mm** (**14.6 in**) / **(*) 405 mm** (**15.9 in**)
(P) Ground clearance of blade up	**375 mm** (**14.8 in**) / **(*) 430 mm** (**16.9 in**)
(Q) Depth of blade down	**390 mm** (**15.4 in**) / **(*) 440 mm** (**17.3 in**)

Boom length: **2.5 m** (**98.425 in**)
Arm length: **1.3 m** (**51.181 in**)
With boom swing post

***NOTE: (*)**: angle blade version (**25°** left-hand and right-hand angle)*

https://truckmanualshub.com/

Working range

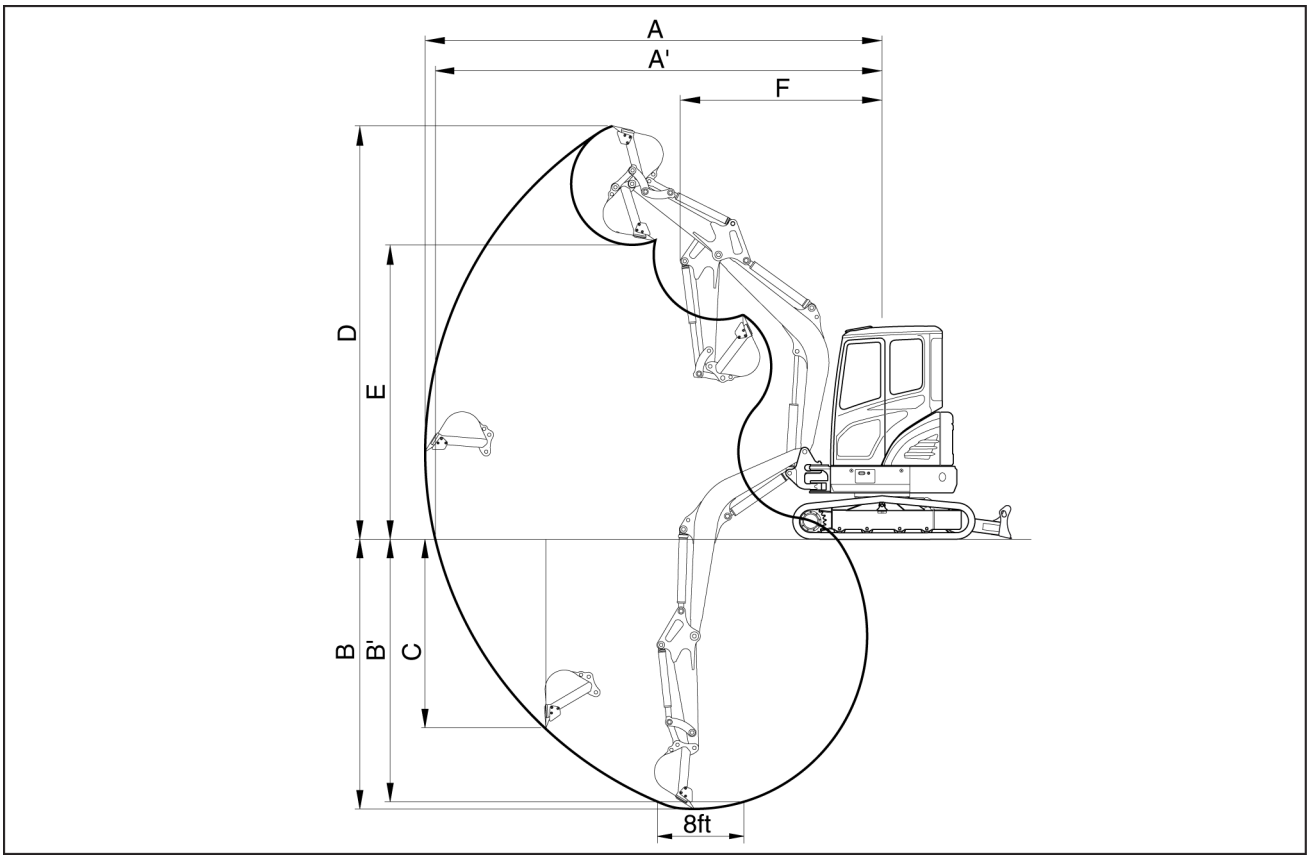

SMIL18MEX0148FA 3

(A) Maximum digging reach		**5315 mm** (**209.3 in**)
(A') Maximum digging reach on ground		**5200 mm** (**204.7 in**)
(B) Maximum digging depth		**3135 mm** (**123.4 in**)
(B') Maximum digging depth (8ft level)		**2670 mm** (**105.1 in**)
(C) Maximum vertical wall digging depth		**2190 mm** (**86.2 in**)
(D) Maximum digging height		**4810 mm** (**189.4 in**)
(E) Maximum dumping height		**3425 mm** (**134.8 in**)
(F) Minimum swing radius		**2350 mm** (**92.5 in**)
Boom swing radius (left-hand/right-hand)		**75° / 50°**
Bucket digging force	SAE	**27.4 kN** (**6159.8 lb**)
	ISO	**30.7 kN** (**6901.6 lb**)
Arm crowd force	SAE	**18.9 kN** (**4248.9 lb**)
	ISO	**19.5 kN** (**4383.8 lb**)

Boom length: **2.5 m** (**98.425 in**)
Arm length: **1.3 m** (**51.181 in**)
With boom swing post

https://truckmanualshub.com/

Weights

Machine

Operating weight (cab version) **(*)**	**4010 kg** (**8840.5 lb**) / **(***) 4105 kg** (**9050 lb**)
Operating weight (canopy version) **(**)**	**3870 kg** (**8532 lb**) / **(***) 3965 kg** (**8741 lb**)

Components

Upperstructure assembly	**1975 kg** (**4354.1 lb**)
Main frame weld assembly	**460 kg** (**1014.1 lb**)
Engine assembly	**172 kg** (**379.2 lb**)
Main pump assembly	**19 kg** (**42 lb**)
Main control valve assembly	**25 kg** (**55 lb**)
Swing motor assembly	**40 kg** (**88.2 lb**)
Hydraulic oil tank assembly	**50 kg** (**110 lb**)
Fuel tank assembly	**30 kg** (**66 lb**)
Boom swing post	**80 kg** (**176.4 lb**)
Counterweight	**410 kg** (**904 lb**)
Cab assembly	**210 kg** (**463 lb**)
Canopy assembly	**100 kg** (**220.5 lb**)
Lower chassis assembly	**1230 kg** (**2712 lb**)
Track frame weld assembly	**400 kg** (**881.8 lb**)
Swing bearing	**50 kg** (**110.2 lb**)
Travel motor assembly	**40 kg** (**88.2 lb**)
Hydraulic swivel	**15 kg** (**33 lb**) / **(***) 31 kg** (**68.3 lb**)
Idler assembly	**52.3 kg** (**115.3 lb**)
Carrier roller	**11.5 kg** (**25.4 lb**)
Track roller	**9.93 kg** (**21.89 lb**)
Sprocket	**7 kg** (**15 lb**)
Rubber track 300X52.5X8 (**300 mm** (**11.8 in**))	**130.3 kg** (**287.3 lb**)
Dozer blade assembly	**140 kg** (**308.6 lb**) / **(***) 238.3 kg** (**525.4 lb**)
Front attachment assembly (**2.5 m** (**98.425 in**) boom, **1.3 m** (**51.181 in**) arm, **0.11 m³** (**0.144 yd³**) SAE heaped bucket)	**485 kg** (**1069.2 lb**)
2.5 m (**98.425 in**) boom assembly	**140 kg** (**308.6 lb**)
1.3 m (**51.181 in**) arm assembly	**80 kg** (**176.4 lb**)
Boom cylinder assembly	**40 kg** (**88.2 lb**)
Arm cylinder assembly	**40 kg** (**88.2 lb**)
Bucket cylinder assembly	**30 kg** (**66.1 lb**)
Bucket control link assembly	**20 kg** (**44 lb**)
Dozer cylinder assembly	**30 kg** (**66.1 lb**)
Dozer angle blade cylinder (if equipped)	**9.8 kg** (**21.6 lb**)
Boom swing cylinder assembly	**30 kg** (**66.1 lb**)
Additional counterweight **(***)**	**151 kg** (**333 lb**)

(*) Cab, boom, arm, bucket, lubricant, coolant, full fuel and hydraulic oil, without quick coupler system, rubber track, operator. Weight tolerance: ± **3%**.

(**) Canopy, boom, arm, bucket, lubricant, coolant, full fuel and hydraulic oil, without quick coupler system, rubber track, operator. Weight tolerance: ± **3%**.

(***) Angle blade version (if equipped)

NOTICE: *if the machine is equipped with the angle blade, the installation of the additional counterweight is mandatory.*

https://truckmanualshub.com/

https://truckmanualshub.com/

9 - ACCESSORIES

Direct fit buckets

The data are referred for working operation with the dozer blade up and **400 kg** (**882 lb**) counterweight.

For cab configuration:

- **1.30 m** (**51.18 in**) arm, minimum lift value: **370 kg** (**815.71 lb**).
- **1.60 m** (**62.99 in**) arm, minimum lift value: **340 kg** (**749.57 lb**).

For canopy configuration:

- **1.30 m** (**51.18 in**) arm, minimum lift value: **350 kg** (**771.62 lb**).
- **1.60 m** (**62.99 in**) arm, minimum lift value: **320 kg** (**705.48 lb**).

Direct fit buckets application as function of the arm (for cab version)

General purpose buckets			Arm	
Capacity **ISO 7451** (Heaped)	Width	Mass	**1.30 m** (**51.18 in**)	**1.60 m** (**62.99 in**)
0.060 m³ (**0.078 yd³**)	**305 mm** (**12.01 in**)	**73 kg** (**160.94 lb**)	●	●
0.090 m³ (**0.118 yd³**)	**457 mm** (**17.99 in**)	**93 kg** (**205.03 lb**)	●	●
0.120 m³ (**0.157 yd³**)	**610 mm** (**24.02 in**)	**112 kg** (**246.92 lb**)	●	●
0.188 m³ (**0.246 yd³**)	**914 mm** (**35.98 in**)	**150 kg** (**330.69 lb**)	♦ (**)	♦ (**)

Direct fit buckets application as function of the arm (for canopy version)

General purpose buckets			Arm	
Capacity **ISO 7451** (Heaped)	Width	Mass	**1.30 m** (**51.18 in**)	**1.60 m** (**62.99 in**)
0.060 m³ (**0.078 yd³**)	**305 mm** (**12.01 in**)	**73 kg** (**160.94 lb**)	●	●
0.090 m³ (**0.118 yd³**)	**457 mm** (**17.99 in**)	**93 kg** (**205.03 lb**)	●	●
0.120 m³ (**0.157 yd³**)	**610 mm** (**24.02 in**)	**112 kg** (**246.92 lb**)	●	●
0.188 m³ (**0.246 yd³**)	**914 mm** (**35.98 in**)	**150 kg** (**330.69 lb**)	♦ (**)	Not applicable

● Density of material up to 1.6 t/m^3
▲ Density of material from 1.4 t/m ^{3} to 1.6 t/m^3
■ Density of material from 1.2 t/m ^{3} to 1.4 t/m ^{3}
♦ Density of material under 1.2 t/m ^{3}

(*) With this bucket, to improve digging performance and stability it is recommended to use additional counterweight.

(**) With this bucket, to improve digging performance and stability it is mandatory to use additional counterweight.

NOTICE: *make particular attention when swing the boom to the left-hand side: the attachment may collide with the cab/canopy.*

https://truckmanualshub.com/

Ditch cleaning direct fit bucket

The data shown below are referred to working operation with the dozer blade up and the **400 kg** (**882 lb**) counterweight.

For cab configuration:

- **1.30 m** (**51.18 in**) arm, minimum lift value: **370 kg** (**815.7 lb**).
- **1.60 m** (**62.99 in**) arm, minimum lift value: **340 kg** (**749.6 lb**).

For canopy configuration:

- **1.30 m** (**51.18 in**) arm, minimum lift value: **350 kg** (**771.6 lb**).
- **1.60 m** (**62.99 in**) arm, minimum lift value: **320 kg** (**705.5 lb**).

Ditch cleaning direct fit buckets application as function of the arm (for cab version)

General purpose buckets			Arm	
Capacity **ISO 7451** (Heaped)	Width	Mass	**1.30 m** (**51.18 in**)	**1.60 m** (**62.99 in**)
0.188 m³ (**0.246 yd³**)	**914 mm** (**36.0 in**)	**106 kg** (**233.7 lb**)	▲ (*)	■ (*)

Ditch cleaning direct fit buckets application as function of the arm (for canopy version)

General purpose buckets			Arm	
Capacity **ISO 7451** (Heaped)	Width	Mass	**1.30 m** (**51.18 in**)	**1.60 m** (**62.99 in**)
0.188 m³ (**0.246 yd³**)	**914 mm** (**36.0 in**)	**106 kg** (**233.7 lb**)	■ (*)	♦ (**)

● Density of material up to 1.6 t/m^3
▲ Density of material from 1.4 t/m ^{3} to 1.6 t/m^3
■ Density of material from 1.2 t/m ^{3} to 1.4 t/m ^{3}
♦ Density of material under 1.2 t/m ^{3}

(*) With this bucket, to improve digging performance and stability it is recommended to use additional counterweight.

(**) With this bucket, to improve digging performance and stability it is mandatory to use additional counterweight.

NOTICE: *pay particular attention when swinging the boom to the left-hand side: the attachment may contact the cab/canopy.*

https://truckmanualshub.com/

Klac type buckets

NOTICE: *all attachment shown on this manual are exclusive to the North American Market. To all other markets contact your authorized NEW HOLLAND CONSTRUCTION dealer, before purchasing an attachment.*

NOTE: *contact your authorized NEW HOLLAND CONSTRUCTION dealer, before purchasing an attachment.*

The data shown below are referred to working operation with the dozer blade up and the **400 kg** (**882 lb**) counterweight.

For cab configuration:

- **1.30 m** (**51.18 in**) arm, minimum lift value: **370 kg** (**815.71 lb**).
- **1.60 m** (**62.99 in**) arm, minimum lift value: **340 kg** (**749.57 lb**).

For canopy configuration:

- **1.30 m** (**51.18 in**) arm, minimum lift value: **350 kg** (**771.62 lb**).
- **1.60 m** (**62.99 in**) arm, minimum lift value: **320 kg** (**705.48 lb**).

Klac type buckets application as function of the arm (for cab version)

General purpose buckets			Arm	
Capacity **ISO 7451** (Heaped)	Width	Mass	**1.30 m** (**51.18 in**)	**1.60 m** (**62.99 in**)
0.062 m³ (**0.081 yd³**)	**305 mm** (**12 in**)	**81 kg** (**178.6 lb**)	●	●
0.091 m³ (**0.119 yd³**)	**457 mm** (**18 in**)	**101 kg** (**222.7 lb**)	●	●
0.119 m³ (**0.156 yd³**)	**610 mm** (**24 in**)	**121 kg** (**266.8 lb**)	●	▲ (*)

Klac type buckets application as function of the arm (for canopy version)

General purpose buckets			Arm	
Capacity **ISO 7451** (Heaped)	Width	Mass	**1.30 m** (**51.18 in**)	**1.60 m** (**62.99 in**)
0.062 m³ (**0.081 yd³**)	**305 mm** (**12 in**)	**81 kg** (**178.6 lb**)	●	●
0.091 m³ (**0.119 yd³**)	**457 mm** (**18 in**)	**101 kg** (**222.7 lb**)	●	●
0.119 m³ (**0.156 yd³**)	**610 mm** (**24 in**)	**121 kg** (**266.8 lb**)	▲ (*)	■ (*)

● Density of material up to 1.6 t/m^3
▲ Density of material from 1.4 t/m ^{3} to 1.6 t/m^3
■ Density of material from 1.2 t/m ^{3} to 1.4 t/m ^{3}
♦ Density of material under 1.2 t/m ^{3}

(*) With this bucket, to improve digging performance and stability it is recommended to use additional counterweight.

(**) With this bucket, to improve digging performance and stability it is mandatory to use additional counterweight.

NOTICE: *pay particular attention when swinging the boom to the left-hand side: the attachment may contact the cab/canopy.*

https://truckmanualshub.com/

Standard buckets with mechanical coupler

NOTICE: *all attachment shown on this manual are exclusive to the North American Market. To all other markets contact your authorized NEW HOLLAND CONSTRUCTION dealer, before purchasing an attachment.*

NOTE: *contact your authorized NEW HOLLAND CONSTRUCTION dealer, before purchasing an attachment.*

The data shown below are referred to working operation with the dozer blade up and the **400 kg** (**882 lb**) counterweight.

For cab configuration:

- **1.30 m** (**51.18 in**) arm, minimum lift value: **370 kg** (**815.71 lb**).
- **1.60 m** (**62.99 in**) arm, minimum lift value: **340 kg** (**749.57 lb**).

For canopy configuration:

- **1.30 m** (**51.18 in**) arm, minimum lift value: **350 kg** (**771.62 lb**).
- **1.60 m** (**62.99 in**) arm, minimum lift value: **320 kg** (**705.48 lb**).

Standard buckets with mechanical coupler application as function of the arm (for cab version)

General purpose buckets			Arm	
Capacity **ISO 7451** (Heaped)	Width	Mass	**1.30 m** (**51.18 in**)	**1.60 m** (**62.99 in**)
0.060 m³ (**0.078 yd³**)	**305 mm** (**12 in**)	**73 kg** (**160.9 lb**)	●	●
0.090 m³ (**0.118 yd³**)	**457 mm** (**18 in**)	**93 kg** (**205.0 lb**)	●	●
0.120 m³ (**0.157 yd³**)	**610 mm** (**24 in**)	**112 kg** (**246.9 lb**)	●	▲ (*)

Standard buckets with mechanical coupler application as function of the arm (for canopy version)

General purpose buckets			Arm	
Capacity **ISO 7451** (Heaped)	Width	Mass	**1.30 m** (**51.18 in**)	**1.60 m** (**62.99 in**)
0.060 m³ (**0.078 yd³**)	**305 mm** (**12 in**)	**73 kg** (**160.9 lb**)	●	●
0.090 m³ (**0.118 yd³**)	**457 mm** (**18 in**)	**93 kg** (**205.0 lb**)	●	●
0.120 m³ (**0.157 yd³**)	**610 mm** (**24 in**)	**112 kg** (**246.9 lb**)	●	■ (*)

● Density of material up to 1.6 t/m^3
▲ Density of material from 1.4 t/m ^{3} to 1.6 t/m^3
■ Density of material from 1.2 t/m ^{3} to 1.4 t/m ^{3}
♦ Density of material under 1.2 t/m ^{3}

(*) With this bucket, to improve digging performance and stability it is recommended to use additional counterweight.

(**) With this bucket, to improve digging performance and stability it is mandatory to use additional counterweight.

NOTICE: *pay particular attention when swinging the boom to the left-hand side: the attachment may contact the cab/canopy.*

https://truckmanualshub.com/

Ditch cleaning direct fit bucket

The data shown below are referred to working operation with the dozer blade up and the **400 kg** (**882 lb**) counterweight.

For cab configuration:

- **1.30 m** (**51.18 in**) arm, minimum lift value: **370 kg** (**815.7 lb**).
- **1.60 m** (**62.99 in**) arm, minimum lift value: **340 kg** (**749.6 lb**).

Ditch cleaning direct fit buckets application as function of the arm (for cab version)

General purpose buckets			Arm	
Capacity **ISO 7451** (Heaped)	Width	Mass	**1.30 m** (**51.18 in**)	**1.60 m** (**62.99 in**)
0.188 m³ (**0.246 yd³**)	**914 mm** (**36.0 in**)	**106 kg** (**233.7 lb**)	♦ (**)	♦ (**)

● Density of material up to 1.6 t/m^3
▲ Density of material from 1.4 t/m ^{3} to 1.6 t/m^3
■ Density of material from 1.2 t/m ^{3} to 1.4 t/m ^{3}
♦ Density of material under 1.2 t/m ^{3}

(*) With this bucket, to improve digging performance and stability it is recommended to use additional counterweight.

(**) With this bucket, to improve digging performance and stability it is mandatory to use additional counterweight.

NOTICE: *pay particular attention when swinging the boom to the left-hand side: the attachment may contact the cab/canopy.*

https://truckmanualshub.com/

Standard buckets with Hydraulic pin grabber coupler

NOTICE: *all attachment shown on this manual are exclusive to the North American Market. To all other markets contact your authorized NEW HOLLAND CONSTRUCTION dealer, before purchasing an attachment.*

NOTE: *contact your authorized NEW HOLLAND CONSTRUCTION dealer, before purchasing an attachment.*

The data shown below are referred to working operation with the dozer blade up and the **400 kg** (**882 lb**) counterweight.

For cab configuration:

- **1.30 m** (**51.18 in**) arm, minimum lift value: **370 kg** (**815.71 lb**).
- **1.60 m** (**62.99 in**) arm, minimum lift value: **340 kg** (**749.57 lb**).

For canopy configuration:

- **1.30 m** (**51.18 in**) arm, minimum lift value: **350 kg** (**771.62 lb**).
- **1.60 m** (**62.99 in**) arm, minimum lift value: **320 kg** (**705.48 lb**).

Standard buckets with mechanical coupler application as function of the arm (for cab version)

General purpose buckets			Arm	
Capacity **ISO 7451** (Heaped)	Width	Mass	**1.30 m** (**51.18 in**)	**1.60 m** (**62.99 in**)
0.060 m³ (**0.078 yd³**)	**305 mm** (**12 in**)	**73 kg** (**160.9 lb**)	●	●
0.090 m³ (**0.118 yd³**)	**457 mm** (**18 in**)	**93 kg** (**205.0 lb**)	●	●
0.120 m³ (**0.157 yd³**)	**610 mm** (**24 in**)	**112 kg** (**246.9 lb**)	●	■ (*)

Standard buckets with mechanical coupler application as function of the arm (for canopy version)

General purpose buckets			Arm	
Capacity **ISO 7451** (Heaped)	Width	Mass	**1.30 m** (**51.18 in**)	**1.60 m** (**62.99 in**)
0.060 m³ (**0.078 yd³**)	**305 mm** (**12 in**)	**73 kg** (**160.9 lb**)	●	●
0.090 m³ (**0.118 yd³**)	**457 mm** (**18 in**)	**93 kg** (**205.0 lb**)	●	●
0.120 m³ (**0.157 yd³**)	**610 mm** (**24 in**)	**112 kg** (**246.9 lb**)	▲ (*)	■ (*)

● Density of material up to 1.6 t/m^3
▲ Density of material from 1.4 t/m ^{3} to 1.6 t/m^3
■ Density of material from 1.2 t/m ^{3} to 1.4 t/m ^{3}
♦ Density of material under 1.2 t/m ^{3}

(*) With this bucket, to improve digging performance and stability it is recommended to use additional counterweight.

(**) With this bucket, to improve digging performance and stability it is mandatory to use additional counterweight.

NOTICE: *pay particular attention when swinging the boom to the left-hand side: the attachment may contact the cab/canopy.*

https://truckmanualshub.com/

Ditch cleaning direct fit bucket

The data shown below are referred to working operation with the dozer blade up and the **400 kg** (**882 lb**) counterweight.

For cab configuration:

- **1.30 m** (**51.18 in**) arm, minimum lift value: **370 kg** (**815.7 lb**).
- **1.60 m** (**62.99 in**) arm, minimum lift value: **340 kg** (**749.6 lb**).

Ditch cleaning direct fit buckets application as function of the arm (for cab version)

General purpose buckets			Arm	
Capacity **ISO 7451** (Heaped)	Width	Mass	**1.30 m** (**51.18 in**)	**1.60 m** (**62.99 in**)
0.188 m³ (**0.246 yd³**)	**914 mm** (**36.0 in**)	**106 kg** (**233.7 lb**)	♦ (**)	Not applicable

● Density of material up to 1.6 t/m^3
▲ Density of material from 1.4 t/m ^{3} to 1.6 t/m^3
■ Density of material from 1.2 t/m ^{3} to 1.4 t/m ^{3}
♦ Density of material under 1.2 t/m ^{3}

(*) With this bucket, to improve digging performance and stability it is recommended to use additional counterweight.

(**) With this bucket, to improve digging performance and stability it is mandatory to use additional counterweight.

NOTICE: *pay particular attention when swinging the boom to the left-hand side: the attachment may contact the cab/canopy.*

https://truckmanualshub.com/

Auxiliary hydraulic circuits

First auxiliary hydraulic circuits (1-way or 2-way)

The machine can be provided with a first auxiliary hydraulic circuit. This type of circuit can be alternatively set as a single acting circuit (1-way) or as a double-acting hydraulic circuit (2-way).

- The single-acting hydraulic circuit is intended for attachments such as a hydraulic breaker.
- The double-acting hydraulic circuit is intended for attachments such as auger, clamshell or nibbler.

Hydraulic switching

The selection between the single-acting hydraulic circuit and the double-acting hydraulic circuit is done acting on the bolt located on the three-way valve near the hydraulic oil tank.

To select the hydraulic circuit perform the following operations.

Park the machine on a flat and level place. Stop the engine, and remove the starter key.

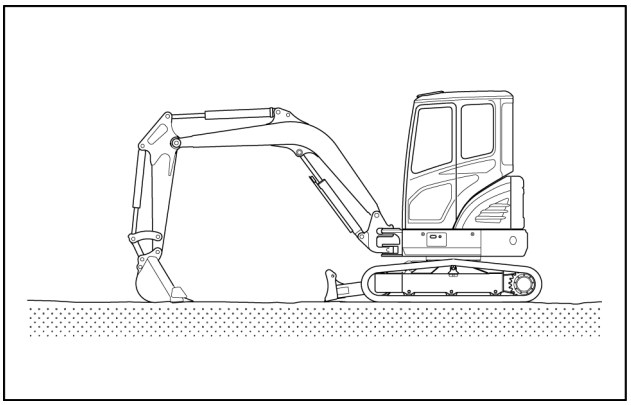

SMIL16MEX0040AA 1

Open the side hood to access to the three-way valve.

Use a wrench to turn the bolt of the three-way valve and select the hydraulic circuit.

- **(1)**: 1-way flow, single-acting hydraulic circuit
- **(2)**: 2-way flow, double-acting hydraulic circuit

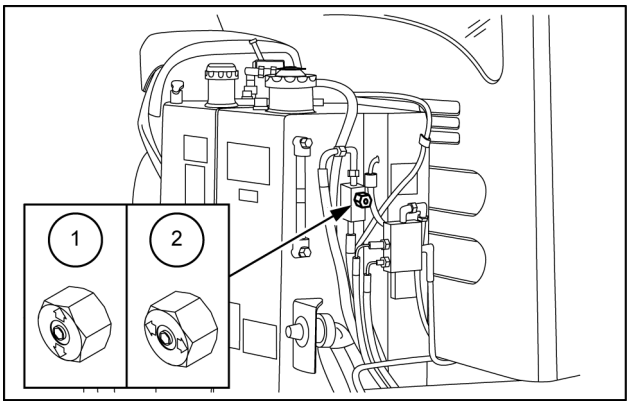

SMIL16MEX2714AB 2

https://truckmanualshub.com/

Hydraulic connections

The two stop valves are located on each side of the arm to allow proper and safe connection of the attachment hydraulic lines to the first auxiliary hydraulic circuit.

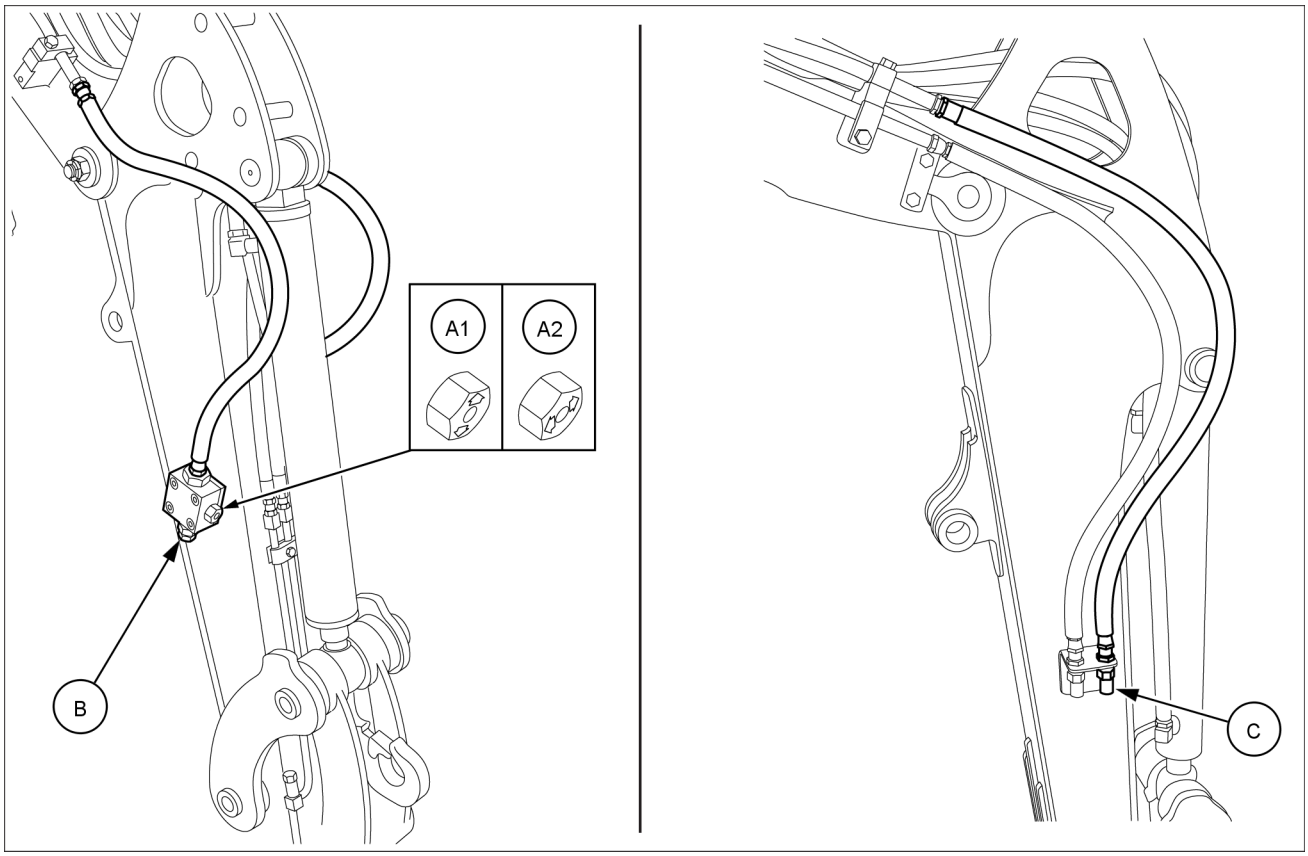

SMIL17MEX2841FA 3

Open **(A1)** / Close **(A2)** tool of the stop valve	**19 mm** wrench
Hydraulic connection **(B)**	G 3/8” male port with cap
Hydraulic connection **(C)**	Quick coupling fitting
Delivery pressure	Left-hand hose
Discharge pressure	Right-hand hose

NOTICE: *Always keep each connecting hose on the same side of the arm. Never cross-over the connecting hoses between the two sides of the arm.*

Operational settings

The flow rate/pressure characteristic of the first auxiliary hydraulic circuit is set by means the engine power applied.

The first auxiliary specifications for breaker are set from factory:

maximum flow rate (P2+P3)	**60.5 L/min** (**16 US gpm**)
maximum operating pressure (P3)	**205 bar** (**2972 psi**)

https://truckmanualshub.com/

Operating controls

If the auxiliary pedal is equipped proceed as follow:

- 1-way: press the front side of pedal to full stroke to operate a single-acting hydraulic attachment .
- 2-way: press the front side and rear side of pedal to full stroke to operate a double-acting hydraulic attachment.

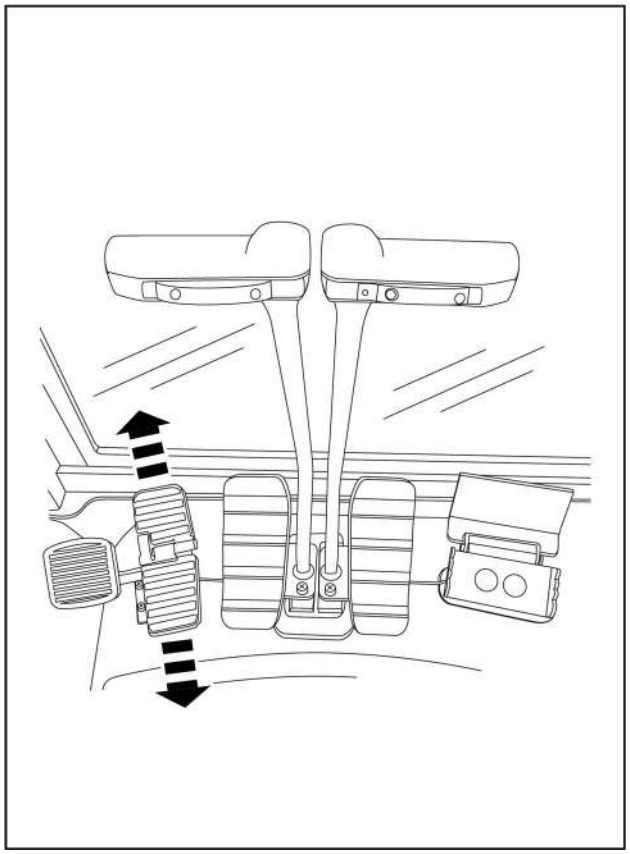

SMIL19MEX0775BA 4

If the right-hand control lever is equipped with a proportional switch, proceed as follows:

- 1-way: slide to the left-hand side the switch to operate the single-acting hydraulic attachment.
- 2-way: slide the switch from the left-hand to the right-hand to operate the double-acting hydraulic attachment.

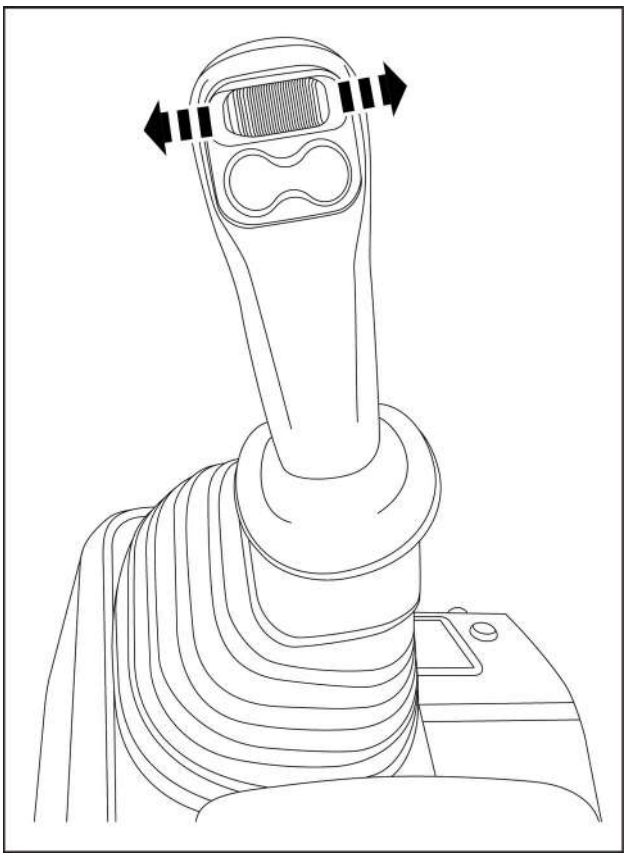

SMIL19MEX0128BA 5

https://truckmanualshub.com/

Second auxiliary hydraulic circuits (4-way)

The machine can be provided with an additional second auxiliary hydraulic circuit. This type of circuit can operate the attachments featuring secondary hydraulic actuation for positioning, such as rotating grabs or tiltable buckets.

Hydraulic connections

The two feed lines are located on each side of the arm under first auxiliary hydraulic circuit to allow proper and safe connection of the attachment hydraulic lines to the second auxiliary hydraulic circuit.

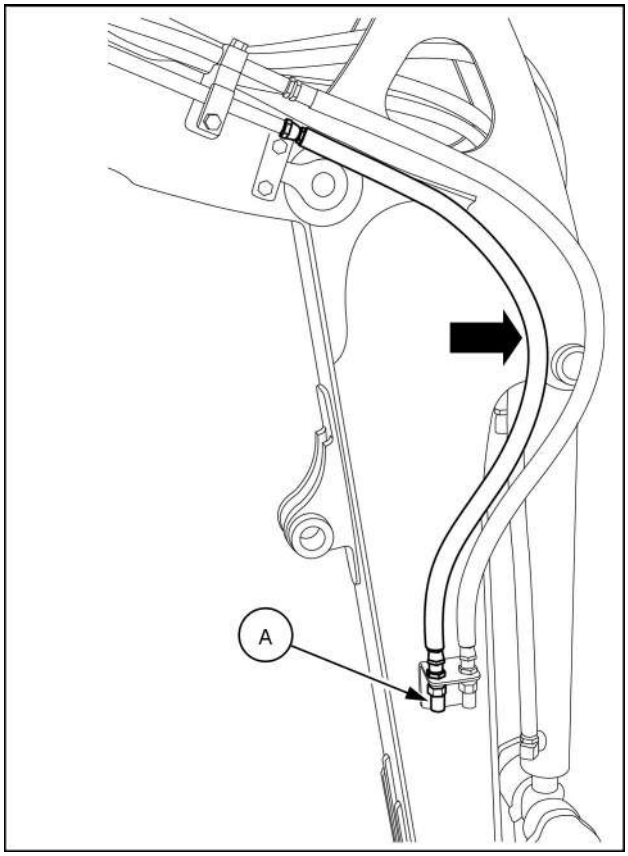

SMIL17MEX2778BA 6

Hydraulic connection **(A)**	Quick coupling fitting

Operational settings

The flow rate/pressure characteristic of the second auxiliary hydraulic circuit is set by means the engine power applied.

The second auxiliary specifications for second auxiliary circuit are set from factory:

maximum flow rate (P2+P3)	**60.5 L/min** (**16 US gpm**)
maximum operating pressure (P3)	**205 bar** (**2972 psi**)

https://truckmanualshub.com/

Operating controls

Use the proportional switch located on the left-hand control lever to operate the double-acting hydraulic attachment. Move left-hand side and right-hand side to confirm the rotation control directions:

- slide the switch to the left-hand side to rotate counter-clockwise the attachment.
- slide the switch to the right-hand side to rotate clockwise the attachment.

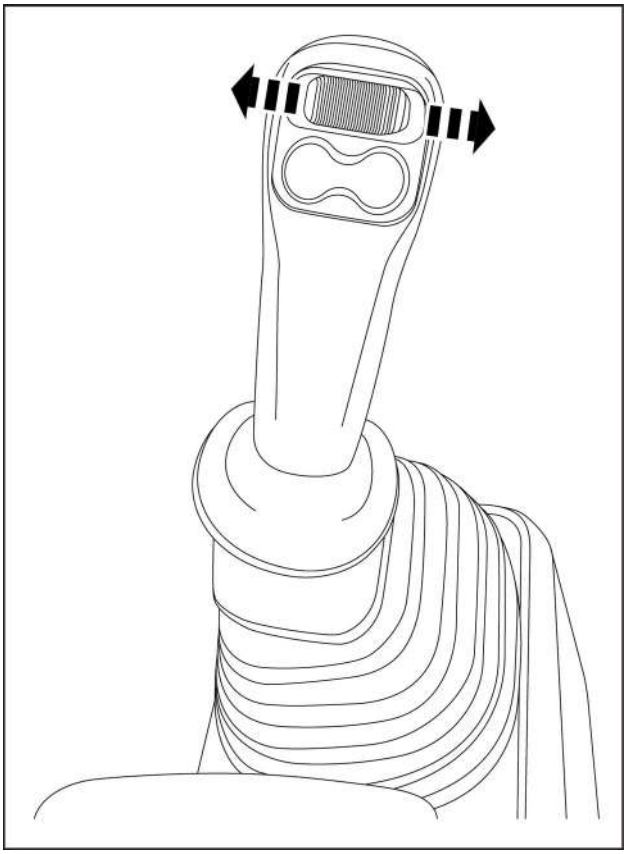

SMIL19MEX0129BA 7

Operating guidelines for usage of hydraulic attachments

Always select an hydraulic attachment which is suitable for installation on the machine, in order to avoid severe damages to the machine frames and to the machine systems. Make sure to select an hydraulic attachment which does not compromise the overall machine stability. Make sure to select an hydraulic attachment which properly matches the capacity of the auxiliary hydraulic circuit of the machine.

NOTICE: *make sure to know the maximum working pressure allowed by the attachment.*

Make sure to read and understand the Operator's Manual of the hydraulic attachment.

Always refer to the Operator's Manual of the hydraulic attachment for proper and safe installation of the attachment to the machine.

Always refer to the Operator's Manual of the hydraulic attachment and to the following instructions in this manual for proper and safe usage of the attachment.

Always refer to the Operator's Manual of the hydraulic attachment for proper maintenance of the attachment. Always refer to the Operator's Manual of the machine for specific maintenance schedule related to the usage of specific attachments (for example replacement of the hydraulic filters and of the hydraulic fluid, greasing of the pins of the bucket linkage).

https://truckmanualshub.com/

Operation with the hydraulic breaker

The hydraulic breaker is a single-acting hydraulic attachment, and shall be connected to the first auxiliary (1-way) hydraulic circuit.

Therefore, to operate with a hydraulic breaker the machine shall be equipped with the first auxiliary (1-way) hydraulic circuit.

After making sure to have read and understood the installation procedure described in the Operator's manual of the attachment, proceed as follows:

1. Make sure that the machine and the attachment to be installed are on flat and level ground.
2. Operate the controls of boom, arm and bucket in order to install the hydraulic breaker to the bucket linkage at the top of the arm.
3. Stop the engine. Release pressure inside the first auxiliary (1-way) hydraulic circuit as indicated on page **6-10**.
4. Close the stop valves at the top of the arm. Install the connecting hoses between the attachment and the stop valves.

   NOTICE: *on the breaker, make sure to identify the supply port (IN or P) and the return port to tank (OUT or T). The hose for breaker supply shall always be connected to the stop valve on the left-hand side of the arm. If the supply port on the breaker is not aligned to the stop valve on the left-hand side of the arm, check for an alternative set up of the hydraulic ports on the attachment.*

   NOTICE: *always keep each connecting hose on the same side of the arm. Never cross-over the connecting hoses between the two sides of the arm.*
5. Open the stop valves and check the fixing clamps for looseness, and the tubes and hoses fittings for leaks.
6. Start the engine. Operate the controls of boom, arm and bucket in order to position the breaker right to the structure or to the object to be crushed.

https://truckmanualshub.com/

7. Press and hold the front side of the pedal (if equipped) to full stroke in order to operate the hydraulic breaker with the continuous selected flow, providing a constant blowing frequency. Release the pedal to stop the breaker operation.

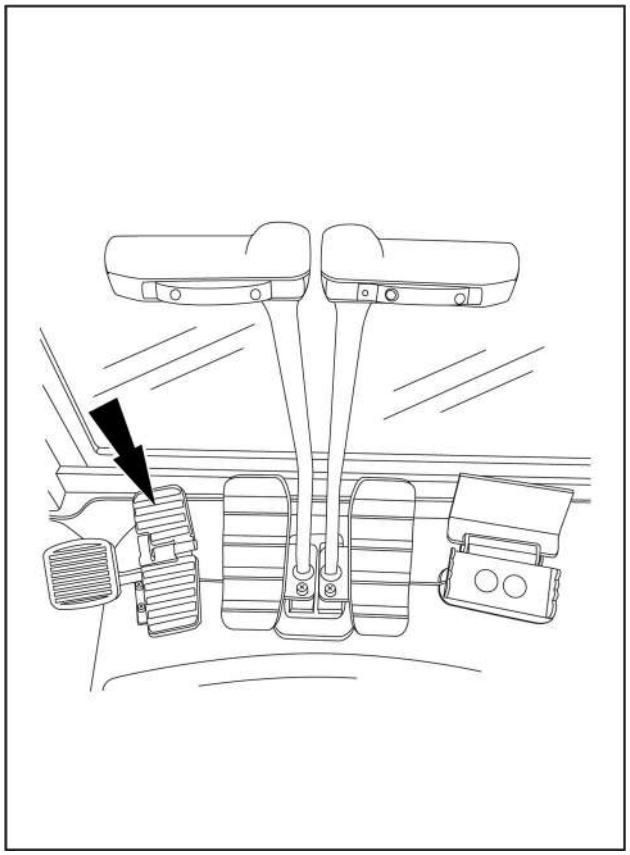

SMIL19MEX0775BA 8

8. Use the right-hand control lever and slide the proportional switch to the left-hand to operate the hydraulic breaker. The proportional switch allow to have a variable flow rate/pressure which providing a variable blowing frequency. Reposition the switch to the center of the right-hand control lever to stop the breaker operation.

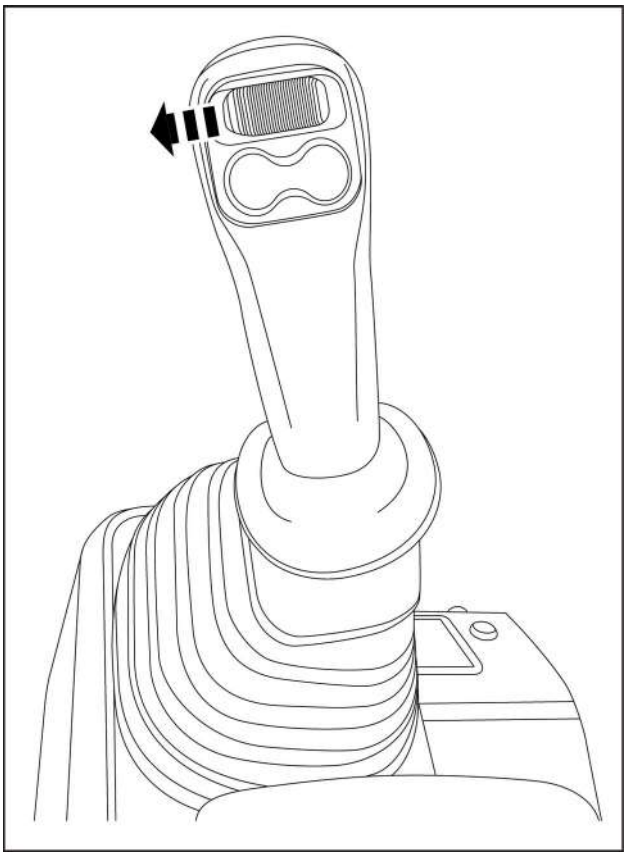

SMIL19MEX0128BA 9

https://truckmanualshub.com/

Precautions while operating the hydraulic breaker

Avoid hitting objects with breaker. The breaker is heavier than the bucket and lowers faster. This may cause damage to the breaker, attachment, and upper structure. Always lower the breaker slowly until the chisel point touches the object to be broken before starting breaker operation.

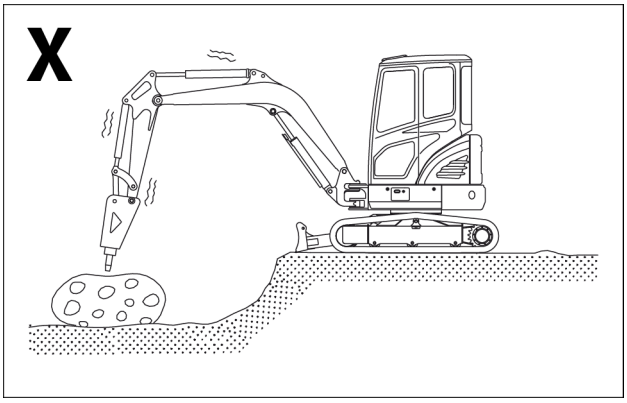

SMIL16MEX0461AA 10

Do not use the hydraulic breaker and/or swing function to push objects as damage to the attachment may result.

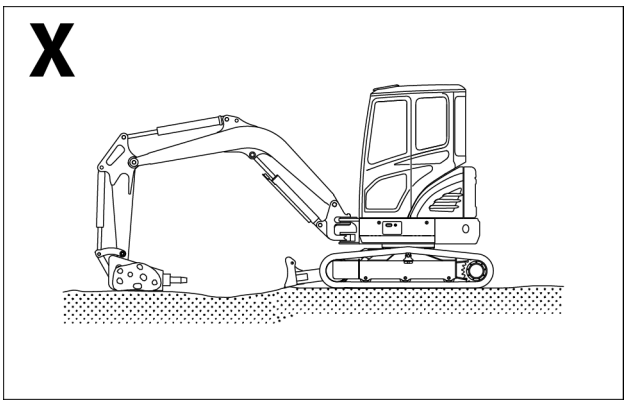

SMIL16MEX0462AA 11

Do not operate the breaker with the excavator cylinders fully extended or retracted to avoid attachment and/or cylinder damage.

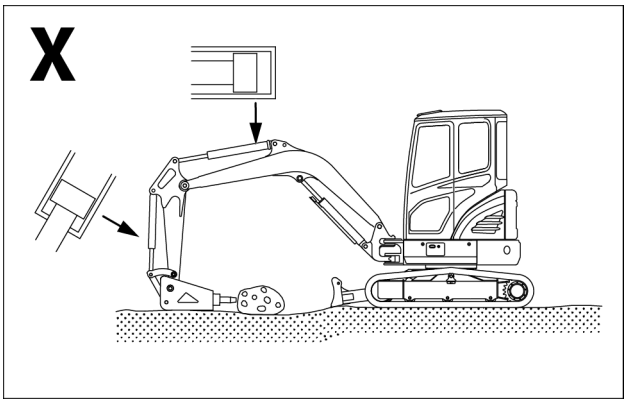

SMIL16MEX0463AA 12

Stop working if hydraulic hoses look abnormally bent. Contact your authorized Dealer.

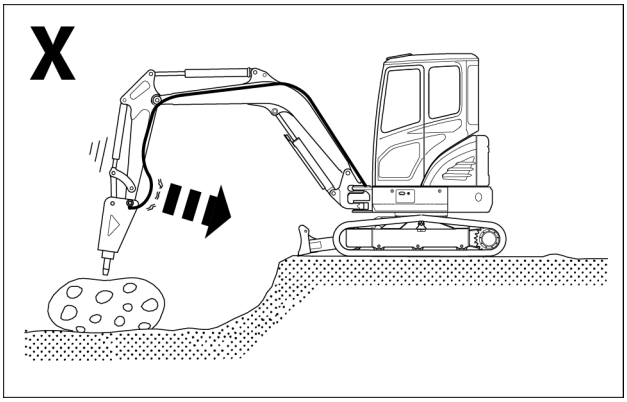

SMIL16MEX0464AA 13

https://truckmanualshub.com/

Do not operate the breaker to the side of the machine. The machine may become unstable and undercarriage components life may be reduced.

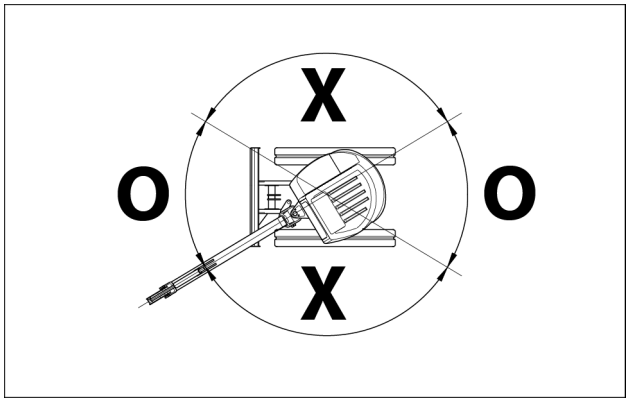

SMIL16MEX0465AA 14

Operate the excavator carefully to avoid hitting the boom with the hydraulic breaker.

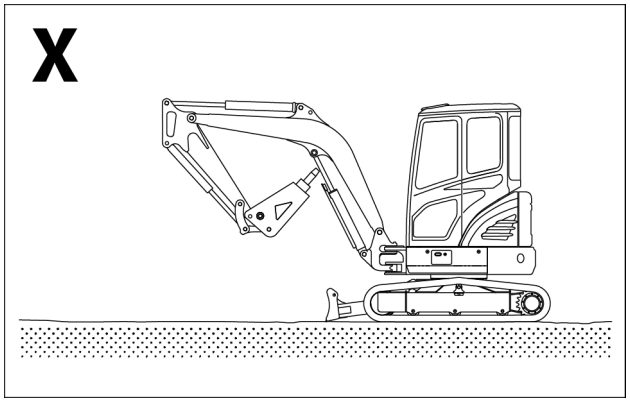

SMIL16MEX0466AA 15

Do not operate the breaker while striking. This can cause damage to the working device and to the swing system.

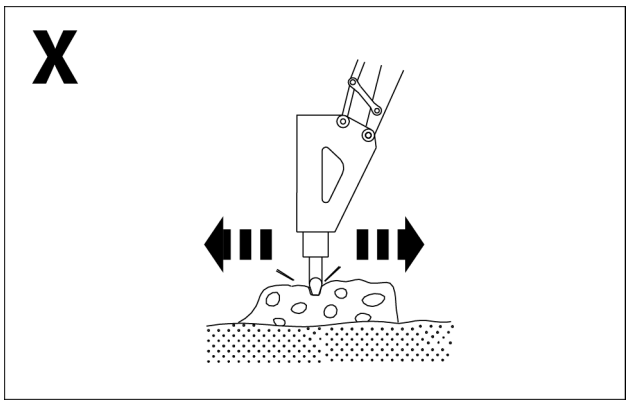

SMIL16MEX0467AA 16

Do not operate the hydraulic breaker continuously longer than **60 s**. Excessive chisel wear will result. If an object could not be broken within **60 s**, apply chisel to other locations, less than **60 s** for each location.

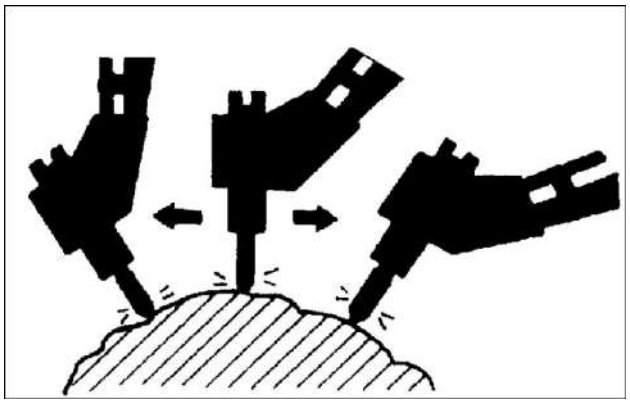

NH0205 17

https://truckmanualshub.com/

Advised models

NOTICE: *all attachment shown on this manual are exclusive to the North American Market. To all other markets contact your authorized NEW HOLLAND CONSTRUCTION dealer, before purchasing an attachment.*

NOTE: *contact your authorized NEW HOLLAND CONSTRUCTION dealer, before purchasing an attachment.*

Hydraulic breaker			
Model	Unit weight (with chisel - without adapter plate)	Operating pressure	Operating flow
CH 3M hydraulic hammer	**222 kg** (**489 lb**)	**100 – 160 bar** (**1450 – 2320 psi**)	**35 – 60 L/min** (**9.2 – 15.9 US gpm**)
CH 4M hydraulic hammer	**269 kg** (**593 lb**)	**100 – 160 bar** (**1450 – 2320 psi**)	**35 – 60 L/min** (**9.2 – 15.9 US gpm**)

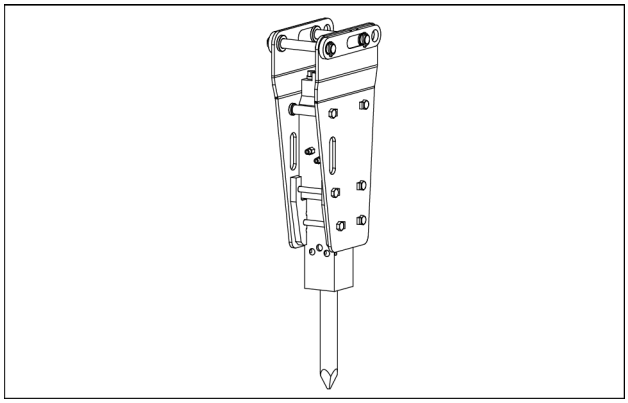

SMIL17MEX2784AA 18

NOTE: *maximum tool (chisels) allowable for model CH 3M:* ***12 kg*** *(****26.5 lb****)*

NOTE: *maximum tool (chisels) allowable for model CH 3M:* ***15 kg*** *(****33 lb****)*

NOTICE: *For cab version, to improve breaking performance and stability it is mandatory to use additional counterweight*

NOTICE: *For canopy version, the breaker must not be used*

Adapter plate	
Model	Unit weight
Klac type	**67 kg** (**147.7 lb**)

NOTE: *for Klac coupler applications only.*

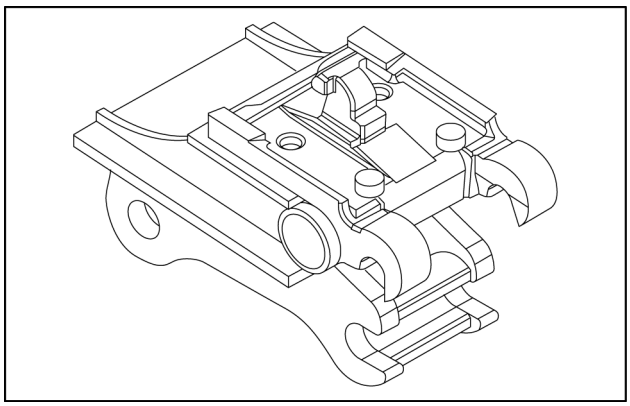

SMIL17MEX2840AA 19

Pin, bushing and insert kit
Unit weight
16 kg (**36 lb**)

NOTE: *for all direct fit and pin-grabber coupler application.*

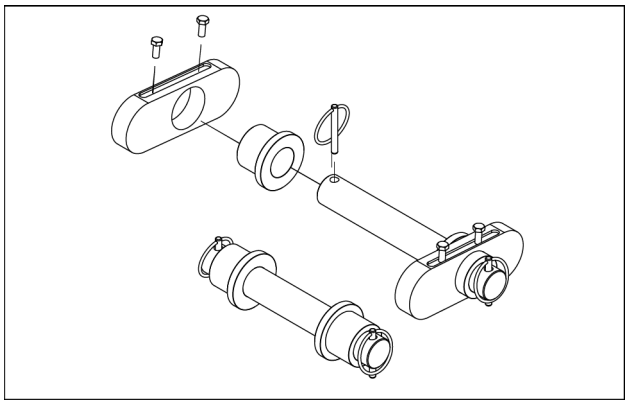

SMIL17MEX2838AA 20

https://truckmanualshub.com/

Operation with the hydraulic auger

The hydraulic auger is a double-acting hydraulic attachment, and shall be connected to the first auxiliary (2-way) hydraulic circuit.

Therefore, to operate with a hydraulic auger the machine shall be equipped with the first auxiliary (2-way) hydraulic circuit.

After making sure to have read and understood the installation procedure described in the Operator's manual of the attachment proceed as follows:

1. Make sure that the machine and the attachment to be installed are on flat and level ground.
2. Operate the controls of boom, arm and bucket in order to install the hydraulic auger with its relative cradle and power head unit auger drive to the bucket linkage at the top of the arm.
3. Stop the engine. Release pressure inside the first auxiliary (1-way) hydraulic circuit as indicated on page **6-10**.
4. Open the side hood to access to the three-way valve. Use a wrench to turn the bolt of the three-way valve and positioning it to the two way flow, double acting hydraulic circuit.
   Close the side hood.
5. Close the stop valves at the top of the arm. Install the connecting hoses between the attachment and the stop valves.

   NOTICE: *on the power head unit auger drive, make sure to identify the supply port (IN or P) and the return port to tank (OUT or T). The hose for power head unit auger drive supply shall always be connected to the stop valve on the left-hand side of the arm. If the supply port on the power head unit auger drive is not aligned to the stop valve on the left-hand side of the arm, check for an alternative set up of the hydraulic ports on the attachment.*

   NOTICE: *always keep each connecting hose on the same side of the arm. Never cross-over the connecting hoses between the two sides of the arm.*

6. Open the stop valves and check the fixing clamps for looseness, and the tubes and hoses fittings for leakages.

https://truckmanualshub.com/

7. Use a suitable belt with eyebolt **(A)** to secure the link rod on the top of the arm to avoid unappropriated moving and tapping on the top of the arm.

   NOTE: *applies to pendulum mount only.*

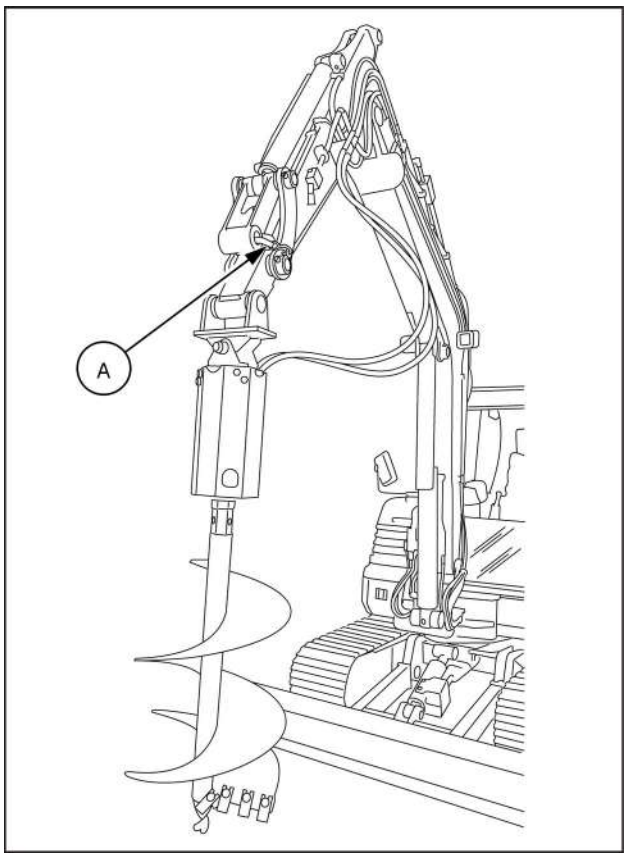

SMIL17MEX2805BA 21

8. Start the engine. Operate the controls of boom, arm and bucket in order to position auger to the position for the hole.

https://truckmanualshub.com/

9. If the auxiliary pedal is equipped, press the front and rear sides of the pedal in order to rotate the auger clockwise and counterclockwise.

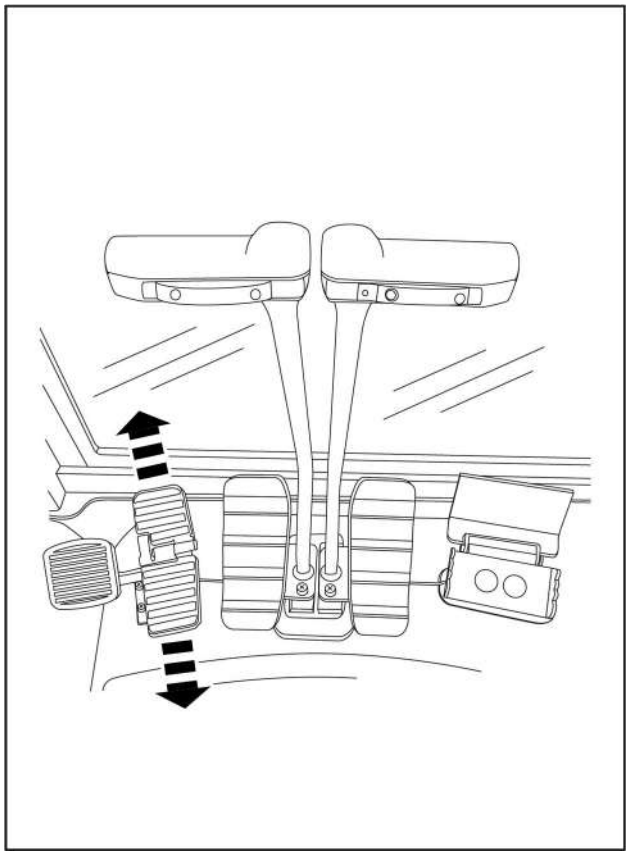

SMIL19MEX0775BA 22

10. If the proportional switch on the right-hand control lever is equipped, slide the left-hand the proportional switch to operate the hydraulic auger. Slide to the left-hand the proportional switch to rotate clockwise the auger.
    Slide to the right-hand the proportional switch to rotate the auger counterclockwise.
    The proportional switch allows to have a variable flow rate/pressure which provide a variable blowing frequency.
    Reposition the proportional switch to the center of the right-hand control lever to stop auger operation.

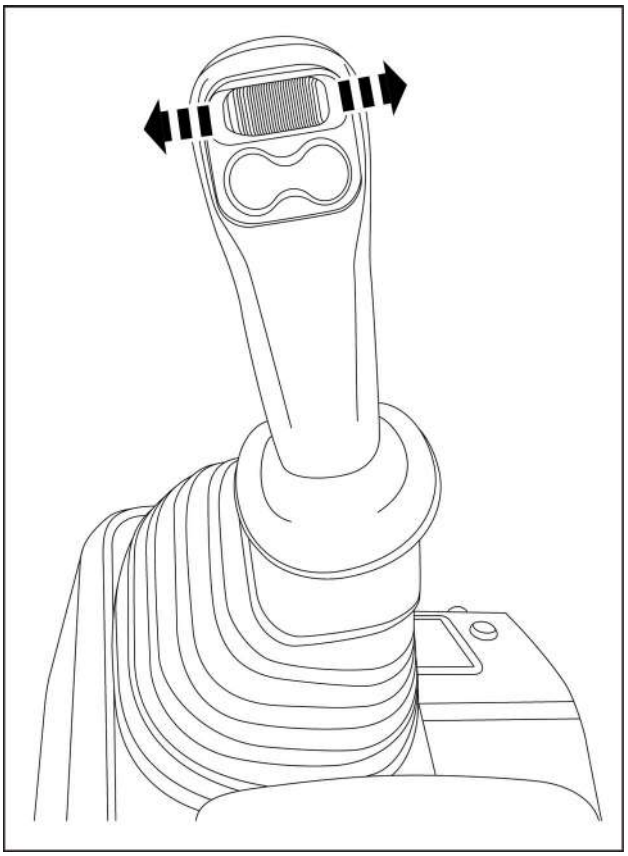

SMIL19MEX0128BA 23

https://truckmanualshub.com/

Precautions while operating the hydraulic auger

Avoid hitting objects with auger. The auger is heavier than the bucket and lowers faster. This may cause damages to the auger, attachment, and upper structure. Always lower the auger slowly until the bit point touches the ground to be drilled before starting auger operation.

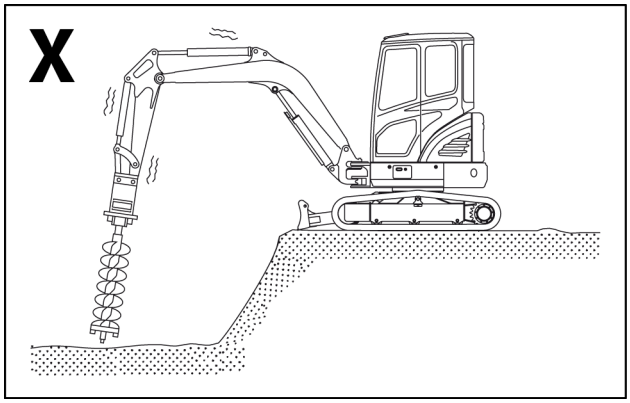

SMIL17MEX2807AA 24

Do not use the hydraulic auger and/or swing function to push objects as damage to the attachment may result.

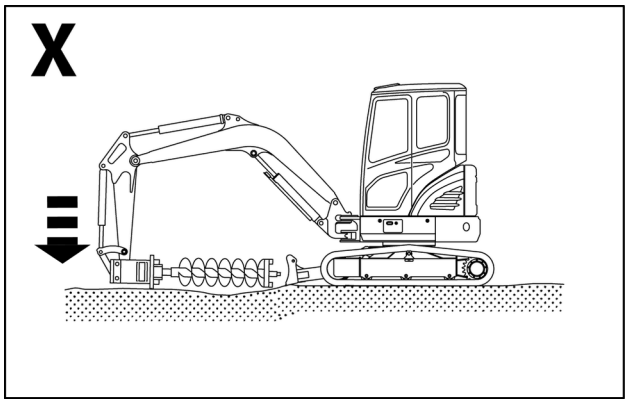

SMIL17MEX2808AA 25

Do not operate the auger with the excavator cylinders fully extended or retracted to avoid attachment and/or cylinder damage.

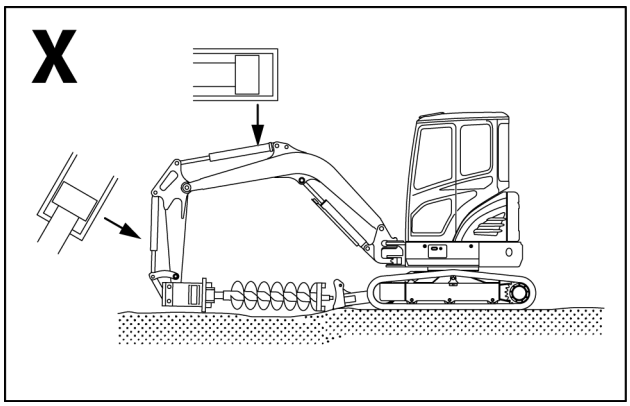

SMIL17MEX2809AA 26

Stop working if hydraulic hoses look abnormally bent. Contact your authorized Dealer.

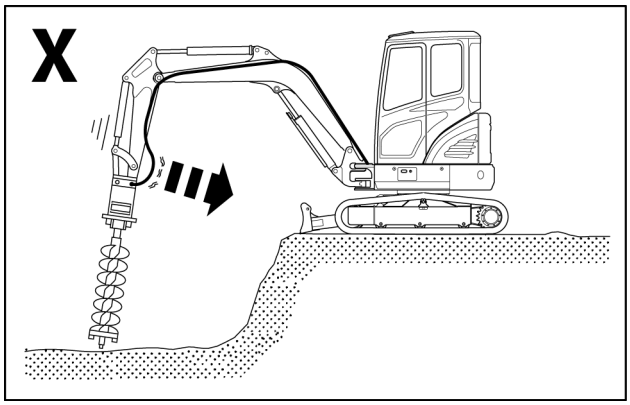

SMIL17MEX2810AA 27

https://truckmanualshub.com/

Do not operate the auger to the side of the machine. The machine may become unstable and undercarriage components life may be reduced.

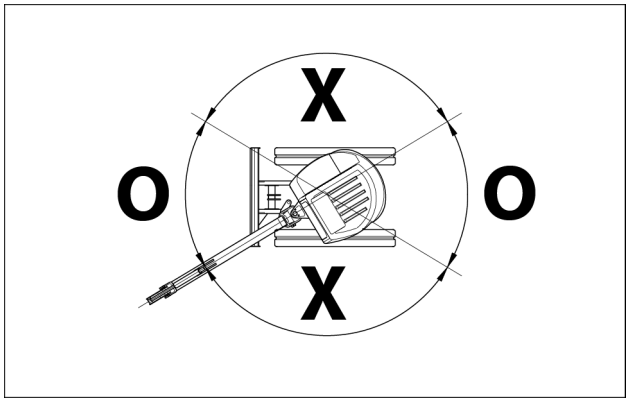

SMIL16MEX0465AA 28

Operate the excavator carefully to avoid hitting the boom with the hydraulic auger.

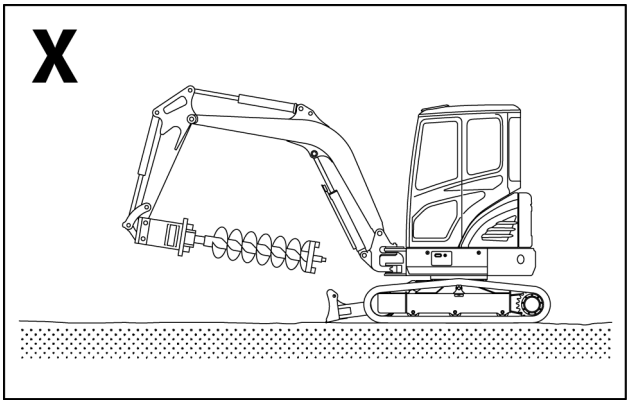

SMIL17MEX2811AA 29

Do not operate the auger while striking. This can cause damage to the working device and to the swing system.

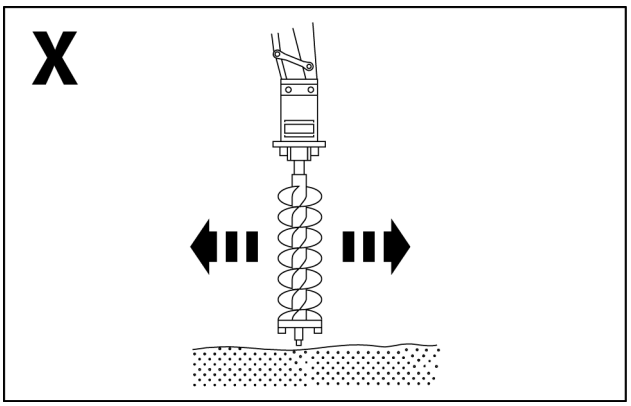

SMIL17MEX2812AA 30

https://truckmanualshub.com/

Advised models

NOTICE: *all attachment shown on this manual are exclusive to the North American Market. To all other markets contact your authorized NEW HOLLAND CONSTRUCTION dealer, before purchasing an attachment.*

NOTE: *contact your authorized NEW HOLLAND CONSTRUCTION dealer, before purchasing an attachment.*

Drive unit (1)			
Model	Maximum unit weight	Maximum working pressure	Maximum working flow
X1475H200	**77 kg** (**170 lb**)	Up to full system pressure	**35 – 75 L/min** (**9 – 20 US gpm**)
X1475R256	**77 kg** (**170 lb**)	Up to full system pressure	**35 – 75 L/min** (**9 – 20 US gpm**)

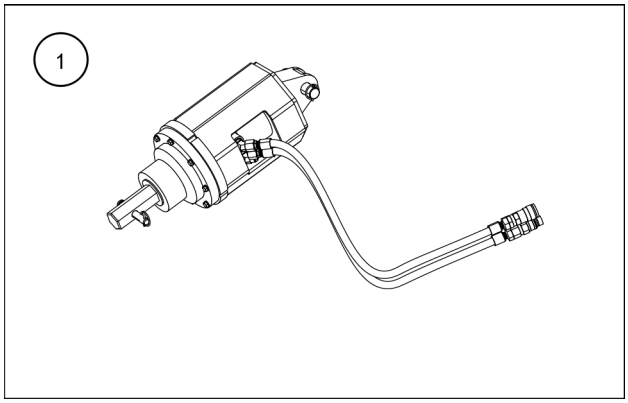

SMIL17MEX2793AA 31

Pendulum mount (2)	
Model	Unit weight
Pendulum auger mount	**25 kg** (**55 lb**)

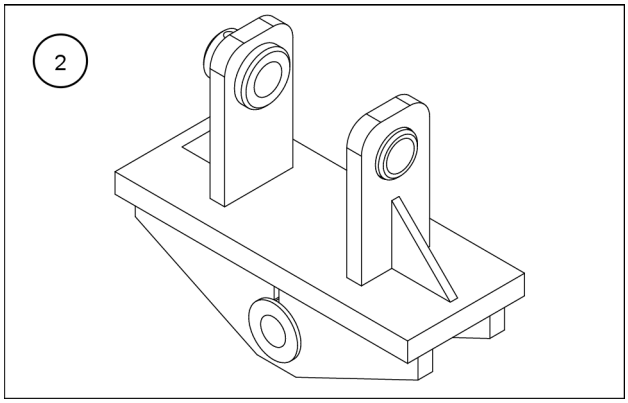

SMIL17MEX2834AA 32

Cradle mount bracket (3)	
Model	Unit weight
Cradle auger mount	**56 kg** (**124 lb**)

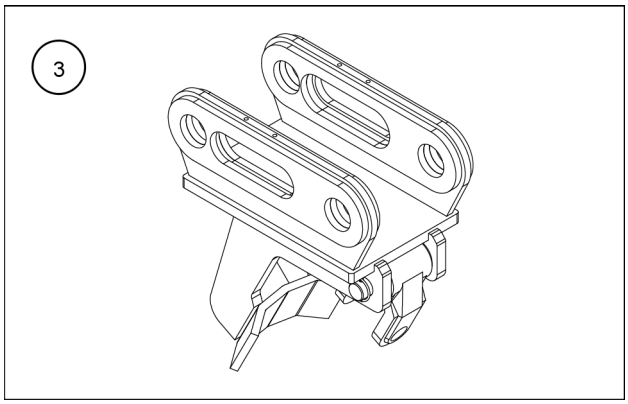

SMIL17MEX2781AA 33

https://truckmanualshub.com/

Pin, bushing and insert kit (4)
Unit weight
16 kg (**36 lb**)

NOTE: *for cradle mount bracket application.*

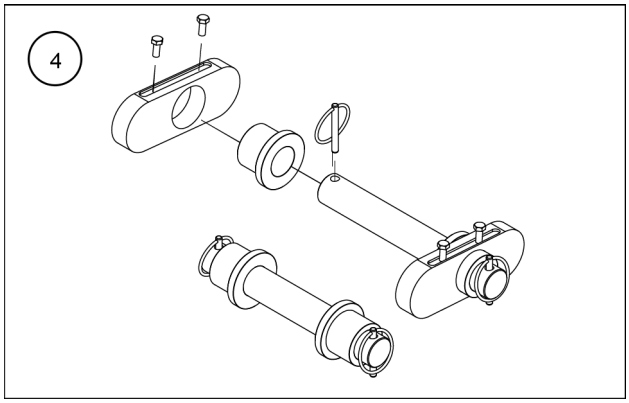

SMIL17MEX2838AA 34

Bit (5)	
Unit weight	Maximum diameter
92 kg (**203 lb**)	**450 mm** (**18 in**)

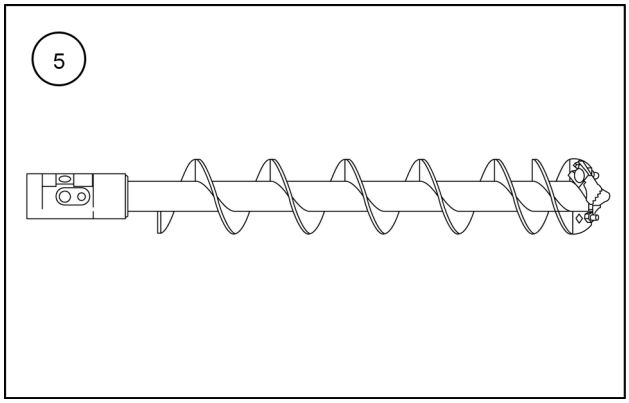

SMIL17MEX2794AA 35

Auger bit extension (6)	
Unit weight	Maximum length
26 kg (**57 lb**)	**1220 mm** (**48 in**)

NOTICE: *Never connect more than one extension with auger.*

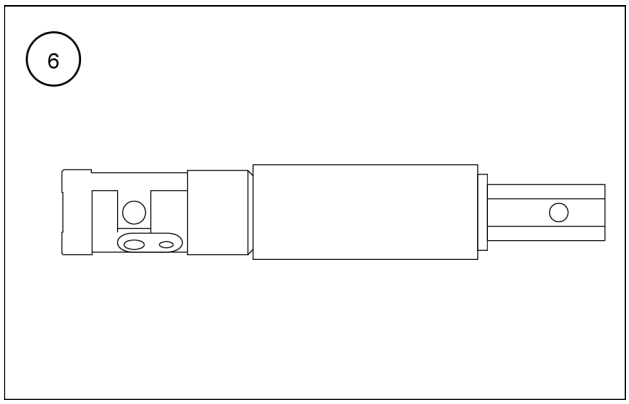

SMIL17MEX2839AA 36

Adapter plate (7)	
Model	Unit weight
Klac type	**67 kg** (**147.7 lb**)

NOTE: *for Klac coupler applications only.*

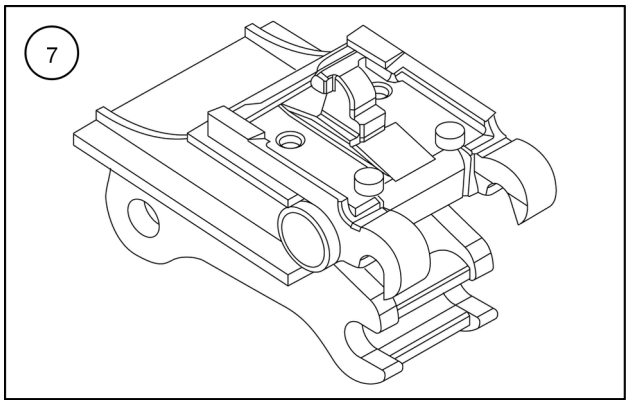

SMIL17MEX2840AA 37

https://truckmanualshub.com/

The auger pendulum mount assembly consist of the following items:

- Drive unit **(1)**
- Pendulum mount **(2)**
- Bit **(5)**
- Auger bit extension **(6)**: this component, not shown in figure, must be installed between drive unit **(1)** and the bit **(5)**.

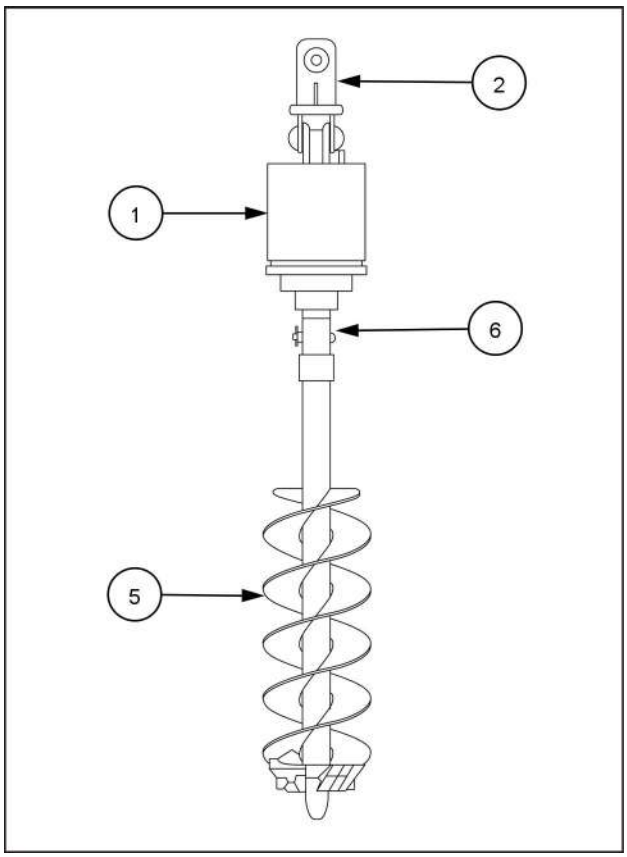

SMIL17MEX3033BA 38

The auger cradle mount bracket assembly consist of the following items:

- Drive unit **(1)**
- Cradle mount bracket **(3)**
- Pin, bushing and insert kit **(4)**
- Bit **(5)**
- Auger bit extension **(6)**: this component, not shown in figure, must be installed between drive unit **(1)** and the bit **(5)**
- Adapter plate **(7)**: this component, not shown in figure, must be used to engage the cradle mount bracket **(3)** with Klac coupler.

  NOTE: *the adapter plate **(7)** is for Klac coupler applications only.*

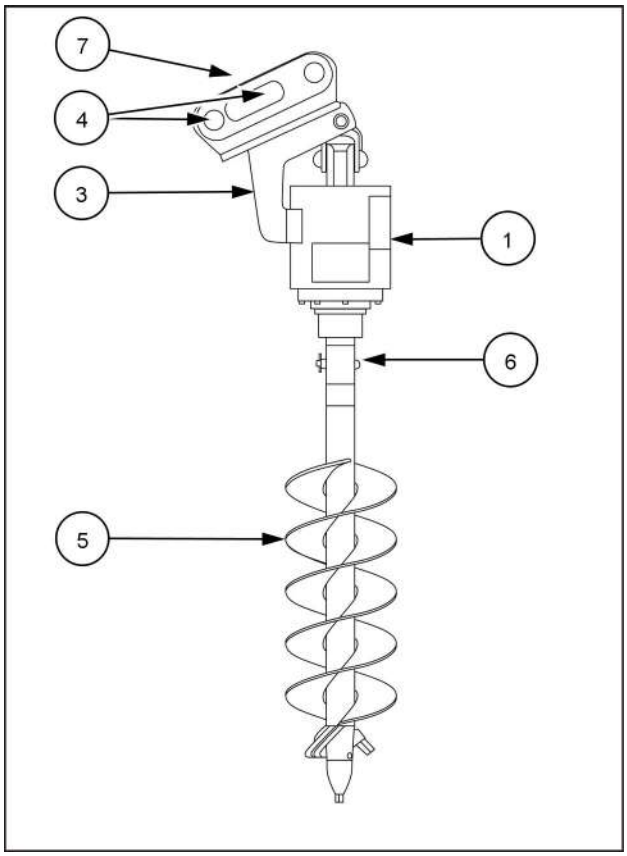

SMIL17MEX3034BA 39

https://truckmanualshub.com/

Hydraulic oil - breaker/auger

When using the hydraulic breaker, hydraulic fluid deteriorates more quickly than during ordinary digging. Check the hydraulic fluid level more frequently. In addition, when changing the filters, also check the condition of the hydraulic fluid.

Use the following table to determine the interval for changing the hydraulic fluid and filters when using the hydraulic breaker.

Maintenance action	Operating the breaker (rate 100%)	Normal use
Hydraulic oil replacement	Every **1000 h**	Every **5000 h**
Biodegradable hydraulic oil replacement	Every **600 h**	Every **2000 h**
Pilot line filter replacement	Every **200 h**	Every **1000 h**
Hydraulic oil return filter replacement	Every **200 h**	Every **1000 h**

https://truckmanualshub.com/

Quick coupling system - Klac type

⚠ WARNING

Crushing hazard!
Never put your hands inside the quick coupler mechanism. Turn off the engine and wait for all movement to stop.
Failure to comply could result in death or serious injury.

W1542A

⚠ WARNING

Hazard to bystanders!
ALWAYS make sure the work area is clear of bystanders and domestic animals before starting this procedure. Know the full area of movement of the machine. Do not permit anyone to enter the area of movement during this procedure.
Failure to comply could result in death or serious injury.

W0245A

NOTICE: *the quick coupler extends the length of the arm. Make sure to check the operating range of the coupled attachment in order to avoid risk of striking the cab or the machine frame.*

NOTICE: *never operate with a quick-coupled hydraulic breaker for an extended period of time, in order to reduce the risk of premature wear, failures or breakage of the quick coupler. Never use the breaker as a lever, as this subjects the quick coupler cylinder to stress.*

NOTICE: *be sure to read and understand the Operator's Manual of the quick coupler to proper installation, usage and maintenance.*

https://truckmanualshub.com/

Attachment engagement

⚠ WARNING

Misuse hazard!
Follow the operating instructions in this chapter. Any other practice that has not received the prior approval of the manufacturer is considered to be strictly forbidden.
Failure to comply could result in death or serious injury.

W0281A

⚠ WARNING

Crushing hazard!
This operation may be dangerous. You are advised to wear suitable clothing and respect all relevant safety messages.
Failure to comply could result in death or serious injury.

W0283A

⚠ WARNING

Cutting hazard!
This operation could be dangerous.
Do not put your hands near the mobile plate.
If the mobile plate is not properly locked in the engaged position, the mobile plate could suddenly disengage.
Failure to comply could result in death or serious injury.

W1491A

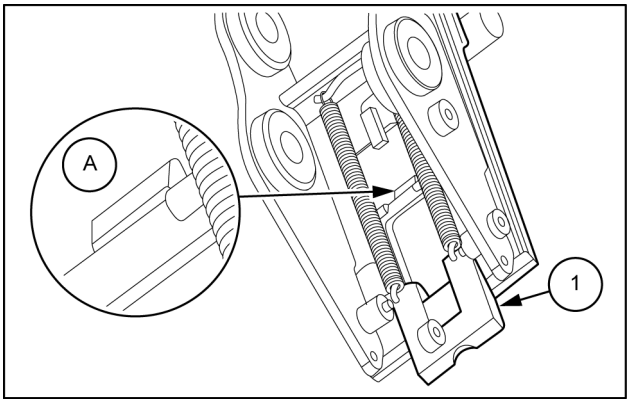

SMIL16MEX3210AB 1

To engage the attachment to the quick coupling system:

1. Make sure that the machine and the bucket to be used are on a flat solid ground.

   NOTICE: *before using an attachment, make sure that its total weight when fully loaded DOES NOT EXCEED the maximum lift capacity of the machine.*

2. Before attaching any equipment, the locking plate of the quick coupling must be prepared. Operate the arm controls, arm and bucket to positioning the quick coupling horizontally at a height of about **1 m** (**3.3 ft**) from the ground. Lock all machine controls, down from the cab, and take the release tool. Insert the release tool into the locking plate as shown in figure.

   NOTE: *use the release tool **(2)** to move the locking plate into its engage position.*

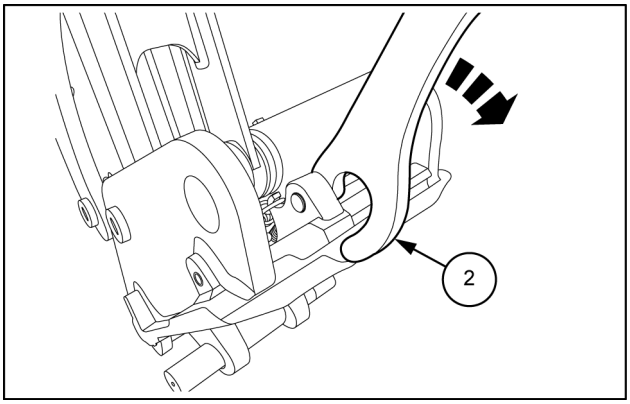

SMIL16MEX3211AB 2

https://truckmanualshub.com/

3. Pull the wrench handle to extract the locking plate, until it latches in place.
4. Remove the release tool, and store it in a compartment of the machine.
5. Align the arm **(3)** so that is parallel to the bucket **(4)**, then engage the pins **(5)** that secure the quick coupler to the bucket hooks.

   NOTE: *the bucket cylinder **(6)** must be completely retracted: the angle **(B)** between the quick coupler and the bucket jaw must be at least **100°**.*

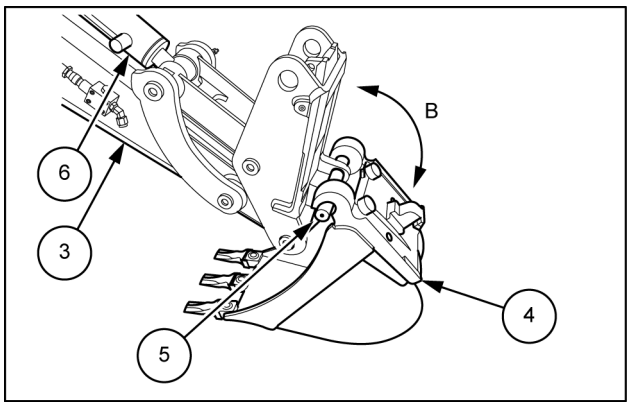

SMIL16MEX3212AB 3

NOTICE: *complete the bucket engagement by positioning the engagement pins fully in the hooks of the adapter plate. Do not engage the bucket, as shown in the figure opposite, unless the pins are completely in place (detail A); doing so may cause the pins to bend under stress, also seriously damaging the quick-coupling system and attachment.*

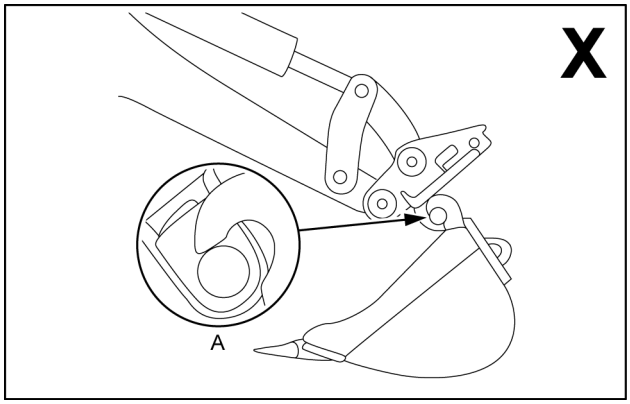

SMIL17MEX0078AA 4

⚠ WARNING

Crushing hazard!
This operation may be dangerous. You are advised to wear suitable clothing and respect all relevant safety messages.
Failure to comply could result in death or serious injury.

W0283A

6. Lift the bucket to a height of **50 cm** (**19.7 in**) **(C)** from the ground and engage the right-hand control lever to extend the bucket cylinder **(6)**. The bucket makes the distinctive noise when locked.

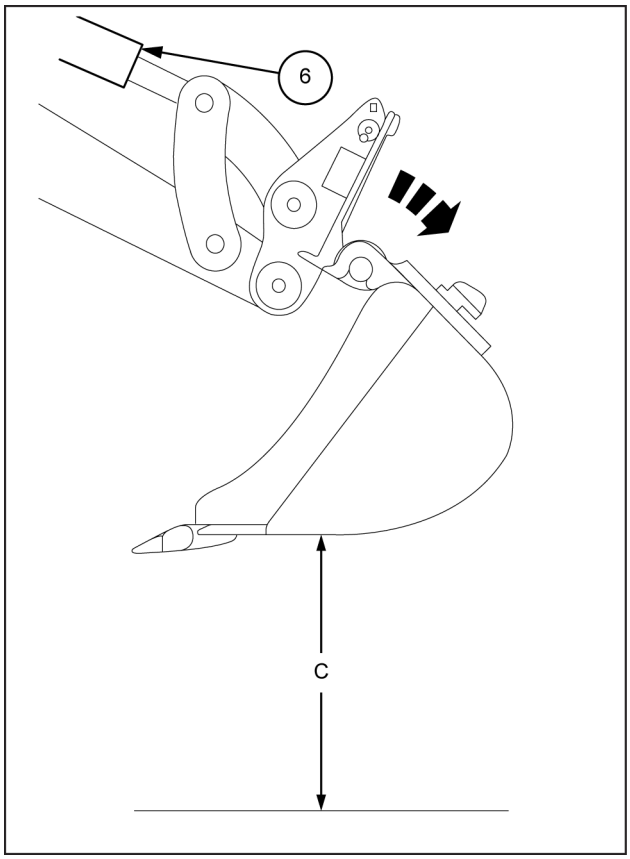

SMIL16MEX3213BB 5

https://truckmanualshub.com/

7. Check the coupling between the bucket and the quick coupler.
   - **(A)** there must be no play between the alignment profiles. Lock all machine controls, get off the machine, go near to the quick coupling system and check the coupling status.
8. Coupling is complete when the locking plate is aligned with the back surface of the coupler.
   - **(B)** Bucket locking is not complete if the mobile plate is not aligned with the quick coupling system: extend the bucket cylinder, lock all machine controls, get off the machine, go near to the quick coupling system and check the coupling status.

NOTICE: *check the coupling status before performing any operation. If no visual check is possible from the operator's seat, lock all machine controls, get off the machine and check the coupling status.*

9. Before commencing any work operations, get on the machine, unlock the machine controls, and operate the arm, boom and bucket controls to maintain the bucket against the ground.

   NOTE: *this operation is known as " BUMP TEST".*

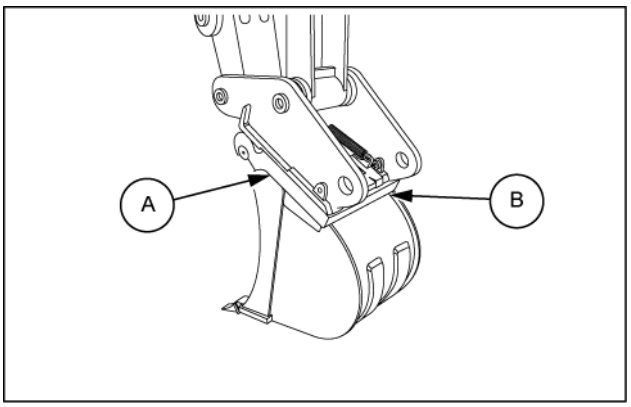

SMIL17MEX0061AB 6

https://truckmanualshub.com/

Attachment disengagement - Mechanical version

⚠ WARNING

Misuse hazard!
Follow the operating instructions in this chapter. Any other practice that has not received the prior approval of the manufacturer is considered to be strictly forbidden.
Failure to comply could result in death or serious injury.

W0281A

⚠ WARNING

Cutting hazard!
This operation could be dangerous.
Do not put your hands near the mobile plate.
If the mobile plate is not properly locked in the engaged position, the mobile plate could suddenly disengage.
Failure to comply could result in death or serious injury.

W1491A

⚠ WARNING

Impact and crushing hazard!
The attachment can swing from one side during the removal procedure. Keep clear of the attachment, including the swing area.
Failure to comply could result in death or serious injury.

W1492A

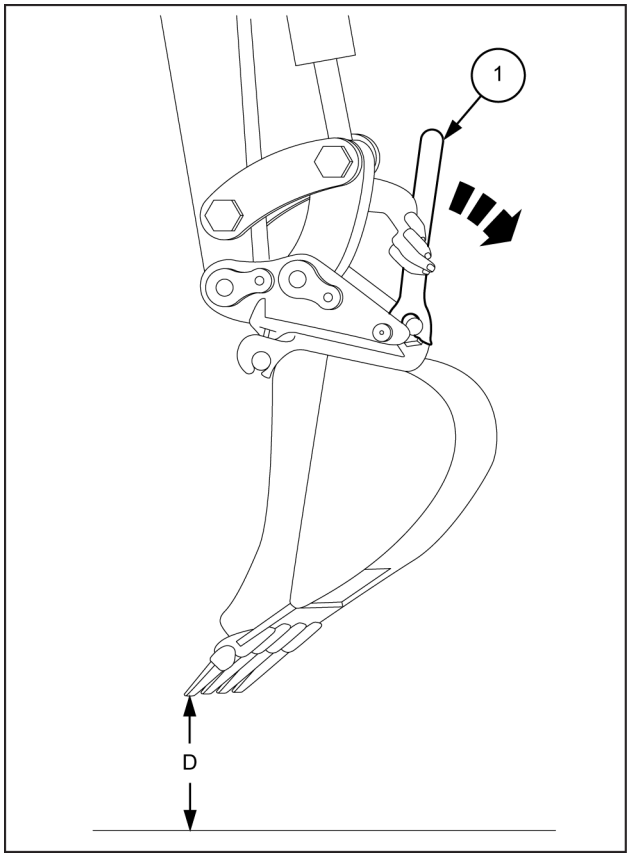

SMIL16MEX3215BB 7

To disengage the attachment from the quick coupling system:

1. Lift the bucket **30 cm** (**11.8 in**) **(D)** from the ground, then extend the bucket cylinder to prevent excessive oscillation and keep it from locking when disengaged.
2. Use the release tool **(1)** to disengage the bucket from the coupler. To release the system, pull the release tool completely until the system unlocks.
3. Extend the arm and position the bucket on the ground.
4. Disengage the pins **(2)** of the quick coupler from the bucket hooks.

NOTICE: *pay close attention while disengaging the bucket. A falling bucket may cause damage to objects or seriously injure people.*

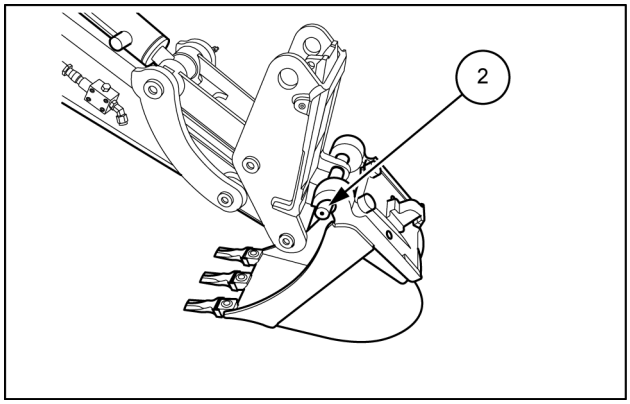

SMIL16MEX3216AB 8

https://truckmanualshub.com/

Securing the quick coupling system

NOTICE: *The quick coupling system must be secured unless using another attachment. Be sure to retract the mobile plate of the quick coupling system.*

⚠ WARNING

Cutting hazard!
This operation could be dangerous.
Do not put your hands near the mobile plate.
If the mobile plate is not properly locked in the engaged position, the mobile plate could suddenly disengage.
Failure to comply could result in death or serious injury.

W1491A

1. Move the boom, arm, and bucket controls in order to position the quick coupling system **1 m** (**3.3 ft**) above the ground.
2. Position the release tool **(1)** on the locking plate as shown in the figure opposite.

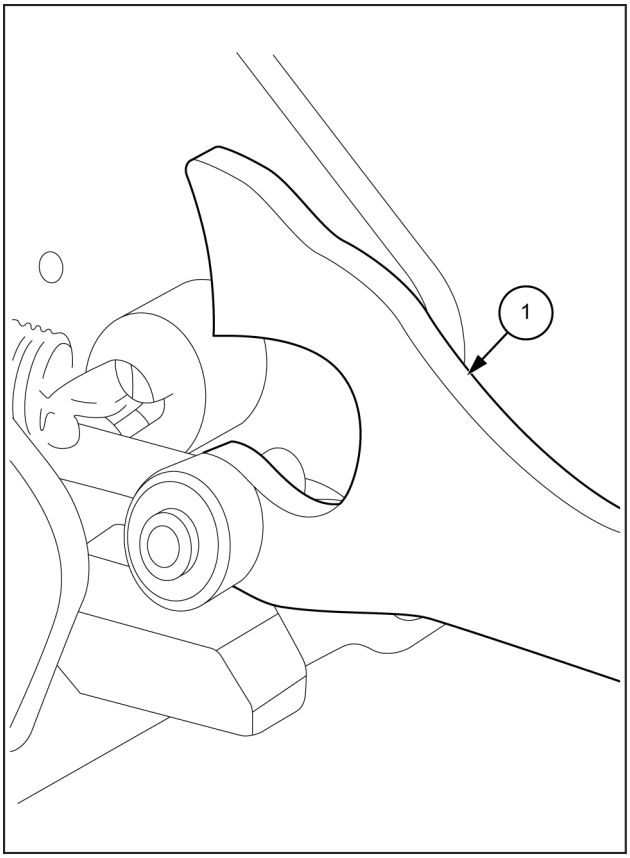

SMIL17MEX0062BB 9

3. Push the release tool down to disengage the locking plate from the stop tab.

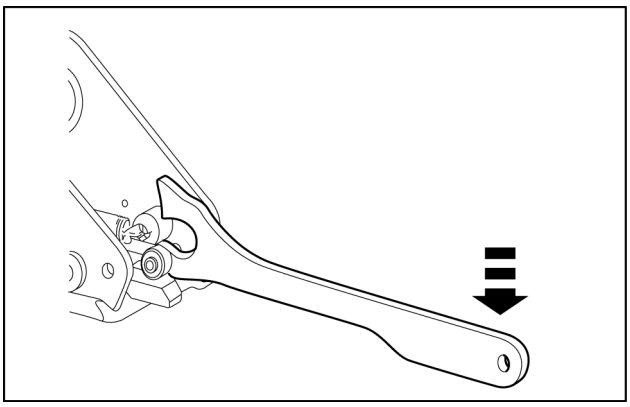

SMIL17MEX0063AB 10

4. Move the locking plate toward the bucket latched position. The locking plate is secured when the springs are at rest.
5. Remove the release tool and put it in the machine compartment.

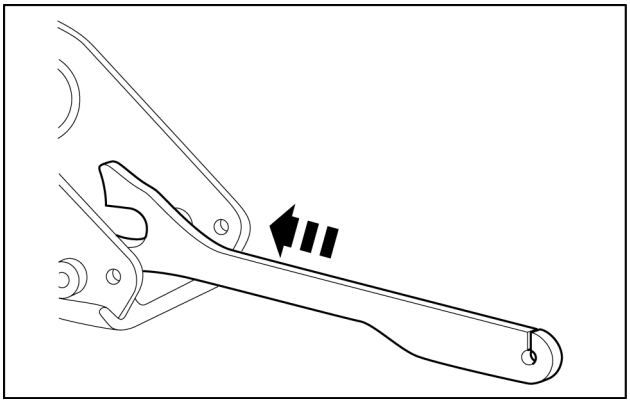

SMIL17MEX0064AB 11

https://truckmanualshub.com/

Advised models

NOTICE: *all attachment shown on this manual are exclusive to the North American Market. To all other markets contact your authorized NEW HOLLAND CONSTRUCTION dealer, before purchasing an attachment.*

NOTE: *contact your authorized NEW HOLLAND CONSTRUCTION dealer, before purchasing an attachment.*

KLAC type	
Model	Unit weight
E (mechanics)	**52 kg** (**115 lb**)

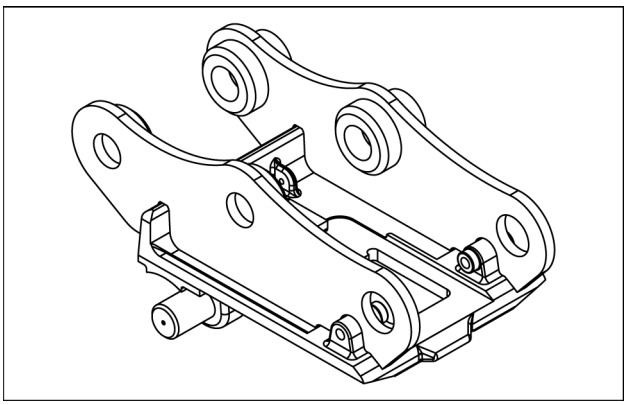

SMIL19MEX0513AA 12

https://truckmanualshub.com/

Quick coupling system - Mechanical pin-grabber type

⚠ WARNING

Crushing hazard!
Never put your hands inside the quick coupler mechanism. Turn off the engine and wait for all movement to stop.
Failure to comply could result in death or serious injury.

W1542A

⚠ WARNING

Hazard to bystanders!
ALWAYS make sure the work area is clear of bystanders and domestic animals before starting this procedure. Know the full area of movement of the machine. Do not permit anyone to enter the area of movement during this procedure.
Failure to comply could result in death or serious injury.

W0245A

NOTICE: *the quick coupler extends the length of the arm. Make sure to check the operating range of the coupled attachment in order to avoid risk of striking the cab or the machine frame.*

NOTICE: *never operate with a quick coupled hydraulic breaker for an extended period of time, in order to reduce the risk of premature wear, failures or breakage of the quick coupler. Never use the breaker as a lever, as this subjects the quick coupler cylinder to stress.*

NOTICE: *be sure to read and understand the quick coupler Operator's Manual for proper installation, usage and maintenance.*

Attachment engagement

⚠ WARNING

Misuse hazard!
Follow the operating instructions in this chapter. Any other practice that has not received the prior approval of the manufacturer is considered to be strictly forbidden.
Failure to comply could result in death or serious injury.

W0281A

⚠ WARNING

Crushing hazard!
This operation may be dangerous. You are advised to wear suitable clothing and respect all relevant safety messages.
Failure to comply could result in death or serious injury.

W0283A

To engage the attachment to the quick coupling system:

1. Ensure locking hook is open **(1)** and locking pin **(2)** is in released position.
2. Position the front hooks of the coupler over the front pin of the attachment.

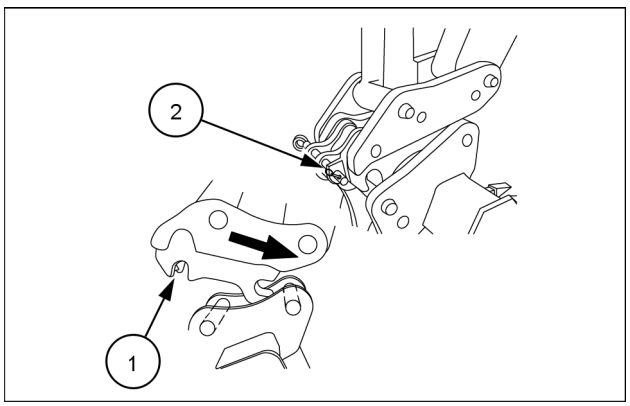

SMIL17MEX2844AA 1

https://truckmanualshub.com/

3. Extend the bucket cylinder (curl in) until the rear pin of the attachment is firmly seated in the coupler.
4. Stop the engine and get out of the machine.

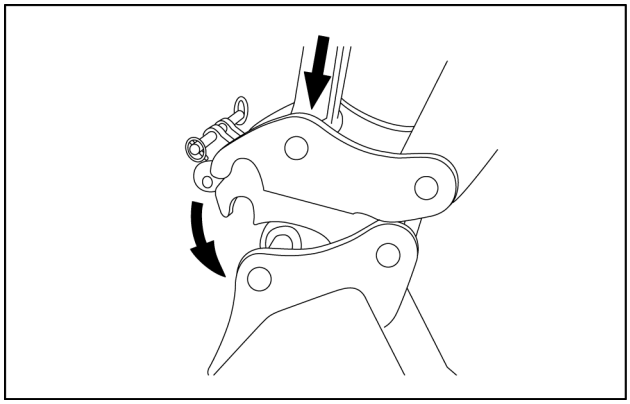

SMIL17MEX2814AA 2

5. Insert the release bar **(3)** and rotate the locking hooks upwards slightly.
6. Remove the retainer pin **(4)** and the locking pin **(2)**.

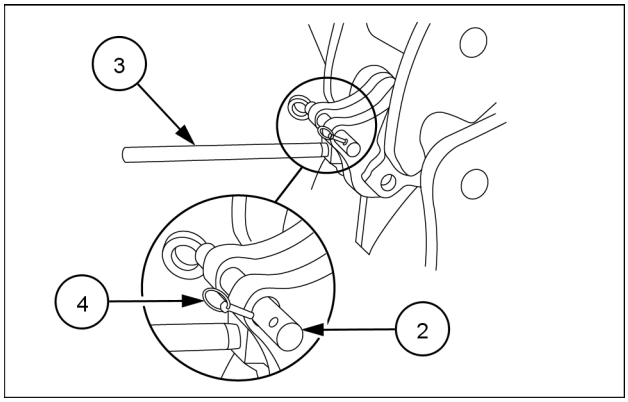

SMIL17MEX2815AA 3

7. Use the release bar **(3)** to rotate the locking hook downward to engage the attachment rear pin.
8. Install the locking pin **(2)** and the retainer pin **(4)**.
9. Remove the release bar from its seat.

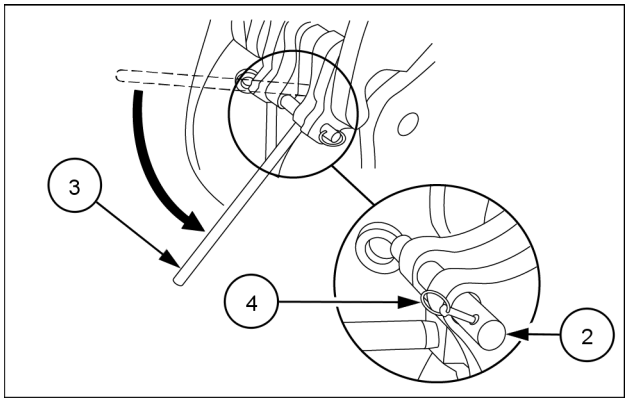

SMIL17MEX2816AA 4

https://truckmanualshub.com/

Attachment disengagement

⚠ WARNING

Misuse hazard!
Follow the operating instructions in this chapter. Any other practice that has not received the prior approval of the manufacturer is considered to be strictly forbidden.
Failure to comply could result in death or serious injury.

W0281A

⚠ WARNING

Impact and crushing hazard!
The attachment can swing from one side during the removal procedure. Keep clear of the attachment, including the swing area.
Failure to comply could result in death or serious injury.

W1492A

To disengage the attachment from the quick coupling system:

1. Lower the attachment to the ground and stop the engine.
2. Remove the retainer pin **(4)**.
3. Insert the release bar **(3)** into its seat and rotate it upwards slightly to remove the locking pin **(2)**.

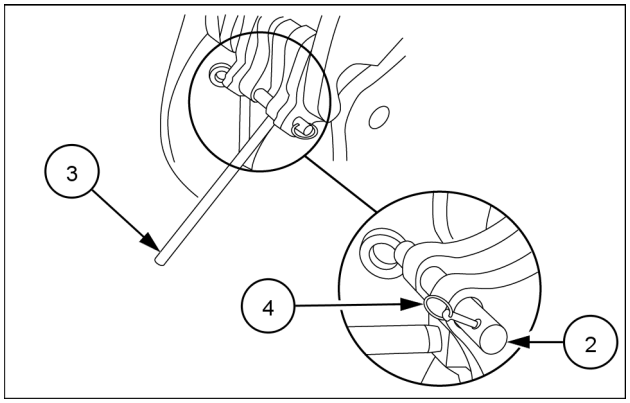

SMIL17MEX2817AA 5

4. Use the release bar **(3)** to rotate the locking hook upwards to the unlock position.

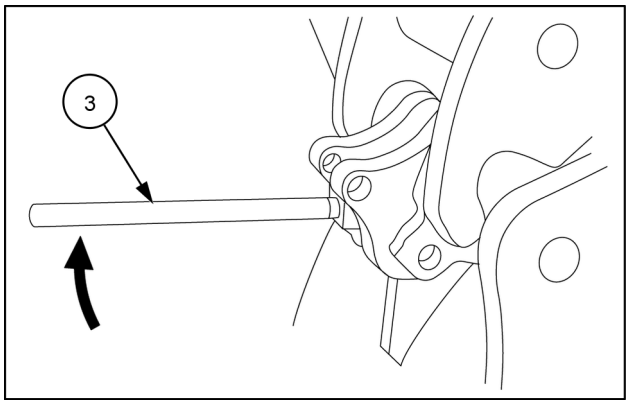

SMIL17MEX2818AA 6

https://truckmanualshub.com/

5. Install the locking pin **(2)** and the retainer pin **(4)**.
6. Remove the release bar **(3)**.
7. Get into the machine, fasten the seat belt and start the engine.

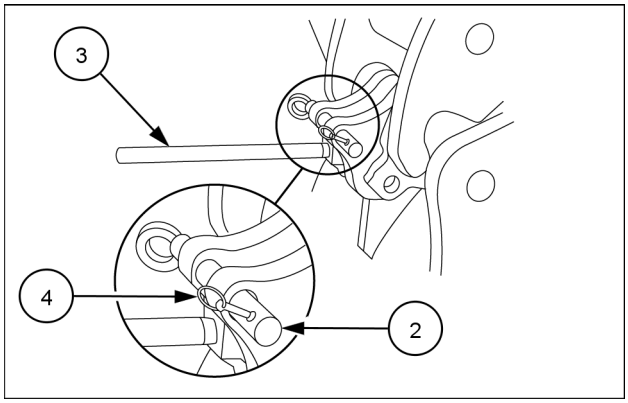

SMIL17MEX2819AA 7

8. Retract the bucket cylinder.
9. Move the arm away from the attachment pin until the coupler hooks are clear of the attachment.

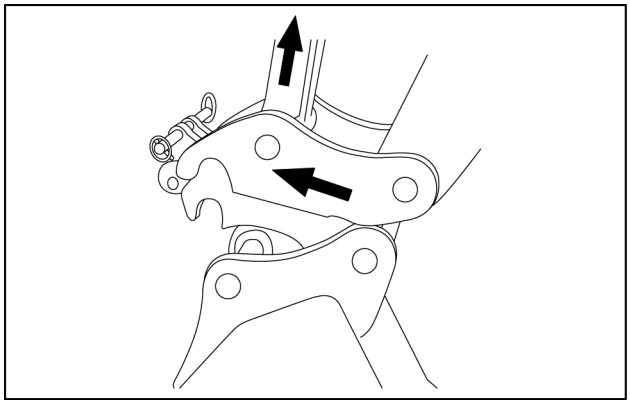

SMIL17MEX2820AA 8

https://truckmanualshub.com/

Advised models

NOTICE: *all attachment shown on this manual are exclusive to the North American Market. To all other markets contact your authorized NEW HOLLAND CONSTRUCTION dealer, before purchasing an attachment.*

NOTE: *contact your authorized NEW HOLLAND CONSTRUCTION dealer, before purchasing an attachment.*

Mechanical pin-grabber type	
Unit weight	Maximum working pressure
44 kg (**97 lb**)	—

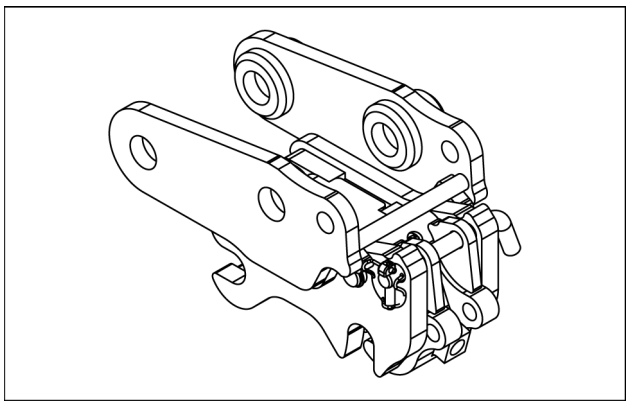

SMIL19MEX0520AA 9

https://truckmanualshub.com/

Quick coupling system - Hydraulic pin-grabber type

⚠ WARNING

Crushing hazard!
Never put your hands inside the quick coupler mechanism. Turn off the engine and wait for all movement to stop.
Failure to comply could result in death or serious injury.

W1542A

⚠ WARNING

Hazard to bystanders!
ALWAYS make sure the work area is clear of bystanders and domestic animals before starting this procedure. Know the full area of movement of the machine. Do not permit anyone to enter the area of movement during this procedure.
Failure to comply could result in death or serious injury.

W0245A

NOTICE: *the quick coupler extends the length of the arm. Make sure to check the operating range of the coupled attachment in order to avoid risk of striking the cab or the machine frame.*

NOTICE: *never operate with a quick-coupled hydraulic breaker for an extended period of time, in order to reduce the risk of premature wear, failures or breakage of the quick coupler. Never use the breaker as a lever, as this subjects the quick coupler cylinder to stress.*

NOTICE: *be sure to read and understand the Operator's Manual of the quick coupler to proper installation, usage and maintenance.*

Quick coupling hydraulic circuit and connections

The machine can provide a quick coupling hydraulic circuit. The two rigid pipes located both on the top of the arm allow to install properly and safely the hoses to connect the hydraulic attachment to the quick coupling hydraulic circuit.

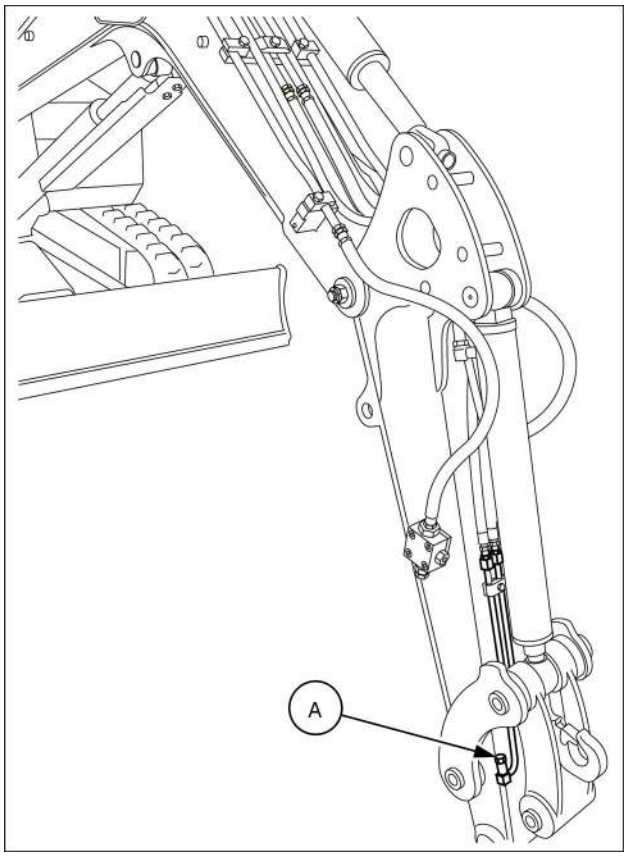

SMIL17MEX2804BA 1

Hydraulic connections **(A)**	ORFS ISO 843406–9/16–18UNF 2A
Delivery pressure	Left-hand hose
Discharge pressure	Right-hand hose

https://truckmanualshub.com/

Attachment engagement

⚠ WARNING

Misuse hazard!
Follow the operating instructions in this chapter. Any other practice that has not received the prior approval of the manufacturer is considered to be strictly forbidden.
Failure to comply could result in death or serious injury.

W0281A

⚠ WARNING

Crushing hazard!
This operation may be dangerous. You are advised to wear suitable clothing and respect all relevant safety messages.
Failure to comply could result in death or serious injury.

W0283A

To engage the attachment to the quick coupling system:

1. Make sure that the machine and the bucket to be used are on a flat solid ground.

   NOTICE: *before using an attachment, make sure that its total weight when fully loaded DOES NOT EXCEED the maximum lift capacity of the machine.*

2. Slide the switch mechanism **(A)** , then press the hydraulic quick coupling activation switch **(B)** to engage coupler system for **2 s**, then release the quick coupling activation switch **(B)**.

   NOTE: *to engage the attachment is not necessary keep pressed the hydraulic quick coupling activation switch **(B)**.*

3. Place coupler in the fully curled position. Hold the bucket curl lever for **3 – 5 s** to allow the hook to fully retract.
4. Verify that the jaw is completely retracted, place the coupler above the attachment.
5. Curl the coupler to engage the front pin of the attachment.

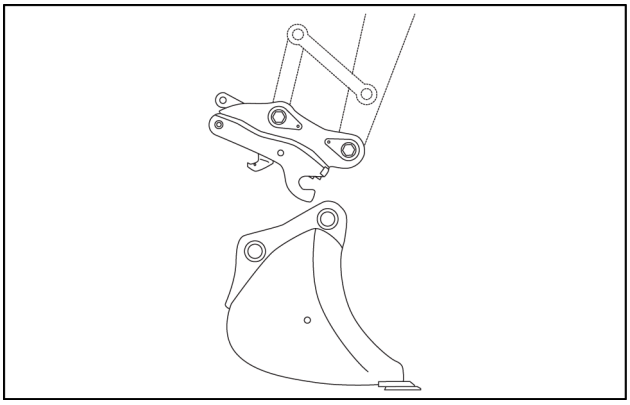

SMIL17MEX2822AA 2

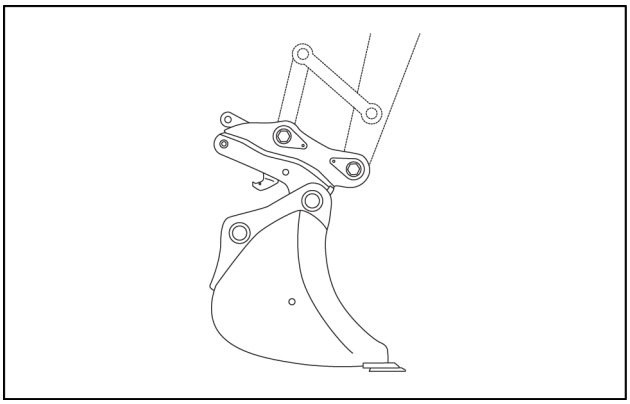

SMIL17MEX2823AA 3

https://truckmanualshub.com/

6. Continue to curl the coupler until the attachment is lifted off the ground.

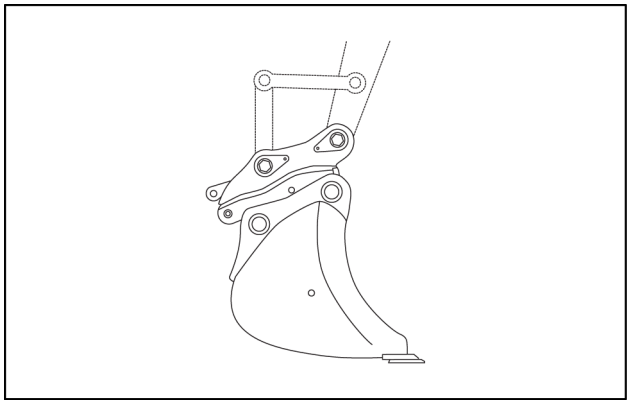

SMIL17MEX2824AA 4

7. Fully curl the bucket and hold the bucket curl lever for approximately **3 – 5 s** to allow the jaw to fully engage and clamp the bucket pin.

NOTICE: *If the bucket/attachment pins have not been correctly engaged, the jaw must not have been fully retracted. This could cause the bucket to be unintentionally released from the coupler and could result in machine damage or personal injury. Please refer to step 9 for remedial action.*

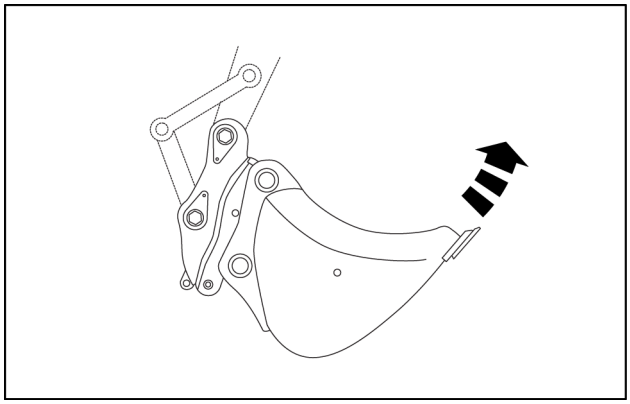

SMIL17MEX2825AA 5

8. From the operator's seat perform a visual inspection and check in order to verify the correct rear jaw engagement.

If the front lock is not visible proceed as follows:

- Fully extend the bucket cylinder.
- Slide the switch mechanism **(A)** , then press and hold the hydraulic quick coupling activation switch **(B)** in release position for **2 s**.

  NOTE: *to disengage the attachment is necessary keep pressed the hydraulic quick coupling activation switch* ***(B)****.*
- Hold the bucket curl lever for approximately for **3 – 5 s** to allow the hook to fully retract place coupler in the fully curled position.
- Slide the switch mechanism **(A)**, then press the hydraulic quick coupling activation switch **(B)** to engage coupler system for **2 s**, then release the quick coupling activation switch **(B)**.

  NOTE: *to engage the attachment is not necessary keep pressed the hydraulic quick coupling activation switch* ***(B)****.*
- Hold the bucket curl lever for approximately for **3 – 5 s** to allow the jaw to fully engage and clamp the bucket pin.
- Perform a new visual inspection and check again to verify the correct rear jaw engagement.

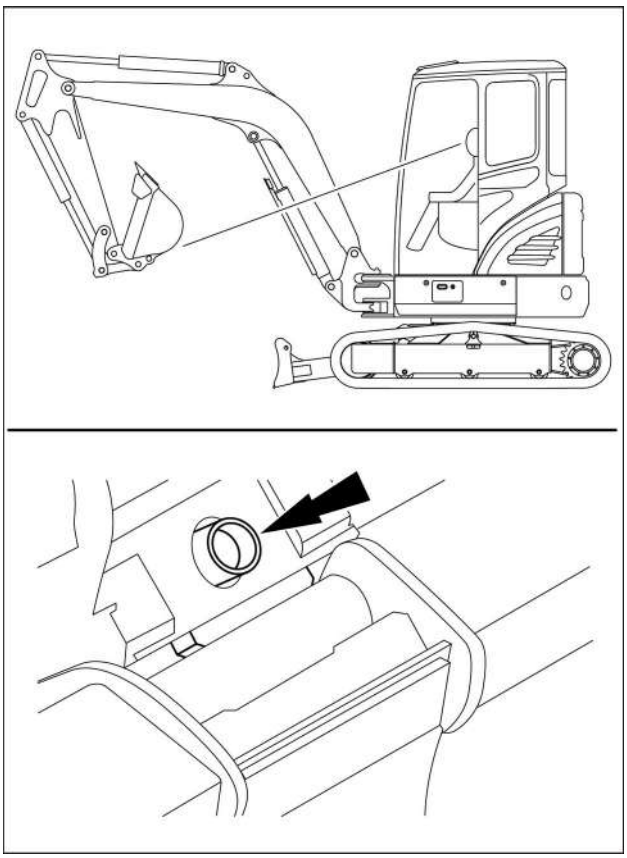

SMIL17MEX2845BA 6

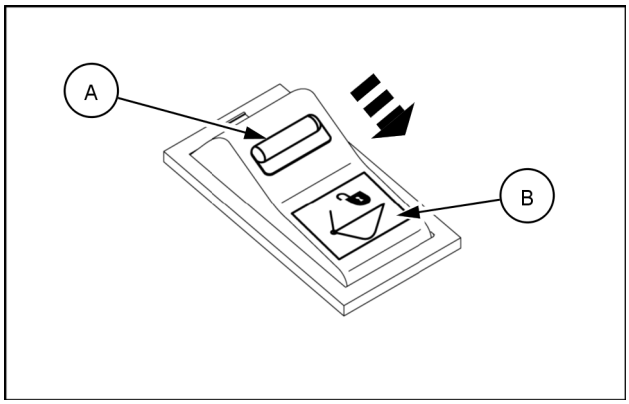

SMIL16MEX3181AA 7

- The bucket may hit cab, canopy, boom and boom cylinders when it reaches vicinity of them.

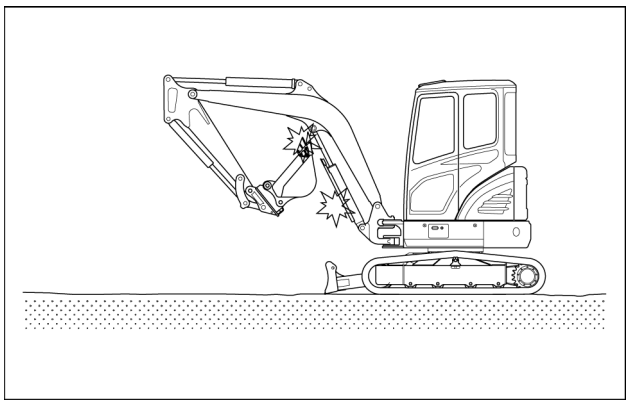

SMIL19MEX0728AA 8

https://truckmanualshub.com/

NOTE: *If is not possible to perform the visual inspection and check from the cab, the operator must get out of the cab and stand in a safe place to visually inspect before operating the machine.*

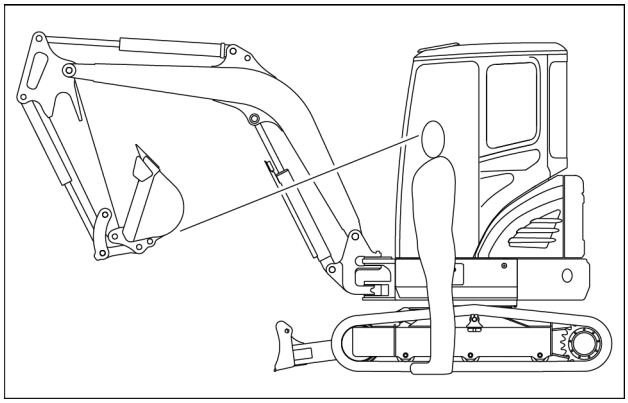

SMIL17MEX2827AA 9

9. To ensure that the bucket pins are securely held by the coupler, apply pressure to the bucket by rotating it against the ground and away from the machine before operation.
10. If the bucket is not correctly attached, repeat the sequence from step 1.

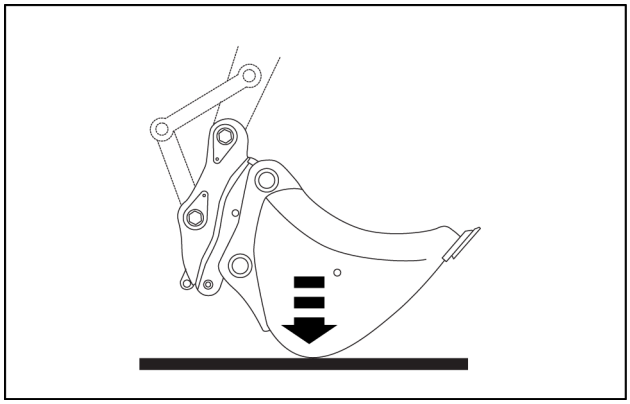

SMIL17MEX2828AA 10

https://truckmanualshub.com/

Attachment disengagement

⚠ WARNING

Misuse hazard!
Follow the operating instructions in this chapter. Any other practice that has not received the prior approval of the manufacturer is considered to be strictly forbidden.
Failure to comply could result in death or serious injury.

W0281A

⚠ WARNING

Impact and crushing hazard!
The attachment can swing from one side during the removal procedure. Keep clear of the attachment, including the swing area.
Failure to comply could result in death or serious injury.

W1492A

NOTE: *Before to disengaging the attachment, Fully extend bucket crowd cylinder.*

To disengage the attachment from the quick coupling system:

1. Fully extend the bucket cylinder.
2. Slide the switch mechanism **(A)** , then press and hold the hydraulic quick coupling activation switch **(B)** in release position for **2 s**.

   NOTE: *to disengage the attachment is necessary keep pressed the hydraulic quick coupling activation switch **(B)**.*
3. Hold the bucket curl lever for approximately for **3 – 5 s** to allow the hook to fully retract place coupler in the fully curled position.
4. Release the quick coupling activation switch **(B)**.

⚠ WARNING

Impact and crushing hazard!
Never use ladders or other means to disengage the attachment.
Keep clear of the attachment during the disengagement procedure.
Failure to comply could result in death or serious injury.

W1493A

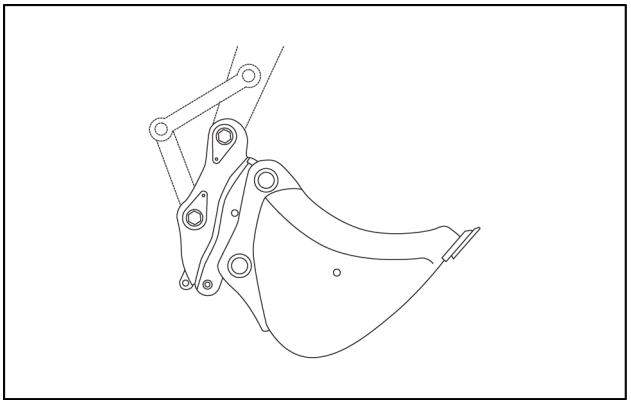

SMIL17MEX2829AA 11

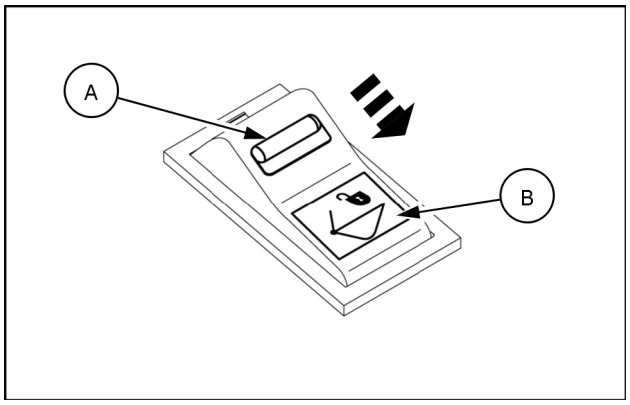

SMIL16MEX3181AA 12

https://truckmanualshub.com/

5. Once the jaw is fully retracted, lower the attachment to ground and slowly curl the coupler back to release the rear attachment pin.

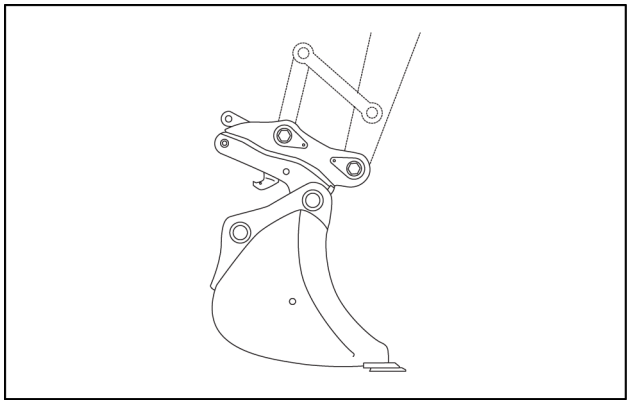

SMIL17MEX2830AA 13

6. Lift the dipper arm until the coupler has disengaged from the front attachment pin. The attachment is now safety disengaged.

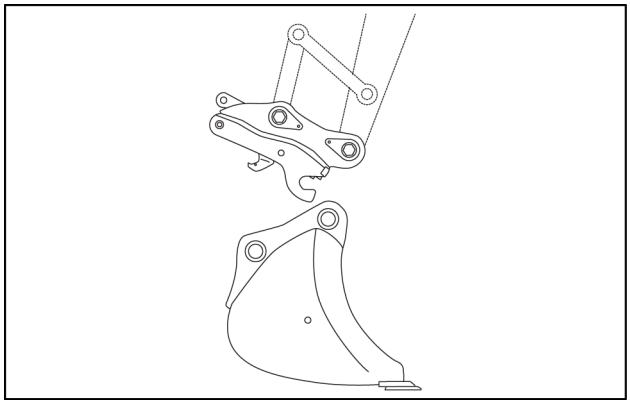

SMIL17MEX2831AA 14

https://truckmanualshub.com/

Advised models

NOTICE: *all attachment shown on this manual are exclusive to the North American Market. To all other markets contact your authorized NEW HOLLAND CONSTRUCTION dealer, before purchasing an attachment.*

NOTE: *contact your authorized NEW HOLLAND CONSTRUCTION dealer, before purchasing an attachment.*

Hydraulic pin-grabber type	
Unit weight	Maximum working pressure
60 kg (**132 lb**)	**226 bar** (**3277 psi**)

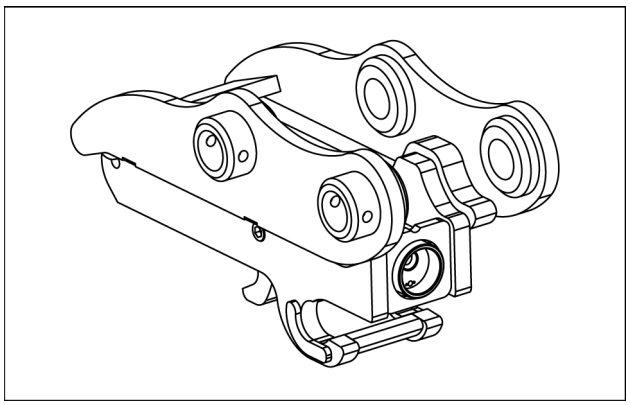

SMIL19MEX0516AA 15

https://truckmanualshub.com/

Load handling

⚠ WARNING

Crushing hazard!
During load handling operations, it is very important to adhere strictly to the instructions given in this manual and local legislation.
Failure to comply could result in death or serious injury.

W0257A

⚠ WARNING

Improper operation or service of this machine can result in an accident.
When lifting a load the machine must be equipped with:
- safety valves,
- an overload indicator,
- a load fixing point,
- a load handling chart corresponding to the type of machine and to its attachment.
Failure to comply could result in death or serious injury.

W1168A

NOTICE: *the machine has been specifically designed to perform digging/loading works. If you handle suspended loads with this machine, you must equip the machine with the appropriate optional equipment including safety valves, load handling eye, load lifting table, and an overhead warning alarm. Make sure to handle suspended loads following strictly all current Regulations regarding this application, as well as the rules described in the SAFETY INFORMATION chapter.*

NOTICE: *make provision for lifting devices that comply with current Regulations for lifting applications. Make sure that the lifting devices (hooks, chains etc.) are in perfect conditions without any sign of excessive wear. Make sure to use self-locking hooks in order to avoid unintended opening during lift operation. The lifting devices can be used exclusively for the lifting of parts not anchored to the ground. Never use them for towing operations, uprooting or tearing apart.*

NOTICE: *a suspended load can swing freely, and it can thus hit persons or the cab of the machine. Make sure that all bystanders are moved away from the field of action of the machine, and make sure to handle the load slowly. If the load starts to swing during the handling, lower it slowly to the ground and sling it in a way that avoid unintended swinging as much as possible.*

https://truckmanualshub.com/

To handle suspended loads proceed as described below:

- Evaluate (if not known) the mass of the object to be handled and compare it with the data listed in the liftable loads chart **(1)** located in the cab/canopy. Do not lift loads exceeding the maximum values prescribed by the table.
- Check the information for the maximum load handling eye rated lifting load (RLL) indicated on the plate **(2)** located in the bucket linkage.
- Press the ON side of the overload switch **(3)** to activate the overload warning alarm. The overload warning alarm is intended to avoid lifting of excessive loads.

  NOTICE: *if an overload condition is detected during the handling of the load, When the machine is overloaded, a buzzer sounds and the red warning lamp in the instrument cluster is ON. Place the load onto the ground and check the load conditions making reference to the chart located inside the cab/canopy.*
- Secure the load with the load handling eye **(4)** located on the bucket linkage rod, using slinging devices and chains adequate for the load to be lifted. In order to limit the swinging of the load, avoid slinging it with cables and/or chains too long.
- Extend the bucket cylinder to end stroke.
- Check the surrounding working area and make sure that the path to be travelled with the load is free from obstacles.
- Lift slowly the load, avoiding sharp movements which could cause swinging of the load. Keep the load near the machine, to improve the stability and operate, preferably, along its longitudinal axis, rather than crossways. Lift the load from the ground the minimum height required.
- Position and place the load where desired, making sure that it is resting on a solid base appropriate for its mass.
- Remove the chains.

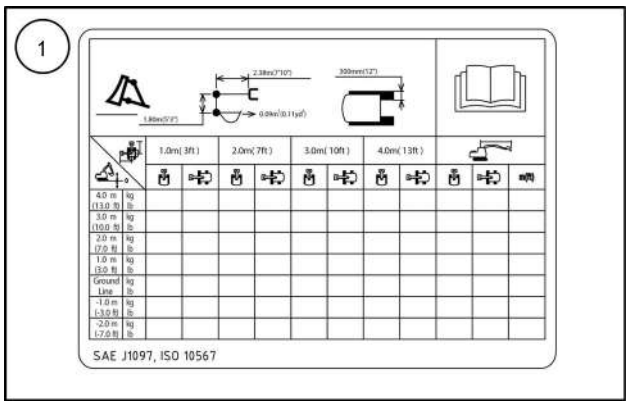

SMIL16MEX3232AA 1

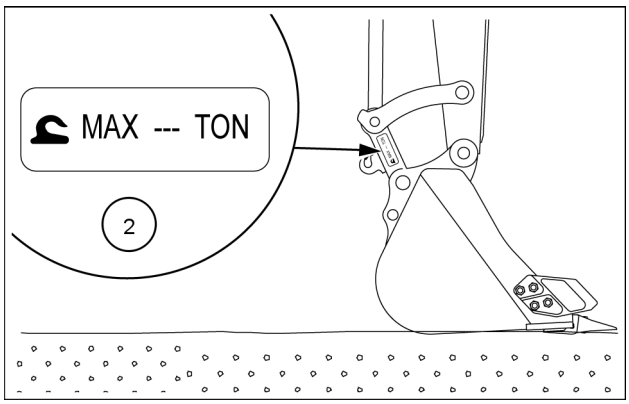

SMIL19MEX0746AA 2

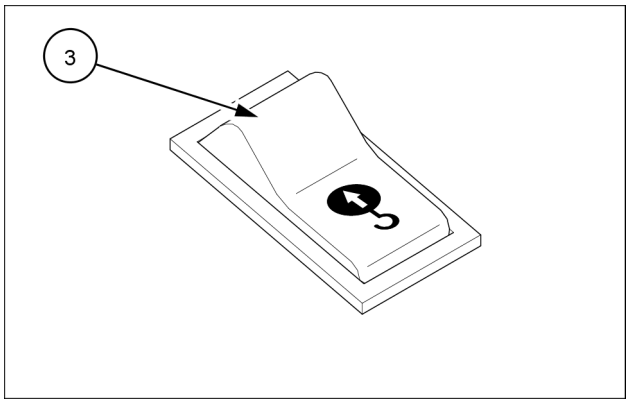

SMIL16MEX0390AA 3

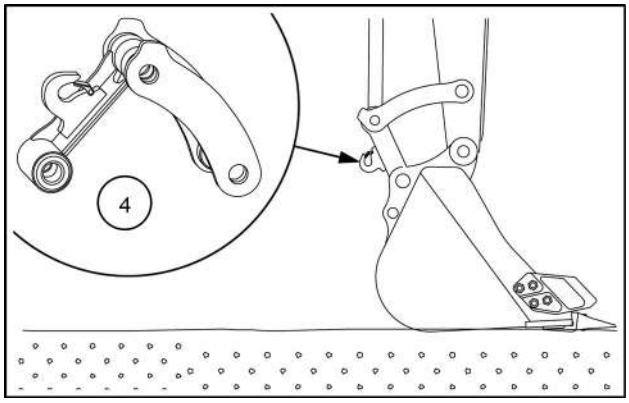

SMIL16MEX1105AA 4

Load handling chart

The load handling chart indicates the rated lift capacities that you must consider at different distances from the swing axis.

The rated lift capacity is defined according to SAE J1097 and ISO 10567 as the smaller value of either the rated tipping load (**75%** of the tipping load) or the rated hydraulic lift capacity (**87%** of the hydraulic lift capacity).

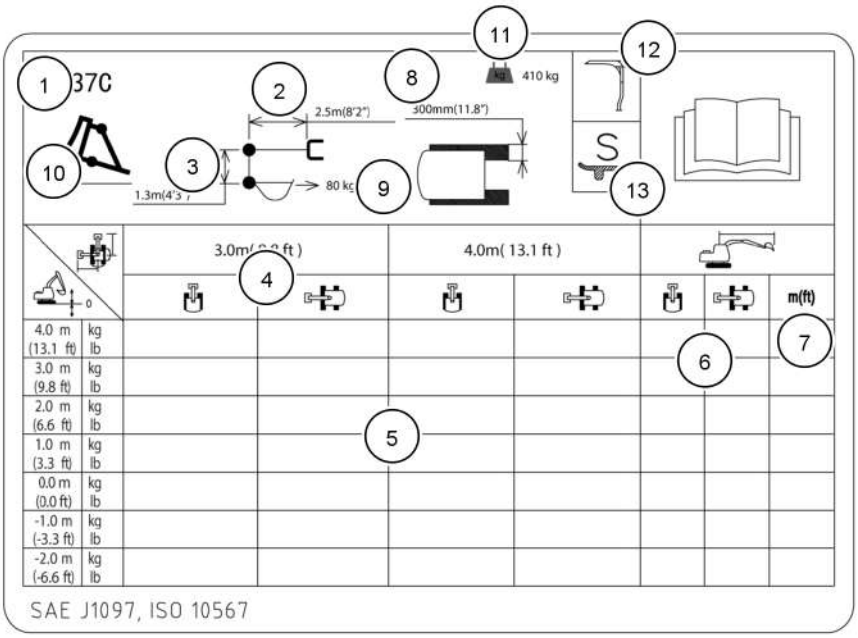

SMIL17MEX0031FA 5

1. Model name
2. Boom length
3. Arm length
4. Load radius
5. Rated lift capacity
6. Rated lift capacity at maximum reach
7. Maximum reach
8. Track shoe width
9. Bucket weight
10. Dozer blade position
11. Counterweight mass
12. Cab/canopy configuration
13. Track shoe steel

https://truckmanualshub.com/

Safety valves

The safety valves are intended to prevent the front equipment from dropping down in the event of a breakage or burst of a hose in the hydraulic lines of boom and arm. The safety valves keep the front equipment in the position at the time of breakage, and thus allow the operator to slowly lower the attachment to the ground using the left and right control levers.

Moreover, the safety valves allow an operator to keep the front equipment in the selected operating position, reducing the leakages that occur in the neutral position of the boom spool and the arm spool in the main control valve.

NOTICE: *prior to starting any handling of suspended loads check that the valves do not show clear evidence of damages or abnormal noises. In the event abnormal conditions are found, contact the NEW HOLLAND CONSTRUCTION. dealer.*

NOTICE: *the pressure setting of the safety valves must be checked every 6 months. Consult the NEW HOLLAND CONSTRUCTION dealer.*

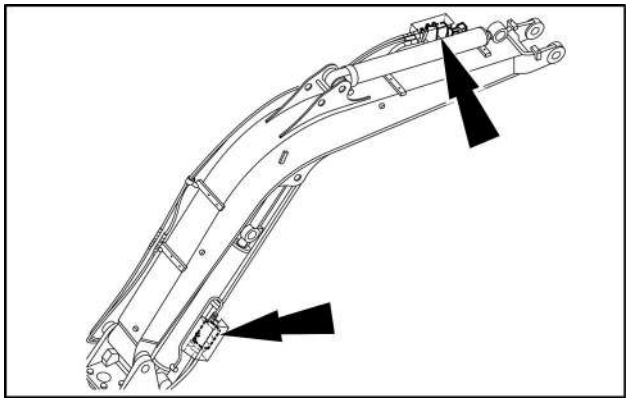

SMIL16MEX1125AA 6

https://truckmanualshub.com/

Thumb bracket

The arm can be equipped with the bracket in order to install a hydraulic thumb.

⚠ WARNING

Avoid injury!
Only use the thumb bracket for the installation of the hydraulic thumb. Do not use the thumb bracket to handle loads.
Failure to comply could result in death or serious injury.

W1572A

NOTE: *consult your NEW HOLLAND CONSTRUCTION dealer to select the hydraulic thumb compatible with your machine and to install it correctly.*

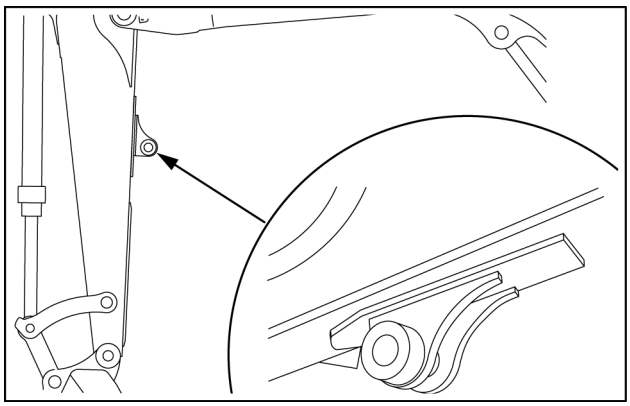

SMIL16MEX1106AA 1

https://truckmanualshub.com/

Rotating beacon

When you operate a machine on a road or beside a road, a rotating beacon is required to avoid any traffic accident. Please contact your NEW HOLLAND CONSTRUCTION dealer to install it.

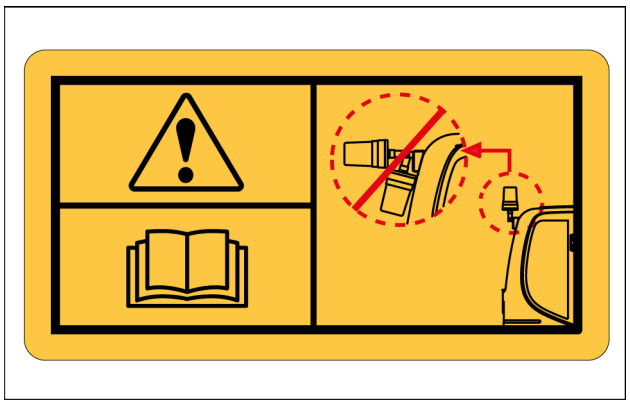

SMIL19MEX0711AA 1

During the machine transfer, change the position of the lamp to the horizontal position.
Before starting the machine operations, make sure that the rotating beacon **(1)** maintains a vertical position.
A horizontal position can result in a decrease in life time of the lamp due to the infiltration of foreign substances such as dust or water.

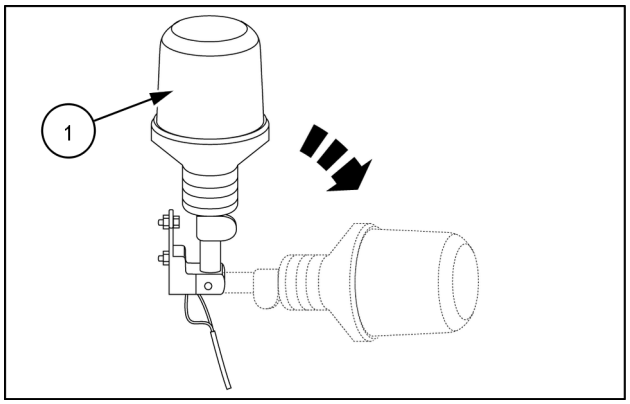

SMIL16MEX1108AA 2

Press the beacon switch **(2)** located on the right–hand console to activate the beacon light on the cab and the indicator light on the switch.

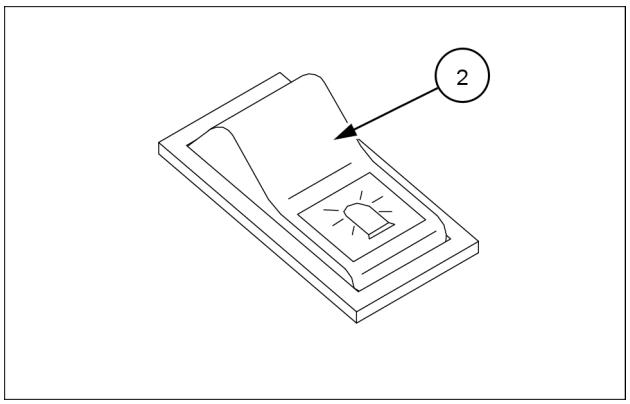

SMIL16MEX0386AA 3

https://truckmanualshub.com/

Fire extinguisher

You can install an emergency fire extinguisher to the machine.
Two threaded holes are available to the rear-left upright of the upper frame to install the fire extinguisher (refer to the figures to locate the threaded holes).

Please contact your NEW HOLLAND CONSTRUCTION dealer to obtain the fire extinguisher.

Canopy version

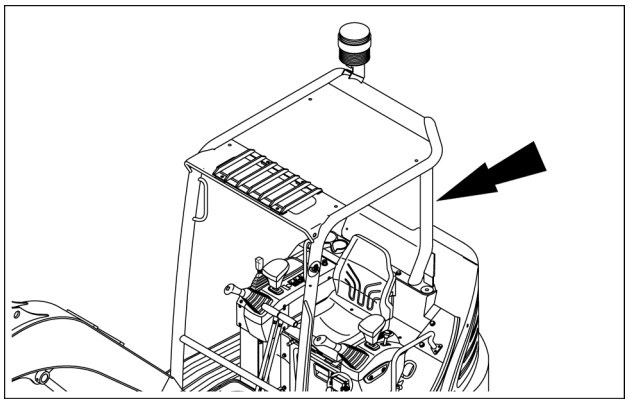

SMIL18MEX0871AA 1

Cab version

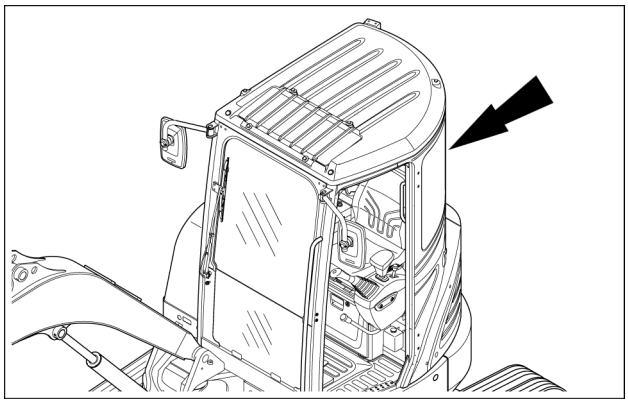

SMIL18MEX0872AA 2

https://truckmanualshub.com/

https://truckmanualshub.com/

Index

A

Air cleaner . . . 6-48, 6-55
Air-conditioning compressor drive belt . . . 6-27
Air conditioning control . . . 3-29
Air-conditioning system . . . 6-73
Anti-theft protection . . . 4-1
Auxiliary hydraulic circuits . . . 9-8

B

Basic instructions . . . 6-1
Battery . . . 6-37
Battery disconnect switch . . . 3-50
Biodegradable hydraulic oil . . . 6-63
Boom swing cylinder . . . 6-20, 6-41
Bringing the machine up to operating temperature . . . 4-5
Bucket replacement . . . 4-12

C

Cab air filter . . . 6-70
Cab and working lights . . . 6-67
Cab internal lighting . . . 3-34
Caution while using rubber tracks . . . 4-16
Control levers . . . 6-72

D

Dimensions . . . 8-4
Direct fit buckets . . . 9-1
Door and steps . . . 3-1
Dozer blade control lever . . . 3-22

E

Ecology and environment . . . 2-12
Electrical systems - Troubleshooting . . . 7-2
Electro-Magnetic Compatibility (EMC) . . . 1-2
Emergency exit hammer . . . 3-17
Emissions overview . . . 1-14
Engine coolant . . . 6-58
Engine coolant level . . . 6-22
Engine oil and filter . . . 6-19, 6-44
Engine oil level . . . 6-21
Engine speed control . . . 3-16
Engine - Troubleshooting . . . 7-1

F

Fan and alternator drive belt . . . 6-25
Fire extinguisher . . . 9-53
Fluids and lubricants . . . 6-6
Forward controls . . . 3-6
Fuel filter . . . 6-19, 6-46
Fuel filter water separator . . . 6-24, 6-35
Fuel system bleeding . . . 6-15
Fuel tank . . . 3-51
Fuel tank drain . . . 6-34
Fuel tank strainer . . . 6-71
Fuses . . . 6-76

https://truckmanualshub.com/

G

General specifications - Biodiesel fuels . . . 6-4
Grease points (Blade) . . . 6-20, 6-29
Grease points (Boom and arm) . . . 6-20, 6-42
Grease points (Bucket) . . . 6-20, 6-28

H

Handling the machine . . . 5-5
Hand signals . . . 2-13
Hydraulic control lever operating pattern . . . 4-13
Hydraulic hoses . . . 6-62
Hydraulic oil . . . 6-65
Hydraulic oil - breaker/auger . . . 9-26
Hydraulic oil level . . . 6-23
Hydraulic oil return filter . . . 6-19, 6-52
Hydraulic oil suction filter . . . 6-61

I

Injection nozzle . . . 6-54
Injection pump . . . 6-62
Injection timing . . . 6-62
Instrument cluster . . . 3-24
Intended use . . . 1-2

K

Klac type buckets . . . 9-3

L

Left-hand side controls . . . 3-14
Load handling . . . 9-47
Loading the machine onto a transport trailer . . . 5-1
Lowering the attachment in the event of a failure . . . 4-11

M

Machine components . . . 1-10
Machine orientation . . . 1-9
Machine specifications . . . 8-1
Machine travel . . . 4-21
Maintenance chart . . . 6-17

N

Note to the Owner . . . 1-1, 1-3

O

Operating the machine . . . 4-7
Operating the machine in hot or cold weather . . . 4-6
Operator's manual storage on the machine . . . 1-8
Operator's seat . . . 3-4
Other systems - Troubleshooting . . . 7-3

P

Parking the machine . . . 4-27
Periodic checks . . . 6-78
Pilot line filter . . . 6-19, 6-53
Plastic and resin parts . . . 6-72
Preparing for storage . . . 6-77
Product identification . . . 1-5
Protecting the electronic and electrical systems during battery charging or welding . . . 6-16

Q

Quick coupling system - Hydraulic pin-grabber type . . . 9-39
Quick coupling system - Klac type . . . 9-27
Quick coupling system - Mechanical pin-grabber type . . . 9-34

https://truckmanualshub.com/

R

Radiator and coolers 6-51
Radio 3-35
Rear view mirrors 3-48
Releasing pressure in the hydraulic system 6-10
Right-hand side controls 3-19
Rotating beacon 9-52

S

Safety lock lever 3-16
Safety rules 2-3
Safety rules - Utility precautions 2-2
Safety signs 2-17
Side doors 3-46
Signal word definitions 2-1
Standard buckets with Hydraulic pin grabber coupler 9-6
Standard buckets with mechanical coupler 9-4
Starting the engine 4-3
Starting up the machine after storage 6-79
Stopping the engine 4-20
Storage compartment 3-33
Swing bearing 6-40
Swing ring gear 6-31

T

Telematics (optional) 1-2
Thumb bracket 9-51
Tie downs for shipping 5-3
Tightening torques 6-19, 6-43
Towing the machine 5-7
Track tension 6-32
Travel reduction gears 6-19, 6-54

U

Unloading the machine from a transport trailer 5-4

V

Valve clearance 6-54
Valve seat 6-62
Ventilation and heating 3-31

W

Weights 8-7
Windshield 3-13
Windshield washer reservoir 3-18

https://truckmanualshub.com/

Dealer's stamp

CNH Industrial Italia S.p.A. reserves the right to make improvements in design and changes in specifications at any time without notice and without incurring any obligation to install them on units previously sold. Specifications, descriptions, and illustrative material herein are as accurate as known at time of publication, but are subject to change without notice.

Availability of some models and equipment builds varies according to the country in which the equipment is being used. For exact information about any particular product, please consult your New Holland dealer.

NEW HOLLAND
CONSTRUCTION

© 2021 CNH Industrial Italia S.p.A. All Rights Reserved.

New Holland is a trademark registered in the United States and many other countries, owned by or licensed to CNH Industrial N.V., its subsidiaries or affiliates.

Any trademarks referred to herein, in association with goods and/or services of companies, other than owned by or licensed to CNH Industrial N.V., its subsidiaries or affiliates, are the property of those respective companies.