https://truckmanualshub.com/
Aquila Trucks Centres

SECTION 16

Electric/Electronic system

	Page
GENERAL WARNINGS FOR ELECTRICAL/ ELECTRONIC COMPONENTS	3
COMPONENT CODE	6
MAIN CHANGES	11
CAN LINES	12
CAN LINE ASSEMBLY DRAWING	17
POWER NETWORK	18
GROUND POINTS	19
ELECTRICAL EQUIPOTENTIAL BRAID	20
ALTERNATOR	23
STARTER MOTOR	25
JUNCTION CONNECTORS	27
DIAGNOSIS CONNECTOR	77
BULKHEAD	79
CENTRAL INTERCONNECTING UNIT	84
FUSE	85
REMOTE SWITCHES	87
FUSE ASSEMBLY BODY CONTROLLER (IBC3)	89
SUPPLEMENTARY FUSES (70000)	90
INSTRUMENT BOARD	92
CENTRAL DASHBOARD CONTROLS	93
CONTROLS ON THE STEERING WHEEL	94
REARVIEW MIRRORS AND WINDOW REGULATOR CONTROL ADJUSTMENT	95
LEFT LIGHT CONTROL 54033	96
ENGINE BRAKE CONTROL AND INTARDER	99
GEAR SELECTION FUNCTION	100
FUNCTION ENGAGING EMERGENCY MODE (LIMP HOME)	102

https://truckmanualshub.com/
Aquila Trucks Centres

Page

CLUSTER 104
CLUSTER (PIN-OUT) 107
BODY CONTROLLER (IBC3) 113
BODY CONTROLLER 115
- Linking connectors 115
CHASSIS ELECTRONIC MODULE (M.E.T.) 119
S.W.I. (STEERING WHEEL / STEERVATOR INTERFACE) 122
SPIRALED CONTACT 125
STEERING COLUMN (COMPONENT LOCATION) 126
B.M. (BED MODULE) 130
E.B.M. (BED MODULE EASY) 131
TACHOGRAPH 133
EDC (ECM) SYSTEMS 135
SYSTEM COMPONENTS 139
VCM (VEHICLE CONTROL MODULE) ELECTRONIC CONTROL UNIT 163
IMMOBILIZER 166
ABS-EBL 168
COMMON COMPONENTS 171

Page

ECAS SUSPENSIONS 178
EUROTRONIC AUTOMATIC TRANSMISSION . . 184
LIMP - HOME 189
ELECTRONIC CONTROL UNIT 192
TRANSMISSION ACTUATOR 194
CLUTCH ACTUATOR 196
INTARDER 200
EM (EXPANSION MODULE) ELECTRONIC CONTROL UNIT (PTO) 206
AUTOMATIC AIR CONDITIONER 209
MANUAL AIR CONDITIONER 224
HYDRONIC D 10 WATER HEATER 228
SCR (SELECTIVE CATALYTIC REDUCTION) SYSTEM - DENOX 2 235
CENTRAL LOCKING WITH REMOTE CONTROL 238
DIAGNOSTIC 240
CIRCUIT CHARTS 245

https://truckmanualshub.com/
Aquila Trucks Centres

GENERAL WARNINGS FOR ELECTRICAL/ELECTRONIC COMPONENTS

Do not ever disconnect the batteries from the system with the engine running.
Do not start the engine without first having connected the batteries in a permanent manner.

- Before working on the vehicle, immobilise the wheels with chocks.
- Do not use fast chargers to start the engine. Engine starting can be performed either by means of separate batteries or by means of a special truck.
- Incorrect polarisation of the power supply voltage for the electronic control units (e.g. erroneous battery polarisation) may damage the components irreversibly.
- If you have to disconnect the batteries from the system, always disconnect the frame ground cable from the negative terminal of the batteries first.
- Before connecting the batteries to the system, make sure that the system is suitably insulated.
- Disconnect the batteries from the system before recharging them by means of an external unit.
- Disconnect the external recharging unit from the power mains before removing the unit's pliers from the battery terminals.
- At temperatures of over 80 °C (drier ovens), take down the ECU's.
- At the connection stage, tighten the flanged nuts of the connectors (temperature and pressure sensors, etc.) to he required torque. Check the exact polarity of the battery terminals when starting the engine by means of the auxiliary truck.
- Before working on the vehicle's electrical/electronic system disconnect the positive pole of the battery.
- Before disconnecting the connector from an electronic control unit, isolate the system.
- Do not cause sparks to check whether a circuit is live.
- Do not use a test bulb to check the continuity of a circuit. Only use the appropriate testing devices.
- Do not directly power the components associated with electronic control units with the nominal power rating of the vehicle.
- Make sure that the wirings of electronic devices (length, type of cable, location, grouping, connection of screen braiding, earthing, etc.) conform with the IVECO system and that they are carefully restored after repair or maintenance work. To avoid the possible malfunctioning of the electronic systems on board, the wirings of additional devices must follow a different path than that of the above-mentioned systems.
- Do not connect the negative terminals of additional systems to the negative terminals of electronic systems.
- In the event of electric welding on the vehicle, disconnect all the electronic control units and/or disconnect the power cable from the battery positive terminal and connect it to the frame earth.
- Connectors are viewed from the cable side.

Key storage procedures are affected by electromagnetic disturbances such as cell phones and the like.
Therefore, during key memorization:
1. Ensure there are no sources of disturbance in the cab or close to the keys.
2. Keys not inserted in the panel must be at a distance of at least 1 meter.

When working on electronic control units, plug connections and electrical connections to the components, measurements can be made only on suitable testing lines, by means of special plugs and plug-type bushes. Do not under any circumstances make use of improper devices such as metal wires, screwdrivers, clips and the like. In addition to the risk of causing a short circuit, this might damage plug-type connections and this would then give rise to contact problems.

https://truckmanualshub.com/
Aquila Trucks Centres

In order to prevent damage or short-circuiting of the on-board electronic control units, the following operations must be always carried out before starting any welding operation on the chassis.

- If electric welding has to be done on the vehicle,

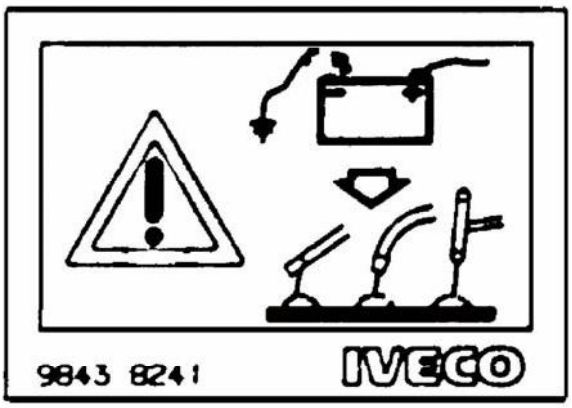

112514

isolate the electric system as follows:

a) disconnect the power lead from the battery positive terminal and connect it to the chassis earth;

b) disconnect the power lead from the battery negative terminal;

c) disconnect the electronic control unit connectors, taking care to avoid touching the control unit connector pins.

- Moreover:

a) should it be necessary to carry out welding operations close to the control unit, remove it from its location.

b) whenever possible, earth the welding machine directly to the piece that has to be welded.

In the case of vehicles equippedwith a DTCO digital tachograph, do not disconnect the battery leads and then connect them by jumpers to reset the electronic systems.

This operation should be avoided, as it could cause permanent damage to the DTCO tachograph CARD or other on-board electronic systems.

To reset the electronic system without running risks, disconnect the vehicle battery and wait for 10 minutes.

It is strictly forbidden to carry out any modifications or connections to the electronic control unitwiring; in particular, the line interconnecting data between the control units (CAN line) must be considered as untouchable.

Diagnostic and maintenance operations can only be carried out by authorised personnel with IVECO approved equipment.

Aquila Trucks Centres

Practical tips

The negative leads connected to a system grounding point must be as short as possible and connected to one another in "star" configuration; make sure that they are tightened in an orderly and adequate manner (Figure 1, ref. M).

Furthermore, for electronic components, the instructions to be followed very carefully are:

- ECU's must be connected to the system ground if they are provided with a case.
- ECU negative cables must be connected both to a system grounding point, such as for instance the dash compartment ground (with no "serial" or "chain" connections) and to the negative terminal(s) of the battery/batteries.
- Even though they are not connected to the system ground/battery negative terminals, analogue ground elements (sensors) must have excellent insulation. As a result, special care must be devoted to the eddy resistances of the cable terminals: oxidation, seam-folding defects, etc.
- The metal braid of shielded circuits must be in electrical contact at either end with system components.
- Only one end of the shielding braid must be connected to the system ground.
- In the presence of jointing connectors, the non-shielded portion, d, must be as short as possible in the proximity of the connectors (Figure 1).
- The cables must be arranged so as to run parallel to the reference plane, i.e., as close as possible to the frame/body structure.
- Additional electromechanical systems must be connected with the greatest care to the system ground and must not be placed alongside the cables of electronic components.

Figure 1

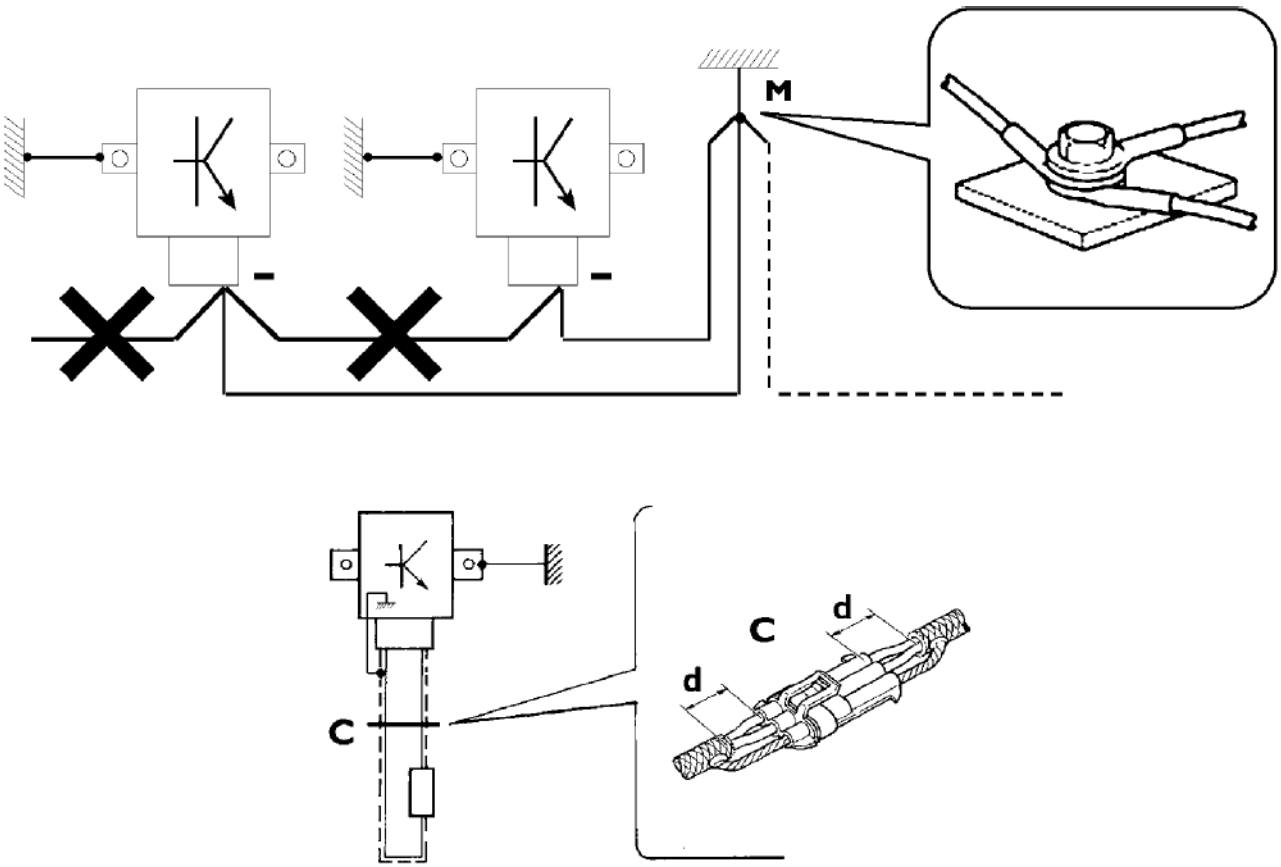

SHIELDING BY MEANS OF A METAL BRAID OF A CABLE LEADING TO AN ELECTRONIC COMPONENT - C. CONNECTOR - d. DISTANCE ! 0.

https://truckmanualshub.com/
Aquila Trucks Centres

COMPONENT CODE

03000	Self-rectifying alternator with built in voltage regulator
08000	Starter Motor
12015	Motor for outside air intake door
12023	Window shade motor
12032	Cab hydraulic release pump motor
20000	Starter battery
22000	Horn
25200	Relay for starter
25201	Relay, preheating
25202	Relay, G.C.R. energizing
25203	Relay, G.C.R. opening
25204	Relay, remote starting enablement, cab unlatched
25205	Relay, engine stopping
25206	Relay, rich mixture control
25207	Relay, alternator D+ earthing
25208	Relay, remote start enablement, gear engaged
25209	Relay for cutting off various components during starting stage
25210	Relay, starting enablement with transmission in neutral
25211	Relay with delayed opening contact for keeping G.C.R energized
25212	Relay with delayed closing contact for keeping RTE energized
25213	Relay for supply of users connected to ignition switch through battery positive
25222	Relay for allowing connection of thermal starter
25310	Relay for allowing connection of internal heating with power load inhibiting relay
25322	Relay for connection of auxiliary heater (1st speed)
25327	Relay for connection of air-conditioning system
25332	Relay for connection of air-conditioning system
25544	Topflap engine polarity reverse contactor for LD
25545	Topflap open/close comand contactor for LD
25722	Cab hydraulic release pump switch (lowering)
25723	Cab hydraulic release pump switch (raising)
25866	Relay for terminal 58
25874	Relay for connection of power loads with engine running
25897	Relay for connection of side transmission power takeoff
25898	Relay for connection of rear transmission power takeoff
25900	General current relay
25924	EDC connecting relay "Main Relay"
30001	Dipped and main beam headlamp with side light
30011	Fog light
32002	Front direction indicator
33001	Side direction indicator
34000	Multifunctional rear light
34011	Trailer light
35000	Number plate light
37000	Front/rear dimensions light
37001	Front dimensions light
39003	Courtesy light for steps
39009	Courtesy light for reading lights
39017	Courtesy light for adjustable cabin interior light
39030	Cab side opening lighting lamp
39034	White and red internal light unit
40011	Electronic Tachograph

https://truckmanualshub.com/
Aquila Trucks Centres

40032	Sender unit for tachometer and tachograph
40046	Inductive type chassis height sensor (rear axle)
40047	Inductive type chassis height sensor (front axle)
42030	Sender unit for engine oil pressure gauge
42045	Sender unit for outdoor temperature gauge
42102	Switch signalling handbrake applied
42108	Switch for trailer retarder signal
42111	Switch signalling trailer braking system failure
42116	Switch for low air pressure indicator in EBS system
42200	Switch signalling pneumatic suspension system failure
42351	Switch signalling air filter blocked
42374	EDC clutch switch
42381/A	Drive axle RH pressure sensor (ECAS)
42382/a	Lift axle RH pressure sensor (ECAS)
42389	Air pressure sensor on third axle pneumatic lifting system
42551	Switch signalling oil filter blocked
42608	Coolant pressure signalling 3-switch assembly
42700	Fuel filter clogged indicator switch
44031	Fuel level gauge sender unit with reserver warning light contact
44035	Insufficient windscreen washer fluid level gauge control
44036	Insufficient radiator coolant level gauge control
44037	Insufficient power assisted steering fluid level gauge control
44043	Engine oil level gauge sender unit
47032	Sender unit for engine oil temperature thermometer
47041	Water temperature sender for retarder control unit
47042	Fuel temperature sensor
47043	Engine fan temperature sensor
48035	Engine rpm sensor
48042	Engine rpm sensor (on timing gear)
48043	Turbocharger speed sensor
50005	Multiplex instruments unit module
52005	Switch with built in w/l for heated rear view mirrors
52009	Switch with built in w/l for trailer light
52024	Switch with built in w/l for additional headlamps
52056	Switch with built-in w/lamp for ASR cutout
52059	Automatic transmission speed selector
52070	Switch for engaging side power takeoff
52071	Switch for engaging rear power takeoff
52090	Suspension levelling switch (ECAS)
52092	Switch for engine or cab heater
52093	Switch for tail hatch locking safety
52093	Switch for tail hatch locking safety
52094	Switch for spot light
52200	Switch for electric or pneumatic horns
52302	Switch with built in w/l for hazard warning lights
52304	Switch for fog lights and rear fog lights inhibitor
52307	Switch for exterior lights
52312	Switch controlling headlamp alignment adjustment
52324	Engine brake connecting switch
52326	White and red internal lights switch
52502	Ignition switch for services with starting
53006	Switch for starting from engine compartment
53007	Switch for stopping engine from engine compartment

https://truckmanualshub.com/
Aquila Trucks Centres

53030	Switch for controlling starting assistance
53061	Cab hydraulic release consensus switch
53062	Cab hydraulic release pump switch (lowering)
53063	Cab hydraulic release pump switch (raising)
53300	Switch for driver's side electric window
53302	Switch for passenger side electric window
53053	Test pushbutton coupling, automatic transmission
53054	Limit switch button on side doors
53055	Unstable switch for interior lights
53306	Switch controlling sun roof motor
53309	Switch for 3rd axle raising system
53311	Switch for controlling window blind
53315	Switch with built in telltale to turn on foglights
53316	Current general contactor switch
53501	Switch signalling vehicle stopped
53503	Switch signalling reversing lights
53507	Switch signalling reduced gears engaged
53508	Switch for antistarting with reduced gears
53509	Switch for switching on interior lights
53510	Switch for switching on step lights
53511	Switch signalling cabin unlatched
53512	Switch for antistarting engine device with handbrake off
53521	Switch for signalling longitudinal differential lock
53547	Switch for secondary signal from brake pedal to EDC control unit
53567	Switch for signalling side power takeoff engaged
53568	Switch for signalling rear power takeoff engaged
53591	Switch for signalling failure of the hydraulic circuit with auxiliary steering third axle
53593	Switch to light cab side opening lamp
53593	Tool compartment light switch
53602	Switch indicating incomplete sunshade closing
53801	Switch signalling Rockwell axle differential lock engaged
53802	Switch signalling Rockwell axle differential lock engaged (3rd axle)
54030	4 function steering column switch unit
54033	6 function steering column switch unit
61011	3A 1-diode holder container
61104	Air braking system drier resistor
61121	Resistance for engine preheating
61126	Termination resistor for CAN bus
64000	Electric windscreen washer pump
68000	Radio equipment
68001	Speaker
68003	Preamplifier
68005	Feeder 24 V 12 V
68007	City Band (C.B.)
70000	6 fuse carrier
70058	1-way 20A fuse carrier
70601	6-fuse holder
70602	6-fuse holder
70603	6-fuse holder
70604	6-fuse holder
70605	6-fuse holder
72006	Coupling with 7 poles for electrical connection of trailer ABS
72010	15-pole coupling for electrical connection to trailer
72021	30-pole connector for the electrical connection to the diagnostic equipment located outside the vehicle
72025	2-pole 12 V connection for general power supply

Aquila Trucks Centres

72026	2-pole 12 V connection for telephone
78016	Engine fan solenoid valve
78050	Engine brake solenoid valve
78052	ABS/EBS solenoid valve
78053	ASR solenoid valve
78054	Solenoid valve for engaging retarder
78055	Solenoid valve for retarder oil accumulator
78057	EBS front axle air pressure control proportional valve
78058	EBS trailer air pressure control proportional valve
78059	Duplex valve for EBS
78060	Solenoid valve to exclude third-axle braking with ASR
78061	Redundant solenoid valve for rear-axle braking in the event of EBS control unit failure
78203	Solenoid valve for pneumatic horns
78227	Solenoid valve for radiator water recirculation
78238	Rear axle solenoid valve assembly for chassis alignment
78239	Front axle solenoid valve assembly for chassis alignment
78243	Rear axle electropneumatic distributor
78247	Solenoid valve for electronic injection
78248	Solenoid valve for variable geometry turbine order
72049	3-pole coupling for rear-view mirror motor
72050	Unipolar current outlet
78251	Solenoid valve for engaging transmission side power takeoff
78252	Solenoid valve for engaging transmission rear power takeoff
80000	Motor for right electric window
80001	Motor for left electric window
82000	Windscreen defrosting control unit
82005	Auxiliary air heater
82010	Air-conditioning system electronic control unit
84000	Water boiler
84009	Internal temperature sensor
84010	Metering device
84019	Electromagnetic pulley
85000	Cigar lighter
85001	Cigar lighter outlet
85003	Heated rearview mirror (trailer)
85004	Heated rearview mirrot (wheel)
85005	Heated rearview mirror
85006	Electrically adjustable heated rear view mirror
85007	Wheel electrically adjustable heated rear view mirror
85008	Trailer electrically adjustable heated rear view mirror
85010	Rear view mirror control
85023	Electric latch
85065	Remote control for aligning suspensions and raising 3rd axle
85150	EDC MS6 control unit
85152	Accelerator load sensor (EDC)
85153	Coolant temperature sensor (EDC)
85154	Turbofan air temperature sensor (EDC)
85155	Turbofan air temperature sensor (EDC)
85158	Turbofan air temperature sensor (EDC)
85159	Temperature and ambient air pessure sensor for E.D.C.
86002	Sensors for front brake shoe wear
86003	Sensors for rear brake shoe wear
86004	Automatic transmission electronic control unit
86013	Sensor for signalling water in fuel filter
86015	Retarder electronic control unit
86023	Vehicle raising/lowering control unit Ecas
86030	Sensor detecting heat irradiation

https://truckmanualshub.com/
Aquila Trucks Centres

86053	Multiplex control and signal unit from bed positions
86116	Multiplex body computer control unit
86117	Multiplex front frame computer control unit
86118	Multiplex rear frame computer control unit
86119	Multiplex Driver Door Module Control Unit
86120	Multiplex Passenger Door Module Control Unit
86123	Multiplex control unit for interface with steering control shaft
86124	Cab with multiplex function electronic control unit
86125	Electronic control unit for VDI (Vehicle Data interface)
86126	Electronic control unit for EM (Expansion module)
86127	Electronic control unit for DMI (Data Management Interface)
86128	Electronic control unit for M.E.T. chassis (chassis electronic module)
86129	Electronic control unit for MC-NET (Mobile Communication Network)
86130	Electronic control unit for navigator
86131	Electronic control unit for telematic
86132	VCM control unit (Vehicle Control Module)
88000	ABS system electronic control unit
88001	ABS system sensor
88005	Electronic control unit for EBS system
88006	EBS rear axle air pressure control modulator
88007	Potentiometric sensor for front wheel shoe position indicator
88008	Potentiometric sensor for rear wheel shoe position indicator
88010	Rear axle brake application pressure sensor
88011	Potentiometric sensor for third axle skid wear signalling
88012	SAS sensor (= Steering Angle Sensor) for EBS
88013	ESC module (= Electronic Stability Control) for EBS
89000	Fridge
89010	Food warmer

https://truckmanualshub.com/
Aquila Trucks Centres

MAIN CHANGES

For vehicles with Euro 4 engine the electric/electronic system is subject to important variations.
In order to handle the increased complexity of Euro 4 operations demanded to the engine control system extra hardware and software resources, the VCM (Vehicle Computer Module) has been added so that vehicle functions can be reallocated on it, which up to Euro 3 had been carried out by the EDC engine control unit, therefore more development flexibility is available for vehicle functions. The immobilizer function has been also integrated on this unit.

The New Body Controller (IBC3) unlike the Body Computer (BC) distributes direct positives and key-locked, protected by external fuses (replaceable) or internal (resettable).In the chassis there is the MET control unit (chassis electronic module) which controls the chassis power devices, thus replacing the FFC and RFC control units.

For the automated transmission on the new Euro 4 vehicle range the gear selector has been removed. Its functions are carried out from the control pushbuttons located on the dashboard center panel combined with the power steering lever.

The EM control unit (Expansion Module) replaces the DMI (Data Management Interface). It controls the power takeoffs and makes it possible to implement complex applications and connections to different devices through the CAN-open line. It communicates with the other control units through the CAN DVB line.

The SCR (Selective Catalytic Reduction) - Denox 2 is on the entire Average/Heavy Euro 4 Range with the Urea Dosing System (UDS) positioned on the lower side of the frame.
The ENGINE ECM (Engine Control Module) replaces EDC MS 6.2.

The new Cluster is monochrome with more functions compared to the previous one.

The introduction of the new units and the change of the previous ones require changes of the vehicle system structure.
The following CAN lines are on the VCM unit:

- VDB - Vehicle Data Bus
- ECB - Engine Control Bus
- FMB - Fuhrpark Management Bus

Figure 2

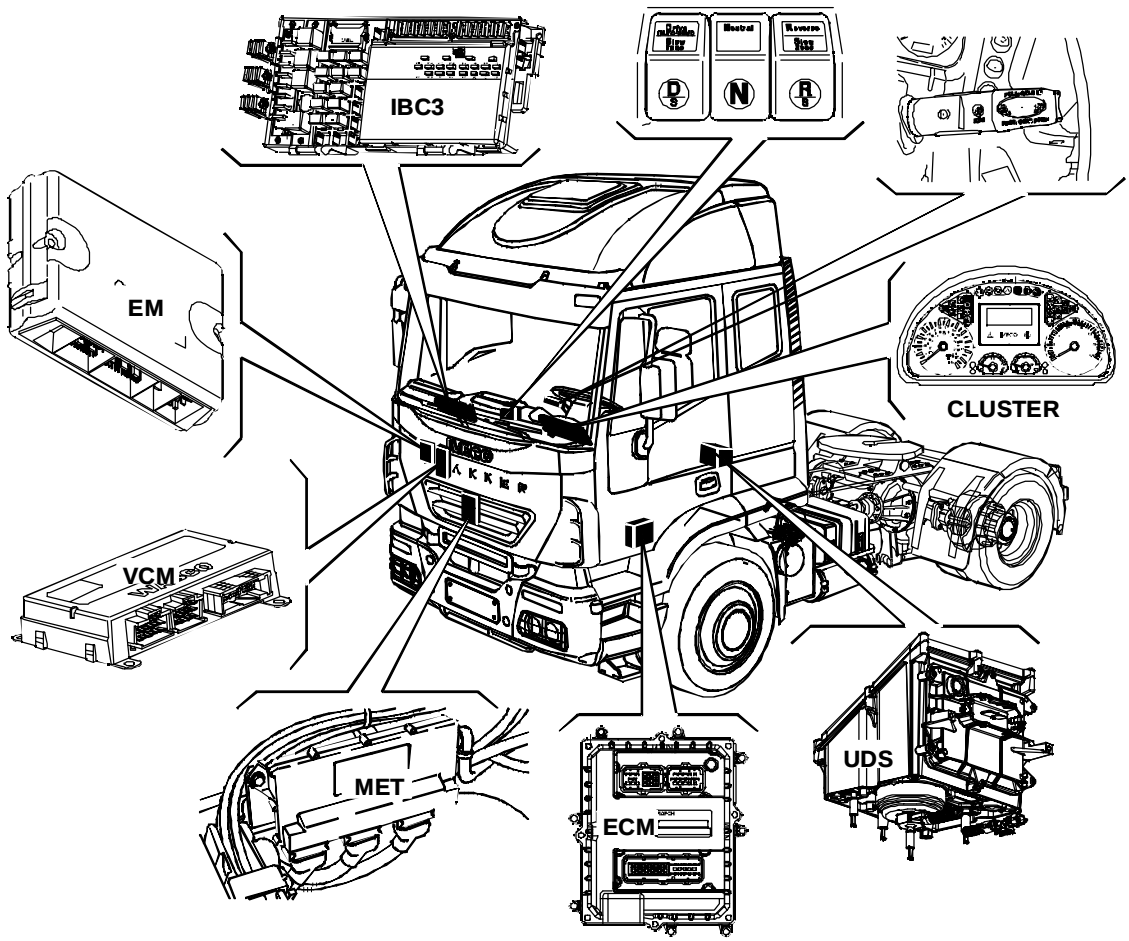

https://truckmanualshub.com/
Aquila Trucks Centres

CAN LINES

Dialogue between the Easy Mux system, vehicle systems, engine control unit, SCR system, radio and various setters is carried out by means of the CAN lines:

- BCB - Body Control Bus
- VDB - Vehicle Data Bus
- ECB - Engine Control Bus
- IDB - Infotainment Data Bus
- FMB - Fuhrpark Management Bus

BCB (Body Control Bus) communication line

It enables the communication between the IBC3 and MET control units of the Easy Mux system and the other control units of the different services onboard.

Figure 3

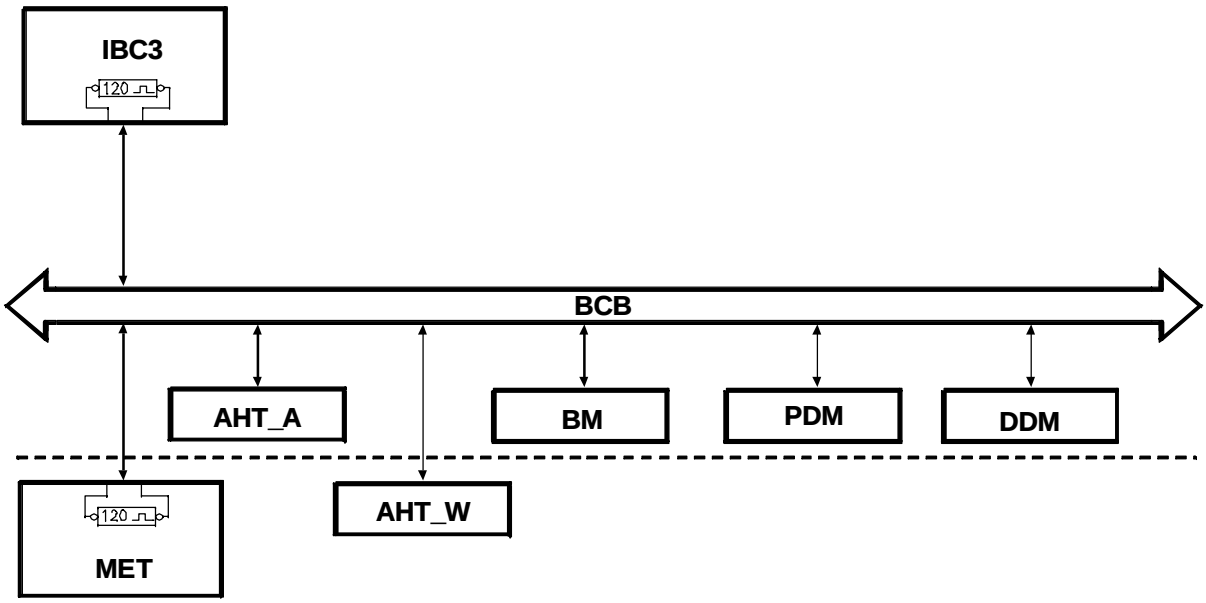

Technical features

112585

- Data transmission speed 62.500 (BIT/SEC)
- Color of the wire Grey

List of Units

Ref.	Description
IBC3	Body Controller
DDM	Driver Door Module control unit
PDM	Passenger Door Module control unit
BM	Bed Module
MET	MET chassis control unit
AHT-A	Air heater
AHT-W	Water heater

https://truckmanualshub.com/
Aquila Trucks Centres

VDB (Vehicle Data Bus) Communication Line

Allows the electronic systems on the vehicle to dialogue. The units connected to it are: Eurotronic Transmission, Retarder, ABS, Ecas, Diagnosis connector, VCM, Tachograph, ACC, SWI, EM, (Mc Net).
This line also dialogues with the Cluster and the Body Computer.

Figure 4

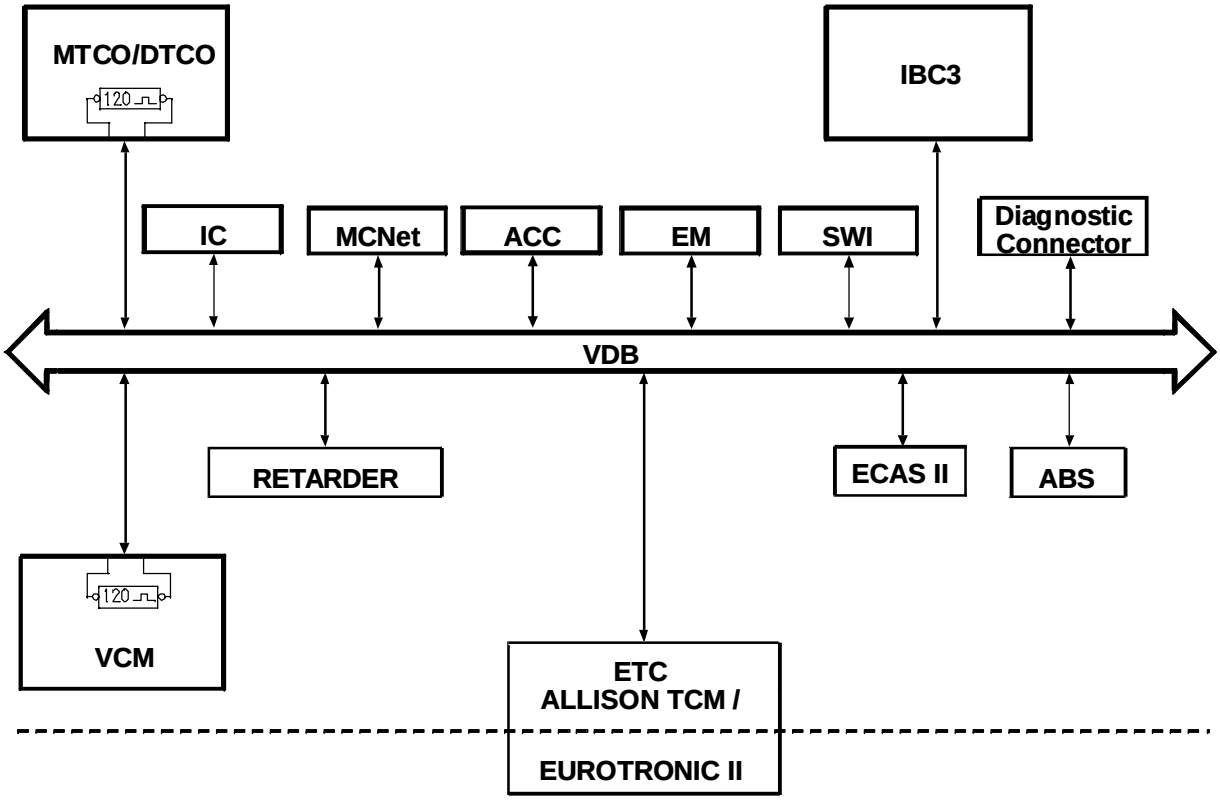

112597

Features

- Data transmission speed 250.000 (BIT/SEC)
- Color of the wire Black

List of Units

Ref.	Description
MTCO	Tachograph
DTCO	Digital tachograph
VCM	Vehicle Control Module control unit
IC	Cluster
IBC3	Body Controller
SWI	Steering Wheel Interface control unit
Diagnostic Connector	30-pole diagnosis connector
ABS	ABS control unit
McNet	Electronic control unit for Mobile Communication Network
RETARDER	Intarder control unit
ECAS II	Air suspension contrl unit
EUROTRONIC II	Eurotronic II automatic gearbox control unit
ALLISON TCM	Allison automatic gearbox control unit
ACC	Radar ACC (Adaptive Cruise Control) control unit

https://truckmanualshub.com/
Aquila Trucks Centres

ECB (Engine Control Bus) communication line

Allows the units and the engine control sensors to dialogue together. The units connected to it are:: EDC, VCM, DCU15 and the OBD connector.

Figure 5

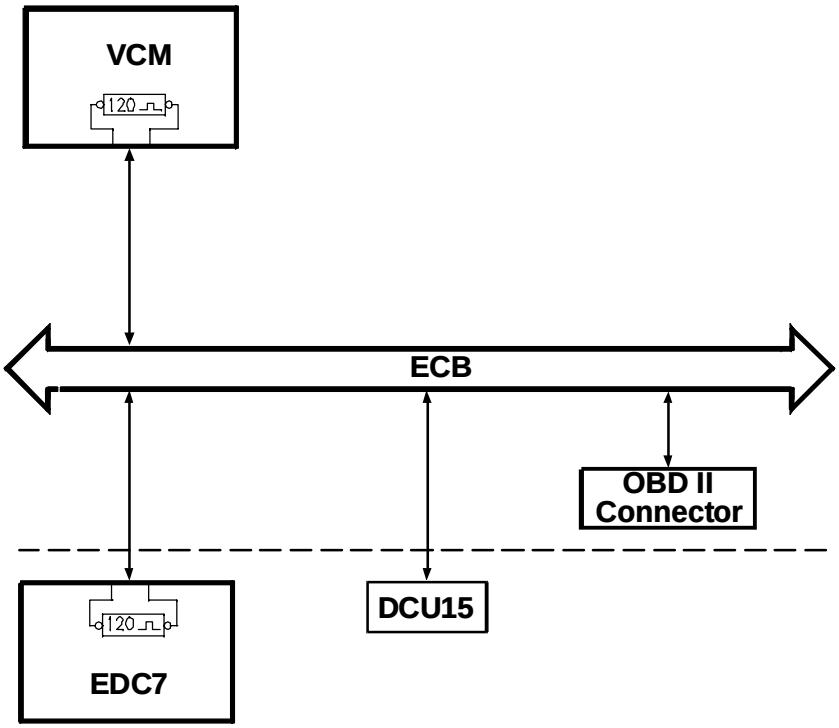

112280

Features

- Data transmission speed 250.000 (BIT/SEC)
- Color of the wire Yellow

List of Units

Ref.	Description
VCM	Vehicle Control Module Unit
EDC7	Engine control unit
DCU15	SCR pumping module unit
OBD II Connector	16 pole connector for OBD (onbord diagnose)

https://truckmanualshub.com/
Aquila Trucks Centres

I.D.B. (Infotainment Data Bus) communication line

Allows communication between the Cluster and the Radio. The messages sent are shown on the CLUSTER.

Figure 6

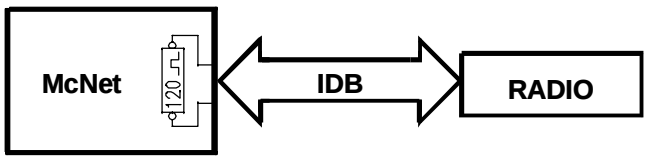

112586

Technical features

- Data transmission speed 100.000 (BIT/SEC)
- Color of the wire Blue

List of Units

Ref.	Description
Radio	Radio
McNet	Electronic control unit for Mobile Communication Network

https://truckmanualshub.com/
Aquila Trucks Centres

F.M.B. (Fuhrpark Managemant Bus) communication line

Allows communication between the different electronic systems (accessories) on the vehicle, , FMS (Telephone) connector and VCM unit.

Figure 7

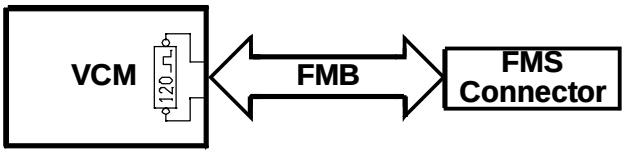

112283

Technical features

- Data transmission speed 250.000 (BIT/SEC)
- Color of the wire White

List of Units

Ref.	Description
VCM	Vehicle Control Module Unit
FMS	Connector FMS

https://truckmanualshub.com/
Aquila Trucks Centres

CAN LINE ASSEMBLY DRAWING

Figure 8

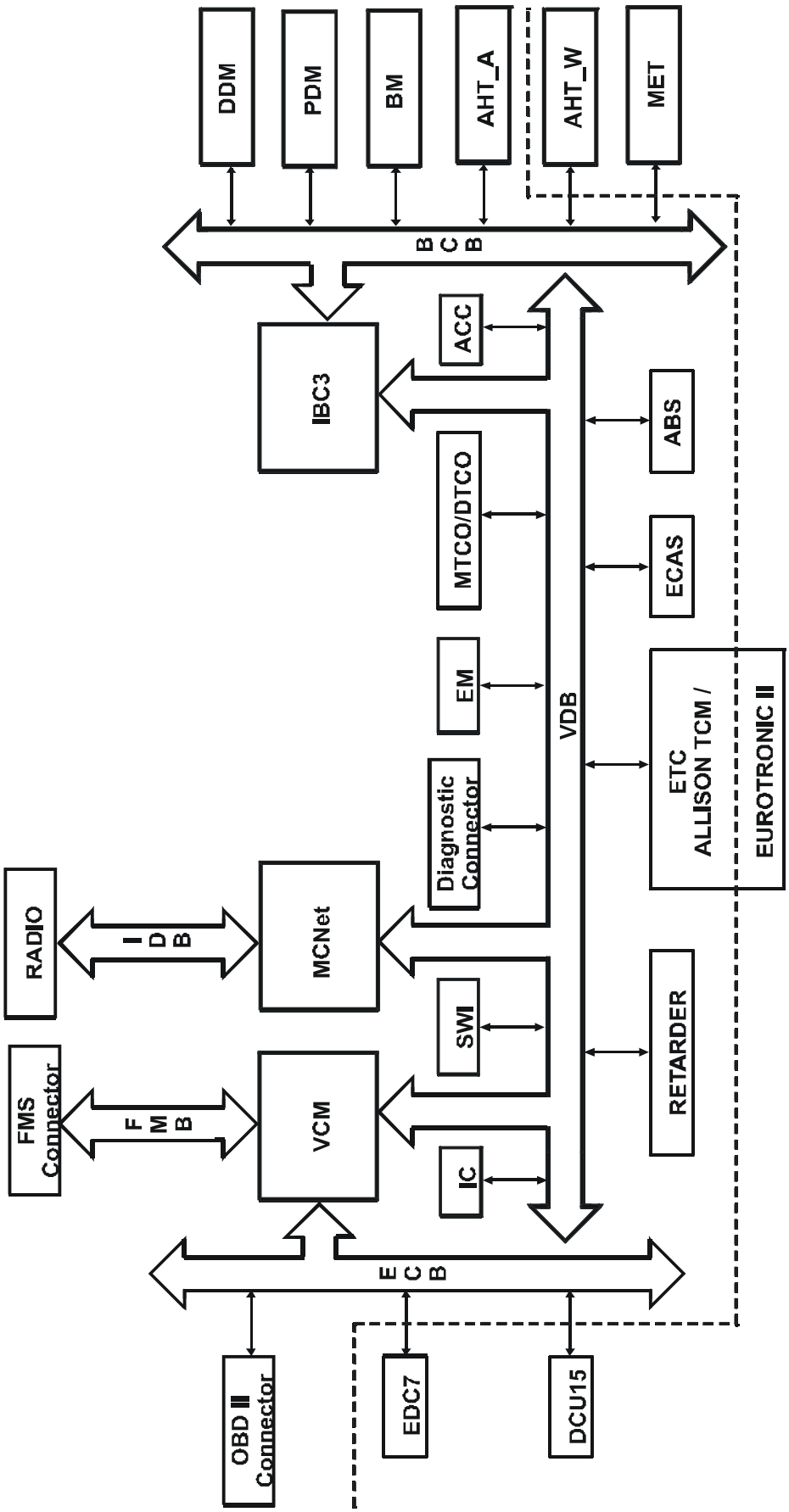

112587

https://truckmanualshub.com/
Aquila Trucks Centres

POWER NETWORK

Never disconnect the batteries from the system with the engine running.
Before connecting the batteries to the system, make sure that the system is well insulated.
Disconnect the batteries from the system when charging them.

The purpose of the electric system is to generate, regulate, store and distribute the energy needed to make the vehicle components work.

For this reason the supply of the base electric system is ensured by a generator (28V - 60A -90A alternator) and two batteries, each with 12 V 170 Ah (opt 220 Ah) connected in series.

A mobile fuse holder containing a 20 Amp fuse is located close to the batteries. This fuse supplies:

- Fuse holder 70605/1
- Body Controller (A07)
- Refrigerator
- ACC presetting

This fuse is not present on the ADR version.

Power cable section:

- battery direct cable = 16 mm^2
- fuse cables = 4 mm^2

Attain to what detected on the vehicle for the remaining sections.

Negative network

The batteries are connected to the frame ground with a brown 70 mm^2 cable, at ground point M1 on the left sidemember (Figure 9).

The starter motor is connected to the frame ground (M2) through a 70 mm^2 cable, fastened on the right sidemember near the actual motor.

The same cable serves for connecting the whole engine unit to the frame ground.

Figure 9

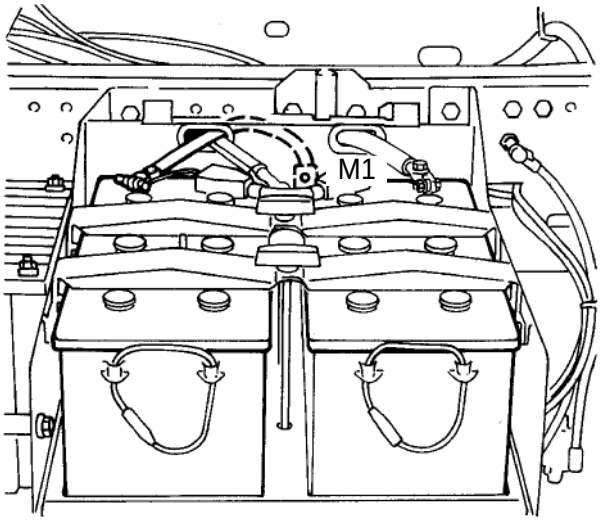

GROUND POINT OF BATTERIES ON LEFT SIDEMEMBER

Figure 10

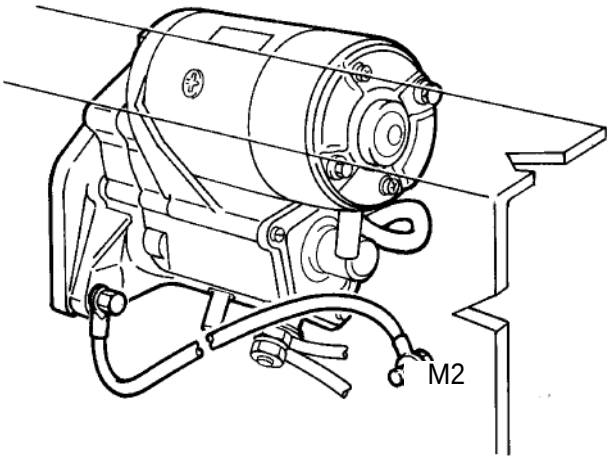

6632

STARTER MOTOR AND ENGINE GROUND POINT

https://truckmanualshub.com/
Aquila Trucks Centres

GROUND POINTS

Figure 11

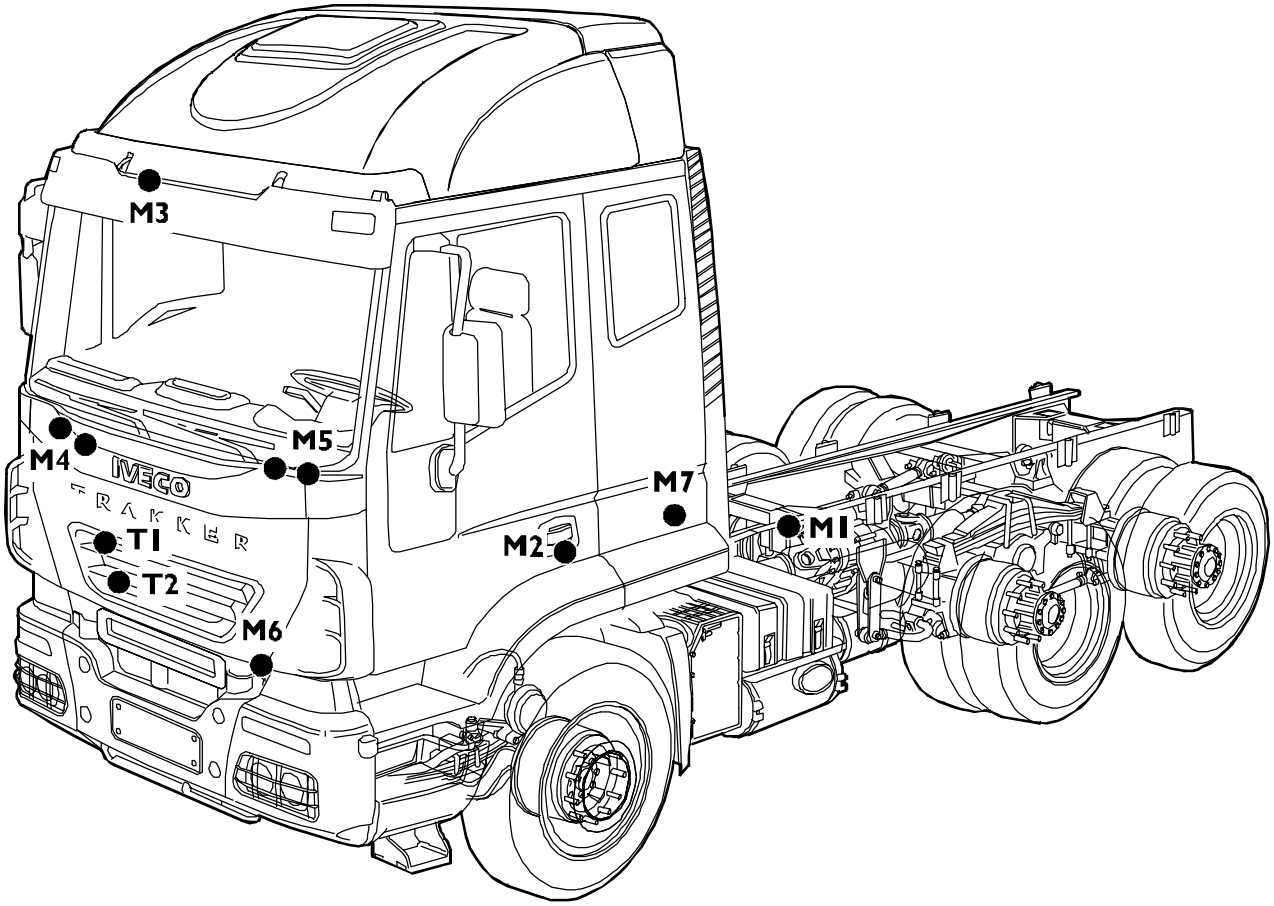

M1. Battery ground - M2. Starter motor ground - M3. Upper cab ground - M4. Right inner cab ground - M5. Left inner cab ground - M6. Front right frame ground - M7. Engine ground - T1 - T2. Equipotential braid

https://truckmanualshub.com/
Aquila Trucks Centres

ELECTRICAL EQUIPOTENTIAL BRAID

Though generally protected against the influence of on-board equipment voltage, electronic components nevertheless remain particularly sensitive electromagnetic compatibility issues, of different nature such as:

- generated by the vehicles
- external.

A suitable size flexible electrolytic copper braid has been provided on the vehicles to minimize these phenomena and return main cab and frame structures to the equipotential state.

Check that the braid is properly attached to the frame and the cab, in the event of defective cab grounding.

Figure 12

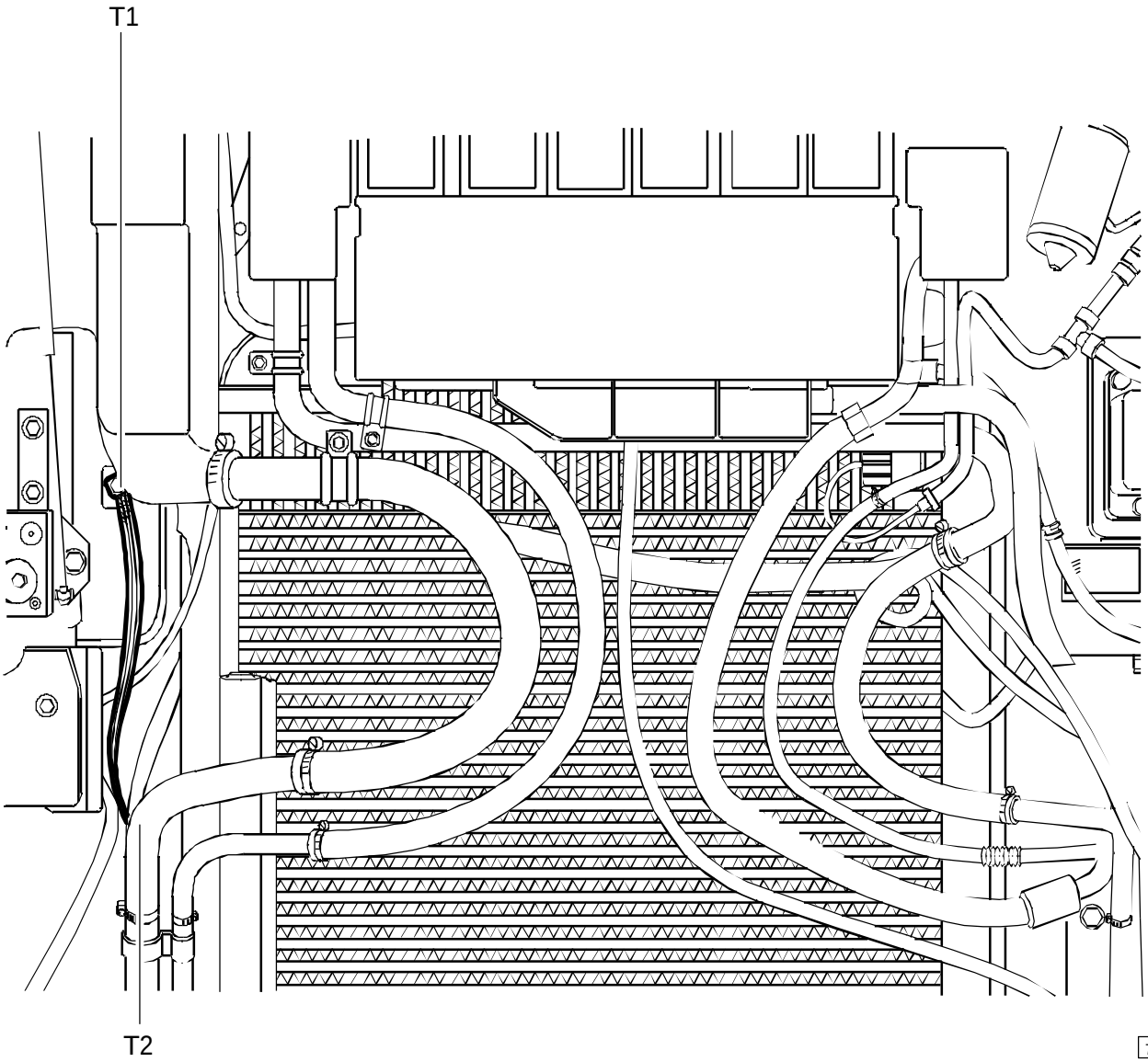

https://truckmanualshub.com/
Aquila Trucks Centres

Figure 13

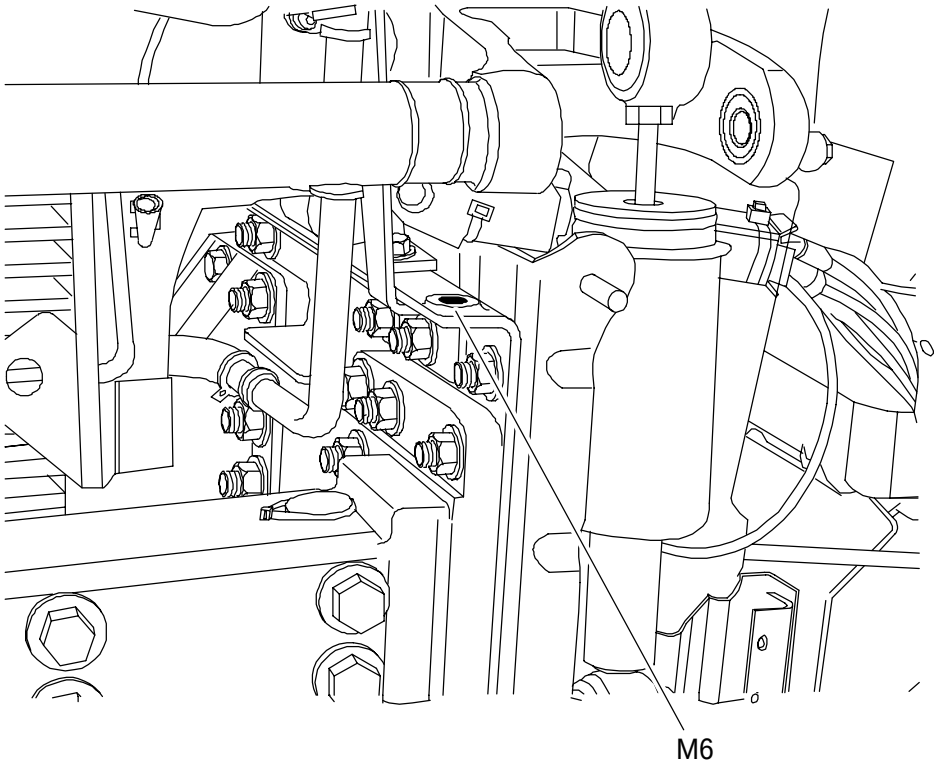

GROUND POINT ON THE LEFT FRONT FRAME

Figure 14

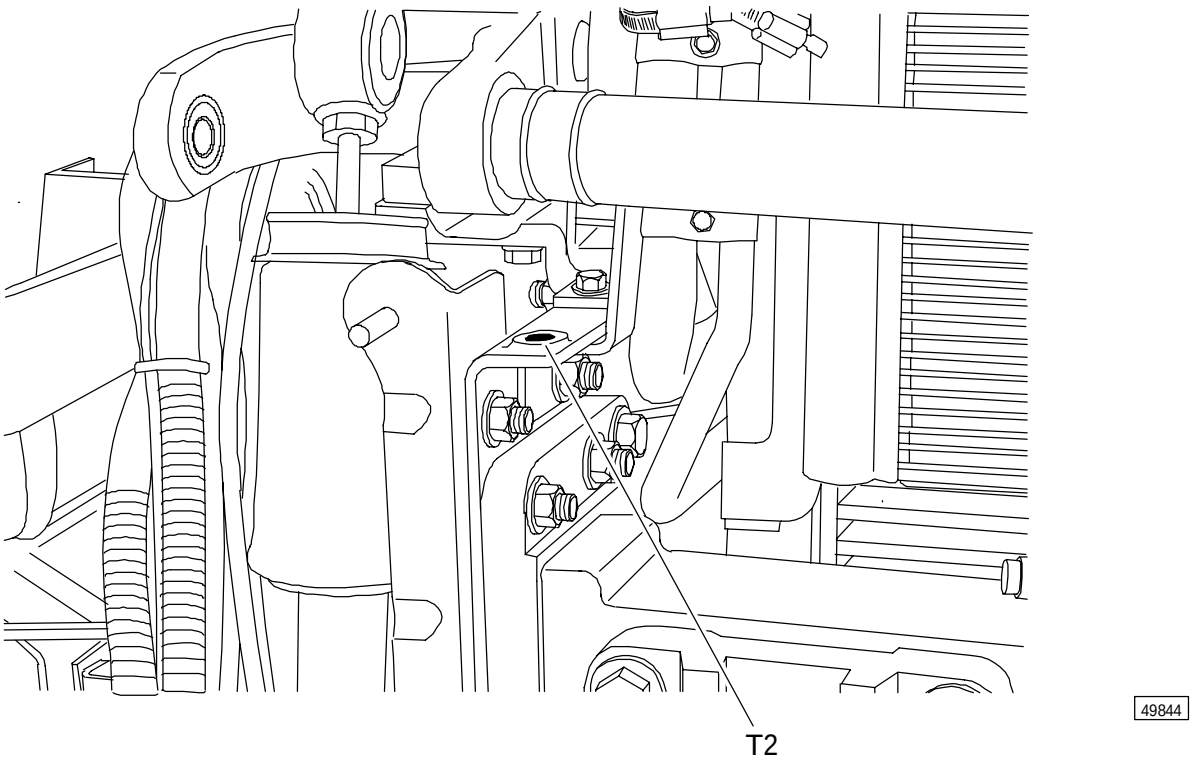

GROUND POINT ON THE RIGHT FRONT FRAME

https://truckmanualshub.com/
Aquila Trucks Centres

Figure 15

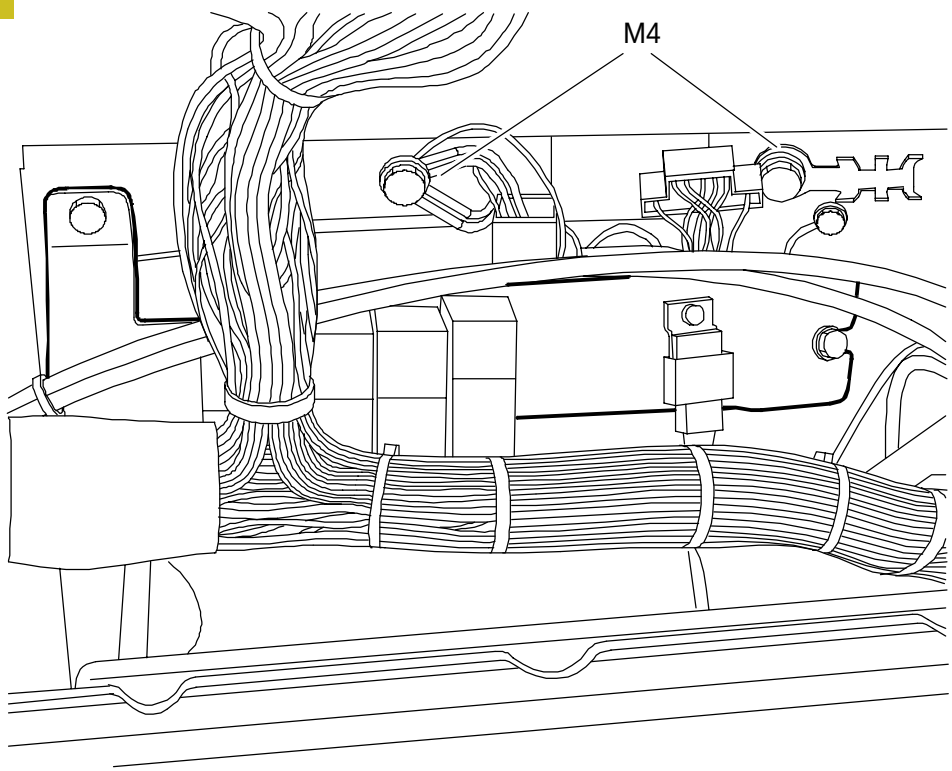

GROUND POINT BEHIND THE BODY COMPUTER

Figure 16

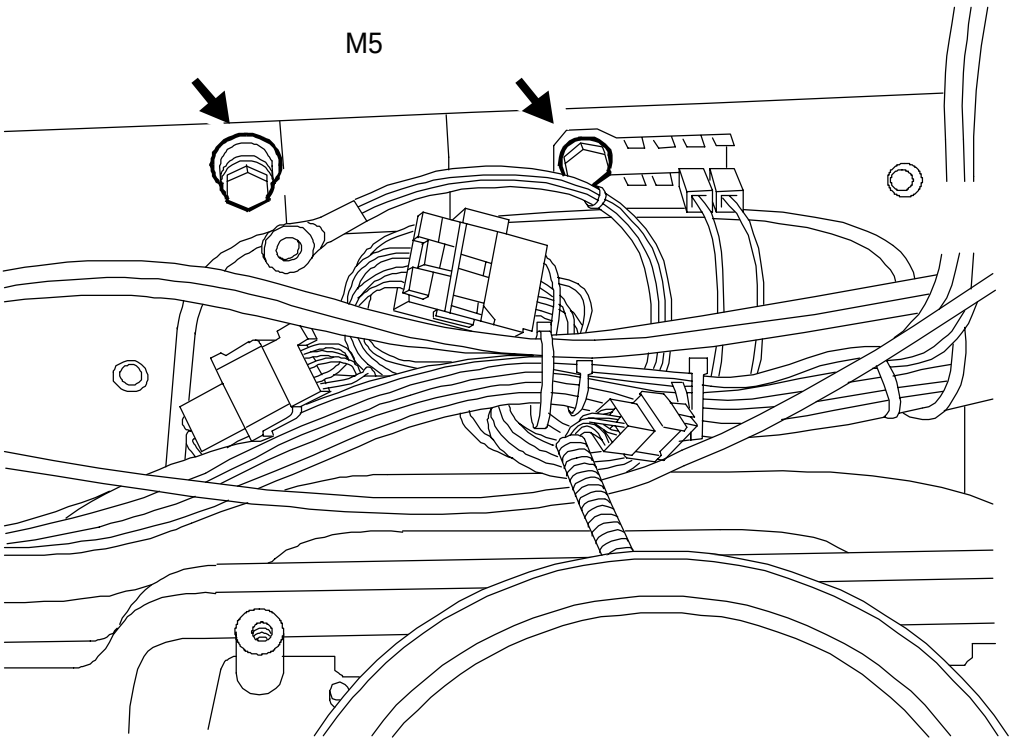

GROUND POINT BEHIND THE CLUSTER

https://truckmanualshub.com/
Aquila Trucks Centres

28 V - 40 A ÷ 90 A "BOSCH"ALTERNATOR

Figure 17

03000

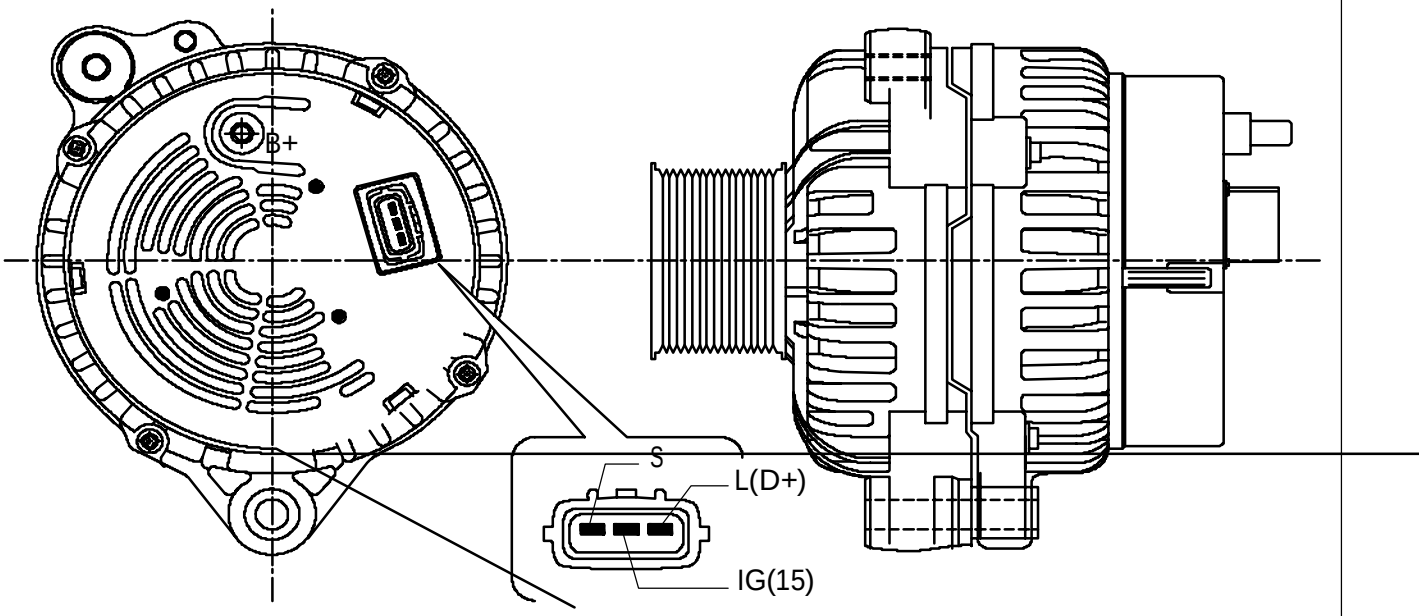

TECHNICAL VIEW

7998

Figure 18

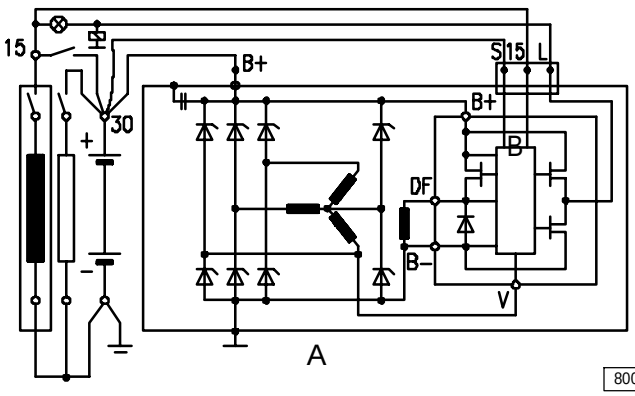

8003

WIRING DIAGRAM
A. Alternator B. Voltage regulator

Figure 19

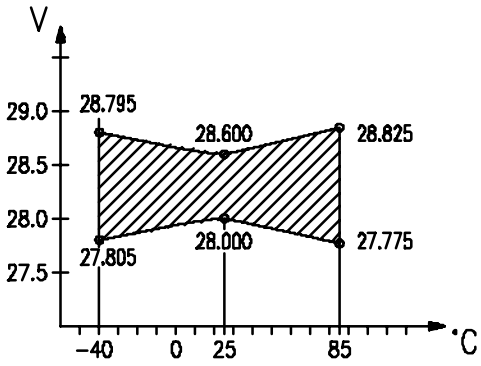

8000

VOLTAGE REGULATOR TEMPERATURE CHARACTERISTICS (6000 RPM)

Figure 20

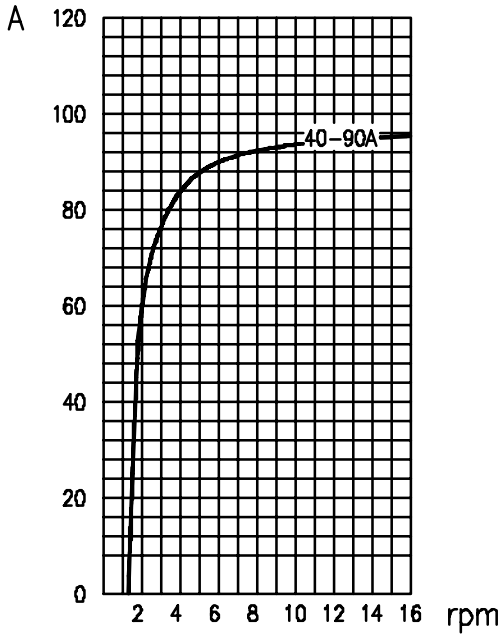

8002

ALTERNATOR CURRENT DELIVERY CURVE

Characteristics

Rated voltage	28 V
Rated power	90 A
Current at environment temperature	1800 RPM/40 A
At 25 °C and rated voltage	6000 RPM/90 A
Direction of rotation	clockwise, seen from pulley
Weight	7.8 kg

https://truckmanualshub.com/
Aquila Trucks Centres

Figure 21

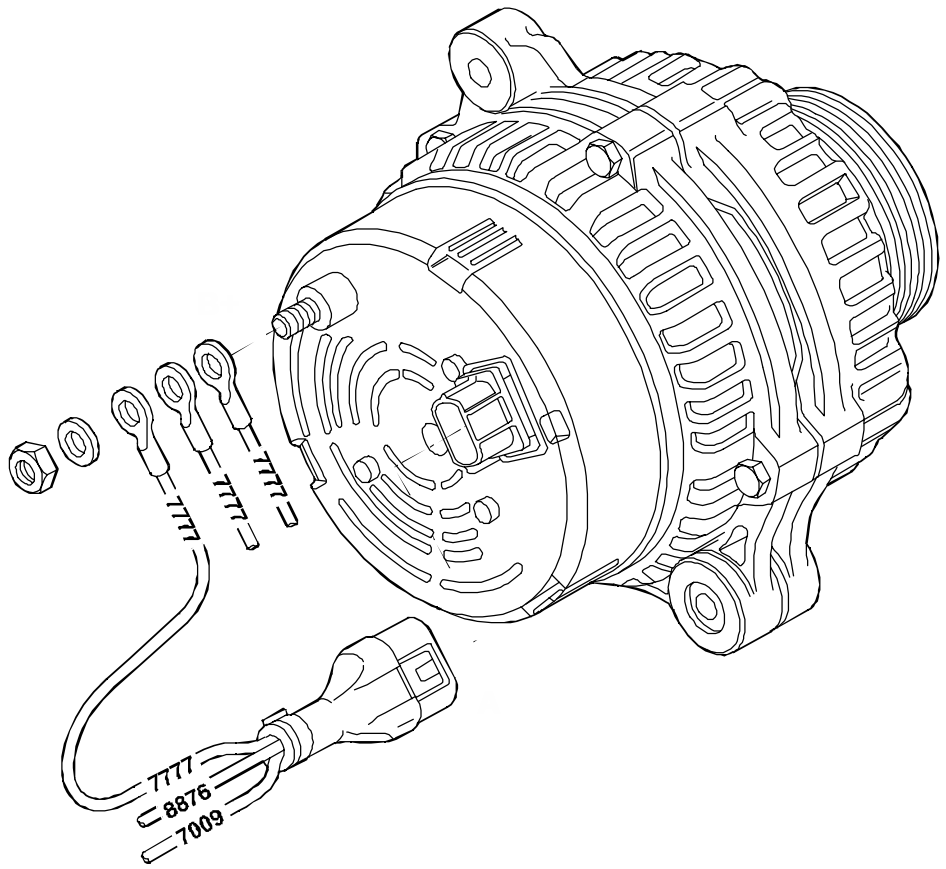

8535

PERSPECTIVE VIEW WITH CORRESPONDING ELECTRICAL CONNECTIONS

Ref.	Function	Cable colour code
L 15 (IG) S	To F.F.C. center clamp J2/B24 To remote switch 25213 clamp 87 (via fuse F6-70601) Positive (+30)	7009 8876 7777
B+	Clamp S alternator Positive +30 power positive +30 positive to starter motor Positive +30	7777 7777 7777

https://truckmanualshub.com/
Aquila Trucks Centres

24V - 5.5 KW "NIPPONDENSO" STARTER MOTOR

08000

Figure 22

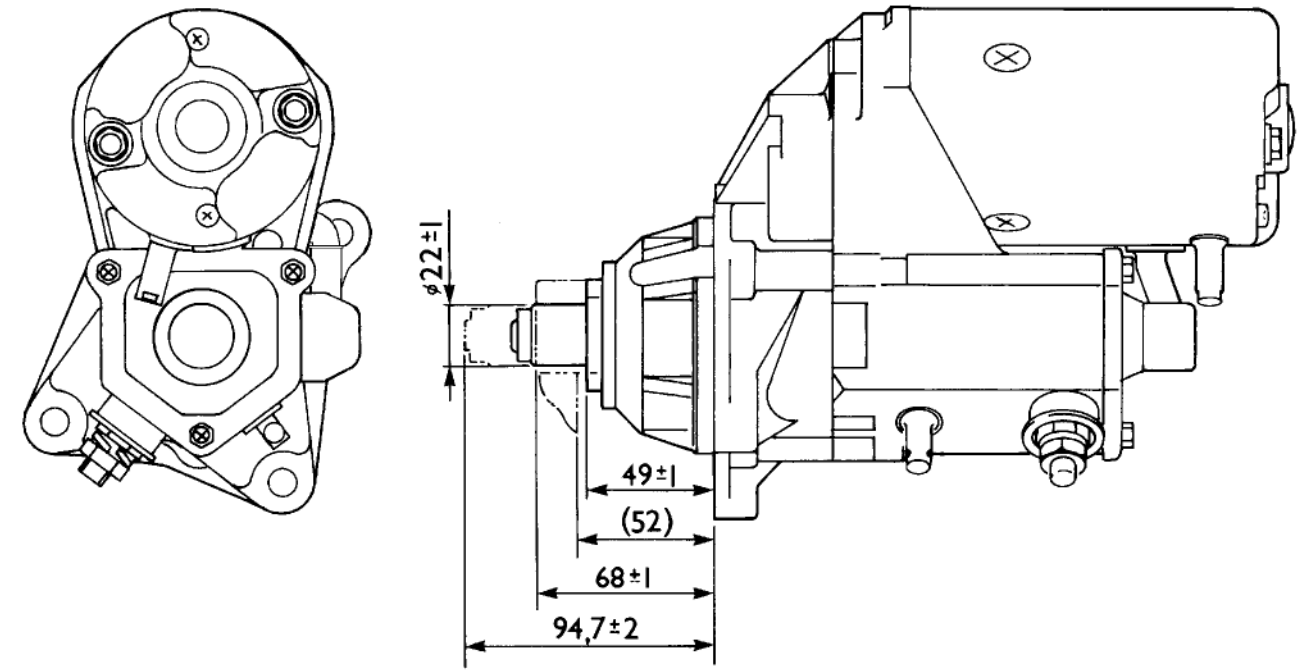

Figure 23

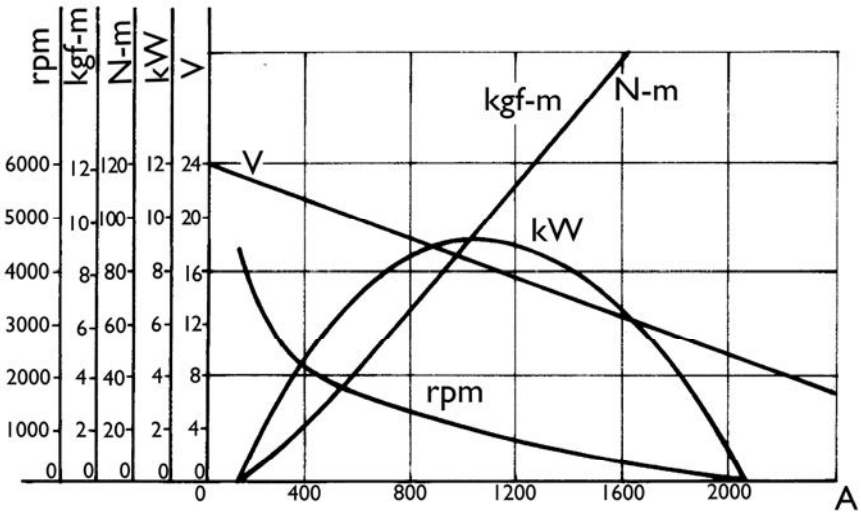

4957

CHARACTERISTIC CURVES

Figure 24

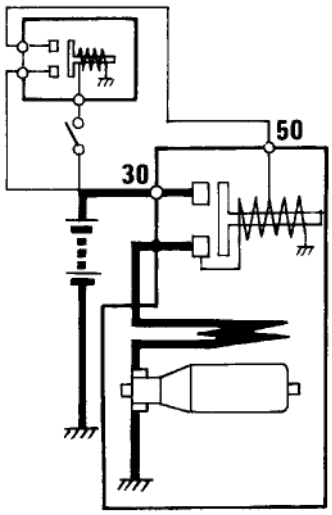

4958

WIRING DIAGRAM

Characteristics		Specific Power (20 °C)	Test cond.	Characteristics
Rated power	5.5 kW	Loadless	23V	120A MAX (3800rpm MIN.)
System voltage	24V	Load	16V (49 N-m)	690A MAX. (900rpm MIN.)
Engagement system	Positive approach control	Stall	6V	1260A MAX. (73.5 N-m MIN.)
Adjusted time	30 sec.			
Direction of rotation	clockwise, seen from end of pinion			
Weight	approx. 10.5 kg			
Operating voltage	16V MAX. (20°C)			
Water resistance	Water spray test to JIS D0203' SI'			

https://truckmanualshub.com/
Aquila Trucks Centres

Figure 25

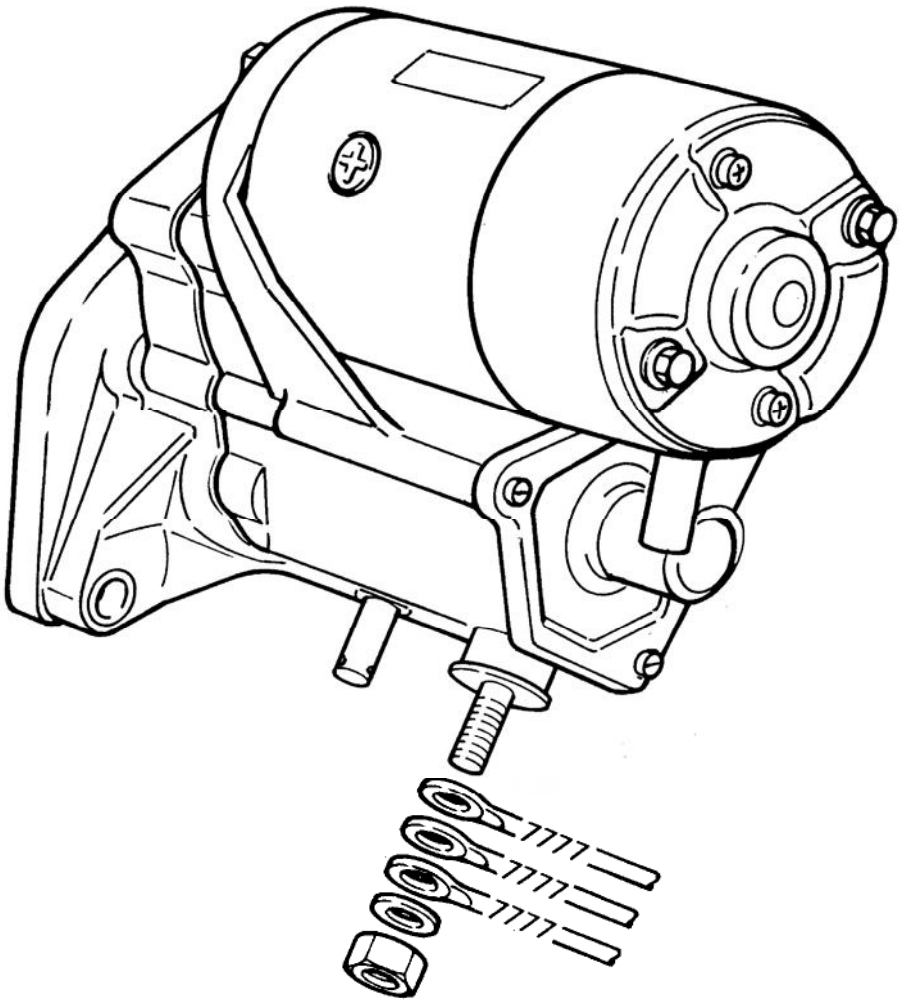

6658

PERSPECTIVE VIEW WITH ASSOCIATED ELECTRICAL CONNECTIONS

Connector	Function	Cable colour code
+30	+30 positive for starter motor power from battery positive clamp (via the T.G.C.)	7777
+30	+30 positive to the alternator	7777
+30	+30 positive to remote switch for engine preheat on consent	7777
+50	+50 positive for key switch	8888

https://truckmanualshub.com/
Aquila Trucks Centres

JUNCTION CONNECTORS
Location of the junction connectors - cab

Figure 26

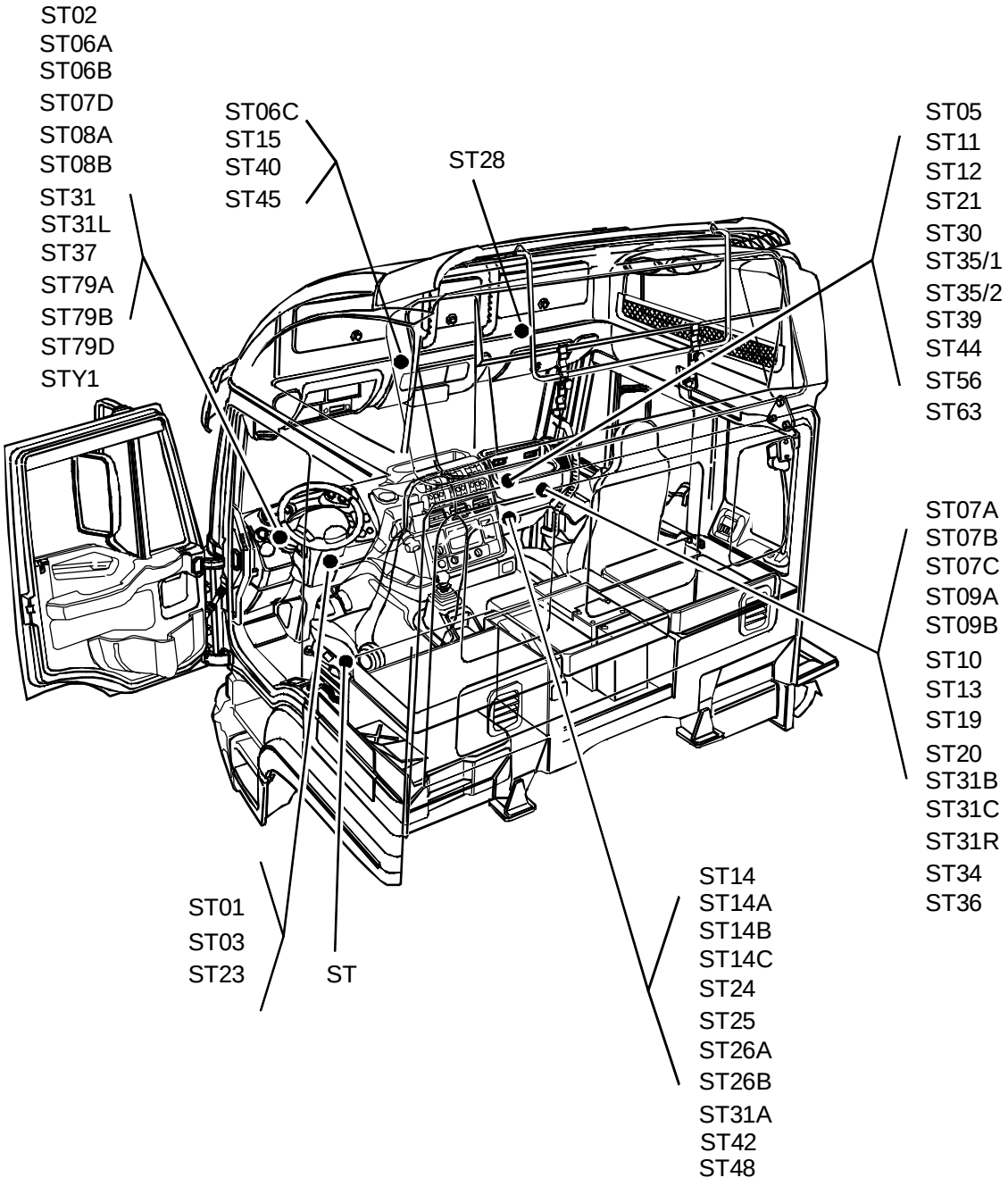

The location of the connectors (cab - chassis) could change to suit wiring needs.

https://truckmanualshub.com/
Aquila Trucks Centres

Location of the junction connectors - chassis

Figure 27

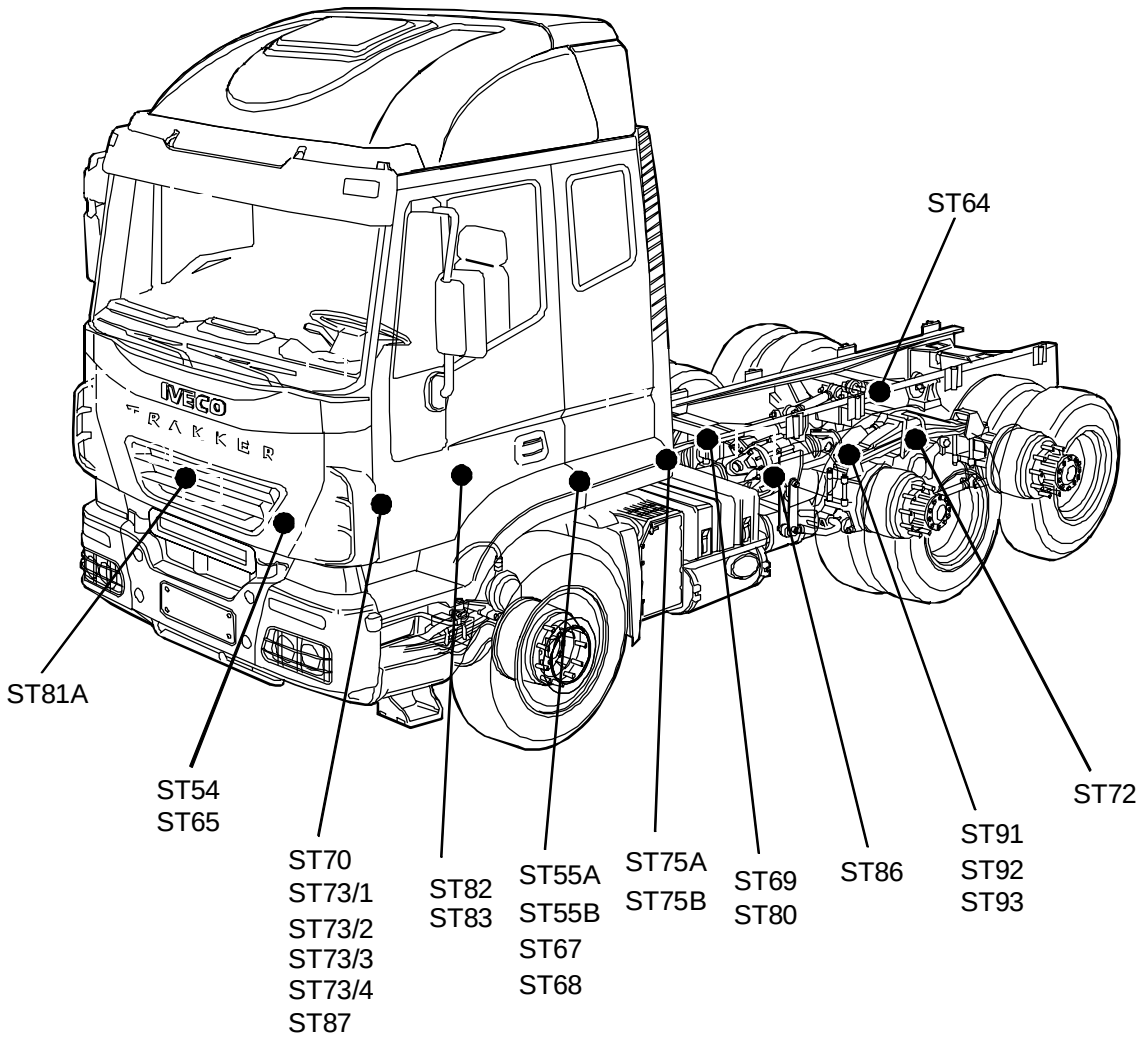

https://truckmanualshub.com/
Aquila Trucks Centres

List of connectors

Name	Description
ST 01	Connection for starting commutator
ST 02	Connection for steering column
ST 03	Connection for speed limiter / Cruise control set
ST 05	Connection for Eurotronic
ST 06A	Connection for roof panel wings devices on the driver side
ST 06B	Connection for tachograph
ST 06C	Connection for Toll Collect
ST 07A	Connection for roof panel wings devices on the passenger side
ST 07B	Connection for navigation and for IT tools
ST 07C	Connection for heatable windscreen
ST 07D	Connection for rotating headlights
ST 08A	Connection for DDM control unit
ST 08B	Connection for driver side door
ST 09A	Connection for PDM control unit
ST 09B	Connection for passenger side door
ST 10	Connection for tools lighting
ST 11	Connection for trailer retarder brake
ST 12	Connection for ABS/EBS tractor and trailer electrical connection
ST 13	Connection for auxiliary air heater CAN line
ST 14	Connection for Ecas bodybuilders (cab)
ST 14A	Connection for bodybuilders (cab)
ST 14B	Connection for bodybuilders (cab)
ST 14C	Connection for set up devices (Allison)
ST 15	Connection for couplings in the high roof
ST 19	Connection for heater
ST 20	Connection for air- conditioner
ST 21	Connection for radiator water recirculation solenoid valve
ST 23	Connection for Immobilizer antenna
ST 24	Connection for air conditioning system control unit CAN line
ST 25	Connection for Intarder
ST 26A	Connection for Ecas
ST 26B	Connection for ABS/EBS
ST 28	Connection for rotating headlights
ST 30	Connection for ADR (tachograph) provision
ST 31	Connection for ECAS remote control
ST 31A	Connection for cab rear
ST 31B	Connection for auxiliary air heating
ST 31C	Connection for auxiliary air heating temperature sensor
ST 31L	Connection for pneumatic heated seat
ST 31R	Connection for pneumatic heated seat
ST 34	Connection for ACC provision / simple "H" gearbox control
ST 35/1	Connection for air conditioner with manual control
ST 35/2	Connection for air conditioning with manual control
ST 36	Connection for T.G.C. / I.G.C.
ST 37	Connection for Toll Collect
ST 39	Connection for differential lock
ST 40	Connection for navigation and for IT tools
ST 42	Connection for DDM/PDM supplies

https://truckmanualshub.com/
Aquila Trucks Centres

Name	Description
ST 44	Connection for centralized closing with remote control
ST 45	Connection for 24 V radio
ST 48	Connection for DMI / EM control unit for PTO
ST 49	Connection for Allison setup
ST 54	Connection for ACC provision
ST 55A	Connection for SCR system (Urea)
ST 55B	Connection for SCR system (Urea)
ST 56	Connection for ADR (15) Alternator
ST 59	Connection for ECAS breakdown switch/longitudinal blockage of 2nd front axle (8x8)
ST 63	Connection for auxiliary water heater CAN line (BCB)
ST 64	Connection for 15-poles current output free pins
ST 65	CAN line connection for trailer (PTO with EM)
ST 67	Connection for urea dosing module solenoid valve
ST 68	Connection for Urea temperature sensor
ST 69	Connection for Intarder
ST 70	Connection for ASR solenoid valve
ST 72	Connection for 35 axles for shoes wear and tear / transverse differential blocking
ST 73/1	Connection for indicating 1st front axle wear (right)
ST 73/2	Connection for indicating 1st front axle wear (left)
ST 73/3	Connection for indicating 2nd front axle wear (right)
ST 73/4	Connection for indicating 2nd front axle wear (left)
ST 77	Connection for right hand side SML indicator lamp (Side Marker Lamp)
ST 78	Connection for left hand side SML indicator lamp (Side Marker Lamp)
ST 79A	Connection for external cab front
ST 79B	Connection for windshield washer and warning horn unit
ST 79D	Connection for brake pedal switch (ABS)
ST 80	Connection for mechanic gearbox
ST 81A	Connection for front lights
ST 82	Connection for components on the engine
ST 83	Connection for components on engine
ST 85L	Connection for left hand side plate light
ST 85R	Connection for right hand side plate light
ST 86	Connection for T.G.C. / I.G.C.
ST 88	Connection for trailer connectors
ST 91	Connection for PTO1 (DMI)
ST 92	Connection for PTO2 (DMI)
ST 93	Connection for PTO3 (DMI)
ST 99	Connection for rear axle ECAS
ST	Connection for ECAS
STY/1	Connection for switch on clutch

https://truckmanualshub.com/
Aquila Trucks Centres

Junction connector ST01 (black) - turn on key

Figure 28

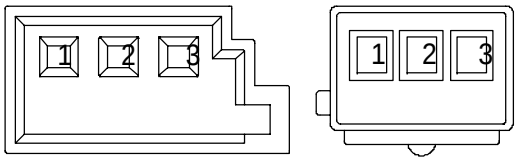

107169

KEY SIDE CONNECTOR VIEW

Pin	Function	Cable colour code
1	Positive +30 for ignition key	7777
2	Terminal 15 ignition key	8887
3	Terminal 50 ignition key	8888

ST02 (green) - connection for steering column

Figure 29

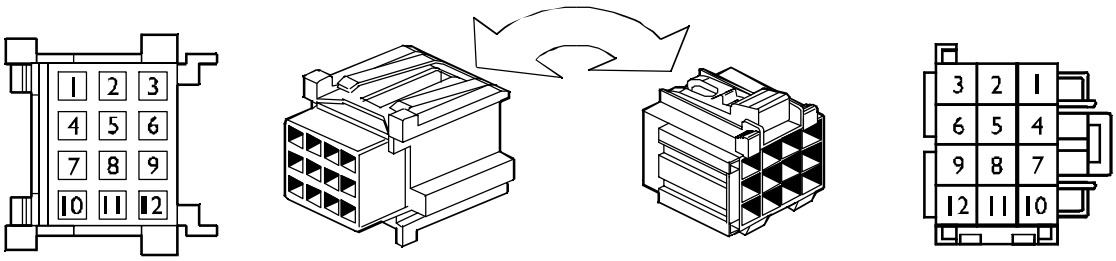

107538

KEY SIDE CONNECTOR VIEW

Pin	Function	Cable colour code
1	CAN L line (ICB)	Green
2	CAN H line (ICB)	White
3	Ground	0000
4	Negative for warning horn	1116
5	Positive +15 from ignition key (15)	8887
6	Positive for steering column switch unit symbols lighting	4442
7	Positive (+30)	7906
8	Positive from ignition key (50)	8888
9	Speed limiter signal	9968
10	Ground	0000
11	-	-
12	-	-

https://truckmanualshub.com/
Aquila Trucks Centres

ST03 junction connector - speed limiter signal / Cruise Control Set

Figure 30

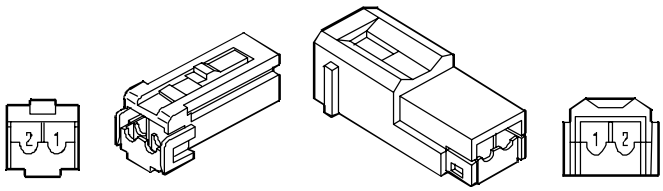

101525

KEY SIDE CONNECTOR VIEW

Pin	Function	Cable colour code
1	Speed limiter signal	9968
2	-	-

Aquila Trucks Centres

ST05 junction connector (green) - Eurotronic II

Figure 31

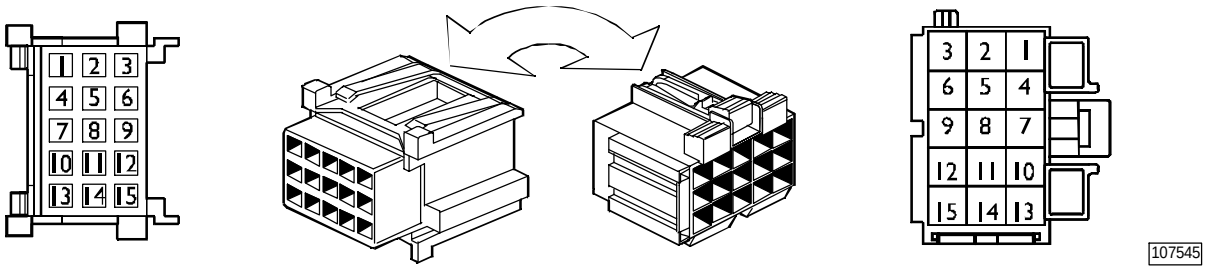

KEY SIDE CONNECTOR VIEW

Pin	Function	Cable colour code
1	CAN VDB Line (L)	Green
2	CAN VDB Line (H)	White
3	CAN VDB Line (L)	Green
4	CAN VDB Line (H)	White
5	K line automatic gearbox	2297
6	Automatic gearbox system power supply (Positive +15)	8102
7	Positive symbols lighting	4442
8	Negative signal forward gear with automatic gearbox	0127
9	VCM control unit pin - X3/24	0125
10	Negative signal from neutral position of the automatic gearbox	0147
11	Negative signal reverse gear with automatic gearbox	0128
12	VCM control unit pin - X3/41	0126
13	Automatic gearbox system power supply (Positive +30)	7101
14	Ground	0000
15	Speed limiter signal	9968

ST06A junction connector (yellow) - roof panel wings devices on the driver side

Figure 32

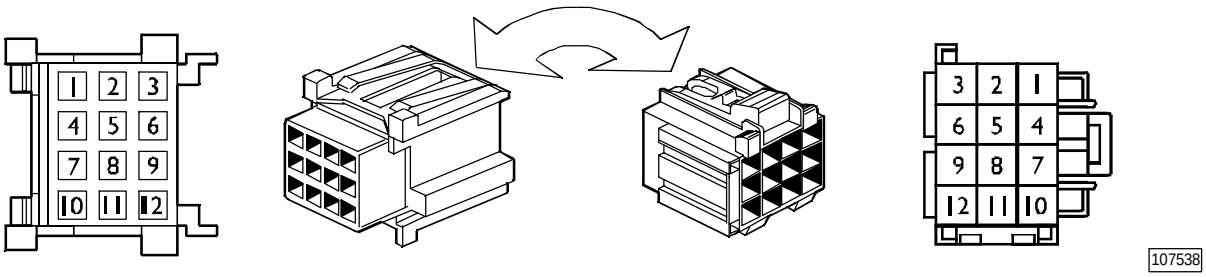

KEY SIDE CONNECTOR VIEW

Pin	Function	Cable colour code
1	Positive left loudspeaker (preamplifier)	1188
2	Negative left loudspeaker (preamplifier)	1186
3	Sliding roof closing control power supply	7011
4	Sliding roof opening control power supply	7010
5	Positive for warning horn solenoid valve	1133
6	CAN line (IDB) H	White
7	CAN line (IDB) L	Green
8	Positive symbols lighting	4442
9	Positive +15	8871
10	-	-
11	-	-
12	-	-

https://truckmanualshub.com/
Aquila Trucks Centres

ST06B junction connector (yellow) - tachograph

Figure 33

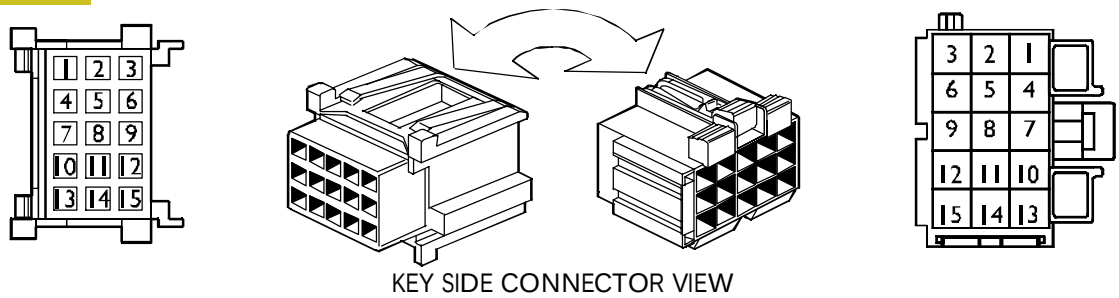

KEY SIDE CONNECTOR VIEW

Pin	Function	Cable colour code
1	Isolated negative tachograph transmitter	0058
2	Speed signal tachograph transmitter	5517
3	Inverted signal tachograph transmitter	5516
4	Tachograph transmitter power supply	5514
5	Speed pulse for EDC	5155
6	CAN VDB Line (H)	White
7	CAN VDB Line (L)	Green
8	-	-
9	Ground	0000
10	Tachograph power supply (Positive +15)	8871
11	Positive symbols lighting	4442
12	Tachograph power supply (battery positive +Batt) after fuse 70058	7768
13	K line	2997
14	Tachograph signal distance - travelled for Cluster	5518
15	-	-

ST06C junction connector (yellow) - Toll Collect

Figure 34

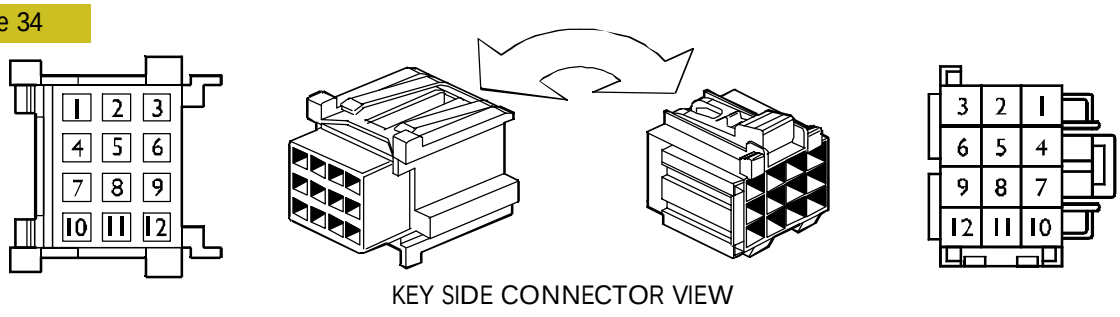

KEY SIDE CONNECTOR VIEW

Pin	Function	Cable colour code
1	Positive +30	7772
2	Positive symbols lighting	4442
3	Positive +15	8871
4	Speed signal (tachograph)	5541
5	Earth	0000
6	Positive symbols lighting	4444
7	-	2222
8	CAN line	Yellow
9	CAN line	Red
10	-	6666
11	Positive +30	7777
12	Earth	0000

https://truckmanualshub.com/
Aquila Trucks Centres

ST07A junction connector (yellow) - roof panel wings devices on the passenger side

Figure 35

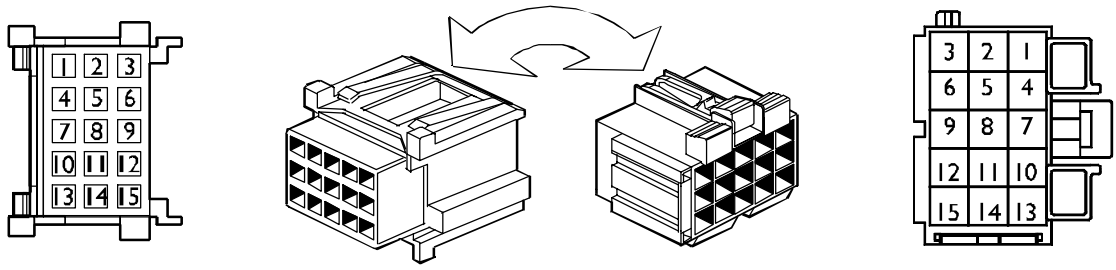

KEY SIDE CONNECTOR VIEW

Pin	Function	Cable colour code
1	Positive for front end-outline marker lamps	3339
2	Positive for voltage reducer	7772
3	Loudspeaker signal (preamplifier)	1184
4	Loudspeaker signal (preamplifier)	1183
5	Positive for reading lights (12V)	7712
6	Positive 12V	7712
7	Positive for overhead light (white light)	4423
8	Positive step lighting	4445
9	Positive for overhead light (blue lights)	4410
10	Positive for overhead light (red lights)	4422
11	Negative for sunshade curtain	0974
12	Sunshade curtain closing signal	8065
13	Positive for sunshade curtain motor	8063
14	Positive for sunshade curtain motor	8064
15	-	-

ST07B junction connector (yellow) - navigation and it tools

Figure 36

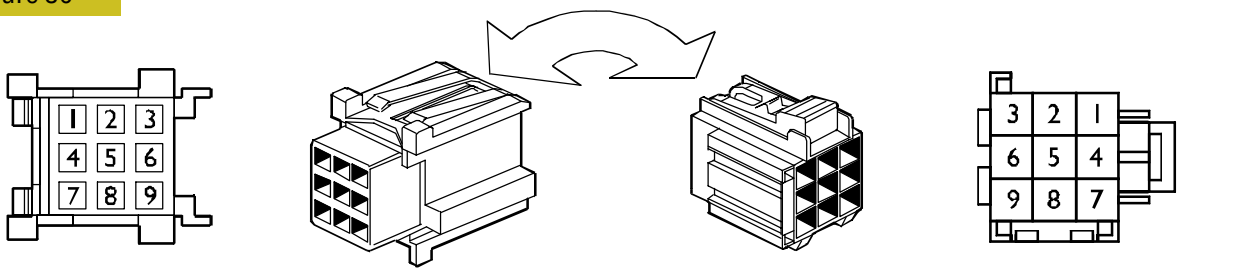

KEY SIDE CONNECTOR VIEW

Pin	Function	Cable colour code
1	Positive +30 after TGC	7772
2	Positive +15	8871
3	Speed signal for navigator	5541
4	-	-
5	CAN L line (FMB)	Green
6	CAN H line (FMB)	White
7	Positive for instruments lighting	4442
8	Reverse gear signal	2268
9	-	-

https://truckmanualshub.com/
Aquila Trucks Centres

ST07C junction connector (black) - heatable windshield

Figure 37

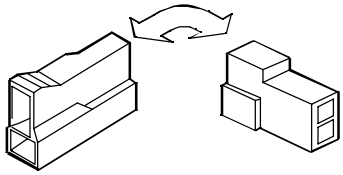

101529

KEY SIDE CONNECTOR VIEW

Pin	Function	Cable colour code
1	Power supply to heatable windshield	8020
2	Power supply to heatable windshield	8020

ST07D junction connector- rotating headlights

Figure 38

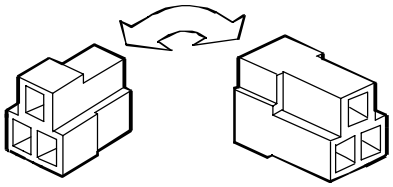

105228

KEY SIDE CONNECTOR VIEW

Pin	Function	Cable colour code
1	Positive for left hand side rotating headlight	1108
2	Ground for rotating headlight	0000
3	Positive for right hand side rotating headlight	1115

Aquila Trucks Centres

ST08A junction connector (blue) - DDM control unit

Figure 39

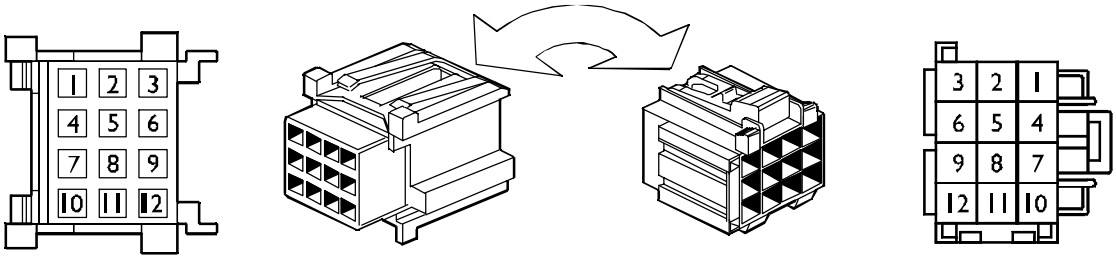

107538

KEY SIDE CONNECTOR VIEW

Pin	Function	Cable colour code
1	Positive (+30) for control unit power supply	7991
2	Ground	0000
3	Signal for loudspeaker (roof panel)	1188
4	Signal for loudspeaker (roof panel)	1186
5	K line for diagnosis	2991
6	CAN H line (BCB)	White
7	CAN L line (BCB)	Green
8	Centralised locking control signal - opening	0064
9	Centralised locking control signal - closing	0065
10	Signal (+) external temperature sensor	7573
11	Driver side electrical lock bolt	0003
12	External temperature sensor ground	0550

Jointing connector ST08B (blue) - driver side door

Figure 40

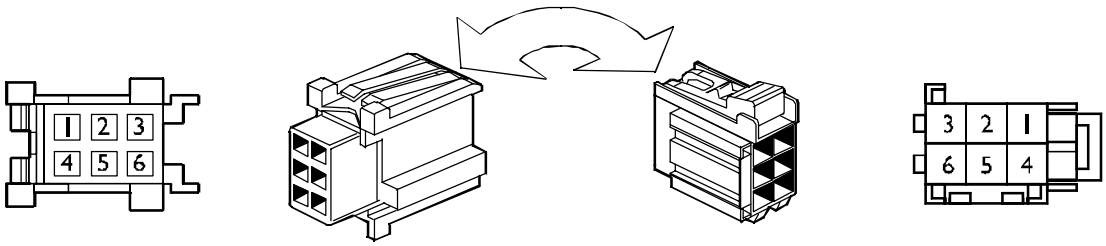

107188

KEY SIDE CONNECTOR VIEW

Pin	Function	Cable colour code
1	Connection 2 between side window regulator switches	8862
2	Connection 1 between side window regulator switches	8002
3	Mirror heating supply	8830
4	Positive +30 (presetting)	7990
5	-	-
6	-	-

https://truckmanualshub.com/
Aquila Trucks Centres

ST09A junction connector (blue) - PDM control unit

Figure 41

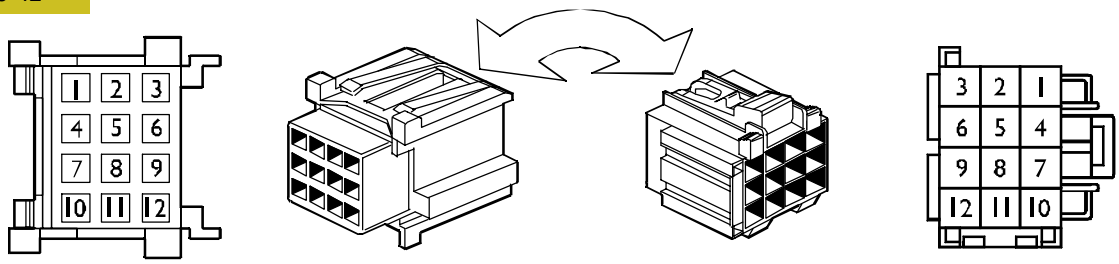

107538

KEY SIDE CONNECTOR VIEW

Pin	Function	Cable colour code
1	Positive (+30) control unit power supply	7990
2	Ground	0000
3	Positive right hand side loudspeaker	1184
4	Negative right hand side loudspeaker	1183
5	K line for diagnosis	2290
6	CAN H line (BCB)	White
7	CAN L line (BCB)	Green
8	Centralised locking control signal - opening	0064
9	Centralised locking control signal - closing	0065
10	-	-
11	Passenger side electrical lock bolt	0003
12	Free	-

Jointing connector ST09B (white) - passenger side door

Figure 42

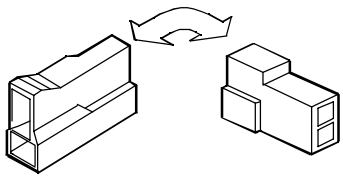

101529

KEY SIDE CONNECTOR VIEW

Pin	Function	Cable colour code
1	Connection 2 between side window regulator switches	8862
2	Connection 1 between side window regulator switches	8002

https://truckmanualshub.com/
Aquila Trucks Centres

ST10 junction connector (green) - Instruments lighting

Figure 43

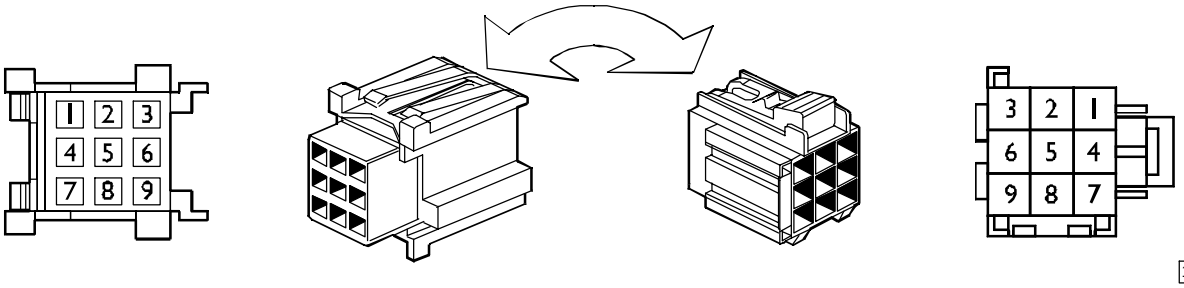

KEY SIDE CONNECTOR VIEW

Pin	Function	Cable colour code
1	Positive for instruments lighting	4442
2	Positive for instruments lighting	4442
3	Positive for commutator for third axle lifting.	4442
4	Positive for switch with incorporated warning light for heatable windshield enabling	4442
5	Positive for switch with incorporated warning light for heated rear view mirrors	4442
6	Positive for switch with incorporated warning light for A.S.R. disabling	4442
7	Positive for instruments lighting	4442
8	Positive for instruments lighting	4442
9	Positive for instruments lighting	4442

Connector of junction ST11 - trailer retarder brake

Figure 44

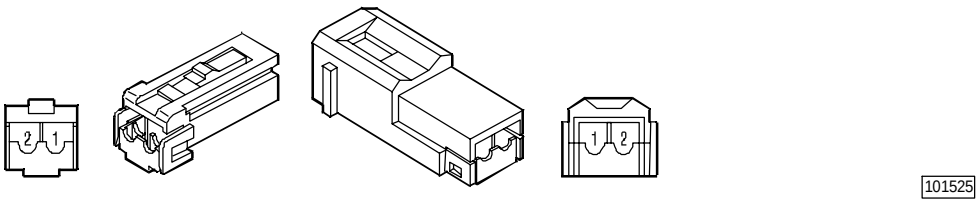

KEY SIDE CONNECTOR VIEW

Pin	Function	Cable colour code
1	Ground from trailer brake hand wheel switch (brake light)	0927
2	Ground for trailer brake hand wheel switch (brake light)	0000

https://truckmanualshub.com/
Aquila Trucks Centres

ST12 junction connector (green) - tractor and trailer ABS/EBS

Figure 45

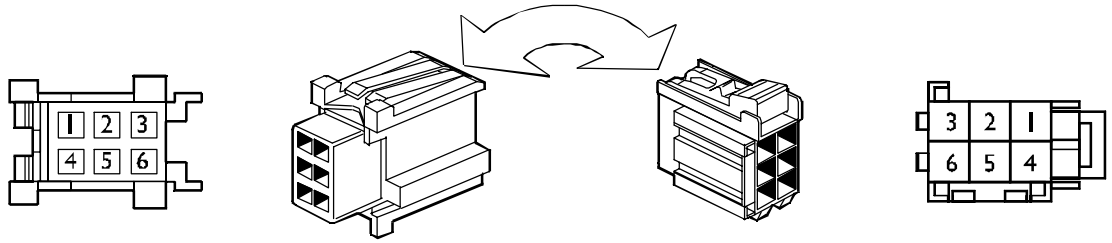

KEY SIDE CONNECTOR VIEW

107188

Pin	Function	Cable colour code
1	-	-
2	-	-
3	-	-
4	-	-
5	Positive pressed pedal signal (ABS)	8153
6	Positive for stop lights (ABS)	8158

ST13 junction connector (black) - auxilliary air heater

Figure 46

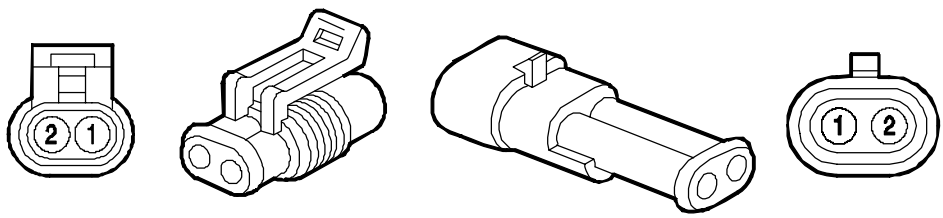

101531

KEY SIDE CONNECTOR VIEW

Pin	Function	Cable colour code
1	CAN BCB Line (L)	Green
2	CAN BCB Line (H)	White

Aquila Trucks Centres

ST14 junction connector - ECAS bodybuilders (cab)

Figure 47

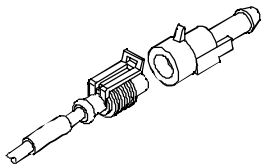

101523

KEY SIDE CONNECTOR VIEW

Pin	Function	Cable colour code
1	Power supply to liftable axle lowering or lifting switch	8445

ST14A junction connector (blue) - for bodybuilders (cab)

Figure 48

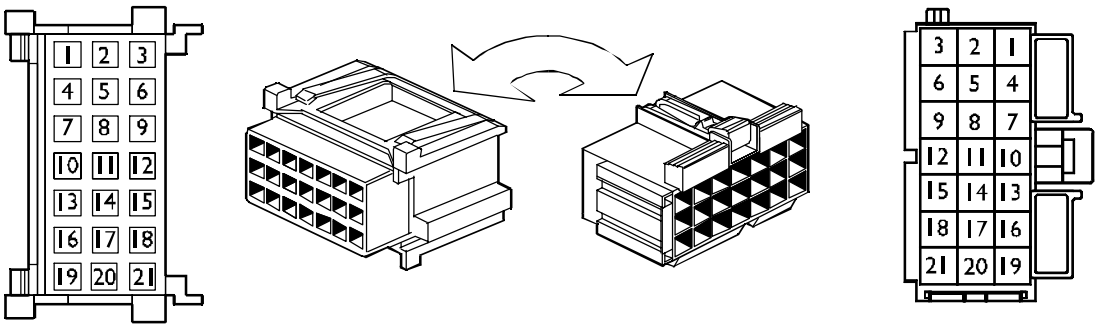

107554

KEY SIDE CONNECTOR VIEW

Pin	Function	Cable colour code
1	Engine start-up signal input	8892
2	Engine turning off signal input	0151
3	Stop lights signal for bodybuilders	1165
4	Vehicle not in operation signal output	5515
5	Parking brake engaged signal output	6656
6	-	-
7	Speed signal from tachograph	5155
8	Engine condition (output signal) 0 V engine not in operation / 24 V engine in operation	7778
9	Gearbox in neutral position signal	8050
10	Reverse gear signal	2268
11	Positive +15	8871
12	Provision for Cruise Control SET +	8156
13	Provision for Cruise Control SET -	8157
14	Provision for Cruise Control OFF	8154
15	Provision for Cruise Control RESUME	8155
16	Provision Cruise Control (internal /external choice)	0158
17	Ground	0000
18	Provision for P.T.O. 1 control signal	0131
19	Provision for P.T.O. 2 control signal	0132
20	Provision for P.T.O. 3 control signal	0123
21	Positive +30	7772

https://truckmanualshub.com/
Aquila Trucks Centres

ST14B junction connector (blue) - for bodybuilders (cab)

Figure 49

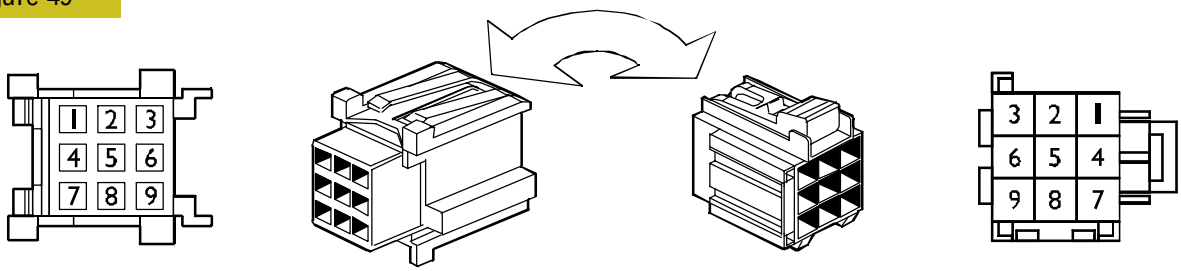

107531

KEY SIDE CONNECTOR VIEW

Pin	Function	Cable colour code
1	Signal for the second speed limiter	0172
2	-	-
3	Clutch status signal	9963
4	Programmable speed threshold indicator signal (PTS)	5542
5	Hazard light signal	1113
6	-	-
7	-	-
8	Engine rpm signal	5584
9	External light signal	3333

ST14C junction connector (grey) - for set up devices (Allison)

Figure 50

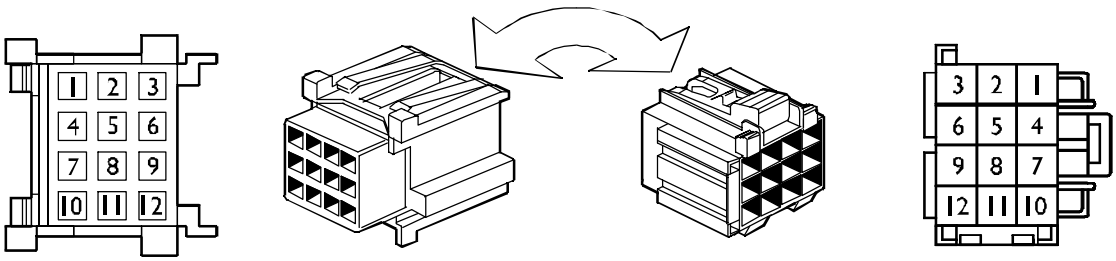

107538

KEY SIDE CONNECTOR VIEW

Pin	Function	Cable colour code
1	Neutral signal for PTO	145
2	Stepping switch signal	123
3	-	-
4	PTO signal active	143
5	PTO signal active	130
6	-	-
7	-	-
8	Automatic neutral signal	117
9	Automatic neutral signal	101
10	Digital earth	103
11	Zone indicator signal	113
12	-	-

https://truckmanualshub.com/
Aquila Trucks Centres

ST15 - ST19 junction connector

Figure 51

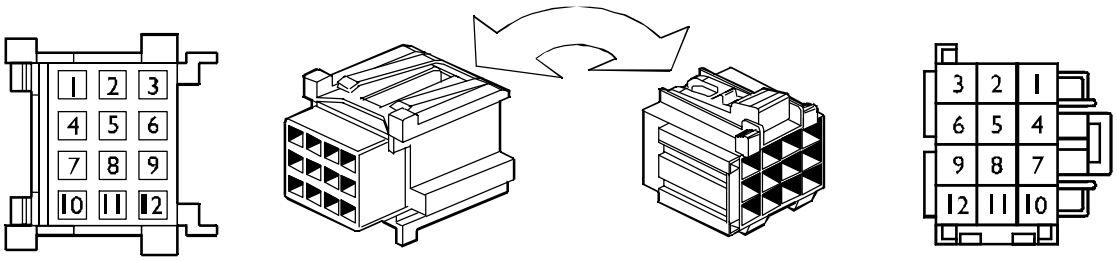

107538

KEY SIDE CONNECTOR VIEW

ST15 (yellow) - Connection for couplings in the high roof

Pin	Function	Cable colour code
1	Ground	0000
2	Positive for sliding roof closing	7011
3	Positive for sliding roof opening	7010
4	Positive for reading light	4412
5	Positive for overhead lights (white light)	4423
6	Positive for overhead lights (red lights)	4422
7	-	-
8	Left hand side loudspeaker	1186
9	Left hand side loudspeaker	1188
10	Right hand side loudspeaker	1183
11	Right hand side loudspeaker	1184
12	–	-

ST19 (green) - connection for heating

Pin	Function	Cable colour code
1	K line	2295
2	Positive symbols lighting	4442
3	with ST 20 - 3	0506
4	with ST 20 - 4	8087
5	Positive for 1st speed auxiliary heating enabling (remote control switch)	8884
6	Positive for heater motor water recirculation enabling (remote control switch)	7778
7	Locked positive	8871
8	-	-
9	Ground	0000
10	Negative for auxiliary heater enabling	0501
11	Positive with starter up engine	7786
12	-	-

https://truckmanualshub.com/
Aquila Trucks Centres

ST20 junction connector (green) - air conditioning system

Figure 52

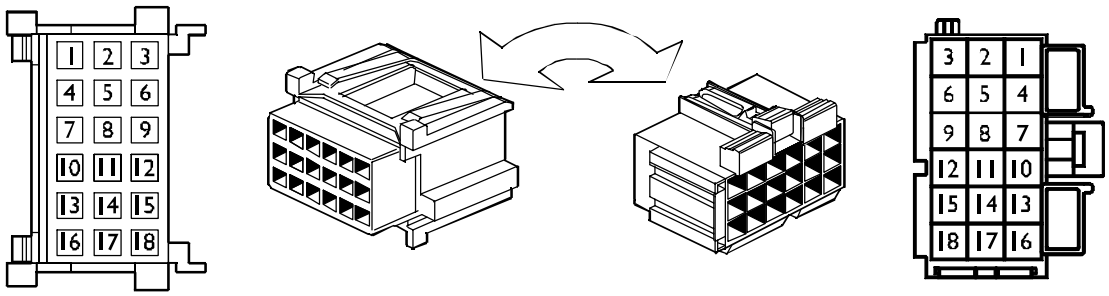

107552

KEY SIDE CONNECTOR VIEW

Pin	Function	Cable colour code
1	K line	2296/2295
2	Positive instruments lighting	4442
3	with ST 19 - 3	0506
4	with ST 19 - 4	8087
5	Positive for 1st speed heater enabling (remote control switch)	8884
6	Remote control switch signal for compressor enabling (from pressure switches)	9933
7	Remote control switch signal for compressor enabling (from control unit)	9933
8	Positive with starter up engine	7778
9	Ground	0000
10	Positive compressor control	9993
11	Positive +15	8871
12	Positive after TGC	7551
13	Positive after TGC	7551
14	-	-
15	Negative (from control unit) for solenoid valve radiator water recirculation	9552
16	Positive for solenoid valve radiator water recirculation	7550
17	-	-
18	-	-

https://truckmanualshub.com/
Aquila Trucks Centres

ST21 junction connector (black) - solenoid valve for radiator water recirculation

Figure 53

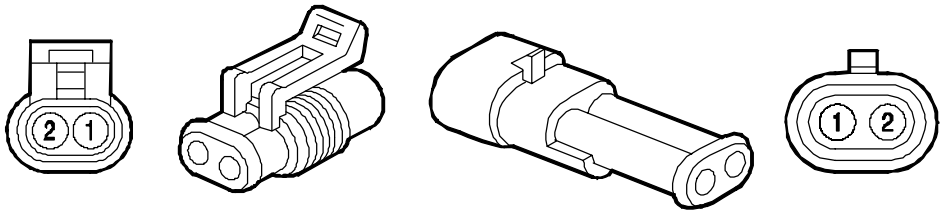

101531

KEY SIDE CONNECTOR VIEW

Pin	Function	Cable colour code
1	Positive for solenoid valve radiator water recirculation	7550
2	Negative for solenoid valve for radiator water recirculation	9552

ST23 junction connector - immobilizer antenna

Figure 54

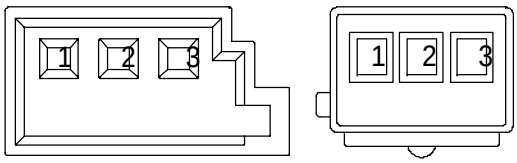

107169

KEY SIDE CONNECTOR VIEW

Pin	Function	Cable colour code
1	Immobilizer antenna signal (VCM pin - X1/1)	-
2	Immobilizer antenna signal (VCM pin - X1/3)	-
3	-	-

https://truckmanualshub.com/
Aquila Trucks Centres

ST24 junction connector (black) - CAN line for air conditioning system

Figure 55

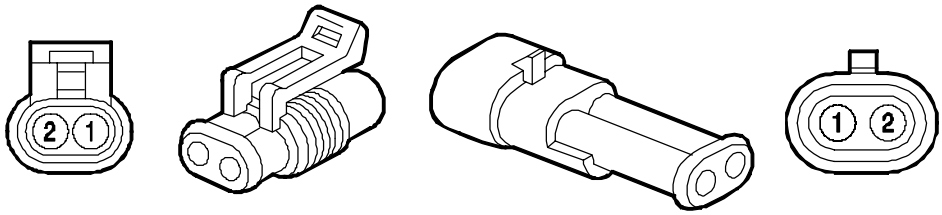

101531

KEY SIDE CONNECTOR VIEW

Pin	Function	Cable colour code
1	CAN L line (BCB)	Green
2	CAN H line (BCB)	White

ST25 junction connector (black) - Intarder

Figure 56

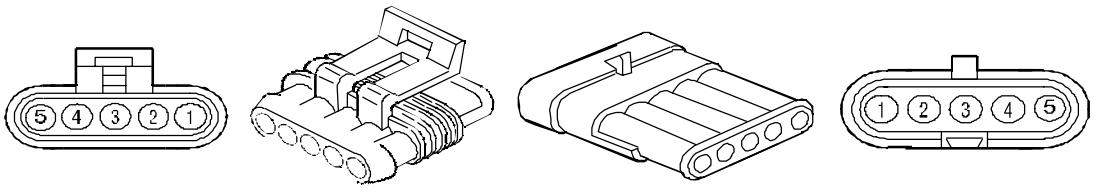

101542

KEY SIDE CONNECTOR VIEW

Pin	Function	Cable colour code
1	CAN VDB Line (L)	Green
2	CAN VDB Line (H)	White
3	Speed signal for Intarder	5541
4	EOL data entry line for Intarder control unit	3393
5	K line	2293

https://truckmanualshub.com/
Aquila Trucks Centres

ST26A - ST26B junction connector

Figure 57

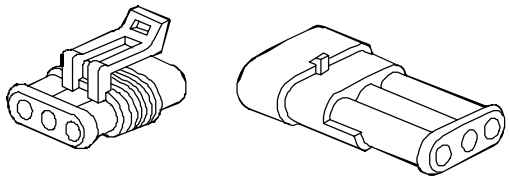

101536

KEY SIDE CONNECTOR VIEW

ST26A (black) - Ecas (CAN)

Pin	Function	Cable colour code
1	CAN VDB Line (L)	Green
2	CAN VDB Line (H)	White
3	K line	2294

ST26B (black) - ABS/EBS (CAN)

Pin	Function	Cable colour code
1	CAN VDB Line (L)	Green
2	CAN VDB Line (H)	White
3	K line	2299

ST28 junction connector- rotating headlights

Figure 58

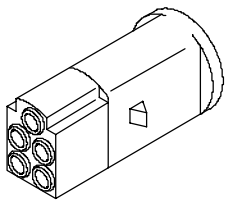

107183

KEY SIDE CONNECTOR VIEW

Pin	Function	Cable colour code
1	Ground for left hand side rotating headlight	0000
2	Positive for left hand side rotating headlight	1108
3	Free	-
4	Positive for right hand side rotating headlight	1115
5	Ground for right hand side rotating headlight	0000

https://truckmanualshub.com/
Aquila Trucks Centres

ST30 - ST31 junction connector

Figure 59

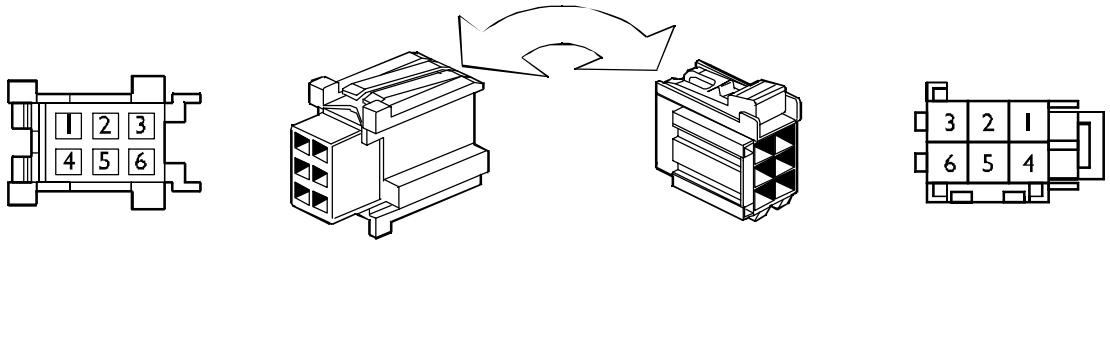

KEY SIDE CONNECTOR VIEW

ST30 (blue) - provision for ADR (tachograph)

Pin	Function	Cable colour code
1	Positive (+Batt) tachograph	7768
2	-	-
3	Positive (+Batt) from IBC3	7768
4	Positive (+Batt) Cluster / Central locking	7768
5	Battery direct positive (+Batt) after fuse 70058 (20A)	7972
6	Positive (+Batt)	7972

ST31 (green) - connection for ECAS (remote control)

Pin	Function	Cable colour code
1	Power supply to equalization adjustment system (+15)	8810
2	Ground	0000
3	Clock line on ECAS suspensions control keyboard	6402
4	Clock line on ECAS suspensions control keyboard	6403
5	-	-
6	-	-

Aquila Trucks Centres

ST31A junction connector (green) - Cab rear

Figure 60

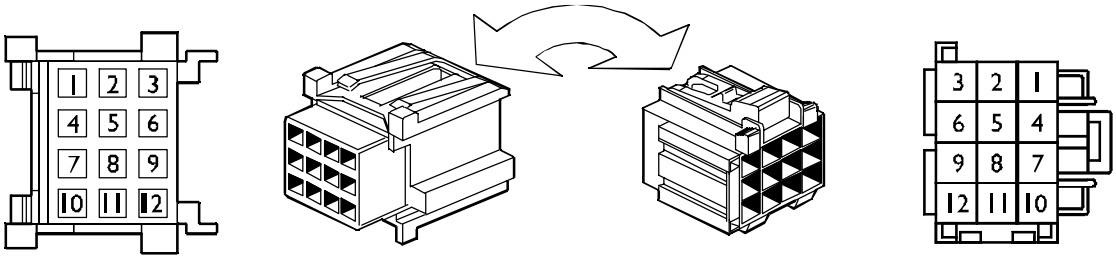

107538

KEY SIDE CONNECTOR VIEW

Pin	Function	Cable colour code
1	Positive for tool compartment lighting switch	4448
2	Positive for reading over head light	4412
3	Ground	0000
4	Ground for refrigerator	0000
5	Positive for refrigerator (24 V)	7735
6	Positive power supply for Bed Module	7906
7	Ground	0000
8	CAN (H) Line BCB	White
9	CAN Line (L) BCB	Green
10	Positive for telephone plug (12 V)	7712
11	Telephone plug ground	0000
12	Positive for lamp	7772

ST31B junction connector (blue) - auxiliary air heating

Figure 61

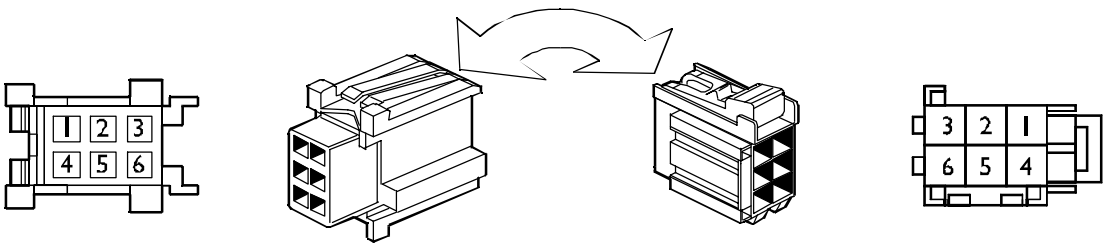

107188

KEY SIDE CONNECTOR VIEW

Pin	Function	Cable colour code
1	Auxiliary air heater warning light	6655
2	Positive +30	7708
3	Ground	0000
4	Power supply to auxiliary fuel pump for air heater	7783
5	Auxiliary heater K line	2295
6	Power supply to ambient temperature sensor for auxiliary sensor	7512

https://truckmanualshub.com/
Aquila Trucks Centres

ST31C junction connector (white) - water heating temperature sensor

Figure 62

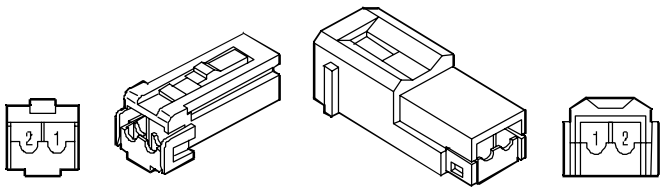

101525

KEY SIDE CONNECTOR VIEW

Pin	Function	Cable colour code
1	Positive for internal temperature detection probe	7520
2	Negative for internal temperature detection probe	0000

ST31L - ST31R junction connector

Figure 63

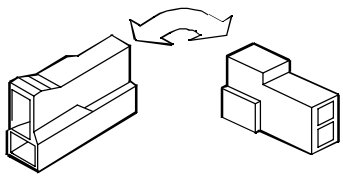

101529

KEY SIDE CONNECTOR VIEW

ST31L - connection for pneumatic heated seat

Pin	Function	Cable colour code
1	Ground	0000
2	Positive for driver side heated pneumatic seat	8031

ST31R - connection for pneumatic heated seat

Pin	Function	Cable colour code
1	Ground	0000
2	Positive for passenger side heated pneumatic seat	8031

https://truckmanualshub.com/
Aquila Trucks Centres

ST34 (blue) junction connector- provision for ACC / simple gearbox control "H"

Figure 64

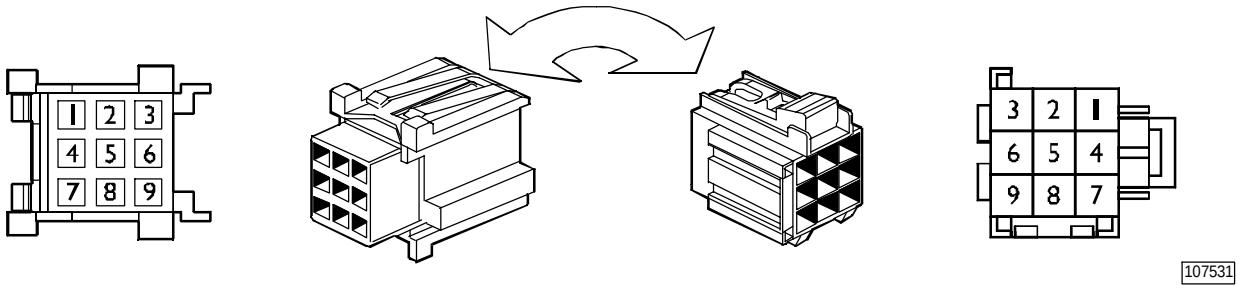

KEY SIDE CONNECTOR VIEW

Pin	Function	Cable colour code
1	VCM control unit pin X3/7	0179
2	Power supply to warning light for ACC (Adaptive Cruise Control) distance rule signalling / Power supply to splitter control solenoid valve (gear reducer) mechanical gearbox	6179/9973
3	Positive 5 V for distance control with ACC (Adaptive Cruise Control) great distance	8179
4	VCM control unit pin X2/9	0139
5	Return from distance selector with ACC (Adaptive Cruise Control)	6178
6	Power supply to distance alarm buzzer with ACC (Adaptive Cruise Control) / Power supply to splitter control solenoid valve (mechanical gearbox)	1166/9974
7	Positive +15	8871
8	Positive for instruments lighting	4442
9	-	-

https://truckmanualshub.com/
Aquila Trucks Centres

ST35/1 junction connector (yellow) - manual control air conditioning system

Figure 65

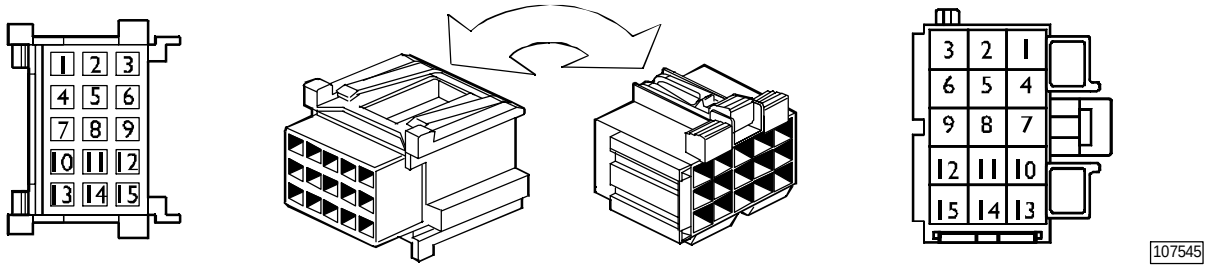

KEY SIDE CONNECTOR VIEW

Pin	Function	Cable colour code
1	-	-
2	-	-
3	-	-
4	Positive +30	7550
5	-	-
6	-	-
7	-	-
8	Ambient thermostat signal	9993
9	Negative remote control switches air conditioning enabling command	0555
10	Positive symbols lighting	4442
11	Positive from remote control switch internal heating enabling consent	8004
12	Positive remote control switch air conditioner enabling command	8097
13	Contact of the remote control switch (87) for auxiliary heater 1st speed enabling	8884
14	Positive for Topflap commanding remote switch control	8801
15	-	-

ST35/2 junction connector (yellow) - manual control air conditioning system

Figure 66

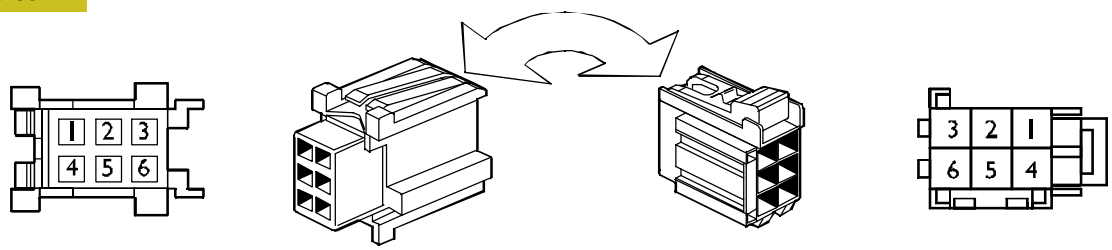

KEY SIDE CONNECTOR VIEW

107188

Pin	Function	Cable colour code
1	Positive for windshield electric defroster command unit	8884
2	-	-
3	K line	2296
4	Positive +30 from Body Computer	7786
5	-	-
6	-	-

https://truckmanualshub.com/
Aquila Trucks Centres

ST36 junction connector (grey) - T.G.C. / I.G.C.

Figure 67

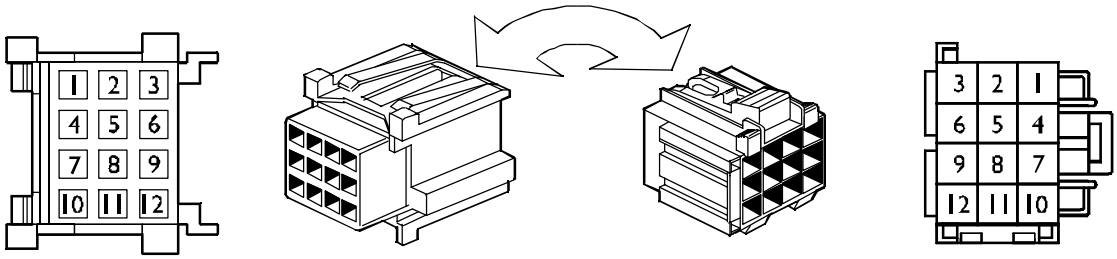

107538

KEY SIDE CONNECTOR VIEW

Pin	Function	Cable colour code
1	Alternator power supply terminal 15	8876
2	Alternator power supply terminal 15	8876
3	Signal for TGC closing	8035
4	Signal for TGC closing	8035
5	Battery positive (+Batt)	7972
6	Battery positive (+Batt) for tachograph and IC	7768
7	Battery positive (+Batt) for B.C. / B.M. / diagnosis /refrigerator connector	7972
8	CAN (H) line (BCB)	
9	CAN (L) line (BCB)	
10	Telephone socket positive (12 V)	7712
11	Ground for telephone	0000
12	Positive for bulb	7772

SST37C junction connector (yellow) - Toll Collect

Figure 68

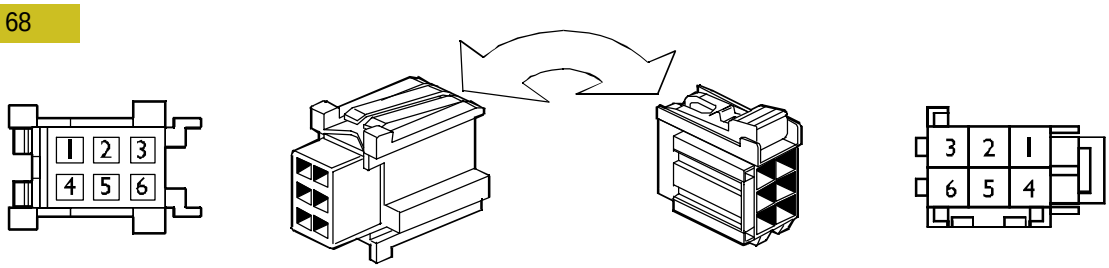

107188

KEY SIDE CONNECTOR VIEW

Pin	Function	Cable colour code
1	Positive +30 after TGC	7772
2	Positive symbols lighting	4442
3	Positive +15	8871
4	Speed signal (tachograph)	5541
5	Ground	0000
6	-	-

https://truckmanualshub.com/
Aquila Trucks Centres

ST39 junction connector (yellow) - differential lock

Figure 69

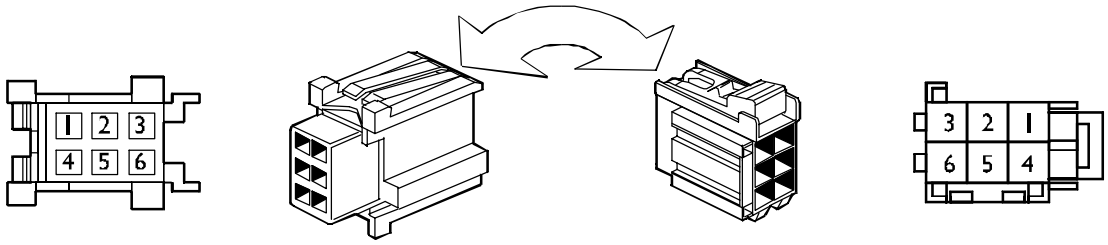

107188

KEY SIDE CONNECTOR VIEW

Pin	Function	Cable colour code
1	Positive symbols lighting	4442
2	Signal from front transverse differential lock control switch	0902
3	Signal from longitudinal differential lock control switch	0903
4	Signal from rear transverse differential lock control switch	0904
5	Ground	0000
6	-	-

https://truckmanualshub.com/
Aquila Trucks Centres

ST40 junction connector - navigation and it tools

Figure 70

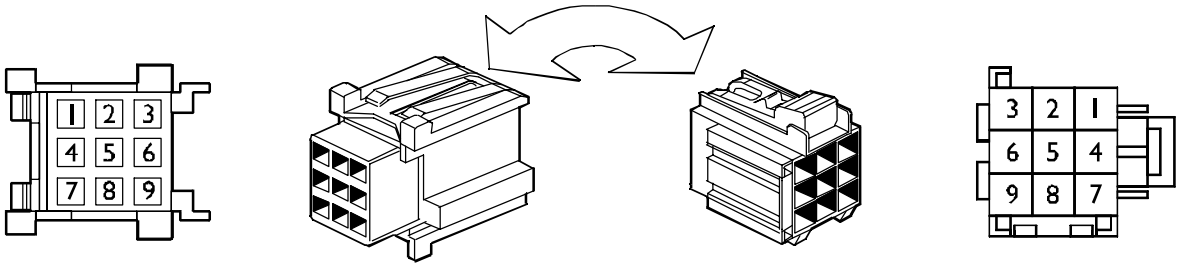

107531

KEY SIDE CONNECTOR VIEW

Pin	Function	Cable colour code
1	Positive +30 after TGC	7772
2	Positive +15	8871
3	Speed signal for navigator	5541
4	Positive 12V	7712
5	CAN L line (ICB)	Green
6	CAN H line (ICB)	Bianco
7	Positive for instruments lighting	4442
8	Reverse gear signal	2268
9	Ground	0000

Jointing connector ST42 - DDM/PDM supplies

Figure 71

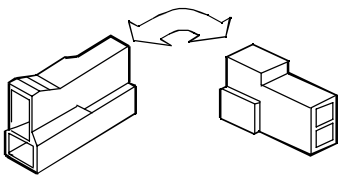

101529

KEY SIDE CONNECTOR VIEW

Pin	Function	Cable colour code
1	Positive +30	7777
2	Positive +15	8887

https://truckmanualshub.com/
Aquila Trucks Centres

ST44 junction connector - centralized locking with remote control

Figure 72

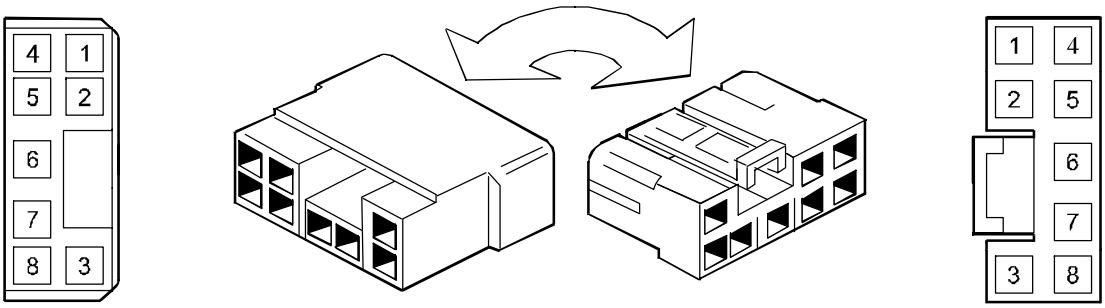

KEY SIDE CONNECTOR VIEW

113250

Pin	Function	Cable colour code
1	Clinker control	1113
2	-	-
3	Battery positive (+Batt)	7772
4	Ground	0000
5	Control for centralized locking to Body Computer (door opening)	0064
6	Control for centralized locking to Body Computer (door closing)	0065
7	Power supply +15	8871
8	-	-

ST45 junction connector- 24V connection for radio

Figure 73

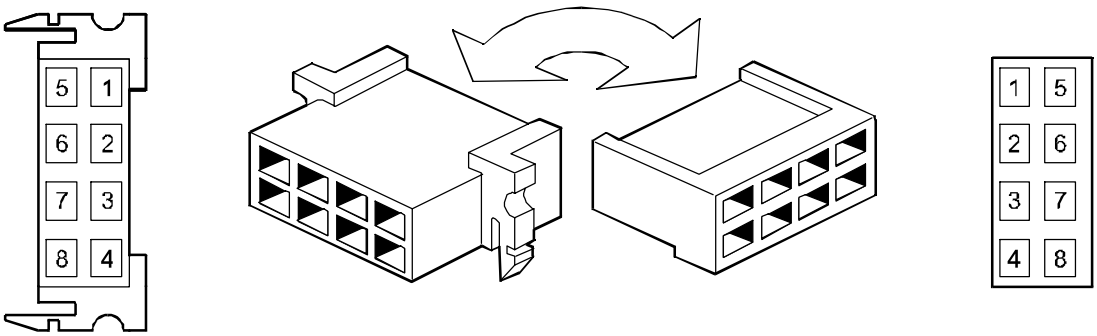

105243

KEY SIDE CONNECTOR VIEW

Pin	Function	Cable colour code
1	Positive +30 for preamplifier	7772
2	Positive +15 for radio receiver	8871
3	Ground	0000
4	Positive symbols lighting	4442
5	CAN line L (IDB)	Green
6	CAN line H (IDB)	White
7	Positive +30 for radio receiver	7770
8	-	-

https://truckmanualshub.com/
Aquila Trucks Centres

ST48 junction connector (yellow) - EM control unit (PTO)

Figure 74

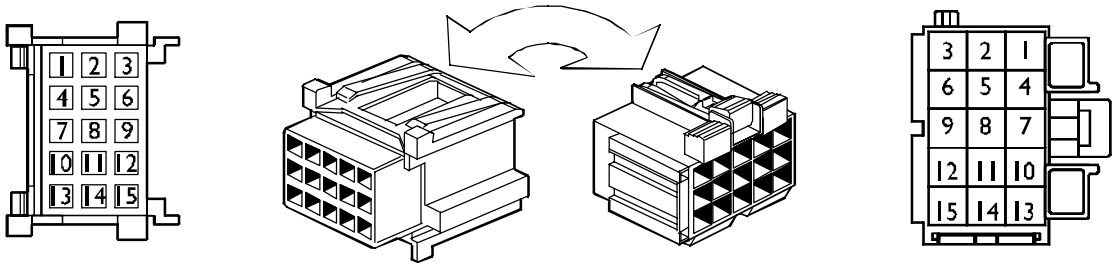

KEY SIDE CONNECTOR VIEW

Pin	Function	Cable colour code
1	CAN L line (ICB)	Green
2	CAN H line (ICB)	White
3	K line	Green
4	Positive +30 after TGC	7772
5	Positive +30	7166
6	Positive +15	8166
7	Ground	0000
8	Wiring for CAN L line (SB)	Green
9	Wiring for CAN H line (SB)	White
10	P.T.O. control signal 1	0131
11	P.T.O. control signal 1	0132
12	P.T.O. control signal 1	0123
13	Positive +30 for body builders connector (72072C)	7795
14	Positive +30 for body builders connector (72072D)	7796
15	-	-

Jointing connector ST 49 - Allison transmission setup

Figure 75

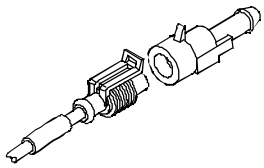

KEY SIDE CONNECTOR VIEW

Pin	Function	Cable colour code
1	Starter motor remote control switch ground	0008

https://truckmanualshub.com/
Aquila Trucks Centres

ST54 junction connector- provision for ACC

Figure 76

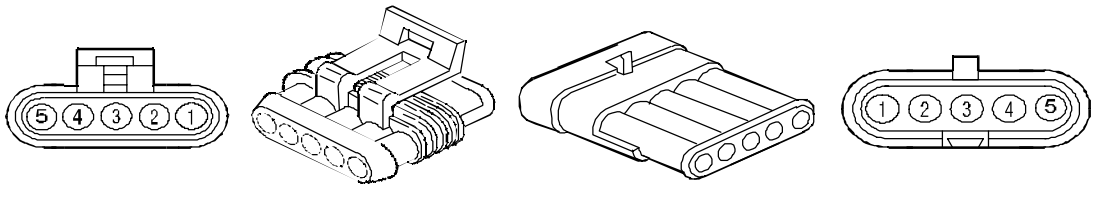

KEY SIDE CONNECTOR VIEW

Pin	Function	Cable colour code
1	CAN line L (VDB)	Green
2	CAN line H (VDB)	White
3	CAN line L (VDB)	Green
4	CAN line H (VDB)	White
5	Positive +15	8176

ST55A junction connector- SCR system (urea)

Figure 77

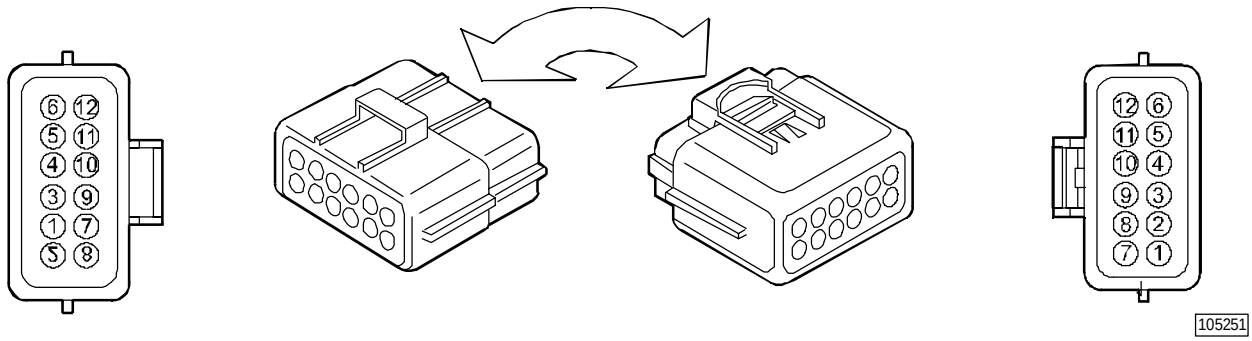

KEY SIDE CONNECTOR VIEW

Pin	Function	Cable colour code
1	CAN line L (ECB)	Green
2	CAN line H (ECB)	White
3	CAN line L (ECB)	Green
4	CAN line H (ECB)	White
5	K line	2257
6	Positive +15	8540
7	Power supply to combustion air relative humidity and temperature sensor	8173
8	Signal for combustion air relative humidity sensor	5173
9	Combustion air relative humidity and temperature sensor ground	0173
10	Combustion air temperature sensor signal	5174
11	Power supply to engine brake solenoid valve	9966
12	Engine brake solenoid valve ground	0043

https://truckmanualshub.com/
Aquila Trucks Centres

ST55B - ST56 junction connector

Figure 78

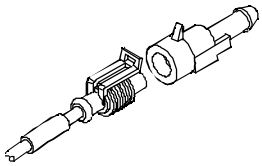

101523

KEY SIDE CONNECTOR VIEW

ST55B - SCR system power supply (urea)

Pin	Function	Cable colour code
1	Battery positive (+Batt) SCR System	7540

ST56 (black) - Connection for ADR cut generator

Pin	Function	Cable colour code
1	Alternator power supply terminal 15	8876

ST59 junction connector - 2nd front axle ECAS fault / longitudinal lock (8x8)

Figure 79

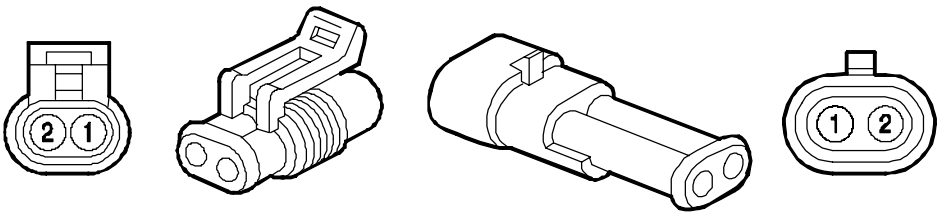

101531

KEY SIDE CONNECTOR VIEW

Pin	Function	Cable colour code
1	ECAS fault signal / front longitudinal differential locks engaged signal (8x8)	6401 / 6643
2	ECAS fault signal switch earth	0000

https://truckmanualshub.com/
Aquila Trucks Centres

ST63 junction connector- auxiliary water heater CAN

Figure 80

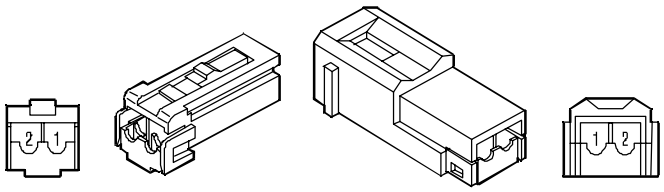

101525

KEY SIDE CONNECTOR VIEW

Pin	Function	Cable colour code
1	CAN Line (L) BCB	Green
2	CAN (H) Line BCB	White

ST64 junction connector (black) - 15-poles current outlet free pins

Figure 81

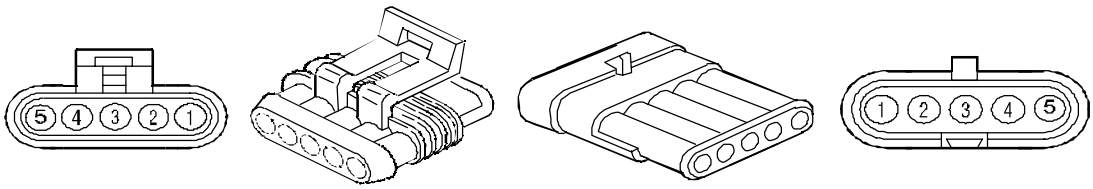

101542

KEY SIDE CONNECTOR VIEW

Pin	Function	Cable colour code
1	Power supply to current outlet	8021
2	Power supply to current outlet	7021
3	Transverse differential blocking signal	6621
4	Power supply to positive trailer interlocking +15	8075
5	Power supply to positive trailer interlocking +15	8075

https://truckmanualshub.com/
Aquila Trucks Centres

ST65 - ST67 junction connector

Figure 82

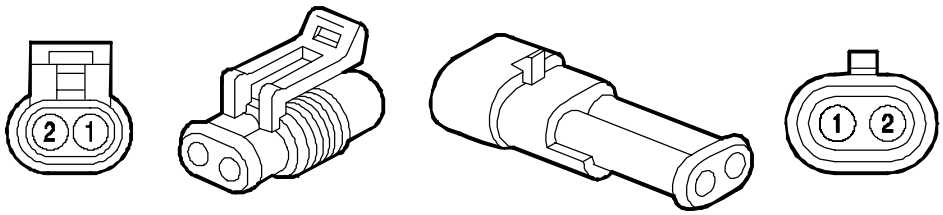

101531

KEY SIDE CONNECTOR VIEW

ST65 - CAN for trailer (PTO with EM)

Pin	Function	Cable colour code
1	CAN SB line (L) (connection for trailer - PTO with EM)	
2	CAN SB line (H) (connection for trailer - PTO with EM)	

ST67 - UREA dosing module solenoid

Pin	Function	Cable colour code
1	Power supply to dosing module solenoid valve with SCR	7541
2	Urea electric dosing unit (-) control	9541

ST68 junction connector- UREA temperature sensor

Figure 83

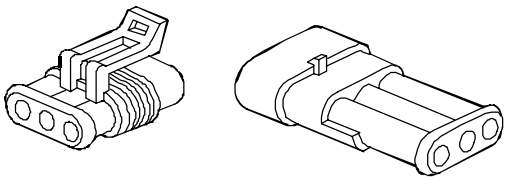

101536

KEY SIDE CONNECTOR VIEW

Pin	Function	Cable colour code
1	Signal cable to urea tank level sensor with SCR	6543
2	Urea tank with CSR level and temperature sensor ground	0543
3	Signal cable to urea tank temperature sensor with SCR	6542

https://truckmanualshub.com/
Aquila Trucks Centres

ST69 junction connector- Intarder

Figure 84

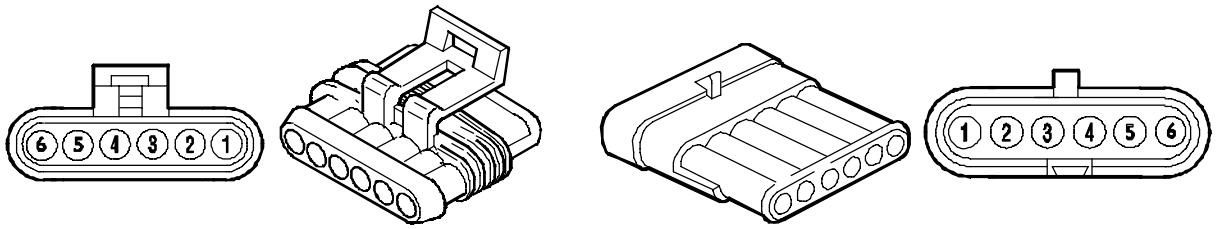

105334

KEY SIDE CONNECTOR VIEW

Pin	Function	Cable colour code
1	Solenoid valve for retarder oil accumulator	0311
2	Solenoid valve for retarder oil accumulator	9311
3	Water temperature transmitter for retarder	5309
4	Water temperature transmitter for retarder	0309
5	Solenoid valve for retarder enabling	0310
6	Solenoid valve for retarder enabling	9310

ST70 junction connector (black) - ASR solenoid valve

Figure 85

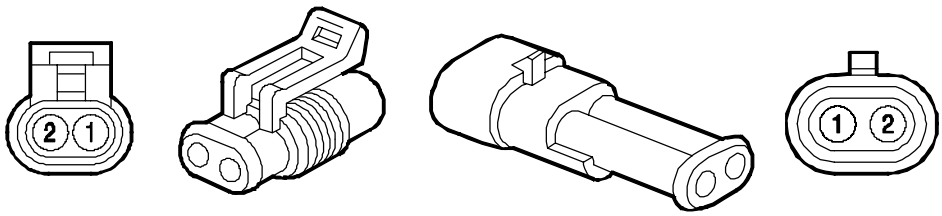

101531

KEY SIDE CONNECTOR VIEW

Pin	Function	Cable colour code
1	ASR solenoid valve (-) control	0260
2	ASR solenoid valve power supply	9260

https://truckmanualshub.com/
Aquila Trucks Centres

ST72 junction connector (black) - rear block wear / transverse differential lock

Figure 86

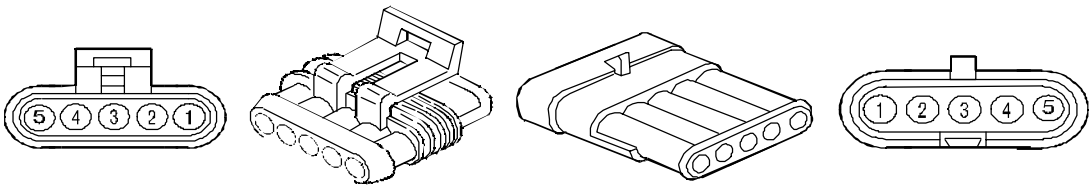

101542

KEY SIDE CONNECTOR VIEW

Pin	Function	Cable colour code
1	To the deviator for signalling of transverse differential lock of Rockwell rear axles for the third axle	0041
2	To the deviator for signalling of transverse differential lock of Rockwell rear axles for the third axle	0000
3	To the deviator for signalling of transverse differential lock of Rockwell rear axles for the third axle	0040
4	To the sensor for circuit signalling of rear wheel shoes wear	6667
5	To the sensor for circuit signalling of rear wheel shoes wear	6664

https://truckmanualshub.com/
Aquila Trucks Centres

Junction connector ST73/1 - ST73/2 - ST73/3 - ST73/4

Figure 87

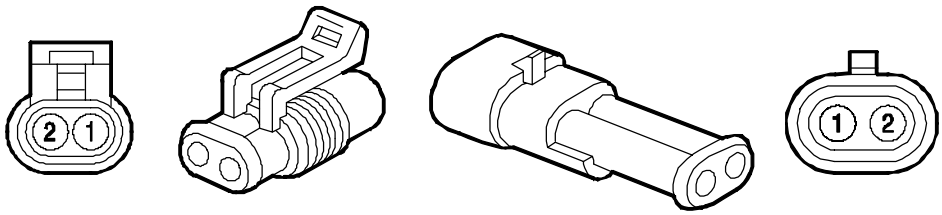

101531

KEY SIDE CONNECTOR VIEW

ST73/1 (black) - 1st front axle block wear (right)

Pin	Function	Cable colour code
1	To the sensor for circuit signalling of front wheel shoes wear	6664
2	To the sensor for circuit signalling of front wheel shoes wear	6664

ST73/2 (black) - 1st front axle block wear (left)

Pin	Function	Cable colour code
1	To the sensor for circuit signalling of front wheel shoes wear	6664
2	To the sensor for circuit signalling of front wheel shoes wear	0000

ST73/3 (black) - 2nd front axle block wear (right)

Pin	Function	Cable colour code
1	To the sensor for circuit signalling of front wheel shoes wear	6664
2	To the sensor for circuit signalling of front wheel shoes wear	6664

ST73/4 (black) - 2nd front axle block wear (left)

Pin	Function	Cable colour code
1	To the sensor for circuit signalling of front wheel shoes wear	6664
2	To the sensor for circuit signalling of front wheel shoes wear	0000

https://truckmanualshub.com/
Aquila Trucks Centres

ST75A junction connector - 1st front axle differential lock

Figure 88

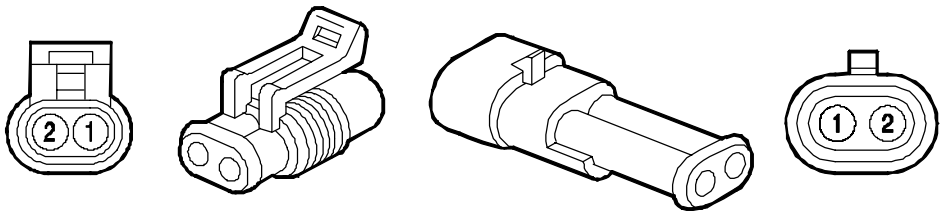

101531

KEY SIDE CONNECTOR VIEW

Pin	Function	Cable colour code
1	1st front axle differential lock signal	6659
2	Ground	0000

ST75B junction connector - 2nd front axle differential lock

Figure 89

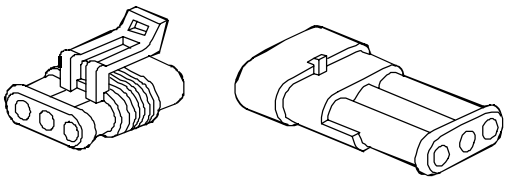

101536

KEY SIDE CONNECTOR VIEW

Pin	Function	Cable colour code
1	2nd front axle differential lock signal	6659
2	Ground	0000
3	Front longitudinal differential lock engaged signal (8x8)	6643

https://truckmanualshub.com/
Aquila Trucks Centres

ST77 - ST78 JUNCTION CONNECTOR BODYBUILDERS (CHASSIS - TRUCK)

Figure 90

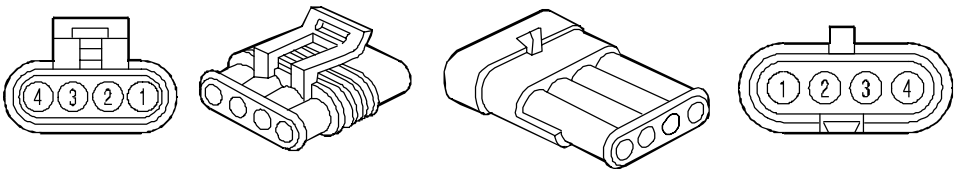

101538

KEY SIDE CONNECTOR VIEW

ST77 (black) - Right hand side SML indicator light (Side Marker Lamp)

Pin	Function	Cable colour code
1	Signal for side lamps	3330
2	Ground for side lamps	0000
3	Signal for side lamps	3330
4	Ground for side lamps	0000

ST78 (black) - Left hand side SML indicator lamp (Side Marker Lamp)

Pin	Function	Cable colour code
1	Signal for side lamps	3339
2	Ground for side lamps	0000
3	Signal for side lamps	3339
4	Ground for side lamps	0000

Aquila Trucks Centres

ST79A junction connector (yellow) - external cab front

Figure 91

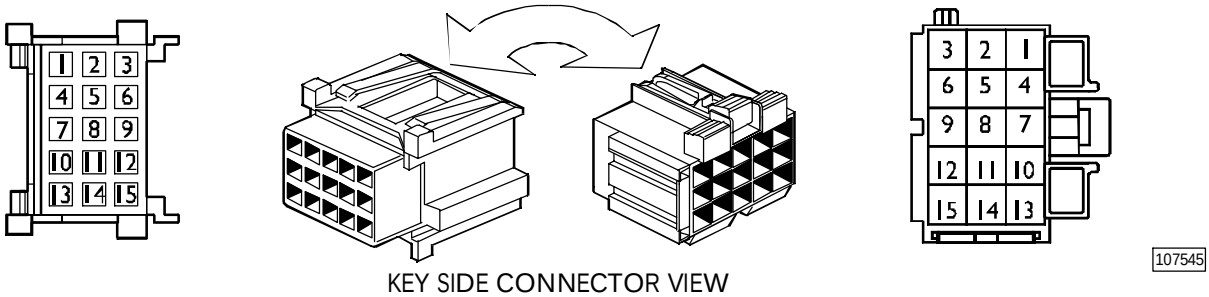

KEY SIDE CONNECTOR VIEW

Pin	Function	Cable colour code
1	Ground	0000
2	Positive to refrigerating fluid pressure signalling switch (air conditioner)	9993
3	Positive from refrigerating fluid pressure signalling switch (air conditioner)	9993
4	Positive for solenoid valve radiator water recirculation	7550
5	Signal from switch on clutch for VCM (clutch cylinder 20% compressed)	0160
6	Gearbox synchronous protection solenoid control earth (clutch cylinder 70% compressed)	9975
7	Positive for windscreen unit (high speed)	8881
8	Positive for windscreen unit (low speed)	8882
9	Positive for windscreen unit	8880
10	Positive for windscreen unit	8873
11	Radiator water recirculation solenoid valve command	9552
12	Negative from refrigerating fluid pressure signalling switch (engine cooling)	0583
13	Negative from refrigerating fluid pressure signalling switch (engine cooling)	0582
14	-	-
15	-	-

Jointing connector ST79B (yellow) - windshield washer and warning horn unit

Figure 92

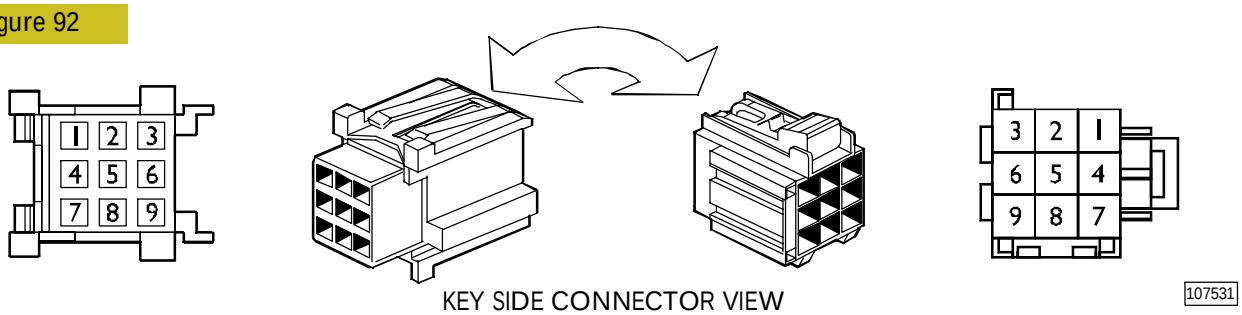

KEY SIDE CONNECTOR VIEW

Pin	Function	Cable colour code
1	Signal for warning horn	1116
2	Electrical pump power headlight wipers	8821
3	Signal from the Body Computer for windshield washer liquid low level indicator control	5521
4	Windshield washer control signal	8886
5	-	-
6	-	-
7	-	-
8	-	-
9	-	-

https://truckmanualshub.com/
Aquila Trucks Centres

ST79D junction connector (green) - brake pedal switch (ABS)

Figure 93

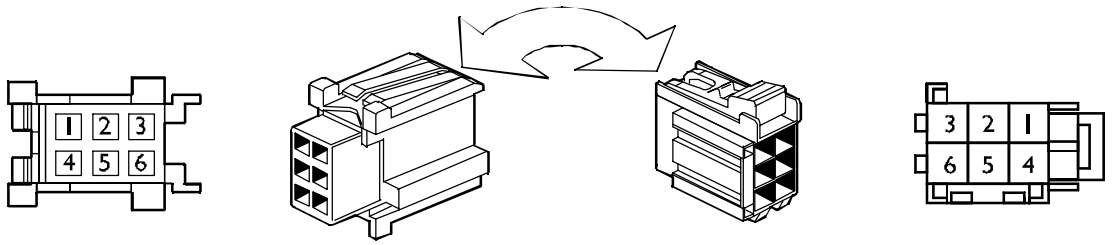

101545

KEY SIDE CONNECTOR VIEW

Pin	Function	Cable colour code
1	Positive +30	7150
2	Positive for stop lights	8158
3	Positive pressed pedal signal	8153
4	Positive +30	7150
5	-	-
6	-	-

https://truckmanualshub.com/
Aquila Trucks Centres

ST80 junction connector (black) - mechanical gearbox

Figure 94

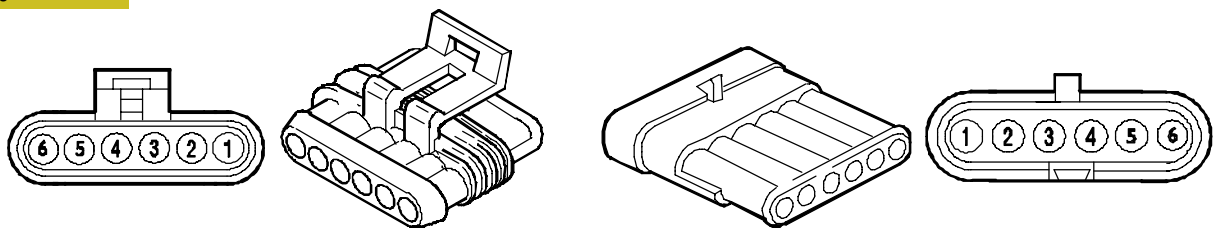

105334

KEY SIDE CONNECTOR VIEW

Pin	Function	Cable colour code
1	Signal for reverse lights light up switch	2268
2	Ground for reverse lights lighting up switch	0000
3	Ground for anti-start system with gears engaged switch and for reverse light light up switch	0000
4	Ground for anti-start system with gears engaged switch and for reverse light light up switch	8050
5	Signal for reduced gears engaged signalling switch	9992
6	Ground for reduced gears engaged signalling switch	0000

ST81A junction connector (black) - front lights

Figure 95

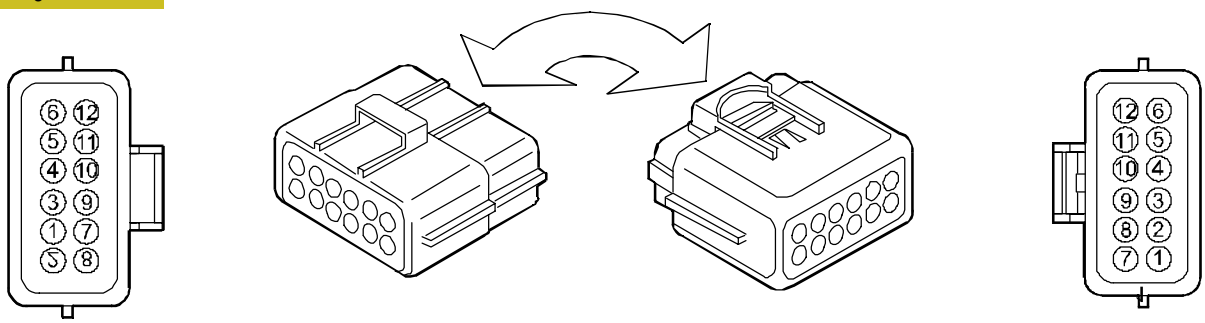

KEY SIDE CONNECTOR VIEW

105251

Pin	Function	Cable colour code
1	Side / left front direction indicator power supply	1129
2	Right / left front side light power supply	3339
3	Left low beam power supply	2231
4	Left high beam power supply	2219
5	Right / left fog lamp power supply	2228
6	-	-
7	Right side / front direction indicator power supply	1123
8	-	-
9	Right low beam power supply	2223
10	Right high beam power supply	2221
11	Head lamp alignment corrector control	9936
12	Supplementary head lamp power supply	2229

https://truckmanualshub.com/
Aquila Trucks Centres

ST82 junction connector (black) - components on engine

Figure 96

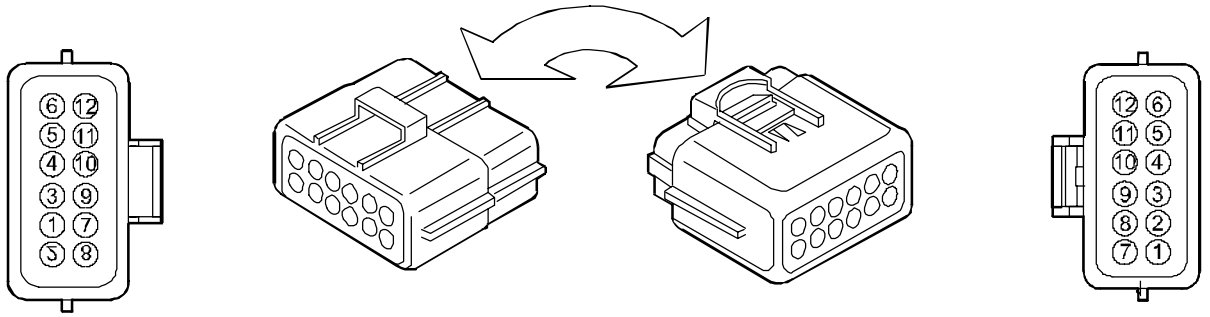

KEY SIDE CONNECTOR VIEW

105251

Pin	Function	Cable colour code
1	-	-
2	-	-
3	Signal for engine ventilation temperature sensor	5166
4	-	-
5	-	-
6	-	-
7	-	-
8	-	-
9	Signal for engine oil level thermometer transmitter	5505
10	Signal for engine oil level thermometer transmitter	5506
11	Ground for fuel filter clogged signalling switch	0000
12	Signal for fuel filter clogged signalling switch	5531

ST83 junction connector (black) - components on engine

Figure 97

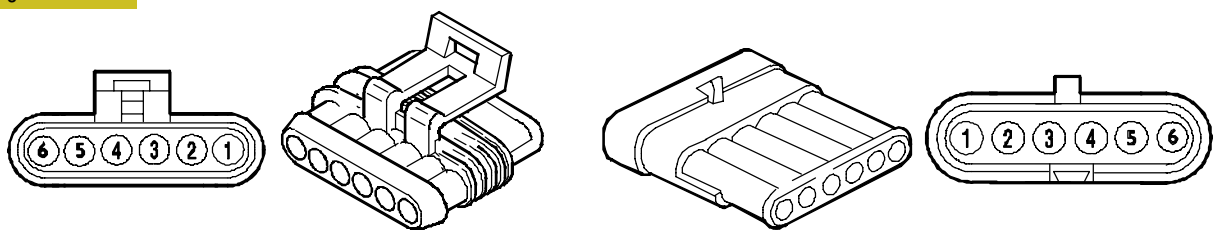

KEY SIDE CONNECTOR VIEW

105334

Pin	Function	Cable colour code
1	Engine oil level transmitter signal	5506
2	Engine oil level transmitter signal	5505
3	Blocked fuel filter switch signal	5531
4	Power drive low oil level switch signal	5525
5	Positive +15 for UDS power unit	8540
6	-	-

https://truckmanualshub.com/
Aquila Trucks Centres

ST86 - ST88 junction connector

Figure 98

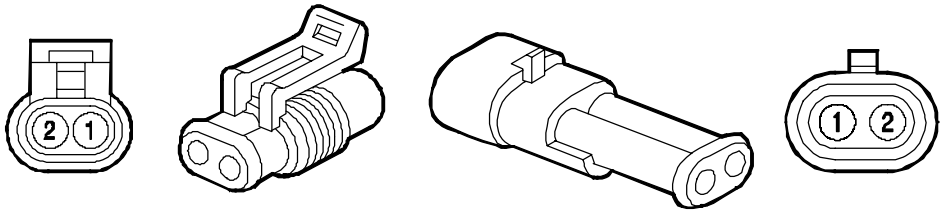

101531

KEY SIDE CONNECTOR VIEW

ST86 (black) - T.G.C. connection

Pin	Function	Cable colour code
1	TGC Off relay excitation	8845
2	TGC On relay excitation	8835

ST86 (black) - I.G.C. connection

Pin	Function	Cable colour code
1	Provision	8045
2	TGC On relay excitation	8035

ST88 (black) - trailer connectors

Figure 99

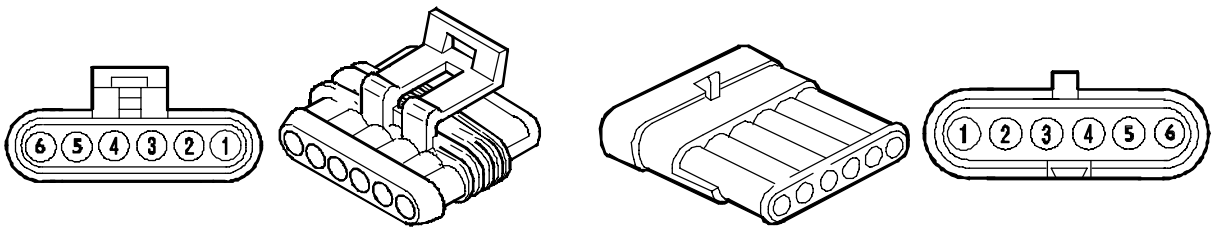

105334

KEY SIDE CONNECTOR VIEW

Pin	Function	Cable colour code
1	Trailer axle lift signal	6442
2	Trailer brake low air pressure	6689
3	Positive +30 for trailer socket	7790
4	Positive +15 for trailer ABS socket	8847
5	Trailer ABS fault signal	6671
6	Load compartment lighting power supply	2224

https://truckmanualshub.com/
Aquila Trucks Centres

ST91 - ST92 - ST93 junction connector

Figure 100

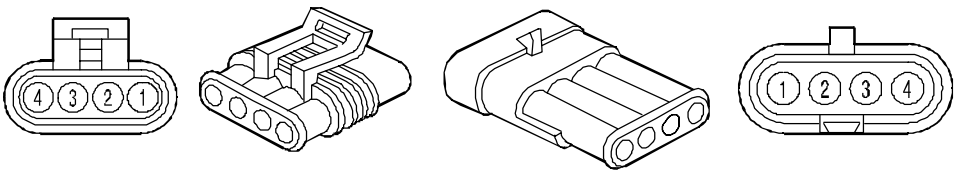

101538

KEY SIDE CONNECTOR VIEW

ST91 (black) - PTO1 (EM)

Pin	Function	Cable colour code
1	PTO 1 power take-off return signal	6131
2	PTO 1 solenoid valve power supply	9131
3	Negative consent for power take-off PTO 1	0391
4	Ground	0000

ST92 (black) - PTO2 (EM)

Pin	Function	Cable colour code
1	PTO 2 power take-off return signal	6132
2	PTO 2 solenoid valve power supply	9132
3	Negative consent for power take-off PTO 2	0392
4	Ground	0000

ST93 (black) - PTO3 (EM)

Pin	Function	Cable colour code
1	PTO 3 power take-off return signal	6133
2	PTO 3 solenoid valve power supply	9133
3	Negative consent for power take-off PTO 3	0393
4	Ground	0000

https://truckmanualshub.com/
Aquila Trucks Centres

ST99 junction connector (black) - rear axle ECAS

Figure 101

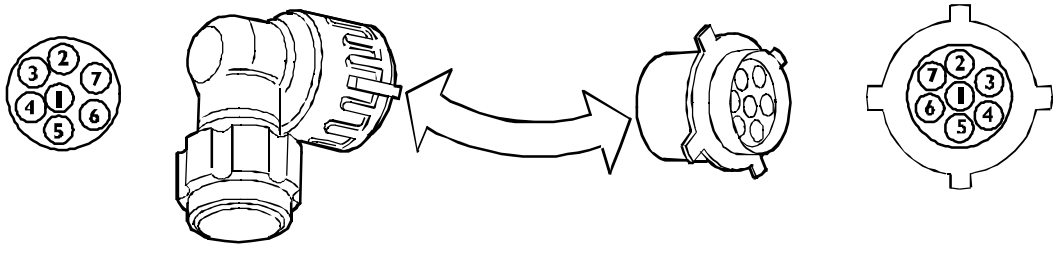

KEY SIDE CONNECTOR VIEW

Pin	Function	Cable colour code
1	Level sensor ground	0400
2	Right rear axle level sensor signal	5421
3	Left rear axle level sensor signal	5422
4	Rear axle positive electro pneumatic distributor	9400
5	Rear axle ground electro pneumatic distributor	9423
6	Ground for rear axle electro pneumatic distributor left valve command	9425
7	Ground for rear axle electro pneumatic distributor right valve command	9424

https://truckmanualshub.com/
Aquila Trucks Centres

ST junction connector- ECAS remote control

Figure 102

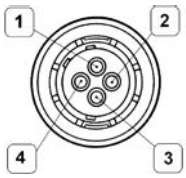

107178

KEY SIDE CONNECTOR VIEW

Pin	Function	Cable colour code
1	Positive for remote control power supply (pin 1)	7777
2	Negative for remote control (pin 2)	0000
3	Communication line with remote control (pin 3)	3333
4	Communication line with remote control (pin 4)	8888

STY/1 junction connector (black) - switch on clutch

Figure 103

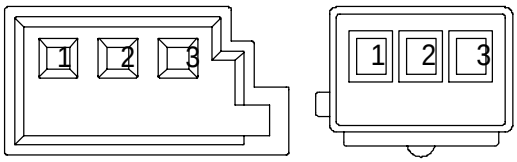

107169

KEY SIDE CONNECTOR VIEW

Pin	Function	Cable colour code
1	Ground	0000
2	Signal from switch on clutch for VCM	0160
3	-	-

https://truckmanualshub.com/
Aquila Trucks Centres

15-pin current outlet for trailer electric connection (72010)

Figure 104

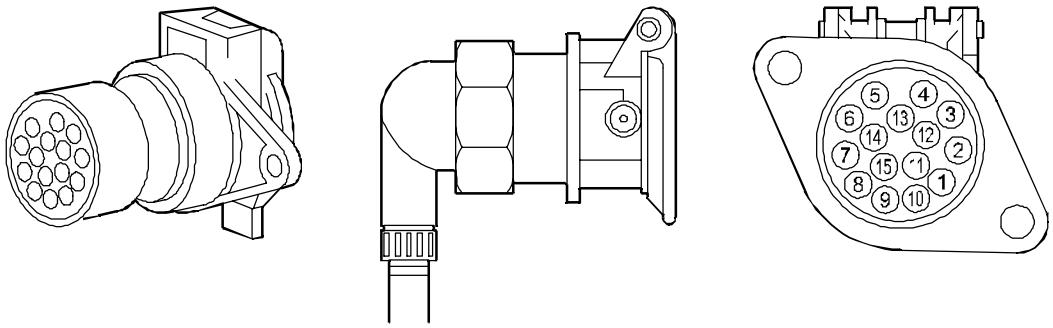

113251

KEY SIDE CONNECTOR VIEW

Pin	Function	Cable colour code
1	Left hand side trailer direction indicators	1180
2	Right hand side trailer direction indicators	1185
3	Trailer back fog light	2283
4	Ground	0000
5	Left trailer end-outline marker	3339
6	Right trailer end-outline marker	3330
7	Trailer stop lights	1179
8	Trailer reverse light	2226
9	Power supply to trailer outlet after fuse for T.M.P. devices	7790
10	Transverse differential blocking signal	6621
11	Power supply to positive trailer interlockings +15	8075
12	Warning light signalling trailer axle lifted	6442
13	Ground	0000
14	Power supply to current outlet	7021
15	Power supply to current outlet	8021

https://truckmanualshub.com/
Aquila Trucks Centres

7-pin current outlet for trailer electric connection

Figure 105

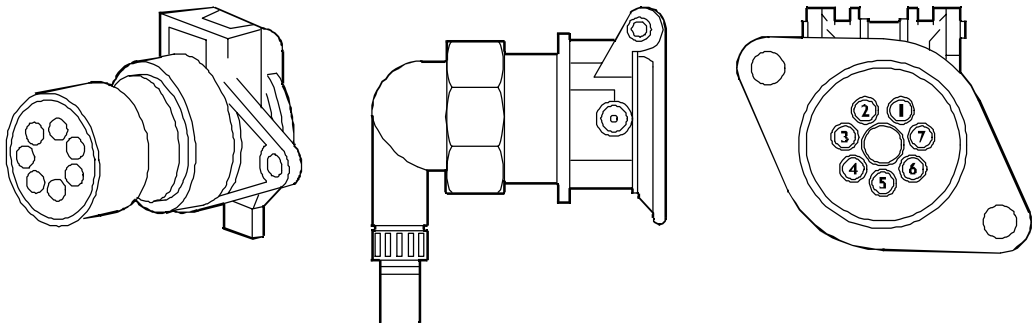

113252

KEY SIDE CONNECTOR VIEW

72000 - normal 7-poles current outlet for trailer electric connection

Pin	Function	Cable colour code
1	Ground	0000
2	Left trailer end-outline marker	3339
3	Left hand side trailer direction indicators	1180
4	Trailer stop lights	1179
5	Right hand side trailer direction indicators	1185
6	Trailer end-outline marker	3330
7	Free	-

72001 - auxiliary 7-poles current outlet for trailer electric connection

Pin	Function	Cable colour code
1	Ground	0000
2	Trailer interlockings power supply with terminal +15	8075
3	Trailer reverse light	2226
4	Free	-
5	Warning light signalling trailer axle lifted	6442
6	Power supply to trailer outlet after fuse for T.M.P. devices	7790
7	Trailer back fog light	2283

72006 - -poles current outlet for trailer ABS electric connection

Pin	Function	Cable colour code
1	Positive after fuse for trailer ABS	7772
2	Power supply after fuse for ABS / speed limiter	8847
3	Ground	0000
4	Ground	0000
5	Trailer ABS fault warning light	6671
6	CAN "H" line (SB)	WS/BI
7	CAN "L" line (SB)	GN/VE

https://truckmanualshub.com/
Aquila Trucks Centres

DIAGNOSIS CONNECTOR
Diagnosis connector - 72021

Figure 106

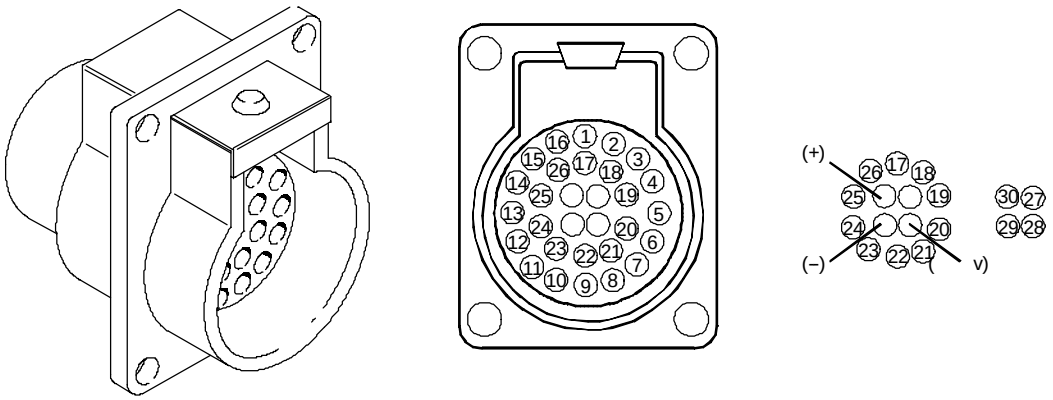

DIAGNOSIS CONNECTOR (FRONT VIEW)

Pins 27,28,29,30 might be printed with different positions from those reported in this picture.

Pin	System	Function	Cable colour code
1	Free	-	-
2	EDC (ECM)	K	2298
3	Free	-	-
4	ABS / EBS + ECAS	K	2299
5	Free	-	-
6	Intarder / EM	K	2293
7	Free	-	-
8	Body Controller / DDM / PDM	K	2295
9	Free	-	-
10	Heater / Air conditioner	K	2296
11	Service actuation Key to "MAR"	+ 15	8802
12	VCM	K	2292
13	Free	-	-
14	Cluster / tachograph	K	2994
15	Free	-	-
16	UREA (SCR system)	K	2257
17	Free	-	-
18	EUROTRONIC / ALLISON	K	2297
19	Free	-	-
20	Programming retarder EOL	-	3393
21	CAN H (VDB)	H	Ws/Bi
22	CAN L (VDB)	L	Gn/Ve
23	Free	-	-
24	Free	-	-
25	Startup signal	-	8050
26	Signal ground	-	0050
27	Free	-	-
28	Speed signal (B7)	v	5542
29	Signal ground	31	0050
30	Positive	+ 30	7772

https://truckmanualshub.com/
Aquila Trucks Centres

OBD DIAGNOSIS CONNECTOR (BLUE)

Figure 107

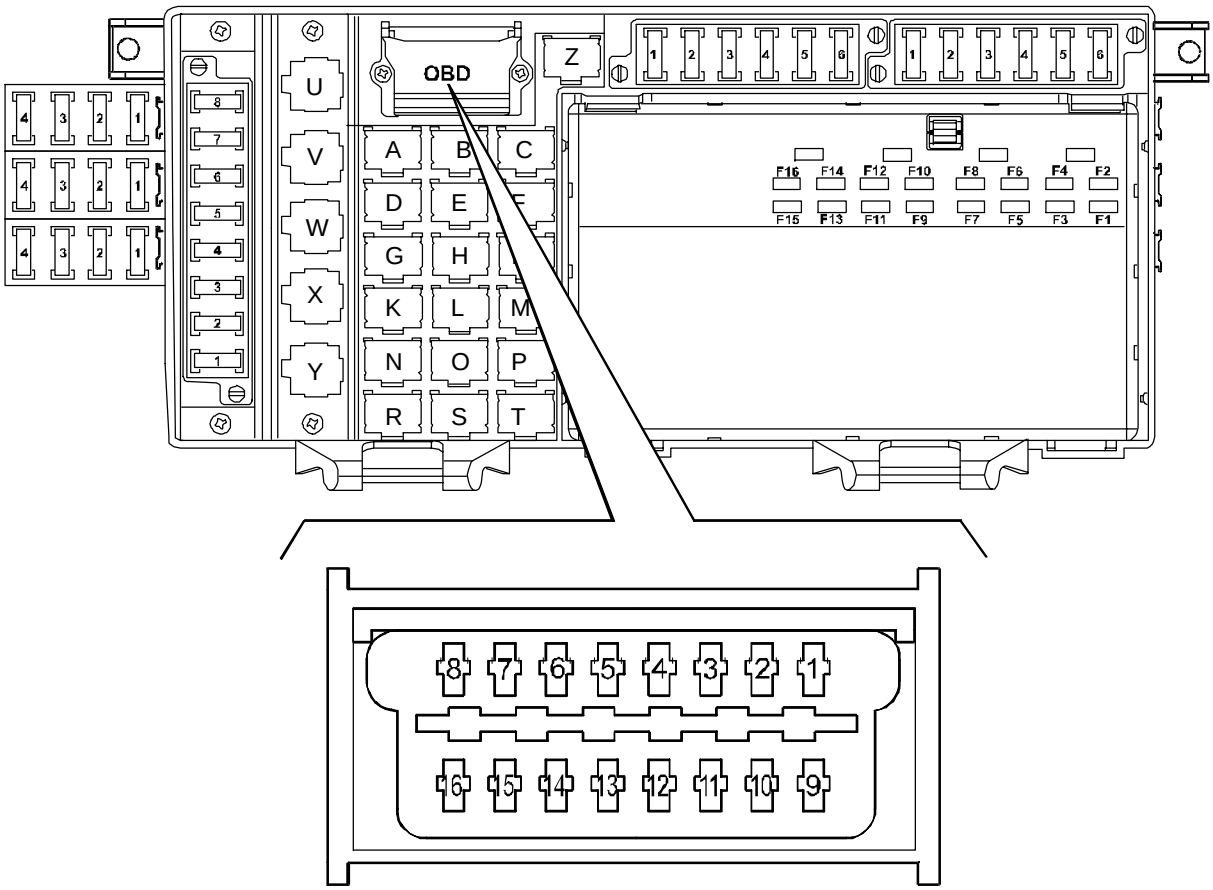

KEY SIDE CONNECTOR VIEW

Pin	Function	Cable colour code
1	-	-
2	-	-
3	-	-
4	Ground	0000
5	Signal ground	0050
6	CAN line H (ECB)	White
7	-	-
8	-	-
9	-	-
10	-	-
11	-	-
12	-	-
13	-	-
14	CAN line L (ECB)	Green
15	-	-
16	Battery direct positive (+Batt)	7721

https://truckmanualshub.com/
Aquila Trucks Centres

BULKHEAD

LEFT-HAND DRIVE

Connector A	–	White (free)
Connector B	–	Brown (ECAS)
Connector C	–	Yellow (SCR)
Connector D	-	Blue (EuroTronic/PTO/INTARDER)
Connector E	–	Green (EDC/ADR)

Figure 108

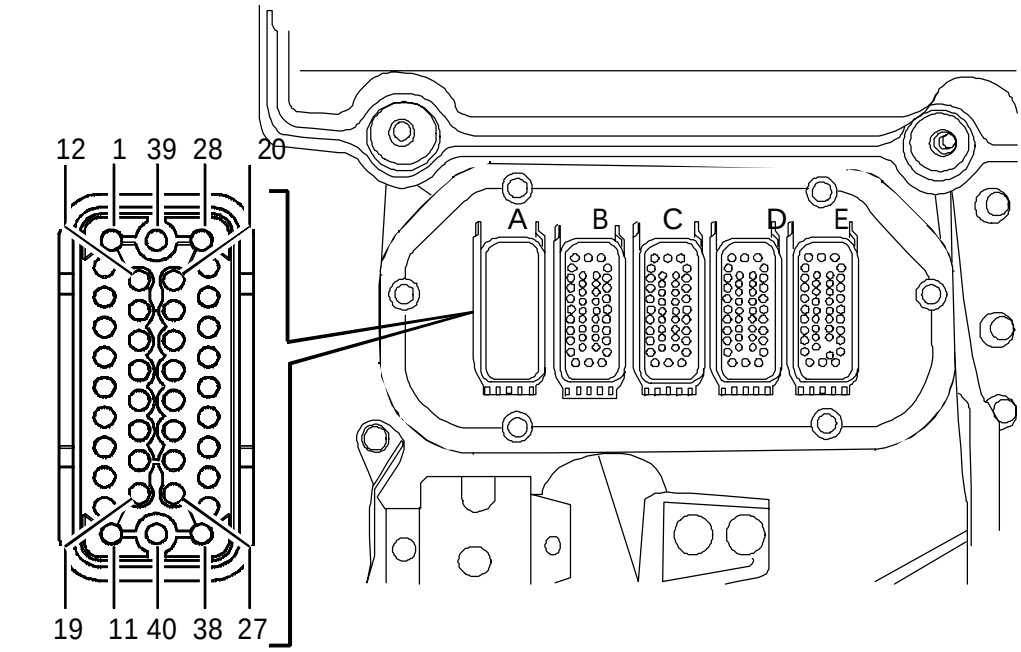

RIGHT-HAND DRIVING

Connector A	–	White (EDC/ADR)
Connector B	–	Brown (EuroTronic/PTO/INTARDER)
Connector C	–	Yellow (SCR)
Connector D	–	Blue (ECAS)
Connector E	–	Green (free)

Figure 109

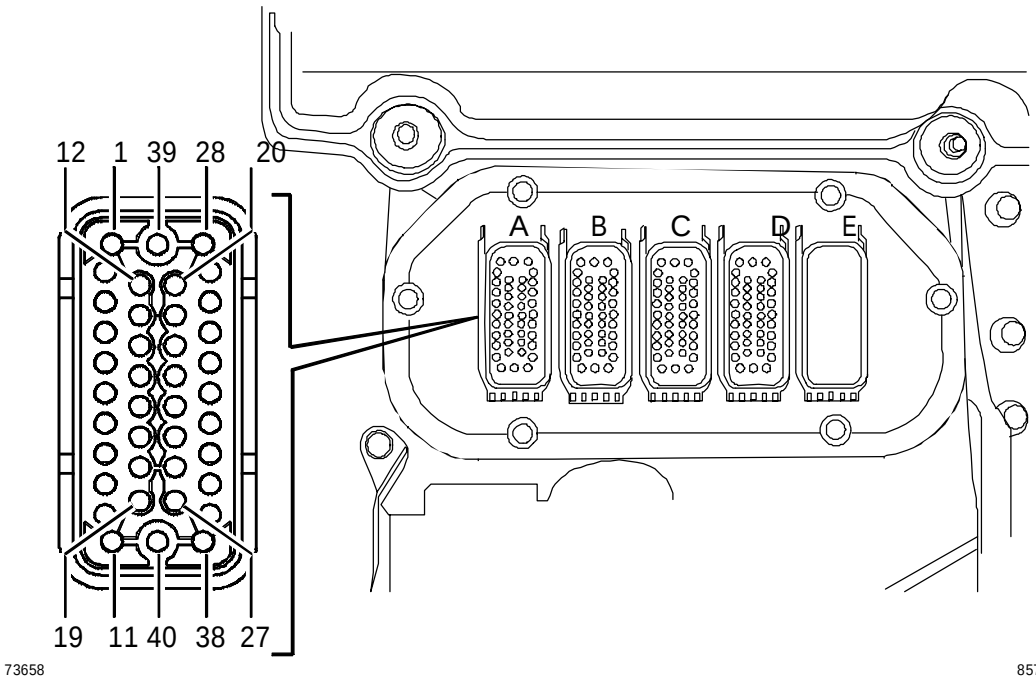

The new bayonet connectors make signal continuity much more reliable than the previous system.

https://truckmanualshub.com/
Aquila Trucks Centres

Brown bulkhead "B"

Pin	Description	Cable colour code
1	Ground of level and load pressure on axle sensors	0400
2	Rear right axle level sensor signal	5421
3	Rear left axle level sensor (only truck)	5422
4	-	-
5	CAN - L Line (SB)	Green
6	CAN - H Line (SB)	White
7	Positive for rear axle electro pneumatic distributor	9400
8	Ground for rear axle electro pneumatic distributor loading/unloading command	9423
9	Ground for rear axle electro pneumatic distributor left valve command (only truck)	9425
10	Ground for rear axle electro pneumatic right valve command	9424
11	Air pressure Transmitter signal (rear brakes)	5561
12	Power supply for air pressure transmitter for braking system	5560
13	Ground for air pressure transmitter for braking system	0560
14	Air pressure transmitter signal (front brakes)	5562
15	Sensor signal of load pressure on axles - right axle	5443
16	Sensor signal of load pressure on axles - left axle (only truck)	5444
17	-	-
18	-	-
19	Signal for raised trailer indicator	6442
20	CAN - L Line (BCB)	Green
21	CAN - H Line (BCB)	White
22	Ground from signalling switch gear box in a neutral position	8050
23	Power supply for electronic tachograph transmitter	5514
24	Inverted signal from electronic tachograph transmitter	5516
25	Speed signal from electronic tachograph transmitter	5517
26	Ground for electronic tachograph transmitter	0058
27	Positive +15 for air block turbine VGT (Shut-Off)electro valve	8360
28	Positive +15 for MET control unit	8871
29	Positive +15 for resistance of dryer braking system	8840
30	Positive for TGC closure (TGC On)	8035
31	Positive for TGC aperture (TGC Off)	8045
32	Ground from signalling switch tilted caisson	6607
33	-	-
34	Positive for head lamp illumination loading deck	2224
35	Positive for supplementary depth projectors	2229
36	-	-
37	Failure signal trailer ABS/EBS	6671
38	Positive +15 for power socket trailer ABS/EBS	8847
39	Positive + 30 for 15 pin power socket electrical connection trailer	7790
40	Direct positive +Bat battery for Tachograph	7972

https://truckmanualshub.com/
Aquila Trucks Centres

Yellow wall pass "C"

Pin	Description	Cable colour code
1	Ground from connected signalling switch PTO 1	6131
2	Safety sensor signal for max. braking bridge with front axle failure with ABS	6245
3	Positive +15 for safety sensor for max. braking bridge with front axle failure with ABS	8847
4	ABS speed sensor front right wheel	5571
5	ABS speed sensor front right wheel	5571
6	Positive "EV" solenoid valve (unloaded)command front right wheel	9920
7	Positive for solenoid valve command PTO 1	9131
8	Positive "AV" solenoid valve (loaded) command front right wheel	9918
9	Ground for centralised lubrication control unit	0000
10	Positive +15 for centralised lubrication control unit	8898
11	ABS speed sensor rear right wheel	5573
12	ABS speed sensor rear right wheel	5573
13	Positive "EV" (unloaded) solenoid valve command rear right wheel	9930
14	Ground from switch connection consent PTO 1	0391
15	Positive "AV" (loaded) solenoid valve command rear right wheel	9928
16	Ground from signalling switch PTO 2 connected	6132
17	Positive for solenoid valve command PTO 2	9132
18	Ground from switch connection consent PTO 2	0392
19	Ground from signalling switch PTO 3 connected	6133
20	Ground for shielding of CAN outfitted lines	0999
21	CAN-L line(SB) for fitters	Green
22	CAN-H (SB)line for fitters	White
23	Positive for solenoid valve command PTO 3	9123
24	Ground for ASR solenoid valve	0260
25	Positive ASR solenoid valve command	9260
26	Ground from switch connection consent PTO 3	0393
27	Positive +30 for fitters (72072D connector)	7795
28	Ground for e with +15 clamp connected (72072C/D connectors)	0975
29	Positive "AV" (loaded) solenoid valve command left rear wheel	9929
30	Positive for solenoid valve synchronous protection mechanical gear change	8871
31	Positive "EV" (loaded) solenoid valve command left rear wheel	9931
32	Positive "AV" (loaded) solenoid valve command left front wheel	9919
33	Ground for solenoid valve synchronous protection mechanical gear change	9975
34	Positive "EV" (unloaded) solenoid valve command front left wheel	9921
35	ABS speed sensor front left wheel	5570
36	ABS speed sensor front left wheel	5570
37	ABS speed sensor rear left wheel	5572
38	ABS speed sensor rear left wheel	5572
39	-	-
40	Ground for ABS solenoid valves	0000

https://truckmanualshub.com/
Aquila Trucks Centres

Blue wall pass "D"

Pin	Description	Cable colour code
1	Positive +15 for Eurotronic 2 / Mass from connected slow gears signalling switch (9 gear changes)	8101 / 0177
2	Ground for Eurotronic 2 / Positive for connection of electro valve reduced gears (9 gear changes)	0000 / 9973
3	Positive for gear change beeper/ Positive for electro valve connection normal gears (9 gear changes)	6100 / 9974
4	Ground for gear change beeper	1101
5	-	-
6	Positive +30 for Eurotronic 2	7101
7	K line Eurotronic 2 (18-pin diagnosis connector)	2297
8	CAN - L Line (VDB)	Green
9	CAN - H Line (VDB)	White
10	CAN - L Line (VDB)	Green
11	CAN - H Line(VDB)	White
12	Speed signal from integral traction tachograph transmitter (Retarder)	5103
13	Positive for integral traction tachograph transmitter (Retarder)	8300
14	Ground for water temperature sensor for Retarder	0309
15	Signal water temperature sensor for Retarder	5309
16	Positive for oil accumulator electro valve Retarder	9311
17	Ground for oil accumulator electo valve Retarder	0311
18	Positive for electro valve connection Retarder	9310
19	Positive for electro valve connection Retarder	0310
20	Positive for Air heater supplementary pump /K Line K water heater (10-pin diagnosis connector)	7783 / 2295
21	Positive for control and signalling unit supplementary heater	7775
22	Command for supplementary heater with passage for micro-switch with command lever heater tap	7506
23	Positive from switch for internal aerator	7711
24	Positive +30 for supplementary water heater	7708
25	Ground for supplementary fuel pump Air heater	0000
26	CAN - L line(BCB)	Green
27	CAN - H line(BCB)	White
28	CAN - L line(BCB)	Green
29	CAN - H line (BCB)	White
30	Positive for electro valve water re-circulation engine block	9506
31	Positive for warning light supplementary connected heater/connection consent electro valve water re-circulation engine block	6605
32	Ground for integral traction tachograph transmitter (Retarder)	0000
33	Positive +15 alternator (TGC with ADR)	8876
34	Positive +15 alternator (TGC with ADR)	8876
35	Ground (TGC ADR)	0000
36	-	-
37	Ground from safety control unit switch - TGC signal (ADR) Off	0176
38	Ground from safety control unit switch - TGC signal (ADR) On	0178
39	-	-
40	-	-

https://truckmanualshub.com/
Aquila Trucks Centres

Green wall pass "E"

Pin	Description	Cable colour code
1	CAN - L line (ECB)	Green
2	CAN - H line (ECB)	White
3	-	-
4	-	-
5	-	-
6	-	-
7	Positive +15 alternator	8876
8	Ground from request EDC system diagnosis switch (predisposition)	0163
9	Ground from request EDC system diagnosis switch (predisposition)	5163
10	ACC Power supply	8176
11	Load signal from alternator	7009
12	Positive for front thermal mirror	8830
13	Positive +15 for EDC (from IBC3)	8015
14	Ground for front thermal mirror	0000
15	-	-
16	CAN L line (VDB)	Green
17	CAN H line (VDB)	White
18	CAN L line (VDB)	Green
19	CAN H line (VDB)	White
20	-	-
21	-	-
22	K line EDC control unit (2-pin diagnosis connector)	2298
23	Positive +30 for starting engine connection (clamp 50)	8888
24	Positive for connection electro magnetic compressor joint (Valeo)	9993
25	Direct positive battery (+Bat) for SCR control unit	7540
26	-	-
27	K line SCR control unit (16-pin diagnosis connector)	2257
28	-	-
29	-	-
30	Ground from low cooling water level sensor warning light)	5520
31	-	-
32	Ground from low cooling water level sensor	5527
33	Positive for connection ventilator engine (baruffaldi)	5166
34	Positive for electro magnetic joint connection switch (baruffaldi ventilator)	5187
35	Ground for electro magnetic joint connection switch (baruffaldi ventilator)	0014
36	-	-
37	Engine rpm sensor signal for bodybuilders (ST14B)	5587
38	-	-
39	Positive +30 for EDC	7151
40	Positive +30 for EDC	7151

https://truckmanualshub.com/
Aquila Trucks Centres

CENTRAL INTERCONNECTING UNIT

Figure 110

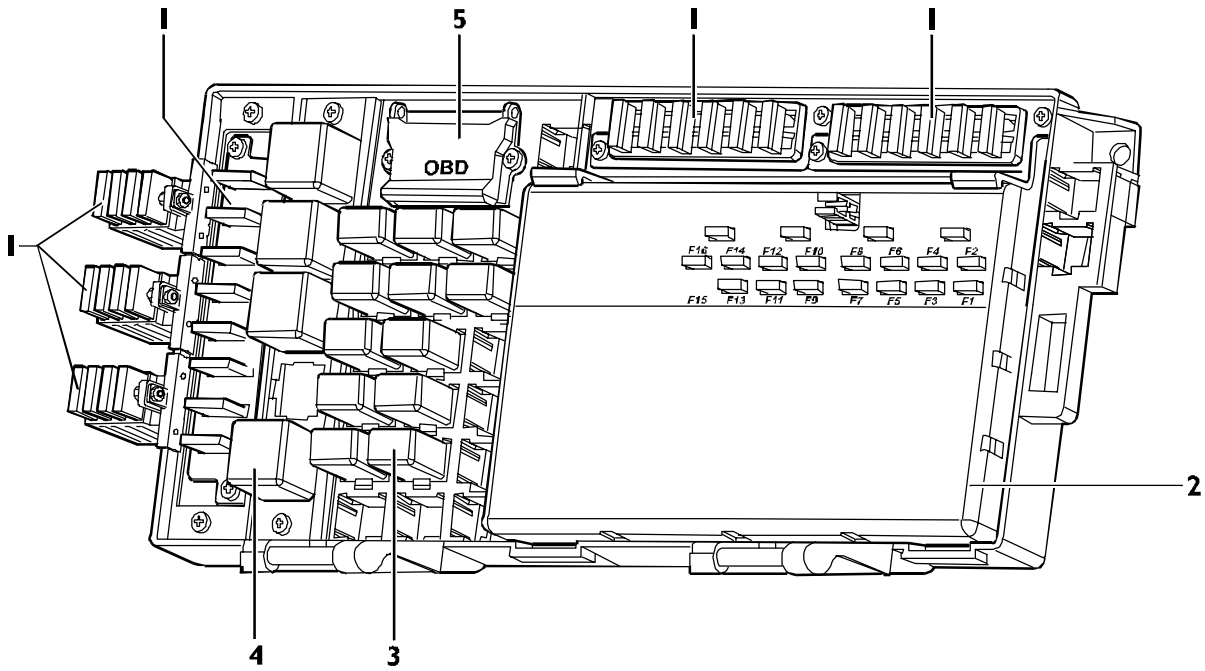

Ref.	Description
1	Fuse holder
2	Body Controller (IBC3)
3	Mini switches
4	Micro remote control switches
5	OBD

https://truckmanualshub.com/
Aquila Trucks Centres

FUSE

Figure 111

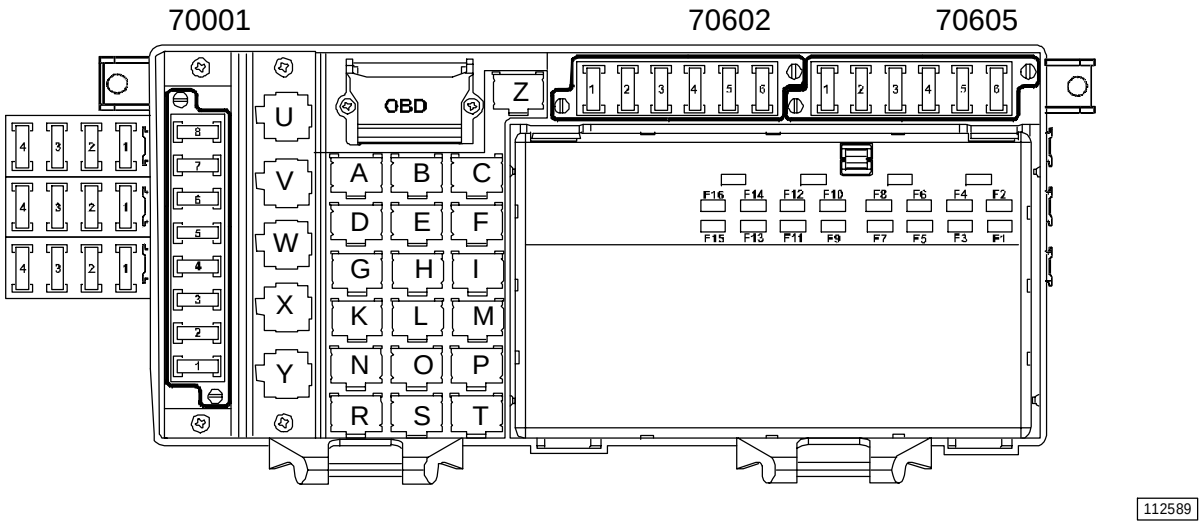

Fuse holder 70602

Ref.	Function	Delivery (A)	Terminal
1	DDM / Driver power windows	20/15	+30/+15
2	PDM / Passenger power windows	20/15	+30/+15
3	EDC	30	+30
4	ABS	5	+15
5	-	15	+30
6	ABS	15	+30

Fuse holder 70605

Ref.	Function	Delivery (A)	Terminal
1	Fridge / tool collect / OBD / Data communication + navigation	10	+BAT
2	ECAS/EM	5	+15
3	ECAS	7.5	+30
4	Retarder / ABS	10	+30
5	Retarder	10	+15
6	Heated seats/central lubrication/door lock with RF	7.5	+15

Fuse holder 70001

Ref.	Function	Delivery (A)	Terminal
1	EUROTRONIC 2	10	+30
2	Air conditioner	15	+30
3	Air conditioner	5	+30
4	Additional heater	15	+30
5	Additional heater	5	+30
6	Courtesy lights	5	+30
7	ACC/Heated windscreen/tool collect/Data communication + navigation	10	+15
8	MC-NET / Beacon lights/headlamp washer pump	10	+30

https://truckmanualshub.com/
Aquila Trucks Centres

Figure 112

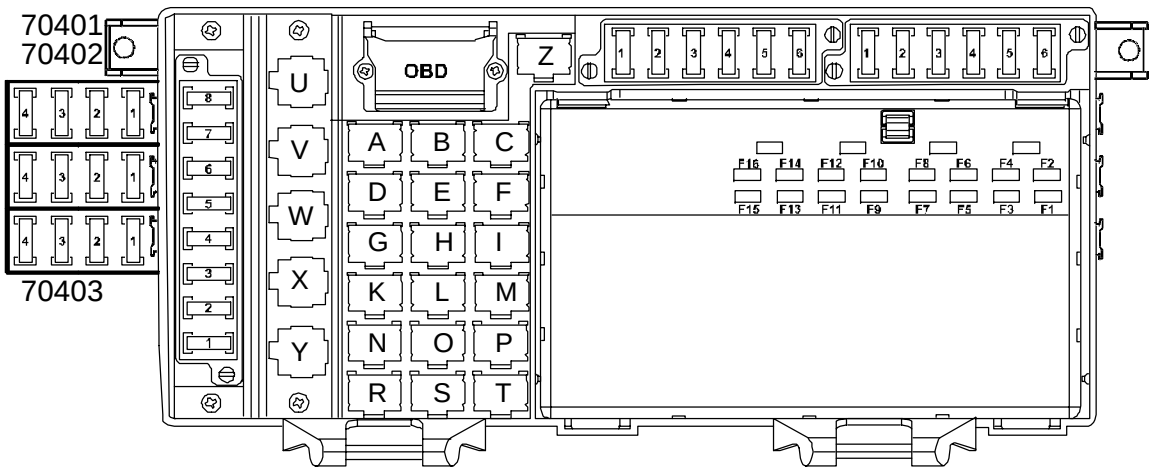

Fuse holder 70401

Ref.	Function	Delivery (A)	Terminal
1	Sun visors	7.5	+15
2	-	-	-
3	-	-	+30
4	12V internal lighting	5	-

Fuse holder 70402

Ref.	Function	Delivery (A)	Terminal
1	Heated windscreen	25	+30
2	VGT solenoid valve/servoshift	10	+15
3	Heated mirrors	15	+15
4	Heated windscreen	25	+30

Fuse holder 70403

Ref.	Function	Delivery (A)	Terminal
1	EM	15	+30
2	EM	15	+30
3	ACC	5	+15
4	SRC (UREA)	20	+ batt.

https://truckmanualshub.com/
Aquila Trucks Centres

REMOTE SWITCHES

Figure 113

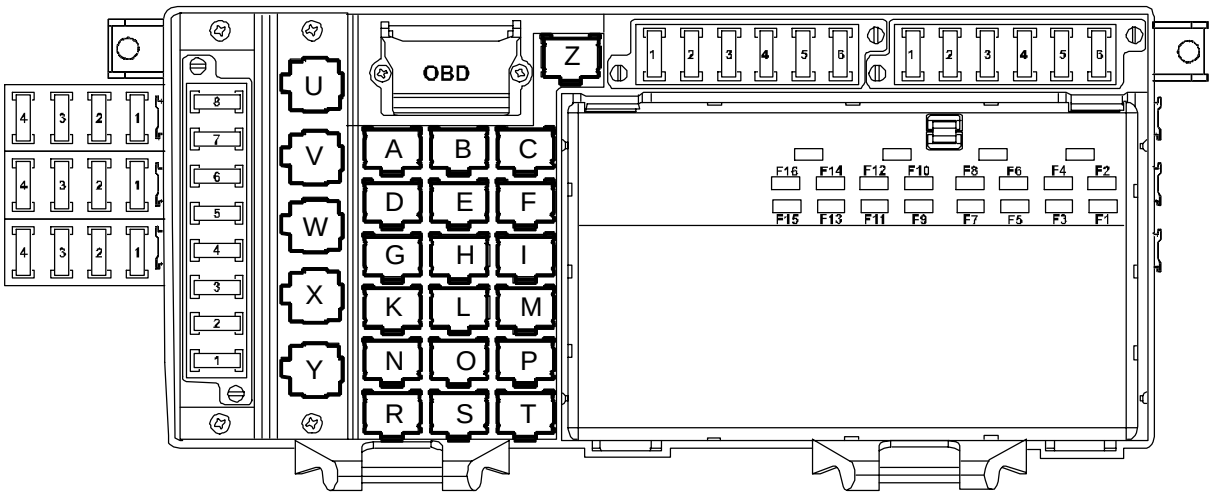

Ref.	Description	Component code
A	Horn remote control switch	25805
B	Remote control switch for water heater (opt.)	25337
C	-	-
D	Remote control switch for electrical bush opening	25352
E	Remote control switch for water heater (opt.)	25325
F	-	-
G	Electrical manhole lock remote control switch	25351
H	Remote control switch for manual climate control system (opt.)	25310
I	Remote control switch for manual climate control system (opt.)	25874
K	Remote control switch for electro-magnetic engagement of baruffaldi fan	25737
L	Remote control switch for manual climate control system	25332B
M	Remote control switch for manual climate control system	25322
N	Remote control switch for vehicle diagnosis (opt.)	25705
O	Remote control switch for manual climate control system (opt.)	25332A
P	Remote control switch for manual climate control system (opt.)	25327
R	Remote control switch for headlamp washer consensus (opt.)	25740
S	Remote control switch for main electric/mechanic switch (opt.)	25203/25903
T	Remote control switch for main electric switch (opt.)	25202
U	Engine start up remote control switch	25200
V	Remote control switch for key 15 distribution	25213
W	-	-
X	-	-
Y	-	-
Z	-	-

https://truckmanualshub.com/
Aquila Trucks Centres

Additional remote control switches

Positioned behind the BODY COMPUTER.

Figure 114

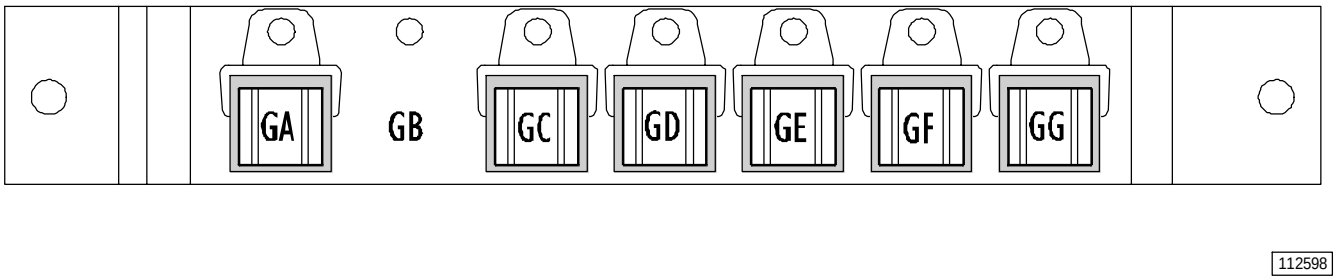

Ref.	Description	Component code
GA	Remote control switch for heated windscreen control	25306
GB	-	-
GC	Remote control switch for heated windscreen	25818
GD	-	-
GE	-	-
GF	-	-
GG	-	-

https://truckmanualshub.com/
Aquila Trucks Centres

FUSE ASSEMBLY BODY CONTROLLER (IBC3)

Figure 115

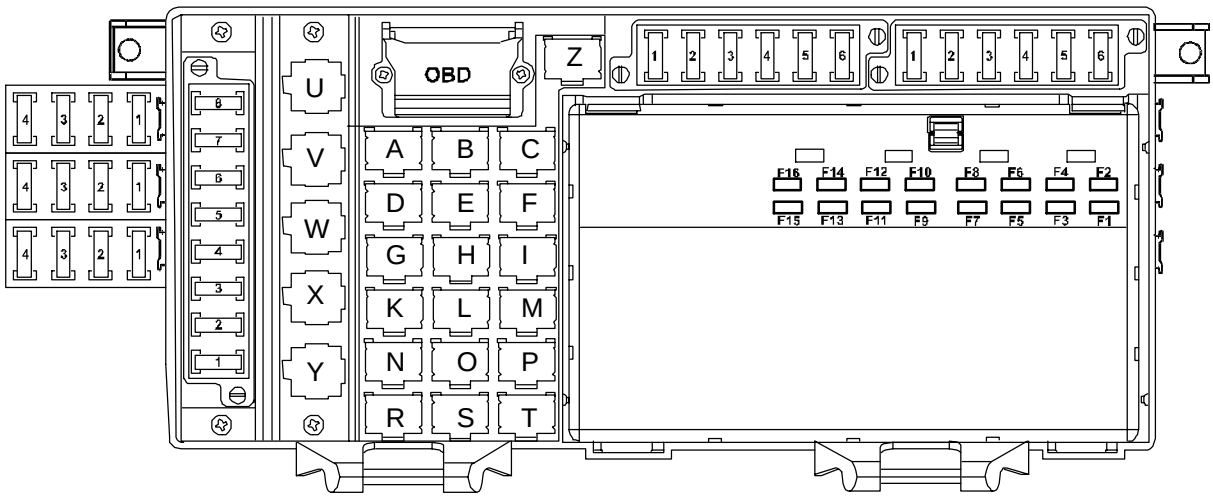

FUSES IBC3

Ref.	Function	Rating (A)	Terminal
F1	-	10	+15/1
F2	-	20	+15
F3	VCM / SWI	10	+30
F4	Tachograph / Bed Module / Cluster / Centralised closure	5	+BAT
F5	-	20	+30
F6	-	20	+30
F7	-	20	+30
F8	-	20	+30
F9	ST14A bodybuilders connector / 72072D (EM -framework)	10	+30
F10	Beeper	10	+30
F11	Tension reducer / Radio	20	+30
F12	Air dryer resistance	10	+15
F13	Bodybuilders connector 72072C (EM - cabin)	10	+30
F14	30-pin junction / Cigarette lighter	10	+30
F15	Radio / Acclimatiser	5	+15/1
F16	-	20	+15/1

https://truckmanualshub.com/
Aquila Trucks Centres

SUPPLEMENTARY FUSES (70000)

They are located on the left side of the vehicle, next to the batteries and the TGC. The fuse compartment can be accessed by levering on the two springs available on cover (A).

Figure 116

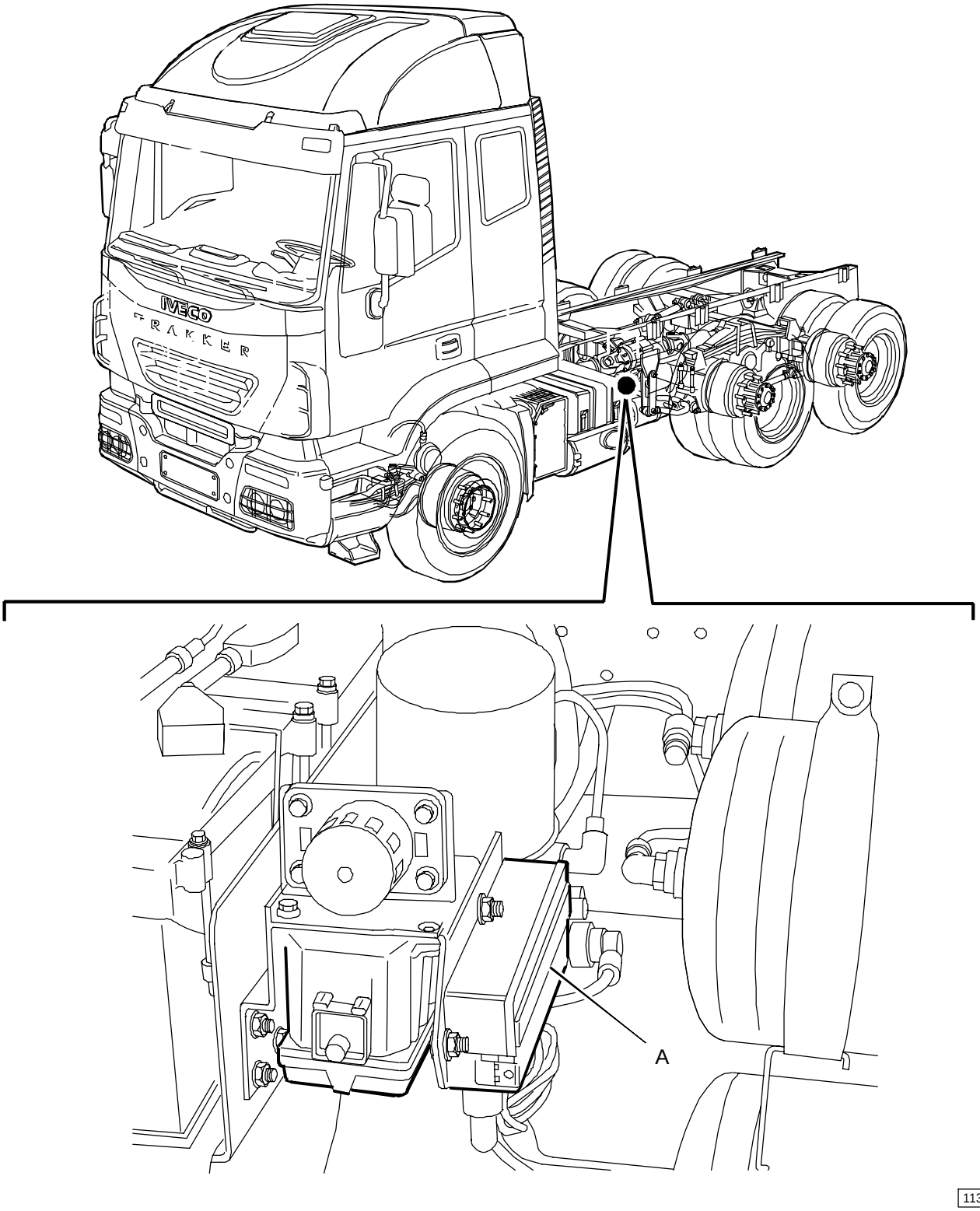

A. Auxiliary fuse holder

https://truckmanualshub.com/
Aquila Trucks Centres

Figure 117

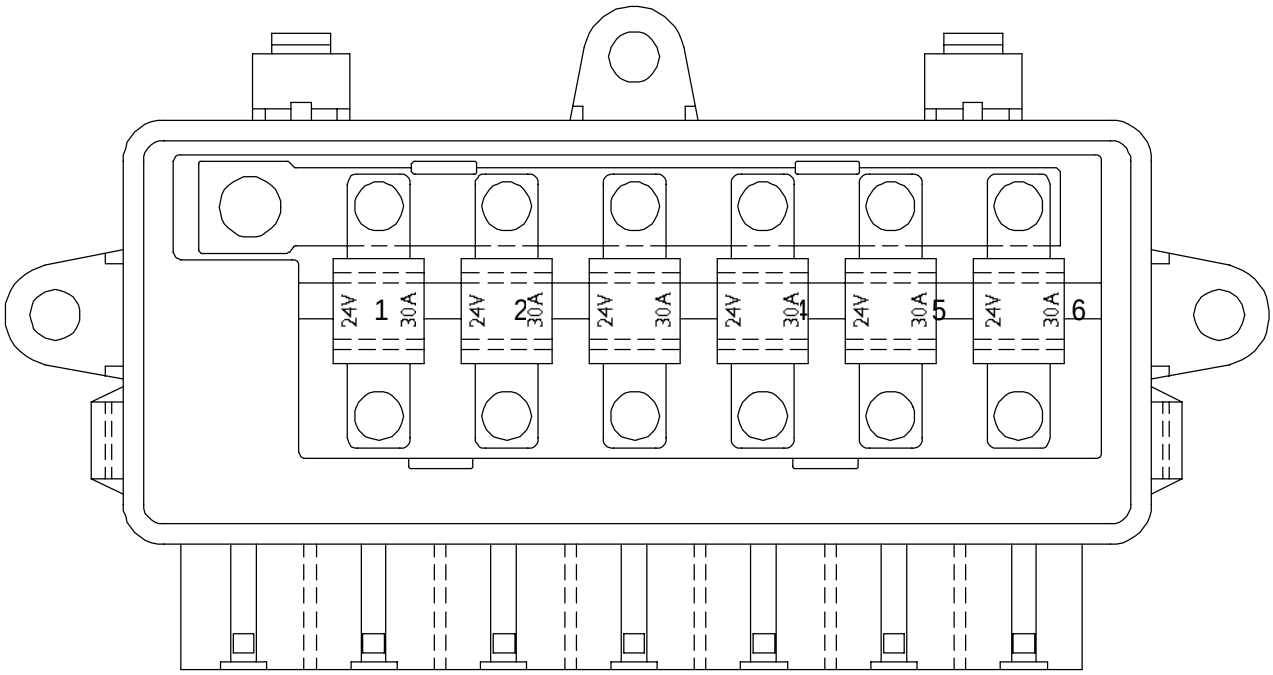

Ref.	Function	Delivery A
1	MET	30
2	MET	30
3	Presetting	30
4	Presetting	30
5	Current tap - ABS/EBS	30
6	Presetting	30

https://truckmanualshub.com/
Aquila Trucks Centres

INSTRUMENT BOARD

Figure 118

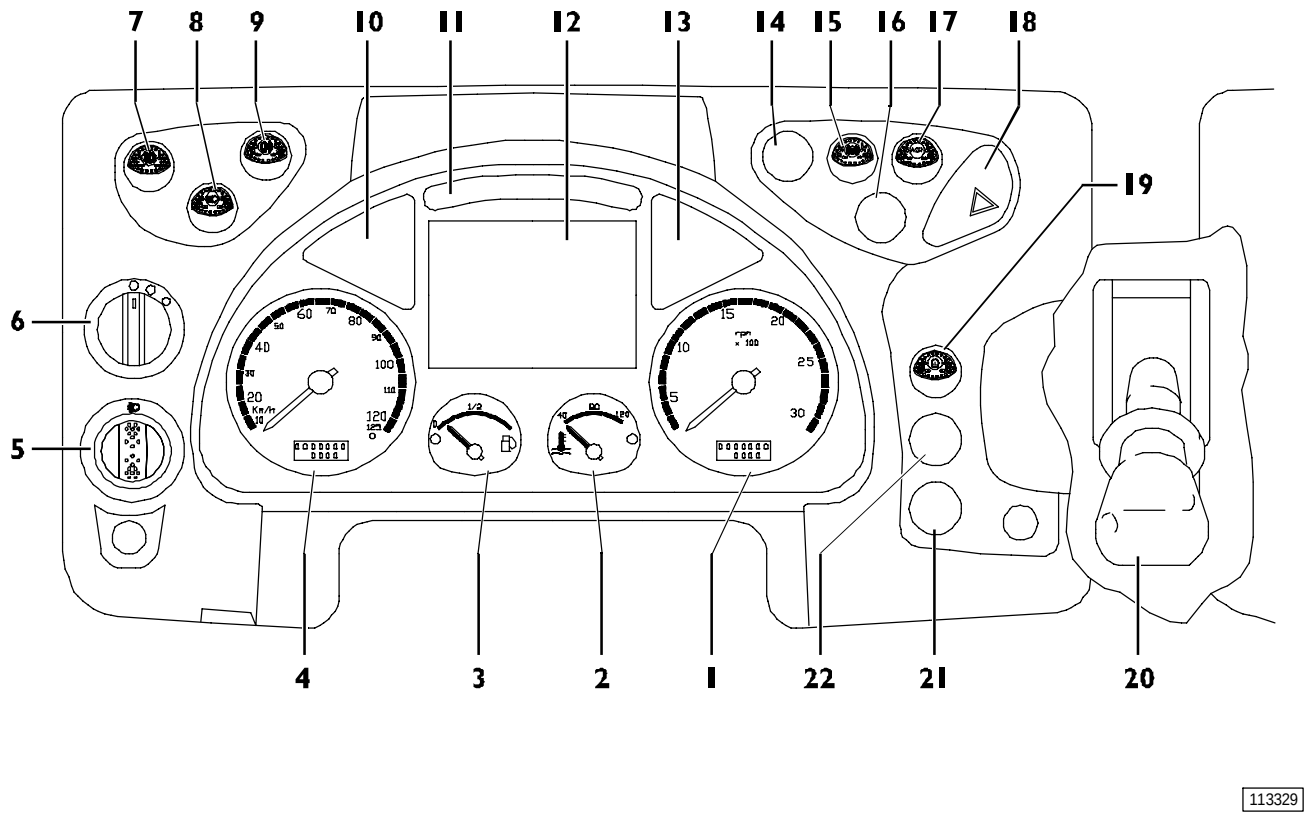

Ref.	Description
1	Revs counter
2	Coolant thermometer
3	Fuel level gauge
4	Speedometer
5	Headlamp trim control
6	External light switch
7	Fog light actuation switch
8	Auxiliary headlamp actuation switch
9	Rear fog light actuation switch
10	Optical indicator cluster
11	Optical indicator cluster
12	Display
13	Optical indicator cluster
14	Free
15	ABS actuation switch (if available)
16	Free
17	ASR actuation switch (if available)
18	Emergency light actuation switch
19	Speed limiter cut-in switch
20	Parking brake
21	Free
22	Free

https://truckmanualshub.com/
Aquila Trucks Centres

CENTRAL DASHBOARD CONTROLS

Figure 119

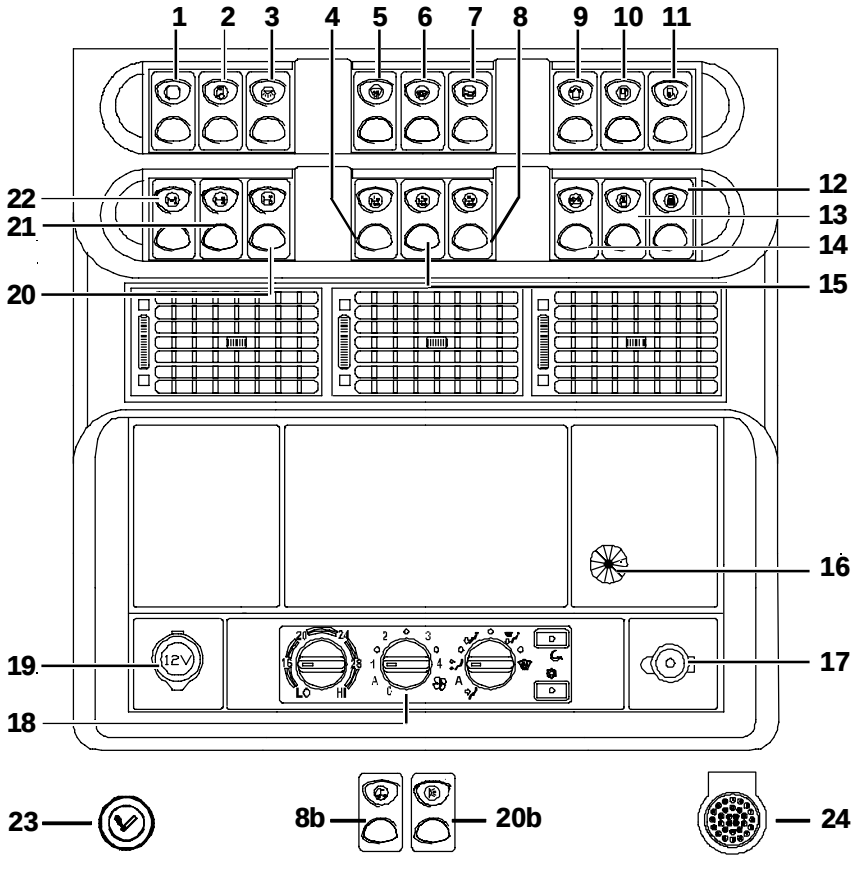

Ref.	Description
1	Switch for engine brake engagement
2	Control for electric hatch pit (OPT)
3	Pneumatic horns
4	Power takeoff switch 1 (OPT)
5	Heated windscreen actuation switch (OPT)
6	Sunshade curtain control (OPT)
7	Central roof lamp cabin lights
8	Multipower power takeoff control (OPT)
8b	Loading platform light actuation switch
9	Roof side roof lamps cabin lights control
10	Fuel heater (OPT)
11	Rearview mirrors heating (before it was embedded into the door)
12	Switch for immediately connecting supplementary water heater (OPT)
13	Engine/cabin pre-heating selector (OPT)
14	Switch for connecting supplementary air heater (OPT - for manual version only)
15	Power takeoff 2 (OPT)
16	Supplementary water heater thermostat (OPT)
17	Key switch for ECO - POWER function
18	Heating/venting or air conditioner controls (OPT)
19	12V current outlet
20	Front differential locking switch
20b	Rotating lamps switch (OPT)
21	Rear differential locking switch
22	Longitudinal differential locking switch
23	Lighter
24	30-pin diagnosis outlet

https://truckmanualshub.com/
Aquila Trucks Centres

CONTROLS ON THE STEERING WHEEL

The steering wheel features some keys that enable selecting and controlling certain functions.

Figure 120

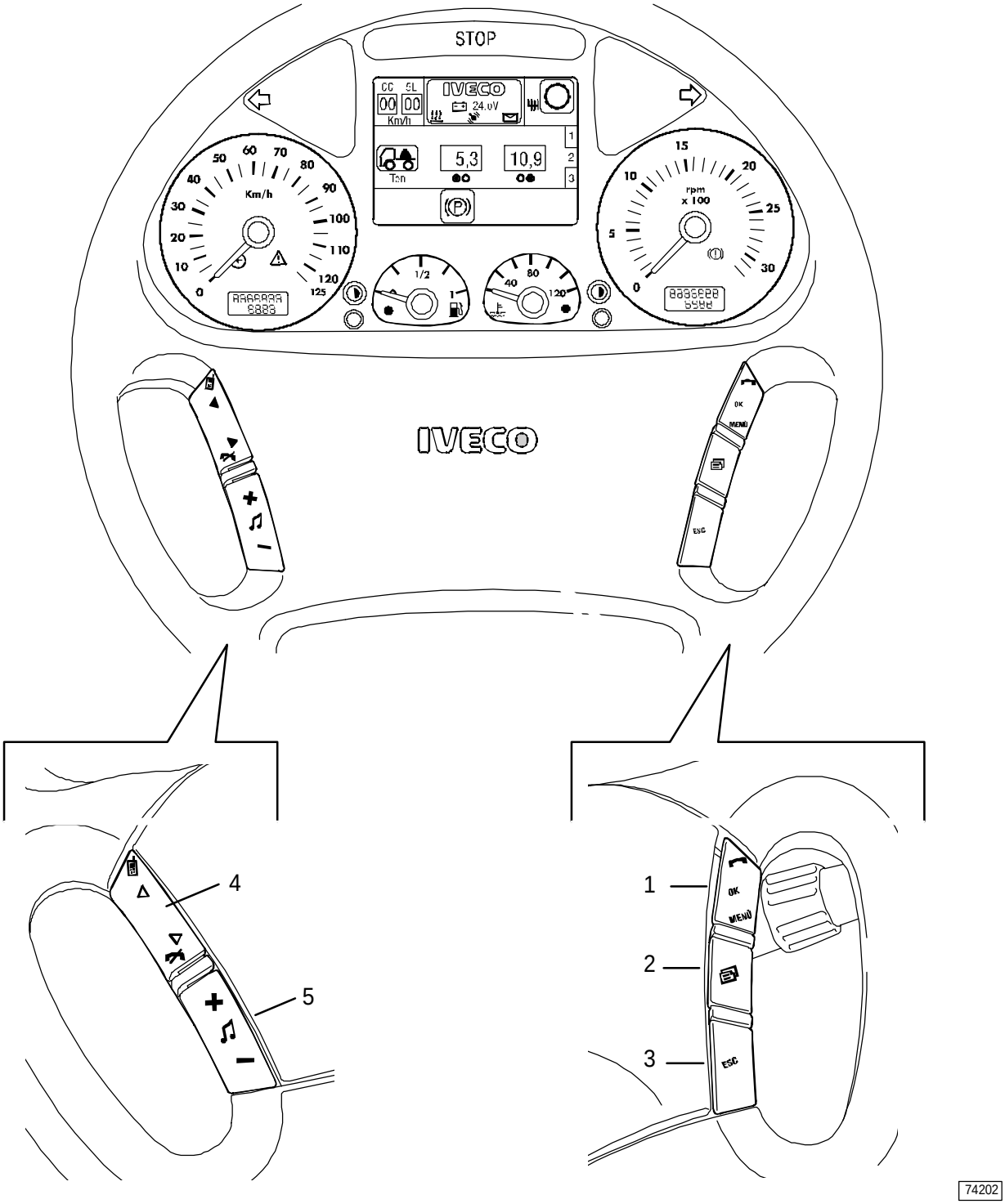

Left hand side:
4. KEY y
   KEY b
5. KEY +
   KEY -

Right hand side:
1. MEBU KEY/OK
2. PAGE PUSH BUTTON
3. ESCAPE KEY

https://truckmanualshub.com/
Aquila Trucks Centres

REARVIEW MIRRORS AND WINDOW REGULATOR CONTROL ADJUSTMENT

Figure 121

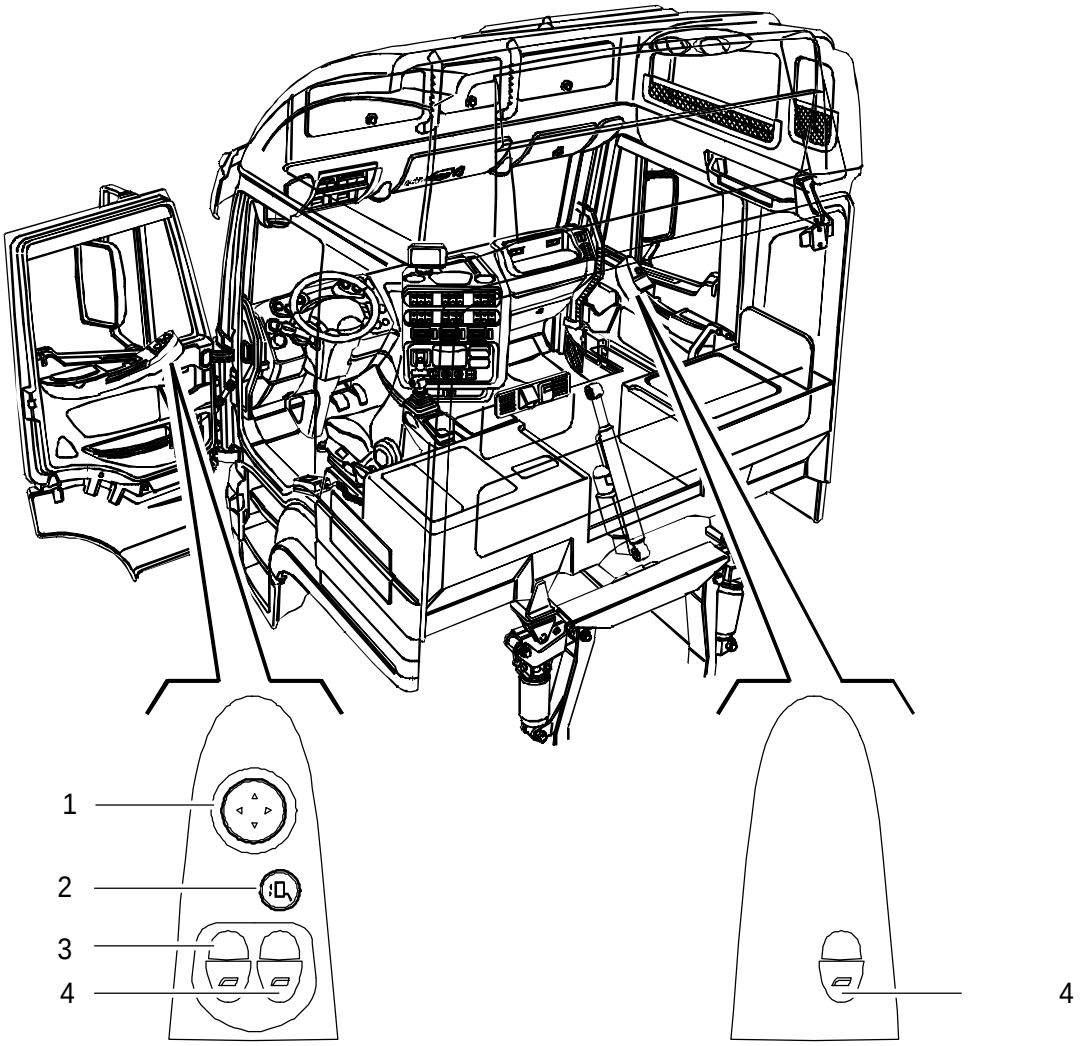

Ref.	Description
1	Rearview mirror orientation control
2	Mirror selector control
3	Driver window regulator
4	Passenger window regulator

Key 2 on AS was placed on the left and in its place there was the mirror heating key that on AT/AD is placed on central dashboard as series.

Adjustment functions for rearview mirrors and window regulator control are managed by DDM and FDM units, and consequently they are present as optionals.

EXTERNAL REARVIEW MIRRORS HEATING

By pressing the related button, the rearview mirrors heating is activated and the related icon is displayed on the display. To deactivate such function, press the button again. The icon will not be displayed any more. It is possible to select this function also with moving vehicle. Heating has a maximum length of 30 minutes.

https://truckmanualshub.com/
Aquila Trucks Centres

LEFT LIGHT CONTROL 54033

Figure 122

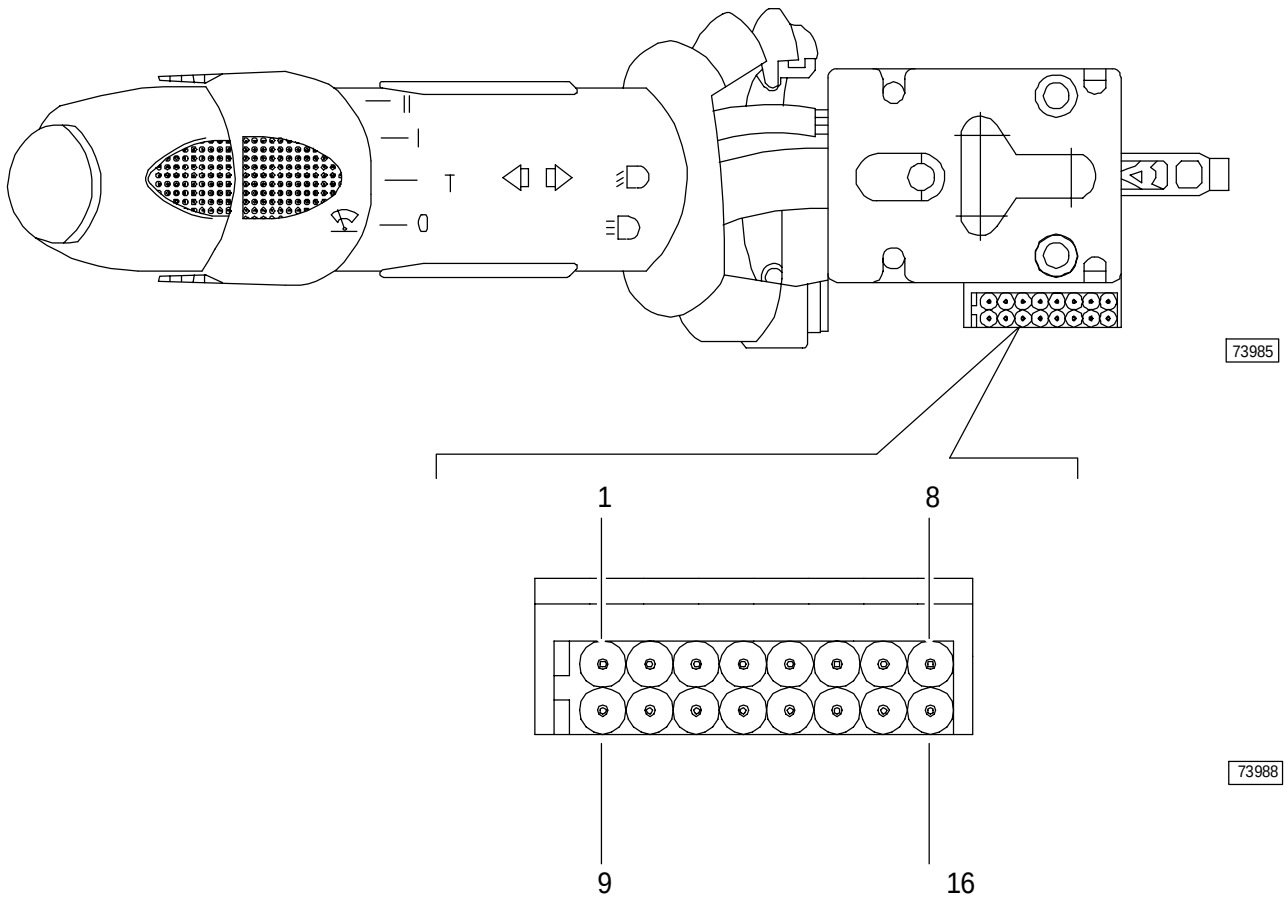

Ref.	Description
1	Windshield wiper (top speed)
2	Windshield wiper (slow speed)
3	Windshield wiper (intermittent)
4	Windshield wiper (one stroke)
5	-
6	Dipped lights on
7	Light flashes
8	Ground
9	Washer electrical pump control
10	-
11	-
12	-
13	-
14	-
15	Right direction indicator
16	Left direction indicator

https://truckmanualshub.com/
Aquila Trucks Centres

RIGHT LIGHT CONTROL 54030

Figure 123

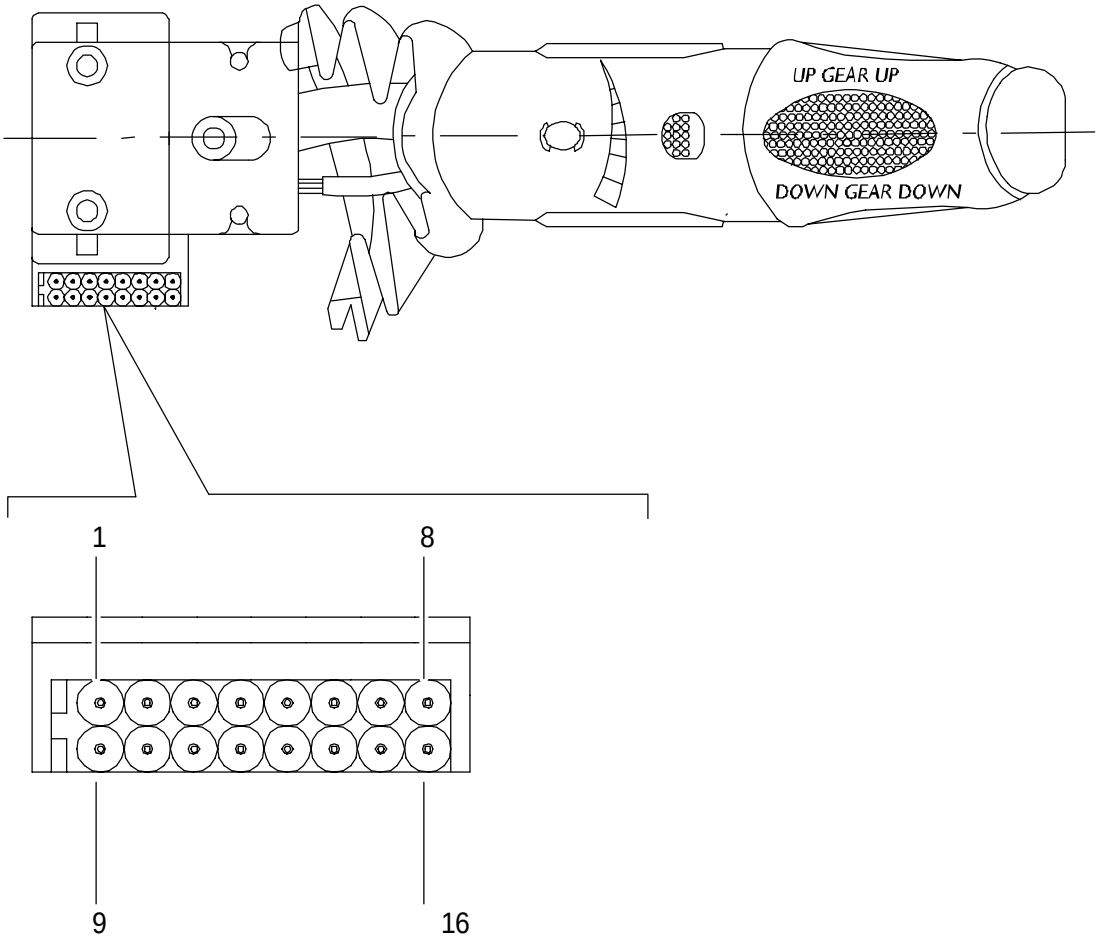

Ref.	Description
1	Intarder (Position 4)
2	Change gear (down)
3	Cruise Control (set/acceleration)
4	Cruise Control (Resume)
5	Intarder (Position 1)
6	Intarder (Position 3)
7	Intarder (Position 2)
8	-
9	Intarder (Position 5)
10	Intarder (Position 6)
11	Cruise Control (deceleration)
12	-
13	-
14	-
15	Change gear (up)
16	Ground (from the SWI)

https://truckmanualshub.com/
Aquila Trucks Centres

Figure 124

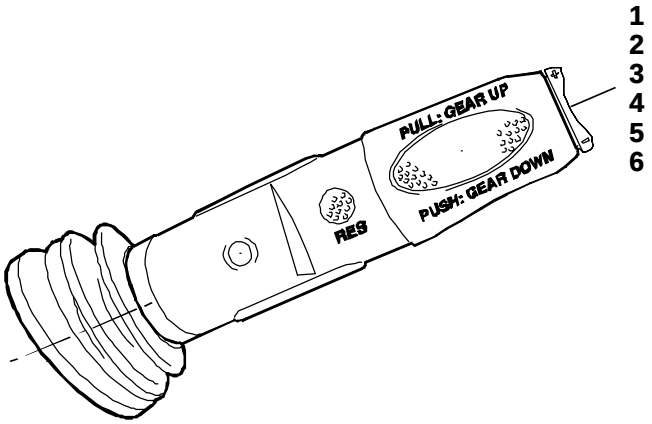

108920

RIGHT MULTIFUNCTION LEVER

The multifunction lever located on the right side of the steering column enables insertion of the engine brake function and the intarder when installed.

The former is selected by moving the lever to positions 1 and 2 and remains o even when the same lever is used to selected the intarder function at positions 3, 4, 5 and 6 related to available braking power ratings.

When the engine brake function is selected the control lever signal is transmitted to the (Steering Wheel Interface) S.W.I. center.

Which activates the engine brake on warning light on Instrument Cluster IC, and via Body Computer B.C. sends the request fro engine rake to the EDC, EBS and automated EuroTronic center (when present).

When the operator selects the engine brake manually, selection is displayed in the Cluster with a blinking warning light, which goes to steady when the engine brake is turned on. In the manual mode, engine brake action is also conditioned by accelerator pedal release. In the automatic mode, the engine brake is activated by the EDC center on receipt of a request from the EBS center.

In this condition, the EDC center pilots the engine brake electro valve and the VGT actuator to the fully closed position.

https://truckmanualshub.com/
Aquila Trucks Centres

ENGINE BRAKE CONTROL AND INTARDER

Vehicles with Intarder mechanical gearshift

Figure 125

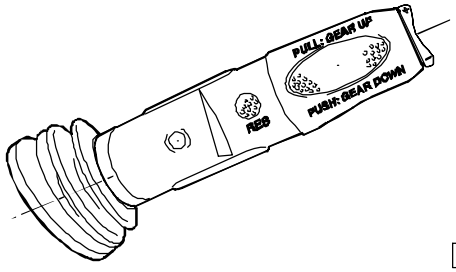

108920

1 Position 0 = disenabled
2 Position 1 = 50% engine brake
3 Position 2 = 100% engine brake + 20% Intarder
4 Position 3 = 100% engine brake + 40% Intarder
5 Position 4 = 100% engine brake + 60% Intarder
6 Position 5 = 100% engine brake + 80% Intarder
Position 6 = 100% engine brake + 100% Intarder

Vehicles with Intarder EuroTronic transmission

Figure 126

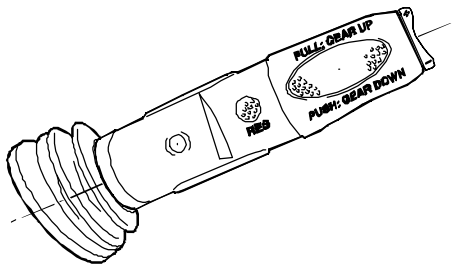

108920

1 Position 0 = disenabled
2 Position 1 = 50% engine brake
3 Position 2 = 100% engine brake + 25% Intarder
4 Position 3 = 100% engine brake + 50% Intarder
5 Position 4 = 100% engine brake + 75% Intarder
6 Position 5 = 100% engine brake + 100% Intarder
Position 6 = 100% engine brake + 100% Intarder *

(*) The intarder can be more effective with automatic downshifting managed by the transmission electronic control centre.

Vehicles with mechanical gearshift or Eurotronic transmission in the manual mode without Intarder

Figure 127

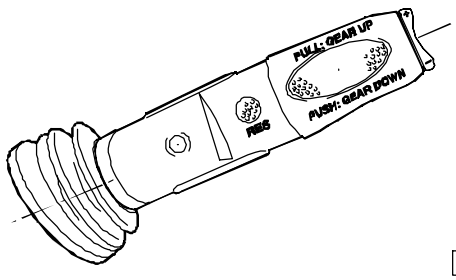

108920

0 Position 0 = disenabled
1 Position 1 = 50% engine brake
2 Position 2 = 100% engine brake

Vehicles with Eurotronic transmission in the automatic mode without Intarder

Figure 128

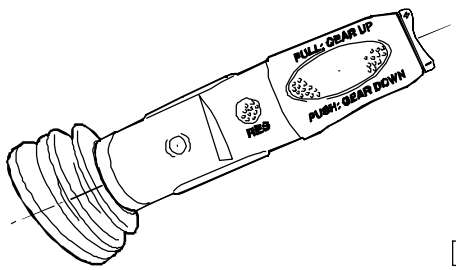

108920

0 Position 0 = disenabled
1 Position 1 = 100% engine brake
2 Position 2 = 100% engine brake + downshifting in the automatic mode

https://truckmanualshub.com/
Aquila Trucks Centres

GEAR SELECTION FUNCTION

On the new range of Euro 4 vehicles the gear selector has been eliminated. Its functions are performed by the control pushbutton panel on the central panel of the dashboard, in combination with the drive control system lever.

Figure 129

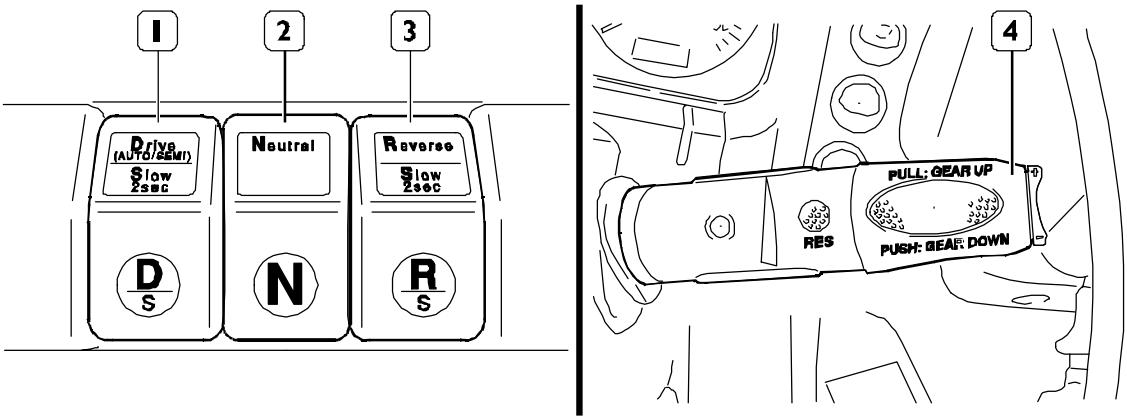

108921

1. Pushbutton D - AUTO/SEMI mode
2. Pushbutton N - neutral
3. Pushbutton R - Reverse gear
4. Drive control system - gear selection

Driving in manual mode (semi)

1) Parking brake engaged.
2) Start the engine
3) Gearbox in neutral (position N).
4) Briefly press pushbutton "D" (1). The automatic system is activated and the calculated pick-up gear is engaged.The display shows the pick-up gear together with "AUTO".
5) Turn off the automatic system by again pressing button "D". The display passes from showing "AUTO" to "SEMI".
6) The pick-up gear can be corrected with the following operations on the drive control system (4): By slightly moving the drive control system upwards (pulling it) the gearbox shifts one ratio up.By slightly moving the drive control system downwards (pressing it) the gearbox shifts one ratio down.By keeping the drive control system in the desired position (pulling / pressing it) the gearbox shifts two ratios up or down respectively.

NOTE The following pick-up gears are available: 1st, 2nd, 3rd, 4th, 5th.

7) Press the accelerator pedal releasing the parking brake. The vehicle starts (the clutch engages automatically).

Changing ratio while driving the vehicle

Shifting up to a higher ratio

- By slightly moving the drive control system (4) downwards (pressing it) the gearbox shifts one ratio up.
- By keeping the drive control system (4) in this position the gearbox shifts two ratios up.

Shifting down to a lower ratio

- By slightly moving the drive control system (4) downwards (pressing it) the gearbox shifts one ratio down.
- By keeping the drive control system (4) in this position the gearbox shifts two ratios down.

Aquila Trucks Centres

Driving in automatic mode (Auto)

1) Parking brake engaged.
2) Start the engine
3) Gearbox in neutral (position N).
4) Briefly press pushbutton "D" (1). The automatic system is activated and the calculated pick-up gear is engaged.The display shows the pick-up gear together with "AUTO".
5) After entering AUTO mode, the same guidelines given for the SEMI mode apply (points 6 and 7) for selecting the pick-up gear.

Changing ratio while driving the vehicle

While driving the vehicle the display shows the engaged ratio. All the ratio changing operations are automatic and depend on the situation of driving the vehicle, the load, the position of the accelerator pedal, the speed and number of revolutions of the engine. The gear can always be changed manually with the drive control system (4), without having to leave automatic mode.

Keeping the engaged ratio

If in automatic mode you want to keep the engaged ratio, you need to briefly press pushbutton "D" (1). The gearbox will pass on to manual mode (SEMI). Later operations on the gearbox are possible only by pulling or pressing the drive control system (4) (as described for driving in manual mode). To pass back into automatic mode, you need to briefly press pushbutton "D" (1).

Pass into neutral (Position N)

Press pushbutton "N" (2). The display shows N.Positioning in neutral "N" has priority over the other operations of changing ratio. It is always possible to pass into neutral starting from any ratio. When the vehicle is driving forwards, from the neutral position (N) it is always possible to engage a gearbox ratio. For this you need to briefly press pushbutton "D" (1).

NOTE So as not to wear out the mechanical parts of the clutch control, if stopping the vehicle for longer than 1 - 2 minutes (for instance, in a queue, at a level crossing, etc.), the gearbox must be put into neutral (N).
This closes the clutch and the control system is lightened.

Reverse gear

- With the vehicle stationary, briefly press pushbutton "R" (3). The slow reverse gear ratio (RL) is engaged.
- Press the accelerator pedal. The vehicle starts (the clutch engages automatically).

NOTE With the vehicle stationary and in reverse gear it is possible to change between the two reverse gear ratios RL (slow) and RH (fast) by using the drive control system (4)

By slightly moving the drive control system upwards (pulling it) ⇒ RH
By slightly moving the drive control system downwards (pressing it) ⇒ RL

Operations in slow mode

For manoeuvring in harsh driving conditions (off-road, for instance) there is a supplementary operating mode, with the aid of which the driver can fine tune the clutch according to the travel of the accelerator pedal (up to 100%). In this way the engine speed is limited and rapid vehicle acceleration is prevented.

Turning on

- The vehicle must be stationary

Forward drive manoeuvres
- Press and hold pushbutton "D" (1) (> 2 sec.) The forward drive manoeuvre mode is turned on. The display shows "SLOW"

Reverse drive manoeuvres
- Press and hold pushbutton "R" (> 2 sec.) The reverse drive manoeuvre mode is turned on. The display shows "RL SLOW"

https://truckmanualshub.com/
Aquila Trucks Centres

Turning off

With the vehicle stationary

- Briefly press pushbutton "D" (1). The calculated pick-up gear is engaged and automatic mode turned on or briefly press pushbutton "R" (3). The slow reverse gear ratio (RL) is engaged.

During the forward drive manoeuvre:

- Briefly press pushbutton "D" (1). The automatic system is activated or operate the kick-down.

During the reverse drive manoeuvre:

- Briefly press pushbutton "R" (3). or operate the kick-down.

FUNCTION ENGAGING EMERGENCY MODE (LIMP HOME)

Figure 130

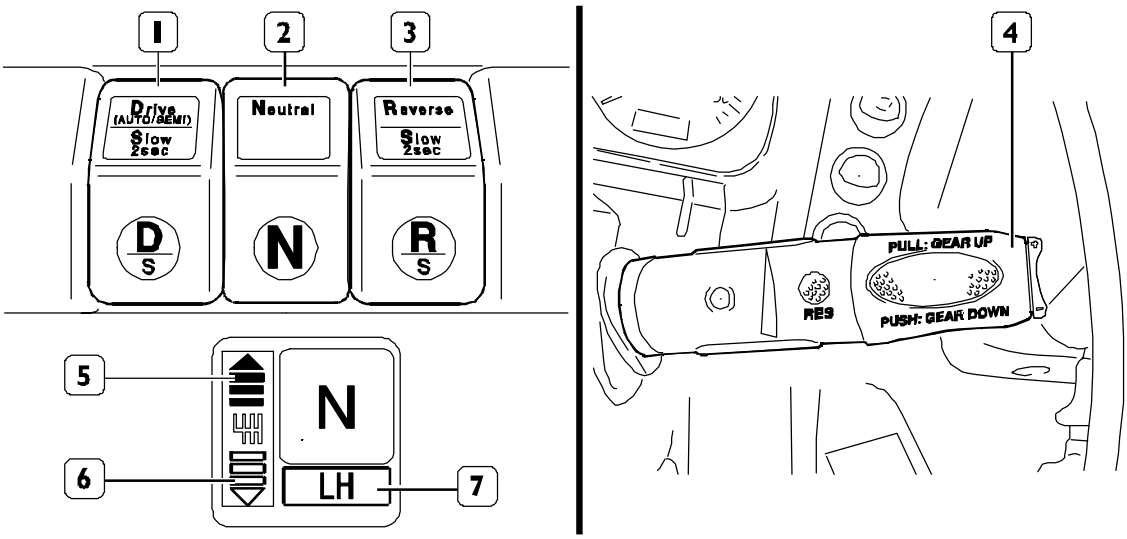

108922

This is an emergency function in which the normal system of automatic control is put out of service.

1) Engagement

Indicator (Display): LH = engage emergency mode (when changing ratio).

2) Activation by the driver

Ignition turned off (until the indicator is turned off).
Ignition turned on, within 5 seconds:
Press pushbutton N (2) for at least 5 seconds.

3) Indicator LH

After turning on emergency mode (when changing ratio).
Gearbox in neutral.
Clutch released (open).

4) "Clutch status" indicator

Bar with arrow tip pointing upwards (5) (blinking) = clutch released.
Bar with arrow tip pointing downwards (6) = the clutch is about to engage or is engaged.

NOTE When changing ratio, blinking stops: (as soon as a new ratio is engaged it starts blinking again!)

5) Operations to perform

After turning on the emergency mode (see point 3), start up the engine.
When the engine is running, press and then release again the brake pedal.
Engage the required pick-up gear.

https://truckmanualshub.com/
Aquila Trucks Centres

Forwards:

- By slightly moving the drive control system (4) upwards (pulling it) the gearbox shifts one ratio up.
- By slightly moving the drive control system (4) downwards (pressing it) the gearbox shifts one ratio down.

In reverse gear:

- Briefly press pushbutton "R" (3). (the slow reverse gear ratio "RL" is engaged).
- By slightly moving the drive control system (4) upwards (pulling it) the gearbox passes to the fast reverse gear ratio RH.

Engage the clutch: press pushbutton D (1) until the bars stop blinking with the arrow tip pointing upwards and when the bars appear with the arrow tip pointing downwards (5 / 6).

The clutch can be engaged slowly or even suddenly.

NOTE If the vehicle accidentally moves on a slope with a gear engaged, the clutch will automatically engage

Disengage the clutch: briefly press pushbutton "D" (1) or alternatively press the brake pedal.

If on pressing the brake pedal the clutch is engaged with the pushbutton "D" (1) (for example vehicle pick-up uphill), in order to be able to release the clutch again with the brake pedal, it will be necessary to first briefly take your foot off the brake pedal: a ratio shift will only be possible with the vehicle stationary.

Leaving emergency mode.
Turn off the ignition and wait for the indicator to disappear.
When next starting up the system will be in normal mode.

https://truckmanualshub.com/
Aquila Trucks Centres

CLUSTER

Proceed as follows to remove the Cluster:

– Use a screwdriver for leverage inside the two slots in the two groups of switches (A) located in the upper panel.

Figure 131

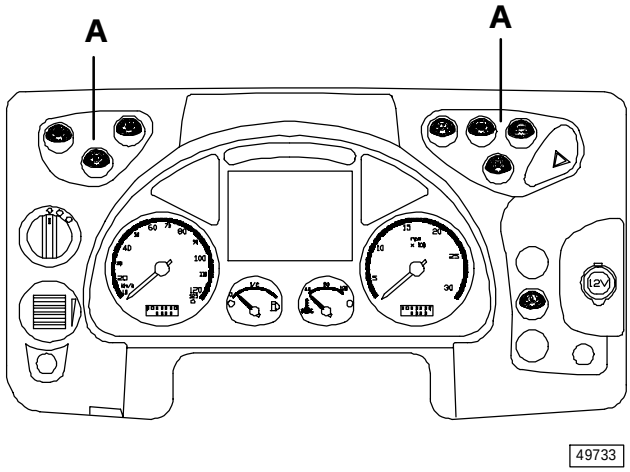

– Remove the two protection caps.

– Loose the four panel retainer screws (B).

Figure 132

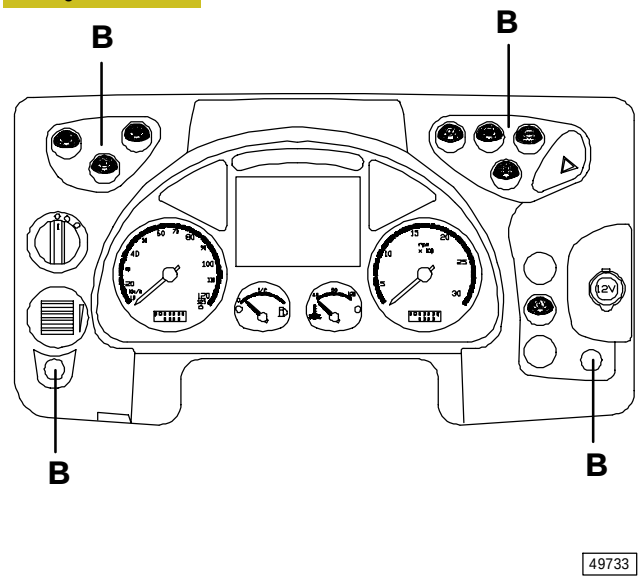

– Move the panel as far outwards as possible after relocating the steering wheel far from the panel.

– Disconnect the two Cluster attaching screws.

– Loosen the four retainer screws (C).

Figure 133

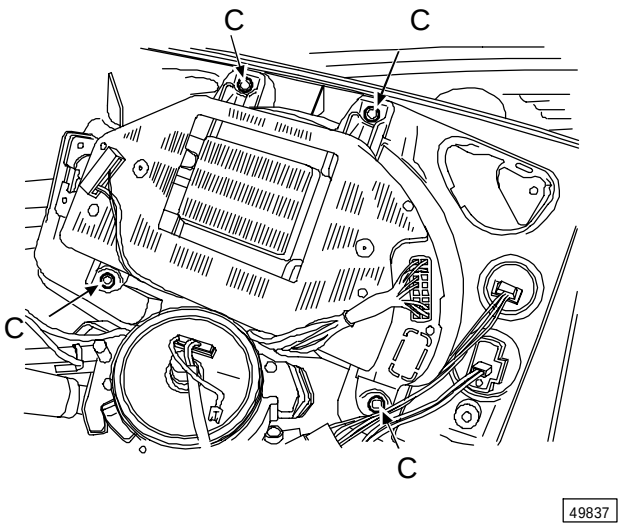

https://truckmanualshub.com/
Aquila Trucks Centres

Cluster (optical indicators)

Figure 134

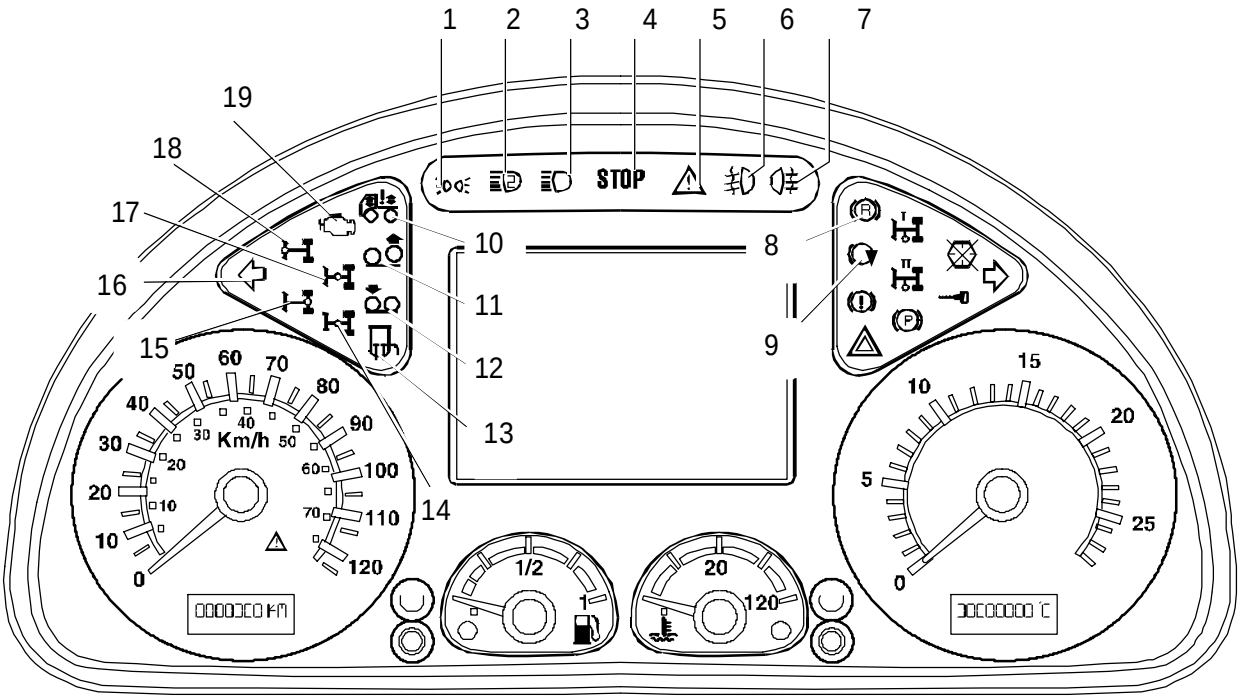

102385

Ref.	Description
1	External lights
2	Auxiliary headlamps
3	High-beam headlamps
4	Generic anomaly/failure signal
5	Generic alarm
6	Fog headlamps
7	Rear fog lights
8	* Retarder
9	* Engine brake
10	Vehicle suspensions not in running trim
11	Third axle lifted
12	Pick-up assist provision
13	Mirror heating
14	Longitudinal tandem differential locking
15	Longitudinal/transverse rear differential locking
16	Left indicator light
17	Longitudinal differential locking
18	Longitudinal/transverse front differential locking
19	OBDII anomaly
*	Warning light: blinking with the function requested by the driver; ON steady with the function actuated

https://truckmanualshub.com/
Aquila Trucks Centres

Figure 135

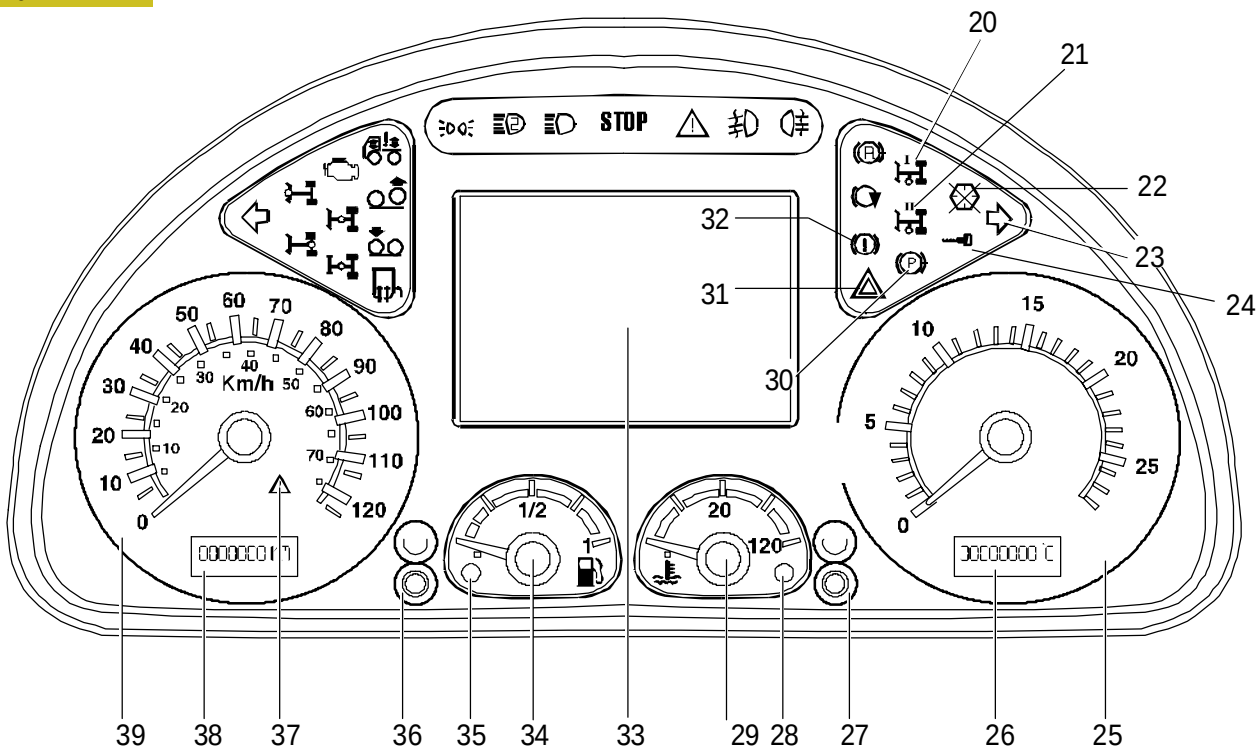

Ref.	Description
20	Power take-off 1 (PTO 1)
21	Power take-off 2 (PTO 2)
22	Instrument panel failure (Cluster)
23	Right indicator light
24	Immobilizer
25	Analog revs counter
26	Temperature/time display
27	Instrument illumination itensity/temperature/time display button
28	Coolant temperature (high temperature warning light)
29	Full/trip odometer display button
30	Hand brake ON
31	Emergency lights
32	Braking system failure
33	Display
34	Fuel level
35	Fuel level (low level warning light)
36	Odometer/mileage indicator display button
37	Tachograph anomaly
38	Full/trip odometer/mileage indicator display
39	Analog speedometer

https://truckmanualshub.com/
Aquila Trucks Centres

CLUSTER (PIN-OUT)

Figure 136

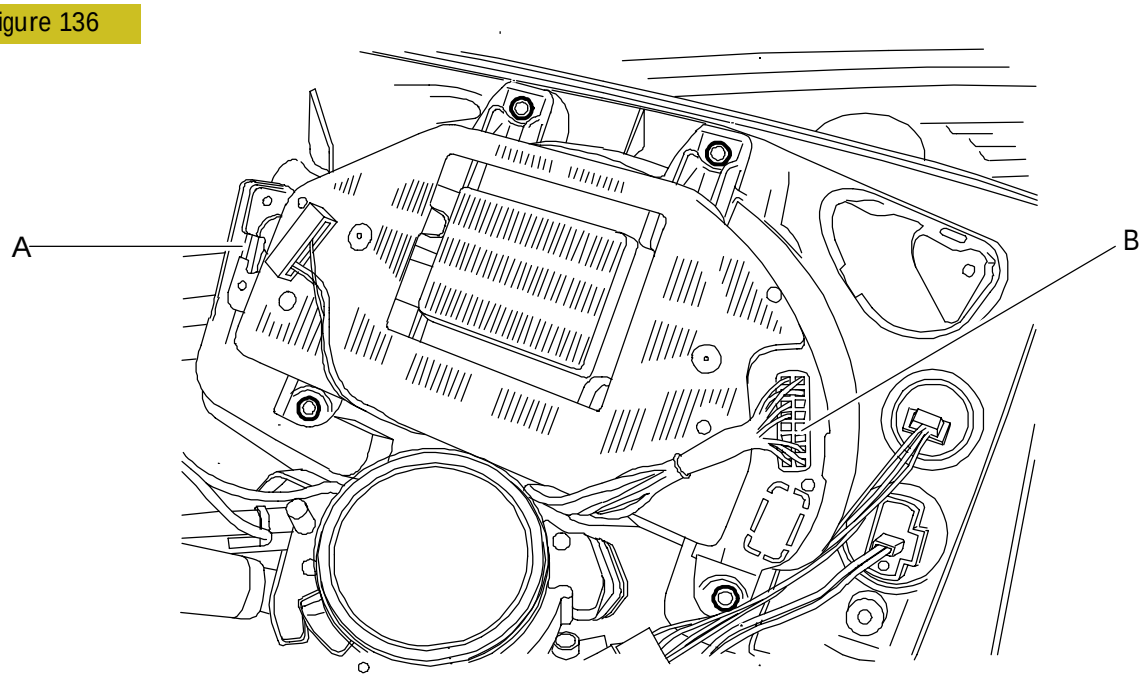

Connector A - Blue

Pin	Description	Cable colour code
1	-	-
2	CAN H line (VDB)	White
3	CAN L line (VDB)	Green
4 ÷ 17	-	-
18	Positive +15 (from IBC3)	8871
19	Ground	0000
20	Direct positive battery (+Bat from ICB3)	7906

Connector B - Black

Pin	Description	Cable colour code
1	K line (14-pin diagnosis connector)	2994
2	-	-
3	Trailer ABS failure signal	6671
4	-	-
5	-	-
6	-	-
7	-	-
8	ECM failure signal	6150
9	Speed signal for diagnosis connector (28-pin)	5540
10	Ground from switch for tilted caisson signalling	6607
11	-	-
12 ÷ 17	-	-
18	-	-
19	Speed signal for Toll Collect (predisposition)	5541
20	-	-

https://truckmanualshub.com/
Aquila Trucks Centres

Display operation

Display varies subject to the following:

- Key on MAR with engine off
- Key on MAR with engine started and vehicle stationary
- Key on MAR at vehicle speed over 15 Km/h
- Key out

Key in MAR with engine off

Turning the key to MAR displays control of main vehicle systems.
Their presence is indicated in green, if all is OK, or yellow in case of a light anomaly/breakdown, or red in case of a serious anomaly/ breakdown, with activation of a buzzer.

The list of systems present on the vehicle and their status can be displayed with the Multiplex system during Start-Up, by receiving the diagnostic message from the various centers.
System Check Ok or System Check Failed information is provided at Start-Up Test end.
The defective system then sends its diagnostic message that is displayed with the icon of the defect under review.

The Multiplex system can indicate vehicle and electronic system errors. In case of an error detected by the Body Computer, it sends the Instrument Cluster a message containing the following information, via the CAN line:

- the status of the light associated to the defect (red for a serious and yellow for a slight anomaly)
- the error code

At receipt of the error message, the Instrument Cluster displays the following in the central display area:

- the colored icon related to the defective component or center
- the related error code

It also advises the operator by activating the Buzzer. After recognizing the error, the operator presses key "OK" and the central display area returns showing the previous information (virtual tool or menu).
The icon related to the error detected is stored in the lower layer of the display or with a specific warning.

No options such as to distract attention or options not related to an operation useful for vehicle operation are available during operation, which is why the Menus available in case of a moving vehicle are reduced to the base essential and scanning of the various displays is obtained simply with the "Menu" key (without reading the list of options).
With the vehicle stationary, scanning of the complete set of menus available is enabled with keys "Arrow up" and "Arrow down".

Breakdown

After acknowledging the error, the operator presses key OK on the steering wheel and the icon appears in the lower display layer.

Yellow color (light anomaly/breakdown):
Proceed with caution and contact a Service Network workshop as soon as possible.

Red color (serious anomaly/breakdown):
Park the vehicle on the roadside in a non-dangerous area or contact the Dealer or the 24 hour Client Center number in unusual hours or in a decentralized area.

Two menus are available:

- TRAVEL MENU
- DIALOG MENU

External mirrors and lights can also be adjusted.
When the key is inserted, the present electronic systems perform a test by activating the related lights, enabling the operator to check their efficiency (and learn of the existence of vehicle systems).

https://truckmanualshub.com/
Aquila Trucks Centres

Display structure

Figure 137

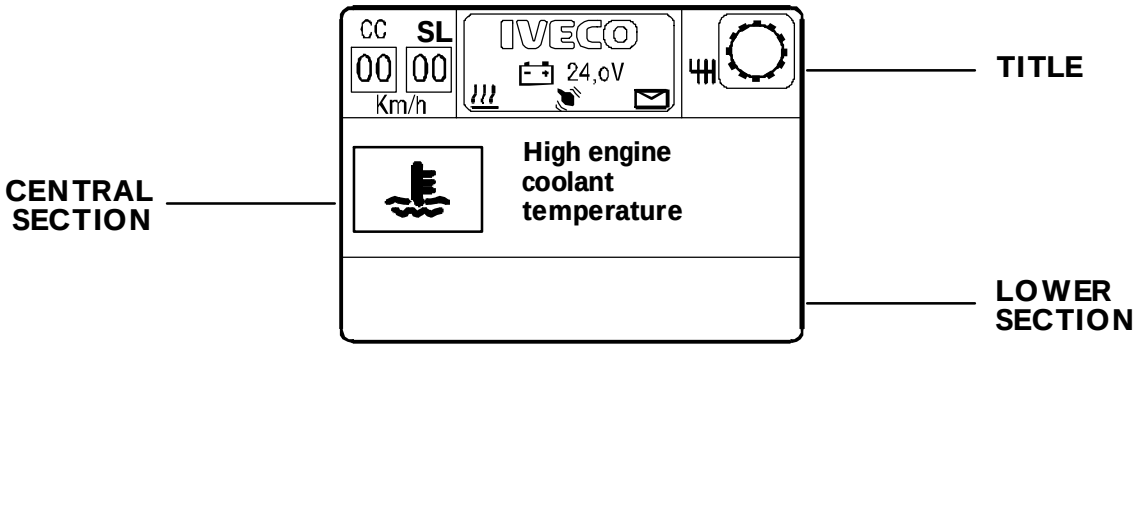

TITLE

- Speed set by Cruise Control
- Speed Limiter set
- Supplementary heater enabled
- Battery voltage
- Radio/RDS information
- Telephone/ EMS message information
- Gears (downshifted/normal gears), suggested gears, auto/manual mode.

CENTRAL SECTION

- Engine oil pressure
- Engine oil level
- Consumption indicator
- Turbo pressure
- Engine oil temperature
- Reservoir, trailer, service air pressure
- Front / rear / trailer brake wear (vehicles with EBS)
- Light setting adjustment
- Mirror positioning
- Failure messages
- Load on the axles (OPT)

LOWER SECTION

- Alarms
- Active functions indications (intarder, etc.)

https://truckmanualshub.com/
Aquila Trucks Centres

Optical status indicators on display

The corresponding icon appears at activation of the following functions of occurence of the following anomalies.

Figure 138

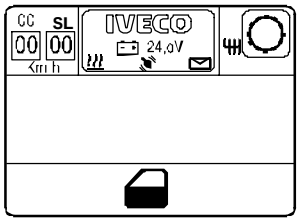

Meaning	Symbol	Colour	Meaning	Symbol	Colour
Pre-heating		yellow	ASR on	ASR	yellow
Cab unhooked Unhooked cab enable		red yellow	ASR off	ASR	yellow
Door open		red	Reduced ABS operation	ABS	yellow
Low front axle brake air pressure		red	Automatic chains		yellow
Low rear axle brake air pressure		red	Trailer without EBS/ABS	ABS	yellow
Low trailer brake air pressure		red	Tipper body		yellow
Loading deck light (tractor only)		yellow	Instrument Cluster trouble	IC	red
Windscreen defroster		yellow	Low hydraulic pressure of third steering axle		red
Minimum engine coolant level		yellow	Low engine coolant level		red
High engine coolant temperature		yellow	Very high engine coolant temperature		red
Low windscreen washer reservoir level		yellow	Low fuel level / Ad Blue		yellow
Front axle brake wear		red	Rear axle brake wear		red
Rear second axle brake worn		red	Brake wear on a specific wheel		red
Power steering low fuel level		yellow	Air filter clogged		yellow
Oil filter clogged		yellow	Water in fuel filter		yellow
Fuel filter clogged		yellow	Engine oil level too high		yellow
Low engine oil level		red	High engine oil temperature		red
Low engine oil pressure		red	High engine oil temperature		red
Low parking brake air pressure	P	red	Brake wear on a specific wheel		yellow
Low trailer brake air pressure		red	Low/poor generator charge	- +	yellow red

After recognizing the error, the operator must press OK on the steering wheel and the icon appears in the lower display section.

https://truckmanualshub.com/
Aquila Trucks Centres

Meaning	Symbol	Colour	Meaning	Symbol	Colour
TCO ECU failure	TCO	red	BM ECU failure	BM	red
Parking brake failure		red	CM ECU failure	CM	red
Second importance light failure		yellow	Air conditioning system failure		red
BC ECU failure	BC	yellow/red	Additional heater failure		red
ECM failure	ECM	yellow/red	SWI ECU failure	SWI	red
EuroTronic failure		red	RFC ECU trouble/fault	RFC	yellow/red
EBS failure	EBS	red	First importance light failure		red
ABS failure	ABS	red	Right turn indicator fault		yellow
Intarder failure	R	red	Left turn indicator fault		yellow
FFC ECU trouble/fault	FFC	yellow/red	Central locking system failure		yellow
DDM ECU failure	DDM	red	EAC defect	EAC	yellow
Distance alarm signalling		yellow	EAC failure	EAC	red
ACC sensor defect		red	Trailer EBS failure	EBS	red
ACC sensor dirty		red	Reduced power and engine		yellow
ARB enabled		yellow	Rotating headlights		yellow
TPM steering axle low tire pressure		yellow	VCM failure	VCM	yellow/red
TPM engine axle low tire pressure		yellow	SCR failure	SCR	yellow/red
Trailer: attention thresholds reached		yellow	ASR / ESP disabled	ASR ESR	yellow
Trailer: anti-theft enabled		yellow	ESP enabled	ESP	yellow
Airbag default/defect		red	Power steering failure		red
EM defect	EM	yellow	Power steering liquid low pressure		yellow
EM failure	EM	red			
CDM ECU failure	CDM	red			

https://truckmanualshub.com/
Aquila Trucks Centres

Display instruments

Figure 139

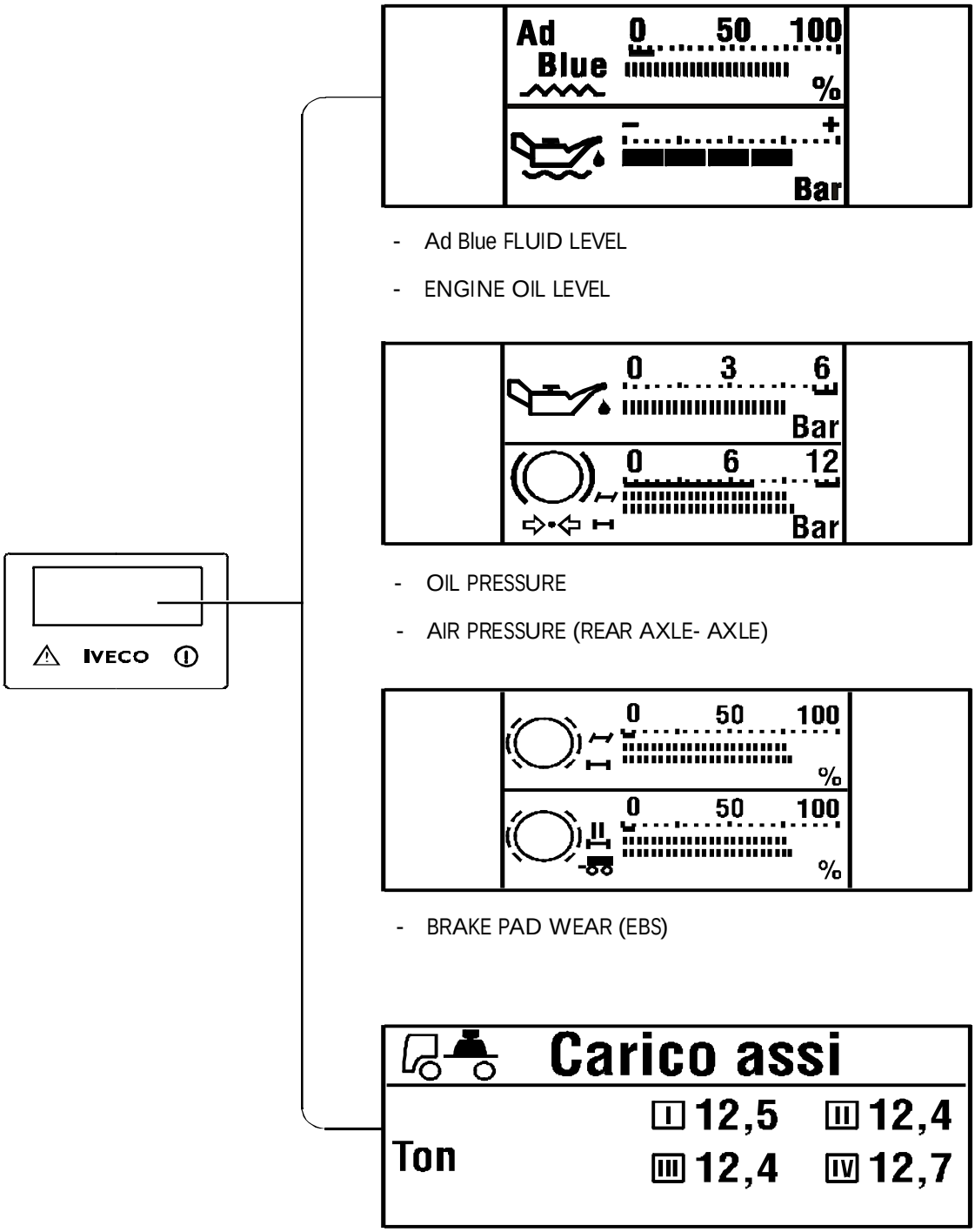

- Ad Blue FLUID LEVEL
- ENGINE OIL LEVEL
- OIL PRESSURE
- AIR PRESSURE (REAR AXLE- AXLE)
- BRAKE PAD WEAR (EBS)
- LOAD GAUGE ON AXLES

https://truckmanualshub.com/
Aquila Trucks Centres

BODY CONTROLLER (IBC3)

The Body Controller is the central unit which represents the heart of electrical system and together with MET central unit make up Easy Mux system.

The two central units communicate between each other via CAN line (BCB).

Instead through the CAN line (VDB), the IBC3 communicates with the vehicle different electronic systems.

Body controller inputs:

- Coolant low level contact
- Windscreen wiper liquid low level contact
- Alternator warning lamp
- Key 15
- Additional heater
- Brake system air low pressure sensor
- Emergency switch
- Door unlocking pushbutton
- Rear fog lights switch
- External lights switch
- Headlamp attitude rectifier
- Sunroof unlock/lock control
- Unfastened seat belts
- TGC unlock/lock
- Rear cross differential locking control
- Front differential locking control
- Longitudinal differential locking control
- Trailer handle pressure gauge
- Heater immediate engagement control

Signals received via CAN network:

- Gear in
- Trailer brake signal

Body controller outputs:

- Controls illumination
- Windscreen washer electric pump
- Lh / rh clearance headlamp
- Steps light
- Internal roof lamp
- Sun roof opening / closing relay
- Horns power supply relays
- Lighter
- Windscreen electric defroster power supply
- Remote control switch for inserting loads with key in
- Fitter outputs
- TGC (Current General Remote Control Switch) / CGE (Emergency General Control) /MBS (Current General Control)
- Central door lock motor control
- Additional main beam headlight control
- Additional heater engagement control

https://truckmanualshub.com/
Aquila Trucks Centres

IBC3 displays following information on Instrument Cluster:

- Fuel level
- Oil level
- External air temperature
- Brake circuit air pressure

IBC3 controls following devices:

Lights (parking lights, dipped headlights, additional lights, front fog lights, rear fog lights, blinkers, stop lights, reverse lights, steps lights, cab lights, high roof cab lights, headlights attitude)

- Central locking
- Air-conditioner
- Additional heater
- Air drier

Limp Home:

It identifies central unit status in case of micro processor failure; in this condition, following functions are ensured:

- Power supply (battery voltage, key 30, 15 and 15/1) from central unit to other cab loads
- Switching off of disabled TGC
- Switching on of windscreen wiper at minimum speed (or keeping previous control)
- Switching on steps lights
- Switching on clearance lights

https://truckmanualshub.com/
Aquila Trucks Centres

BODY CONTROLLER

Figure 140

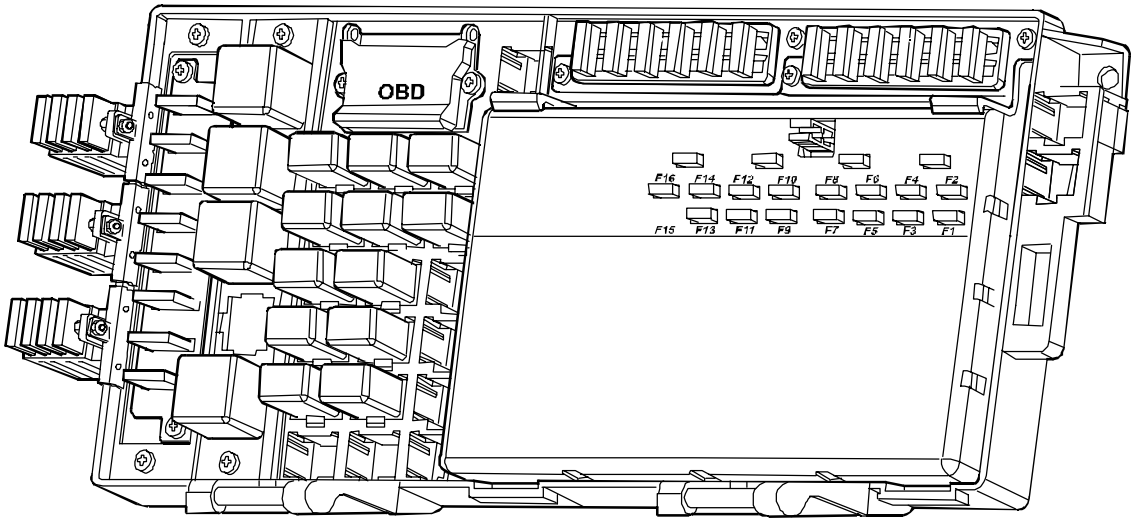

112595

Linking connectors

Figure 141

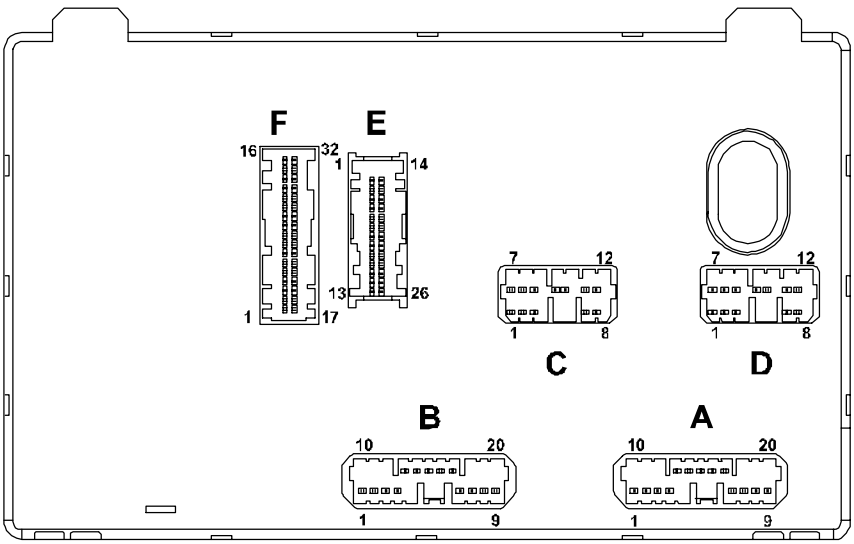

108903

https://truckmanualshub.com/
Aquila Trucks Centres

Body controller connector "A"

Pin	Description	Cable colour code
1	-	-
2	Positive from TGC (+30)	7905
3	-	-
4	-	-
5	-	-
6	Positive +30 for VCM / SWI	7906
7	Direct battery positive (+batt)	7768
8	Positive from service relay (+15/1)	8887
9	-	-
10	-	-
11	-	-
12	-	-
13	-	-
14	Positive from TGC (+30)	7905
15	Direct battery positive (+Bat) for DTCO (Tachograph) / central locking	7768
16	Direct battery positive (+batt) for BM (Bed Module)	7906
17	-	-
18	-	-
19	-	-
20	-	-

Body controller connector "B"

Ref.	Description	Cable colour code
1	Positive +15 for air conditioner / body builders (ST14A)	8871
2	Positive from service relay (+15/1)	8887
3	Positive +30 for cigar lighter / diagnostic interface	7772
4	Positive +30 for body builders (connector 72072C)	7796
5	-	-
6	Positive +30 for voltage reducer	7772
7	Positive +15 from ignition key	8887
8	Positive from TGC (+30)	7905
9	Positive +30 for body builders (ST14A / connector 72072D)	7772
10	-	-
11	-	-
12	-	-
13	-	-
14	Positive from TGC (+30)	7905
15	-	-
16	Positive +15 for brake system drier heater coil	8840
17	Positive +30 for horn relay	1116
18	-	-
19	-	-
20	-	-

https://truckmanualshub.com/
Aquila Trucks Centres

Body controller connector "C" (grey)

Ref.	Description	Cable colour code
1	Power supply for brake system air pressure sending unit	5560
2	Positive +15 for alternator	8876
3	Air pressure sending unit signal (front brakes)	5562
4	Air pressure sending unit signal (rear brakes)	5561
5	Windscreen wiper motor fixed stop (31B)	8873
6	-	-
7	Positive from TGC (+30)	7905
8	Earth for brake system air pressure sending unit	0560
9	Front marker light power supply	3339
10	Windscreen wiper motor high speed power supply (53B)	8881
11	Windscreen washer pump power supply	8886
12	Windscreen wiper motor low speed power supply (53)	8882

Body controller connector "D" (blue)

Ref.	Description	Cable colour code
1	Earth from windscreen washer fluid low level sensor	5521
2	-	-
3	Ground	0000
4	Charge signal from alternator	7009
5	Signal from external temperature sensor	7573
6	Earth from radiator water low level sensor	5527
7	CAN H line (BCB)	White
8	CAN L line (BCB)	Green
9	CAN L line (VDB)	White
10	CAN H line (VDB)	Green
11	External temperature sensor earth	0550
12	Control unit IBC3 K line (diagnostic connector pin 8)	2995

https://truckmanualshub.com/
Aquila Trucks Centres

Body controller connector "E" (blue)

Ref.	Description	Cable colour code
1	Ground from left door button	0003
2	Ground from right door button	0003
3	Ground from parking brake engaged switch	6662
4	Hazard lights signal for body builders (ST14B)	1113
5	-	-
6	-	-
7	-	-
8	Positive + 15 for cab tilt enablement switch	8871
9	Positive for opening TGC (TGC off)	8045
10	Positive +15 for ECM / VCM	8051
11	-	-
12	-	-
13	Positif +15 pour Cluster / DTCO / MET / Eurotronic 2	8871/8802
14	Engine running signal for air conditioner / body builders (ST14A) Signal moteur en route pour climatiseur / dispositifs d'équipement (ST 14A)	7778
15	Vehicle parked signal for body builders (ST14A)	5515
16	Reversing signal for body builders (ST14A)	2268
17	-	-
18	Positive for enablement of supplementary headlight activation relay	2229
19	Positive for sunroof closure control relay	7011
20	Positive for sunroof opening control relay	7010
21	Positive for TGC closure (TGC On)	8035
22	Positive for headlamp washer pump relay	8820
23	-	-
24	Positive for fifth wheel lighting switch / side lights for body builders (ST14B)	3333
25	Positive for interior courtesy light	4440
26	Positive for step light	4445

Body controller connector "F"

Ref.	Description	Cable colour code
1	Positive +30 for Cluster	7906
2	Signal from head light alignment corrector control switch	9936
3	Positive for independent water heating pump enablement	7786
4	Ground from radiator low level sensor (for warning light)	5520
5	Ground from supplementary headlight switch	2229
6	-	-
7	Ground from longitudinal differential lock switch	0903
8	Ground from hatch opening control switch	0970
9	Ground from supplementary heater activation switch	0501
10	-	-
11	Ground from TGC activation switch (TGC On)	0945
12	Ground from exterior lighting switch (exterior light)	3333
13	Ground from rear fog lamp switch	2284
14	-	-
15	-	-
16	-	-
17	Positive for symbol lighting	4442
18	Head lamp alignment corrector control switch power supply	8871
19	-	-
20	Ground from trailer brake hand wheel switch (brake light)	0927
21	-	-
22	Ground from rear transverse differential lock switch	0904
23	Ground from front differential lock switch	0902
24	Ground from hatch opening control switch	0971
25	Control signal for central locking - locking	0064
26	Ground from hazard light switch	1113
27	Ground from TGC off switch (TGC Off)	0946
28	Ground from exterior lighting switch (low-high beams)	2237
29	Ground from fog lamp switch	2228
30	-	-
31	Ground from courtesy light on switch	0941
32	Control signal for central locking - locking	0065

https://truckmanualshub.com/
Aquila Trucks Centres

CHASSIS ELECTRONIC MODULE (M.E.T.)

MET central unit is placed on the chassis, actuates the controls and collects signals from sensors installed outside the cab, and communicates with ICB3 through CAN BCB network.

Figure 142

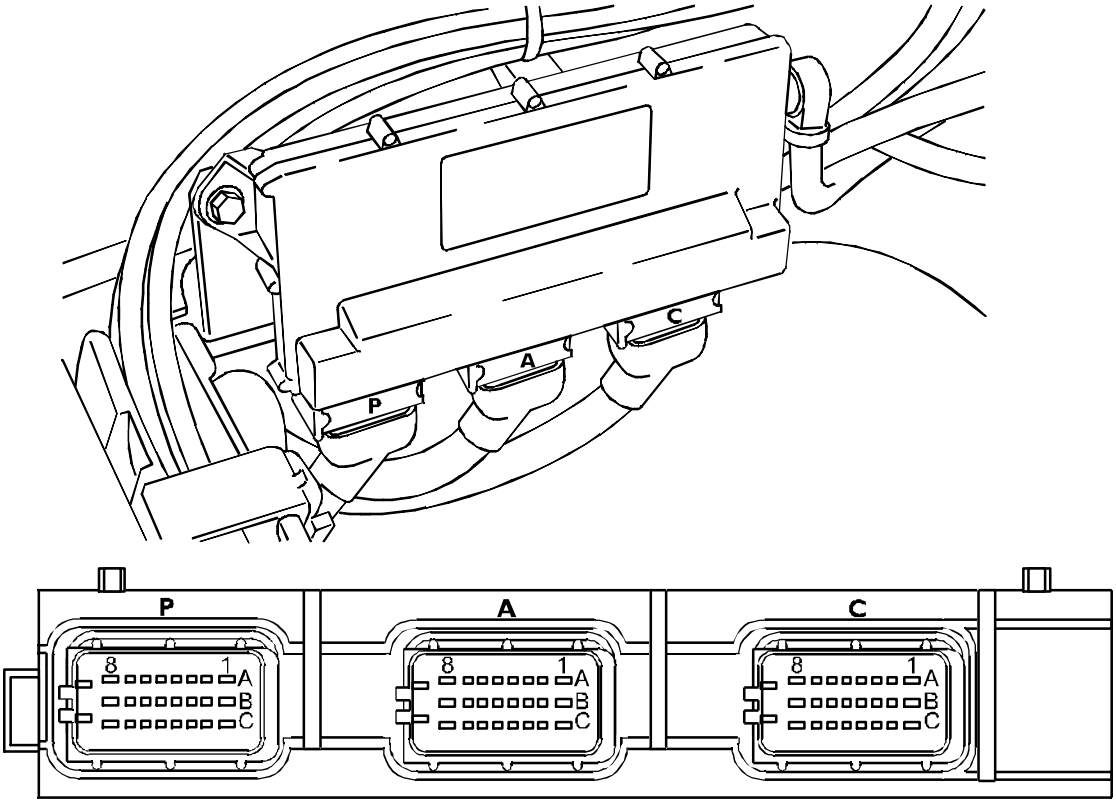

It supplies locked positive (+15) to UDS central unit (Denox 2), trailer, fitters and checks vehicle illumination. It supplies other loads too, such as air-conditioner compressor and fuel filter and pre-filter heating.

Distributes key 15 to:

- UDS (DENOX 2)
- Trailer
- Fitters

Powers the following lights:

- Parking lights
- Parking lights for fitters
- Marker
- Brake lights
- Fog lights and rear fog lights
- Direction indicators
- Reverse gear

Powers other loads:

- The conditioner compressor
- Fuel filter and prefilter heating
- ECAD solenoid valves
- Servoshift solenoid valve

Acquires the following signals:

- Reverse gear engaged
- Front differential locked signals
- Rear differential locked signals
- Longitudinal differential lock signals

https://truckmanualshub.com/
Aquila Trucks Centres

- Underdrive gears in
- Engaging 5th and 6th gears
- Suspensions air low pressure
- Hydraulic guide liquid low pressure
- Brake liquid low pressure
- Air-conditioning system high or low pressure
- Air-conditioning system high or low pressure
- Front axle brake pads wear status
- Rear axle brake pads wear status
- Front parking brake
- Front brakes converter cylinder end switch
- Rear brakes converter cylinder end switch
- Side PTO in
- Rear or total PTO in
- Clogged air filter
- Clogged air filter
- Fuel level
- Engine oil level

Pin - Out

Pin	Description	Cable colour code
A-1	Reversing light positive +30	2226
A-2	Positive +30 for trailer brake lights	1179
A-3	Positive +30 for left brake light	1177
A-4	Positive +30 for right brake light	1172
A-5	Positive +30 for number plate light	3307
A-6	Positive +30 for right rear side lights	3315
A-7	Positive +30 for left rear side lights	3330
A-8	Positive +30 for right trailer side lights	3339
B-1	Positive +30 for trailer rear fog lamp	2283
B-2	Positive +30 for rear fog lamps	2283
B-3	Positive +30 for right trailer direction indicators	1185
B-4	Ground from transverse differential lock engaged indicator switch (1st rear axle)	0040
B-5	Ground from transverse differential lock engaged indicator switch (2nd rear axle)	0041
B-6	Ground from longitudinal differential lock engaged indicator switch	6603
B-7	Positive +30 for rear marker lights	3306
B-8	Positive +30 for left rear side lights	3305
C-1	Positive +15 for trailer	8075
C-2	Positive +30 for left rear direction indicators	1120
C-3	Positive +30 for right rear direction indicators	1125
C-4	Positive +30 for left trailer direction indicators	1180
C-5	Ground from ECAS air system low pressure switch / Earth from front longitudinal differential lock indicator switch (8x8)	6401/6643
C-6	Ground from rear brake wear sensor (1st rear axle)	6667
C-7	Ground from rear brake wear sensor (2nd rear axle)	6667
C-8	-	-

https://truckmanualshub.com/
Aquila Trucks Centres

A connector

Pin	Description	Cable colour code
A-1	Positive +30 for left high beam	2219
A-2	Positive +30 for right low beam	2223
A-3	Positive +30 for right high beam	2221
A-4	Positive +30 for left low beam	2231
A-5	Signal from water in fuel filter sensor	5530
A-6	Ground from front wheel block wear sensor (2nd axle)	6664
A-7	Ground from front transverse lock engaged signal switch (1st axle)	6659
A-8	Positive +30 for diesel heater coil	7733
B-1	Positive +30 for diesel pre-filter heater coil	7753
B-2	Head lamp alignment corrector control	9936
B-3	Ground from switch for circuit II power steering oil flow indicator	6632
B-4	Ground from power steering fluid low level sensor	5525
B-5	Ground from front transverse lock engaged indicator switch (2nd axle)	6659
B-6	Ground from air filter clog switch	6663
B-7	Ground from front wheel block wear sensor (1st axle)	6664
B-8	Positive +30 for fog lights	2228
C-1	-	-
C-2	Positive +30 for front side lights	3339
C-3	Positive +15 from IBC3	8871
C-4	CAN L line (BCB)	Green
C-5	CAN H line (BCB)	White
C-6	Positive +30 for front / right side direction indicators	1123
C-7	Positive +30 for front / left side direction indicators	1129
C-8	Positive +15 for water in fuel filter presence sensor	8879

C connector

Pin	Description	Cable colour code
A-1	Positive +30 for ECAD regeneration solenoid (air system)	9043
A-2	Positive +30 for ECAD discharge solenoid (air system)	9043
A-3	Positive +30 for rear transverse differential lock solenoid	9325
A-4	Positive +30 for longitudinal differential lock solenoid	9323
A-5	Positive +30 for front transverse differential lock solenoid	9063
A-6	Ground from switch in front power steering lock valve	6631
A-7	Ground from side PTO engaged indicator switch (without EM)	6132
A-8	Ground from low hydraulic circuit pressure indicator with 3rd steering axle	0491
B-1	Ground from trailer brake circuit indicator switch	6689
B-2	Ground from distributor crawler gear engagement indicator switch (4x4)	9976
B-3	Engine oil level sending unit signal	5505
B-5	Fuel level sending unit	5557
B-6	Ground from total/rear PTO engaged indicator switch (without EM)	6131
B-7	Ground from switch in front power steering switch valve	6631
B-8	Positive +15 for UDS control unit (SCR system)	8540
C-1	Ground	0000
C-2	Engine oil level sending unit earth	5506
C-3	Fuel level sending unit	5555
C-4	Ground from four wheel drive engagement indicator switch	6602
C-5	Ground from reverse engagement indicator switch	2268
C-6	Ground from crawler gear engagement indicator switch	9992
C-7	Ground from fuel filter blocked indicator switch	5531
C-8	-	-

https://truckmanualshub.com/
Aquila Trucks Centres

S.W.I. (Steering wheel / steervator interface)

The function of this electronic center located on the steering column is to group together all controls from the two steervator levers and the steering wheel.
It is connected to the vehicle electronic system via a CAN line.

Figure 143

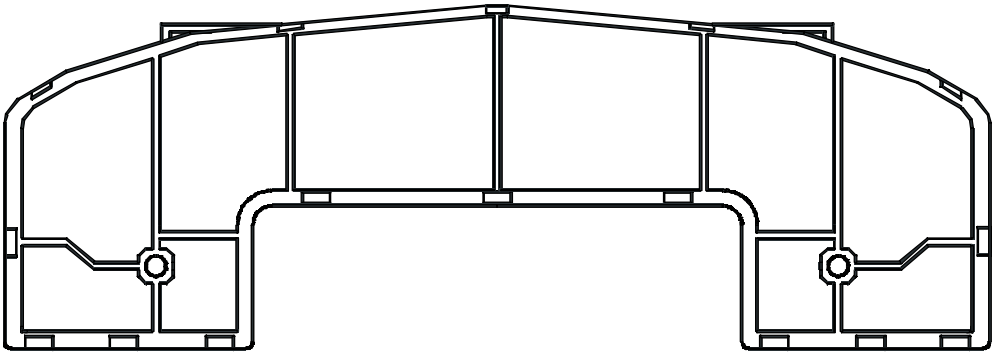

UPPER VIEW

Figure 144

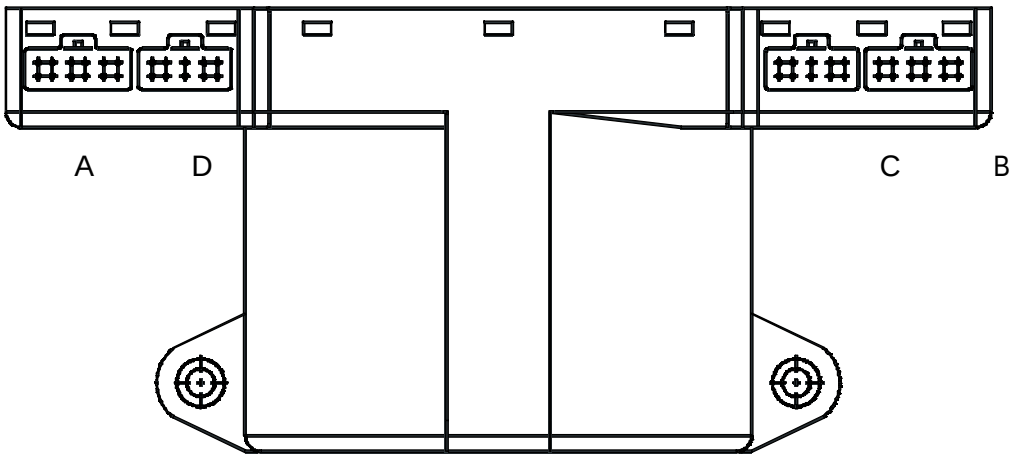

FRONT VIEW

50240

https://truckmanualshub.com/
Aquila Trucks Centres

SWI functions

Figure 145

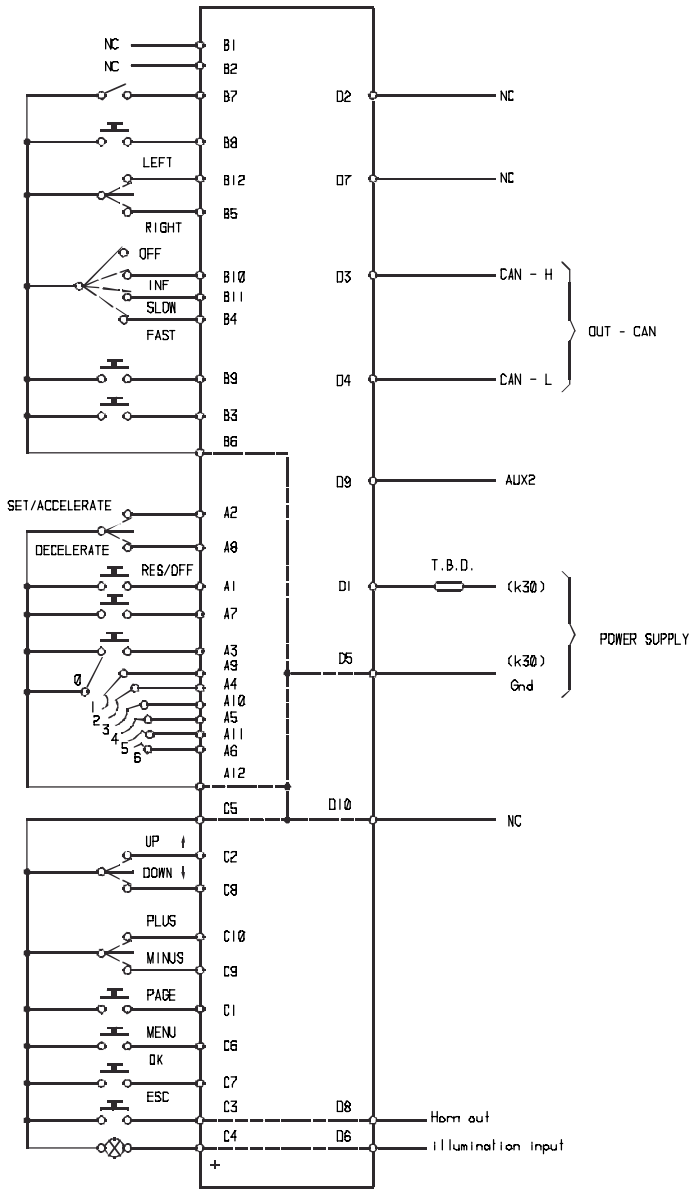

Inputs	Outputs
Key switch	Messages on CAN line
Cruise Control keys	
INTARDER lever	
Change gear	
Flood/dipped lights	
Direction indicators	
Windshield wiper	
Controls on steering wheel Control lighting	

https://truckmanualshub.com/
Aquila Trucks Centres

Connectors

Figure 146

A - Right lever		B - Left lever		C - Steering wheel		D	
1	Cruise Control (Resume)	1	-	1	Display page selection	1	+ 30
2	Cruise Control (Set/Acc.)	2	-	2	Display cursor movement (high)	2	-
3	Change gear (down)	3	Wiper electro pump controls	3	Horn	3	CAN H
4	Intarder (pos.2)	4	Wiper (top speed)	4	Lever lighting (output)	4	CAN L
5	Intarder (pos.4)	5	Direction indicators (right)	5	Earth	5	Earth
6	Intarder (pos.6)	6	Earth	6	Menu selection / confirmation	6	Lever lighting (input)
7	Change gear (up)	7	Flood lights on	7	Main display return (instruments)	7	-
8	Cruise Control (deceler.)	8	Light flashes	8	Display cursor movement (low)	8	Horn (output)
9	Intarder (pos.1)	9	Wiper (one stroke)	9	Control (-)	9	AUX 2
10	Intarder (pos.3)	10	Wiper (intermittent)	10	Control (+)	10	Earth
11	Intarder (pos.5)	11	Wiper (low speed)				
12	Ground	12	Direction indicators (left)				

https://truckmanualshub.com/
Aquila Trucks Centres

SPIRALED CONTACT

Located below the steering wheel.
Its function is to collect all controls present on the steering wheel and send them to the SWI center.

Figure 147

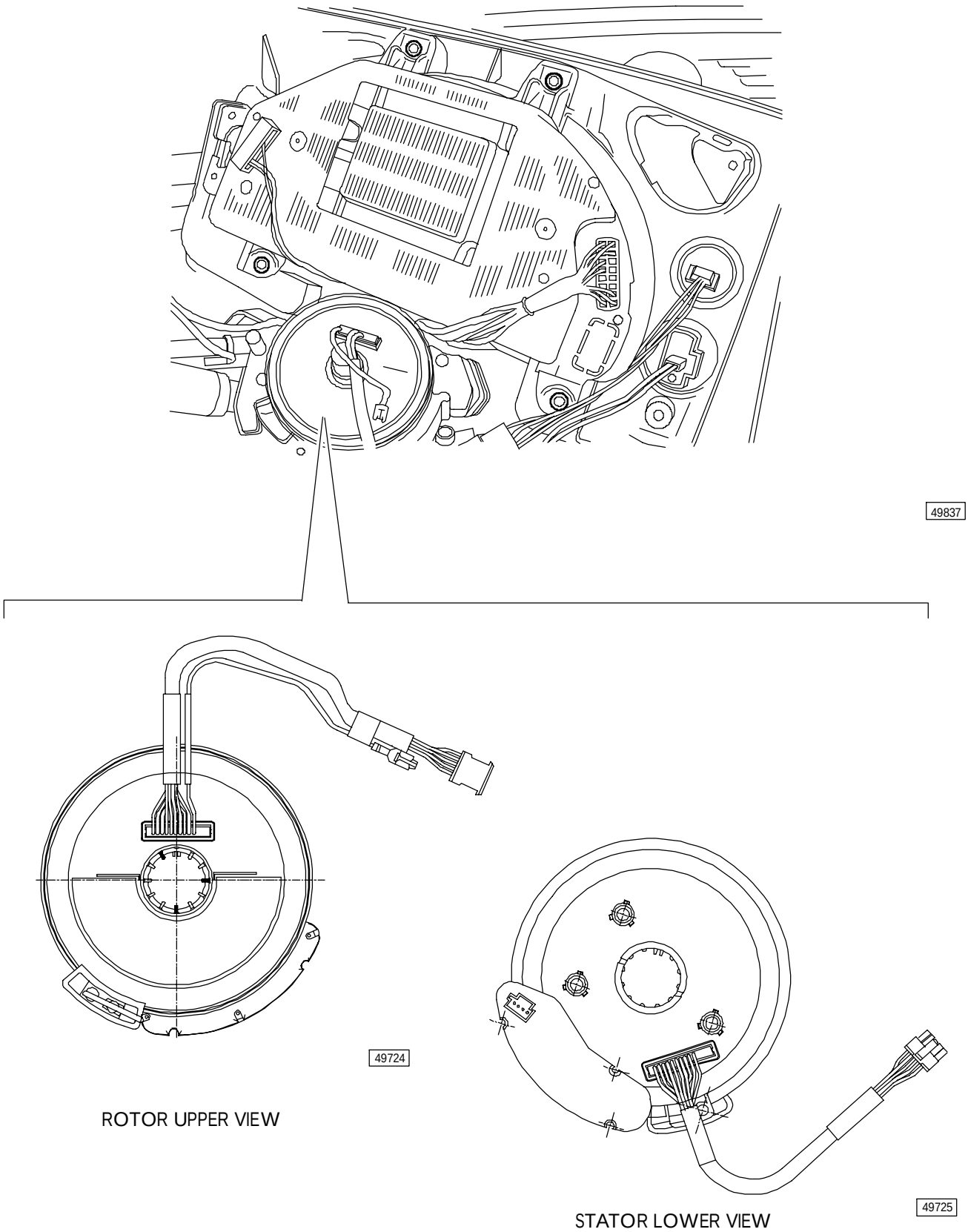

https://truckmanualshub.com/
Aquila Trucks Centres

STEERING COLUMN (COMPONENT LOCATION)

Figure 148

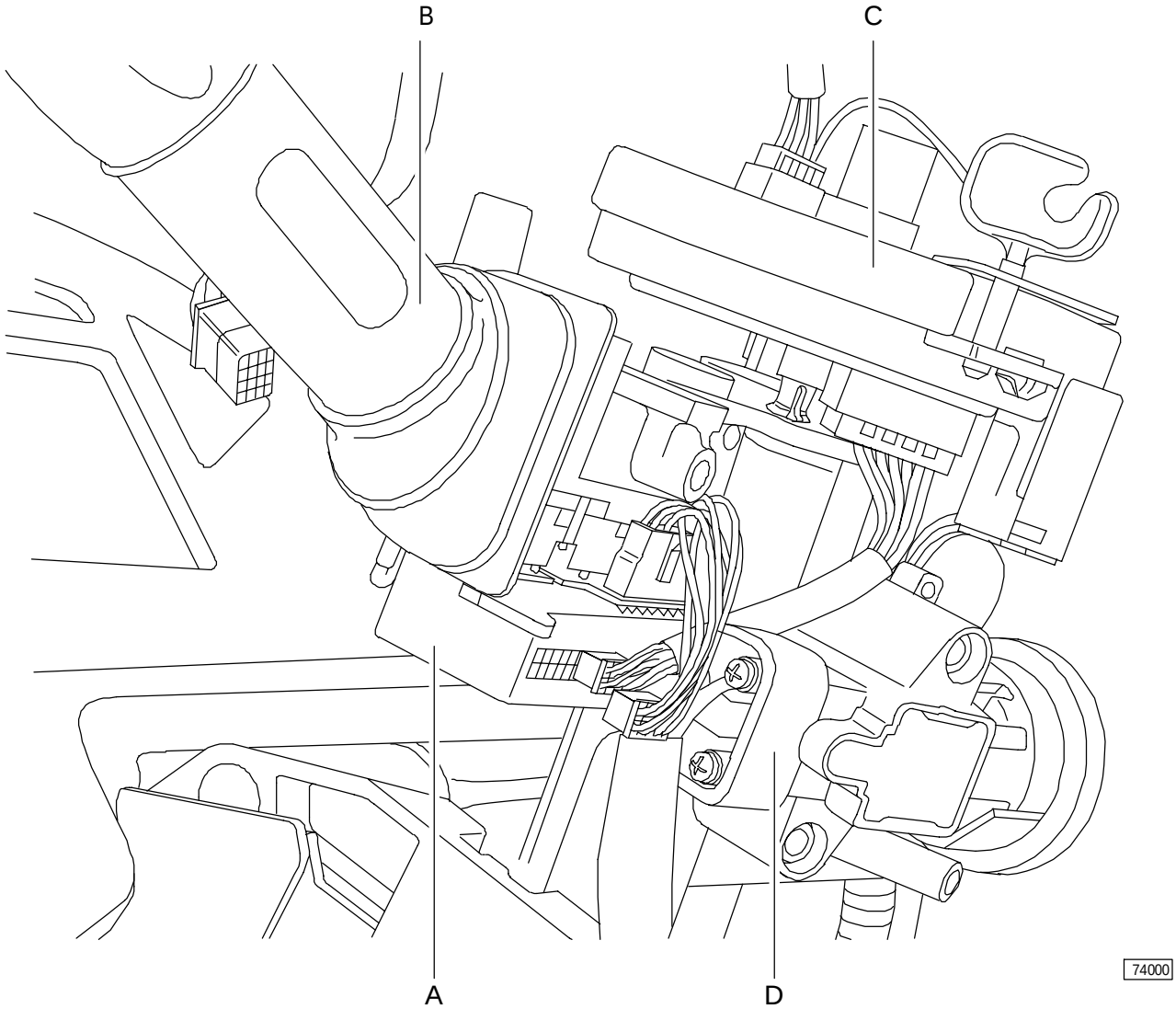

A. S.W.I center. - B. Steervator - C. Spiraled contact - D. Start block

NOTE Follow the procedures described in the following pages in case of spiraled contact disassembly.

https://truckmanualshub.com/
Aquila Trucks Centres

Figure 149

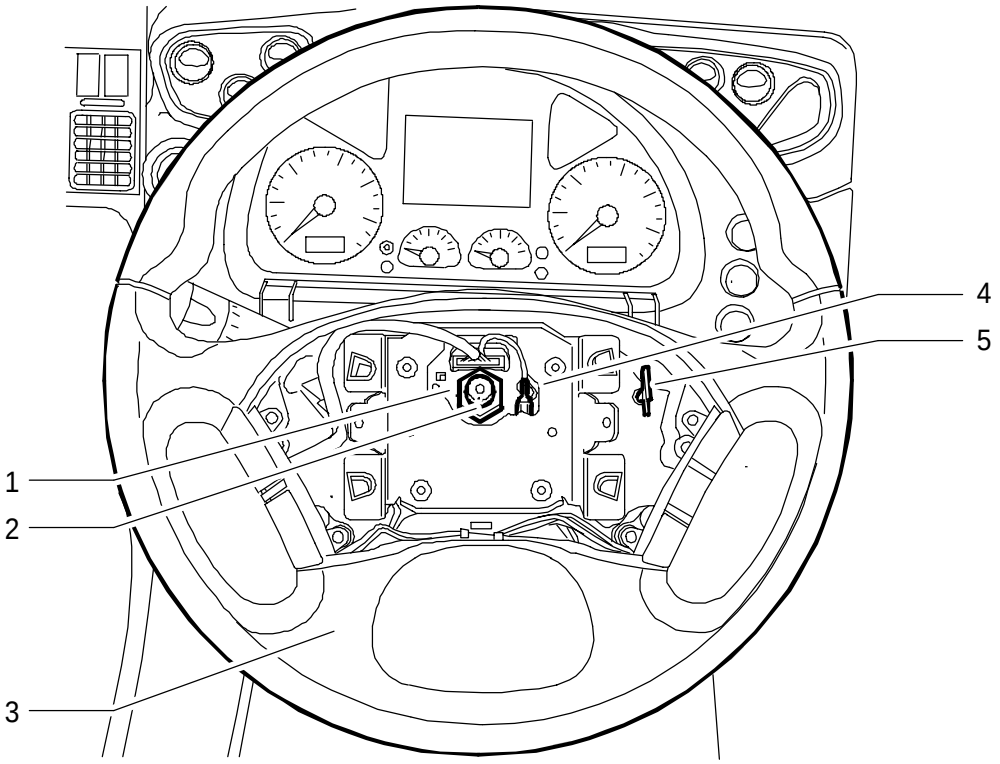

Carefully follow the procedures described hereunder to replace the spiraled contact, to avoid damaging the spiraled cable contained in its box when disassembling and aligning the steering wheel incorrectly.

Disconnect mass cable connection (4).

Remove nut (1) and mark steering wheel assembly position on shaft (2) and remove the steering wheel (3).

https://truckmanualshub.com/
Aquila Trucks Centres

Figure 150

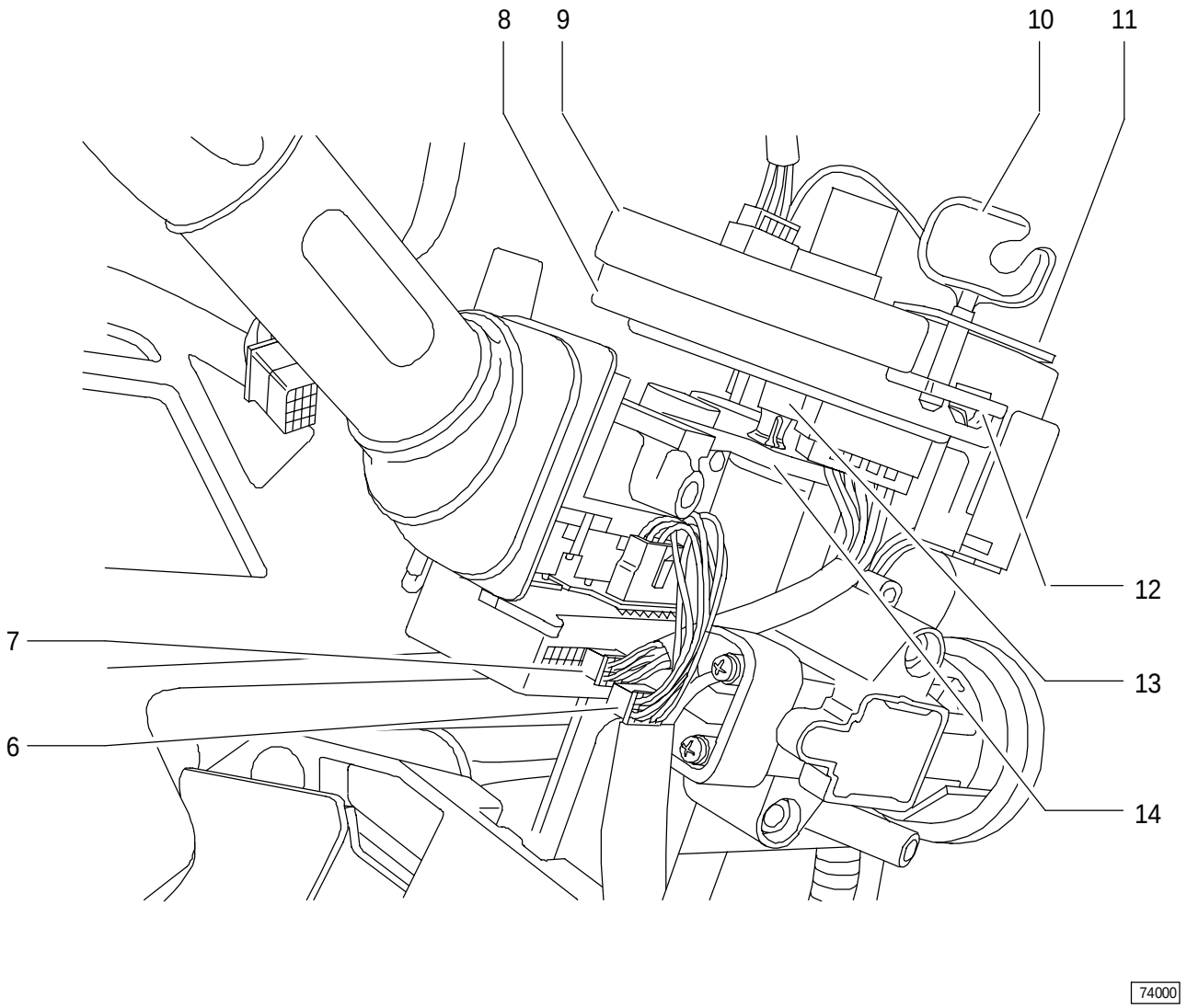

Disconnect electrical connections (6 and 7) from the S.W.I.

Secure contact rotor (9) to its container by inserting key (10) into slots (11 and 12), to prevent rotor (9) and stator (8) from rotating during disassembly.

Keep this situation until assembly. In the lack of a key, use an adequate size nut and bolt.

Carefully raise the contact so elastic retainer pins (13) are removed from support (14). Store it carefully.

https://truckmanualshub.com/
Aquila Trucks Centres

Figure 151

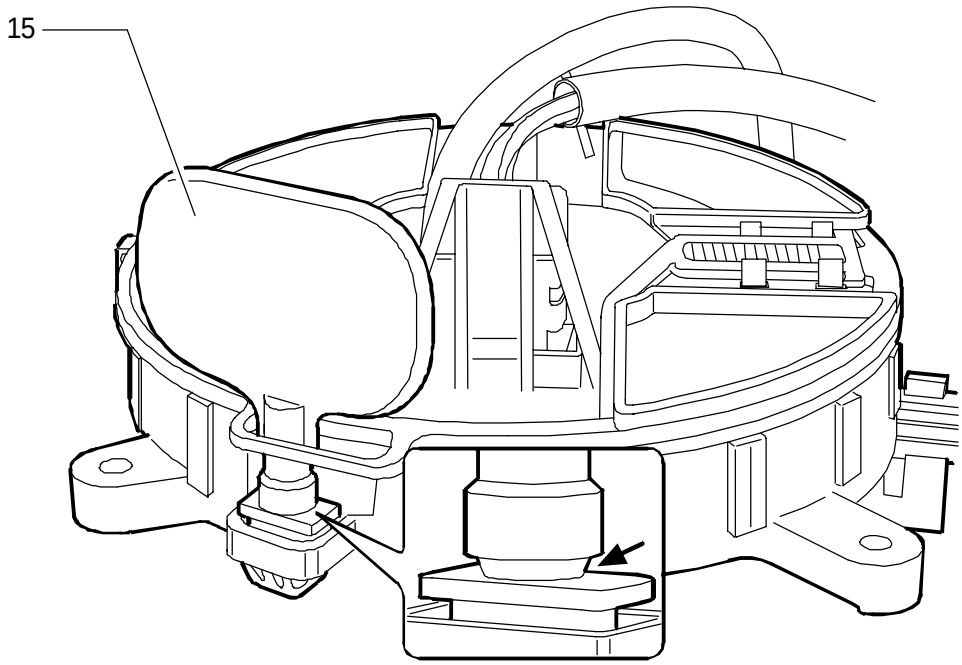

Invert the sequence of operations described above for reassembly.

The spiraled contact is supplied spare with its stop key (15) assembled as shown in the figure. After assembly on the steering wheel control support, rotate the key to cause breakage at the point indicated by the arrow and return it to steering wheel seat (5).

https://truckmanualshub.com/
Aquila Trucks Centres

B.M. (BED MODULE)

Positioned at the cab rear

Figure 152

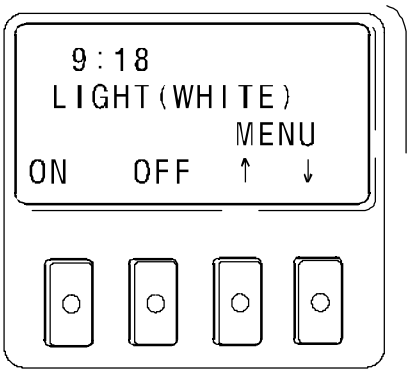

106971

The B.C. identifies its presence but CANNOT be diagnosed.

Its functions are as follows
(variable configuration according to vehicle accessories):

- Time in hours and minutes
- Switching on/off of cab interior lights (selection of white/nightime lights).
- Opening/closing doors.
- Opening/closing electric windows.
- Opening/closing electric hatch.
- Lowering/raising sun blinds.
- Switching radio on/off
- Radio volume adjustment
- Radio tuning
- Wake up function.
- Switching additional heater on/off.
- Temperature adjustment (only with additional heater switched on). (Automatic).
- Adjustment of heater on time (9 hours max.)

NOTE Press the switch on the instrument panel before adjusting heater temperature.

https://truckmanualshub.com/
Aquila Trucks Centres

E.B.M. (EASY BED MODULE)

E.B.M. (Easy Bed Module) substitutes the previous (B.M.) roughly carrying out same functions. It has three keys and a display with icons for the various functions and the visualisation of the time. The B.M.E. connector is the same as the B.M. and the electrical connections are unchanged.

Figure 153

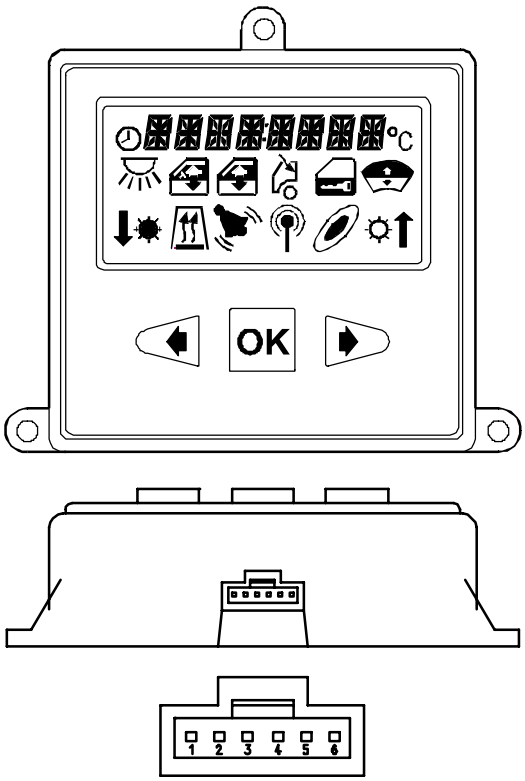

113411

Technical features

- Supplier	ITALAMEC
- Nominal Voltage	24V
- Working Voltage	18V ÷ 32V
- Working Temperature	-30°C ÷ +60°C
- Absorption - stand by	<200mA
- Absorption - normal display mode	<200mA
- Absorption - sleep mode	<3mA
- Data transmission speed (CAN line)	62,500 (BIT/SEC)

Pin - out

Pin	Description	Cable code colour
1	Direct Positive battery (+Bat)	7906
2	Ground	0000
3	-	-
4	CAN L line (BCB)	Green
5	CAN H line (BCB)	White
6	-	-

https://truckmanualshub.com/
Aquila Trucks Centres

E.B.M. Functions

The functions which are carried out by E.B.M. vary according to the configuration of the accessories expected on the vehicle.

Figure 154

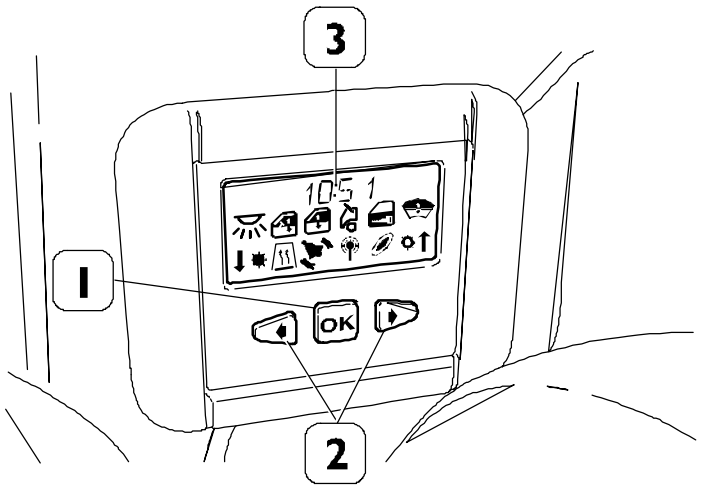

1. Confirmation key - 2. Key for the selection of the desired function - 3. Clock

Function	Symbol	Availability
Indication of hour and minutes		Always
Switching on / off of internal cabin lights (white lights)		Always
Switching on / off of internal cabin lights (red lights)		Only for vehicles with medium-high roofs
Opening/closure doors		Optional
Opening/closure electric windows		Optional
Opening/closure electric trapdoor		Optional
Lowering /raising of sun blinds		Optional
Switching on / off radio Regulation of radio volume Radio tuning		Optional
Switching on / off radio Regulation volume Selection CD tracks		Optional
Alarm clock setting		Only if the alarm clock function is present on the Cluster
Alarm clock repetition (snooze) / switching off (stop)		Only if the alarm clock function is present on the Cluster
Switching on / off supplementary heater Regulation of temperature (if heater is switched on) Regulation of duration of heater functioning (max.9 hours)		Optional

https://truckmanualshub.com/
Aquila Trucks Centres

TACHOGRAPH

Digital Tachograph (DTCO)

Digital Tachograph (DTCO) is a series tachograph for new production vehicles and replaces analogue tachographs in case of failure.
DTCO electrical connections are the same as MTCO electrical connections. In the case of DTCO tachograph, the sensor on the gearbox must be replaced; from electrical point of view, this sensor is the same as former sensor.
The sensor being used for MTCO tachograph (KITAS 2170) cannot be used on new DTCO tachograph, for which KITAS 2171 sensor is mounted.
This sensor (KITAS 2171 sensor) is also compatible with MTCO sensor; however, once it has been configured, it can only be used for that tachograph family.

1. Display
2. Keypad (driver-1)
3. Card feeder slot-1
4. Download interface / calibration interface
5. Keypad driver-2
6. Card feeder slot-2
7. Release button, printer drawer
8. Tear-off edge
9. Keys of Display menu

Figure 155

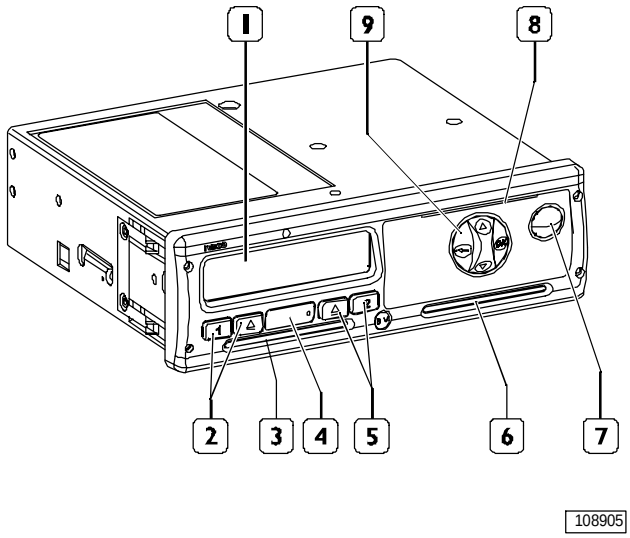

DIGITAL TACHOGRAPH DTCO

Figure 156

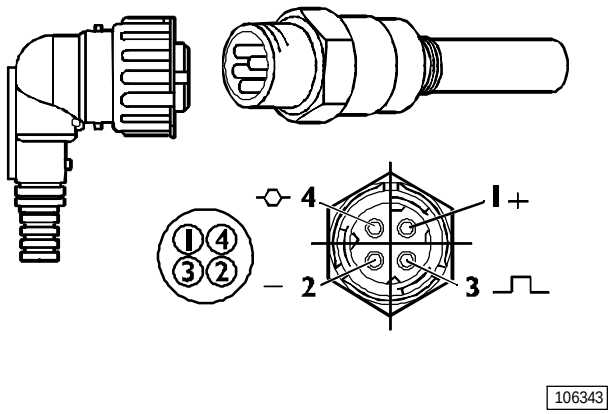

TACHOGRAPH SENSOR (KITAS 2171)

https://truckmanualshub.com/
Aquila Trucks Centres

Figure 157

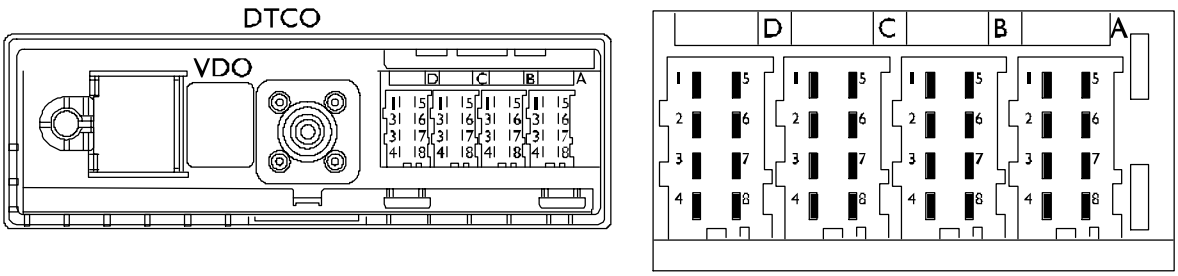

Pin		Description	Cable colour code
A	1	Direct positive battery (+Bat)	7768
	2	Positive ideogram illumination(from IBC3)	4442
	3	Positive +15 (from IBC3)	8871
	4	CAN H line (VDB)	White
	5	Ground	0000
	6	Ground	0000
	7	-	-
	8	CAN L line (VDB)	Green
B	1	Power supply for electronic tachograph transmitter	5514
	2	Ground for electronic tachograph transmitter	0058
	3	Speed signal for electronic tachograph transmitter	5517
	4	Inverted signal from electronic tachograph transmitter	5516
	5	-	-
	6	Speed signal for Intarder / Navigator (pre-disposition)	5540
	7	Speed signal for fitters (ST14A connector)	5155
	8	Space travelled Signal (pre-disposition)	5518
C	1		-
	2		-
	3		-
	4		-
	5		-
	6		-
	7		
	8		-
D	1		-
	2		-
	3		-
	4		-
	5		-
	6		-
	7	K line (14-pin diagnosis connector)	2297
	8		-

https://truckmanualshub.com/
Aquila Trucks Centres

EDC (ECM) SYSTEMS

EDC 7 UC31 electronic control unit

Figure 158

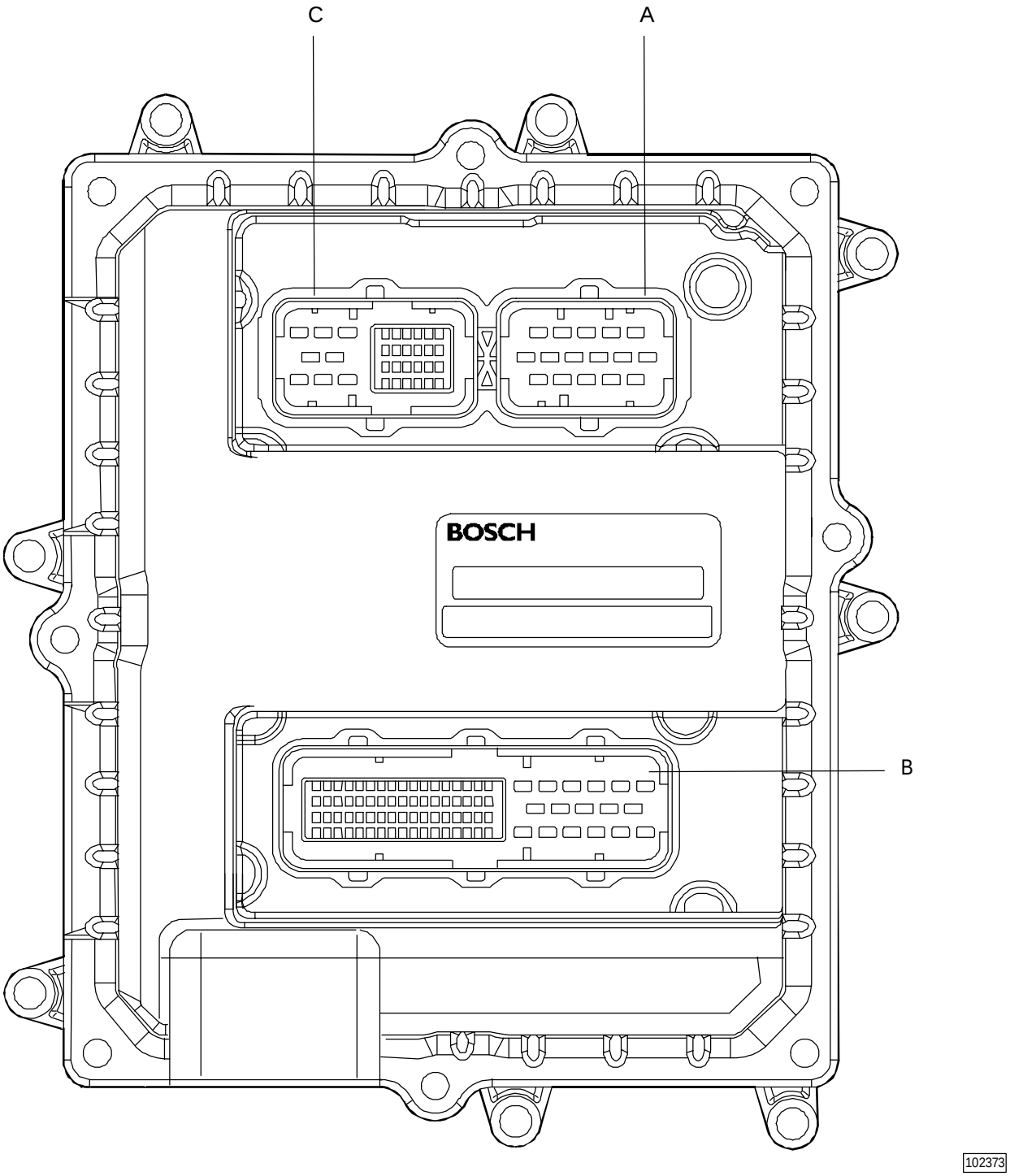

A. Injector connector - B. Chassis connector - C. Sensor connector

https://truckmanualshub.com/
Aquila Trucks Centres

Electric injector connector 3 "A"

Figure 159

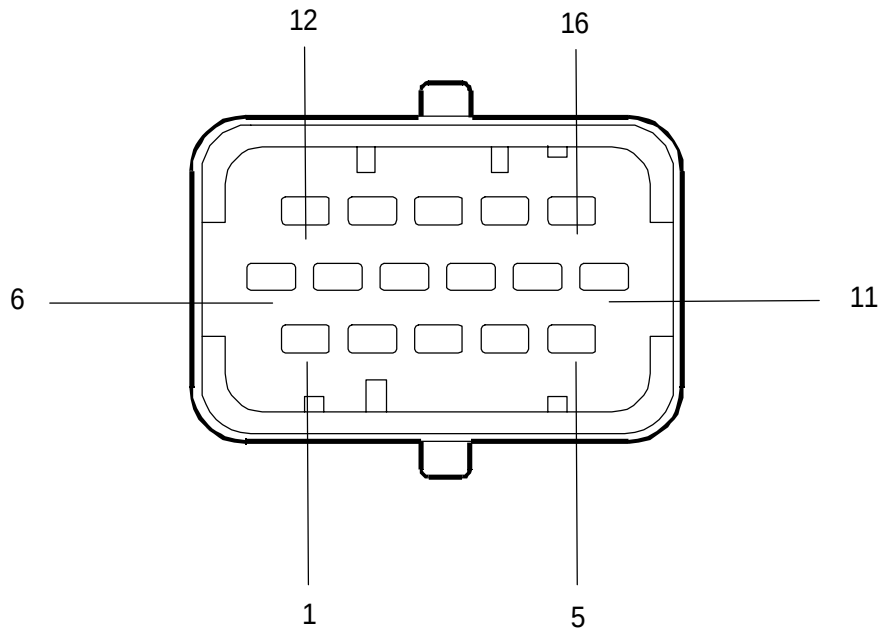

Colour legend

C	ORANGE
A	LIGHT BLUE
B	WHITE
L	BLUE
G	YELLOW
H	GREY
M	DARK BROWN
N	BLACK
W	LIGHT BROWN
S	PINK
R	RED
V	GREEN
Z	PURPLE

Pin	Description (F3B)	Description (F2B)	Cable colour code	
			F3B	F2B
1	-	Cylinder 5 pump injector	-	N
2	-	Cylinder 6 pump injector	-	N
3	Cylinder 4-5-6 pump injector shared cable	Cylinder 4 pump injector	N	N
4	-	Cylinder 1 pump injector control	-	B
5	-	Cylinder 3 pump injector control	-	V
6	Cylinder 2 pump injector control	Cylinder 2 pump injector	B	R
7	Engine brake control solenoid	Engine brake control solenoid	C	C
8	Engine brake control solenoid	Engine brake control solenoid	M	M
9	-	-	-	-
10	-	-	-	-
11	Cylinder 1-2-3 pump injector shared cable	Cylinder 2 pump injector control	R	G
12	Cylinder 3 pump injector control	Cylinder 3 pump injector	V	R
13	Cylinder 1 pump injector control	Cylinder 1 pump injector	B	R
14	Cylinder 4 pump injector control	Cylinder 4 pump injector control	L	L
15	Cylinder 6 pump injector control	Cylinder 6 pump injector control	H	V
16	Cylinder 5 pump injector control	Cylinder 5 pump injector control	Z	Z

https://truckmanualshub.com/
Aquila Trucks Centres

Sensor connector 2 "C"

Figure 160

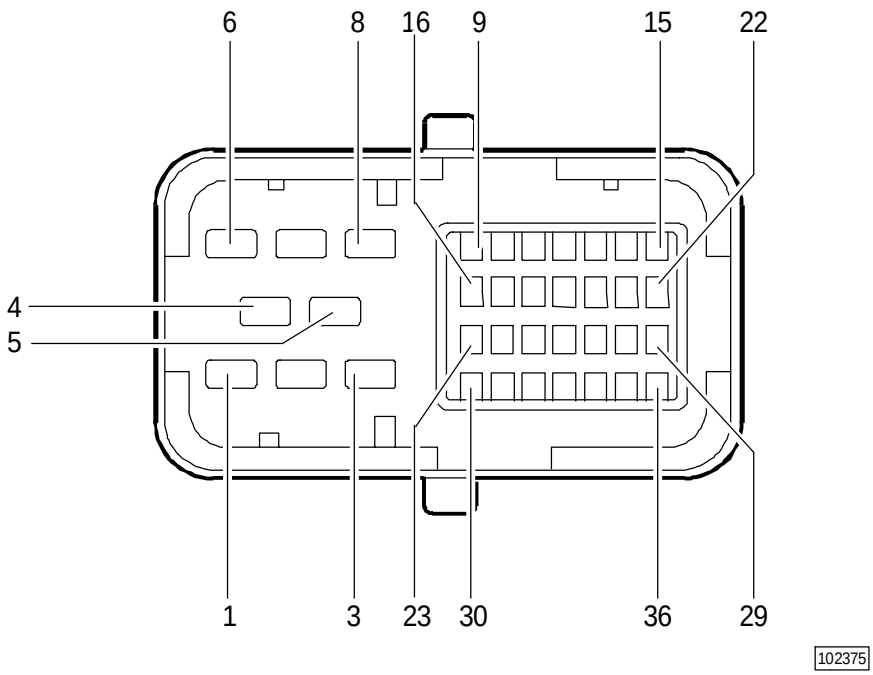

Colour legend

C	ORANGE
A	LIGHT BLUE
B	WHITE
L	BLUE
G	YELLOW
H	GREY
M	DARK BROWN
N	BLACK
W	LIGHT BROWN
S	PINK
R	RED
V	GREEN
Z	PURPLE

Pin	Description	Cable colour code
1	Variable geometry turbine control solenoid	M
2	-	-
3	Variable geometry turbine control solenoid	N
4÷8	-	-
9	Earth for engine rpm sensor on timing system (timing sensor)	B
10	Engine rpm signal on timing system (timing sensor)	R
11÷14	-	-
15	Water temperature sensor signal	S
16 ÷17	-	-
18	Fuel temperature sensor earth	CN
19	Engine rpm sensor earth (flywheel sensor)	N
20	Turbocharger speed sensor earth	M
21÷22	-	-
23	Engine rpm sensor signal (flywheel sensor)	B
24	Oil temperature/pressure sensor earth	M
25	Air temperature/pressure sensor earth	B
26	Water temperature sensor earth	G
27	Oil temperature sensor signal	CN
28	Oil pressure sensor signal	L
29	-	-
30	Turbocharger speed sensor signal	B
31	-	-
32	Oil temperature/pressure sensor power supply	C
33	Air temperature/pressure sensor power supply	R
34	Air pressure sensor signal	V
35	Fuel temperature sensor signal	BR
36	Air temperature sensor signal	C

https://truckmanualshub.com/
Aquila Trucks Centres

Chassis connector I "B"

Figure 161

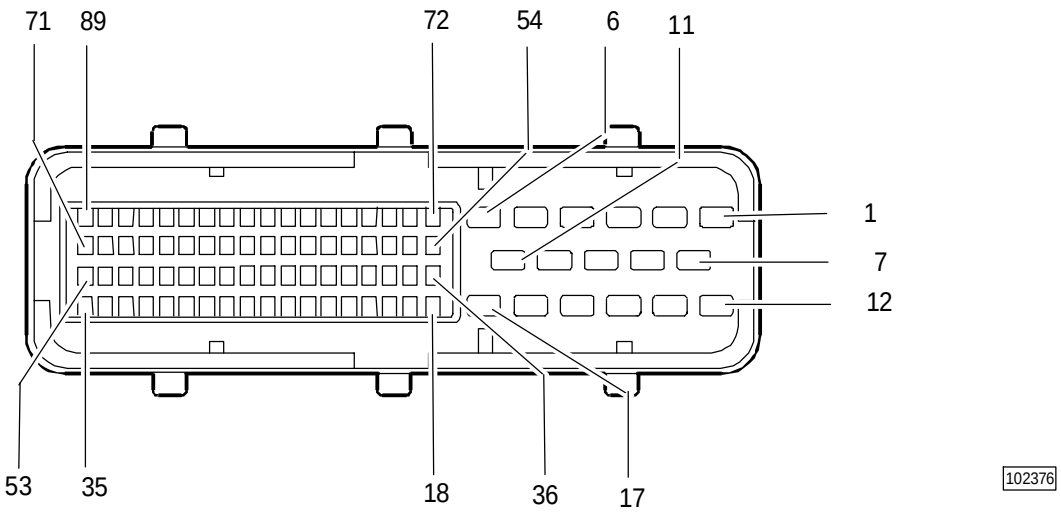

Pin	Description	Cable colour code
1	-	-
2	Control unit power supply positive (+30)	7151
3	Control unit power supply positive (+30)	7151
4	-	-
5	Ground	0151
6	Ground	0151
7	-	-
8	Control unit power supply positive (+30)	7151
9	Control unit power supply positive (+30)	7151
10	Ground	0151
11	Ground	0151
12	Ground enabling preheating activation	0094
13÷15	-	-
16	Ground enabling engine fan activation	0014
17÷25	-	-
26	Signal from fuel air temperature sensor	5173
27	Signal from combustion air humidity sensor	5174
28	Ground for combustion air humidity and temperature sensors	0173
29	Ground from EDC system diagnosis request switch (wiring)	5163
30	-	-
31	-	-
32	Ground from engine bay start-up button	8892
33	Engine rpm signal for bodybuilders (ST14B)	5587
34	Can - L line (ECB)	Green
35	Can - H line (ECB)	White
36÷39	-	-
40	Positive +15 (from IBC3)	8015
41÷46	-	-
47	Ground from engine bay shut-down button	0151
48÷54	-	-
55	Positive for engine brake solenoid (wiring)	9966
56	-	-
57	Positive enabling engine fan activation	5187
58	Ground for engine brake solenoid (wiring)	0043
59÷67	-	-
68	Power for combustion air humidity and temperature sensors	8173
69÷74	-	-
75	Positive enabling preheating activation	9164
76÷84	-	-
85	Ground from EDC system diagnosis request switch (wiring)	5163
86÷88	-	-
89	K line (diagnostic connector pin 2)	2298

https://truckmanualshub.com/
Aquila Trucks Centres

SYSTEM COMPONENTS
Pump injector (78247)

It mainly consists of three components as follows:

A) Solenoid valve

B) Plunger unit

C) Sprayer

These three parts CANNOT be replaced individually and are NOT subject to overhaul.

The pump is actuated mechanically at each cycle by a rocker arm and compresses the fuel contained in the pressure chamber.

The sprayer features the same assembly and operation as a conventional injector; it is opened by the fuel under pressure and injects it fine pulverized into the combustion chamber.

An electro valve controlled directly by the electronic center sets delivery modalities based on the control signal.

An injector holder houses the lower part of the pump injector in the cylinder head.

Figure 162

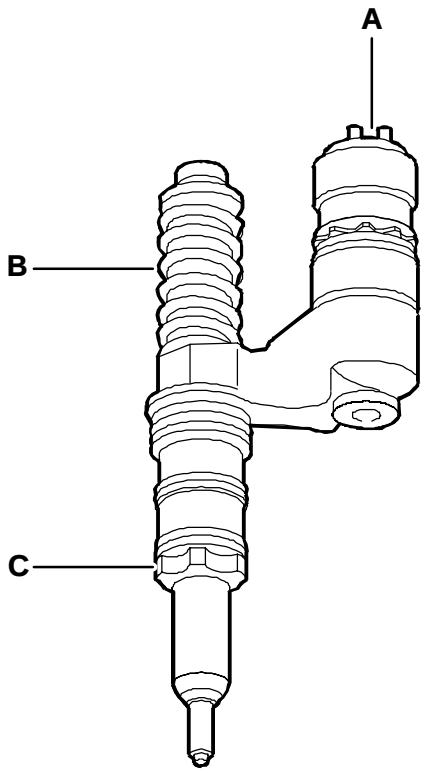

106978

https://truckmanualshub.com/
Aquila Trucks Centres

The electro valve is of the N.A. type.

Coil resistance is ~ 0.56 ÷ 0.57 Ohm.

Maximum operating voltage is ~ 12 ÷ 15 Amp.

Based on voltage absorbed by the electro valve, the electronic center can identify whether injection was correct or mechanical problems exist. It can also detect injector errors ONLY with the engine running or during starts.

They are connected to the electronic center with a positive common to groups of three injectors:

Cylinder 1 - 2 – 3 injector to pin A 11
Cylinder 4 - 5 - 6 injector to pin A 3.

Injectors are individually connected to the center between pins:

A11 / A13 cylinder 1 injector
A11 / A6 cylinder 2 injector
A11 / A12 cylinder 3 injector
A3 / A14 cylinder 4 injector
A3 / A16 cylinder 5 injector
A3 / A15 cylinder 6 injector

Injectors are connected to the center with connector ST - E mounted on the engine front with a twisted cable, to avoid possible electromagnetic interference problems, so junctions or repairs on it must NOT be performed.

Figure 163

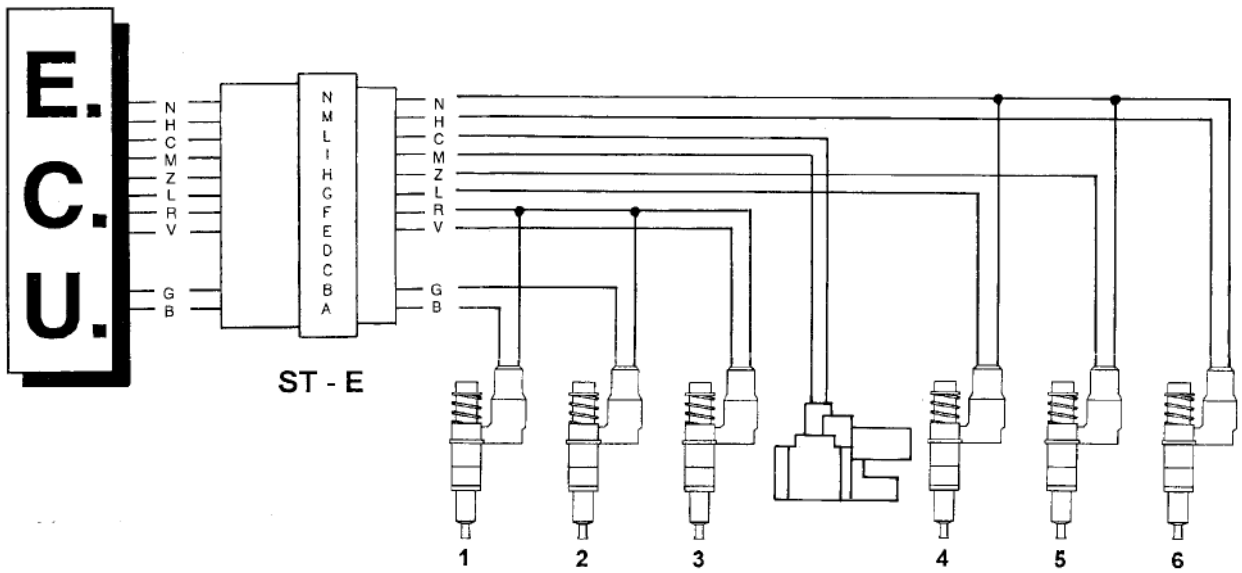

106979

https://truckmanualshub.com/
Aquila Trucks Centres

Figure 164

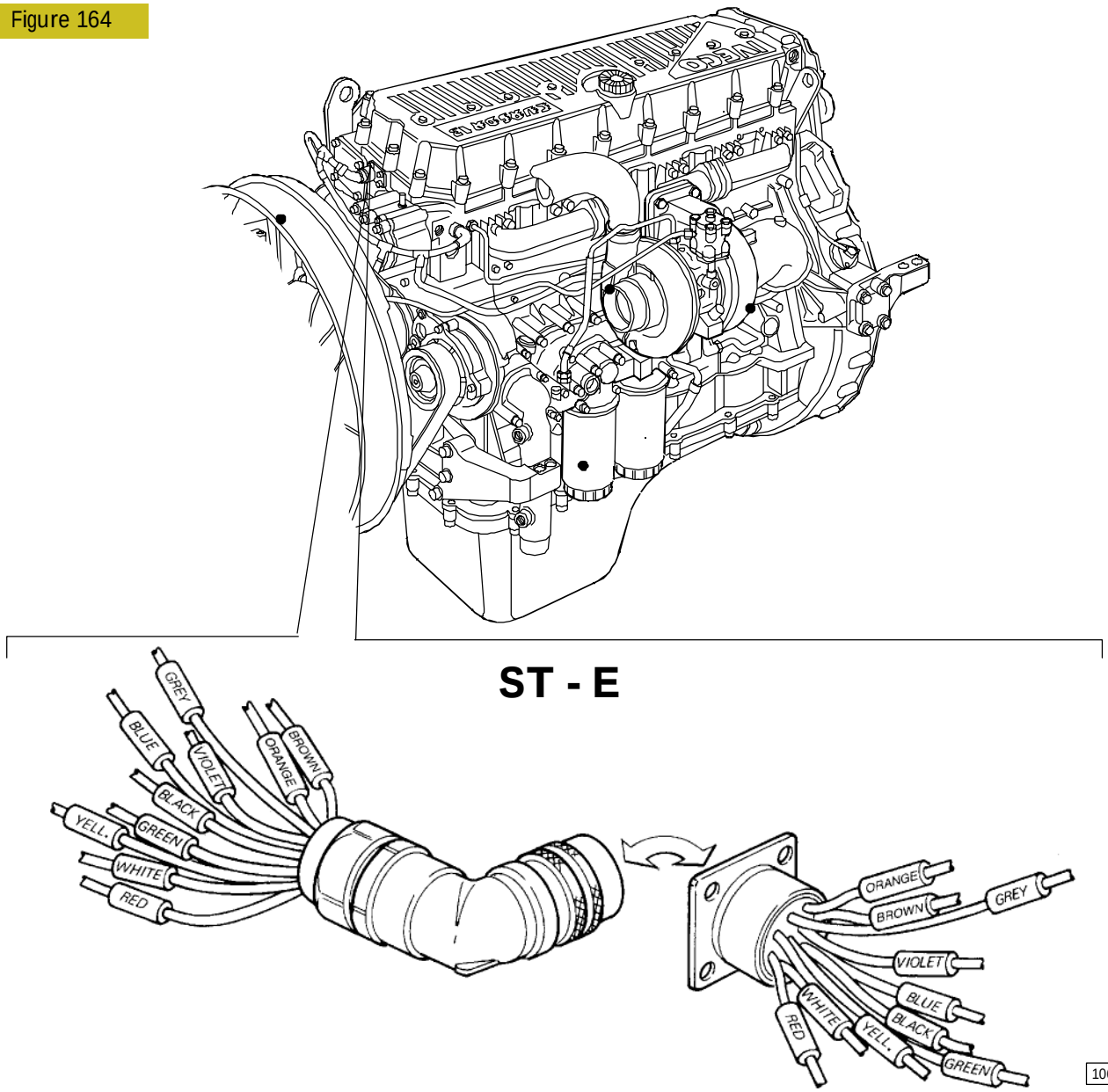

Pin	Cable	Function	Center Pin
A	B	Injector 1 control	A13
B	G	Injector 2 control	A6
C	-	-	-
D	-	-	-
E	V	Injector 3 control	A12
F	R	Injector 1/2/3 supply	A11
G	L	Injector 4 control	A14
H	Z		A16
I	M	Engine brake control electro valve	A8
L	C	Engine brake electro valve supply	A7
M	H	Injector 6 control	A15
N	N	Injector 4/5/6 supply	A3

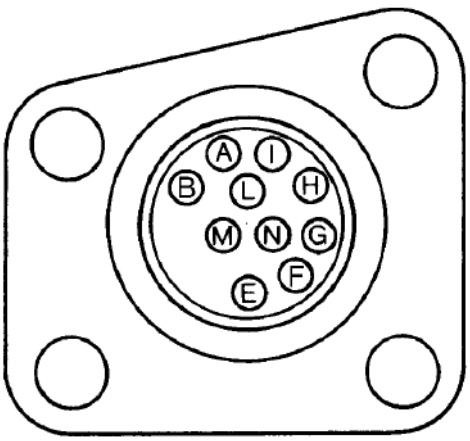

106981

https://truckmanualshub.com/
Aquila Trucks Centres

Engine coolant temperature sensor (85153)

This N.T.C. type sensor located on the water outlet sump on the engine head left measures coolant temperature for the various operating logics with a hot or cold engine and identifies injection enrichment requirements for a cold engine or fuel reduction requirements for a hot engine.

The coolant temperature signal is used for display on the Cluster and to control the fan.

It is connected to electronic center pins C 15 / C 26

Sensor behavior as a function of temperature:

- 10 °C	8,10 ÷ 10,77 kOhm
+ 20 °C	2,28 ÷ 2,72 kOhm
+ 80 °C	0,29 ÷ 0,364 kOhm

At 60 to 90 _C, voltage at C15 and C26 ranges from 0.6 to 2.4V.

Figure 165

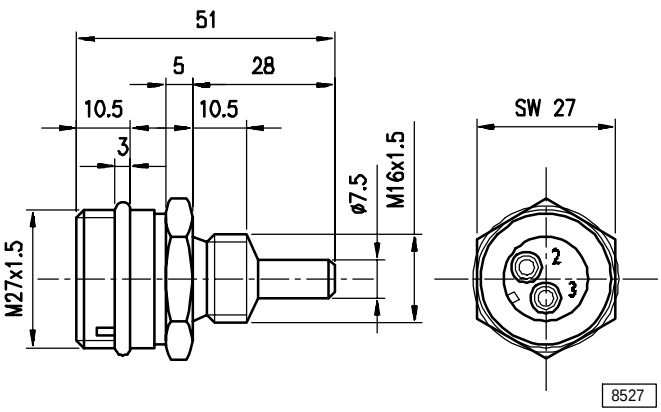

TECHNICAL VIEW

Figure 166

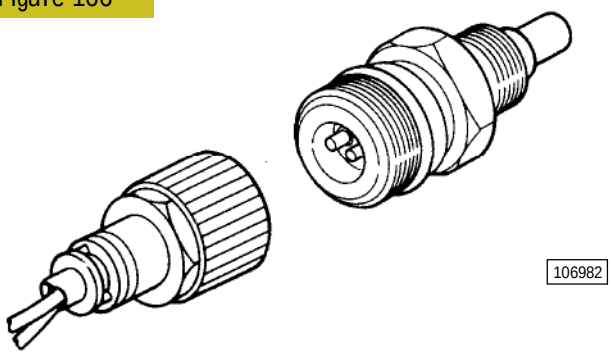

PERSPECTIVE VIEW

Figure 167

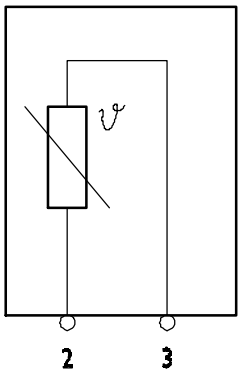

WIRING DIAGRAM

Connector	Function	Cable colour
2	To EDC center pin C 15	—
3	To EDC center pin C 26	—

Aquila Trucks Centres

Fuel temperature sensor (47042)

Features

Vendor	BOSCH
Maximum torque	35 Nm

This N.T.C. type sensor located on the fuel filter on the engine left side detects fuel temperature and enables the electronic center to measure fuel density and volume for delivery correction.

Figure 168

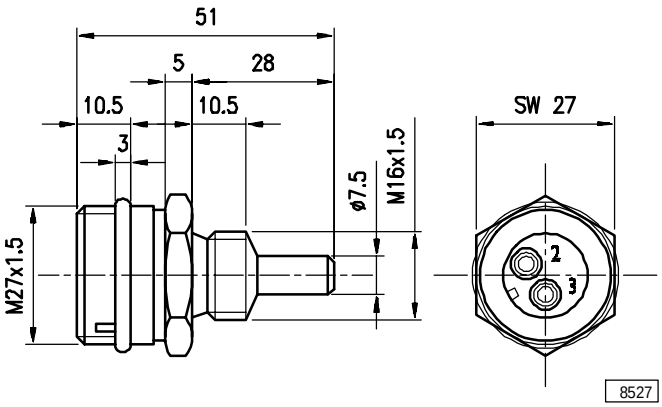

TECHNICAL VIEW

Figure 170

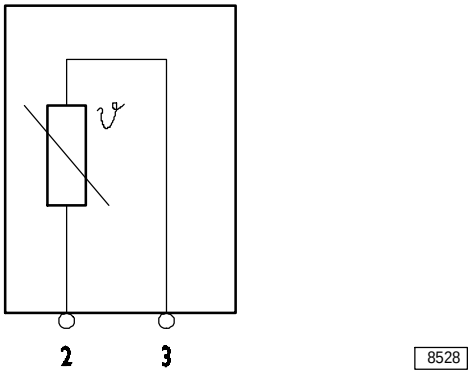

WIRING DIAGRAM

Figure 169

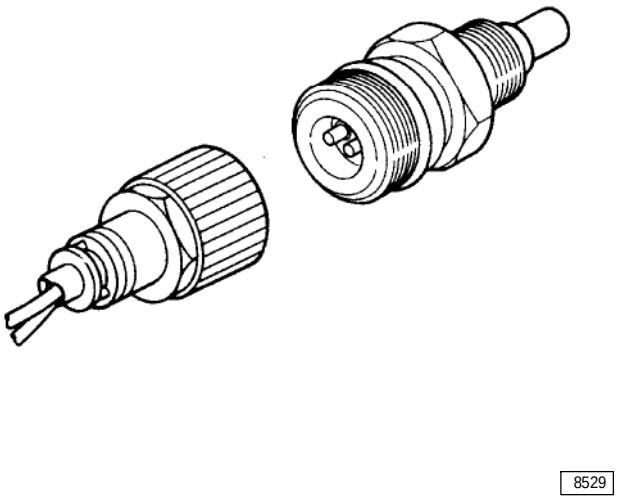

PERSPECTIVE VIEW

Figure 171

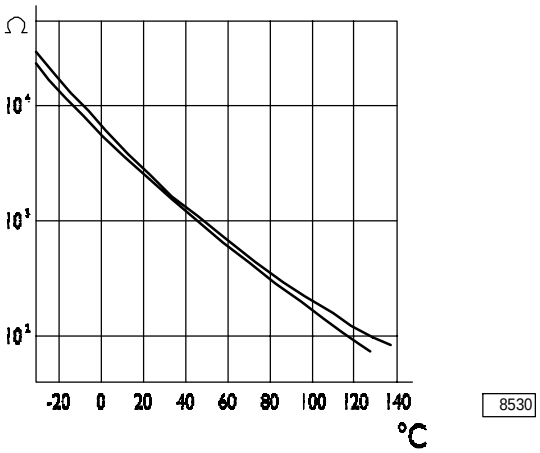

RESISTANCE BEHAVIOR

Connector	Function	Cable colour
2	To EDC center pin C 18	—
3	To EDC center pin C 35	—

https://truckmanualshub.com/
Aquila Trucks Centres

Flywheel pulse transmitter (48035)

Features

Vendor	BOSCH
Torque	8 ± 2 Nm
Resistance	880 ÷ 920 Ω

This induction type sensor located on the flywheel generates signals obtained from the magnetic flow lines that close through 54 holes in three series of 18 in the flywheel.

The electronic center uses this signal to detect the various engine ratings and pilot the electronic rev counter.

The rev counter does not operate in the absence of this signal.

This sensor's air gap is NOT ADJUSTABLE.

Figure 172

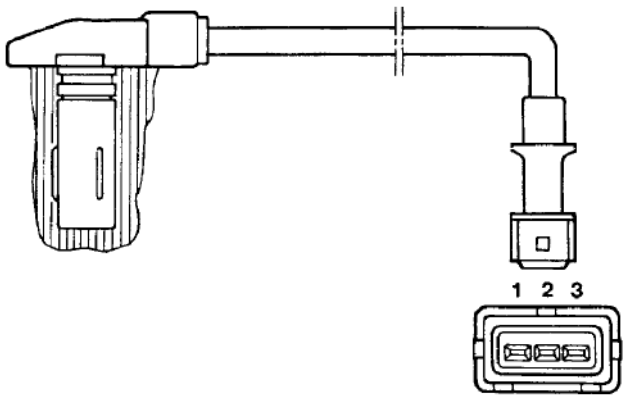

TECHNICAL VIEW 106984

Figure 173

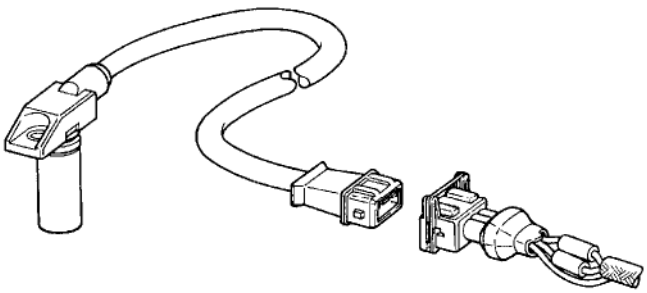

PERSPECTIVE VIEW 106985

Figure 174

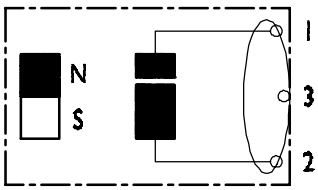

106986

WIRING DIAGRAM

Figure 175

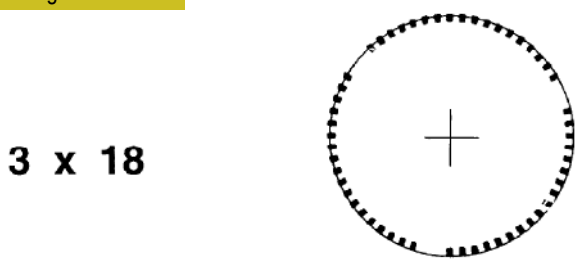

8520

HOLES ON FLYWHEEL

Connector	Function	Cable colour
1	To EDC center pin C 23	—
2	To EDC center pin C 19	—
3	Shields	—

https://truckmanualshub.com/
Aquila Trucks Centres

Distribution pulse transmitter (48042)

Features

Vendor	BOSCH
Torque	8 ± 2 Nm
Resistance	880 ÷ 920 Ω

This induction type sensor located on the camshaft generates signals obtained from the magnetic flow lines that close through the 6 plus 1 phase teeth of a sound wheel mounted on the shaft.

The electronic center uses the signal generated by this sensor as an injection step signal.

Though electrically identical to (48035) engine rpm sensor mounted in the camshaft in is NOT interchangeable with it as it cable is shorter and it features a larger diameter.

This sensor's air gap is NOT ADJUSTABLE.

Figure 176

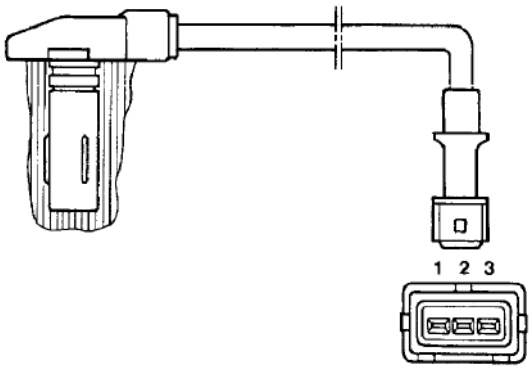

106987

TECHNICAL VIEW

Figure 178

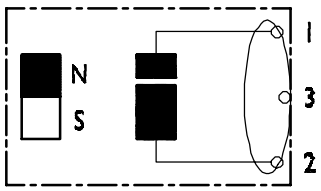

106989

WIRING DIAGRAM

Figure 177

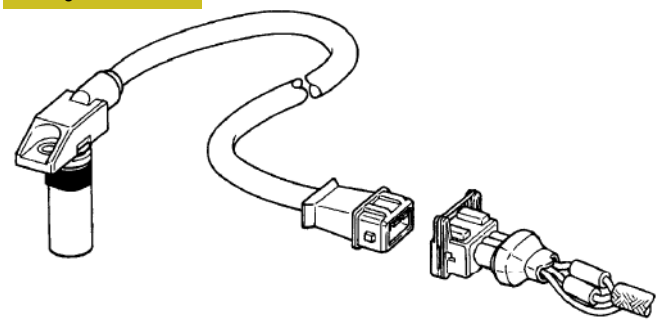

106988

PERSPECTIVE VIEW

Figure 179

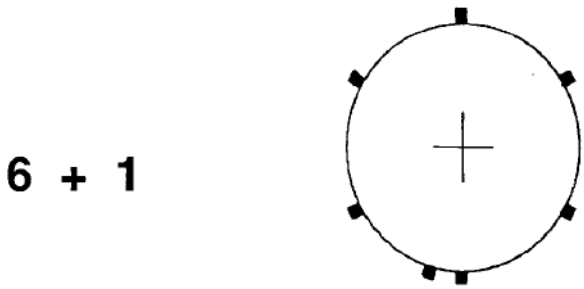

8520

REFERENCE ON SOUND WHEEL

Connector	Function	Cable colour
1	To EDC center pin C 10	—
2	To EDC center pin C 9	—
3	Shields	—

https://truckmanualshub.com/
Aquila Trucks Centres

Pre-post reheat resistor (61121)

Figure 180

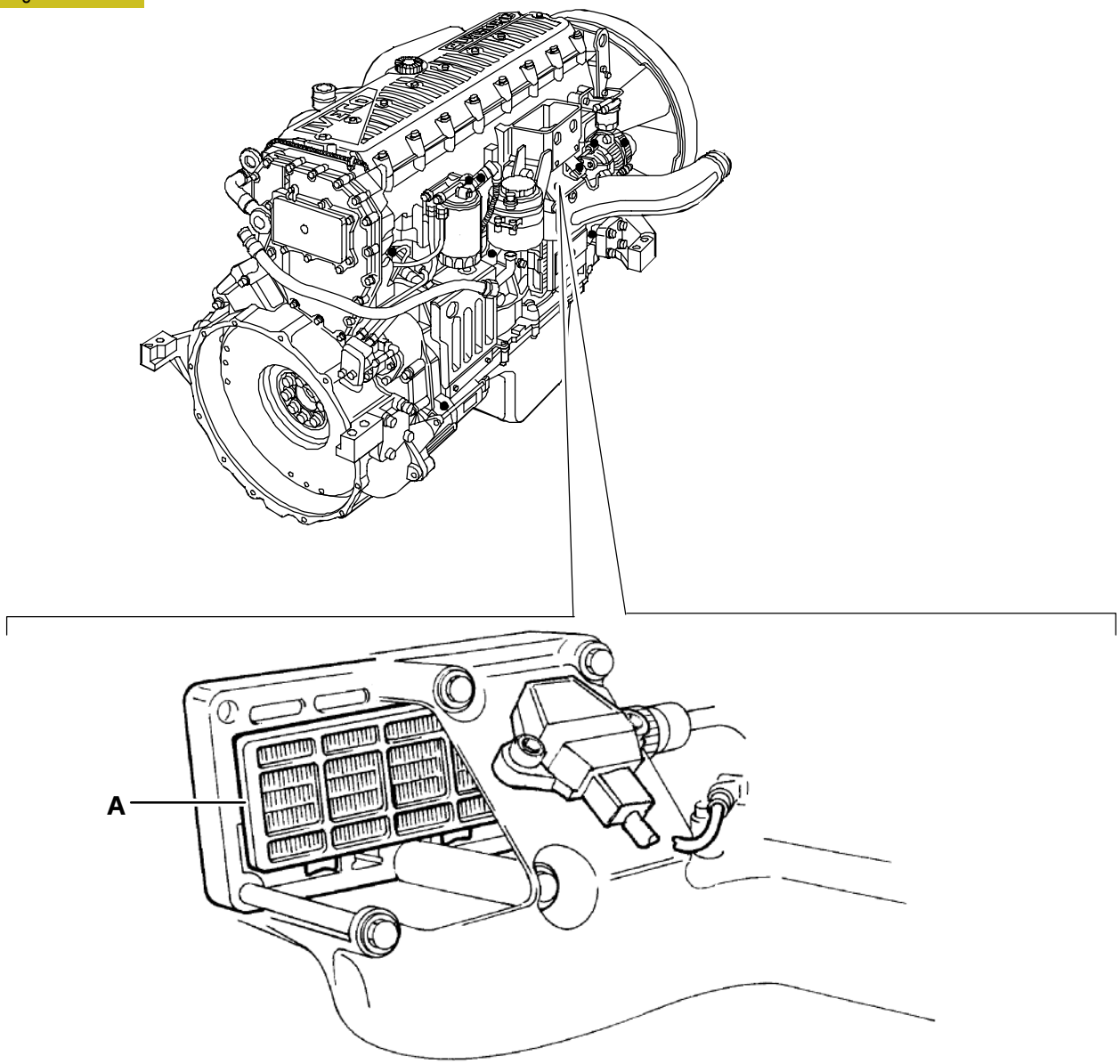

A. Pre/ort reheat resistor / 0.7 Ohm

106990

This resistor located between the cylinder head and the intake duct is used to heat air in pre/post reheat operations.

By inserting the key switch, when even only one of the water, air or gas oil temperature sensors record less than 10 _C, the electronic center activates pre/post reheating and switches on the warning light on the cab instrument panel for a variable period according to temperature, after which the light starts blinking to inform the operator that the engine can be started.

The warning light goes off after engine start but the resistor continues being supplied for a variable period of time to complete post reheating.

The operation is cancelled to prevent uselessly discharging the battery if the engine is not started within 20/25 seconds with the warning light blinking.

When reference temperature is above 10 _C, actuating the ignition key makes the warning light go on for some 2 seconds to complete the test and then turns it of to indicate the engine can be started.

https://truckmanualshub.com/
Aquila Trucks Centres

VGT control card

Figure 181

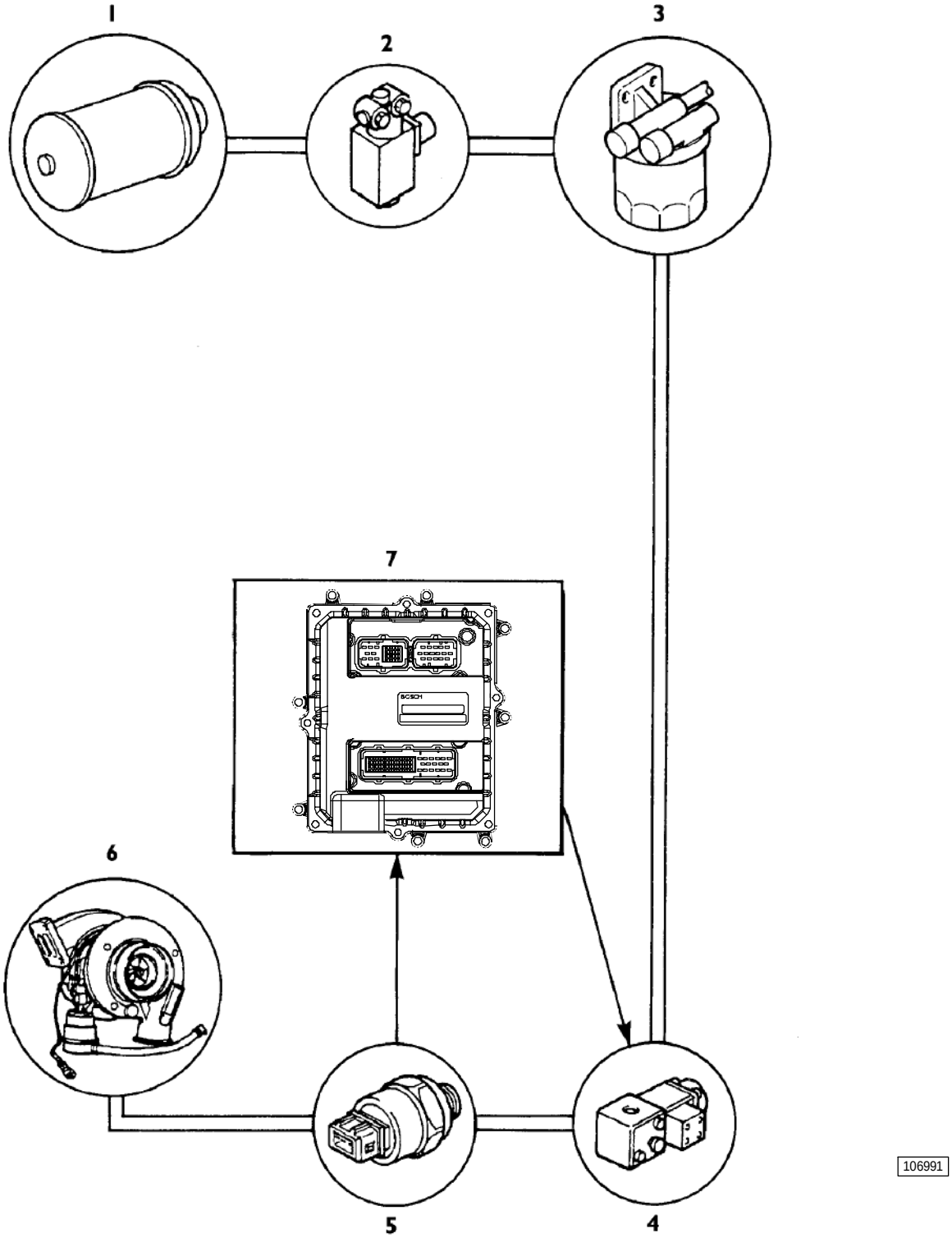

1. Service reservoir - 2. Shut-off electro valve - 3. Air filter - 4. VGT electro valve - 5. Actuator position sensor - 6. Turbine actuator - 7. EDC center

https://truckmanualshub.com/
Aquila Trucks Centres

Variable geometry Holset turbo compressor (series HY)

Figure 182

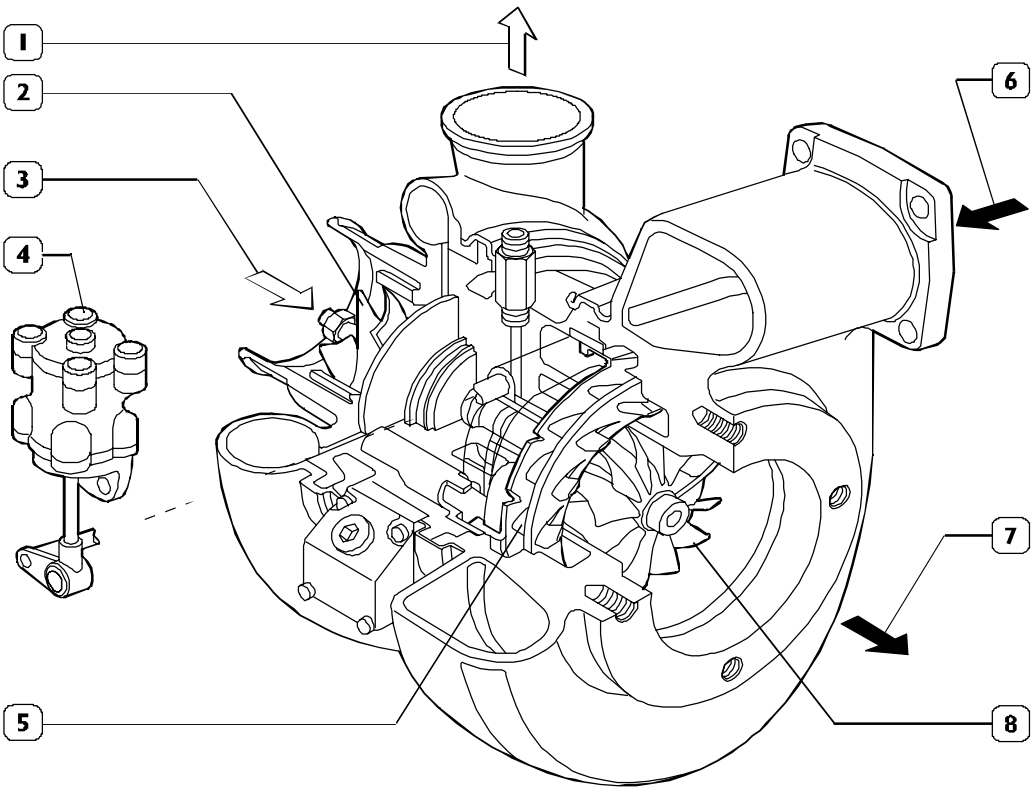

1. Intake duct air delivery - 2. Compressor - 3. Air intake - 4. Actuator - 5. Exhaust gas speed adjustment - 6. Exhaust gas intake - 7. Exhaust gas outlet - 8. Turbine

Figure 183

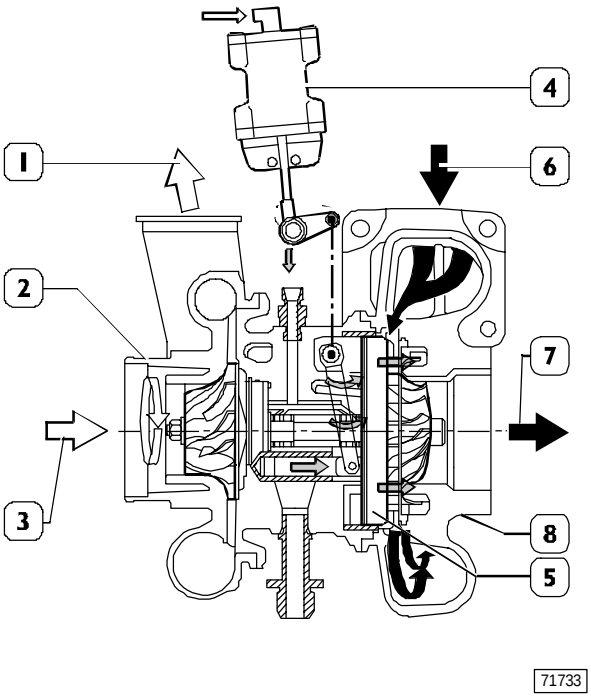

MINIMUM FLOW SECTION

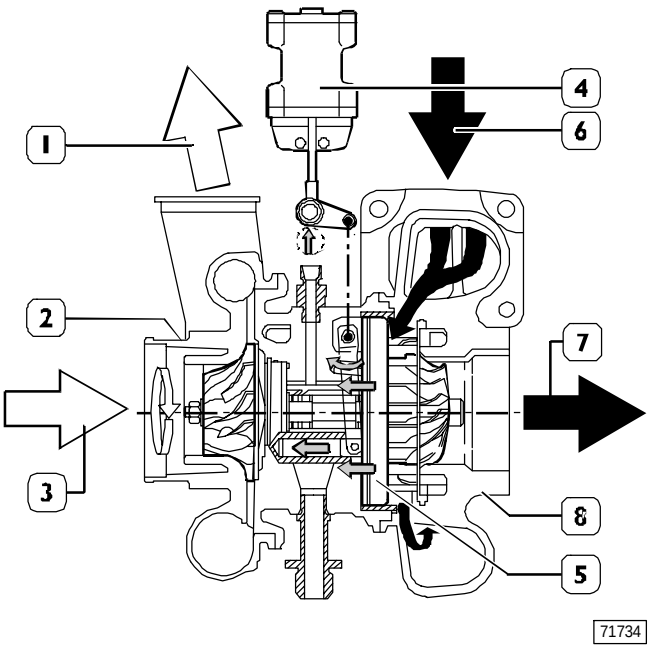

MAXIMUM FLOW SECTION

1. Air delivery to intake manifold - 2. Compressor - 3. Air intake - 4. Actuator - 5. Exhaust gas delivery adjustment ring - 6. Exhaust gas intake - 7. Exhaust gas outlet - 8. Turbine

https://truckmanualshub.com/
Aquila Trucks Centres

Operating principle

Figure 184

Exhaust gas section with engine under load

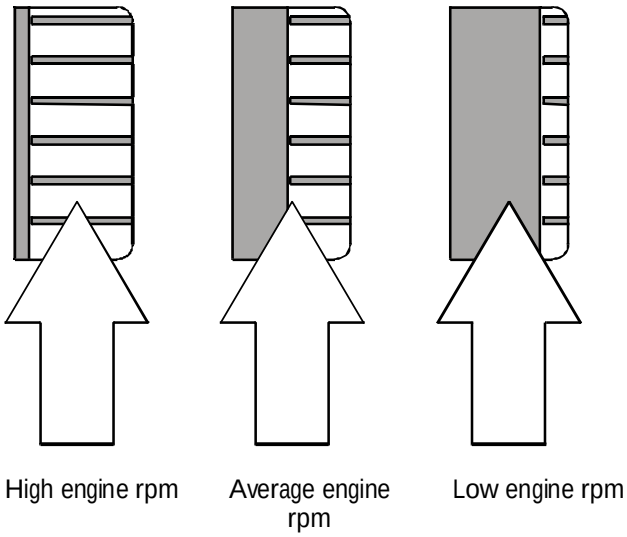

The VGT variable geometry turbo compressor consists of a centrifugal compressor and a turbine provided with a mobile device that adjusts the rate of exhaust gas to the turbine rate by changing the gas passage cross section.

This solution enables keeping gas and turbine rates high even when the engine is operating at low rpm.

Making gasses pass through a reduced cross section in fact increases their rate so the turbine too rotates faster.

Movement of the exhaust gas intake cross section partialization device is obtained by means of a mechanism controlled by a compressed air actuator, which is controlled by a proportional electro valve.

The device is fully closed at low rpm, while at high engine rpm the electronic control system increases cross section to enable incoming gasses to flow without increasing their speed.

A thoroidal chamber is cast into the central body for coolant passage.

https://truckmanualshub.com/
Aquila Trucks Centres

Engine components (VGT)

Figure 185

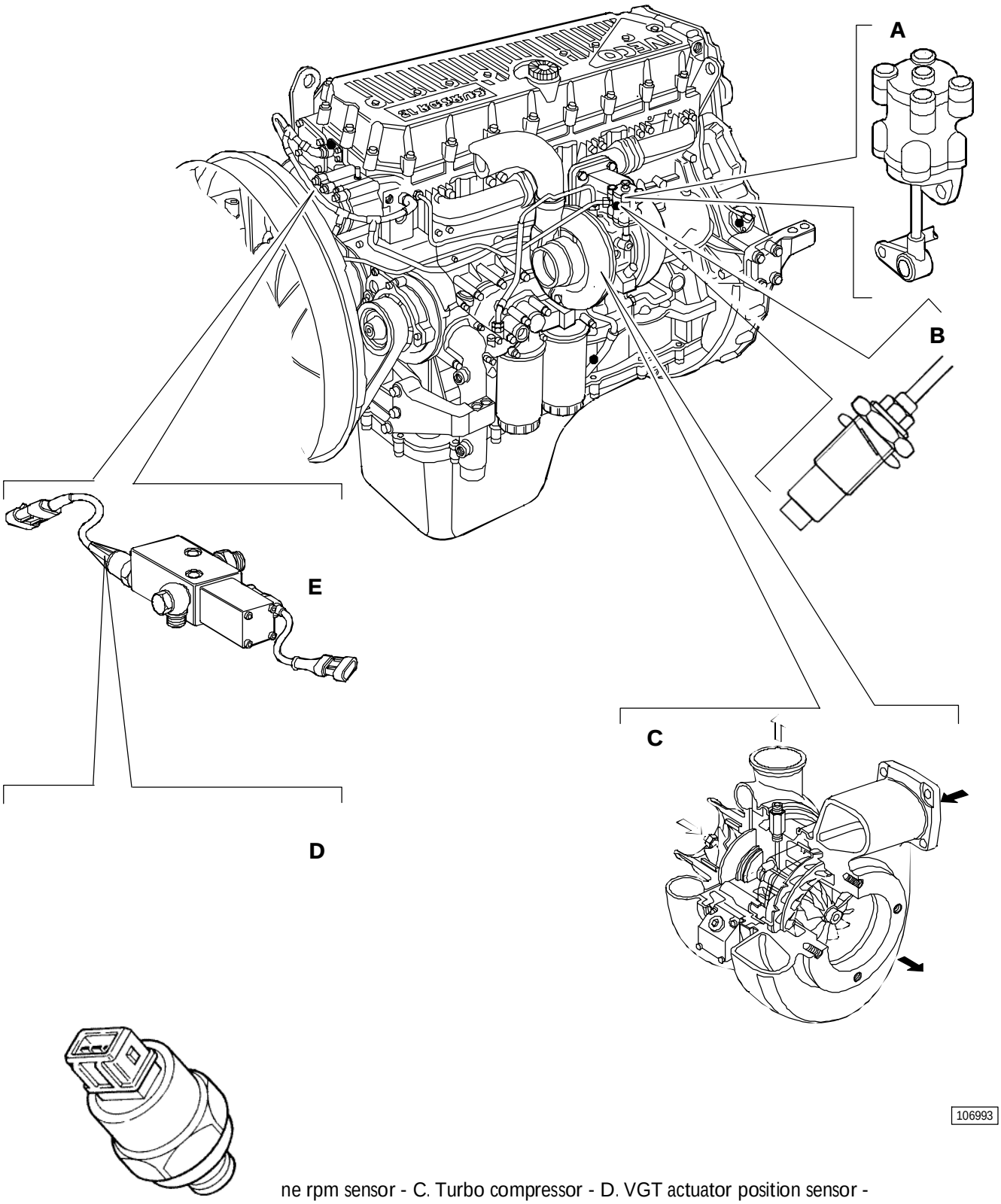

ne rpm sensor - C. Turbo compressor - D. VGT actuator position sensor - E. VGT activator control electro valve

Aquila Trucks Centres

Actuator

Figure 186

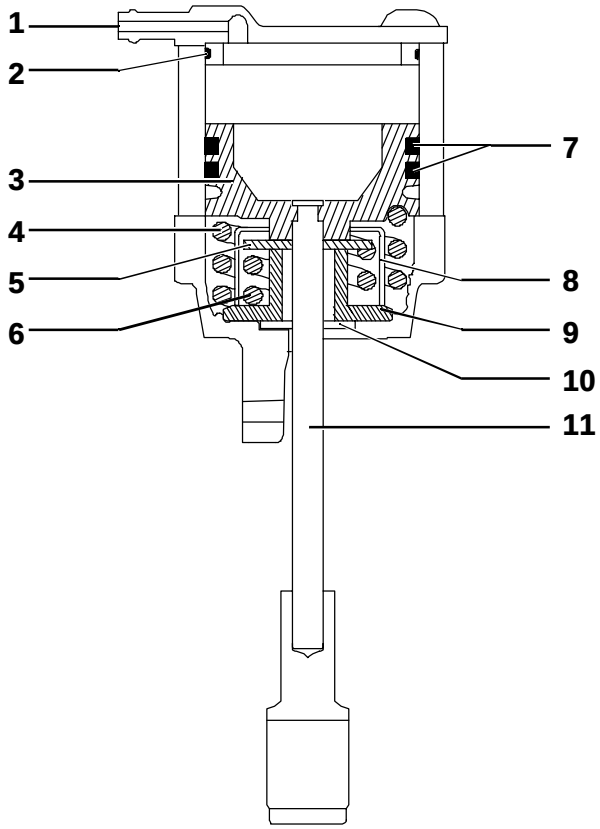

1. Air intake - 2. Washer - 3. Piston - 4. External spring - 5. Internal spring control disc - 6. Internal spring - 7. O-Ring - 8. Spring holder - 9. Run end - 10. Dust cover - 11. Control rod

Operating principle

The actuator piston connected to the control rod is piloted through the compressed air admitted from air intake 1 on the top of the actuator.

Modulating air pressure varies piston and turbine control rod movement.

During its movement, the piston progressively compresses external spring 4 until the piston base reaches internal spring 6 control disc 5.

By further increasing pressure, the piston compresses the internal spring through disc 5 until run end, which is reached when disc 5 interferes with lower run end 10.

Use of the two springs enables changing the ratio between pressure and piston travel. About 85% of rod travel is contrasted by the external spring, the remaining 15% being contrasted by the internal one.

VGT control solenoid valve

Figure 187

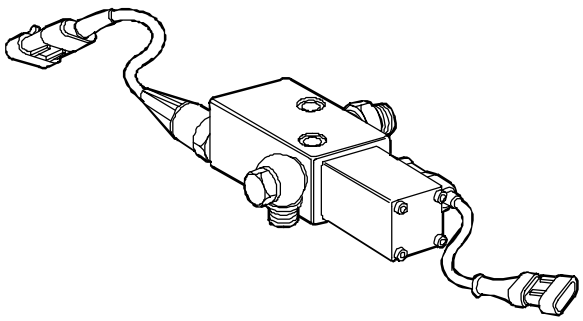

This is an N.C. type proportional solenoid valve mounted on the engine front, behind the fan.

Through a PWM signal, the electronic center pilots this electro valve to adjust turbine actuator feed pressure; actuator position changes modify the exhaust gas intake cross section on the fan blades and thus its speed.

The VGT electro valve is connected between electronic center pins C3/C1.

Coil resistance is ~ 20 ÷ 30 Ohm.

https://truckmanualshub.com/
Aquila Trucks Centres

Turbine speed sensor (48043)

This is an inductive sensor positioned on the impeller shaft.
It generates signals obtained from the magnetic flow lines, which close through a notch obtained on the shaft itself.
The signal generated by this sensor is used by the electronic control unit to verify that the turbine revs number does not exceed the maximum value.
To control the revs number, the control unit acts on variable geometry.
If the revs number keeps on increasing until it reaches excessive r.p.m. values, the electronic control unit will detect an anomaly.
The gap of this sensor CANNOT BE ADJUSTED.
It is connected on electronic control unit pins C30 / C20.
The sensor resistance value is 400 Ohm.

Figure 188

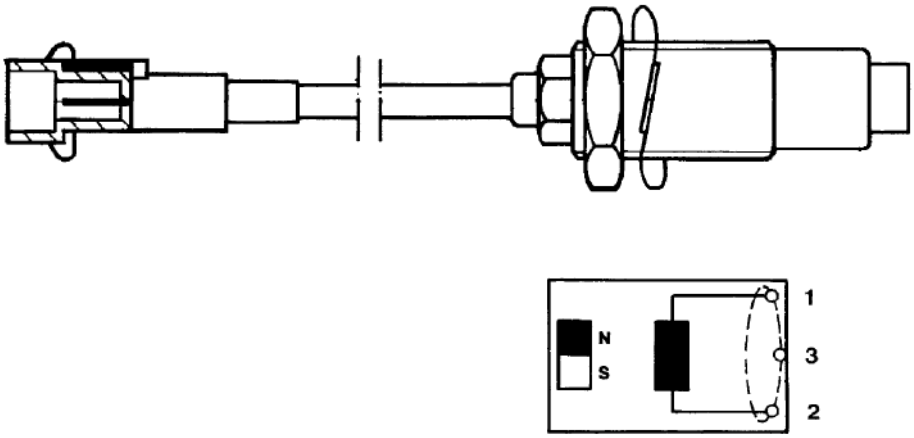

Wiring diagram

106996

Aquila Trucks Centres

Figure 189

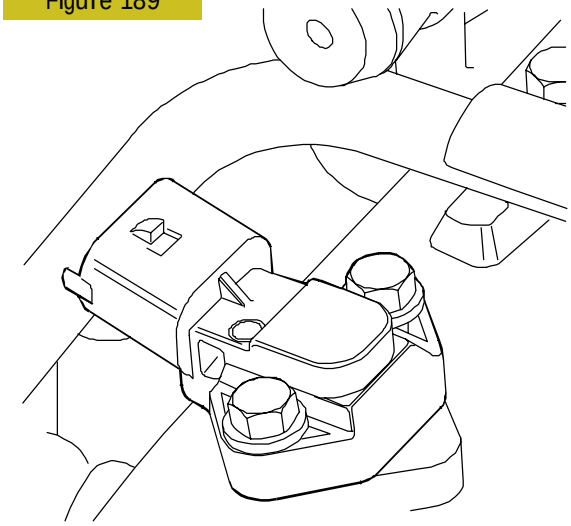

50324

Sensor external view

Figure 190

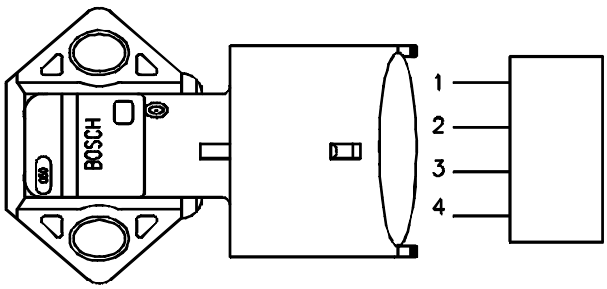

50323

Linking connector

Figure 191

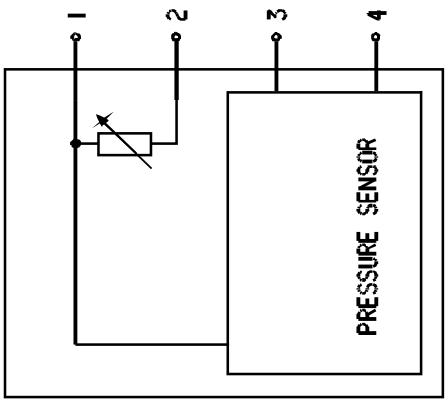

50344

Wiring diagram

Air pressure/temperature sensor (85156).

This component incorporates a temperature sensor and a pressure sensor.

Ilt replaces the temperature sensors (85155) and pressure sensors (85154) available in the preceding systems.

It is fitted onto the intake manifold and measures the maximum supplied air flow rate used to accurately calculate the amount of fuel to be injected at every cycle.

The sensor is powered with 5 V.

The output voltage is proportional to the pressure or temperature measured by the sensor.

Pin (EDC)	25/C - 33/C	Power supply
Pin (EDC)	36/C	Temperature
Pin (EDC)	34/C	Pressure

Oil temperature/pressure sensor (42030 / 47032)

This component is identical to the air pressure/temperature sensor and replaced single sensors 47032 / 42030.

It is fitted onto the engine oil filter, in a horizontal position.

It measures the engine oil temperature and pressure.

The measured signal is sent to the EDC control unit which controls, in turn, the indicator instrument on the dashboard (low pressure warning lights / gauge).

Pin (EDC)	24/C - 32/C	Power supply
Pin (EDC)	27/C	Temperature
Pin (EDC)	28/C	Pressure

The engine oil temperature is used only by the EDC control unit.

Ref.	Description	Control unit pin	
		Oil	Air
1	Ground	24C	25C
2	Temp. Sign.	27C	36C
3	+5	32C	33C
4	Press. Sign.	28C	34C

https://truckmanualshub.com/
Aquila Trucks Centres

Fan with electromagnetic joint (F2B)

The fan has an effective speed, called second speed, that is controlled by the Front Frame Computer control unit by coil (8) excitation.
When coil (8) is de-energised, the fan is driven by the four magnets (6) at a speed (called first speed) of about 450 rpm.
The first speed is activated when:
- Water temperature is less than 93° C and the Intarder and the air conditioner are off, or
- Water temperature is less than 85° C and the air conditioning system is on but the circuit pressure is below 22 bar, or
- Water temperature is less than 85° C and the Intarder is on with braking power 41% lower than max. power.

The second speed is activated when:
- Water temperature reaches 93° C with Intarder off or on with braking power less than 41%, second speed will deactivate when temperature drops to 88° C, or
- Water temperature reaches 85° C with Intarder on and braking power 41% higher than max. power or air conditioning system on and circuit pressure equal to 22 bar.

Figure 192

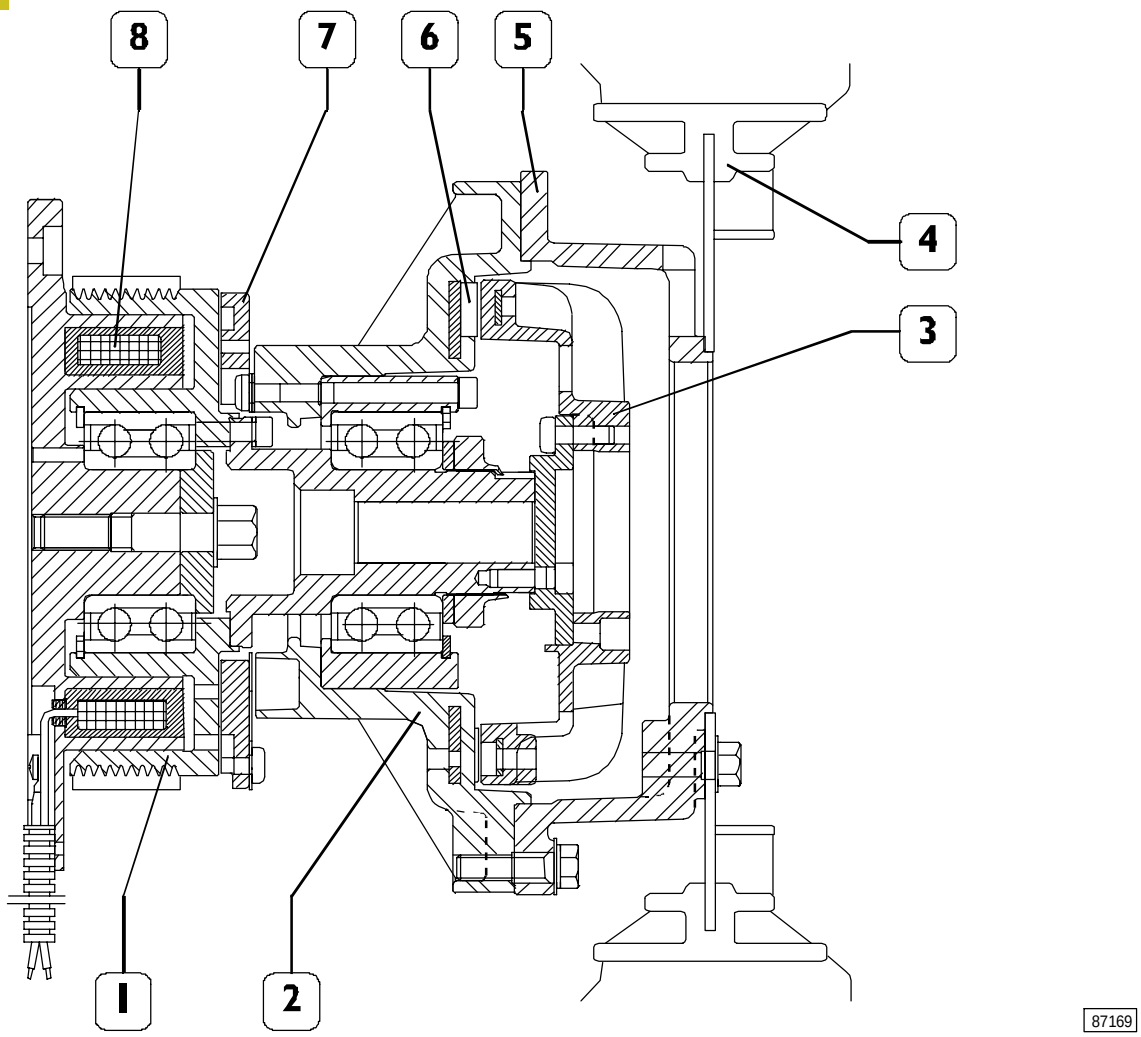

1. Pulley - 2. Support - 3. Disk with fins - 4. Fan - 5. Fan adapter- 6. Round magnets -7. Floating ring - 8. 24V coil

https://truckmanualshub.com/
Aquila Trucks Centres

Fan at first speed position

Figure 193

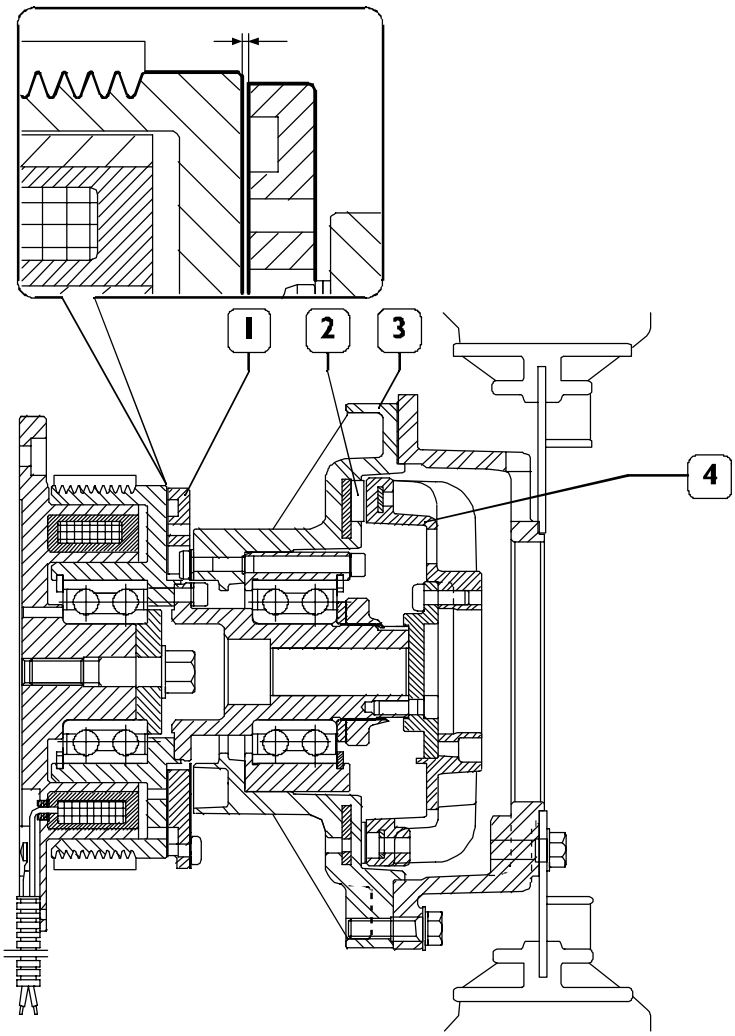

In this condition the floating ring (1) is at rest, fan movement is therefore induced by the 4 magnets (2) keyed into the support.

The first speed is therefore always actuated and due to the effect of the magnetic field generated by the magnets (2), the fan can follow the output shaft speed up to 450 rpm. Higher output shaft speeds will produce a slipping between the support (3) and the keyed disk (4).

https://truckmanualshub.com/
Aquila Trucks Centres

Fan with second speed on

Figure 194

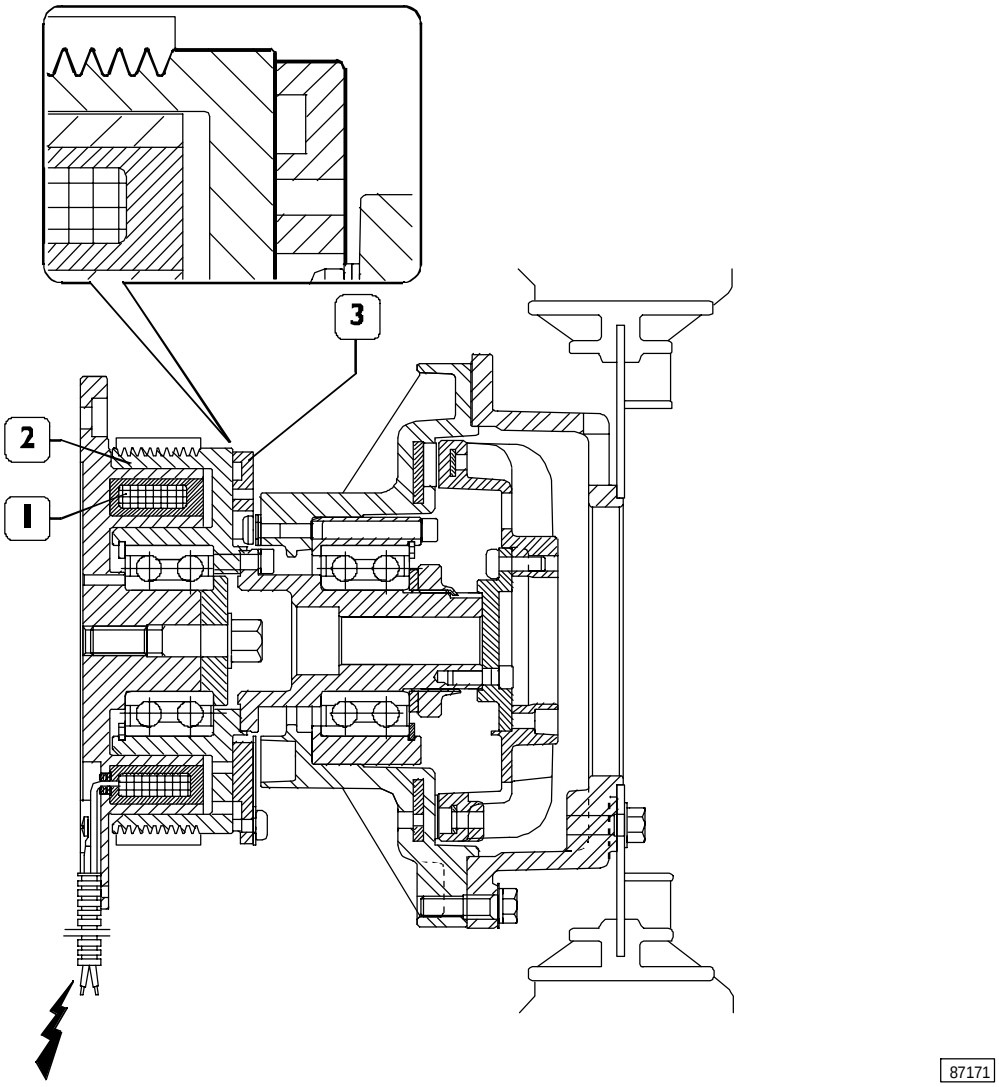

The second speed is activated by the Front Frame Computer control unit that controls coil (1), the magnetic field generated by the coil attracts the floating ring (3) to the pulley (2), thus making them integral.

Under this condition the fan speed is proportional to the output shaft speed.

https://truckmanualshub.com/
Aquila Trucks Centres

Fan with electromagnetic junction (F3A - F3B)

The fan features two possible rotation speeds controlled by the Front Frame Computer center by exciting the compressed air electro valve for slow speed and by coil (11) for second speed.
When neither low nor second speed is activated, the fan is drawn slowly by friction forces present (neutral position).
The parameters/systems that may require fan action via the BC center are as follows:

- Coolant temperature
- Conditioning system coolant pressure
- Intarder

Low speed is activated when:

- Engine coolant temperature reaches 80 _C and the intarder is cut in at deceleration power under 41% of maximum.
- Conditioner coolant pressure reaches 18 bars.

Second speed is activated when:

- Conditioner coolant pressure reaches 22 bars.
- Engine coolant temperature reaches 80 _C and the intarder is cut in at deceleration power over 41% of maximum.
- Engine coolant temperature is over 88 _C.

When second speed activation is required, the system pilots the fan for 5 seconds at low speed, then second speed is cut in. This operating logic enables increasing belt and fan component reliability in time.
When fan low speed remains cut in for over 1 minute, the system activates second speed until control parameters return below action limits.

Figure 195

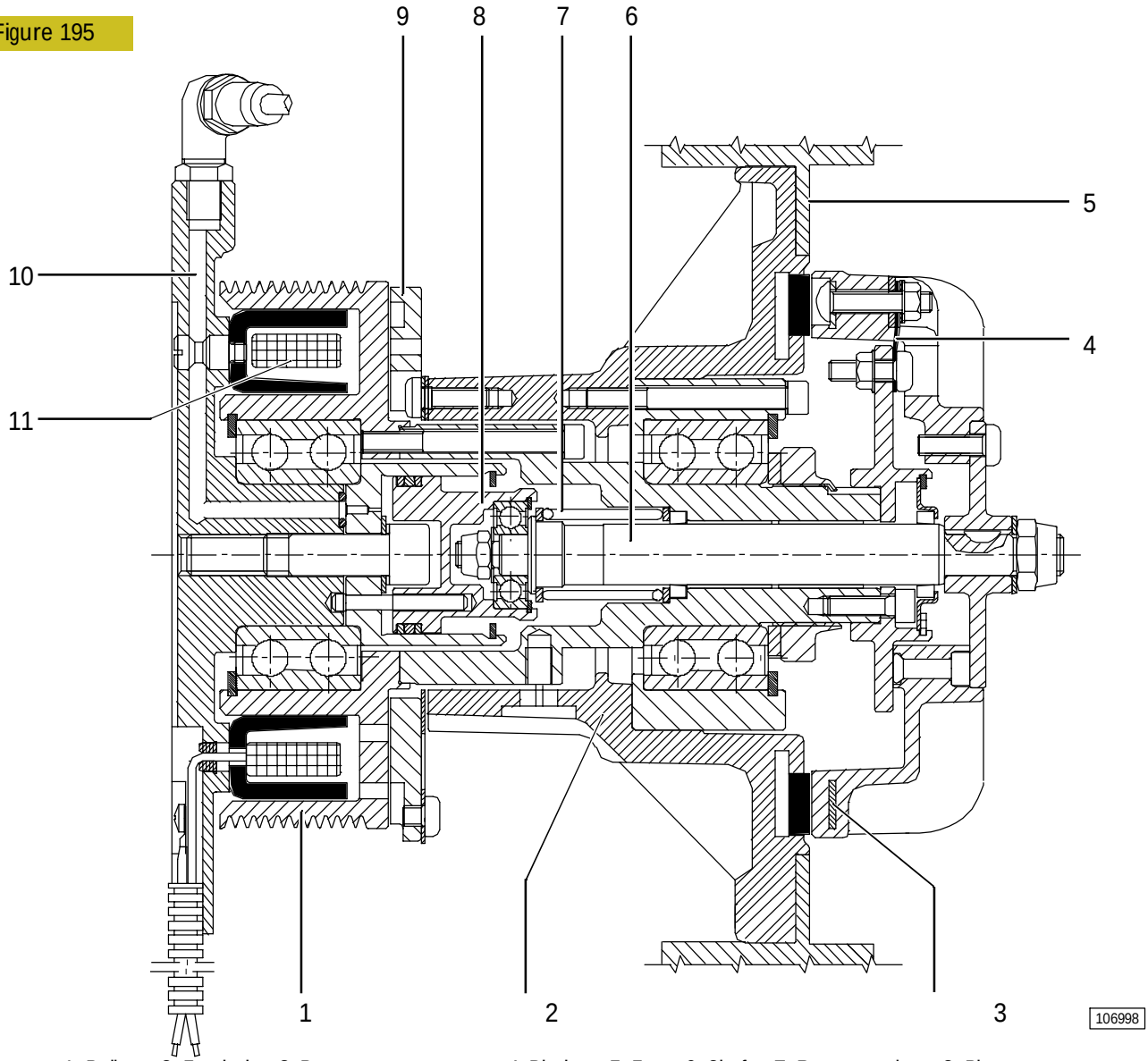

1. Pulley - 2. Fan hub - 3. Permanent magnets - 4. Blades - 5. Fan - 6. Shaft - 7. Return spring - 8. Piston - 9. Floating ring - 10. Air supply pipe - 11. Coil

https://truckmanualshub.com/
Aquila Trucks Centres

Fan cut out (neutral position)

Figure 196

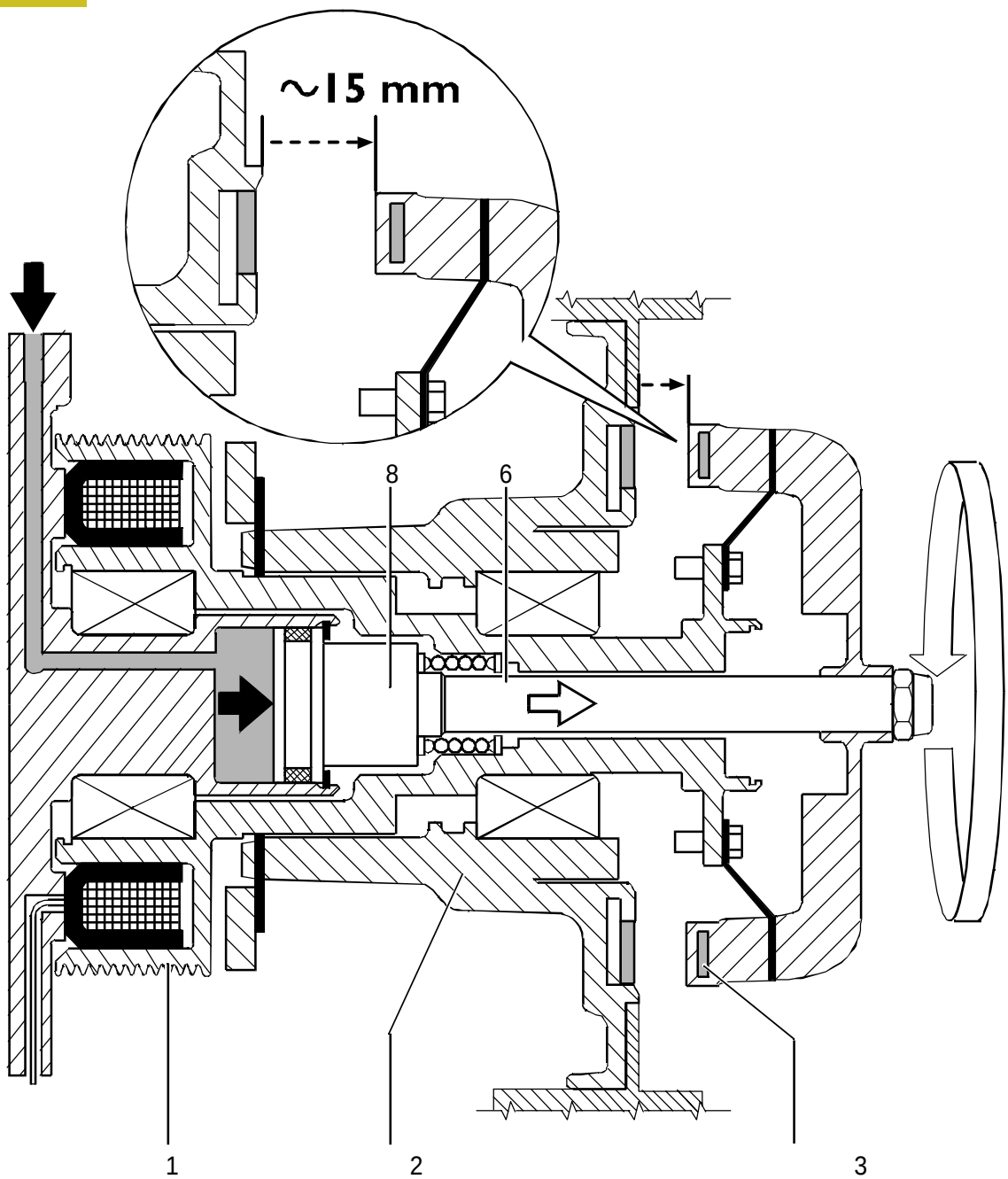

When fan action is not required for proper engine operation, the Front Frame Computer center pilots the compressed air electro valve to move piston (8), displaces permanent magnets (3) from fan hub (2). The magnetic field generated by magnets (3) is not enough to move fan hub (2) by induction.

The fan may rotate slowly due to friction present.

https://truckmanualshub.com/
Aquila Trucks Centres

Fan with low speed cut in

Figure 197

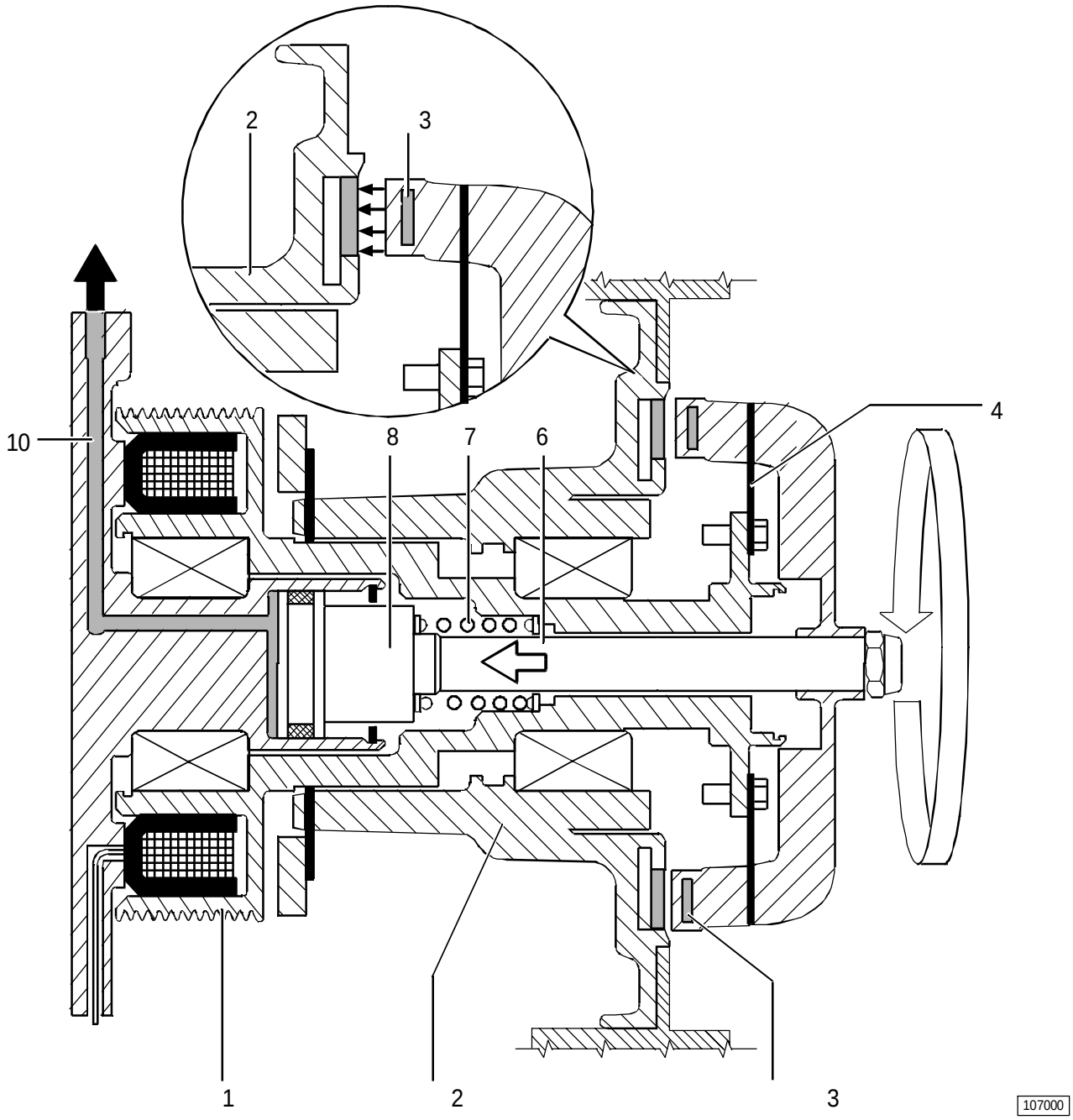

When low speed action is required, the Front Frame Computer center discharge air from duct (10) through the compressed air electro valve; piston (8) moves and draws permanent magnets (3) towards fan hub (2). Piston travel is ensured by return spring (7) and blades (4).

The shaft rotates at the same speed as pulley (1) and the effect of the magnetic field generated by magnets (3) is to make fan hub (2) rotate at the maximum speed of 650 rpm.

For F2B the first speed is always connected since there are no pneumatic solenoid valve nor air exhaust system inside the assembly.

https://truckmanualshub.com/
Aquila Trucks Centres

Fan with second speed cut it

Figure 198

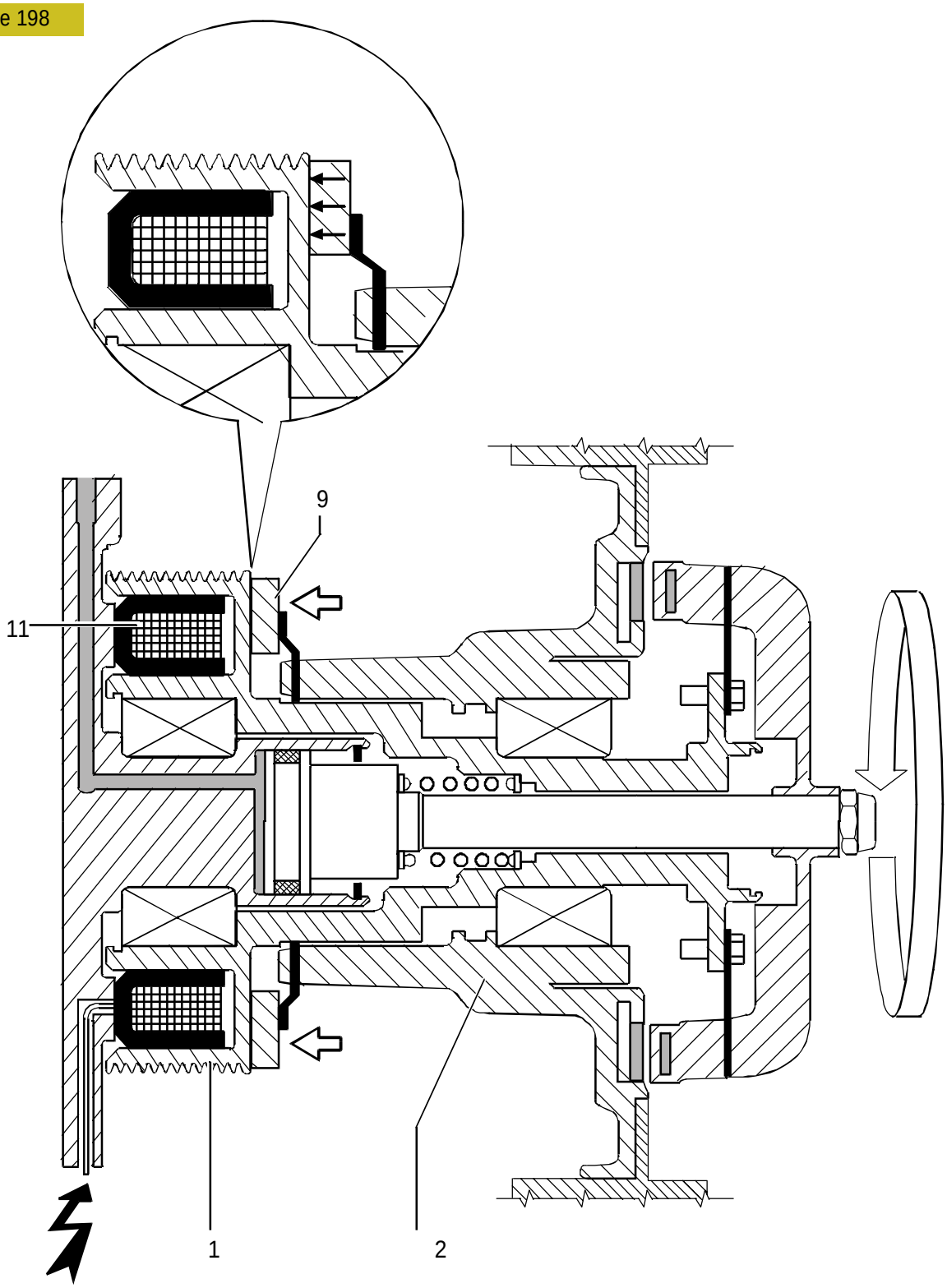

When low speed is not enough to properly cool the engine, the Front Frame Computer center pilots second speed cut-in by exciting coil (11).

The magnetic field generated by the coil attracts fan hub (2) floating ring (9) to pulley (1) making the two units solidal.

In this condition fan speed is the same as pulley speed.

Aquila Trucks Centres

Fan control diagram

Figure 199

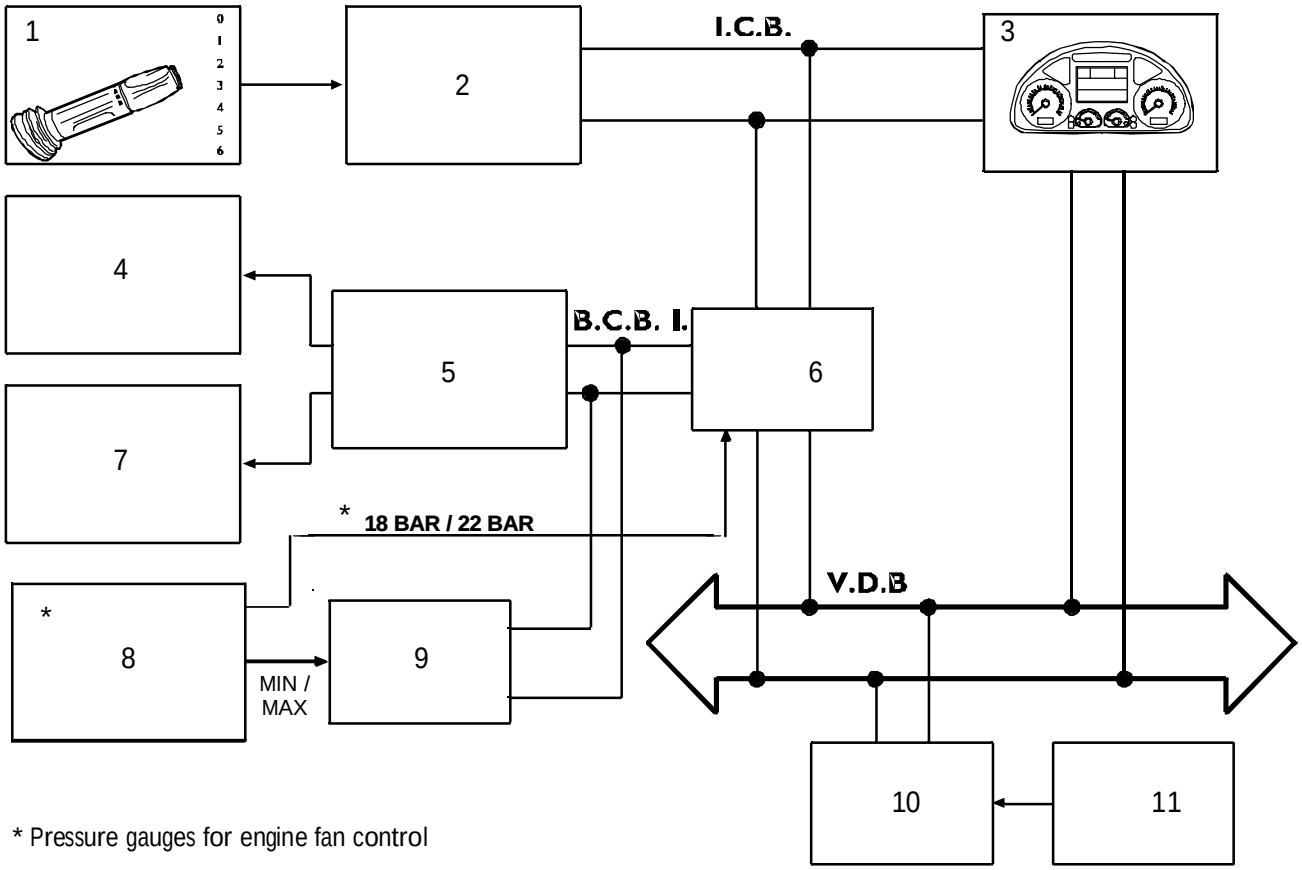

* Pressure gauges for engine fan control

107002

1. Engine brake switch - 2. Steering Wheel Interface - 3. Instrument Cluster - 4. Fan electro valve - 5. Front Frame Computer - 6. Body Computer - 7. Fan electro valve - 8. Conditioner pressure switches - 9. Conditioner - 10. EDC - 11. Water temperature sensor - * The pressure switches involved in fan control are the (18-22 bar) conditioner coolant pressure warning ones.

Defect identification

Defect	Cause
The fan always rotates at low speed	- Air supply pipe clogged - Air supply pipe broken
The fan does not rotate above 650 rpm (low speed)	- Center output does not pilot the coil - Interruption of the center to coil wire - Coils short-circuited - Improper mechanical parts sliding
The fan always rotates at second speed	- The center output always pilots the coil - Improper mechanical parts sliding

https://truckmanualshub.com/
Aquila Trucks Centres

Electric fan wear check

Figure 200

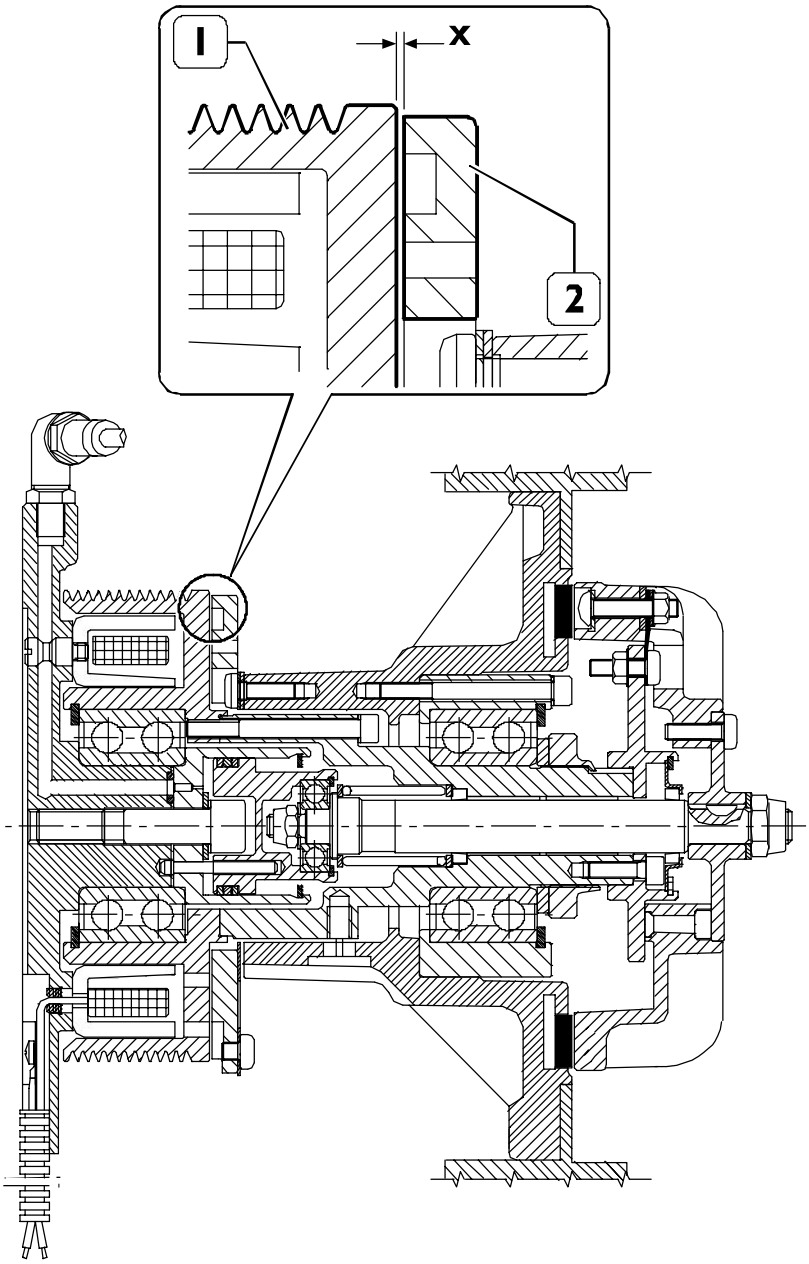

77469

In rest conditions, gap X between pulley (1) and floating ring (2) (subject to wear) must range between 0.5 and 1.2 mm.
Wear up to maximum gap thickness of 2.5 mm is permitted.

https://truckmanualshub.com/
Aquila Trucks Centres

VCM (VEHICLE CONTROL MODULE) ELECTRONIC CONTROL UNIT

This Electronic Control Unit is interfaced with the other on-board electronic systems through CAN lines:

- ECB - Engine Control Bus
- VDB - Vehicle Data Bus
- ICB - Instrument Cluster Bus
- FMB - Fuhrpark Managemant Bus

Among the Electronic Control Unit input signals we find those of the accelerator pedal sensor, deviator for signalling (ABS) stop, switch on clutch and switch for Economy function, which previously were connected to the EDC Electronic Control Unit.

The Immobilizer Elec. Cont. Unit is eliminated and the immobilizer antenna is connected to the Elec. Cont. Unit VCM.

The VCM operates also Cruise Control which before was connected onto Body Computer.

VCM main functions

- Driveability: accelerator pedal control and generation of torque requirements via CAN towards the engine according to the driveability maps, Required torque = f (Engine Speed, Accelerator Pedal Position).
- Arbitration of the requirements of Torque and Engine Speed: from external systems (Brakes, Transmission, Fitters, etc.) towards the engine during the phases of braking, changing gear, operations in PTO mode, VCM determines the requirement with the highest priority and transmits the corresponding requirement of Torque or Engine Speed via CAN to the engine.
- Speed limiter: (main, programmable and secondary) VCM determines the extent of the requirement of torque towards the engine ensuring that the active speed limits are not exceeded.
- Cruise Control: VCM adjusts the vehicle speed according to the set Cruise speed by modulating the requirement of torque transmitted via CAN to the engine (torque limitation or control), via the requirement of turning on the exhaust brake and Intarder, integrating the control functions of the conditions of engagement and release.
- Adaptive Cruise Control: VCM reads the data of the Radar relating to the distance of the preceding vehicle, adjusts the vehicle speed according to the set Cruise speed, keeping the distance selected by the driver, modulating the requirement of torque transmitted via CAN to the engine (torque limitation or control), via the requirement to turn on the exhaust brake and Intarder, integrating the functions of control of the conditions of engagement and release and in case of risk of collision activating the conventional brakes (interacting with the EBS system).
- Engine starting / stopping control logic and associated safety devices: requirement control from cab, engine bay, fitter connector.
- Power take off (PTO mode): management of the requirement to adjust engine speed via CAN in accordance with the conditions relating to the PTO 0, 1, 2, 3 (pre-programmed) modes with actuation by the engine.
- Low Idle control logic: dynamic High Idle control with requirement relating to the engine via CAN the VCM controls the requirement for engine speed adjustment via CAN with actuation by the engine.
- Exhaust Brake activation logic: control of driver requirements and arbitration of the requirements from external systems (Brakes, Transmission, Fitters, etc.), transmission of the value via CAN and actuation by the engine.
- Engine cooling fan activation logic (Baruffaldi): management of control logic, transmission of the activation request via CAN and actuation by the engine.
- ZF Simple H Gearbox: gearbox control with solenoid activation to pass from low range and high range in conditions of safety
- ALLISON Gearbox: standard CAN interface control on lever side, external requirements (Fitters) and for display logic on Instrument Panel.
- New EUROTRONIC lever (used for ALLISON too): driver requirement control for sending to EUROTRONIC gearbox and recovery in case of breakdown.
- Vehicle security system: Immobilizer
- Communication on CAN bus: Point-to-point communication from external bus for dedicated connection to apparatuses of Fleet Management in accordance with Bus - FMS. Interface for connection to Tester for diagnosis via CAN of the on-board systems.
- Others: Interface towards Instrument Panel on dedicated bus (ICB on Heavy Range) for information / controls to / from Driver. HW signal generation for fitter connector.

https://truckmanualshub.com/
Aquila Trucks Centres

Electronic Control Unit location

Figure 201

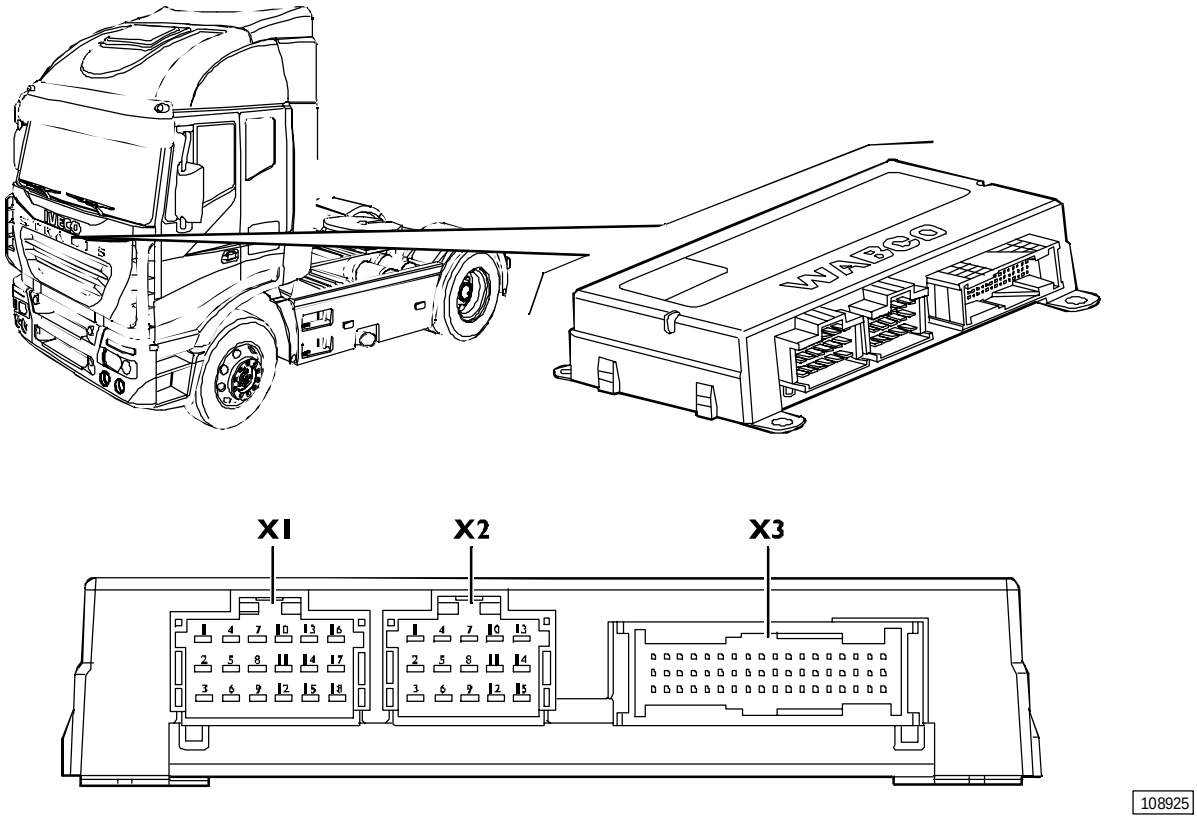

Pin - out

Connector X1

Pin	Description	Cable color code
1	Immobiliser aerial input signal	-
2	-	-
3	Immobiliser aerial output signal	-
4	Positive +30 (from IBC3)	7993
5	Positive +15 (from IBC3)	8802
6	Ground	0000
7	Gearbox in neutral signal for body builders (ST14A)	8050
8	Power to ACC (Adaptive Cruise Control) distance rule reached indicator warning light / Positive for splitter gear activation solenoid (9 speed gearbox)	6179/9973
9	EDC system faulty signal for cluster	6150
10	Handbrake engaged signal for bodybuilders (ST14A)	6656
11	Power to ACC (Adaptive Cruise Control) distance alarm buzzer / Positive for normal gear activation solenoid (9 speed gearbox)	1166/9974
12	Clutch status signal for bodybuilders (ST14B)	9963
13	Brake light signal for bodybuilders (ST14A)	1165
14	Signal indicating programmable speed threshold (PST) for bodybuilders (ST14B)	5542
15	Groundcontrolling starter motor relay	0008
16	Positive controlling starter motor relay	8888

Connector X2

Pin	Description	Cable color code
7	Positive 5 V for distance control with ACC (Adaptive Cruise Control) at great distance	8179
8	Return from distance selector with ACC (Adaptive Cruise Control)	6178
9	Ground cable for ACC distance control	0139

Aquila Trucks Centres

Pin - out

Connector X3

Pin	Description	Cable color code
1	CAN L line (VDB)	White
2	CAN H line (VDB)	Green
3	-	-
4	Ground from coolant pressure indicator switch (22 bars)	0583
5	Ground from coolant pressure indicator switch (18 bars)	0582
6	-	-
7	Control cable for activating ACC	0179
8	Ground from switch indicating gearbox in neutral	8050
9	-	-
10	Ground from engine brake wiring switch (associated with accelerator pedal release)	0082
11	-	-
12	Positive from ignition key terminal 50 (ignition control)	8888
13	Second speed limiter engagement signal from body builders (ST14B)	0172
14	Positive from brake indicator switch (brake pedal pressed - main brake lights)	8153
15	Positive from brake indicator switch (brake pedal released - secondary brake lights)	8158
16	-	-
17	Positive for accelerator pedal sensor	5158
18	-	-
19	Can H line (ECB)	White
20	Can L line (ECB)	Green
21	-	-
22	-	-
23	Ground from switch (N) for neutral position gear with automatic gearbox	0147
24	Ground from switch (D) for forward gears with automatic gearbox	0125
25	Ground from switch (D) for forward manoeuvre gears with automatic gearbox	0127
26	Engine stop signal (ST14A pin 2)	0151
27	Engine start-up signal from diagnostic interface/body builders (ST14A)	8892
28	Ground from start-up enablement switch	8892
29	Signal from cab release indicator switch	0096
30	Ground from Cruise Control cut-out switch (OFF)	8154
31	Ground from Cruise Control resume switch (RESUME)	8155
32	Ground from Cruise Control speed increase switch (SET+)	8156
33	Ground from Cruise Control speed decrease switch (SET-)	8157
34	Signal from switch indicating engine idling	0159
35	Signal from accelerator pedal sensor	5157
36	-	-
37	CAN H Line (FMB)	White
38	CAN L Line (FMB)	Green
39	-	-
40	-	-
41	Ground from switch (R) for reverse gears with automatic gearbox	0126
42	Ground from switch (D) for reverse manoeuvre gears with automatic gearbox	0128
43	-	-
44	-	-
45	Ground for power take-off 3 request from body builders (ST14A)	0123
46	Ground for power take-off 2 request from body builders (ST14A)	0123
47	Ground for power take-off 1 request from body builders (ST14A)	0131
48	Ground from signalling switch connection of slow gears (9 gear changes)	0117
49	Cruise Control selection signal (INT / EXT) from body builders (ST14A)	0158
50	Signal from switch (SL) for speed limiter with automatic transmission	9968
51	Signal from switch on clutch for VCM (clutch cylinder 20% compressed)	0160
52	Ground from accelerator pedal idle switch	0158
53	Ground for accelerator pedal sensor	0157
54	VCM control unit K line (diagnostic connector pin 12)	2292

https://truckmanualshub.com/
Aquila Trucks Centres

IMMOBILIZER

Description and operation

Vehicles are provided with an immobilizer engine lock that is activated automatically by removing the starter key, to increase protection against theft. Keys are provided with an electronic transponder that transmits a coded signal to an ICU centre that only enables engine start at code recognition.

IMMOBILIZER central unit on Euro 4 vehicles is integrated into VCM.
Main technical features are:

- IMMO central unit integrated into VCM
- New keys (colour BLUE)
- Min 2 max 7 programmable keys
- New antenna connector

VCM / Immobilizer procedures

Replacing a key Adding a key	1) Cut the key into based on existing mechanical profile 2) Provide yourself with Code card 3) Go to environment ENGINE / VCM-IMMOBILIZER / SPECIFIC FUNCTIONS / KEY STORING
Replacing all keys (loss)	CAUTION! In this procedure, also add working remaining keys, otherwise they will not be enabled any more at start-up. Order the new keys and program them as described above. (Replacing or Adding a key)
Replacing VCM-IMMOBILIZER central unit (NOT COMMUNICATING WITH DIAGNOSIS DEVICE)	1) Replace ECM central unit. 2) Go to environment ENGINE \ ECM-EDC7 UC31 / SPECIFIC FUNCTIONS / ACKNOWLEDGING NEW ECM (enter the electronic code that is present on code card). N.B:This operation is necessary to have the new ECM central unit acknowledge the VCM that is present on the vehicle. - If old VCM is out of order and is not communicating any more, ECM must also be either replaced or re-programmed through remote services (Immo code erased). N.B:Only for VCM 5.4 versions - If old VCM is out of order and is not communicating any more with the other vehicle communication BUSes, the emergency start via electronic code insertion is not possible.
Replacing VCM-IMMOBILIZER central unit (NOT COMMUNICATING WITH DIAGNOSIS DEVICE)	1) Cut the keys into based on existing mechanical profile. 2) Perform following operations: a) Go to environment / ENGINE \ VCM IMMOBILIZER / PROGRAMMING / OTHER / REPLACING VCM b) Go to environment ENGINE / VCM IMMOBILIZER / SPECIFIC FUNCTIONS / KEY STORING (2 new keys) c) Mount the old VCM to make VCM / ECM disconnection (present 5.4 version) d) Go to environment ENGINE / VCM IMMOBILIZER / SPECIFIC FUNCTIONS / ACKNOWLEDGING NEW VCM e) Remount the new VCM and perform the start-up operation.

https://truckmanualshub.com/
Aquila Trucks Centres

Componentry

Figure 202

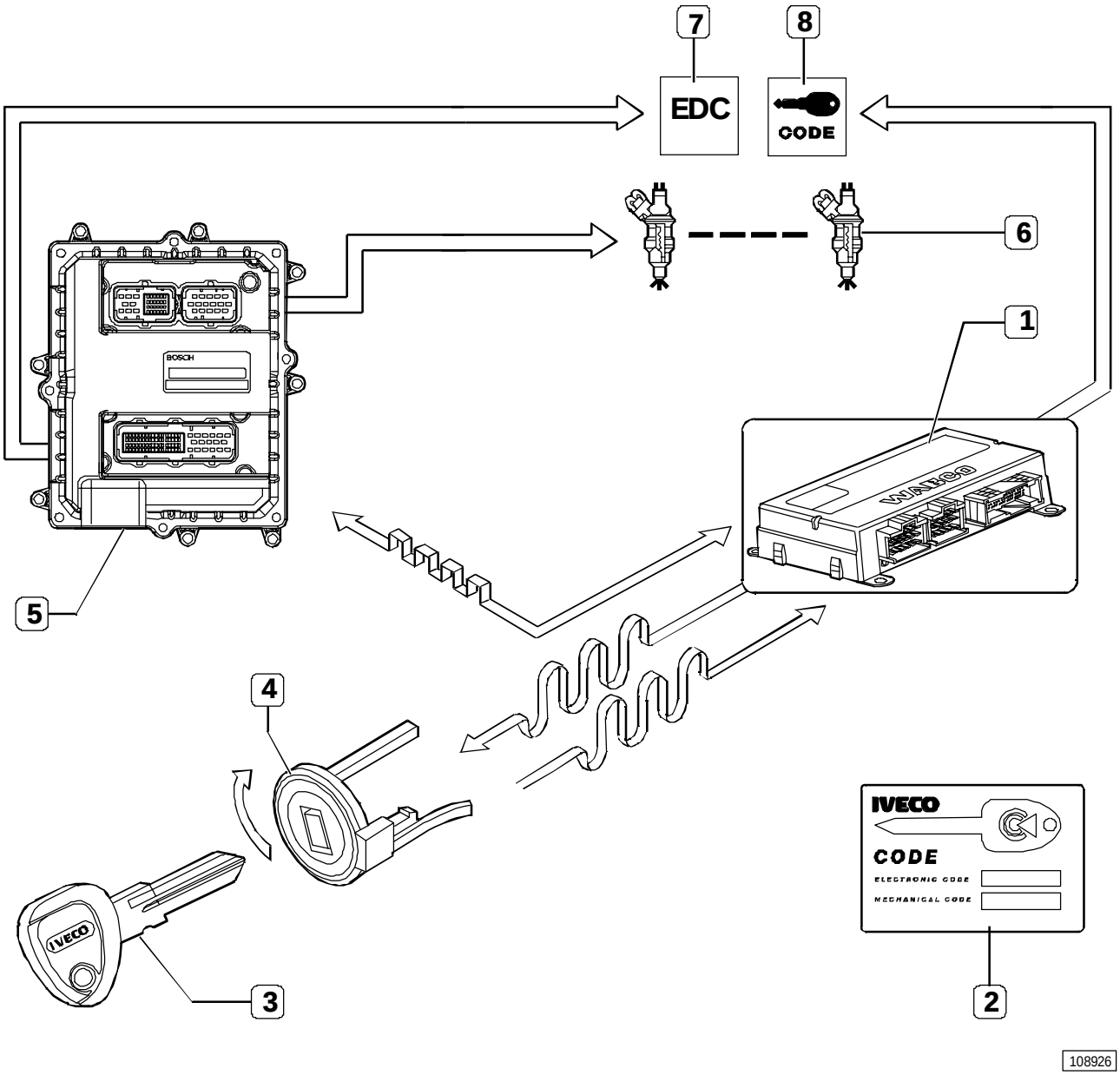

Componentry

Ref.	Description
1	Central unit VCM
2	Code-card
3	Electronic key
4	Antenna
5	EDC injecton control eletronic centre
6	Electro injectors
7	Indicator light EDC
8	IMMOBILIZER down warning light

https://truckmanualshub.com/
Aquila Trucks Centres

ABS-EBL ANTI–LOCK BRAKE SYSTEM - ELECTRONIC BRAKE LIMITER SYSTEM

The ABS – EBL braking system is available as an alternative to the EBS system on 4x2 e 6x2 vehicles.

ABS Anti – Lock Brake System

Braking a moving vehicle and is deceleration and stopping distance are essentially dependant on adherence between tire and road surface. Improved braking with an efficient braking system can only be achieved by acting on tire friction features or road surface quality.

Improved braking with an efficient braking system can only be achieved by acting on tire friction features or road surface quality.

Even in optimum conditions, absolutely safe braking is not guaranteed when critical situations have to be coped with, such as low adherence due on a wet or iced road surface, which obliges the vehicle operator to moderate braking action to prevent possible wheel locks and consequent dangerous loss of vehicle control.

The ABS therefore has the function of ensuring vehicle stability in any braking condition by preventing wheel locks independently of road surface conditions and guarantee full exploitation of available adherence.

In essence, the ABS system:

- prevents wheel locks during vehicle braking in and road adherence conditions
- reduces stop distances
- offers operator safety for stability and vehicle control maintenance.

Electronic Brakes Limiter EBL

The EBL function controls rear axle wheel skidding by comparing it with front wheel speed.

Data entering the center are wheel rpm and braking pressure measured by the pressure sensor installed upstream the rear axle ABS modulators.

The center uses these data to calculate vehicle speed and deceleration, rear axle wheel skid and minimum deceleration required.

The EBL function is activated with rear ABS modulators maintaining set pressure when the operators applies excess braking force than required for vehicle load conditions, in essence when vehicle deceleration and rear axle skid thresholds are passed.

Aquila Trucks Centres

Operating logic

The objective of the electronic center is to slow down the vehicle as fast as possible, guarantee its stability and avoid the tendency to lock wheels. When braking, the center is informed of the following to reach these objectives:

- braking intensity required by the operator via the rear axle pressure sensor
- slowing reaction due to pressures made available via signals from the speed sensors.

Ongoing monitoring and processing of these data referred to the objective set required activation of rear axle modulating valves and consequent braking optimization.

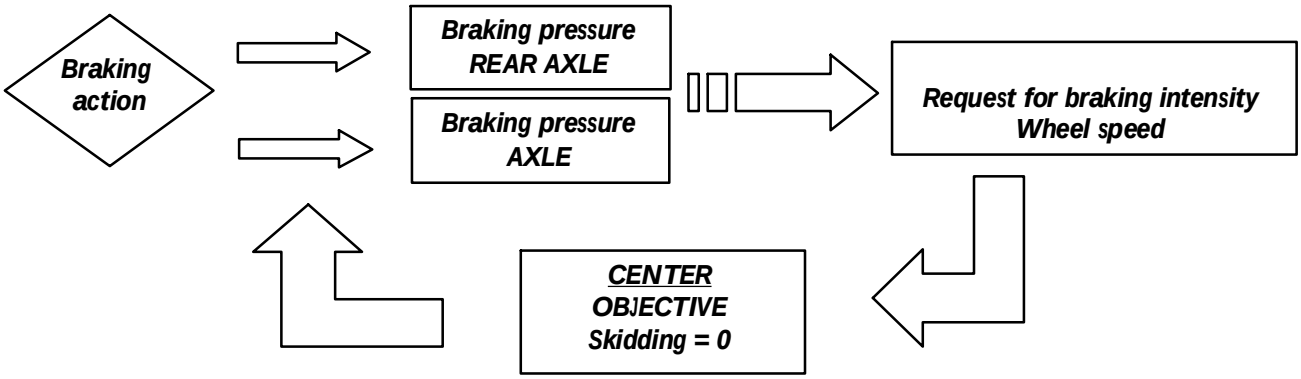

ABS electronic center

Figure 203

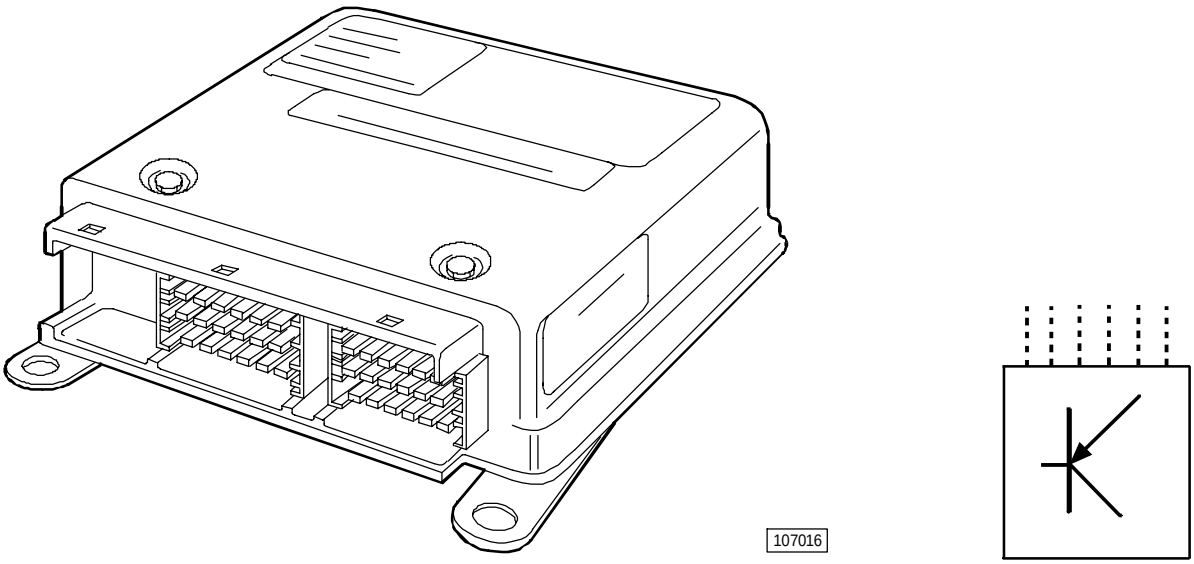

Manages the braking system by setting deceleration to the parameters measured by the various system components.

It communicates with on-board electronic systems via a CAN line and is connected through two polarized connectors.

Though offering the possibility of a blink code displayed via the ASR warning light for preliminary diagnosis, the electronic center is provided with an advanced self-diagnosis system capable of identifying and storing any intermittent anomaly to an operating system subject to environmental conditions, and ensuring proper and reliable repair.

https://truckmanualshub.com/
Aquila Trucks Centres

Pin – out ABS center

Figure 204

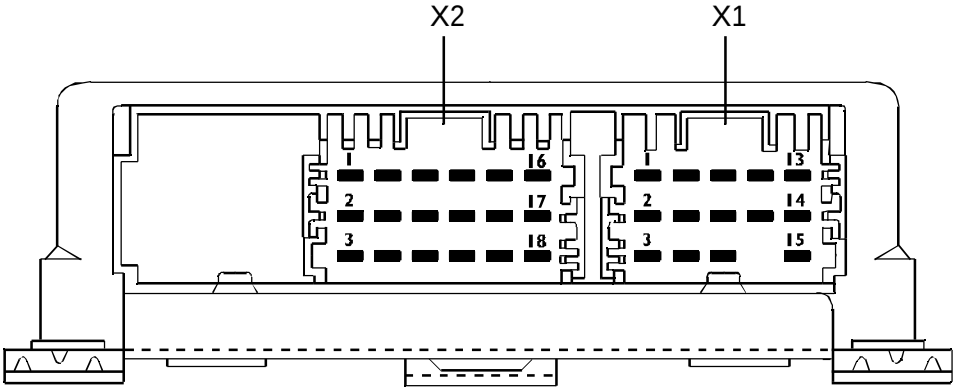

107017

Connector X1

Pin	Description	Cable color code
1	CAN L line (VDB)	Green
2	Safety signal sensor for maximum braking bridge with axle failure with ABS	6245
3	CAN H line (VDB)	White
4	Ground	0000
5	Ground from switch for ABS exclusion	0049
6	Ground from switch ASR exclusion	0048
7	Positive +15	8847
8	Positive +30	7710
9	Ground	0000
10	K line (4-pin diagnosis connector)	2299
11	-	-
12	9/15-pin safety bridge (only when connected X1 is not connected)	-
13	-	-
14	-	-
15	-	-

Connector X2

Pin	Description	Cable color code
1	Positive "EV" (unloaded)electro valve command front right wheel	9920
2	Positive "EV" (unloaded)electro valve command front left wheel	9931
3	Positive "EV" (unloaded)electro valve command front left wheel	9921
4	Positive "AV" (loaded)electro valve command front right wheel	9918
5	Positive "AV" (loaded)electro valve command front left wheel	9929
6	Positive "AV" (loaded) electro valve command front left wheel	9919
7	Ground for ASR electro valve	0260
8	Positive "EV" (unloaded) electro valve command rear right wheel	9930
9	Positive "AV" (loaded) electro valve command rear right wheel	9928
10	ABS speed sensor front right wheel	5571
11	ABS speed sensor rear left wheel	5572
12	ABS speed sensor front left wheel	5570
13	ABS speed sensor front right wheel	5571
14	ABS speed sensor rear left wheel	5572
15	ABS speed sensor front left wheel	5570
16	Positive ASR electro command valve	9260
17	ABS speed sensor rear right wheel	5573
18	ABS speed sensor rear right wheel	5573

https://truckmanualshub.com/
Aquila Trucks Centres

COMMON COMPONENTS
A.P.U. (Air processing unit)

Figure 205

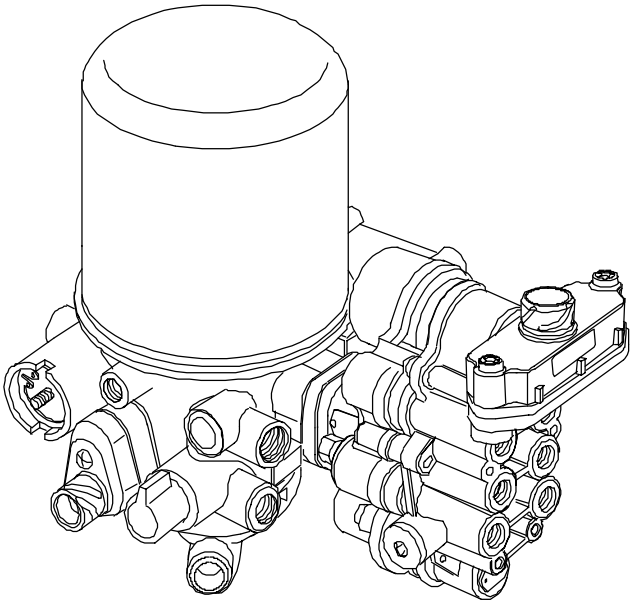

107020

It consists of a drier provided with a filter regeneration timer and a 4-way protection valve incorporating a pressure reducer.
The purpose of the drier is to purify and dry compressed air by adjusting system pressure to its rated value.
The 4-way protection valve distributes air con the various circuits ensuring their operating pressure even in the event of breakdowns.
This component is used in all systems and is rated at 10.5 + 0.2 bars; for mobile bowl CM vehicle setting is 12.5 + 0.2 bars.
The APU contains two sensors connected to the MUX system for axle pressure display on the Cluster.

Pneumatic connections			Electric connections			
11	-	From air tank to trailer	6.1	-	Positive	Pressure sensor
21	-	To automatic coupling joint	6.2	-	Ground	Pressure sensor
22	-	To moderable coupling joint	6.3	-	Signal	Pressure sensor
42	-	From (drive) CBU	6.4	-	Positive	Solenoid
3	-	Exhaust	6.5	-	Negative	Solenoid

https://truckmanualshub.com/
Aquila Trucks Centres

Figure 206

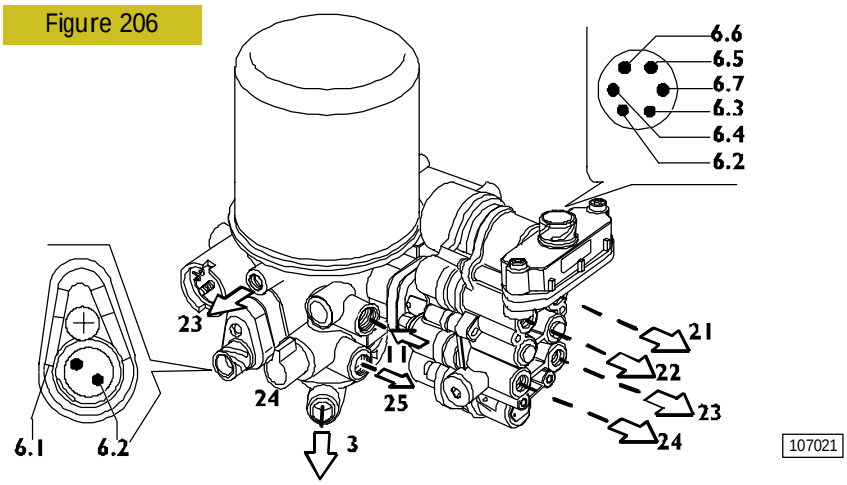

TECHNICAL VIEW

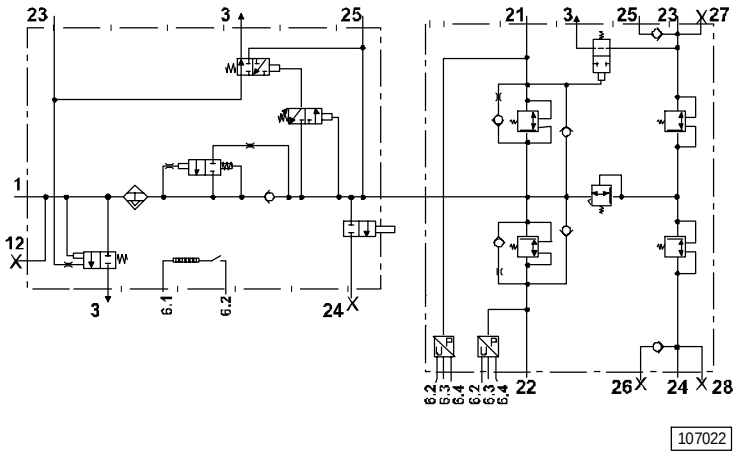

WIRING DIAGRAM

Compressed air connections

1 - Power from the compressor
24 - PTO
25 - Output for 10.5 bar compressed air suspension
23 - To the compressor for Energy Saving control
3 - Venting to outside air
21 - To the 10.5 bar axle reservoir
22 - To the 10.5 bar axle reservoir
23 - To the 8.5 bar parking brake manual distributor and trailer recharge and parking air reservoir
24 - To the 8.5 bar service reservoir

Drier electrical connections

6.1 - Negative for thermostatic resistance
6.2 - Positive for thermostatic resistance

4-way protection valve electrical connections

6.2 -	Rear circuit air pressure signal	5561
6.3 -	Positive for power	5560
6.4 -	Negative	0000
6.5 -	Front circuit air pressure signal	5562
6.6 -	Positive for power	5560
6.7 -	Negative	0000

https://truckmanualshub.com/
Aquila Trucks Centres

Duplex distributor (ABS/EBL systems)

Figure 207

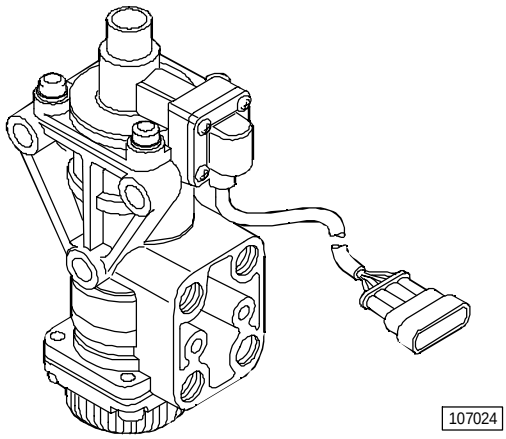

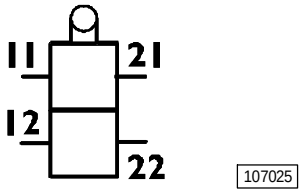

This non self-limited coaxial component consists of a compressed air and an electrical section, the former distributing braking control pressure to the front axle, the rear axle and the trailer control servo distributor.

The electrical section ensures sending the braking signal to the EDC center and to the stop light control relay.

Figure 208

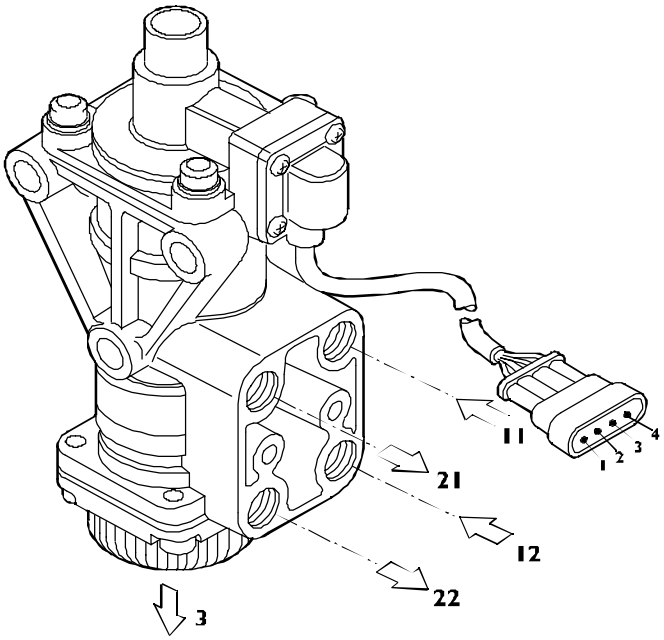

Compressed air connections:

11 - Power from the axle reservoir

12 - Power from the axle reservoir

21 - Valve output to servo distributor relay valve and trailer control

22 - Valve output to axle relay

3 - Vent to outside air

Electrical connections:

1 - Positive for stop lights/EDC

2 - Input positive

3 - Positive for EDC

4 - Input positive

https://truckmanualshub.com/
Aquila Trucks Centres

Electro valve ABS 78052

This normally open electro valve consists of a power coil and a discharge.

It is used to modulate braking pressure when wheel tendency to lock is detected by the speed sensor.

Vehicles with the EBS system feature two of them to control the front axle.

Figure 209

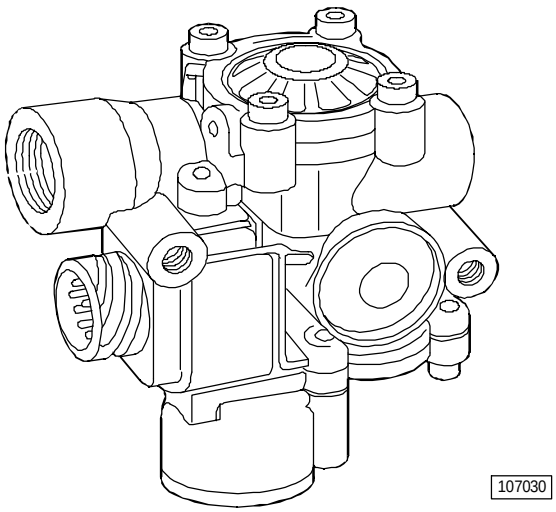

PERSPECTIVE VIEW

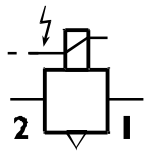

WIRING DIAGRAM

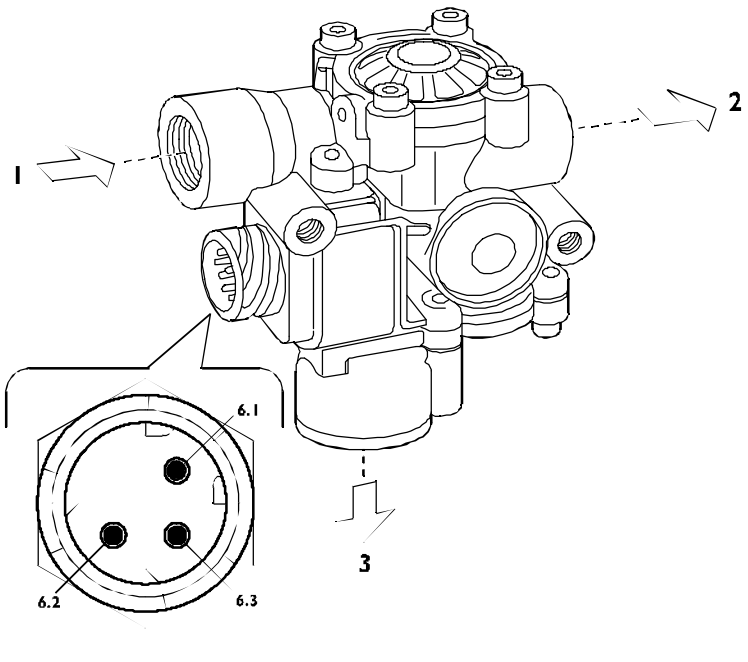

Compressed air connections

1 Proportional relay power

2 Axle brake cylinder output

3 Discharge

https://truckmanualshub.com/
Aquila Trucks Centres

Electric connections

Wheel	Solenoid valve pin 78052	ABS		EBS	
		Cable code	ABS pin	Cable code	EBS pin
Left-hand front LHF	1	9919	X2/6	9919	X4/10
	2	0000	-	0122	X4/12
	3	9921	X2/3	9921	X4/11
Right-hand front RHF	1	9918	X2/4	9918	X3/1
	2	0000	-	0118	X3/3
	3	9920	X2/1	9920	X3/2
Left-hand rear LHR	1	9929	X2/5	-	-
	2	0000	-	-	-
	3	9931	X2/2	-	-
Right-hand rear RHR	1	9928	X2/9	-	-
	2	0000	-	-	-
	3	9930	X2/8	-	-

https://truckmanualshub.com/
Aquila Trucks Centres

Phonic wheel and speed sensor 88001

Sensors continuously supply the electronic center with all the data it requires to properly pilot the electro valves.

Signals are obtained from magnetic flow lines that close through the teeth of a teethed wheel facing the sensor and rotating together with the wheel.

Passage from full to empty due to the presence or absence of the tooth causes sufficient magnetic flow variation to create induced electromagnetic force at sensor terminals and thus an alternating electrical signal that is sent to the electronic center.

The clearance between the sensor and wheel, called air gap, must obviously be at a pre-set value of 0.8 ÷ 1.6 mm for proper signals to be sent. Resistance of each sensor at connection terminals is between 1 and 2 kΩ.

The toothed wheel is called phonic wheel because the signal it generates has the same frequency as a sound wave.

The frequency of this signal serves to define wheel rotation speed.

Frequency variations, or the speed at which signals follow one another, define acceleration and deceleration rates.

Figure 210

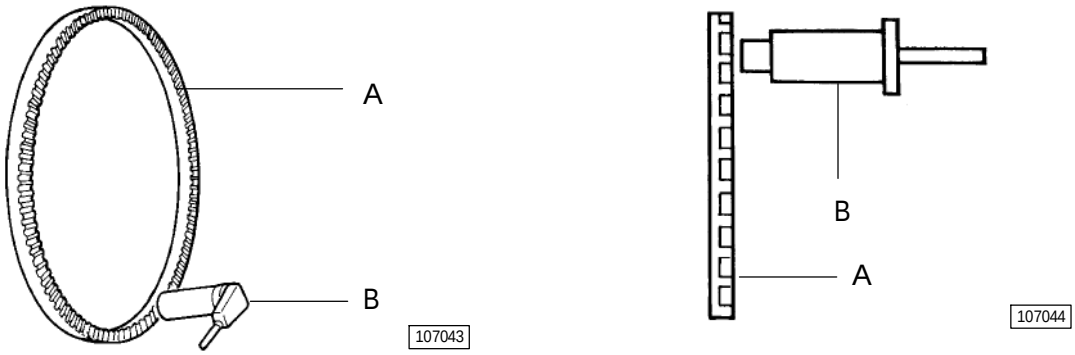

PHONIC WHEEL (A) AND SENSOR (B) PERSPECTIVE VIEWS

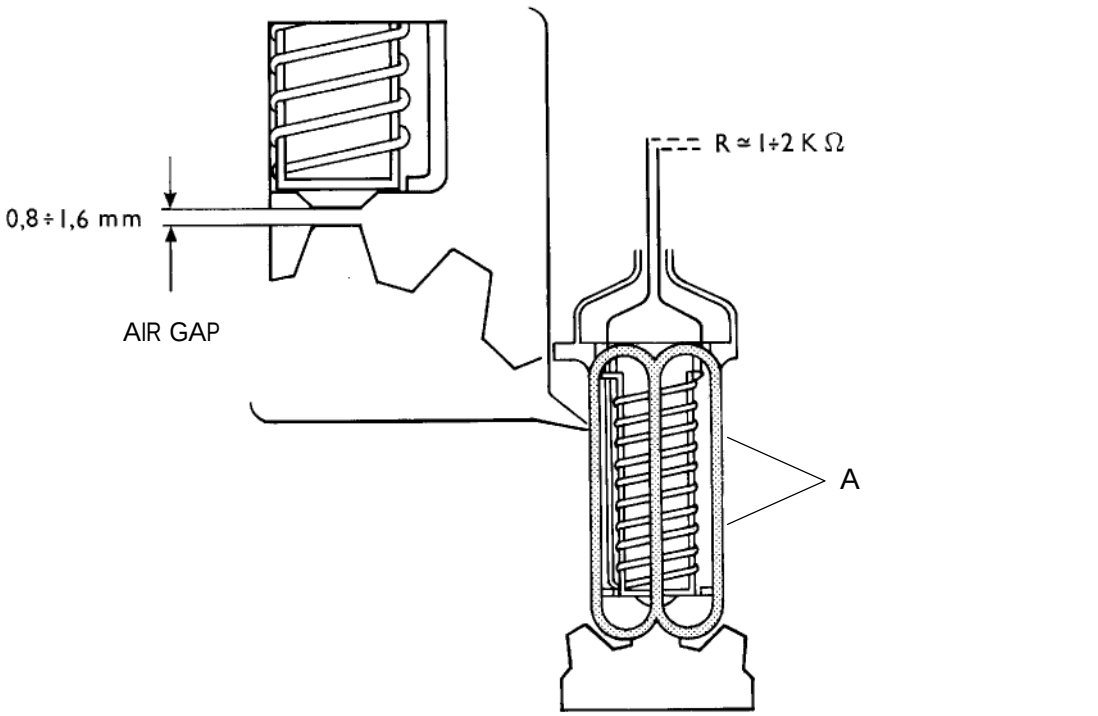

A. Magnetic flow lines

https://truckmanualshub.com/
Aquila Trucks Centres

Low pressure switch

Figure 211

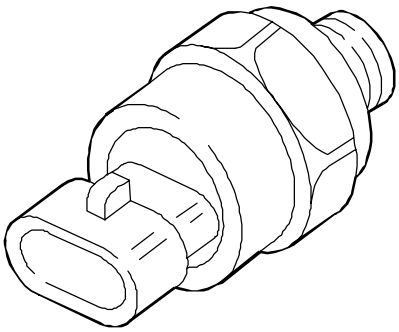

107046

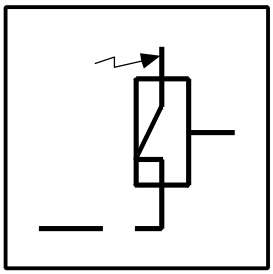

107047

It warns the driver, by the warning lights on the CLUSTER, of low pressure in the following systems:

- Hand brake engaged - N.C. 6.6 ± 0.2 bars
- Low trailer pressure recharge - N.C. 6.6 ± 0.2 bars

A normally closed 6.6 ± 0.2 bar switch is also mounted on the axle reservoir to inform the electronic center of any axle circuit low pressure so as to inhibit differentiated axle braking in the ASR function.

https://truckmanualshub.com/
Aquila Trucks Centres

ECAS SUSPENSIONS

Compressed air suspensions

Compressed air suspensions feature high flexibility, high vibration damping and with system self-adjustment constant frame to road level clearance independently of vehicle load, that can be changed as well as vehicle load height with a special push button provided for this purpose.
In addition to the known advantages offered by compressed air suspension, the ECAS system also features:

- minimized air consumption
- prompt response to adjustment
- simple systems
- top safety level
- complete system diagnosis.

The Electronically Controlled Air Suspension ECAS system provides automatic vehicle compressed air suspension rated level monitoring.

All the above operations are subject to operating conditions and connected system safety devices.

The ECAS electronic provides automatic frame ground clearance control via the real values supplied by the sensors, which are compared with stored rated data. In the event of setting deviations or variations, the electronic center pilots the electro-pneumatic units through which it corrects real levels versus those stored previously by the operator.

The system is provided with remote control for frame lifting/lowering and leveling and operations are possible both with the vehicle stationary and moving.

This unit also enables other frame setting level storage and retrieval when required by operating conditions.

Vehicle lifting, lowering and leveling before load and unload operations are via the remote control located on the operator seat side.

The remote control can be extracted from its support so these operations can also be performed from ground level.

When unloading heavy loads or containers with a crane, the frame can be lowered completely.

https://truckmanualshub.com/
Aquila Trucks Centres

Figure 212

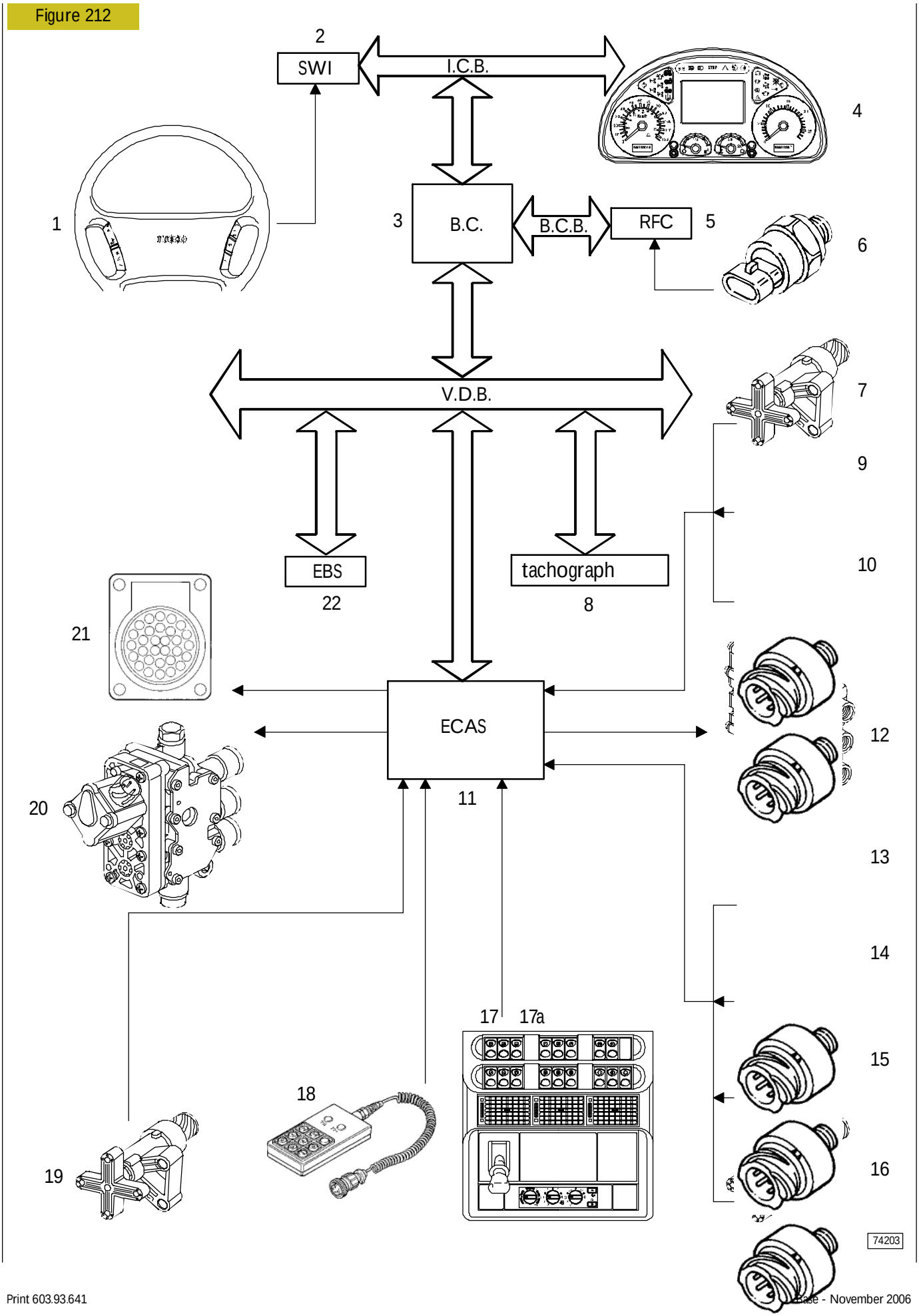

https://truckmanualshub.com/
Aquila Trucks Centres

Ref.	Description	Component code
1	Steering wheel	-
2	Steering Wheel Interface	86123
3	Body Computer	86116
4	Cluster	50005
5	Rear Frame Computer	86118
6	Low pressure sensor	42200
7	Right rear axles level sensor	40046
8	Electronic tachograph	-
9	Right drive axle sensor	42381/A
10	Left drive axle sensor	42381/B
11	ECAS electronic control unit	86023
12	Axle solenoid valve unit	-
13	3rd axle compressed air lift sensor	42389
14	Right 3rd axle air pressure sensor	42382/A
15	Left 3rd axle air pressure sensor	42382/B
16	Left axle level sensor	40046/B
17	Start support control switch	53030
17a	3rd axle left switch remote control	53309
18	Suspension remote control	85065
19	Axle level sensor	40046/A
20	Axle solenoid valve unit	78239
21	Diagnosis connector	72021
22	EBS electronic control unit	88005

https://truckmanualshub.com/
Aquila Trucks Centres

ECAS electronic control unit

Vendor	WABCO
Voltage	18 ÷ 30 Vdc
Heat range	-40 to 75 _C

Figure 213

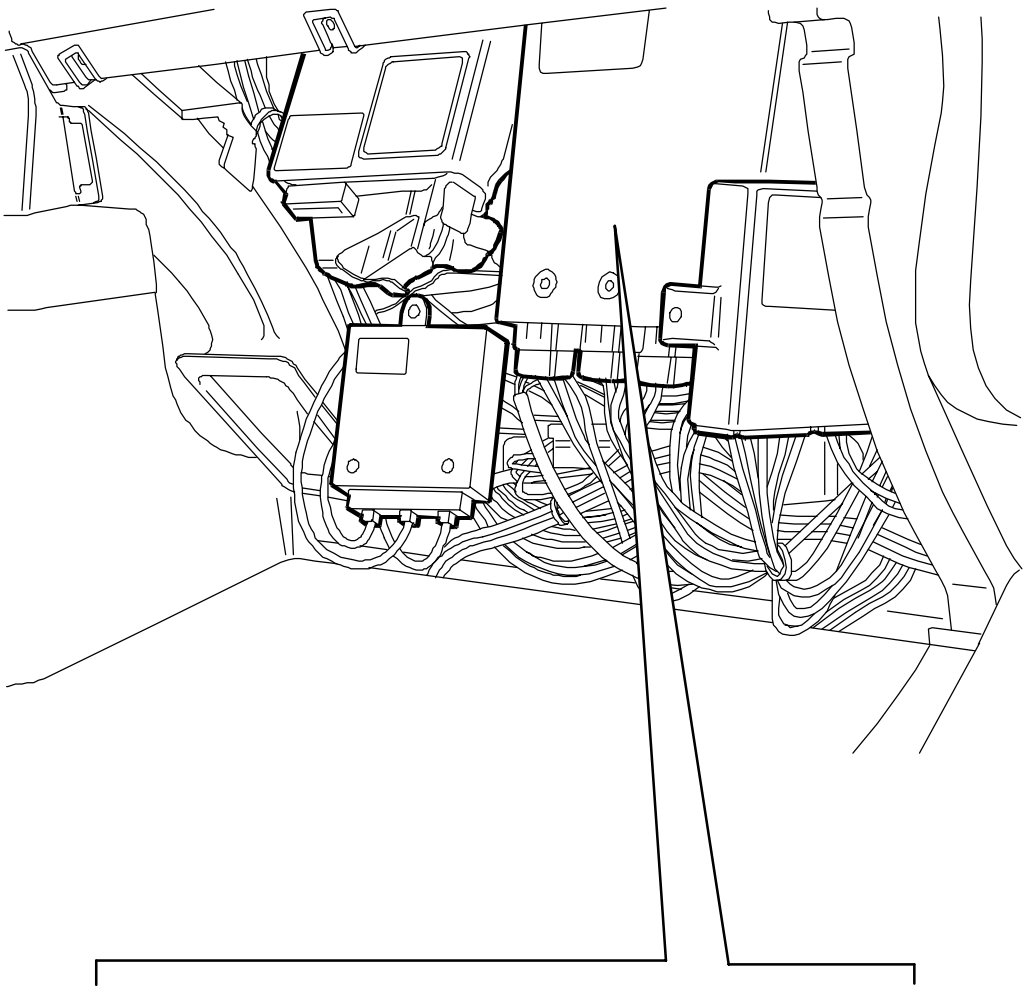

73667

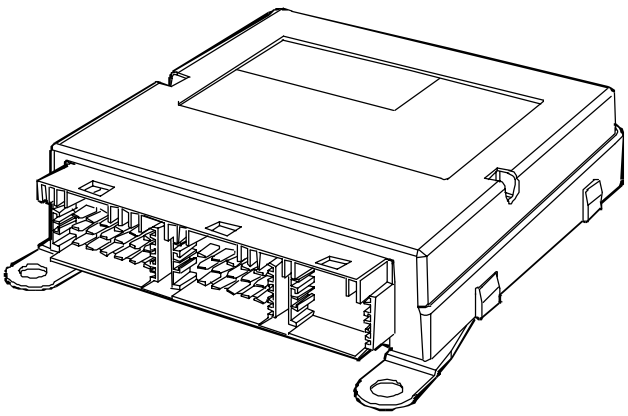

107052

ECAS electronic control unit

https://truckmanualshub.com/
Aquila Trucks Centres

Ecas control unit for air suspension system

Figure 214

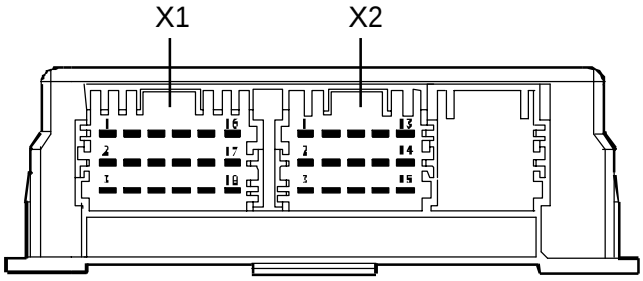

Connector X1

Pin	Description	Cable color code
1	CAN L line (VDB)	Green
2	Ground	0000
3	CAN H line (VDB)	White
4	-	-
5	Positive for manual levelling key (ST14 fitters connector)	8445
6	-	-
7	Positive +30	7440
8	CLOCK line on ECAS remote-control set	6402
9	K line(14-pin diagnosis connector)	2294
10	Positive +15	8810
11	Data line on ECAS remote-control set	6403
12	Ground	0000
13	Positive for ECAS remote-control set	8810
14	-	-
15	Ground for ECAS remote-control set	0050
16	-	-
17	-	-
18	-	-

Connector X2

Pin	Description	Cable color code
1	Positive for load pressure sensors on axles (opt.)	8403
2	Load pressure sensors on axles signal - right axle (opt.)	5443
3	-	-
4	Positive for rear axle electro pneumatic distributor	9400
5	Rear left axle level sensor signal (only truck)	5422
6	Load pressure sensors on axles signal-left axle (opt. - only truck)	5444
7	Ground for load pressure on axles sensors	0400
8	Rear right sensor level signal	5421
9	-	-
10	Ground for electro pneumatic distributor rear axle left valve command (only truck)	9425
11	Ground for electro pneumatic distributor rear axle load/unload valve command	9423
12	-	-
13	Ground for electro pneumatic distributor rear axle right valve command	9424
14	-	-
15	-	-

https://truckmanualshub.com/
Aquila Trucks Centres

Electro-pneumatic axle distributor

It consists of three control electro valves "A", "B" and "C" and the same number of compressed air distributors.

Electro valve "A" manages the input/output distributor.

Electro valve "B" manages the right frame setting distributor.

Electro valve "C" manages the left frame setting distributor.

The electro-pneumatic distributor is connected to the system via a 4-pole connector (A).

Figure 215

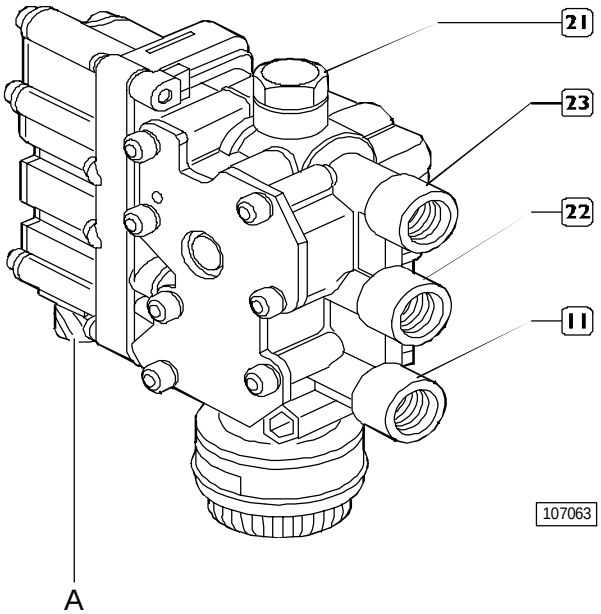

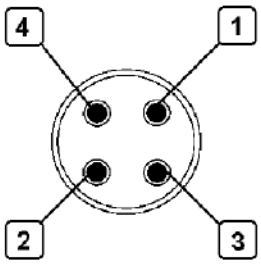

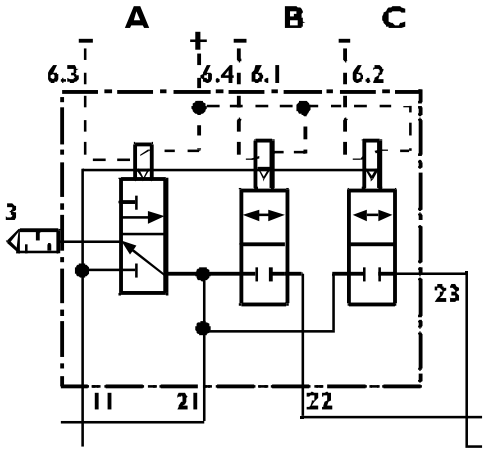

Ref.	Description
1	Electro valve "A" control negative
2	Electro valve "B" control negative
3	Electro valve "C" control negative
4	Common positive

https://truckmanualshub.com/
Aquila Trucks Centres

EUROTRONIC AUTOMATIC TRANSMISSION

General

The new generation of Automated EuroTronic transmissions is IVECO's response to new Customer expectations and changed needs. The design of gearshifts with a new inspected and test transmission technology concept combined with advanced electronics has generated a system that guarantees:

- Economic efficiency
- Reliability
- Environmental acceptability

Figure 216

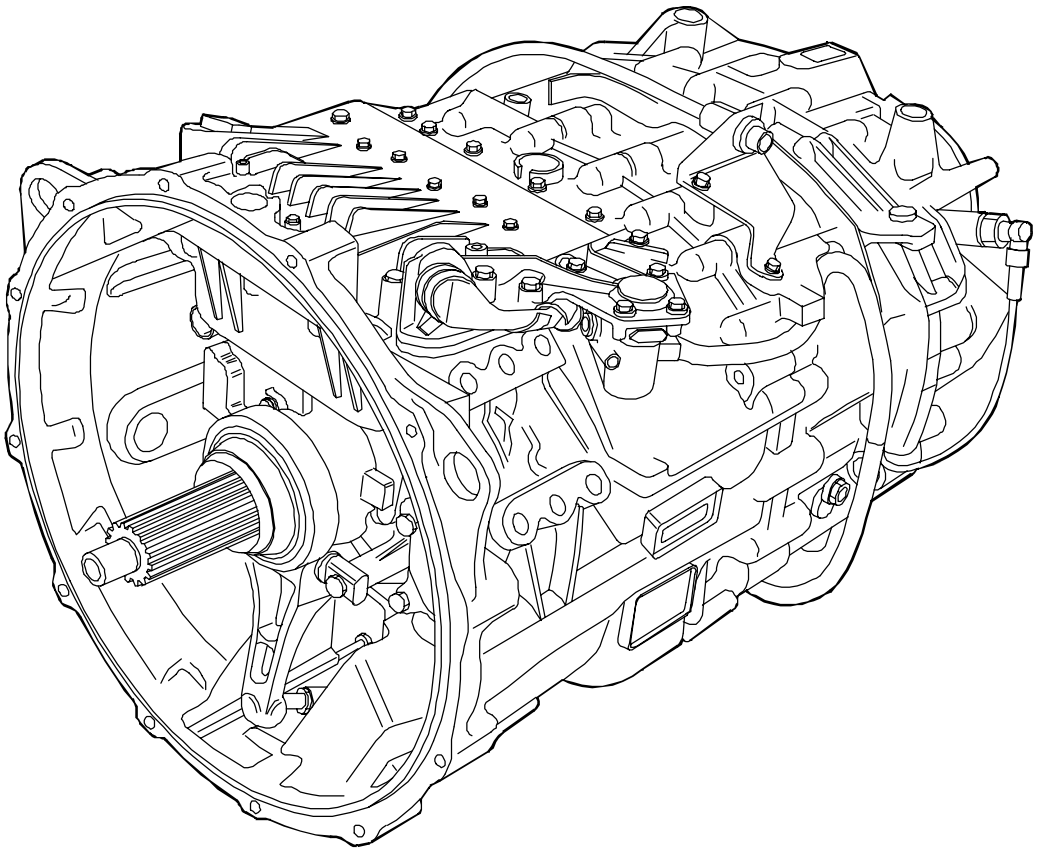

VIEW OF THE AUTOMATED EUROTRONIC TRANSMISSION

These modern and completely automated transmission systems with highly integrated components have already been developed for EDC M6.2 center ELECTRONIC CONTROL DIESEL ENGINES.

https://truckmanualshub.com/
Aquila Trucks Centres

The system automates gear selection and meshing by automatically controlling the clutch and engine during gear shifting.

The operator decides when to shift gears by actuating a selector lever with no need to release the accelerator pedal.

Unlike previous versions, the Automated EuroTronic enables the operator to use COMPLETELY AUTOMATIC gear shifting management.

The system enables automatic vehicle star and completely eliminates the clutch pedal. On receipt of vehicle and operator signals, the electronic center controls all components involved, optimizes maneuvers and manages safety.

	PRODUCTIVITY				Comfort	Safety
	Con-sumption	Average com-mercial speed	Maintenance courses	Payload		
Operating comfort and less physi-cal and mental stress	•	•			•	•
Precise and fast gear shifting	•	•			•	
Optimized use	•		•			
No use errors	•	•	•		•	•
Selection of maximum rpm for engine brake use	•	•			•	•
Reduced tare				•		
Longer linkage line life (the clutch especially)			•			
Noise abatement (Db)					•	
Automatic gear shifting	•	•			•	

Design features

The entire transmission shaft and universal joint assembly is relieved of considerable load as gear shifting operations and procedures are automated. The main Automated EuroTronic countershaft gearbox consists of the following:

- A couple of low and high speed gears (SPLITTER)
- 4 forward speeds + 1 reverse

The auxiliary box consists of a G.R.E. epicyclical reduction gear mounted at the back to double the number of gear ratios of the main gearbox and enable 16 forward and 2 reverse speeds.

https://truckmanualshub.com/
Aquila Trucks Centres

Description

Automated EuroTronic is a completely automatic transmission featuring a regulated dry clutch that eliminates the clutch pedal.

It consists of a reduced noise emission main gearbox with a planetary and split group.

The main unit meshes with front teeth and only the planetary and split group are synchronized.

The 16-speed Automated EuroTronic features sixteen forward and two reverse speeds.

The Instrument cluster supplied the operator with all necessary system information, such as gear meshed, disturbances and the like.

The insert module and the clutch regulator unit are the most important structural elements for complete transmission automation.

The former consists of the transmission electronic system, switching valves, cylinder and sensors.

The transmission electronic system processes all input signals and inserts the speed via the electromagnetic valve and the switching cylinder.

The clutch regulator is set electro-pneumatically and performs all friction actuation operations. In the manual mode, the operator can easily select speeds with the speed selector lever.

In the automatic mode, the operator only has to actuate the accelerator or brake pedal.

Speeds are selected automatically by the system.

To respect anti-pollution regulations, all gears are helical teeth, which enabled abating noise level about 79 db.

https://truckmanualshub.com/
Aquila Trucks Centres

Transmission/clutch connection diagram with the compressed air system

Figure 217

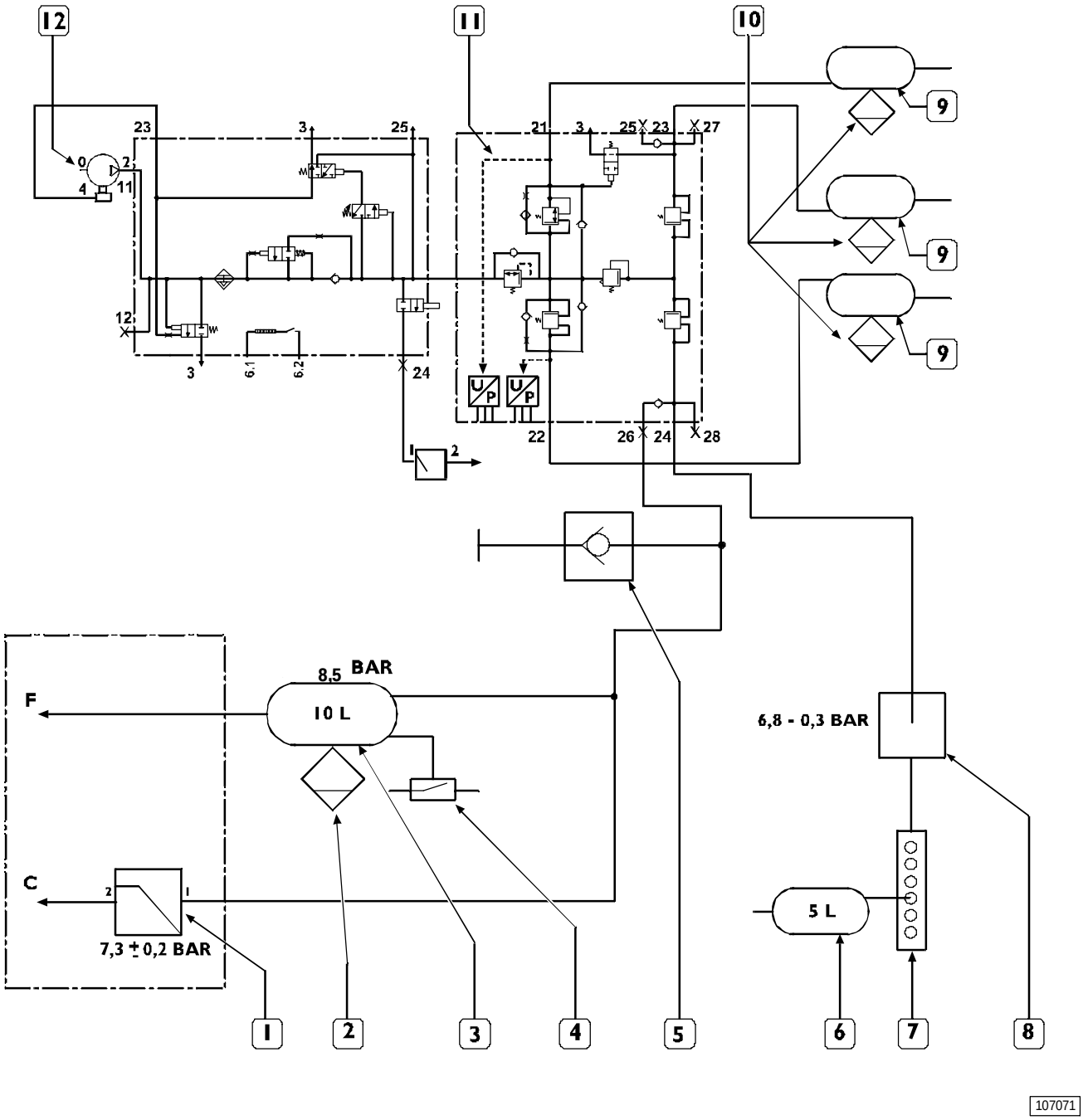

1. Pressure limiter valve - 2. Normal purge valve - 3. 10-l reservoir - 4. Air pressure switch - 5. Pressure control socket - 6. 5-l reservoir - 7. Distributor element - 8. Controlled pressure valve - 9. Reservoir - 10. Normal purge valve - 11. APU Air Processing Unit - 12. Compressor.
F = Clutch
C = Transmission

https://truckmanualshub.com/
Aquila Trucks Centres

Display on the Instrument Cluster

The information required by the operator is displayed by the system on the Instrument Cluster central display.

Figure 218

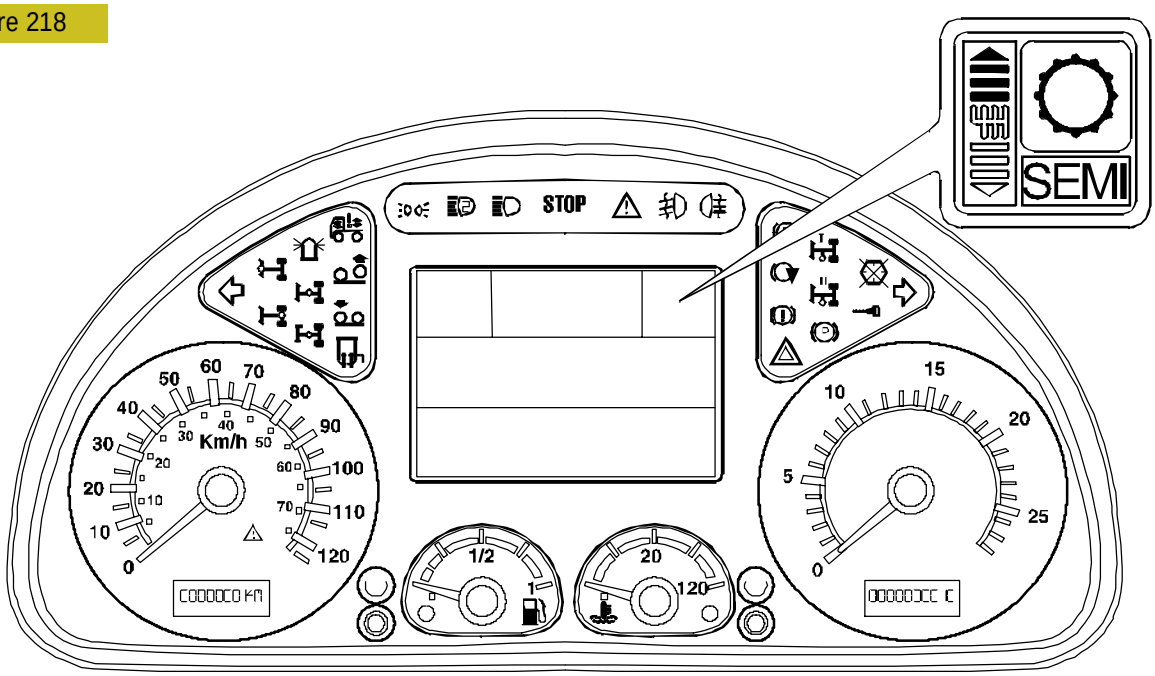

The symbols displayed by the system are as follows:

	System self-diagnosis	CL	Clutch overload
N	Gear in neutral	CW	Duct disc wear
AP	Accelerator pedal pressed before turning the ignition key	SEMI	Transmission in the manual mode
RL	Slow reverse selected	AUTO	Transmission in the automatic mode, with clear display Transmission with the automatic mode pre-selected but not active with shadowed display (moving at low speed)
RH	Fast reverse selected	12	Speed number selected (12th)
AL	Low system air pressure		Transmission in the manual mode, lower speeds recommended by the system Recommended ratios (as many as 3) are displayed with bars

https://truckmanualshub.com/
Aquila Trucks Centres

LIMP - HOME

The Limp Home function enables removing the vehicle when the system presents serious anomalies it cannot manage automatically. It cannot move the vehicle when purely mechanical anomalies are present. The operator can activate the Limp Home function as follows:

1. Key switch on stop
2. Key switch on +15
3. Press the blue color push button on the gear shift lever within 5 seconds
4. Keep the blue color push button pressed for at least 5 seconds.

The operator can select the speed at which to start with gearshift lever, and can select as many as 7 speeds forward and 2 reverse with the 16 speed transmissions and 5 and 2 respectively with the 12-speed one. Selection is managed by the system via an internal delay reaction time and not through the speed with which the gearshift lever sensors identify lever movements.
Speed selection must be slow to allow the system to implement each individual speed, as the Cluster displays individual speeds with a delay of a few seconds.
The speeds that can be set with the Limp Home function can only be selected with the vehicle stationary.
After start speed selection, pressing the function push button for at least 2 seconds makes the system control timed clutch engagement.
To prevent the engine from stopping, the clutch disengages automatically when the speed output from the transmission is below a reference threshold. Is the clutch sensor is not operating properly, the clutch can only be engaged/disengaged manually with the Function push button.
The system disregards any gearshift lever movement during vehicle movement. In particular, push button function operation is excluded when engine rpm is over 950 and reactivated at under this rating.
Clutch management can thus also be manual with the function push button on the gearshift lever of the brake pedal when engine rpm is under/equal to 950. When the vehicle is stopped with the Limp Home function, the clutch is managed automatically if possible or manually as described above.
At vehicle stop, the system keeps the Limp Home function active with the start speed set previously and the function remains active until system RESET is completed.

https://truckmanualshub.com/
Aquila Trucks Centres

Eurotronic Automated transmission operation diagram

Figure 219

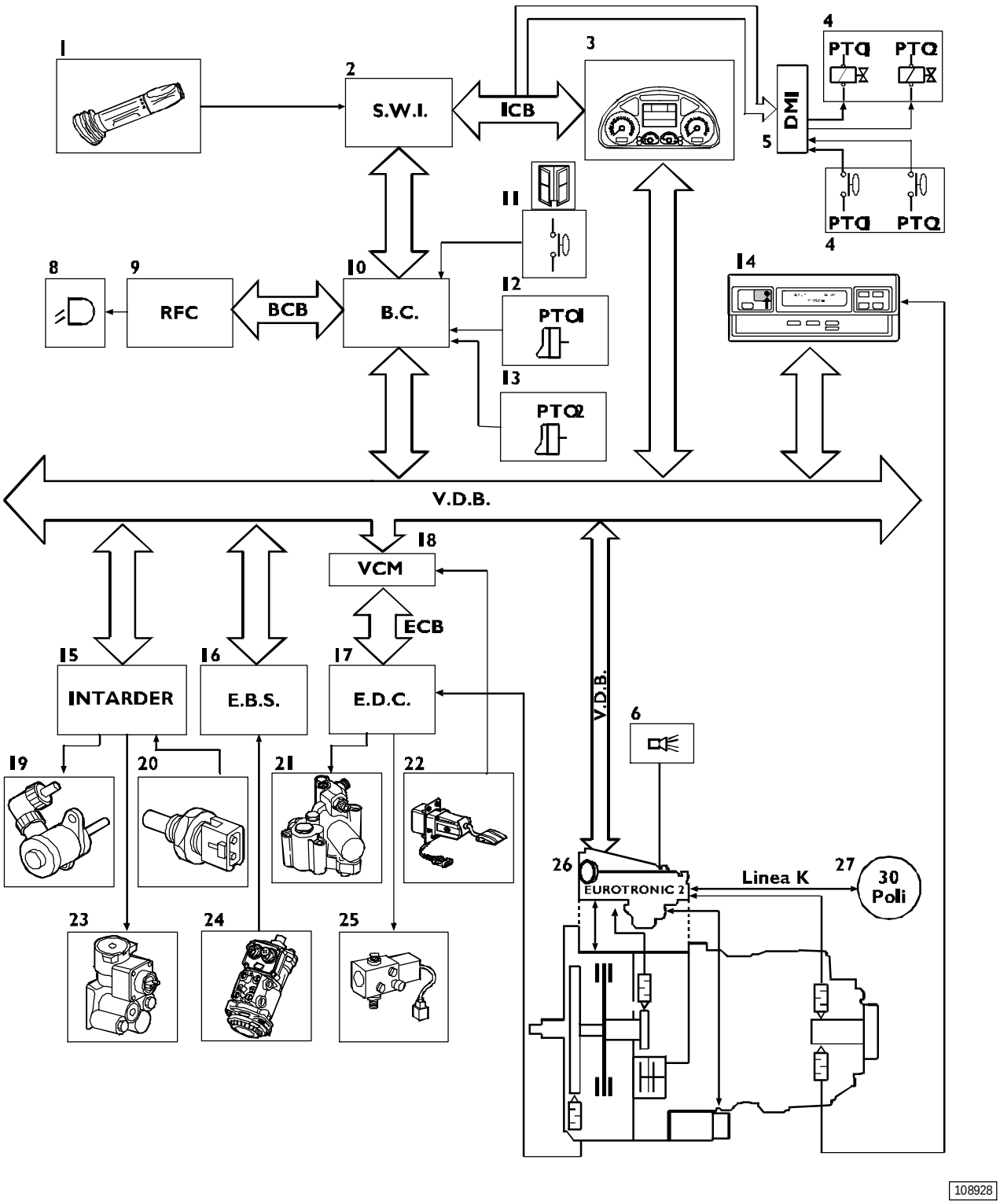

1. Multi-function lever - 2. Steering Wheel Interface - 3. Instrument Cluster - 4. PTO solenoid valves - 5. DMI - 6. External buzzer - 7. PTO on warning switches - 8. Reverse lights - 9. Rear Frame Computer - 10. Body Computer - 11. Door open switch- 12. Switches for PTO1 on request - 13. Switches for PTO2 on request - 14. Tachograph - 15. Intarder Control Unit - 16. EBS Control Unit - 17. EDC Control Unit - 18. VCM - 19. Proportional solenoid valve- 20. Water temperature sensor - 21. Engine stop solenoid valve - 22. Accelerator pedal - 23. ON/OFF solenoid valve - 24. Duplex Distributor (brake pedal) - 25. VGT solenoid valve - 26. Gearbox Electronic Control Unit - 27. Diagnosis socket

https://truckmanualshub.com/
Aquila Trucks Centres

Location of main components

Figure 220

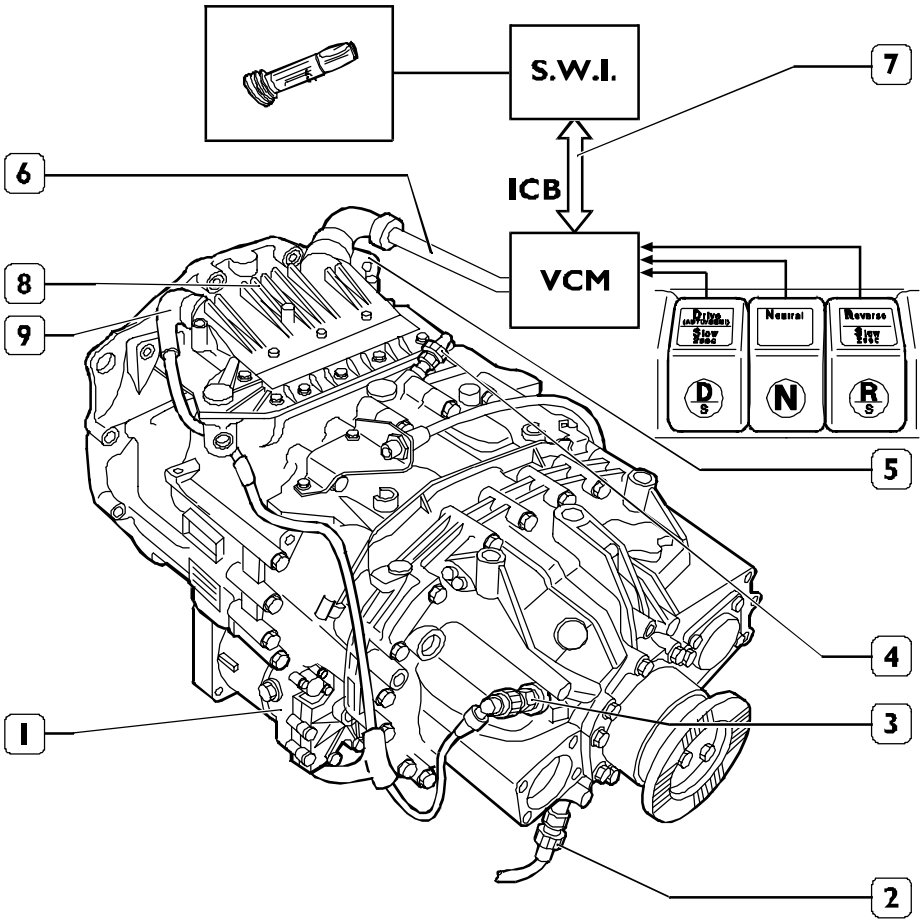

108929

1. Clutch actuator - 2. Tachograph gearshift/transmission outgoing speed sensor - 3. Gearshift/transmission outgoing speed sensor for sensor - 4. Gearshift idling position sensor - 5. Frame side centre connector - 6. Vehicle Data Bus VDB CAN line - 7. System internal CAN line - 8. Gearshift/transmission electronic centre - 9. Gearshift/transmission side centre connector

https://truckmanualshub.com/
Aquila Trucks Centres

ELECTRONIC CONTROL UNIT

It is integrated into the gearshift actuator.

Automatic transmission management enables automating speed selection and meshing with automatic clutch and engine control.

It interfaces with the other on-board electronic systems such as the EDC, EBS, INTARDER and Instrument Cluster via a CAN V.D.B. Vehicle Data Bus line.

From connection with the EDC system the transmission electronic control unit can detect accelerator pedal position, fuel delivery, engine rpm and engine brake and kick-down activation.

The control unit inside houses control unit temperature, transmission oil temperature and low air pressure sensors to improve system operation.

Function AL is enabled at <5.8 bar pressure and disabled at> 6 bars. The Automated EuroTronic transmission electronic center offers the possibility of a Cluster displayed error code for preliminary diagnosis and is also provided with an advanced self-diagnosis system capable of identifying and storing any even intermittent anomaly dependent on environmental condition the system may have encountered during operation, to ensure more correct and reliable repair.

Figure 221

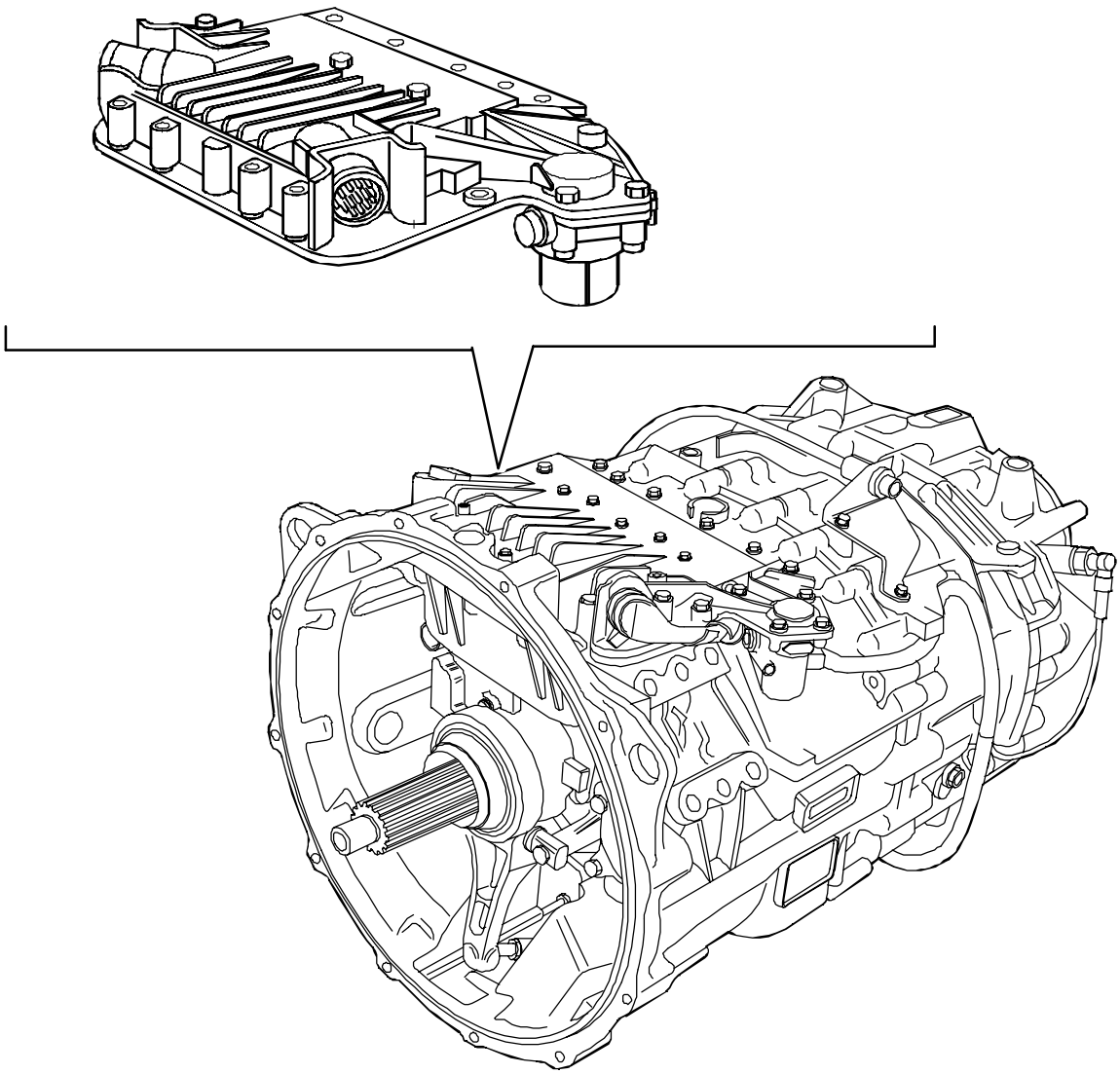

https://truckmanualshub.com/
Aquila Trucks Centres

Figure 222

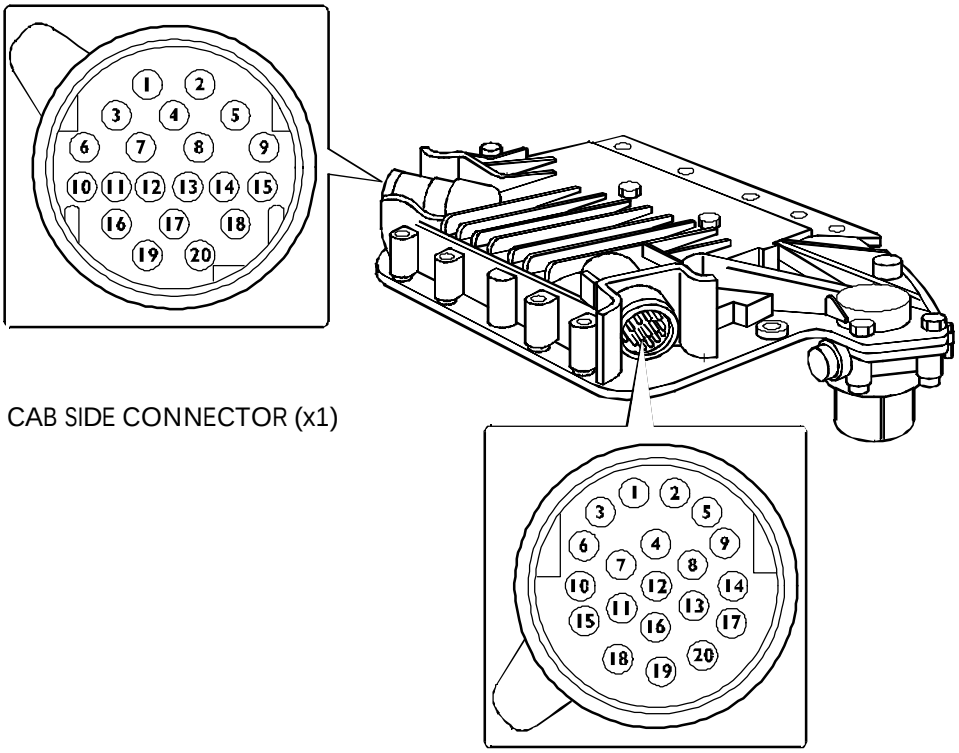

Pin	Cable	Description x1	Pin	Cable	Description x2
1	8801	Power from Body Computer (J 3/6)	1	–	–
2	2297	Positive 30-pole connector for ground diagnosis	2	–	–
3	–	Free	3	–	–
4	7101	Positive from fuse 70602/2 (+30)	4	–	–
5	7101	Positive from fuse 70602/2 (+30)	5	–	–
6	–	Free	6	–	Gearshift speed sensor mass (pin2)
7	–	Free	7	–	Signal electrovalve Y17 (slow opening) (pin A)
8	WS/BI	CAN VDB line	8	–	Signal electrovalve Y16 (fast opening) (pin B)
9	–	Free	9	–	Signal electrovalve Y15 (slow closing) (pin E)
10	1101	Gearbox malfunction beeper earth	10	–	Clutch position sensor analogic signal (pin F)
11	6100	Gearbox malfunction beeper positive	11	–	Gearshift/transmission outgoing speed sensor signal (pin 3)
12	GN/VE	CAN L VDB line	12	–	Signal electrovalve Y14 (fast closing) (pin 0)
13	–	–	13	–	–
14	–	–	14	–	–
15	–	–	15	–	Clutch position sensor power supply (pin G)
16	0000	Negative	16	–	Y15 - Y17 electro valve mass (pin 3)
17	0000	Negative	17	–	Y14 - Y16 electro valve mass (pin C)
18	–	–	18	–	–
19	–	–	19	–	Gearshift/transmission speed sensor power supply (pin 1)
20	–	–	20	–	Clutch position sensor mass (pin H)

https://truckmanualshub.com/
Aquila Trucks Centres

TRANMSISSION ACTUATOR

The transmission actuator is mounted on the top of the main gearbox. It consists of a series of electro valves, control cylinder and sensors. The electronic center powers the various electro valves to selected gear ratios available by using sensor signals as a feedback. Actuator operating pressure is 7 bars.

Actuator components

Y1 Inertia brakes control electro valve
Y2 Fast Splitter control electro valve
Y3 Slow Splitter control electro valve
Y4 Speed selection control electro valve
Y5 Speed selection control electro valve
Y6 Gear meshing control electro valve
Y7 Gear meshing control electro valve
Y8 Downshifted speed epicyclical unit control electro valve
Y9 Normal speed epicyclical unit control electro valve
Y10 Cmpressed air supply electro valve
B2 Transmission input rpm sensor
B4 Selected speed sensor
B5 Selector position sensor
B6 Normal and downshifted speed epicyclical unit position sensor
B7 Splitter position sensor

The actuator cannot be overhauled.
For actuator removal, transmission must be on NEUTRA.
The transmission neutral warning switch is located on the gearshift.

Electro valves are of the N.C. on/off type powered at 24 Volt with ~64.2 Ohm resistance at 20 °C.
Induction type transmission input rpm sensor B2 features ~1 Kohm resistance and identified rpm with a 40-teeth sound wheel. This signal is compared with the engine rpm measured by the E.D.C. center; if the two values are NOT identical the transmission center is enabled to detect clutch slide.
Induction type sensors B4, B5, B6 and B7, respectively selector position, epicyclical unit and splitter, are an integral part of the control cylinders and feature ~ 69 Ohm resistance at 20 °C.
The automatic system pressure sensor located downstream the reduction gear is also integrated inside the center.

https://truckmanualshub.com/
Aquila Trucks Centres

LOCATION ON THE VEHICLE

Figure 223

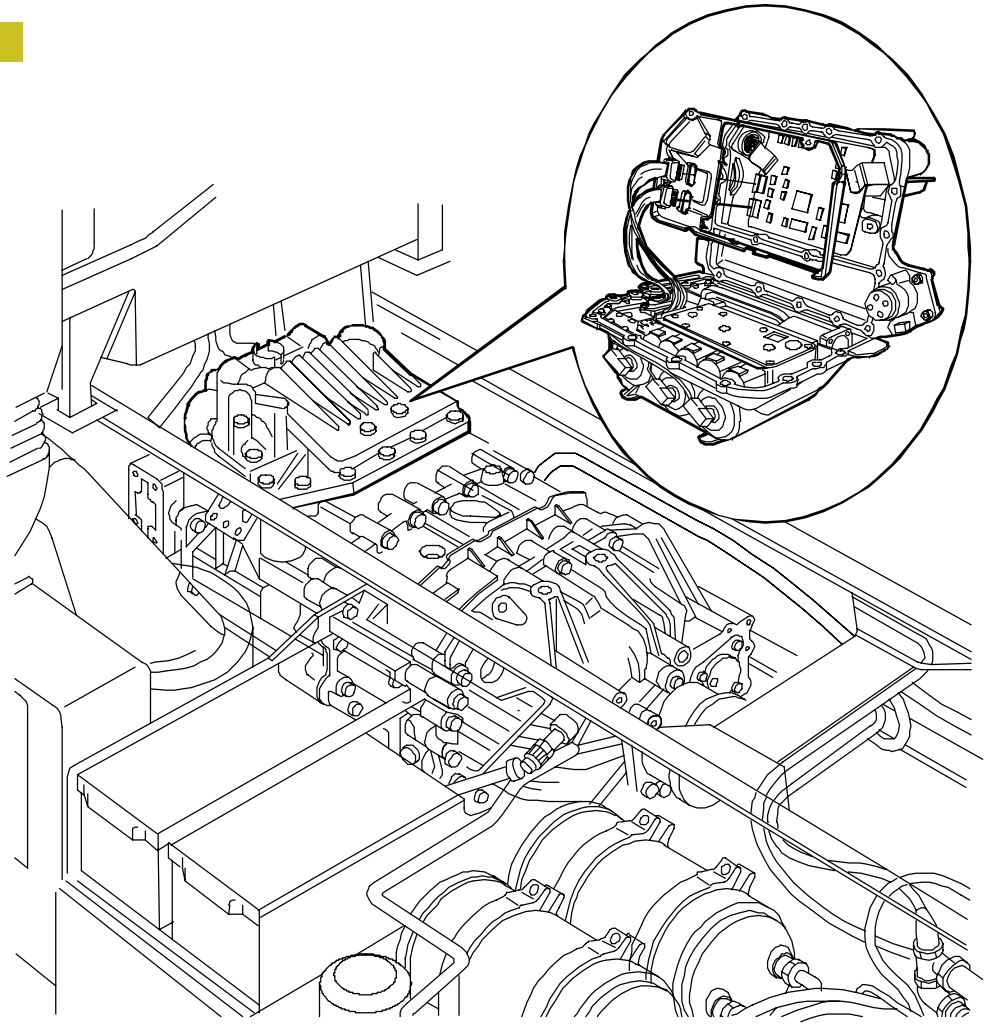

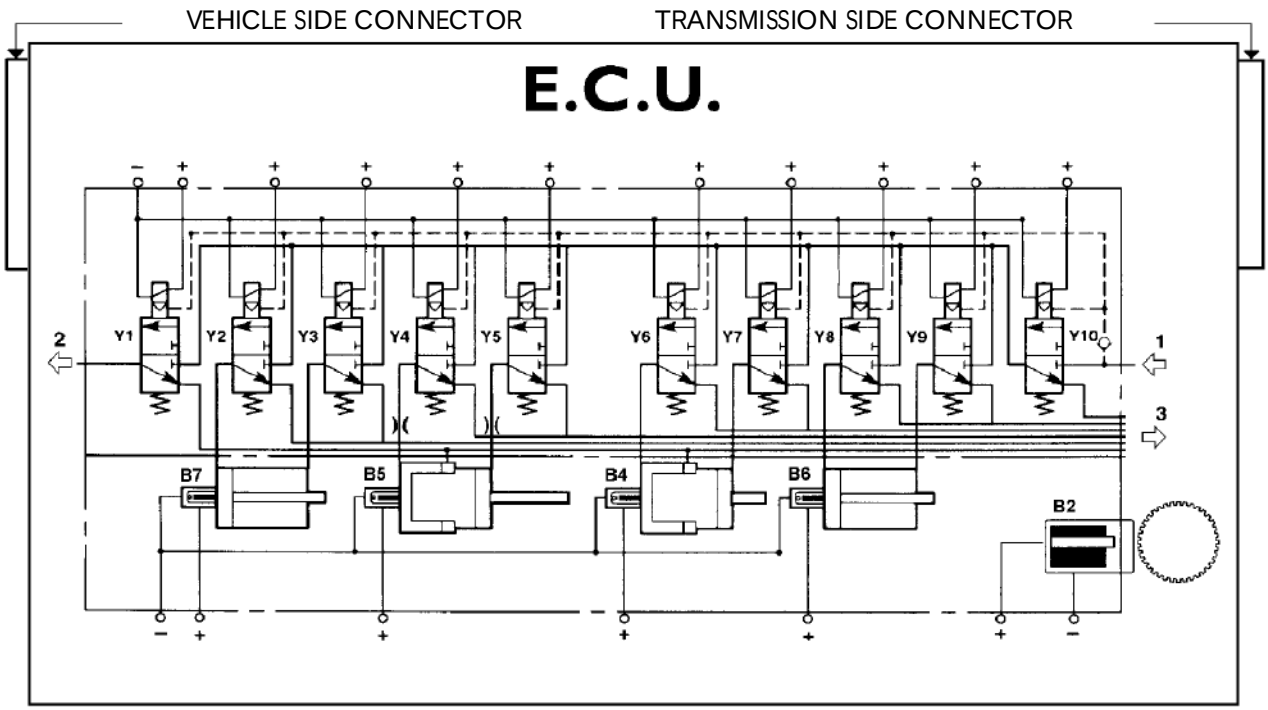

107078

https://truckmanualshub.com/
Aquila Trucks Centres

CLUTCH ACTUATOR

The clutch actuator is located on the lower part of the clutch bell.

It consists of four electro valves, an actuator cylinder and a clutch run position sensor and is suitable to actuate 17.5" single-disc clutches via a 2.09 ratio lever.

In the load mode as detected by the accelerator pedal sensor signal from the E.D.C. center, the electronic center powers the various electro valves for slow or fast clutch engagement and release.

The center uses the clutch run position sensor to calculate clutch wear at each vehicle start, to enable fast approaches and overcome empty runs.

Actuator components

Y14 - Fast clutch engagement electro valve
Y15 - Slow clutch engagement electro valve
Y16 - Fast clutch release electro valve
Y17 - Slow clutch release electro valve
S - Clutch run position sensor
T - Air vent cap

Actuator operating pressure is 11 bars.

Internal channel diameters are as follows:

- 2.5 mm for fast engagement/release;
- 1.5 mm for slow engagement/release.

Actuation times at start, subject to load, slope and accelerator pedal position, are as follows:

- Initial engagement: ~ 1 sec.
- Modulated release: ~ 4 sec.

The times change as follows during gear changes to enable fast and precise synchronization:

- Modulated opening: ~ 0.6 sec.
- Complete opening: ~ 0.3 sec.
- Modulated closing: ~ 1 sec.

Actuator features

- Operating fluid:	air (min. 6 bar max 11.5 bar)
- Power:	24 Volt
- Load on lever in operating conditions:	382 kg
- Operating temperature:	40 °C + - 120 °C
- Cylinder diameter:	100 mm
- Piston travel:	70 mm

https://truckmanualshub.com/
Aquila Trucks Centres

Figure 224

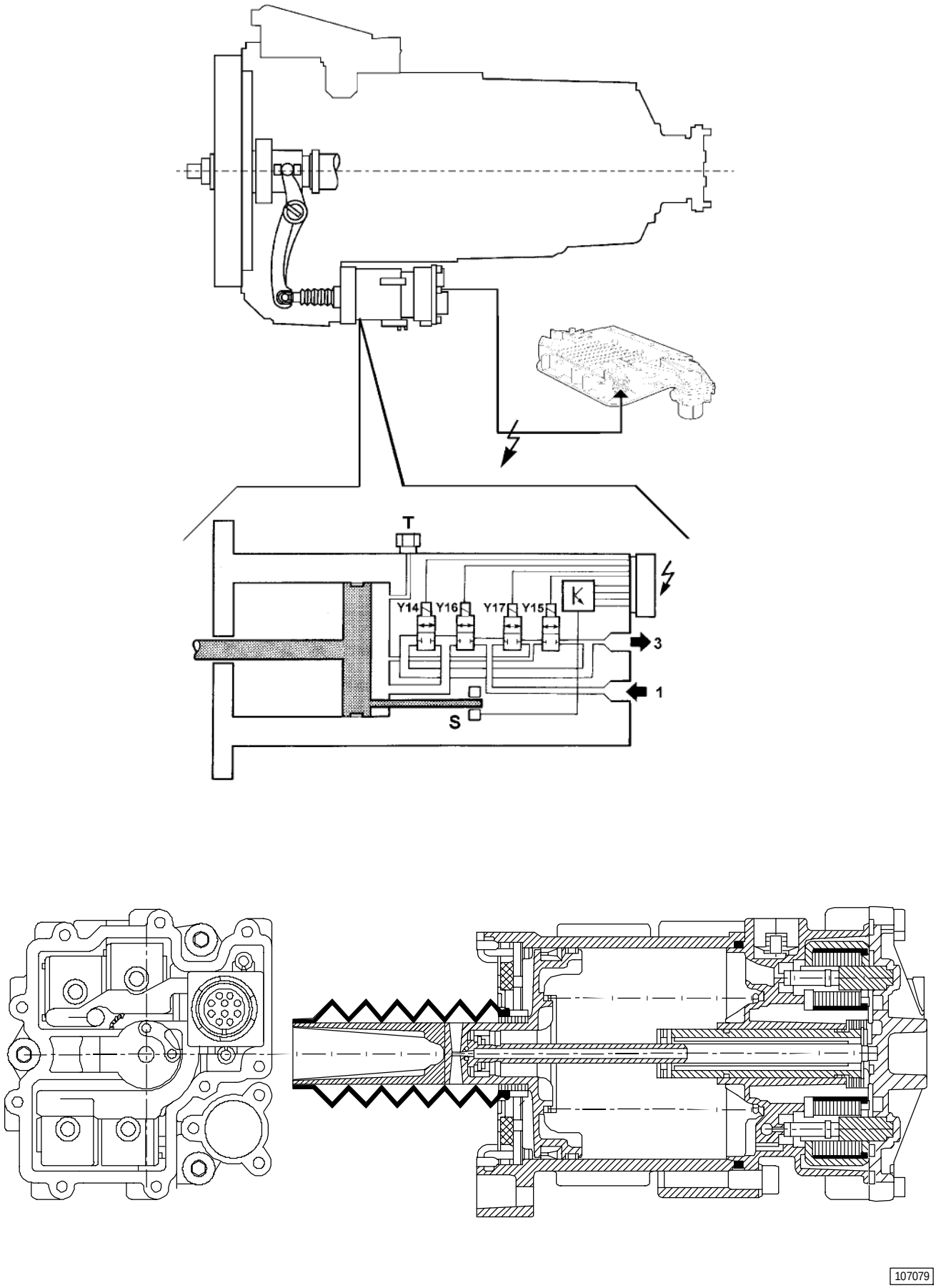

https://truckmanualshub.com/
Aquila Trucks Centres

Clutch actuator Pin-out

The N.C. on/off type electro valves are powered at 24 Volt with ~ 14 ÷ 20 Ohm resistance.

The sensor is powered by the center at 5 Volts and the return signal is between 0.5 and 4.5 Volt.

The clutch actuator is connected to the system via a 20-pole connector.

Figure 225

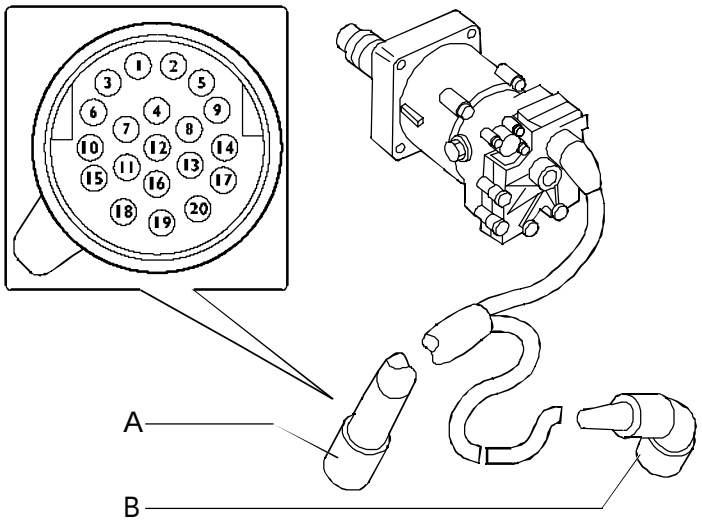

A. 20-pole connector - B. Output transmission rpm sensors

Pin	Function
1	-
2	-
3	-
4	-
5	-
6	Transmission speed sensor mass (pin 2)
7	Y17 electro valve signal (slow opening)
8	Y16 electro valve signal (fast opening)
9	Y15 electro valve signal (slow closing)
10	Clutch position sensor analogic signal
11	Transmission output speed sensor signal (pin 3)
12	Y14 electro valve signal (fast closing)
13	-
14	-
15	Clutch position sensor power
16	Y15 - Y17 electro valve mass
17	Y14 - Y16 electro valve mass
18	-
19	Transmission speed sensor power (pin 1)
20	Clutch position sensor mass

https://truckmanualshub.com/
Aquila Trucks Centres

Accelerator pedal

Release pedal NA integrated into the position sensor is used to detect engine idling position and enable clutch engagement at vehicle start.

The signal reaches the VCM electronic center via the CAN VDB Vehicle Data Base line and is sent to the Automated EuroTronic transmission center.

Kick Down is activated with the accelerator pedal in automatic function mode travel. The Kick Down function is activated when accelerator pedal lever (1) move the potentiometer to position 100%, which does not correspond to pedal mechanical travel end.

Stiffened travel end is only mechanical and is used to transmit the feeling Kick Down inserted to the operator.

Figure 226

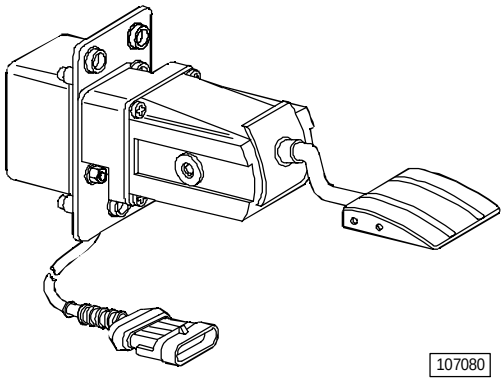

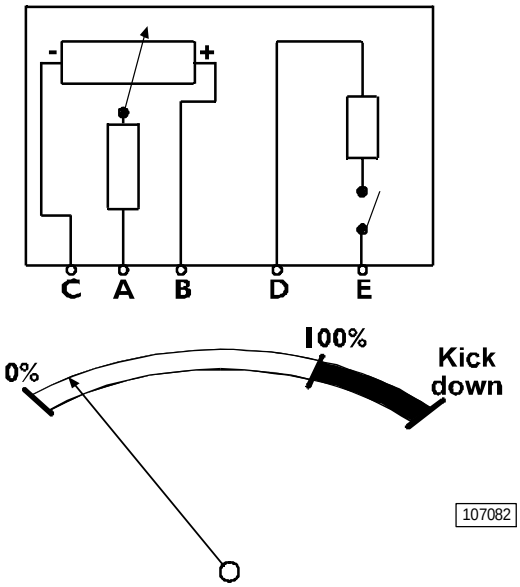

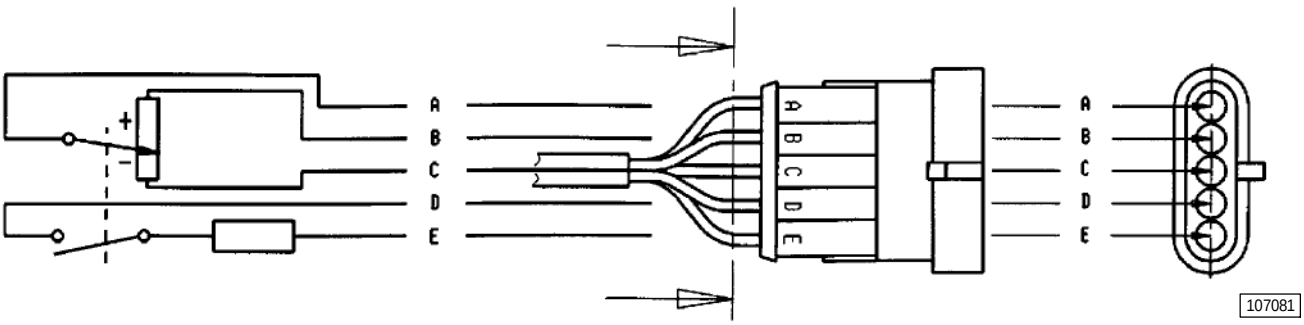

https://truckmanualshub.com/
Aquila Trucks Centres

INTARDER
Operation

The intarder is operated with the 7-position sector located in the right direction indicator (1). INTARDER cut-in indication is managed by the CLUSTER (2) via a specific warning.

The system is provided with a Brensomat constant velocity function used for vehicles without EBS. This function enables keeping a vehicle on a downhill slop moving at the speed as selected by the operator. In this case, the intarder electronic centre automatically selects the braking torque required.

The constant velocity function is only activated in position "0" after storing the speed desired.

Storage can be at any of the 7 selector positions by briefly pressing the push button provided; with higher pressure storing speed at that moment and lower pressure decrease of speed set. The speed programmed previously is restored as soon as the selector is returned to position "0".

Pressing the push button once again disenables the constant velocity function. The oil contained in the sump is sent to the intarder hydraulic circuit via a filter and the circuit is protected by a safety valve.

By acting on selector (1), electronic centre (4) receives via SWI (3) an electrical signal that it processes and sends to electro valve (7) controlling the accumulator and proportional electro valve (5).

The accumulator control electro valve switches and lets air under pressure pass through its piston to send oil to the hydraulic circuit and reduce action time.

The proportional electro valve acts on the control valve to set its pressure. The adjustment valve is piloted by control valve oil pressure. The rotor is connected to the rear axle via the transmission shaft and the stator is connected to the frame through the intarder case.

The oil contained in the areas between the rotor and the stator is moved by the rotor blades to create a closed circuit oil flow between mobile and fixed parts.

By impacting the stator blades, oil causes rotor and therefore vehicle braking. Reduced oil flow speed between the rotor and the stator transforms kinetic energy into heat, to dissipate which oil passes through an oil/water heat exchanger, where oil heat is transmitted to cooling water and dissipated through the vehicle cooling system.

The heat exchanger water discharge pipe is provided with a temperature sensor (6) that continually sends cooling water temperature data to the electronic centre to ensure maximum temperature allowed for proper engine operation is not exceeded.
If water temperature rises to reach the safety limit for any reason whatsoever, the centre pilots sump control air adjustment to reduce braking torque.
The electronic centre receives a signal from the ABS/EBS system that causes intarder cutout when actuated and it also receives a signal from electronic tachograph (8) enabling constant velocity function use. This signal is sent via a VDB can line.

Switching to position "0" cuts the intarder off and deactivates the proportional and accumulator control electro valves.

https://truckmanualshub.com/
Aquila Trucks Centres

Figure 227

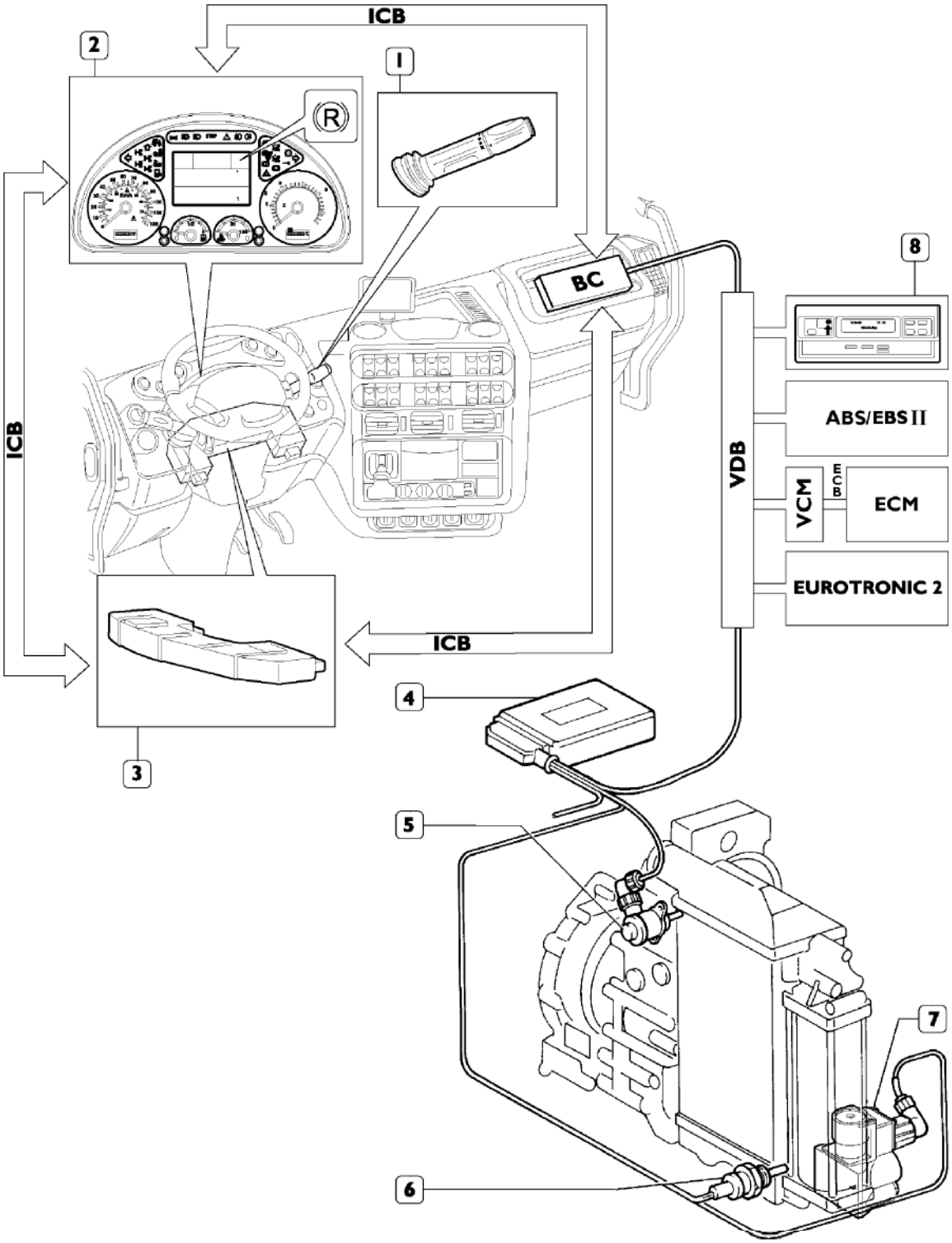

1. Engine brake/Intarder selector - 2. Instrument Cluster - 3. Steering Wheel Interface centre - 4. Intarder electronic centre - 5. Proportional electro valve - 6. Water temperature sensor - 7. Accumulator on/off control electro valve - 8. Electronic tachograph

https://truckmanualshub.com/
Aquila Trucks Centres

Hydraulic system diagram
Description

The oil contained in the sump is sent to the intarder hydraulic circuit by a pump through a filter and a 12.5 bar pressure limiter valve.

Intarder on

When the intarder is actuated with control (2), the centre supplies electro valve (19) controlling accumulator (10), whose piston is piloted by the service air system at 9.5 bar pressure to send oil faster to the rotor/stator unit.

When excited, proportional electro valve (16) acts on valve (16) by moving its hydraulic spool and moves function control pressure to braking level.

Pressure acts on adjustment valve (14), to create communication between input duct P and output ducts P 1 - R.

Thus, oil from pressure limiter electro valve (4) moves the hydraulic spool of valve (8) and puts duct R_1 0into communication with the motor/stator via heat exchanger (9).

Pressure (13) is not affected by oil pressure and closes oil discharge into sump (7).

Figure 228

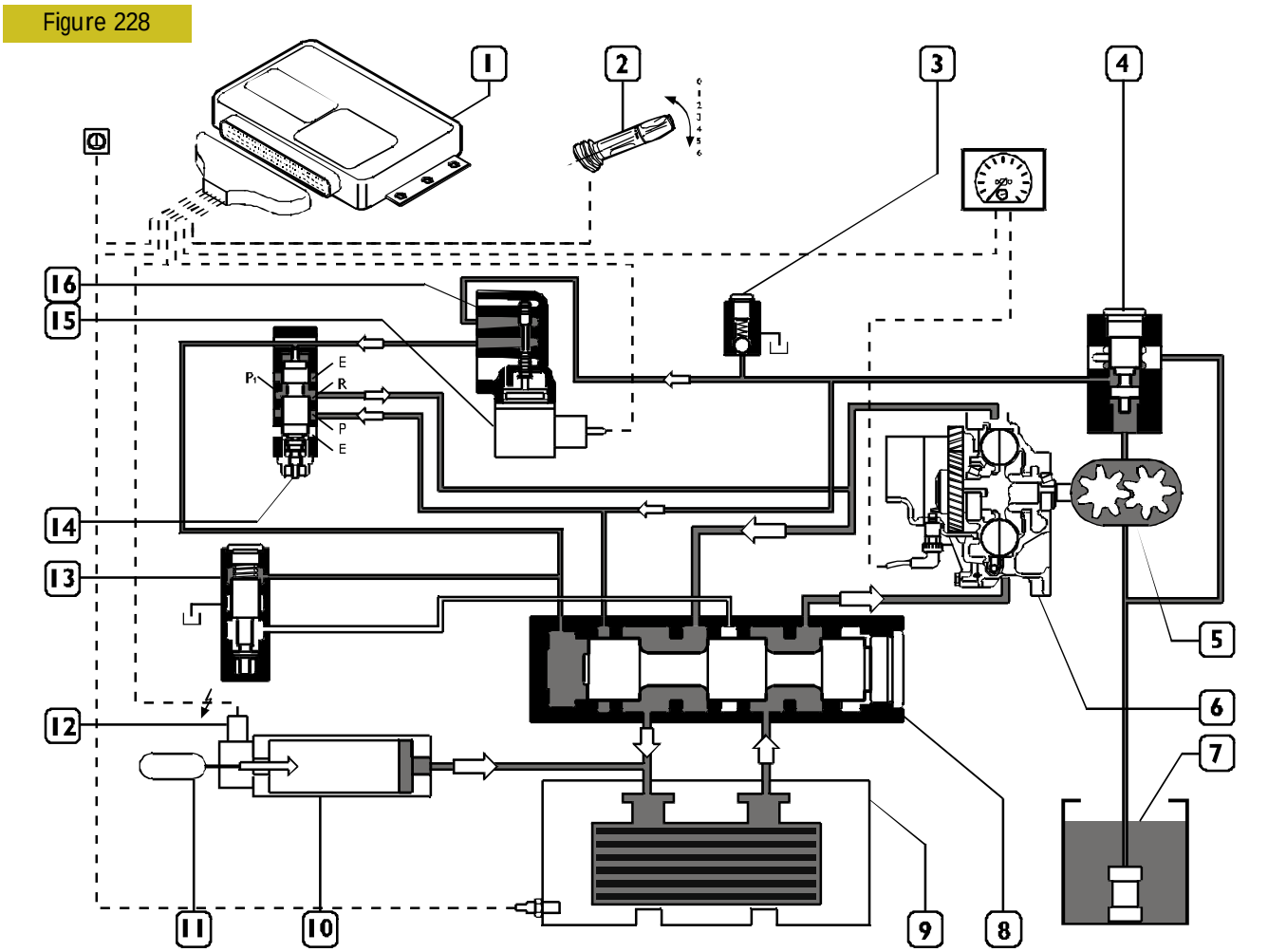

Aquila Trucks Centres

Speed storage and use

By inserting Cruise Control, the system automatically maintains vehicle advance speed without having to use the accelerator pedal. If vehicle speed increases over 2 Km/h more than the speed set, such as when travelling downhill for instance, the engine brake is activated automatically to slow the vehicle down and maintain the speed reached. The intarder is also activated if speed increases by over 3 Km/h.

Figure 229

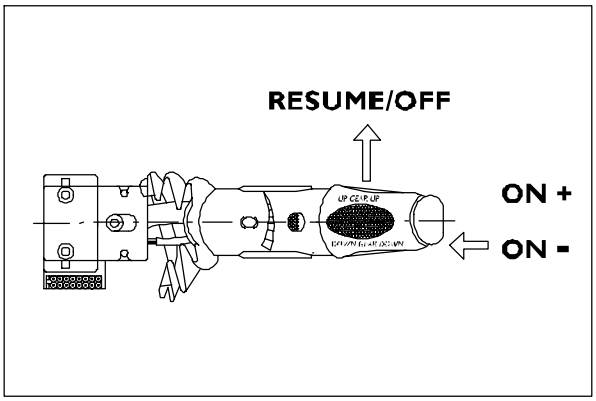

108931

Its function can only be activated when the following conditions are satisfied:

- engine brake/intarder lever cut out;
- vehicle on the move with gear selected;
- vehicle speed over 20 Km/h;
- brake pedal released;
- clutch pedal released.

Control	Vehicle speed adjustment
ON+	Speed increase
ON-	Speed decrease
RESUME	Last stored speed selection
OFF	Speed adjustment cancellation

Adjustment is cut out when the brake or clutch pedal is actuated. The same applies when the minimum speed set is not reached. Top speed is stored in the programme inside the electronic control module and cannot be changed.

1 Basculating push button ON has the following functions:

a)when pressed once, it activates the function and keeps the speed set at that moment by the accelerator pedal. The accelerator pedal can then be released and the vehicle keeps moving at the cruise speed set.

b)with the function already activated, it increases vehicle speed without having to use the accelerator pedal.

2 Basculating push button ON has the following function: with the function activated, it decreases vehicle speed.

3 The Cruise Control lever actuated OFF towards the steering wheel deactivates the function (CC display shaded).

4 Actuating the steering wheel lever once again (RESUME) the value stored is reactivated (CC display clear).

https://truckmanualshub.com/
Aquila Trucks Centres

Assembly

Figure 230

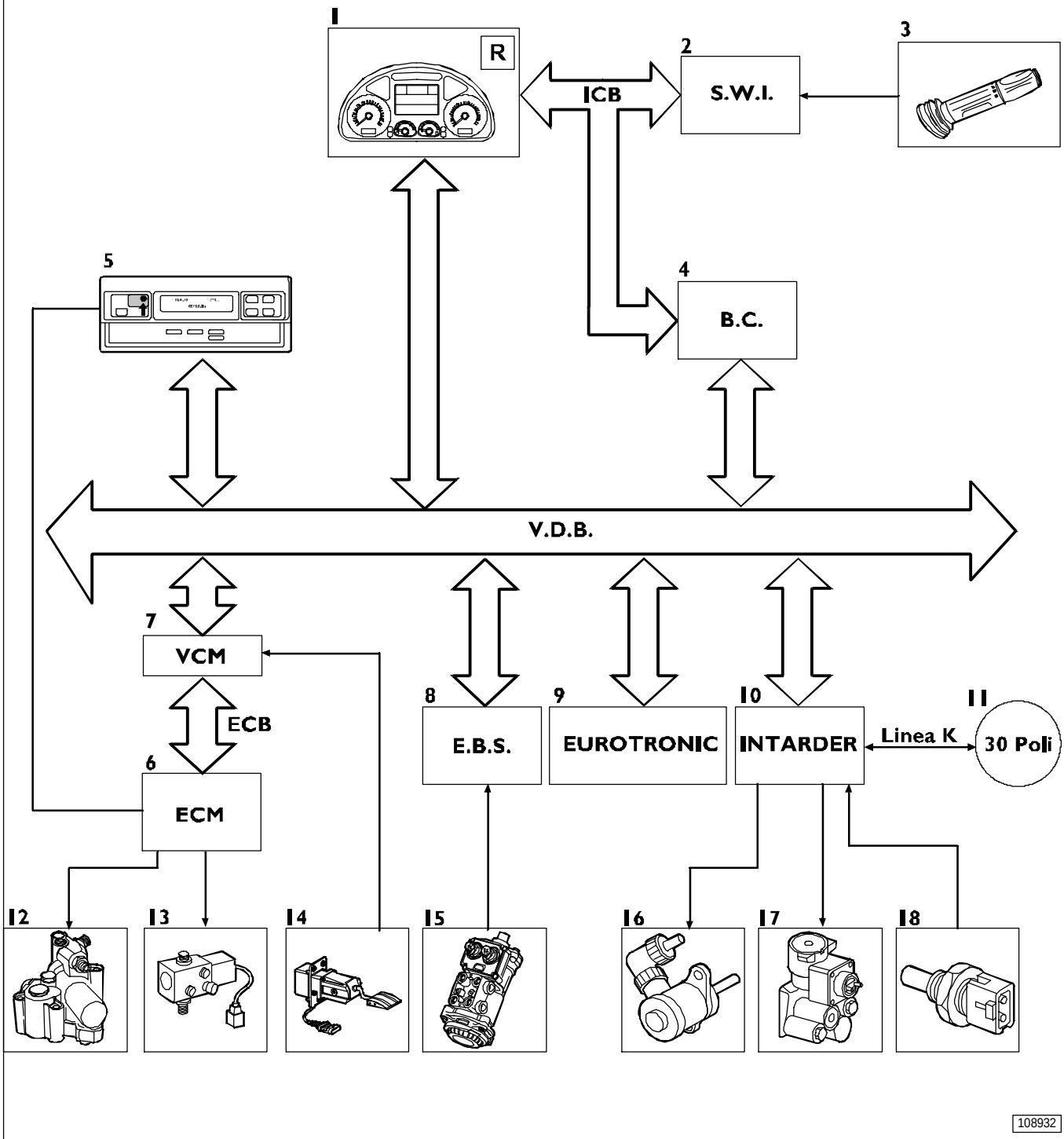

1. Instrument Cluster - 2. Steering Wheel Interface - 3. Engine brake on multi function lever - 4. Body Computer - 5. Tachograph - 6. EDC centre - 7. VCM centre - 8. EBS centre - 9. EuroTronic centre - 10. Intarder centre - 11. Diagnosis connection - 12. Engine brake electro valve - 13. VGT electro valve - 14. Accelerator pedal - 15. Brake pedal Duplex distributor - 16. Proportional electro valve - 17. ON-OFF electro valve - 18. Water temperature sensor

https://truckmanualshub.com/
Aquila Trucks Centres

Control unit disposition

Figure 231

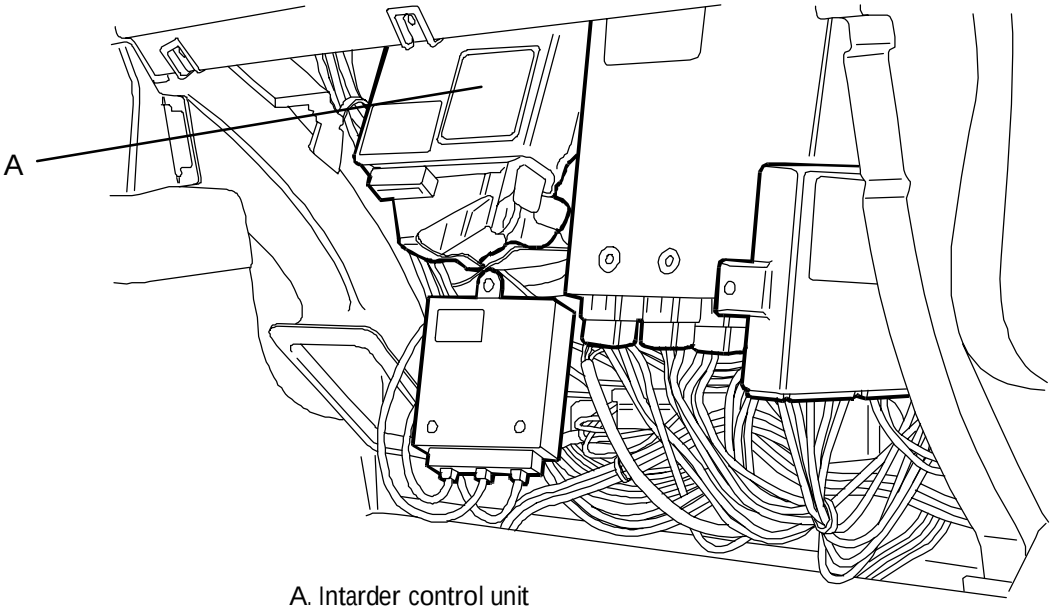

A. Intarder control unit

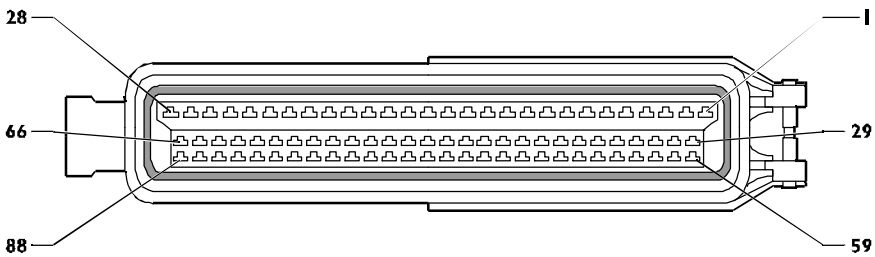

Pin	Cable	Function
1	9311	Oil accumulator solenoid valve positive
3	0310	Proportional solenoid valve negative
4	9310	Proportional solenoid valve positive
8	5541	Cluster
9	5309	Water temperature transmitter positive
12	3393	30-pole diagnosis connection (pin 20)
14	2293	30-pole diagnosis connection (K line - Pin 6)
22		CAN VDB (H) line
27	0000	Cab mass
28	0000	Cab mass
34	0311	Oil accumulator solenoid valve negative
37	0309	Water temperature transmitter negative
49		CAN VDB (L) line
53	8300	+15 power supply
54	7300	+30 power supply

https://truckmanualshub.com/
Aquila Trucks Centres

EM (EXPANSION MODULE) ELECTRONIC CONTROL UNIT (PTO)

The EM (Expansion Module) control unit located in the cabin control unit compartment (passenger's side) controls the power takeoffs and, unlike the DMI, makes it possible to carry out complicated applications such as:

- transmission (gearbox) control from external source (TCI message)
- engine control from external sources, like request and limitation of engine rev number, vehicle speed limit, start up and engine stop
- safety logics for waste collection applications
- optimization of braking system for waste collection applications
- additional headlight control
- interface with CAN_open network

Figure 232

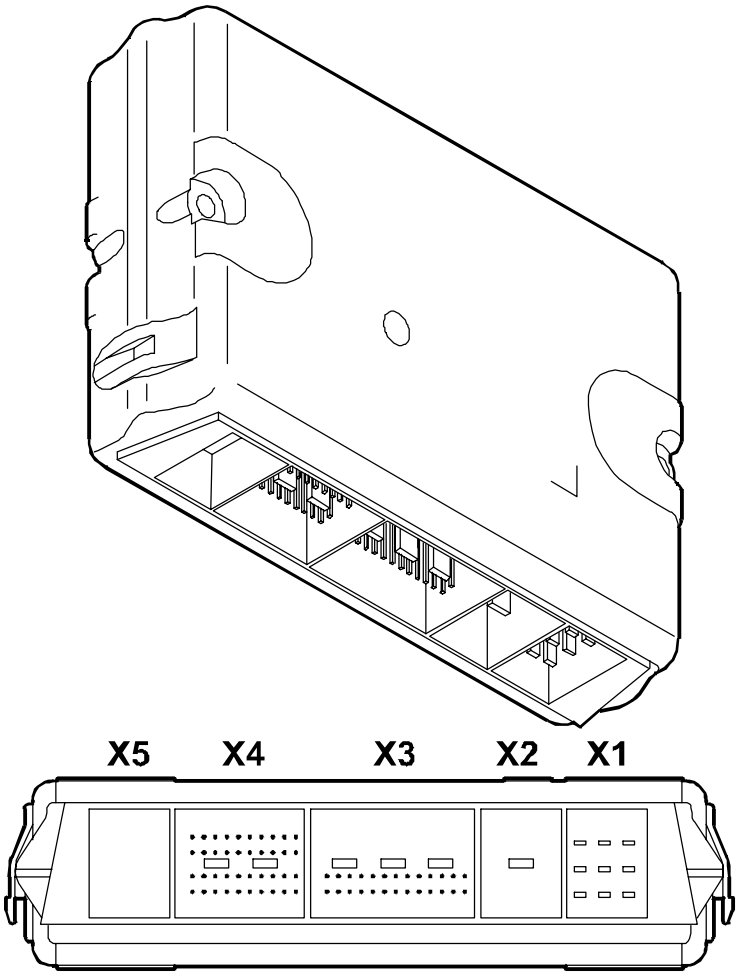

112596

https://truckmanualshub.com/
Aquila Trucks Centres

Pin - out

Connector XI

Pin	Description	Cable colour code
1	PTO1 solenoid valve power supply	9131
2	Positive +30	7772
3	Signal for operators (72072B - pin 6)	6985
4	PTO2 solenoid valve power supply	9132
5	Earth	0000
6	PTO3 solenoid valve power supply	9132
7	Clutch solenoid valve signal (72072A - pin 4)	9995
8	Signal for operators (72072B - pin 7)	6986
9	Positive +30	7166

Connector X3

Pin	Description	Cable colour code
1	CAN - H line (VDB)	Sw/Bi
2	CAN - L line (VDB)	Gn/Ve
3	Free	-
4	Line K (diagnosis connector pin 6)	2996
5	PTO1 request	0131
6	PTO2 request	0132
7	PTO3 request	0123
8	Signal of PTO1 engaged	6131
9	Signal of PTO2 engaged	6132
10	Signal of PTO3 engaged	6133
11	PTO1 consensus signal	0391
12	PTO2 consensus signal	0392
13	Positive +15	8166
14	Free	-
15	Free	-
16	PTO3 consensus signal	0393
17	Signal from operators (72072A - pin 3)	0991
18	Signal from operators (72072A - pin 1)	0992
19	Signal from operators (72072A - pin 2)	0993
20	Signal from operators (72072B - pin 3)	0994
21	Signal from operators (72072B - pin 4)	0995
22	Pin 24 jumper	8990
23	Pin 26 jumper	0990
24	Pin 22 jumper	8990
25	Free	-
26	Pin 23 jumper	0990

https://truckmanualshub.com/
Aquila Trucks Centres

Connector X4

Pin	Description	Cable colour code
1	Signal for operators (72072B - pin 8)	6987
2	Signal for operators (72072B - pin 9)	6988
3	Signal for operators (72072B - pin 10)	6989
4	Parking brake signal (72072A - pin 1)	6981
5	Neutral gear signal (72072A - pin 2)	6983
6	Signal from operators (72072B - pin 5)	0996
7	Free	-
8	Free	-
9	Signal from operators (72072C / 72072D - pin 5)	0999
10	Free	-
11	Free	-
12	Line CAN - H (SB) - (trailer)	Ws/Bi
13	Line CAN - L (SB) - (trailer)	Gn/Ve
14	-	5981
15	-	5982
16	-	5991
17	Line CAN - H (SB)	Ws/Bi
18	Line CAN - H (SB)	Ws/Bi
19	Line CAN - L (SB)	Gn/Ve
20	Line CAN - L (SB)	Gn/Ve
21	Signal for operators (72072B - pin 11)	6990
22	Signal for operators (72072B - pin 12)	6991
23	Signal for operators (72072B - pin 13)	6992
24	Free	-
25	Free	-
26	Free	-
27	Free	-
28	Signal from operators (72072C / 72072D - pin 3)	0975
29	Signal from operators (72072B - pin 18)	5983
30	Free	-
31	Signal for operators (72072B - pin 14)	6993
32	Signal for operators (72072B - pin 15)	6994
33	Free	-
34	Free	-
35	Free	-
36	Free	-
37	Free	-
38	Signal from operators (72072B - pin 20)	5992
39	Free	-
40	Free	-

https://truckmanualshub.com/
Aquila Trucks Centres

AUTOMATIC AIR CONDITIONER

In automatic version the system is managed by an electronic unit placed in the lower part of central dashboard and integrates control knobs.

The electronic unit is connected to vehicle CAN BCB line and is equipped with a very advanced diagnostic system.

The main objective of the unit is adjusting internal cabin temperature (set by the driver) depending on external temperature measured by a suitable sensor.
The system provides for the chance of a completely automatic management, but anyway for the user it is always possible, if he so wishes, to modify the main system operating parameters.

Figure 233

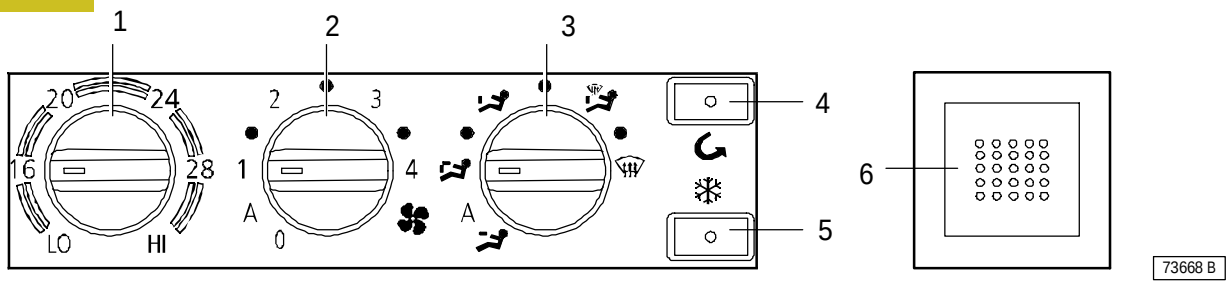

1. Required temperature adjusting knob
2. Fan speed adjusting knob
3. Air flow distribution knob
4. Recirculation function button with embedded led
5. Compressor control button with embedded led
6. Internal temperature sensor

After having set the desired internal temperature, by placing the other two knobs next to letter A, the unit is able to automatically check the following functions:

- Air temperature to unions.
- Fan speed
- Air flows distribution
- Supplementary heater connection if external temperature is < 5 °C.

In this position the unit does NOT automatically activate either compressor or recirculation function: connection of both of them is manually managed by the driver.

"RECIRCULATION" FUNCTION

Connection of this function is completely manual and is obtained through a suitable button that allows closing the external air intake by placing the baffle at 95% of internal air and 5% of external air.
The unit automatically deactivates this function after about 20 minutes if the compressor is disconnected and after 30 minutes is the compressor is connected.

"COMPRESSOR CONTROL" FUNCTION

Connection of this function is completely manual and is obtained through a suitable button that allows connecting the compressor clutch after a quality check of fluid in the system through safety pressure switches and evaporator temperature by means of the suitable sensor.
The unit does NOT automatically connect the compressor.

"SUPPLEMENTARY HEATER CONTROL" FUNCTION

With moving engine the unit automatically connects the supplementary AIR and/or WATER heater only if the external temperature is < 5 _C.
With off engine the heater connection depends on driver's setting.

In both cases, the supplementary heater connection is signalled to the driver on Cluster display.

https://truckmanualshub.com/
Aquila Trucks Centres

AUTOMATIC AIR CONDITIONER
Automatic air conditioner block diagram

Figure 234

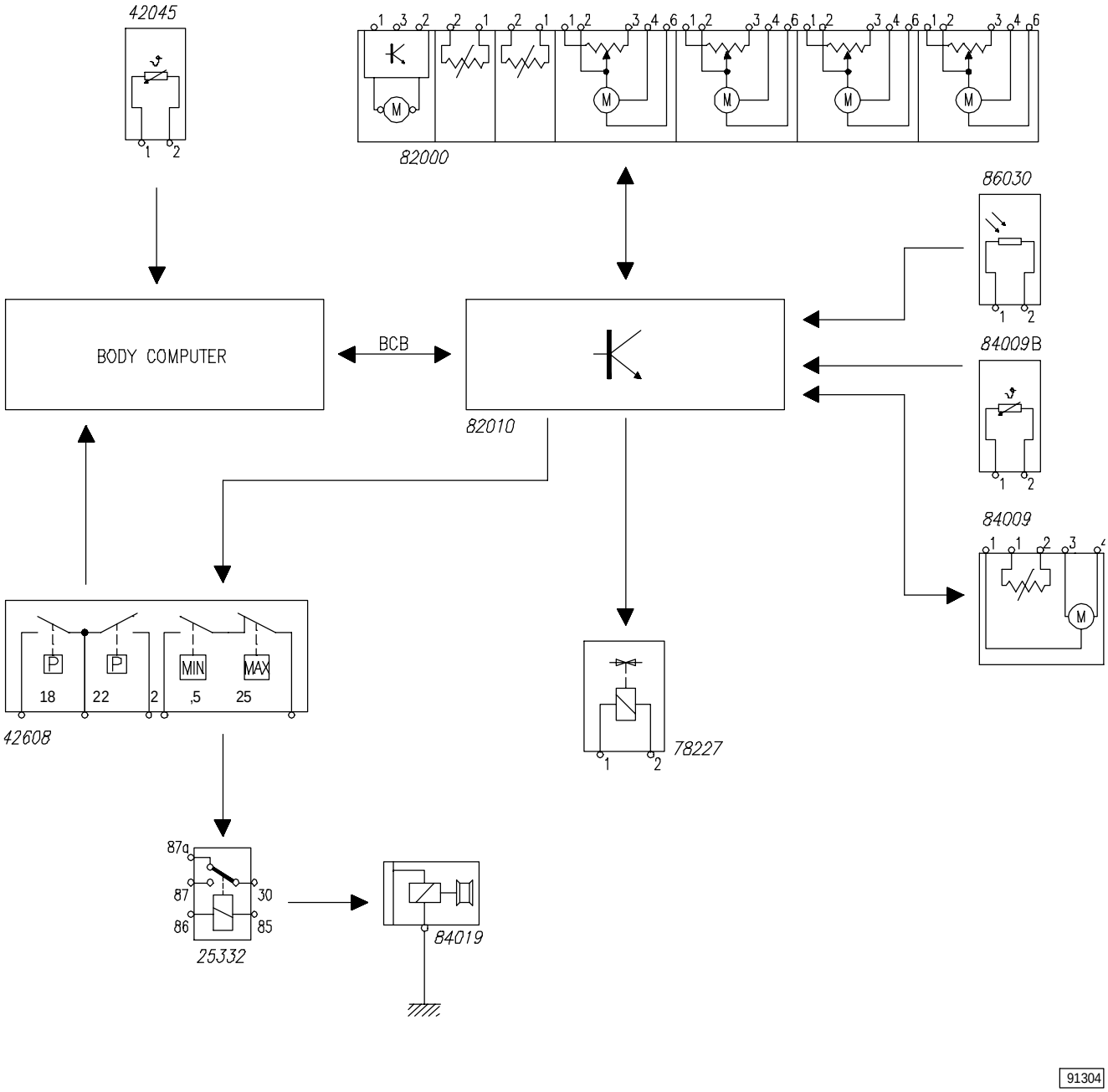

42045. Water temperature transmitter - 82000. Windscreen electric defroster assembly - 82010. Air conditioner control electronic unit - 86030. Sun radiation measuring sensor - 84009. Vented internal temperature measuring sensor - 84009B. Inner temperature detection sensor - 42608. Cooling liquid pressure signaling pressure switches - 25332. Compressor connection remote control switch - 78227. 3-way solenoid valve for radiator water recirculation - 84019. Compressor

Components 82010 - 82000 are placed in the same control assembly.

https://truckmanualshub.com/
Aquila Trucks Centres

Component location

Figure 235

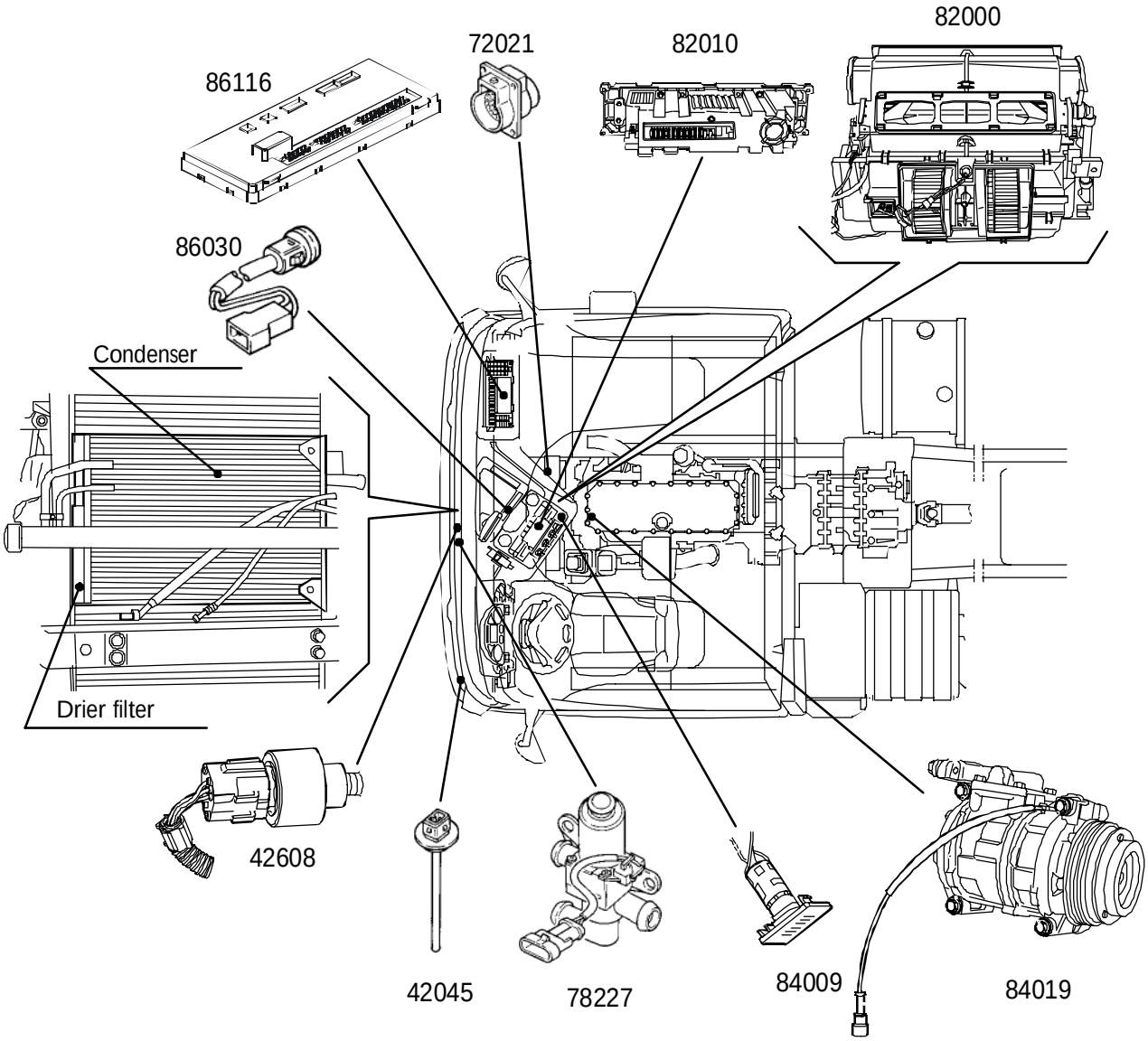

42045. External temperature transmitter - 82000. Windshield defroster unit - 82010. Conditioner electronic control centre - 86030. Sun ray detection sensor - 84009. Internal temperature detection sensor - 42608. Coolant pressure warning pressure switches - 25332. Compressor on remote control switch - 78227. Radiator coolant recirculation electro valve - 84019. Compressor - 86116. Body Computer - 72021. 30-pole connector for diagnosis

https://truckmanualshub.com/
Aquila Trucks Centres

Windscreen electric defroster assembly components location

Figure 236

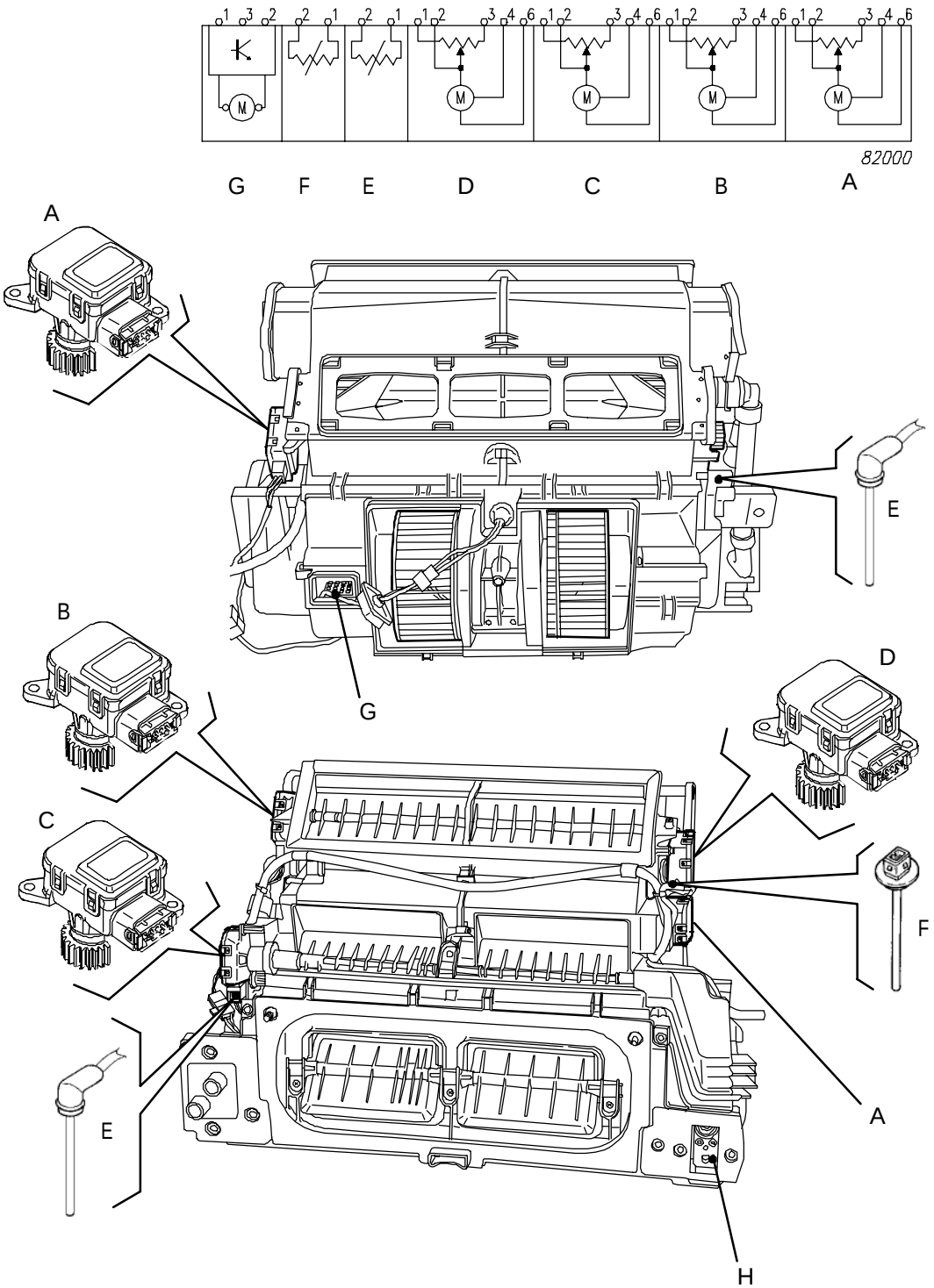

A. Floor reduction gear - B. Windshield defrost reduction gear motor - C. Recirculation reduction gear motor - D. Mixing reduction gear motor - E. Blown temperature sensor - F. Evaporator temperature sensor - G. Blower control module - H. Expansion valve

https://truckmanualshub.com/
Aquila Trucks Centres

External temperature sensor

Located on the driver side vehicle front so it is invested by external temperature, as close as possible to reality. Its resistance at 25 °C = ~ 10 Kohm

Figure 237

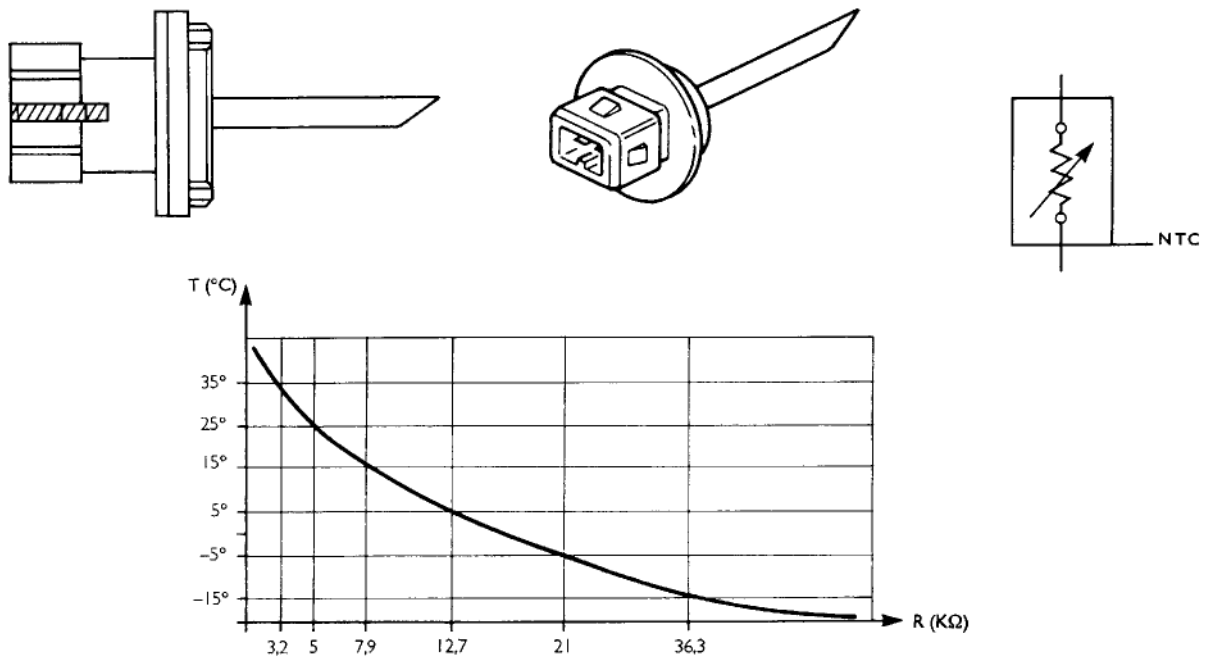

77566

Main interior temperature sensor

Located on the right inside the control module and ventilated by a motor enabling air circulation and preventing erroneous temperature readings between values measured and the cab. Its resistance at 25 °C = ~ 10 Kohm

Figure 238

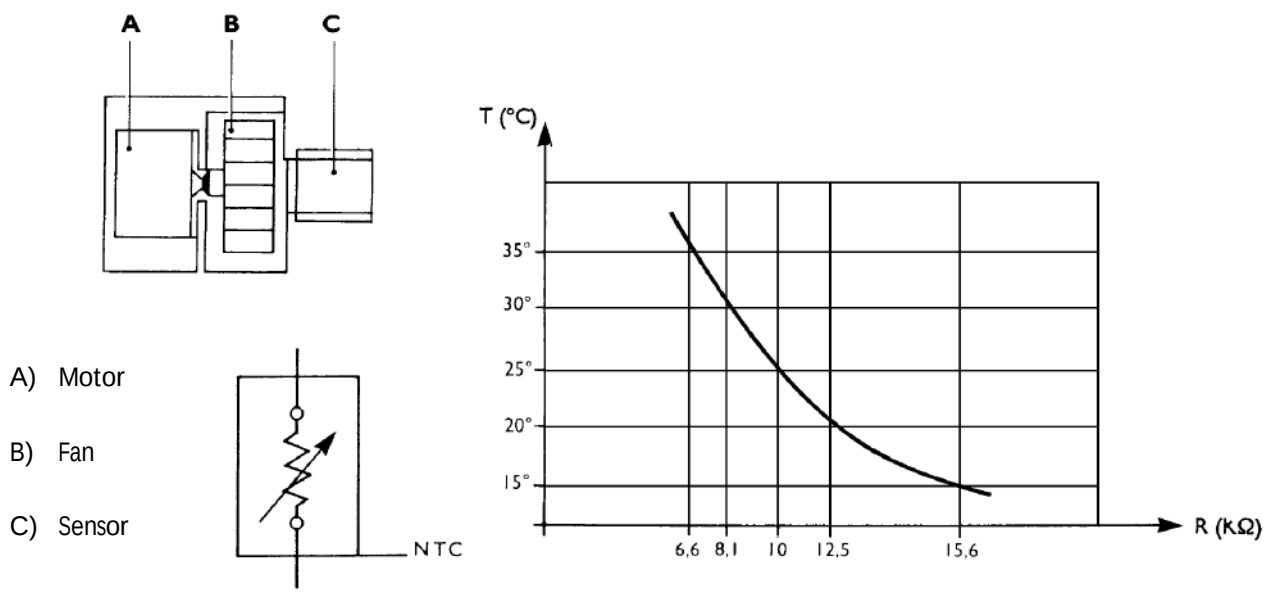

77567

https://truckmanualshub.com/
Aquila Trucks Centres

Evaporator temperature sensor

The sensor placed inside the evaporator generates compressor connection and disconnection.

Disconnection to avoid dispenser freezing occurs at a temperature < 2 °C, while connection at a temperature > 5.5 °C. Its resistance at 25 °C = ~ 3.28 Kohm

Figure 239

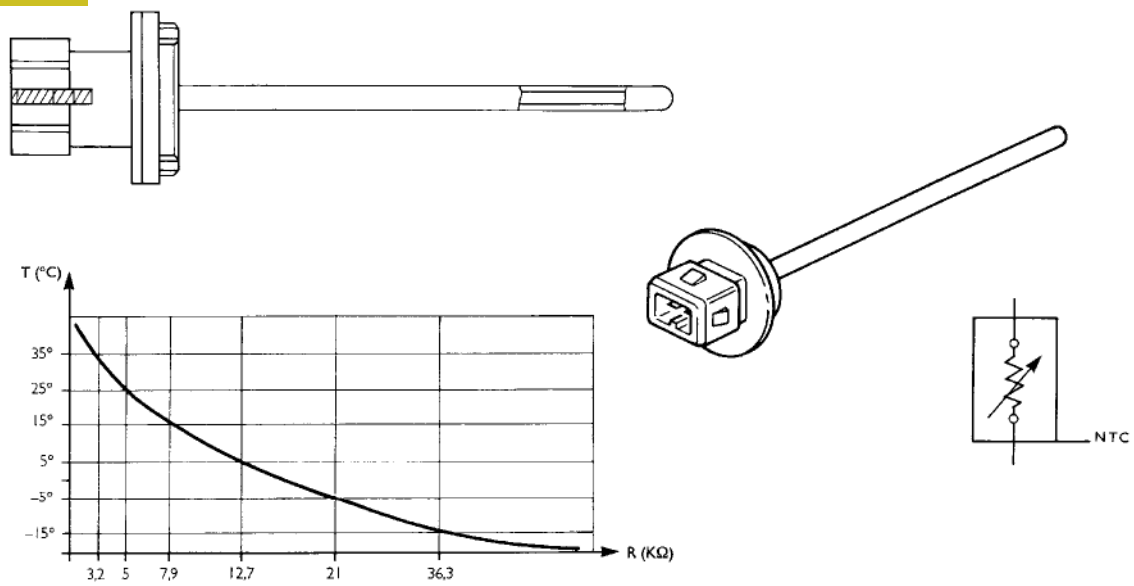

77559

Blown air temperature sensor

Located downstream the heat exchanger, it gives the temperature of air inlet into the cab and enables the centre to adjust more properly. Its resistance at 25 °C = ~ 10 Kohm

Figure 240

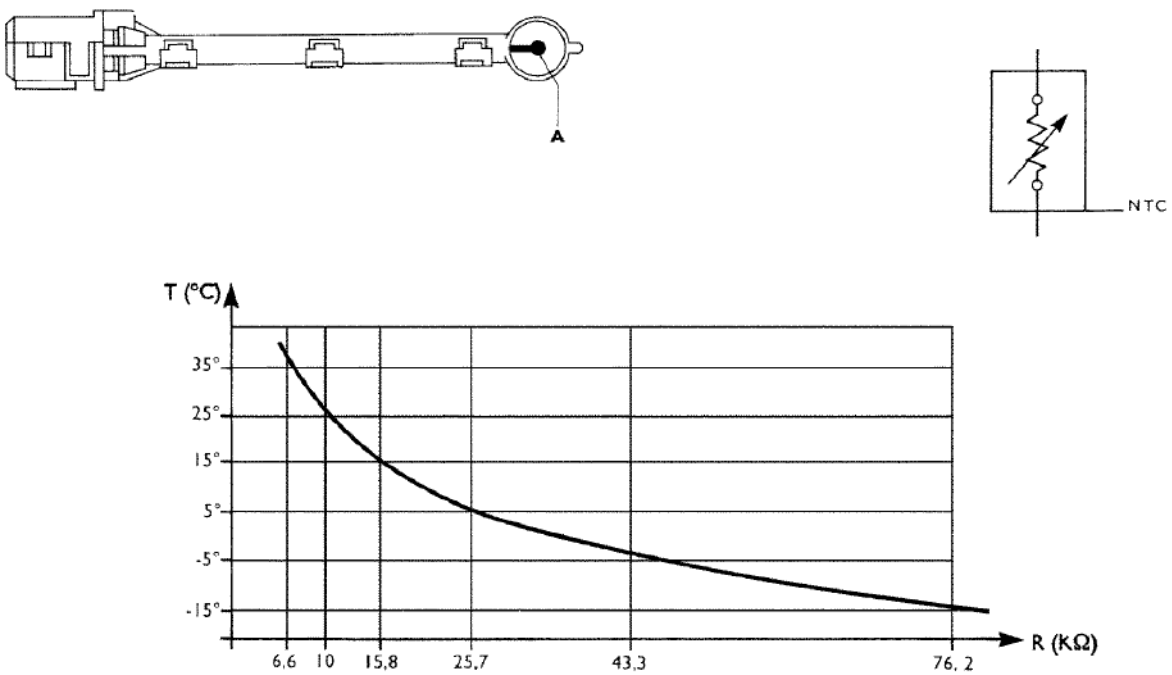

77574

https://truckmanualshub.com/
Aquila Trucks Centres

Sun ray sensor

It is a photodiode placed on vehicle dashboard to point out luminous intensity that the cabin receives from outside.

Figure 241

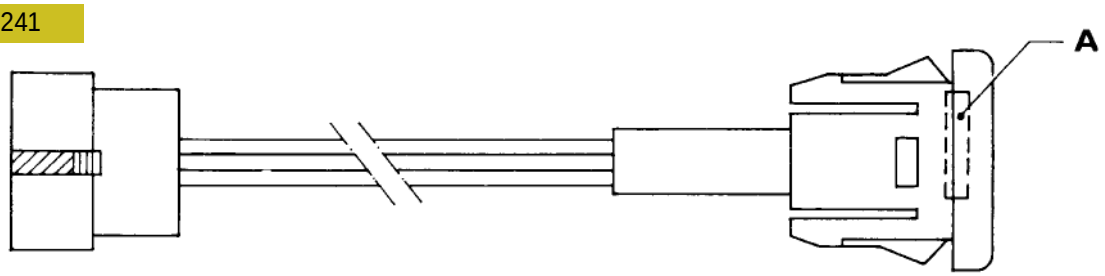

A) Sensor

77563

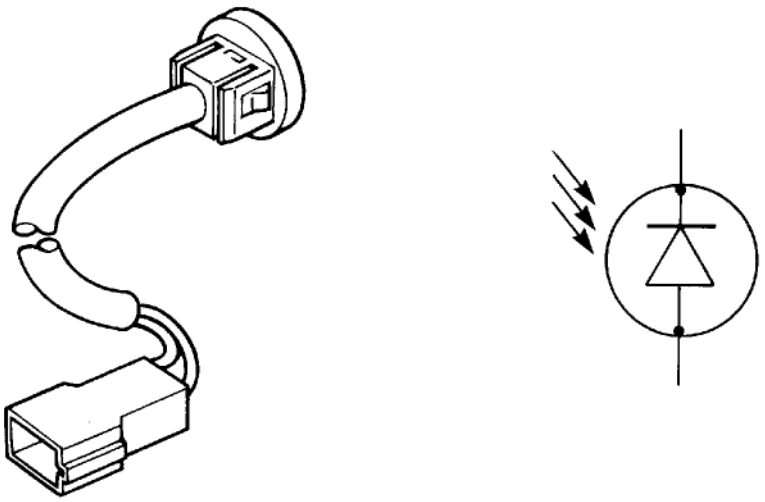

77564

Figure 242

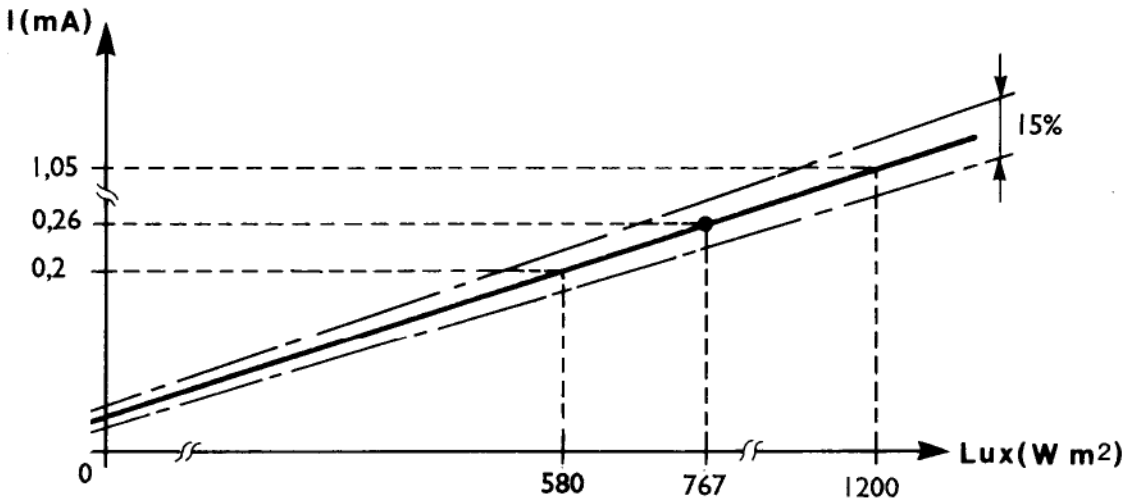

77565

https://truckmanualshub.com/
Aquila Trucks Centres

Reduction gear motors

The four automatic system units are located in the heater/conditioner inside the cab, according to their functions.

Their electrical features are the same.

They are activated directly by the electronic centre at 24 V rated voltage and absorb from 20 to 40 mA.
Motor resistance = ~ 112 Ohm.

Maximum absorption at travel end is 200 mA, when the centre cuts supply off.

Their potentiometer is used as a return signal and when first lit, the centre detects and stores end travel values to divide the operating field. It is supplied at 5V, its resistance = ~ 5 Kohm.

Figure 243

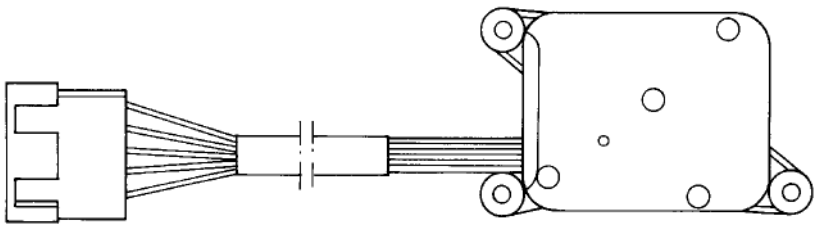

77571

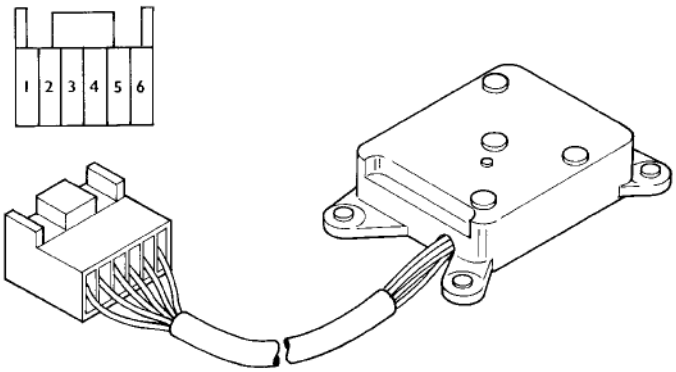

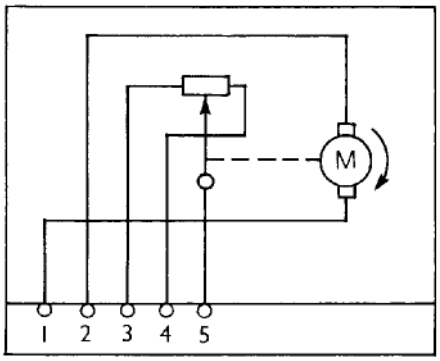

77573

Pin-out

Pin	Cable colour	
1	White	+/- 24V
2	Violet	+/- 24V
3	Blue	0V
4	Orange	0 ÷ 5V
5	Green	+ 5V
6	-	Free

NOTE If a ratio motor is replaced, it is MANDATORY to carry out the system RESET by disconnecting and reconnecting vehicle batteries.

https://truckmanualshub.com/
Aquila Trucks Centres

Blower control module

This electronic circuit located in the heater/conditioner unit adjusts double fan radial blower speed with some 200 different rates in the automatic mode and 8 in the manual mode.

The module is driven by the unit with a signal from 0 to 5 Volts while fans with a voltage from 0 to 24 Volts.

Figure 244

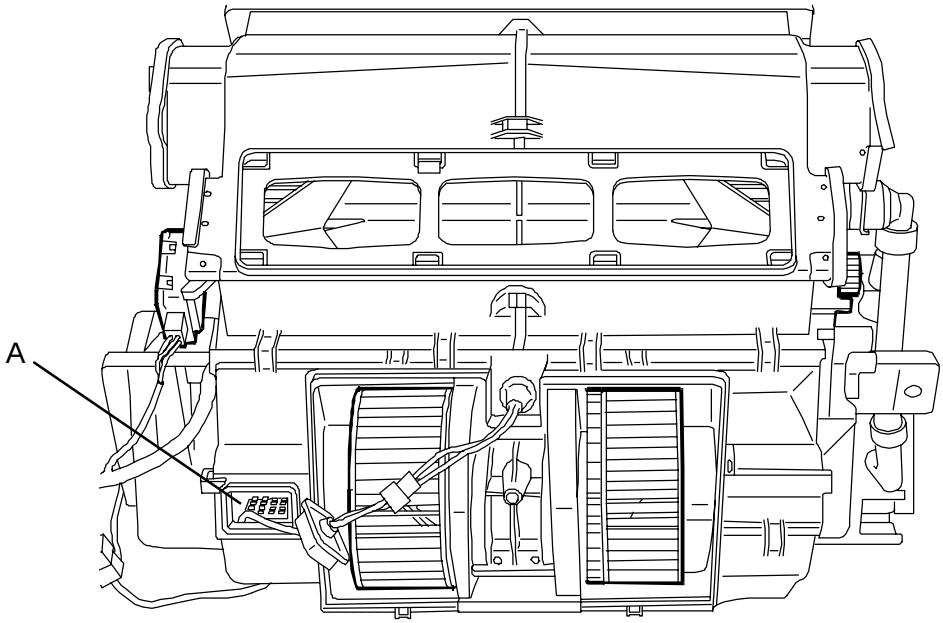

74244

A. Blower control module

Pin	Cable	Function
1	0000	Negative direct from the battery
2	7555	Centre control positive
3	7551	Positive direct from the battery

https://truckmanualshub.com/
Aquila Trucks Centres

Solenoid valve (3 ways)

This one-directional NA unit is supplied by a battery-directed positive.
The electronic centre adjusts its duty cycle by supplying a mass.
This three-way valve performs all dosing and by-pass functions.
It is supplied by a battery-directed positive and is piloted by the negative supplied by the centre monitoring the duty cycle.

Figure 245

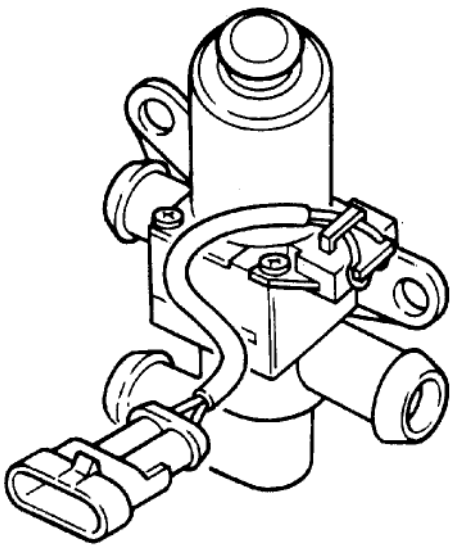

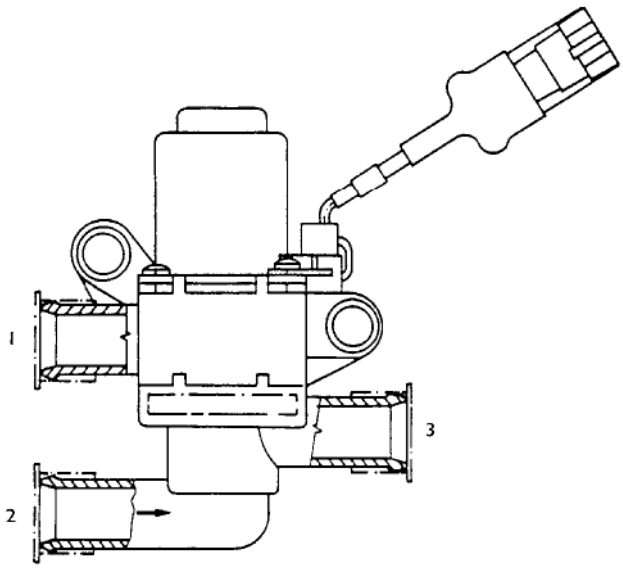

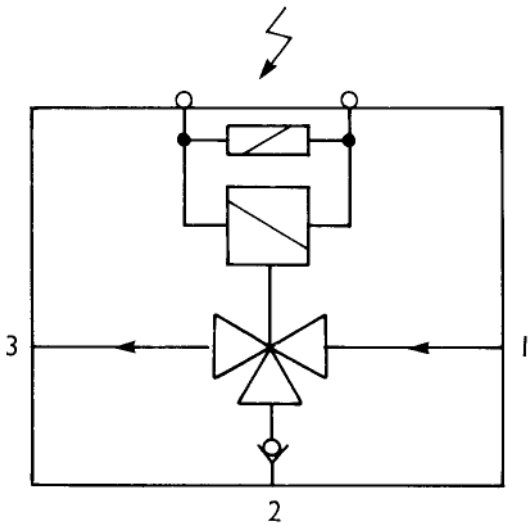

77570

https://truckmanualshub.com/
Aquila Trucks Centres

Compressor

Figure 246

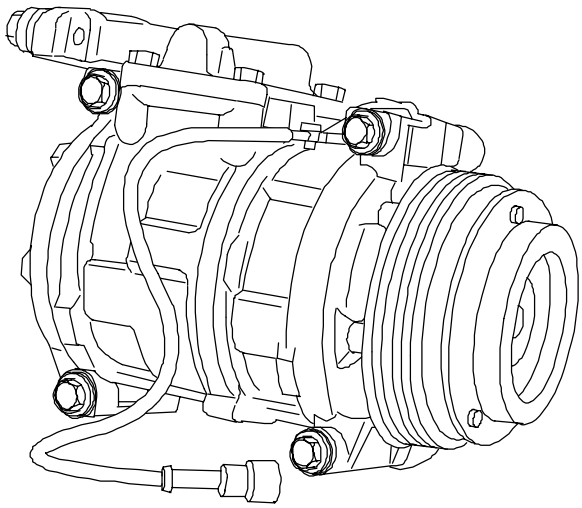

106393

	NIPPODENSO
	ND 10 PA 17
Coolant	R134a
Lube oil	ND80
Quantity of coolant	700g
Quantity of oil	200cc.

R134a coolant is anyhow exclusively used in the STRALIS range

https://truckmanualshub.com/
Aquila Trucks Centres

Drier filter and safety pressure switches

The drier filter is integral with the condenser located on the vehicle front.

The cooling system uses R134a coolant as specified on its cover plate.

The 4-level safety pressure switch unit is installed on the condenser return line.

The two type NC and NA pressure switches keep system pressure constant from a minimum of 2.5 (for the NA) to a maximum of 25 bars (for the NC). The system is cut off when values are outside this range.

The two NA pressure switches are to cutout the engine cooling fan coil when system pressure is between 18 and 22 bars. This is achieved by means of a mass signal the two switches transmit to the Body Computer control centre.

Figure 247

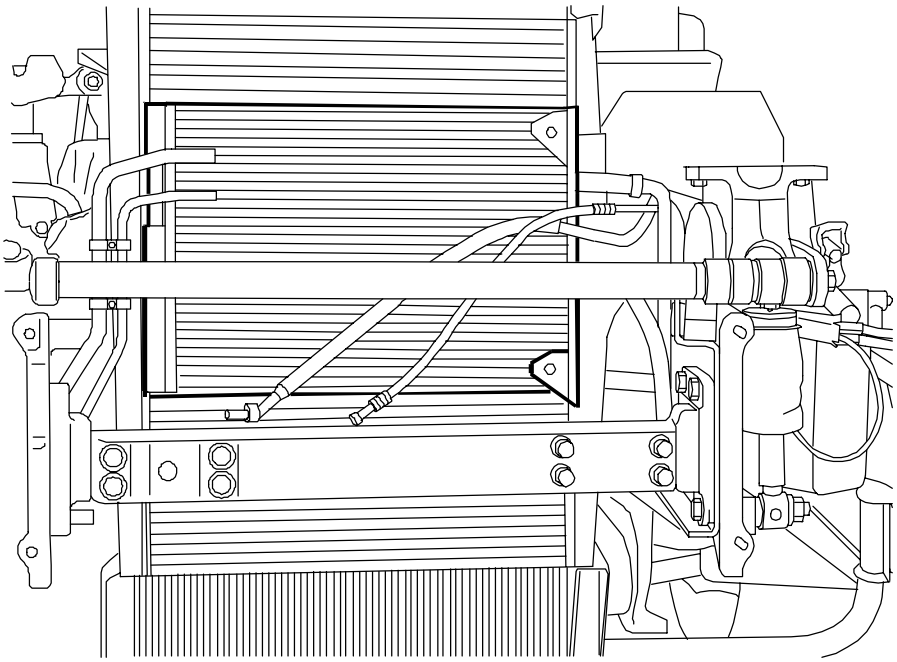

74245

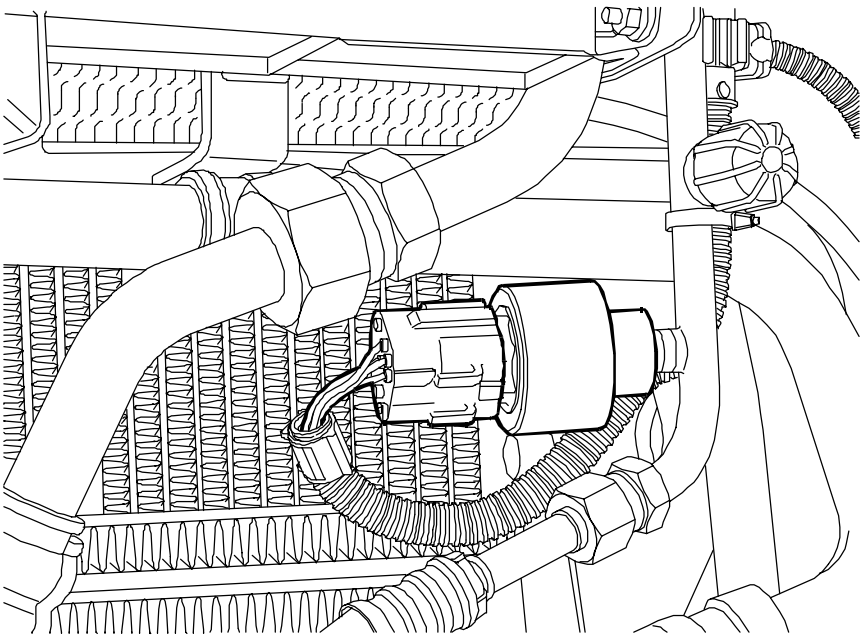

74247

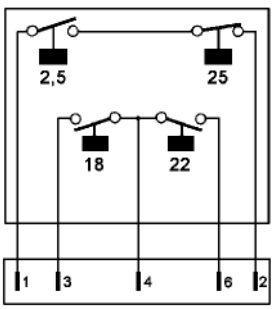

77560

https://truckmanualshub.com/
Aquila Trucks Centres

Expansion valve

Its function is to lower liquid pressure from the condenser to a preset value so by circulating inside the evaporator the coolant can be sucked as a gas by the compressor.

It thus completes three basic functions:

D DOSING

D MODULATING

D MONITORING

It is installed on the heater/conditioner unit close to the blower control module.

Figure 248

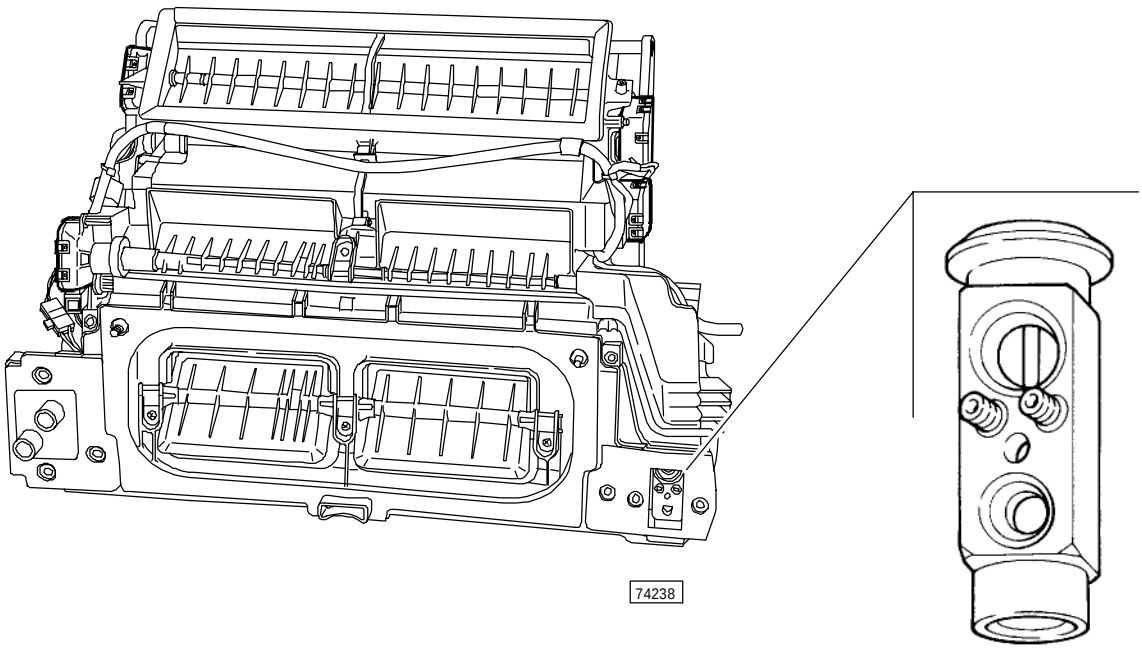

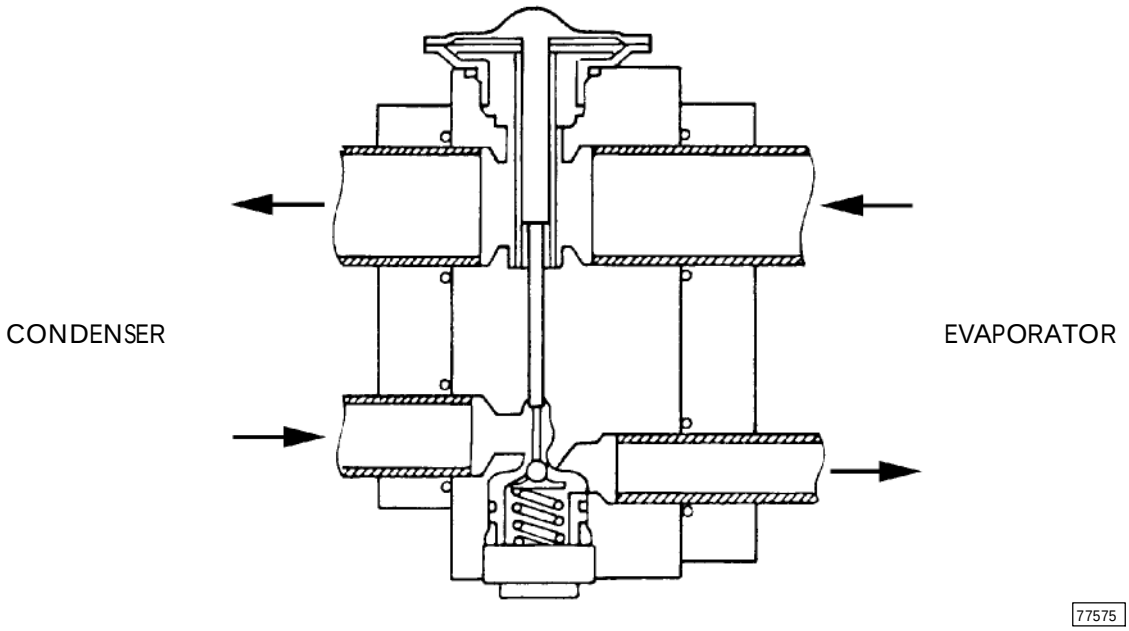

https://truckmanualshub.com/
Aquila Trucks Centres

The expansion valve is of the union type and is placed between drier filter and evaporator.

Its task is checking and batching the cooling fluid flow in order to obtain the maximum refrigerating power from the system and to lower the cooling liquid pressure (upon exiting the filter) to a pre-established value, so that the fluid itself, by then circulating into the evaporator, can be sucked by the compressor in a completely gaseous state.
In this valve there are two cooling fluid passages:

- The lower one that allows the cooling fluid to pass from drier filter (5) to evaporator (2). Along this path a spring (4) is placed that, suitably calibrated, allows obtaining such a temperature jump (overheating) as to ensure that the cooling fluid, upon entry the evaporator, is completely in a gaseous state. Moreover there is also a modulating element, in this case a ball (3) housed in the calibrated duct, that checks the cooling fluid flow rate to the evaporator.
- The upper one that allows the cooling fluid to pass from evaporator (1) to compressor (6). Along this path instead there is a temperature sensor (7) that, depending on the temperature upon exiting the evaporator, allows obtaining a control action on the cooling fluid flow rate, through the modulating and overheating checking element (3), through the spring (4).

Figure 249

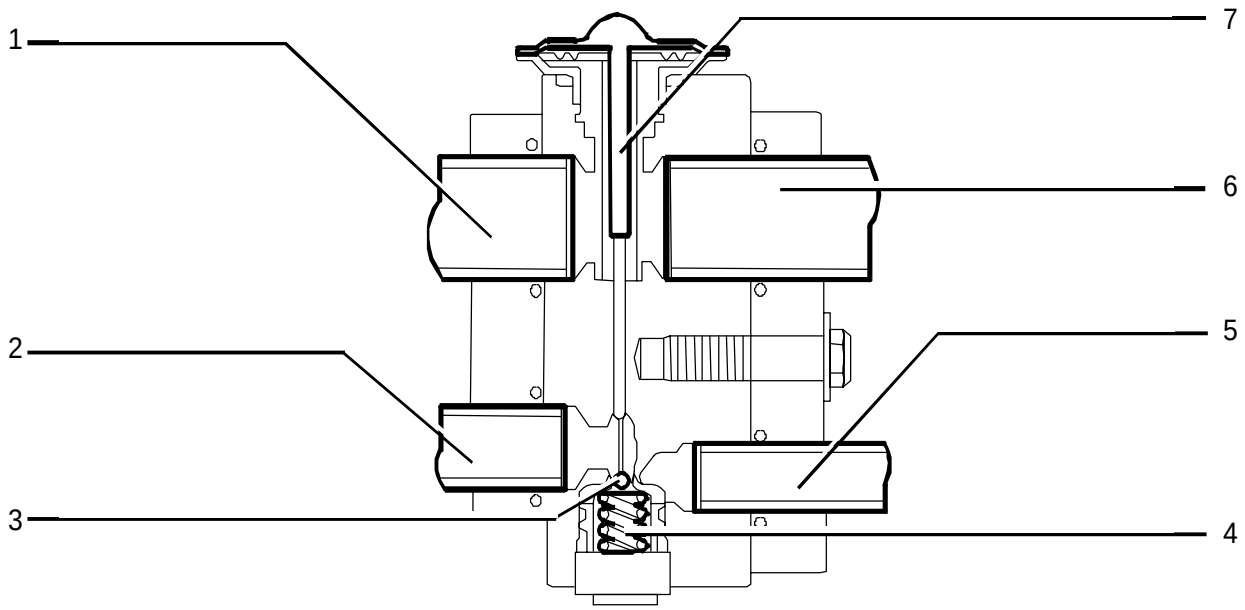

77565

https://truckmanualshub.com/
Aquila Trucks Centres

Conditioner control unit

Figure 250

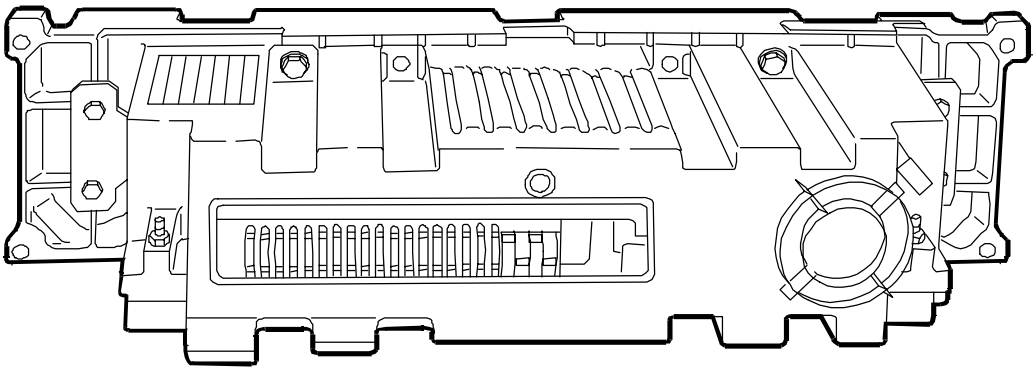

74239

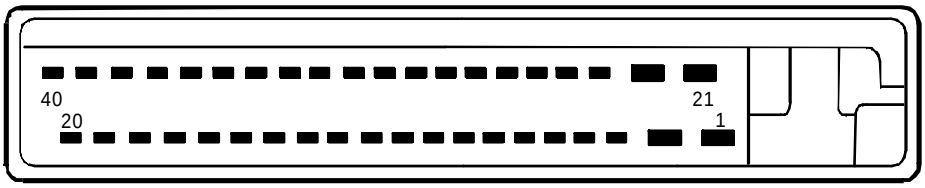

74248

Pin	Cable	Function
1	-	-
2	7550	Positive direct from the battery
3	-	-
4	2296	K line for diagnosis
5	Ws/Bi	CAN - H (BCB) line
6	9993	Outgoing positive compressor electromagnetic clutch signal
7	7568	Mixer reduction gear motor power supply
8	7566	Recirculation reduction gear motor power supply
9	0562	Floor reduction gear motor power supply
10	7564	Windshield defrost reduction gear motor power supply
11	-	-
12	0550	Sensor and reduction gear motor mass
13	7572	Evaporator temperature reference signal
14	7574	Sun ray sensor signal
15	7565	Recirculation potentiometer reference voltage
16	7561	Floor potentiometer reference voltage
17	-	-
18	2290	Internal temperature sensor motor signal
19	-	-
20	7555	Outgoing positive blower control module signal
21	0000	Negative direct from the battery
22	9552	Outgoing negative electro valve signal
23	-	-
24	-	-
25	Gn/Ve	CAN - L (BCB) line
26	0568	Mixer reduction gear motor power supply
27	7569	Internal temperature sensor motor power supply
28	0566	Recirculation reduction gear motor power supply
29	-	-
30	0564	Windshield defrost reduction gear motor power supply
31	7562	Floor reduction gear motor power supply
32	7575	Internal temperature sensor signal
33	7571	Blow air temperature reference signal
34	7567	Recirculation potentiometer reference voltage
35	7563	Windshield defrost potentiometer reference voltage
36	7560	5-Volt Mix / Floor / Rec / Defrost potentiometer signal
37 ÷ 40	-	-

https://truckmanualshub.com/
Aquila Trucks Centres

MANUAL AIR CONDITIONER

In the manual version the refrigerating circuit and heater checks occur by means of a device with leverages and knobs placed in the lower part of the central dashboard.

The system is checked by an electronic unit but by means of knob controls used for the following functions:

Figure 251

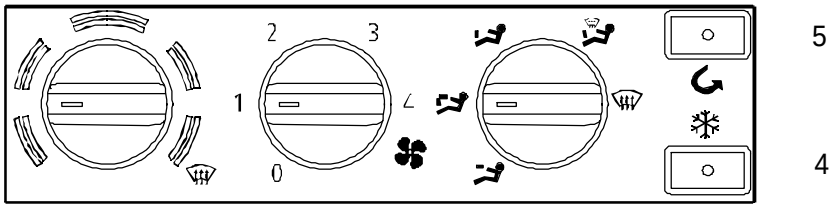

1. Heating water cock control
2. Internal fans speed
3. Air flows distribution
4. Compressor control switch
5. Recirculation function switch

CONTROLS DESCRIPTION

Water cock control

The knob rotation adjusts water cock position and consequently the amount circulating inside the cabin radiator.
If supplementary WATER heater is present, this knob controls three microswitches used for the following functions:

20% supplementary heater water pump activation
60% top flap closing motor activation (TOP FLAP)
80% supplementary heater connection

If supplementary AIR heater is present, this knob controls two microswitches used for the following functions:

60% top flap closing motor activation (TOP FLAP)
85% supplementary heater connection

NOTE The motor for TOP FLAP function is present only in manual version, since in automatic version this function is performed through a bowden cable connected to air mixing motor (MIX).

- Maximum heating = TOP FLAP closed
- Maximum cooling = TOP FLAP open

Internal fan speed

This knob is composed of a multiple switch that controls three adjusting resistances for different motor speeds.

Air flows distributions

This control through bowden cables allows distributing the air flows in the desired cabin areas.

Recirculation function switch

This button allows, through a specific motor, closing the external door with a percentage of 95% of internal air and 5% of external air.
The motor has no position sensors since it works only under the two all-closed or all-opened conditions.
On the button there is a yellow-coloured led that signals its connection.
There is no time limit for this function.

https://truckmanualshub.com/
Aquila Trucks Centres

Compressor control switch

This button allows connecting the air conditioner compressor.
The cluth closure is constrained by safety system pressure switches and by fixed-calibration evaporator thermostat
Such thermostat, of the mechanical type, adjusts the temperature inside the evaporator in order to disconnect the compressor clutch upon reacihing ~ 2 _C and reconnect it at ~ 5.5 _C
The compressor operation is constrained by the manual connection of at least one fan speed.
A yellow-amber-coloured led is present on the button and signals the compressor connection.

STEPPER MOTORS

In manual system there are two stepper motors placed on heater assembly
They are composed of a motor without potentiometers ahd have the same electric characteristics.

The ratio motors are used to perform the following functions:

RECIRCULATION (RIC)

TOP FLAP (TOP FLAP)

MOTORS

D They are supplied at 24 V.

D Motor resistance is ~112 Ohm.

D No-load absorption is about 30 mA.

D Limit absorption is about 200 mA.

https://truckmanualshub.com/
Aquila Trucks Centres

Block diagram

Figure 252

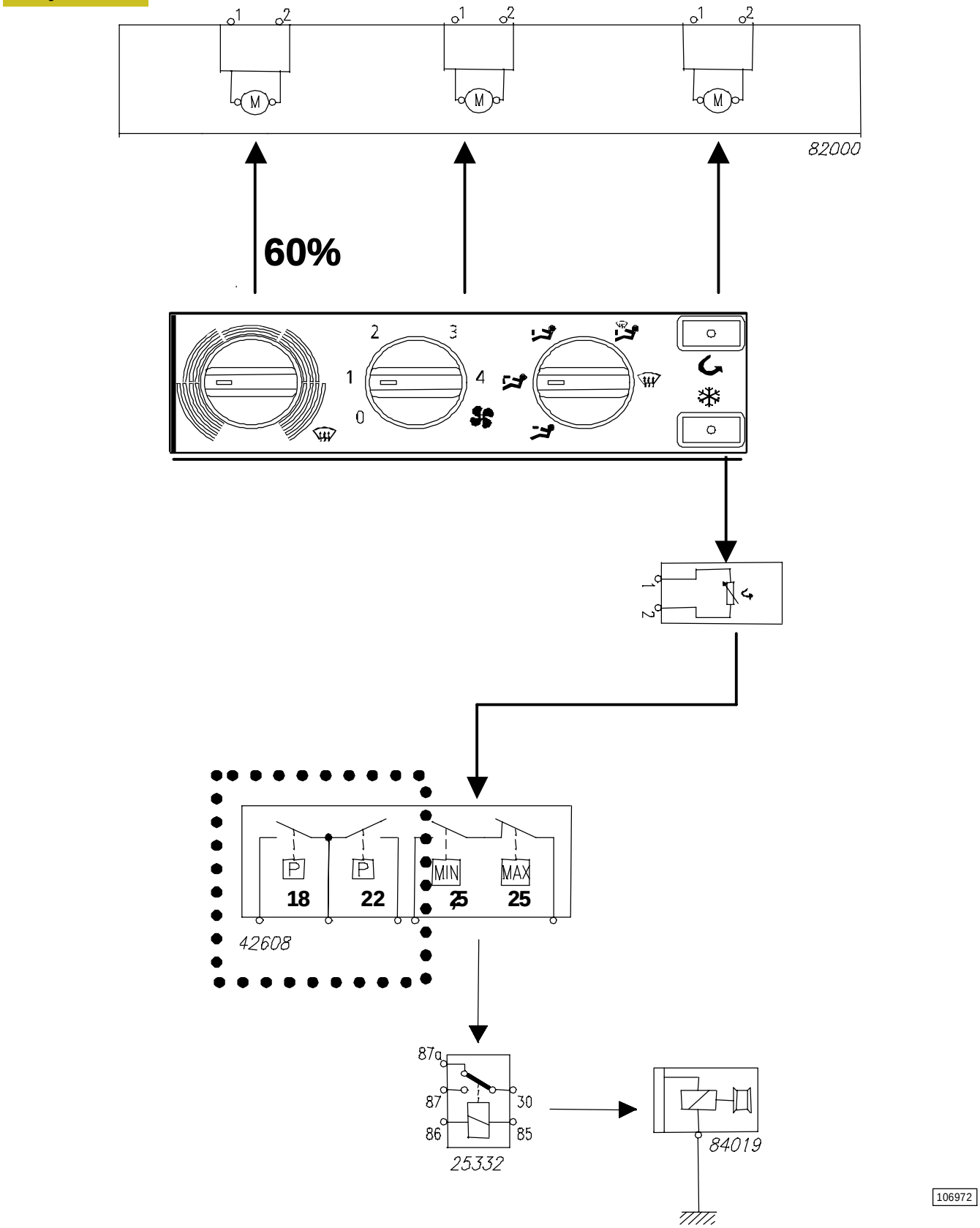

42045. External temperature sensor - 82000. Windscreen defroster assembly - 84009. Internal temperature sensor - 42608. Cooling fluid safety pressure switches - 25332. Compressor connection remote control switch - 84019. Compressor

https://truckmanualshub.com/
Aquila Trucks Centres

Air conditioner fuses remote control switches

Figure 253

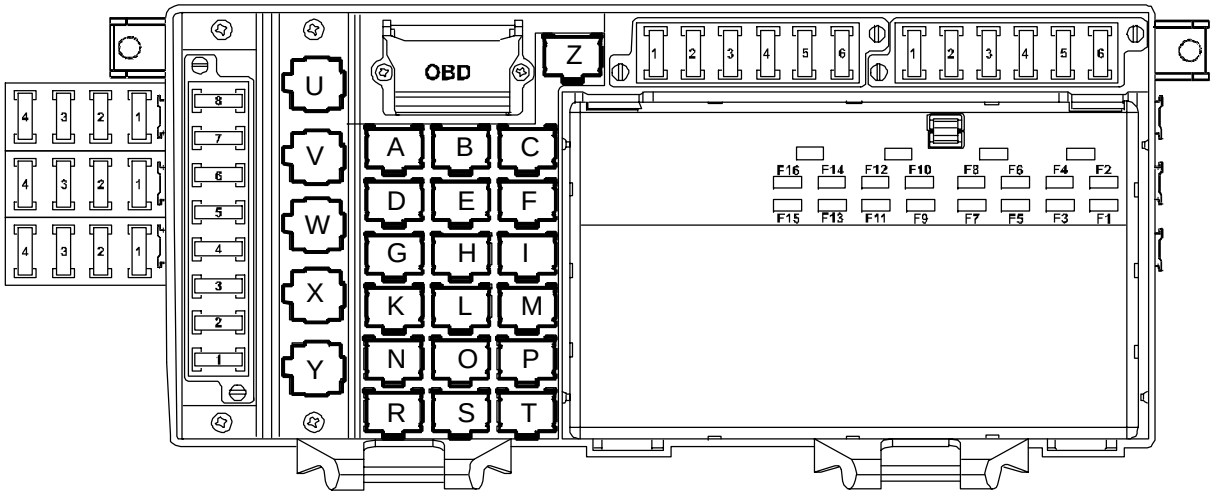

Black-coloured fuse-holder (70604)

Position	Description	Delivery A
2	Air conditioning system	10
3	Air conditioning system	5
4	Supplementary heating	15
5	Supplementary heating	5

Ref.	Description	Component code
B	Water heated remote control switch (opt.)	25337
E	Heated remote control switch (opt.)	25325
H	Manual conditioner remote control switch	25310
I	Manual conditioner remote control switch	25874
L	Manual conditioner remote control switch	25332B
M	Manual conditioner remote control switch	25322
O	Manual conditioner remote control switch (opt.)	25332A
P	Manual conditioner remote control switch (opt.)	25327

https://truckmanualshub.com/
Aquila Trucks Centres

HYDRONIC D 10 WATER HEATER
System operation

By connecting the burner, the electronic unit controls water pump, fuel batching pump, burner motor and ignition spark plug.

The water pump circulates the cooling liquid in the cooling circuit of the engine to be heated.

The burner motor sucks and inserts the right amount of air necessary for combustion.

The ignition spark plug heats air and burns fuel injected by the batching pump.

Purpose of the batching pump is taking and injecting fuel onto spark plug.

After 90 seconds, the unit, through the flame sensors, checks that the exhaust gases temperature value is included between 500 and 600 °C, (ignition has correctly occurred).
Upon reaching about 700 °C the unit disconnects the spark plug and the burner works in self-combustion.

If the flame sensor does not measure the above temperature, thereby the burner is not turned on, the unit repeats the ignition procedure. If it does not start again, the unit turns the burner off and it will then be mandatory to manually switch it on again.

If the heater does not start for three consecutive times, it is blocked.

The unit checks, through water temperature sensor and overheating sensor, whether combustion and burner correctly operate.

The water temperature sensor is used by the unit to adjust the burner working power (maximum, medium, minimum and stand by).
In the manual version, upon reaching 55 _C, the system connects the fans inside the cabin.

The overheating sensor is used by the unit to turn the burner off in case of excessive water temperature (about 115 _C).

The burner operating time is determined by driver's settings.
Upon turning off, the burner performs a washing phase that lasts for about 3 minutes in order to be ready for the following starting.

The heater is connected with its own control logic in the air conditioning system and is therefore equipped with an electronic unit with related connector.

The unit is directly assembled onto the heater.

The heater can be directly driven by the automatic air conditioning system, by the version with manual control or through the Bed Module unit.

https://truckmanualshub.com/
Aquila Trucks Centres

COMPONENTS LOCATION

Figure 254

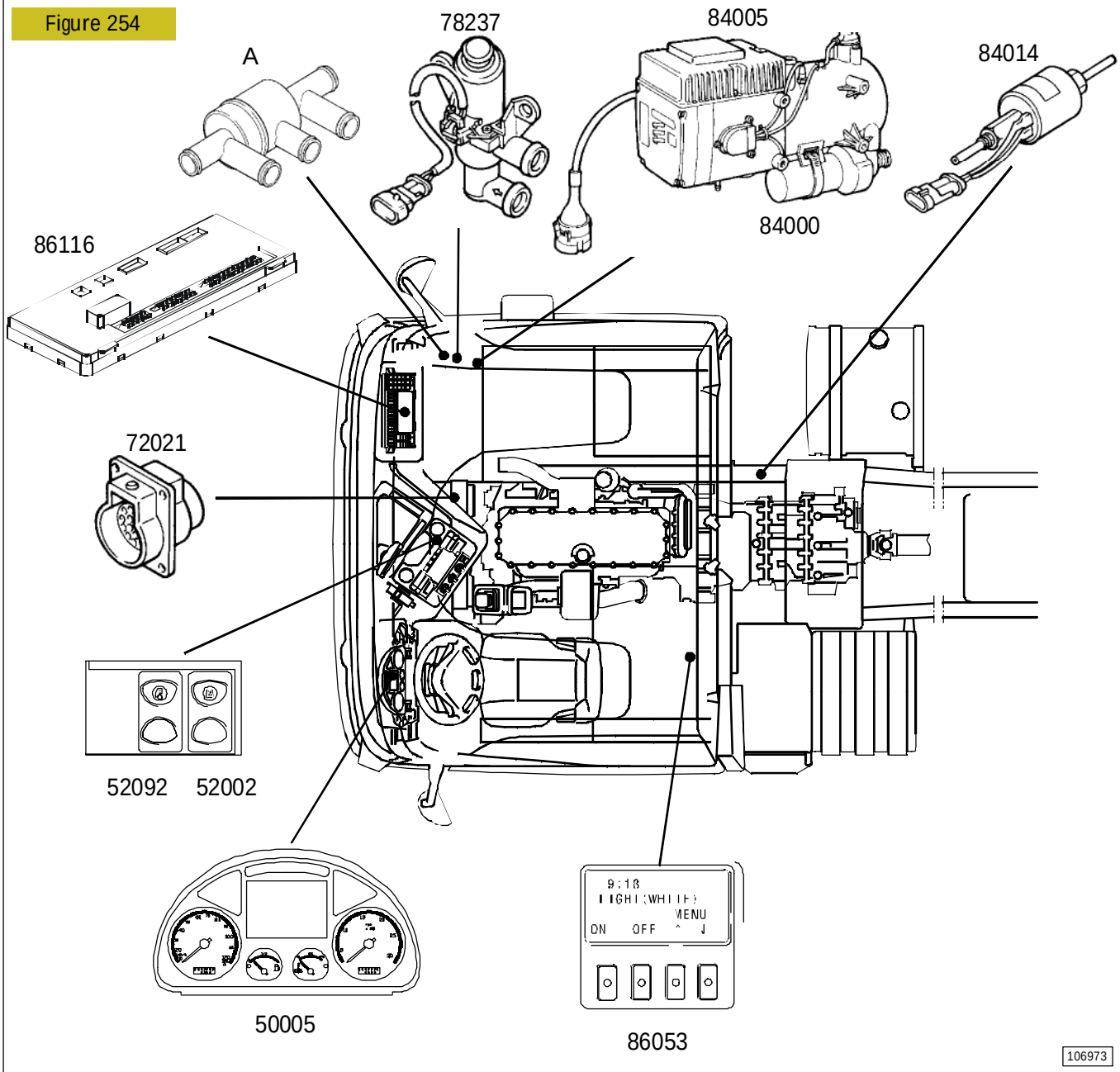

Legenda

A	Thermostat 65 _C
50005	Cluster
52002	Heater connecting switch
52092	Cabin/engine heating swtich
72021	30-pole diagnosis connector
78237	Two-way solenoid valve (D+)
84000	Supplementary water heater
84005	Heater control electronic unit
84014	Fuel batching pump
86053	Bed Module
86116	Body Computer

https://truckmanualshub.com/
Aquila Trucks Centres

SYSTEM COMPONENTS

1) Burner motor
2) Flame sensor
3) Combustion chamber
4) Burner control unit
5) Ignition spark plug
6) Water temperature sensor
7) Flame pipe
8) Heat exchanger
9) Overheating sensor
10) Water pump
11) Silencer
12) Air suction pipe
13) Fuel batching pump
14) Bed Module unit
15) Automatic Webasto air conditioner electronic unit
16) Cabin/engine heating and heater connecting switch
17) Air conditioner control dashboard for manual version
18) Cluster

Connection to circuit

WE. Water inlet
WA. Water outlet
V. Comburent air inlet
B. Fuel supply
A. Exhaust gases outlet

https://truckmanualshub.com/
Aquila Trucks Centres

Figure 255

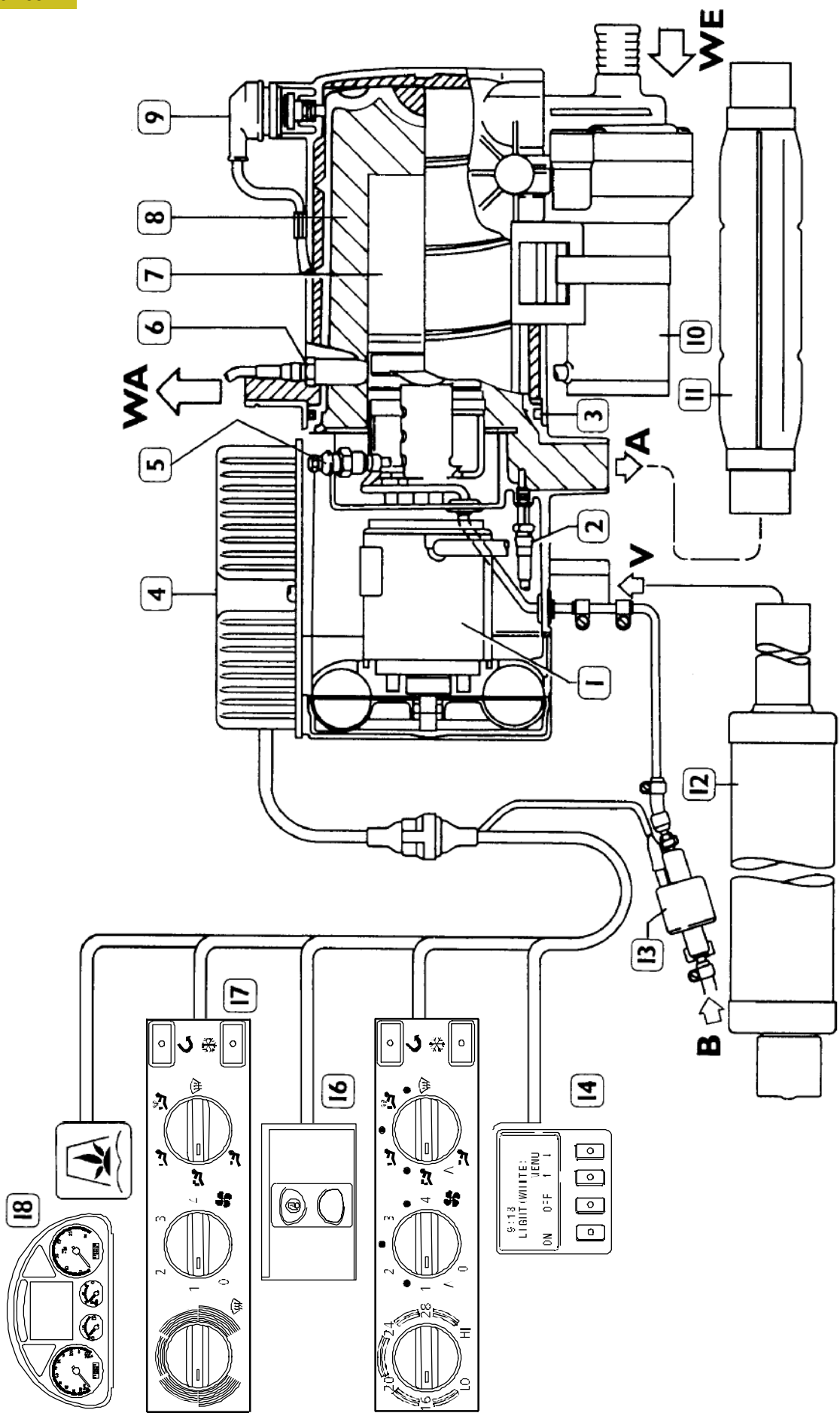

https://truckmanualshub.com/
Aquila Trucks Centres

65 _C THERMOSTAT

It is assembled on the right vehicle side near the burner and has been inserted in order to allow quickly heating the cabin when the engine is off.

It is equipped with a temperature-sensitive membrane calibrated at 65 °C.

With temperature < 65 _C water will only circulate in cabin (small circuit).

With temperature > 65 _C the thermostat switches its position, allowing water to circulate both in cabin and in engine, heating them both (big circuit).

3-WAY SOLENOID VALVE

In the WEBASTO air conditioning system there is a single 3-way solenoid valve that performs the function of batching and bypassing cooling water from engine to radiator inside the cabin.

The valve is placed next to the front left side of the engine (driver side).

It is of the Normally Open type at rest and is supplied by a direct battery positive.

The electronic unit, by providing it with a mass, adjusts its working cycle (Duty-Cicle).

WATER PUMP

The water pump is directly assembled on the lower part of the burner.

It is used to circulate the engine cooling water in the circuit.

The supply voltage is 24 Volt.

The minimum flow rate is about 500 l/h.

FUEL BATCHING PUMP

It is assembled on the chassis next to fuel tanks with a slant of 15° to facilitate air drain. It is used to take and inject gas oil inside the burner.

The unit supplies the pump with a pulse signal.

For a correct operation the internal delivery pipe diameter must be 2 mm and must not exceed the length of 5 meters.

It embeds a small fueld filter and a unidirectional check valve.

The fuel flow rate is about 0.2 l/min.

https://truckmanualshub.com/
Aquila Trucks Centres

WATER TEMPERATURE SENSOR

It is a PTC sensor assembled on heat exchanger; it measures different water temperatures in order to adjust the burner power and, only in manual version, upon reaching 55 °C, it allows connecting the fans.

The sensor resistance at 20 _C is ~950 Ohm.

FLAME SENSOR

It is a PTC sensor assembled inside the combustion chamber next to the exhaust gas outlet and measures the current temperature, in order to disconnect the spark plug in case the burner has not been turned on.

It disconnects the spark plug at an exhaust gas temperature of about 700_C

The sensor resistance at 20 _C is ~1080 Ohm.

IGNITION SPARK PLUG

It is a resistance placed inside the combustion chamber.

The unit supplies it with pulses through an internal electronic regulator.

The rated operating voltage is 18 Volt to allow its operation also with battery voltages of ~ 22 Volt.

The resistance at 20 _C must be < 2 Ohm.

OVERHEATING SENSOR

It is a temperature sensor assembled on the heat exchanger, it measures the different water temperatures to possibly disconnect the burner upon reaching about 115 °C

In case of intervention the sensor restores itself autonomously. It is not of the manual restoring type.

The sensor resistance at 20 °C is ~ 10 K Ohm.

BURNER MOTOR

It is embedded into the assembly in the rear burner part.

The rotation speed is managed by the unit by means of an integrated electronic regulator.

It embeds an inductive sensor that measures the engine rotation speed.

https://truckmanualshub.com/
Aquila Trucks Centres

ELECTRONIC UNIT

It is directly assembled on heater body and is interfaced with vehicle through a 14-pin connector.

It is connected to CAN BCB line.

It has a very advanced diagnostic system and transmits possible error codes on vehicle Cluster.

Pin	Cable	Function
A1	7506	Positive from water cock knob manual version (25% position)
A2	7711	Positive from boiler activating switch
A3	Ws/Bi	CAN H line
A4	7775	Positive for ambient thermostat control (manual version)
B1	Gn/ve	CAN H line
-	-	-
B3	2296	Diagnosis K line
B4	6605	Positive for cabin/engine heating key warning light
-	-	
C2	7708	Direct positive from battery
C3	0000	Direct negative
C4	7783	Positive for fuel batching pump control
-	-	-
-	-	-

https://truckmanualshub.com/
Aquila Trucks Centres

SCR (SELECTIVE CATALYTIC REDUCTION) SYSTEM - DENOX 2

The system operation is described in the "Engine" section of this manual.

Figure 256

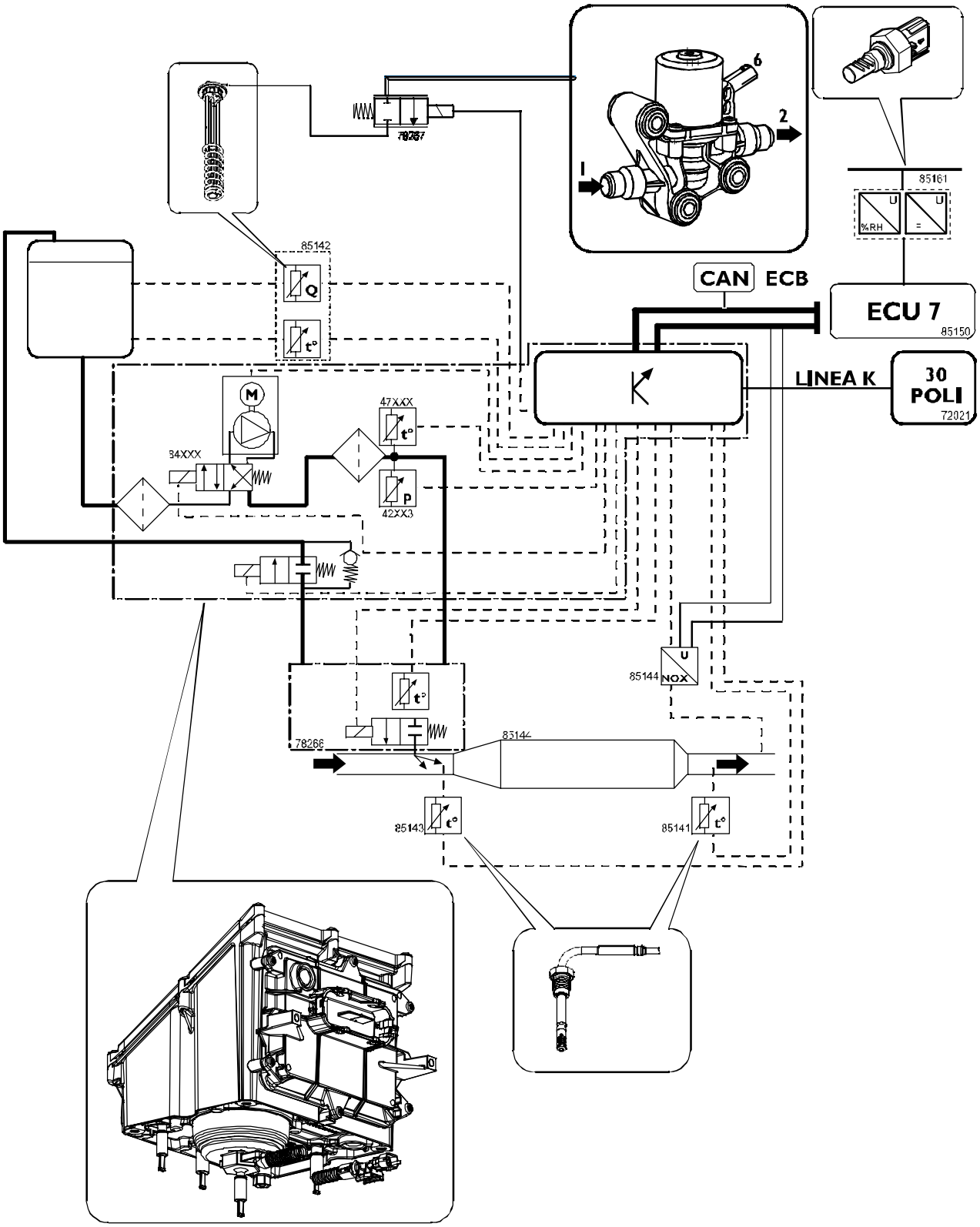

SCR SYSTEM OPERATION DIAGRAM

108913

https://truckmanualshub.com/
Aquila Trucks Centres

Name	Description
42XX3	AD-Blue solution pressure sensor
47XXX	AD-Blue solution temperature sensor
72069	16-pole joint for OBD (on-board diagnosis)
78266	Measuring module solenoid valve with SCR
78267	Engine water circulation switch valve for UREA tank heating with SCR
84XXX	Electric displacement pump with pressure control valve and circulation valve
85140	Electronic control for SCR pumping module
85141	Catalyst output temperature sensor with SCR
85142	UREA tank level and temperature sensors with SCR
85143	Catalyst input temperature sensor with SCR
85144	Nitric oxide (NOx) measuring sensor with SCR
85150	EDC control unit
85161	Combustion air relative humidity and temperature sensors with EDC

https://truckmanualshub.com/
Aquila Trucks Centres

Pin - out

Figure 257

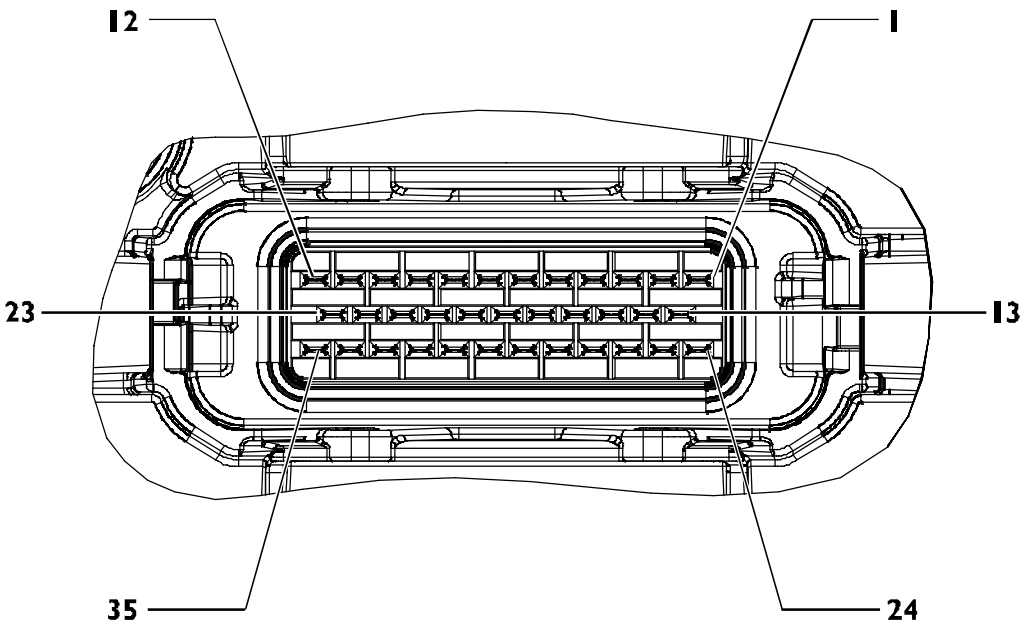

CONNECTOR VIEW (CABLE SIDE)

Ref.	Description	Cable colour code
1	Solenoid valve power supply positive for engine coolant circulation	7542
2	Power supply of urea filter output heater	7546
3	Power supply +30	7540
4	Power supply +30	7540
5	CAN H line (ECB)	White
6	CAN L line (ECB)	Green
11	Urea electric meter control	9541
12	Power supply of metering module solenoid valve with SCR	7541
14	Ground	0000
15	Ground	0000
17	Earth cable for input temperature sensor of catalyst with SCR	0544
18	Signal cable to urea tank level sensor with SCR	6543
19	Level sensor earth and urea reservoir temperature	0543
23	Urea tank heating solenoid valve earth	9542
24	Positive +15	8540
25	Groundcable for output temperature sensor of catalyst with SCR	0541
26	Output temperature sensor signal of catalyst with SCR	6541
28	Signal cable for input temperature sensor of catalyst with SCR	6544
29	Signal cable to urea tank temperature sensor with SCR	6542
31	Fault diagnosis "K" line for SCR control unit	2257
33	Urea filter output heater control	9546

https://truckmanualshub.com/
Aquila Trucks Centres

CENTRAL LOCKING WITH REMOTE CONTROL

The system consists of one or several (max. 8) transmitters and a receiver.

Transmitter

The transmitter has a special container of its own, equipped with an eyelet and ring.. The shock-proof transmitter container is also waterproof.
The transmitter sends the receiver a variable code (rolling code) by means of a radiofrequency signal at 433.92 MHz (EC Directive 95/56).
It is equipped with two buttons for door opening and closing, respectively.
By keeping the button pressed down for 50 msec, the variable code will be fully transmitted. If the button is actuated continuously, however, transmission will be interrupted after 5 seconds (± 10%).
The transmitter operating range is 10 m.
The battery guarantees a 2 years' service life. Following the replacement, the transmitter may be briefly actuated twice in order to restore synchronism with the receiver. This sequence is also permitted at any time other than battery replacement

Receiver

The receiver is housed inside a container with a white cover, which includes a transmitter programming button (easily accessible and protected against unintentional actuation), a programming check green LED, and a 8-way connector.
It is housed in instrument panel upper side, in front of passenger's seat.
The receiver antenna is housed inside the container, too.
The receiver receives and decodes the code_that was sent by the transmitter, and can store up to eight codes. Doors locking and unlocking commands go from the transmitter to the receveir, which sends the signal to Body Computer central unit, which in turn via CAN line sends a message to Door Modules to activate the locks.
If the vehicle is in the key-ON condition (+15 is available), the receiver will perform no actuation through the remote control.
The receiver manages synchronization between the locks, and resumes correct alignment through a sequence of two or several transmitter or lock key drives.

Blinker control

Door lock locking and opening will be signalled by the lighting of the indicator lights. Therefore, the receiver need be interfaced with the Body Computer control unit that manages the above-mentioned lights.
The receiver features an output (to the ground) that is connected in parallel with the emergency light switch. The latter consists of an unstable button that actuates and deactivates the blinking sequence (blinker signal).

Description of blinker controls:

- T1 = 120 msec (Start)
- T2 = 700 msec (Delay - Lock)
- T2 = 1550 msec (Delay - Unlock)
- T3 = 120 msec (Stop)

Figure 258

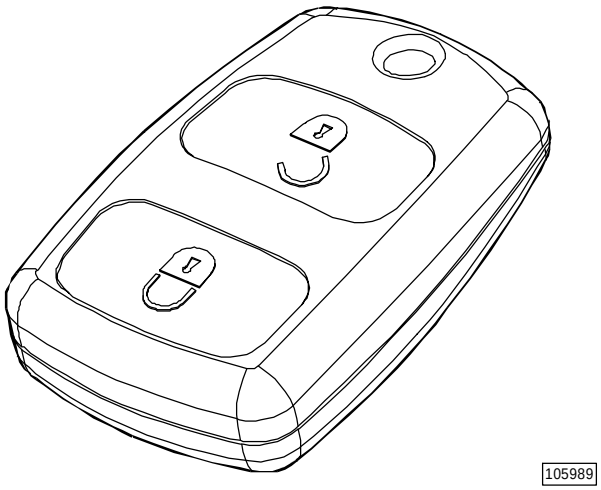

TRANSMITTER

Figure 259

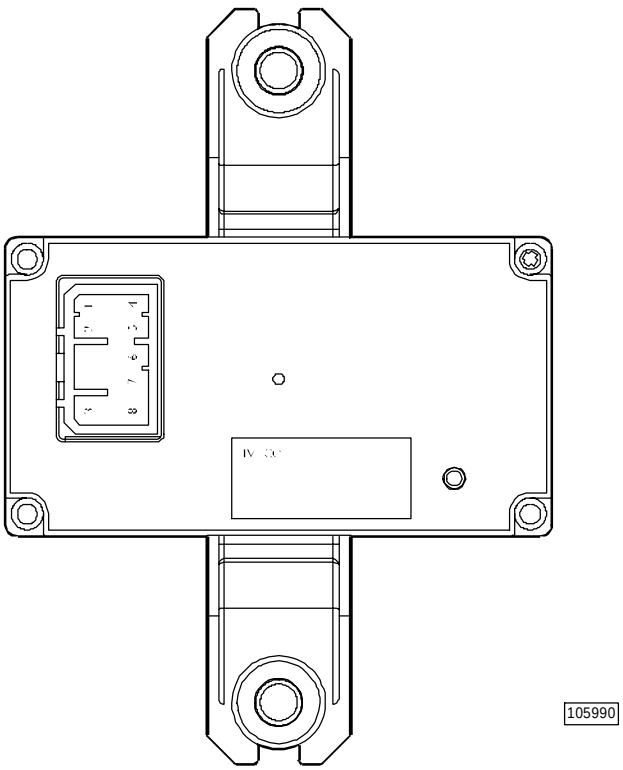

CENTRAL LOCKING CONTROL UNIT (RECEIVER)

https://truckmanualshub.com/
Aquila Trucks Centres

Control unit pin-out (receiver)

Pin	Function	Cable colour code
1	Blinker control	1113
2	Engine power supply for centralised closure (door closure)- (without DDM, PDM)	9965
2	Battery positive	7772
4	Ground	0000
5	Central locking control (door closing)	0064
6	Central locking control (door opening)	0065
7	+15 power supply	8871
8	Engine power supply for centralised closure (door opening) - (without DDM, PDM)	9964

Programming

The programming status makes it possible to get the receiver to recognize the transmitters enabled to control the respective functions.
Programming is accessed through the rest state when the +15 signal is not available.
The receiver may be controlled by a transmitter with a universal code as long as at least one transmitter is not programmed.
After a variable code (other than the universal code) has been programmed, the latter will not be recognized any longer.
Transmitters are programmed in the FIFO mode.
Two transmitter programming modes are available:

- simplified programming: it allows you to program the transmitters quickly. It can be actuated until 128 actuations are performed after the first programming, or until it is disabled.
- Protected programming: it guarantees the customer against the risk of other transmitters being programmed without the knowledge of the customer themselves. It involves using a password (shown on the tag enclosed with the transmitter) that can be obtained from the transmitter code.

Simplified programming

The first code (and the subsequent ones as well) are programmed as follows:

- press the button on the receiver: the LED will light up and blink;
- the operator presses, while keeping the button on the receiver pressed down, any of the key of the transmitter, which sends out the code;
- the receiver stores, after detecting three subsequent transmission instances (with the current checksum), the code into the memory;
- the receiver LED will, at the very time when it recognizes the code, light up steadily, thus signalling that the code has been received: now the operator may release the transmitter button to end the programming.

Simplified programming disable
Simplified programming may be disabled by entering the password as follows:

- press the small button on the receiver: the LED will light up and blink;
- release the small button: the LED will blink once;
- enter, by means of the small button, a 4-digit code (password): each digit shall be included between 0 and 9 (code written on the label delivered together with the transmitter). An optical feedback will be generated on the LED every time the small button is pressed;
- after each digit has been entered, wait for the LED to blink again to request the next digit, up to the fourth digit;
- the procedure will be over after the last digit is entered.

Protected programming

Every time a new transmitter is to be recognized after firstly entering the password, you will need to enter the password of any of the transmitters previously stored into the memory. Correct recognition of the password will be signalled by the LED blinking after the password has been entered (if the password is not recognized, the LED will remain ON for 10 seconds). When the LED is blinking, keep the receiver button pressed down, then transmit with the new remote control to be stored into the memory, by following the simplified programming instructions.

https://truckmanualshub.com/
Aquila Trucks Centres

DIAGNOSTIC

MODUS

Computer-assisted diagnosis station used for diagnosis of braking systems, pneumatic suspensions, electronically-controlled systems and engines.

The station is equipped with auxiliary functions such as electronic control unit programming, spare list catalogue referencing, time-charts, etc.

IT 2000

The IVECO electronic tester makes it possible to immediately intervene on the vehicle, by recognizing the latter by means of the chassis number.

This tester stores the results of the diagnostic operations carried out.

It can also be used as a portable PC, and is set for remote diagnosis.

By using MODUS as a mother station, IT 2000 can be updated and configured.

IT 2000 is interfaced with the vehicle by means of a 30-pole diagnosis takeoff.

E.A.SY.

E.A.SY. system allows to simply make the diagnosis and programming of the various electronic central units aboard the vehicle.

E.A.SY. system is made up of ECI module communicating with the electronic central units and of a Panasonic PC.

ECI module, exploiting the Panasonic PC, also allows easy on the road interventions: in particular, thanks to Panasonic PC wireless technologies (e.g. GPRS), diagnostic interventions can be assisted by a remote expert centre.

Figure 260

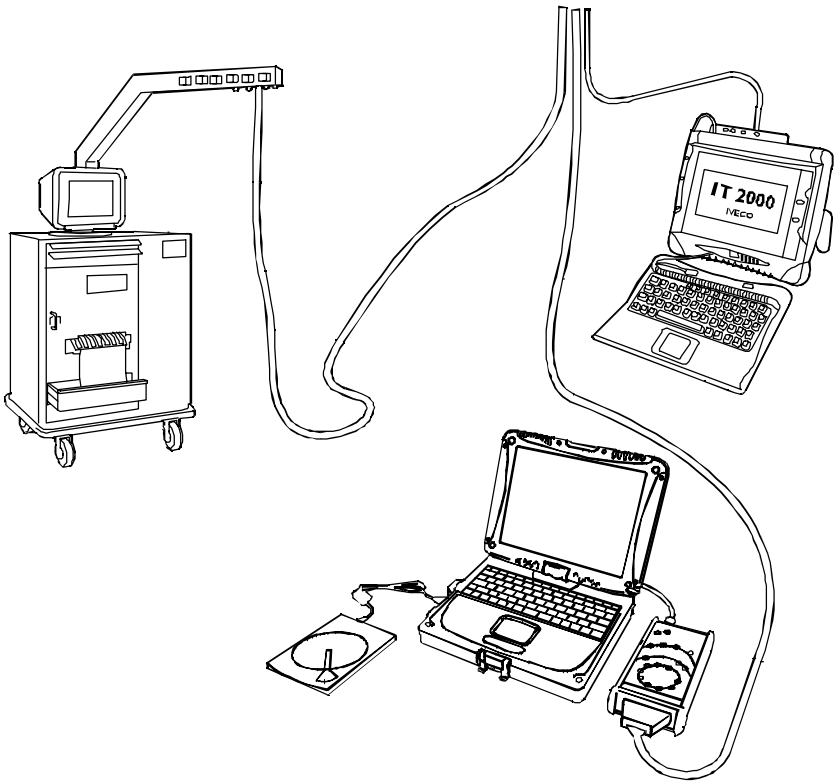

101586

https://truckmanualshub.com/
Aquila Trucks Centres

Diagnosis on Cluster

Access to the fault memory is possible through the "menu" function key (2) available on the steering wheel.

Figure 261

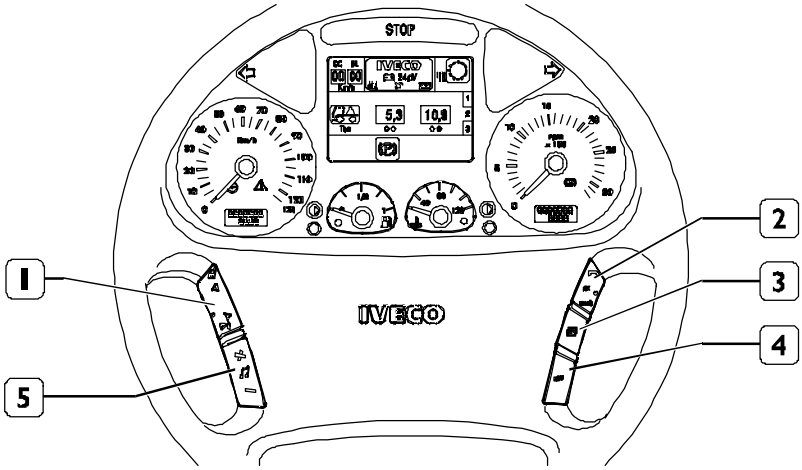

1. Button y or b - 2. Button MENU/OK - 3. Page button - 4. Escape button - 5. Button + and –

Turn key switch to MARCIA (+15), then press "menu" function button (2): the display will show the data exchange menu containing the list of available functions (e.g. HI-FI, telephone, diagnostic, etc.).

Select, by means of function y and b button (1), the diagnostic function, then confirm correct selection by means of function "OK" button (2).

The available electronic systems can be selected by means of select/confirm buttons (1) and (2).

The diagnosed systems are:

1	EDC	10	FFC (Front Frame Computer)
2	EUROTRONIC	11	RFC (Rear Frame Computer)
3	INTARDER	12	DDM (Drive Door Module)
4	0EBS (or ABS)	13	PDM (Passenger Door Module)
5	ECAS	14	CM (Cabin Module)
6	IMMOBILIZER*	15	0ACLC (Automatic air conditioner)
7	0MTCO (Tachograph*)	16	0AHT_w (Auxiliary water heater)
8	DC (Body Computer)	17	0AHT_a (Auxiliary air heater)
9	IC (Instrument Cluster)		

* Function not active

NOTE EDC control unit errors are not displayed after the engine has been started.

https://truckmanualshub.com/
Aquila Trucks Centres

- The anomaly-free system is displayed with a GREEN background.
- The faulty system is displayed with a RED background
- The systems not available on the vehicle or not diagnosed (tachograph and Immobilizer) are displayed with a GREY background.
- If several anomalies related to a system are available, the list can be run through by means of button (5, Figure 260) "+" and "–".

Figure 262

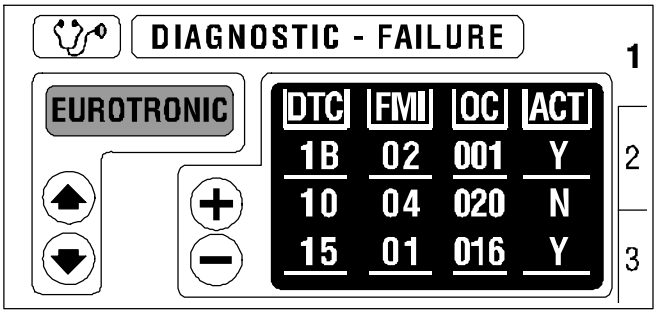

86029

The different codes shown allow you to identify the faulty component, the type of stored error (open circuit, short-circuit, etc.), the error occurrences and, finally, whether the error is currently present or intermittent.

Figure 263

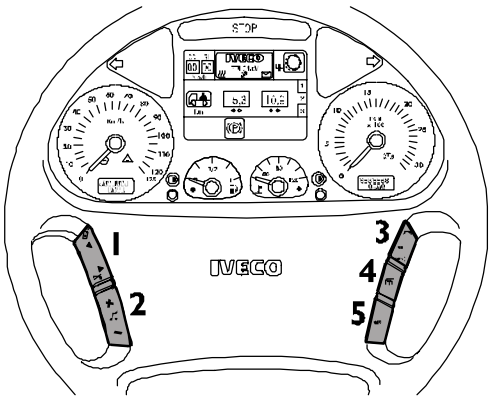

86030

To display intermittent faults, press simultaneously buttons "OK" and "(–)" (2-5).

https://truckmanualshub.com/
Aquila Trucks Centres

INFORMATION ON CLUSTER

The diagnosis information shown on the cluster is divided into three screens:

- the first screen allows you to display all the stored/currently present anomalies (if any);
- the second screen allows you to cancel intermittent errors (provided that the respective password is available);
- the third screen allows you to know the software version of the various Multiplex electronic control units.

Figure 264

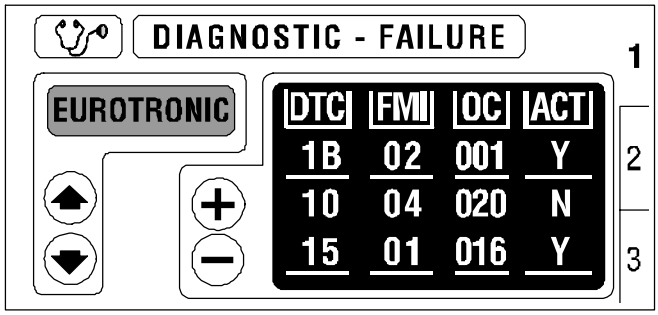

73687

First screen

If several anomalies are found, the respective list can be run through by means of buttons "+" and "–".
Information on every single fault is displayed on four columns with the following data:

DTC	FMI	OC	ACT
Displays the anomaly code related to the fault	Indicates the type of fault	Anomaly rate counter	Active/not active anomaly condition
Two digits (hexadecimal)	Two digits (hexadecimal)	Three digits (decimal)	One character (Y-yes, N-no)

Second screen

To select the second screen, press button "page" on the steering wheel.

Cancelling errors

The system can be selected by means of buttons y and b available on the steering wheel.
Anomaly display can be cancelled as follows:

- Press "+"
- The display will show the deletion confirm request: press "OK" to continue.
- Enter the requested password (see next paragraph ENTERING THE PASSWORD), then press "OK" to confirm.

Figure 265

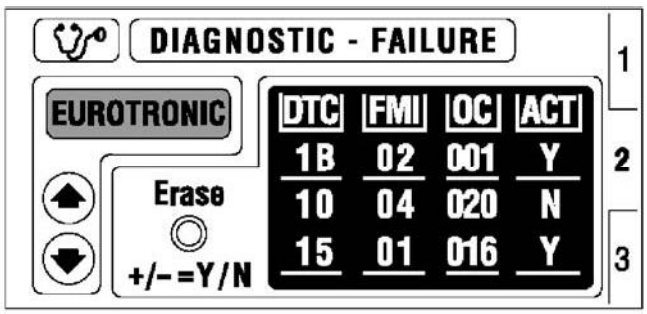

74225

https://truckmanualshub.com/
Aquila Trucks Centres

Entering the password

Figure 266

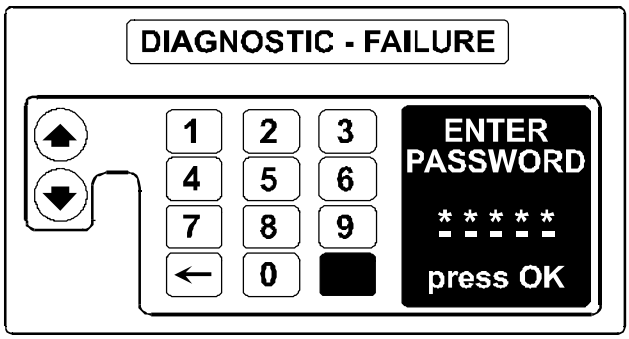

86031

- Select the first number of the password by means of buttons y and b.
- Press button OK to confirm each number.
- Press a to cancel the latest selected number.
- After the password has been completed, select the key symbol to confirm it.

Third screen

To select the third screen, press button "page" available on the steering wheel.

Software version

Figure 267

74227

The software version is displayed only for the Multiplex system control units.
The release of the following control units can be selected by means of buttons y and b:

1. Body Computer
2. Front Frame Computer
3. Rear Frame Computer
4. Driver Door Module
5. Passenger Door Module
6. Instrument Cluster
7. Cabine Module

https://truckmanualshub.com/
Aquila Trucks Centres

Circuit charts

		Page
CHART 1:	DIRECT POSITIVE TO BATTERY	247
CHART 2	POSITIVE AFTER TGC (+30) . .	248
CHART 3	POSITIVE AFTER TGC (+30) . .	249
CHART 4	POSITIVE AFTER TGC (+30) . .	250
CHART 5	POSITIVE AFTER TGC (+30) . .	251
CHART 6	POWER SUPPLY (+15)	252
CHART 7	POWER SUPPLY (+15)	253
CHART 8	POWER SUPPLY (+15)	254
CHART 9:	BODY CONTROLLER	255
CHART 10:	BODY CONTROLLER	256
CHART11:	BODY CONTROLLER	257
CHART 12:	BODY CONTROLLER	258
CHART 13	IC CENTRAL UNIT	259
CHART 14	TACHOGRAPH / DIAGNOSIS SOCKET	260
CHART 15	STEERING WHEEL INTERFACE (SWI)	261
CHART 16	DDM-BM CONTROL UNIT . . .	262
CHART 17	PDM CONTROL UNIT	263
CHART 18	THERMAL MIRRORS / CENTRALISED LOCKING / WINDOW WINDERS (WITHOUT DDM-PDM)	264
CHART 19	VCM CONTROL UNIT	265
CHART 20:	EDC (CONNECTOR B)	266
CHART 21:	EDC (CONNECTOR A/C - F2B)	267
CHART 22:	EDC (CONNECTOR A/C - F3B)	268
CHART 23:	CONTROL UNIT UDS (DENOX 2)	269
CHART 24:	CONTROL UNIT MET	270
CHART 25:	CONTROL UNIT MET	271
CHART 26:	CONTROL UNIT MET	272
CHART 27:	LINE CAN-IDB / FMB / CONTROL UNIT / TELEMATICS / NAVIGATOR	273
CHART 28:	LINE CAN-BCB	274

https://truckmanualshub.com/
Aquila Trucks Centres

Page

CHART 29:	LINE CAN-VDB	275
CHART 30:	LINE CAN-ECB	276
CHART 31	ECAS 4X2 P TRACTOR	277
CHART 32	ECAS 4X2P/4X4P/6X4P/8X4X4P (LORRY)	278
CHART 33	ABS	279
CHART 34:	VENTILATION	280
CHART 35:	MANUALLY CONTROLLED CLIMATE CONTROL SYSTEM	281
CHART 36:	MANUALLY CONTROLLED ADDITIONAL AIR HEATER	282
CHART 37:	MANUALLY CONTROLLED ADDITIONAL AIR HEATER	283
CHART 38:	EUROTRONIC II	284
CHART 39:	RETARDER ZF	285
CHART 40:	CONTROL UNIT EM (PTO)	286
CHART 41:	RADIO RECEIVER	287
CHART 42:	GENERAL MECHANICAL POWER SWITCH (IGC)	288
CHART 43:	ADR (2001)	289
CHART 44:	ADR (OPT. 0129)	290

https://truckmanualshub.com/
Aquila Trucks Centres

Chart 1: Direct positive to battery

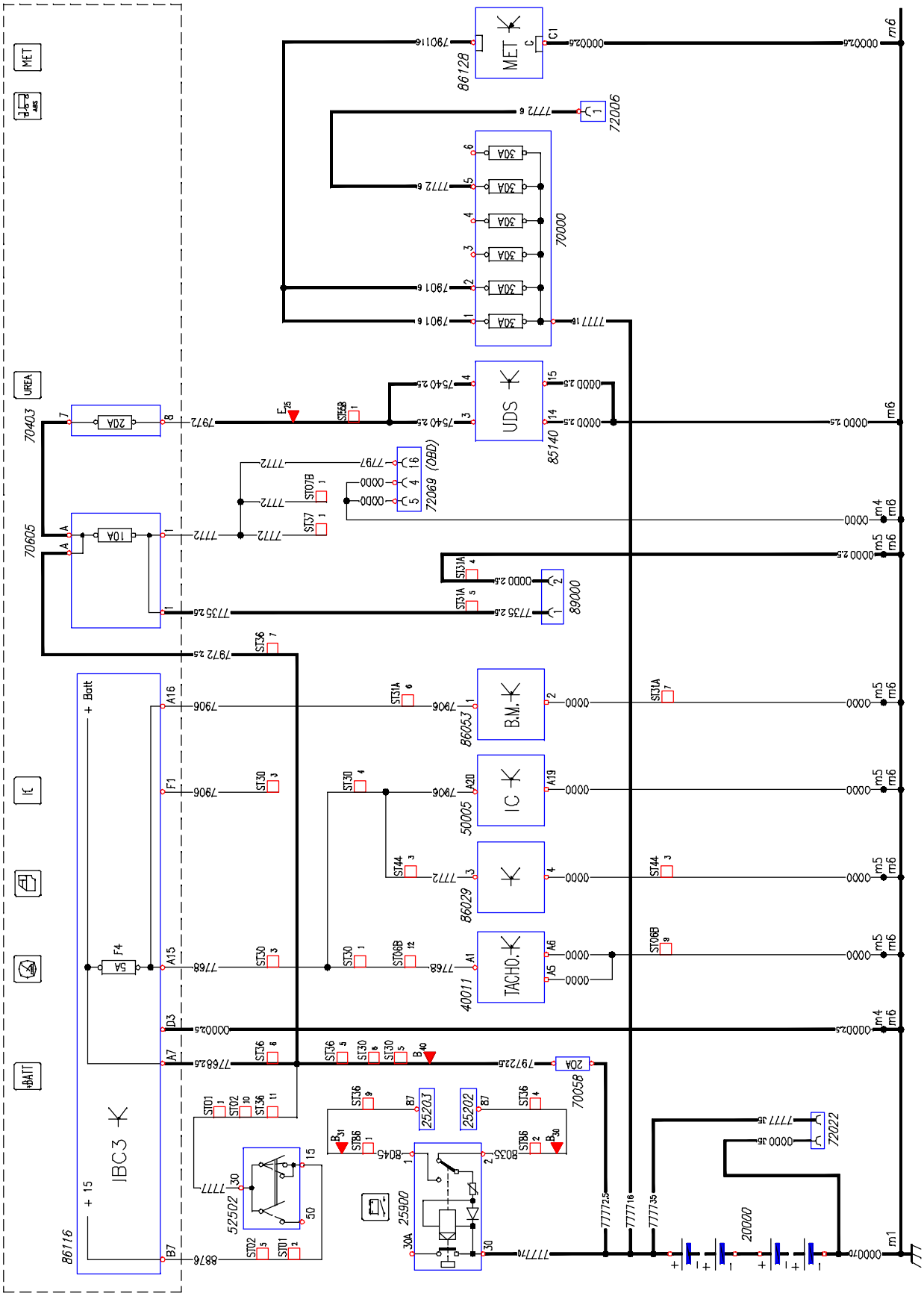

113356

https://truckmanualshub.com/

Aquila Trucks Centres

Chart 2: Positive after TGC (+30)

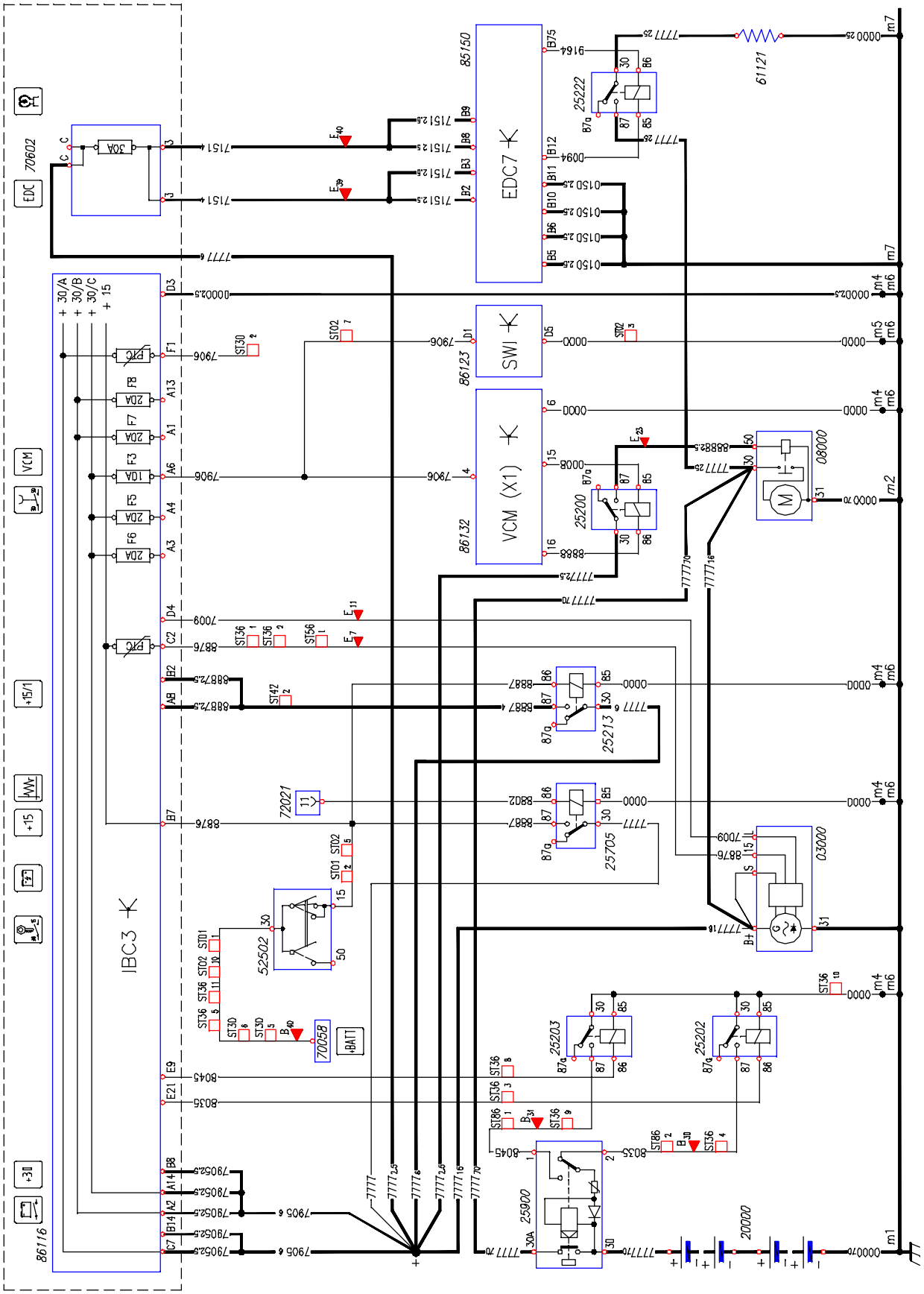

Aquila Trucks Centres

Chart 3: Positive after TGC (+30)

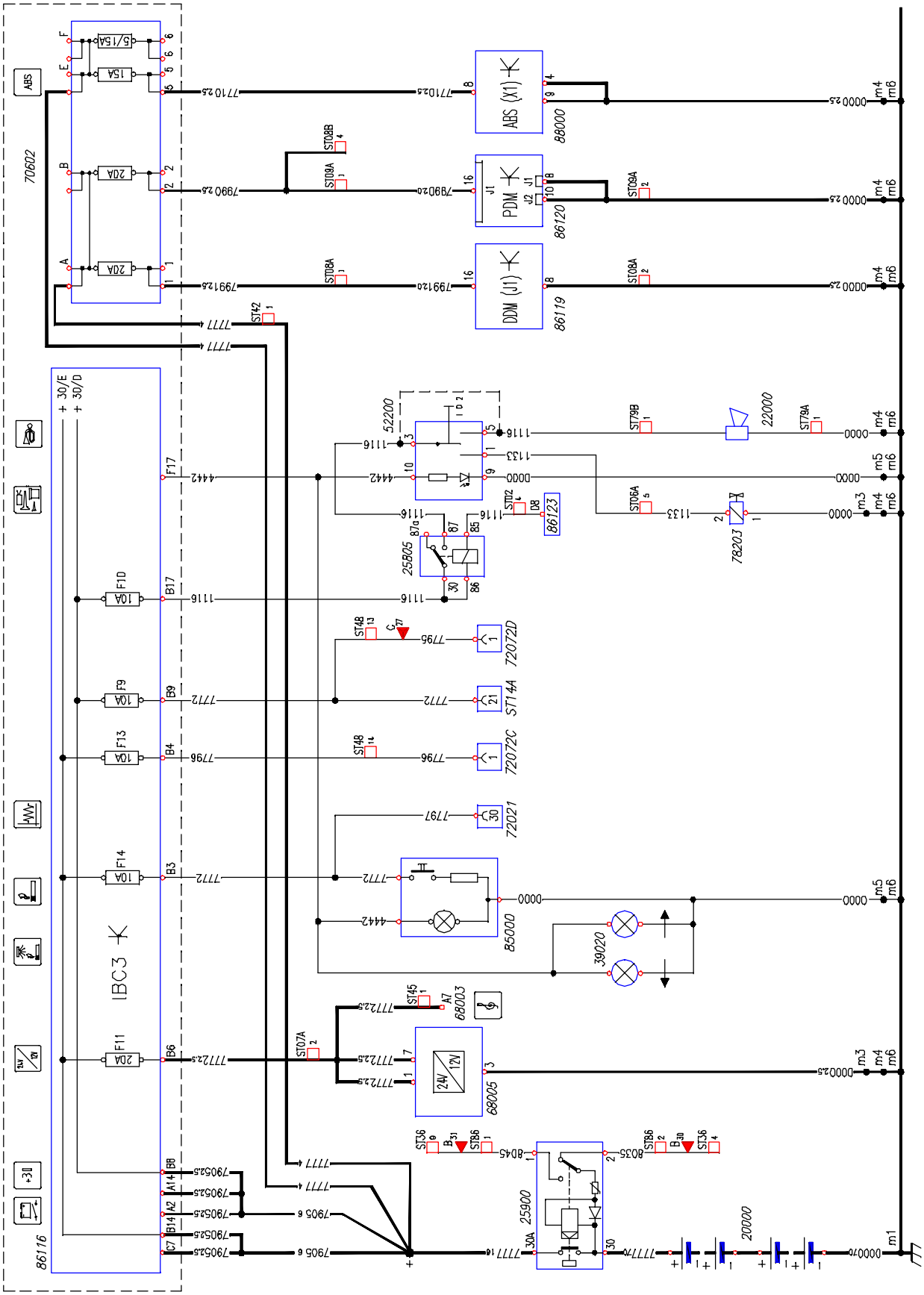

113358

https://truckmanualshub.com/

Aquila Trucks Centres

Chart 4: Positive after TGC (+30)

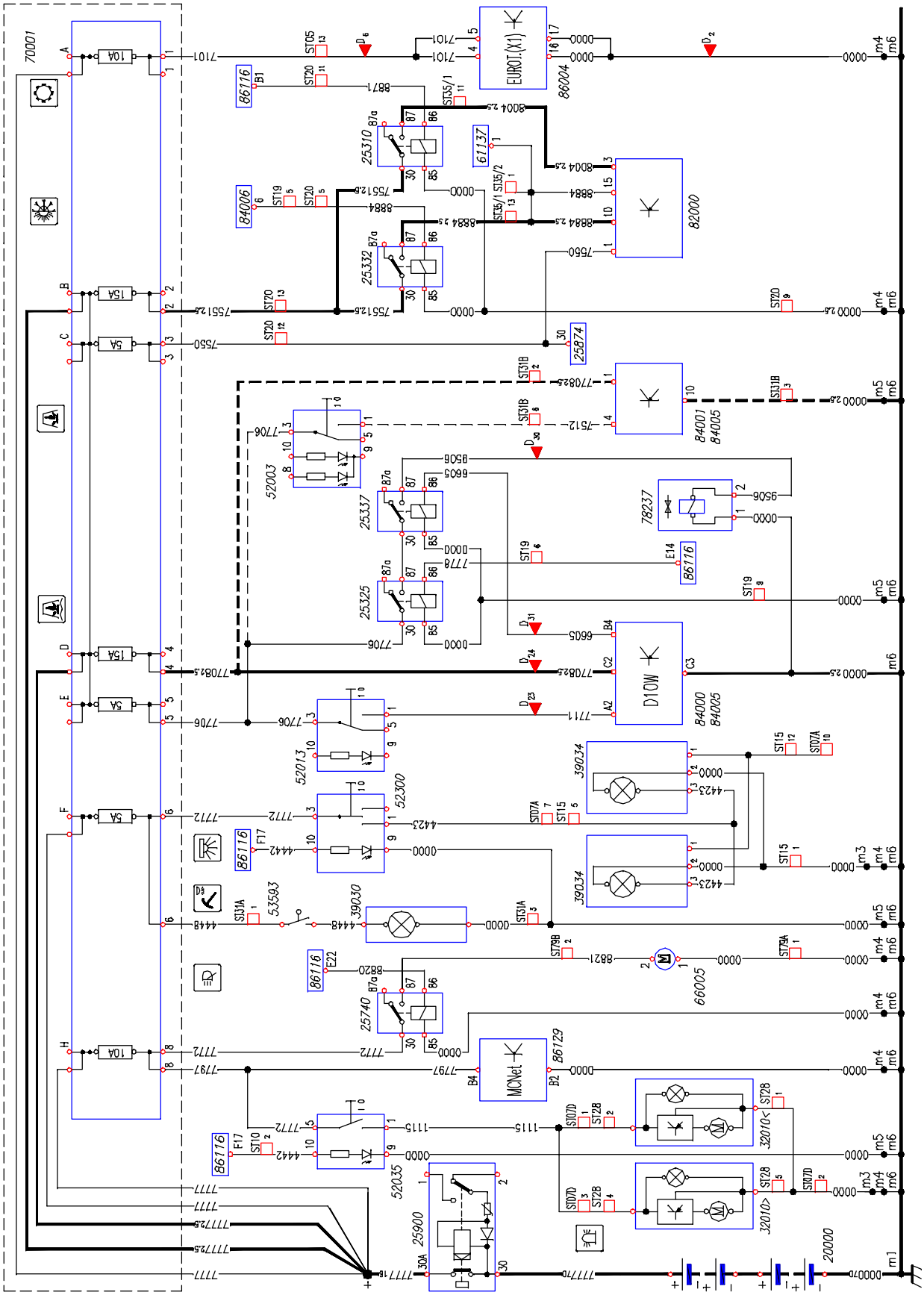

113359

https://truckmanualshub.com/
Aquila Trucks Centres

Chart 5: Positive after TGC (+30)

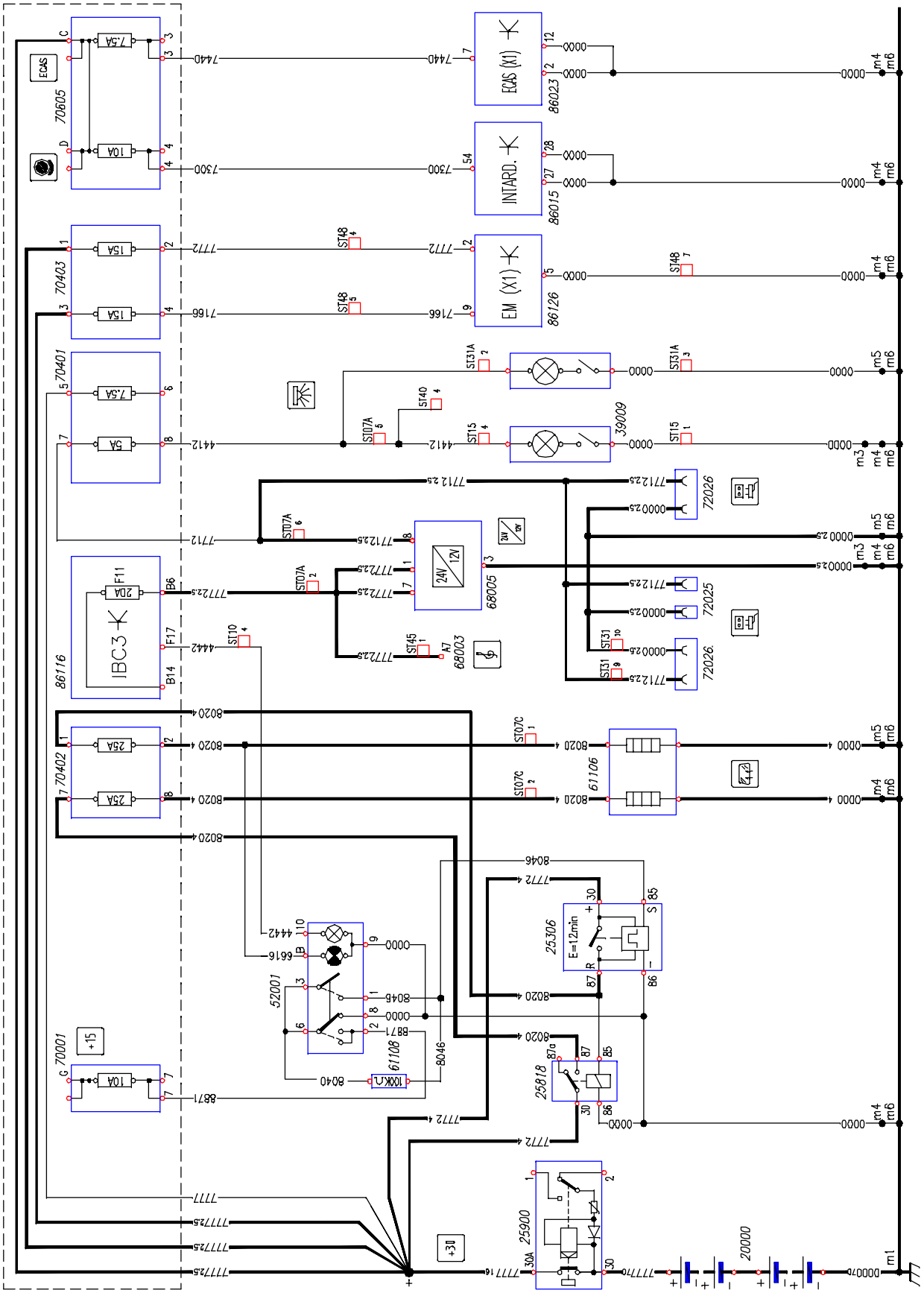

113360

https://truckmanualshub.com/

Aquila Trucks Centres

Chart 6: Power supply (+15)

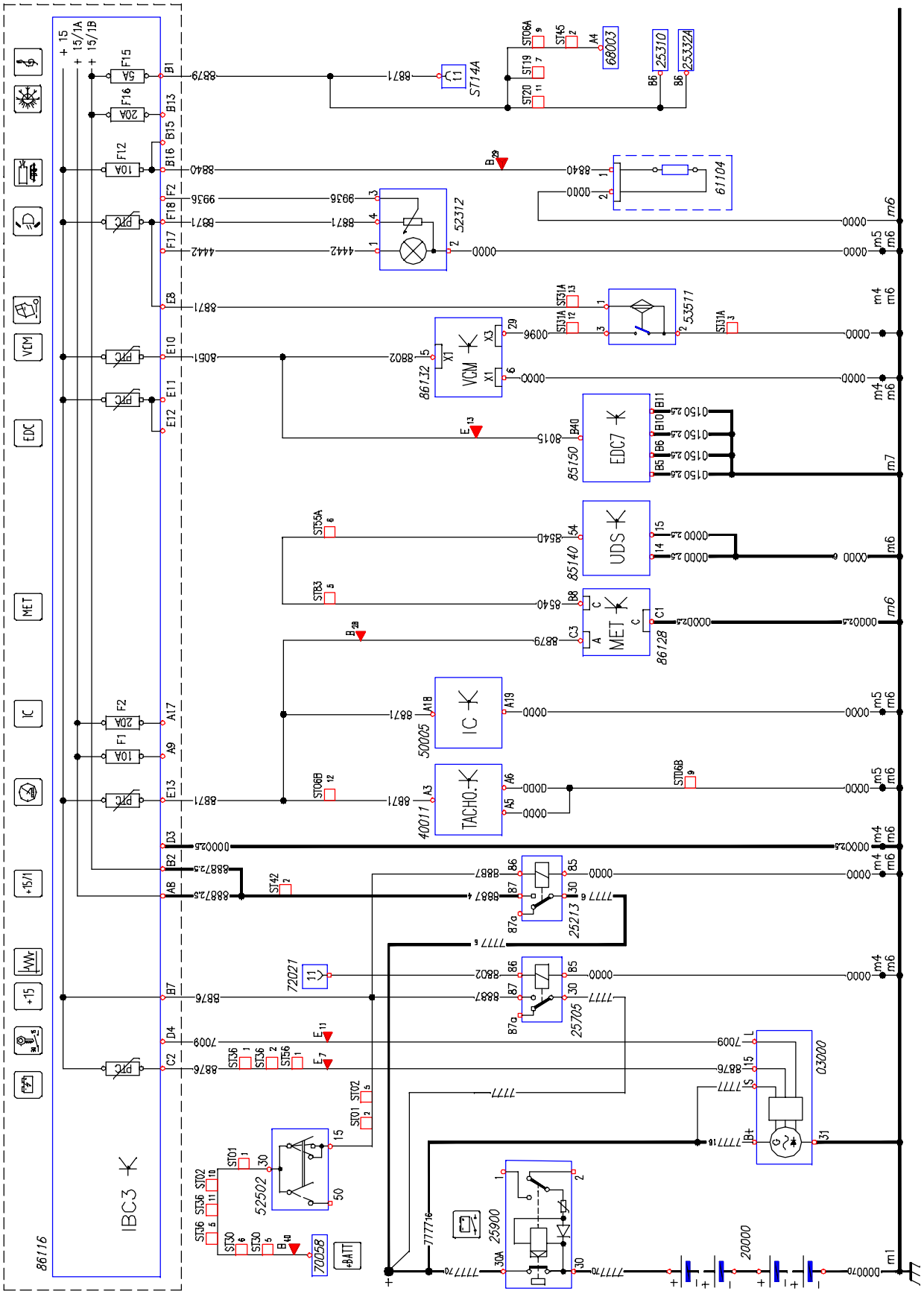

113361

https://truckmanualshub.com/

Aquila Trucks Centres

Chart 7: Power supply (+15)

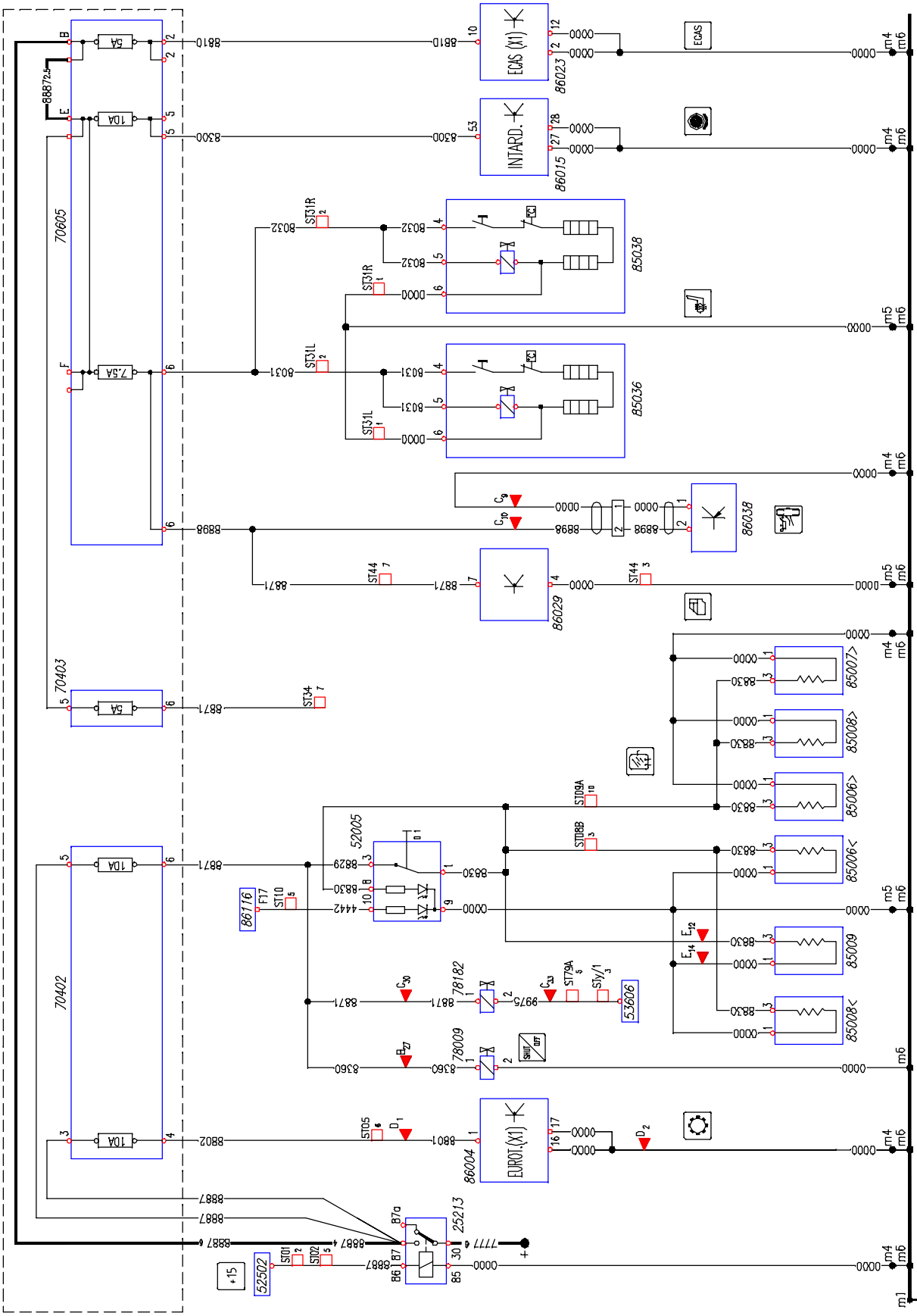

113362

https://truckmanualshub.com/
Aquila Trucks Centres

Chart 8: Power supply (+15)

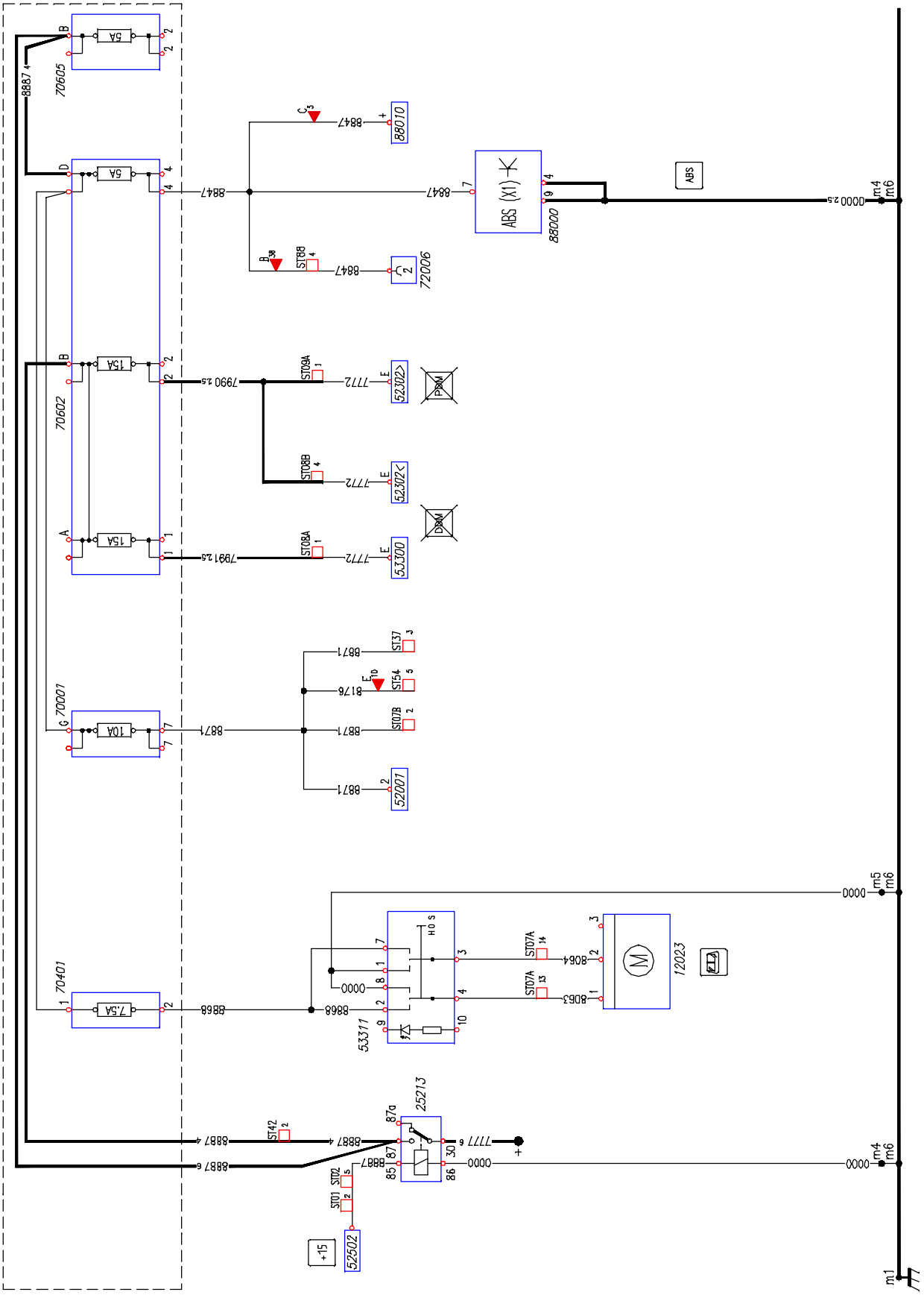

113363

Aquila Trucks Centres

Chart 9: Body controller

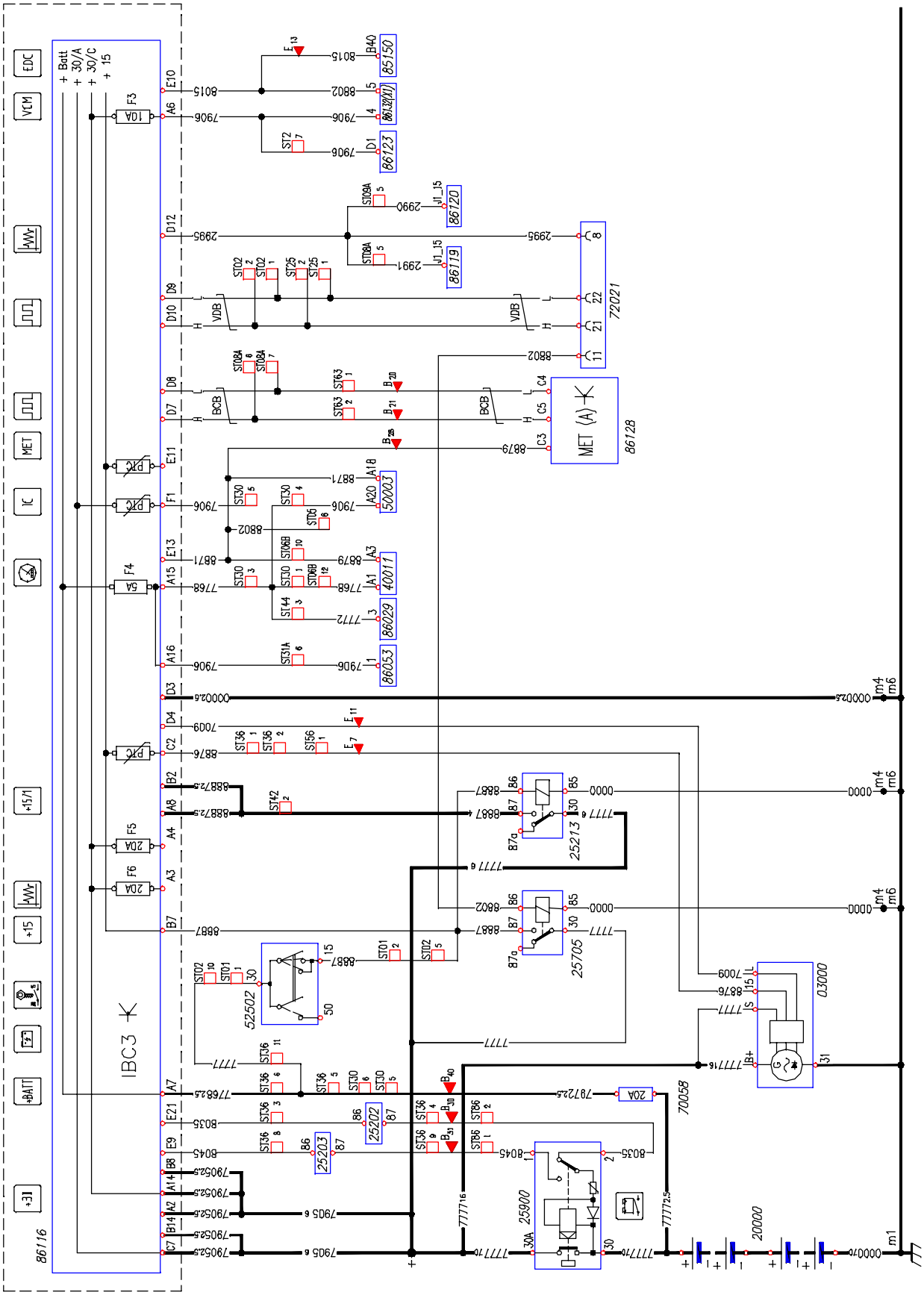

https://truckmanualshub.com/

Aquila Trucks Centres

Chart 10: Body controller

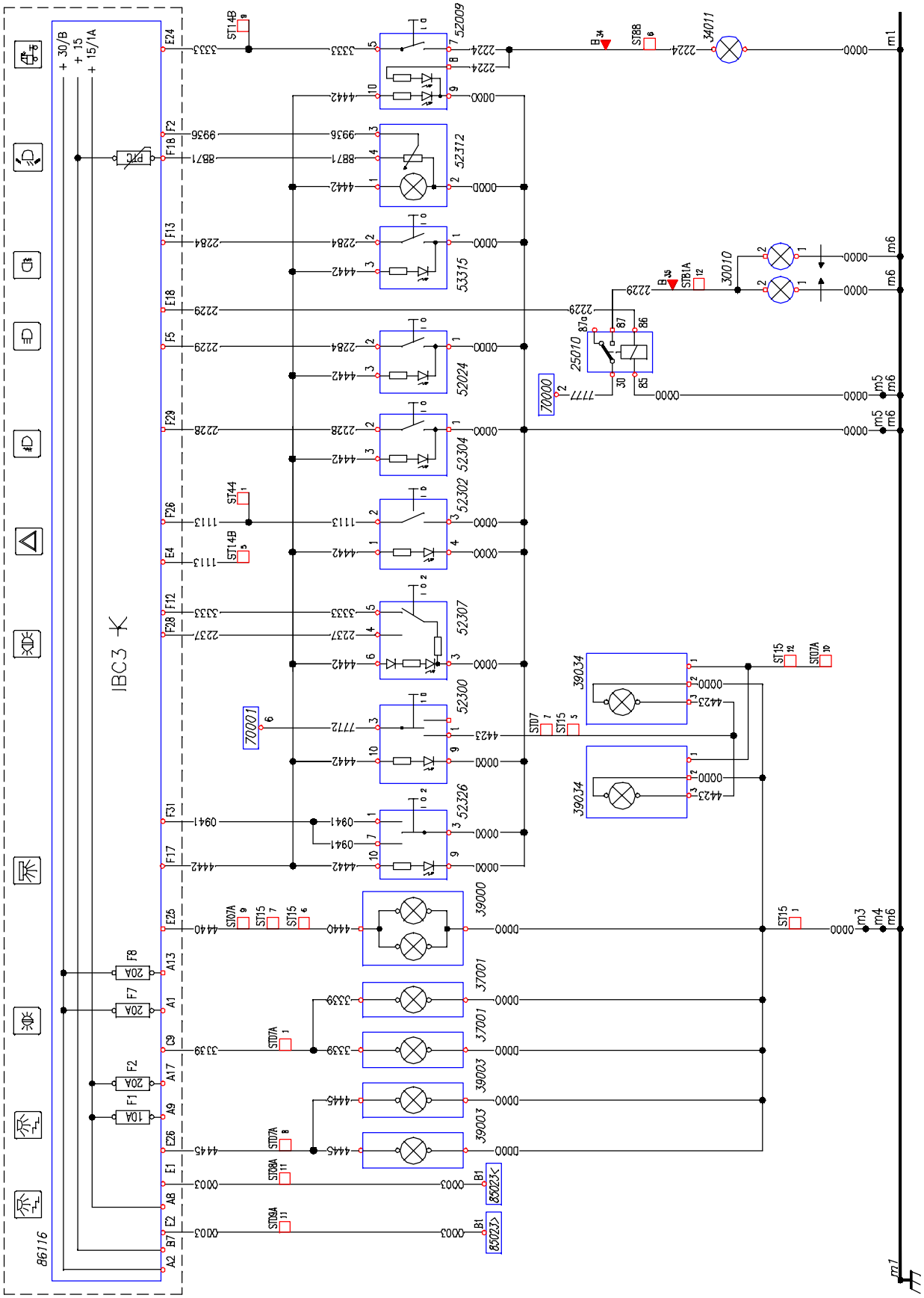

Aquila Trucks Centres

Chart 11: Body controller

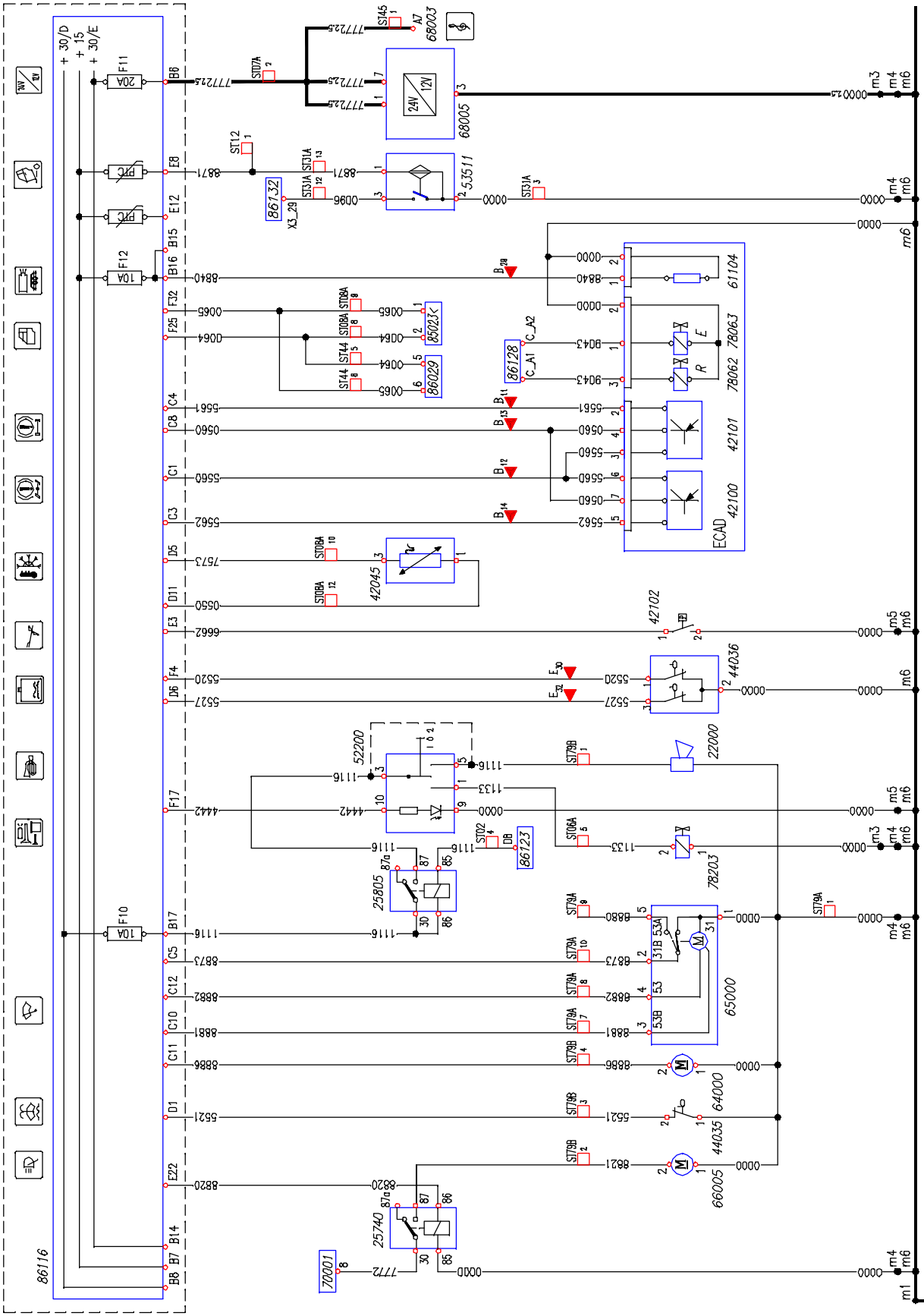

https://truckmanualshub.com/

Aquila Trucks Centres

Chart 12: Body controller

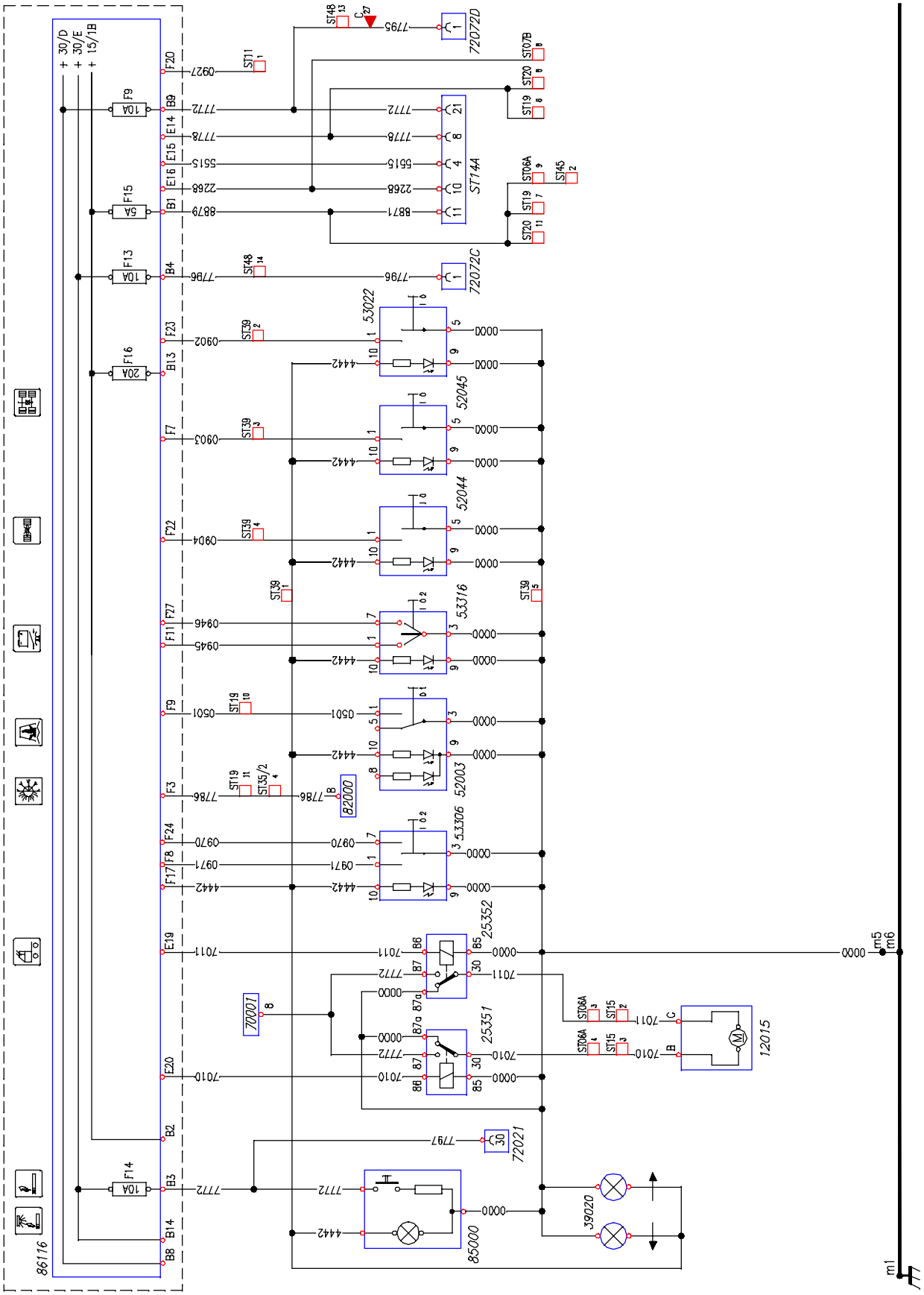

113367

https://truckmanualshub.com/
Aquila Trucks Centres

Chart 13: IC central unit

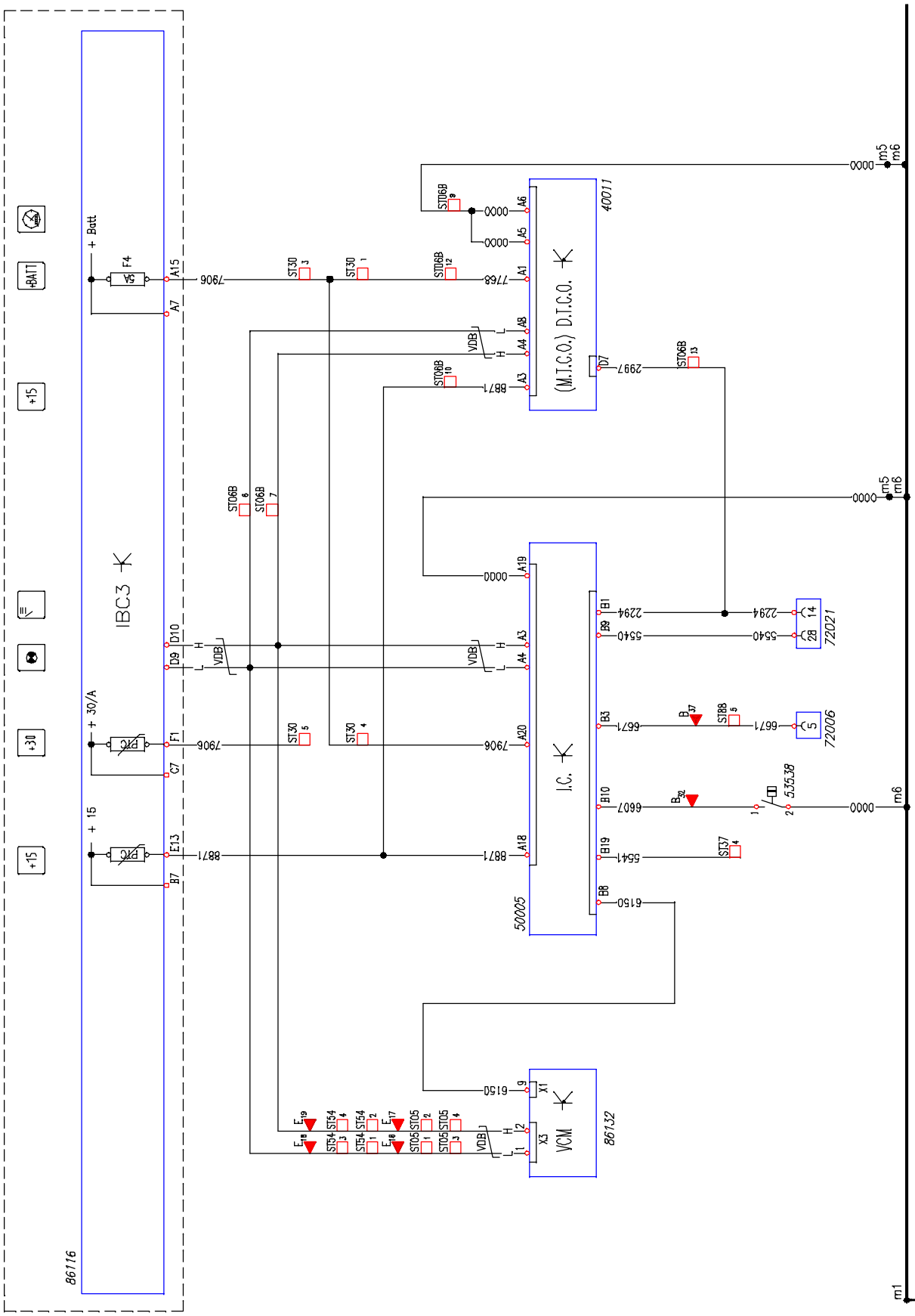

113368

https://truckmanualshub.com/

Aquila Trucks Centres

Chart 14: Tachograph / Diagnosis socket

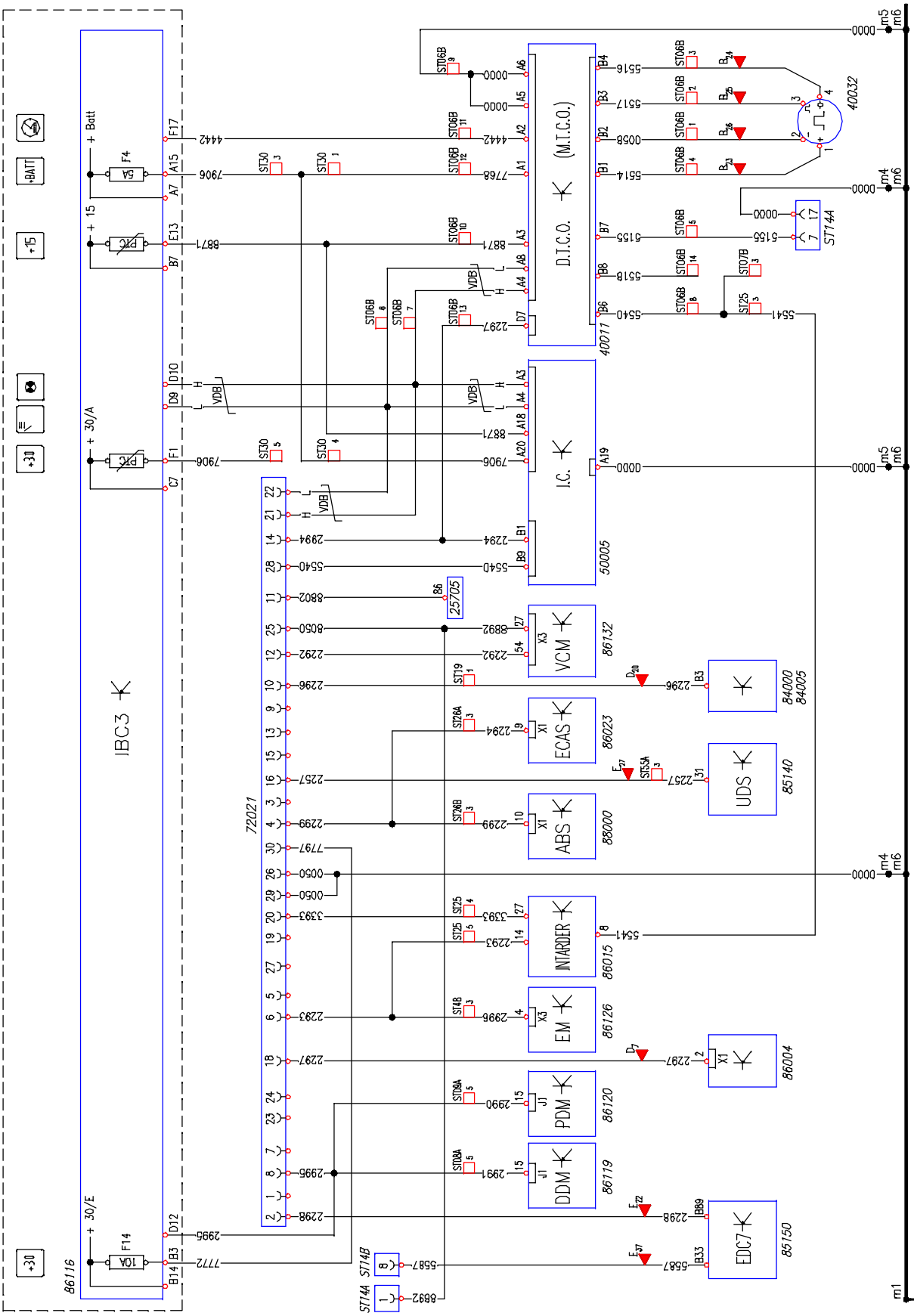

Aquila Trucks Centres

Chart 15: Steering Wheel Interface (SWI)

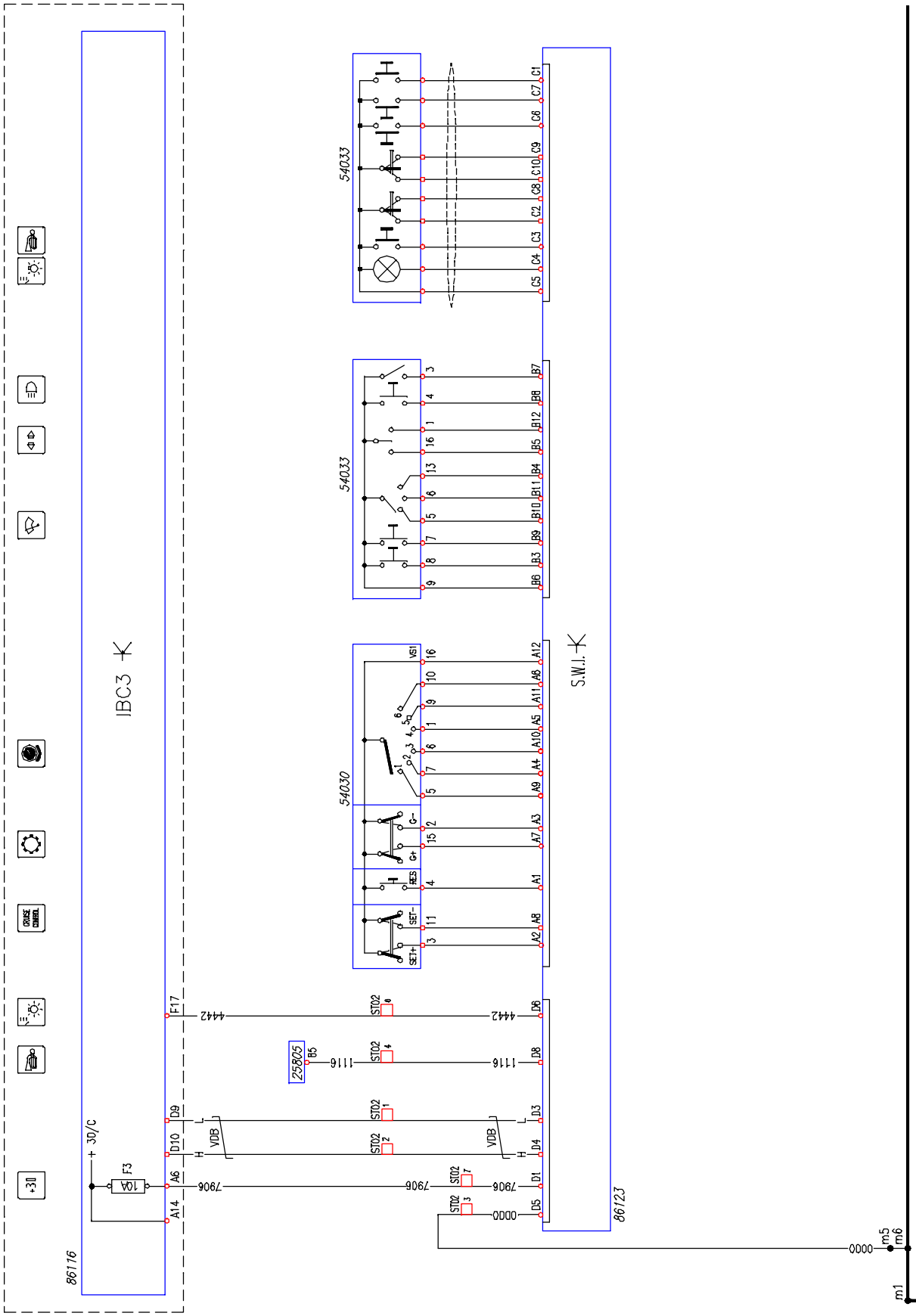

https://truckmanualshub.com/

Aquila Trucks Centres

Chart 16: DDM-BM control unit

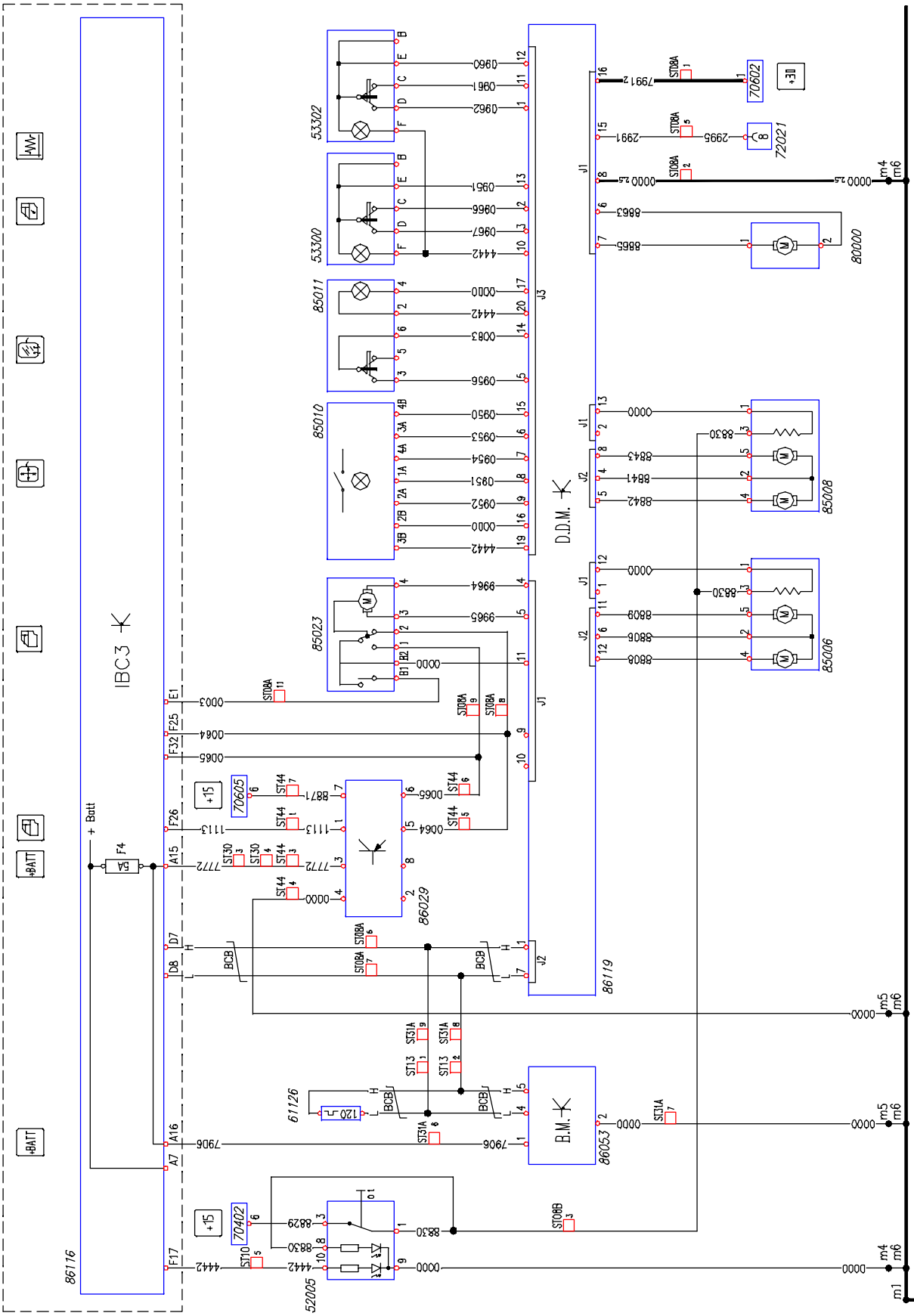

113371

https://truckmanualshub.com/
Aquila Trucks Centres

Chart 17: Passenger Door Module (PDM)

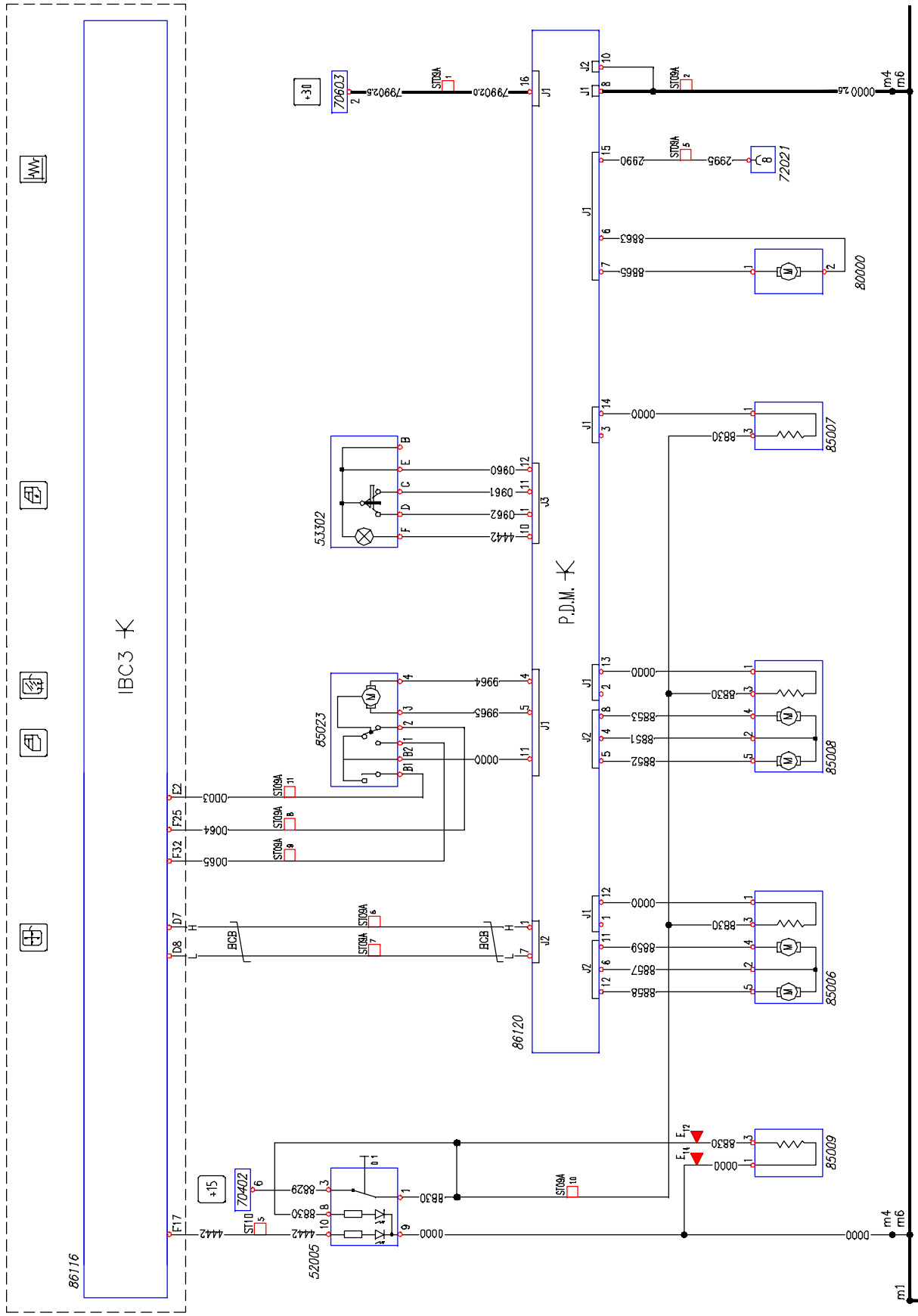

113372

https://truckmanualshub.com/

Aquila Trucks Centres

Chart 18: Thermal mirrors / Centralised locking / Window winders (without DDM-PDM)

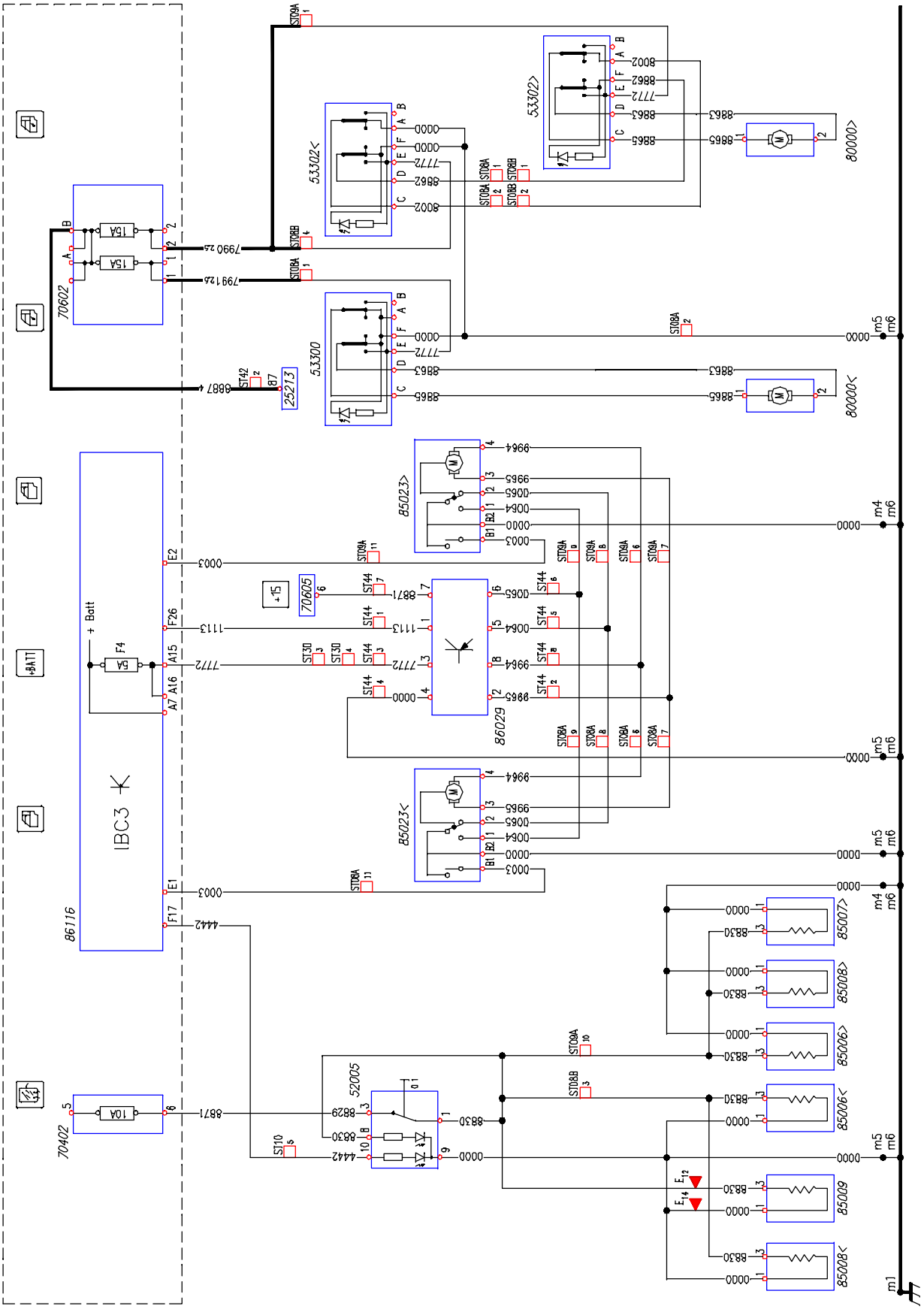

113373

https://truckmanualshub.com/

Aquila Trucks Centres

Chart 19: Electronic Control Unit VCM

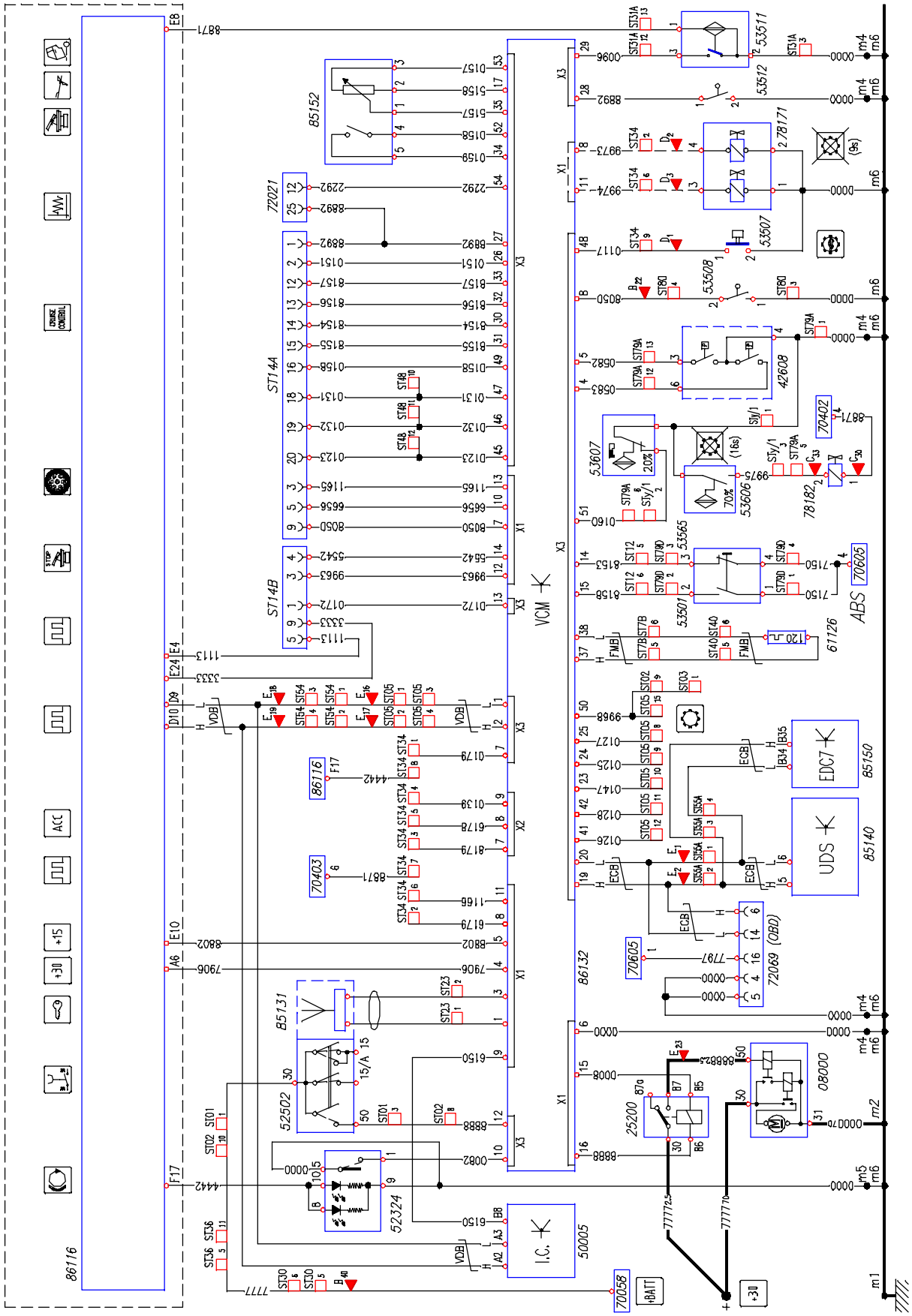

113374

https://truckmanualshub.com/

Aquila Trucks Centres

Chart 20: EDC (Connector B)

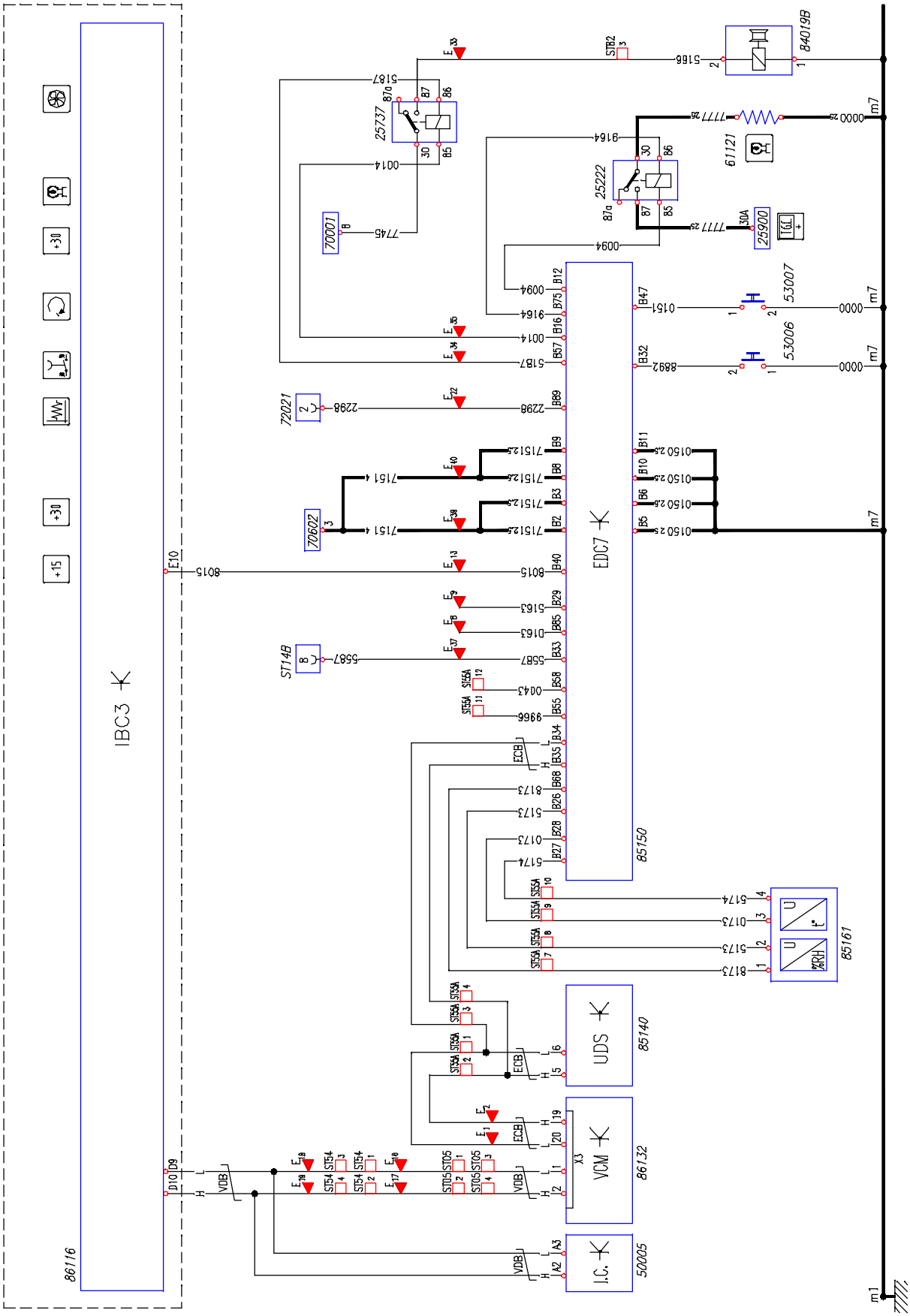

https://truckmanualshub.com/
Aquila Trucks Centres

Chart 21: EDC (Connector A/C - F2B)

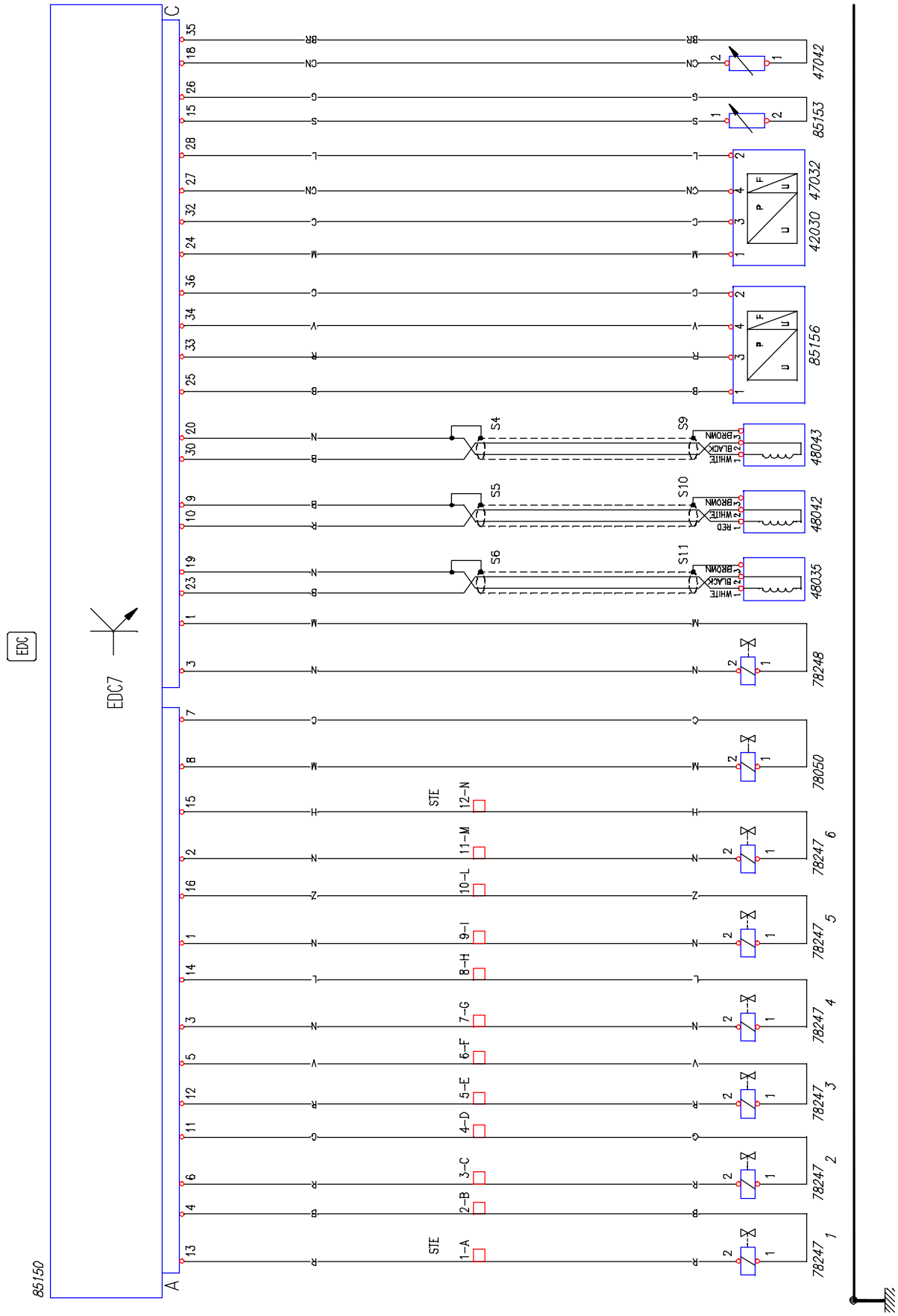

113376

https://truckmanualshub.com/

Aquila Trucks Centres

Chart 22: EDC (Connector A/C - F3B)

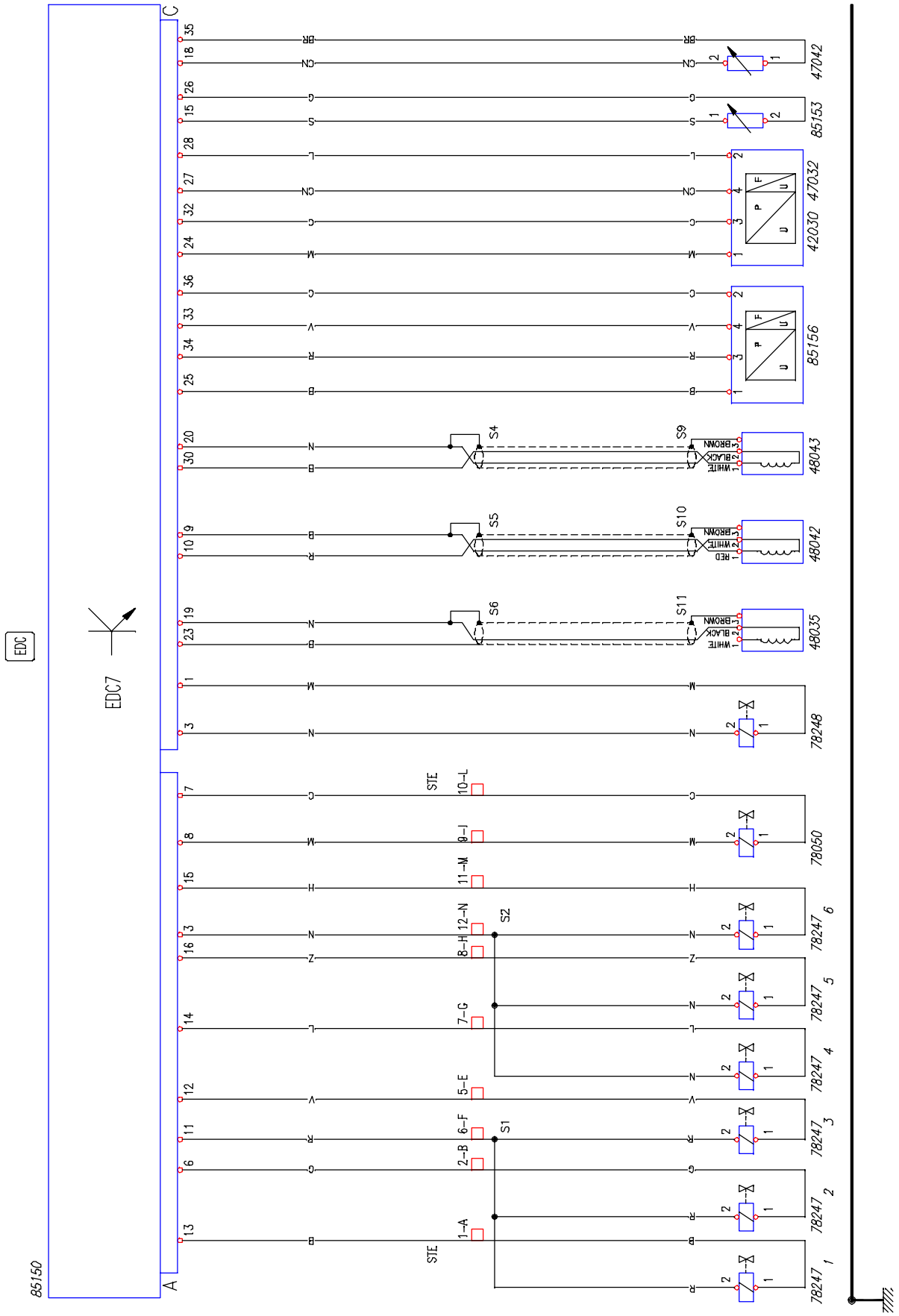

113377

https://truckmanualshub.com/
Aquila Trucks Centres

Chart 23: Central unit UDS (DENOX 2)

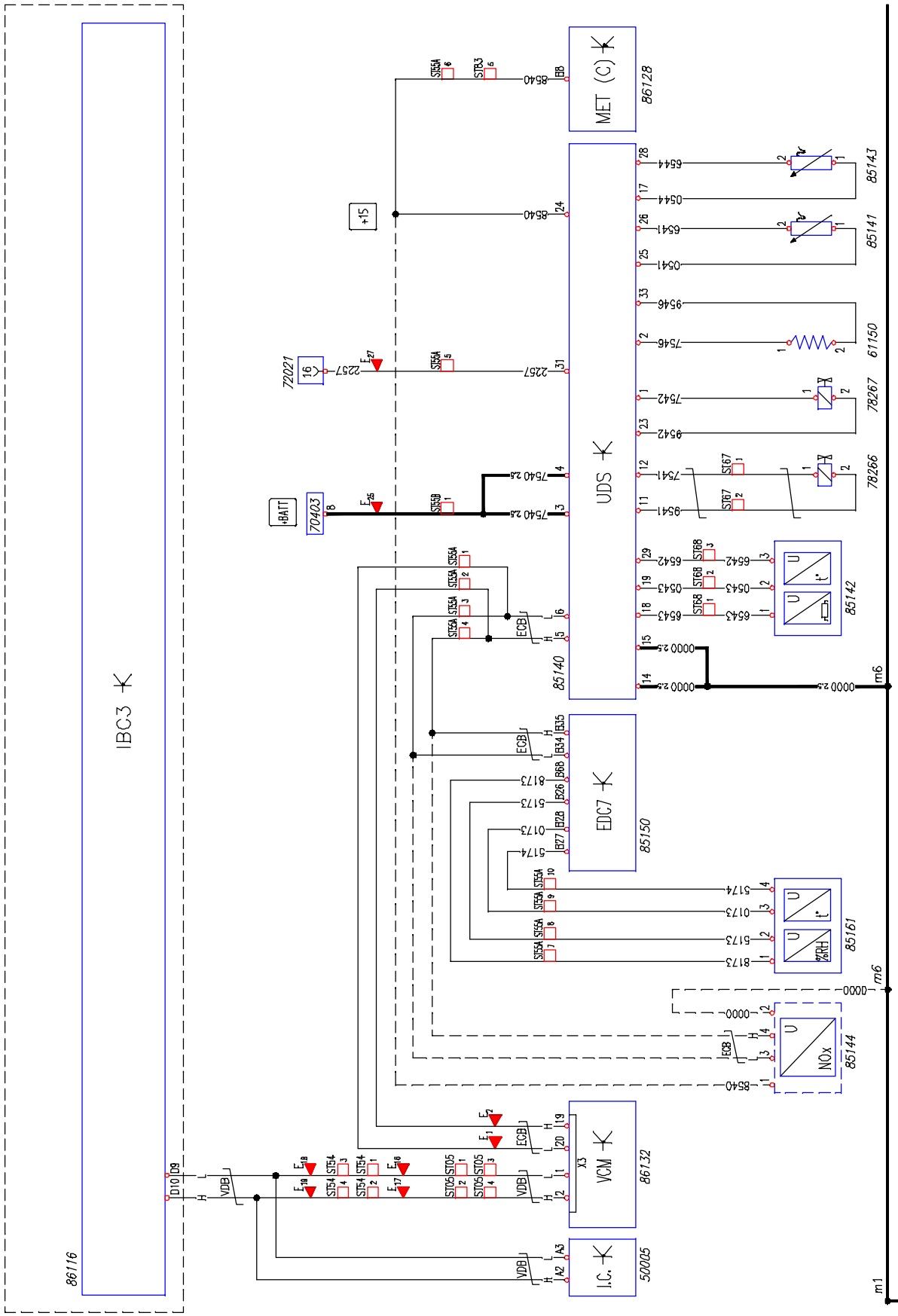

113378

https://truckmanualshub.com/

Aquila Trucks Centres

Chart 24: Control unit MET

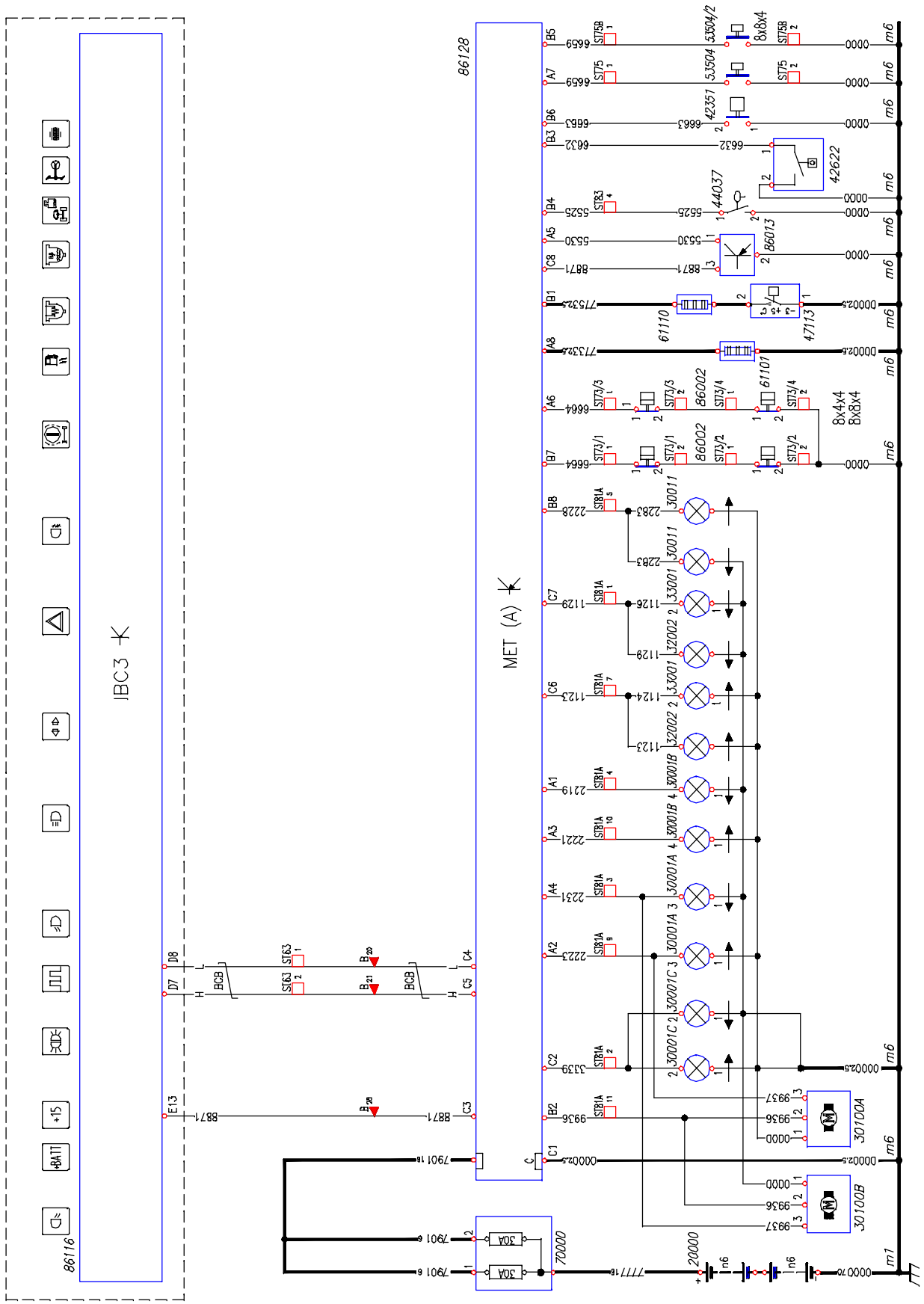

113379

Aquila Trucks Centres

Chart 25: Control unit MET

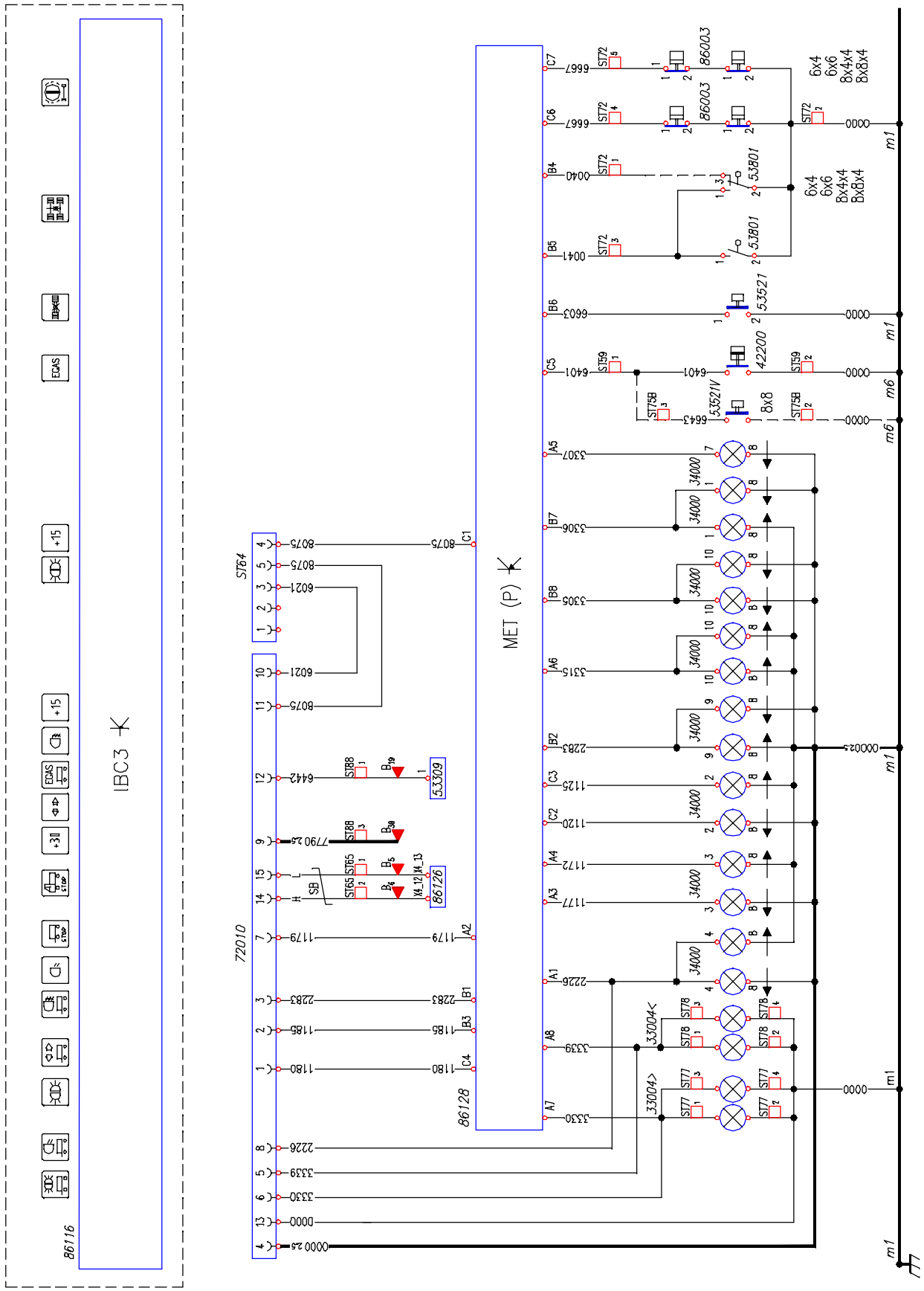

113380

https://truckmanualshub.com/
Aquila Trucks Centres

Chart 26: Control unit MET

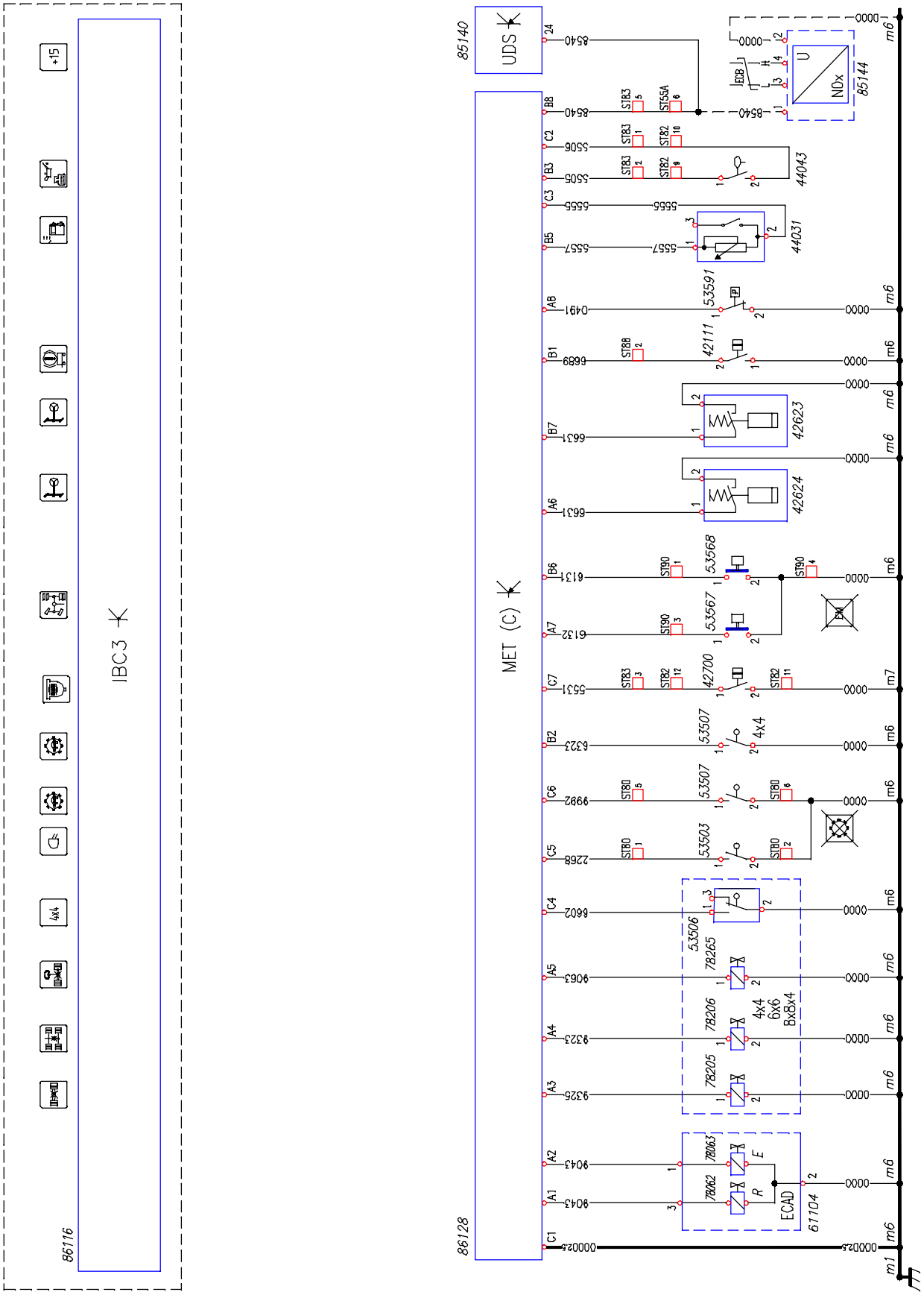

113381

https://truckmanualshub.com/
Aquila Trucks Centres

Chart 27: Line CAN-IDB / FMB / Control unit / Telematics / Navigator

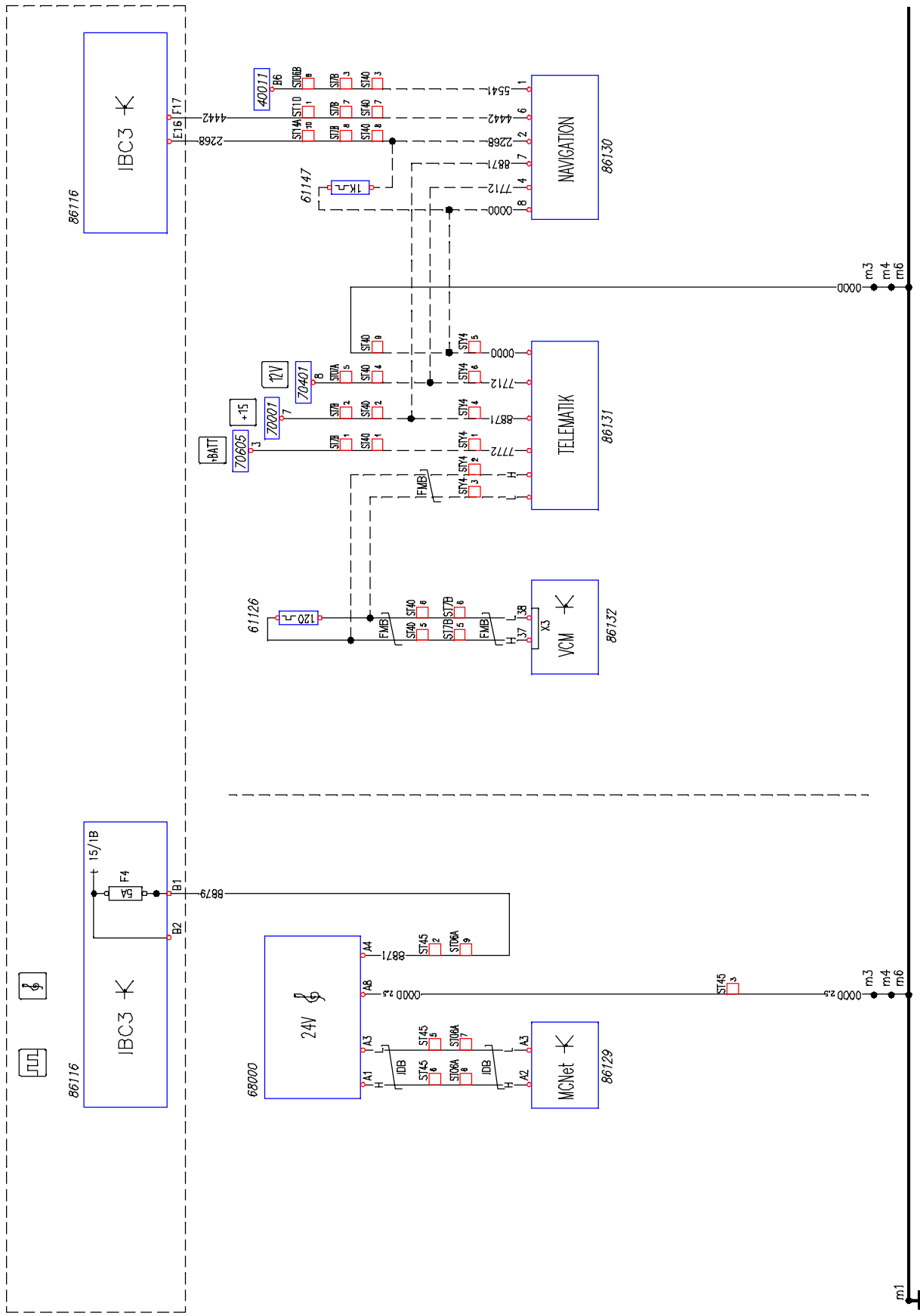

https://truckmanualshub.com/

Aquila Trucks Centres

Chart 28: Can line "BCB"

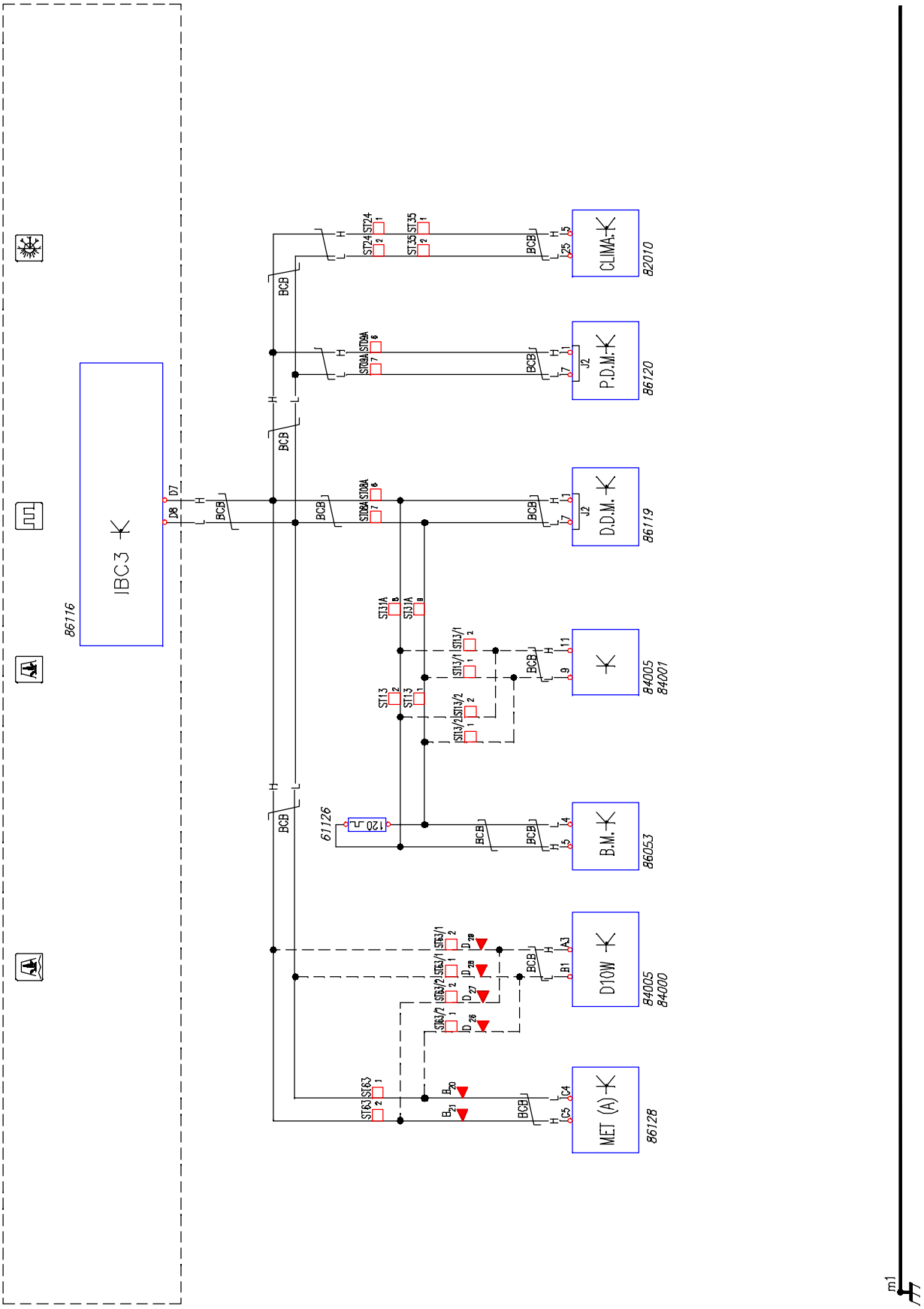

113383

https://truckmanualshub.com/

Aquila Trucks Centres

Chart 29: Can line "VDB"

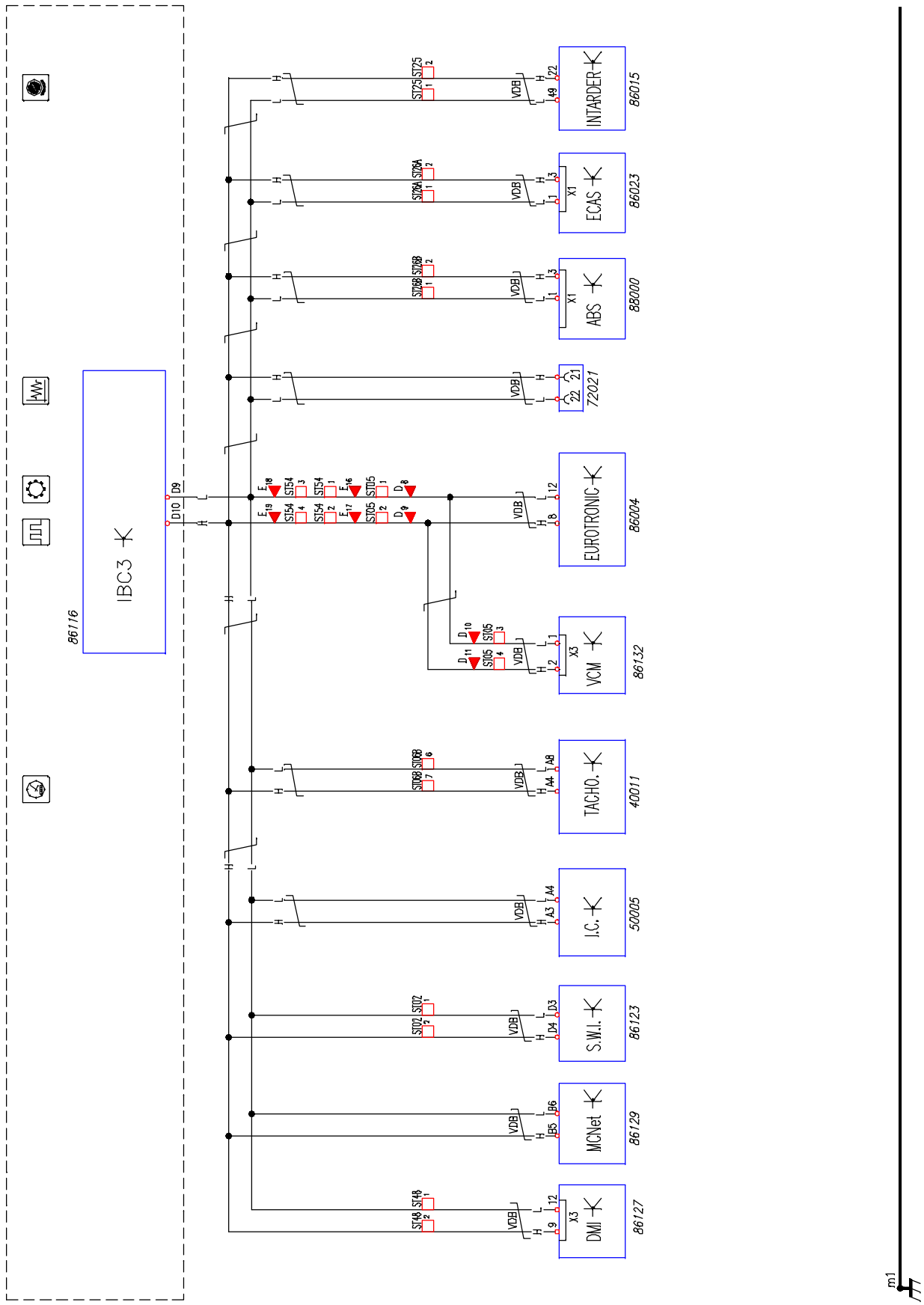

https://truckmanualshub.com/
Aquila Trucks Centres

Chart 30: Can line "ECB"

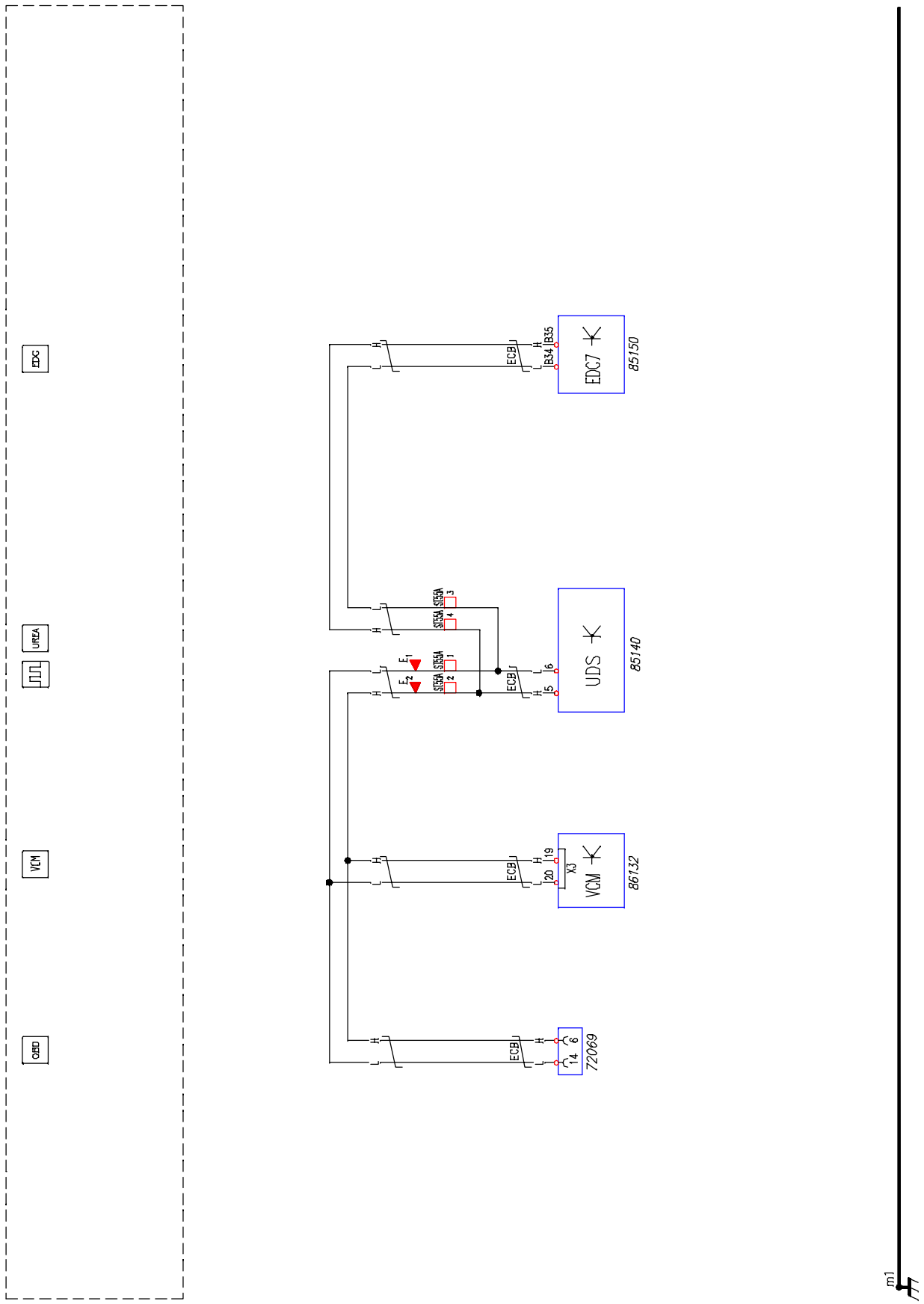

113385

https://truckmanualshub.com/
Aquila Trucks Centres

Chart 31: ECAS 4x2 P (TRACTOR)

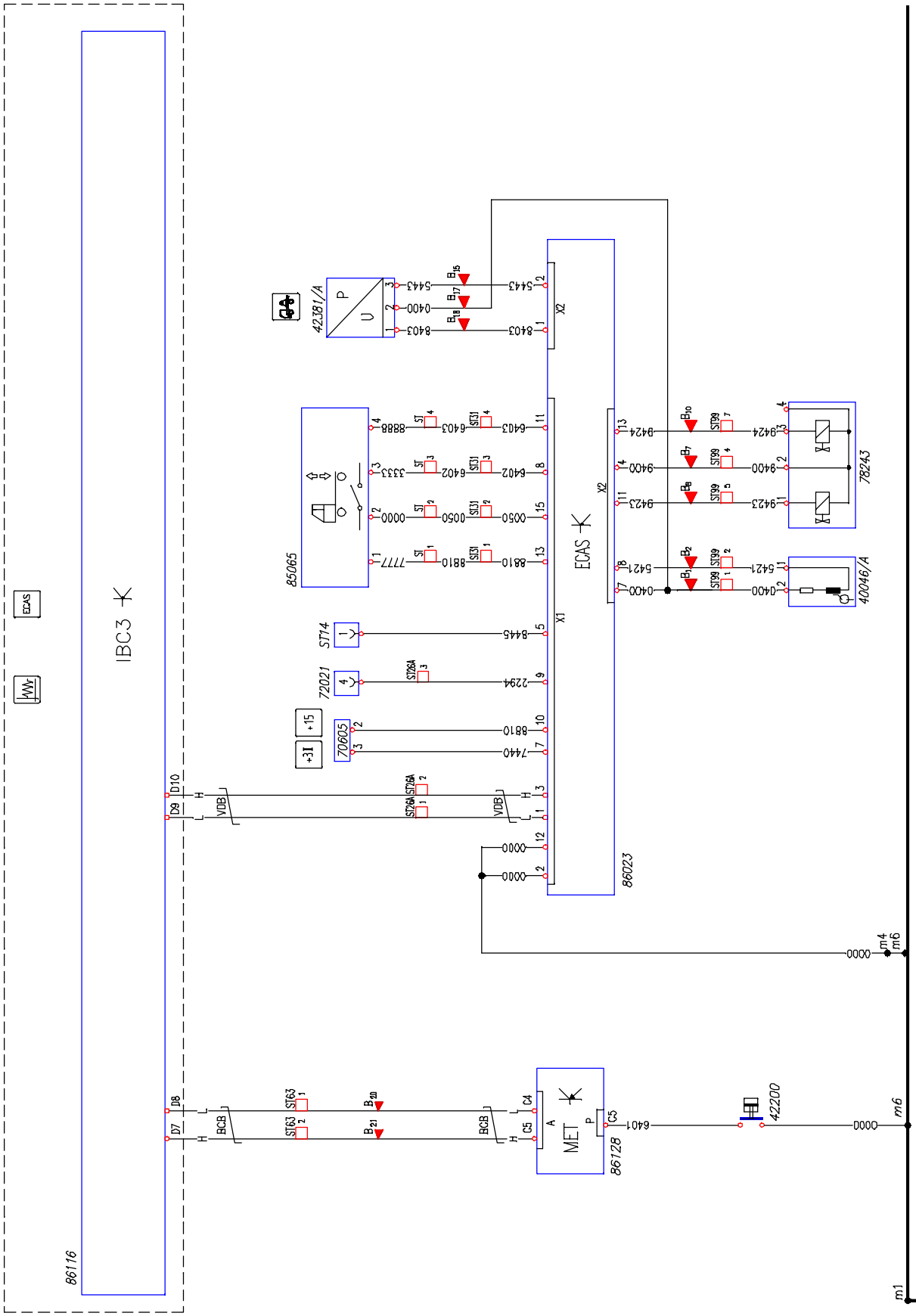

113386

https://truckmanualshub.com/

Aquila Trucks Centres

Chart 32: ECAS 4X2P/4X4P/6X4P/8X4X4P (LORRY)

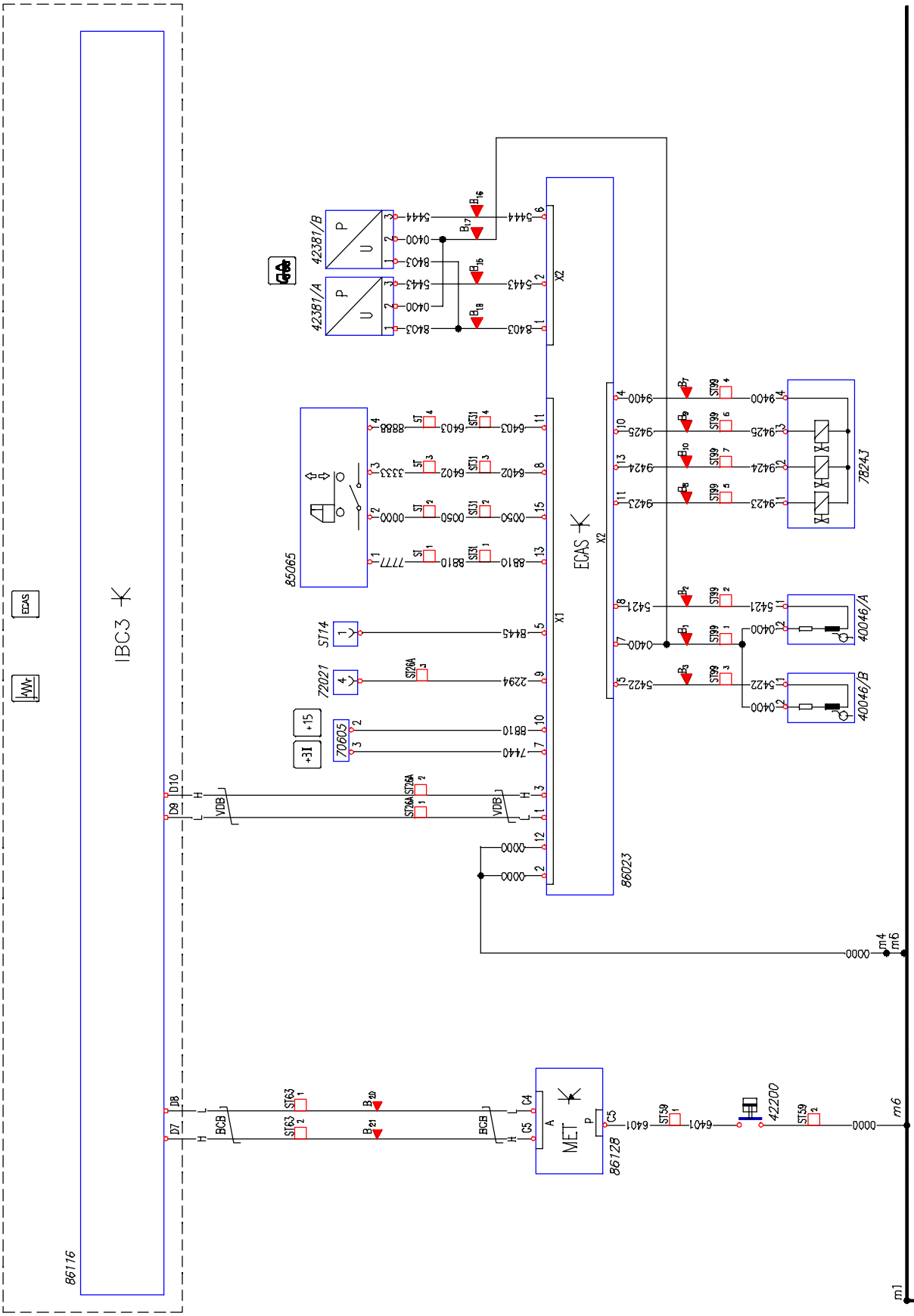

113387

https://truckmanualshub.com/

Aquila Trucks Centres

Chart 33: ABS

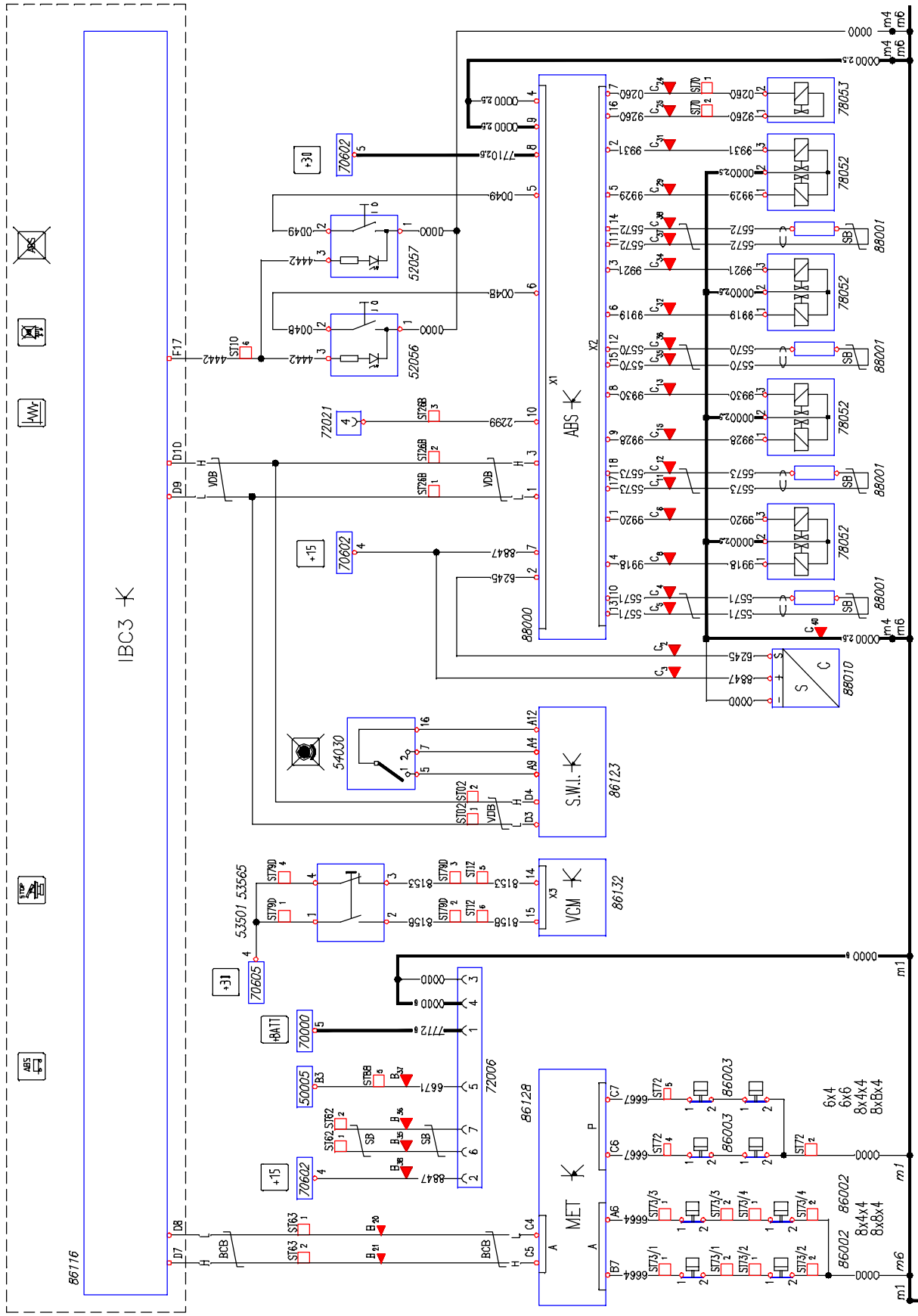

113388

https://truckmanualshub.com/
Aquila Trucks Centres

Chart 34: Ventilation

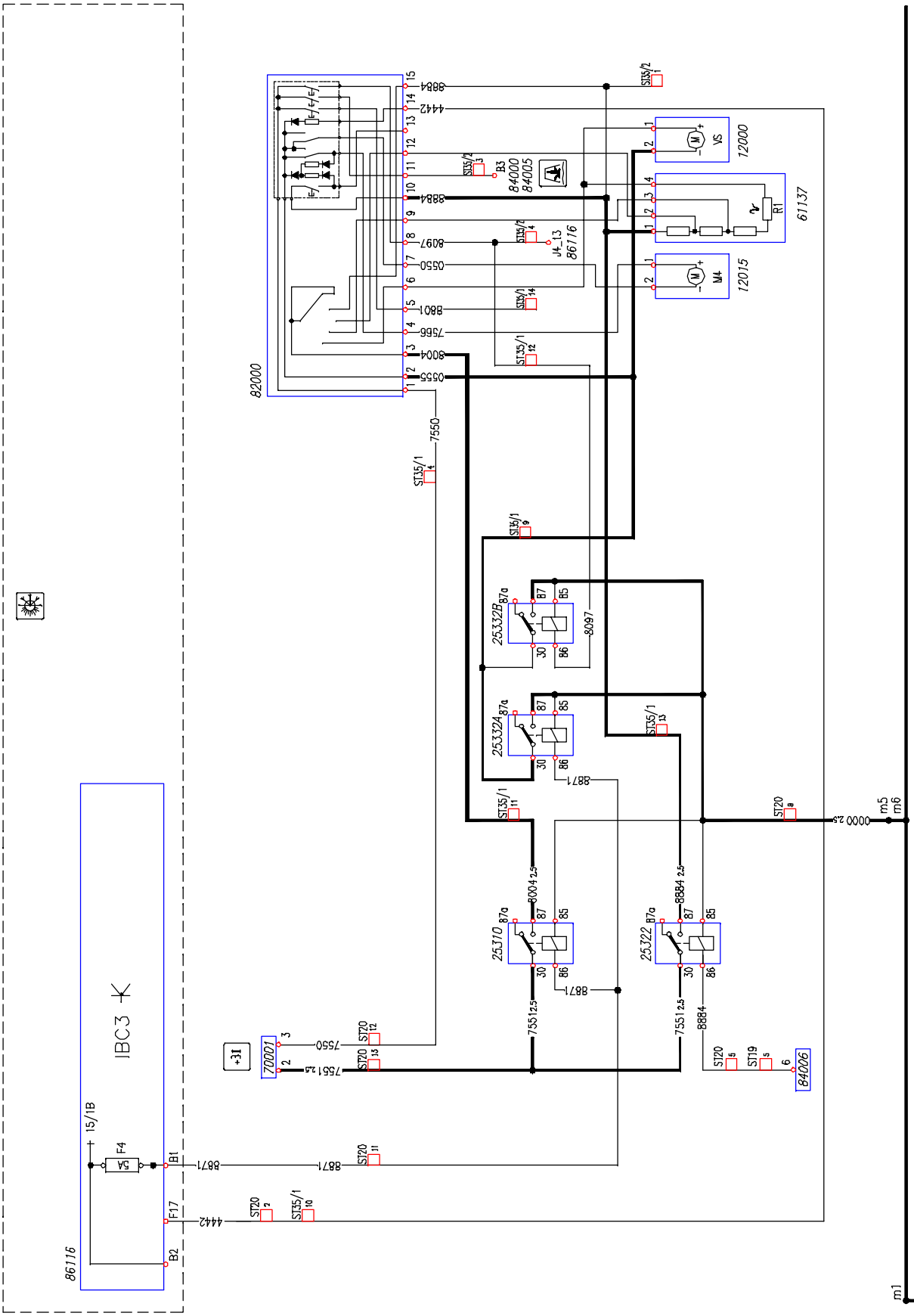

113389

https://truckmanualshub.com/

Aquila Trucks Centres

Chart 35: Manually controlled climate control system

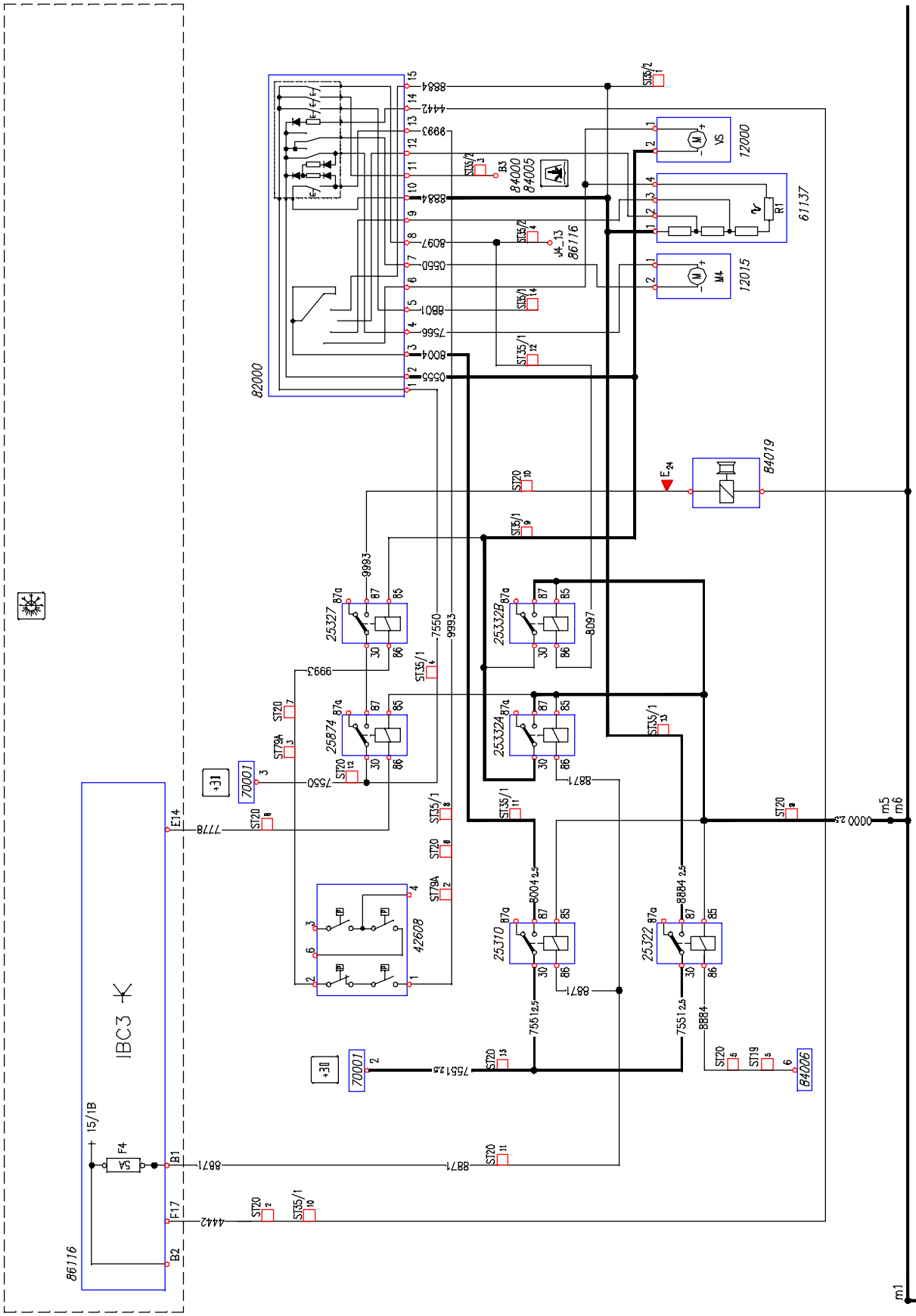

113390

https://truckmanualshub.com/

Aquila Trucks Centres

Chart 36: Manually controlled additional water heater

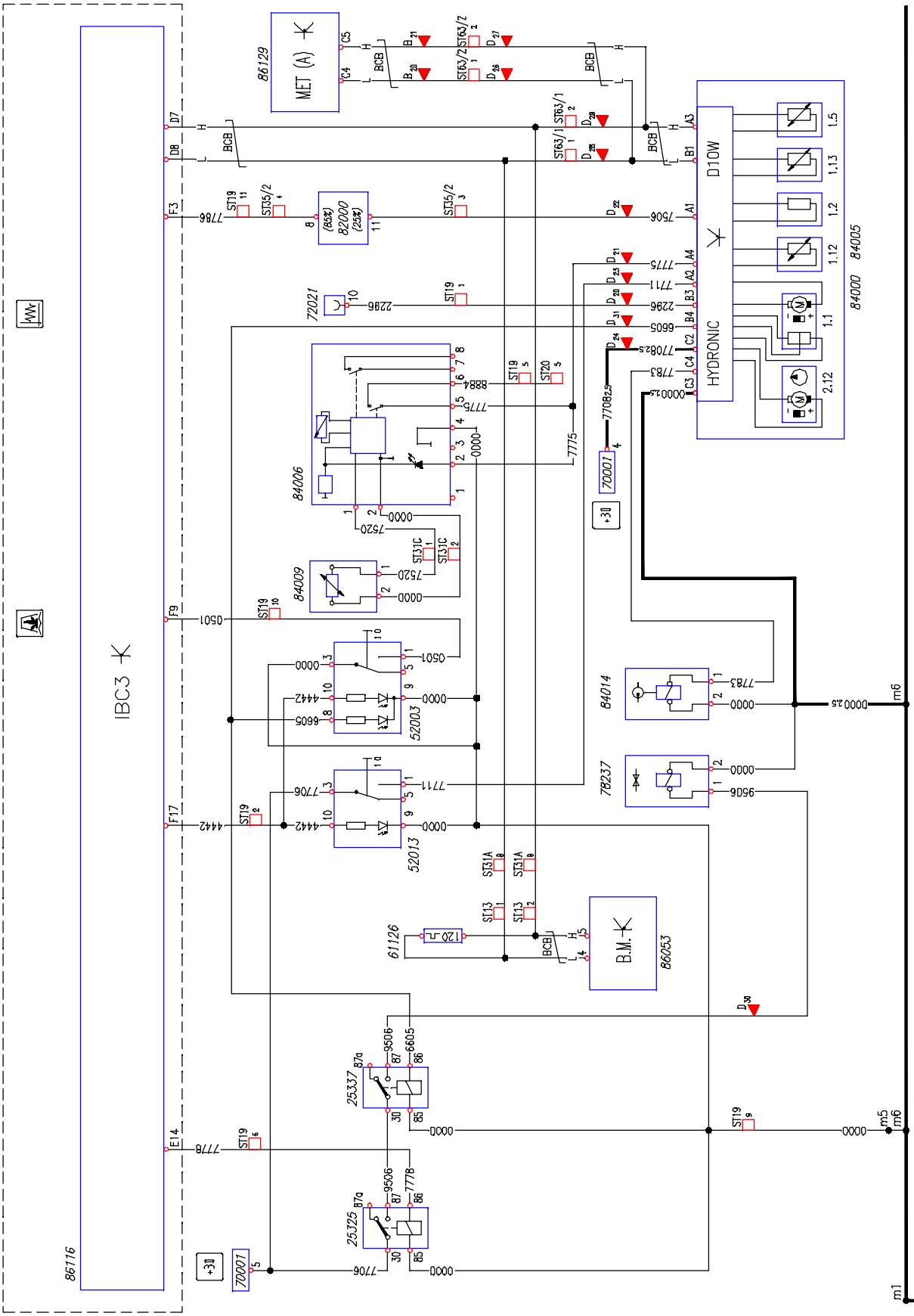

113391

https://truckmanualshub.com/
Aquila Trucks Centres

Chart 37: Manually controlled additional air heater

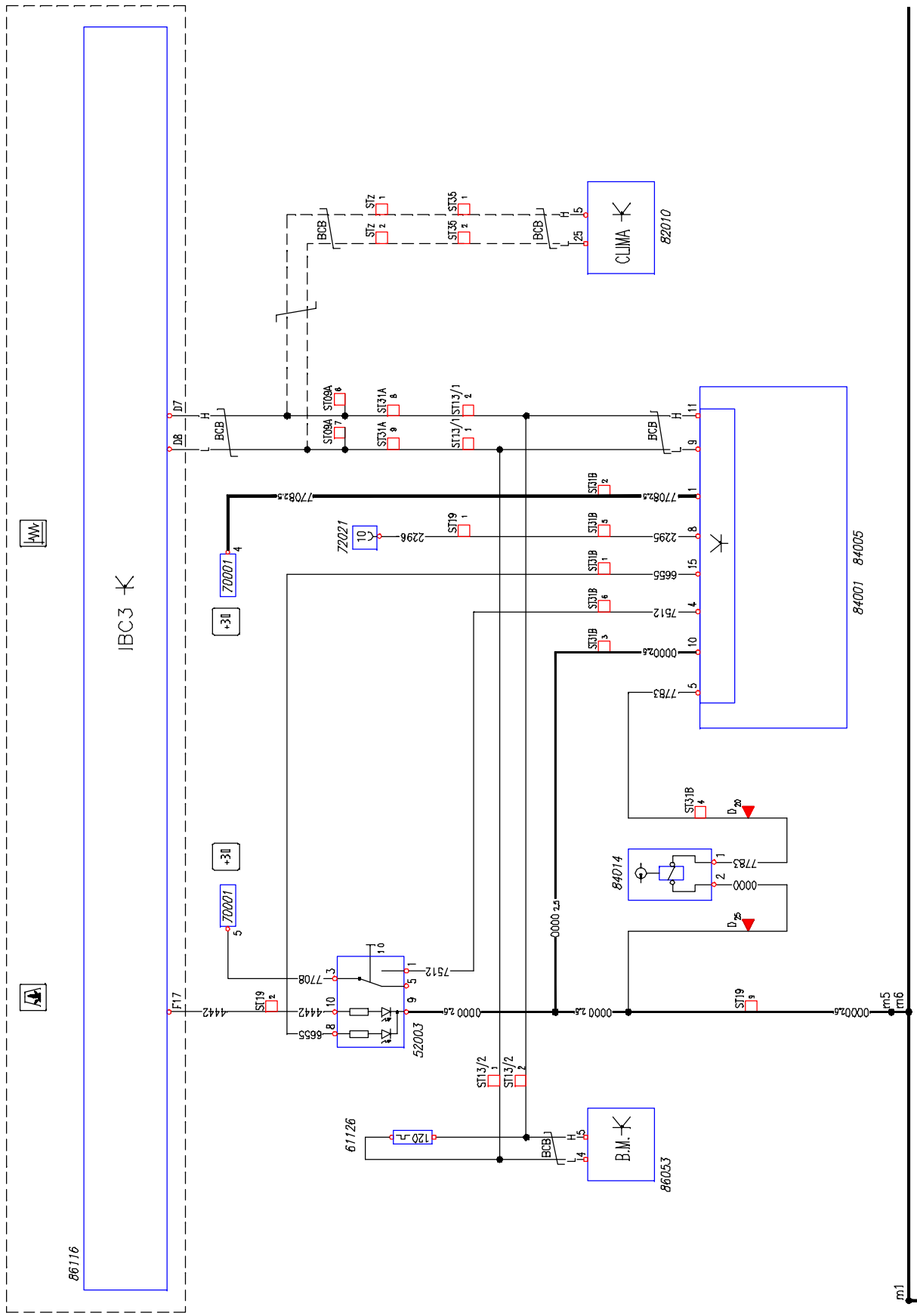

113392

https://truckmanualshub.com/
Aquila Trucks Centres

Chart 38: EuroTronic II

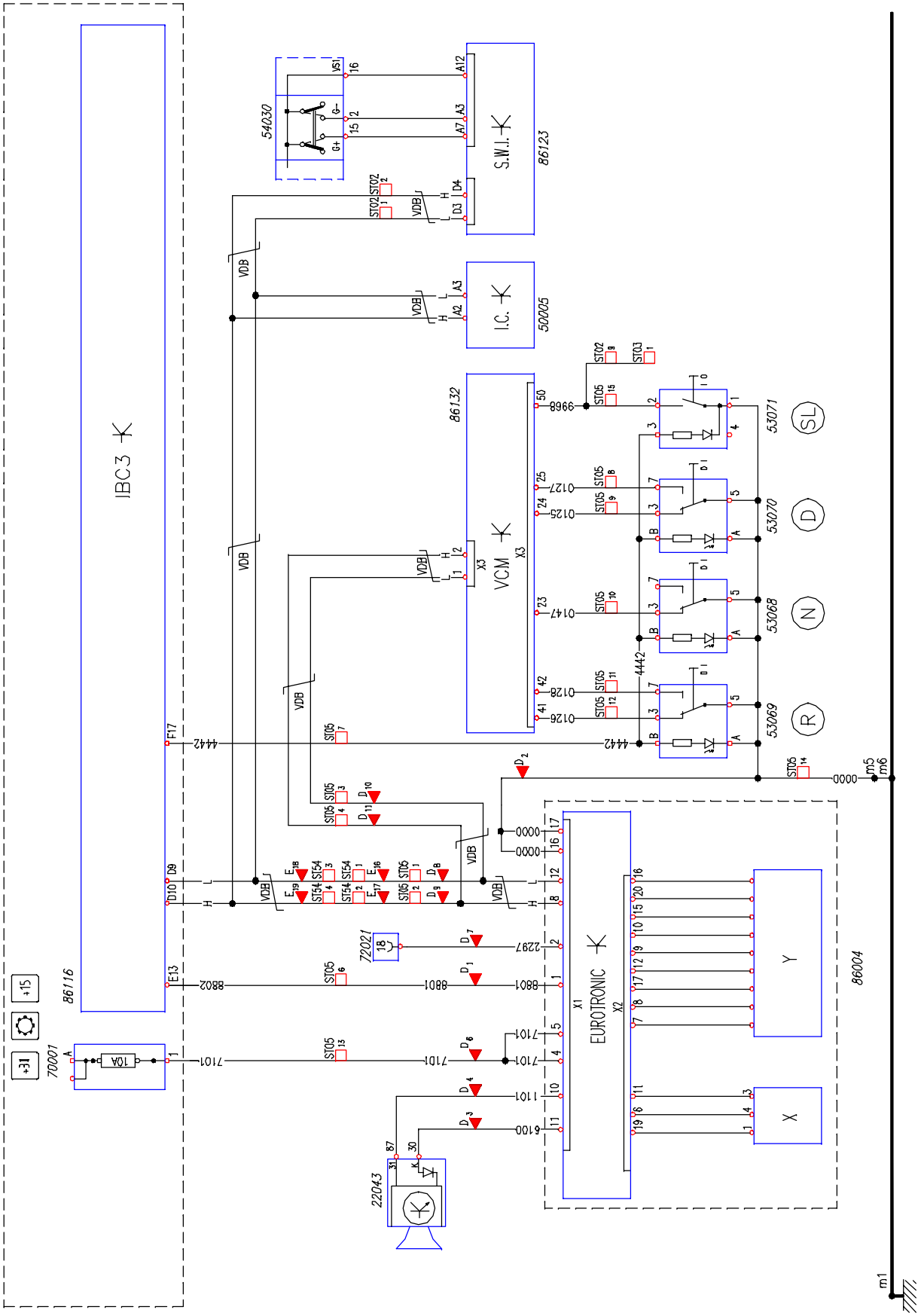

https://truckmanualshub.com/
Aquila Trucks Centres

Chart 39: Retarder ZF

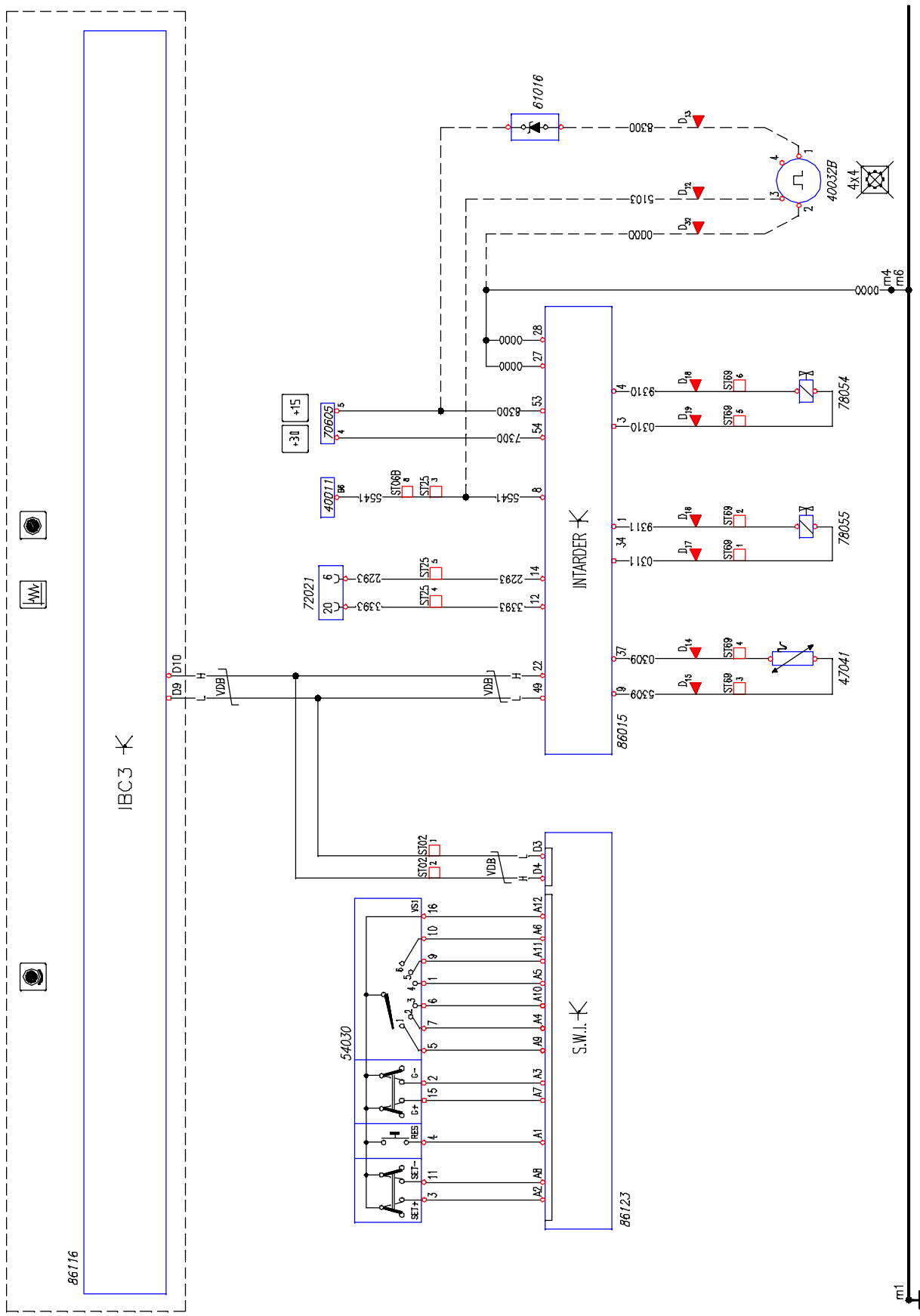

113394

https://truckmanualshub.com/

Aquila Trucks Centres

Chart 40: Control unit EM (PTO)

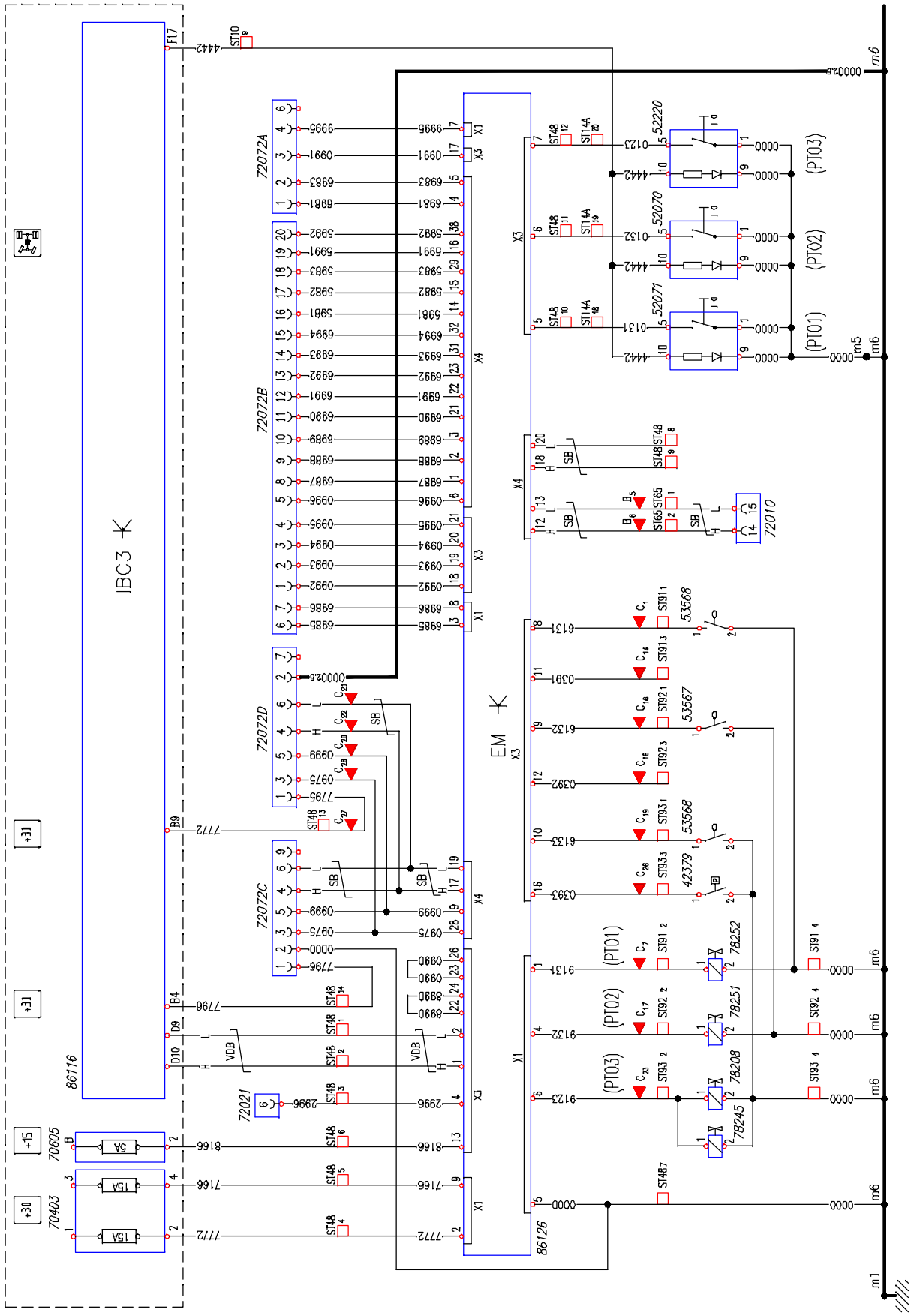

https://truckmanualshub.com/
Aquila Trucks Centres

Chart 41: Radio receiver

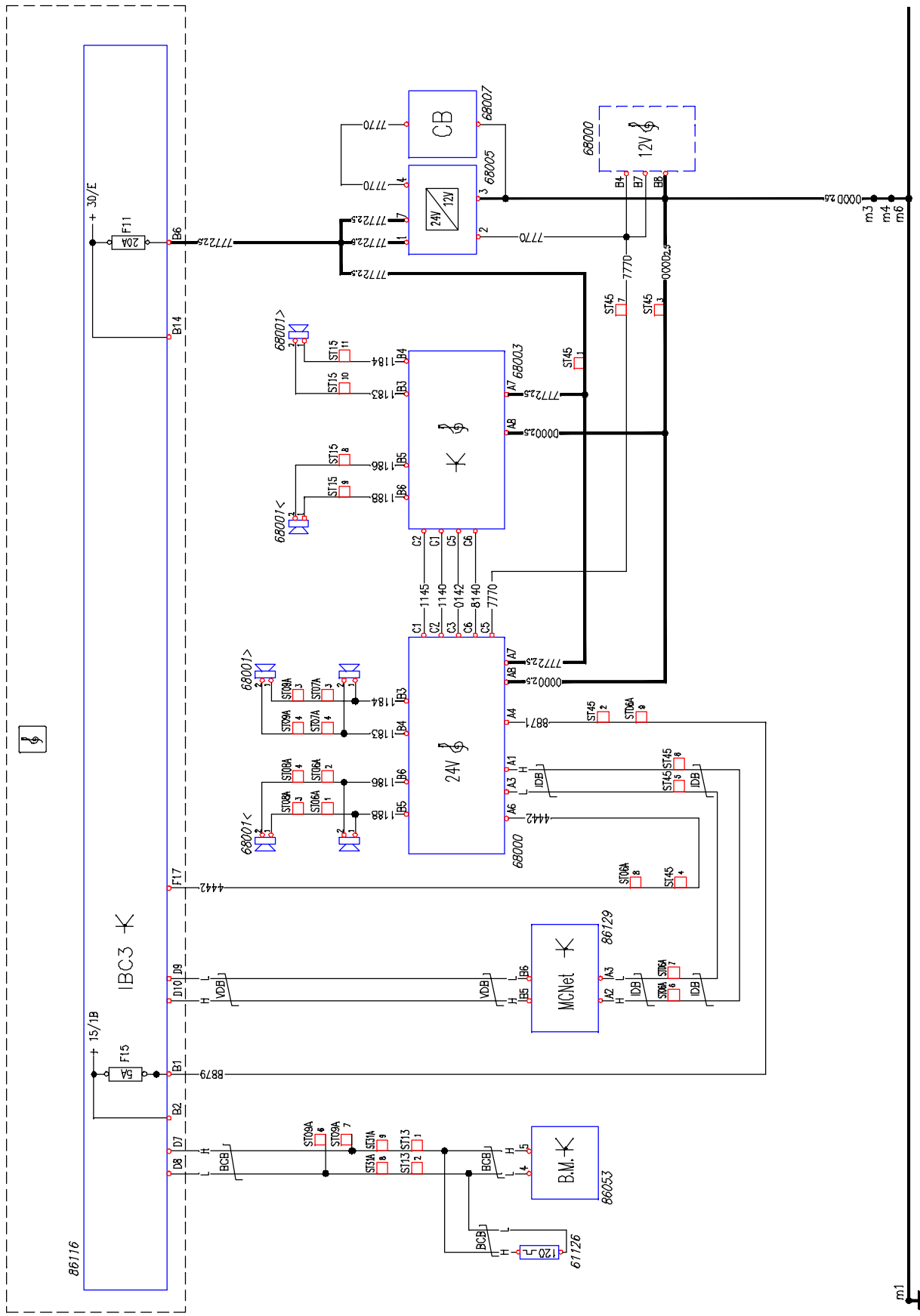

113396

https://truckmanualshub.com/

Aquila Trucks Centres

Chart 42: General mechanical power switch (IGC)

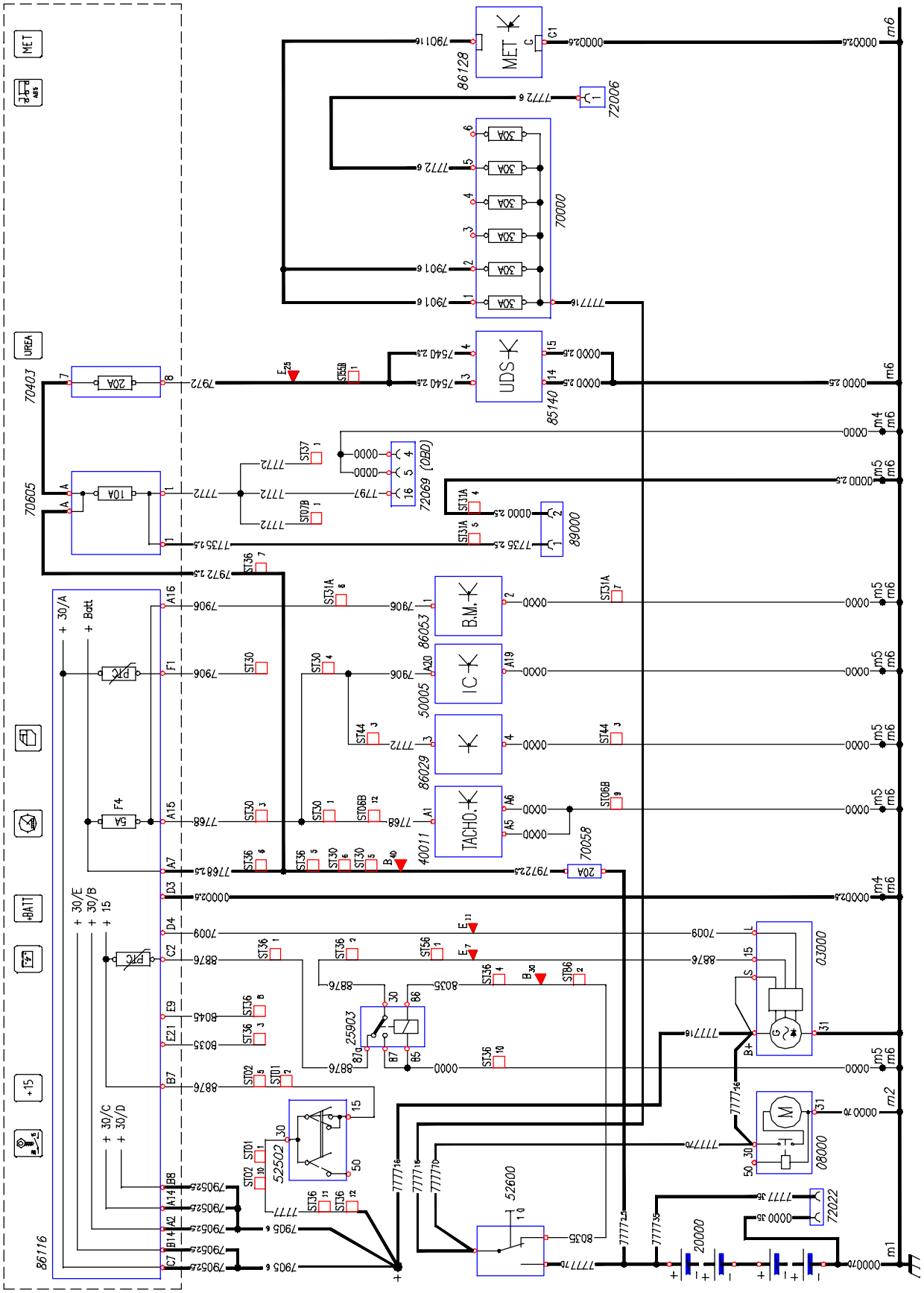

113397

https://truckmanualshub.com/

Aquila Trucks Centres

Chart 43: ADR (2001)

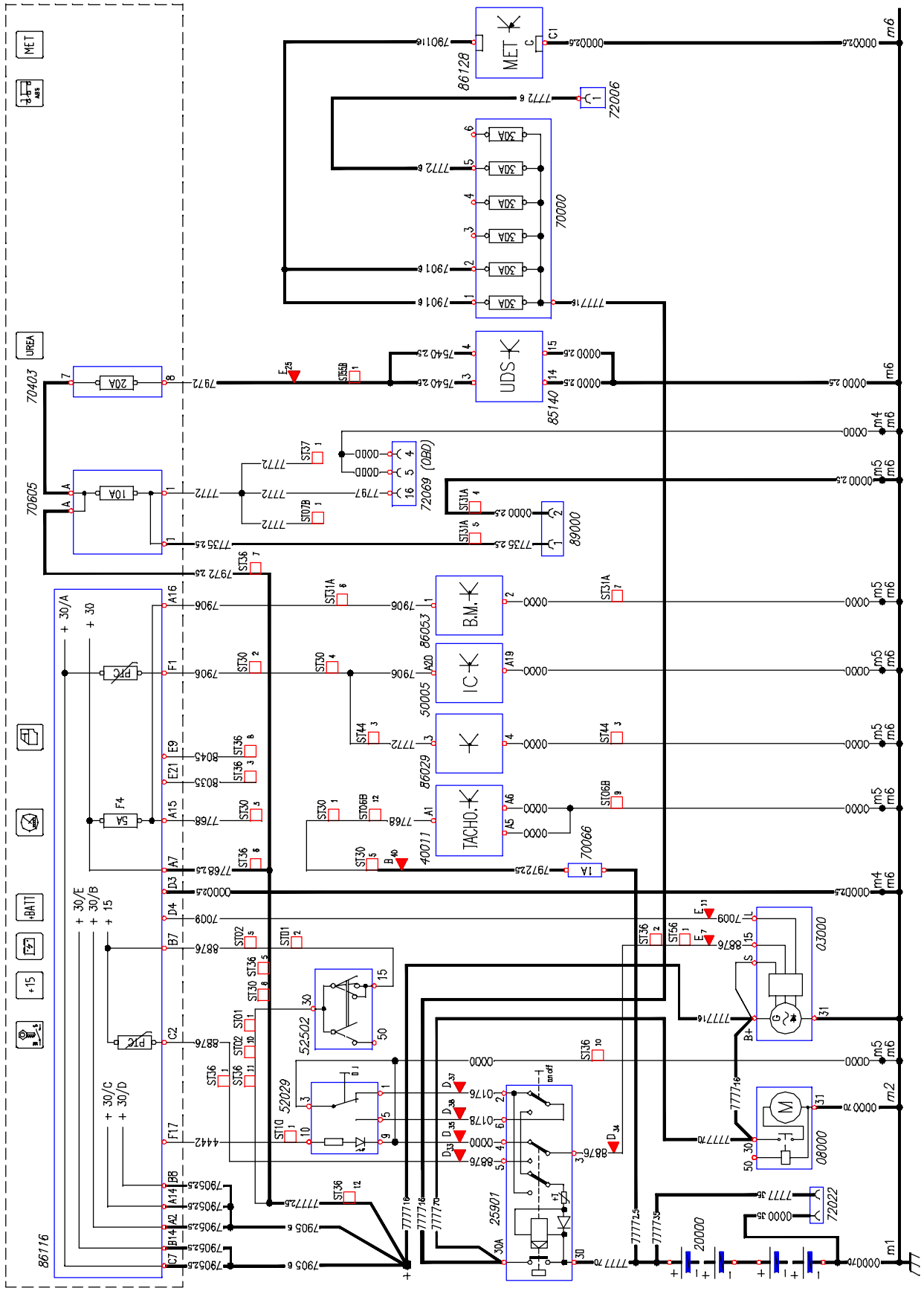

https://truckmanualshub.com/

Aquila Trucks Centres

Chart 44: ADR (OPT. 0129)

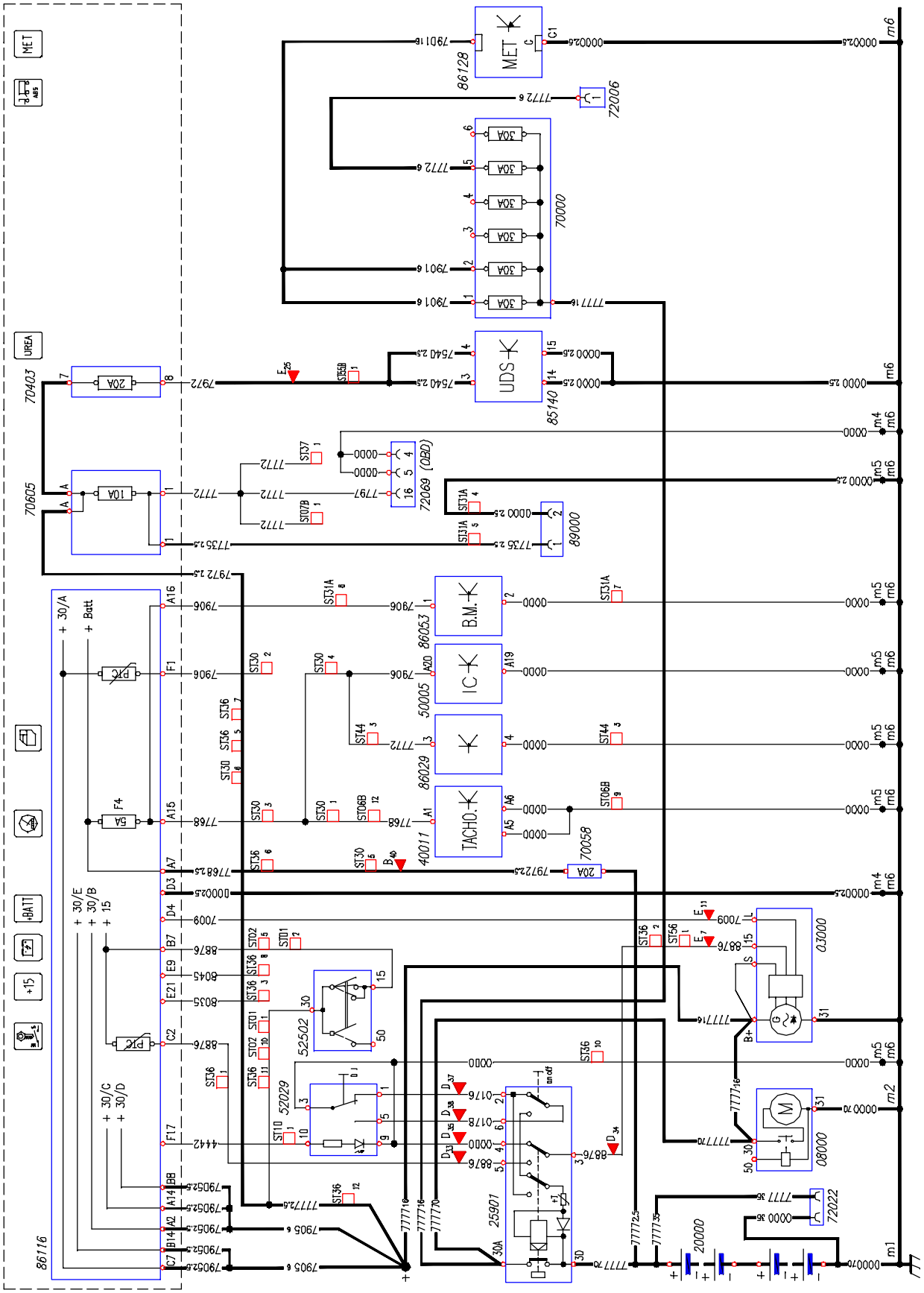

113399