https://truckmanualshub.com/

BHARATBENZ

GUIDE TO WORLD-CLASS BODY BUILDING

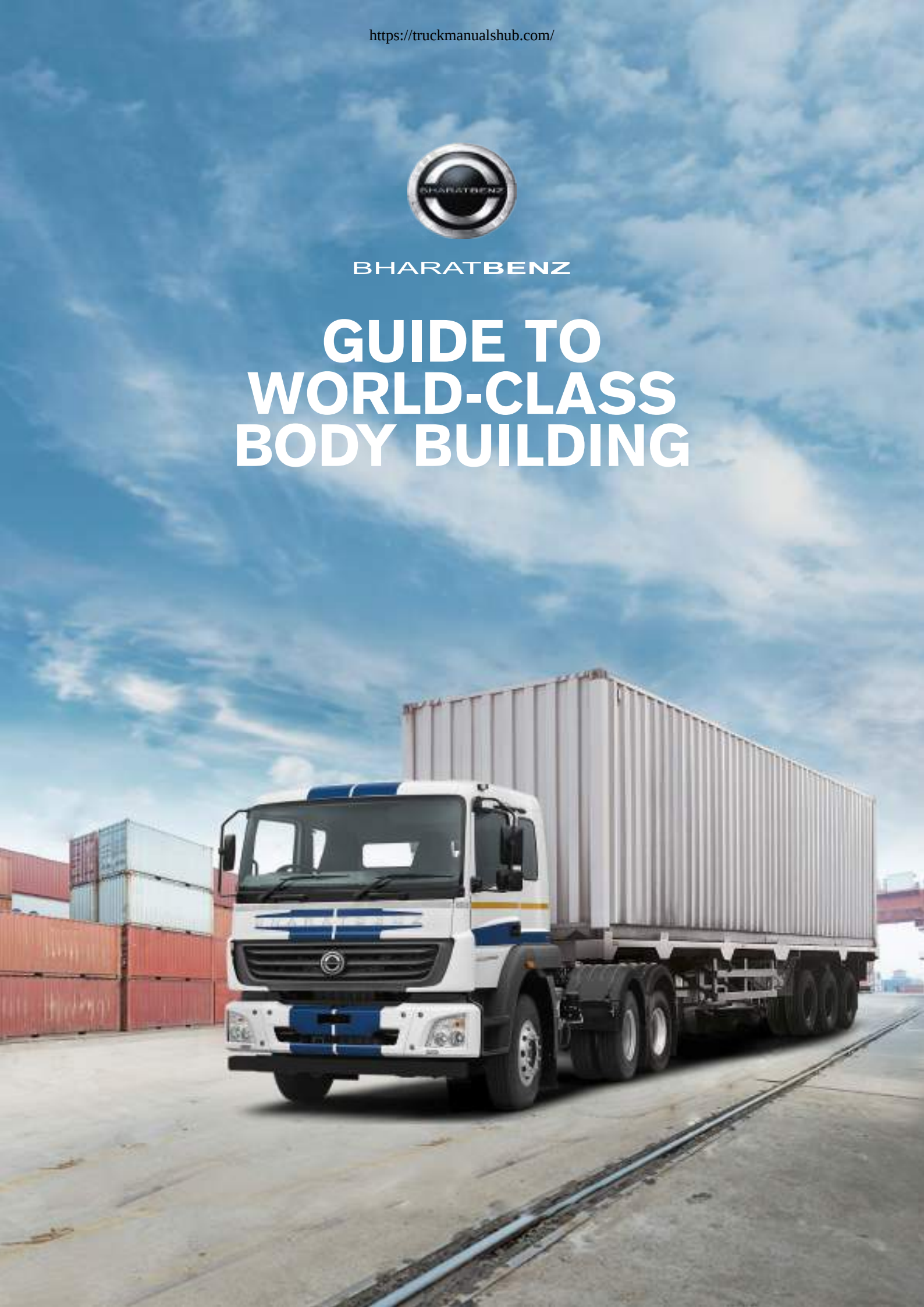

https://truckmanualshub.com/

BODY BUILDING GUIDELINES & PRECAUTIONS

Guidelines and Precautions

Daimler India Commercial Vehicles Pvt. Ltd., as the manufacturer of BharatBenz vehicles, publises this body/equipment mounting directive to provide body manufacturers with important technical information about the basic vehicle. This information must be observed by the body manufacturer in the production of bodies and equipment, fittings and modifications for BharatBenz vehicles.

Due to the large number of body manufacturers and body types, Daimler India Commercial Vehicles Pvt. Ltd., cannot take into account all the possible modifications to the vehicle, e.g. performance, stability, load distribution, center of gravity and handling characteristics, that may result from the design of attachments, bodies, equipment or modifications. For this reason, Daimler India Commercial Vehicles Pvt. Ltd., can accept no body manufacturer liability for accidents or injuries sustained as a result of such modifications to the vehicles if such modifications have a negative impact on the overall vehicle. Accordingly, Daimler India Commercial Vehicles Pvt. Ltd., will only assume liability as vehicle manufacturer within the scope of the design, production and instruction services which it has performed itself.
The body manufacturer is bound to ensure that its bodies and equipment, fittings and modifications are themselves not defective, nor capable of causing defects or hazards to the overall vehicle. If this obligation is violated in any way, the body manufacturer shall assume full product liability. Daimler India Commercial Vehicles Pvt. Ltd., does not issue body/ equipment approval certificates for bodies not manufactured by BharatBenz.
These directives only supply important information and technical specifications to body manufacturers explaining how to handle the product.

These body/equipment mounting directives are primarily intended for the professional manufacturers of bodies, equipment, fittings and modifications for our vehicles. As a result, these body/equipment mounting directives assume that the body manufacturer has suitable background knowledge.

If you intend to mount attachments, bodies and equipment on or carry out modifications to our vehicles, please be aware that certain type of work (e.g. welding work on load-bearing components) may only be carried out by qualified personnel.

https://truckmanualshub.com/

This will avoid the risk of injury while also ensuring that the degree of quality required for the attachments, bodies, equipment and modifications is given.

PROPERTY DAMAGE

General recommendations are being highlighted below in Operators Manual. For detailed body building guidelines please contact BharatBenz dealer for expert advice.

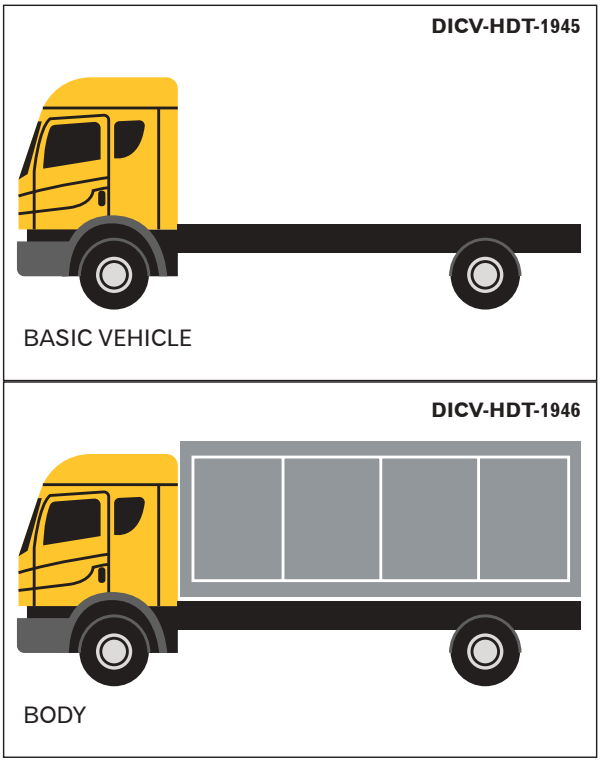

THE AIM OF DIRECTIVES

These directives serve as instructions for the manufacture of attachments, bodies, equipment and modification to other make bodies and major assemblies. The following graphics show the distinction between the basic vehicle and the body.

WARNING

Before installing any attachments, special-purpose bodies, equipment or carrying out any modifications to the basic vehicle and/or its assemblies, you must read the relevant sections of this Operator's Manual, as well as the operating and assembly instructions issued by the manufacturer of the accessories and items of optional equipment. You could otherwise fail to recognise dangers, which could result in injury to yourself or others.

The instructions listed herein must be observed in full to maintain the operational reliability and road safety of the chassis and for observance of material defect claims.

Illustrations and schematic drawings are examples only and serve to explain the texts and tables. References to regulations, standards, directives etc. are given in keywords and serve for information only.

Additional information is available from any of the Daimler India Commercial Vehicles Pvt Ltd authorised Dealers or Service Centres.

https://truckmanualshub.com/

Conventions / Interpretation

The following conventions are used in these directives:

WARNING

A warning note draws your attention to possible risks of accident and injury to yourself and others.

ENVIRONMENTAL NOTE

An environmental note gives you tips on the protection of the environment.

PROPERTY DAMAGE

This note draws your attention to possible damage to your vehicle.

ADDITIONAL INFORMATION

This note points any advice or further information you may find useful.

▶ Reference TOC

This symbol indicates the reference TOC on which you will find further information on the subject.

Vehicle Safety

WARNING

The use of parts, assemblies or conversion parts and accessories which have not been approved may put the safety of the vehicle at risk. Before installing any attachments, special-purpose bodies, equipment or carrying out any modifications to the basic vehicle and/or its assemblies, you must read the relevant sections of the this Operator's Manual, as well as the operating and assembly instructions issued by the manufacturer of the accessories and items of optional equipment. You could otherwise fail to recognise dangers, which could result in injury to yourself or others. Official acceptance by public testing bodies or official approval does not rule out safety hazards.

https://truckmanualshub.com/

Notes on vehicle safety Daimler India Commercial Vehicles Pvt. Ltd recommends

using appropriate parts only for each particular vehicle model. In many countries, parts that make extensive changes to the vehicle can invalidate the general operating permit. Specifically, this concerns parts which:

- change the vehicle type approved in the general operating permit
- could endanger road users
- could adversely affect exhaust emissions or noise levels

ADDITIONAL INFORMATION

Make absolutely sure that you comply with national registration regulations as attachments, bodies, equipment on or modifications to the vehicle will change the vehicle type approved and may invalidate the general operating permit.

Operational Reliability

WARNING

Before installing any attachments, special-purpose bodies, equipment or carrying out any modifications to the basic vehicle and/or its assemblies, you must read the relevant sections of this Operator's Manual, as well as the operating and assembly instructions issued by the manufacturer of the accessories and items of optional equipment. You could otherwise fail to recognise dangers, which could result in injury to yourself or others. Work incorrectly carried out on electronic components and their software could prevent this equipment from working correctly. Since the electronic systems are networked, this might also affect systems that have not been modified.

WARNING

Malfunctions in the electronic system could seriously jeopardise the operating safety of the vehicle.

Accident Prevention

The body, the attached or installed equipment and any modifications must comply with the applicable laws and ordinances as well as work safety or accident prevention regulations, safety rules and accident insurer leaflets.

All technical means shall be used to avoid operating conditions that may be unsafe or liable to cause an accident.

All national laws, directives and registration requirements must be complied.

The manufacturer of the attachment, body, equipment or conversion or the device manufacturer is responsible for compliance with these laws and regulations.

https://truckmanualshub.com/

Vehicle and Model Designations

This body/equipment mounting directive applies for the following vehicle model designations:

Vehicle	Model	Model Designation	Wheel bases (mm)
40t Trailer	4023TT (4x2)	262	3,600
49t Trailer	4928TT (6X4)	281	3,975
55t Trailer	5528TT (6X4)	281	3,975

Identification Of Model Designation

The model designation can be identified from the model plate attached to the cab. Please refer digits 4, 5 & 6 in the VIN to get the model designation. Digit 4 & 5 indicate the model designation and Digit 6 indicate the variant in the specific model.

ADDITIONAL INFORMATION

Further information about VIN location can be found on “Vehicle Identification”
▶ **PRODUCT INFORMATION**

VIN example for Model Description:
For VIN No. 0000503AJBP000005,
the digits 4, 5 & 6 are 0, 5 and 0. Therefore the model designation is 050.

ADDITIONAL INFORMATION

Information on latest vehicle models and its range can be known from BharatBenz Authorised dealerships.

Contact Details for Technical Support

The staff members of the Body Builder Management department, the team responsible for conversion/ body manufacturers and the body/ equipment mounting directive for the overall vehicle development of BharatBenz trucks, answer technical and design-engineering questions. The relevant members of staff can be contacted at:

Contacts	
24 X 7 Road Side Assistance	1800-300-12345 +91 44 33411234
24 X 7 Enquiry Management	1800-300-88888
Dial for Parts/ AdBlue Contact	1800-300-22228
Factory Address	Daimler India Commer- cial Vehicles Pvt. Ltd. SIPCOT Industrial Estate, Mattur P.O, Oragadam Village, Sriperumbudur Taluk, Kancheepuram District, Tamilnadu, India – 602105.

https://truckmanualshub.com/

Product Safety

Both the vehicle manufacturer and the body manufacturer must always ensure that they introduce their scopes into the market in a safe condition and that third parties are not at risk of any safety hazard. If this is not adhered they may be subject to civil, criminal and public law consequences. Every manufacturer is liable for the products it manufactures.

From this, it follows that the body/ conversion manufacturer therefore also bears responsibility for the following:

- the operating and road safety of the body, parts and modifications.
- testing and maintaining the operating and handling safety of the vehicle after the body/ equipment is mounted (the body and/or equipment must not have a negative effect on the driving, braking or steering characteristics of the vehicle).
- influences of parts on or modifications to the chassis.
- consequential damage resulting from the body, attachment, equipment, retrofitted electrical and electronic systems or modification.
- maintaining the operational reliability and freedom of movement of all moving parts of the chassis after the body/ equipment is mounted (e.g. axles, springs, propeller shafts, steering, gearbox linkage, etc.) even in the case of diagonal torsion between the chassis and the bodies.

Work or modifications performed to the chassis or body must be entered in the “Service Records”
▶ **MAINTENANCE AND LUBRICATION**

Guarantee of Traceability

Hazards in your equipment/body which become known after delivery may necessitate supplementary measures in the market (customer notification, warnings, recalls). In order to make these measures as efficient as possible, your product must be traceable after delivery.
For this purpose and to enable the Road Transport Inspector or comparable registers abroad to be used for determining which owners are affected, we advise you to promptly file the serial number/ identification number of your equipment/add-on part linked to the vehicle identification number for the truck in your databases. Similarly, it is also advisable to store the addresses of your customers for this purpose and to grant subsequent purchasers the opportunity to register.

Body builder identification plate as per the local laws to be incorporated in the body/equipment, meeting the regulations.

After Sales Central (ASCENT)

An additional source of information available to you is the ASCENT which provides information on basic data (dimensions, tightening torques), function descriptions, circuit diagrams, repair instructions and maintenance sheets. Information about ASCENT can be obtained from any Bharat-Benz dealership (Refer ▶ **BODY BUILDING GUIDELINES** to the contact details for technical support).

BharatBenz Logo and Emblem

The BharatBenz logo and emblem are registered trademarks of Daimler AG. They must not be removed or affixed in another position without approval.

BharatBenz logo and emblem shall not be affixed/ painted at a place other than that is provided by Daimler India Commercial Vehicles Pvt. Ltd.

Overall appearance of the overall vehicle
If the vehicle fails to comply with the appearance and quality standards as required by Daimler India Commercial Vehicles Pvt Ltd, the trademarks such as the BharatBenz logo and emblem must be removed.
Third-party trademarks,

- may not be affixed next to BharatBenz trademarks.
- may not be affixed at any other points on the

https://truckmanualshub.com/

basic vehicle without necessary approval of the department responsible.

(Refer ▶ **BODY BUILDING GUIDELINES** to the aim of directives for basic vehicle)

Recycling of Components

ENVIRONMENTAL NOTE

All attachments, bodies, equipment and modifications shall be done with environmentally compatible design and material selection shall be done taking environment protection into account.

Materials with risk potential, such as halogen additives, heavy metals, asbestos, CFCs and CHCs, are to be avoided.

- It is preferable to use materials which permit recycling and closed material cycles.
- Plastics are to be used only where they provide advantages in terms of cost, function or weight.
- Materials and production processes are to be selected such that only low quantities of waste are generated during production and that this waste can be easily recycled.
- In the case of plastics, and composite materials in particular, only compatible substances within one material family are to be used.
- For components which are relevant to recycling, the number of different types of plastics used must be kept to a minimum.
- It must be assessed whether a component can be made from recycled material or with recycled elements.
- Wherever possible, components should not be painted or coated; coloured plastic parts are to be used instead.
- Components in areas at risk from accidents must be designed in such a way that they are damage tolerant, repairable and easy to replace.

Quality System

World-wide competition, increased quality standards demanded by the customer from the product as a whole, national and international product liability laws, new organisational forms and rising cost pressures make efficient quality assurance systems a necessity in all sectors of the automotive industry.

For the reasons quoted above, Daimler India Commercial Vehicles Pvt. Ltd., advises body manufacturers to set up a quality management system with the following minimum requirements:

- The quality management system should clearly define responsibility and authority.
- There should be a description of processes/ workflow.
- The body build orders / contracts has to be checked for its feasibility with respect to its application / usage.
- Product checks on the basis of specified instructions to be carried out.
- Provisions are made for the handling of faulty products.
- The inspection results must be documented and archived.
- All employees concerned should have valid proof of qualification required to perform their task.
- The test equipment must be monitored and calibrated regularly.
- There should be a system for labelling materials/parts.
- Quality assurance measures should be carried out at suppliers end.

https://truckmanualshub.com/

Planning of Bodies Selecting the Chassis

PROPERTY DAMAGE

When planning attachments, bodies, equipment or modification work, the selected vehicle must be checked to verify whether it fulfils the necessary requirements.

In order to ensure safe operation of the vehicle, it is essential to choose the chassis and equipment carefully in accordance with the intended use. Along with the selection of the correct vehicle version, the required series and special equipment such as

- Wheelbase
- Engine/Gearbox
- Power take-off
- Axle ratio
- Position of the centre of gravity
- Legal registration requirements (eg. underride guard)
- Permissible and technical gross vehicle weight

should be taken into consideration and be appropriate for the intended use.

PROPERTY DAMAGE

Observe the weight code. The axle designation or the load capacity of the tyres has only limited relevance to the gross weight of the vehicle.

ADDITIONAL INFORMATION

The non-availability of a vehicle version may be an indication that the vehicle is not suitable for the intended application. For clarification contact BharatBenz authorised dealership.

Vehicle Modifications

WARNING

Do not carry out any modifications to major assemblies (steering, brake system etc.). Any modifications to the steering and the brake system may result in these systems malfunctioning and ultimately failing. The driver could lose control of the vehicle and cause an accident.

Alterations to the basic vehicle are permitted only within the framework of the procedures described in this body/ equipment mounting directive.

Standard vehicles ex-factory comply with Central Motor Vehicle Rules (vehicles produced for countries outside of India may be exceptions). The vehicles must still comply with CMVR after modifications have been carried out.

The body manufacturer must inform the officials of recognised approval authority or inspector about any modifications done to the chassis when the vehicle is inspected.

Following all work on the brake system, i.e. even if merely disassembling parts, a complete check (operation, effectiveness and visibility) of the entire brake system must be performed.

https://truckmanualshub.com/

Dimensions, Weights, Overall Vehicle Height

WARNING

The vehicle tyre load capacity may not be exceeded by overloading the vehicle beyond its specified gross vehicle weight. The tyres could overheat and suffer damage. This could cause you to lose control of the vehicle and cause an accident with possible injury to yourself and others. Information on the permissible axle loads can be found on the vehicle model plate. All legal provisions governing the permissible vehicle height must be taken into accoun when planning bodies.

Standard vehicles ex-factory comply with Central Motor Vehicle Rules (vehicles produced for countries outside of India may be exceptions). The vehicles must still comply with CMVR after modifications have been carried out.
The body manufacturer must inform the officials of recognised approval authority or inspector about any modifications done to the chassis when the vehicle is inspected. Following all work on the brake system, i.e. even if merely disassembling parts, a complete check (operation, effectiveness and visibility) of the entire brake system must be performed.

Tyres

Tyres The body manufacturer must ensure that:

- The largest permissible tyres can be fitted.
- The distance between the tyre and the mudguard or wheel housing is sufficient even with the suspension fully compressed (including any twist) (adherence to valid regulations).

ADDITIONAL INFORMATION

The non-availability of a vehicle version may be an indication that the vehicle is not suitable for the intended application. For clarification contact BharatBenz authorised dealership.

ADDITIONAL INFORMATION

Should comply as per the AIS 093 (Rev.1):2015 standard.

- The relevant information in thedrawings to be observed.

Bolted and Welded Connections

WARNING

Do not modify any bolted connections that are relevant to safety, e.g. that are required for wheel alignment, steering or braking functions. When unfastening bolted connections make

sure that, when work is complete, the connection again corresponds with the original condition. Welding work on the chassis/body may only be carried out by trained personnel. The body, the attached or installed equipment and any modifications must comply with the applicable laws and ordinances as well as work safety or accident prevention regulations, safety rules and accident insurer leaflets.

Bolted Connections

If it is necessary to replace standard bolts with longer bolts, use only bolts:

- of the same diameter
- of the same strength grade
- of the same type
- with the same thread pitch

Also note:

It is strictly prohibited to shorten the length of the free clamping bolt, change to a stretch-shank bolt or use bolts with a shorter thread.

- No design modification is possible if bolts are tightened to the required torque and angle by Daimler India Commercial Vehicles Pvt Ltd.
- The settling behaviour of bolted connections must be observed. Additional tensioned parts must be of equal or greater strength than the preceding tensioned assembly. The use of Daimler India Commercial Vehicles Pvt Ltd tightening torques assumes coefficients of friction for the bolts in the tolerance range of 0.08 0.14.

Daimler India Commercial Vehicles Pvt Ltd recommends the use of Daimler India Commercial Vehicles Pvt Ltd standard parts.

Flange head bolts

Thanks to the use of flange head bolts, all bolted connections on the chassis of BharatBenz commercial vehicles are maintenance free, i.e. retightening of the bolts in the context of regular service intervals is no longer necessary. We expect all bolted connections used for work on BharatBenz vehicles to satisfy the same requirements.

Causes for the loosening of bolted connections

Bolted connections work loose when a permanent change in length occurs in the axial direction of the bolt. This leads to a reduction in the preload force and thus a reduced clamping force under operating loads.

A permanent change in length can be caused by:

Settling

The surfaces of parts that make contact with other parts (e.g. nuts, washers) are coated with corrosion protection and settle under the pressure of the clamping force. This means that more the connecting points are bolted together, greater the length change due to settling.

Creepage

The pressure per unit area of the bolt and nut on the contact surfaces exceeds the specific pressure strength of the material of the clamped parts.

Description of flange head bolts

The main feature of this type of bolt is a press-fitted flange which increases the contact area of the bolt head.

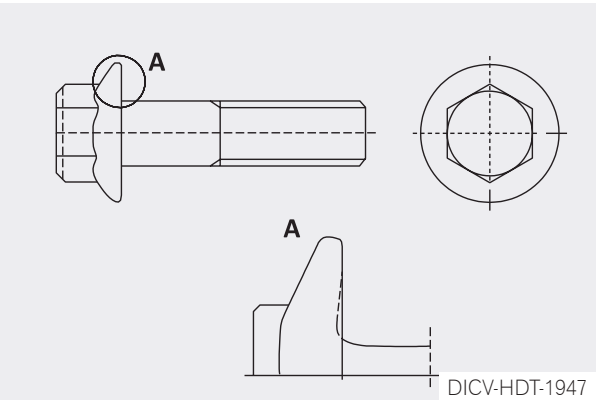

Fig: Flanged bolt

Properties

Flange head bolts and nuts that comply with MBN standards 10105 and 13023 reduce the danger of loss of pre-load by setting on the bearing surface. The pressure intensity that is created during the process of tightening is low in contrast to other types of screw heads, because it is spread over the increased bearing surface.

Advantages of flange head bolts and nuts to MBN 10105 and 13023

- Reduced risk of creep due to an enlarged contact area and thus a lower pressure per unit area than other types of bolt heads.
- Reduced settling effect due to a lower number of parts to be connected compared with bolted connections with washers.
- The pressure concave contact disc increases the elasticity of the connection so that any settling or creep behaviour that still occurs can be compensated, largely preventing any decrease in the clamping force.
- The elasticity of the bolted connection can be increased further by selecting a high clamping length ratio l/d (l = shank length, d = shank diameter).
- The use of flange head bolts and nuts guarantees a secure and maintenance-free bolted connection.

(For attached components, e.g. fifth wheel couplings, the maintenance guidelines of the component manufacturer should be followed.)

Conformity of lengths and reach in blind holes must be ensured.

As the nuts conforming with MBN 13023 feature clamp locking, they must not be used more than once.

When flange head bolts and nuts are used, the tightening torques in the following tables must be complied.

Extract from MBN 10130 Part 3 Class II

Torque variation in tightening process: ± 3% to ± 8%

Bolt driver with shutoff clutch; torque wrench: - 5%

Thread	Tightening Torque (Nm)	Pre-load Force Fvmin.(kN)
M8 x 125	29.5±2.3	16.3
M10 x 1.5	58±4.5	25.9
M12 x 1.5	106±8	39.7
M14 x 1.5	172±13	56.0
M16 x 1.5	260±20	74.4
M18 x 1.5	380±30	96.9
M20 x 1.5	520±40	120

Extract from MBN 10130 Part 3 Class III

Torque variation in tightening process: ± 3% to ± 20%

Impulse wrench; “good impact wrench”: –20%

Thread	Tightening Torque (Nm)	Pre-load Force Fvmin.(kN)
M8 x 1.25	26±5	12.9
M10 x 1.5	51±10	20.5
M12 x 1.5	92±18	31.0
M14 x 1.5	150±30	43.9
M16 x 1.5	225±45	57.9
M18 x 1.5	330±60	75.8
M20 x 1.5	460±90	95.6

Tightening torque for BharatBenz original flange-bolts and flange- nuts

- For torque and turn-angle tightening a minimum clamp- length (L) of 1.5 x D must be guaranteed
- Bolt spec - MBN 10105; Nut spec - MBN 13023

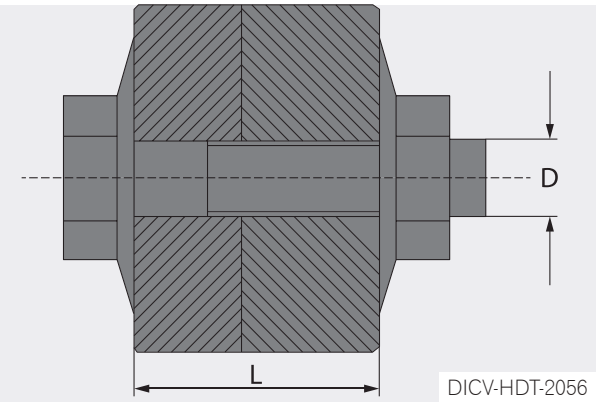

https://truckmanualshub.com/

Flange - bolts & nuts	M12 x1.5 10.9	M14 x1.5 10.9	M16 x1.5 10.9	M18 x1.5 10.9	M20 x1.5 10.9
Torque tightening	92 Nm	150 Nm	225 Nm	330 Nm	460 Nm
Torque and turn-angle tightening. Only for nuts MBN 13023	92 Nm+ 90°	150 Nm+ 90°	225 Nm+ 90°	330 Nm+ 90°	460 Nm+ 90°

Use of bolted connections

All bolts and nuts used to connect implements or equipment to the BharatBenz chassis (e.g. fuel tank, exhaust system, implement carrier, end cross member) must always be selected according to the criteria described in section “Flange head bolts” (according to MBN 10105 and 13023).

The exception to this rule is body mounting. For this it is possible to use bolts conforming to standards ISO 4162 and ISO 1665 (both of the normal shank design) and nuts according to ISO 7044 of property class 10.9.

Welded Connections

Welding work on the chassis/body may only be carried out by trained personnel.

PROPERTY DAMAGE

Parts which must not be welded:
- Assemblies such as the engine, gearbox, axles, etc.
- The chassis frame.

Pass-By Noise

No modification (from the original spec) is permitted on the parts that change the pass-by noise quality, e.g.
- Engine
- Exhaust system
- Air intake system
- Tyres, etc.,

Noise-insulating parts fitted as standard must not be removed or modified.

Exhaust System

PROPERTY DAMAGE

The original exhaust system mounting, by this we mean the bracket components including frame mounted castings, may not be modified. Modifications can lead to damage to the exhaust system.

Maintenance and Repairs

WARNING

Do not modify any bolted connections that are relevant to safety, e.g. that are required for wheel alignment, steering or braking functions.
When unfastening bolted connections make sure that, when work is complete, the connection again corresponds with the original condition. Welding work on the chassis/body may only be carried out by trained personnel. The body, the attached or installed equipment and any modifications must comply with the applicable laws and ordinances as well as work safety or accident prevention regulations, safety rules and accident insurer leaflets.

https://truckmanualshub.com/

Maintenance and repair of the vehicle should not be made difficult by the body.

Maintenance points and major assemblies must be easily accessible.

- This Operator's Manual must be complied with and supplemented as necessary.
- Stowage boxes must be fitted with maintenance flaps or removable rear panels.
- The battery compartment must be sufficiently ventilated, with provision for air to enter and exit.
- Check the condition and capacity of batteries and service them in accordance with the manufacturer's specifications.

Any additional expenses arising from the body in connection with warranty, maintenance or repair will not be borne by Daimler India Commercial Vehicles Pvt. Ltd.

Maintenance Instruc- tions

The following must be observed by the body manufacturer before delivery of the vehicle:

- Due date of inspection
- Check the condition and capacity of batteries and service them in accordance with the manufacturer's specifications.
- Check the head lamp setting or have this checked at a qualified specialist workshop.
- Retighten the wheel nuts to the specified torque.
- This Operator's Manual and directives for maintenance of attachments, bodies, installations or conversions, which have been installed by the body manufacturer, must be provided with the vehicle in the language of the country of use.
- Daimler India Commercial Vehicles Pvt Ltd recommends adapting to each individual body the scope of maintenance work which has to be carried out on the body, coordinating it by means of the valid BharatBenz service systems. This applies both to the scope and type of service work, and for determining the service due dates for servicing intervals based on time elapsed and distance covered.

Preparation for Storing the Vehicle

Storage in an enclosed space:

- Clean the overall vehicle.
- Check the oil and coolant levels.
- Inflate the tyres to 0.5 bar above the specified tyre pressures.
- Release the handbrake and chock the wheels.
- Disconnect the battery and grease battery lugs and terminals.

Storing the vehicle in the open (< 1 month):

- Carry out the same procedure as for storing in an enclosed space.
- Close all air inlets and set the heating system to "OFF".

Storing the vehicle in the open (> 1 month):

- Carry out the same procedure as for storing in an enclosed space.
- Fold the windscreen wipers away from the windscreen.
- Close all air inlets and set the heating system to "OFF".
- Remove the battery and store it in accordance with the manufacturer's specifications.

Maintenance work on stored vehicles (in storage for > 1 month):

- Check the oil level once a month.
- Check the coolant once a month.
- Check the tyre pressures once a month.
- Remove the battery.

Removing the vehicle from storage:

- Check the fluid levels in the vehicle.
- Correct the tyre pressures to the manufacturer's specifications.
- Check the battery charge and install the battery.
- Clean the overall vehicle.

Battery Maintenance and Storage

To avoid damage to the battery, disconnect the battery if the vehicle is to be immobilised for a period of more than 1 week.

If the vehicle is immobilised for a period of more than 1 month, remove the battery and store it in a dry place at temperatures of between 0 °C to 30°C.

Store the battery in an upright position.
The battery charge must be kept above 12.55 V at all times.

https://truckmanualshub.com/

PROPERTY DAMAGE

If the battery voltage drops below 12.1 V, the battery is damaged and it will have to be replaced.
Leaving the vehicle parked up for a long period of time can lead to battery damage. This can be avoided by disconnecting the battery and storing it appropriately.

Work before handing over the body built vehicle

The body manufacturer must confirm the work and modification carried out by making an entry in the "Service Records" ▶ **MAINTENANCE AND LUBRICATION.**
Body manufacturer should strictly advise the customer to carry out a detailed check on the vehicle after the body is mounted, at BharatBenz authorised dealership.

Checking the overall vehicle

- Check the vehicle for its perfect condition. All damages must be repaired.
- If it is not known how long a vehicle equipped with a hydraulic clutch operating system has been in storage, the brake fluid must be replaced by BharatBenz authorised dealership.

Checking the batteries

- Test the battery charge before handing over the vehicle.

Checking the tyres

- Before handing over the vehicle, check that the tyres are inflated to the specified pressure and check the tyres for damage. Damaged tyres must be replaced.

Checking wheel alignment

When equipment, attachments and bodies have been mounted, it is recommended to have the toe setting checked by a Daimler India Commercial Vehicles Pvt Ltd authorised Dealer or Service Centre.

Daimler India Commercial Vehicles Pvt Ltd recommends authorised Dealer or Service Centre for this work.

It is absolutely essential that all safety-relevant work and all work on safety-relevant systems is performed by Daimler India Commercial

Vehicles Pvt Ltd authorised Dealer or Service Centre.

Pneumatic Auxiliary Consumers

If pneumatic accessories are installed, the following must be observed:

- In the System protection valve of Pneumatic brake circuit the outlet port number 24 is provided for any auxiliary usage. If necessary T-Junction should be installed to this air line.
- To protect the other (on-board) auxiliary usages, the connection may only be made using an additional overflow valve without return flow.
- Do not use auxiliary outlet port that consume compressed air continuously.

Maximum Permissible Air Consumption

The air requirement must be checked in the case of arduous vehicle operation, e.g. stop/start traffic and/or when pneumatic auxiliary usages with high air consumption are installed.

The total air consumption must not exceed the limit curve indicated in the diagram. Ensure that all available pneumatic utilities are considered, e.g. brakes, air suspension, trailer, etc.

ADDITIONAL INFORMATION

The non-availability of a vehicle version may be an indication that the vehicle is not suitable for the intended application. For clarification contact BharatBenz authorised dealership.

https://truckmanualshub.com/

Below illustration represents the maximum permissible air consumption.

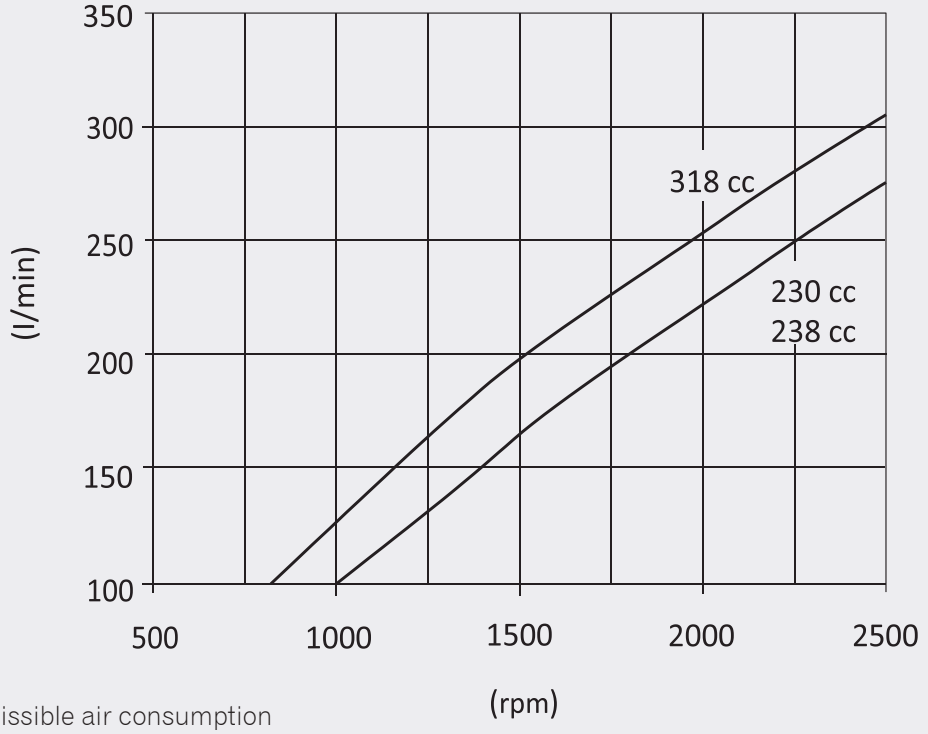

Max . permissible air consumption
rpm = average engine speed
l/min = permissible air consumption (litres/min) free air

DICV-HDT-1948

Pneumatic line routing examples

✕ **Incorrect**

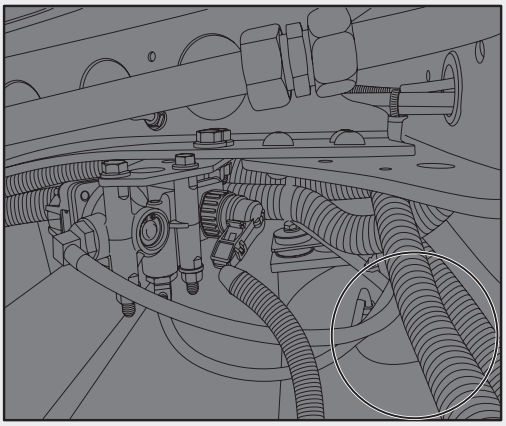

Brake lines are routed poorly without cable ties.

✔ **Correct**

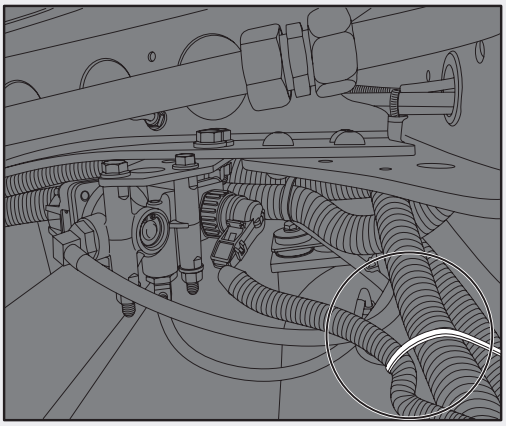

Brake lines should be secured against chafing with cable ties.

DICV-HDT-2070

Note: All the modification comply as per AIS 093 (Rev.1):2015 standard

https://truckmanualshub.com/

Pneumatic line routing examples

✕ **Incorrect**

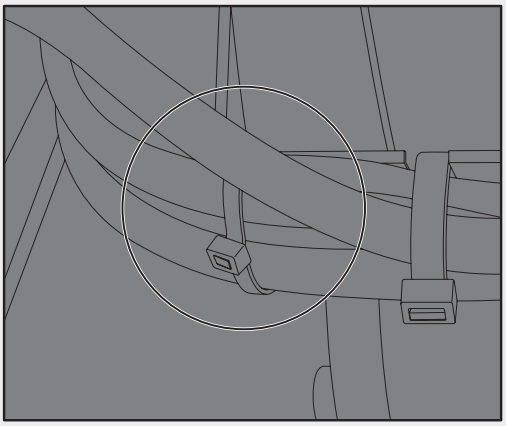

Line runs over sharp edge, risk of chafing.

✔ **Correct**

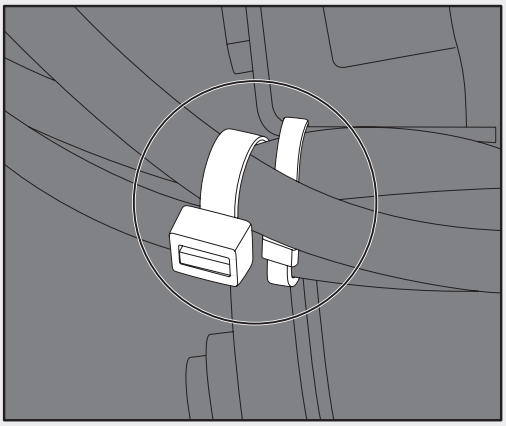

Proper routing should be done with cable tie to avoid chafing.

DICV-HDT-2071

Note: All the modification comply as per AIS 093 (Rev.1):2015 standard

Pneumatic line routing examples

✕ **Incorrect**

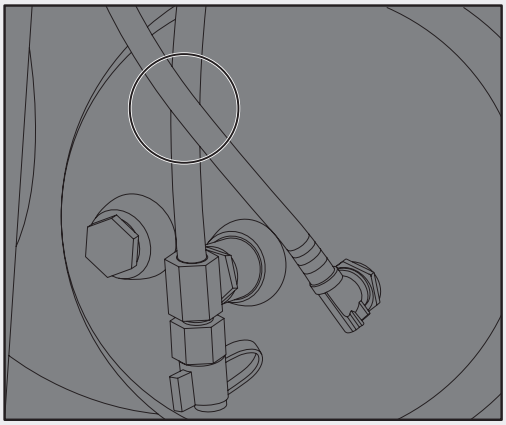

Intersecting point is not properly secured, risk of chafing.

✔ **Correct**

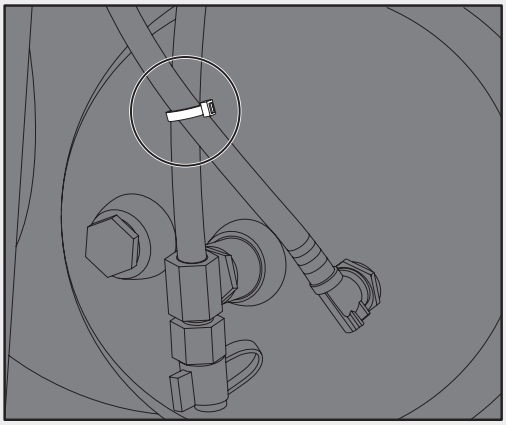

Intersecting point is secured with cable tie.

DICV-HDT-2072

Note: All the modification comply as per AIS 093 (Rev.1):2015 standard

https://truckmanualshub.com/

Pneumatic line routing examples

✕ **Incorrect**

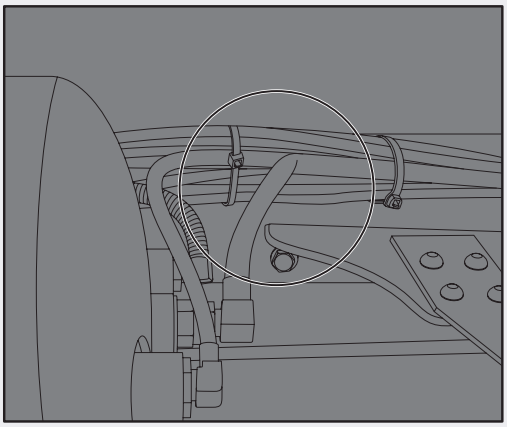

Pneumatic line is kinked, bending radius is not provided to avoid kinks.

✔ **Correct**

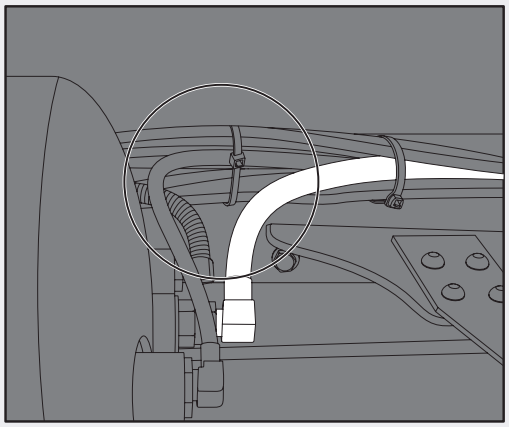

Bending radius and adequate length should be provided for pneumatic lines to avoid kinks.

DICV-HDT-2073

Note: All the modification comply as per AIS 093 (Rev.1):2015 standard

Pneumatic line routing examples

✕ **Incorrect**

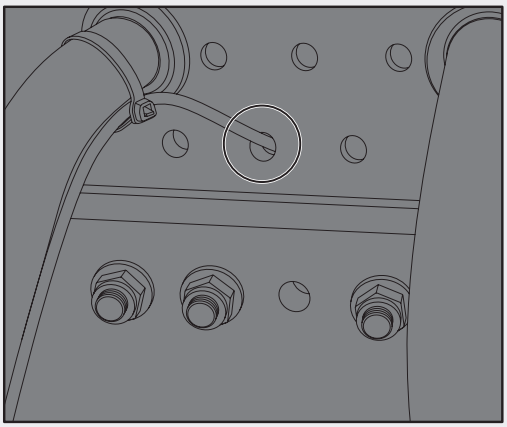

Chafe protection is not provided on the frame holes, risk of line chafe.

✔ **Correct**

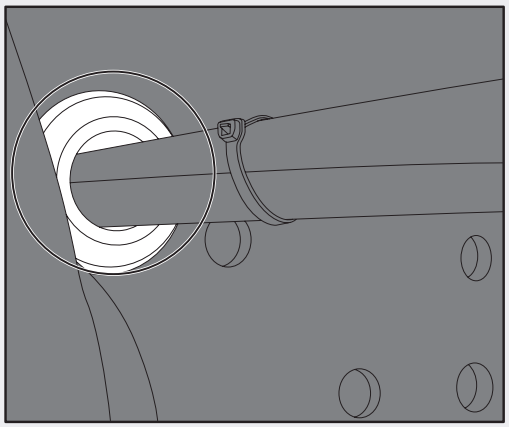

Chafe protection should be provided with rubber grommet in the frame through holes to avoid damages to the pneumatic holes.

DICV-HDT-2074

Note: All the modification comply as per AIS 093 (Rev.1):2015 standard

https://truckmanualshub.com/

AdBlue System

- DICV does not recommend to relocate the AdBlue tank as the AdBlue line re-routing may have an impact on dosing, if not done properly.
- AdBlue & Pneumatic lines are not to be disturbed as it may impact AdBlue dosing.
- Bodybuilder to ensure sufficient space is provided for filling of AdBlue tank upon building the load body.
- As the AdBlue tank is made of polymer, care to be exercised while welding so that no weld sparks fall on the tank. Protective shield may be used in such cases.
- The electrical connection should not be removed unless vehicle ignition is OFF. If not, there will be fault codes which would be registered.

ADDITIONAL INFORMATION

Further information about "AdBlue System" ▶**ADBLUE AND SCR SYSTEM**

Technical Threshold Values for Planning

Vehicle Overhang

WARNING

The body must be designed in such a way that placing of excessive load weight at the rear is prevented. It is important, otherwise the necessary steering and braking forces for safe vehicle operation cannot be transferred to the road.

- It is strongly recommended not to alter the vehicle overhang from the specification offered by BharatBenz.

Steerability

WARNING

The body must be designed in such a way that placing of excessive load weight at the rear is prevented. It is important **to comply with the points listed below,** otherwise the necessary steering and braking forces for safe vehicle operation cannot be transferred to the road.

To ensure sufficient vehicle steerability, the minimum front axle load must be maintained under all load conditions. Consult the department responsible in the event of any deviations.

PROPERTY DAMAGE

The permissible front axle load as per the national regulations shall not be exceeded.

https://truckmanualshub.com/

Clearance for Assemblies and Cab

Certain clearances must be maintained in order to ensure the function and operational safety of assemblies. Dimensional data in the quotation drawings must be observed.

Gearshift Linkage

- Sufficient distance from the body, including when the cab is tilted.
- Observe the vertical slewing range of the semitrailer.

Spring-loaded brake cylinder

- For vehicles with drum brakes, check that the spring-loaded brake emergency release screw moves freely and is accessible.

Engine and gearbox

- Minimum distance from body 30 mm.

Attachment above Cab

- Observe the permissible centre of gravity location and the front axle load.
- Make sure that there is sufficient space for tilting.

PROPERTY DAMAGE

Semitrailers with pneumatic suspension must not lean over by more than 3° to 4° when subjected to a lateral acceleration of 0.3 g so that the semitrailer tractor does not have to bear the entire force caused by the lateral inclination of the semitrailer.

The manufacturer of the semitrailer is responsible for compliance with the regulations concerning driving the semitrailer-tractor combination as per the national laws.

- Check the front and rear slewing radius on the semitrailer and the vertical slewing range.
- If necessary, observe the minimum height of the semitrailer coupling according to ISO standard 1726.
- Observe the clearance for the gearshift linkage and above the tank filler neck.

Tractor Specification
Trailer forward clearance zone

- Tractor fifth wheel coupling at standard kingpin offset should not exceed the trailer forward clearance radius as mentioned in the above figure.

Trailer gooseneck clearance

- As per ISO 1726, gooseneck profile should be 2300mm. (refer above figure)

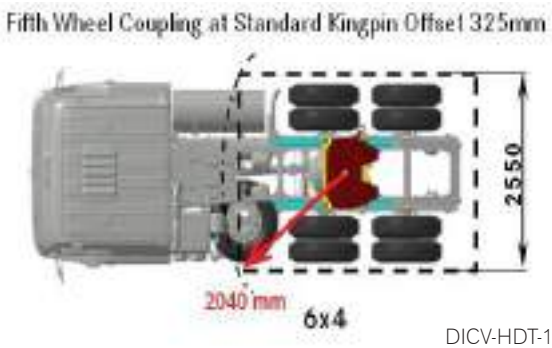

DICV-HDT-1952

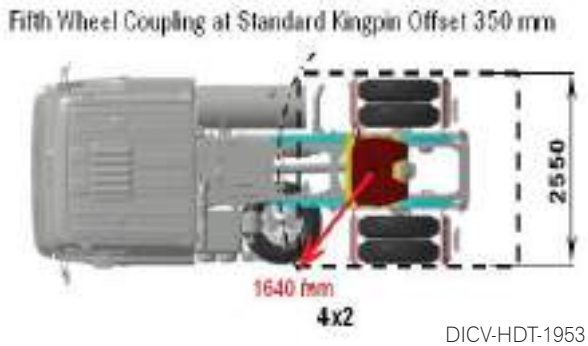

DICV-HDT-1953

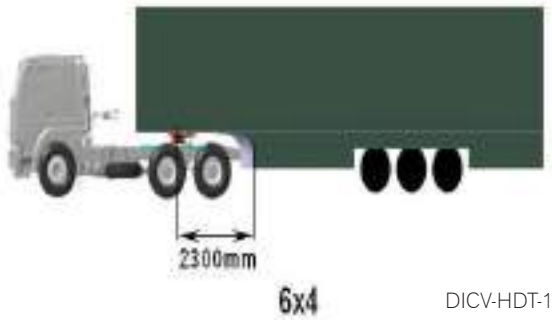

DICV-HDT-1954

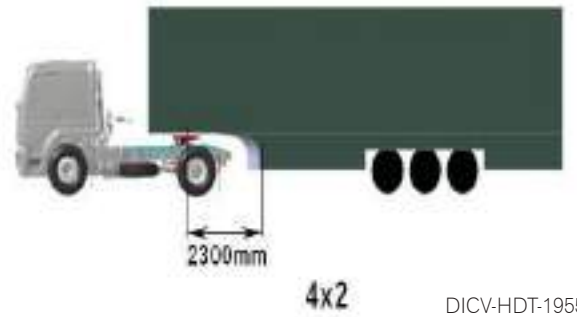

DICV-HDT-1955

https://truckmanualshub.com/

Damage Prevention Electrical System

WARNING

Work carried out incorrectly on the electrical system may impair its function. This may lead to the fail- ure of components or parts rele- vant to safety. All accident prevention regula- tions must be complied with when working on the vehicle. Comply with all national regula- tions and laws. Work on live electrical lines carries a risk of short circuit. Before starting work on the electrical system, disconnect the on-board electrical system from the power source, e.g. battery.

General Instructions:

- This vehicle is having advanced E&E system, Vehicle ECU, Engine ECU, ABS ECU & Cluster is connected by CAN.
- Don't tamper (cutting and joining of the existing wiring harness) for taking output for Lamps, Horn, Fan, Audio System, VTS etc.
- Don't tamper earth points and power net connections like Ignition Switch, Starter motor, Battery & Alternator etc.
- Use BharatBenz approved accessories to avoid tampering.
- After making changes in Electrical connections, check for fault codes and malfunction indicator lamp in the cluster.

Batteries

- Never place any metal objects or tools on the batteries.
- There is a risk of short circuit if the positive terminal clamp on the connected battery comes into contact with vehicle parts. This could cause the highly explosive gas mixture to ignite. You and others could be seriously injured as a result.
- When disconnecting the batteries, always disconnect the negative terminal clamp first and then the positive terminal.
- When connecting the batteries, always connect the positive terminal clamp first and then the negative terminal.
- Incorrect polarity of the supply voltage can cause irreparable damage to the control units.
- Never start the engine without a connected battery (battery terminals tightened).
- Do not disconnect or remove the battery terminals while the engine is running.
- If the batteries are flat, the engine can be jump-started using jump leads connected to the batteries of another vehicle. Observe the Instruction Manual. Do not use a quick charger for jump-starting.
- Only tow-start the vehicle with the batteries connected.
- Quick-charge the batteries only after disconnecting them from the vehicle's electrical system. Both the positive and negative terminals must be disconnected.

Lines, plug connections and control units

- A plug connection must not be unplugged from or plugged into the control units while the ignition is on.
- Lines must be protected from heat by means of insulation.
- Route cables in such a way that chafing cannot occur, particularly at crossover points and sharp edges. If necessary, use cable ducts or guide pipes.
- Do not carry out tests at connector terminals using unsuitable tools (test probes, wire ends, etc.). This may lead to contact damage and subsequent problems. Use suitable test leads.
- The department responsible must be consulted if a battery isolating switch is to be retrofitted.

https://truckmanualshub.com/

Electrical line routing examples

✕ **Incorrect**

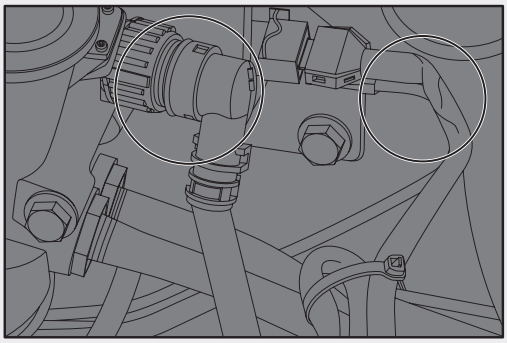

Electrical lines are poorly routed with tension.

✔ **Correct**

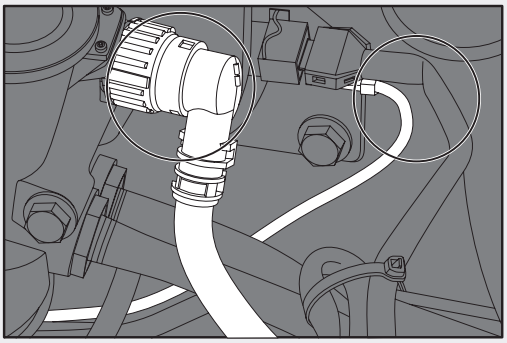

Electricals cables and connectors should be routed properly without tension.

DICV-HDT-2075

Note: All the modification comply as per AIS 093 (Rev.1):2015 standard

Electrical line routing examples

✕ **Incorrect**

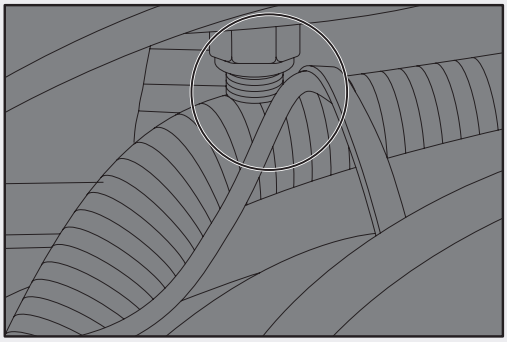

Line chafes against / lies on thread of a bolt.

✔ **Correct**

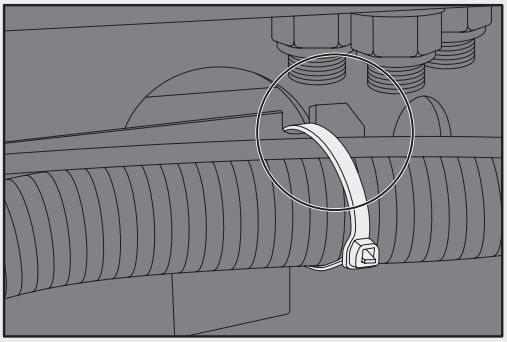

Electrical line should be routed with sufficient clearance to avoid contact with other components.

DICV-HDT-2076

Note: All the modification comply as per AIS 093 (Rev.1):2015 standard

https://truckmanualshub.com/

Electrical terminal for accessories (Inside cab)

Below illustration represents the location and wiring harness for the electrical accessories inside the cab.

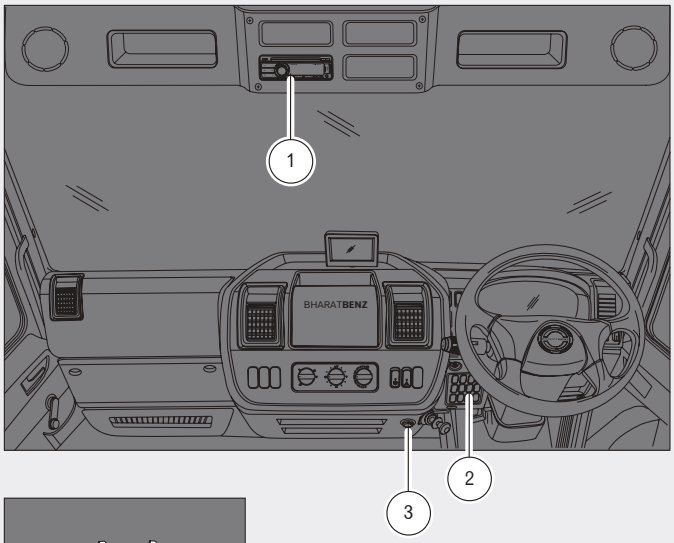

1. 24V Connector (1no) - for radio
Location: Overhead tray.
Harness: Roof wiring harness

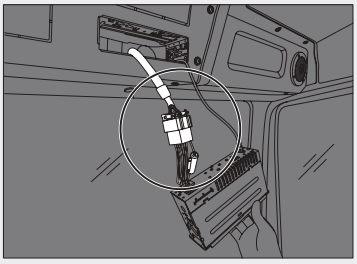

2. 24V Connector (2 nos) - For Electrical accessories Location: Left side of the steering column.
Harness: Dashboard wiring harness

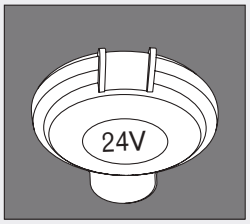

3. 24V Socket - For 24V output
Location: At the bottom of the center console.
Harness: Dashboard wiring harness

DICV-HDT-2077

Note: All the modification comply as per AIS 093 (Rev.1):2015 standard

https://truckmanualshub.com/

Brake Hoses/Cables and Lines

WARNING

Work carried out incorrectly on the brake hoses, cables and lines may impair their function. This may lead to the failure of components or parts relevant to safety.

- Compressed-air, fuel and gas lines, hydraulic

  lines and brake hoses must be covered or removed if necessary before carrying out any welding, drilling and grinding work and before working with cutting discs.
- After installing compressed-air, fuel and gas lines, hydraulic lines and brake hoses, the system must be tested for pressure loss and leaks.
- No other lines may be attached to brake hoses.
- Lines must be protected from heat by means of appropriate insulation.
- Line routing must be designed to prevent any increase in pressure loss.
- Comply with all national regulations and laws

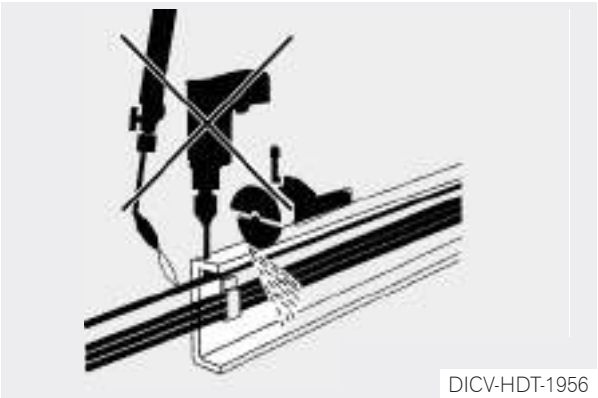

Fig: Safety for plastic lines

Mobile Communications Systems

If mobile communication systems (e.g. telephone, CB radio) are retro- fitted, the following requirements must be fulfilled in order to avoid malfunctions developing on the vehicle at a later stage.

Equipment

- Always use equipment approved by competent authorities as per the national regulations.
- The equipment must be permanently installed.
- Operation of portable or mobile equipment inside the cab is only permitted if this equipment is connected to a permanently installed external aerial.
- The transmitter must be installed separately from all other vehicle electronics. • Protect equipment moisture.
- Observe the permissible operating temperature.
- Protect the equipment against severe mechanical vibrations.

Aerial (for two-way radio sets)

• The aerial must be officially licensed.

Connection and wiring

- The connection should be made only from the additional 12-voltsockets inside the cabin for auxiliary consumers. It is recommended to take connection via an additional fuse.
- Disconnect the unit from the electrical system before jumpstarting.
- Cables should be wired via the shortest possible route (not looped) and twisted.
- Ensure that the system has a good earth connection to the body (aerial and equipment).
- The aerial and connecting cables between the transmitter, receiver and control panel must be routed separately from the vehicle wiring harness in the vicinity of the body earth.
- Make sure that the aerial cable is not kinked or crushed.

https://truckmanualshub.com/

Electromagnetic Compatibility (EMC)

The different electrical consumers on board the vehicle cause electrical interference in the vehicle's electrical circuit. At BharatBenz, electronic components installed at the factory are checked for their electromagnetic compatibility in the vehicle.

When retrofitting electric or electronic systems, they must be tested for electromagnetic compatibility and this must be documented.

The equipment must have been granted type approval in accordance with AIS 004 (for India) or any applicable regulation as per the national regulations.

Welding Work

All laws governing explosive substances must be

complied with the following safety measures must be observed to prevent damage to components caused by overvoltage during welding work:

- Disconnect the positive and negative terminals from the battery and cover them.
- Connect the welding-unit earth terminal directly to the part to be welded.
- Do not touch electronic component housings (e.g. control modules) and electric lines with the welding electrode or the earth contact clamp of the welding unit.
- Before welding, cover springs and air bellows to protect them from welding spatter. Do not touch springs with welding electrodes or welding tongs.
- Cover the fuel tank, natural gas and fuel system (lines, etc.) before carrying out welding work.
- Avoid welding work on inaccessible cavities in the cab.

PROPERTY DAMAGE

Do not connect the arc welder earth clamp to assemblies such as the engine, gearbox or axles.
Welding work is not permitted on assemblies such as the engine, gearbox, axles, etc.

ADDITIONAL INFORMATION

All welding should comply as per the AIS 093 (Rev.1):2015 standard.

Corrosion Protection Measures

General

In order to preserve the durability and quality standard of the vehicle, measures must be taken to protect it against corrosion when the vehicle is modified and after installing bodies and fittings.

- When chassis paint is damaged during body installation, proper primer and top coat to be used for repair Information on the design, execution of work and the requirements of the materials and components to be used with regard to corrosion protection is listed below. Information provided in this material may be used for body/equipment fabrication also. BharatBenz recommends to follow appropriate

https://truckmanualshub.com/

ADDITIONAL INFORMATION

Ensure proper cleaning of surface before primer coating.

procedures to protect body/ equipment from corrosion and to ensure that the base vehicle is not affected due the corrosion of body/ equipment. To achieve good corrosion protection, the areas of design (1), production (2) and materials (3) must be perfectly matched.

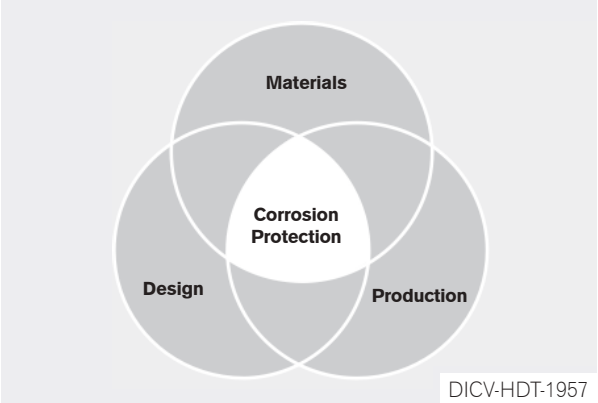

Fig: Corrosion protection

Damage to components

If components are damaged during disassembly (scratches, scuff marks), they must be professionally repaired. This applies especially for drilled holes and openings. Two- component epoxy primers are particularly suitable for repair work.

Cutting of components

When cutting and grinding work is carried out, the adjacent painted components must be protected against flying sparks and shavings. Grinding dust and shavings must be carefully removed because these contaminants can spread corrosion.

Corrosion protection on fittings

All fittings must receive adequate anti-corrosion priming prior to installation. In addition to galvanising, cataphoretic dip- priming and zinc-rich paint in sufficient coatings have proved satisfactory for this purpose.

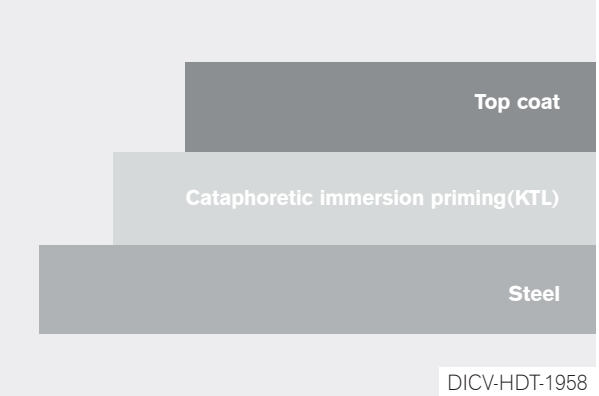

Fig: Body paint work

ADDITIONAL INFORMATION

All paint coat corrosion protection should meet as per JIS DO202 standard & as per AIS 093 (Rev.1):2015 standard.

https://truckmanualshub.com/

Examples of inferior corrosion protection

✕ **Incorrect**

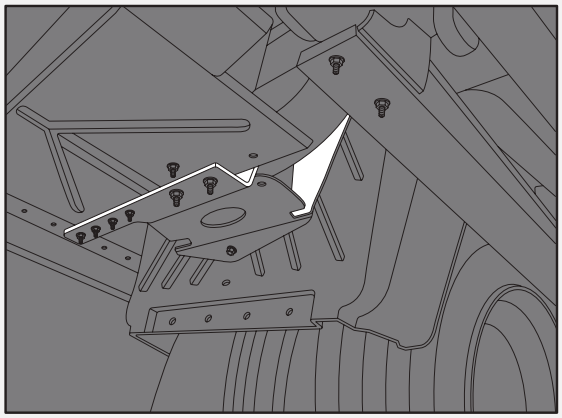

Top coat missing, parts are merely primed.

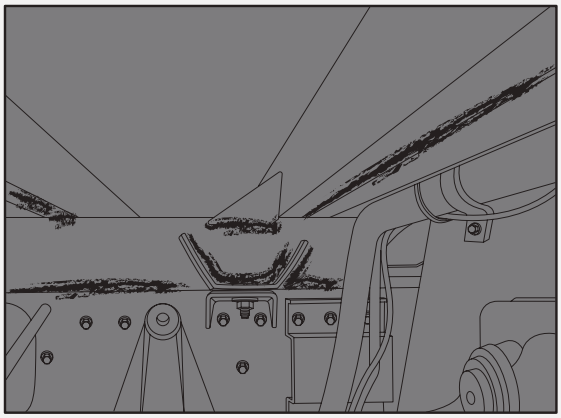

Corroded base metal used, top coat without surface preparation & primer application.

DICV-HDT-2068

Note: All the modification comply as per AIS 093 (Rev.1):2015 standard

Examples of inferior corrosion protection

✕ **Incorrect**

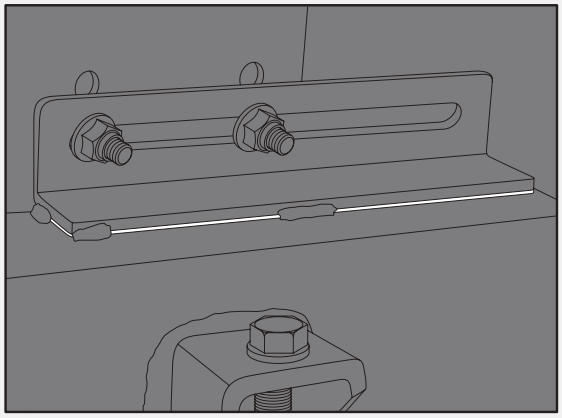

Gaps cannot be reached for surface coating.

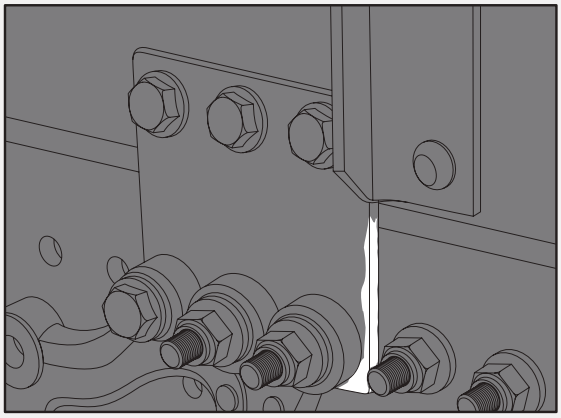

Parts are merely coated with top coat, primer is missing.

DICV-HDT-2069

Note: All the modification comply as per AIS 093 (Rev.1):2015 standard

https://truckmanualshub.com/

Corrosion Prevention in Welding Work

In order to avoid crevice corrosion at weld seams, the welds should be made in accordance with the examples shown.

Preparation

The welding area must be free from corrosion, grease, dirt or similar contamination. If painted surfaces are to be welded, the paint coat must first be removed by grinding or chemical stripping. If this is not done, the paint will burn and the residues can impair corrosion resistance.

After welding work

- Remove drilling shavings.
- Deburr sharp edges.
- Remove any burned paint and thoroughly prepare surfaces for painting.
- Prime and paint all unprotected parts.
- Preserve cavities with wax preservative.
- Carry out corrosion protection measures on the underbody and frame parts.

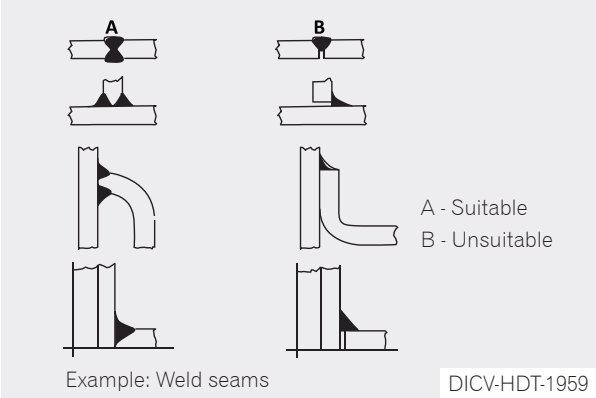

Fig: Suitable and unsuitable weld seams

ADDITIONAL INFORMATION

Plug and slot welds, particularly on horizontal surfaces, should be avoided due to the risk of corrosion. If they are unavoidable, these welds must receive additional preservation. Furthermore, avoid designs which allow moisture to accumulate. These must be fitted with additional drainage holes or gaps in the weld seam.

Bolted Connections

Finish-painted components

If painted parts are to be bolted together, the coats of paint must not cause settling in the bolted connections. In such cases, hard, high-density coatings such as cataphoretic immersion primers or powder coatings should be used. The coat thicknesses should be kept as small as possible (cataphoretic immersion primer approx. 20μm, powder coatings approx. 100 μm).

- If using bolts with serrations under the head, an additional top coat must be applied to touch up any paint damage.
- The use of hexagon socket or Torx socket bolts in a horizontal position is to be avoided, as moisture can accumulate in the bolt head under certain conditions, leading to corrosion.

Fasteners

In areas susceptible to corrosion always use bolts, nuts, etc. with higher corrosion resistance regardless of the required strength class.

Preventing contact corrosion

Direct contact between materials with different electrode potentials can lead to corrosion of the

https://truckmanualshub.com/

less noble material when exposed to moisture and salt ions. When selecting materials, avoid the following combinations:

- Chrome/nickel-steel with aluminium
- Chrome/nickel-steel with zinc- coated steel

Insulation by coating

Contact corrosion can be prevented by using insulation such as washers, sleeves or bushings. Even in this case, however, the connecting points must not be persistently exposed to moisture.

Vehicle cleaning and care

When the vehicle is handed over to the body manufacturer, it must immediately be cleaned of salt and dirt. If it is to be stored for some time, the vehicle must be preserved.

During modification it must be ensured that load bearing components are additionally protected against aggressive chemicals and environmental influences. If the vehicle comes into contact with chemicals or salts (e.g. snow-clearing operations), it must be cleaned thoroughly at regular intervals.

PROPERTY DAMAGE

A conductive connection occurs if two different metals are brought into contact with each other through an electrolyte (e.g. air humidity). This causes electro-chemical corrosion and the less base of the two metals is damaged. The further apart the two metals are in the electrochemical potential series, the more intense electro- chemical corrosion becomes. For this reason, electrochemical corrosion must be prevented by insulation or by treating the components accordingly, or it can be minimized by selecting suitable materials

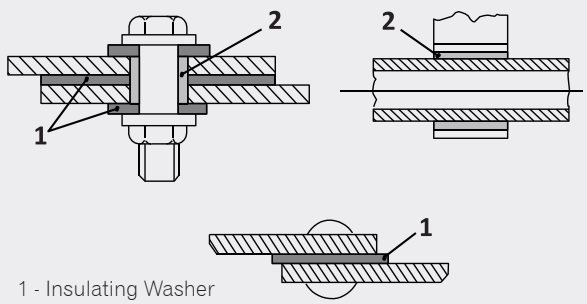

1 - Insulating Washer
2 - Insulating Sleeve

DICV-HDT-1960

Fig: Insulation examples

Painting Work

ENVIRONMENTAL NOTE

Paints and lacquers are harmful to health and to the environment if they are not handled correctly. Dispose of paints and lacquers in an environmentally responsible manner.

Mask the following areas before painting:

- Sealing surfaces
- Windows
- Contact areas between the wheels and wheel hubs
- Contact areas for wheel nuts
- Breathers on gearboxes, axles, etc.
- Door locks

PROPERTY DAMAGE

Do not exceed a temperature of 80 °C for drying the paint.

https://truckmanualshub.com/

Engine

A warning buzzer is installed in the cab within the hearing range of the driver.

The buzzer serves as an acoustic warning when e.g.:

- the maximum permissible engine speed is exceeded.
- the maximum permissible coolant temperature is exceeded.
- the coolant level is too low.
- the oil level or oil pressure in the engine is too low.

PROPERTY DAMAGE

When the warning buzzer sounds, the operating safety of the vehicle is in danger. Switch OFF the engine immediately (taking into account the traffic situation) and ascertain the cause.
If cranes are operated from outside the cab (e.g. loading crane), an additional visual warning system must be installed in the vicinity of the controls

Leaf Springs

Parabolic springs

- Damaged parabolic springs must be completely replaced.
- Individual spring leaves may not be renewed.
- Only use spring leaves which have been tested and approved for the vehicle model in question. Reinforcement by installing additional spring leaves is not permitted.
- Do not damage the surface or the corrosion protection of the spring leaves when carrying out installation work.
- Before carrying out welding work, cover the spring leaves to protect them against welding spatter. Do not touch springs with welding electrodes or welding tongs.

Tilting the Cab

WARNING

Before tilting the cab, please make sure that you read the “Tilting the cab” section ▶ **DRIVING AND OPERATION.** You could otherwise fail to recognise dangers, which could result in injury to yourself or others.

Towing and Tow-Starting

WARNING

Before towing or tow-starting, please make sure that you read the “Towing” section ▶ **DRIVING AND OPERATION.** You could otherwise fail to recognise dangers and cause of an accident, which could result in injury to yourself or others.

PROPERTY DAMAGE

Failure to observe the instructions in this Operator’s Manual can result in damage to the vehicle.

https://truckmanualshub.com/

Risk of Fire

WARNING

Work on live electrical lines carries a risk of short circuit.
Before starting work on the electri- cal system, disconnect the on- board electrical system from the power source, e.g. battery.
With all bodies make sure that neither flammable objects nor flammable liquids can come into contact with hot assemblies (including through leakages in the hydraulic system) such as the engine, gearbox, exhaust system, turbocharger, etc.

Appropriate caps, seals and covers must be installed on the body in order to avoid the risk of fire

Storing and Handing Over the Vehicle

Storage

To prevent any damage while vehicles are in storage, BharatBenz recommends that they be serviced and stored in accordance with the manufacturer's specifications (Refer ▶ **BODY BUILDING GUIDELINES** to the maintenance and repairs).

Handover

To prevent damage to the vehicle or to repair any existing damage, BharatBenz recommends that the vehicle be subjected to a full function check and a complete visual inspection before it is handed over (Refer ▶ **BODY BUILDING GUIDELINES** to the maintenance and repairs).

Modification to the Basic Vehicle

WARNING

Do not modify any bolted connections that are relevant to safety, e.g. that are required for wheel alignment, steering or braking functions. When unfastening bolted connections make sure that, when work is complete, the connection again corresponds with the original condition. Welding work on the chassis/body may only be carried out by trained personnel. The body, the attached or installed equipment and any modifications must comply with the applicable laws and directives as well as work safety or accident prevention regulations, safety rules and accident insurer leaflets.

ADDITIONAL INFORMATION

Further information on bolted and welded connections can be found in "Planning of bodies" and "Damage prevention" ▶ **DRIVING AND OPERATION.**

Chassis Frame Extension and Wheelbase Modifica- tion

Chassis frame extension and wheelbase modifications on BharatBenz chassis are not

https://truckmanualshub.com/

permitted. Incase of violation, Daimler India Commercial Vehicles Pvt. Ltd., provides no guarantee for any consequences.

PROPERTY DAMAGE

Modification of wheelbase on frame overhang could lead to violation of national regulations. Please ensure that no national regulations are violated at any case.

Drilling Work on the Vehicle Frame

PROPERTY DAMAGE

Drilling work in the chassis frame is not permitted on BharatBenz chassis. Incase of violation, Daimler India Commercial Vehicles Pvt. Ltd., provides no guarantee for any consequences.

Welding Work on the Vehicle Frame

PROPERTY DAMAGE

Welding work on the frame is not permitted.

ADDITIONAL INFORMATION

All the modification should comply as per the AIS 093 (Rev.1):2015 standard.

Brake and Compressed-Air Systems

Recommended Trailer Brakes

- Below mentioned brake specifications are strongly recommended for the trailers which are to be used on all BharatBenz tractors.

Sl. No.	Aggregate	Recommendation
1	Foundation brakes	Minimum 410x180mm (Diameter x Lining Width)
2	Brake Chambers	Minimum Type 24 brake chambers
3	Slack adjuster	Automatic slack adjust- ers are recommended Preferred lever length - 160mm
4	Pneumatics	Ensure emergency function available in case of ABS vehicles. Relay emergency valve should be available in case of non ABS trailer brake circuit.
		Reservoir capacity Minimum – 90L
		Palm couplings as per ISO: 1728
		• Air Piping - Properly routed and fastened nylon tubes. • Nylon pipe material:

https://truckmanualshub.com/

Sl. No.	Aggregate	Recommendation
5	Parking brakes	• Spring brake actuators are recommended at least on two axles in case of 3 axle trailers. • Winding type parking brakes to be provided in the absence of SBA.

PROPERTY DAMAGE

Modifications on the brake system and circuit are not permitted. Only take connection from port 24 for adding auxiliary air consumers, separately fused from other consumers.

WARNING

Work carried out incorrectly on the brake system may impair its function. This may lead to the failure of components or parts relevant to safety. This could cause you to lose control of the vehicle and cause an accident with possible injury to yourself and others.

All accident prevention regulations must be complied with when working on the vehicle. Comply with all national regulations and laws.

Compressed Air System

BharatBenz recommends that compressed air brake lines (in case of any unexpected damage during body building) only be replaced complete with BharatBenz spares. In case of auxiliary consumer connection from port 24, BharatBenz recommends that use only tested line connections which have been approved for the model of vehicle concerned.

The approved systems for line connections are:

- VOSS 232 for (all diameters)

PROPERTY DAMAGE

Connectors that have not been approved are only accepted for use on separately fused auxiliary consumer circuits connected to port 24.

Installation of Lines

Lines must be routed at a safe distance from heat sources, sharp- edged and moving parts. Use plastic straps for fastening. The maximum permissible distance between loops is 500 mm.

Frame Modifications

Chassis frame extension and wheel- base modifications on BharatBenz chassis are not permitted. Incase of violation, Daimler India Commercial Vehicles Pvt. Ltd., provides no guarantee for any consequences.

PROPERTY DAMAGE

Any frame modification, other than reduction of frame overhang, is not permitted. Reduction of frame overhang shall be done only after consulting responsible department (Refer ▶ **BODY BUILDING GUIDELINES** to the contact details for technical support)

https://truckmanualshub.com/

ADDITIONAL INFORMATION

All the modification should comply as per the AIS 093 (Rev.1):2015 standard.

Mounting of Implements and Auxiliary Compo-nents

WARNING

The use of parts, assemblies or conversion parts and accessories which have not been approved may jeopardise the safety of the vehicle.
Before installing any attach- ments, special-purpose bodies, equipment or carrying out any modifications to the basic vehicle and/or its assemblies, you must read the relevant sections of the Vehicle Instruction Manual, as well as the operating and assem- bly instructions issued by the manufacturer of the accessories and items of optional equipment. You could otherwise fail to recog- nise dangers, which could result in injury to yourself or others.
Official acceptance by public test- ing bodies or official approval does not rule out safety hazards.
All national laws, directives and registration requirements must be complied.

Attachment to the Chassis Frame

- BharatBenz recommends the use of flange head bolts and nuts complying with MBN standard (MBN) 10105 and 13023, strength class 10.9, pitch 1.5 mm, and self-locking nuts. (Refer ▶ **BODY BUILDING GUIDELINES** to bolted connections)
- Use existing holes.
- Use the number of bolts appropriate to the load.

Mounting at side

- Install the bracket and assembly near a cross member. Fitting additional cross members is not permitted.
- Fit the reinforcement plate to the inside of the frame web.

No load may be applied to the centre of the web of the longitudinal member (diaphragm effect). If this is unavoidable, make sure that there is a large area of support on both sides of the web.

Mudguards and Wheel Arches

Tractor driving condition - with- out trailer

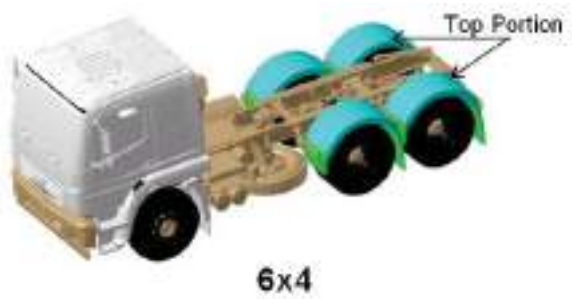

- Top portion of the rear fenders to be installed in position as shown in the above figure during tractor alone driving condition.

Tractor driving condition - with trailer

- Top portion of the rear fenders should be removed Since in operation the trailers may hit the top portion of fenders.

https://truckmanualshub.com/

- The distance from the tyre to the mudguard or wheel arch must be sufficient, even when snow chains or anti-skid chains are fitted and at full spring compression (including under torsion). The dimensional data in the quotation drawings must be observed.
- On chassis with standard bore holes for mudguard brackets, use these bore holes to secure the brackets.

Side Underride Guards

According to Central Motor Vehicle Rules, a side underride guard is stipulated for vehicles. Exceptions to this regulation are semitrailer tractor vehicles, machines and special-purpose vehicles whose purpose cannot be fulfilled if side underride guards are fitted.

- The function and accessibility of all equipment on the vehicle must not be impaired.
- The underride guards must extend continuously from the front to the rear wherever possible.
- All national regulations must be fulfilled.
- Follow the installation dimensions provided

▶CMVR NORMS

Compressor Mounting

Arrange compressor brackets in such a way that the load application covers a large area on the chassis frame; use a pressure distribution plate if necessary.

- Do not attach the compressor brackets in the middle of the longitudinal body member web (diaphragm effect).
- The reinforcing bracket must have a minimum side measurement of 80 mm on the lower frame flange.

BharatBenz recommends the use of BSK 46 (min. St 52) material.

For compressors with a weight > 50 kg, reinforcement measures are required, depending on the installation position:

Variant 1

Compressor bracket lies near a vehicle cross member (i.e. the compressor bracket is bolted to the cross member gusset).

Semitrailer tractor

An additional plate must be fitted on the longitudinal body member to balance the thickness of upper semitrailer bracket.

ADDITIONAL INFORMATION

Adjust the material thickness of the semitrailer bracket.

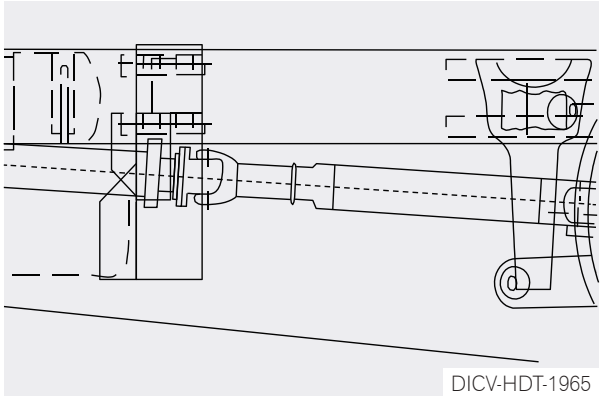

Fig: Compressor mounting on cross member DICV-HD

Variant 2

Only part of the compressor bracket lies near a vehicle cross member (i.e. the compressor bracket can only be partly bolted to the cross member gusset).

Semitrailer tractor:

A reinforcing bracket must be fitted underneath on the longitudinal body member.

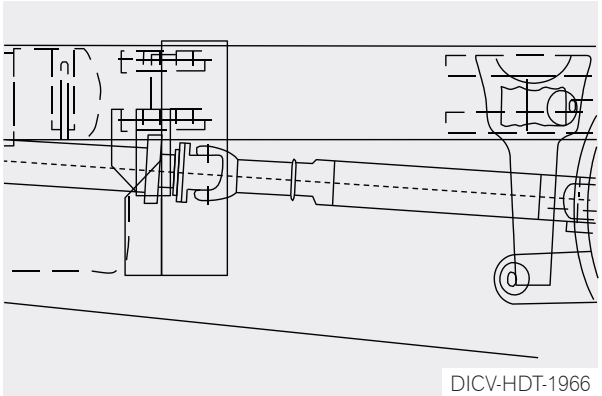

https://truckmanualshub.com/

Fig: Compressor mounting near cross member

Variant 3

Compressor bracket lies outside the gusset of the vehicle cross member.

Semitrailer tractor

There must be a reinforcing bracket (material thickness of at least 8 mm) and extending from the centre of the cross member immediately in front, to at least the centre of the cross member immediately behind.

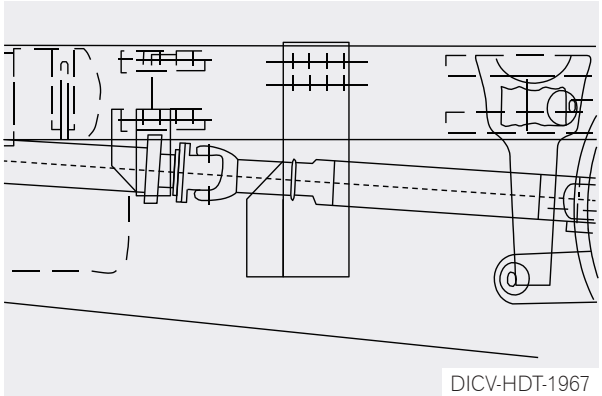

Fig: Compressor mounting away from cross member

Power Supply for Auxil- iary Consumers

- Sockets provided at appropriate positions for installing marker lamps on the body.
- 12V or 24V sockets provided in the cabin shall be used for power supply for auxiliary consumers.
- For any additional requirements, contact responsible department.

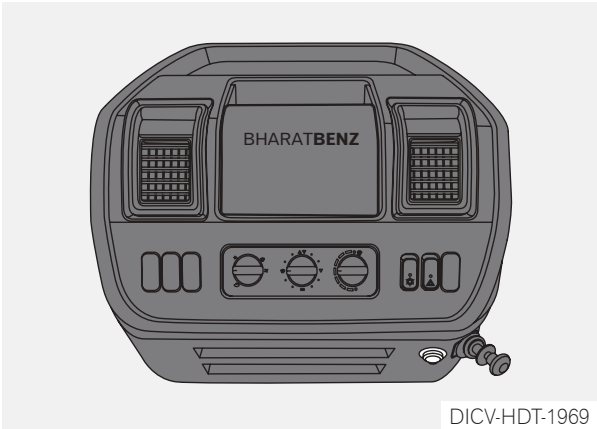

PROPERTY DAMAGE

Ensure to properly re-fit all sealing plugs in the cabin whenever removed. This will help to avoid water ingress and short circuit.

Power Take-Off

Power take-off versions available from the factory:

- Gearbox-driven power take-off
- Engine power take-off at the front

Consider the following when retrofitting power take-off:

- After installation, fill the gearbox with oil up to the lower edge of the filler opening.
- Allow the engine to run for approx. 2 minutes and engage the power take-off.
- Check the oil level again and correct if necessary.

Installation of a non BharatBenz power take-off must be approved by the department responsible (Refer ▶ **BODY BUILDING GUIDELINES** to the contact details for technical support). The operational reliability of the gearbox cannot be guaranteed if unsuitable power take- offs are used.

- The power take-off version and choice of ratio both depend on the power output and speed of the equipment to be driven.
- Gearbox-driven power take-off can only be engaged and disengaged with the vehicle stationary.
- Data on the maximum transferable torque (Nm) for the individual power take-off are guide values for operation without shock and vibration.
- The data was based on a highly durable gearing design and a calculated service life at maximum output. The additional mass forces of the driven PTO assemblies are not taken into account.
- Select the power take-off ratio such that a minimum engine speed of 650 to 800 rpm is maintained with the power take- off under load. The power output should be within the range of the maximum engine torque.
- Exposed propeller shafts or pulleys must be covered.
- Belts or chain drives must not be fitted to the drive shaft or flange of a power take-off. In special cases where absolutely necessary,

https://truckmanualshub.com/

submit drawings and required data for approval (Refer ▶ **BODY BUILDING GUIDELINES** to the contact details for technical support).

PROPERTY DAMAGE

Failure to observe these instruc- tions could result in damage to the gearbox.

Gearbox-Driven Power Take-Off

The power take-off is driven by the gearbox countershaft:

- Refer ▶ **INSTRUMENT AND CONTROLS** for notes on engaging and disengaging the power take-off.
- The power take-off is connected to the manual gearbox oil circuit.
- The maximum permissible weight moment must not be exceeded if a hydraulic pump is directly connected.

Power take-off without an oil cooler are only approved for brief operation at full power.

Brief operation:

- Maximum running time approx. 30 minutes
- Subsequent cooling OFF period at least 30 minutes

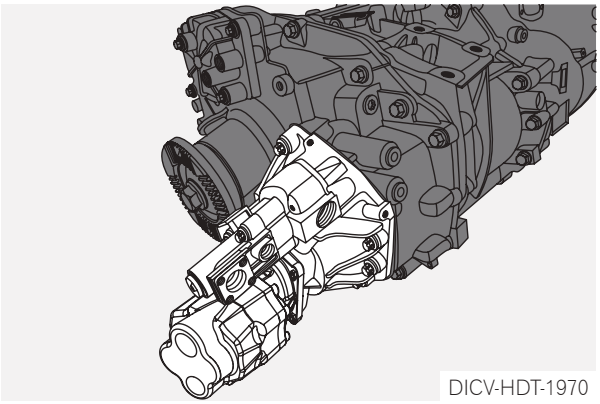

Fig: PTO on gearbox

Engine Power Take-Off at the Rear (Only for Model Designation (2xx))

An engine power take-off at the rear is available for vehicles with series 900 engines. The engine power take- off cannot be engaged or disengaged. Direction of rotation identical to that of the engine. Gearbox ratio: 1.071 x engine speed A certificate of non-objection is required from the department responsible when retrofitting assemblies (Refer ▶ **BODY BUILDING GUIDELINES** to the contact details for technical support). Do not exceed the maximum permissible torque. Provide overload protection (e.g. pressure relief control for hydraulic pumps, and overload clutch, anti-lock protection or breakage protection for other assemblies).

PROPERTY DAMAGE

Failure to observe these instruc- tions could result in damage to the major assemblies.

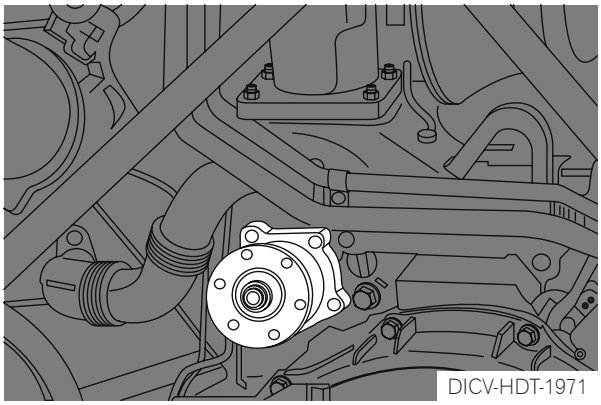

Fig: Engine power take-off at the rear

Detail	Value
Maximum transferable torque in Nm	600
Briefly permissible excess torque (e.g. when pulling away and changing gear)	20%
Maximum moment of inertia (resilient coupling) in kgm^2	0.02

https://truckmanualshub.com/

The below table represents the Engine PTO fitment details.

Sl. No.	Product	1623R	2523R	3123R	3723R	4023T	4928T
1	Variant	Yes	No	Yes	No	No	No
2	PTO Fitment	Engine					
3	PTO Type	Flange					
4	Engine Variant	OM906 (DE175BS4)			OM906 (DE210BS4)		
5	Engine Max Torque	850 Nm			1120 Nm		
6	Min Engine Speed @ PTO Engaged	900 rpm					
7	Max Engine Speed @ PTO Engaged	2700 rpm					
8	PTO Ratio	1.07143					
9	Max. rated PTO Torque	<= 600 Nm					
10	Min. Output Speed (PTO)	643 rpm					
11	Max. Output Speed (PTO)	2893 rpm					
12	Rotation from Rear of transmission	Counter - clockwise					
13	PTO Mount Location (Engine/Transmission)	In engine flywheel housing					
14	PTO Actuation Control	Constantly actuated PTO switch is only to raise the rpm from 600 to 900					

The below table represents the Transmission PTO fitment details.

Sl. No.	Product	914R	1214R	1617R	1623R	2523R	3123R	3723R	4023T	4928T
1	PTO Fitment	Transmission								
2	PTO Type	Flange/Spline								
3	Transmission	MO36	G85		G85			G131		
4	Engine Variant	4D34i			OM906 (DE175BS4)			OM906 DE175BS4)	OM906 (DE210BS4)	
5	Engine Max Torque	420	520		810			1000		
6	Max Engine Speed @ PTO Engaged	2500			1600					
7	PTO Ratio	1.807	1.607		1.607			1.357		
8	Max. rated PTO Torque	758	836		1302			1357		
9	Rotation from Rear of transmission	Clockwise			Clockwise					
10	PTO Mount Location (Engine/Transmission)	Side mounted	Rear Mounted		Rear Mounted					
11	PTO Actuation Control	Electro Pneumatic			Electro Pneumatic					

Rigid Drive

- The moment of inertia of the driven rotary masses (including propeller shaft) must not exceed 0.01 kgm².

Resilient Drive

- The original resilient coupling (code N54) must be fitted if the moment of inertia is greater than 0.01 kgm².
- Always fit the resilient coupling on the assembly to be driven.
- Take the length of the resilient when determining the length of the propeller shaft.
- The engine speed must not fall below 1,200 rpm when the power take-off is operating at full load. If operation at lower speeds is necessary, e.g. because of noise, a lower engine speed may be acceptable if the department responsible performs the necessary tests and is satisfied with the results.

Reich coupling dimensions (mm)							
a Ø	b Ø	c Ø	e	f Ø	Holes	OD	Width
102	84± 0.1	57h8	2	M8	6	212	83

Coupling flange dimensions

Coupling dimensions (mm)						
aØ	bØ	cØ	d	e	fØ	Holes
	84±				8.1±0.1	

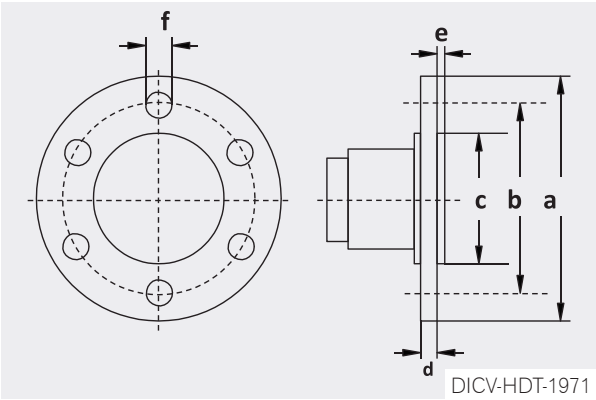

Fig: Companion flange

PTO Installation position

Engine	A (mm)	B (mm)
OM 906	362	128

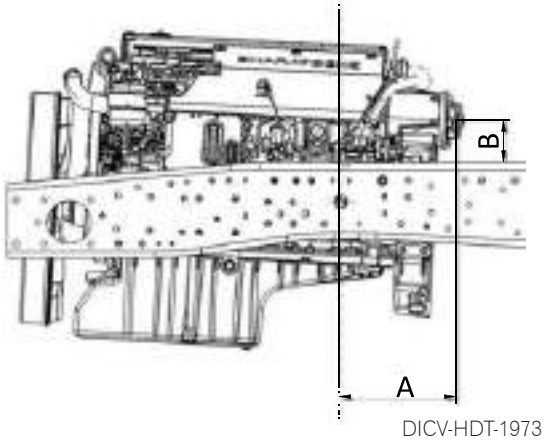

Fig: Engine power take-off output position

A - Centre of front axle to centre of coupling flange
B - Top edge of frame to centre of coupling flange

The centre of the engine power take-off is 162 mm from the centre of the crankshaft.

ADDITIONAL INFORMATION

All the modification should comply as per the AIS 093 (Rev.1):2015 standard.

Installation of Propeller Shafts

Observe the following when installing propeller shafts:

- Installation guidelines of the propeller shaft manufacturer.
- If necessary, fit several propeller shafts with intermediate bearings.
- The flanging surfaces must be completely flat.
- The angular offsets must be identical at both universal joints (ß1 = ß2). They must not be greater than 6° or less than 1°.
- Balancing plates must not be removed.
- Make sure that the marks are aligned on the propeller shafts during installation.
- Eliminate any vibrations, e.g. by optimising the propeller shaft angles.

PROPERTY DAMAGE

Failure to observe these instructions could result in damage to the major assemblies.

Types of Angular Offset

Angle in one plane

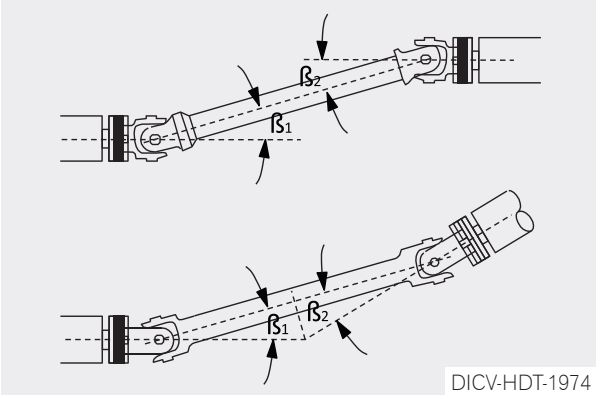

Fig: Angle in one plane

Angle in two plane

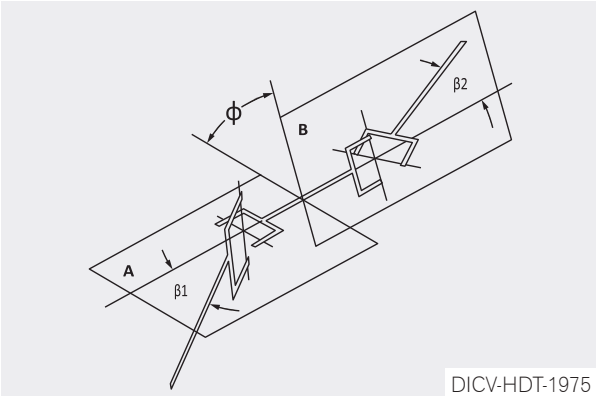

Fig: Angle in two plane

Cab Roof Load Carrier

BharatBenz cab is reinforced for adding a cab roof load carrier that could be used for certain specific purposes. Necessary mounting provisions are provided as standard fitment on all cabs.

DICV standardized design concept and fitment procedure is available with BharatBenz Authorised dealerships. It is strongly recommended to follow the standard design and procedure provided by DICV and use the BharatBenz standard accessory only. Incaseof violation, Daimler India Commercial Vehicles Pvt. Ltd., provides no guarantee for any consequences.

Please ensure installation of roof load carrier complies with all local regulations as applicable.

ADDITIONAL INFORMATION

All the luggage carrier/storage space should comply as per AIS 093 (Rev.1):2015 standard.

Construction of Bodies

WARNING

Do not modify any bolted connec- tions that are relevant to safety, e.g. that are required for wheel alignment, steering or braking functions. Appropriate caps, seals and covers must be installed on the body in order to avoid the risk of fire.

https://truckmanualshub.com/

WARNING

When unfastening bolted connec- tions make sure that, when work is complete, the connection again corresponds with the original con- dition. Welding work on the chas- sis/body may only be carried out by trained personnel.The body, attached or installed equipment and any modifications must com- ply with the applicable laws and directives as well as workplace safety or accident prevention regu- lations, safety rules and accident insurer leaflets. With all bodies make sure that neither flammable objects nor flammable liquids can come into contact with hot assem- blies (including through leakages in the hydraulic system) such as the engine, gearbox, exhaust sys- tem, turbocharger, etc.

PROPERTY DAMAGE

Bodies on which the gearbox can be expected to be exposed to high levels of water, e.g. cleaning water (flushing, overflowing or similar), require an effective cover over the gearbox (gearbox guard) which will prevent abrupt cooling as well as water ingestion via the gearbox breather.

ADDITIONAL INFORMATION

Further information on bolted and welded connections can be found in “Planning of bodies” and “Damage prevention” ▶ **BODY BUILDING GUIDELINES**

Trailer integration with fifth wheel coupling

Procedure to couple a trailer

- Apply and ensure proper greasing on coupling top surface to avoid abnormal wear & noisy operation.
- Use wheel chock to secure the semi-trailer to prevent its rolling.
- The fifth wheel coupling must be ready to engage then open the fifth wheel coupling lock as shown below.

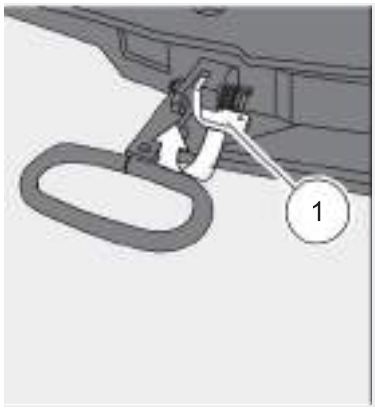

Lift the catch (1)

DICV-HDT-2000

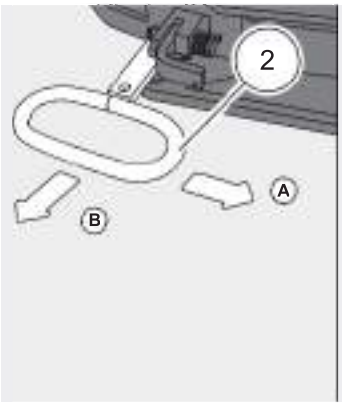

With the handle (2) pulled out. Swing it forwards into position C and engage

Pull out the handle (2) as far as possible into position B

DICV-HDT-2001

https://truckmanualshub.com/

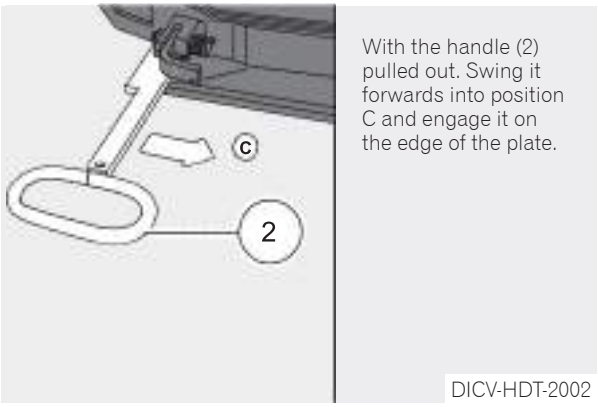

Fig: To open fifth wheel coupling

- Check & adjust the height of the semi-trailer. The skid plate must ideally be at the same height or no more than 50mm lower than the coupling plate on the fifth wheel coupling.

- Drive the tractor unit under the semi-trailer concurrently see the center axis between king pin and fifth wheel coupling to be aligned in the same line.
- The locking mechanism will close automatically when it gets engaged.
- Check the locking mechanism as shown below.

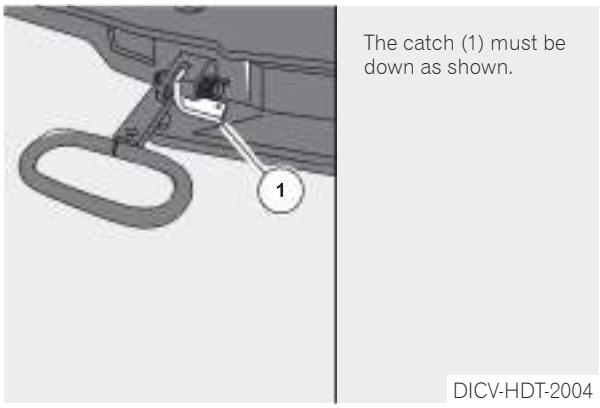

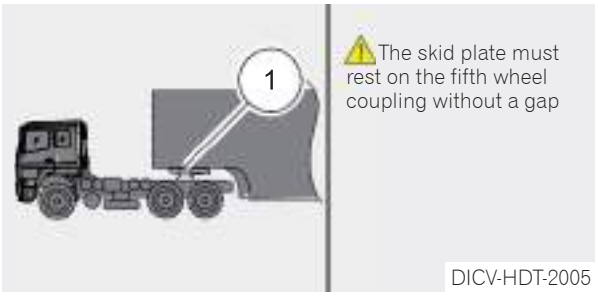

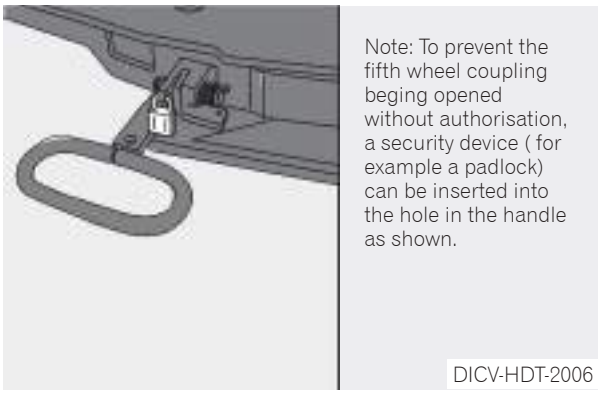

Fig: To check the locking mechanism

Trailer integration with fifth wheel coupling

Procedure to uncouple a trailer

- Park the vehicle on flat, firm ground.
- Secure the semi-trailer to prevent its rolling away by means of wheel chock.
- Extend the landing leg until the fifth wheel coupling has almost no strain on it.
- Keep wooden blocks underneath the landing leg to avoid any damage on the bottom.
- Disconnect the air & electrical lines.
- Open the fifth wheel coupling as shown below.

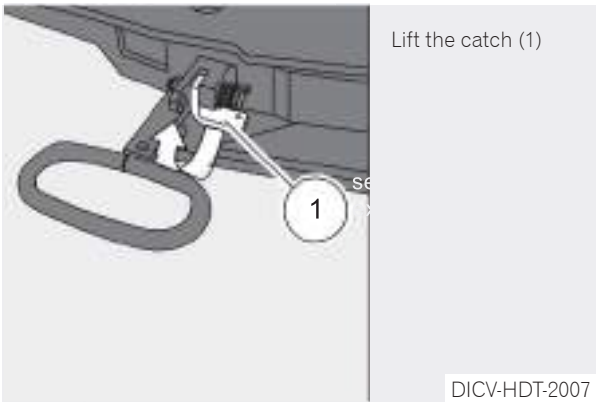

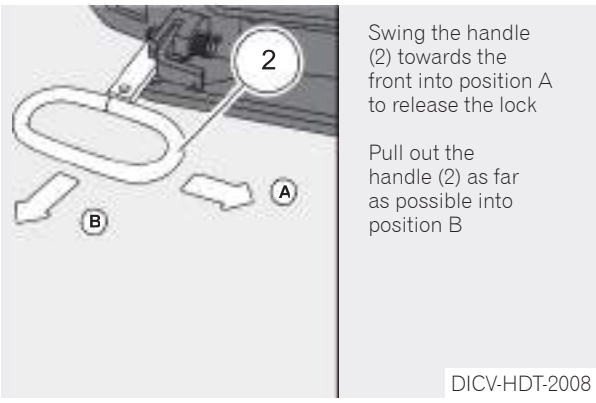

https://truckmanualshub.com/

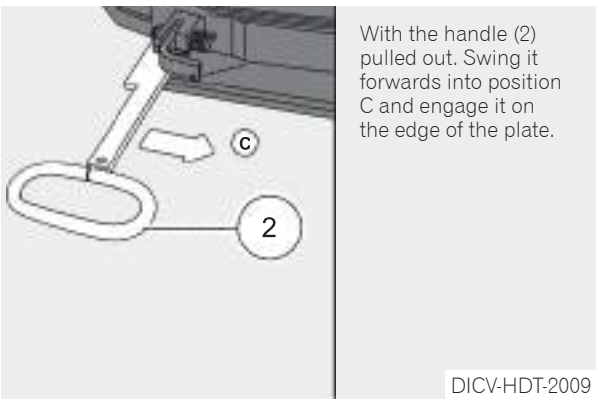

Fig: To open fifth wheel coupling

- Drive the tractor unit away from the semi-trailer.
- The fifth wheel coupling will be automatically ready for next engagement.

Safety Information to be followed while integrating fifth wheel coupling:

- The fifth wheel coupling may only be used by authorized persons.
- Only use the fifth wheel coupling and skid plate on the semi-trailer if they are in perfect technical condition.
- The front of the skid plate must not be sharp, otherwise it may damage the fifth wheel coupling.
- Comply with the relevant safety regulations when coupling up a semi-trailer, for example the Health and Safety at Work Regulations.
- Only connect a semi-trailer on firm, flat ground. The skid plate must be at the same height or preferably lower, no more than 50 mm, than the coupling plate on the fifth wheel coupling.
- Check the locking mechanism before starting the journey to ensure that it is properly locked. Only drive the vehicle with the locking mechanism locked and secured.

Safety Information for Servicing:

- Standard grease (Castrol AP3, Balmerol MP3) to be used while servicing. For detailed service instructions refer ▶ **TECHNICAL DATA**
- The servicing work should only be completed by trained personnel.

Electrical system integration

Introduction

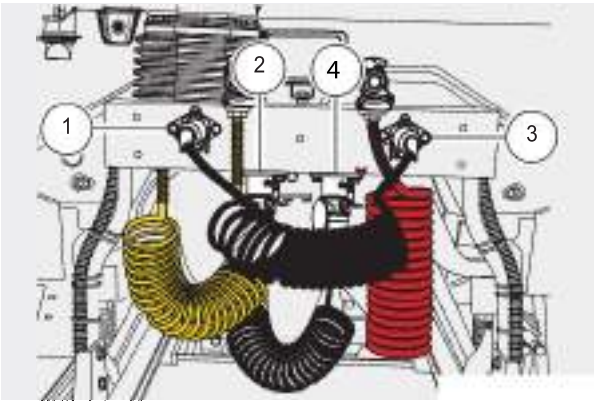

1 - 7 Pin socket for trailer lighting.
2 - 7 Pin socket for trailer ABS unit.
3 - Dummy socket for trailer lighting.
4 - Dummy socket for ABS unit.

WARNING

Always connect the electrical connection on dummy sockets when not connected to the trailer.

Coupling/De-coupling Tractor and Trailer

Coupling:

1 Connect tractor 7 Pin “Lighting” male socket to trailer 7 Pin “Lighting” female socket so that they look straight & no error occur (Refer callout 1 on Tractor and trailer image).
2 Connect tractor 7 Pin “ABS” male socket to trailer 7 Pin “ABS” female socket, so that they look straight & no error occur (Refer callout 2 on Tractor and Trailer image).
3 Make sure all electrical connections are safely supported & spiral wires are freely hanging to avoid damage & pullout of cables.

https://truckmanualshub.com/

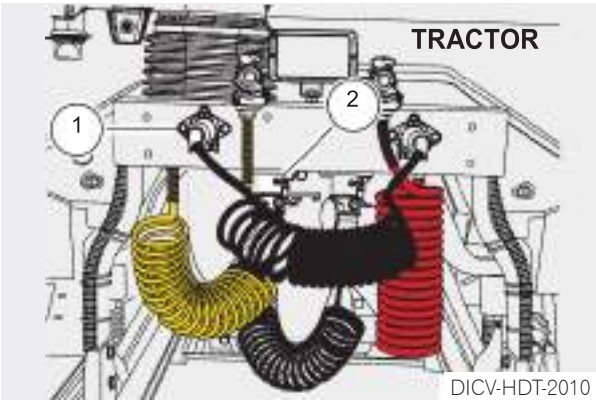

DICV-HDT-2010

De-Coupling:

1 Disconnect supply 7 Pin lighting connection followed by 7 Pin ABS connection from trailer.
2 Mount 7 Pin sockets on the dummy socket provision provided on the palm coupling bracket as shown in the previous slide.
3 Make sure all electrical lines are properly supported to avoid any damage.

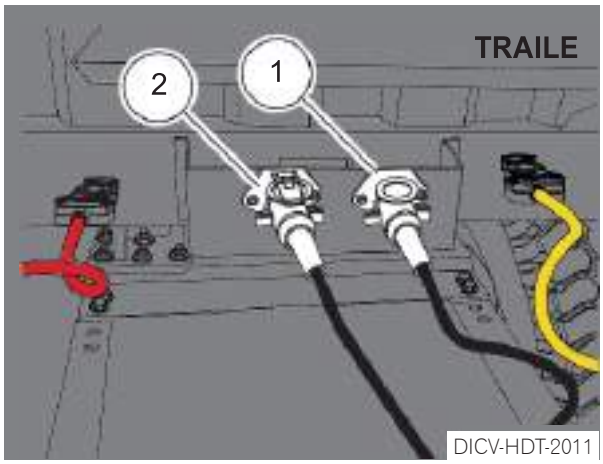

DICV-HDT-2011

Pneumatic system integration

Coupling/De-coupling Tractor and Trailer

Coupling:

1 Check palm coupling seals and first connect tractor air “Control” line (Yellow color) to trailer “Control” palm coupling (yellow color) so that they look straight (Refer callout 1 in Tractor and Trailer image).
2 Then connect tractor “Supply” air line (Red color) to trailer “Supply” palm coupling (Red color) so that they look straight (Refer callout 2 in Tractor and Trailer image).
3 Make sure air lines are safely supported & spiral cables should not get crushed or caught while tractor is articulating with trailer. Check for air leakage & arrest if any.

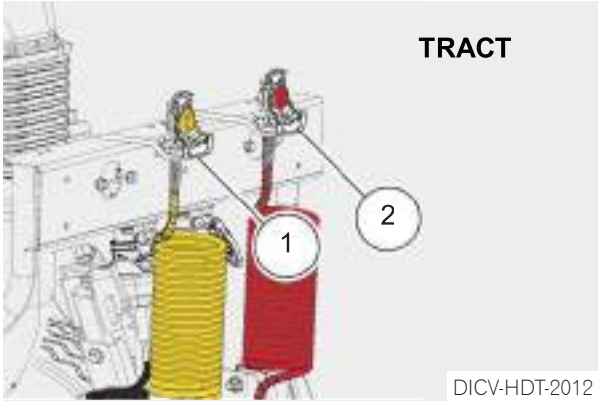

DICV-HDT-2012

De-Coupling:

1 Disconnect first supply air line (Red color) followed by control line (Yellow color) from trailer.
2 Mount air line palm couplings on palm coupling mounting bracket as shown in the previous slide.
3 Make sure that the lines are properly supported & there should not be any damage while driving the tractor.

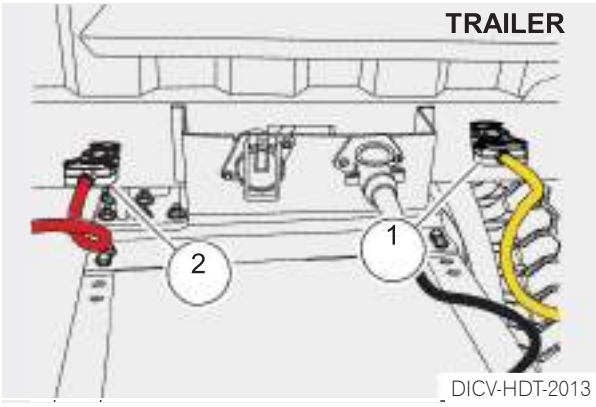

DICV-HDT-2013

Chassis Drawing

4023TT (Facelift) - 3600WB

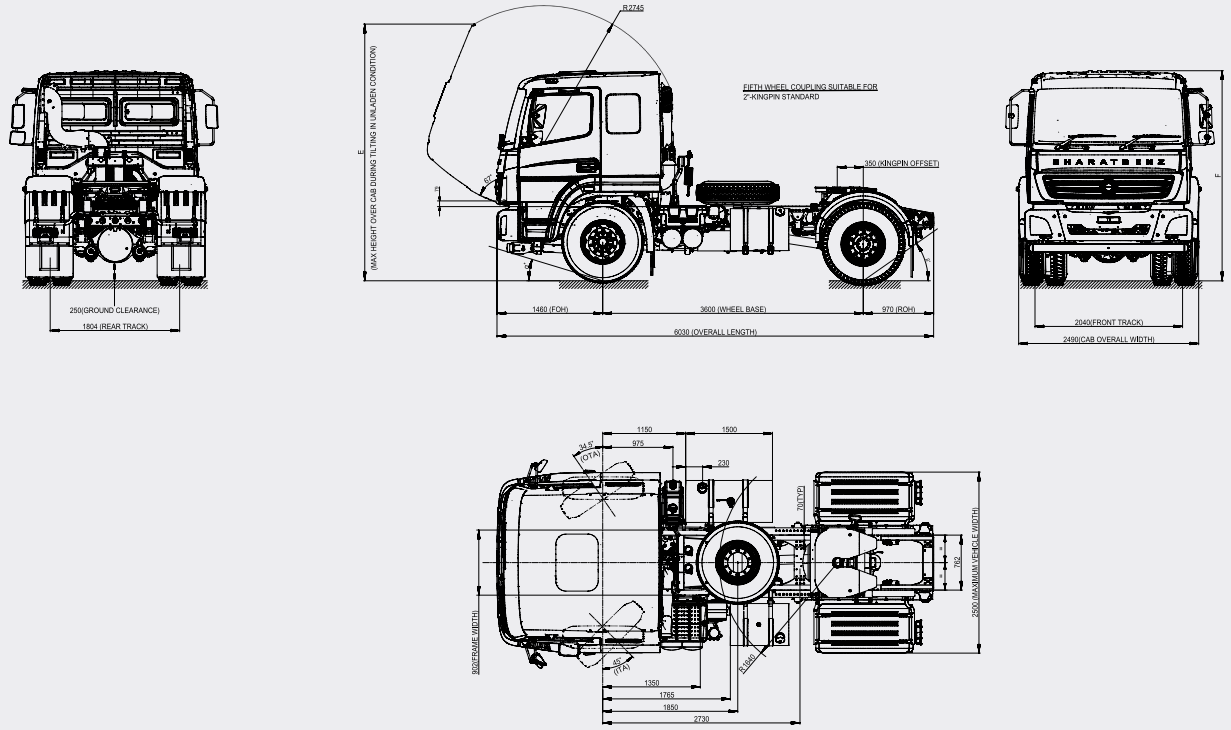

DICV-HDT-2038

4928TT / 5528TT (Facelift) - 3300WB

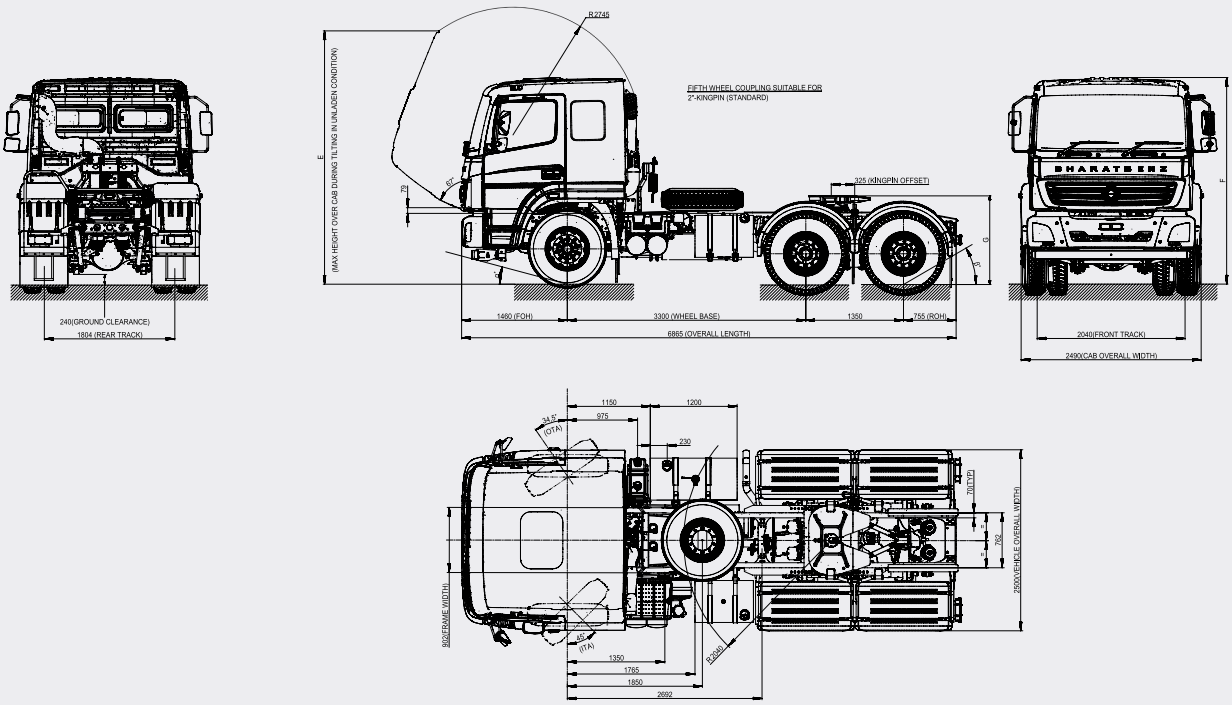

DICV-HDT-2039

https://truckmanualshub.com/

BHARATBENZ

1800 300 12345 | www.bharatbenz.com