https://truckmanualshub.com/

# TSI

Number
030-500

## Vehicle Management System

Vectro II From 1998

PV776-TSP144528

VOLVO

https://truckmanualshub.com/

# Foreword

The descriptions and service procedures contained in this manual are based on designs and methods studies carried out up to June 2001.

The products are under continuous development. Vehicles and components produced after the above date may therefore have different specifications and repair methods. When this is believed to have a significant bearing on this manual, supplementary service bulletins will be issued to cover the changes.

The new edition of this manual will update the changes.

In service procedures where the title incorporates an operation number, this is a reference to an S.R.T. (Standard Repair Time).

Service procedures which do not include an operation number in the title are for general information and no reference is made to an S.R.T.

The following levels of observations, cautions and warnings are used in this Service Documentation:

**Note:** Indicates a procedure, practice, or condition that must be followed in order to have the vehicle or component function in the manner intended.

**Caution:** Indicates an unsafe practice where damage to the product could occur.

**Warning:** Indicates an unsafe practice where personal injury or severe damage to the product could occur.

**Danger:** Indicates an unsafe practice where serious personal injury or death could occur.

**Volvo Trucks North America, Inc.**
Greensboro, NC USA

**Order number: PV776-144528**

© 2001 Volvo Trucks North America, Inc., Greensboro, NC USA

All rights reserved. No part of this publication may be reproduced, stored in retrieval system, or transmitted in any forms by any means, electronic, mechanical, photocopying, recording or otherwise, without the prior written permission of Volvo Trucks North America, Inc.

https://truckmanualshub.com/

# Contents

**General** ..... 7
Vehicle Management System ..... 7
Engine Control System Glossary ..... 8

**Specifications** ..... 10
Description of Signals ..... 10
EECU (D7C) and Breakout Box Connected in Series Between EECU and Wiring Harness ..... 10
EECU, D7C, with Breakout Box Connected to Wiring Harness Only 13
EECU (D12B and D12C), Breakout Box Connected in Series Between EECU and Wiring Harness ..... 16
EECU (D12B and D12C), Breakout Box Connected to Wiring Harness Only ..... 19
Pinouts ..... 22
Engine Electronic Control Unit (EECU) ..... 22
Pinouts ..... 26
Vehicle Electronic Control Unit(VECU) ..... 26
Schematic ..... 28
D12B ..... 28
Schematic ..... 29
D12C ..... 29
Schematic ..... 30
D7C ..... 30
Schematic ..... 31
VECU ..... 31

**Tools** ..... 33
Special Tools ..... 33
Other Special Equipment ..... 35

**Design and Function** ..... 37
Vehicle Management System ..... 37
Strategy ..... 37
Conventional Control Systems ..... 37
Data Link System ..... 38
Data Links, Design and Function ..... 39
Diagnostic Connector ..... 47
Communication Equipment ..... 48
Instrument Cluster ..... 49
Vehicle Electronic Control Unit (VECU) ..... 50
Engine Electronic Control Unit ..... 51
ABS Brake System ECU ..... 63
SRS Airbag ECU ..... 64
Transmission ECU ..... 65
Breakout Boxes and Harnesses ..... 66
VECU Overview ..... 67
VECU Functions ..... 68
Sensor Locations ..... 73
Control Unit Locations ..... 77
Fuses and Relays ..... 81

**Troubleshooting** ..... 85
Fault Code Troubleshooting ..... 85
Message and Parameter Descriptions ..... 85
FMI Table ..... 87
Reading/Clearing Fault Codes ..... 88

Fault Tracing Strategy ..... 88
MID 128 EECU ..... 92
MID 128 Fault Code Table ..... 92
MID 128 PID 45 Preheater Status ..... 96
Fault Codes ..... 96
MID 128 PID 45 Preheater Status, Check ..... 97
MID 128 PID 49 ABS Control Status ..... 98
Fault Codes ..... 98
MID 128 PID 49 ABS Control Status, Check ..... 99
MID 128 PID 84 Road Speed ..... 100
Fault Codes ..... 100
MID 128 PID 84 Road Speed, Check ..... 101
MID 128 PID 85 Cruise Control Status ..... 102
Fault Codes ..... 102
MID 128 PID 85 Cruise Control Status, Check ..... 103
MID 128 PID 91 Accelerator Pedal Position ..... 104
Fault Codes ..... 104
MID 128 PID 91 Accelerator Pedal Position, Check ..... 105
MID 128 PID 94 Fuel Delivery Pressure ..... 106
D7C and D12C ..... 106
Fault Codes ..... 106
MID 128 PID 94 Fuel Delivery Pressure, Check ..... 107
D7C and D12C ..... 107
MID 128 PID 100 Engine Oil Pressure ..... 110
Fault Codes ..... 110
MID 128 PID 100 Engine Oil Pressure, Check ..... 111
MID 128 PID 102 Boost Pressure ..... 114
Fault Codes ..... 114
MID 128 PID 102 Boost Pressure, Check ..... 115
MID 128 PID 105 Boost Air Temperature ..... 118
Fault Codes ..... 118
MID 128 PID 105 Boost Air Temperature, Check ..... 119
MID 128 PID 107 Air Filter Differential Pressure ..... 122
Fault Codes ..... 122
MID 128 PID 107 Air Filter Differential Pressure, Check ..... 124
MID 128 PID 108 Atmospheric Pressure ..... 125
Fault Codes ..... 125
MID 128 PID 110 Engine Coolant Temperature ..... 126
Fault Codes ..... 126
MID 128 PID 110 Engine Coolant Temperature, Check ..... 127
MID 128 PID 111 Coolant Level ..... 129
Fault Codes ..... 129
MID 128 PID 111 Coolant Level, Check ..... 130
MID 128 PID 158 Battery Voltage ..... 131
Fault Codes ..... 131
MID 128 PID 158 Battery Voltage, Check ..... 132
MID 128 PID 172 Air Inlet Temperature ..... 133
Fault Codes ..... 133
MID 128 PID 172 Air Inlet Temperature, Check ..... 134
MID 128 PID 174 Fuel Temperature ..... 136
D7C and D12C ..... 136
Fault Codes ..... 136
MID 128 PID 174 Fuel Temperature, Check ..... 137
D7C and D12C ..... 137
MID 128 PID 175 Engine Oil Temperature ..... 140

https://truckmanualshub.com/

Fault Codes ..... 140
MID 128 PID 175 Engine Oil Temperature, Check ..... 141
MID 128 PID 228 Road Speed Sensor Calibration ..... 144
Fault Codes ..... 144
MID 128 PID 228 Road Speed Sensor Calibration, Check ..... 145
MID 128 PPID 86 Engine Brake Torque Percent ..... 146
Fault Codes ..... 146
MID 128 PPID 86 Engine Brake Torque Percent, Check ..... 147
MID 128 PPID 119 High Coolant Temperature ..... 148
Fault Codes ..... 148
MID 128 PPID 119 High Coolant Temperature, Check ..... 149
MID 128 PPID 122 VCB Engine Compression Brake ..... 151
D12B and D12C ..... 151
Fault Codes ..... 151
MID 128 PPID 122 VCB Engine Compression Brake, Check ..... 152
D12B and D12C ..... 152
MID 128 PPID 123 EPG 2 ..... 153
D12B and D12C ..... 153
Fault Codes ..... 153
MID 128 PPID 123 EPG 2, Check ..... 154
D12B and D12C ..... 154
MID 128 PPID 124 EPG 1 ..... 155
Fault Codes ..... 155
MID 128 PPID 124 EPG 1, Check ..... 156
MID 128 SID 1/2/3/4/5/6 Injector ..... 157
D12B and D12C ..... 157
Fault Codes ..... 157
MID 128 SID 1/2/3/4/5/6 Injector, Check ..... 159
D12B and D12C ..... 159
MID 128 SID 17 Fuel Shutoff Valve ..... 161
Fault Codes ..... 161
MID 128 SID 17 Fuel Shutoff Valve, Check ..... 162
D7C only ..... 162
MID 128 SID 20 Timing Sleeve ..... 163
D7C only ..... 163
Fault Codes ..... 163
MID 128 SID 20 Timing Sleeve, Check ..... 165
D7C only ..... 165
MID 128 SID 21 Engine Position Timing Sensor ..... 166
D12B and D12C ..... 166
Fault Codes ..... 166
MID 128 SID 21 Engine Position Timing Sensor, Check ..... 167
D12B and D12C ..... 167
MID 128 SID 21 Needle Lift Sensor ..... 168
Fault Codes ..... 168
MID 128 SID 21 Needle Lift Sensor, Check ..... 169
D7C only ..... 169
MID 128 SID 22 Engine Speed Sensor ..... 170
Fault Codes ..... 170
MID 128 SID 22 Engine Speed Sensor, Check ..... 171
MID 128 SID 23 Rack Actuator ..... 172
D7C only ..... 172
Fault Codes ..... 172
MID 128 SID 23 Rack Actuator, Check ..... 174
D7C only ..... 174

MID 128 SID 24 Rack Position Sensor ..... 175
D7C only ..... 175
Fault Codes ..... 175
MID 128 SID 24 Rack Position Sensor, Check ..... 176
D7C only ..... 176
MID 128 SID 33 Fan Control ..... 177
Fault Codes ..... 177
MID 128 SID 33 Fan Control, Check ..... 178
MID 128 SID 64 Redundant Engine Speed Sensor ..... 179
D7C only ..... 179
Fault Codes ..... 179
MID 128 SID 64 Redundant Engine Speed Sensor, Check ..... 180
D7C only ..... 180
MID 128 SID 70 Preheater Element 1 ..... 181
Fault Codes ..... 181
MID 128 SID 70 Preheater Element 1, Check ..... 182
MID 128 SID 71 Preheater Element 2 ..... 183
D12B only ..... 183
Fault Codes ..... 183
MID 128 SID 71 Preheater Element 2, Check ..... 184
D12B ..... 184
MID 128 SID 230 Idle Validation Switch 1 ..... 185
Fault Codes ..... 185
MID 128 SID 230 Idle Validation Switch 1, Check ..... 186
MID 128 SID 231 SAE J1939 Control Link ..... 187
Fault Codes ..... 187
MID 128 SID 232 5 Volt DC Supply ..... 189
Fault Codes ..... 189
MID 128 SID 232 5 Volt DC Supply, Check ..... 190
MID 128 SID 240 Program Memory ..... 191
Fault Codes ..... 191
MID 128 SID 250 SAE J1587/1708 Information Link ..... 192
Fault Codes ..... 192
MID 128 SID 253 Data Set Memory EEPROM ..... 193
Fault Codes ..... 193
MID 128 SID 254 Engine Electronic Control Unit (EECU) ..... 194
Fault Codes ..... 194
MID 144 VECU ..... 196
MID 144 Fault Code Table ..... 196
MID 144 PID 29 Second Accelerator Pedal Position Sensor ..... 198
Fault Codes ..... 198
MID 144 PID 29 Second Accelerator Pedal Position Sensor, Check 199
MID 144 PID 84 Road Speed ..... 201
Fault Codes ..... 201
MID 144 PID 84 Road Speed, Check ..... 202
MID 144 PID 91 Accelerator Pedal Position ..... 204
Fault Codes ..... 204
MID 144 PID 91 Accelerator Pedal Position, Check ..... 205
MID 144 PID 152 VECU, Number of Resets ..... 207
Fault Codes ..... 207
MID 144 PPID 69 Idle Validation Switch ..... 208
Fault Codes ..... 208
MID 144 PPID 69 Idle Validation Switch, Check ..... 209
MID 144 PPID 70 Pedal Switches, Supply ..... 211
Fault Codes ..... 211

https://truckmanualshub.com/

MID 144 PPID 70 Pedal Switches, Supply, Check ..... 212
MID 144 PPID 71 Cruise Control and Engine Brake, Supply Switch 215
Fault Codes ..... 215
MID 144 PPID 71 Cruise Control and Engine Brake, Supply Switch, Check ..... 216
MID 144 PPID 72 Accelerator Pedal, Supply Sensors ..... 220
Fault Codess ..... 220
MID 144 PPID 72 Accelerator Pedal, Supply Sensors, Check ..... 221
MID 144 PPID 73 Second Accelerator Pedal, Supply Sensors ..... 223
Fault Codes ..... 223
MID 144 PPID 73 Second Accelerator Pedal, Supply Sensors, Check ..... 224
MID 144 PPID 75 Range Inhibitor, Solenoid Valve Status ..... 226
Fault Codes ..... 226
MID 144 PPID 75 Range Inhibitor, Solenoid Valve Status, Check ... 227
MID 144 SID 230 Idle Validation Switch 1 ..... 229
Fault Codes ..... 229
MID 144 SID 230 Idle Validation Switch 1, Check ..... 230
MID 144 SID 231 SAE J1939 Control Link ..... 232
Fault Codes ..... 232
MID 144 SID 231 SAE J1939 Control Link, Check ..... 233
MID 144 SID 240 Program Memory ..... 234
Fault Codes ..... 234
MID 144 SID 243 Cruise Control Set Switch ..... 235
Fault Codes ..... 235
MID 144 SID 243 Cruise Control Set Switch, Check ..... 236
MID 144 SID 250 SAE J1587/1708 Information Link ..... 238
Fault Codes ..... 238
MID 144 SID 250 SAE J1587/1708 Information Link, Check ..... 239
MID 144 SID 253 Data Set Memory EEPROM ..... 240
Fault Codes ..... 240
MID 144 PSID 3 Idle Validation Switch 3 ..... 241
Fault Codes ..... 241
MID 144 PSID 3 Idle Validation Switch 3, Check ..... 242

**Service Procedures** ..... 245
Engine ECU, Replacement ..... 245

**Feedback**

**Operation Numbers**

https://truckmanualshub.com/

https://truckmanualshub.com/


# General

## Vehicle Management System

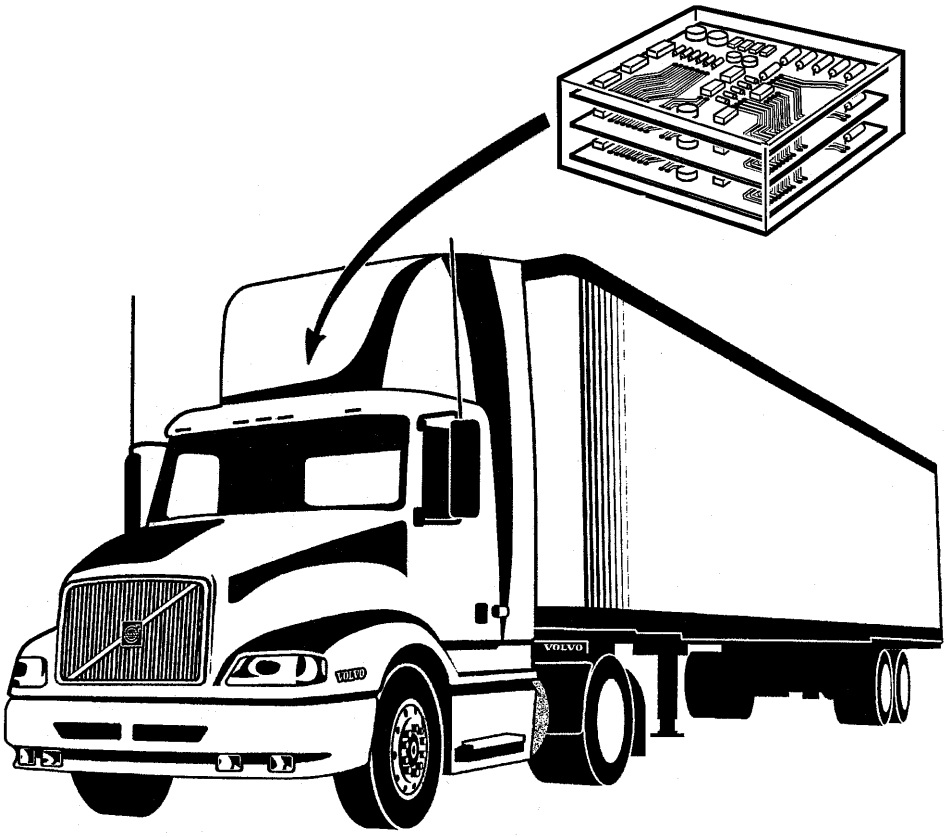


W2002520

This information covers the Vehicle Management System, which includes VECTRO II electronics, the vehicle ECU, and other control systems used in the vehicle.

https://truckmanualshub.com/


# Engine Control System Glossary

**ATA**

American Trucking Association

**ATDC (After Top Dead Center)**

The 180° of crankshaft rotation after the piston reaches top center (normal direction of rotation).

**AC (Alternating Current)**

An electrical current that alternates level and direction.

**BTDC (Before Top Dead Center)**

The 180° of crankshaft rotation before the piston reaches top center (normal direction of rotation).

**INFO lamp**

Light that warns the operator of an active diagnostic fault code; also referred to as the diagnostic lamp.

**Data link**

An electrical connection for communication with other microprocessor-based devices (such as powertrain control, trip recorders and maintenance systems) that are compatible with the ATA and SAE standard.

**Diagnostic fault code**

These codes indicate an electronic system malfunction, indicating a problem with the D12 electrical systems.

**Diagnostic flash code**

Codes flashed out in a series via the INFO lamp to indicate an active fault code.

**DC (Direct Current)**

An electrical current that flows in one direction only.

**EEPROM (Electrical Erasable Programmable Read Only Memory)**

The contents of this type of memory may be electronically erased and new information programmed into the device.

**EECU (Engine Electronic Control Unit)**

The computer that controls the power supplied to the engine electronics, monitors and governs engine functions.

**EUI (Electronic Unit Injector)**

An injector pump which is mechanically activated and electronically controlled. It combines metering and injecting in a single unit.

**Engine brake disable system**

During the time ABS (anti-lock braking system) is active, the engine brake is disabled.

**FMI (Failure Mode Identifier)**

Numbers and names used to identify how a system or part failed.

| FMI | Description |
|---|---|
| 0 | Data valid but above normal operating range |
| 1 | Data valid but below normal operating range |
| 2 | Data erratic, intermittent, or incorrect |
| 3 | Voltage above normal |
| 4 | Voltage below normal |
| 5 | Current below normal or open circuit |
| 6 | Current above normal or short circuit |
| 7 | Mechanical system not responding properly |
| 8 | Abnormal frequency, pulse rate or period |
| 9 | Abnormal update |
| 10 | Abnormal rate of change |
| 11 | Failure mode not identifiable |
| 12 | Defective device or component |
| 13 | Uncalibrated device or component |
| 14/15 | Reserved for future assignment |

**Hz (Hertz)**

Measure of frequency in cycles per second.

**MID**

Message Identification Description

**Open circuit**

Condition where an electrical wire or connector is broken, preventing signal or supply voltage from reaching its intended destination.

**Parameter**

A programmable value that affects the characteristics or behavior of the engine and/or vehicle.

https://truckmanualshub.com/


**PID**

Parameter Identification code.

**PTO (Power Takeoff)**

Operated with the cruise control switches, this mode permits setting a constant engine rpm when the vehicle is not moving.

**PWM (Pulse Width Modulation)**

A signal consisting of variable-width pulses at fixed intervals to vary; “TIME ON” versus versus “TIME OFF.”

**RAM (Random Access Memory)**

A memory that has stored information immediately available when addressed.

**Reference voltage**

A regulated voltage supplied by the EECU to a sensor, which uses it to generate a signal voltage.

**Password**

A group of seven alphanumeric characters designed to restrict access to level-2 parameters. The password is automatically defaulted to seven empty spaces if customer has not specified password.

**SAE**

Society of Automotive Engineers.

**Short circuit**

A connection of comparatively low resistance, accidentally or intentionally made between two points on a circuit.

**SID**

Subsystem Identification code.

**Signal**

A voltage value used to transmit information typically from a sensor to the EECU.

**Supply voltage**

A constant voltage that supplies electrical power to a component. It may be generated by the EECU or supplied by the vehicle battery.

**Throttle Position Sensor (TPS)**

An electronic sensor that is connected to the accelerator pedal and sends a Pulse Width Modulated signal to the EECU.

**Vehicle Specification Programming (VSP)**

VSP consists of two levels of programming: engine configuration (level 1) and customer parameters (level 2).

**Vehicle Speed Sensor (VSS)**

An electromagnetic device that measures vehicle speed from the rotation of gear teeth in the drivetrain of the vehicle.

**VEB (Volvo Engine Brake)**

Consists of a compression brake (VCB) and an exhaust pressure governor (EPG).

https://truckmanualshub.com/


# Specifications

## Description of Signals

### EECU (D7C) and Breakout Box Connected in Series Between EECU and Wiring Harness

**For the measurements below, the following applies:**

- Breakout box J-41132 connected between connector EA or EB and the EECU.
- Jumper harness J–43233 connected between connector EA or EB and the EECU.
- The EECU connected.
- Ignition key in ON position.
- Engine not running.
- Measuring voltage.

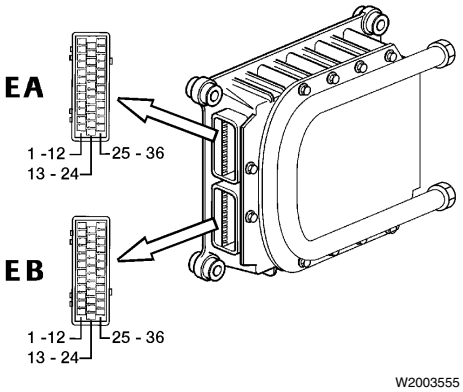


Fig. 1: EECU with pinouts

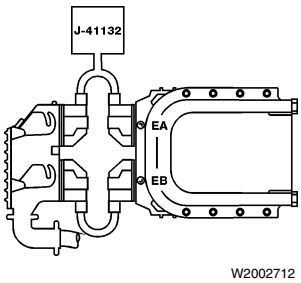


Fig. 2: EECU voltage check, EA

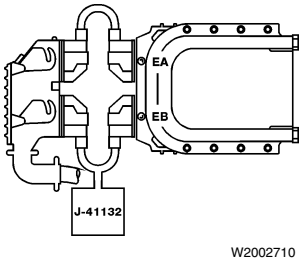


Fig. 3: EECU voltage check, EB

**B+** = battery voltage

| Connection | Signal type | Measuring points | Ignition key in the ON position | Other |
|---|---|---|---|---|
| EA1 | Oil temperature sensor, signal | EA1 - EA5 | 3.0 V (+20 °C/68 °F)<br>0.4 V (+100 °C/212 °F) | |
| EA2 | Intake manifold temperature sensor, signal | EA2 - EA5 | 2.6 V (+20° C/68 °F)<br>1.6 V (+40 °C/104 °F) | |
| EA3 | Intake manifold pressure sensor, signal | EA3 - EA5 | 1.1 V (sea level) | |
| EA4 | Supply to sensors (5 V), + | EA4 - EA5 | 4.8 - 5.15 V | |
| EA5 | Signal ground to sensors, - | | | |
| EA6 | Not currently used | | | |
| EA7 | Redundant engine speed sensor, + | | | |
| EA8 | Rack drive PWM, + | | | |
| EA9 | Timing sleeve PWM, + | | | |

https://truckmanualshub.com/


| Connec-tion | Signal type | Measuring points | Ignition key in the ON position | Other |
|---|---|---|---|---|
| EA10 | Rack drive PWM, - | | | |
| EA11 | Not currently used | | | |
| EA12 | Not currently used | | | |
| EA13 | Fuel temperature sensor, signal | EA13 - EA5 | 3.0 V (+20 °C/68 °F)<br>2.0 V (+40 °C/104 °F) | |
| EA14 | Oil pressure sensor, signal | EA14 - EA5 | 0.5 V (for cold engines) | |
| EA15 | Needle lift sensor, + | | | |
| EA16 | Rack position sensor, search coil | | | |
| EA17 | Rack position sensor, common | | | |
| EA18 | Redundant engine speed sensor, - | | | |
| EA19 | Not currently used | | | |
| EA20 | Not currently used | | | |
| EA21 | Timing sleeve PWM, - | | | |
| EA22 | Not currently used | | | |
| EA23 | Not currently used | | | |
| EA24 | Not currently used | | | |
| EA25 | Coolant temperature sensor, signal | EA25 - EA5 | 3.0 V (+20 °C/68 °F)<br>0.6 V (+85 °C/185 °F) | |
| EA26 | Not currently used | | | |
| EA27 | Fuel pressure sensor, signal | EA27-EA5 | ≈ 0.5V (for cold engines) | D12 C |
| EA28 | Needle lift sensor, - | | | |
| EA29 | Rack position sensor, reference coil | | | |
| EA30 | Engine speed sensor (crank), + | | | |
| EA31 | Engine speed sensor (crank), - | | | |
| EA32 | Not currently used | | | |
| EA33 | Not currently used | | | |
| EA34 | Not currently used | | | |
| EA35 | Not currently used | | | |
| EA36 | Not currently used | | | |
| EB1 | SAE J1939 A Communications link | EB1/EB9 | ≈2-5V | |
| EB2 | SAE J1939 B Communications link | EB2/EB9 | ≈0-3V | |
| EB3 | Ambient air temperature sensor, sig-nal | EB3 - EB13 | 2.6 V (+20 °C/68 °F)<br>1.2 V (+50 °C/122 °F) | |
| EB4 | Buffered idle validation switch | EB4 - EB9 | < 4 V (idle)<br>> 8 V (off idle) | |
| EB5 | Pre-heat sense 1 | EB5 - EB9 | 55 % of B+ (open)<br>0 V (closed) | Normally closed with the ignition key in the ON position. |
| EB6 | Not currently used | | | |

https://truckmanualshub.com/


| Connec-tion | Signal type | Measuring points | Ignition key in the ON position | Other |
|---|---|---|---|---|
| EB7 | Coolant level sensor, signal | EB7 - EB8 | 80% B+ (open)<br>0 V (closed) | Applies to WX and VN. Normally open with the ignition key in the ON position. |
| EB8 | Signal ground to sensors, - | | | |
| EB9 | EECU ground, - | | | |
| EB10 | EECU ground, - | | | |
| EB11 | EECU B+ | EB11 - EB9 | B+ | |
| EB12 | EECU B+ | EB12 - EB10 | B+ | |
| EB13 | Ambient air temperature sensor | | | |
| EB14 | Not currently used | | | |
| EB15 | Not currently used | | | |
| EB16 | Not currently used | | | |
| EB17 | Air filter indicator sensor signal | | | |
| EB18 | Not currently used | | | |
| EB19 | Not currently used | | | |
| EB20 | Not currently used | | | |
| EB21 | Fan control (if equipped with on/off fan) | EB21 - EB9 | B+ (fan on)<br>0 V (fan off) | Normally ON with the ignition key in the ON position. |
| EB22 | Not currently used | | | |
| EB23 | Not currently used | | | |
| EB24 | EOL Enable | EB24 - EB9 | < 6 V or O/C (EOL Disable)<br>> 9.6 V (EOL Enable) | |
| EB25 | SAE J1587A/J1708A Information link | EB25-EB9 | ≈ 0-5V | |
| EB26 | SAE J1587B/J1708B Information link | EB26-EB9 | ≈ 0-5V | |
| EB27 | Not currently used | | | |
| EB28 | Not currently used | | | |
| EB29 | Not currently used | | | |
| EB30 | Not currently used | | | |
| EB31 | Pre-heating relay, Coil ground | EB31 - EB9 | B+ (pre-heat off)<br>0 V (pre-heat on) | Normally ON with the ignition key in the ON position. |
| EB32 | Not currently used | | | |
| EB33 | Not currently used | | | |
| EB34 | Fuel shut-off valve | EB34 - EB9 | 0 V (valve on)<br>> 1.0V (valve off) | Normally ON with the ignition key in the ON position. |
| EB35 | EPG 1 | EB35 - EB9 | B+ (EPG off)<br>0 V (EPG on) | Normally OFF with the ignition key in the ON position. |
| EB36 | Not currently used | | | |

https://truckmanualshub.com/


# EECU, D7C, with Breakout Box Connected to Wiring Harness Only

**For the measurements below, the following applies:**

- Breakout box J-41132 connected to connector EA or EB.
- The EECU is **not** connected.
- Ignition key must be in the OFF position.
- Measuring resistance.

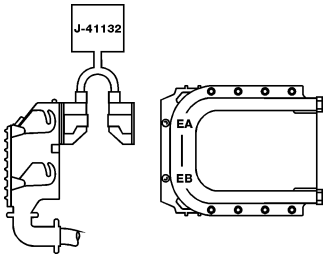

W2002711

Fig. 4: EECU harness checks, EA

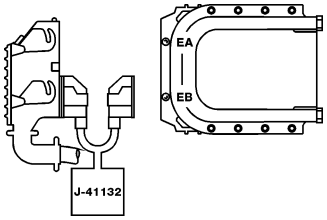

W2002713

Fig. 5: EECU harness checks, EB

| Connection | Signal type | Measuring points | Ignition key in the OFF position | Other |
|---|---|---|---|---|
| EA1 | Oil temperature sensor, signal | EA1 / EA5 | 1.9 kΩ (+20 °C/68 °F)<br>100 Ω (+100 °C/212 °F) | |
| EA2 | Intake manifold temperature sensor, signal | EA2 / EA5 | 6.2 kΩ (+20 °C/68 °F)<br>2.5 kΩ (+40 °C/104 °F) | |
| EA3 | Intake manifold pressure sensor, signal | | | |
| EA4 | Sensor supply to (5 V), + | | | |
| EA5 | Sensors ground , - | | | |
| EA6 | Not currently used | | | |
| EA7 | Redundant engine speed sensor, + | EA7 / EA18 | 775 - 945 Ω | |
| EA8 | Rack drive PWM, + | EA8 / EA10<br>EA8 / alternate ground | 1.5 Ω<br>open circuit | |
| EA9 | Timing sleeve PWM, + | EA9 / EA21<br>EA9 / alternate ground | 1.5 Ω<br>open circuit | |
| EA10 | Rack drive PWM, - | EA10 / alternate ground | open circuit (see also EA8) | |
| EA11 | Not currently used | | | |
| EA12 | Not currently used | | | |
| EA13 | Fuel temperature sensor, signal | EA13 / EA5 | 1.9 kΩ (+20 °C/68 °F)<br>800 Ω (+40 °C/104 °F) | |
| EA14 | Oil pressure sensor, signal | | | |
| EA15 | Needle lift sensor, + | EA15 / EA28 | 65 - 165 Ω | |
| EA16 | Rack position sensor, search coil | EA16 / EA17 | 20.0 Ω | |
| EA17 | Rack position sensor, common | | | |
| EA18 | Redundant engine speed sensor, - | EA18 / EA7 | 775 - 945 Ω | |
| EA19 | Not currently used | | | |

https://truckmanualshub.com/


| Connec-tion | Signal type | Measuring points | Ignition key in the OFF position | Other |
|---|---|---|---|---|
| EA20 | Not currently used | | | |
| EA21 | Timing sleeve PWM, - | EA21 / alternate ground | open circuit (see also EA9) | |
| EA22 | Not currently used | | | |
| EA23 | Not currently used | | | |
| EA24 | Not currently used | | | |
| EA25 | Coolant temperature sensor, signal | EA25 / EA5 | 1.9 kΩ (+20 °C/68 °F)<br>160 Ω (+85 °C/185 °F) | |
| EA26 | Not currently used | | | |
| EA27 | Fuel pressure sensor | | | D12 C |
| EA28 | Needle lift sensor, - | | | |
| EA29 | Rack position sensor, reference coil | EA29 / EA17 | 20.0 Ω | |
| EA30 | Engine speed sensor (crank), + | EA30 / EA31 | 775 - 945 Ω | |
| EA31 | Engine speed sensor (crank), - | EA31 / EA30 | 775 - 945 Ω | |
| EA32 | Not currently used | | | |
| EA33 | Not currently used | | | |
| EA34 | Not currently used | | | |
| EA35 | Not currently used | | | |
| EA36 | Not currently used | | | |
| EB1 | SAE J1939A Communications link | | | |
| EB2 | SAE J1939B Communications link | | | |
| EB3 | Ambient air temperature sensor, sig-nal | EB3 / EB13 | 6.2 kΩ (+20 °C/68 °F)<br>1.7 kΩ (+50 °C/122 °F) | |
| EB4 | Buffered idle validation switch | | | |
| EB5 | Pre-heat sense 1 | EB5 / EB9 | open circuit (open)<br>< 5 Ω (closed) | |
| EB6 | Not currently used | | | |
| EB7 | Coolant level sensor, signal | EB7 / EB8 | open circuit (coolant level normal)<br><1 Ω (coolant level low) | Applies to WX and VN |
| EB8 | Sensor ground | | | |
| EB9 | EECU ground, - | | | |
| EB10 | EECU ground, - | | | |
| EB11 | EECU, B+ | | | |
| EB12 | EECU, B+ | | | |
| EB13 | Ambient air temperature ground | | | |
| EB14 | Not currently used | | | |
| EB15 | Not currently used | | | |
| EB16 | Not currently used | | | |
| EB17 | Air filter indicator sensor signal | | | |
| EB18 | Not currently used | | | |
| EB19 | Not currently used | | | |
| EB20 | Not currently used | | | |
| EB21 | Not currently used | | | |
| EB22 | Not currently used | | | |
| EB23 | Not currently used | | | |
| EB24 | EOL Enable | EB24/EB9 | open circuit (open) | |

https://truckmanualshub.com/


| Connec-tion | Signal type | Measuring points | Ignition key in the OFF position | Other |
|---|---|---|---|---|
| EB25 | SAE J1587/J1708 A Information link | EB25 / (connection A in 6 pin diagnostics connector) | <1 Ω | |
| | | EB25 / (connection F in 9 pin diagnostics connector) | <1 Ω | |
| EB26 | SAE J1587/J1708 B Information link | EB26 / (connection B in the 6 pin diagnostics connector) | <1 Ω | |
| | | EB26 / (connection G in the 9 pin diagnostics connector) | <1 Ω | |
| EB27 | Not currently used | | | |
| EB28 | Not currently used | | | |
| EB29 | Not currently used | | | |
| EB30 | Not currently used | | | |
| EB31 | Pre-heating relay, coil ground | | | |
| EB32 | Not currently used | | | |
| EB33 | Not currently used | | | |
| EB34 | Fuel shut-off valve, include | | | |
| EB35 | EPG 1, - | | | |
| EB36 | Not currently used | | | |

https://truckmanualshub.com/


# EECU (D12B and D12C), Breakout Box Connected in Series Between EECU and Wiring Harness

**For the measurements below, the following applies:**

- Breakout box J-41132 connected between connector EA or EB and the EECU.
- Jumper harness J43233 connected between connector EA or EB and the EECU.
- The EECU connected.
- Ignition key in ON position.
- Engine not running.
- Measuring voltage.

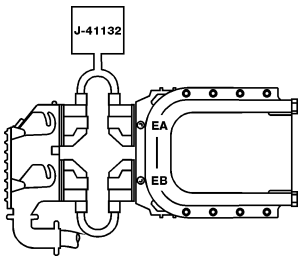

W2002712

Fig. 6: EECU voltage check, EA

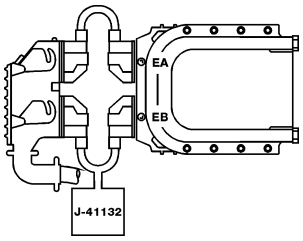

W2002710

Fig. 7: EECU voltage check, EB

**B+** = battery voltage

| Connection | Signal type | Measuring points | Ignition key in the ON position | Other |
|---|---|---|---|---|
| EA1 | Oil temperature sensor, signal | EA1 / EA5 | 3.0 V (+20 °C/68 °F)<br>0.4 V (+100 °C/212 °F) | |
| EA2 | Intake manifold temperature sensor, signal | EA2 / EA5 | 2.6 V (+20 °C/68 °F)<br>1.6 V (+40 °C/104 °F) | |
| EA3 | Intake manifold pressure sensor, signal | EA3 / EA5 | 1.1 V (sea level) | |
| EA4 | Sensor supply (5 V), + | EA4 / EA5 | 4.8 - 5.15 V | |
| EA5 | Sensor ground | | | |
| EA6 | Not currently used | | | |
| EA7 | Engine position sensor (cam), + | | | |
| EA8 | Not currently used | | | |
| EA9 | Not currently used | | | |
| EA10 | Not currently used | | | |
| EA11 | Unit injector cylinder 1, - | | | |
| EA12 | Unit injector cylinder 1, 2, 3 (90 Volt), + | | | |
| EA13 | Fuel temperature sensor, signal | | | D12 C |
| EA14 | Oil pressure sensor, signal | EA14 / EA5 | 0.5 V (for cold engines) | |
| EA15 | Not currently used | | | |

https://truckmanualshub.com/


| Connec-tion | Signal type | Measuring points | Ignition key in the ON position | Other |
|---|---|---|---|---|
| EA16 | Not currently used | | | |
| EA17 | Not currently used | | | |
| EA18 | Engine position sensor (cam), - | | | |
| EA19 | Not currently used | | | |
| EA20 | Not currently used | | | |
| EA21 | Not currently used | | | |
| EA22 | Unit injector cylinder 2, - | | | |
| EA23 | Unit injector cylinder 3, - | | | |
| EA24 | Unit injector cylinder 4, 5, 6 (90 Volt), + | | | |
| EA25 | Coolant temperature sensor, signal | EA25 / EA5 | 3.0 V (+20 °C/68 °F)<br>0.6 V (+85 °C/185 °F) | |
| EA26 | Not currently used | | | |
| EA27 | Fuel pressure sensor | | | D12 C |
| EA28 | Not currently used | | | |
| EA29 | Not currently used | | | |
| EA30 | Engine speed sensor (crank), + | | | |
| EA31 | Engine speed sensor (crank), - | | | |
| EA32 | Not currently used | | | |
| EA33 | VCB, - | EA33 / alternate ground | B+ (VCB off)<br>0 V (VCB on) | Normally OFF with the ignition key in the ON position. |
| EA34 | Unit injector cylinder 4, - | | | |
| EA35 | Unit injector cylinder 5, - | | | |
| EA36 | Unit injector cylinder 6, - | | | |
| EB1 | SAE J1939 Communications link, can HI | EB1/EB9 | ≈ 2-5V | |
| EB2 | SAE J1939 Communications link, can LOW | EB2/EB9 | ≈ 0-3V | |
| EB3 | Ambient air temperature sensor, signal | EB3 / EB13 | 2.6 V (+20 °C/68 °F)<br>1.2 V (+50 °C/122 °F) | |
| EB4 | Buffered idle validation switch | EB4 / EB9 | < 4 V (inactive)<br>> 8 V (active) | |
| EB5 | Pre-heat sense 1 (if equipped) | EB5 / EB9 | 55% of B+ (open)<br>0 V (closed) | Normally closed with the ignition key in the ON position. |
| EB6 | Not currently used | | | |
| EB7 | Coolant level sensor, signal | EB7 / EB8 | 80% B+ (open)<br>0 V (closed) | VN and VHD. Normally open with the ignition key in the ON position. |
| EB8 | Sensor ground | | | |
| EB9 | EECU ground, - | | | |
| EB10 | EECU ground, - | | | |

https://truckmanualshub.com/


| Connec-tion | Signal type | Measuring points | Ignition key in the ON position | Other |
|---|---|---|---|---|
| EB11 | EECU B+ | EB11 / EB9 | B+ | |
| EB12 | EECU B+ | EB12 / EB10 | B+ | |
| EB13 | Ambient air temperature sensor | | | |
| EB14 | Not currently used | | | |
| EB15 | Not currently used | | | |
| EB16 | Pre-heat sensor 2 (if equipped) | EB16 / EB9 | 55 % of B+ (open)<br>0 V (closed) | Normally closed with the ignition key in the ON position. |
| EB17 | Air filter indicator sensor signal | | | |
| EB18 | Not currently used | | | |
| EB19 | Not currently used | | | |
| EB20 | Not currently used | | | |
| EB21 | Engine fan control (if equipped with on/off fan), - | EB21 / EB9 | B+ (fan on/solenoid inactive)<br>0 V (fan off/solenoid active) | Normally ON with the ignition key in the ON position. |
| EB22 | Not currently used | | | |
| EB23 | Not currently used | | | |
| EB24 | EOL Enable | EB24 / EB9 | < 6 V or O/C (EOL disable)<br>> 9.6 V (EOL Enable) | |
| EB25 | SAE J1587/J1708 + Information link | | | |
| EB26 | SAE J1587/J1708 - Information link | EB25/EB9 | ≈ 0-5V | |
| EB27 | Not currently used | EB26/EB9 | ≈ 0-5V | |
| EB28 | Not currently used | | | |
| EB29 | Not currently used | | | |
| EB30 | Not currently used | | | |
| EB31 | Pre-heating relay coil ground (if equipped) | EB31 / EB9 | B+ (pre-heat off)<br>0 V (pre-heat on) | Normally OFF with the ignition key in the ON position. |
| EB32 | Not currently used | | | |
| EB33 | Not currently used | | | |
| EB34 | Not currently used | | | |
| EB35 | EPG 1 | EB35 / EB9 | B+ (EPG off)<br>0 V (EPG on) | Normally OFF with the ignition key in the ON position. |
| EB36 | EPG 2 | EB36 / EB9 | B+ (EPG off)<br>0 V (EPG on) | Normally OFF with the ignition key in the ON position. |

https://truckmanualshub.com/


# EECU (D12B and D12C), Breakout Box Connected to Wiring Harness Only

**For the measurements below, the following applies:**

- Breakout box J-41132 connected to connector EA or EB.
- The EECU **not** connected.
- Ignition key must be in the OFF position.
- Measuring resistance.

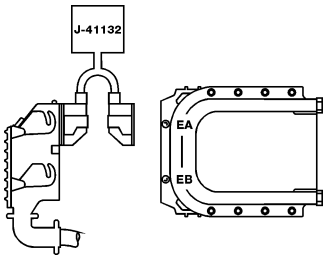

Fig. 8: EECU harness checks, EA

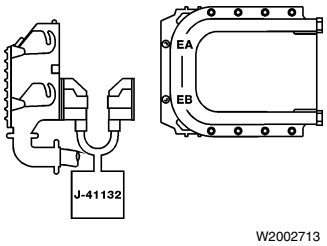

Fig. 9: EECU harness checks, EB

| Connection | Signal type | Measuring points | Ignition key in the OFF position | Other |
|---|---|---|---|---|
| EA1 | Oil temperature sensor, signal | EA1 / EA5 | 1.9 kΩ (+20 °C/68 °F)<br>100 Ω (+100 °C/212 °F) | |
| EA2 | Intake manifold temperature sensor, signal | EA2 / EA5 | 6.2 kΩ (+20 °C/68 °F)<br>2.5 kΩ (+40 °C/104 °F) | |
| EA3 | Intake manifold pressure sensor, signal | | | |
| EA4 | Sensor supply (5 V), + | | | |
| EA5 | Sensor ground | | | |
| EA6 | Not currently used | | | |
| EA7 | Engine position sensor (cam), + | EA7 / EA18 | 775 - 945 Ω | |
| EA8 | Not currently used | | | |
| EA9 | Not currently used | | | |
| EA10 | Not currently used | | | |
| EA11 | Unit injector cylinder 1, - | EA11 / EA12 | 1.5 - 2.0 Ω | |
| EA12 | Unit injector cylinder 1, 2, 3 (90 Volt), + | | see EA11, EA22 and EA23 | |
| EA13 | Fuel temperature sensor, signal | | | D12 C |
| EA14 | Oil pressure sensor, signal | | | |
| EA15 | Not currently used | | | |
| EA16 | Not currently used | | | |
| EA17 | Not currently used | | | |
| EA18 | Engine position sensor (cam), - | | see EA7 | |
| EA19 | Not currently used | | | |
| EA20 | Not currently used | | | |

https://truckmanualshub.com/


| Connec-tion | Signal type | Measuring points | Ignition key in the OFF position | Other |
|---|---|---|---|---|
| EA21 | Not currently used | | | |
| EA22 | Unit injector cylinder 2, - | EA22 / EA12 | 1.5 - 2.0 Ω | |
| EA23 | Unit injector cylinder 3, - | EA23 / EA12 | 1.5 - 2.0 Ω | |
| EA24 | Unit injector cylinder 4, 5, 6 (90 Volt), + | | see EA34, EA35, and EA36 | |
| EA25 | Coolant temperature sensor, signal | EA25 / EA5 | 1.9 kΩ (+20 °C/68 °F)<br>160 Ω (+85 °C/185 °F) | |
| EA26 | Fuel pressure sensor, signal | | | D12 C |
| EA27 | Not currently used | | | |
| EA28 | Not currently used | | | |
| EA29 | Not currently used | | | |
| EA30 | Engine speed sensor (crank), + | EA30 / EA31 | 775 - 945 Ω | |
| EA31 | Engine speed sensor (crank), - | EA31 / EA30 | 775 - 945 Ω | |
| EA32 | Not currently used | | | |
| EA33 | VCB, - | | | |
| EA34 | Unit injector cylinder 4, - | EA34 / EA24 | 1.5 - 2.0 Ω | |
| EA35 | Unit injector cylinder 5, - | EA35 / EA24 | 1.5 - 2.0 Ω | |
| EA36 | Unit injector cylinder 6, - | EA36 / EA24 | 1.5 - 2.0 Ω | |
| EB1 | SAE J1939 + Communications link | | | |
| EB2 | SAE J1939 - Communications link | | | |
| EB3 | Ambient air temperature sensor, sig-nal | EB3 / EB13 | 6.2 kΩ (+20 °C/68 °F)<br>1.7 kΩ (+50 °C/122 °F) | |
| EB4 | Buffered idle validation switch | | | |
| EB5 | Pre-heat sense 1 (if equipped) | EB5 / EB9 | open circuit (open)<br>< 5.0 Ω (closed) | |
| EB6 | Not currently used | | | |
| EB7 | Coolant level sensor, signal | EB7 / EB8 | open circuit (coolant level normal)<br><1 Ω; closed (coolant level low) | Applies to WX , VN and VHD |
| EB8 | Sensors ground | | | |
| EB9 | EECU ground, - | | | |
| EB10 | EECU ground, - | | | |
| EB11 | EECU B+ | | | |
| EB12 | EECU B+ | | | |
| EB13 | Ambient air temperature sensor | | | |
| EB14 | Not currently used | | | |
| EB15 | Not currently used | | | |
| EB16 | Pre-heat sensor 2 (if equipped) | EB16 / EB9 | open circuit (open)<br>< 5.0 Ω (closed) | |
| EB17 | Air filter indicator sensor signal | | | |
| EB18 | Not currently used | | | |
| EB19 | Not currently used | | | |

https://truckmanualshub.com/


| Connec-tion | Signal type | Measuring points | Ignition key in the OFF position | Other |
|---|---|---|---|---|
| EB20 | Not currently used | | | |
| EB21 | Engine fan control (if equipped with on/off fan) | | | |
| EB22 | Not currently used | | | |
| EB23 | Not currently used | | | |
| EB24 | EOL Enable | EB24/EB9 | Open circuit(open) | |
| EB25 | SAE J1587/J1708 A Information link | EB25 / (connection A in the 6 pin diagnostics connector) | <1 Ω | |
| | | EB25 / DCA (connection F in the 9 pin diagnostics connector) | <1 Ω | |
| EB26 | SAE J1587/J1708 B Information link | EB26 / (connection B in the 6 pin diagnostics connector) | <1 Ω | |
| | | EB26 / (connection G in the 9 pin diagnostics connector) | <1 Ω | |
| EB27 | Not currently used | | | |
| EB28 | Not currently used | | | |
| EB29 | Not currently used | | | |
| EB30 | Not currently used | | | |
| EB31 | Preheating relay coil ground (if equipped) | | | |
| EB32 | Not currently used | | | |
| EB33 | Not currently used | | | |
| EB34 | Not currently used | | | |
| EB35 | EPG 1, - | | | |
| EB36 | EPG 2, - | | | |

https://truckmanualshub.com/


# Pinouts

## Engine Electronic Control Unit (EECU)

| VOLVO D12B/D12C EECU/EA Connector | | |
|---|---|---|
| **Cavity** | **Color** | **Description** |
| 1 | GN | OIL TEMPERATURE |
| 2 | BL/W | BOOST TEMPERATURE |
| 3 | GR | BOOST PRESSURE |
| 4 | GN/W | BOOST & OIL PRESSURE COMMON (+) |
| 5 | BN/W | PRESSURE & TEMP. SENSOR COMMON (-) |
| 6 | | NOT USED |
| 7 | Y | ENGINE POSITION SENSOR, CAM (+) |
| 8-10 | | NOT USED |
| 11 | W | INJECTOR, CYL 1 (-) |
| 12 | W | CYL 1, CYL 2, CYL 3 INJECTOR COMMON, 90 Volt (+) |
| 13 | GN | FUEL TEMPERATURE (D12C) |
| 14 | BN | OIL PRESSURE |
| 15-17 | | NOT USED |
| 18 | BN/W | ENGINE POSITION SENSOR, CAM (-) |
| 19-21 | | NOT USED |
| 22 | W | INJECTOR, CYL 2 (-) |
| 23 | W | INJECTOR, CYL 3 (-) |
| 24 | W | CYL 4, CYL 5, CYL 6 INJECTOR COMMON, 90 Volt (+) |
| 25 | Y/W | COOLANT TEMPERATURE |
| 26 | | NOT USED |
| 27 | BN | FUEL PRESSURE (D12C) |
| 28-29 | | NOT USED |
| 30 | BL/SB | ENGINE SPEED SENSOR, CRANK (+) |
| 31 | BL/R | ENGINE SPEED SENSOR, CRANK (-) |
| 32 | | NOT USED |
| 33 | GN/W | VCB SOLENOID VALVE RETURN |
| 34 | W | INJECTOR, CYL 4 (-) |
| 35 | W | INJECTOR, CYL 5 (-) |
| 36 | W | INJECTOR, CYL 6 (-) |

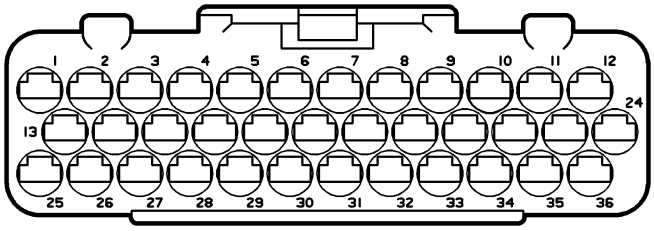

W3000945

**Wire Colors:**

| | | | |
|---|---|---|---|
| BL | BLUE | R | RED |
| BN | BROWN | SB | SOLID BLACK |
| GN | GREEN | VO | VIOLET |
| GR | GRAY | W | WHITE |
| OR | ORANGE | Y | YELLOW |
| P | PINK | | |

https://truckmanualshub.com/


| VOLVO D12B/D12C EECU/EB Connector | | |
|---|---|---|
| **Cavity** | **Color** | **Description** |
| 1 | Y | DATA LINK J1939 CAN HI |
| 2 | GN | DATA LINK J1939 CAN LO |
| 3 | BL/Y | AMBIENT AIR TEMPERATURE |
| 4 | P | BUFFERED IDLE VALIDATION SWITCH |
| 5 | R | PREHEAT SENSE 1 |
| 6 | | NOT USED |
| 7 | BL/SB | COOLANT LEVEL WARNING |
| 8 | GR/W | AIR FILTER, COOL LVL COMMON |
| 9 | W | GROUND (-) |
| 10 | W | GROUND (-) |
| 11 | R/SB | POWER SUPPLY (+) |
| 12 | R/SB | POWER SUPPLY (+) |
| 13 | V0/W | AMBIENT AIR TEMP COMMON (-) |
| 14-15 | | NOT USED |
| 16 | R/W | PREHEAT SENSE 2 |
| 17 | BL/R | AIR FILTER INDICATOR |
| 18-20 | | NOT USED |
| 21 | GR/R | COOLING FAN CONTROL (-) |
| 22-23 | | NOT USED |
| 24 | Y/SB | FACTORY PROGRAMMING (NOT USED) |
| 25 | GR | DATA LINK J1708/1587 (+) |
| 26 | OR | DATA LINK J1708/1587 (-) |
| 27-30 | | NOT USED |
| 31 | BL/R | PREHEAT RELAY(Coil Ground) |
| 32-34 | | NOT USED |
| 35 | GR/SB | EPG1 CONTROL |
| 36 | GR/W | EPG2 CONTROL |

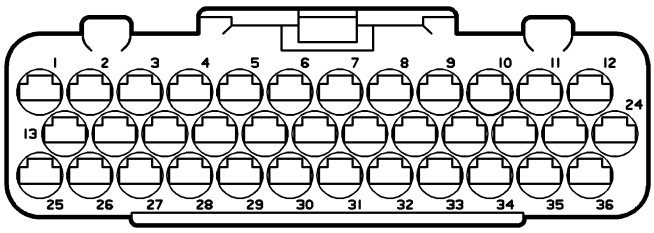

W3000945

**Wire Colors:**

| | | | |
|---|---|---|---|
| BL | BLUE | R | RED |
| BN | BROWN | SB | SOLID BLACK |
| GN | GREEN | VO | VIOLET |
| GR | GRAY | W | WHITE |
| OR | ORANGE | Y | YELLOW |
| P | PINK | | |

https://truckmanualshub.com/


| VOLVO D7C EECU/EA Connector | | |
|---|---|---|
| **Cavity** | **Color** | **Description** |
| 1 | GN | OIL TEMPERATURE |
| 2 | BL/W | BOOST TEMPERATURE |
| 3 | GR | BOOST PRESSURE |
| 4 | GN/W | BOOST, OIL & FUEL PRESSURE COMMON (+) |
| 5 | BN/W | PRESSURE & TEMP. SENSOR COMMON |
| 6 | | NOT USED |
| 7 | Y | REDUNDANT ENGINE SPEED SENSOR (+) |
| 8 | Y/R | RACK DRIVE, PWM (+) |
| 9 | Y/SB | TIMING SLEEVE, PWM |
| 10 | GN/BN | RACK DRIVE, PWM (-) |
| 11-12 | | NOT USED |
| 13 | GN/BN | FUEL TEMPERATURE |
| 14 | BN | OIL PRESSURE |
| 15 | GR/SB | NEEDLE LIFT SENSOR(+) |
| 16 | BL/R | RACK POSITION SENSOR, SEARCH COIL |
| 17 | Y/GR | RACK POSITION SENSOR, COMMON |
| 18 | BN/W | REDUNDANT ENGINE SPEED SENSOR (-) |
| 19-20 | | NOT USED |
| 21 | OR | TIMING SLEEVE, PWM (-) |
| 22-24 | | NOT USED |
| 25 | Y/W | COOLANT TEMPERATURE |
| 26 | | NOT USED |
| 27 | BN | FUEL PRESSURE |
| 28 | GR/R | NEEDLE LIFT SENSOR (-) |
| 29 | Y/W | RACK POSITION SENSOR, REFERENCE COIL |
| 30 | BL/SB | ENGINE SPEED SENSOR, CRANK(+) |
| 31 | BL/R | ENGINE SPEED SENSOR, CRANK(-) |
| 32-36 | | NOT USED |

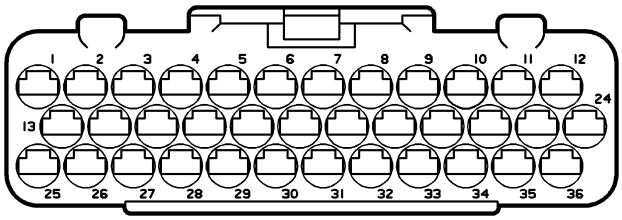

W3000945

**Wire Colors:**

| | | | |
|---|---|---|---|
| BL | BLUE | R | RED |
| BN | BROWN | SB | SOLID BLACK |
| GN | GREEN | VO | VIOLET |
| GR | GRAY | W | WHITE |
| OR | ORANGE | Y | YELLOW |
| P | PINK | | |

https://truckmanualshub.com/


| VOLVO D7C EECU/EB Connector | | |
|---|---|---|
| **Cavity** | **Color** | **Description** |
| 1 | Y | DATA LINK J1939 CAN HI |
| 2 | GN | DATA LINK J1939 CAN LO |
| 3 | BL/Y | AMBIENT AIR TEMPERATURE |
| 4 | P | BUFFERED IDLE VALIDATION SWITCH |
| 5 | R | PREHEAT SENSE 1 |
| 6 | | NOT USED |
| 7 | BL/SB | COOLANT LEVEL WARNING |
| 8 | GR/W | AIR FILTER, COOL LEVEL COMMON (-) |
| 9 | W | GROUND (-) |
| 10 | W | GROUND (-) |
| 11 | R/SB | POWER SUPPLY (+) |
| 12 | R/SB | POWER SUPPLY (+) |
| 13 | V0/W | AMBIENT AIR TEMP COMMON (-) |
| 14-16 | | NOT USED |
| 17 | BL/R | AIR FILTER INDICATOR |
| 18-23 | | NOT USED |
| 24 | Y/SB | FACTORY PROGRAMMING (NOT USED) |
| 25 | GR | DATA LINK J1708/1587 (+) |
| 26 | OR | DATA LINK J1708/1587 (-) |
| 27-30 | | NOT USED |
| 31 | BL/R | PREHEAT RELAY, CONTROL |
| 32-33 | | NOT USED |
| 34 | Y/BN | FUEL SHUTOFF VALVE CONTROL |
| 35 | GR | EPG1 |
| 36 | | NOT USED |

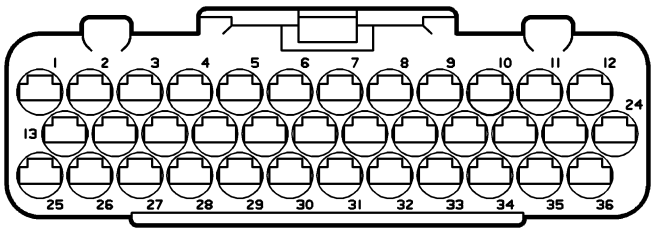

W3000945

**Wire Colors:**

| | | | |
|---|---|---|---|
| BL | BLUE | R | RED |
| BN | BROWN | SB | SOLID BLACK |
| GN | GREEN | VO | VIOLET |
| GR | GRAY | W | WHITE |
| OR | ORANGE | Y | YELLOW |
| P | PINK | | |

https://truckmanualshub.com/


# Pinouts

## Vehicle Electronic Control Unit(VECU)

| Vehicle ECU Connector A-(GREEN) | | |
|---|---|---|
| **Cavity** | **Circuit** | **Description** |
| 1 | 564A | CC/PTO SWITCH SET(-) INPUT |
| 2 | 563A | CC/PTO SWITCH SET(+) INPUT |
| 3 | 562A | CC/PTO SWITCH ON INPUT |
| 4 | | NOT USED |
| 5 | 567B | SERVICE BRAKE SWITCH INPUT |
| 6 | 284-A | 12V STARTER CONTROL SOLE-NOID FEED |
| 7 | 245 | ENGINE PREHEAT CIRCUIT PRO-TECTION FEED |
| 8 | 571 | CLUTCH SWITCH INPUT |
| 9 | 385-A | PARK CONTROL WIPER MOTOR |
| 10 | 388 | INTERMITTENT WIPER INPUT |
| 11 | 387-C | SWITCH TO WASHER MOTOR |
| 12 | 0XE | ELECTRONIC GROUND |
| 13 | 18V | ELECTRONIC ENGINE SWITCHED BATTERY FEED |
| 14 | 196V | IGNITION SWITCH DR FEED |
| 15-18 | | NOT USED |
| 19 | 300D | MANUAL FAN SWITCH INPUT |
| 20 | 629 | ENGINE BRAKE MEDIUM FEED |
| 21 | 628 | ENGINE BRAKE LOW FEED |
| 22 | | NOT USED |
| 23 | 555 | IDLE VALIDATION INPUT |
| 24 | 682 | HIGH REFRIGERANT PRESSURE SWITCH FEED |
| 25-28 | | NOT USED |
| 29 | 573 | PTO SWITCH ON INPUT |
| 30 | 565A | CC/PTO SWITCH RESUME INPUT |

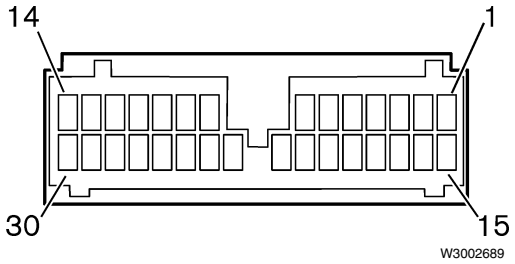

https://truckmanualshub.com/


| Vehicle ECU Connector B-(BLUE) | | |
|---|---|---|
| **Cavity** | **Circuit** | **Description** |
| 1 | | NOT USED |
| 2 | 312A | TRANSMISSION AREA INHIBITOR VALVE RETURN |
| 3-4 | | NOT USED |
| 5 | 597 | ECU COMMON 12V OUTPUT |
| 6 | 550 | VEHICLE SPEED INPUT |
| 7 | | NOT USED |
| 8 | 553 | THROTTLE POSITION SENSOR INPUT |
| 9 | | NOT USED |
| 10 | 552 | THROTTLE POSITION SENSOR SUPPLY |
| 11 | 581 | PARKING BRAKE SWITCH INPUT |
| 12-14 | | NOT USED |
| 15 | 583 | POWER CONTROL FROM ENGINE ECU |
| 16 | 389B | INTERMITTENT WIPER RELAY COIL RETURN |
| 17 | 555A | IDLE VALIDATION FROM ENGINE ECU |
| 18 | 312C | RANGE INHIBITOR VALVE RETURN |
| 19 | 558 | ECU COMMON +12V OUTPUT |
| 20 | 551 | VEHICLE SPEED RETURN FROM ECU |
| 21 | 317B | TRANSMISSION LOW RANGE INDICATOR SIGNAL |
| 22 | 554 | THROTTLE POSITION SENSOR RETURN |
| 23-26 | | NOT USED |
| 27 | 567A | SERVICE BRAKE SWITCH INPUT |
| 28-30 | | NOT USED |

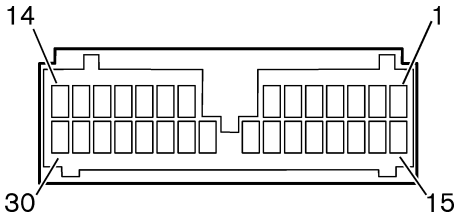

W3002689

| Vehicle ECU Connector C-(GREEN) | | |
|---|---|---|
| **Cavity** | **Circuit** | **Description** |
| 1 | 401-D | DATA LINK J1708 (-) |
| 2 | 400-D | DATA LINK J1708 (+) |
| 3 | 408-B | DATA LINK J1939 SHIELD |
| 4 | 406-B | DATA LINK J1939 CAN HI |
| 5 | 407-B | DATA LINK J1939 CAN LOW |

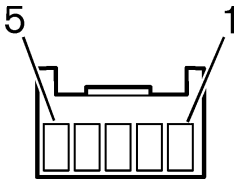

W3002690

# Schematic

## D12B

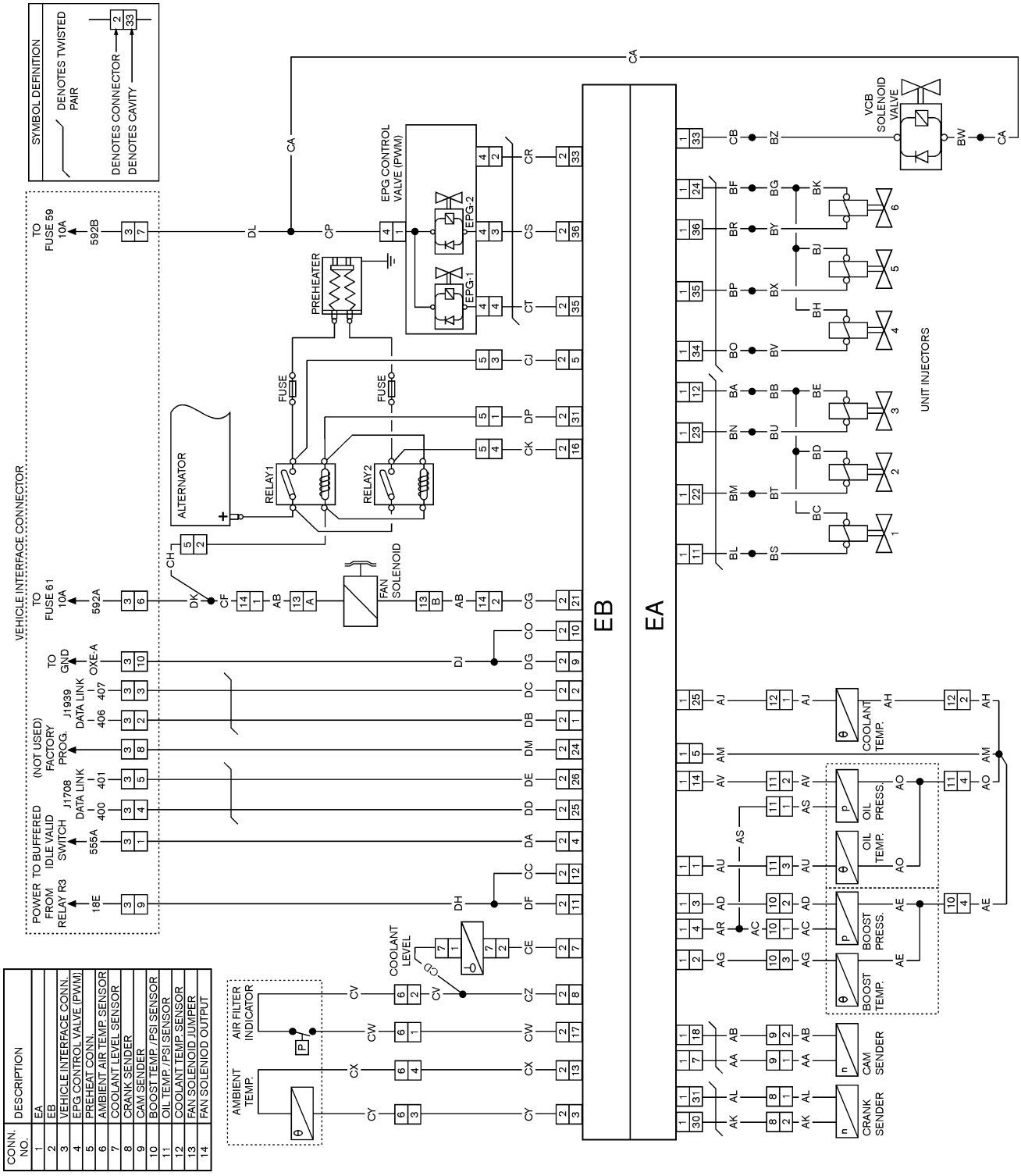

https://truckmanualshub.com/



# Schematic

## D12C

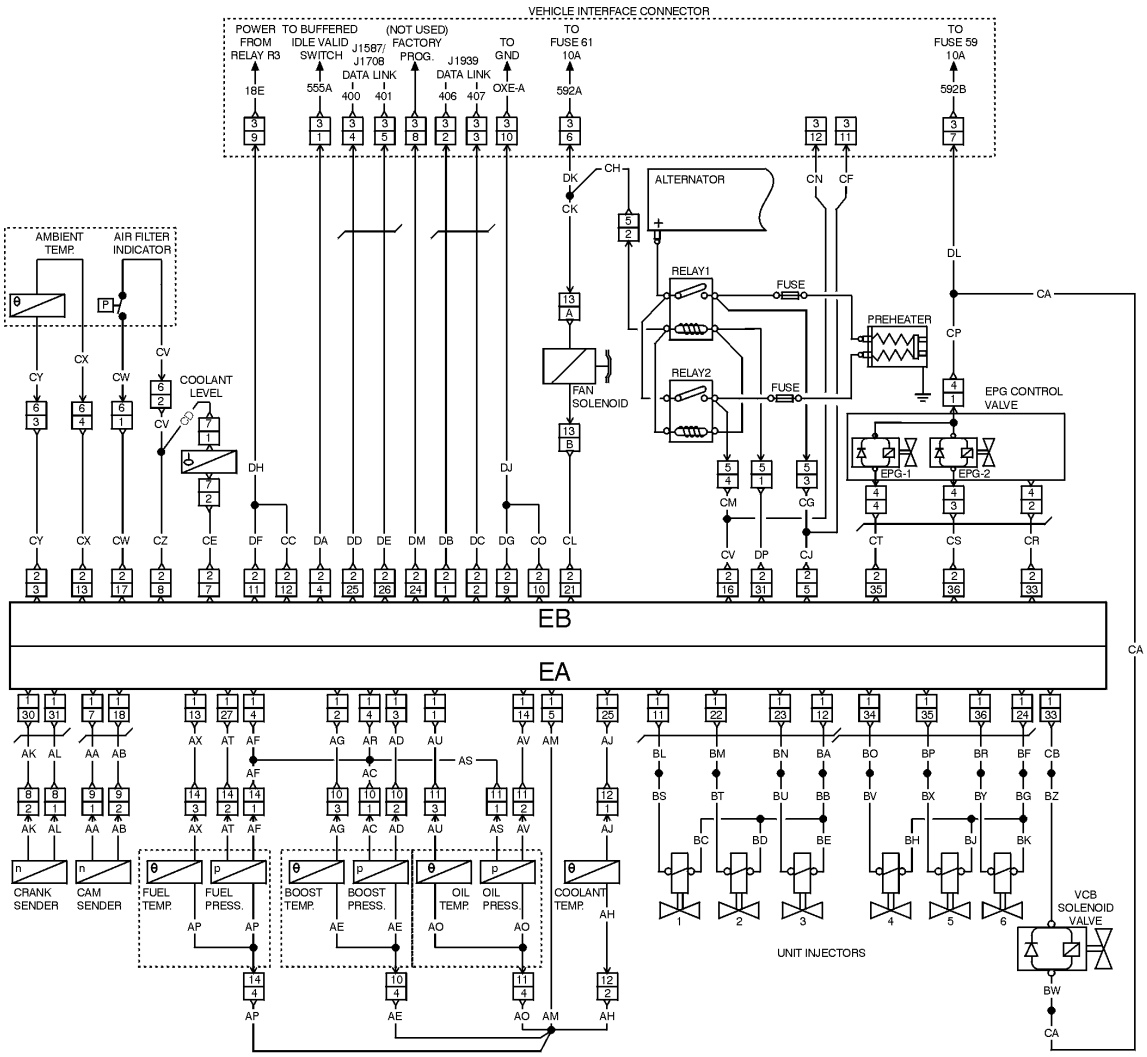


| CONN NO | DESCRIPTION | CONN NO | DESCRIPTION |
|---|---|---|---|
| 1 | ENGINE ECU - EA | 8 | CRANK SENDER |
| 2 | ENGINE ECU - EB | 9 | CAM SENDER |
| 3 | VEHICLE INTERFACE | 10 | BOOST PRESSURE/TEMP |
| 4 | EPG CONTROL VALVE (PWM) | 11 | OIL TEMP/PSI SENSOR |
| 5 | PREHEATER HARNESS | 12 | COOLANT TEMP SENSOR |
| 6 | AMBIENT AIR TEMP SENSOR | 13 | COOLING FAN SOLENOID |
| 7 | COOLANT LEVEL SENSOR | 14 | FUEL TEMP/PRESSURE SENSOR |

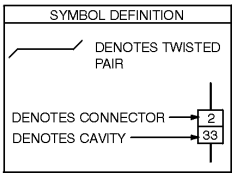


W2003348

https://truckmanualshub.com/



# Schematic

## D7C

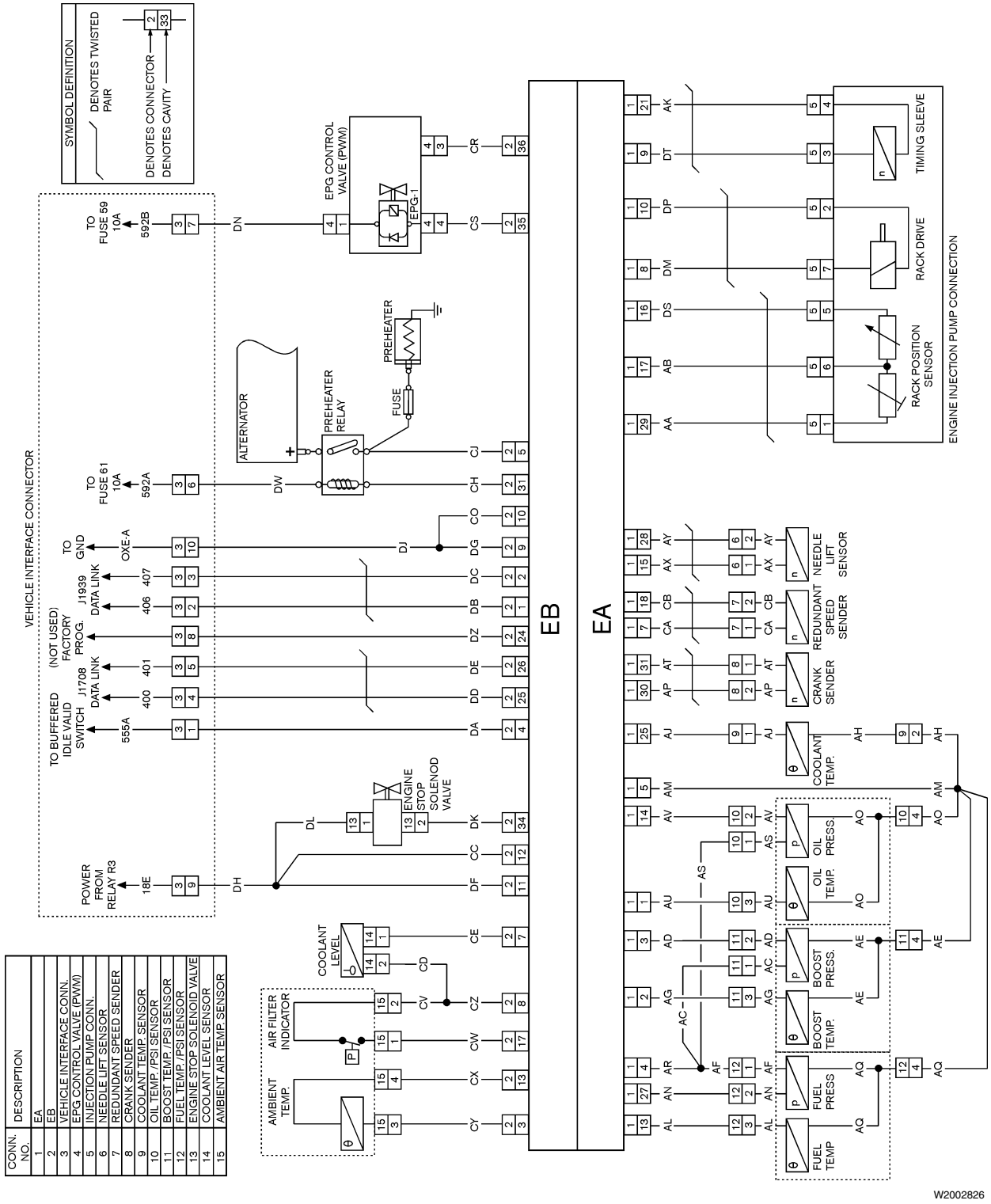


| CONN. NO. | DESCRIPTION |
|---|---|
| 1 | EA |
| 2 | EB |
| 3 | VEHICLE INTERFACE CONN. |
| 4 | EPG CONTROL VALVE (PWM) |
| 5 | INJECTION PUMP CONN. |
| 6 | NEEDLE LIFT SENSOR |
| 7 | REDUNDANT SPEED SENDER |
| 8 | CRANK SENDER |
| 9 | COOLANT TEMP. SENSOR |
| 10 | OIL TEMP./PSI SENSOR |
| 11 | BOOST TEMP./PSI SENSOR |
| 12 | FUEL TEMP./PSI SENSOR |
| 13 | ENGINE STOP SOLENOID VALVE |
| 14 | COOLANT LEVEL SENSOR |
| 15 | AMBIENT AIR TEMP. SENSOR |

https://truckmanualshub.com/


# Schematic

## VECU

Vehicle Electronic Control Unit
Wiring Schematic

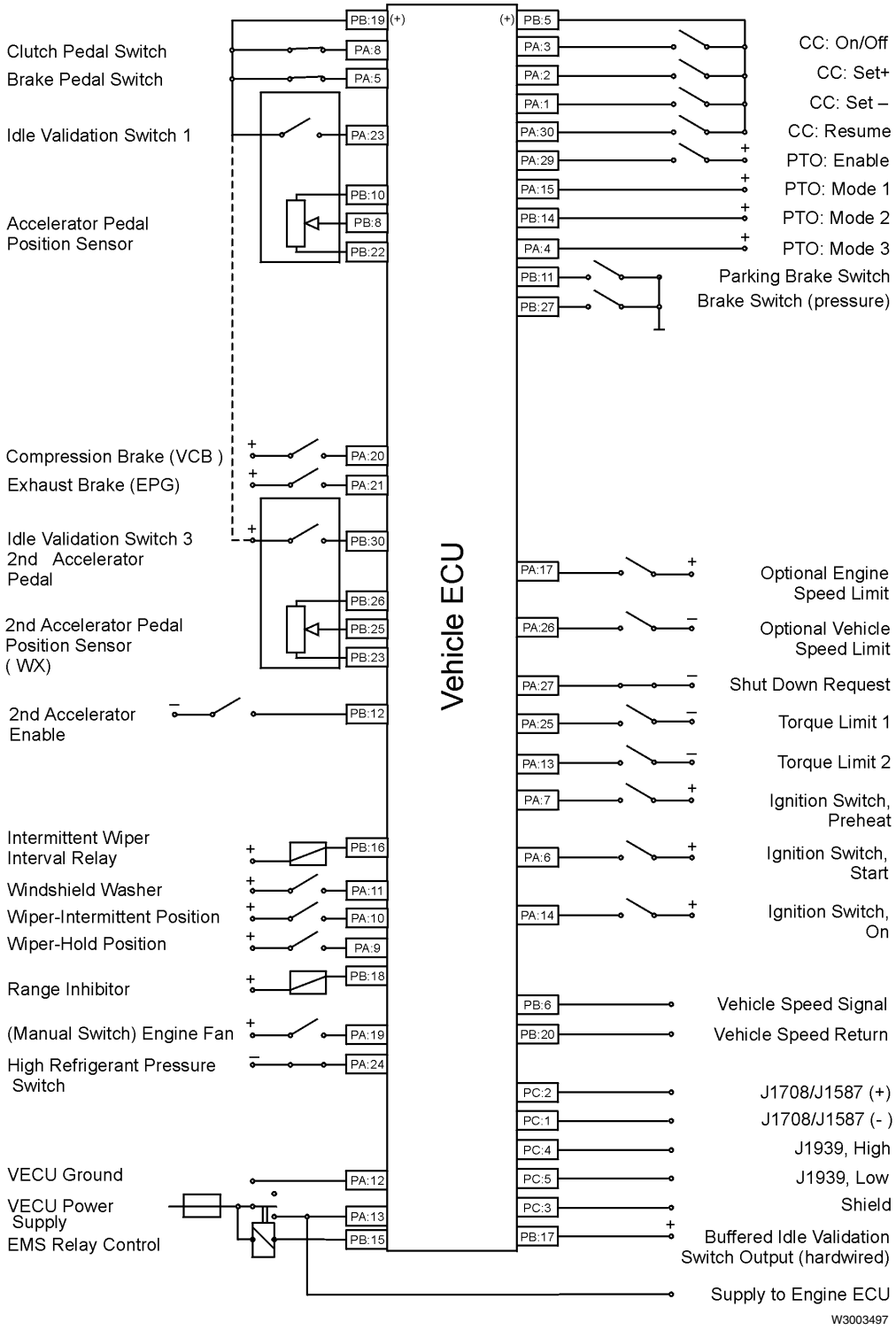

https://truckmanualshub.com/

https://truckmanualshub.com/


# Tools

## Special Tools

The following special tools are required for work with the D12 electronic control system. The 3917916 VOLVO breakout kit, along with its components, is available from Volvo Truck. When requesting tools, provide the appropriate part number. Part numbers beginning with ”J” are available from Kent-Moore.

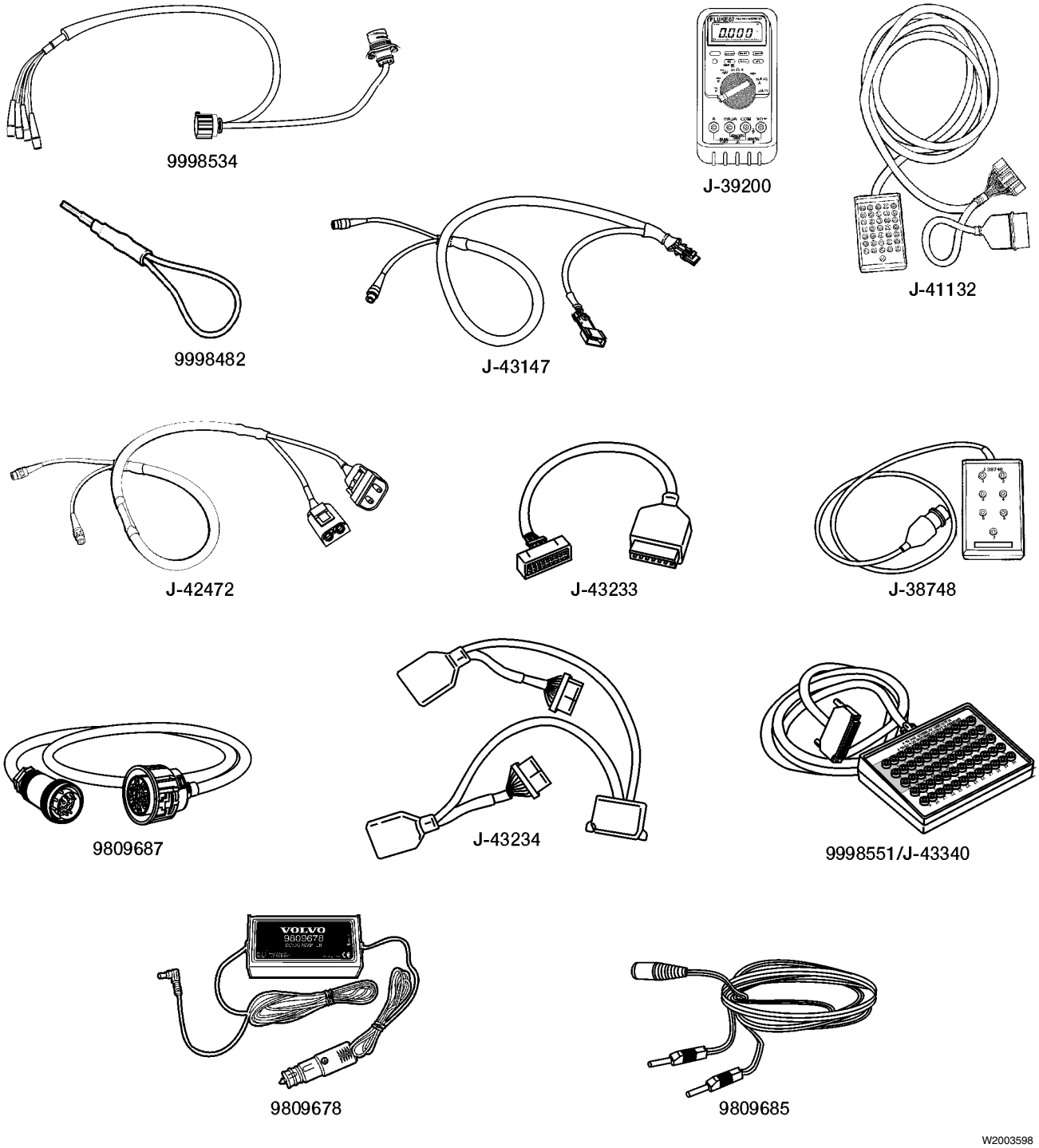


See list on next page for information about the tools in the picture.

https://truckmanualshub.com/


| | |
|---|---|
| **9998534** | 4–pin breakout harness |
| **J-39200** | digital multimeter |
| **J-43147** | 2–pin breakout harness |
| **9998482** | Guage for inspection of control unit connector |
| **J-41132** | 36–pin breakout box |
| **J-42472** | 2–pin breakout harness |
| **J-43233** | 36–pin jumper |
| **J-38748** | 7–pin fuel injection pump breakout box |
| **9809687** | AC/DC power supply for PC toll.(optional) |
| **9809678** | 12 Pin DIN Connector cable-alternative programming cable for EECU |
| **9809685** | Power extension cable —used together w/9808635. |
| **J-43234** | Adapter(Kent Moore). |
| **9998551/J-43340** | 60 Pin Breakout Box/Overlay. |

https://truckmanualshub.com/


# Other Special Equipment

The following hardware is used to operate VCADS Pro. The tools can be ordered from Volvo quoting the specified part number.

VCADS Pro tools for diagnostics is for vehicles built from 1998 and later. For diagnostics on vehicles built prior to 1998, use Pro-Link 9000 (J-38500) with Volvo Application Cartridge J-38500–2000.

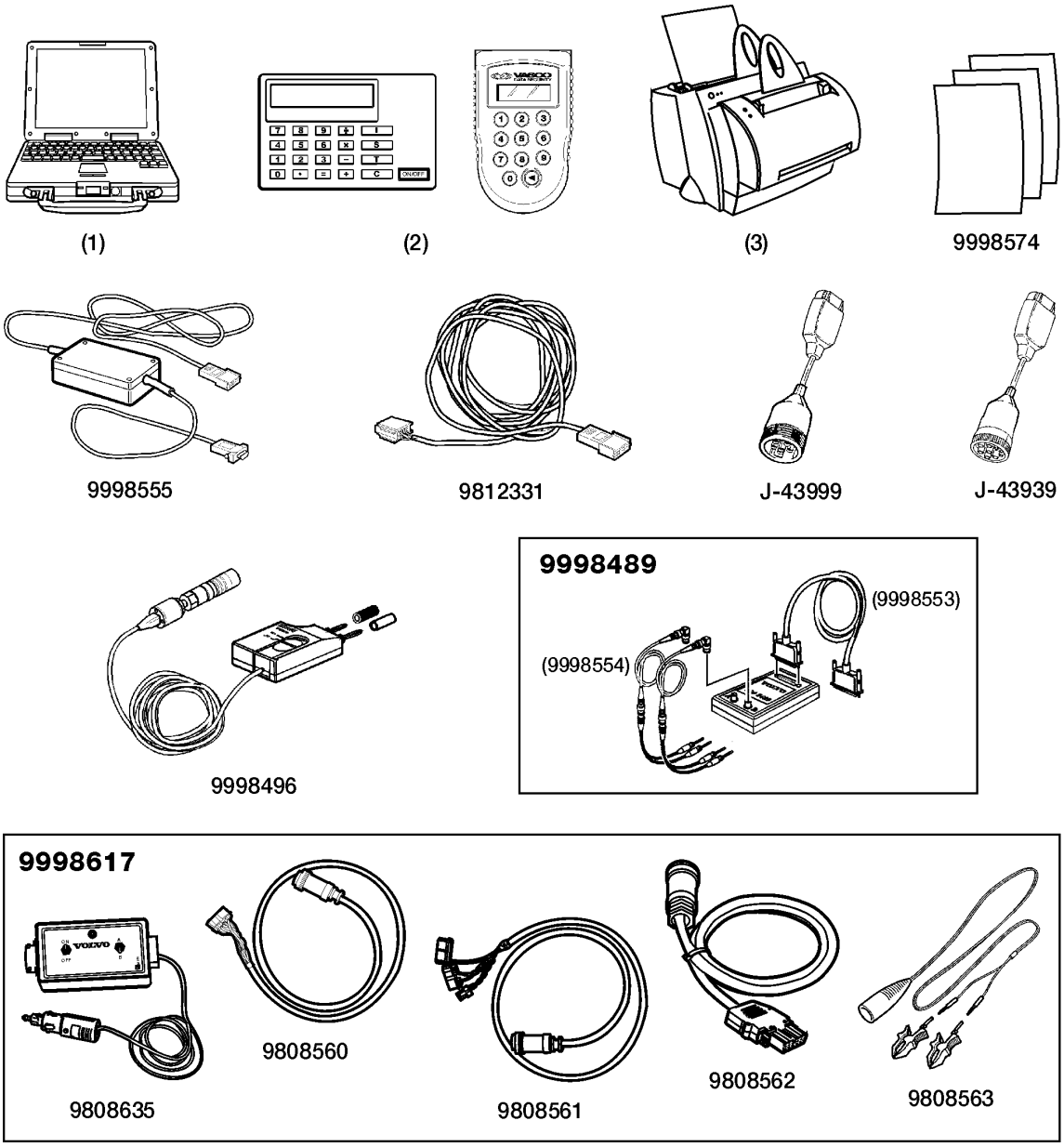


W2003597

See list on next page for information about the tools in the picture.

https://truckmanualshub.com/


| | |
|---|---|
| 1 | PC tool -package. |
| 2 | Didgipass password generator, model 300 or 500. |
| 3 | Laser printer; HP 1100A (To be purchased from a local supplier. Not supplied by Volvo.) |
| 9998574 | Laser printer labels. Used when printing labels for the engine electronic control unit (EECU). |
| 9998555 | Communication interface unit; for connection between the PC tool and the vehicle's diagnostic connector. |
| 9812331 | Extension Cable; for communication, 22 yards (optional) |
| J-43999 | 6 Pin Diagnostic adapter; for vehicles prior to 1999 |
| J-43939 | 9 Pin Diagnostic adapter; for vehicles built from January 1999. |
| 9998496 | Pressure Guage |
| 9998489 | Oscilloscope interface |
| 9998554 | Oscilloscope Cable-BNC connector cable to banana jack (optional) |
| 9998553 | Oscilloscope Cable-25 pin parallel cable (optional) |
| 9998617 | Programming Kit (see below) |
| 9808635 | Programming Unit |
| 9808560 | Cable for direct connection to the Engine ECU |
| 9808561 | Cable for direct connection to the Vehicle ECU |
| 9808562 | Cable for direct connection to the Intstrument Cluster |
| 9808563 | Cable for power supply |

**Note:** There are three ways of connecting the power cable; 1) To radio power supply, 2) Directly to battery with battery. 3) To cigar lighter.

https://truckmanualshub.com/


# Design and Function

## Vehicle Management System

### Strategy

The vehicle management system is designed to incorporate the entire vehicle system and instantly receive real-time data from key vehicle components.

- Uniform interfaces between the control systems.
- Standard adaptations to the vehicle's functions.
- Stand-alone diagnostics for the vehicle's main electronic components.

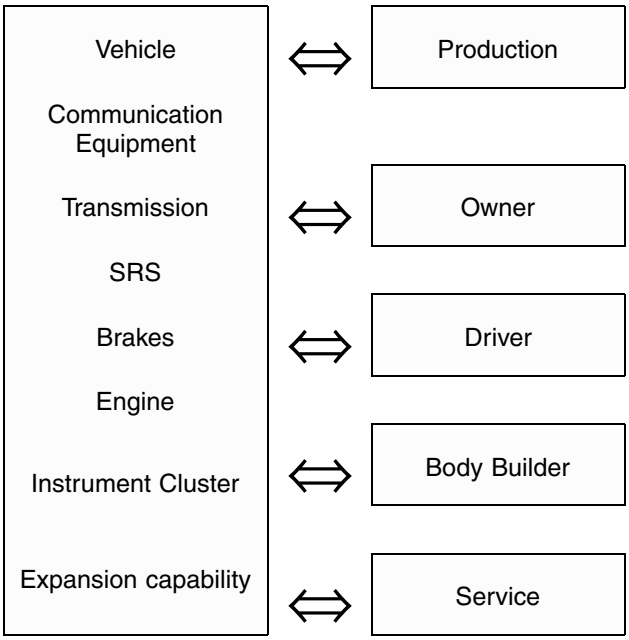


### Conventional Control Systems

In principle, a conventional control system is constructed so that one or several of the vehicle's components have their own control units that receive signals from different sensors. Each control unit serves its own component and sends signals to other control units via electrical wires.

An example of this is the engine control unit that receives signals from different sensors on the engine, as well as from other control units on the vehicle. The accelerator pedal position, the clutch pedal position, the speed signal, engaged power take-off etc., are sent to the engine electronic control unit (EECU) via wires from different sensors and contacts.

The system must have one or more communication ports, to which tools can be connected for programming as well as for reading information and any fault codes.

In the future, the vehicle's sub-components will require several specific control units and the vehicle electronics will therefore become even more complex. In the long run this will limit the ability of conventional control systems to fulfill their tasks.

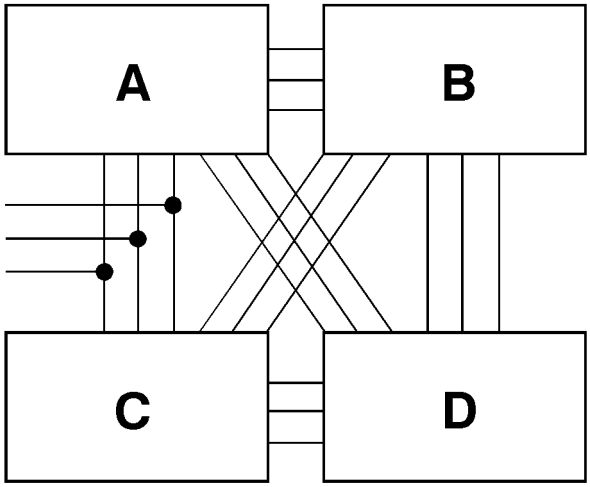


T3008752

https://truckmanualshub.com/


# Data Link System

Volvo's vehicle electronics are constructed on the principle that all communications between the control units in the system are accomplished via two data links:

- the J1939 Control Data Link
- and the J1587/1708 Information Data Link

The vehicle's main components have their own control units that are connected to one or both links in order to be able to communicate with each other.

Here is how the system works on a vehicle equipped with a Volvo engine: when the driver wants to increase the vehicle's speed, a signal is sent from the accelerator position sensor to the vehicle electronic control unit (VECU). The signal is then transferred via the data link to the engine electronic control unit (EECU).

The EECU communicates with its own sensors to verify that the conditions exist to permit increased acceleration. If the conditions are met, it carries out the VECU's request.

The EECU communicates with the other control units via the data links, either by requesting or by receiving direct information that all prerequisites are met in order to be able to carry out the request.

If an error should occur in any of the systems, a signal is sent out on the J1587/1708 information data link, which makes it possible to read the information, either on the driver's instrument cluster, or via a PC or diagnostic tool (i.e. Pro-Link, VCADS or VCADS Pro) connected to the diagnostic connector.

The data link system provides an extremely flexible solution with great potential for expansion.

**CAUTION**

No modifications or connections should be made to wires 406 (yellow), 407 (green) or 408 (shielded). These wires carry the high-speed communications between the electronic systems in the vehicle. **Any modification, connection to, or damage to these wires can result in the failure of the vehicle's electronic systems.**

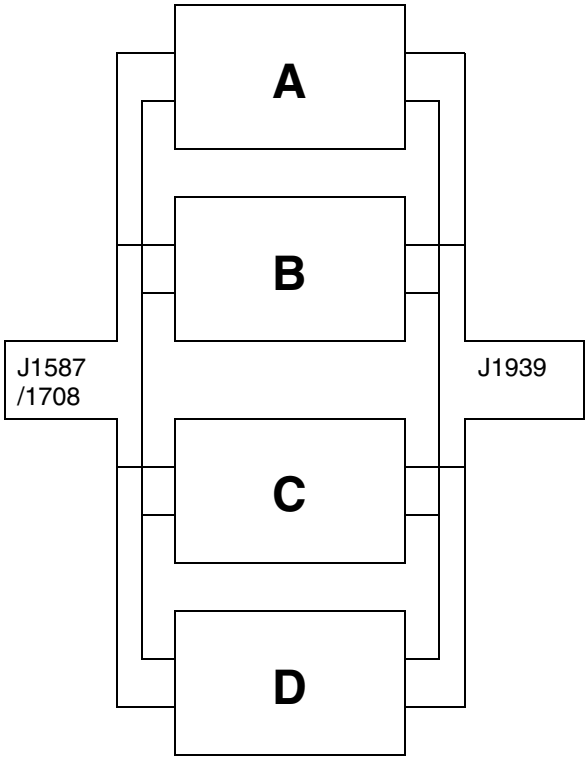

https://truckmanualshub.com/


# Data Links, Design and Function

Data links are one way of transferring information between various components. In conventional systems, analog signals have mostly been used.

Analog signals mean that different voltage levels represent different values. A simplified example of analog signals could be:

1 volt = 10° C

2 volts = 20° C

3 volts = 30° C

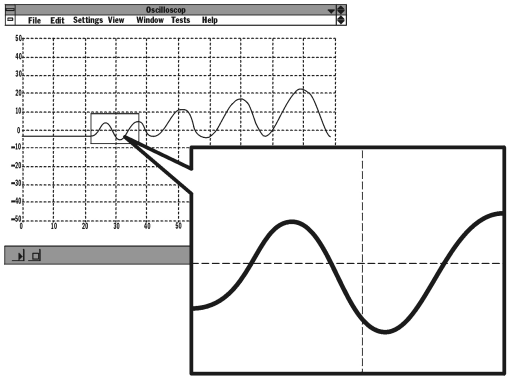


W3003960

Data links use digital communication. This means that the voltage only varies between two different values, either “high” or “low”. By combining these high and low signals various values can be described.

The diagram shows an oscilloscope image where the voltage of the data link is measured. As can be seen from the diagram, a large part of the time the link is “silent” but at times a number of fast pulses are sent. A group of pulses is called a message.

The enlarged portion of the diagram shows that each message consists of a combination of high and low voltage levels.

The following sections describe what type of information this message contains.

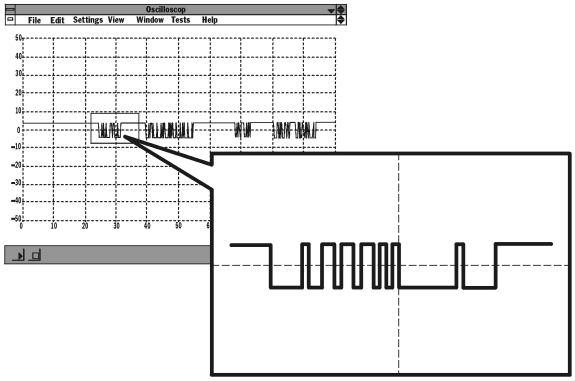


W3003957

https://truckmanualshub.com/


## Messages and Information Content

Different voltage levels are represented by the different numbers in the binary number system. The binary number system has only two numbers, one and zero.

The ones are normally represented by a high voltage and the zeros by a low voltage.

Each binary number is called a “bit”. This message consists of four groups of binary numbers. Each group of eight bits makes up a “byte”, a decimal number from 0–255 with information, as well as a start bit and a stop bit.

The purpose of the start and stop bits is to function as markers for where that group of data begins and ends. In the diagram above only the start and stop bits are labeled. The other information is shaded.

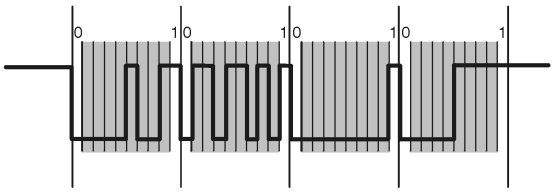


W3003956

## Example

The diagram shows the information content in the four different parts of the message. The start and stop bits are shaded since they do not contain any information.

The box in the diagram shows the different binary and decimal values which comprise the message.

**Note:** The information is sent over the data link with the “least” bit first in the binary numbers. The normal way to notate binary numbers is shown in the box in the diagram.

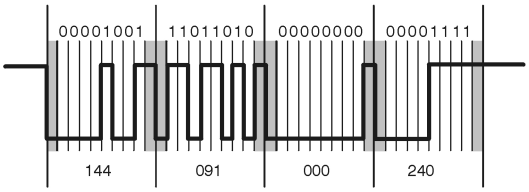


| | | 128+ | 64+ | 32+ | 16 + | 8 + | 4 + | 2 + | 1 |
|---|---|---|---|---|---|---|---|---|---|
| 144 | = | 1 | 0 | 0 | 1 | 0 | 0 | 0 | 0 |
| 091 | = | 0 | 1 | 0 | 1 | 1 | 0 | 1 | 1 |
| 000 | = | 0 | 0 | 0 | 0 | 0 | 0 | 0 | 0 |
| 240 | = | 1 | 1 | 1 | 1 | 0 | 0 | 0 | 0 |

W3003958

https://truckmanualshub.com/


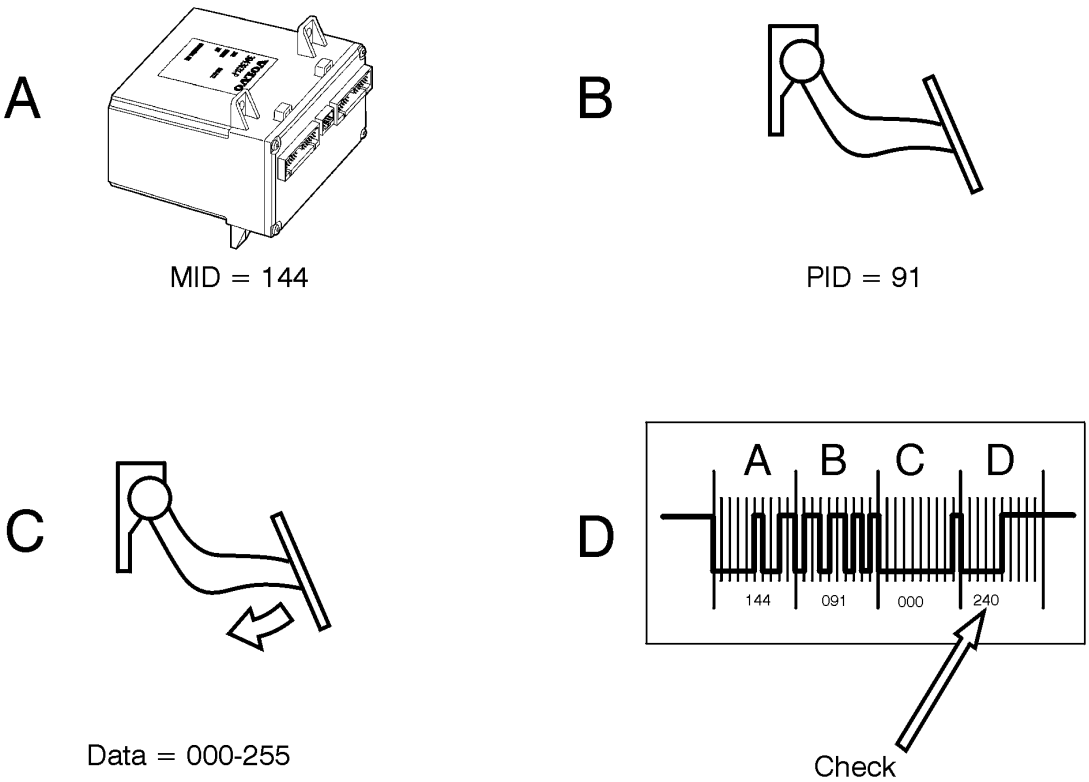


W2003293

Message 144–091–000–240 in this example, has the following meaning:

**A** MID 144 — The message comes from the Vehicle ECU.

**B** PID 091 — The message states the accelerator pedal position percentage.

**C** Data 000 — The accelerator pedal is in the completely released position.

000 is a data component, which in this case states how much the accelerator pedal has been pressed down. The value can vary between 000 for a completely released pedal and 255 for a completely pressed down accelerator pedal.

**D** Check 240 — The checksum is used as a check that the message is reasonable.

https://truckmanualshub.com/


## Diagnostic Message Description

The Society of Automotive Engineers (SAE) and the American Trucking Association (ATA) have developed a standardized list of diagnostic messages, or fault codes. These diagnostic messages are used to communicate information about problems detected by an electronic control unit's (ECU's) self-diagnostic program. In addition to the industry-standard SAE codes, Volvo has developed a list of diagnostic messages that are unique to Volvo applications. Generally, diagnostic messages and their descriptions are listed in the service manual for each respective ECU and in the user manual for diagnostic tools.

**MID** MID is an acronym for Message Identification Description. MIDs are SAE standardized codes used to identify individual electronic control units.

**PID** PID is an acronym for Parameter Identification Description. PIDs are SAE standardized codes used to identify parameters or values.

**PPID** PPID is an acronym for Proprietary Parameter Identification Description. PPIDs are Volvo's unique codes used to identify parameters or values.

**SID** SID is an acronym for Subsystem Identification Description. SIDs are SAE standardized codes used to identify components.

**PSID** PSID is an acronym for Proprietary Subsystem Identification Description. PSIDs are Volvo's unique codes used to identify components.

**FMI** FMI is an acronym for Failure Mode Identifier. FMIs are SAE standardized codes used to identify a type of failure.

https://truckmanualshub.com/


# Data Link Communication

## *General*

Communication between the different ECUs takes place via the two data links: the J1939 control data link and the J1587/1708 information data link.

The diagram shows how the control units, the diagnostic connector, and the instrument cluster are connected in principle.

**The instrument cluster, the engine ECU** and **the diagnostic connector** are always included in the system. The system may include other control units, depending on the vehicle type, engine type and optional equipment.

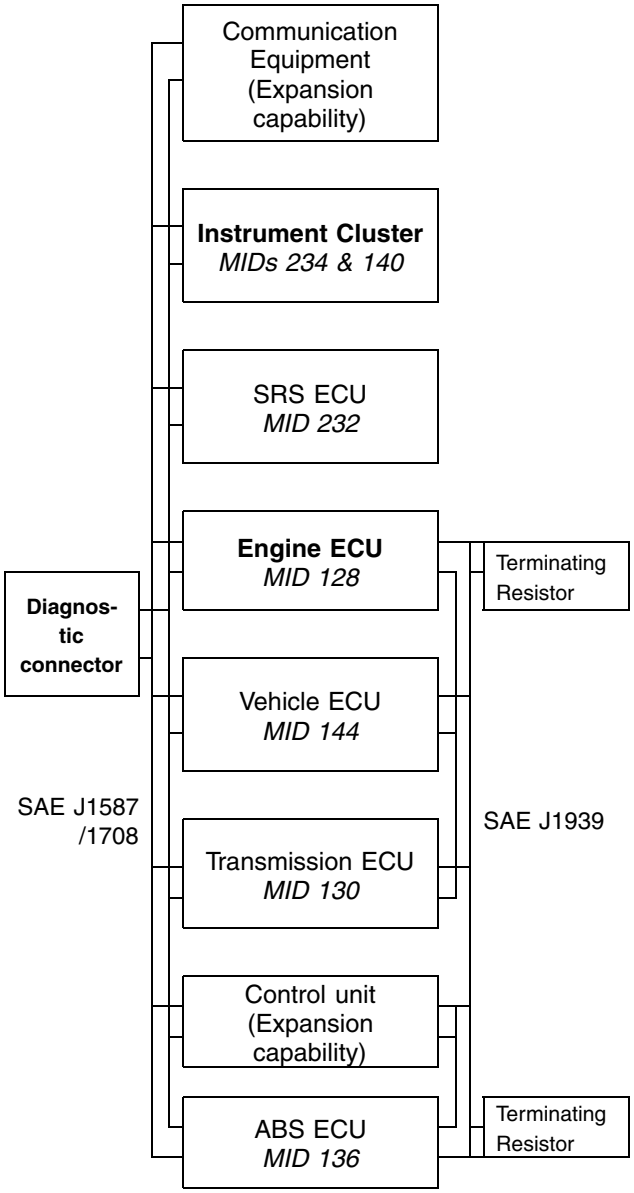

https://truckmanualshub.com/


## *SAE J1939 Control Data Link*

The system's **control signals** are sent via this link.

The J1939 link is very fast, operating at 250,000 bits per second. This operating speed allows the system to function more effectively and adapt quickly to changing conditions and vehicle requirements.

The link complies with SAE standards, and consists of three twisted wires: a green wire (407), a yellow wire (406) and in early deisgns a shield wire (408–optional). The twisted wire set (40 turns per meter) is used to protect the link from electrical interference.

**CAUTION**

No modifications or connections should be made to wires 406 (yellow), 407 (green) or 408 (shielded). These wires carry the high-speed communications between the electronic systems in the vehicle. **Any modification, connection to, or damage to these wires can result in the failure of the vehicle's electronic systems.**

https://truckmanualshub.com/


## Terminating Resistor

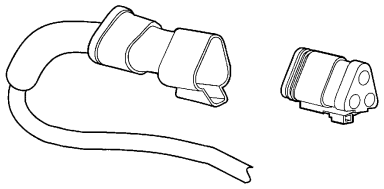

W3002905

Terminating resistors are wired into each end of the J1939 data link. One is located near the ABS ECU and the other near the engine ECU. On Volvo engines, the terminating resistor at the engine ECU end is located inside the EECU.

If you measure 120 ohm (+/- 10 ohm) between circuits 406 and 407, then there is only one terminatig resistor. Check to determine which is missing and reconnect it.

**Note:** With Volvo engines, one terminating resistor is within the engine ECU. The other is poitioned at the end of the J1939 network, typically at the ABS ECU. The one within the ECU is not accessible and should not be at fault.

If you measure less than 60 ohm, only two terminating resistors are used in a vehicle. Never install three in one truck. If more than two terminating resistors exist in the J1939 circuit, damage to the ECU electronics can occur over time. You can easily check to see if you have two resistors by measuring the resistance between circuits 406 and 407 with the ignition OFF. The correct resistance is 60Ω.

The purpose of these resistors is to prevent data link signal reflections. They must remain connected for the system to function properly.

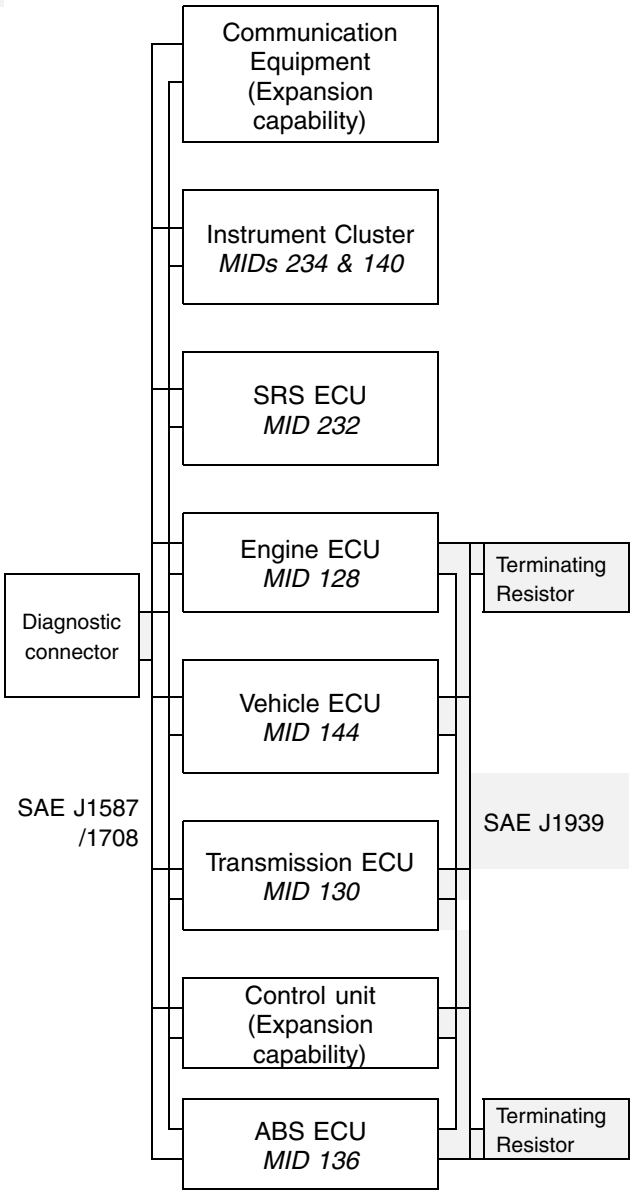

https://truckmanualshub.com/


## *SAE J1587/1708 Information Data Link*

**Information and diagnostic signals** are sent via this link. The link also functions as a “backup” should the J1939 control data link fail to function for any reason.

SAE J1708 is a standard that specifies hardware and a databus speed of 9600 bits per second. SAE J1587 is a protocol that provides a standard method for exchanging information between microprocessors.

The J1587 link consists of two wires (400 and 401) that are twisted around each other approx. 30 turns per meter. The twisted-pair wires are to protect the link against electrical interference.

**CAUTION**

If a circuit must be added to the electrical system, and will carry high currents or frequencies, route it in a location AWAY from wires 400 and 401 to prevent mutual inductance from interfering with data link functions.

**CAUTION**

Wires 400 and 401 MUST NOT be cut or spliced for any connections. These wires are used for the transmission of data for diagnostic messages and gauges. Modifying this circuit can cause these functions to fail.

## *SAE J1922 Data Link*

For a short period of time some vehicles were produced which used the J1922 data link. The J1922 data link was developed as an interim standard until the J1939 control data link was established. The J1922 link operates on J1708 defined hardware and is used like a control link for communication between engine, transmission and ABS ECUs.

The J1922 link consists of two wires (404 and 405) that are twisted around each other approx. 30 turns per meter. The twisted-pair wires are to protect the link against electrical interference.

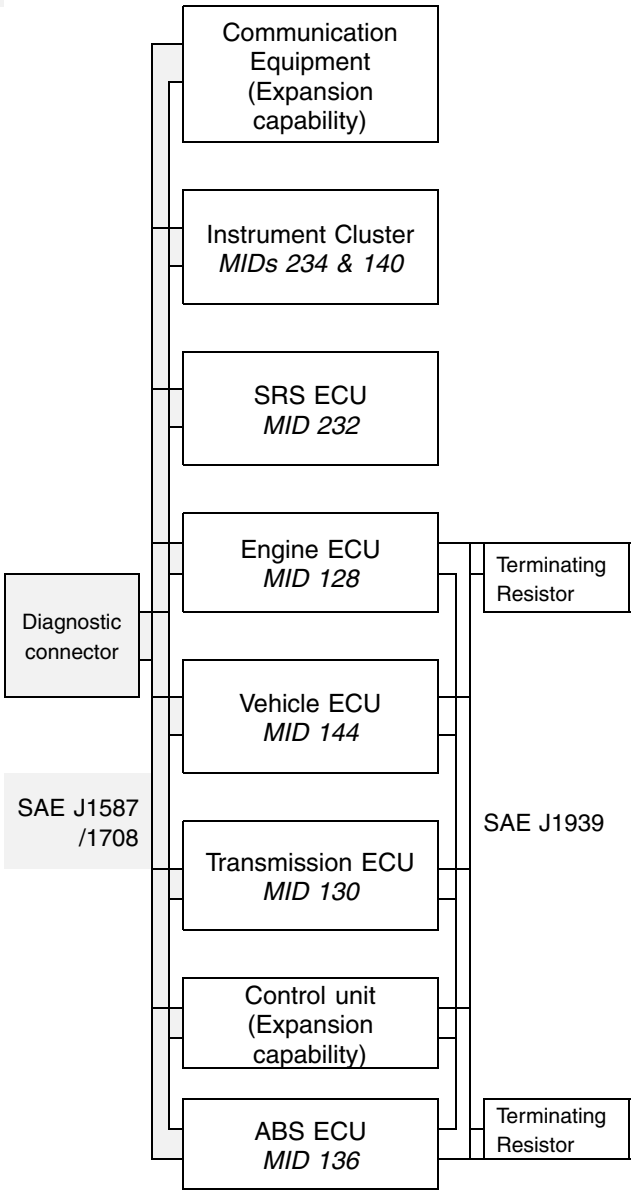

https://truckmanualshub.com/


# Diagnostic Connector

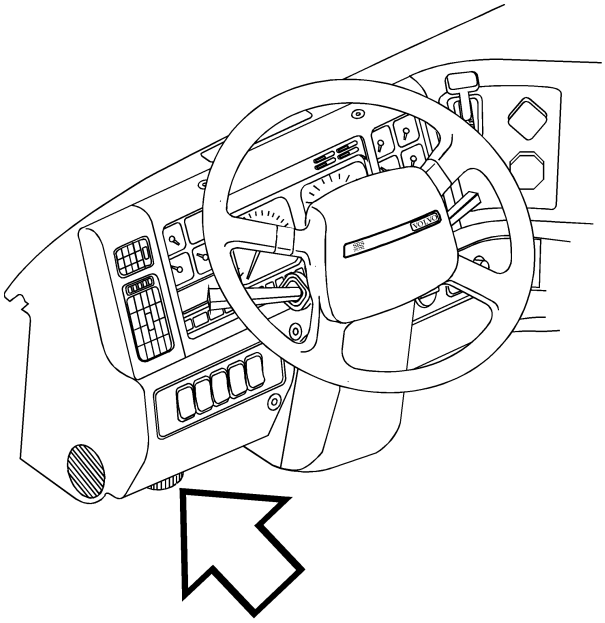

W8001310

The diagnostic connector is a round Deutsch connector located in the driver's side kick panel. The diagnostic connector is connected to the J1587/1708 information link and gives the system a way to communicate with an external PC or diagnostic tool.

With a PC or diagnostic tool connected, fault codes can be read from all the control units. This is important in fault tracing to carry out basic checks of all the vital parts of the vehicle's electronics.

Some programming can also be done via the diagnostic connector.

The standard diagnostic connector is a 6–pin Deutsch. A newer 9–pin Deutsch version has been introduced on certain vehicle/engine variants. The new 9–pin connector connects to both the J1939 and J1587/1708 data links.

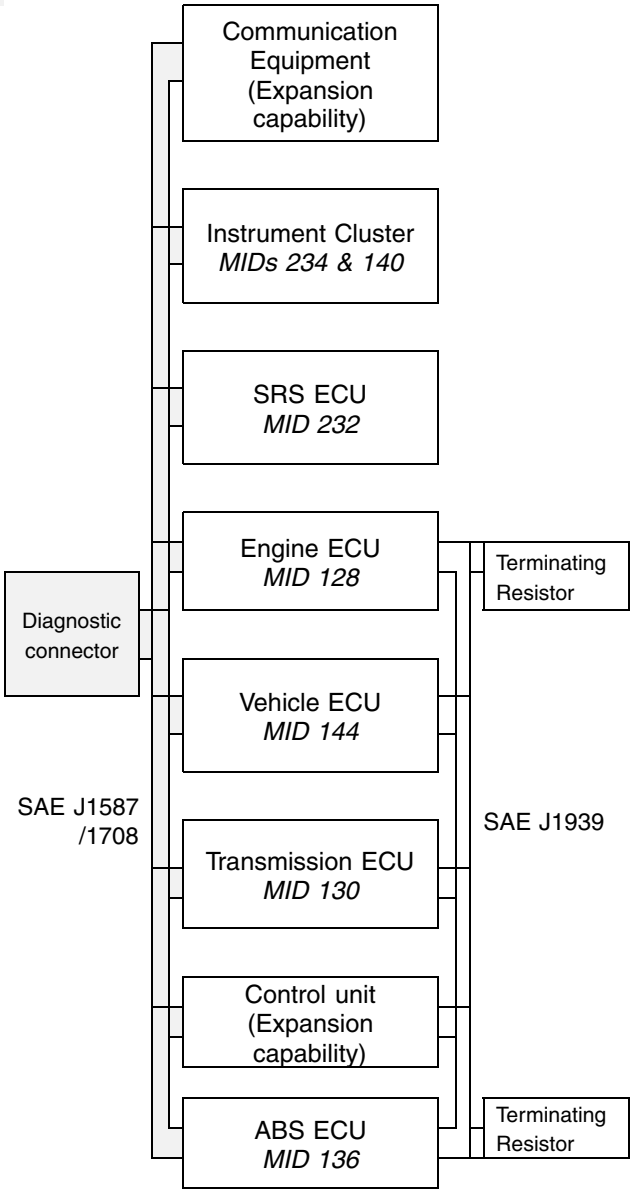

https://truckmanualshub.com/


# Communication Equipment

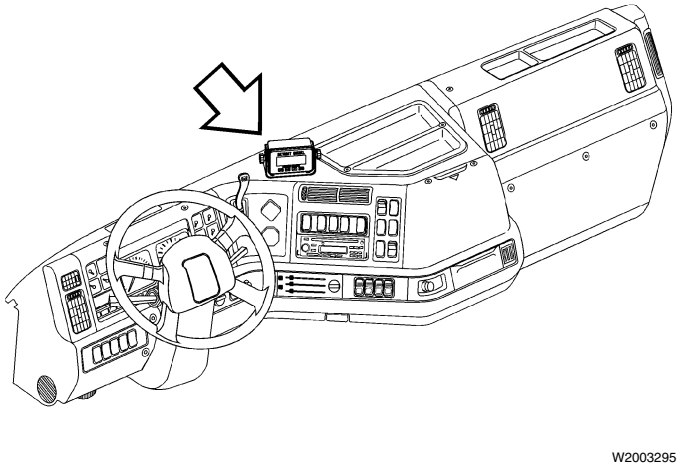


Pro-Driver Display

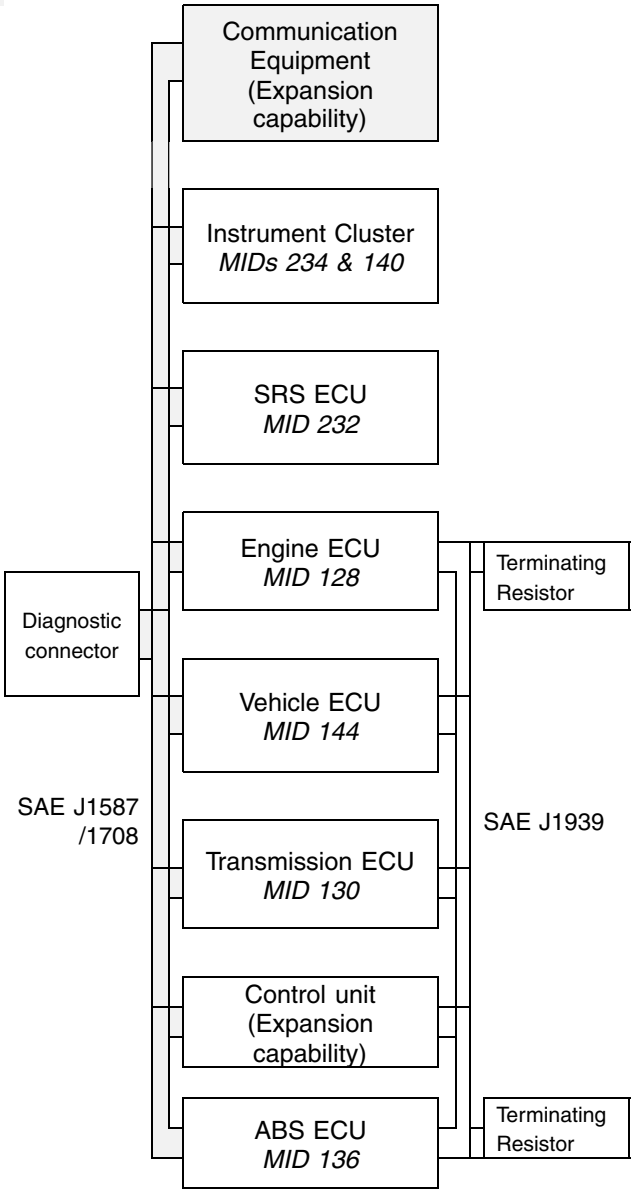


Various manufacturers offer communication equipment designed to allow drivers to keep log book records electronically, maintain communication with the home office, monitor and record vehicle operations, and many other functions. Currently these communication devices are connected to the J1587/1708 Information Data Link. Newer and more sophisticated versions of these devices may also connect to the J1939 Control Data Link. Note: No provisions have currently been made to add communication equipment to the J1939 link in aftermarket adaptations.

**CAUTION**

No modifications or connections should be made to wires 406 (yellow), 407 (green) or 408 (shielded). These wires carry the high-speed communications between the electronic systems in the vehicle. **Any modification, connection to, or damage to these wires can result in the failure of the vehicle's electronic systems.**

Provisions are made for adding aftermarket communication devices to the J1587/1708 link via connectors in the wiring harness.

Some of the communication devices currently used in Volvo trucks include Road Relay, Pro-Driver, Qualcomm and Highway Master.

https://truckmanualshub.com/


# Instrument Cluster

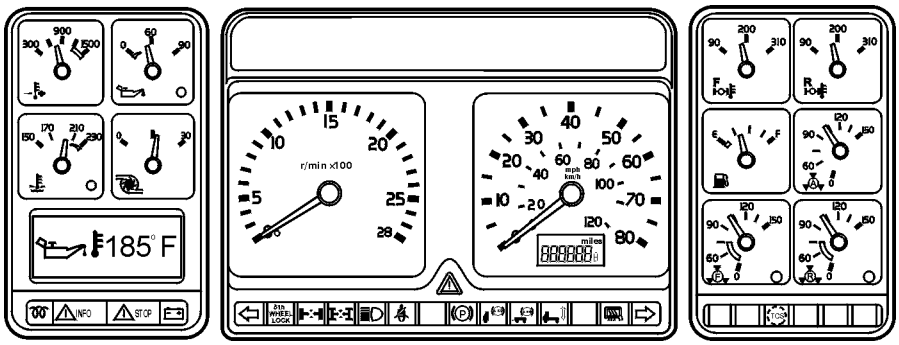


The instrument cluster used on Volvo vehicles uses both data link signals and hardwired sensors depending on the vehicle/engine variant and instrument configuration. A graphic display screen is integrated into the instrument cluster to provide additional features and vehicle system information not available from other gauges. Diagnostic codes can also be retrieved and displayed. The instrument cluster is connected to the J1587/1708 information data link.

For information about the instrumentation that communicates via the data link, refer to service manuals in group 38:

| Model: | See Publication: |
|---|---|
| WG/AC/WC/WI from 1994; WX with electronic engines from 5.96 | Data Link Instrumentation, PV776–381–620SM |
| WX | Kysor Mini-Cluster, PV776–TSP108262 |
| VN from 1.98–2.99 | Instrumentation, PV776–TSP106805/1 |
| VN from 3.99 ADN VHD | Instrumentation, PV776–TSP139790 |

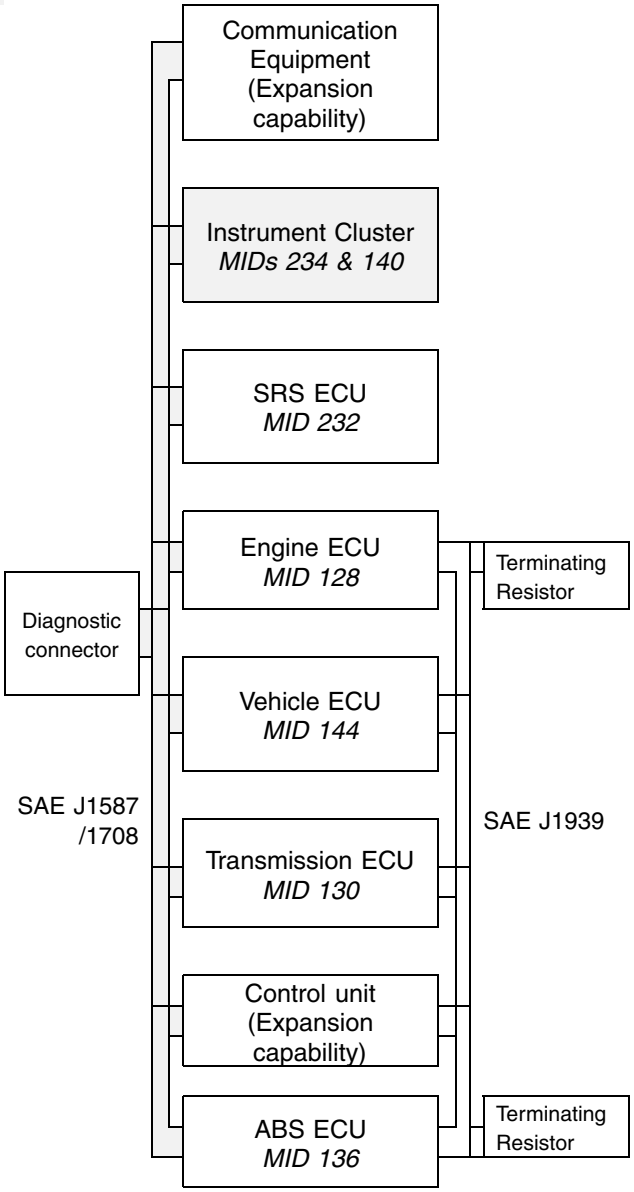

https://truckmanualshub.com/


# Vehicle Electronic Control Unit (VECU)

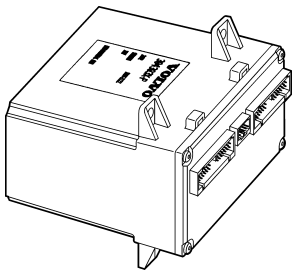


W2002673

The vehicle electronic control unit (VECU) is part of the integrated vehicle electronics. The VECU is located in the cab, but its specific mounting location varies by model.

The main function of the VECU is to collect data from different cab control units and then to pass this data to other ECUs in the system (primarily to the engine ECU).

For detailed information about the VECU see *Vehicle Electronic Control Unit, MID 144*, Volvo service publication number PV776–300–610.

**The VECU is only used in vehicles equipped with Volvo engines.**

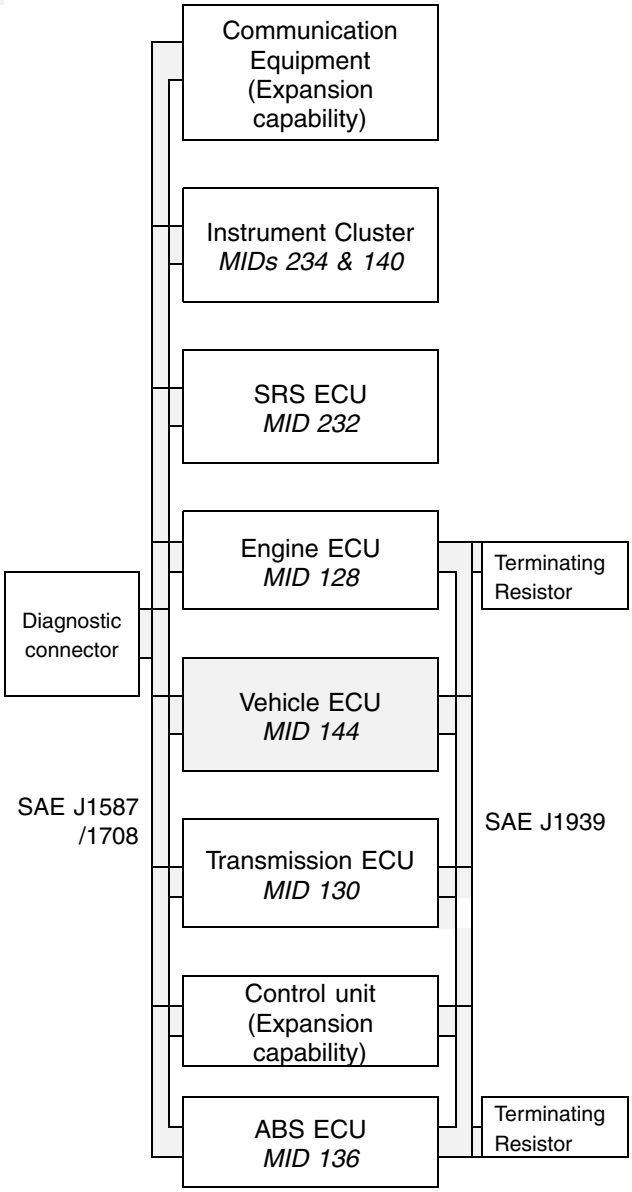

https://truckmanualshub.com/


# Engine Electronic Control Unit

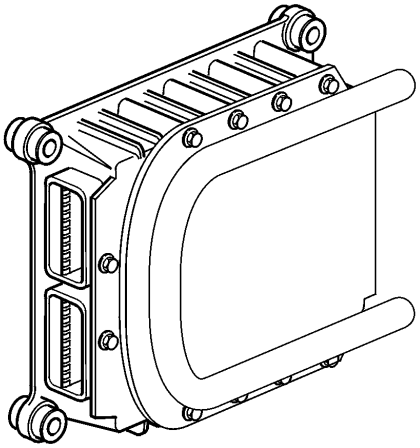

Irrespective of engine variant, the engine electronic control unit (EECU) performs the same basic functions in the system: control of engine operation. The EECU receives signals from various sensors and the data links. Based on these signals and the parameters programmed into the EECU, the EECU calculates the proper injection angle and fuel quantity to satisfy the requested operating requirements.

The EECU is connected to both the J1939 control data link and the J1587/1708 information data link.

**Note:** Early production model EECUs may use only the J1587/1708 data link, or the J1587/1708 and the J1922 data links.

For detailed information about EECUs see the service literature for that particular engine.

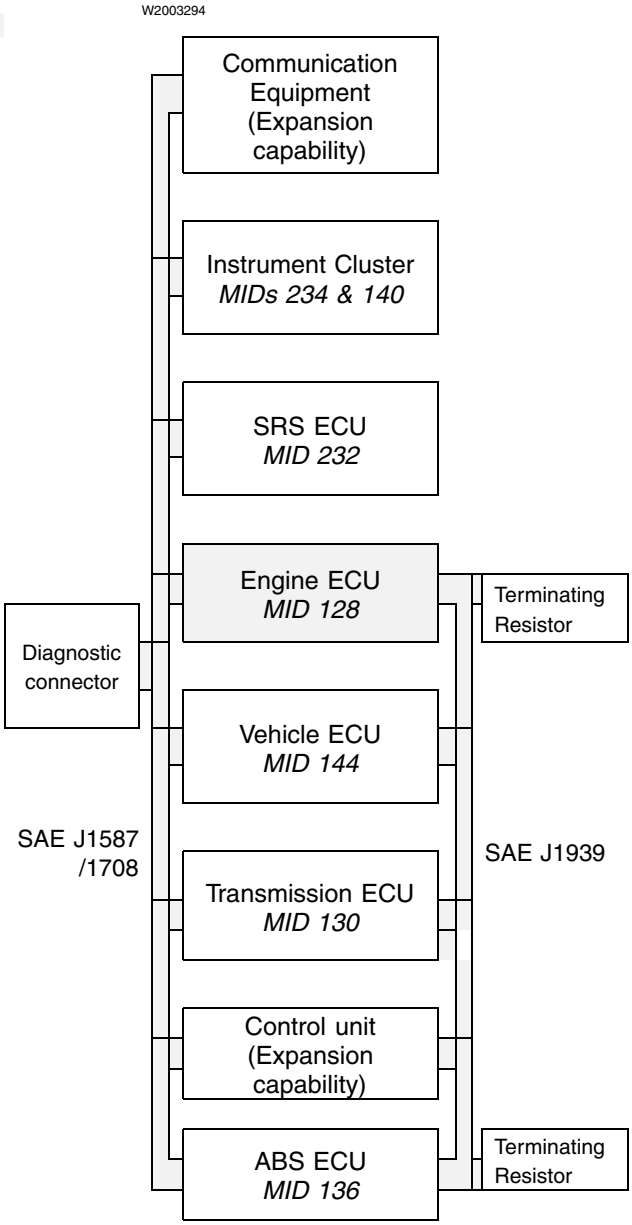

https://truckmanualshub.com/


# EECU

The EECU is an electronic control unit that monitors certain operational parameters of the Volvo engine from the SAE J1587 Data Link and appropriate sensors.

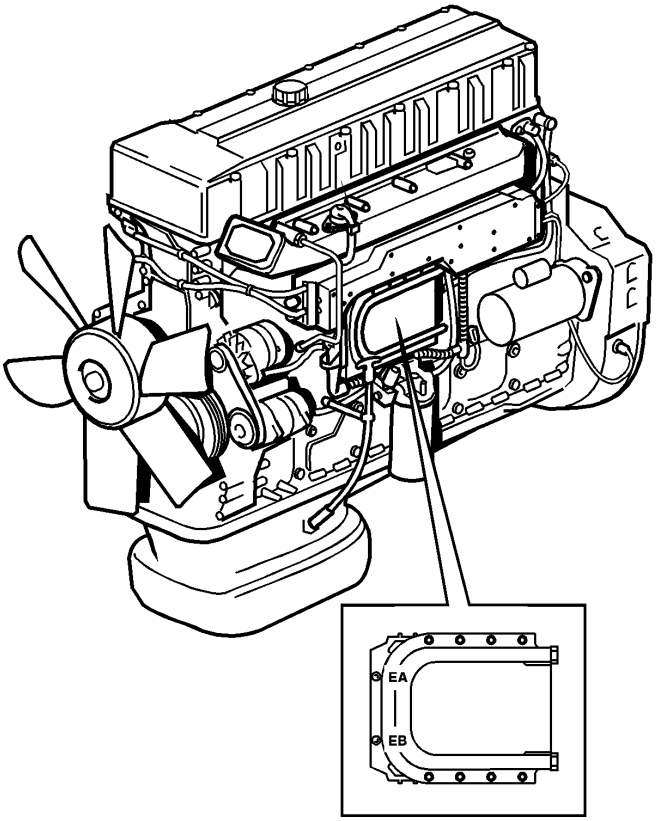


W2003076

https://truckmanualshub.com/


## *ON/OFF Engine Cooling Fan*

The EECU receives the input from the engine coolant temperature sensor to turn on the cooling fan at 115 °C (202 °F). The fan will remain engaged until the engine coolant drops to 90 °C (195 °F).

The ON/OFF cooling fan can also be engaged by the EECU if it receives a signal from the air conditioning systems APADS module. When the A/C system pressure reaches 20.5 bar (300 psi) the APADS module will send a signal to the EECU to engage the cooling fan. The on time of the cooling fan is controlled by the APADS module.

If the EECU does not receive any coolant temperature data, the fan is engaged for a minimum of 30 seconds. The fan will stay engaged until valid coolant temperature data is received and the coolant temperature drops below 90 °C (195 °F).

## *Converting Engine Oil Pressure Signal*

The EECU takes an analog signal from a pressure transducer and broadcasts the signal on the SAE J1587 data link.

## *Engine Information and Warning Lamp-On Dash*

- **Engine Oil Pressure**
  The EECU will make the △ STOP lamp light and the icon in the display light up if the oil pressure is < 41 ± 3 kPa (6 ± 1.2 psi). Also a warning signal sounds if the engine is running.
- **Engine Coolant Level**
  The EECU will make the △ STOP lamp light stay on (solid) if the low coolant level sensor detects a low coolant level condition. The low coolant level condition is active only after 5 seconds of a constant signal from the low level sensor.
- **Engine Coolant Temperature**
  The EECU will make the △ STOP lamp light illuminate and gauge LED illuminate, plus the icon in the display if a high coolant temperature from the engine ECU is received.
- **Engine Oil Temperature**
  If the Engine oil temperature becomes too high an information message is shown automatically with the text HIGH. At the same time the yellow△INFO lamp under the display lights up. The engine may also derate, if it is set up to do so in the engine ECU programming. The temperature which activates this warning varies for different engines. This temperature is set in the engine ECU. For Volvo engines, it is 275 °F (135 °C).

**Note:** If the engine is running and the stop lamp comes on you will get a **buzzer** or warning signal.

https://truckmanualshub.com/


## *Electronic Unit Injectors*

The engine has six unit injectors, one for each cylinder.

Each **Electronic Unit Injector**, or EUI, is a combination of injection pump and injector, but operates at a considerably higher pressure than a standard injector.

Each unit injector is mounted vertically in the cylinder head at each cylinder, centered between the four valves. The compressive force for the unit injector is developed by a lobe on the overhead camshaft. It is then transferred by a rocker arm to the injector.

The injection angle and the amount of fuel to be injected into the cylinder is determined by the EECU, which transmits signals to the electromagnetically controlled fuel valve in the unit injector valve housing.

**⚠ DANGER**

Make sure to turn the ignition key off before working on the electronic unit injectors. This eliminates the possibility of electric shock which may result in personal injury or death.

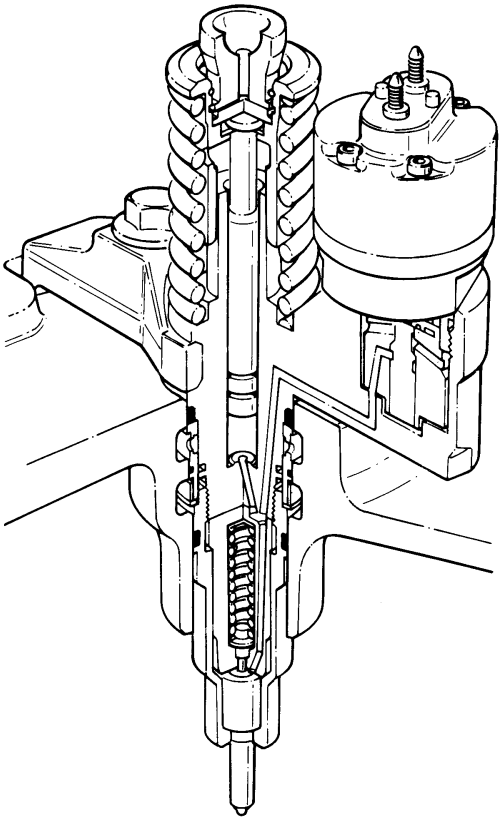


Electronic unit injector

## *Calculating Fuel Quantities*

The EECU calculates the quantity of fuel to be injected into a cylinder. This calculation provides the period of time during which the fuel valve is closed (when the fuel valve is closed, fuel is injected into the cylinder). Factors that determine how much fuel to inject into a cylinder are:

- Requested fuel amount
- Limitation of fuel amount

### Flywheel

There are 54 notches cut into the flywheel; these are read by the speed sensor for the flywheel. With the help of these notches, the EECU can set the correct injection angle and calculate the time which gives the correct fuel amount.

The notches are divided into three groups, with 18 notches in each group. There is a flat area between each group of notches equivalent to 18°. A flat area and 18 notches is equivalent to 120° on the flywheel, or a third of a full turn. The area between each notch equals 6° on the flywheel.

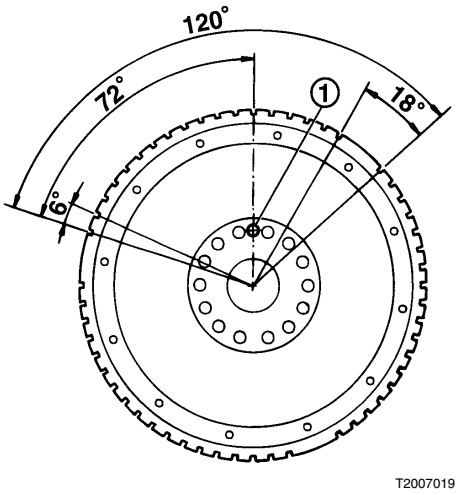


Flywheel

https://truckmanualshub.com/


## Cam Sensor Wheel

The cam sensor wheel has six teeth (one tooth for each unit injector) evenly spaced at 60° center-to-center, plus an extra tooth, placed 15° before the tooth that indicates cylinder number 1.

The EECU uses these teeth to determine which injector is in line for injection. In other words, each tooth (teeth 1–6) represents the start of a cylinder operating phase (does not apply to the extra tooth).

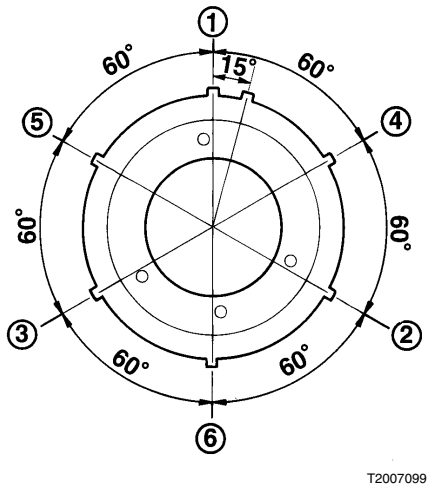


Cam sensor wheel

## Flywheel and Cam Sensor Wheel

The ratio between the flywheel and cam sensor is 2:1. This means that when the flywheel has rotated two turns, the cam sensor wheel has rotated one turn or when the flywheel has rotated 30°, the cam sensor wheel has rotated 15° and so on.

https://truckmanualshub.com/


## Injector Operational Phases

The operational phase of the number 1 cylinder is given in the following example. Fuel is injected at 7° before top dead center (BTDC) (the injection angle may vary between 18° BTDC and 6° after top dead center).

The cam sensor reacts to the extra tooth on the cam sensor wheel. This informs the control unit that the next tooth in turn (tooth 1) indicates the number 1 cylinder.

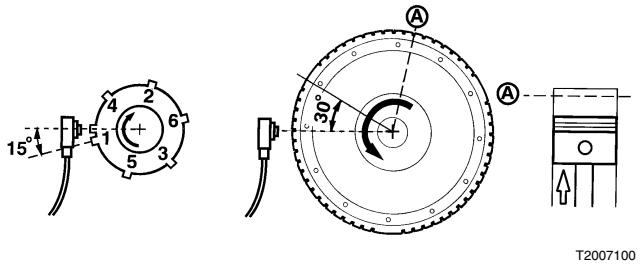


Locating number 1 cylinder

| | |
|---|---|
| **A** | top dead center (TDC) |

The cam sensor wheel detects tooth 1 and the flywheel sensor reaches a flat area on the flywheel at the same time.

At this point, the piston is on its way upward in the cylinder and no fuel is injected into the cylinder.

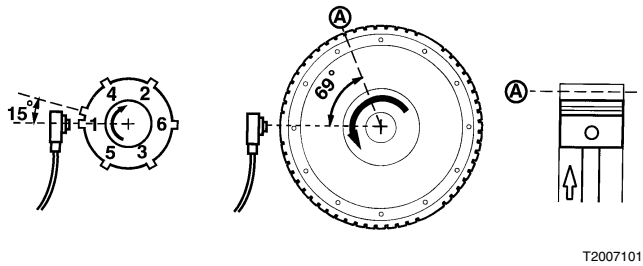


Engine speed calculated

| | |
|---|---|
| **A** | top dead center (TDC) |

The sensor detects the first notch after a flat area on the flywheel. Using the engine speed calculation, the EECU can determine:

- When to begin injecting fuel into the number 1 cylinder. This gives selected injection angle (7° BTDC in the example).
- When to stop injecting fuel into the number 1 cylinder. This gives the selected fuel amount.

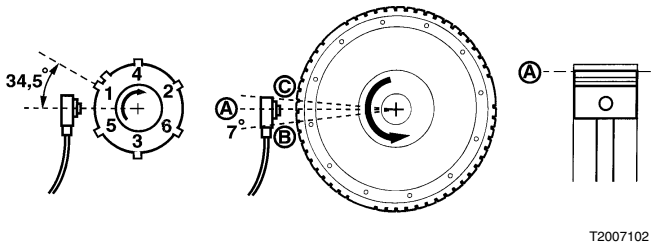


Calculating injection angle

| | |
|---|---|
| **A** | TDC |
| **B** | 7° BTDC (injection begins) |
| **C** | ATDC (injection stops) |

https://truckmanualshub.com/


From the first notch after a flat area, the EECU advances the angle from which it is to begin injecting fuel into the cylinder and on to the angle where it is to stop injecting fuel into the cylinder. If the calculated angles do not agree with the notches on the flywheel, the EECU measures the time between the last notches to rectify the angles.

Because the EECU must calculate the engine speed during 120°, the engine speed calculation for each cylinder occurs one step ahead at all times. In other words, during the operational phase for one cylinder, the EECU calculates engine speed for the next cylinder and so on.

This procedure is repeated for the next cylinder in the same manner as described for the number 1 cylinder.

**Note:** Note that the calculation of the injection angle and fuel amount takes place continuously, regardless of the operational phase of the cylinders.

## *Cylinder Balancing*

The EECU can provide each cylinder with a different quantity of fuel to make the engine run more smoothly at idling speeds. At higher speeds, there are no problems with smooth running and all cylinders receive the same amount of fuel. If the variation in fuel quantity between different cylinders is too great during cylinder balancing, the EUI, which deviates most, triggers a fault code from 31 to 36. This indicates that there must be a fault in the cylinder in question.

For cylinder balancing to take place, the following conditions must be satisfied:

- Idling speed must be below 650 rpm.
- Fuel requirement must be below a specific rating.
- Idling adjustment function must not be active.
- PTO not active.
- Cruise control mode not active.
- Accelerator pedal in idling position.
- Coolant temperature must be above 50 °C (122 °F).
- Vehicle must be at a standstill.
- No fault codes in existence.

https://truckmanualshub.com/


## *Other Functions*

The EECU guides the EUIs based on the following ”control functions.”

**Smoke limitation** — To prevent injecting too much fuel into the cylinder, the EECU checks:

- Boost pressure
- Engine speed
- Boost air temperature

**PTO engine speed** — The engine can be kept at a constant rpm level that is at least 100 rpm greater than low idle and less than high idle.

**Cruise control** — The engine can be set to maintain a constant speed between 48 km/h (30 mph) and 140 km/h (87 mph). For the cruise control mode to function, the following conditions must be satisfied:

- Cruise control in **ON** position.
- Brake pedal must not be depressed.
- Clutch pedal must not be depressed.

**Speed limitation** — The EECU can be programmed to limit the maximum speed up to 140 km/h (87 mph). A fault on the sensor signal and/or a faulty cable to the EECU generates a fault code.

**Differentiated speed limitation** — This mode is available as an option. It limits the speed to various levels depending on the gear selected. In other words, each gear has a maximum speed.

https://truckmanualshub.com/


**Engine protection** — To a certain extent, the EECU can also protect the engine by:

- Reducing engine speed at low coolant temperatures (cold engine cranking): When coolant temperature is lower than 50 °C (122 °F), engine speed is limited during a specific time to 1000 rpm immediately after starting. At –20 °C (–4 °F) and lower, this period is 16 seconds, and above 50 °C (122 °F) the period is 0 second. This function allows oil pressure to build up before engine speeds become too high.

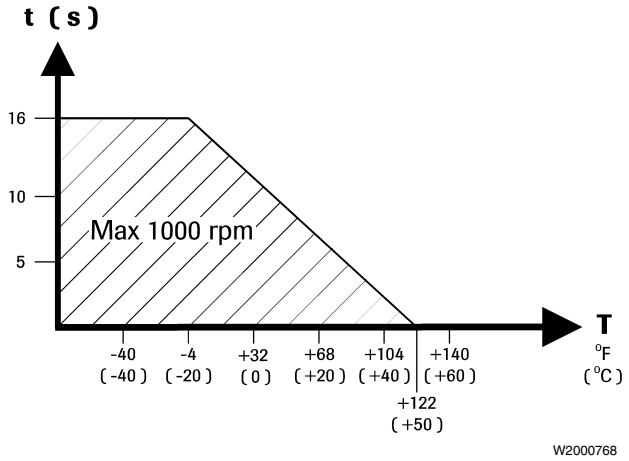


Engine speed during cold cranking

- Reducing engine output at high coolant temperatures (during engine operation): Should coolant temperature exceed 102 °C (216 °F), the maximum fuel provision is reduced by a certain percentage of its original rating and the coolant temperature warning lamp lights up. If the coolant temperature becomes **excessively** high, the engine will gradually reduce power to 50%. When coolant temperature has dropped below 100 °C (212 °F), maximum fuel provision is permitted again and the coolant temperature warning lamp goes out.

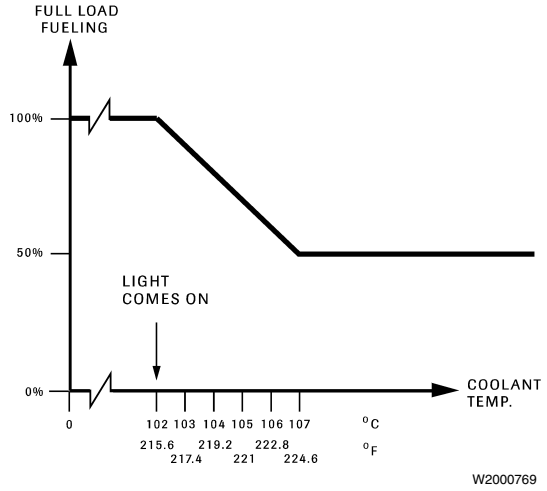


Engine speed during operation

The safety signal is an optional system that enables the EECU too switch off the engine. The EECU can be programmed to provide three levels of engine protection:

- No engine protection (fire engine)
- Engine protection
- Extended engine protection

https://truckmanualshub.com/


**Idle shutdown** — This function is available as an option. It switches off the engine after it has run at idling speed for a specific time. This time can be set to between 1 and 40 minutes. The engine will be switched off if the following conditions are met:

- Vehicle speed is 0.
- Parking brake is applied.
- Engine running at idle speed.
- Coolant temperature is above 45 °C (113 °F).

**Cold starts, idling** — Idling speed is automatically boosted to heat the engine more quickly from a cold start when coolant temperature is below a specific level. When this mode is activated, idling speed is boosted to 650 rpm. When coolant temperature has reached 30 °C (86 °F), idling speed drops steadily to its normal level which is reached at a coolant temperature of 45 °C (113 °F).

https://truckmanualshub.com/


### Starting the engine

Before any fuel can be injected into the cylinders, the EECU must have had a sufficient amount of time to carry out the first calculations on injection angles and fuel quantities. This time is equivalent to two engine revolutions.

### VEB (VOLVO engine brake)

The VEB consists of an exhaust brake and a compression brake. The EECU activates the VEB when the following conditions are satisfied:

- Accelerator pedal at idling position (fuel injection must not occur).
- Engine speed must exceed 1200 rpm.
- Clutch pedal must not be depressed.
- Boost pressure must be lower than 152 kPa (22 psi) (overpressure).
- PTO not activated.
- Vehicle speed is greater than 3.2 km/h (2 mph).
- ABS not activated.
- Engine coolant temperature is greater than 40 ± 2 °C (104 ± 5 °F).
- Engine oil temperature is greater then 55 °C (130 °F).

The VEB may be activated when the cruise control is in use. For this to take place, the following condition must be satisfied:

- Vehicle road speed must exceed the set speed of the cruise control by between 5 and 30 km/h (4 and 20 mph), depending on what level has been programmed into the EECU.

https://truckmanualshub.com/


## *Idle Speed Adjustment*

**Note:** This service information should be considered supplemental to the Engine Control information for base D12 B and C engine.

The idle speed is adjusted on the VN vehicles at the turn signal stalk. The idle speed can be adjusted between 500 RPM and 650 RPM.

Prerequisites to adjusting idle speed:

- Accelerator pedal not depressed.
- Engine temperature above 45 °C (113 °F).
- Vehicle is stationary / Parking brake set.

**Idle speed adjustment**

1 Cruise control in the ON position.
2 Depress the brake pedal and continue to hold it during the entire adjustment procedure.
3 Move the ON/OFF switch to the RESUME position and hold for four seconds. Release the switch; the engine speed will drop to approximately 500 RPM.
4 The idle speed can be adjusted with the SET switch. Each time the SET switch is pressed, the idle speed will increase approximately 10 RPM.
5 Move the ON/OFF switch to the RESUME position and the idle speed will decrease approximately 10 RPM each time.
6 Hold in the SET switch and move the ON/OFF switch to the RESUME position and hold them in position for four seconds. Release the switches
7 Release the brake pedal and the new idle speed is set. If an error was made during the adjustment procedure, the default idle speed will be maintained.

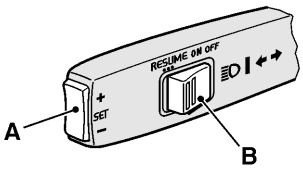


T3014326

1 **A**-Set
2 **B**-Resume, On/Off

https://truckmanualshub.com/


# ABS Brake System ECU

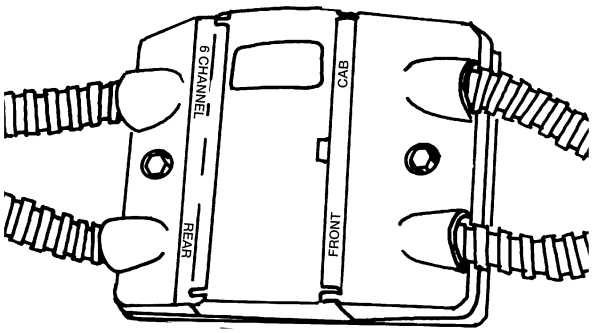


The ABS ECU continuously monitors wheel speed and helps to control braking in exterme situations. It also helps prevent wheel spin in vehicles equipped with traction control systems (ATC or TCS).

The ABS ECU is connected to the J1939 control data link and the J1587/1708 information data link.

Note: Early production model ABS ECUs may be connected to the J1587/1708 and J1922 data link or have no data link connection at all.

For detailed information about ABS systems see the appropriate service literature for the type of ABS system used on the vehicle.

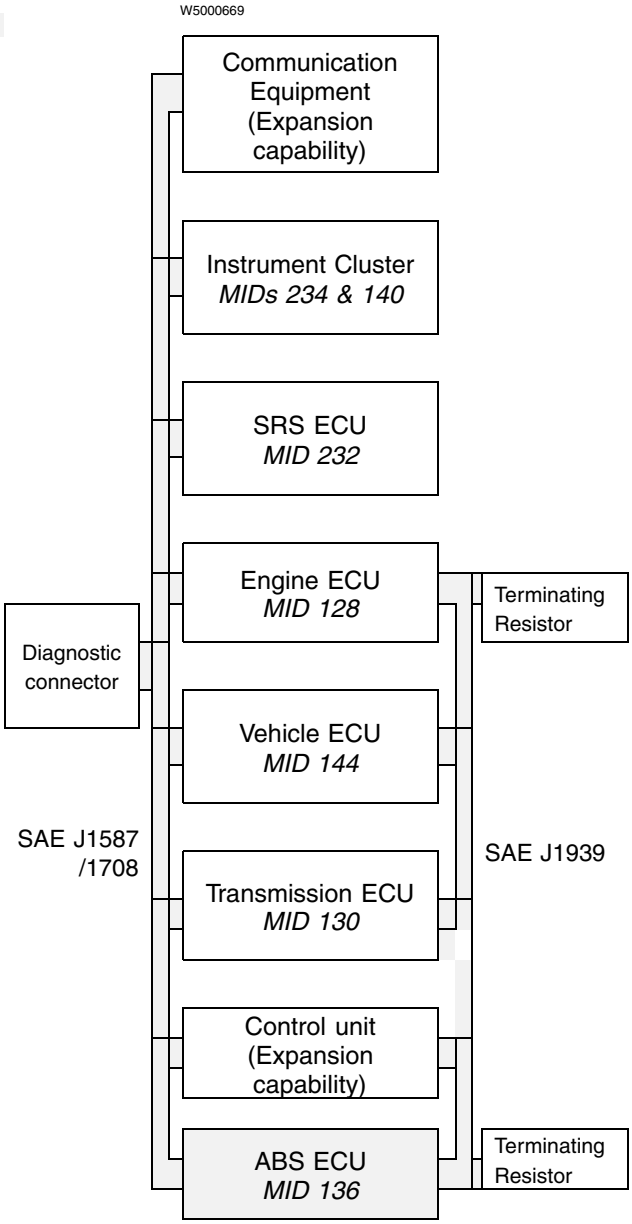

https://truckmanualshub.com/


# SRS Airbag ECU

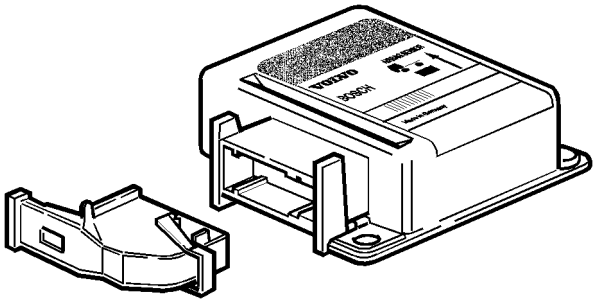

The Supplemental Restraint System (SRS) ECU senses frontal collisions with two rapid deceleration sensors. The SRS ECU will deploy the airbag module in the steering wheel if a collision of sufficient force and duration is detected.

The SRS ECU is connected to the J1587/1708 information data link. For detailed information about the SRS see *Supplemental Restraint System (SRS), VNL, VNM*, Volvo service publication number PV776–TSP21771/1.

**Note:** The SRS system is not available on all models.

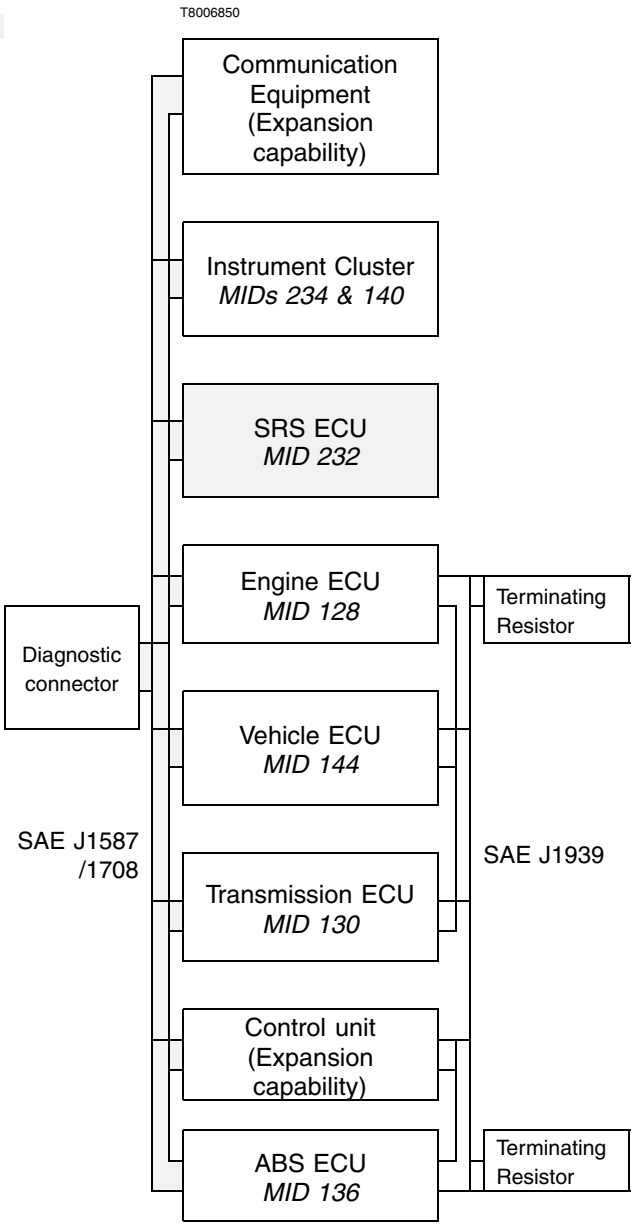

https://truckmanualshub.com/


# Transmission ECU

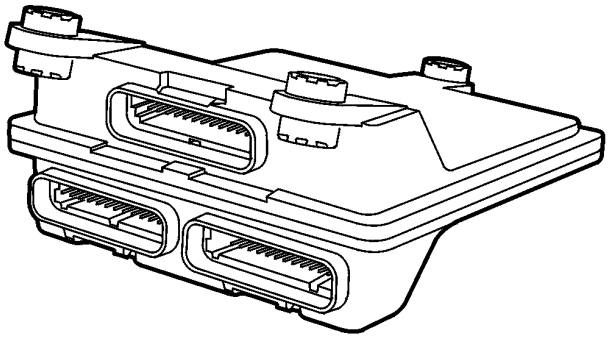

The transmission electronic control unit (ECU) receives signals directly from switches and sensors and via the data links. Based on those inputs, the transmission ECU controls transmission operation via solenoid valves and switches. The transmission ECU also supplies system status and diagnostic information.

The transmission ECU is connected to both the J1939 control data link and the J1587/1708 information data link.

**Note:** Early production model transmission ECUs may be connected to the J1587/1708 and J1922 data links.

For detailed information about transmission ECUs see the service literature for that particular transmission.

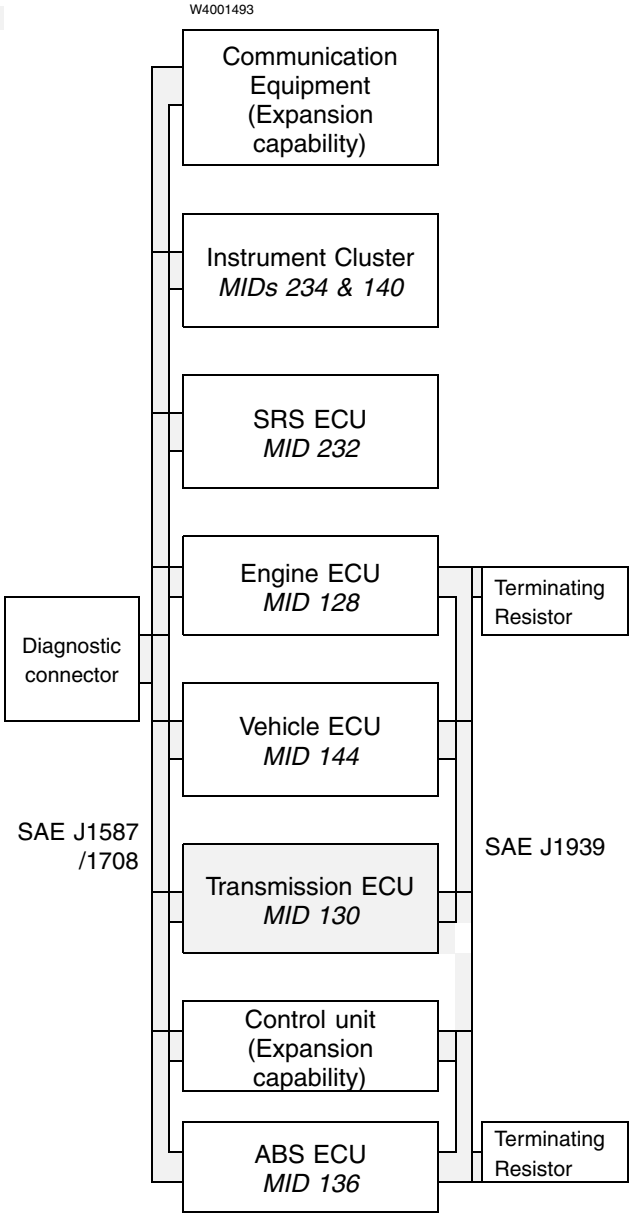

https://truckmanualshub.com/


# Breakout Boxes and Harnesses

The harness adapters are used to gain access to the EECU, the VECU, the throttle pedal and certain other sensors on the engine, while the circuit is intact. This allows the technician and vehicle to take measurements on functional circuits.

**Example:**

The **36-pin breakout box** allows the technician to measure resistance and voltage on the EECU's EA connector (which covers the engine mounted components) and the EB connector (which covers the remaining components involved).

**CAUTION**

Check that the proper cable and connector location is observed and used while connectin to the ECU. Ohterwise, damage to the ECU or tool will occur.

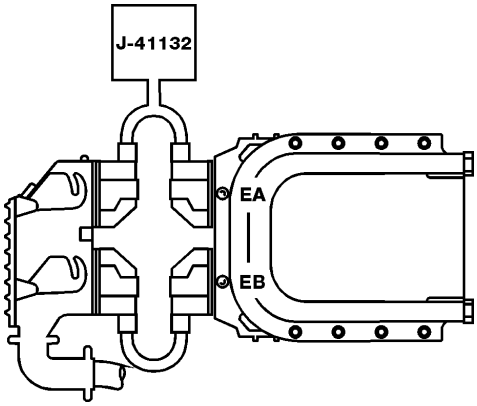


W2002712

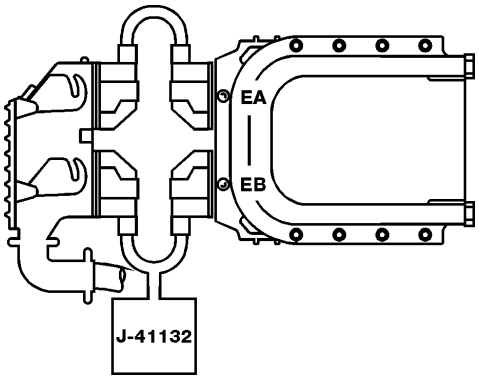


W2002710

https://truckmanualshub.com/


# VECU Overview

The Vehicle Electronic Control Unit (VECU) receives inputs and generates output signals for functions associated with cab devices. It also converts information into digital data to be broadcast over the J1587/1708 Information Link and the J1939 Control Link.

**Note:** The VECU may also be referred to as the “Cab Controller” on the graphics display of the VN series dash and in some Volvo publications.

## *VECU Programming*

Each VECU is programmed with specific vehicle performance characteristics corresponding to customer-ordered options for that particular vehicle. This dataset is stored in the VECU memory, making the VECU unique to each vehicle.

For this reason, it is not possible to “swap” a suspected faulty VECU with one from another vehicle without reprogramming the replacement VECU.

Replacement VECUs are programmed using the VCADS Pro tool. Programming is based on the particular dataset that matches the vehicle; datasets are stored in the Volvo Data Administration (VDA) database. Authorized technicians can update and/or alter software datasets, change customer parameters, and perform campaigns.

For more information about the proper operation of the VCADS Pro tool and VECU programming, please refer to Information on VCADS Pro in Group O. This manual is also available as a pdf file within VCADS Pro tool located under Help.

**Note:** Customer parameter changes are not stored in the VDA database. Therefore, after a replacement VECU is programmed for the vehicle, it will have to be customized to include those customer alterations.

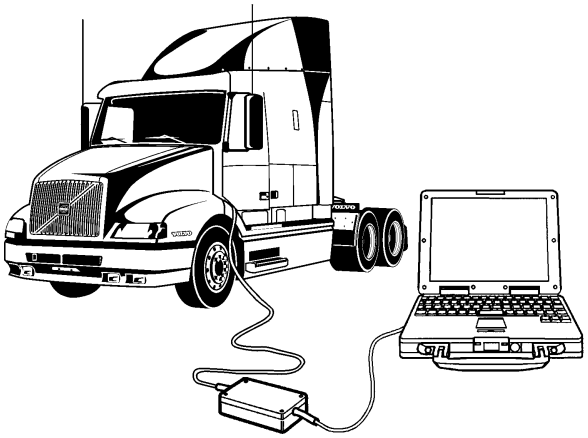

W0001632

https://truckmanualshub.com/


# VECU Functions

The following functions are monitored or controlled by the VECU. Only the functions needed for each specific vehicle/engine application are wired and programmed into the VECU.

## *Accelerator Pedal*

The accelerator pedal signals travel first to the VECU and are transferred to the Engine Electronic Control Unit (EECU) via the J1939 Control Link.

If there is a fault in the J1939 Control Link, the accelerator pedal signal travels to the EECU via the J587/1708 Information Link. The vehicle can also be driven in the “limp home” mode is there is a fault in both links. In this situation, the idle validation switch is used to determine when the accelerator pedal is pressed; then, the VECU sends a buffered idle validation switch signal (via hard wire) to the EECU.

## *Second Accelerator Pedal*

If the vehicle is equipped with a second accelerator pedal, the second accelerator pedal signals travel first to the VECU and are transferred to the Engine Electronic Control Unit (EECU) via the J1939 Control Link.

A road speed limit may be programmed into the VECU to limit vehicle speed when the second accelerator pedal is being used. Second accelerator pedal road speed limit can be programmed using the VCADS Pro tool.

## *Speedometer*

The speed signal comes from a sensor on the transmission or as a digital signal, if an electronically-controlled transmission (Allison) is used. The VECU then sends the vehicle speed signal on both the J1939 Control Link and J1587/1708 Information Link. The signal on the J1939 Control Link is used to control vehicle operation. The signal on the J1587/1708 Information Link is collected by the instrument cluster and is displayed on the speedometer.

## *Cruise Control*

The VECU receives signals from the cruise control switch and sends signals to the EECU via the J1939 Control Link. Cruise control parameters can be programmed with the VCADS Pro too.

https://truckmanualshub.com/


### *Power Take-Off (PTO)*
PTO functions are controlled by the VECU through the cruise control switch. Basic or optional PTO parameters can be programmed with the VCADS Pro tool.

### *Ignition Switch*
Ignition switch positions are recognized by the VECU, which transfers the ignition switch position information to the EECU.

### *Idle Shut-Down*
Timed engine shut-off can be controlled by the VECU as a customer option. Idle shut-down time can be programmed with the VCADS Pro tool.

### *Engine Brake*
The control for the engine brake (including the exhaust pressure governor [EPG] and compression brake [VCB], if installed) are monitored by the VECU. At the request of the ABS ECU, the VECU can de-activate the engine brake.

### *Windshield Wipers*
Windshield wiper function on the VN and VHD (with Volvo engine) is controlled by the VECU using signals received from the wiper switch.

### *Calibration Number*
The calibration number (K factor) is a measurement of “Drivetrain Constant Pulses per Mile” and is used by the VECU to determine vehicle speed and distance traveled. The calibration number is calculated by multiplying “tire revolutions per mile” x “rear axle ratio” x “number of teeth on the transmission output shaft chopper wheel.”

The calibration number is programmed into the VECU using the VCADS Pro tool.

https://truckmanualshub.com/


### *Optional Engine Speed Limit*
Optional engine speed limit is the maximum speed at which the engine can be operated with the vehicle at zero road speed and the PTO mode engaged. Optional engine speed limit parameters can be programmed with the VCADS Pro tool.

### *Optional Vehicle Speed Limit*
Optional vehicle speed limit allows for an optional switch to limit vehicle speed. Typically, this switch is operated on the vehicle by someone other than the driver, such as a garbage collector who rides on the back of the vehicle. Optional vehicle speed limit parameters can be programmed with the VCADS Pro tool.

**Note:** Basic vehicle speed limit is set by the EECU.

### *Shut-Down Request*
Optional engine shut-down request is made via a remote mounted switch (the ignition switch is the basic engine shut-down request). After the VECU receives the shut-down request, the request is sent to the EECU via the J1939 Control Link. Shut-down request is enabled using the VCADS Pro tool.

**Note:** The engine shut-down request function should not be considered or used as an emergency shut-down.

### *Torque Limit*
Torque limit 1 and 2 are used to limit drive line torque. Torque limit parameters can be programmed with the VCADS Pro tool.

### *Engine Fan Request*
The VECU receives the request for engine fan operation from either a manual switch or a high pressure A/C refrigerant switch. The VECU then transfers the request to the EECU via the J1939 Control Link.

### *Brake/Clutch Status Switches*
The VECU recognizes the position of the brake, clutch, and parking brake. Various VECU functions (i.e. cruise control or PTO) operate only when these switches are in the proper position.

https://truckmanualshub.com/


## Safety Warnings/Cautions

- Always wear approved eye protection.
- To avoid personal injury and damage to the vehicle, always refer to and follow the vehicle manufacturer's WARNINGS, CAUTIONS, and service procedures.
- Unless otherwise directed, turn the ignition switch **OFF** before disconnecting or connecting any electrical components.
- Read and understand the manual provided with the tool before operating your Pro-Link® 9000.
- VGHT recommends an assistant drive the vehicle while you use the Pro-Link® 9000.
- Never leave the vehicle unattended while testing.

https://truckmanualshub.com/


## *VCADS Pro*

From the VCADS Pro Main Menu, VCADS Pro Test, Calibration, Programming and Job Cards are started. In addition, a number of settings can be done, i.e. the selection of language. Ensure your “language” is selected to get the right tests for your country’s vehicle variant.

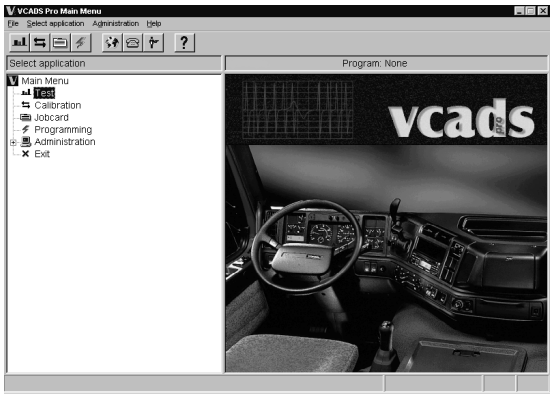

T0009469

Do one of the following to start an application:

- Select the application in the menu Select application. When highlighted press “Enter”.
- Click the program’s function button in the toolbar; test (1), calibration (2), programming (3) and job card (4).
- Double click the desired program in the function tree.

The following can be performed in the Administrative functions

- Language selection
- Selection of screen saver and screen saver delay.
- Selection of background image.
- Selection of default application.
- Update the system. Get a new program version of VCADS Pro from Volvo via connection to the central systems.
- User administration. Select the user to change the password for. This function requires authorization and is not available to all users.
- General adminstration. Selection of communication method, vehicle/machine type and activation/deactivation of the simulator is possible.

https://truckmanualshub.com/


# Sensor Locations

## VN/VHD Sensors and Switches

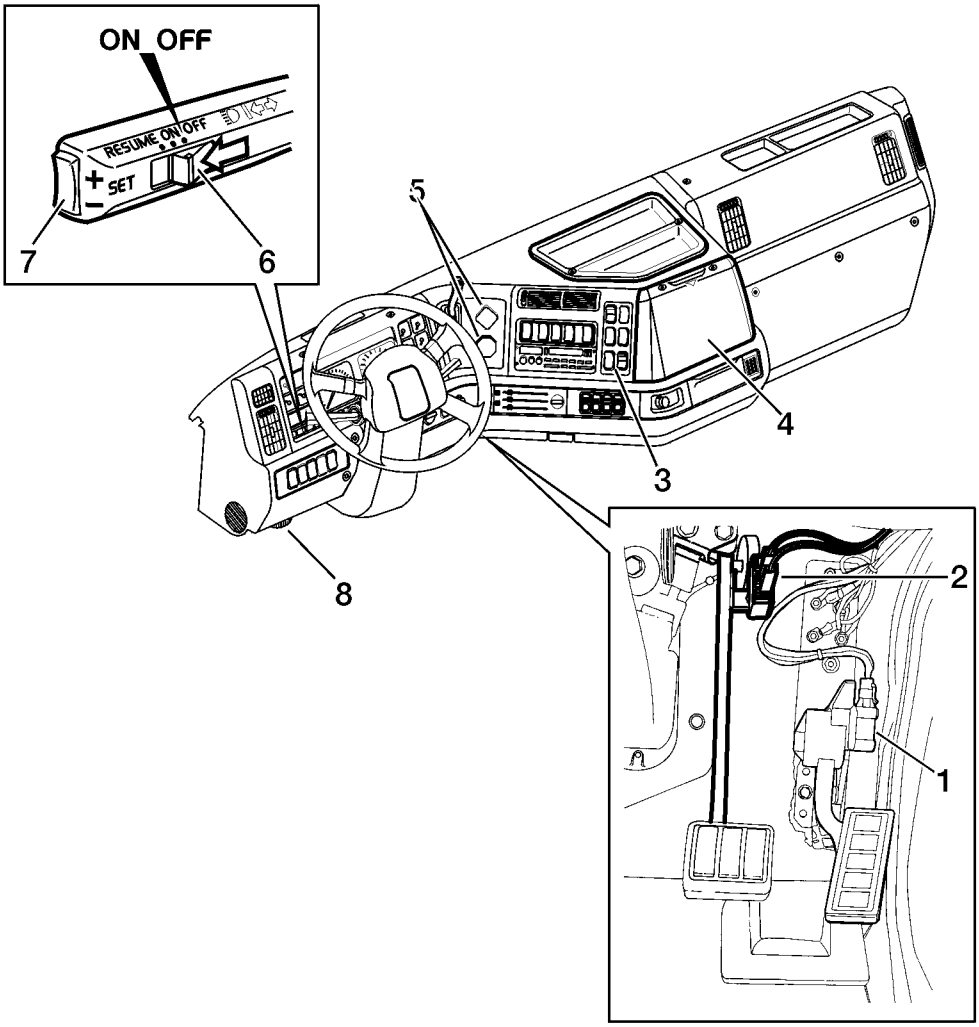


W2003551

Inside cab

| | |
|---|---|
| **1** | Throttle position sensor |
| **2** | Microswitch(service brake) |
| **3** | Engine/Exhaust Brake |
| **4** | VECU |
| **5** | Pressure Switch-Parking and Service Brake |
| **6** | ON/OFF—Resume Switch |
| **7** | Resume Switch |
| **8** | Diagnostic connector |

https://truckmanualshub.com/


# D7C

1 EECU connector EA/EB
2 EPG solenoid
3 Boost pressure/temperature sensor
4 Oil pressure/temperature sensor
5 Engine timing (crank) sensor
6 Engine electronic control unit (EECU)

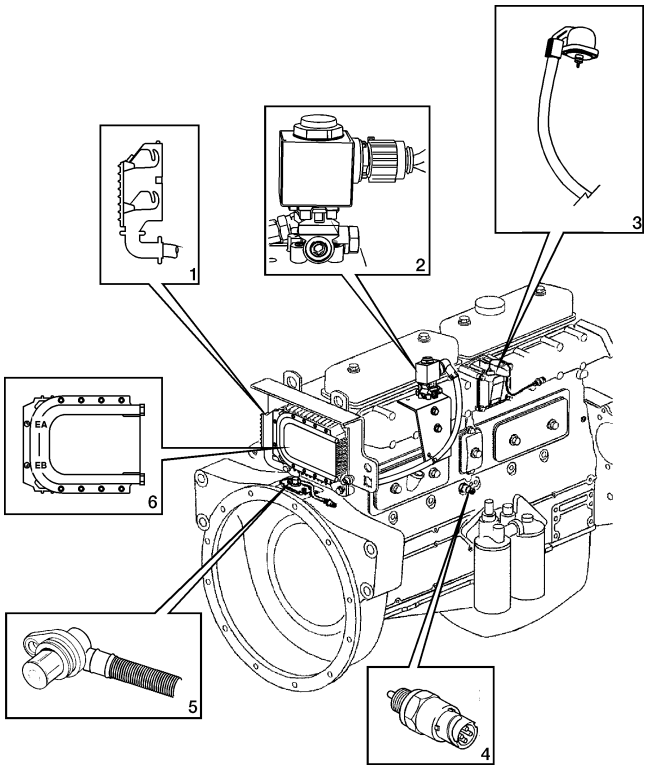


W2002748

1 Needle lift sensor (at injector #1)
2 Coolant temperature sensor
3 Redundant engine speed sensor (1); Fuel pressure/temperature sensor (2); Fuel shut-off valve (3); 7–pin connector (4), includes rack drive, rack position sensor, and timing sleeve

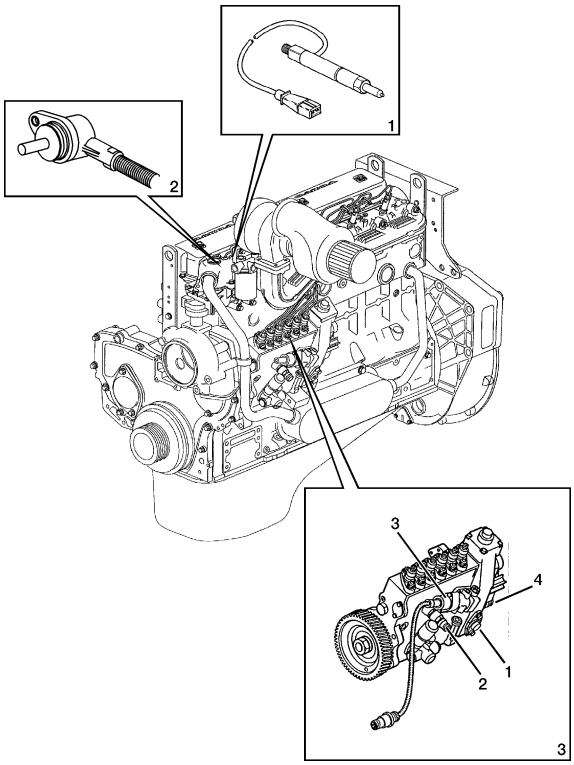


W2002749

https://truckmanualshub.com/


## D12B

1 Boost pressure/temperature sensor
2 Coolant temperature sensor
3 Oil pressure/temperature sensor
4 Engine timing (crank) sensor
5 Engine electronic control unit (EECU)
6 EECU connector EA/EB
7 Engine position (cam) sensor

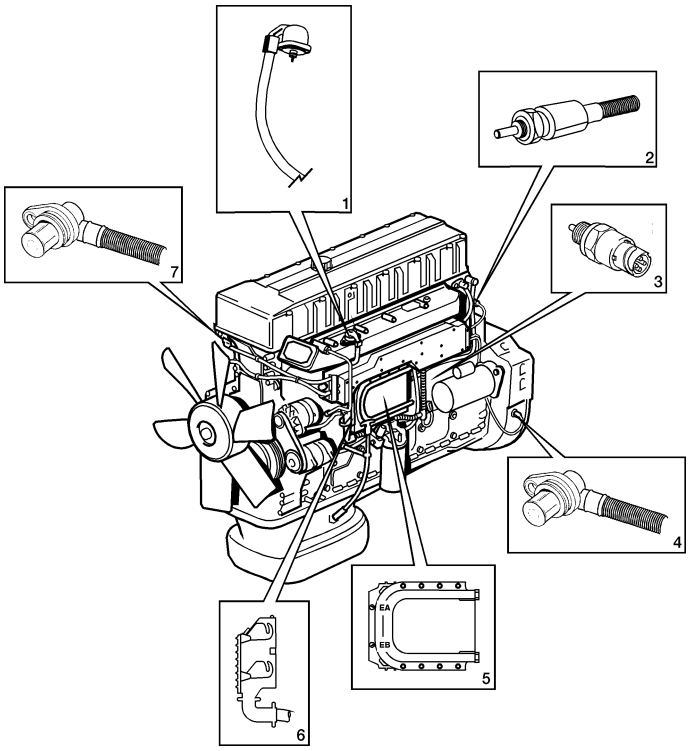


W2002745

1 Compression brake, VCB (under valve cover)
2 EPG control (PWM box)

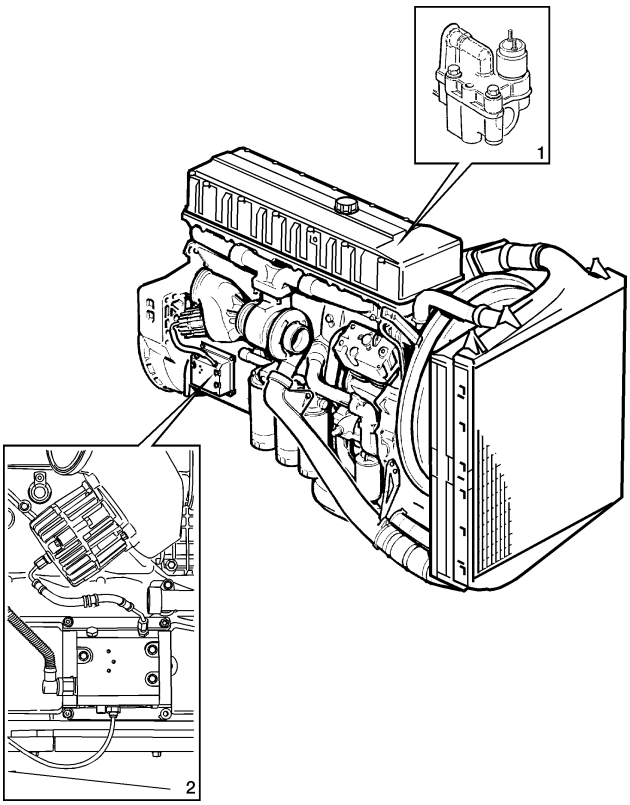


W2002746

https://truckmanualshub.com/


# D12C

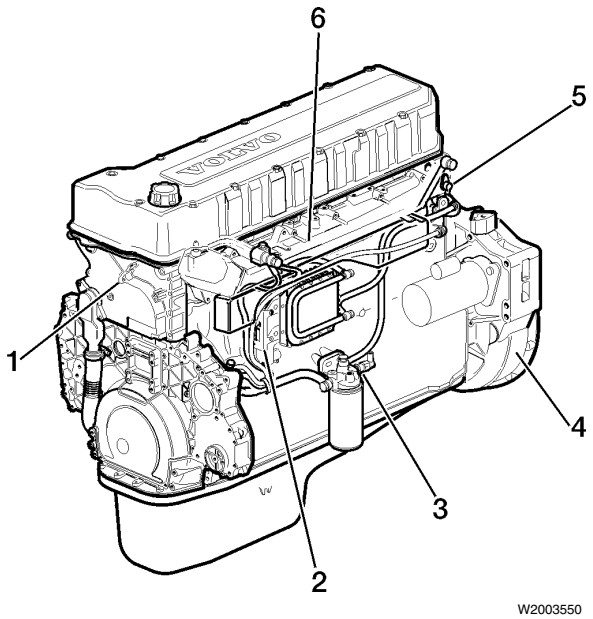


Fig. 10: Engine electronic control unit (EECU) sensor locations D12C

Several engine sensors send signals to the EECU. They are:

1 **Cam Sensor (timing gears)**—This sensor determines which cylinder is in line for injection. It detects the camshaft's position via a pole wheel bolted to the camshaft drive gear.

2 **Oil Pressure/temperature sensor (cylinder block)**—This combined sensor monitors oil pressure and oil temperature.

3 **Fuel Pressure/Temperature Sensor** — Monitors the fuel pressure and fuel temperature

4 **Crank Sensor (flywheel housing)** — This sensor detects the crank-shafts's position and speed, via teeth in the flywheel. Detects Engine RPM's.

5 **Coolant Temperature Sensor (cylinder head)**—This sensor monitors coolant temperature.

6 **Intake Manifold Pressure (intake manifold)**—This is a combined sensor that monitors both the intake manifold air pressure and temperature.

https://truckmanualshub.com/


# Control Unit Locations

## VN/VHD: Cab and Engine Compartment

The diagram shows the normal location of the different control units on a VN vehicle equipped with a Volvo engine.

Control units may vary slightly in location, depending on vehicle and component type (variant). The locations are virtually the same on a VHD vehicle.

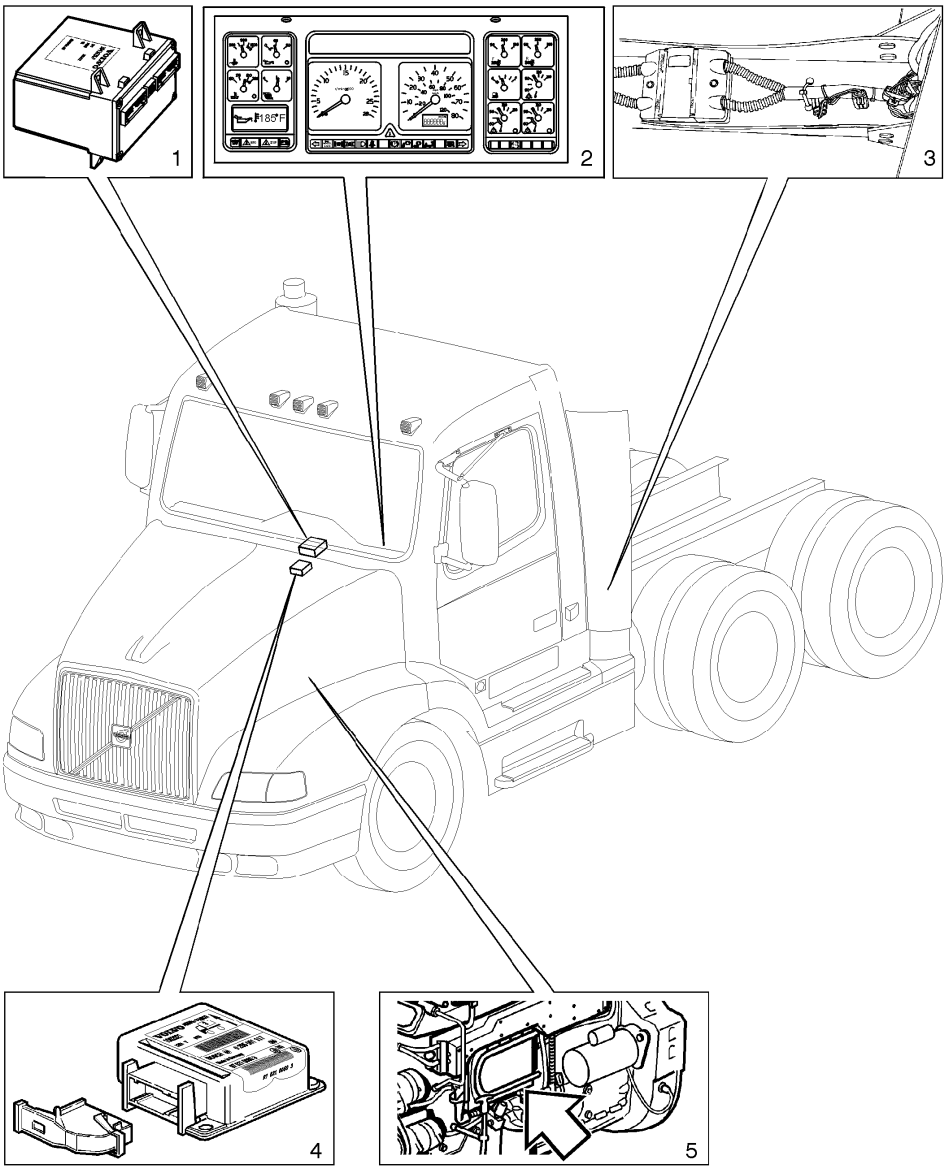


1 Vehicle electronic control unit (VECU)

2 Instrument cluster

3 ABS control unit; crossmember located toward rear of cab

4 SRS control unit

5 Engine electronic control unit (EECU)

https://truckmanualshub.com/


# WG/AC: Cab and Engine Compartment

The diagram shows the normal location of the different control units on WG and AC vehicles.

Control units may vary slightly in location, depending on vehicle type (variant).

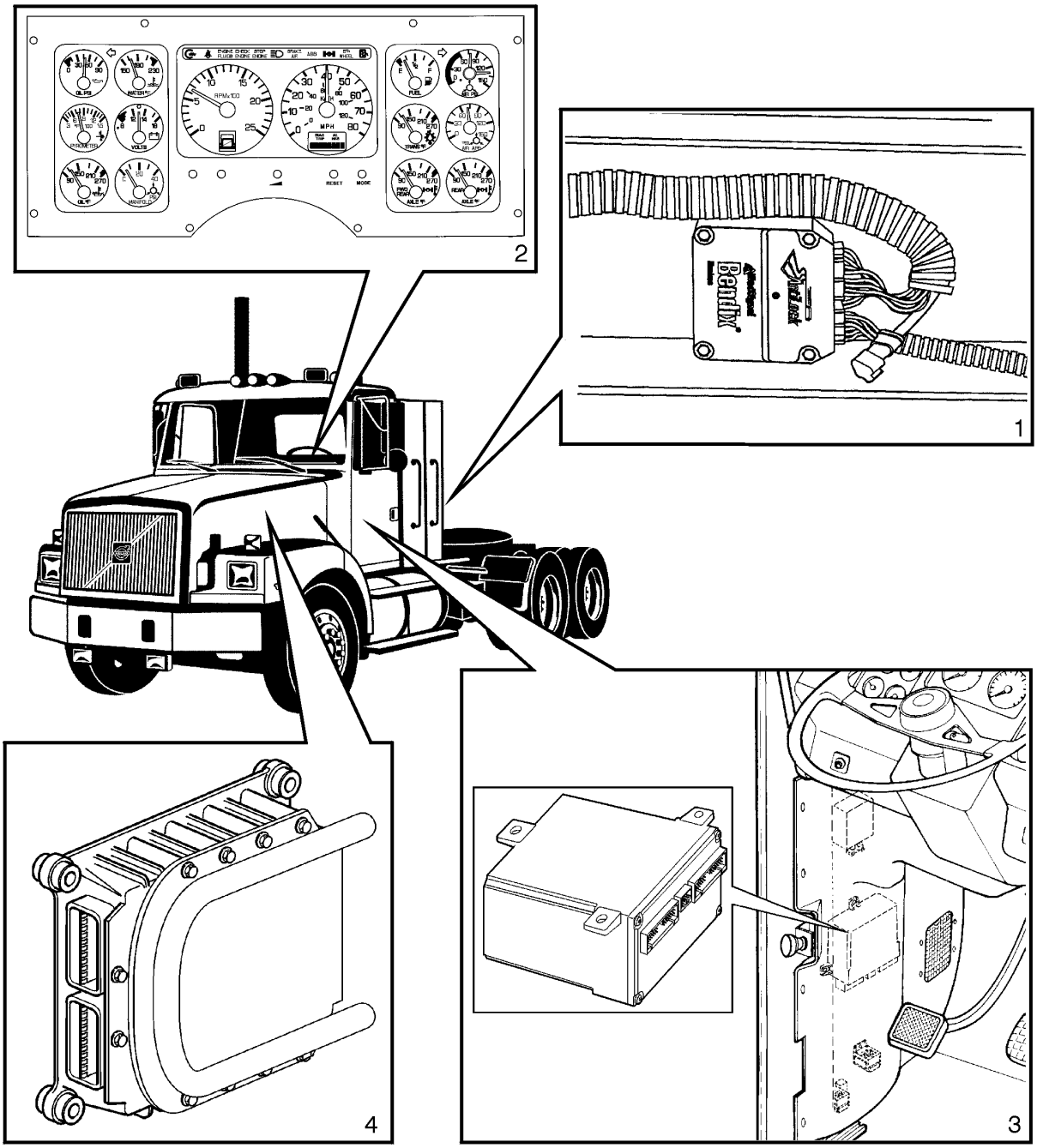


1 ABS control unit, on right side frame rail

2 Instrument cluster

3 Vehicle electronic control unit (VECU)

4 Engine electronic control unit (EECU)

https://truckmanualshub.com/


# WX/WXLL: Cab and Engine Compartment

The diagram shows the normal location of the different control units on a WX or WXLL vehicle.

Control units may vary slightly in location, depending on vehicle type (variant).

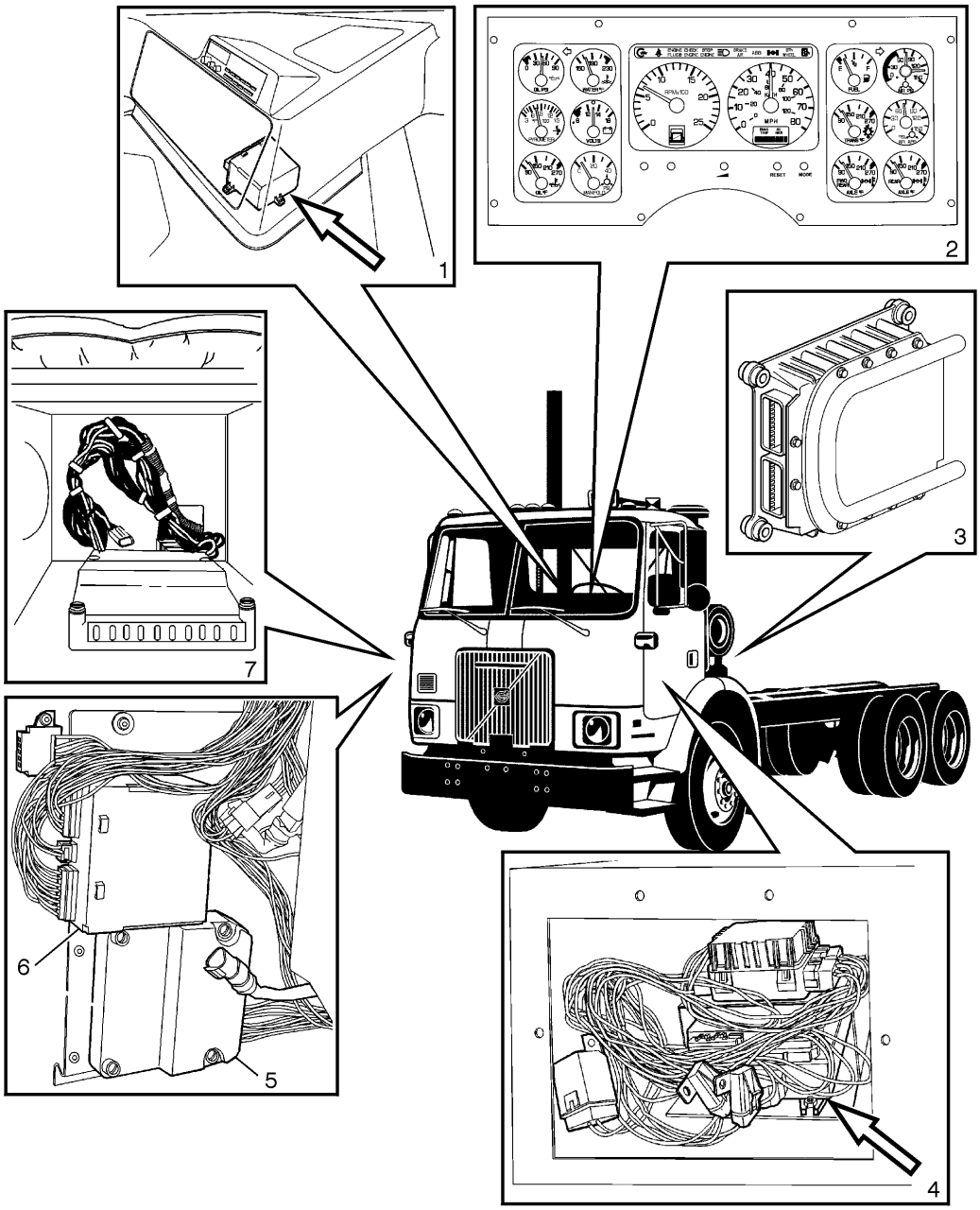


1 Vehicle electronic control unit (VECU), location in WX narrow cab only

2 Instrument cluster

3 Engine electronic control unit (EECU)

4 Transmission ECU, under driver's seat

5 ABS control unit, right side engine tunnel

6 VECU, WX and WXLL, right side engine tunnel

7 ABS control unit, location in WX narrow cab only

https://truckmanualshub.com/


# WXR: Cab and Engine Compartment

The diagram shows the normal location of the different control units on a WXR vehicle.

Control units may vary slightly in location, depending on vehicle type (variant).

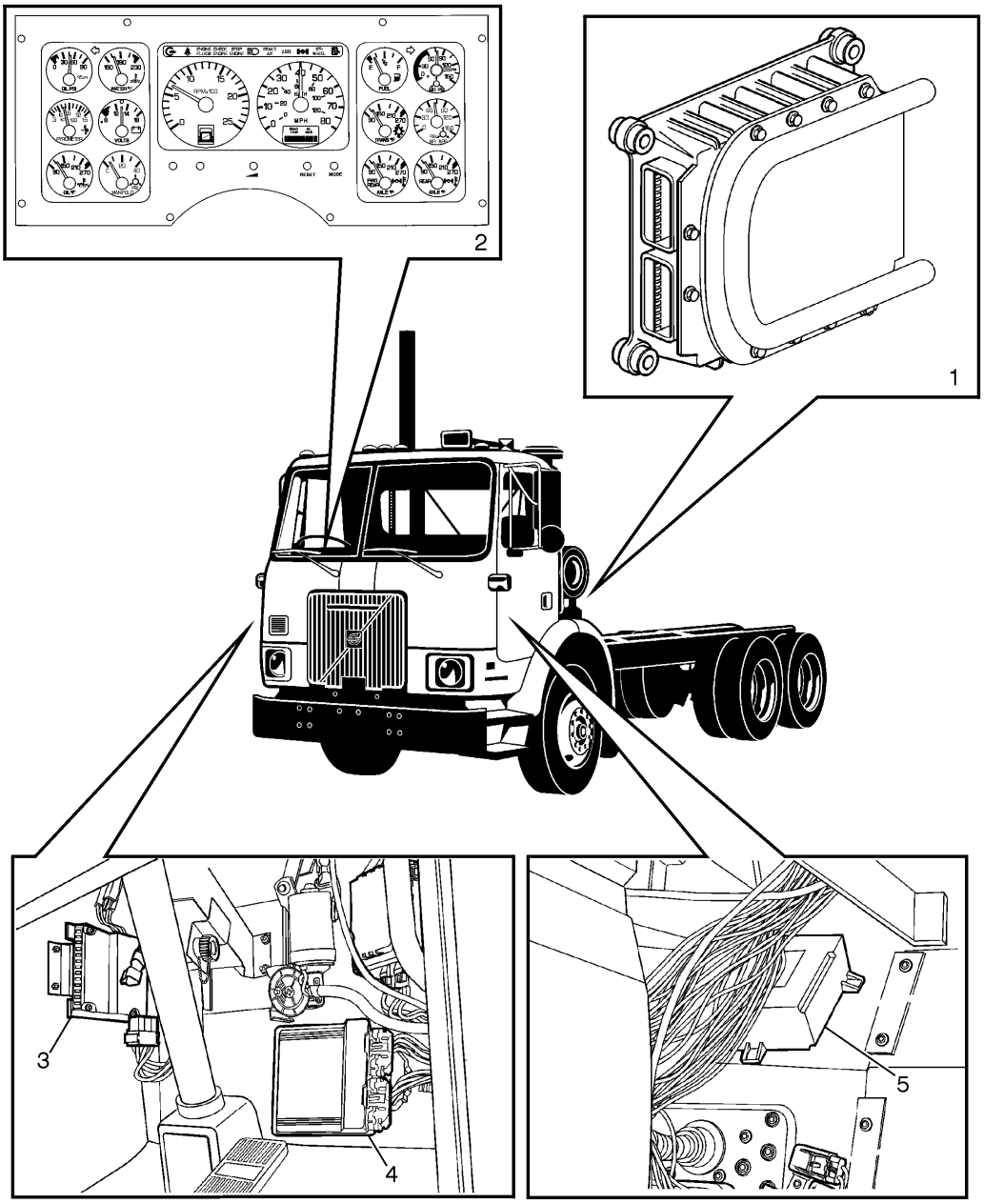


W3003962

1 Engine electronic control unit (EECU)

2 Instrument cluster

3 ABS control unit

4 Transmission ECU

5 Vehicle electronic control unit (VECU) — on left side of cab, below center dash panel

https://truckmanualshub.com/


# Fuses and Relays

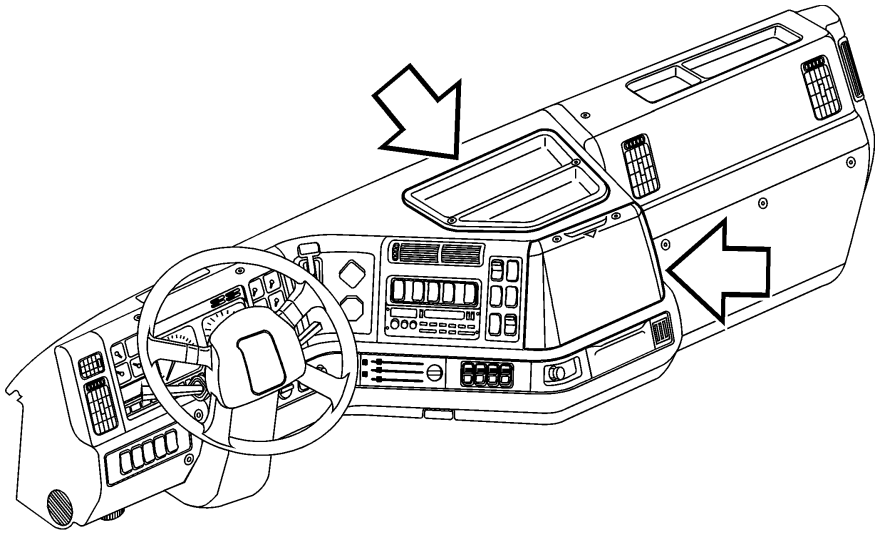

W8000923

The VN/VHD vehicles have easy access to the TEC panel. Fuses and relays are easily identified by referring to the decals inside the TEC covers.

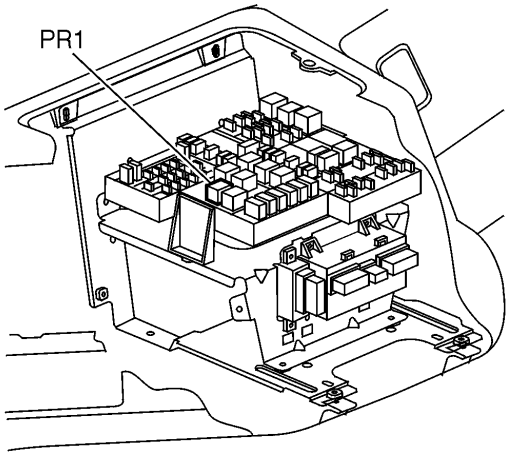


W3004398

https://truckmanualshub.com/


# VN

**Note:** Refer to the decal inside the TEC cover for vehicle's exact fuse descriptions and ratings.

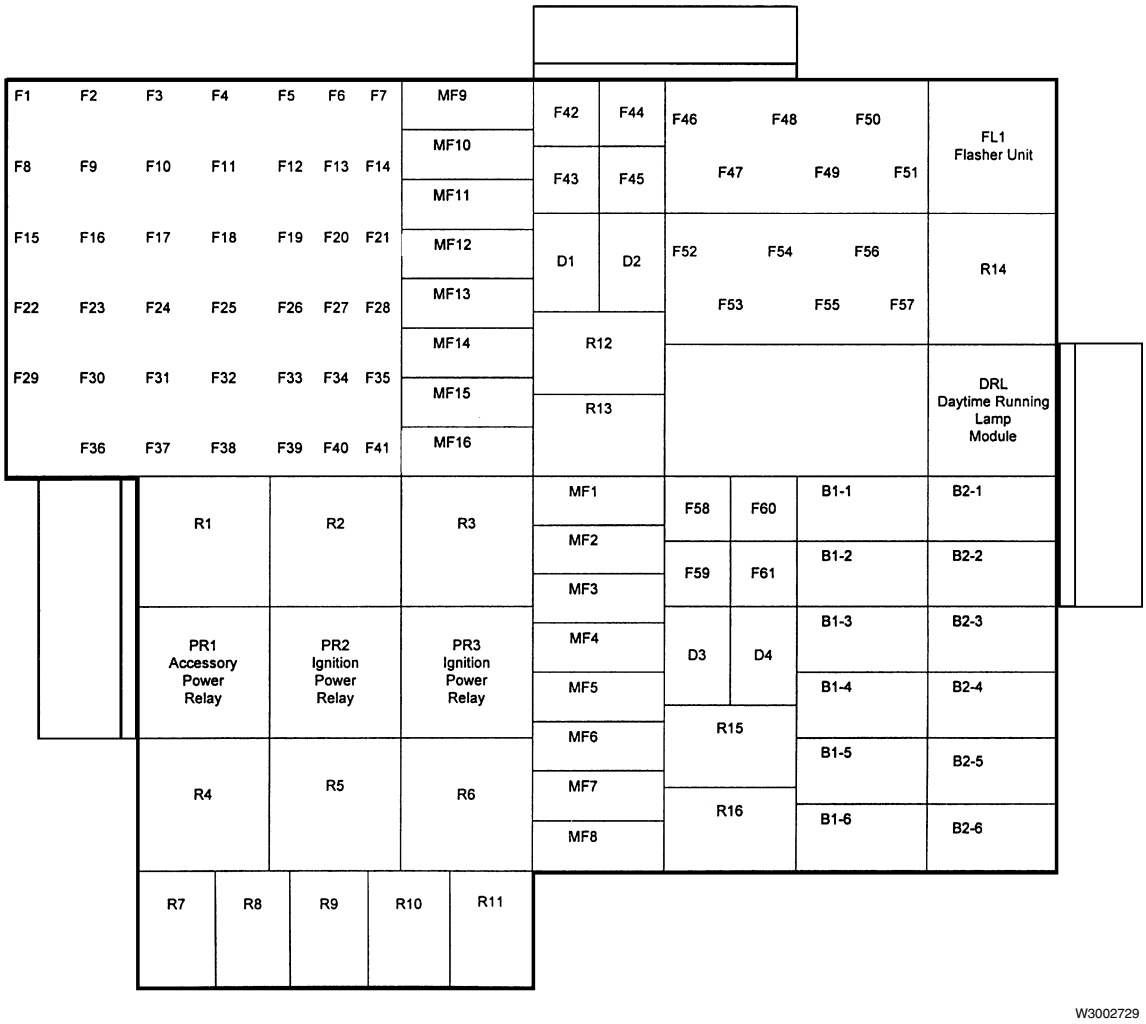


Fig. 11: Fuse and Relay Positions (in the top TEC panel, VN)

| | |
|---|---|
| **B1–1 through B1–6** | Ignition Expansion Blocks |
| **B2–2 through B2–4** | Battery Expansion Blocks |
| **PR1** | Accessory Power Relay |
| **PR2, PR3** | Igntion Power Relays |

One Accessory an two Ignition Power relays are used to transfer the heavy current load coming from the battery to the Ignition/Accessory circuits. These relays are located on the TEC tray for easy access and replacement.

https://truckmanualshub.com/


# VHD

**Note:** Refer to the decal inside the TEC cover for vehicle's exact fuse descriptions and ratings.

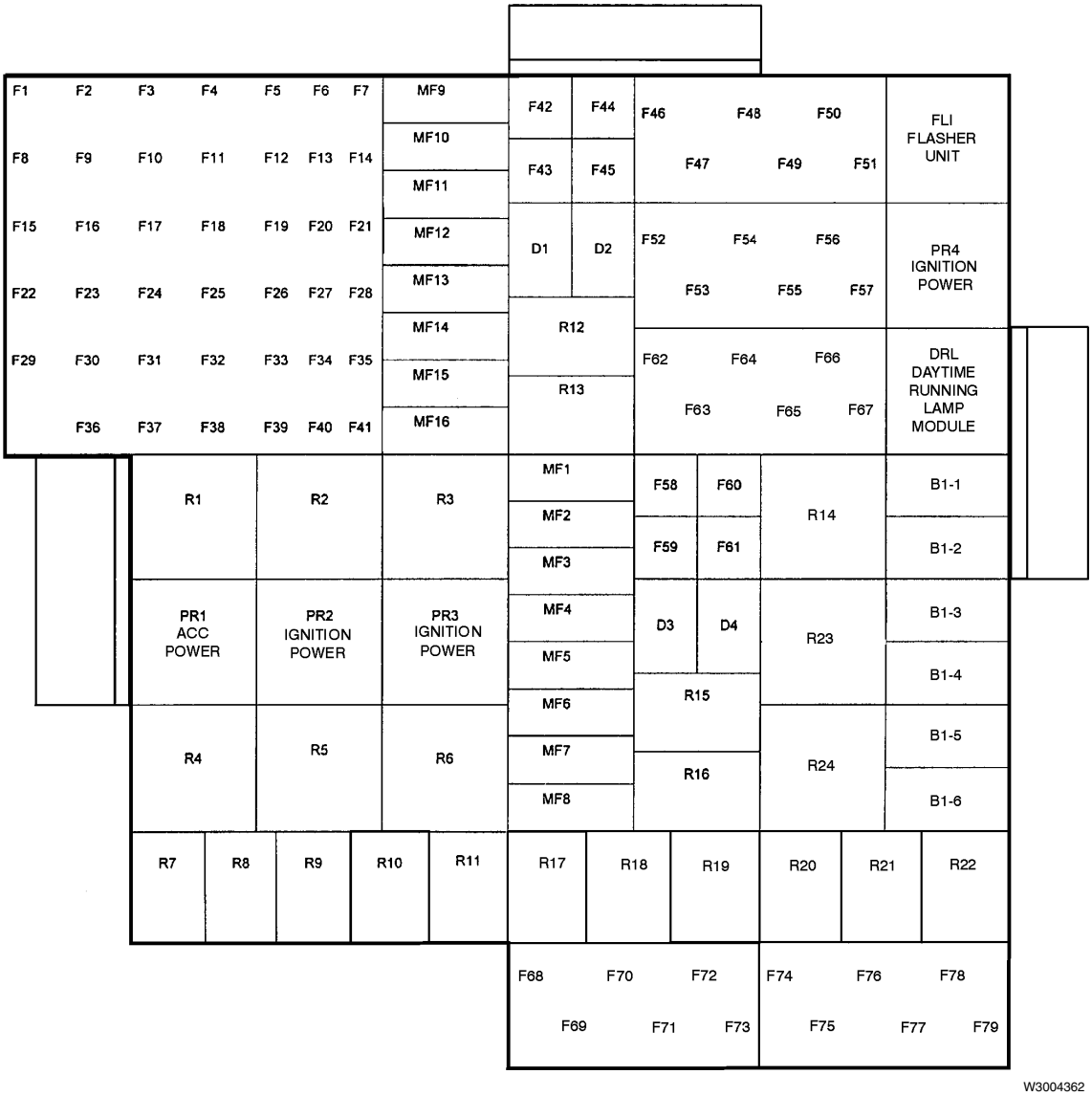


Fig. 12: Fuse and Relay Positions (in the top TEC panel, VHD)

| | |
|---|---|
| **B1–1 through B1–6** | Battery and Ignition Expansion Block |
| **PR1** | Accessory Power Relay |
| **PR2, PR3, PR4, R24** | Ignition Power Relays |

One Accessory and four ignition Power relays are used to transfer the heavy current load coming from the battery to the Ignition/Accessory circuits. These relays are located on the TEC tray for easy access and replacement. PR4 is used in the VHD bodybuilder applications

https://truckmanualshub.com/

https://truckmanualshub.com/


# Troubleshooting

## Fault Code Troubleshooting

### Message and Parameter Descriptions

| MID's (message ID's) | Description |
|---|---|
| 128 | EECU (Engine Electronic Control Unit) |
| 232 | SRS (Supplemental Restraint System) |
| 136 | ABS (Antilock Braking System |
| 140 | Instrument Cluster Center Module |
| 234 | Instrument Cluster Left Module |
| 144 | VECU (Vehicle Electronic Control Unit) |
| 130 | TECU (Transmission Electronic Control Unit) |

| PID's (Parameter ID's) | Description |
|---|---|
| 84 | Road Speed |
| 91 | % Accelerator Pedal |
| 100 | Engine Oil Pressure |
| 102 | Boost Pressure |
| 105 | Air Inlet Temperature |
| 110 | Engine Coolant Temperature |
| 111 | Coolant Level |
| 173 | Pyrometer |
| 175 | Engin Oil Temperature |
| 190 | Engine Speed |

https://truckmanualshub.com/


| PPID's (Proprietary Parameter ID's) | Description |
|---|---|
| 69 | Buffered idle switch |
| 70 | Pedal switches, supply |
| 71 | Cruise control and retarder, supply switch |
| 72 | Accelerator pedal and retarder, supply sensors |
| 73 | Accelerator control 2 and primary tank, supply sensors |
| 75 | Range inhibitor, status solenoid valve |
| 77 | Compressor, status solenoid valve |
| 78 | Interval wiper, status relay |
| 79 | Area inhibitor, status solenoid valve |
| 86 | Engine brake torque percent |
| 109 | EOG3 drive stage failure |
| 121 | MTE (Engine compsressor control output) failure |
| 122 | VCB Engine compression brake |
| 123 | EPG2 Start and Warmhold |
| 124 | EPG1 Engine brake |
| 125 | EOL Enable failure |
| 195 | Proprietary Diagnostic Data Request Clear Count |
| 196 | Proprietary Diagnostic Data/Count Clear Response |

https://truckmanualshub.com/


# FMI Table

**SAE Standard**

| FMI value | SAE Text |
|---|---|
| 0 | Data Valid, but above normal operating range. |
| 1 | Data Valid, but under normal operating range. |
| 2 | Intermittent or incorrect data. |
| 3 | Abnormally high voltage. |
| 4 | Abnormally low voltage. |
| 5 | Abnormally low current or open circuit. |
| 6 | Abnormally high current or chort circuit. |
| 7 | Mechanical system no repsonse |
| 8 | Abnormal frequency or Pulse Width |
| 9 | Abnormal update rate |
| 10 | Abnormal change rate |
| 11 | Failure unkown |
| 12 | Bad device |
| 13 | Out of calibration |
| 14 | Special instruction (see Note) |
| Note: The special instruction FMI 14 is broadcast when the airbag has stored crash data. | |

**Engine-specific for Injectors**

| FMI value | Explanation |
|---|---|
| 2 | Short circuit to battery voltage, unit injector high side. |
| 3 | Short circuit to battery voltage, unit injector low side. |
| 4 | Short circuit to ground, unit injector high or low side. |
| 5 | Open circuit in the unit injector circuit. |

**Engine-specific for Injection Pump**

| FMI value | Explanation |
|---|---|
| 2 | Short circuit to battery voltage, injection pump high side. |
| 3 | Short circuit to battery voltage, injection pump low side. |
| 4 | Short circuit to ground, injection pump high or low side. |
| 5 | Open circuit in the unit injection pump circuit. |
| 6 | Short circuit to ground, injection pump high side. |
| 8 | Injection pump current too high for long period of time. |

https://truckmanualshub.com/


# Reading/Clearing Fault Codes

Fault codes can be read and cleared using the VCADS Pro tool or the Pro-Link tool with Volvo application cartridge. See the appropriate service information for details on reading and clearing fault codes using VCADS Pro or Pro-Link tools.

On VN-series vehicles, fault codes also can be accessed, read, and cleared via the instrument cluster graphic display. Clearing fault codes is password protected. For information, see “Instrumentation VN, from 3/99 and VHD,” Volvo Service Publication PV776–TSP139790.”

The Data Link Instrument cluster used WX-series vehicles can access and read a limited number of fault codes. However, it does not have the ability to clear fault codes. For more information, see “Data Link Instrumentation,” Volvo Service Publication PV776–381–620SM.

# Fault Tracing Strategy

**CAUTION**

Check that the proper cable and connector location is observed and used while connecting to the ECU. Failure to do so may result in permanent damage to the ECU or the tool.

Generally, the fault tracing strategy employed in this section follows a set sequence in which measurements are taken at specific points in the vehicle wiring. The three basic elements in this strategy are:

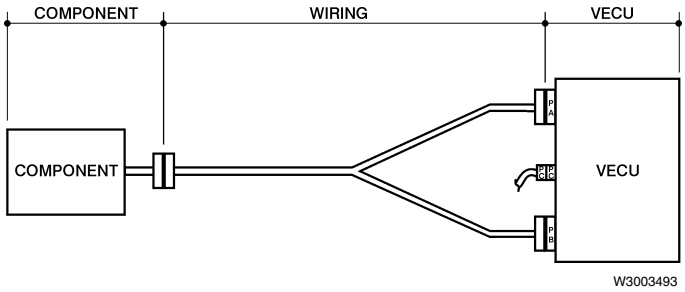


1 Vehicle Electronic Control Unit (VECU)

2 The actual component being tested (varies with each fault code)

3 Wiring between VECU and the component being tested

The following information describes the three test strategies:

- “Measurement at the Component’s Connector, to the VECU” page 90
- “Check of Component” page 90
- “Check of the Subsystem” page 91

https://truckmanualshub.com/


## *Measurement at the Component's Connector, to the VECU*

In this procedure, the component is disconnected and measurements are made at specific pin locations on the wiring harness end of the connector. Measurements usually involve supply, ground, and signal wire connections through the wiring harness and VECU.

Breakout boxes or harnesses may be used to assist in taking measurements. Measurements outside "expected values" may indicate faults in the wiring or in the VECU itself

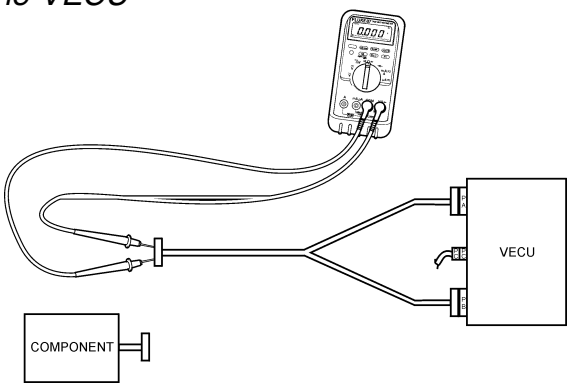


W3003494

## *Check of Component*

In this procedure, the component is disconnected and measurements are made at specific pin locations on the component wiring harness or directly to the component. The component is usually a sensor or switch; it is identified at the beginning of each check.

Breakout boxes or harnesses may be used to assist in taking measurements. Measurements outside "expected values" may indicate faults in the component or in the wiring to the component.

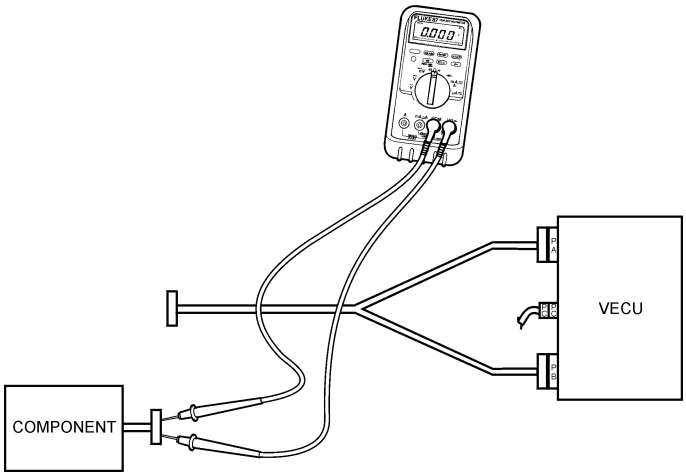


W3003495

https://truckmanualshub.com/


## *Check of the Subsystem*

In this procedure, the VECU is disconnected, a breakout box is connected between the VECU and wiring harness, and measurements are made at specific pin locations on the breakout box. This check is made to measure the voltage that is present at the VECU with the circuit intact.

Measurements outside “expected values” may indicate faults in the component, wiring, or VECU.

## *Tests Using the VCADS Pro Tool*

The VCADS Pro tool is a Windows95®-based PC tool that is used to program, test, and read information from the VECU and EECU.

A number of “real time” tests can be performed by connecting the VCADS Pro tool to the vehicle’s diagnostic connector. If a test in the VCADS Pro tool may be of benefit when troubleshooting a specific fault code, that test will be referenced in the section titled, “Appropriate tests in the VCADS Pro tool.”

**Note:** Not all tests will apply to all vehicle variants. When starting VCADS Pro, menu selections for various vehicles and engines are entered. Only those tests that apply will be available for selection.

For information about the proper operation of the VCADS Pro tool, please refer to VCADS Pro Service Information in group 0.

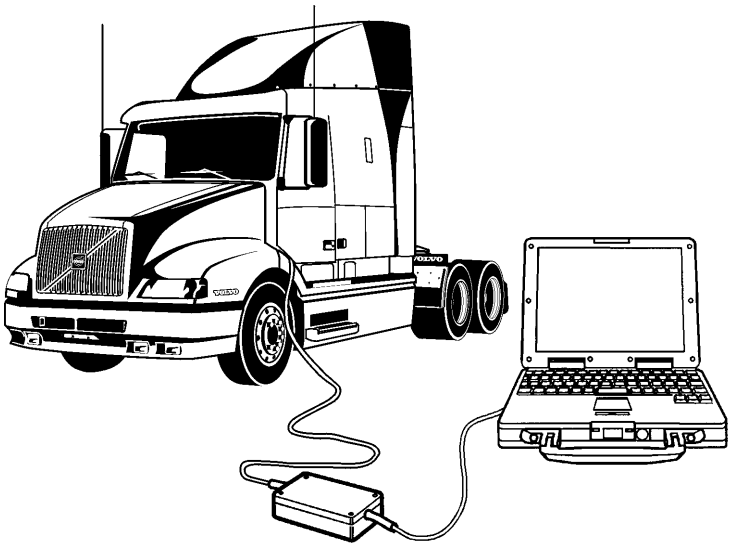

W0001632

https://truckmanualshub.com/


# MID 128 EECU

## MID 128 Fault Code Table

**MID:**Message Identification Description.

**SID:**Subsystem Identification Description.

**PID:**Parameter Identification Description.

**FMI:**Failure Mode Identifier.

| Error code | Component/Function | FMI | Section |
|---|---|---|---|
| MID 128-PID 45 | Preheater Status | 3, 4, 5 | “MID 128 PID 45 Preheater Status” page 96 |
| MID 128-PID 49 | ABS Control Status | 9 | “MID 128 PID 49 ABS Control Status” page 98 |
| MID 128-PID 84 | Road speed | 9, 11 | “MID 128 PID 84 Road Speed” page 100 |
| MID 128-PID 85 | Cruise Control Status | 9 | “MID 128 PID 85 Cruise Control Status” page 102 |
| MID 128-PID 91 | Accelerator Pedal Position | 9, 11 | “MID 128 PID 91 Accelerator Pedal Position” page 104 |
| MID 128-PID 94 | Fuel Delivery Pressure (D7C and D12C only) | 1, 3, 4 | “MID 128 PID 94 Fuel Delivery Pressure” page 106 |
| MID 128-PID 100 | Engine Oil Pressure | 1, 3, 4 | “MID 128 PID 100 Engine Oil Pressure” page 110 |
| MID 128–PID 102 | Boost Pressure | 3, 4 | “MID 128 PID 102 Boost Pressure” page 114 |
| MID 128–PID 105 | Boost Air Temperature | 3, 4 | “MID 128 PID 105 Boost Air Temperature” page 118 |
| MID 128–PID 107 | Air Filter Differential Pressure | 0, 3, 4, 5 | “MID 128 PID 107 Air Filter Differential Pressure” page 122 |
| MID 128–PID 108 | Atmospheric Pressure | 3, 4 | “MID 128 PID 108 Atmospheric Pressure” page 125 |
| MID 128–PID 110 | Engine Coolant Temperature | 0, 3 ,4 | “MID 128 PID 110 Engine Coolant Temperature” page 126 |
| MID 128–PID 111 | Coolant level | 1 | “MID 128 PID 111 Coolant Level” page 129 |
| MID 128–PID 158 | Battery Voltage | 3 | “MID 128 PID 158 Battery Voltage” page 131 |
| MID 128–PID 172 | Air Inlet Temperature | 3, 4 | “MID 128 PID 172 Air Inlet Temperature” page 133 |
| MID 128–PID 174 | Fuel Temperature (D7C and D12C only) | 3, 4 | “MID 128 PID 174 Fuel Temperature” page 136 |

https://truckmanualshub.com/


| Error code | Component/Function | FMI | Section |
|---|---|---|---|
| MID 128–PID 175 | Engine Oil Temperature | 0, 3, 4 | “MID 128 PID 175 Engine Oil Temperature” page 140 |
| MID 128–PID 228 | Road Speed Sensor Calibration | 11 | “MID 128 PID 228 Road Speed Sensor Calibration” page 144 |
| MID 128–PPID 86 | Engine Brake Torque Percent | 9 | “MID 128 PPID 86 Engine Brake Torque Percent” page 146 |
| MID 128–PPID 119 | High Coolant Temperature | 0 | “MID 128 PPID 119 High Coolant Temperature” page 148 |
| MID 128–PPID 122 | VCB Engine Compression Brake (D12B adn D12C only) | 3, 4, 5 | “MID 128 PPID 122 VCB Engine Compression Brake” page 151 |
| MID 128–PPID 123 | EPG 2 (D12B adn D12C only) | 3, 4, 5 | “MID 128 PPID 123 EPG 2” page 153 |
| MID 128–PPID 124 | EPG 1 | 3, 4, 5 | “MID 128 PPID 124 EPG 1” page 155 |
| MID 128–SID 1-6 | Injector (D12B and D12C only) | 2, 3, 4, 5, 7, 11 | “MID 128 SID 1/2/3/4/5/6 Injector ” page 157 |
| MID 128–SID 17 | Fuel Shutoff Valve (D7C only) | 3, 4, 5 | “MID 128 SID 17 Fuel Shutoff Valve” page 161 |
| MID 128–SID 20 | Timing Sleeve (D7C only) | 2, 3, 4, 5, 6, 7, 8, 11 | “MID 128 SID 20 Timing Sleeve” page 163 |
| MID 128–SID 21 | Engine Position Timing Sensor (D12B and D12C) | 3, 8 | “MID 128 SID 21 Engine Position Timing Sensor” page 166 |
| MID 128–SID 21 | Needle Lift Sensor (D7C only) | 2 | “MID 128 SID 21 Needle Lift Sensor” page 168 |
| MID 128–SID 22 | Engine Speed Sensor | 2, 3, 8 | “MID 128 SID 22 Engine Speed Sensor” page 170 |
| MID 128–SID 23 | Rack Actuator (D7C only) | 2, 3, 4, 5, 6, 7, 8, 11 | “MID 128 SID 23 Rack Actuator” page 172 |
| MID 128–SID 24 | Rack Position Sensor (D7C only) | 2, 13 | “MID 128 SID 24 Rack Position Sensor” page 175 |
| MID 128–SID 33 | Fan Control | 3, 4, 5 | “MID 128 SID 33 Fan Control” page 177 |
| MID 128–SID 64 | Redundant Engine Speed Sensor (D7C only) | 3, 8 | “MID 128 SID 64 Redundant Engine Speed Sensor” page 179 |
| MID 128–SID 70 | Preheater Element 1 | 3, 4, 5 | “MID 128 SID 70 Preheater Element 1” page 181 |

https://truckmanualshub.com/


| Error code | Component/Function | FMI | Section |
|---|---|---|---|
| MID 128–SID 71 | Preheater Element 2 (D12B only) | 3, 4, 5 | “MID 128 SID 71 Preheater Element 2” page 183 |
| MID 128–SID 230 | Idle Validation Switch 1 | 3, 4 | “MID 128 SID 230 Idle Validation Switch 1” page 185 |
| MID 128–SID 231 | SAE J1939 Control Link | 2, 9, 11, 12 | “MID 128 SID 231 SAE J1939 Control Link” page 187 |
| MID 128–SID 232 | 5 Volt DC Supply | 3, 4 | “MID 128 SID 232 5 Volt DC Supply” page 189 |
| MID 128–SID 240 | Program Memory | 2, 12 | “MID 128 SID 240 Program Memory” page 191 |
| MID 128–SID 250 | SAE J1587/1708 Information Link | 12 | “MID 128 SID 250 SAE J1587/1708 Information Link” page 192 |
| MID 128–SID 253 | Data Set Memory EEPROM | 2, 12 | “MID 128 SID 253 Data Set Memory EEPROM” page 193 |
| MID 128–SID 254 | Engine Electronic Control Unit (EECU) | 2, 8, 9, 11, 12, 13 | “MID 128 SID 254 Engine Electronic Control Unit (EECU)” page 194 |

https://truckmanualshub.com/

https://truckmanualshub.com/


# MID 128 PID 45 Preheater Status

The preheat relay is provided battery voltage at all times through the supply wire. If the EECU requests preheat operation (based on engine temperature), the control wire will be grounded through the EECU. Preheating is standard on the D7C engine with one preheat relay/element. Preheating is optional on the D12B engine with two preheat relays/elements.

## Fault Codes

### FMI 3

Short circuit to battery voltage.

*Conditions for fault code:*

- Output activated.
- Short circuit to battery voltage on EB31.

*Possible cause:*

- Short circuit to battery voltage on wire between preheating relay and EECU.
- Short circuit in the preheating relay.

*Reaction from the EECU:*

- Fault code is set.
- Yellow lamp is requested.
- The EECU switches off the output.

*Noticeable external symptom:*

- Yellow lamp lights up.
- The preheating relay is not activated.
- White smoke for cold start.
- Difficult to start in extreme cold.

### FMI 4

Short circuit to ground.

*Conditions for fault code:*

- Output switched off.
- Short circuit to ground on EB31.

*Possible cause:*

- Short circuit to ground on wire between preheating relay and EECU.

*Reaction from the EECU:*

- Fault code is set.
- Yellow lamp is requested.

*Noticeable external symptom:*

- Yellow lamp lights up.
- The intake air is warm since the preheating relay is on all the time.
- High current consumption.

### FMI 5:

Break

*Conditions for fault code:*

- Output switched off.
- Open circuit.

*Possible cause:*

- Blown fuse to the supply for preheating relay.
- Open circuit in wire between EECU and preheating relay.
- Open circuit in the preheating relay.
- Open circuit in supply wire to preheating relay.

*Reaction from the EECU:*

- Fault code is set.
- Yellow lamp is requested.
- The EECU switches off the output.

*Noticeable external symptom:*

- Yellow lamp lights up.
- The preheating relay is not activated.
- White smoke for cold start.
- Difficult to start in extreme cold.

https://truckmanualshub.com/


# MID 128 PID 45 Preheater Status, Check

*Special tools: J-43233, J-39200, J-41132*

## NOTE!

Check all the particular connectors for loose connections, switch resistance, and oxidation.

For detailed circuit information, refer to “VNL, VNM Electrical Schematics,” Group 37.

## Measurement at the component’s connector, to the EECU

**1**
**Note:** Check the component to verify that each of the following values is correct. Incorrect values can cause this component to fail.

**2**
Disconnect the control wire (D7C: small blue/red wire; D12B: small solid black wire) at the preheat relay.

### *Control wire:*

**3**
Ignition key must be in the OFF position. J-39200

| Measuring points | Optimal value |
|---|---|
| Control wire / alternate ground | 180 kΩ |

### *Supply wire:*

**4**
Measure the voltage at the supply wire (D7C: small solid black wire; D12B: small blue/red wire) using voltmeter J-39200. J-39200

Ignition key must be in the ON position.

| Measuring points | Optimal value |
|---|---|
| Supply wire / alternate ground | B+ |

## Check of component

### *Preheating relay*

**1**
Disconnect the control and supply wires to the preheat relay. J-39200

Ignition key must be in the OFF position.

**Note:** Each relay must be checked independently.

| Measuring points | Optimal value |
|---|---|
| Control and supply terminals on the preheat relay | 8.5 Ω |

## Check of Subsystem

### *Control of the preheating relay*

**1**
Ignition key must be in the ON position. J-41132
J-43233
Connect breakout box J-41132 in series between connector EB and the EECU. Connect jumper harness J-43233 in series between connector EA and the EECU. J-39200

**Note:** Test with “Preheat ON” can only be performed if the EECU requested preheat.

| Measuring points | Optimal value |
|---|---|
| EB31 / EB9 | B+ (preheat off) |
| EB31 / EB9 | 0 V (preheat on) |
| Ground term EB31 with a jumper wire | preheat relay clicks on |

https://truckmanualshub.com/


# MID 128 PID 49 ABS Control Status

Applies only to vehicles with ABS.

## Fault Codes

### FMI 9

Status message from the ABS control unit is not available (SAE J1587 message).

*Conditions for fault code:*

- PID 49 — the message is unavailable or is not being updated regularly.

*Possible cause:*

- Error in the information link (SAE J1587).
- Error from the ABS control unit.

*Reaction from the EECU:*

- Fault code is set.
- Yellow lamp is requested.

*Noticeable external symptom:*

- Yellow lamp lights up.

https://truckmanualshub.com/


# MID 128 PID 49 ABS Control Status, Check

*Special tools: J-43233, J-39200, J-41132*

## NOTE!

Check all the particular connectors for loose connections as well as for switch resistance and oxidation.

For detailed circuit information, refer to “VNL, VNM Electrical Schematics,” Group 37.

Also check if the ABS system has any active fault codes. This fault code could be due to the fact that there is a fault in the ABS system.

## Check of Subsystem

### *Check of the SAE J1587 Information link*

**1**
Ignition key must be in the OFF position.
Connect breakout box J-41132 in series between connector EB and the EECU.

**2**
Connect jumper harness J-43233 in series between connector EA and the EECU.

J-41132
J-43233
J-39200

| Measuring points | Optimal value |
|---|---|
| EB25 / DCA (connection A in diagnostics connector) | <1 Ω |
| EB26 / DCB (connection B in diagnostics connector) | <1 Ω |

https://truckmanualshub.com/


# MID 128 PID 84 Road Speed

## Fault Codes

### FMI 9

Vehicle road speed signal not available (SAE J1587 message).

*Conditions for fault code:*

- PID 84 — the message is unavailable or is not being updated regularly.

*Possible cause:*

- Fault in speed sensor.
- Fault in the information link (SAE J1587).
- Error from the vehicle ECU (VECU).

*Reaction from the EECU:*

- Fault code is set.
- Yellow lamp is requested.
- If FMI 11 has also been set, the EECU limits the engine speed to approx. 1700 rpm.

*Noticeable external symptom:*

- Yellow lamp lights up.
- If FMI 11 has also been set, the maximum engine speed is approx. 1700 rpm.

### FMI 11

Vehicle road speed signal not available. (SAE J1939 message).

*Conditions for fault code:*

- The vehicle speed signal is not available on the communications link (SAE J1939).

*Possible cause:*

- Fault in speed sensor.
- Fault in the communications link (SAE J1939).
- Fault in VECU.

*Reaction from the EECU:*

- Fault code is set.
- Yellow lamp is requested.
- The message is read from the information link (SAE J1587) instead.
- If FMI 9 has also been set, the EECU limits the engine speed to approx. 1700 rpm.

*Noticeable external symptom:*

- Yellow lamp lights up.
- If FMI 9 has also been set, the maximum engine speed is approx. 1700 rpm.

https://truckmanualshub.com/


# MID 128 PID 84 Road Speed, Check

*Special tools: J-43233, J-39200, J-41132*

## NOTE!

Check all the particular connectors for loose connections as well as for switch resistance and oxidation.

For detailed circuit information, refer to “VNL, VNM Electrical Schematics,” Group 37.

Also check the speed sensor and the VECU. This fault code could be due to the fact that there is a fault in any of these components.

## Check of Subsystem

### *Check of the SAE J1587 Information link*

**1**
Ignition key must be in the OFF position.
Connect breakout box J-41132 in series between connector EB and the EECU.

**2**
Connect jumper harness J-43233 in series between connector EA and the EECU.

J-41132
J-43233
J-39200

| Measuring points | Optimal value |
|---|---|
| EB25 / DCA (connection A in diagnostics connector) | <1 Ω |
| EB26 / DCB (connection B in diagnostics connector) | <1 Ω |

https://truckmanualshub.com/


# MID 128 PID 85 Cruise Control Status

## Fault Codes

### FMI 9

Status message from Cruise Control is not available (SAE J1587 message).

*Conditions for fault code:*

- PID 85 — the message is unavailable or not being updated regularly.

*Possible cause:*

- Fault in the information link (SAE J1587).
- Fault in the VECU.

*Reaction from the EECU:*

- Fault code is set.
- Yellow lamp is requested.

*Noticeable external symptom:*

- Yellow lamp lights up.

https://truckmanualshub.com/


# MID 128 PID 85 Cruise Control Status, Check

*Special tools: J-43233, J-39200, J-41132*

## NOTE!

Check all the particular connectors for loose connections as well as for switch resistance and oxidation.

For detailed circuit information, refer to “VNL, VNM Electrical Schematics,” Group 37.

Also check the cruise control switch and VECU. This fault code could be due to the fact that there is a fault in any of these components.

## Check of Subsystem

### *Check of the SAE J1587 Information link*

**1**
Ignition key must be in the OFF position.
Connect breakout box J-41132 in series between connector EB and the EECU.

**2**
Connect jumper harness J-43233 in series between connector EA and the EECU.

J–41132
J-43233
J-39200

| Measuring points | Optimal value |
|---|---|
| EB25 / DCA (connection A in diagnostics connector) | <1 Ω |
| EB26 / DCB (connection B in diagnostics connector) | <1 Ω |

https://truckmanualshub.com/


# MID 128 PID 91 Accelerator Pedal Position

## Fault Codes

### FMI 9

Accelerator pedal message not available. (SAE J1587 message)

*Conditions for fault code:*

- PID 91 message is unavailable or not being updated regularly.

*Possible cause:*

- Fault in the accelerator pedal.
- Fault in the information link (SAE J1587).
- Error from the VECU.

*Reaction from the EECU:*

- Fault code is set.
- Yellow lamp is requested.
- If FMI 11 has also been set, the EECU will switch to the “Limp home mode”.

*Noticeable external symptom:*

- Yellow lamp lights up.
- If FMI 11 has also been set, the engine will be put in the “Limp home mode” and the buffered idle validation switch is used instead of the accelerator pedal position sensor.

### FMI 11

Accelerator pedal faulty. (SAE J1939 message)

*Conditions for fault code:*

- Faults in the accelerator pedal sensor are sent on the communications link (SAE J1939).
- The accelerator pedal signal is not available on the communications link (SAE J1939).

*Possible cause:*

- Fault in the accelerator pedal.
- Fault in the communications link (SAE J1939).
- Error from the VECU.

*Reaction from the EECU:*

- Fault code is set.
- Yellow lamp is requested.
- Accelerator pedal signal is retrieved instead from the information link (SAE J1587).
- If FMI 9 has also been set, the EECU will switch to the “Limp home mode.”

*Noticeable external symptom:*

- Yellow lamp lights up.
- If FMI 9 has also been set, the engine will be put in the “Limp home mode” and the buffered idle validation switch is used instead of the accelerator pedal position sensor.

https://truckmanualshub.com/


# MID 128 PID 91 Accelerator Pedal Position, Check

*Special tools: J-43233, J-39200, J-41132*

## NOTE!

Check all the particular connectors for loose connections as well as for switch resistance and oxidation.

For detailed circuit information, refer to “VNL, VNM Electrical Schematics,” Group 37.

Also check the accelerator pedal and the VECU. This fault code could be due to the fact that there is a fault in any of these components.

## Check of Subsystem

### *Check of the SAE J1587 Information link*

**1**
Ignition key must be in the OFF position.
Connect breakout box J-41132 in series between connector EB and the EECU.

**2**
Connect jumper harness J-43233 in series between connector EA and the EECU.

J-41132
J-43233
J-39200

| Measuring points | Optimal value |
|---|---|
| EB25 / DCA (connection A in diagnostics connector) | <1 Ω |
| EB26 / DCB (connection B in diagnostics connector) | <1 Ω |

https://truckmanualshub.com/


# MID 128 PID 94 Fuel Delivery Pressure

## D7C and D12C

In addition to the fuel pressure, the sensor also measures the fuel temperature.

## Fault Codes

### FMI 1

Pressure too low.

*Conditions for fault code:*

- The voltage on EA27 is below the alarm limit.

*Possible cause:*

- Clogged fuel filter.
- Air in fuel system.
- Opening pressure too low on overflow valve.
- Worn out fuel pump.
- Mechanical fault in sensor.

*Reaction from the EECU:*

- Fault code is set.
- Yellow lamp is requested.

*Noticeable external symptom:*

- Yellow lamp lights up.
- Low power output.
- Difficult to start.
- Blue smoke.

### FMI 3

Short circuit to voltage or permanent loss of signal.

*Conditions for fault code:*

- The voltage on EA27 is below the alarm limit.

*Possible cause:*

- Short circuit to voltage, 5 V supply wire
- Short circuit to voltage, signal wire.
- Fault in sensor.

*Reaction from the EECU:*

- Fault code is set.
- Yellow lamp is requested.

*Noticeable external symptom:*

- Yellow lamp lights up.

### FMI 4

Short circuit to ground.

*Conditions for fault code:*

- The voltage on EA27 is under 0.08 V.

*Possible cause:*

- Break, 5 V supply wire.
- Break, signal wire.
- Break, ground wire.
- Short circuit to ground, 5 V supply wire.
- Short circuit to ground, signal wire.
- Fault in sensor

*Reaction from the EECU:*

- Fault code is set.
- Yellow lamp is requested.

*Noticeable external symptom:*

- Yellow lamp lights up.

https://truckmanualshub.com/


# MID 128 PID 94 Fuel Delivery Pressure, Check

## D7C and D12C

*Special tools: J-43233, J-39200, J-41132, 9998534*

## NOTE!

Check all the particular connectors for loose connections as well as for switch resistance and oxidation.

For detailed circuit information, refer to “VNL, VNM Electrical Schematics,” Group 37.

## Measurement at the component’s connector, to the EECU

**1**
**Note:** An incorrect value (below) can also cause the component to fail; therefore, it is important to check the component if any of the values are incorrect.

**2**
Disconnect the connector for the fuel pressure sensor. Install breakout harness 9998534 to the wiring harness end only. — 9998534

### *Ground wire:*

**3**
Measure the resistance with ohmmeter J-39200. — J-39200

Ignition key must be in the OFF position.

| Measuring points | Optimal value |
|---|---|
| 4 / alternate ground | <1 Ω |

### *Supply wire:*

**4**
Measure the voltage with voltmeter J-39200. — J-39200

Ignition key must be in the ON position.

| Measuring points | Optimal value |
|---|---|
| 1 / alternate ground | 5 V |

### *Signal wire:*

**5**
Measure the resistance with ohmmeter J-39200. — J-39200

Ignition key must be in the OFF position.

| Measuring points | Optimal value |
|---|---|
| 2 / alternate ground | 100 kΩ |

## Check of component

### *Fuel pressure sensor*

**1**
Disconnect the connector for the fuel pressure sensor. Install breakout harness 9998534 to the sensor connector only. — 9998534

**2**
Measure the resistance with ohmmeter J-39200. — J-39200

Ignition key must be in the OFF position.

| Measuring points | Optimal value |
|---|---|
| 1 / 4 | 11 kΩ |
| 1 / 2 | 40 kΩ |
| 2 / 4 | 40 kΩ |
| 1 / alternate ground | open circuit |
| 2 / alternate ground | open circuit |
| 4 / alternate ground | open circuit |

https://truckmanualshub.com/


# Check of Subsystem

## *Fuel Pressure*

**1**

Ignition key must be in the ON position.
Connect breakout box J-41132 in series between connector EA and the EECU. Connect jumper harness J-43233 in series between connector EB and the EECU.

J-41132
J-43233
J-39200

| Measuring points | Optimal value |
|---|---|
| EA27 / EA5 | 0.5 V (engine not running) |

**Note:** For fuel pressure/voltage chart, see page 109.

https://truckmanualshub.com/


# Fuel Pressure Sensor, Pressure/Voltage Chart

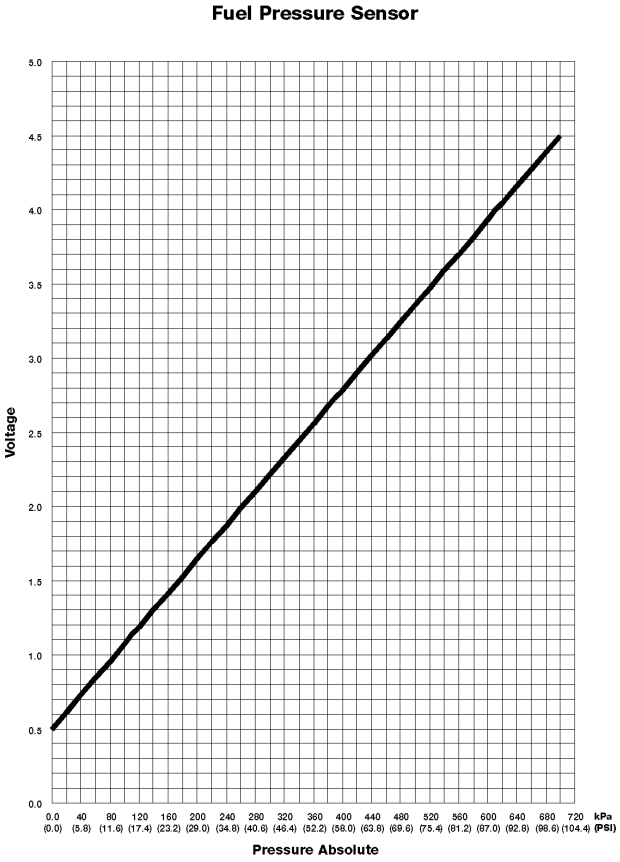


| Bars | kPa | PSI | Volts | Volts (High) | Volts (Low) |
|---|---|---|---|---|---|
| 0 | 0 | 0 | 0.50 | 0.52 | 0.49 |
| 0.2 | 20 | 2.9 | 0.61 | 0.63 | 0.60 |
| 0.4 | 40 | 5.8 | 0.73 | 0.75 | 0.71 |
| 0.6 | 60 | 8.7 | 0.84 | 0.87 | 0.82 |
| 0.8 | 80 | 11.6 | 0.96 | 0.99 | 0.93 |
| 1 | 100 | 14.5 | 1.07 | 1.10 | 1.04 |
| 1.2 | 120 | 17.4 | 1.19 | 1.22 | 1.15 |
| 1.4 | 140 | 20.3 | 1.30 | 1.34 | 1.26 |
| 1.6 | 160 | 23.2 | 1.41 | 1.46 | 1.37 |
| 1.8 | 180 | 26.1 | 1.53 | 1.57 | 1.48 |
| 2 | 200 | 29.0 | 1.64 | 1.69 | 1.59 |
| 2.2 | 220 | 31.9 | 1.76 | 1.81 | 1.70 |
| 2.4 | 240 | 34.8 | 1.87 | 1.93 | 1.82 |
| 2.6 | 260 | 37.7 | 1.99 | 2.05 | 1.93 |
| 2.8 | 280 | 40.6 | 2.10 | 2.16 | 2.04 |
| 3 | 300 | 43.5 | 2.21 | 2.28 | 2.15 |
| 3.2 | 320 | 46.4 | 2.33 | 2.40 | 2.26 |
| 3.4 | 340 | 49.3 | 2.44 | 2.52 | 2.37 |
| 3.6 | 360 | 52.2 | 2.56 | 2.63 | 2.48 |
| 3.8 | 380 | 55.1 | 2.67 | 2.75 | 2.59 |
| 4 | 400 | 58.0 | 2.79 | 2.87 | 2.70 |
| 4.2 | 420 | 60.9 | 2.90 | 2.99 | 2.81 |
| 4.4 | 440 | 63.8 | 3.01 | 3.10 | 2.92 |
| 4.6 | 460 | 66.7 | 3.13 | 3.22 | 3.03 |
| 4.8 | 480 | 69.6 | 3.24 | 3.34 | 3.15 |
| 5 | 500 | 72.5 | 3.36 | 3.46 | 3.26 |
| 5.2 | 520 | 75.4 | 3.47 | 3.58 | 3.37 |
| 5.4 | 540 | 78.3 | 3.59 | 3.69 | 3.48 |
| 5.6 | 560 | 81.2 | 3.70 | 3.81 | 3.59 |
| 5.8 | 580 | 84.1 | 3.81 | 3.93 | 3.70 |
| 6 | 600 | 87.0 | 3.93 | 4.05 | 3.81 |
| 6.2 | 620 | 89.9 | 4.04 | 4.16 | 3.92 |
| 6.4 | 640 | 92.8 | 4.16 | 4.28 | 4.03 |
| 6.6 | 660 | 95.7 | 4.27 | 4.40 | 4.14 |
| 6.8 | 680 | 98.6 | 4.39 | 4.52 | 4.25 |
| 7 | 700 | 101.5 | 4.50 | 4.63 | 4.36 |

W2002799

https://truckmanualshub.com/


# MID 128 PID 100 Engine Oil Pressure

In addition to the oil pressure, the sensor also measures the oil temperature.

## Fault Codes

### FMI 1

Pressure too low.

*Conditions for fault code:*

- The voltage on EA14 is below the alarm limit.

*Possible cause:*

- Fault in overflow valve.
- Oil level too low.
- Contaminated oil, slow-flowing or too thin.
- Worn oil pump.
- Fault in sensor.

*Reaction from the EECU:*

- Fault code is set.
- Power reduction in the first stage and shutdown in 2nd stage (if engine protection is chosen in the data set).

*Noticeable external symptom:*

- LED lights up at the oil pressure gauge.
- Power reduction (if engine protection is chosen in the data set).
- Engine shut-down if the vehicle speed falls below 5 mph (3 km/h), if engine protection is chosen in the data set.

### FMI 3

Short circuit to voltage.

*Conditions for fault code:*

- The voltage on EA14 exceeds 4.95 V.

*Possible cause:*

- Short circuit to battery voltage, 5 V supply wire.
- Short circuit to battery voltage or 5 V, signal wire.
- Fault in sensor.

*Reaction from the EECU:*

- Fault code is set.
- Yellow lamp is requested.
- The EECU stops sending PID 100.

*Noticeable external symptom:*

- Yellow lamp lights up.
- The oil pressure gauge shows 0.

### FMI 4

Short circuit to ground or open circuit.

*Conditions for fault code:*

- The voltage on EA14 is under 0.08 V.

*Possible cause:*

- Break, 5 V supply wire.
- Break, signal wire.
- Short circuit to ground, 5 V supply wire.
- Short circuit to ground, signal wire.
- Fault in sensor.

*Reaction from the EECU:*

- Fault code is set.
- Yellow lamp is requested.
- The EECU stops sending PID 100.

*Noticeable external symptom:*

- Yellow lamp lights up.
- The oil pressure gauge shows 0.

https://truckmanualshub.com/


# MID 128 PID 100 Engine Oil Pressure, Check

*Special tools: J-43233, J-39200, J-41132, 9998534*

## NOTE!

Check all the particular connectors for loose connections as well as for switch resistance and oxidation.

For detailed circuit information, refer to “VNL, VNM Electrical Schematics,” Group 37.

## Measurement at the component’s connector, to the EECU

**1**
**Note:** An incorrect value (below) can also cause the component to fail; therefore, it is important to check the component if any of the values are incorrect.

**2**
Disconnect the connector to the oil pressure sensor. Install breakout harness 9998534 to the wiring harness end only. — 9998534

### *Ground wire:*

**3**
Measure the resistance with ohmmeter J-39200. — J-39200

Ignition key must be in the OFF position.

| Measuring points | Optimal value |
|---|---|
| 4 / alternate ground | <1 Ω |

### *Supply wire:*

**4**
Measure the voltage with voltmeter J-39200. — J-39200

Ignition key must be in the ON position.

| Measuring points | Optimal value |
|---|---|
| 1 / alternate ground | 5 V |

### *Signal wire:*

**5**
Measure the resistance with ohmmeter J-39200. — J-39200

Ignition key must be in the OFF position.

| Measuring points | Optimal value |
|---|---|
| 2 / alternate ground | 100 kΩ |

## Check of component

### *Oil pressure sensor*

**1**
Disconnect the connector to the oil pressure sensor. Install breakout harness 9998534 to the sensor harness end only. — 9998534

**2**
Measure the resistance with ohmmeter J-39200. — J-39200

Ignition key must be in the OFF position.

| Measuring points | Optimal value |
|---|---|
| 1 / 4 | 11 kΩ |
| 1 / 2 | 40 kΩ |
| 2 / 4 | 40 kΩ |
| 1 / alternate ground | open circuit |
| 2 / alternate ground | open circuit |
| 4 / alternate ground | open circuit |

https://truckmanualshub.com/


# Check of Subsystem

## *Oil pressure*

**1**

Ignition key must be in the ON position.
Connect breakout box J-41132 in series between connector EA and the EECU. Connect jumper harness J-43233 in series between connector EB and the EECU.

J-41132
J-43233
J-39200

| Measuring points | Optimal value |
|---|---|
| EA14 / EA5 | 0.5 V (engine not running) |

**Note:** For oil pressure/voltage chart, see “Oil Pressure Sensor, Pressure/Voltage Chart” page 113.

https://truckmanualshub.com/


# Oil Pressure Sensor, Pressure/Voltage Chart

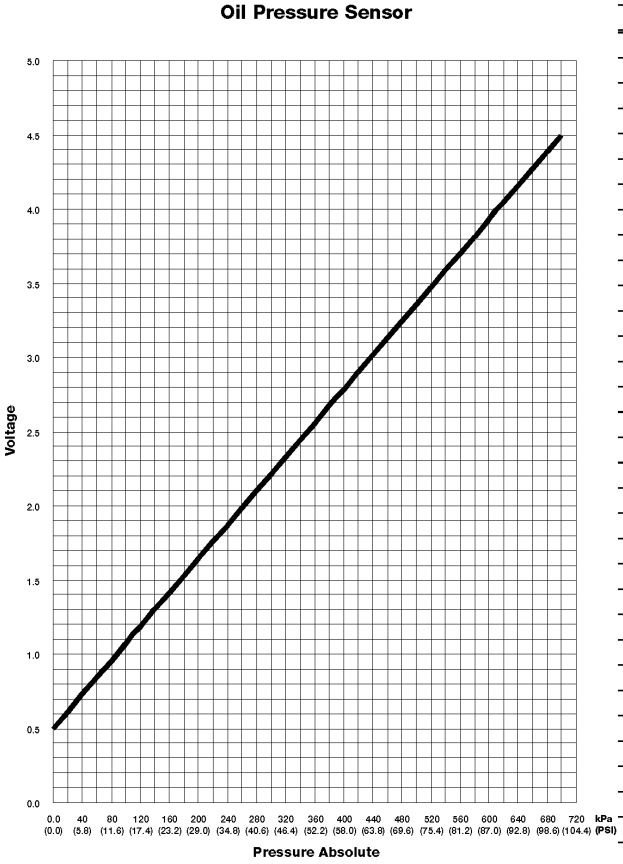


| Bars | kPa | PSI | Volts | Volts (High) | Volts (Low) |
|---|---|---|---|---|---|
| 0 | 0 | 0 | 0.50 | 0.52 | 0.49 |
| 0.2 | 20 | 2.9 | 0.61 | 0.63 | 0.60 |
| 0.4 | 40 | 5.8 | 0.73 | 0.75 | 0.71 |
| 0.6 | 60 | 8.7 | 0.84 | 0.87 | 0.82 |
| 0.8 | 80 | 11.6 | 0.96 | 0.99 | 0.93 |
| 1 | 100 | 14.5 | 1.07 | 1.10 | 1.04 |
| 1.2 | 120 | 17.4 | 1.19 | 1.22 | 1.15 |
| 1.4 | 140 | 20.3 | 1.30 | 1.34 | 1.26 |
| 1.6 | 160 | 23.2 | 1.41 | 1.46 | 1.37 |
| 1.8 | 180 | 26.1 | 1.53 | 1.57 | 1.48 |
| 2 | 200 | 29.0 | 1.64 | 1.69 | 1.59 |
| 2.2 | 220 | 31.9 | 1.76 | 1.81 | 1.70 |
| 2.4 | 240 | 34.8 | 1.87 | 1.93 | 1.82 |
| 2.6 | 260 | 37.7 | 1.99 | 2.05 | 1.93 |
| 2.8 | 280 | 40.6 | 2.10 | 2.16 | 2.04 |
| 3 | 300 | 43.5 | 2.21 | 2.28 | 2.15 |
| 3.2 | 320 | 46.4 | 2.33 | 2.40 | 2.26 |
| 3.4 | 340 | 49.3 | 2.44 | 2.52 | 2.37 |
| 3.6 | 360 | 52.2 | 2.56 | 2.63 | 2.48 |
| 3.8 | 380 | 55.1 | 2.67 | 2.75 | 2.59 |
| 4 | 400 | 58.0 | 2.79 | 2.87 | 2.70 |
| 4.2 | 420 | 60.9 | 2.90 | 2.99 | 2.81 |
| 4.4 | 440 | 63.8 | 3.01 | 3.10 | 2.92 |
| 4.6 | 460 | 66.7 | 3.13 | 3.22 | 3.03 |
| 4.8 | 480 | 69.6 | 3.24 | 3.34 | 3.15 |
| 5 | 500 | 72.5 | 3.36 | 3.46 | 3.26 |
| 5.2 | 520 | 75.4 | 3.47 | 3.58 | 3.37 |
| 5.4 | 540 | 78.3 | 3.59 | 3.69 | 3.48 |
| 5.6 | 560 | 81.2 | 3.70 | 3.81 | 3.59 |
| 5.8 | 580 | 84.1 | 3.81 | 3.93 | 3.70 |
| 6 | 600 | 87.0 | 3.93 | 4.05 | 3.81 |
| 6.2 | 620 | 89.9 | 4.04 | 4.16 | 3.92 |
| 6.4 | 640 | 92.8 | 4.16 | 4.28 | 4.03 |
| 6.6 | 660 | 95.7 | 4.27 | 4.40 | 4.14 |
| 6.8 | 680 | 98.6 | 4.39 | 4.52 | 4.25 |
| 7 | 700 | 101.5 | 4.50 | 4.63 | 4.36 |

W2002732

https://truckmanualshub.com/


# MID 128 PID 102 Boost Pressure

In addition to the boost pressure, the sensor also measures the boost air temperature.

## Fault Codes

### FMI 3

Short circuit to voltage.

*Conditions for fault code:*

- The voltage on EA3 exceeds 4.95 V.

*Possible cause:*

- Short circuit to battery voltage, 5 V supply wire.
- Short circuit to battery voltage or 5 V, signal wire.
- Fault in sensor.

*Reaction from the EECU:*

- Fault code is set.
- Yellow lamp is requested.
- The EECU stops sending PID 102.
- Power reduction.

*Noticeable external symptom:*

- Yellow lamp lights up.
- The boost pressure gauge shows 0.
- Low power output.

### FMI 4

Short circuit to ground or open circuit.

*Conditions for fault code:*

- The voltage on EA3 is under 0.08 V.

*Possible cause:*

- Break, 5 V supply wire.
- Break, signal wire.
- Short circuit to ground, 5 V supply wire.
- Short circuit to ground, signal wire.
- Fault in sensor.

*Reaction from the EECU:*

- Fault code is set.
- Yellow lamp is requested.
- The EECU stops sending PID 102.
- Power reduction.

*Noticeable external symptom:*

- Yellow lamp lights up.
- The boost pressure gauge shows 0.
- Low power output.

https://truckmanualshub.com/


# MID 128 PID 102 Boost Pressure, Check

*Special tools: J-43233, J-39200, J-41132, 9998534*

## NOTE!

Check all the particular connectors for loose connections as well as for switch resistance and oxidation.

For detailed circuit information, refer to “VN/VHD, Electrical Schematics,” Group 37.

## Measurement at the component’s connector, to the EECU

**1**
**Note:** An incorrect value (below) can also cause the component to fail; therefore, it is important to check the component if any of the values are incorrect.

**2**
Disconnect the connector to the boost pressure sensor. Install breakout harness 9998534 to the wiring harness end only. — 9998534

### *Ground wire:*

**3**
Measure the resistance with ohmmeter J-39200. — J-39200

Ignition key must be in the OFF position.

| Measuring points | Optimal value |
|---|---|
| 4 / alternate ground | <1 Ω |

### *Supply wire:*

**4**
Measure the voltage with voltmeter J-39200. — J-39200

Ignition key must be in the ON position.

| Measuring points | Optimal value |
|---|---|
| 1 / alternate ground | 5 V |

### *Signal wire:*

**5**
Measure the resistance with ohmmeter J-39200. — J-39200

Ignition key must be in the OFF position.

| Measuring points | Optimal value |
|---|---|
| 2 / alternate ground | 100 kΩ |

## Check of component

### *Boost pressure sensor*

**1**
Disconnect the connector to the boost pressure sensor. Install breakout harness 9998534 to the sensor harness end only. — 9998534 J-39200

Measure the resistance with ohmmeter J-39200.

Ignition key must be in the OFF position.

| Measuring points | Optimal value |
|---|---|
| 1 / 4 | 11.5 kΩ |
| 1 / 2 | 44 kΩ |
| 2 / 4 | 44 kΩ |
| 1 / alternate ground | open circuit |
| 2 / alternate ground | open circuit |
| 4 / alternate ground | open circuit |

https://truckmanualshub.com/


# Check of Subsystem

## *Boost pressure*

**1**

Ignition key must be in the ON position.
Connect breakout box J-41132 in series between connector EA and the EECU. Connect jumper harness J-43233 in series between connector EB and the EECU.

J-41132
J-43233
J-39200

| Measuring points | Optimal value |
|---|---|
| EA3 / EA5 | 1.2 V (sea level, engine not running) |

**Note:** For boost pressure/voltage chart, see “Boost Pressure Sensor, Pressure/Voltage Chart” page 117.

https://truckmanualshub.com/


# Boost Pressure Sensor, Pressure/Voltage Chart

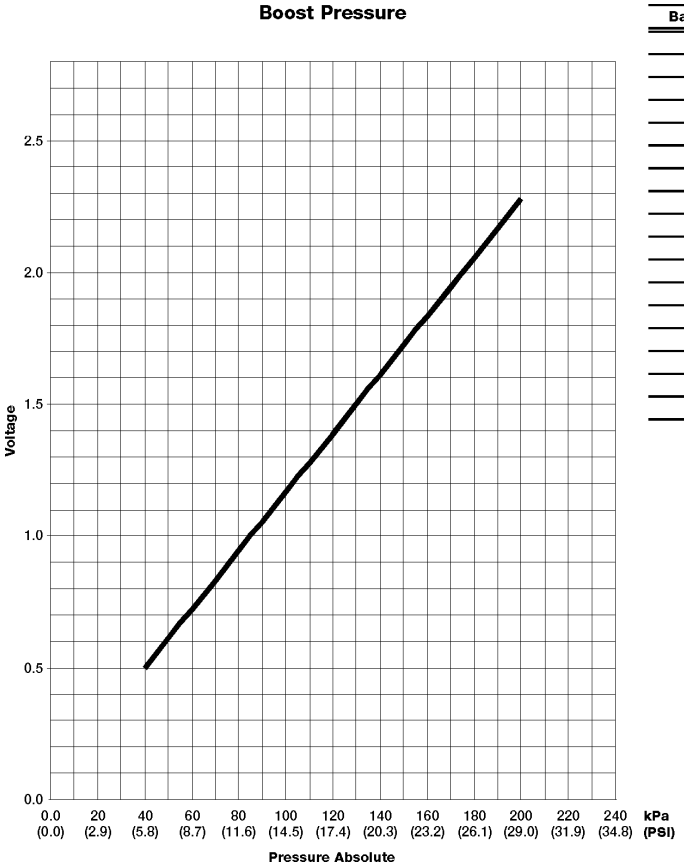


| Bars | kPa | PSI | Volts | Volts (High) | Volts (Low) |
|---|---|---|---|---|---|
| 0.4 | 40 | 5.8 | 0.50 | 0.53 | 0.47 |
| 0.5 | 50 | 7.3 | 0.61 | 0.64 | 0.58 |
| 0.6 | 60 | 8.7 | 0.72 | 0.76 | 0.69 |
| 0.7 | 70 | 10.2 | 0.83 | 0.87 | 0.80 |
| 0.8 | 80 | 11.6 | 0.94 | 0.98 | 0.91 |
| 0.9 | 90 | 13.1 | 1.06 | 1.09 | 1.02 |
| 1.0 | 100 | 14.5 | 1.17 | 1.20 | 1.13 |
| 1.1 | 110 | 16.0 | 1.28 | 1.31 | 1.24 |
| 1.2 | 120 | 17.4 | 1.39 | 1.42 | 1.36 |
| 1.3 | 130 | 18.9 | 1.50 | 1.53 | 1.47 |
| 1.4 | 140 | 20.3 | 1.61 | 1.64 | 1.58 |
| 1.5 | 150 | 21.8 | 1.72 | 1.76 | 1.69 |
| 1.6 | 160 | 23.2 | 1.83 | 1.87 | 1.80 |
| 1.7 | 170 | 24.7 | 1.94 | 1.98 | 1.91 |
| 1.8 | 180 | 26.1 | 2.06 | 2.09 | 2.02 |
| 1.9 | 190 | 27.6 | 2.17 | 2.20 | 2.13 |
| 2.0 | 200 | 29.0 | 2.28 | 2.31 | 2.24 |

W2002730

https://truckmanualshub.com/


# MID 128 PID 105 Boost Air Temperature

In addition to the boost air temperature, the sensor also measures the boost pressure. The boost air temperature signal can be used to switch on the radiator fan.

## Fault Codes

### FMI 3

Short circuit to voltage or open circuit.

*Conditions for fault code:*

- The voltage on EA2 exceeds 4.95 V.

*Possible cause:*

- Short circuit to voltage, signal wire.
- Short circuit to voltage, ground wire.
- Break, signal wire.
- Break, ground wire.
- Fault in sensor.

*Reaction from the EECU:*

- Fault code is set.
- Yellow lamp is requested.

*Noticeable external symptom:*

- Yellow lamp lights up.

### FMI 4

Short circuit to ground.

*Conditions for fault code:*

- The voltage on EA2 is under 0.08 V.

*Possible cause:*

- Short circuit to ground, signal wire.
- Fault in sensor.

*Reaction from the EECU:*

- Fault code is set.
- Yellow lamp is requested.

*Noticeable external symptom:*

- Yellow lamp lights up.

https://truckmanualshub.com/


# MID 128 PID 105 Boost Air Temperature, Check

*Special tools: J-43233, J-39200, J-41132, 9998534*

## NOTE!

Check all the particular connectors for loose connections as well as for switch resistance and oxidation.

For detailed circuit information, refer to “VNL, VNM Electrical Schematics,” Group 37.

## Measurement at the component’s connector, to the EECU

**1**
**Note:** An incorrect value (below) can also cause the component to fail; therefore, it is important to check the component if any of the values are incorrect.

**2**
Disconnect the connector to the boost air temperature sensor. Install breakout harness 9998534 to the wiring harness end only. — 9998534

### *Ground wire:*

**3**
Measure the resistance with ohmmeter J-39200. — J-39200

Ignition key must be in the OFF position.

| Measuring points | Optimal value |
|---|---|
| 4 / alternate ground | <1 Ω |

### *Supply wire:*

**4**
Measure the voltage with voltmeter J-39200. — J-39200

Ignition key must be in the ON position.

| Measuring points | Optimal value |
|---|---|
| 1 / alternate ground | 5 V |

### *Signal wire:*

**5**
Measure the resistance with ohmmeter J-39200. — J-39200

Ignition key must be in the OFF position.

| Measuring points | Optimal value |
|---|---|
| 3 / alternate ground | 5.7 kΩ |

## Check of component

### *Boost air temperature sensor*

**1**
Disconnect the connector to the boost air temperature sensor. Install breakout harness 9998534 to the sensor harness only. — 9998534 J-39200

Measure the resistance with ohmmeter J-39200.

Ignition key must be in the OFF position.

| Measuring points | Optimal value |
|---|---|
| 3 / 4 | 6.2 kΩ (20 °C/68 °F) |
| 3 / 4 | 2.5 kΩ (40 °C/104 °F) |
| 1 / alternate ground | open circuit |
| 2 / alternate ground | open circuit |
| 4 / alternate ground | open circuit |

**Note:** For boost air temperature/resistance chart, see “Boost Air Temperature Sensor, Temperature/Resistance Chart” page 121.

https://truckmanualshub.com/


# Check of Subsystem

## *Boost air temperature*

**1**

Ignition key must be in the ON position.

Connect breakout box J-41132 in series between connector EA and the EECU. Connect jumper harness J-43233 in series between connector EB and the EECU.

J-41132
J-43233 J-39200

| Measuring points | Optimal value |
|---|---|
| EA2 / EA5 | 2.6 V (20 °C/68 °F) |
| EA2 / EA5 | 1.6 V (40 °C/104 °F) |

**Note:** For boost air temperature/resistance chart, see “Boost Air Temperature Sensor, Temperature/Resistance Chart” page 121.

https://truckmanualshub.com/



# Boost Air Temperature Sensor, Temperature/Resistance Chart

**Intake Manifold Air Temperature Sensor**

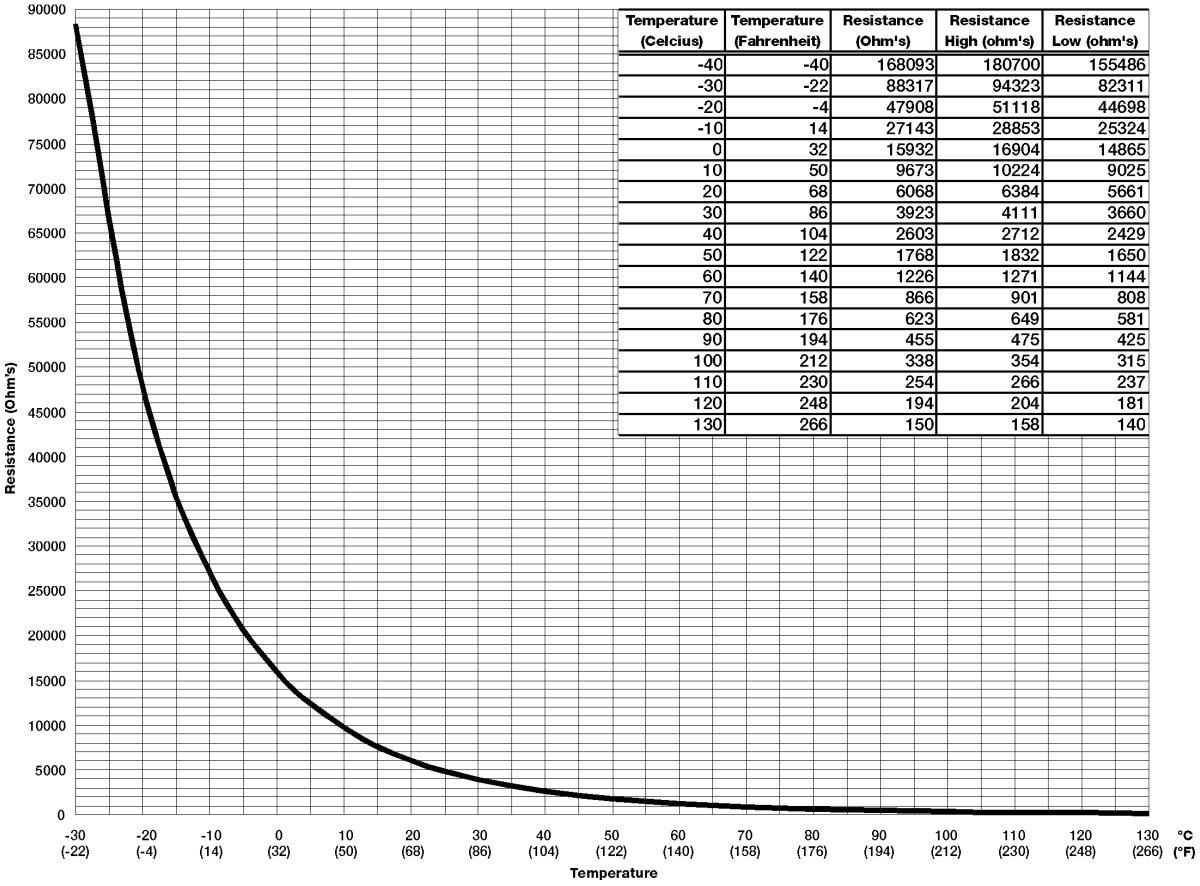


| Temperature (Celcius) | Temperature (Fahrenheit) | Resistance (Ohm's) | Resistance High (ohm's) | Resistance Low (ohm's) |
|---|---|---|---|---|
| -40 | -40 | 168093 | 180700 | 155486 |
| -30 | -22 | 88317 | 94323 | 82311 |
| -20 | -4 | 47908 | 51118 | 44698 |
| -10 | 14 | 27143 | 28853 | 25324 |
| 0 | 32 | 15932 | 16904 | 14865 |
| 10 | 50 | 9673 | 10224 | 9025 |
| 20 | 68 | 6068 | 6384 | 5661 |
| 30 | 86 | 3923 | 4111 | 3660 |
| 40 | 104 | 2603 | 2712 | 2429 |
| 50 | 122 | 1768 | 1832 | 1650 |
| 60 | 140 | 1226 | 1271 | 1144 |
| 70 | 158 | 866 | 901 | 808 |
| 80 | 176 | 623 | 649 | 581 |
| 90 | 194 | 455 | 475 | 425 |
| 100 | 212 | 338 | 354 | 315 |
| 110 | 230 | 254 | 266 | 237 |
| 120 | 248 | 194 | 204 | 181 |
| 130 | 266 | 150 | 158 | 140 |

https://truckmanualshub.com/


# MID 128 PID 107 Air Filter Differential Pressure

**(D12B, D12C, D7C Engines)**

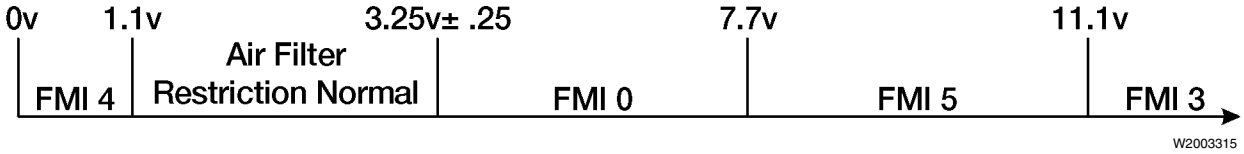


## Fault Codes

### FMI 0

Filter restriction is too great.

The pressure drop (filter restriction) is greatest at high engine speed/load. With current engine software, once PID 107 is triggered, it remains active until the ignition is turned to the OFF position. At that time, the fault code is reset (neither active nor inactive) until the fault condition recurs.

*Conditions for fault code:*

- Filter restriction too great.
- Voltage between EB17–EB8 exceeds 3.25 ± 0.25 V.

*Possible cause:*

- Clogged air filter.
- Fault in sensor.

*Reaction from the EECU:*

- Fault code is set.
- Yellow lamp is requested.

*Noticeable external symptom:*

- Yellow lamp is illuminated.
- Loss of tractive power.

*Possible action:*

- Check/replace the air filter.
- See Service Bulletin, “Checklist A: Turbo Boost Pressure,” publication number PV776–200–040SB.

### FMI 3

Short circuit to battery voltage.

*Conditions for fault code:*

- Voltage between EB17–EB8 exceeds 11.1 V.

*Possible cause:*

- Short circuit to battery voltage, signal wire.
- Short circuit to battery voltage, ground wire.
- Fault in sensor.

*Reaction from the EECU:*

- Fault code is set.
- Yellow lamp is requested.

*Noticeable external symptom:*

- Yellow lamp lights up.

*Possible checks:*

- “MID 128 PID 107 Air Filter Differential Pressure, Check” page 124.

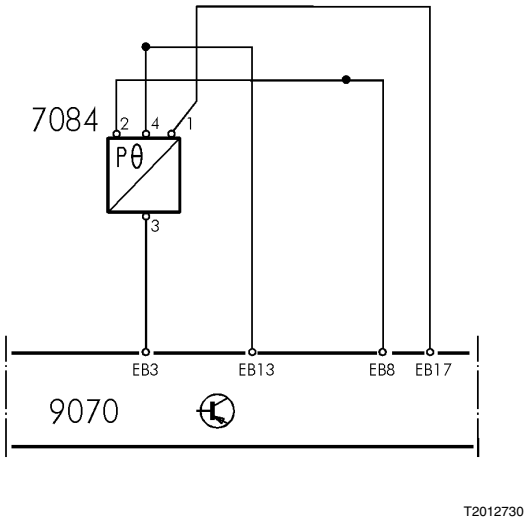


Fig. 13: 7084 - air filter restriction/temperature sensor; 9070 - EECU.

https://truckmanualshub.com/


## FMI 4

Short circuit to ground.

*Conditions for fault code:*

- Voltage between EB17–EB8 is under 1.1 V.

*Possible cause:*

- Short circuit to ground, signal wire.
- Fault in sensor.

*Reaction from the EECU:*

- Fault code is set.
- Yellow lamp is requested.

*Noticeable external symptom:*

- Yellow lamp lights up.

*Possible checks:*

- “MID 128 PID 107 Air Filter Differential Pressure, Check” page 124.

## FMI 5:

Break

*Conditions for fault code:*

- Voltage between EB17–EB8 exceeds 7.7 V.

*Possible cause:*

- Break in signal wire.
- Fault in sensor.

*Reaction from the EECU:*

- Fault code is set.
- Yellow lamp is requested.

*Noticeable external symptom:*

- Yellow lamp lights up.

*Possible checks:*

- “MID 128 PID 107 Air Filter Differential Pressure, Check” page 124.

https://truckmanualshub.com/


# MID 128 PID 107 Air Filter Differential Pressure, Check

**(D12B, D12C, D7C Engines)**

*Special tools: 9998534, J-39200, J-43233, J-41132*

## NOTE!

Check all the particular connectors for loose connections, switch resistance, and oxidation.

For detailed circuit information, refer to “VN/VHD, Electrical Schematics,” Group 37.

## Measurement at the Component’s Connector, to the EECU

**1**
**Note:** Check to verify that each of the following values is correct. Incorrect values can also cause this component to fail. It is important to check the component if any of the values are incorrect.

**2**
Disconnect the connector to the air filter restriction/temperature sensor. Install breakout harness 9998534 to the wiring harness only. — 9998534

### *Ground wire:*

**3**
Measure the resistance using DMM J-39200. — J-39200

Ignition key must be in the OFF position.

| Measuring points | Optimal value |
|---|---|
| 2 / alternate ground | <1 Ω |

### *Signal wire/supply wire:*

**4**
Measure the voltage at the supply wire using DMM J-39200. — J-39200

Ignition key must be in the ON position.

| Measuring points | Optimal value |
|---|---|
| 1 / alternate ground | 80% B+ |

## Check of Component

**Note:** Faults in the component can be caused by faults in the wiring harness of the EECU. Thus, a check of the wiring harness should also be made before connecting a new component.

### *Air Filter Restriction/Temperature Sensor*

**1**
Disconnect the connector to the air filter restriction/temperature sensor. Install breakout harness 9998534 to the sensor harness end only. — 9998534

**2**
Measure the resistance with DMM J-39200. — J-39200

Ignition key must be in the OFF position.

| Measuring points | Optimal value |
|---|---|
| 1 / 2 | 330 Ω (inactive; normal position) |
| 1 / 2 | 2.2 kΩ (active) |

## Check of Subsystem

### *Air Filter Indicator*

**1**
Connect breakout box J-41132 in series between connector EB and the EECU. Connect jumper harness J-43233 in series between connector EA and the EECU.

**2**
Measure the voltage with DMM J-39200. — J-41132, J-43233, J-39200

Ignition key must be in the ON position.

| Measuring points | Optimal value |
|---|---|
| EB8 / EB17 | 1.35 V (inactive; normal position)<br>5.1 V (active) |

https://truckmanualshub.com/


# MID 128 PID 108 Atmospheric Pressure

The sensor is located inside the EECU and therefore cannot be checked. The signal is used to calculate the turbo pressure and to compensate the fuel when driving at high altitudes.

## Fault Codes

### FMI 3

Short circuit to voltage.

*Conditions for fault code:*

- The signal from the internal sensor exceeds 4.95 V.

*Possible cause:*

- Internal fault in the EECU.
- The EECU has been exposed to extremely high pressure.

*Reaction from the EECU:*

- Fault code is set.
- Yellow lamp is requested.

*Noticeable external symptom:*

- Yellow lamp lights up.
- Poor response at high altitudes.

### FMI 4

Short circuit to ground or open circuit.

*Conditions for fault code:*

- The signal from the internal sensor is under 0.08 V.

*Possible cause:*

- Internal fault in the EECU.
- The EECU has been exposed to extremely low pressure.

*Reaction from the EECU:*

- Fault code is set.
- Yellow lamp is requested.

*Noticeable external symptom:*

- Yellow lamp lights up.
- Poor response at high altitudes.

https://truckmanualshub.com/


# MID 128 PID 110 Engine Coolant Temperature

## Fault Codes

### FMI 0

Temperature too high.

*Conditions for fault code:*

- The coolant temperature exceeds 102 °C/216 °F.

*Possible cause:*

- Low coolant level.
- Fault in thermostat.
- Clogged radiator (internally/externally).
- Clogged intercooler (on the outside).
- Poor through-flow in the cooling system.
- Worn coolant pump.
- Fault in pressure cap, expansion tank.
- Fault in sensor.

*Reaction from the EECU:*

- Fault code is set.
- Power reduction in the first stage.
- The engine is shut down in the second stage (if engine protection is chosen in the data set).

*Noticeable external symptom:*

- LED lights up at the coolant temperature gauge.
- Low power output.
- The engine is shut down (if engine protection is chosen in the data set).

### FMI 3

Short circuit to voltage or open circuit.

*Conditions for fault code:*

- The voltage on EA25 exceeds 4.95 V.

*Possible cause:*

- Short circuit to battery or 5 V voltage, signal wire.
- Short circuit to voltage, ground wire.
- Break, signal wire.
- Break, ground wire.
- Fault in sensor.

*Reaction from the EECU:*

- Fault code is set.
- Yellow lamp is requested.
- The EECU stops sending PID 110.

*Noticeable external symptom:*

- Yellow lamp lights up.
- The coolant temperature gauge shows 0.

### FMI 4

Short circuit to ground.

*Conditions for fault code:*

- The voltage on EA25 is under 0.08 V.

*Possible cause:*

- Short circuit to ground, signal wire.
- Fault in sensor.

*Reaction from the EECU:*

- Fault code is set.
- Yellow lamp is requested.
- The EECU stops sending PID 110.

*Noticeable external symptom:*

- Yellow lamp lights up.
- The coolant temperature gauge shows 0.

https://truckmanualshub.com/


# MID 128 PID 110 Engine Coolant Temperature, Check

*Special tools: J-43233, J-39200, J-41132, 9998534*

## NOTE!

Check all the particular connectors for loose connections as well as for switch resistance and oxidation.

For detailed circuit information, refer to “VNL, VNM Electrical Schematics,” Group 37.

## Measurement at the component’s connector, to the EECU

**1**
**Note:** An incorrect value (below) can also cause the component to fail; therefore, it is important to check the component if any of the values are incorrect.

**2**
Disconnect the connector to the coolant temperature sensor. Install breakout harness 9998534 to the wiring harness end only. — 9998534

### *Ground wire:*

**3**
Measure the resistance with ohmmeter J-39200. — J-39200

Ignition key must be in the OFF position.

| Measuring points | Optimal value |
|---|---|
| 2 / alternate ground | <1 Ω |

### *Signal wire:*

**4**
Measure the resistance with ohmmeter J-39200. — J-39200

Ignition key must be in the OFF position.

| Measuring points | Optimal value |
|---|---|
| 1 / alternate ground | 1.4 kΩ |

## Check of component

### *Coolant temperature sensor*

**1**
Disconnect the connector to the coolant temperature sensor. Install breakout harness 9998534 to the sensor harness only. — 9998534, J-39200

Measure the resistance with ohmmeter J-39200.

Ignition key must be in the OFF position.

**Note:** For coolant temperature/resistance chart, see “Coolant Temperature Sensor, Temperature/Resistance Chart” page 128.

| Measuring points | Optimal value |
|---|---|
| 1 / 2 | 1.9 kΩ (20 °C/68 °F) |
| 1 / 2 | 160 Ω (85 °C/185 °F) |
| 1 / alternate ground | open circuit |
| 2 / alternate ground | open circuit |

## Check of Subsystem

### *Coolant temperature*

**1**
Ignition key must be in the ON position. — J-41132, J-43233, J-39200
Connect breakout box J-41132 in series between connector EA and the EECU. Connect jumper harness J-43233 in series between connector EB and the EECU.

| Measuring points | Optimal value |
|---|---|
| EA25 / EA5 | 3.0 V (20 °C/68 °F) |
| EA25 / EA5 | 0.6 V (85 °C/185 °F) |

**Note:** For coolant temperature/resistance chart, see “Coolant Temperature Sensor, Temperature/Resistance Chart” page 128.

https://truckmanualshub.com/


# Coolant Temperature Sensor, Temperature/Resistance Chart

**Coolant Temperature Sensor**

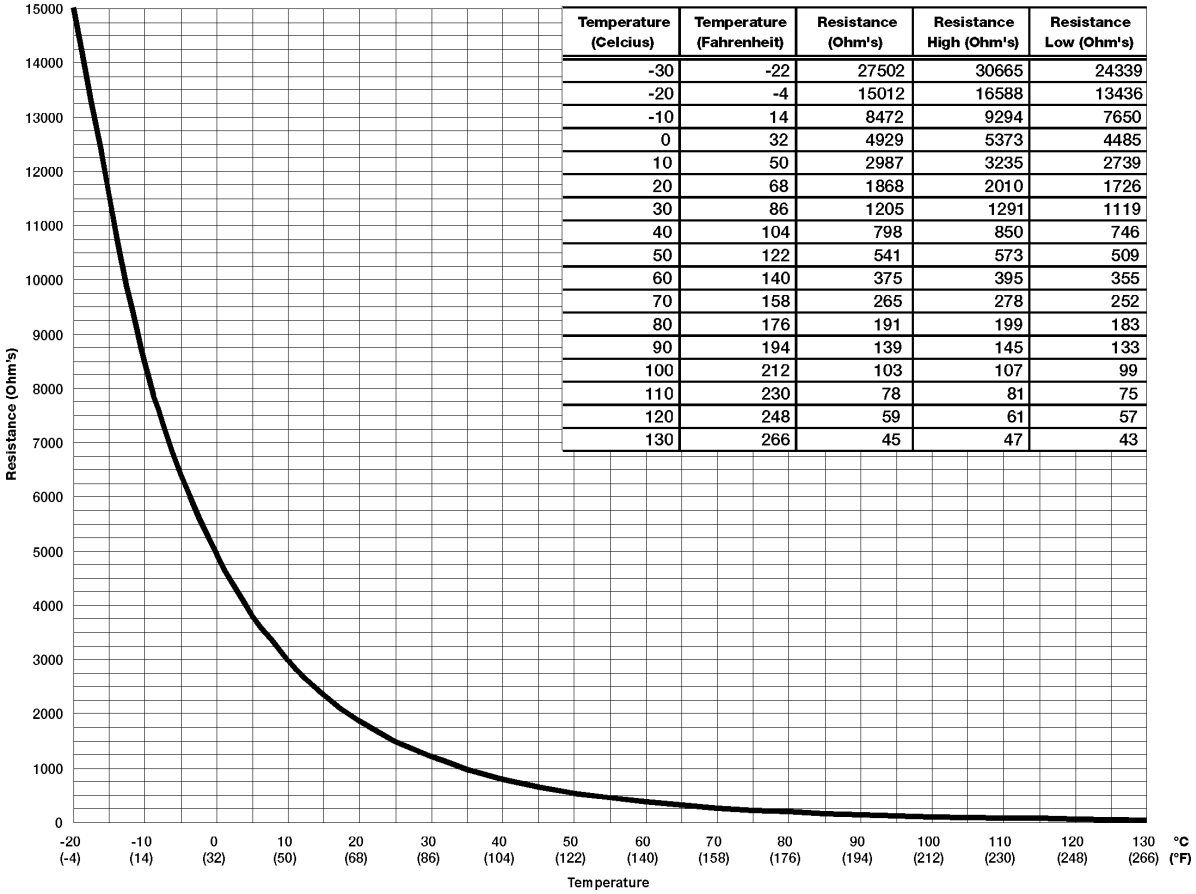


| Temperature (Celcius) | Temperature (Fahrenheit) | Resistance (Ohm's) | Resistance High (Ohm's) | Resistance Low (Ohm's) |
|---|---|---|---|---|
| -30 | -22 | 27502 | 30665 | 24339 |
| -20 | -4 | 15012 | 16588 | 13436 |
| -10 | 14 | 8472 | 9294 | 7650 |
| 0 | 32 | 4929 | 5373 | 4485 |
| 10 | 50 | 2987 | 3235 | 2739 |
| 20 | 68 | 1868 | 2010 | 1726 |
| 30 | 86 | 1205 | 1291 | 1119 |
| 40 | 104 | 798 | 850 | 746 |
| 50 | 122 | 541 | 573 | 509 |
| 60 | 140 | 375 | 395 | 355 |
| 70 | 158 | 265 | 278 | 252 |
| 80 | 176 | 191 | 199 | 183 |
| 90 | 194 | 139 | 145 | 133 |
| 100 | 212 | 103 | 107 | 99 |
| 110 | 230 | 78 | 81 | 75 |
| 120 | 248 | 59 | 61 | 57 |
| 130 | 266 | 45 | 47 | 43 |

https://truckmanualshub.com/


# MID 128 PID 111 Coolant Level

The information applies only to the magnetic coolant level sensor that is mounted in the bottom of the radiator expansion tank. Some models (WG, AC) are equipped with a capacitive probe and an electronic coolant level module that converts the capacitive signal to an output signal that the EECU can understand.

## Fault Codes

### FMI 1

Level too low.

*Conditions for fault code:*

- Coolant level switch closed.
- The voltage on EB7 is under 45% of the battery voltage.

*Possible cause:*

- Low coolant level.
- Short circuit to ground, signal wire.
- Fault in sensor.

*Reaction from the EECU:*

- Fault code is set.
- Red lamp is requested.
- The EECU reduces the output after 30 seconds and shuts down the engine if the vehicle speed goes under 5 mph or 3 km/h (if engine protection is chosen in the data set).

*Noticeable external symptom:*

- Red lamp lights up.
- The EECU reduces the output after 30 seconds and shuts down the engine if the vehicle speed goes under 5 mph or 3 km/h (if engine protection is chosen in the data set).

https://truckmanualshub.com/


# MID 128 PID 111 Coolant Level, Check

*Special tools: J-43233, J-39200, J-41132, J-42472*

## NOTE!

Check all the particular connectors for loose connections as well as for switch resistance and oxidation.

For detailed circuit information, refer to “VNL, VNM Electrical Schematics,” Group 37.

## Measurement at the component’s connector, to the EECU

**1**
**Note:** An incorrect value (below) can also cause the component to fail; therefore, it is important to check the component if any of the values are incorrect.

**2**
Disconnect the connector to the coolant level sensor. Install breakout harness J-42472 to the wiring harness end only. J-42472

### *Ground wire:*

**3**
Measure the resistance with ohmmeter J-39200. J-39200

Ignition key must be in the OFF position.

| Measuring points | Optimal value |
|---|---|
| 1 / alternate ground | <1 Ω |

### *Signal wire:*

**4**
Measure the resistance with ohmmeter J-39200. J-39200

Ignition key must be in the OFF position.

| Measuring points | Optimal value |
|---|---|
| 2 / alternate ground | 2.1 kΩ |

## Check of component

### *The coolant level sensor*

**1**
Disconnect the connector to the coolant level sensor. Install breakout harness J-42472 to the sensor harness end only. J-39200 J-42472

Measure the resistance with ohmmeter J-39200.

Ignition key must be in the OFF position.

| Measuring points | Optimal value |
|---|---|
| 1 / 2 | open circuit (coolant level normal) |
| 1 / 2 | <1 Ω (coolant level low) |
| 1 / alternate ground | open circuit |
| 2 / alternate ground | open circuit |

## Check of Subsystem

### *Coolant level*

**1**
Ignition key must be in the ON position. J-41132 J-43233
Connect breakout box J-41132 in series between connector EB and the EECU. Connect jumper harness J-43233 in series between connector EA and the EECU. J-39200

| Measuring points | Optimal value |
|---|---|
| EB7 / EB8 | 80% B+ (open, coolant level normal) |
| EB7 / EB8 | 0 V (closed, coolant level low) |

https://truckmanualshub.com/


# MID 128 PID 158 Battery Voltage

## Fault Codes

### FMI 3

Battery voltage too high.

*Conditions for fault code:*

- The battery voltage exceeds 36 V.

*Possible cause:*

- Fault in alternator.
- Fast charger connected.

*Reaction from the EECU:*

- Fault code is set.
- Yellow lamp is requested.

*Noticeable external symptom:*

- Yellow lamp lights up.

https://truckmanualshub.com/


# MID 128 PID 158 Battery Voltage, Check

*Special tools: J-43233, J-39200, J-41132*

## NOTE!

Check all the particular connectors for loose connections as well as for switch resistance and oxidation.

For detailed circuit information, refer to “VNL, VNM Electrical Schematics,” Group 37.

## Check of Subsystem

### *EECU supply relay*

**1**

Ignition key must be in the ON position.
Connect breakout box J-41132 in series between connector EB and the EECU. Connect jumper harness J-43233 in series between connector EA and the EECU.

J-41132
J-43233
J-39200

| Measuring points | Optimal value |
|---|---|
| EB9 / EB11 | B+ |
| EB10 / EB12 | B+ |
| EB9 / EB10 | <1 Ω |
| EB11 / EB12 | <1 Ω |

https://truckmanualshub.com/


# MID 128 PID 172 Air Inlet Temperature

An ambient air temperature sensor is mounted in the piping between the air filter and the turbo inlet. In addition to ambient air temperature, the sensor also measures air filter restriction. The air filter restriction function is currently not used.

## Fault Codes

### FMI 3

Short circuit to voltage or open circuit.

*Conditions for fault code:*

- The voltage on EB3 exceeds 4.95 V.

*Possible cause:*

- Short circuit to voltage, signal wire.
- Short circuit to voltage, ground wire.
- Break, signal wire.
- Break, ground wire.
- Fault in sensor.

*Reaction from the EECU:*

- Fault code is set.
- Yellow lamp is requested.

*Noticeable external symptom:*

- Yellow lamp lights up.
- Blue smoke in cold weather conditions.

### FMI 4

Short circuit to ground.

*Conditions for fault code:*

- The voltage on EB3 is under 0.08 V.

*Possible cause:*

- Short circuit to ground, signal wire.
- Fault in sensor.

*Reaction from the EECU:*

- Fault code is set.
- Yellow lamp is requested.

*Noticeable external symptom:*

- Yellow lamp lights up.
- Blue smoke in cold weather conditions.

https://truckmanualshub.com/


# MID 128 PID 172 Air Inlet Temperature, Check

*Special tools: J-43233, J-39200, J-41132, 9998534*

## NOTE!

Check all the particular connectors for loose connections as well as for switch resistance and oxidation.

For detailed circuit information, refer to “VNL, VNM Electrical Schematics,” Group 37.

## Measurement at the component’s connector, to the EECU

**1**
**Note:** An incorrect value (below) can also cause the component to fail; therefore, it is important to check the component if any of the values are incorrect.

**2**
Disconnect the connector to the ambient air temperature sensor. Install breakout harness 9998534 to the wiring harness only. — 9998534

### *Ground wire:*

**3**
Measure the resistance with ohmmeter J-39200. — J-39200

Ignition key must be in the OFF position.

| Measuring points | Optimal value |
|---|---|
| 4 / alternate ground | <1 Ω |

### *Signal wire:*

**4**
Measure the resistance with ohmmeter J-39200. — J-39200

Ignition key must be in the OFF position.

| Measuring points | Optimal value |
|---|---|
| 3 / alternate ground | 6 kΩ |

## Check of component

### *Air temperature sensor*

**1**
Disconnect the connector to the ambient air temperature sensor. Install breakout harness 9998534 to the sensor harness end only. — 9998534 J-39200

Measure the resistance with ohmmeter J-39200.

Ignition key must be in the OFF position.

**Note:** For ambient air temperature/resistance chart, see “Ambient Air Temperature Sensor, Temperature/Resistance Chart” page 135.

| Measuring points | Optimal value |
|---|---|
| 3 / 4 | 5.7 kΩ (20 °C/68 °F) |

## Check of Subsystem

### *Ambient air temperature inlet*

**1**
Ignition key must be in the ON position. — J-41132 J-43233 J-39200
Connect breakout box J-41132 in series between connector EB and the EECU. Connect jumper harness J-43233 in series between connector EA and the EECU.

| Measuring points | Optimal value |
|---|---|
| EB3 / EB13 | 2.6 V (20 °C/68 °F) |
| EB3 / EB13 | 1.2 V (50 °C/122 °F) |

**Note:** For ambient air temperature/resistance chart, see “Ambient Air Temperature Sensor, Temperature/Resistance Chart” page 135.

https://truckmanualshub.com/


# Ambient Air Temperature Sensor, Temperature/Resistance Chart

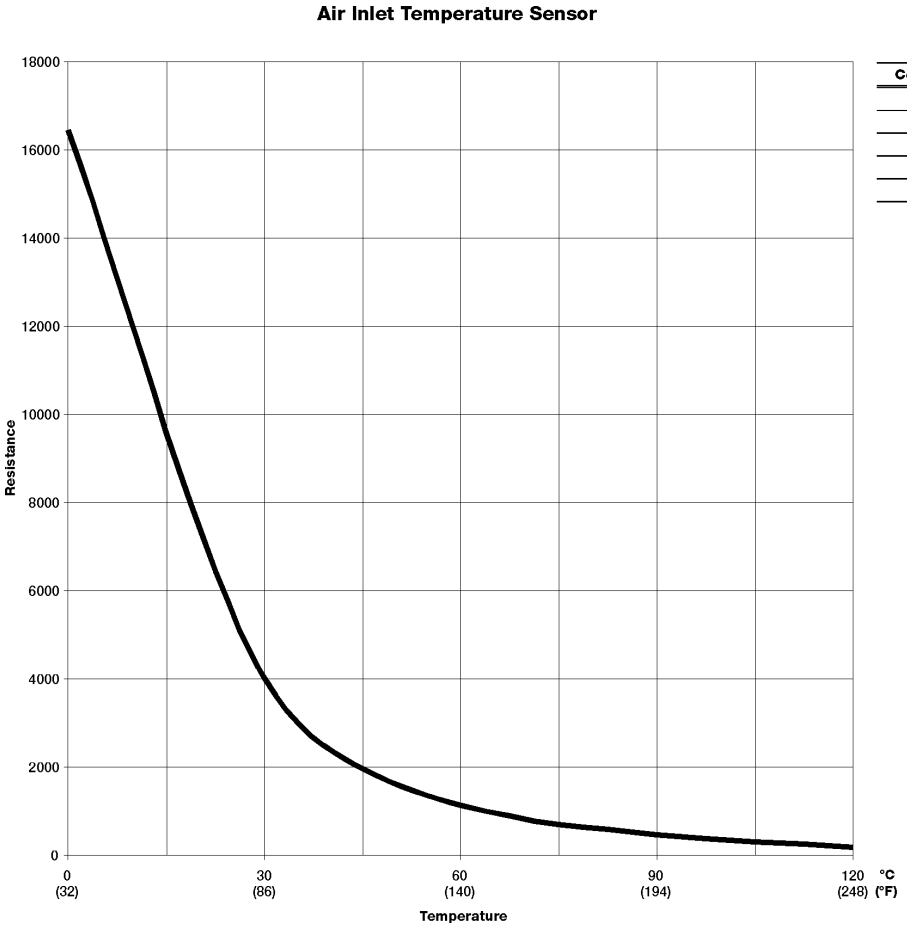


| Celcius | Fahrenheit | Resistance |
|---|---|---|
| 0 | 32 | 16445 |
| 30 | 86 | 4026 |
| 60 | 140 | 1246 |
| 90 | 194 | 463 |
| 120 | 248 | 198 |

W2002733

https://truckmanualshub.com/


# MID 128 PID 174 Fuel Temperature

## D7C and D12C

In addition to the fuel temperature, the sensor also measures the fuel pressure. The signal is used for fuel density compensation.

## Fault Codes

### FMI 3

Short circuit to voltage or open circuit.

*Conditions for fault code:*

- The voltage on EA13 exceeds 4.95 V.

*Possible cause:*

- Short circuit to voltage, signal wire.
- Short circuit to voltage, ground wire.
- Break, signal wire.
- Break, ground wire.
- Fault in sensor.

*Reaction from the EECU:*

- Fault code is set.
- Yellow lamp is requested.

*Noticeable external symptom:*

- Yellow lamp lights up.
- Incorrect fuel quantity.

### FMI 4

Short circuit to ground.

*Conditions for fault code:*

- The voltage on EA13 is under 0.08 V.

*Possible cause:*

- Short circuit to ground, signal wire.
- Fault in sensor.

*Reaction from the EECU:*

- Fault code is set.
- Yellow lamp is requested.

*Noticeable external symptom:*

- Yellow lamp lights up.
- Incorrect fuel quantity.

https://truckmanualshub.com/


# MID 128 PID 174 Fuel Temperature, Check

*Special tools: J-43233, J-39200, J-41132, 9998534*

## D7C and D12C

**Note:** Check all the particular connectors for loose connections as well as for switch resistance and oxidation. For detailed circuit information, refer to “VNL, VNM Electrical Schematics,” Group 37.

## Measurement at the component’s connector, to the EECU

**1**
**Note:** An incorrect value (below) can also cause the component to fail; therefore, it is important to check the component if any of the values are incorrect.

**2**
Disconnect the connector to the fuel temperature sensor. Install breakout harness 9998534 to the wiring harness end only. — 9998534

### *Ground wire:*

**3**
Measure the resistance with ohmmeter J-39200. — J-39200

Ignition key must be in the OFF position.

| Measuring points | Optimal value |
|---|---|
| 4 / alternate ground | <1 Ω |

### *Supply wire:*

**4**
Measure the voltage with voltmeter J-39200. — J-39200

Ignition key must be in the ON position.

| Measuring points | Optimal value |
|---|---|
| 1 / alternate ground | 5 V |

### *Signal wire:*

**5**
Measure the resistance with ohmmeter J-39200. — J-39200

Ignition key must be in the OFF position.

| Measuring points | Optimal value |
|---|---|
| 3 / alternate ground | 1.4 kΩ |

## Check of component

### *Fuel temperature sensor*

**1**
Disconnect the connector to the fuel temperature sensor. Install breakout harness 9998534 to the sensor connector only. — 9998534 J-39200

Measure the resistance with ohmmeter J-39200.

Ignition key must be in the OFF position.

**Note:** For fuel temperature/resistance chart, see “Fuel Temperature Sensor, Temperature/Resistance Chart” page 139.

| Measuring points | Optimal value |
|---|---|
| 3 / 4 | 1.9 kΩ (20 °C/68 °F) |
| 3 / 4 | 800 Ω (40 °C/104 °F) |
| 1 / alternate ground | open circuit |
| 3 / alternate ground | open circuit |
| 4 / alternate ground | open circuit |

https://truckmanualshub.com/


# Check of Subsystem

## *Fuel temperature*

**1**

Ignition key must be in the ON position.

Connect breakout box J-41132 in series between connector EA and the EECU. Connect jumper harness J-43233 in series between connector EB and the EECU.

J-41132
J-43233
J-39200

| Measuring points | Optimal value |
|---|---|
| EA13 / EA5 | 3.0 V (20 °C/68 °F) |
| EA13 / EA5 | 2.0 V (40 °C/104 °F) |

**Note:** For fuel temperature/resistance chart, see “Fuel Temperature Sensor, Temperature/Resistance Chart” page 139.

https://truckmanualshub.com/


# Fuel Temperature Sensor, Temperature/Resistance Chart

**Fuel Temperature Sensor**

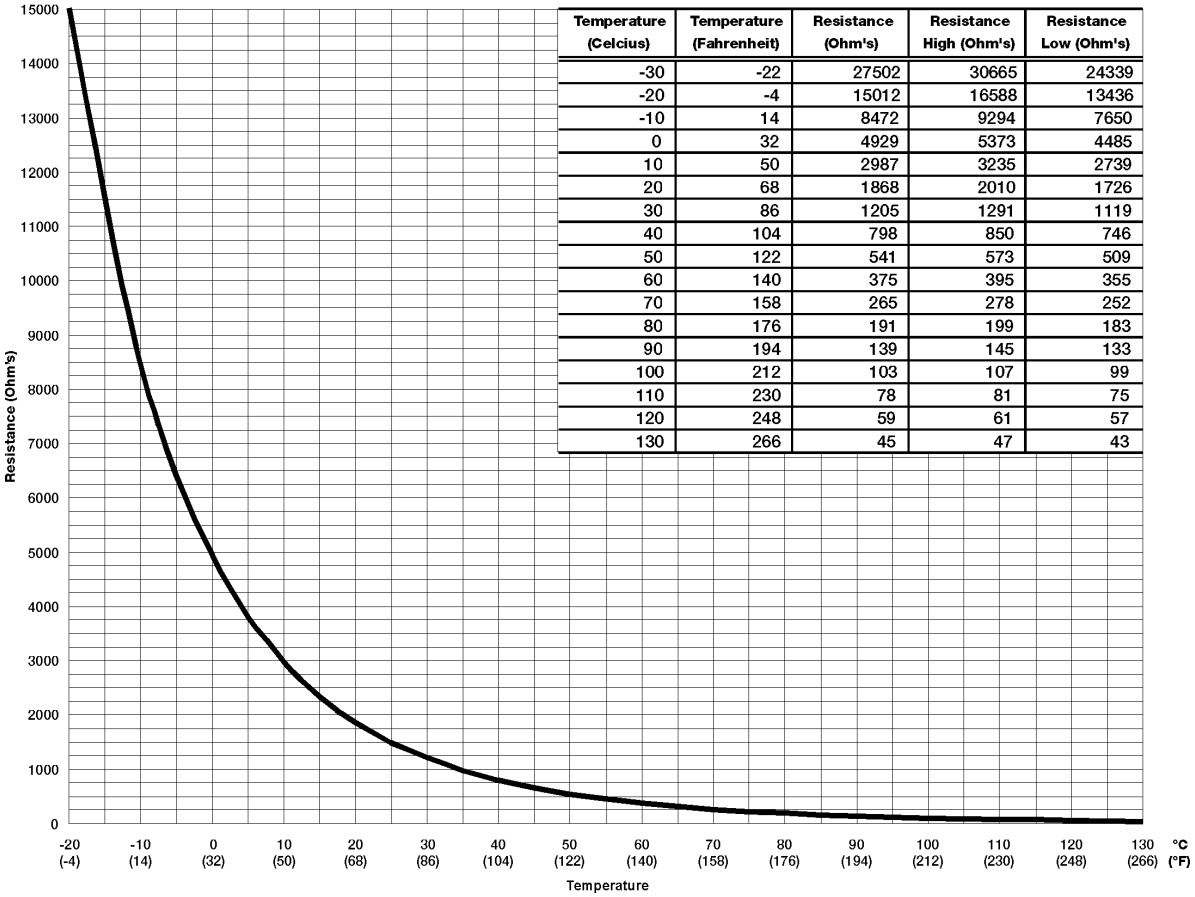


| Temperature (Celcius) | Temperature (Fahrenheit) | Resistance (Ohm's) | Resistance High (Ohm's) | Resistance Low (Ohm's) |
|---|---|---|---|---|
| -30 | -22 | 27502 | 30665 | 24339 |
| -20 | -4 | 15012 | 16588 | 13436 |
| -10 | 14 | 8472 | 9294 | 7650 |
| 0 | 32 | 4929 | 5373 | 4485 |
| 10 | 50 | 2987 | 3235 | 2739 |
| 20 | 68 | 1868 | 2010 | 1726 |
| 30 | 86 | 1205 | 1291 | 1119 |
| 40 | 104 | 798 | 850 | 746 |
| 50 | 122 | 541 | 573 | 509 |
| 60 | 140 | 375 | 395 | 355 |
| 70 | 158 | 265 | 278 | 252 |
| 80 | 176 | 191 | 199 | 183 |
| 90 | 194 | 139 | 145 | 133 |
| 100 | 212 | 103 | 107 | 99 |
| 110 | 230 | 78 | 81 | 75 |
| 120 | 248 | 59 | 61 | 57 |
| 130 | 266 | 45 | 47 | 43 |

https://truckmanualshub.com/


# MID 128 PID 175 Engine Oil Temperature

In addition to the oil temperature, the sensor also measures the oil pressure.

## Fault Codes

### FMI 0

Temperature too high.

*Conditions for fault code:*

- The oil temperature exceeds 130 °C (266 °F).

*Possible cause:*

- Poor cooling capacity.
- Fault in sensor.

*Reaction from the EECU:*

- Fault code is set.
- Red lamp is requested.

*Noticeable external symptom:*

- Red lamp lights up.
- Power reduction in the first stage (at 130 °C (266 °F) and shutdown in 2nd stage (if engine protection is chosen in the data set).

### FMI 3

Short circuit to voltage or open circuit.

*Conditions for fault code:*

- The voltage on EA1 exceeds 4.95 V.

*Possible cause:*

- Short circuit to voltage, signal wire.
- Short circuit to voltage, ground wire.
- Break, signal wire.
- Break, ground wire.
- Fault in sensor.

*Reaction from the EECU:*

- Fault code is set.
- Yellow lamp is requested.
- The EECU stops sending PID 175.

*Noticeable external symptom:*

- Yellow lamp lights up.
- The oil temperature gauge shows 0.

### FMI 4

Short circuit to ground.

*Conditions for fault code:*

- The voltage on EA1 is under 0.08 V.

*Possible cause:*

- Short circuit to ground, signal wire.
- Fault in sensor.

*Reaction from the EECU:*

- Fault code is set.
- Yellow lamp is requested.
- The EECU stops sending PID 175.

*Noticeable external symptom:*

- Yellow lamp lights up.
- The oil temperature gauge shows 0.

https://truckmanualshub.com/


# MID 128 PID 175 Engine Oil Temperature, Check

*Special tools: J-43233, J-39200, J-41132, 9998534*

## NOTE!

Check all the particular connectors for loose connections as well as for switch resistance and oxidation.

For detailed circuit information, refer to “VN/VHD, Electrical Schematics,” Group 37.

## Measurement at the component’s connector, to the EECU

**1**
**Note:** An incorrect value (below) can also cause the component to fail; therefore, it is important to check the component if any of the values are incorrect.

**2**
Disconnect the connector to the oil temperature sensor. Install breakout harness 9998534 to the wiring harness end only. — 9998534

### *Ground wire:*

**3**
Measure the resistance with ohmmeter J-39200. — J-39200

Ignition key must be in the OFF position.

| Measuring points | Optimal value |
|---|---|
| 4 / alternate ground | <1 Ω |

### *Supply wire:*

**4**
Measure the voltage with voltmeter J-39200. — J-39200

Ignition key must be in the ON position.

| Measuring points | Optimal value |
|---|---|
| 1 / alternate ground | 5 V |

### *Signal wire:*

**5**
Measure the resistance with ohmmeter J-39200. — J-39200

Ignition key must be in the OFF position.

| Measuring points | Optimal value |
|---|---|
| 3 / alternate ground | 1.44 kΩ |

## Check of component

### *Oil temperature sensor*

**1**
Disconnect the connector to the oil temperature sensor. Install breakout harness 9998534 to the sensor harness end only. — 9998534 J-39200

Measure the resistance with ohmmeter J-39200.

Ignition key must be in the OFF position.

**Note:** For oil temperature/resistance chart, see “Oil Temperature Sensor, Temperature/Resistance Chart” page 143.

| Measuring points | Optimal value |
|---|---|
| 3 / 4 | 1.9 kΩ (20 °C/68 °F) |
| 3 / 4 | 100 Ω (100 °C/212 °F) |

https://truckmanualshub.com/


# Check of Subsystem

## *Oil temperature*

**1**

Ignition key must be in the ON position.

Connect breakout box J-41132 in series between connector EA and the EECU. Connect jumper harness J-43233 in series between connector EB and the EECU.

J-41132
J-43233
J-39200

| Measuring points | Optimal value |
|---|---|
| EA1 / EA5 | 3.0 V (20 °C/68 °F) |
| EA1 / EA5 | 0.4 V (100 °C/212 °F) |

**Note:** For oil temperature/resistance chart, see “Oil Temperature Sensor, Temperature/Resistance Chart” page 143.

https://truckmanualshub.com/


# Oil Temperature Sensor, Temperature/Resistance Chart

**Oil Temperature Sensor**

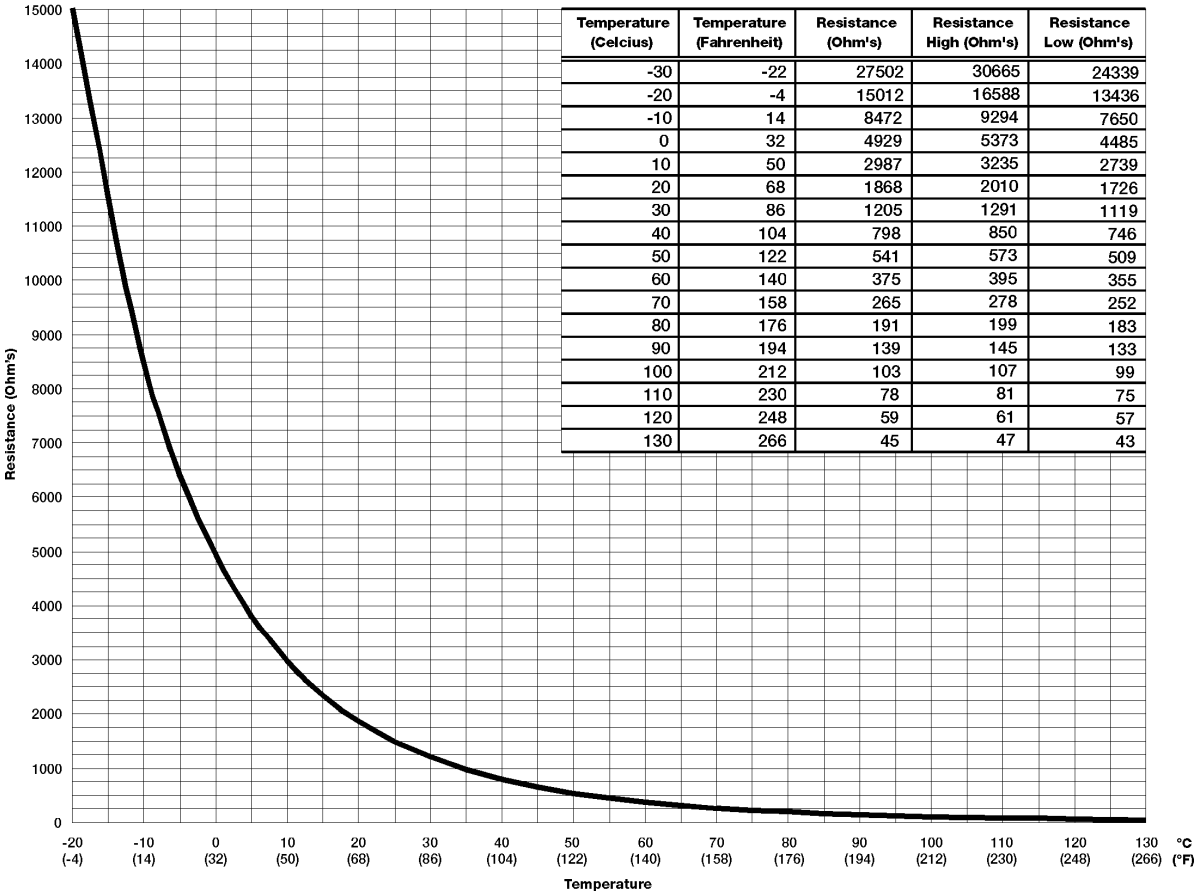


| Temperature (Celcius) | Temperature (Fahrenheit) | Resistance (Ohm's) | Resistance High (Ohm's) | Resistance Low (Ohm's) |
|---|---|---|---|---|
| -30 | -22 | 27502 | 30665 | 24339 |
| -20 | -4 | 15012 | 16588 | 13436 |
| -10 | 14 | 8472 | 9294 | 7650 |
| 0 | 32 | 4929 | 5373 | 4485 |
| 10 | 50 | 2987 | 3235 | 2739 |
| 20 | 68 | 1868 | 2010 | 1726 |
| 30 | 86 | 1205 | 1291 | 1119 |
| 40 | 104 | 798 | 850 | 746 |
| 50 | 122 | 541 | 573 | 509 |
| 60 | 140 | 375 | 395 | 355 |
| 70 | 158 | 265 | 278 | 252 |
| 80 | 176 | 191 | 199 | 183 |
| 90 | 194 | 139 | 145 | 133 |
| 100 | 212 | 103 | 107 | 99 |
| 110 | 230 | 78 | 81 | 75 |
| 120 | 248 | 59 | 61 | 57 |
| 130 | 266 | 45 | 47 | 43 |

W2002727

https://truckmanualshub.com/


# MID 128 PID 228 Road Speed Sensor Calibration

## Fault Codes

### FMI 11

K factor message not available on the information link (SAE J1587).

*Conditions for fault code:*

- PID 228 the message is not available on the information link (SAE J1587).

*Possible cause:*

- Fault in the information link (SAE J1587).
- Error from the VECU.

*Reaction from the EECU:*

- Fault code is set.
- Yellow lamp is requested.

*Noticeable external symptom:*

- Yellow lamp lights up.

https://truckmanualshub.com/


# MID 128 PID 228 Road Speed Sensor Calibration, Check

*Special tools: J–43233, J-39200, J-41132*

## NOTE!

Check all the particular connectors for loose connections as well as for switch resistance and oxidation.

For detailed circuit information, refer to “VNL, VNM Electrical Schematics,” Group 37.

Also check the VECU. This fault code could be due to the fact that there is a fault in the VECU.

## Check of Subsystem

*Check of the SAE J1587 Information link*

**1**

Ignition key must be in the ON position.
Connect breakout box J-41132 in series between connector EB and the EECU. Connect jumper harness J-43233 in series between connector EA and the EECU.

J-41132
J-43233
J-39200

| Measuring points | Optimal value |
|---|---|
| EB25 / DCA (connection A in diagnostics connector) | <1 Ω |
| EB26 / DCB (connection B in diagnostics connector) | <1 Ω |

https://truckmanualshub.com/


# MID 128 PPID 86 Engine Brake Torque Percent

## Fault Codes

### FMI 9

Engine brake torque information is not available (SAE J1587 message).

*Conditions for fault code:*

- PPID 86 the message is not available on the information link (SAE J1587).

*Possible cause:*

- Fault in the information link (SAE J1587).
- Error from the VECU.

*Reaction from the EECU:*

- Fault code is set.
- Yellow lamp is requested.

*Noticeable external symptom:*

- Yellow lamp lights up.

https://truckmanualshub.com/


# MID 128 PPID 86 Engine Brake Torque Percent, Check

*Special tools: J-43233, J-39200, J-41132*

## NOTE!

Check all the particular connectors for loose connections as well as for switch resistance and oxidation.

For detailed circuit information, refer to “VNL, VNM Electrical Schematics,” Group 37.

Also check the VECU. This fault code could be due to the fact that there is a fault in the VECU.

## Check of Subsystem

### *Check of the SAE J1587 Information link*

**1**

Ignition key must be in the ON position.
Connect breakout box J-41132 in series between connector EB and the EECU. Connect jumper harness J-43233 in series between connector EA and the EECU.

J-41132
J-43233
J-39200

| Measuring points | Optimal value |
|---|---|
| EB25 / DCA (connection A in diagnostics socket) | <1 Ω |
| EB26 / DCB (connection B in diagnostics socket) | <1 Ω |

https://truckmanualshub.com/


# MID 128 PPID 119 High Coolant Temperature

**D12B, D12C, D7C Engines**

## Fault Codes

### FMI 0

Temperature too high.

*Conditions for fault code:*

- The coolant temperature exceeds 102 °C (216 °F).

*Possible cause:*

- Low coolant level.
- Fault in thermostat.
- Clogged radiator (internally/externally).
- Clogged intercooler (on the outside).
- Poor through-flow in the cooling system.
- Worn coolant pump.
- Fault in pressure cap, expansion tank.
- Fault in sensor.

*Reaction from the EECU:*

- Fault code is set.
- Power reduction in the first stage.
- The engine is shut down in the second stage (if engine protection is chosen in the data set).

*Noticeable external symptom:*

- LED lights up at the coolant temperature gauge.
- Low power output.
- The engine is shut down (if engine protection is chosen in the data set).

*Possible checks:*

- “MID 128 PPID 119 High Coolant Temperature, Check” page 149.

https://truckmanualshub.com/


# MID 128 PPID 119 High Coolant Temperature, Check

**(D12B, D12C, D7C Engines)**

*Special tools: 9998534, J-43233, J-39200, J-41132*

## NOTE!

Check all the particular connectors for loose connections as well as for switch resistance and oxidation.

For detailed circuit information, refer to “VNL, VNM Electrical Schematics,” Group 37.

## Measurement at the Component’s Connector, to the EECU

**Note:** An incorrect value (below) can also cause the component to fail; therefore, it is important to check the component if any of the values are incorrect.

**1**
Disconnect the connector to the coolant temperature sensor. Install breakout harness 9998534 to the wiring harness end only. — 9998534

### *Ground wire:*

**2**
Measure the resistance using DMM J-39200. — J-39200

Ignition key must be in the OFF position.

| Measuring points | Optimal value |
|---|---|
| 2 / alternate ground | <1 Ω |

### *Signal wire:*

**3**
Measure the resistance using DMM J-39200. — J-39200

Ignition key must be in the OFF position.

| Measuring points | Optimal value |
|---|---|
| 1 / alternate ground | 1.4 kΩ |

## Check of Component

**Note:** Faults in the component can be caused by faults in the wiring harness of the EECU. Thus, a check of the wiring harness should also be made before connecting a new component.

### *Coolant Temperature Sensor*

**1**
Disconnect the connector to the coolant temperature sensor. Install breakout harness 9998534 to the sensor harness end only. — 9998534

**2**
Measure the resistance with DMM J-39200. — J-39200

Ignition key must be in the OFF position.

**Note:** A coolant temperature/resistance chart is available; see “System Check” in Service Publication 200–870, “Fault Codes, Engine Electronic Control Unit,” order number PV776–TSP105620/1.

| Measuring points | Optimal value |
|---|---|
| 1 / 2 | 1.9 kΩ / 20 °C (68 °F) |
| 1 / 2 | 160 Ω / 85 °C (185 °F) |
| 1 / alternate ground | open circuit |
| 2 / alternate ground | open circuit |

https://truckmanualshub.com/


# Check of Subsystem

## *Coolant Temperature*

**1**
Connect breakout box J-41132 in series between connector EA and the EECU. Connect jumper harness J-43233 in series between connector EB and the EECU.

**2**
Measure the voltage using DMM J-39200.

J-41132
J-43233
J-39200

Ignition key must be in the ON position.

| Measuring points | Optimal value |
|---|---|
| EA25 / EA5 | 3.0 V / 20 °C (68 °F) |
| EA25 / EA5 | 0.6 V / 85 °C (185 °F) |

https://truckmanualshub.com/


# MID 128 PPID 122 VCB Engine Compression Brake

## D12B and D12C
## Fault Codes

### FMI 3

Short circuit to voltage.

*Conditions for fault code:*

- Output activated.
- Short circuit to battery voltage on EA33.

*Possible cause:*

- Short circuit to battery voltage between the VCB solenoid valve and EECU.
- Short circuit in VCB solenoid valve.

*Reaction from the EECU:*

- Fault code is set.
- Yellow lamp is requested.
- The output is switched off.

*Noticeable external symptom:*

- Yellow lamp lights up.
- Reduced engine brake power because the VCB cannot be activated.

### FMI 4

Short circuit to ground.

*Conditions for fault code:*

- Output switched off.
- Short circuit to ground on EA33.

*Possible cause:*

- Short circuit to ground between the VCB solenoid valve and EECU.

*Reaction from the EECU:*

- Fault code is set.
- Yellow lamp is requested.
- The output is switched off.

*Noticeable external symptom:*

- Yellow lamp lights up.
- VCB is on all the time.
- Low power output.
- Black smoke.
- Extreme uneven operation.

### FMI 5

Break.

*Conditions for fault code:*

- Output switched off.
- Open circuit in the VCB circuit.

*Possible cause:*

- Open circuit between the VCB solenoid valve and EECU.
- Open circuit in the supply wire to VCB solenoid valve.
- Blown fuse for supply to VCB solenoid valve.
- Open circuit in VCB solenoid valve.

*Reaction from the EECU:*

- Fault code is set.
- Yellow lamp is requested.
- Output is switched off.

*Noticeable external symptom:*

- Yellow lamp lights up.
- Reduced engine brake power because the VCB cannot be activated.

https://truckmanualshub.com/


# MID 128 PPID 122 VCB Engine Compression Brake, Check

*Special tools: J-43233, J-39200, J-41132*

## D12B and D12C

### NOTE!

Check all the particular connectors for loose connections as well as for switch resistance and oxidation.

For detailed circuit information, refer to “VNL, VNM Electrical Schematics,” Group 37.

## Measurement at the component’s connector, to the EECU

**1**
**Note:** An incorrect value (below) can also cause the component to fail; therefore, it is important to check the component if any of the values are incorrect.

**2**
Disconnect the two wires at the compression brake solenoid. The compression brake solenoid is located under the valve cover.

### *“Ground wire”/Control wire:*

**3**
Measure the resistance with ohmmeter J-39200. J-39200

Ignition key must be in the OFF position.

| Measuring points | Optimal value |
|---|---|
| Ground control wire / alternate ground | 215 kΩ |

### *Supply wire:*

**4**
Measure the voltage with voltmeter J-39200. J-39200

Ignition key must be in the ON position.

| Measuring points | Optimal value |
|---|---|
| Supply wire / alternate ground | B+ |

## Check of component

### *Compression brake solenoid, VCB*

**1**
Disconnect the two wires at the compression brake solenoid. The compression brake solenoid is located under the valve cover. J-39200

Measure the resistance with ohmmeter J-39200.

Ignition key must be in the OFF position.

| Measuring points | Optimal value |
|---|---|
| Solenoid terminal A / B | 21 Ω |
| A / alternate ground | open circuit |
| B / alternate ground | open circuit |

## Check of Subsystem

### *Compression brake, VCB*

**1**
Ignition key must be in the ON position. J-41132 J-43233
Connect breakout box J-41132 in series between connector EA and the EECU. Connect jumper harness J-43233 in series between connector EB and the EECU. J-39200

**Note:** Test with “VCB On” can be performed only if the EECU has requested VCB operation.

| Measuring points | Optimal value |
|---|---|
| EA33 / alternate ground | B+ (VCB off) |
| EA33 / alternate ground | 0 V (VCB on) |
| ground terminal EA33 with a jumper wire | VCB solenoid clicks on |

https://truckmanualshub.com/


# MID 128 PPID 123 EPG 2

## D12B and D12C Fault Codes

### FMI 3

Short circuit to voltage.

*Conditions for fault code:*

- Output activated.
- Short circuit to battery voltage on EB36.

*Possible cause:*

- Short circuit to battery voltage between solenoid valve and EECU.
- Short circuit in solenoid valve.

*Reaction from the EECU:*

- Fault code is set.
- Yellow lamp is requested.
- EPG1, EPG2 and VCB outputs are switched off.

*Noticeable external symptom:*

- Yellow lamp lights up.
- The heat retention does not function.
- Blue smoke under cold conditions.
- The engine may be difficult to start.
- Engine brake does not function.

### FMI 4

Short circuit to ground.

*Conditions for fault code:*

- Output switched off.
- Short circuit to ground on EB36.

*Possible cause:*

- Short circuit to ground between solenoid valve and EECU.

*Reaction from the EECU:*

- Fault code is set.
- Yellow lamp is requested.

*Noticeable external symptom:*

- Yellow lamp lights up.
- EPG 2 constantly activated.
- Low power output.
- Black smoke.

### FMI 5

Break.

*Conditions for fault code:*

- Output switched off.
- Open circuit in the EPG2 circuit.

*Possible cause:*

- Open circuit between solenoid valve and EECU.
- Open circuit in supply wire to solenoid valve.
- Blown fuse for supply to EPG2.
- Open circuit in the solenoid valve.

*Reaction from the EECU:*

- Fault code is set.
- Yellow lamp is requested.
- EPG1, EPG2 and VCB outputs are switched off.

*Noticeable external symptom:*

- Yellow lamp lights up.
- The heat retention does not function.
- Blue smoke under cold conditions.
- The engine may be difficult to start.
- Engine brake does not function.

https://truckmanualshub.com/


# MID 128 PPID 123 EPG 2, Check

## D12B and D12C

*Special tools: J-43233, J-39200, J-41132, 9998534*

## NOTE!

Check all the particular connectors for loose connections as well as for switch resistance and oxidation.

For detailed circuit information, refer to “VNL, VNM Electrical Schematics,” Group 37.

## Measurement at the component’s connector, to the EECU

**1**
**Note:** An incorrect value (below) can also cause the component to fail; therefore, it is important to check the component if any of the values are incorrect.

**2**
Disconnect the connector to the EPG control box. Install breakout harness 9998534 to the wiring harness end only. — 9998534

### *“Ground wire”/Control wire:*

**3**
Measure the resistance with ohmmeter J-39200. — J-39200

Ignition key must be in the OFF position.

| Measuring points | Optimal value |
|---|---|
| 3 / alternate ground | 180 kΩ |

### *Supply wire:*

**4**
Measure the voltage with voltmeter J-39200. — J-39200

Ignition key must be in the ON position.

| Measuring points | Optimal value |
|---|---|
| 1 / alternate ground | B+ |

## Check of component

### *EPG control (PWM box)*

**1**
Disconnect the connector to the EPG control box. Install breakout harness 9998534 to the EPG control connector only. — 9998534 J-39200

Ignition key must be in the OFF position.

| Measuring points | Optimal value |
|---|---|
| 1 / 3 | 23 Ω |
| 1 / alternate ground | open circuit |
| 3 / alternate ground | open circuit |

## Check of Subsystem

### *Exhaust pressure governor 2, EPG 2*

**1**
Ignition key must be in the RUN position. — J-41132
Connect breakout box J-41132 in series between connector EB and the EECU. Connect jumper harness J-43233 in series between connector EA and the EECU. — J-43233 J-39200

**Note:** Test with “EPG On” can be performed only if the EECU has requested EPG 2 operation.

| Measuring points | Optimal value |
|---|---|
| EB36 / EB9 | B+, EPG 2 off (Engine running, parking brake released, accelerator pedal above idle) |
| EB36 / EB9 | 0 V, EPG 2 on (Engine running, parking brake on, accelerator at idle) |

https://truckmanualshub.com/


# MID 128 PPID 124 EPG 1

## Fault Codes

### FMI 3

Short circuit to voltage.

*Conditions for fault code:*

- Output activated.
- Short circuit to battery voltage on EB35.

*Possible cause:*

- Short circuit to battery voltage between solenoid valve and EECU.
- Short circuit in solenoid valve.

*Reaction from the EECU:*

- Fault code is set.
- Yellow lamp is requested.
- EPG1, EPG2 and VCB outputs are switched off.

*Noticeable external symptom:*

- Yellow lamp lights up.
- Heat retention does not function.
- Blue smoke under cold conditions.
- Engine may be difficult to start.
- Engine brake does not function.

### FMI 4

Short circuit to ground.

*Conditions for fault code:*

- Output switched off.
- Short circuit to ground on EB35.

*Possible cause:*

- Short circuit to ground between solenoid valve and EECU.

*Reaction from the EECU:*

- Fault code is set.
- Yellow lamp is requested.

*Noticeable external symptom:*

- Yellow lamp lights up.
- EPG 1 constantly activated.
- Low power output.
- Black smoke.

### FMI 5

Break.

*Conditions for fault code:*

- Output switched off.
- Open circuit in the EPG1 circuit.

*Possible cause:*

- Open circuit between solenoid valve and EECU.
- Open circuit in supply wire to solenoid valve.
- Blown fuse for supply to EPG1.
- Open circuit in the solenoid valve.

*Reaction from the EECU:*

- Fault code is set.
- Yellow lamp is requested.
- EPG1, EPG2 and VCB outputs are switched off.

*Noticeable external symptom:*

- Yellow lamp lights up.
- Engine brake does not function.
- Heat retention does not function.
- Blue smoke under cold conditions.
- Engine may be difficult to start.

https://truckmanualshub.com/


# MID 128 PPID 124 EPG 1, Check

*Special tools: J-43233, J-39200, J-41132, 9998534*

## NOTE!

Check all the particular connectors for loose connections as well as for switch resistance and oxidation.

For detailed circuit information, refer to “VNL, VNM Electrical Schematics,” Group 37.

## Measurement at the component’s connector, to the EECU

**1**
**Note:** An incorrect value (below) can also cause the component to fail; therefore, it is important to check the component if any of the values are incorrect.

**2**
Disconnect the connector to the EPG control box (D12B) or the EPG solenoid (D7C). Install breakout harness 9998534 to the wiring harness end only. — 9998534

### *“Ground wire”/Control wire:*

**3**
Measure the resistance with ohmmeter J-39200. — J-39200

Ignition key must be in the OFF position.

| Measuring points | Optimal value |
|---|---|
| 4 / alternate ground | 180 Ω |

### *Supply wire:*

**4**
Measure the voltage with voltmeter J-39200. — J-39200

Ignition key must be in the ON position.

| Measuring points | Optimal value |
|---|---|
| 1 / alternate ground | B+ |

## Check of component (D12B only)

### *EPG control (PWM box)*

**1**
**Note:** This procedure is for the D12B engine only. The D7C engine uses a single EPG solenoid; to check the solenoid used on the D7C, see publication TSI-270–600–07 (11/96).

**2**
Disconnect the connector to EPG control. Install breakout harness 9998534 to the EPG control connector only. — 9998534, J-39200

Ignition key must be in the OFF position.

| Measuring points | Optimal value |
|---|---|
| 1 / 4 | 23 Ω |
| 1 / alternate ground | open circuit |
| 4 / alternate ground | open circuit |

## Check of Subsystem

### *Exhaust pressure governor 1, EPG 1*

**1**
Ignition key must be in the ON position. — J-41132, J-43233, J-39200
Connect breakout box J-41132 in series between connector EB and the EECU. Connect jumper harness J-43233 in series between connector EA and the EECU.

**Note:** Test with “EPG On” can be performed only if the EECU has requested EPG 1 operation.

| Measuring points | Optimal value |
|---|---|
| EB35 / EB9 | B+ (EPG off) |
| EB35 / EB9 | 0 V (EPG on) |

https://truckmanualshub.com/


# MID 128 SID 1/2/3/4/5/6 Injector

## D12B and D12C

Error Code Information

| Error code | Explanation |
|---|---|
| SID 1 | Injector 1 |
| SID 2 | Injector 2 |
| SID 3 | Injector 3 |
| SID 4 | Injector 4 |
| SID 5 | Injector 5 |
| SID 6 | Injector 6 |

## Fault Codes

### FMI 2

Short circuit to battery voltage, injectors high side.

*Conditions for fault code:*

- Injector activated.
- Short circuit to battery voltage on pin EA12 or EA24 (each respective injector bank's high side).

*Possible cause:*

- Short circuit to battery voltage in the wiring to the injectors' high side.

*Reaction from the EECU:*

- Fault code is set.
- Yellow lamp is requested.
- The particular injector bank is switched off.

*Noticeable external symptom:*

- Yellow lamp lights up.
- Low power output.
- Uneven operation.
- Abnormal noise.
- 3 cylinder operation.

### FMI 3

Short circuit to battery voltage or short-circuited injector, injector low side.

*Conditions for fault code:*

- Injector activated.
- Short circuit to battery voltage on each respective injector's low side (EA11, EA22, EA23, EA34, EA35, EA36).

*Possible cause:*

- Short circuit between high and low side.
- Short circuit to battery voltage in the wiring to the injectors' low side.

*Reaction from the EECU:*

- Fault code is set.
- Yellow lamp is requested.
- The particular injector or the whole of the affected injector bank is switched off.

*Noticeable external symptom:*

- Yellow lamp lights up.
- Low power output.
- Uneven operation.
- Abnormal noise.
- 3 or 5 cylinder operation.

https://truckmanualshub.com/


## FMI 4

Short circuit to ground, injector low or high side.

*Conditions for fault code:*

- Injector activated.
- Short circuit to ground on each respective injector's low side (EA11, EA22, EA23, EA34, EA35, EA36) or high side (EA12, EA24).

*Possible cause:*

- Short circuit to ground in the wiring for each respective injector's low or high side.

*Reaction from the EECU:*

- Fault code is set.
- Yellow lamp is requested.
- The particular injector bank is switched off.

*Noticeable external symptom:*

- Yellow lamp lights up.
- Low power output.
- Uneven operation.
- Abnormal noise.
- 3 cylinder operation.

## FMI 5

Open circuit in the injector circuit.

*Conditions for fault code:*

- Injector activated.
- Open circuit in the injector circuit.

*Possible cause:*

- Open circuit in the wiring on low or high side. If 3 fault codes have been set (a bank) the open circuit is on that bank's high side, if there is only one fault code the open circuit is on the particular injector's low side.

*Reaction from the EECU:*

- Fault code is set.
- Yellow lamp is requested.
- One or three injectors are switched off.

*Noticeable external symptom:*

- Yellow lamp lights up.
- Low power output.
- Uneven operation.
- Abnormal noise.
- 3 or 5 cylinder operation.

## FMI 7

The mechanical system does not respond in the correct way

*Conditions for fault code:*

- Injector activated.
- Cylinder balancing data too high.

*Possible cause:*

- Fault in injector.
- Poor compression.

*Reaction from the EECU:*

- Fault code is set.
- Yellow lamp is requested.
- The particular injector is switched off.

*Noticeable external symptom:*

- Yellow lamp lights up.
- Low power output.
- Uneven operation.
- Abnormal noise.
- 5 cylinder operation.

## FMI 11

Unidentifiable error.

*Conditions for fault code:*

- Injector activated.

*Possible cause:*

- Intermittent faults.

*Reaction from the EECU:*

- Fault code is set.
- Yellow lamp is requested.
- The particular injector or the whole injector bank is switched off.

*Noticeable external symptom:*

- Yellow lamp lights up.
- Low power output.
- Uneven operation.
- Abnormal noise.
- 3 or 5 cylinder operation.

https://truckmanualshub.com/


# MID 128 SID 1/2/3/4/5/6 Injector, Check

*Special tools: J-43233, J-39200, J-41132*

## D12B and D12C

### NOTE!

Check all the particular connectors for loose connections as well as for switch resistance and oxidation.

For detailed circuit information, refer to “VNL, VNM Electrical Schematics,” Group 37.

Note that small resistances are difficult to measure. Use the value instead as a standard value for the open circuit in the injector circuits.

## Measurement at the component’s connector, to the EECU

**1**

**Note:** An incorrect value (below) can also cause the component to fail; therefore, it is important to check the component if any of the values are incorrect.

*Wires*

**2**

Connect breakout box J-41132 to the EA connector, wiring harness end only. **DO NOT connect 100pt to the EECU.** J-39200 J-41132

Measure the resistance with ohmmeter J-39200.

Ignition key must be in the OFF position.

| Measuring points | Optimal value |
|---|---|
| EA11 / EA12 | 1.7 Ω |
| EA22 / EA12 | 1.7 Ω |
| EA23 / EA12 | 1.7 Ω |
| EA34 / EA24 | 1.7 Ω |
| EA35 / EA24 | 1.7 Ω |
| EA36 / EA24 | 1.7 Ω |
| EA11 / alternate ground | open circuit |
| EA22 / alternate ground | open circuit |
| EA23 / alternate ground | open circuit |
| EA34 / alternate ground | open circuit |
| EA35 / alternate ground | open circuit |
| EA36 / alternate ground | open circuit |

https://truckmanualshub.com/


# Check of component

## *Injectors*

**1**

Disconnect both the connections for each respective injector.

J-39200

Measure the resistance with ohmmeter J-39200 on the injector.

Ignition key must be in the OFF position.

| **Measuring points** | **Optimal value** |
|---|---|
| High side / low side | 1.5 - 2.0 Ω |
| High side / alternate ground | open circuit |
| Low side / alternate ground | open circuit |

https://truckmanualshub.com/


# MID 128 SID 17 Fuel Shutoff Valve

**D7C only**

## Fault Codes

### FMI 3

Short circuit to battery voltage.

*Conditions for fault code:*

- Output activated.
- Short circuit to battery voltage on EB34.

*Possible cause:*

- Short circuit to battery voltage on wire between solenoid valve and EECU.
- Short circuit internally in the solenoid valve.

*Reaction from the EECU:*

- Fault code is set.
- Yellow lamp is requested.
- Output is switched off.

*Noticeable external symptom:*

- Yellow lamp lights up.
- Engine stops or does not start.
- No fuel reaches the nozzle.

### FMI 4

Short circuit to ground.

*Conditions for fault code:*

- Output switched off.
- Short circuit to ground on EB34.

*Possible cause:*

- Short circuit to ground on wire between solenoid valve and EECU.

*Reaction from the EECU:*

- Fault code is set.
- Yellow lamp is requested.

*Noticeable external symptom:*

- Yellow lamp lights up.
- The solenoid valve permanently activated.

### FMI 5

Open circuit in the fuel shut-off circuit.

*Conditions for fault code:*

- Output switched off.
- Open circuit in the fuel shut-off circuit.

*Possible cause:*

- Open circuit between solenoid valve and EECU.
- Open circuit in supply wire to fuel shut-off valve.
- Open circuit in solenoid valve.

*Reaction from the EECU:*

- Fault code is set.
- Yellow lamp is requested.

*Noticeable external symptom:*

- Yellow lamp lights up.
- Engine stops or does not start.
- No fuel reaches the nozzle.

https://truckmanualshub.com/


# MID 128 SID 17 Fuel Shutoff Valve, Check

*Special tools: J-43233, J-39200, J-41132, 9998534*

## D7C only

## Measurement at the component's connector, to the EECU

**1**
**Note:** An incorrect value (below) can also cause the component to fail; therefore, it is important to check the component if any of the values are incorrect.

**2**
Disconnect the connector to the fuel shut-off valve solenoid. Install breakout harness 9998534 to the wiring harness end only. — 9998534

### *"Ground wire"/Control wire:*

**3**
Measure the resistance with ohmmeter J-39200. — J-39200

Ignition key must be in the OFF position.

| Measuring points | Optimal value |
|---|---|
| 2 / alternate ground | 190 kΩ |

### *Supply wire:*

**4**
Measure the voltage with voltmeter J-39200. — J-39200

Ignition key must be in the ON position.

| Measuring points | Optimal value |
|---|---|
| 1 / alternate ground | B+ |

## Check of component

### *Fuel shut-off valve solenoid*

**1**
Disconnect the connector to the fuel shut-off valve solenoid. Install breakout harness 9998534 to the solenoid harness end only. — 9998534 J–39200

Ignition key must be in the OFF position.

| Measuring points | Optimal value |
|---|---|
| 1 / 2 | 10.7 Ω |
| 1 / alternate ground | open circuit |
| 2 / alternate ground | open circuit |

## Check of Subsystem

### *Fuel shut-off*

**1**
Ignition key must be in the ON position. — J-41132 J-43233 J-39200
Connect breakout box J-41132 in series between connector EB and the EECU. Connect jumper harness J-43233 in series between connector EA and the EECU.

| Measuring points | Optimal value |
|---|---|
| EB34 / EB9 | 0 V |

https://truckmanualshub.com/


# MID 128 SID 20 Timing Sleeve

## D7C only
## Fault Codes

### FMI 2

Short circuit to battery voltage, timing sleeve, positive side.

*Conditions for fault code:*

- Short circuit to battery voltage on EA9 (EECU checks only when switching on the ignition).

*Possible cause:*

- Short circuit to battery voltage on positive side.

*Reaction from the EECU:*

- Fault code is set.
- Yellow lamp is requested.

*Noticeable external symptom:*

- Yellow lamp lights up.

### FMI 3

Short circuit to battery voltage, timing sleeve, ground side.

*Conditions for fault code:*

- Short circuit to battery voltage on EA21 (EECU checks only when switching on the ignition).

*Possible cause:*

- Short circuit between power and ground side.
- Short circuit to battery voltage on ground side.

*Reaction from the EECU:*

- Fault code is set.
- Red lamp is requested.
- The timing sleeve cannot be checked.
- Output for timing sleeve and rack drive are switched off.

*Noticeable external symptom:*

- Red lamp lights up.
- The engine stops or does not start.

### FMI 4

Short circuit to ground, timing sleeve, ground side.

*Conditions for fault code:*

- Short circuit to ground on EA21.

*Possible cause:*

- Short circuit to ground, ground side.

*Reaction from the EECU:*

- Fault code is set.
- Red lamp is requested.
- Injection angle cannot be checked.
- Output for timing sleeve and rack drive are switched off.

*Noticeable external symptom:*

- Red lamp lights up.
- The engine stops or does not start.

### FMI 5

Open circuit in the circuit to timing sleeve.

*Conditions for fault code:*

- Open circuit between the EECU and the injection pump.

*Possible cause:*

- Open circuit in the wires between the EECU and the injection pump.

*Reaction from the EECU:*

- Fault code is set.
- Red lamp is requested.
- Output for timing sleeve and rack drive are switched off.

*Noticeable external symptom:*

- Red lamp lights up.
- The engine stops or does not start.

https://truckmanualshub.com/


## FMI 6

Short circuit to ground, timing sleeve positive side.

*Conditions for fault code:*

- Short circuit to ground on EA9.

*Possible cause:*

- Short circuit to ground, positive side.

*Reaction from the EECU:*

- Fault code is set.
- Red lamp is requested.
- Output for timing sleeve and rack drive are switched off.

*Noticeable external symptom:*

- Red lamp lights up.
- The engine stops or does not start.

## FMI 7

The mechanical system does not respond in the correct way

*Conditions for fault code:*

- Needle lift signal available.
- Incorrect timing sleeve.

*Possible cause:*

- Internal fault in the injection pump.
- Interference in needle lift signal.

*Reaction from the EECU:*

- Fault code is set.
- Red lamp is requested.
- Output for timing sleeve and rack drive are switched off.

*Noticeable external symptom:*

- Red lamp lights up.
- The engine stops or does not start.

## FMI 8

Current too high to timing sleeve under long period of time.

*Conditions for fault code:*

- Current too high to timing sleeve.

*Possible cause:*

- Internal fault in the injection pump.
- Internal fault in the EECU.

*Reaction from the EECU:*

- Fault code is set.
- Red lamp is requested.
- Output for timing sleeve and rack drive are switched off.

*Noticeable external symptom:*

- Red lamp lights up.
- The engine stops or does not start.

## FMI 11

Unidentifiable error.

*Conditions for fault code:*

- An unidentifiable error has been found.

*Reaction from the EECU:*

- Fault code is set.
- Red lamp is requested.
- Output for timing sleeve and rack drive are switched off.

*Noticeable external symptom:*

- Red lamp lights up.
- The engine stops or does not start.

https://truckmanualshub.com/


# MID 128 SID 20 Timing Sleeve, Check

*Special tools: J-43233, J-39200, J-41132, J-38748*

## D7C only

### NOTE!

Check all the particular connectors for loose connections as well as for switch resistance and oxidation.

For detailed circuit information, refer to:

| | |
|---|---|
| **Service Manuals** | Function Group 37<br>Electrical Schematics, VNL, VNM |
| **IMPACT** | Function Group 2841<br>Information Type: Diagnostic “Fault Codes” |

Note that small resistances are difficult to measure. Use the value instead as a standard value for an open in the timing sleeve circuit.

## Measurement at the component’s connector, to the EECU

**1**
**Note:** An incorrect value (below) can also cause the component to fail; therefore, it is important to check the component if any of the values are incorrect.

**2**
Disconnect the connector to the timing sleeve (7–pin connector on the rear of the injection pump). Take measurements on the wiring harness connector only.

### *Ground wire:*

**3**
Measure the resistance with ohmmeter J-39200. J-39200

Ignition key must be in the OFF position.

| Measuring points | Optimal value |
|---|---|
| 4 / alternate ground | 60 kΩ |

### *Supply wire:*

**4**
Measure the resistance with ohmmeter J-39200. J-39200

Ignition key must be in the OFF position.

| Measuring points | Optimal value |
|---|---|
| 3 / alternate ground | 40 Ω |

## Check of component

### *Timing sleeve*

**1**
Disconnect the connector to the timing sleeve (7–pin connector on the rear of the injection pump). Install breakout box J-38748 to the pump connector end only. J-38748 J-39200

Measure the resistance with ohmmeter J-39200.

Ignition key must be in the OFF position.

| Measuring points | Optimal value |
|---|---|
| 3 / 4 | 1.3 Ω |
| 3 / alternate ground | open circuit |
| 4 / alternate ground | open circuit |

https://truckmanualshub.com/


# MID 128 SID 21 Engine Position Timing Sensor

## D12B and D12C

The primary function of the engine position sensor (cam sensor) is to provide engine position information to the EECU. As a secondary function, it also provides engine timing (speed) information.

## Fault Codes

### FMI 3

Short circuit to voltage or permanent loss of signal.

*Conditions for fault code:*

- Engine position signal is not available.

*Possible cause:*

- Short circuit to voltage, positive wire.
- Short circuit to voltage, negative wire.
- Short circuit to ground, positive wire.
- Open circuit in positive wire.
- Open circuit in negative wire.
- An incorrectly installed sensor (incorrect distance to cam sensor wheel).
- Reversed polarity on the sensor.
- Faulty sensor.
- Damaged cam sensor wheel.

*Reaction from the EECU:*

- Fault code is set.
- Yellow lamp is requested.
- The EECU uses engine timing sensor signal instead; if this is also incorrect, the engine stops.

*Noticeable external symptom:*

- Yellow lamp lights up.
- Difficult to start at the next start (no symptom if the fault code is set when the engine is running).

### FMI 8

Abnormal frequency.

*Conditions for fault code:*

- The EECU detects extra pulses on the engine position signal.

*Possible cause:*

- Electrical interference in the engine position signal.
- Poor insulation or faulty wires.
- An incorrectly installed sensor (incorrect distance to cam sensor wheel).
- Faulty sensor.
- Damaged cam sensor wheel.

*Reaction from the EECU:*

- Fault code is set.
- Yellow lamp is requested.
- The EECU uses the engine timing sensor signal instead; if this is also incorrect, the engine stops.

*Noticeable external symptom:*

- Yellow lamp lights up.
- Difficult to start at the next start (no symptom if the fault code is set when the engine is running).

https://truckmanualshub.com/


# MID 128 SID 21 Engine Position Timing Sensor, Check

*Special tools: J-43233, J-39200, J-41132, 998534*

## D12B and D12C

### NOTE!

Check all the particular connectors for loose connections as well as for switch resistance and oxidation.

For detailed circuit information, refer to “VNL, VNM Electrical Schematics,” Group 37.

## Measurement at the component’s connector, to the EECU

**1**
**Note:** An incorrect value (below) can also cause the component to fail; therefore, it is important to check the component if any of the values are incorrect.

**2**
Disconnect the connector to the engine position sensor. Install breakout harness 9998534 to the wiring harness end only. — 9998534

### *Ground wire:*

**3**
Measure the resistance with ohmmeter J-39200. — J-39200

Ignition key must be in the OFF position.

| Measuring points | Optimal value |
|---|---|
| 2 / alternate ground | 48 kΩ |

### *Supply wire:*

**4**
Measure the voltage with voltmeter J-39200. — J-39200

Ignition key must be in the ON position.

| Measuring points | Optimal value |
|---|---|
| 1 / alternate ground | 2 V |

## Check of component

### *Engine position sensor*

**1**
Disconnect the connector to the engine position sensor. Install breakout harness 9998534 to the sensor harness end only. — 9998534 J-39200

Measure the resistance with ohmmeter J–39200.

Ignition key must be in the OFF position.

| Measuring points | Optimal value |
|---|---|
| 1 / 2 | 775 - 945 Ω |
| 1 / alternate ground | open circuit |
| 2 / alternate ground | open circuit |

https://truckmanualshub.com/


# MID 128 SID 21 Needle Lift Sensor

**D7C only**

Needle lift sensor. The needle lift sensor is located on first the cylinder.

## Fault Codes

### FMI 2

Intermittent loss of signal or incorrect signal.

*Conditions for fault code:*

- Engine speed greater than 450 rpm.
- Fuel injection is carried out.
- Missing signal.

*Possible cause:*

- Loose connection sensor.
- Open circuit in one of the wires.
- Short circuit to ground on any of the wires.
- Short circuit to battery voltage on any of the wires.
- Lack of fuel.
- Faulty sensor.
- No fuel injection in cylinder 1.

*Reaction from the EECU:*

- Fault code is set.
- Yellow lamp is requested.
- Timing sleeve (injection angle) is controlled without feedback.

*Noticeable external symptom:*

- Yellow lamp lights up.
- Higher fuel consumption than normal.

https://truckmanualshub.com/


# MID 128 SID 21 Needle Lift Sensor, Check

*Special tools: J-43233, J-39200, J-41132, 9998534*

## D7C only

### NOTE!

Check all the particular connectors for loose connections as well as for switch resistance and oxidation.

For detailed circuit information, refer to “VNL, VNM Electrical Schematics,” Group 37.

## Measurement at the component’s connector, to the EECU

**1**
**Note:** An incorrect value (below) can also cause the component to fail; therefore, it is important to check the component if any of the values are incorrect.

**2**
Disconnect the connector to the needle lift sensor. Install breakout harness 9998534 to the wiring harness end only. — 9998534

### *Ground wire:*

**3**
Measure the resistance with ohmmeter J-39200. — J-39200

Ignition key must be in the OFF position.

| Measuring points | Optimal value |
|---|---|
| 2 / alternate ground | 0.5 Ω |

### *Supply wire:*

**4**
Measure the voltage with voltmeter J-39200. — J-39200

Ignition key must be in the ON position.

| Measuring points | Optimal value |
|---|---|
| 1 / alternate ground | B+ |

## Check of component

### *Needle lift sensor*

**1**
Disconnect the connector to the needle lift sensor. Install breakout harness 9998534 to the sensor harness end only. — 9998534 J-39200

Measure the resistance with ohmmeter J-39200.

Ignition key must be in the OFF position.

| Measuring points | Optimal value |
|---|---|
| 1 / 2 | 65 - 165 Ω |
| 1 / alternate ground | open circuit |
| 2 / alternate ground | open circuit |

https://truckmanualshub.com/


# MID 128 SID 22 Engine Speed Sensor

The primary function of the engine timing sensor (crank sensor) is to provide engine timing (speed) information to the EECU. As a secondary function, it also provides limited engine position information.

## Fault Codes

### FMI 2

Intermittent loss of signal or incorrect signal.

*Conditions for fault code:*

- Incorrect engine timing signal.

*Possible cause:*

- Electrical interference in the engine timing signal.
- Loose connection.
- Poor insulation or faulty wire.
- An incorrectly installed sensor (incorrect distance to the flywheel).
- Faulty sensor.
- Damaged teeth on flywheel.

*Reaction from the EECU:*

- Fault code is set.
- Yellow lamp is requested.
- The EECU uses the engine position signal instead. If this is also incorrect, the engine stops.

*Noticeable external symptom:*

- Yellow lamp lights up.
- The engine stops if the engine position signal also disappears.

### FMI 3

Short circuit to voltage or permanent loss of signal.

*Conditions for fault code:*

- Signal is not available.

*Possible cause:*

- Short circuit to voltage, positive wire.
- Short circuit to voltage, negative wire.
- Short circuit to ground, positive wire.
- Open circuit in positive wire.
- Open circuit in negative wire.
- An incorrectly installed sensor.
- Faulty sensor.

*Reaction from the EECU:*

- Fault code is set.
- Yellow lamp is requested.
- The EECU uses the engine position signal instead. If this is also incorrect, the engine stops.

*Noticeable external symptom:*

- Yellow lamp lights up.
- The engine stops if the engine position signal also disappears.

### FMI 8

Abnormal frequency.

*Conditions for fault code:*

- The EECU detects extra pulses on the engine timing signal.

*Possible cause:*

- Electrical interference.
- An incorrectly installed sensor.
- Faulty sensor.
- Damaged teeth on flywheel.

*Reaction from the EECU:*

- Fault code is set.
- Yellow lamp is requested.
- The EECU uses the engine position signal instead. If this is also incorrect, the engine stops.

*Noticeable external symptom:*

- Yellow lamp lights up.
- The engine stops if the engine position signal also disappears.

https://truckmanualshub.com/


# MID 128 SID 22 Engine Speed Sensor, Check

*Special tools: J-43233, J-39200, J-41132, 9998534*

## NOTE!

Check all the particular connectors for loose connections as well as for switch resistance and oxidation.

For detailed circuit information, refer to “VNL, VNM Electrical Schematics,” Group 37.

## Measurement at the component’s connector, to the EECU

**1**
**Note:** An incorrect value (below) can also cause the component to fail; therefore, it is important to check the component if any of the values are incorrect.

**2**
Disconnect the connector to the engine timing sensor. Install breakout harness 9998534 to the wiring harness end only. — 9998534

### *Ground wire:*

**3**
Measure the resistance with ohmmeter J-39200. — J-39200

Ignition key must be in the OFF position.

| Measuring points | Optimal value |
|---|---|
| 2 / alternate ground | 48 kΩ |

### *Supply wire:*

**4**
Measure the voltage with voltmeter J-39200. — J-39200

Ignition key must be in the ON position.

| Measuring points | Optimal value |
|---|---|
| 1 / alternate ground | 2 V |

## Check of component

### *Engine timing sensor*

**1**
Disconnect the connector to the engine timing sensor. Install breakout harness 9998534 to the sensor harness end only. — 9998534 J-39200

Measure the resistance with ohmmeter J-39200.

Ignition key must be in the OFF position.

| Measuring points | Optimal value |
|---|---|
| 1 / 2 | 775 - 945 Ω |
| 1 / alternate ground | open circuit |
| 2 / alternate ground | open circuit |

https://truckmanualshub.com/


# MID 128 SID 23 Rack Actuator

## D7C only
## Fault Codes

### FMI 2

Short circuit to battery voltage, rack drive positive side.

*Conditions for fault code:*

- Short circuit to battery voltage on EA8 (EECU checks only when switching on the ignition).

*Possible cause:*

- Short circuit to battery voltage, positive side.

*Reaction from the EECU:*

- Fault code is set.
- Yellow lamp is requested.

*Noticeable external symptom:*

- Yellow lamp lights up.

### FMI 3

Short circuit to battery voltage, rack drive ground side.

*Conditions for fault code:*

- Fuel injection is requested.
- Short circuit to battery voltage on EA10.

*Possible cause:*

- Short circuit between power and ground side.
- Short circuit to battery voltage, ground side.

*Reaction from the EECU:*

- Fault code is set.
- Red lamp is requested.
- EECU connection for power and ground sides is switched off.

*Noticeable external symptom:*

- Red lamp lights up.
- The engine stops or does not start.

### FMI 4

Short circuit to ground, rack drive ground side.

*Conditions for fault code:*

- Short circuit to ground on EA10.

*Possible cause:*

- Short circuit to ground, ground side.

*Reaction from the EECU:*

- Fault code is set.
- Red lamp is requested.
- EECU connection for power and ground sides is switched off.

*Noticeable external symptom:*

- Red lamp lights up.
- The engine stops or does not start.

### FMI 5

Open circuit in the circuit for rack drive.

*Conditions for fault code:*

- Open circuit in the circuit for rack drive.

*Possible cause:*

- Open circuit in wires between EECU and rack drive.
- Open circuit in rack drive.

*Reaction from the EECU:*

- Fault code is set.
- Red lamp is requested.
- EECU connection for power and ground sides is switched off.

*Noticeable external symptom:*

- Red lamp lights up.
- The engine stops or does not start.

https://truckmanualshub.com/


## FMI 6

Short circuit to ground, rack drive positive side.

*Conditions for fault code:*

- Short circuit to ground on EA8.

*Possible cause:*

- Short circuit to ground, positive side.

*Reaction from the EECU:*

- Fault code is set.
- Red lamp is requested.
- EECU connection for power and ground sides is switched off.

*Noticeable external symptom:*

- Red lamp lights up.
- The engine stops or does not start.

## FMI 7

The mechanical system does not respond in the correct way

*Conditions for fault code:*

- The rack drive does not move as expected.

*Possible cause:*

- Rack drive stuck.
- Mechanical fault in the pump.
- Fault in rack drive position sensor.

*Reaction from the EECU:*

- Fault code is set.
- Red lamp is requested.
- EECU connection for power and ground sides is switched off.

*Noticeable external symptom:*

- Red lamp lights up.
- The engine stops or does not start.

## FMI 8

Current too high to rack drive under long period of time.

*Conditions for fault code:*

- The current to rack drive is too high for a long period.

*Possible cause:*

- Internal fault in the pump.
- Internal fault in the EECU.

*Reaction from the EECU:*

- Fault code is set.
- Red lamp is requested.
- EECU connection for power and ground sides is switched off.

*Noticeable external symptom:*

- Red lamp lights up.
- The engine stops or does not start.

## FMI 11

Unidentifiable error.

*Conditions for fault code:*

- An unidentifiable error has been found.

*Reaction from the EECU:*

- Fault code is set.
- Red lamp is requested.
- EECU connection for power and ground sides is switched off.

*Noticeable external symptom:*

- Red lamp lights up.
- The engine stops or does not start.

https://truckmanualshub.com/


# MID 128 SID 23 Rack Actuator, Check

*Special tools: J-43233, J-39200, J-41132, J-38748*

## D7C only

### NOTE!

Check all the particular connectors for loose connections as well as for switch resistance and oxidation.

For detailed circuit information, refer to “VNL, VNM Electrical Schematics,” Group 37.

Note that small resistances are difficult to measure. Use the value instead as a standard value for an open in the rack drive.

## Measurement at the component’s connector, to the EECU

**1**
**Note:** An incorrect value (below) can also cause the component to fail; therefore, it is important to check the component if any of the values are incorrect.

**2**
Disconnect the connector to the rack drive (7–pin connector on the rear of the injection pump). Take measurements on the wiring harness connector only.

### *Ground wire:*

**3**
Measure the resistance with ohmmeter J-39200. J-39200

Ignition key must be in the OFF position.

| Measuring points | Optimal value |
|---|---|
| 2 / alternate ground | 60 kΩ |

### *Supply wire:*

**4**
Measure the resistance with ohmmeter J-39200. J-39200

Ignition key must be in the OFF position.

| Measuring points | Optimal value |
|---|---|
| 7 / alternate ground | 40 kΩ |

## Check of component

### *Rack drive*

**1**
Disconnect the connector to the rack drive (7–pin connector on the rear of the injection pump). Install breakout box J-38748 to the pump connector end only. J-38748 J-39200

Measure the resistance with ohmmeter J-39200.

Ignition key must be in the OFF position.

| Measuring points | Optimal value |
|---|---|
| 2 / 7 | 0.7 Ω |
| 1 / alternate ground | open circuit |
| 2 / alternate ground | open circuit |

https://truckmanualshub.com/


# MID 128 SID 24 Rack Position Sensor

## D7C only
## Fault Codes

### FMI 2

Incorrect data.

*Conditions for fault code:*

- Unreasonable measurement value from rack position sensor.

*Possible cause:*

- Sensor value outside measurement range.
- Open circuit or short circuit in wires.
- Internal fault in the pump.
- Faulty sensor.

*Reaction from the EECU:*

- Fault code is set.
- Red lamp is requested.
- Output for rack drive is switched off.

*Noticeable external symptom:*

- Red lamp lights up.
- The engine stops or does not start.

### FMI 13

Sensor values outside calibration values.

*Conditions for fault code:*

- Unreasonable measurement value at start-up.

*Possible cause:*

- Uncalibrated sensor.
- Faulty sensor.

*Reaction from the EECU:*

- Fault code is set.
- Red lamp is requested.
- Output for rack drive actuator is switched off.

*Noticeable external symptom:*

- Red lamp lights up.
- The engine does not start.

https://truckmanualshub.com/


# MID 128 SID 24 Rack Position Sensor, Check

*Special tools: J-43233, J-39200, J-41132, J-38748*

## D7C only

### NOTE!

Check all the particular connectors for loose connections as well as for switch resistance and oxidation.

For detailed circuit information, refer to “VNL, VNM Electrical Schematics,” Group 37.

Note that small resistances are difficult to measure. Use the value instead as a standard value for an open in the rack position sensor.

## Measurement at the component’s connector, to the EECU

**1**
**Note:** An incorrect value (below) can also cause the component to fail; therefore, it is important to check the component if any of the values are incorrect.

**2**
Disconnect the connector to the rack drive (7–pin connector on the rear of the injection pump). Take measurements on the wiring harness connector only.

### *Reference wire:*

**3**
Measure the resistance with ohmmeter J-39200. J-39200

Ignition key must be in the OFF position.

| Measuring points | Optimal value |
|---|---|
| 1 / alternate ground | 5.5 kΩ |

### *Search wire:*

**4**
Measure the resistance with ohmmeter J-39200. J-39200

Ignition key must be in the OFF position.

| Measuring points | Optimal value |
|---|---|
| 5 / alternate ground | 5.5 kΩ |

## Check of component

### *Rack position sensor*

**1**
Disconnect the connector to the rack drive (7–pin connector on the rear of the injection pump). Install breakout box J-38748 to the pump connector end only. J-38748 J-39200

Measure the resistance with ohmmeter J-39200.

Ignition key must be in the OFF position.

| Measuring points | Optimal value |
|---|---|
| 5 / 6 | 20 Ω (search coil) |
| 1 / 6 | 20 Ω (reference coil) |
| 1, 5, 6 / alternate ground | open circuit |

https://truckmanualshub.com/


# MID 128 SID 33 Fan Control

## Fault Codes

### FMI 3

Short circuit to voltage.

*Conditions for fault code:*

- Output activated.
- Short circuit to voltage on EB21.

*Possible cause:*

- Short circuit to battery voltage between solenoid valve and EECU.
- Short circuit in solenoid valve for fan control.

*Reaction from the EECU:*

- Fault code is set.
- Yellow lamp is requested.
- Output is switched off.

*Noticeable external symptom:*

- Yellow lamp lights up.
- The fan is in constant operation.
- Increased fuel consumption.

### FMI 4

Short circuit to ground.

*Conditions for fault code:*

- Output switched off.
- Short circuit to ground on EB21.

*Possible cause:*

- Short circuit to ground between solenoid valve and EECU.

*Reaction from the EECU:*

- Fault code is set.
- Yellow lamp is requested.
- Output is switched off.

*Noticeable external symptom:*

- Yellow lamp lights up.
- The fan does not come on.
- Increased coolant temperature.

### FMI 5

Break.

*Conditions for fault code:*

- Output switched off.
- Open circuit in the circuit for fan control.

*Possible cause:*

- Open circuit in the wiring between solenoid valve and EECU.
- Open circuit in solenoid valve for fan control.
- Open circuit in supply wire to solenoid valve for fan control.
- Blown fuse to supply for the fan control's solenoid valve.

*Reaction from the EECU:*

- Fault code is set.
- Yellow lamp is requested.
- Output is switched off.

*Noticeable external symptom:*

- Yellow lamp lights up.
- The fan is in constant operation.
- Increased fuel consumption.

https://truckmanualshub.com/


# MID 128 SID 33 Fan Control, Check

*Special tools: J-43233, J-39200, J-41132, J-43147*

## NOTE!

Check all the particular connectors for loose connections as well as for switch resistance and oxidation.

For detailed circuit information, refer to “VNL, VNM Electrical Schematics,” Group 37.

## Measurement at the component’s connector, to the EECU

**1**
**Note:** An incorrect value (below) can also cause the component to fail; therefore, it is important to check the component if any of the values are incorrect.

**2**
Disconnect the connector to the fan control solenoid valve. Install breakout harness J-43147 to the wiring harness end only. — J-43147

### *“Ground wire”/Control wire:*

**3**
Measure the resistance with ohmmeter J-39200. — J-39200

Ignition key must be in the OFF position.

| Measuring points | Optimal value |
|---|---|
| B / alternate ground | 200 kΩ |

### *Supply wire:*

**4**
Measure the voltage with voltmeter J-39200. — J-39200

Ignition key must be in the ON position.

| Measuring points | Optimal value |
|---|---|
| A / alternate ground | B+ |

## Check of component

### *Fan control solenoid valve*

**1**
Disconnect the connector to the fan control solenoid valve. Install breakout harness J-43147 to the solenoid valve harness end only. — J-43147 J-39200

Measure the resistance with ohmmeter J-39200.

Ignition key must be in the OFF position.

| Measuring points | Optimal value |
|---|---|
| A / B | 20 Ω |

## Check of Subsystem

### *Fan control*

**1**
Ignition key must be in the ON position. — J-41132
Connect breakout box J-41132 in series between connector EB and the EECU. Connect jumper harness J-43233 in series between connector EA and the EECU. — J-43233 J-39200

| Measuring points | Optimal value |
|---|---|
| EB21 / EB9 | B+ (fan on) |
| EB21 / EB9 | 0 V (fan off) |
| ground terminal EB21 with a jumper wire | fan control solenoid valve releases fan |

https://truckmanualshub.com/


# MID 128 SID 64 Redundant Engine Speed Sensor

## D7C only

The redundant engine speed sensor is used as a secondary engine timing (speed) and secondary engine position sensor. Primary engine timing (speed) information is provided by the engine timing (crank) sensor. Primary engine position information is provided by the needle lift sensor.

## Fault Codes

### FMI 3

Short circuit to voltage or permanent loss of signal.

*Conditions for fault code:*

- Engine position signal is not available.

*Possible cause:*

- Short circuit to battery voltage, positive wire.
- Short circuit to voltage, negative wire.
- Short circuit to ground, positive wire.
- Open circuit in positive wire.
- Open circuit in negative wire.
- An incorrectly installed sensor (incorrect distance to pump speed sensor wheel).
- Reversed polarity on the sensor.
- Faulty sensor.
- Damaged pump speed sensor wheel.

*Reaction from the EECU:*

- Fault code is set.
- Yellow lamp is requested.

*Noticeable external symptom:*

- Yellow lamp lights up.

### FMI 8

Abnormal frequency.

*Conditions for fault code:*

- The EECU detects extra pulses on the engine position signal.

*Possible cause:*

- Electrical interference in the engine position signal.
- Poor insulation or faulty wires.
- An incorrectly installed sensor (incorrect distance to pump speed sensor wheel).
- Faulty sensor.
- Damaged pump speed sensor wheel.

*Reaction from the EECU:*

- Fault code is set.
- Yellow lamp is requested.

*Noticeable external symptom:*

- Yellow lamp lights up.

https://truckmanualshub.com/


# MID 128 SID 64 Redundant Engine Speed Sensor, Check

*Special tools: J-43233, J-39200, J-41132*

## D7C only

### NOTE!

Check all the particular connectors for loose connections as well as for switch resistance and oxidation.

For detailed circuit information, refer to “VNL, VNM Electrical Schematics,” Group 37.

## Measurement at the component’s connector, to the EECU

**1**
**Note:** An incorrect value (below) can also cause the component to fail; therefore, it is important to check the component if any of the values are incorrect.

**2**
Disconnect the connector to the engine position sensor. Install breakout harness 9998534 to the wiring harness end only. — 9998534

### *Ground wire:*

**3**
Measure the resistance with ohmmeter J-39200. — J-39200

Ignition key must be in the OFF position.

| Measuring points | Optimal value |
|---|---|
| 2 / alternate ground | 48 kΩ |

### *Supply wire:*

**4**
Measure the voltage with voltmeter J-39200. — J-39200

Ignition key must be in the ON position.

| Measuring points | Optimal value |
|---|---|
| 1 / alternate ground | 2 V |

## Check of component

### *Redundant engine speed sensor*

**1**
Disconnect the connector to the redundant engine speed sensor. Install breakout harness J-43233 to the sensor harness end only. — J-43233, J-39200

Measure the resistance with ohmmeter J-39200.

Ignition key must be in the OFF position.

| Measuring points | Optimal value |
|---|---|
| 1 / 2 | 775 - 945 Ω |
| 1 / alternate ground | open circuit |
| 2 / alternate ground | open circuit |

https://truckmanualshub.com/


# MID 128 SID 70 Preheater Element 1

Each preheater is equipped with a fuse between the preheating relay and element. The fuse and element are monitored by a sense wire that determines if the circuit is intact.

## Fault Codes

### FMI 3

Short circuit to battery voltage.

*Conditions for fault code:*

- Preheating relay not activated.
- The voltage on EB5 is greater than 65% B+.

*Possible cause:*

- Short circuit to battery voltage on EB5.
- Preheating relay constantly on.

*Reaction from the EECU:*

- Fault code is set.
- Yellow lamp is requested.
- Preheating relay is switched off.

*Noticeable external symptom:*

- Yellow lamp lights up.
- Preheating relay may be constantly activated.
- High inlet temperature.
- High current consumption.
- Discharged battery.

### FMI 4

Short circuit to ground.

*Conditions for fault code:*

- Preheating requested.
- Short circuit to ground on EB5.

*Possible cause:*

- Short circuit to ground on EB5.
- Preheating relay damaged.

*Reaction from the EECU:*

- Fault code is set.
- Yellow lamp is requested.
- Output to pre-heating relay is switched off.

*Noticeable external symptom:*

- Yellow lamp lights up.
- Preheating does not function.
- White smoke for cold start.
- Difficult to start in extreme cold.

### FMI 5

Break.

*Conditions for fault code:*

- The voltage on EB5 is greater than 5% B+ and less than 65% B+.

*Possible cause:*

- Open circuit in element or wires.

*Reaction from the EECU:*

- Fault code is set.
- Yellow lamp is requested.
- Output for the pre-heating relay is switched off.

*Noticeable external symptom:*

- Yellow lamp lights up.
- Preheating does not function.
- Difficult to start in extreme cold.

https://truckmanualshub.com/


# MID 128 SID 70 Preheater Element 1, Check

*Special tools: J–43233, J-39200, J-41132*

## NOTE!

Check all the particular connectors for loose connections as well as for switch resistance and oxidation.

For detailed circuit information, refer to “VNL, VNM Electrical Schematics,” Group 37.

## Measurement at the component’s connector, to the EECU

**1**

**Note:** An incorrect value (below) can also cause the component to fail; therefore, it is important to check the component if any of the values are incorrect.

**2**

Disconnect sense wire (small solid red wire) at pre-heat relay #1.

### *Signal wire:*

**3**

Measure the resistance with ohmmeter J-39200. J-39200

Ignition key must be in the OFF position.

| Measuring points | Optimal value |
|---|---|
| Sense wire / alternate ground | 1.4 kΩ |

## Check of component

### *Preheating 1, element*

**1**

Remove the fuse and support (red plastic part) between the pre-heat relay and the pre-heat element terminal. J-39200

Ignition key must be in the OFF position.

Measure the resistance with ohmmeter J-39200.

| Measuring points | Optimal value |
|---|---|
| Preheat element terminal / alternate ground | <1 Ω |

## Check of Subsystem

### *Preheating 1, element diagnostics*

**1**

Ignition key must be in the ON position. J-41132 J-43233 J-39200

Connect breakout box J-41132 in series between connector EB and the EECU. Connect jumper harness J-43233 in series between connector EA and the EECU.

**Note:** Test with “Preheat On” can be performed only if the EECU has requested pre-heat.

| Measuring points | Optimal value |
|---|---|
| EB5 / EB9 | B+ (Preheating on) |
| EB5 / EB9 | 0 V (Preheating off) |

https://truckmanualshub.com/


# MID 128 SID 71 Preheater Element 2

## D12B only

Each preheater is equipped with a fuse between the preheating relay and element. The fuse and element are monitored by a sense wire that determines if the circuit is intact.

## Fault Codes

### FMI 3

Short circuit to battery voltage.

*Conditions for fault code:*

- Preheating relay not activated.
- The voltage on EB16 is greater than 65% B+.

*Possible cause:*

- Short circuit to battery voltage on EB16.
- Preheating relay constantly on.

*Reaction from the EECU:*

- Fault code is set.
- Yellow lamp is requested.
- The preheating relay is switched off.

*Noticeable external symptom:*

- Yellow lamp lights up.
- Preheating relay may be constantly on.
- High inlet temperature.
- High current consumption.
- Discharged battery.

### FMI 4

Short circuit to ground.

*Conditions for fault code:*

- Preheating requested.
- Short circuit to ground on EB16.

*Possible cause:*

- Short circuit to ground on EB16.
- Preheating relay damaged.

*Reaction from the EECU:*

- Fault code is set.
- Yellow lamp is requested.
- Output to preheating relay is switched off.

*Noticeable external symptom:*

- Yellow lamp lights up.
- Preheating does not function.
- White smoke for cold start.
- Difficult to start in extreme cold.

### FMI 5

Break.

*Conditions for fault code:*

- The voltage on EB16 is greater than 5% B+ and less than 65% B+.

*Possible cause:*

- Open circuit in element or wires.

*Reaction from the EECU:*

- Fault code is set.
- Yellow lamp is requested.
- Output for preheating relay is switched off.

*Noticeable external symptom:*

- Yellow lamp lights up.
- Preheating does not function.
- Difficult to start in extreme cold.

https://truckmanualshub.com/


# MID 128 SID 71 Preheater Element 2, Check

*Special tools: J-43233, J-39200, J-41132*

## D12B

### NOTE!

Check all the particular connectors for loose connections as well as for switch resistance and oxidation.

For detailed circuit information, refer to “VNL, VNM Electrical Schematics,” Group 37.

## Measurement at the component’s connector, to the EECU

**1**
**Note:** An incorrect value (below) can also cause the component to fail; therefore, it is important to check the component if any of the values are incorrect.

**2**
Disconnect the sense wire (small red/white wire) at pre-heat relay #2.

### *Signal wire:*

**3**
Measure the resistance with ohmmeter J-39200. J-39200

Ignition key must be in the OFF position.

| Measuring points | Optimal value |
|---|---|
| Sense wire / alternate ground | 1.4 kΩ |

## Check of component

### *Preheating 2, element*

**1**
Remove the fuse and support (red plastic part) between pre-heat relay #2 and pre-heat element #2 terminal. J-39200

Ignition key must be in the OFF position.

Measure the resistance with ohmmeter J-39200.

| Measuring points | Optimal value |
|---|---|
| Preheat element terminal / alternate ground | <1 Ω |

## Check of Subsystem

### *Preheating 2, element diagnostics*

**1**
Ignition key must be in the ON position. J-41132 J-43233
Connect breakout box J-41132 in series between connector EB and the EECU. Connect jumper harness J-43233 in series between connector EA and the EECU. J-39200

**Note:** Test with “Preheat On” can be performed only if the EECU has requested pre-heat.

| Measuring points | Optimal value |
|---|---|
| EB16 / EB9 | B+ (Preheating on) |
| EB16 / EB9 | 0 V (Preheating off) |

https://truckmanualshub.com/


# MID 128 SID 230 Idle Validation Switch 1

## Fault Codes

### FMI 3

Short circuit to battery voltage.

*Conditions for fault code:*

- Accelerator pedal released.
- The voltage on EB4 exceeds 75% of B+.

*Possible cause:*

- Short circuit to battery voltage on wire between EECU and VECU.
- Error in accelerator pedal.

*Reaction from the EECU:*

- Fault code is set.
- Yellow lamp is requested.

*Noticeable external symptom:*

- Yellow lamp lights up.
- The "limp home" function does not function.

### FMI 4

Short circuit to ground or open circuit.

*Conditions for fault code:*

- Accelerator pedal pressed down > 50 %.
- The voltage on EB4 is below 25% of B+.

*Possible cause:*

- Short circuit to ground on wire between EECU and VECU.
- Open circuit in wire between EECU and VECU.
- Error in accelerator pedal.

*Reaction from the EECU:*

- Fault code is set.
- Yellow lamp is requested.

*Noticeable external symptom:*

- Yellow lamp lights up.
- The “limp home” function does not function.

https://truckmanualshub.com/


# MID 128 SID 230 Idle Validation Switch 1, Check

*Special tools: J-43233, J-39200, J-41132*

## NOTE!

Check all the particular connectors for loose connections as well as for switch resistance and oxidation.

For detailed circuit information, refer to “VNL, VNM Electrical Schematics,” Group 37.

## Check of Subsystem

*Buffered idle validation switch*

**1**

Ignition key must be in the ON position.
Connect breakout box J-41132 in series between connector EB and the EECU. Connect jumper harness J-43233 in series between connector EA and the EECU.

J-41132
J-43233
J-39200

| Measuring points | Optimal value |
|---|---|
| EB4 / EB9 | < 4 V (accelerator pedal at idle) |
| EB4 / EB9 | > 8 V (accelerator pedal off idle) |

https://truckmanualshub.com/


# MID 128 SID 231 SAE J1939 Control Link

## Fault Codes

### FMI 2

Communications link (SAE J1939) does not function.

*Conditions for fault code:*

- No messages are received from the communications link (SAE J1939).

*Possible cause:*

- Open circuit in communications link (SAE J1939).
- Short circuit to voltage on communications link (SAE J1939).
- Short circuit to ground on communications link (SAE J1939).
- wires in communications link (SAE J1939) short-circuited to each other.

*Reaction from the EECU:*

- Fault code is set.
- Yellow lamp is requested.
- Information is read/sent instead on the information link (SAE J1587).

*Noticeable external symptom:*

- Yellow lamp lights up.
- Cruise Control does not function.
- PTO does not function.
- Preheating relay does not function.
- Engine brake does not function.
- Driver position no. 2 does not function.

### FMI 9

Communications link (SAE J1939) does not function.

*Conditions for fault code:*

- Communications link (SAE J1939) does not function.

*Possible cause:*

- Wires in communications link (SAE J1939) short-circuited to each other.
- Temporary malfunction in hardware.
- Loose connection.
- Intermittent fault in the wiring.

*Reaction from the EECU:*

- Fault code is set.
- Yellow lamp is requested.
- Information is read/sent instead on the information link (SAE J1587).

*Noticeable external symptom:*

- Yellow lamp lights up.
- Temporary loss of function on:- Cruise Control- PTO.- Pre-heating- Engine brake- Driver position no. 2

### FMI 11

Unidentifiable error.

*Conditions for fault code:*

- Communications link (SAE J1939) does not function internally in EECU at start-up.

*Possible cause:*

- Internal fault in EECU.

*Reaction from the EECU:*

- Fault code is set.
- Yellow lamp is requested.
- Information is read/sent instead on the information link (SAE J1587).

*Noticeable external symptom:*

- Yellow lamp lights up.
- Cruise Control does not function.
- PTO does not function.
- Preheating does not function.
- Engine brake does not function.
- Driver position no. 2 does not function.

https://truckmanualshub.com/


# FMI 12

Loss of message from the VECU.

*Conditions for fault code:*

- The communication between EECU and VECU does not function.

*Possible cause:*

- No contact with VECU.

*Reaction from the EECU:*

- Fault code is set.
- Yellow lamp is requested.
- Information is read/sent instead on the information link (SAE J1587).

*Noticeable external symptom:*

- Yellow lamp lights up.
- Cruise Control does not function.
- PTO does not function.
- Preheating does not function.
- Engine brake does not function.
- Driver position no. 2 does not function.

https://truckmanualshub.com/


# MID 128 SID 232 5 Volt DC Supply

## Fault Codes

### FMI 3

Short circuit to voltage.

*Conditions for fault code:*

- The voltage on EA4 exceeds 5.5 V.

*Possible cause:*

- Short circuit to battery voltage on the output.

*Reaction from the EECU:*

- Fault code is set.
- Yellow lamp is requested.

*Noticeable external symptom:*

- Yellow lamp lights up.
- Incorrect values on oil pressure sensor and boost pressure sensor.
- fault code on oil pressure sensor and boost pressure sensor.
- Low power output.
- Oil pressure gauge and boost pressure gauge show 0 in the instrument.

### FMI 4

Short circuit to ground.

*Conditions for fault code:*

- The voltage on EA4 is under 4.5 V.

*Possible cause:*

- Short circuit to ground.
- Short circuit in sensor.
- Faulty sensor.

*Reaction from the EECU:*

- Fault code is set.
- Yellow lamp is requested.

*Noticeable external symptom:*

- Yellow lamp lights up.
- fault code on oil pressure sensor and boost pressure sensor.
- Oil pressure gauge and boost pressure gauge show 0 in the instrument.
- Low power output.

https://truckmanualshub.com/


# MID 128 SID 232 5 Volt DC Supply, Check

*Special tools: J-43233, J-39200, J-41132, 9998534*

## NOTE!

Check all the particular connectors for loose connections as well as for switch resistance and oxidation.

For detailed circuit information, refer to “VNL, VNM Electrical Schematics,” Group 37.

## Measurement at the component’s connector, to the EECU

**1**
**Note:** An incorrect value (below) can also cause the component to fail; therefore, it is important to check the component if any of the values are incorrect.

**2**
Disconnect the individual connectors to the fuel temperature sensor (D7C only), boost air temperature/pressure sensor, coolant temperature sensor, and oil temperature/pressure sensor. Install breakout harness 9998534 to the wiring harness end only. — 9998534

### *Ground wire:*

**3**
Measure the resistance with ohmmeter J-39200. — J-39200

Ignition key must be in the OFF position.

| Measuring points | Optimal value |
|---|---|
| 2 / alternate ground | <1 Ω (coolant temperature) |
| 4 / alternate ground | <1 Ω (oil pressure/temperature, boost air pressure/temperature, fuel temperature) |

### *Supply wire:*

**4**
Measure the voltage with voltmeter J-39200. — J-39200

Ignition key must be in the ON position.

| Measuring points | Optimal value |
|---|---|
| 1 / alternate ground | 5 V (oil pressure/temperature, boost air pressure/temperature, fuel temperature) |

## Check of sub-system

### *5 V supply to sensors*

**1**
Ignition key must be in the ON position. — J-41132
Connect breakout box J-41132 in series between connector EA and the EECU. Connect jumper harness J-43233 in series between connector EB and the EECU. — J-43233 J-39200

| Measuring points | Optimal value |
|---|---|
| EA4 / EA5 | 4.8 - 5.15 V |

https://truckmanualshub.com/


# MID 128 SID 240 Program Memory

## Fault Codes

### FMI 2

Incorrect checksum in program memory.

*Conditions for fault code:*

- Incorrect checksum (EECU calculates only at start-up).

*Possible cause:*

- Error when programming.
- Internal fault in the EECU.

*Reaction from the EECU:*

- Fault code is set.
- Red lamp is requested.

*Noticeable external symptom:*

- Red lamp lights up.
- The engine does not start.

### FMI 12

Incorrect checksum in program memory.

*Conditions for fault code:*

- Incorrect checksum.

*Possible cause:*

- Internal fault in the EECU.

*Reaction from the EECU:*

- Fault code is set.

*Noticeable external symptom:*

- None.

https://truckmanualshub.com/


# MID 128 SID 250 SAE J1587/1708 Information Link

## Fault Codes

### FMI 12

Internal fault in the EECU.

*Conditions for fault code:*

- The information link (SAE J1587) does not function internally in the EECU.

*Possible cause:*

- Internal fault in the EECU.

*Reaction from the EECU:*

- Fault code is set.
- Yellow lamp is requested.

*Noticeable external symptom:*

- Yellow lamp lights up.
- Information from the EECU is not available on the information link (SAE J1587).
- The boost pressure gauge shows 0.
- The oil pressure gauge shows 0.
- The oil temperature gauge shows 0.
- The coolant temperature gauge shows 0.
- The tachometer shows 0.

https://truckmanualshub.com/


# MID 128 SID 253 Data Set Memory EEPROM

## Fault Codes

### FMI 2

Incorrect checksum in data set memory.

*Conditions for fault code:*

- Checksum error.

*Possible cause:*

- Internal fault in the EECU.
- Error when programming.

*Reaction from the EECU:*

- Fault code is set.
- Red lamp is requested.

*Noticeable external symptom:*

- Red lamp lights up.
- The engine does not start.

### FMI 12

Incorrect checksum in data set memory.

*Conditions for fault code:*

- Checksum error.

*Possible cause:*

- Internal fault in the EECU.

*Reaction from the EECU:*

- Fault code is set.
- Red lamp is requested.

*Noticeable external symptom:*

- Red lamp lights up.
- The engine does not start.

https://truckmanualshub.com/


# MID 128 SID 254 Engine Electronic Control Unit (EECU)

## Fault Codes

### FMI 2

Internal fault in the EECU.

*Conditions for fault code:*

- Incorrect self test in the EECU.

*Possible cause:*

- Internal fault in the EECU.

*Reaction from the EECU:*

- Fault code is set.
- Red lamp is requested.

*Noticeable external symptom:*

- Red lamp lights up.
- The engine does not start.

### FMI 8

Internal fault in the EECU.

*Conditions for fault code:*

- Incorrect self test in the EECU.

*Possible cause:*

- Internal fault in the EECU.

*Reaction from the EECU:*

- Fault code is set.
- Red lamp is requested.

*Noticeable external symptom:*

- Red lamp lights up.
- The engine does not start.

### FMI 9

Internal fault in the EECU.

*Conditions for fault code:*

- Incorrect self test in the EECU.

*Possible cause:*

- Internal fault in the EECU.

*Reaction from the EECU:*

- Fault code is set.
- Red lamp is requested.

*Noticeable external symptom:*

- Red lamp lights up.
- The engine does not start.

### FMI 11

Internal fault in the EECU.

*Conditions for fault code:*

- Incorrect self test in the EECU.

*Possible cause:*

- Internal fault in the EECU.

*Reaction from the EECU:*

- Fault code is set.
- Red lamp is requested.

*Noticeable external symptom:*

- Red lamp lights up.
- The engine does not start.

https://truckmanualshub.com/


## FMI 12

Internal fault in the EECU.

*Conditions for fault code:*

- Incorrect self test in the EECU.

*Possible cause:*

- Internal fault in the EECU.

*Reaction from the EECU:*

- Fault code is set.
- Red lamp is requested.

*Noticeable external symptom:*

- Red lamp lights up.
- The engine does not start.

## FMI 13

Internal fault in the EECU.

*Conditions for fault code:*

- Incorrect self test in the EECU.

*Possible cause:*

- Internal fault in the EECU.

*Reaction from the EECU:*

- The EECU restarts.
- fault code can be requested, will not automatically be shown.

*Noticeable external symptom:*

- The engine falters.

https://truckmanualshub.com/


# MID 144 VECU

## MID 144 Fault Code Table

**MID:**Message Identification Description.

**SID:**Subsystem Identification Description.

**PID:**Parameter Identification Description.

**FMI:**Failure Mode Identifier.

| Error code | Component/Function | FMI | Section |
|---|---|---|---|
| MID 144-PID 29 | SecondAccelerator Pedal Position | 3, 4, 5 | “MID 144 PID 29 Second Accelerator Pedal Position Sensor” page 198 |
| MID 144-PID 84 | Road Speed | 9 | “MID 144 PID 84 Road Speed” page 201 |
| MID 144-PID 91 | Accelerator Pedal Position | 9, 11 | “MID 144 PID 91 Accelerator Pedal Position” page 204 |
| MID 144-PID 152 | VECU, Number of Resests | 9 | “MID 144 PID 152 VECU, Number of Resets” page 207 |
| MID 144-PPID 69 | Idle Validation Switch | 9, 11 | “MID 144 PPID 69 Idle Validation Switch” page 208 |
| MID 144-PPID 70 | Pedal Switches, Supply | 1, 3, 4 | “MID 144 PPID 70 Pedal Switches, Supply” page 211 |
| MID 144-PPID 71 | Cruise Control and Engine Brake, Supply Switch | 1, 3, 4 | “MID 144 PPID 71 Cruise Control and Engine Brake, Supply Switch” page 215 |
| MID 144–PPID 72 | Accelerator Pedal, Supply Sensors | 3, 4 | “MID 144 PPID 72 Accelerator Pedal, Supply Sensors” page 220 |
| MID 144–PPID 73 | Second Accelerator Pedal, Supply Sensors | 3, 4 | “MID 144 PPID 73 Second Accelerator Pedal, Supply Sensors” page 223 |
| MID 144–PPID 75 | Range Inhibitor, Solenoid Valve Status | 0, 3, 4, 5 | “MID 144 PPID 75 Range Inhibitor, Solenoid Valve Status” page 226 |
| MID 144–SID 230 | Idle Validation Switch 1 | 3, 4 | “MID 144 SID 230 Idle Validation Switch 1” page 229 |
| MID 144–SID 231 | SAE J1939 Control Link | 0, 3 ,4 | “MID 144 SID 231 SAE J1939 Control Link” page 232 |
| MID 144–SID 240 | Program Memory | 1 | “MID 144 SID 240 Program Memory” page 234 |
| MID 144–SID 243 | Crusie Control Set Switch | 3 | “MID 144 SID 243 Cruise Control Set Switch” page 235 |

https://truckmanualshub.com/


| Error code | Component/Function | FMI | Section |
|---|---|---|---|
| MID 144–SID 250 | SAE J1587/1708 Information Link | 3, 4 | “MID 144 SID 250 SAE J1587/1708 Information Link” page 238 |
| MID 144–SID 253 | Data Set Memory EEPROM | 3, 4 | “MID 144 SID 253 Data Set Memory EEPROM” page 240 |
| MID144-PSID 3 | Idle Validation Switch 3 | 7 | “MID 144 PSID 3 Idle Validation Switch 3” page 241 |

https://truckmanualshub.com/


# MID 144 PID 29 Second Accelerator Pedal Position Sensor

Applies only to vehicles with a second accelerator pedal assembly (such as the WX).

- ***Text Messages***
  In vehicles equipped with diagnostic display, the following message(s) will appear:
- **Instrument Cluster Graphics Display (VN):**

  Second throttle.
- **Data Link Instrument Cluster (WG, AC, WX):**

  The Data Link instrument cluster graphics display used on WG-, AC-, and WX-series vehicles can display a limited number of text messages. For information, see “Data Link Instrumentation,” Volvo Service Publication PV776–381–620SM.
- **VCADS Pro Display:**

  Second throttle position, %

## Fault Codes

### FMI 3

Abnormally high voltage.

*Conditions for fault code:*

- If the VECU receives a signal from the sensor that is higher than 4.3 V, the VECU interprets this as a fault and an fault code is set.

*Possible cause:*

- Open circuit in ground wire.
- Signal wire short circuited to higher voltage.
- Faulty second accelerator position sensor.
- Faulty idle validation switch 3.

*Reaction from the VECU:*

- Fault code is set.
- Yellow lamp is requested.

*Noticeable external symptom:*

- Yellow lamp lights up.
- The engine does not respond when the second accelerator pedal is depressed.

### FMI 4

Abnormally low voltage.

*Conditions for fault code:*

- If the VECU receives a signal from the sensor that is lower than 0.4 V, the VECU interprets this as a fault and an fault code is set.

*Possible cause:*

- Open circuit in supply wire.
- Open circuit in signal wire.
- Signal wire short-circuited to ground.
- Faulty second accelerator position sensor.
- Switch resistance and oxidation.

*Reaction from the VECU:*

- Fault code is set.
- Yellow lamp is requested.

*Noticeable external symptom:*

- Yellow lamp lights up.
- The engine does not respond when the second accelerator pedal is depressed.

https://truckmanualshub.com/


# MID 144 PID 29 Second Accelerator Pedal Position Sensor, Check

*Other special equipment: J-39200, J-41133, 9998551, J-43340, J-43234*

## NOTE!

- Read off the other fault codes for the VECU.
- Check the particular connectors during the fault tracing for oxidation and switch resistance. For detailed circuit information, refer to “VNL, VNM Electrical Schematics,” Group 37.

## Appropriate Tests in the VCADS Pro Tool

The following test(s) are useful for closely examining the component’s function:

**27104–8** Extra accelerator control, switches and sensor, test

## Measurement at the Component’s Connector, to the VECU

**Note:** Faults in the wiring harness to the VECU can damage the component. Therefore, a check of the component should also be made if any of the measurement values deviate from the expected value.

**1**
Disconnect the connector at the second accelerator pedal. Install 5-pin breakout harness J-41133 to the wiring harness end only. J-41133

### *Ground wire:*

**2**
Turn the ignition key to the OFF position.

**3**
Connect an ohmmeter to the breakout harness pins and measure the resistance. J-39200

| Measuring points | Expected value |
|---|---|
| Pin E / alternate ground | <1 Ω |

### *Supply wire:*

**4**
Turn the ignition key to the ON position.

**5**
Connect a voltmeter to the breakout harness pins and measure the voltage. J-39200

| Measuring points | Expected value |
|---|---|
| Pin A / Pin E | 5.4 ± 20% V |

### *Signal wire:*

**6**
Turn the ignition key to the OFF position.

**7**
Connect an ohmmeter to the breakout harness pins and measure the resistance. J-39200

| Measuring points | Expected value |
|---|---|
| Pin B / Pin E | 100 ± 20% kΩ |

### *Wiring harness*

**8**
To check the wiring harness, see “VNL, VNM Electrical Schematics,” Group 37.

## Check of component

**Second accelerator position sensor**

**Note:** Faults in the component can be caused by faults in the wiring harness of the VECU. A check of the wiring harness should also therefore be made before connecting a new component.

**1**
Disconnect the connector at the second accelerator pedal. Install 5-pin breakout harness J-41133 to the second accelerator pedal harness end only. J-41133

**2**
Turn the ignition key to the OFF position.

**3**
Connect an ohmmeter to the breakout harness pins and measure the resistance. J-39200

| Measuring points | Expected value |
|---|---|
| Pin A / Pin E | 4 ± 20% kΩ |
| Pin A / Pin B | 4.5 ± 20% kΩ (accelerator pedal at idle) |

https://truckmanualshub.com/


## Check of Subsystem

**1**
Disconnect the VECU and install adapter J-43234 between the VECU and wiring harness connectors PB/PA. J-43234

**2**
Connect the 60–pin breakout box 9998551 (with overlay J-43340) to the adapter. 9998551 J-43340

### *Ground wire:*

**3**
Turn the ignition key to the OFF position.

**4**
Connect an ohmmeter to the 60–pin breakout box and measure the resistance. J-39200

| Measuring points | Optimal value |
|---|---|
| PB23 / Alternate ground | <1 Ω |

### *Supply wire:*

**5**
Ignition key in ON position.

**6**
Connect a voltmeter to the 60–pin breakout box and measure the voltage. J-39200

| Measuring points | Optimal value |
|---|---|
| PB26 / PB23 | 5 ± 20% V |

### *Signal wire:*

**7**
Turn the ignition key to the ON position.

**8**
Connect a voltmeter to the 60-pin breakout box and measure the voltage. J-39200

| Measuring points | Expected value |
|---|---|
| PB25 / PB23 | 0.5 ± 20% V (accelerator pedal at idle) |
| | 3.2 ± 20% V (full acceleration) |

## Verification

To verify that the fault has been corrected, use the test in the VCADS Pro tool (see “Appropriate Tests in the VCADS Pro Tool” page 198).

https://truckmanualshub.com/


# MID 144 PID 84 Road Speed

The speed signal comes from a sensor on the transmission or as a digital signal if an electronically-controlled transmission is used (i.e. Allison). Diagnostic settings (level 1.5 parameters) are factory programmed based on the transmission type used.

- ***Text Messages***
  In vehicles equipped with diagnostic display, the following message(s) will appear:
- **Instrument Cluster Graphics Display (VN):**

  Road speed.
- **Data Link Instrument Cluster (WG, AC, WX):**

  The Data Link instrument cluster graphics display used on WG-, AC-, and WX-series vehicles can display a limited number of text messages. For information, see “Data Link Instrumentation,” Volvo Service Publication PV776–381–620SM.
- **VCADS Pro Display:**

  Road speed

## Fault Codes

### FMI 5

Abnormally low current or open circuit.

*Conditions for fault code:*

- If the VECU registers a current lower than 90 $\mu$A on any of the signal wires from the speed sensor the VECU interprets this as a fault and an fault code is set.

*Possible cause:*

- Poor contact, sensor connection.
- Switch resistance and oxidation.
- Break, signal wire.
- Fault in sensor.

*Reaction from the VECU:*

- Yellow lamp lights up.

*Noticeable external symptom:*

- No vehicle speed on gauge.
- No PTO.
- No cruise control.

### FMI 6

Abnormally high current or short circuit.

*Conditions for fault code:*

- If the VECU registers a current higher than 140 $\mu$A on any of the signal wires from the speed sensor, the VECU interprets this as a fault and an fault code is set.

*Possible cause:*

- Signal wire short-circuited to higher voltage.
- Signal wire short-circuited to ground.
- Fault in sensor.

*Reaction from the VECU:*

- Yellow lamp lights up.

*Noticeable external symptom:*

- No vehicle speed on gauge.
- No PTO.
- No cruise control.

https://truckmanualshub.com/


# MID 144 PID 84 Road Speed, Check

*Other special equipment: J-39200, 9998551, J-43340, J-43234*

## NOTE!

- Read off the other fault codes for the VECU.
- Check the particular connectors during the fault tracing for oxidation and switch resistance. For detailed circuit information, refer to “VNL, VNM Electrical Schematics,” Group 37.

## Appropriate Tests in the VCADS Pro Tool

The following test(s) are useful for closely examining the component’s function:

**N/A** No test currently available.

## Measurement at the Component’s Connector, to the VECU

**Note:** Faults in the wiring harness to the VECU can damage the component. Therefore, a check of the component should also be made if any of the measurement values deviate from the expected value.

**1**
Disconnect the VECU and install adapter J-43234 to the wiring harness connector PB only. J-43234

**2**
Connect 60–pin breakout box 9998511 (with overlay J-43340) to the adapter. 9998511 J-43340

### *Signal wire*

**3**
Turn the ignition key to the OFF position.

**4**
Connect an ohmmeter to the 60–pin breakout box and measure resistance. J-39200

| Measuring points | Expected value | Transmission |
|---|---|---|
| PB6/PB20 | 265 ± 20% Ω | Volvo |
| | 3.4k ± 20% Ω | Fuller |
| | 3.17k ± 20% Ω | Allison HT-740 |
| | NO DIAGNOSTICS | Allison Automatic |
| * Value may vary depending on transmission manufacturer. | | |

### *Wiring Harness*

**5**
To check the wiring harness, refer to “VNL, VNM Electrical Schematics,” Group 37.

## Check of Component — Vehicle Speed Sensor

**Note:** Faults in the component can be caused by faults in the wiring harness of the VECU. A check of the wiring harness should also therefore be made before connecting a new component.

**1**
Disconnect the 2–pin vehicle speed sensor connector at the transmission.

**2**
Turn the ignition key to the OFF position.

**3**
Connect an ohmmeter to the vehicle speed sensor connector and measure the resistance. J-39200

| Measuring points | Expected value* | Transmission |
|---|---|---|
| Pin A / Pin B | 265 ± 20% Ω | Volvo |
| | 3.4k ± 20% Ω | Fuller |
| | 3.17k ± 20% Ω | Allison HT-740 |
| | NO DIAGNOSTICS | Allison Automatic |
| * Value may vary depending on transmission manufacturer. | | |

https://truckmanualshub.com/


## Check of Subsystem

**DANGER**

Before working on a vehicle, set the parking brakes, place the transmission in neutral, and block the wheels. Failure to do so can result in unexpected vehicle movement and can cause serious personal injury or death.

**1**
Disconnect the VECU and install adapter J-43234 between the VECU and wiring harness connector PA/PB. — J-43234

**2**
Connect 60–pin breakout box 9998551 (with overlay J-43340) to the adapter. — 9998551 J-43340

**3**

**DANGER**

Personal injury hazard. Never work under or around a raised vehicle unless it is securely supported on jack stands of adequate rating and the front wheels are securely chocked. Failure to use adequate jack stands and chock the wheels can result in the vehicle falling, which can cause serious injury or death to anyone under or near the vehicle.

Chock the front wheels. Release the parking brake and jack up one rear wheel so that it can be turned by hand.

### *Signal wire*

**4**
Turn the ignition key to the OFF position.

**5**
Connect a voltmeter to the 60–pin breakout box and measure the voltage while turning the wheel by hand. The voltage will alternate from positive to negative and will vary with speed. Voltmeter function “MIN/MAX” may be useful to determine value. — J-39200

**Note:** The transmission output shaft must be turning.

| **Measuring points** | **Expected minimum value** | Transmission |
|---|---|---|
| PB6 / PB20 | +0.1 V to -0.1 V | Volvo |
| | +0.1 V to -0.1 V | Fuller |
| | +0.1 V to -0.1 V | Allison HT-740 |
| | NO DIAGNOSTICS | Allison Automatic |

## Verification

No VCADS Pro tool test is currently available to verify this fault correction.

https://truckmanualshub.com/


# MID 144 PID 91 Accelerator Pedal Position

- ***Text Messages***
  In vehicles equipped with diagnostic display, the following message(s) will appear:
- **Instrument Cluster Graphics Display (VN):**

  Acc. pedal pos. %
- **Data Link Instrument Cluster (WG, AC, WX):**

  The Data Link instrument cluster graphics display used on WG-, AC-, and WX-series vehicles can display a limited number of text messages. For information, see “Data Link Instrumentation,” Volvo Service Publication PV776–381–620SM.
- **VCADS Pro Display:**

  Accelerator pedal position, %

## Fault Codes

### FMI 3

Abnormally high voltage.

*Conditions for fault code:*

- If the VECU receives a signal from the sensor that is higher than 4.3 V, the VECU interprets this as a fault and an fault code is set.

*Possible cause:*

- Open circuit in ground wire.
- Open circuit in supply wire.
- Signal wire short-circuited to higher voltage.
- Faulty accelerator position sensor.
- Faulty idle validation switch 1.
- Switch resistance and oxidation.

*Reaction from the VECU:*

- Fault code is set.
- Yellow lamp is requested.

*Noticeable external symptom:*

- Yellow lamp lights up.
- The engine does not respond when the accelerator pedal is depressed.

### FMI 4

Abnormally low voltage.

*Conditions for fault code:*

- If the VECU receives a signal from the sensor that is lower than 0.4 V, the VECU interprets this as a fault and an fault code is set.

*Possible cause:*

- Open circuit in supply wire.
- Open circuit in signal wire.
- Signal wire short-circuited to ground.
- Faulty accelerator position sensor.
- Switch resistance and oxidation.

*Reaction from the VECU:*

- fault code is set.
- Yellow lamp is requested.

*Noticeable external symptom:*

- Yellow lamp lights up.
- The engine does not respond when the accelerator pedal is depressed.

https://truckmanualshub.com/


# MID 144 PID 91 Accelerator Pedal Position, Check

*Other special equipment: J-39200, J-43234, 9998551, J-41133, J-43340*

## NOTE!

- Read off the other fault codes for the VECU.
- Check the particular connectors during the fault tracing for oxidation and switch resistance. For detailed circuit information, refer to “VNL, VNM Electrical Schematics,” Group 37.

## Appropriate Tests in the VCADS Pro Tool

The following test(s) are useful for closely examining the component’s function:

**27102–8** Accelerator pedal, switches and sensor, test

## Measurement at the Component’s Connector, to the VECU

**Note:** Faults in the wiring harness to the VECU can damage the component. Therefore, a check of the component should also be made if any of the measurement values deviate from the expected value.

**1**
Disconnect the connector at the accelerator pedal. Install 5-pin breakout harness J-41133 to the wiring harness end only. J-41133

### *Ground wire:*

**2**
Turn the ignition key to the OFF position.

**3**
Using ohmmeter J-39200, measure resistance from pin E (5–pin harness) to alternate ground. J-39200

| Measuring points | Expected value |
|---|---|
| Pin E / alternate ground | <1 Ω |

### *Supply Wire:*

**4**
Turn the ignition key to the ON position.

**5**
Connect a voltmeter to the connector and measure the voltage from pin A to pin E (5–pin harness). J-39200

| Measuring points | Expected value |
|---|---|
| Pin A / Pin E | 5.4 ± 20% V |

### *Signal Wire:*

**6**
Turn the ignition key to the OFF position.

**7**
Using an ohmmeter, measure the resistance from pin B to pin E (5–pin harness). J-39200

| Measuring points | Expected value |
|---|---|
| Pin B / Pin E | 100 ± 20% kΩ |

### *Wiring harness*

**8**
To check the wiring harness, refer to “VNL, VNM Electrical Schematics,” Group 37.

## Check of component — accelerator pedal position sensor

**Note:** Faults in the component can be caused by faults in the wiring harness of the VECU. A check of the wiring harness should also therefore be made before connecting a new component.

**1**
Disconnect the connector at the accelerator pedal. Install 5–pin breakout harness J-41133 to the accelerator pedal harness only. J-41133

https://truckmanualshub.com/


**2**
Turn the ignition key to the OFF position.

**3**
Using an ohmmeter, measure the resistance of pin A to pin E, and pin A to pin B. J-39200

| Measuring points | Expected value |
|---|---|
| Pin A / Pin E | 4 ± 20% kΩ |
| Pin A / Pin B | 4.5 ± 20% kΩ |

**4**
Remove the 5–pin breakout harness and reconnect the connector at the accelerator pedal.

## Check of Subsystem

**1**
Disconnect the VECU and install adapter J-43234 between the VECU and wiring harness connectors PA/PB. J-43234

**2**
Connect 60-pin breakout box 9998551 (with overlay J-43340) to the adapter. 9998551 J-43340

### *Ground Wire*

**3**
Turn the ignition key to the OFF position.

**4**
Using an ohmmeter at the 60-pin breakout box, measure the resistance between pin PB22 and the alternate ground. J-39200

| Measuring points | Expected value |
|---|---|
| PB22 / alternate ground | <1 Ω |

### *Supply Wire:*

**5**
Turn the ignition key to the ON position.

**6**
Using a voltmeter at the 60-pin breakout box, measure the voltage from pin PB10 to PB22. J-39200

| Measuring points | Expected value |
|---|---|
| PB10 / PB22 | 5 ± 20% V |

### *Signal Wire:*

**7**
Ignition key in the ON position.

**8**
Using a voltmeter at the 60-pin breakout box, measure the voltage from pin PB8 to PB22. J-39200

| Measuring points | Expected value |
|---|---|
| PB8 / PB22 | 0.5 ± 20% V (accelerator at idle) |
| | 3.2 ± 20% V (full acceleration) |

## Verification

To verify that the fault has been corrected, use the test in the VCADS Pro tool (see “Appropriate Tests in the VCADS Pro Tool” page 204).

https://truckmanualshub.com/


# MID 144 PID 152 VECU, Number of Resets

The software in the VECU contains an internal checking function that restarts the VECU when there is a fault in the execution of the software. PID 152 contains information about how many such restarts that have been made.

- ***Text Messages***
  In vehicles equipped with diagnostic display, the following message(s) will appear:
- **Instrument Cluster Graphics Display (VN):**

  No. of ECU resets
- **Data Link Instrument Cluster (WG, AC, WX):**

  The Data Link instrument cluster graphics display used on WG-, AC-, and WX-series vehicles can display a limited number of text messages. For information, see “Data Link Instrumentation,” Volvo Service Publication PV776–381–620SM.
- **VCADS Pro Display:**

  Number of ECU resets

# Fault Codes

## FMI 12

Faulty unit or component.

*Conditions for fault code:*

- If an internal software fault occurs an fault code is set.

*Possible cause:*

- The system has been switched off by disconnecting the battery or using a battery master switch instead of switching it off with the ignition key.
- The system has been restarted due to an internal software fault.

*Reaction from the VECU:*

- Fault code is set.
- The system is restarted.

https://truckmanualshub.com/


# MID 144 PPID 69 Idle Validation Switch

The function is used to be able to drive the vehicle in “limp home mode” if a fault has occurred in the wiring to the engine electronic control unit (EECU).

- ***Text Messages***
  In vehicles equipped with diagnostic display, the following message(s) will appear:
- **Instrument Cluster Graphics Display (VN):**

  Buff. idle val. sw.
- **Data Link Instrument Cluster (WG, AC, WX):**

  The Data Link instrument cluster graphics display used on WG-, AC-, and WX-series vehicles can display a limited number of text messages. For information, see “Data Link Instrumentation,” Volvo Service Publication PV776–381–620SM.
- **VCADS Pro Display:**

  Buffered idle validation switch

# Fault Codes

## FMI 4

Abnormally low voltage.

*Conditions for fault code:*

- If the output signal from the buffered idle validation switch deviates from the input signal from idle validation switch 1, the VECU interprets this as a fault and an fault code is set.

  **Note:** The fault code is set first when the accelerator pedal is depressed.

*Possible cause:*

- Short circuit to ground, signal wire

*Reaction from the VECU:*

- Fault code is set.
- Yellow lamp is requested.

*Noticeable external symptom:*

- Yellow lamp lights up.

https://truckmanualshub.com/


# MID 144 PPID 69 Idle Validation Switch, Check

*Other special equipment: J-39200, J-41132, J-43234, J-43233, 9998551, J-43340*

## NOTE!

- Read off the other fault codes for the VECU.
- Check the particular connectors during the fault tracing for oxidation and switch resistance. For detailed circuit information, refer to “VNL, VNM Electrical Schematics,” Group 37.

## Appropriate Tests in the VCADS Pro Tool

The following test(s) are useful for closely examining the component’s function:

**N/A** No test currently available.

## Measurement at the Component’s Connector, to the VECU

**Note:** Faults in the wiring harness to the VECU can damage the component. Therefore, a check of the component should be made if any of the measurements deviate from the expected values.

**1**
Disconnect connector (EA and EB) at the engine electronic control unit (EECU).

**2**
Connect jumper J-43233 between EECU’s EA (upper) connector and the wiring harness. J-43233

**3**
Connect the 36-pin breakout box J-41132 between the EECU’s EB (lower) connector and the wiring harness. J-41132

### *Signal Wire:*

**4**
Turn the ignition key to the ON position.

**5**
Connect voltmeter J-39200 to the 36-pin breakout box at pin 4 (buffered idle validation switch) and pin 9 (ground). J-39200

| Measuring points | Expected value |
|---|---|
| EB4 / EB9 | 0 V (accelerator pedal at idle) |
| | B+ (accelerator pedal above idle) |

### *Wiring harness*

**6**
To check the wiring harness, refer to “VNL, VNM Electrical Schematics,” Group 37.

## Check of component — buffered idle validation switch

**Note:** Faults in the component can be caused by faults in the wiring harness of the VECU. Therefore, a check of the wiring harness should be made before connecting a new component.

**1**
Disconnect connector (EA and EB) at the EECU.

**2**
Connect jumper J-43233 between EECU’s EA (upper) connector and the wiring harness. J-43233

**3**
Connect the 36-pin breakout box J-41132 between the EECU’s EB (lower) connector and the wiring harness. J-41132

**4**
Turn the ignition key to the OFF position.

**5**
Using ohmmeter J-39200 at the 36–pin breakout box, measure resistance from pin 4 to pin 9. J-39200

| Measuring points | Expected value |
|---|---|
| EB4 / EB9 | 2.9 ± 20% kΩ |

https://truckmanualshub.com/


## Check of subsystem

**1**
Disconnect the VECU and install adapter J-43234 between the VECU and wiring harness connectors PA/PB. J-43234

**2**
Connect the 60–pin breakout box 9998551 (with overlay J-43340) to the adapter. 9998551 J-43340

### *Signal Wire:*

**3**
Turn the ignition key to the ON position.

**4**
Connect voltmeter J-39200 to the 60-pin breakout box and measure the voltage. J-39200

| Measuring points | Expected value |
|---|---|
| PB17 / PB22 | 0 V (accelerator pedal at idle) |
| | B+ (accelerator pedal above idle) |

## Verification

No VCADS Pro tool test is currently available to verify this fault correction.

https://truckmanualshub.com/


# MID 144 PPID 70 Pedal Switches, Supply

Voltage supply to pedal switches.

- ***Text Messages***
  In vehicles equipped with diagnostic display, the following message(s) will appear:
- **Instrument Cluster Graphics Display (VN):**

  Output supply #3
- **Data Link Instrument Cluster (WG, AC, WX):**

  The Data Link instrument cluster graphics display used on WG-, AC-, and WX-series vehicles can display a limited number of text messages. For information, see “Data Link Instrumentation,” Volvo Service Publication PV776–381–620SM.
- **VCADS Pro Display:**

  Pedal switches supply

## Fault Codes

### FMI 4

Abnormally low voltage.

*Conditions for fault code:*

- If the VECU registers a voltage lower than 2.5 V on the supply wire, the VECU interprets this as a fault and an fault code is set.

*Possible cause:*

- The supply wire short-circuited to ground.
- The signal wire for brakes/clutch short-circuited to ground.
- Signal wire for idle validation switch 1 short-circuited to ground.
- Faulty switch.

*Reaction from the VECU:*

- Fault code is set.
- Yellow lamp is requested.

*Noticeable external symptom:*

- Yellow lamp lights up.
- The cruise control function does not work.

https://truckmanualshub.com/


# MID 144 PPID 70 Pedal Switches, Supply, Check

*Other special equipment: J-39200, J-43234, 9998551, J-43340, J-41133*

## NOTE!

- Read off the other fault codes for the VECU.
- Check the particular connectors during the fault tracing for oxidation and switch resistance. For detailed circuit information, refer to “VNL, VNM Electrical Schematics,” Group 37.

## Appropriate Tests in the VCADS Pro Tool

The following test(s) are useful for closely examining the component’s function:

**27102–8** Accelerator pedal, switches and sensor, test

**27503–8** Cruise control, switch, test

## Measurement at the Component’s Connector, to the VECU

**Note:** Faults in the wiring harness to the VECU can damage the component. Therefore, a check of the component should also be made if any of the measurement values deviate from the expected value.

**1**
Disconnect the connector at the accelerator pedal. Install 5-pin breakout harness J-41133 to the wiring harness end only. J-41133

**2**
Disconnect the connector at the brake pedal switch (two pin, Common-558A wire and Normal Open-567B wire).

**3**
Disconnect the connector at the clutch pedal switch (two pin, Normal Open–571 wire and Common 558B wire).

### *Supply wire, idle validation switch 1:*

**4**
Turn the ignition key to the ON position.

**5**
Connect a voltmeter to the breakout harness connector and measure the voltage. J-39200

| Measuring points | Expected value |
|---|---|
| Pin D / alternate ground | B+ |

### *Supply wire, brake pedal switch:*

**6**
Turn the ignition key to the ON position.

**7**
Connect a voltmeter to the wiring harness connector and measure the voltage. J-39200

| Measuring points | Expected value |
|---|---|
| “COMMON” / alternate ground | B+ |

### *Supply wire, clutch pedal switch:*

**8**
Turn the ignition key to the ON position.

**9**
Connect a voltmeter to the wiring harness connector and measure the voltage. J-39200

| Measuring points | Expected value |
|---|---|
| “COMMON” / alternate ground | B+ |

### *Signal wire, idle validation switch 1:*

**10**
Turn the ignition key to the OFF position.

**11**
Connect an ohmmeter to the breakout harness connector and measure the resistance. J-39200

| Measuring points | Expected value |
|---|---|
| Pin C / alternate ground | 1.2 ± 20% kΩ |

### *Signal wire, brake pedal switch:*

**12**
Turn the ignition key to the OFF position.

https://truckmanualshub.com/


**13**
Connect an ohmmeter to the wiring harness connector and measure the resistance. J-39200

| Measuring points | Expected value |
|---|---|
| “Normal Open” / alternate ground | 1.2 ± 20% kΩ |

### *Signal wire, clutch pedal switch:*

**14**
Turn the ignition key to the OFF position.

**15**
Connect an ohmmeter to the wiring harness connector and measure the resistance. J-39200

| Measuring points | Expected value |
|---|---|
| “Normal Open” / alternate ground | 1.2 ± 20% kΩ |

### *Wiring harness*

**16**
To check the wiring harness, see “VNL, VNM Electrical Schematics,” Group 37.

## Check of component

- Idle validation switch
- Brake pedal switch
- Clutch pedal switch

**Note:** Faults in the component can be caused by faults in the wiring harness of the VECU. A check of the wiring harness should also therefore be made before connecting a new component.

### *Check of idle validation switch 1:*

**1**
Disconnect the connector at the accelerator pedal. Install 5-pin breakout harness J-41133 to the accelerator pedal harness end only. J-41133

**2**
Turn the ignition key to the OFF position.

**3**
Connect an ohmmeter to the connector and measure the resistance. J-39200

| Measuring points | Expected value |
|---|---|
| Pin D / Pin C | Open circuit (accelerator pedal at idle) |
| | 20-90 Ω (full acceleration) |

### *Check of the brake pedal switch:*

**4**
Disconnect the connector at the brake pedal switch (two pin).

**5**
Turn the ignition key to the OFF position.

**6**
Connect an ohmmeter to the switch terminals and measure the resistance. J-39200

| Measuring points | Expected value |
|---|---|
| “COMMON” / “Normal Open” | <1 Ω (brake pedal not depressed) |
| | open circuit (brake pedal depressed) |

### *Check of clutch pedal switch:*

**7**
Disconnect the connector at the clutch pedal switch (two pin).

**8**
Turn the ignition key to the OFF position.

**9**
Connect an ohmmeter to the switch terminals and measure the resistance. J-39200

| Measuring points | Expected value |
|---|---|
| “COMMON” / “Normal Open” | <1 Ω (clutch pedal not depressed) |
| | open circuit (clutch pedal depressed) |

https://truckmanualshub.com/


## Check of Subsystem

**1**
Disconnect the VECU and install adapter J-43234 between the VECU and wiring harness PA/PB. J-43234

**2**
Connect 60–pin breakout box 9998551 (with overlay J-43340) to the adapter. 9998551 J-43340

### *Supply wire:*

**3**
Turn the ignition key to the ON position.

**4**
Connect a voltmeter to the 60-pin breakout boxes and measure the voltage. J-39200

| Measuring points | Expected value |
|---|---|
| PB19 / PA12 | B+ |

### *Signal wire, idle validation switch 1:*

**5**
Turn the ignition key to the ON position.

**6**
Connect a voltmeter to the 60-pin breakout box and measure the voltage. J-39200

| Measuring points | Expected value |
|---|---|
| PA23 / PA12 | 0 V (accelerator pedal at idle) |
| | B+ (full acceleration) |

### *Signal wire, brake pedal switch:*

**7**
Turn the ignition key to the ON position.

**8**
Connect a voltmeter to the 60-pin breakout box and measure the voltage. J-39200

| Measuring points | Expected value |
|---|---|
| PA5 / PA12 | B+ (brake pedal not depressed) |
| | 0 V (brake pedal depressed) |

### *Signal wire, clutch pedal switch:*

**9**
Turn the ignition key to the ON position.

**10**
Connect a voltmeter to the 60-pin breakout box and measure the voltage. J-39200

| Measuring points | Expected value |
|---|---|
| PA8 / PA12 | B+ (clutch pedal not depressed)<br>0 V (clutch pedal depressed) |

## Verification

To check that the fault has been corrected, use the test in the VCADS Pro tool (see “Appropriate Tests in the VCADS Pro Tool” page 211).

https://truckmanualshub.com/


# MID 144 PPID 71 Cruise Control and Engine Brake, Supply Switch

Voltage supply to the cruise control and exhaust brake control switches. Also voltage supply to the idle validation switch 3 (on second accelerator pedal), if so equipped

- ***Text Messages***
  In vehicles equipped with diagnostic display, the following message(s) will appear:
- **Instrument Cluster Graphics Display (VN):**

  Output supply #4
- **Data Link Instrument Cluster (WG, AC, WX):**

  The Data Link instrument cluster graphics display used on WG-, AC-, and WX-series vehicles can display a limited number of text messages. For information, see “Data Link Instrumentation,” Volvo Service Publication PV776–381–620SM.
- **VCADS Pro Display:**

  Cruise control and retarder switch supply

## Fault Codes

### FMI 4

Abnormally low voltage.

*Conditions for fault code:*

- If the VECU registers a voltage lower than 2.5 V on the supply wire, the VECU interprets this as a fault and an fault code is set.

*Possible cause:*

- The supply wire short-circuited to ground.
- The signal wire for the cruise control (SET+/SET-/RESUME/ON) short-circuited to ground.
- The signal wire for the exhaust brake switch (EPG/VEB) short-circuited to ground.
- The signal wire for the idle validation switch 3 short-circuited to ground.

*Reaction from the VECU:*

- Fault code is set.
- Yellow lamp is requested.

*Noticeable external symptom:*

- Yellow lamp lights up.
- The cruise control does not function.
- Exhaust brake does not function.
- Idle validation switch 3 does not function.

https://truckmanualshub.com/


# MID 144 PPID 71 Cruise Control and Engine Brake, Supply Switch, Check

*Other special equipment: J-39200, 9998551, J-41133, J-43340, J-43234*

## NOTE!

- Read off the other fault codes for the VECU.
- Check the particular connectors during the fault tracing for oxidation and switch resistance. For detailed circuit information, refer to “VNL, VNM Electrical Schematics,” Group 37.
- Note: checks concerning VCB only apply to vehicles equipped with Volvo Compression Brake.

## Appropriate Tests in the VCADS Pro Tool

The following test(s) are useful for closely examining the component’s function:

| | |
|---|---|
| **27503–8** | Cruise control, switch, test |
| **25336–8** | Exhaust brake, switch, test |
| **27104–8** | Extra accelerator control, switches and sensor, test |

## Measurement at the Component’s Connector, to the VECU

**Note:** Faults in the wiring harness to the VECU can damage the component. Therefore, a check of the component should also be made if any of the measurement values deviate from the expected value.

**1**
Disconnect the connector at the switch for the cruise control. Measurements should be taken only on the wiring harness connector end.

**2**
Disconnect the connector at the switch for the exhaust brake, if the vehicle is equipped with one. Measurements should be taken only on the wiring harness connector end.

**3**
Disconnect the connector at the second accelerator pedal, if the vehicle is equipped with one. Install the 5–pin breakout harness J-41133 to the wiring harness end only. J-41133

### *Supply wire, cruise control switch:*

**4**
Turn the ignition key to the ON position.

**5**
Connect a voltmeter to the connector and measure the voltage. J-39200

| Measuring points | Expected value |
|---|---|
| Pin A (wire #597A) / alternate ground | B+ |

### *Supply wire, exhaust brake switch:*

**6**
Turn the ignition key to the ON position.

**7**
Connect a voltmeter to the connector and measure the voltage. J-39200

| Measuring points | Expected value |
|---|---|
| Pin 1 (wire #597B) / alternate ground | B+ |

### *Supply wire, idle validation switch 3*

**8**
Turn the ignition key to the ON position.

**9**
Connect a voltmeter to the connector and measure the voltage. J-39200

| Measuring points | Expected value |
|---|---|
| Pin D / alternate ground | B+ |

### *Signal wire, cruise control switch:*

**10**
Turn the ignition key to the OFF position.

https://truckmanualshub.com/


**11**
Connect an ohmmeter to the connector and measure the resistance. J-39200

| Measuring points | Expected value |
|---|---|
| Pin E (wire #563A) / alternate ground | SET+ 1.2 ± 20% kΩ |
| Pin G (wire #564A) / alternate ground | SET- 1.2 ± 20% kΩ |
| Pin C (wire #562A) / alternate ground | ON 1.2 ± 20% kΩ |
| Pin H (wire #565A) / alternate ground | RESUME 1.2 ± 20% kΩ |

### *Signal wire, exhaust brake switch:*

**12**
Turn the ignition key to the OFF position.

**13**
Connect an ohmmeter to the connector and measure the resistance. J-39200

| Measuring points | Expected value |
|---|---|
| Pin 6 (wire #628) / alternate ground | EPG 1.2 ± 20% kΩ |
| Pin 5 (wire #629) / alternate ground | VCB 1.2 ± 20% kΩ |

### *Signal wire, idle validation switch 3:*

**14**
Turn the ignition key to the OFF position.

**15**
Connect an ohmmeter to the connector and measure the resistance. J-39200

| Measuring points | Expected value |
|---|---|
| Pin C / alternate ground | 1.2 ± 20% kΩ |

### *Wiring harness:*

**16**
To check the wiring harness, see “VNL, VNM Electrical Schematics,” Group 37.

## Check of component

- Cruise control switch
- Exhaust brake switch
- Idle validation switch 3

**Note:** Faults in the component can be caused by faults in the wiring harness of the VECU. A check of the wiring harness should also therefore be made before connecting a new component.

### *Check of the switch for the cruise control:*

**1**
Disconnect the connector at the switch for cruise control. Measurements should be taken only on the cruise control switch connector.

**2**
Turn the ignition key to the OFF position.

**3**
Connect an ohmmeter to the connector pins and measure the resistance. J-39200

| Measuring points | Expected value |
|---|---|
| Pin E / Pin A | open circuit (SET+ inactive) |
| | <1 Ω (SET+ active) |
| Pin H / Pin A | open circuit (RESUME inactive) |
| | <1 Ω (RESUME active) |
| Pin C / Pin A | open circuit (OFF) |
| | <1 Ω (ON) |
| | <1 Ω (RESUME active) |
| Pin G / Pin A | <1 Ω (SET- active) |
| | open circuit (SET- inactive) |

### *Check of the switch for the exhaust brake:*

**4**
Disconnect the connector at the switch for exhaust brake. Measurements should be taken only on the exhaust brake switch pins.

**5**
Turn the ignition key to the OFF position.

https://truckmanualshub.com/


**6**
Connect an ohmmeter to the switch pins and measure the resistance. J-39200

| Measuring points | Expected value |
|---|---|
| Pin 1 / Pin 6 | open circuit (switch OFF)<br><1 Ω (switch position 1 - EPG)<br><1 Ω (switch position 2 - VCB) |
| Pin 1 / Pin 5 | open circuit (switch OFF)<br>open circuit (switch position 1 - EPG)<br><1 Ω (switch position 2 - VCB) |

### *Check of the idle validation switch 3:*

**7**
Disconnect the connector at the second accelerator pedal. Install the 5–pin breakout harness J-41133 to the accelerator pedal harness end only. J-41133

**8**
Turn the ignition key to the OFF position.

**9**
Connect an ohmmeter to the switch pins and measure the resistance. J-39200

| Measuring points | Expected value |
|---|---|
| Pin C / Pin D | open circuit (accelerator at idle) |
| | 20-90 Ω (full acceleration) |

## Check of Subsystem

**1**
Disconnect the VECU and install adapter J-43234 between the VECU and wiring harness connectors PA/PB. J-43234

**2**
Connect 60–pin breakout box 9998551 (with overlay J-43234) to the adapter. 9998551 J-43234

### *Supply wire:*

**3**
Turn the ignition key to the ON position.

**4**
Connect a voltmeter to the connector and measure the voltage. J-39200

| Measuring points | Expected value |
|---|---|
| PB5 / PA12 | B+ |

https://truckmanualshub.com/


### *Signal wire, cruise control switch:*

**5**
Turn the ignition key to the ON position.

**6**
Connect a voltmeter to the 60-pin breakout box and measure the voltage. J-39200

| Measuring points | Expected value |
|---|---|
| PA2 / PA12 | 0 V (SET+ inactive) |
| | B+ (SET+ active) |
| PA30 / PA12 | 0 V (RESUME inactive) |
| | B+ (RESUME active) |
| PA3 / PA12 | 0 V (cruise switch OFF) |
| | B+ (cruise switch ON) |
| PA1 / PA12 | 0 V (SET- inactive) |
| | B+ (SET- active) |
| PA30 / PA12 | B+ (RESUME active) |
| | 0 V (RESUME inactive) |

### *Signal wire, exhaust brake switch:*

**7**
Turn the ignition key to the ON position.

**8**
Connect a voltmeter to the 60-pin breakout box and measure the voltage. J-39200

| Measuring points | Expected value |
|---|---|
| PA21 / PA12 | 0 V (exhaust brake switch OFF) |
| | B+ (exhaust brake switch position 1 - EPG) |
| | B+ (exhaust brake switch position 2 - VCB) |
| PA20 / PA12 | 0 V (exhaust brake switch OFF ) |
| | 0 V (exhaust brake switch position 1 - EPG) |
| | B+ (exhaust brake switch position 2 - VCB) |

### *Signal wire, idle validation switch 3:*

**9**
Turn the ignition key to the ON position.

**10**
Connect a voltmeter to the 60-pin breakout box and measure the voltage. J-39200

| Measuring points | Expected value |
|---|---|
| PB30 / PA12 | 0 V (accelerator at idle) |
| | B+ (full acceleration) |

## Verification

To check that the fault has been corrected, use the test in the VCADS Pro tool (see “Appropriate Tests in the VCADS Pro Tool” page 215).

https://truckmanualshub.com/


# MID 144 PPID 72 Accelerator Pedal, Supply Sensors

The accelerator pedal position sensor is supplied with a reference voltage of 5.0 V. Each change of the accelerator pedal angle controls the input signal to the VECU.

- ***Text Messages***
  In vehicles equipped with diagnostic display, the following message(s) will appear:
- **Instrument Cluster Graphics Display (VN):**

  Output supply #1
- **Data Link Instrument Cluster (WG, AC, WX):**

  The Data Link instrument cluster graphics display used on WG-, AC-, and WX-series vehicles can display a limited number of text messages. For information, see “Data Link Instrumentation,” Volvo Service Publication PV776–381–620SM.
- **VCADS Pro Display:**

  Accelerator pedal and retarder sensor supply

## Fault Codess

### FMI 3

Abnormally high voltage.

*Conditions for fault code:*

- If the VECU registers a voltage higher than 5.5 V on the supply wire, the VECU interprets this as a fault and an fault code is set.

*Possible cause:*

- Open circuit in ground wire.
- Supply wire short-circuited to higher voltage.
- Open circuit in supply wire.
- Faulty accelerator position sensor.
- Switch resistance and oxidation.

*Reaction from the VECU:*

- Fault code is set.
- Yellow lamp is requested.

*Noticeable external symptom:*

- Yellow lamp lights up.
- The engine does not respond when the accelerator pedal is depressed.

### FMI 4

Abnormally low voltage.

*Conditions for fault code:*

- If the VECU registers a voltage lower than 4.5 V on the supply wire, the VECU interprets this as a fault and an fault code is set.

*Possible cause:*

- Supply wire short-circuited to ground or lower voltage.
- Faulty accelerator position sensor.

*Reaction from the VECU:*

- Fault code is set.
- Yellow lamp is requested.

*Noticeable external symptom:*

- Yellow lamp lights up.
- Engine does not respond when the accelerator pedal is depressed.

https://truckmanualshub.com/


# MID 144 PPID 72 Accelerator Pedal, Supply Sensors, Check

*Other special equipment: J-39200, J-41133, 9998551, J-43340, J-43234*

## NOTE!

- Read off the other fault codes for the VECU.
- Check the particular connectors during the fault tracing for oxidation and switch resistance. For detailed circuit information, refer to “VNL, VNM Electrical Schematics,” Group 37.

## Appropriate Tests in the VCADS Pro Tool

The following test(s) are useful for closely examining the component’s function:

**27102–8** Accelerator pedal, switches and sensor, test

## Measurement at the Component’s Connector, to the VECU

**Note:** Faults in the wiring harness to the VECU can damage the component. Therefore, a check of the component should also be made if any of the measurement values deviate from the expected value.

**1**
Disconnect the connector at the accelerator pedal. Install 5-pin breakout harness J-41133 to the wiring harness end only. J-41133

### *Ground wire:*

**2**
Turn the ignition key to the OFF position.

**3**
Using ohmmeter J-39200, measure the resistance from pin E (5–pin harness) to the alternate ground. J-39200

| Measuring points | Expected value |
|---|---|
| Pin E / alternate ground | <1 Ω |

### *Supply wire:*

**4**
Turn the ignition key to the ON position.

**5**
Connect a voltmeter to the connector and measure the voltage from pin A to pin E (5–pin harness). J-39200

| Measuring points | Expected value |
|---|---|
| Pin A / Pin E | 5.4 ± 20% V |

### *Signal wire:*

**6**
Turn the ignition key to the OFF position.

**7**
Connect an ohmmeter to the 5–pin breakout harness and measure the resistance. J-39200

| Measuring points | Expected value |
|---|---|
| Pin B / Pin E | 100 ± 20% kΩ |

### *Wiring harness*

**8**
To check the wiring harness, see “VNL, VNM Electrical Schematics,” Group 37.

## Check of component

**Accelerator position sensor**

**Note:** Faults in the component can be caused by faults in the wiring harness of the VECU. A check of the wiring harness should also therefore be made before connecting a new component.

**1**
Disconnect the connector at the accelerator pedal. Install 5–pin breakout harness J-41133 to the accelerator pedal harness end only. J-41133

**2**
Turn the ignition key to the OFF position.

**3**
Connect an ohmmeter to the breakout harness pins and measure the resistance. J-39200

| Measuring points | Expected value |
|---|---|
| Pin A / Pin E | 4 ± 20% kΩ |
| Pin A / Pin B | 4.5 ± 20% kΩ (accelerator pedal at idle) |

https://truckmanualshub.com/


## Check of Subsystem

**1**
Disconnect the VECU and install adapter J-43234 between the VECU and wiring harness connectors PB/PA. J-43234

**2**
Connect the 60–pin breakout box 9998551 (with overlay J-43340) to the adapter. 9998551 J-43340

### *Ground wire:*

**3**
Turn the ignition key to the OFF position.

**4**
Connect an ohmmeter to the 60–pin breakout box and measure the resistance between pin PB22 and the alternate ground. J-39200

| Measuring points | Optimal value |
|---|---|
| PB22/ Alternate ground | <1 Ω |

### *Supply wire:*

**5**
Ignition key in ON position.

**6**
Connect a voltmeter to the 60–pin breakout box and measure the voltage from pin PB10 to PB22. J-39200

| Measuring points | Optimal value |
|---|---|
| PB10 / PB22 | 5 ± 20% V |

### *Signal wire:*

**7**
Turn the ignition key to the ON position.

**8**
Connect a voltmeter to the 60-pin breakout box and measure the voltage from pin PB8 to PB22. J-39200

| Measuring points | Expected value |
|---|---|
| PB8 / PB22 | 0.5 ± 20% V (accelerator pedal at idle) |
| | 3.2 ± 20% V (full acceleration) |

## Verification

To verify that the fault has been corrected, use the test in the VCADS Pro tool (see “Appropriate Tests in the VCADS Pro Tool” page 220).

https://truckmanualshub.com/


# MID 144 PPID 73 Second Accelerator Pedal, Supply Sensors

The second accelerator pedal position sensor is supplied with a reference voltage of 5.0 V. Each change of the second accelerator pedal angle controls the input signal to the VECU.

**Note:** Applies only to vehicles with a second accelerator pedal assembly (such as the WX).

- ***Text Messages***
  In vehicles equipped with diagnostic display, the following message(s) will appear:
- **Instrument Cluster Graphics Display (VN):**

  Output supply #2
- **Data Link Instrument Cluster (WG, AC, WX):**

  The Data Link instrument cluster graphics display used on WG-, AC-, and WX-series vehicles can display a limited number of text messages. For information, see “Data Link Instrumentation,” Volvo Service Publication PV776–381–620SM.
- **VCADS Pro Display:**

  Second throttle and wet tank sensor supply

## Fault Codes

### FMI 3

Abnormally high voltage.

*Conditions for fault code:*

- If the VECU registers a voltage higher than 5.5 V on the supply wire, the VECU interprets this as a fault and an fault code is set.

*Possible cause:*

- Open circuit in ground wire.
- Supply wire short-circuited to higher voltage.
- Open circuit in supply wire.
- Faulty second accelerator pedal position sensor.
- Switch resistance and oxidation.

*Reaction from the VECU:*

- Fault code is set.
- Yellow lamp is requested.

*Noticeable external symptom:*

- Yellow lamp lights up.
- The engine does not respond when the second accelerator pedal is depressed.

### FMI 4

Abnormally low voltage.

*Conditions for fault code:*

- If the VECU registers a voltage lower than 4.5 V on the supply wire, the VECU interprets this as a fault and an fault code is set.

*Possible cause:*

- Supply wire short-circuited to ground or lower voltage.
- Faulty second accelerator pedal position sensor.

*Reaction from the VECU:*

- Fault code is set.
- Yellow lamp is requested.

*Noticeable external symptom:*

- Yellow lamp lights up.
- Engine does not respond when the second accelerator pedal is depressed.

https://truckmanualshub.com/


# MID 144 PPID 73 Second Accelerator Pedal, Supply Sensors, Check

*Other special equipment: J-39200, J-41133, 9998551, J-43340, J-43234*

## NOTE!

- Read off the other fault codes for the VECU.
- Check the particular connectors during the fault tracing for oxidation and switch resistance. For detailed circuit information, refer to “VNL, VNM Electrical Schematics,” Group 37.

## Appropriate Tests in the VCADS Pro Tool

The following test(s) are useful for closely examining the component’s function:

**27104–8** Extra accelerator pedal, switches and sensor, test

## Measurement at the Component’s Connector, to the VECU

**Note:** Faults in the wiring harness to the VECU can damage the component. Therefore, a check of the component should also be made if any of the measurement values deviate from the expected value.

**1**
Disconnect the connector at the second accelerator pedal. Install 5-pin breakout harness J-41133 to the wiring harness end only. J-41133

### *Ground wire:*

**2**
Turn the ignition key to the OFF position.

**3**
Using ohmmeter J-39200, measure the resistance from pin E (5–pin harness) to the alternate ground. J-39200

| Measuring points | Expected value |
|---|---|
| Pin E / alternate ground | <1 Ω |

### *Supply wire:*

**4**
Turn the ignition key to the ON position.

**5**
Connect a voltmeter to the connector and measure the voltage from pin A to pin E (5–pin harness). J-39200

| Measuring points | Expected value |
|---|---|
| Pin A / Pin E | 5.4 ± 20% V |

### *Signal wire:*

**6**
Turn the ignition key to the OFF position.

**7**
Connect an ohmmeter to the 5–pin breakout harness and measure the resistance. J-39200

| Measuring points | Expected value |
|---|---|
| Pin B / Pin E | 100 ± 20% kΩ |

### *Wiring harness*

**8**
To check the wiring harness, see “VNL, VNM Electrical Schematics,” Group 37.

## Check of component

**Second accelerator position sensor**

**Note:** Faults in the component can be caused by faults in the wiring harness of the VECU. A check of the wiring harness should also therefore be made before connecting a new component.

**1**
Disconnect the connector at the second accelerator pedal. Install 5–pin breakout harness J-41133 to the second accelerator pedal harness end only. J-41133

**2**
Turn the ignition key to the OFF position.

**3**
Connect an ohmmeter to the breakout harness pins and measure the resistance. J-39200

| Measuring points | Expected value |
|---|---|
| Pin A / Pin E | 4 ± 20% kΩ |
| Pin A / Pin B | 4.5 ± 20% kΩ (accelerator pedal at idle) |

https://truckmanualshub.com/


## Check of Subsystem

**1**
Disconnect the VECU and install adapter J-43234 between the VECU and wiring harness connectors PB/PA. J-43234

**2**
Connect the 60–pin breakout box 9998551 (with overlay J-43340) to the adapter. 9998551 J-43340

### *Ground wire:*

**3**
Turn the ignition key to the OFF position.

**4**
Connect an ohmmeter to the 60–pin breakout box and measure the resistance between pin PB23 and the alternate ground. J-39200

| Measuring points | Optimal value |
|---|---|
| PB23/ Alternate ground | <1 Ω |

### *Supply wire:*

**5**
Ignition key in ON position.

**6**
Connect a voltmeter to the 60–pin breakout box and measure the voltage from pin PB26 to PB23. J-39200

| Measuring points | Optimal value |
|---|---|
| PB26 / PB23 | 5 ± 20% V |

### *Signal wire:*

**7**
Turn the ignition key to the ON position.

**8**
Connect a voltmeter to the 60-pin breakout box and measure the voltage from pin PB25 to PB23. J-39200

| Measuring points | Expected value |
|---|---|
| PB25 / PB23 | 0.5 ± 20% V (accelerator pedal at idle) |
| | 3.2 ± 20% V (full acceleration) |

## Verification

To verify that the fault has been corrected, use the test in the VCADS Pro tool (see “Appropriate Tests in the VCADS Pro Tool” page 223).

https://truckmanualshub.com/


# MID 144 PPID 75 Range Inhibitor, Solenoid Valve Status

This applies only to vehicles with Volvo transmissions.

- ***Text Messages***
  In vehicles equipped with diagnostic display, the following message(s) will appear:
- **Instrument Cluster Graphics Display (VN):**

  Range inhibitor
- **Data Link Instrument Cluster (WG, AC, WX):**

  The Data Link instrument cluster graphics display used on WG-, AC-, and WX-series vehicles can display a limited number of text messages. For information, see “Data Link Instrumentation,” Volvo Service Publication PV776–381–620SM.
- **VCADS Pro Display:**

  Range inhibitor solenoid valve

## Fault Codes

### FMI 3

Abnormally high voltage.

*Conditions for fault code:*

- If the VECU registers a voltage higher than 6.5 V when the function is active, the VECU interprets this as a fault and an fault code is set.

  **Note:** The fault code is set first at the speed when the inhibitor is to engage — at approx 40 km/h (25 mph).

*Possible cause:*

- The wire between the solenoid valve and the VECU short-circuited to battery voltage (B+).
- Faulty solenoid valve.

*Reaction from the VECU:*

- Fault code is set.
- Yellow lamp is requested.

*Noticeable external symptom:*

- Yellow lamp lights up.
- The range inhibitor is not activated.

### FMI 4

Abnormally low voltage.

*Conditions for fault code:*

- If the VECU registers a voltage lower than 2.3 V when the function is inactive, the VECU interprets this as a fault and an fault code is set.

  **Note:** The fault code is set first at the speed when the inhibitor is to be released — approximately 36 km/h (23 mph).

*Possible cause:*

- The wire between the solenoid valve and the VECU short-circuited to ground.
- Open circuit, wire between solenoid valve and VECU.
- Open circuit, supply wire to solenoid valve.
- Faulty solenoid valve.
- Switch resistance and oxidation.

*Reaction from the VECU:*

- Fault code is set.
- Yellow lamp is requested.

*Noticeable external symptom:*

- Yellow lamp lights up.
- The range inhibitor is not activated or is constantly active.

https://truckmanualshub.com/


# MID 144 PPID 75 Range Inhibitor, Solenoid Valve Status, Check

*Other special equipment: J-39200, 9998551, J-43340, J-43234, J–42472*

## NOTE!

- Read off the other fault codes for the VECU.
- Check the particular connectors during the fault tracing for oxidation and switch resistance. For detailed circuit information, refer to “VNL, VNM Electrical Schematics,” Group 37.

## Appropriate Tests in the VCADS Pro Tool

The following test(s) are useful for closely examining the component’s function:

**N/A** No test currently available.

## Measurement at the Component’s Connector, to the VECU

**Note:** Faults in the wiring harness to the VECU can damage the component. Therefore, a check of the component should also be made if any of the measurement values deviate from the expected value.

**1**
Disconnect the connector at the range inhibitor solenoid valve. Install 2–pin breakout harness J–42472 to the wiring harness end only. J–42472

### *Ground wire:*

**2**
Turn the ignition key to the OFF position.

**3**
Connect an ohmmeter and measure the resistance. J-39200

| Measuring points | Expected value |
|---|---|
| Terminal 2 (breakout harness) / alternate ground | 1.5 ± 20% MΩ |

### *Supply wire:*

**4**
Turn the ignition key to the ON position.

**5**
Connect a voltmeter from the breakout harness terminals to the alternate ground and measure the voltage. J-39200

| Measuring points | Expected value |
|---|---|
| Terminal 1 (breakout harness) / alternate ground | B+ |

### *Wiring harness:*

**6**
To check the wiring harness, refer to “VNL, VNM Electrical Schematics,” Group 37.

## Check of Component

Range Inhibitor Solenoid

**Note:** Faults in the component can be caused by faults in the wiring harness of the VECU. A check of the wiring harness should also therefore be made before connecting a new component.

**1**
Disconnect the connector at the range inhibitor solenoid valve.

**2**
Install 2–pin breakout harness J–42472 between the solenoid valve and the wiring harness. J–42472

**3**
Turn the ignition key to the ON position.

https://truckmanualshub.com/


**4**
Ground the #2 breakout pin to an alternate ground. Listen for the range inhibitor valve to click.

**CAUTION**

Accidental grounding of pin #1 may blow a fuse or cause wiring damage.

## Check of Subsystem

**1**
Disconnect the VECU and install adapter J-43234 between the VECU and wiring harness connectors PA/PB. J-43234

**2**
Connect 60-pin breakout box 9998551 (with overlay J-43340) to the adapter. 9998551 J-43340

**3**
Turn the ignition key to the ON position.

**4**
Connect a voltmeter to the 60-pin breakout box and measure the voltage. J-39200

| Measuring points | Expected value |
|---|---|
| PB18 / PA12 | B+ |
| Connect a jumper wire from PB18 to an alternate ground | Click at range inhibitor solenoid |

## Verification

No VCADS Pro tool test is currently available to verify this fault correction.

https://truckmanualshub.com/


# MID 144 SID 230 Idle Validation Switch 1

Idle validation switch 1 is located at the driver's accelerator pedal assembly.

- ***Text Messages***
  In vehicles equipped with diagnostic display, the following message(s) will appear:

- **Instrument Cluster Graphics Display (VN):**

  Idle valid switch

- **Data Link Instrument Cluster (WG, AC, WX):**

  The Data Link instrument cluster graphics display used on WG-, AC-, and WX-series vehicles can display a limited number of text messages. For information, see "Data Link Instrumentation," Volvo Service Publication PV776–381–620SM.

- **VCADS Pro Display:**

  Idle validation switch

## Fault Codes

### FMI 7

Incorrect response from mechanical system.

*Conditions for fault code:*

- If the signal from the idle validation switch is not available, with the accelerator position sensor below 13% travel, the VECU interprets this as a fault and an fault code is set.

*Possible cause:*

- Incorrect or faulty idle validation switch.
- Open circuit in the supply wire.
- Open circuit in the signal wire.
- The signal wire short-circuited to ground.
- The signal wire short-circuited to voltage.
- Switch resistance or oxidation.

*Reaction from the VECU:*

- Fault code is set.
- Yellow lamp is requested.

*Noticeable external symptom:*

- Yellow lamp lights up.
- The engine does not respond correctly to acceleration.

https://truckmanualshub.com/


# MID 144 SID 230 Idle Validation Switch 1, Check

*Other special equipment: J-39200, 9998551, J-43340, J-41133, J-43234*

## NOTE!

- Read off the other fault codes for the VECU.
- Check the particular connectors during the fault tracing for oxidation and switch resistance. For detailed circuit information, refer to “VNL, VNM Electrical Schematics,” Group 37.

## Appropriate Tests in the VCADS Pro Tool

The following test(s) are useful for closely examining the component’s function:

**27102–8** Accelerator pedal, switches and sensor, test

## Measurement at the Component’s Connector, to the VECU

**Note:** Faults in the wiring harness to the VECU can damage the component. Therefore, a check of the component should also be made if any of the measurement values deviate from the expected value.

**1**
Disconnect the connector at the accelerator pedal. Install 5-pin breakout harness J-41133 to the wiring harness end only. J-41133

### *Supply wire:*

**2**
Turn the ignition key to the ON position.

**3**
Connect a voltmeter to the breakout harness pins and measure the voltage. J-39200

| Measuring points | Expected value |
|---|---|
| Pin D / alternate ground | B+ |

### *Signal wire:*

**4**
Turn the ignition key to the OFF position.

**5**
Connect an ohmmeter to the breakout harness pins and measure the resistance. J-39200

| Measuring points | Expected value |
|---|---|
| Pin C / alternate ground | 1.2 ± 20% kΩ |

### *Wiring harness*

**6**
To check the wiring harness, refer to “VNL, VNM Electrical Schematics,” Group 37.

## Check of Component

Idle validation switch 1

**Note:** Faults in the component can be caused by faults in the wiring harness of the VECU. A check of the wiring harness should also therefore be made before connecting a new component.

**1**
Disconnect the connector at the accelerator pedal. Install 5-pin breakout harness J-41133 to the accelerator pedal harness only. J-41133

**2**
Turn the ignition key to the OFF position.

**3**
Connect an ohmmeter to the breakout harness pins and measure the resistance.

| Measuring points | Expected value |
|---|---|
| Pin C / Pin D | open circuit (accelerator at idle) |
| | 20-90 Ω (full acceleration) |

https://truckmanualshub.com/


## Check of Subsystem

**1**
Disconnect the VECU and install adapter J-43234 between the VECU and wiring harness connectors PA/PB. J-43234

**2**
Connect 60-pin breakout box 9998551 (with overlay J-43340) to the adapter. 9998551 J-43340

### *Signal wire:*

**3**
Turn the ignition key to the ON position.

**4**
Connect a voltmeter to the 60-pin breakout box and measure the voltage. J-39200

| Measuring points | Expected value |
|---|---|
| PA23 / PA12 | 0 V (accelerator at idle) |
| | B+ (full acceleration) |

## Verification

To check that the fault has been corrected, use the test in the VCADS Pro tool (see “Appropriate Tests in the VCADS Pro Tool” page 229).

https://truckmanualshub.com/


# MID 144 SID 231 SAE J1939 Control Link

High-speed digital communication between different electronic control units takes place over the J1939 Control Link; this is used to control vehicle operation. If the J1939 Control Link fails, the J1587/1708 Information Link serves as a “back-up” control link.

- ***Text Messages***
  In vehicles equipped with diagnostic display, the following message(s) will appear:
- **Instrument Cluster Graphics Display (VN):**

  SAE J1939 data link
- **Data Link Instrument Cluster (WG, AC, WX):**

  The Data Link instrument cluster graphics display used on WG-, AC-, and WX-series vehicles can display a limited number of text messages. For information, see “Data Link Instrumentation,” Volvo Service Publication PV776–381–620SM.
- **VCADS Pro Display:**

  SAE J1939 data link

## Fault Codes

### FMI 2

Intermittent or incorrect data.

*Conditions for fault code:*

- If the VECU does not receive confirmation for the messages on the J1939 Control Link, the VECU interprets this as a fault and an fault code is set.

*Possible cause:*

- Loose connection.
- Open circuit in J1939 Control Link wire.
- Switch resistance and oxidation.

*Reaction from the VECU:*

- Fault code is set.
- Yellow lamp is requested.

*Noticeable external symptom:*

- Yellow lamp lights up.

### FMI 12

Faulty unit or component.

*Conditions for fault code:*

- If the expected messages are not available from a control unit on the J1939 Control Link, the VECU interprets this as a fault and an fault code is set.

*Possible cause:*

- Open circuit in J1939 Control Link wire.
- Switch resistance and oxidation.

*Reaction from the VECU:*

- Fault code is set.
- Yellow lamp is requested.

*Noticeable external symptom:*

- Yellow lamp lights up.

https://truckmanualshub.com/


# MID 144 SID 231 SAE J1939 Control Link, Check

*Other special equipment: J-39200*

## NOTE!

- Read off the other fault codes for the VECU.
- Check the particular connectors during the fault tracing for oxidation and switch resistance. For detailed circuit information, refer to “VNL, VNM Electrical Schematics,” Group 37.

## Appropriate Tests in the VCADS Pro Tool

The following test(s) are useful for closely examining the component’s function:

**N/A** No test currently available.

## Check of Subsystem

**1**
Turn the ignition key to the OFF position.

**2**
Using an ohmmeter, back probe connector PC (Green 5–pin) at connectors PC4 and PC5 with the connector installed in the VECU. J-39200

| Measuring points | Expected value |
|---|---|
| PC4 / PC5 | 60 ± 10 Ω |

**3**
Turn the ignition key to the ON position.

**4**
Using a voltmeter, back probe connector PC (Green 5–pin) at connectors PC4 and PC5 with the connector installed in the VECU.

**Note:** This may require the use of voltmeter function MIN/MAX.

| Measuring points | Expected value |
|---|---|
| PC4 / Alternate ground | 2-5 V DC |
| PC5 / Alternate ground | 0-3 V DC |
| PC4 / PC5 | 0-5 V DC |

**Note:** The voltage of the control link varies and is dependent on the number of electronic control units and traffic on the control link.

## Verification

No VCADS Pro tool test is currently available to verify this fault correction.

https://truckmanualshub.com/


# MID 144 SID 240 Program Memory

At startup, a checksum is calculated for the software in the VECU's flash memory. This is compared with the previously stored checksum to verify that the checksum is correct.

- ***Text Messages***
  In vehicles equipped with diagnostic display, the following message(s) will appear:
- **Instrument Cluster Graphics Display (VN):**

  Program memory
- **Data Link Instrument Cluster (WG, AC, WX):**

  The Data Link instrument cluster graphics display used on WG-, AC-, and WX-series vehicles can display a limited number of text messages. For information, see "Data Link Instrumentation," Volvo Service Publication PV776–381–620SM.
- **VCADS Pro Display:**

  Programm memory

# Fault Codes

## FMI 2

Intermittent or incorrect data.

*Conditions for fault code:*

- If the checksum stored at start up does not agree with the previously stored checksum, the VECU interprets this as a fault and an fault code is set.

*Possible cause:*

- Internal software fault.
- Faulty memory circuit.

*Reaction from the VECU:*

- The VECU continuously restarts.

*Noticeable external symptom:*

- Yellow lamp is lit by the instrument control unit since the VECU does not respond to the call.
- The vehicle can only be run in "limp home mode."

https://truckmanualshub.com/


# MID 144 SID 243 Cruise Control Set Switch

- ***Text Messages***
  In vehicles equipped with diagnostic display, the following message(s) will appear:
- **Instrument Cluster Graphics Display (VN):**

  CC Set switch
- **Data Link Instrument Cluster (WG, AC, WX):**

  The Data Link instrument cluster graphics display used on WG-, AC-, and WX-series vehicles can display a limited number of text messages. For information, see “Data Link Instrumentation,” Volvo Service Publication PV776–381–620SM.
- **VCADS Pro Display:**

  CC set switch

# Fault Codes

## FMI 7

Incorrect response from mechanical system.

*Conditions for fault code:*

- If the VECU receives the signals for SET+ and SET- at the same time, the VECU interprets this as a fault and an fault code is set.

*Possible cause:*

- Faulty switch.
- Signal wire short-circuited to voltage.

*Reaction from the VECU:*

- Fault code is set.
- Yellow lamp is requested.

*Noticeable external symptom:*

- Yellow lamp lights up.
- The cruise control function does not work. The speed cannot be set.

**Note:** If the speed has been previously set, it can be “resumed.”

https://truckmanualshub.com/


# MID 144 SID 243 Cruise Control Set Switch, Check

*Other special equipment: J-39200, 9998551, J-43340, J-43234*

## NOTE!

- Read off the other fault codes for the VECU.
- Check the particular connectors during the fault tracing for oxidation and switch resistance. For detailed circuit information, refer to “VNL, VNM Electrical Schematics,” Group 37.

## Appropriate Tests in the VCADS Pro Tool

The following test(s) are useful for closely examining the component’s function:

**27503–8** Cruise control, switch, test

## Measurement at the Component’s Connector, to the VECU

**Note:** Faults in the wiring harness to the VECU can damage the component. Therefore, a check of the component should also be made if any of the measurement values deviate from the expected value.

**1**
Disconnect the connector at the switch for the cruise control. Measurements should be taken only on the wiring harness connector.

### *Supply wire:*

**2**
Turn the ignition key to the ON position.

**3**
Connect a voltmeter to the connector and measure the voltage. J-39200

| Measuring points | Expected value |
|---|---|
| Wiring harness connector A / alternate ground | B+ |

### *Signal wire:*

### SET+

**4**
Turn the ignition key to the OFF position.

**5**
Connect an ohmmeter to the connector and measure the resistance. J-39200

| Measuring points | Expected value |
|---|---|
| Wiring harness connector E / alternate ground | 1.2 ± 20% kΩ |

### RESUME

**6**
Turn the ignition key to the OFF position.

**7**
Connect an ohmmeter to the connector and measure the resistance. J-39200

| Measuring points | Expected value |
|---|---|
| Wiring harness connector H / alternate ground | 1.2 ± 20% kΩ |

### ON

**8**
Turn the ignition key to the OFF position.

**9**
Connect an ohmmeter to the connector and measure the resistance. J-39200

| Measuring points | Expected value |
|---|---|
| Wiring harness connector C / alternate ground | 1.2 ± 20% kΩ |

### SET-

**10**
Turn the ignition key to the OFF position.

**11**
Connect an ohmmeter to the connector and measure the resistance. J-39200

| Measuring points | Expected value |
|---|---|
| Wiring harness connector G / alternate ground | 1.2 ± 20% kΩ |

### *Wiring harness*

**12**
To check the wiring harness, see “VNL, VNM Electrical Schematics,” Group 37.

https://truckmanualshub.com/


## Check of Component

Cruise control set switch

**Note:** Faults in the component can be caused by faults in the wiring harness of the VECU. A check of the wiring harness should also therefore be made before connecting a new component.

**1**
Disconnect the connector at the switch for the cruise control. Measurements should be taken only on the cruise control switch connector.

**2**
Turn the ignition key to the OFF position.

**3**
Connect an ohmmeter to the connector and measure the resistance. J-39200

| Measuring points | Expected value |
|---|---|
| Cruise control switch connectors E / G | open circuit (SET+ and SET- inactive) |
| | open circuit (ON and SET+ active) |
| | open circuit (RESUME active and SET+ active) |
| | open circuit (ON and SET- active) |
| | open circuit (RESUME active and SET- active) |

## Check of Subsystem

**1**
Disconnect the VECU and install adapter J-43234 between the VECU and wiring harness connectors PA/PB. J-43234

**2**
Connect 60-pin breakout box 9998551 (with overlay J-43340) to the adapter. 9998551 J-43340

### *Signal wire:*

**3**
Turn the ignition key to the ON position.

**4**
Connect a voltmeter to the 60-pin breakout box and measure the voltage. J-39200

| Measuring points | Expected value |
|---|---|
| PA1 / PA12 | B+ (OFF and SET- active) |
| | 0 V (OFF and SET+ active) |
| | 0 V (ON and SET+ active) |
| | 0 V (RESUME active and SET+ active) |
| PA2 / PA12 | B+ (OFF and SET+ active) |
| | 0 V (OFF and SET- active) |
| | 0 V (ON and SET- active) |
| | 0 V (RESUME active and SET- active) |

## Verification

To check that the fault has been corrected, use the test in the VCADS Pro tool (see “Appropriate Tests in the VCADS Pro Tool” page 235).

https://truckmanualshub.com/


# MID 144 SID 250 SAE J1587/1708 Information Link

The J1587/1708 Information Link is used to communicate gauge information and diagnostic messages.

High-speed digital communication between different electronic control units takes place over the J1939 Control Link; this is used to control vehicle operation. If the J1939 Control Link fails, the J1587/1708 Information Link serves as a “back-up” control link.

- ***Text Messages***
  In vehicles equipped with diagnostic display, the following message(s) will appear:
- **Instrument Cluster Graphics Display (VN):**

  SAE J1708 data link
- **Data Link Instrument Cluster (WG, AC, WX):**

  The Data Link instrument cluster graphics display used on WG-, AC-, and WX-series vehicles can display a limited number of text messages. For information, see “Data Link Instrumentation,” Volvo Service Publication PV776–381–620SM.
- **VCADS Pro Display:**

  SAE J1587/1708 data link

# Fault Codes

## FMI 2

Intermittent or incorrect data.

*Conditions for fault code:*

- If the VECU registers incorrect messages on the J1587/1708 Information Link, the VECU interprets this as a fault and an fault code is set.

*Possible cause:*

- Several units are sending at the same time on the J1587/1708 Information Link.

*Reaction from the VECU:*

- Fault code is set.
- Yellow lamp is requested.

*Noticeable external symptom:*

- Yellow lamp lights up.

https://truckmanualshub.com/


# MID 144 SID 250 SAE J1587/1708 Information Link, Check

*Special tools: J-39200*

## NOTE!

- Read off the other fault codes for the VECU.
- Check the particular connectors during the fault tracing for oxidation and switch resistance. For detailed circuit information, refer to “VNL, VNM Electrical Schematics,” Group 37.

## Appropriate Tests in the VCADS Pro Tool

The following test(s) are useful for closely examining the component’s function:

**N/A** No test currently available.

## Check of Subsystem

**1**
Turn the ignition key to the ON position.

**2**
Using a voltmeter, back the probe connector PC (Green, 5–pin) at connectors PC1 and PC2 with the connector installed in the VECU. J-39200

**Note:** This may require the use of voltmeter function MIN/MAX.

| Measuring points | Expected value |
|---|---|
| PC1 / Alternate ground | 0-5 V DC |
| PC2 / Alternate ground | 0-5 V DC |
| PC1 / PC2 | 2-5 V DC |

**Note:** The voltage of the information link varies and is dependent on the number of electronic control units and traffic on the information link.

## Verification

No VCADS Pro tool test is currently available to verify this fault correction.

https://truckmanualshub.com/


# MID 144 SID 253 Data Set Memory EEPROM

At start-up, a checksum is calculated for the data set in the VECU's EEPROM memory. This is compared with the previously stored checksum to verify that the data set is correct.

- ***Text Messages***
  In vehicles equipped with diagnostic display, the following message(s) will appear:
- **Instrument Cluster Graphics Display (VN):**

  Calibration memory
- **Data Link Instrument Cluster (WG, AC, WX):**

  The Data Link instrument cluster graphics display used on WG-, AC-, and WX-series vehicles can display a limited number of text messages. For information, see "Data Link Instrumentation," Volvo Service Publication PV776–381–620SM.
- **VCADS Pro Display:**

  Calibration memory EEPROM

## Fault Codes

### FMI 2

Intermittent or incorrect data.

*Conditions for fault code:*

- If the VECU receives an error in calculating the checksum in the calibration memory, the VECU interprets this as a fault and an fault code is set.

*Possible cause:*

- The memory circuit is faulty.
- Error when programming.

*Reaction from the VECU:*

- Fault code is set.
- Red lamp is requested.

*Noticeable external symptom:*

- Red lamp lights up.
- The vehicle can only be driven in the "limp home mode."

### FMI 13

Values outside calibration values.

*Conditions for fault code:*

- If the VECU receives an error when calculating the checksums for the data sets, the VECU interprets this as a fault and an fault code is set.

*Possible cause:*

- The memory circuit is faulty.
- Error when programming of the data sets.

*Reaction from the VECU:*

- Fault code is set.
- Red lamp is requested.

*Noticeable external symptom:*

- Red lamp lights up.
- The vehicle can only be driven in the "limp home mode."

https://truckmanualshub.com/


# MID 144 PSID 3 Idle Validation Switch 3

This applies only to vehicles with a second accelerator pedal assembly (WX).

**Note:** Idle validation switch 2 is not used in North American applications.

- ***Text Messages***
  In vehicles equipped with diagnostic display, the following message(s) will appear:
- **Instrument Cluster Graphics Display (VN):**

  Idle validation switch 3
- **Data Link Instrument Cluster (WG, AC, WX):**

  The Data Link instrument cluster graphics display used on WG-, AC-, and WX-series vehicles can display a limited number of text messages. For information, see “Data Link Instrumentation,” Volvo Service Publication PV776–381–620SM.
- **VCADS Pro Display:**

  Idle validation switch 3

# Fault Codes

## FMI 7

Incorrect response from mechanical system.

*Conditions for fault code:*

- If the signal from the idle validation switch is not available with the accelerator position sensor below 13% travel, the VECU interprets this as a fault and an fault code is set.

*Possible cause:*

- Faulty idle validation switch.
- Open circuit in the supply wire.
- Open circuit in the signal wire.
- The signal wire short-circuited to ground.
- The signal wire short-circuited to voltage.
- Switch resistance and oxidation.

*Reaction from the VECU:*

- Fault code is set.
- Yellow lamp is requested.

*Noticeable external symptom:*

- Yellow lamp lights up.
- The engine does not respond correctly when the second accelerator pedal is depressed.

https://truckmanualshub.com/


# MID 144 PSID 3 Idle Validation Switch 3, Check

*Other special equipment: J-39200, 9998551, J-43340, J-43234, J-41133*

## NOTE!

- Read off the other fault codes for the VECU.
- Check the particular connectors during the fault tracing for oxidation and switch resistance. For detailed circuit information, refer to “VNL, VNM Electrical Schematics,” Group 37.

## Appropriate Tests in the VCADS Pro Tool

The following test(s) are useful for closely examining the component’s function:

**27104–8** Extra accelerator control, switches and sensor, test

## Measurement at the Component’s Connector, to the VECU

**Note:** Faults in the component can be caused by faults in the wiring harness of the VECU. A check of the wiring harness should also therefore be made before connecting a new component.

**1**
Disconnect the connector at the second accelerator pedal. Install 5-pin breakout harness J-41133 to the wiring harness end only. J-41133

### *Supply wire:*

**2**
Turn the ignition key to the ON position.

**3**
Connect a voltmeter to the connector and measure the voltage. J-39200

| Measuring points | Expected value |
|---|---|
| Pin D / alternate ground | B+ |

### *Signal wire:*

**4**
Turn the ignition key to the OFF position.

**5**
Connect an ohmmeter to the connector and measure the resistance. J-39200

| Measuring points | Expected value |
|---|---|
| Pin C / alternate ground | 1.2 ± 20% kΩ |

### *Wiring harness*

**6**
To check the wiring harness, see “VNL, VNM Electrical Schematics,” Group 37.

## Check of Component

Idle validation switch 3

**Note:** Faults in the component can be caused by faults in the wiring harness of the VECU. A check of the wiring harness should also therefore be made before connecting a new component.

**1**
Disconnect the connector at the second accelerator pedal. Install 5-pin breakout harness J-41133 to the accelerator pedal harness end only. J-41133

**2**
Turn the ignition key to the OFF position.

**3**
Connect an ohmmeter to the connector and measure the resistance. J-39200

| Measuring points | Expected value |
|---|---|
| Pin C / Pin D | open circuit (accelerator at idle) |
| | 20-90 Ω (full acceleration) |

https://truckmanualshub.com/


## Check of Subsystem

**1**
Disconnect the VECU and install adapter J-43234 between the VECU and wiring harness connectors PA/PB. J-43234

**2**
Connect a 60-pin breakout box 9998551 (with overlay J-43340) to the adapter. 9998551 J-43340

### *Signal wire:*

**3**
Turn the ignition key to the ON position.

**4**
Connect a voltmeter to the 60-pin breakout box and measure the voltage. J-39200

| Measuring points | Expected value |
|---|---|
| PB30 / PA12 | 0 V (accelerator at idle) |
| | B+ (full acceleration) |

## Verification

To check that the fault has been corrected, use the test in the VCADS Pro tool (see “Appropriate Tests in the VCADS Pro Tool” page 241).

https://truckmanualshub.com/


# Service Procedures

## 2841-03-02-01
## Engine ECU, Replacement

*Special tools: 9998482*

**1**
**Note:** Make sure that the parking brake is applied.

**2**
Disconnect the power with main switch

**DANGER**

Before working on a vehicle, set the parking brakes, place the transmission in neutral, and block the wheels. Failure to do so can result in unexpected vehicle movement and can cause serious personal injury or death.

**WARNING**

Fuel leaked or spilled onto hot surfaces or electrical components can cause a fire. Clean up fuel spills immediately.

.

**3**

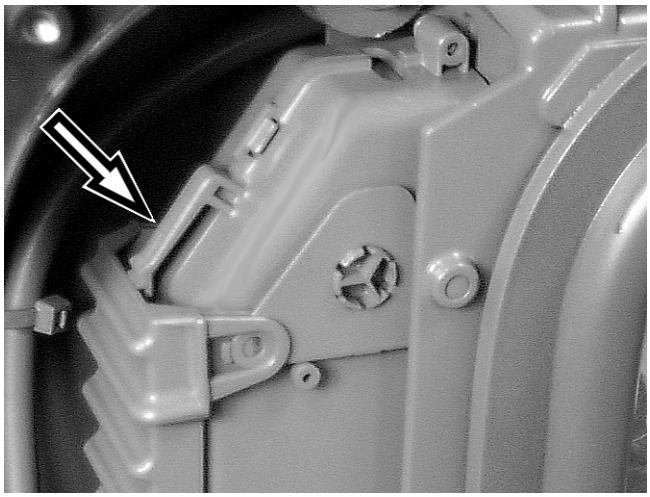

T2014053

Remove the connector from the control unit by pressing the catch and pushing the handle up.

**4**
Cut the clamps round the cable harness under the control unit and fold away the connector for the control unit.

**5**

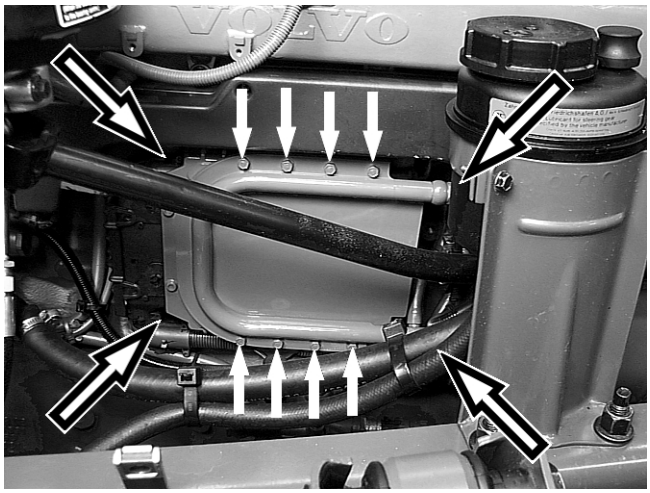


T2014052

Remove the bolts for the cooling coil on the control unit.

**Note:** Do not release the fuel lines on the cooling coil.

**6**
Remove the control unit's hold-down bolts (4, see previous illustration ) and lift off the control unit.

**7**
Install the new control unit.

**Note:** Make sure that the framework line is positioned correctly and that the mating surface on the engine block is free from rust.
If the control unit is painted where the cooling coil is to be installed: Remove the paint where the cooling coil is in contact with the control unit to ensure maximum cooling.

**8**
Install the cooling coil on the control unit.

**9**
Check the clamping force of the terminal in the connector for the control unit by means of gauge 9998482. 9998482

**10**
Install the connector on the control unit. Make sure that the catch locks on the connector.

https://truckmanualshub.com/


**11**
Clamp the cables under the control unit.

**12**
Switch on the power.

**Note:** When starting the engine with cab up, make sure that a gear is not engaged. The parking brake should be applied.

**13**
Conduct a function check. Check that there are no fault codes in the control unit.

https://truckmanualshub.com/

# Feedback

**One of our objectives is that workshop personnel should have access to correct and appropriate service manuals where it concerns fault tracing, repairs and maintenance of Volvo trucks.**
**In order to maintain the high standards of our literature, your opinions and experience when using this manual would be greatly appreciated.**
**If you have any comments or suggestions, make a copy of this page, write down your comments and send them to us, either via telefax or mailing directly to the address listed below.**

| **To** | **From** |
|---|---|
| **Volvo Trucks North America, Inc.** | ..... |
| **Dept. 516 Service Publications** | ..... |
| **7825 National Service Road** | ..... |
| **P.O. Box 26115** | ..... |
| **Greensboro, NC 27402-6115** | ..... |
| **USA** | ..... |
| **Fax (336) 393-3170** | ..... |

**Comments/proposals**

.....
.....
.....
.....
.....
.....
.....
.....
.....
.....
.....
.....
.....

**Concerns Service Manual:** .....

https://truckmanualshub.com/

https://truckmanualshub.com/

# Operation Numbers

2841-03-02-01 Engine ECU, Replacement . . . . . 243

https://truckmanualshub.com/

**Volvo Trucks North America, Inc.**
P.O. Box 26115, Greensboro, NC 27402-6115
**Volvo Trucks Canada, Ltd.**
6490 Vipond Drive, Mississauga, Ontario L5T 1W8
http://www.volvotrucks.volvo.com

PV776-TSP144528 (1000) 06.2001 © Volvo Trucks North America, Inc., 2001