https://truckmanualshub.com/

An Oshkosh Corporation Company

Service & Maintenance Manual

Models
3369LE
4069LE
M3369
M4069

3121122

January 14, 2011

ANSI

An Oshkosh Corporation Company

https://truckmanualshub.com/

https://truckmanualshub.com/

SECTION A. INTRODUCTION - MAINTENANCE SAFETY PRECAUTIONS

A.A GENERAL

This section contains the general safety precautions which must be observed during maintenance of the aerial platform. It is of utmost importance that maintenance personnel pay strict attention to these warnings and precautions to avoid possible injury to themselves or others, or damage to the equipment. A maintenance program must be followed to ensure that the machine is safe to operate.

⚠ WARNING

MODIFICATION OF THE MACHINE WITHOUT CERTIFICATION BY A RESPONSIBLE AUTHORITY THAT THE MACHINE IS AT LEAST AS SAFE AS ORIGINALLY MANUFACTURED, IS A SAFETY VIOLATION.

The specific precautions to be observed during maintenance are inserted at the appropriate point in the manual. These precautions are, for the most part, those that apply when servicing hydraulic and larger machine component parts.

Your safety, and that of others, is the first consideration when engaging in the maintenance of equipment. Always be conscious of weight. Never attempt to move heavy parts without the aid of a mechanical device. Do not allow heavy objects to rest in an unstable position. When raising a portion of the equipment, ensure that adequate support is provided.

⚠ WARNING

SINCE THE MACHINE MANUFACTURER HAS NO DIRECT CONTROL OVER THE FIELD INSPECTION AND MAINTENANCE, SAFETY IN THIS AREA RESPONSIBILITY OF THE OWNER/OPERATOR.

A.B HYDRAULIC SYSTEM SAFETY

It should be noted that the machines hydraulic systems operate at extremely high potentially dangerous pressures. Every effort should be made to relieve any system pressure prior to disconnecting or removing any portion of the system.

Relieve system pressure by cycling the applicable control several times with the engine stopped and ignition on, to direct any line pressure back into the reservoir. Pressure feed lines to system components can then be disconnected with minimal fluid loss.

A.C MAINTENANCE

⚠ WARNING

FAILURE TO COMPLY WITH SAFETY PRECAUTIONS LISTED IN THIS SECTION MAY RESULT IN MACHINE DAMAGE, PERSONNEL INJURY OR DEATH AND IS A SAFETY VIOLATION.

- NO SMOKING IS MANDATORY. NEVER REFUEL DURING ELECTRICAL STORMS. ENSURE THAT FUEL CAP IS CLOSED AND SECURE AT ALL OTHER TIMES.
- REMOVE ALL RINGS, WATCHES AND JEWELRY WHEN PERFORMING ANY MAINTENANCE.
- DO NOT WEAR LONG HAIR UNRESTRAINED, OR LOOSE-FITTING CLOTHING AND NECKTIES WHICH ARE APT TO BECOME CAUGHT ON OR ENTANGLED IN EQUIPMENT.
- OBSERVE AND OBEY ALL WARNINGS AND CAUTIONS ON MACHINE AND IN SERVICE MANUAL.
- KEEP OIL, GREASE, WATER, ETC. WIPED FROM STANDING SURFACES AND HAND HOLDS.
- USE CAUTION WHEN CHECKING A HOT, PRESSURIZED COOLANT SYSTEM.
- NEVER WORK UNDER AN ELEVATED SIZZOR UNTIL PLATFORM HAS BEEN SAFELY RESTRAINED FROM ANY MOVEMENT BY BLOCKING OR OVERHEAD SLING, OR BOOM SAFETY PROP HAS BEEN ENGAGED.
- BEFORE MAKING ADJUSTMENTS, LUBRICATING OR PERFORMING ANY OTHER MAINTENANCE, SHUT OFF ALL POWER CONTROLS.
- BATTERY SHOULD ALWAYS BE DISCONNECTED DURING REPLACEMENT OF ELECTRICAL COMPONENTS.
- KEEP ALL SUPPORT EQUIPMENT AND ATTACHMENTS STOWED IN THEIR PROPER PLACE.
- USE ONLY APPROVED, NONFLAMMABLE CLEANING SOLVENTS.

https://truckmanualshub.com/

REVISION LOG

Original Issue - February 5, 2001

Revision - April 25, 2001

Revision - September 17, 2001

Revision - June 21, 2002

Revision - October 15, 2002

Revision - December 10, 2003

Revision - February 17, 2004

Revision - May 11, 2004

Revision - December 21, 2004

Revision - January 24, 2005

Revision - February 2, 2007

Revision - April 17, 2007

Revision - October 11, 2007

Revision - November 28, 2007

Revision - March 17, 2008

Revision - January 14, 2011

https://truckmanualshub.com/

TABLE OF CONTENTS

SUBJECT - SECTION, PARAGRAPH **PAGE NO.**

SECTION A - INTRODUCTION - MAINTENANCE SAFETY PRECAUTIONS

A.A General 1-a
A.B Hydraulic System Safety 1-a
A.C Maintenance 1-a

SECTION 1 - SPECIFICATIONS

1.1 Specifications 1-1
1.2 Capacities 1-2
1.3 Pressure Settings 1-2
1.4 Component Data 1-2
1.5 Torque Specifications 1-2
1.6 Lubrication 1-2
1.7 Cylinder Specifications 1-3
1.8 Major Component Weights 1-3
1.9 Critical Stability Weights 1-3
1.10 Lubrication 1-4
1.11 Serial Number Locations 1-5
1.12 Torque Charts 1-6

SECTION 2 - GENERAL

2.1 Machine Preparation, Inspection, and Maintenance 2-1
2.2 Service and Guidelines 2-2
2.3 Lubrication and Information 2-3
2.4 Cylinder Drift Test 2-4
2.5 Pins and Composite Bearing Repair Guidelines 2-5
2.6 Preventive Maintenance and Inspection Schedule 2-5

SECTION 3 - CHASSIS & SCISSOR ARMS

3.1 Calibrations 3-1
3.2 Tilt Sensor 3-4
3.3 Battery Maintenance and Charging 3-6
3.4 Generator 3-13
3.5 Supplementary Fuse For APU 3-19
3.6 Joystick Controller 3-21
3.7 Towing 3-24
3.8 Drive Hub 3-27
3.9 Drive Brake - MICO 3-29
3.10 Torque Hub 3-30

SECTION 4 - HYDRAULICS

4.1 Servicing and Maintenance Guidelines 4-1
4.2 Lubrication Information 4-2
4.3 Cylinders - Theory of Operation 4-3
4.4 Valves - Theory of Operation 4-3
4.5 Component Functional Description 4-3
4.6 Wear Pads 4-3
4.7 Motor Controller - Modes of Operation 4-3
4.8 Features 4-4
4.9 Cylinder Checking Procedures 4-4
4.10 Cylinder Removal and Installation 4-5
4.11 Cylinder Repair 4-6
4.12 Steer Cylinder Removal 4-10
4.13 Oscillation Cylinder Bleeding 4-10

https://truckmanualshub.com/

4.14 Cylinder Assemblies 4-12
4.15 Pressure Setting Procedures 4-19
4.16 Drive Torque Hub 4-20
4.17 Drive Assist Valve 4-22

SECTION 5 - JLG CONTROL SYSTEM

5.1 Hand Held Analyzer 5-1
5.2 PC Boards 5-5
5.3 Flash Codes/DTC's and Descriptions 5-6
5.4 Ground Control Circuit Board 5-19

SECTION 6 - GENERAL ELECTRICAL INFORMATION & SCHEMATICS

6.1 General 6-1
6.2 Multimeter Basics 6-1
6.3 Applying Silicone Dielectric Compound To Amp Connectors 6-5
6.4 Working With Deutsch Connectors 6-10

LIST OF FIGURES

FIGURE NO.	TITLE	PAGE NO.
1-1.	Lubrication Chart	1-4
1-2.	Serial Number Location	1-5
1-3.	Torque Chart (SAE Fasteners - Sheet 1 of 7)	1-6
1-4.	Torque Chart (SAE Fasteners - Sheet 2 of 7))	1-7
1-5.	Torque Chart (SAE Fasteners - Sheet 3 of 7)	1-8
1-6.	Torque Chart (SAE Fasteners - Sheet 4 of 7)	1-9
1-7.	Torque Chart (METRIC Fasteners - Sheet 5 of 7))	1-10
1-8.	Torque Chart (METRIC Fasteners - Sheet 6 of 7)	1-11
1-9.	Torque Chart (METRIC Fasteners - Sheet 7 of 7)	1-12
3-1.	Tilt Sensor Location	3-4
3-2.	Tilt Sensor Removal	3-4
3-3.	Tilt Sensor Location	3-5
3-4.	Tilt Sensor Removal	3-5
3-5.	Remote LED Card	3-7
3-6.	Battery Charger Location (M model shown)	3-7
3-7.	Battery Charger	3-7
3-8.	Batteries and Battery Charger	3-12
3-9.	Generator Components	3-14
3-10.	Generator System Analyzer Flow Chart	3-16
3-11.	Joystick Controller - (JLG P/N 1600308)	3-21
3-12.	Joystick Controller - (JLG P/N 1600403)	3-22
3-13.	Drive Components	3-23
3-14.	Power Controller	3-24
3-15.	Torque Hub	3-26
3-16.	Brake Assembly	3-28
3-17.	Torque Hub Assembly	3-30
3-18.	Bolt Torquing Sequence	3-31
3-19.	Hub Main Disassembly	3-32
3-20.	Output Carrier Disassembly	3-34
3-21.	Input Carrier Disassembly	3-35
3-22.	Hub-Spindle Disassembly	3-36
3-23.	Cover Disassembly	3-37
3-24.	Input Carrier Sub-Assembly	3-38
3-23.	Output Carrier Sub-Assembly	3-39
3-24.	Hub-Spindle Sub-Assembly	3-40

https://truckmanualshub.com/

3-25. Cover Sub-Assembly . . . 3-41
3-26. Hub Main Assembly . . . 3-42
4-1. Barrel Support . . . 4-6
4-2. Capscrew Removal . . . 4-6
4-3. Rod Support . . . 4-6
4-4. Oil-lite Bearing Installation . . . 4-7
4-5. Rod Seal Installation . . . 4-7
4-6. Wiper Seal Installation . . . 4-8
4-7. Installation of Head Seal Kit . . . 4-8
4-8. Piston Seal Kit Installation . . . 4-8
4-9. Poly-Pak Piston Seal Installation . . . 4-8
4-10. Rod Assembly Installation . . . 4-9
4-11. Lift Cylinder - 3369LE & M3369 . . . 4-12
4-12. Lift Cylinder - 4069LE & M4069 . . . 4-13
4-13. Leveling Jack Cylinder - USA Built Machines S/N 0200112735 to Present) . . . 4-14
4-14. Leveling Jack Cylinder - USA Built Machines S/N 0200104829 to S/N 0200112735 & All Belgium Built Machines) . . . 4-15
4-15. Leveling Jack Cylinder - USA Built Machines Prior to S/N 0200104829 . . . 4-16
4-16. Steer Cylinder . . . 4-17
4-17. Axle Lockout Cylinder . . . 4-18
4-18. Control Valve . . . 4-20
4-19. Drive Assist Valve . . . 4-22
5-1. Hand Held Analyzer . . . 5-1
5-2. PC Boards . . . 5-5
5-2. Analyzer Flow Chart - SW V13.X - Sheet 1 of 3 . . . 5-11
5-3. Analyzer Flow Chart - SW V13.X - Sheet 2 of 3 . . . 5-12
5-4. Analyzer Flow Chart - SW V13.X - Sheet 3 of 3 . . . 5-13
5-5. Analyzer Flow Chart - Software P1.X - Sheet 1 of 3 . . . 5-14
5-6. Analyzer Flow Chart - Software P1.X - Sheet 2 of 3 . . . 5-15
5-7. Analyzer Flow Chart - Software P1.X - Sheet 3 of 3 . . . 5-16
6-1. Voltage Measurement (DC) . . . 6-2
6-2. Resistance Measurement . . . 6-2
6-3. Continuity Measurement . . . 6-3
6-4. Current Measurement (DC) . . . 6-3
6-5. AMP Connector . . . 6-5
6-6. Connector Assembly (1 of 4) . . . 6-6
6-7. Connector Assembly (2 of 4) . . . 6-6
6-8. Connector Assembly (3 of 4) . . . 6-7
6-9. Connector Assembly (4 of 4) . . . 6-7
6-10. Connector Disassembly . . . 6-8
6-11. Connector Installation . . . 6-9
6-12. DT/DTP Contact Installation . . . 6-10
6-13. DT/DTP Contact Removal . . . 6-10
6-14. HD/HDP Contact Installation . . . 6-10
6-15. HD/HDP Locking Contacts Into Position . . . 6-11
6-16. HD/HDP Contact Removal . . . 6-11
6-17. HD/HDP Unlocking Contacts . . . 6-11
6-18. Electrical Components Installation - (Sheet 1 of 4) . . . 6-12
6-19. Electrical Components Installation - (Sheet 2 of 4) . . . 6-13
6-20. Electrical Components Installation - (Sheet 3 of 4) . . . 6-14
6-21. Electrical Components Installation - (Sheet 4 of 4) . . . 6-15
6-22. Electrical Schematic - Sheet 1 of 2 . . . 6-16
6-23. Electrical Schematic - Sheet 2 of 2 . . . 6-17
6-24. Electrical Schematic - Kubota Engine (M3369 & 3369LE only) . . . 6-18
6-25. Electrical Schematic - Yanmar Engine (M3369 & 3369LE only) . . . 6-19
6-26. Hydraulic Diagram - 3369LE and M3369 (Fixed Axle) . . . 6-20
6-27. Hydraulic Diagram - 3369LE and M3369 (Oscillating Axle) . . . 6-21
6-28. Hydraulic Diagram - 4069LE and M4069 (Fixed Axle) . . . 6-22

https://truckmanualshub.com/

6-29. Hydraulic Diagram - 4069LE and M4069 (Oscillating Axle) 6-23
6-30. Hydraulic Schematic 6-24

LIST OF TABLES

TABLE NO.	TITLE	PAGE NO.
1-1	Operating Specifications	1-1
1-2	Capacities	1-2
1-3	Pressure Settings	1-2
1-4	Torque Specifications	1-2
1-5	Hydraulic Oil	1-2
1-6	Lubrication Specifications	1-3
1-7	Mobil DTE 11M Specs	1-3
1-8	Cylinder Specifications	1-3
1-9	Major Component Weights	1-3
1-10	Critical Stability Weights	1-3
1-11	Lubrication Chart	1-4
2-1	Inspection and Maintenance	2-2
2-2	Cylinder Drift	2-4
2-3	Preventive Maintenance and Inspection Schedule	2-6
3-1	Tilt Sensor Harness Chart	3-4
3-2	Tilt Sensor Harness	3-5
3-3	Delta-Q - Battery Charger Specs	3-8
3-4	Battery Algorithms	3-11
3-5	RBS Pre start Sequence	3-15
3-6	RBS Startup Sequence	3-15
3-7	RBS Shutdown Sequence	3-15
3-8	Generator System Flash Codes	3-17
3-9	Joystick Specifications	3-21
3-10	Joystick Plug Loading Chart	3-21
3-11	Joystick Specifications	3-22
3-12	Joystick Plug Loading Chart	3-22
3-13	Power Controller Cable Descriptions	3-24
4-1	Cutout Heights	4-4
4-2	Cylinder Piston Nut Torque Specifications	4-9
4-3	Holding Valve Torque Specifications	4-9
4-4	Valve Component Torque Values	4-19
5-1	Flash Codes/DTC's	5-6
5-2	Power Module Diagnostic LED Flash Codes	5-10
5-3	Machine Model Adjustment	5-17
5-4	Machine Configuration Programming Information	5-18
5-5	J1 Connector	5-19
5-6	J2 Connector	5-20
5-7	J3 Connector	5-21
5-8	J4 Connector	5-22
5-9	J5 Connector	5-22
5-10	J6 Connector	5-22
5-11	J1 Connector	5-23
5-12	J2 Connector	5-24
5-13	J3 Connector	5-25
5-14	J4 Connector	5-26
5-15	J5 Connector	5-26
5-16	J6 Connector	5-26

https://truckmanualshub.com/

SECTION 1. SPECIFICATIONS

1.1 SPECIFICATIONS

Table 1-1. Operating Specifications

Description	3369LE/M3369	4069LE/M4069
Maximum Platform Height	33 ft (10.1 m)	40 ft (12.2 m)
Maximum Occupants	2	
Gross Machine Weight (minimum)	9760 lbs (4427 kg)	10,560 lbs (4790 kg)
Travel Speed: High Drive Fwd/Rev (sec/50 ft) Elevated Drive Fwd/Rev (sec/50 ft)	 10.6 - 12 sec 40 - 44 sec	
Lifting Speed: No Load Rated Load	 36 - 40 sec 38 - 44 sec	 52 - 60 sec 54 - 62 sec
Lowering Speed (no load)	43 - 48 sec	49 - 51 sec
Gradeability (platform stowed)	35%	
Turning Radius: Inside Outside	 7.5 ft (2.3 m) 16 ft (4.9 m)	
Maximum Platform Capacity -Platform -Platform Extension	 **ANSI/CSA/Brazil:** 1000 lbs (454kg) **CE/AUS:** 1000 lbs (450kg) **ANSI/CSA/Brazil:** 250 lbs (113kg) **CE/AUS:** 250 lbs (120kg)	 **ANSI/CSA/Brazil:** 800 lbs (363kg) **CE/AUS:** 800 lbs (360kg) **ANSI/CSA/Brazil:** 250 lbs (113kg) **CE/AUS:** 250 lbs (120kg)
Maximum Ground Bearing Pressure	57 psi (4 bar)	61 psi (4.3 bar)
Maximum Tire Load	3200 lbs (1452 kg)	3700 lbs (1680 kg)
Maximum Hydraulic System Pressure	3000 psi (207 bar)	
Electrical System Voltage	48Vdc	
Maximum Horizontal Manual Side Force	150 lb force (667 N)	120 lb force (534 N)
Tilt Sensor Setting: Side to Side Fore and Aft	 3° 5°	
Ground Clearance	8 in (20 cm)	
Wheelbase	91.5 in (2.3 m)	
Machine Height (w/ rails folded)	76.5 in (1.9 m)	79 in (2.01 m)
Machine Length (stowed)	121 in (3.1 m)	
Machine Width	69 in (1.75 m)	

https://truckmanualshub.com/

1.2 CAPACITIES

Table 1-2. Capacities

Description	3369LE/M3369	4069LE/M4069
Hydraulic Tank	8.25 gal (31.2 liters) 5.4 gal (20.4 liters) @ full mark	
Hydraulic System	approx. 8.5 gal (32.1 liters)	
Torque Hubs (2)	17 ounces (0.5 liters)	

1.3 PRESSURE SETTINGS

Table 1-3. Pressure Settings

Description	3369LE/M3369	4069LE/M4069
Main Relief (±50 psi)	3000 psi (207 bar)	
Steer Relief	2500 psi (172 bar)	
Lift Relief	2600 psi (179 bar)	2800 psi (193 bar)

1.4 COMPONENT DATA

Battery Charger

Input 220 VAC, 50 HZ Input, (110 VAC,60 HZ)

Output, 48 VDC @ 23 Amp

Batteries (8)

6 Volt, 370 Amp-hour

NOTICE

JLG MACHINES EQUIPPED WITH DELTA Q BATTERY CHARGERS ARE DESIGNED FOR THE BEST PERFORMANCE WITH OEM FACTORY APPROVED BATTERIES.
APPROVED JLG REPLACEMENT BATTERIES ARE AVAILABLE THROUGH JLG' S AFTERMARKET PARTS DISTRIBUTION CENTERS OR JLG' S AFTERMARKET PROGRAMS. FOR ASSISTANCE WITH PROPER BATTERY REPLACEMENT, PLEASE CONTACT YOUR LOCAL JLG SUPPORT OFFICE.
BATTERIES APPROVED BY JLG HAVE BEEN TESTED FOR COMPATIBILITY WITH THE ALGORITHM PROGRAMMING OF THE DELTA Q BATTERY CHARGER TO OPTIMIZE BATTERY LIFE AND MACHINE CYCLE TIMES. THE USE OF NON APPROVED BATTERIES IN YOUR JLG EQUIPMENT MAY RESULT IN PERFORMANCE ISSUES OR BATTERY CHARGER FAULT CODES. JLG ASSUMES NO RESPONSIBILITY FOR SERVICE OR PERFORMANCE ISSUES ARISING FROM THE USE OF NON APPROVED BATTERIES.

Drive System

Drive Motor - 48 VDC, 11.8 H.P. peak 5.5 H.P. continuous, rotation - reversible

Drive Brake- 24 VDC, spring-applied, hydraulically released

Steer System

Tires - IN240/55-17.5 FF

IN240/55-17.5 FF non marking

Toe-In 1/4 inch (6.4 mm) overall

Hydraulic Pump/Electric Motor Assembly

Pump Output - 3.86 gpm (14.6 lpm) @ 2175 psi (150 bar)

1.5 TORQUE SPECIFICATIONS

Table 1-4. Torque Specifications

DESCRIPTION	TORQUE VALUE (DRY)	INTERVAL HOURS
Torque Hub	240 ft lbs (336 Nm)	500
Wheel Nuts	170 ft lbs (238 Nm)	50
Fixed Axle Bolts	220 ft lbs (308 Nm)	500
Drive Motor	35 ft lbs (49 Nm)	N/A
Pump Motor Terminals	12-14 ft lbs (14-19 Nm)	N/A

NOTE: *When maintenance becomes necessary or a fastener has loosened, refer to the Torque Chart to determine proper torque value.*

1.6 LUBRICATION

Table 1-5. Hydraulic Oil

Hydraulic System Operating Temperature Range	SAE Viscosity Grade
0° F to 23° F (-18°C to -5°C)	10W
0° F to 210° F (-18°C to +99°C)	10W-20, 10W- 0
50° F to 210° F (+10°C to +99°C)	20W-20

NOTE: *Hydraulic oils must have anti-wear qualities at least to API Service Classification GL-3, and sufficient chemical stability for mobile hydraulic system service. JLG Industries recommends Mobil DTE 11M hydraulic oil, which has an SAE viscosity index of 140.*
Aside from JLG recommendations, it is not advisable to mix oils of different brands or types, as they may not contain the same required additives or be of comparable viscosities.

https://truckmanualshub.com/

Lubrication Specifications

Table 1-6. Lubrication Specifications

KEY	SPECIFICATIONS
EPGL	Extreme Pressure Gear Lube (oil) meeting API service classification GL-5 or MIL-Spec MIL-L-2105
HO	Hydraulic Oil. API service classification GI-3, BP Energol SHS46.
LL	Synthetic Lithium Lubricant, Gredag 741 Grease.

*MPG may be substituted for these lubricants, if necessary, but service intervals will be reduced.

NOTE: *Refer to Lubrication Chart for specific lubrication procedures.*

Table 1-7. Mobil DTE 11M Specs

ISO Viscosity Grade	#15
Gravity API	31.9
Pour Point, Max	-40°F (-40°C)
Flash Point, Min.	330°F (166°C)
Viscosity	
at 40° C	15 cSt
at 100° C	4.1 cSt
at 100° F	80 SUS
at 210° F	43 SUS
cp at -30° F	3.200
Viscosity Index	140

1.7 CYLINDER SPECIFICATIONS

Table 1-8. Cylinder Specifications

DESCRIPTION	BORE	STROKE	ROD DIA.
Lift Cylinder (M3369/3369LE)	4.00 in (10.16 cm)	63.69 in (161.77 cm)	2.75 in (6.98 cm)
Upper Lift Cylinder (M4069/4069LE)	3.00 in (7.62 cm)	58.13 in (147.65 cm)	2.75 in (6.98 cm)
Lower Lift Cylinder (M4069/4069LE)	4.00 in (10.16 cm)	58.13 in (147.65 cm)	2.25 in (5.71 cm)
Steer Cylinder	2.00 in (5.08 cm)	6.5 in (16.51 cm)	1.125 in (2.86 cm)

1.8 MAJOR COMPONENT WEIGHTS

Table 1-9. Major Component Weights

Description	3369LE/M3369	4069LE/M4069
Platform	780 lbs (354 kg)	
Platform Extension	360 lbs (163 kg)	
Arm Assembly (Includes Lift Cylinders)	3200 lbs (1451 kg)	3900 lbs (1769 kg)
Chassis (Includes Battery Box and Foam filled Tires)	5420 lbs (2458 kg)	5517 lbs (2502 kg)

1.9 CRITICAL STABILITY WEIGHTS

Table 1-10. Critical Stability Weights

Description	3369LE/M3369	4069LE/M4069
Platform	780 lbs (354 kg)	
Platform Extension	360 lbs (163 kg)	
Foam Filled Tires	207 lbs (94 kg)	
Battery (Each)	122 lbs (55 kg)	

https://truckmanualshub.com/

1.10 LUBRICATION

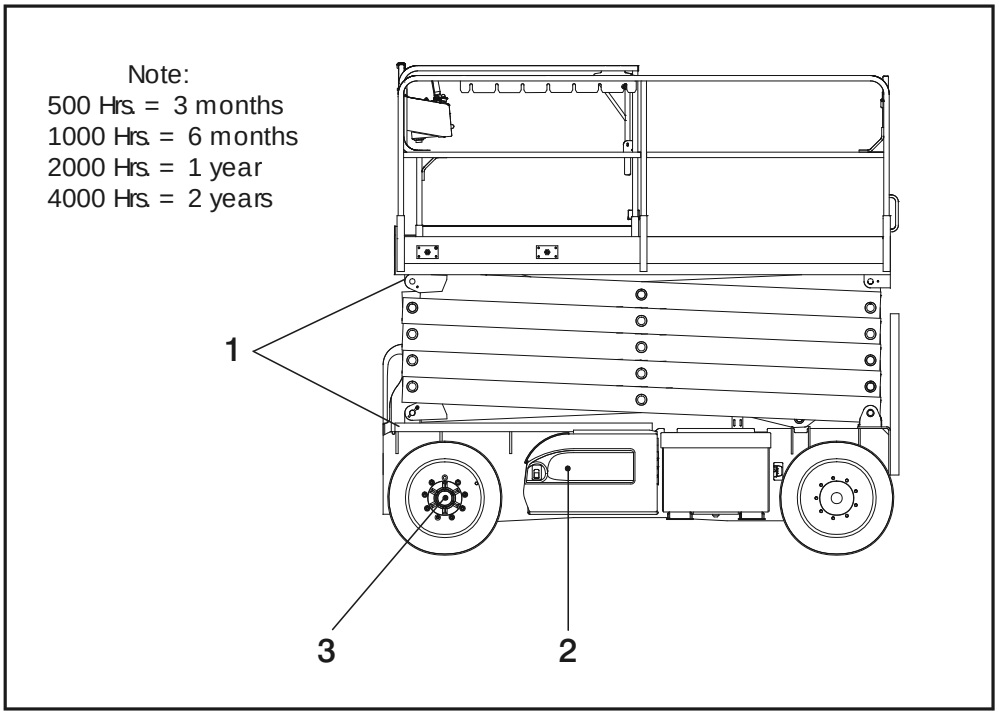

Figure 1-1. Lubrication Chart

Table 1-11. Lubrication Chart

INDEX NUMBER	COMPONENT	NO/TYPE LUBE POINTS	LUBE/METHOD	INTERVAL HOURS	COMMENTS
1	Sliding Wear Pads	8 Wear Pads	MPG/Brush	50	--
2	Hydraulic Oil	Fill Level/Drain Plug	HO - Check HO Level HO - Change HO	10/500	Check oil every 10 hours of operation Change oil after every 1000 hours of operation
3	Wheel Bearings	Front Wheels	MPG - Repack	1200	--
4	Spindles/Bushing (not shown)	N/A	LL	At Spindle Bushing Replacement	--
5	Wheel Drive Hub (not shown)	Fill Plug/Half Full	EPGL	1200	Check oiul level at side plug daily. Change after first 150 hours of operation then every 1000 hours thereafter
6	*High Pressure Filter (not shown)	N/A	Replaceable Element	50/250	Replace filter element after first 50 hours of operation and every 1000 hours thereafter.

KEY TO LUBRICANTS:
HO - Hydraulic Oil - Mobil DTE - 11M
EPGL - Extreme Pressure Gear Lube
MPG - Multi Purpose Grease

⚠ WARNING

TO AVOID PERSONAL INJURY, USE SAFETY PROP FOR ALL MAINTENANCE REQUIRING PLATFORM TO BE ELEVATED

NOTE: *Be sure to lubricate like items on each side of the machine.*

NOTE: *Recommended lubricating intervals are based on machine operations under normal conditions. For machines used in multi-shift operations and/or exposed to hostile environments or conditions, lubricating frequencies must be increased accordingly.*
**The high pressure filter is located in the main control valve. See figure title control valve in section 2.*

https://truckmanualshub.com/

1.11 SERIAL NUMBER LOCATIONS

For machine identification, a serial number plate is affixed to the front of the frame. If the serial number plate is damaged or missing, the machine serial number is stamped on the left front of the machine frame.

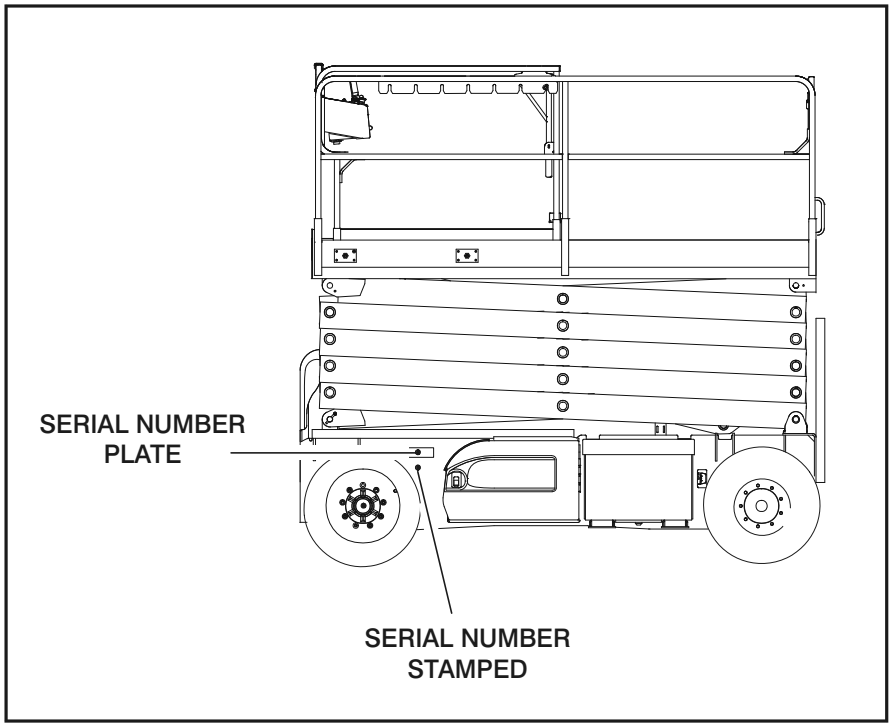

Figure 1-2. Serial Number Location

https://truckmanualshub.com/

1.12 TORQUE CHARTS

				Values for Zinc Yellow Chromate Fasteners (Ref 4150707)								
				SAE GRADE 5 BOLTS & GRADE 2 NUTS								
Size	TPI	Bolt Dia	Tensile Stress Area	Clamp Load	Torque (Dry)		Torque Lubricated		Torque (Loctite® 242™ or 271™ OR Vibra-TITE™ 111 or 140)		Torque (Loctite® 262™ or Vibra-TITE™ 131)	
		In	Sq In	LB	IN-LB	[N.m]	IN-LB	[N.m]	IN-LB	[N.m]	IN-LB	[N.m]
4	40	0.1120	0.00604	380	8	0.9	6	0.7				
	48	0.1120	0.00661	420	9	1.0	7	0.8				
6	32	0.1380	0.00909	580	16	1.8	12	1.4				
	40	0.1380	0.01015	610	18	2.0	13	1.5				
8	32	0.1640	0.01400	900	30	3.4	22	2.5				
	36	0.1640	0.01474	940	31	3.5	23	2.6				
10	24	0.1900	0.01750	1120	43	4.8	32	3.5				
	32	0.1900	0.02000	1285	49	5.5	36	4				
1/4	20	0.2500	0.0318	2020	96	10.8	75	9	105	12		
	28	0.2500	0.0364	2320	120	13.5	86	10	135	15		
		In	Sq In	LB	FT-LB	[N.m]	FT-LB	[N.m]	FT-LB	[N.m]	FT-LB	[N.m]
5/16	18	0.3125	0.0524	3340	17	23	13	18	19	26	16	22
	24	0.3125	0.0580	3700	19	26	14	19	21	29	17	23
3/8	16	0.3750	0.0775	4940	30	41	23	31	35	48	28	38
	24	0.3750	0.0878	5600	35	47	25	34	40	54	32	43
7/16	14	0.4375	0.1063	6800	50	68	35	47	55	75	45	61
	20	0.4375	0.1187	7550	55	75	40	54	60	82	50	68
1/2	13	0.5000	0.1419	9050	75	102	55	75	85	116	68	92
	20	0.5000	0.1599	10700	90	122	65	88	100	136	80	108
9/16	12	0.5625	0.1820	11600	110	149	80	108	120	163	98	133
	18	0.5625	0.2030	12950	120	163	90	122	135	184	109	148
5/8	11	0.6250	0.2260	14400	150	203	110	149	165	224	135	183
	18	0.6250	0.2560	16300	170	230	130	176	190	258	153	207
3/4	10	0.7500	0.3340	21300	260	353	200	271	285	388	240	325
	16	0.7500	0.3730	23800	300	407	220	298	330	449	268	363
7/8	9	0.8750	0.4620	29400	430	583	320	434	475	646	386	523
	14	0.8750	0.5090	32400	470	637	350	475	520	707	425	576
1	8	1.0000	0.6060	38600	640	868	480	651	675	918	579	785
	12	1.0000	0.6630	42200	700	949	530	719	735	1000	633	858
1 1/8	7	1.1250	0.7630	42300	800	1085	600	813	840	1142	714	968
	12	1.1250	0.8560	47500	880	1193	660	895	925	1258	802	1087
1 1/4	7	1.2500	0.9690	53800	1120	1518	840	1139	1175	1598	1009	1368
	12	1.2500	1.0730	59600	1240	1681	920	1247	1300	1768	1118	1516
1 3/8	6	1.3750	1.1550	64100	1460	1979	1100	1491	1525	2074	1322	1792
	12	1.3750	1.3150	73000	1680	2278	1260	1708	1750	2380	1506	2042
1 1/2	6	1.5000	1.4050	78000	1940	2630	1460	1979	2025	2754	1755	2379
	12	1.5000	1.5800	87700	2200	2983	1640	2224	2300	3128	1974	2676

NO. 5000059 REV. J

NOTES: 1. THESE TORQUE VALUES DO NOT APPLY TO CADMIUM PLATED FASTENERS
2. ALL TORQUE VALUES ARE STATIC TORQUE MEASURED PER STANDARD AUDIT METHODS TOLERANCE = ±10%
3. * ASSEMBLY USES HARDENED WASHER

	REFERENCE JLG ANEROBIC THREAD LOCKING COMPOUND			
JLG P/N	Loctite® P/N		ND Industries P/N	Description
0100011	242™		Vibra-TITE™ 121	Medium Strength (Blue)
0100019	271™		Vibra-TITE™ 140	High Strength (Red)
0100071	262™		Vibra-TITE™ 131	Medium - High Strength (Red)

Figure 1-3. Torque Chart (SAE Fasteners - Sheet 1 of 7)

https://truckmanualshub.com/

Values for Zinc Yellow Chromate Fasteners (Ref 4150707)										
SAE GRADE 8 (HEX HD) BOLTS & GRADE 8 NUTS*										
Size	TPI	Bolt Dia	Tensile Stress Area	Clamp Load	Torque (Dry or Loctite® 263) K= 0.20		Torque (Loctite® 242™ or 271™ OR Vibra-TITE™ 111 or 140) K=.18		Torque (Loctite® 262™ or Vibra-TITE™ 131) K=0.15	
		In	Sq In	LB	IN-LB	[N.m]	IN-LB	[N.m]	IN-LB	[N.m]
4	40	0.1120	0.00604							
	48	0.1120	0.00661							
6	32	0.1380	0.00909							
	40	0.1380	0.01015							
8	32	0.1640	0.01400							
	36	0.1640	0.01474	1320	43	5				
10	24	0.1900	0.01750	1580	60	7				
	32	0.1900	0.02000	1800	68	8				
1/4	20	0.2500	0.0318	2860	143	16	129	15		
	28	0.2500	0.0364	3280	164	19	148	17		
		In	Sq In	LB	FT-LB	[N.m]	FT-LB	[N.m]	FT-LB	[N.m
5/16	18	0.3125	0.0524	4720	25	35	20	25	20	25
	24	0.3125	0.0580	5220	25	35	25	35	20	25
3/8	16	0.3750	0.0775	7000	45	60	40	55	35	50
	24	0.3750	0.0878	7900	50	70	45	60	35	50
7/16	14	0.4375	0.1063	9550	70	95	65	90	50	70
	20	0.4375	0.1187	10700	80	110	70	95	60	80
1/2	13	0.5000	0.1419	12750	105	145	95	130	80	110
	20	0.5000	0.1599	14400	120	165	110	150	90	120
9/16	12	0.5625	0.1820	16400	155	210	140	190	115	155
	18	0.5625	0.2030	18250	170	230	155	210	130	175
5/8	11	0.6250	0.2260	20350	210	285	190	260	160	220
	18	0.6250	0.2560	23000	240	325	215	290	180	245
3/4	10	0.7500	0.3340	30100	375	510	340	460	280	380
	16	0.7500	0.3730	33600	420	570	380	515	315	430
7/8	9	0.8750	0.4620	41600	605	825	545	740	455	620
	14	0.8750	0.5090	45800	670	910	600	815	500	680
1	8	1.0000	0.6060	51500	860	1170	770	1045	645	875
	12	1.0000	0.6630	59700	995	1355	895	1215	745	1015
1 1/8	7	1.1250	0.7630	68700	1290	1755	1160	1580	965	1310
	12	1.1250	0.8560	77000	1445	1965	1300	1770	1085	1475
1 1/4	7	1.2500	0.9690	87200	1815	2470	1635	2225	1365	1855
	12	1.2500	1.0730	96600	2015	2740	1810	2460	1510	2055
1 3/8	6	1.3750	1.1550	104000	2385	3245	2145	2915	1785	2430
	12	1.3750	1.3150	118100	2705	3680	2435	3310	2030	2760
1 1/2	6	1.5000	1.4050	126500	3165	4305	2845	3870	2370	3225
	12	1.5000	1.5800	142200	3555	4835	3200	4350	2665	3625

NO. 5000059 REV. J

NOTES: 1. THESE TORQUE VALUES DO NOT APPLY TO CADMIUM PLATED FASTENERS
2. ALL TORQUE VALUES ARE STATIC TORQUE MEASURED PER STANDARD AUDIT METHODS TOLERANCE = ±10%
3. * ASSEMBLY USES HARDENED WASHER

Figure 1-4. Torque Chart (SAE Fasteners - Sheet 2 of 7))

https://truckmanualshub.com/

				SOCKET HEAD CAP SCREWS						
				Magni Coating (Ref 4150701)*						
Size	TPI	Bolt Dia	Tensile Stress Area	Clamp Load See Note 4	Torque (Dry) K = .17		Torque (Loctite® 242™ or 271™ OR Vibra-TITE™ 111 or 140 OR Precoat 85® K=0.16		Torque (Loctite® 262™ or Vibra-TITE™ 131) K=0.15	
		In	Sq In	LB	IN-LB	[N.m]	IN-LB	[N.m]	IN-LB	[N.m]
4	40	0.1120	0.00604							
	48	0.1120	0.00661							
6	32	0.1380	0.00909							
	40	0.1380	0.01015							
8	32	0.1640	0.01400							
	36	0.1640	0.01474							
10	24	0.1900	0.01750							
	32	0.1900	0.02000							
1/4	20	0.2500	0.0318	2860	122	14	114	13		
	28	0.2500	0.0364	3280	139	16	131	15		
		In	Sq In	LB	FT-LB	[N.m]	FT-LB	[N.m]	FT-LB	[N.m]
5/16	18	0.3125	0.0524	4720	20	25	20	25	20	25
	24	0.3125	0.0580	5220	25	35	20	25	20	25
3/8	16	0.3750	0.0775	7000	35	50	35	50	35	50
	24	0.3750	0.0878	7900	40	55	40	55	35	50
7/16	14	0.4375	0.1063	9550	60	80	55	75	50	70
	20	0.4375	0.1187	10700	65	90	60	80	60	80
1/2	13	0.5000	0.1419	12750	90	120	85	115	80	110
	20	0.5000	0.1599	14400	100	135	95	130	90	120
9/16	12	0.5625	0.1820	16400	130	175	125	170	115	155
	18	0.5625	0.2030	18250	145	195	135	185	130	175
5/8	11	0.6250	0.2260	20350	180	245	170	230	160	220
	18	0.6250	0.2560	23000	205	280	190	260	180	245
3/4	10	0.7500	0.3340	30100	320	435	300	410	280	380
	16	0.7500	0.3730	33600	355	485	335	455	315	430
7/8	9	0.8750	0.4620	41600	515	700	485	660	455	620
	14	0.8750	0.5090	45800	570	775	535	730	500	680
1	8	1.0000	0.6060	51500	730	995	685	930	645	875
	12	1.0000	0.6630	59700	845	1150	795	1080	745	1015
1 1/8	7	1.1250	0.7630	68700	1095	1490	1030	1400	965	1310
	12	1.1250	0.8560	77000	1225	1665	1155	1570	1085	1475
1 1/4	7	1.2500	0.9690	87200	1545	2100	1455	1980	1365	1855
	12	1.2500	1.0730	96600	1710	2325	1610	2190	1510	2055
1 3/8	6	1.3750	1.1550	104000	2025	2755	1905	2590	1785	2430
	12	1.3750	1.3150	118100	2300	3130	2165	2945	2030	2760
1 1/2	6	1.5000	1.4050	126500	2690	3660	2530	3440	2370	3225
	12	1.5000	1.5800	142200	3020	4105	2845	3870	2665	3625

NO. 5000059 REV. J

NOTES: 1. THESE TORQUE VALUES DO NOT APPLY TO CADMIUM PLATED FASTENERS
2. ALL TORQUE VALUES ARE STATIC TORQUE MEASURED PER STANDARD AUDIT METHODS TOLERANCE = ±10%
*3. ASSEMBLY USES HARDENED WASHER OR FASTENER IS PLACED AGAINST PLATED STEEL OR RAW ALUMINUM
4. CLAMP LOAD LISTED FOR SHCS IS SAME AS GRADE 8 OR CLASS 10.9 AND DOES NOT REPRESENT FULL STRENGTH CAPABILITY OF SHCS. IF HIGHER LOAD IS REQUIRED, ADDITIONAL TESTING IS REQUIRED.

Figure 1-5. Torque Chart (SAE Fasteners - Sheet 3 of 7)

https://truckmanualshub.com/

				SOCKET HEAD CAP SCREWS						
				Zinc Yellow Chromate Fasteners (Ref 4150707)*						
Size	TPI	Bolt Dia	Tensile Stress Area	Clamp Load See Note 4	Torque (Dry) K = .20		Torque (Loctite® 242™ or 271™ OR Vibra-TITE™ 111 or 140 OR Precoat 85® K=0.18		Torque (Loctite® 262™ or Vibra-TITE™ 131) K=0.15	
		In	Sq In	LB	IN-LB	[N.m]	IN-LB	[N.m]	IN-LB	[N.m]
4	40	0.1120	0.00604							
	48	0.1120	0.00661							
6	32	0.1380	0.00909							
	40	0.1380	0.01015							
8	32	0.1640	0.01400							
	36	0.1640	0.01474							
10	24	0.1900	0.01750							
	32	0.1900	0.02000							
1/4	20	0.2500	0.0318	2860	143	16	129	15		
	28	0.2500	0.0364	3280	164	19	148	17		
		In	Sq In	LB	FT-LB	[N.m]	FT-LB	[N.m]	FT-LB	[N.m]
5/16	18	0.3125	0.0524	4720	25	35	20	25	20	25
	24	0.3125	0.0580	5220	25	35	25	35	20	25
3/8	16	0.3750	0.0775	7000	45	60	40	55	35	50
	24	0.3750	0.0878	7900	50	70	45	60	35	50
7/16	14	0.4375	0.1063	9550	70	95	65	90	50	70
	20	0.4375	0.1187	10700	80	110	70	95	60	80
1/2	13	0.5000	0.1419	12750	105	145	95	130	80	110
	20	0.5000	0.1599	14400	120	165	110	150	90	120
9/16	12	0.5625	0.1820	16400	155	210	140	190	115	155
	18	0.5625	0.2030	18250	170	230	155	210	130	175
5/8	11	0.6250	0.2260	20350	210	285	190	260	160	220
	18	0.6250	0.2560	23000	240	325	215	290	180	245
3/4	10	0.7500	0.3340	30100	375	510	340	460	280	380
	16	0.7500	0.3730	33600	420	570	380	515	315	430
7/8	9	0.8750	0.4620	41600	605	825	545	740	455	620
	14	0.8750	0.5090	45800	670	910	600	815	500	680
1	8	1.0000	0.6060	51500	860	1170	775	1055	645	875
	12	1.0000	0.6630	59700	995	1355	895	1215	745	1015
1 1/8	7	1.1250	0.7630	68700	1290	1755	1160	1580	965	1310
	12	1.1250	0.8560	77000	1445	1965	1300	1770	1085	1475
1 1/4	7	1.2500	0.9690	87200	1815	2470	1635	2225	1365	1855
	12	1.2500	1.0730	96600	2015	2740	1810	2460	1510	2055
1 3/8	6	1.3750	1.1550	104000	2385	3245	2145	2915	1785	2430
	12	1.3750	1.3150	118100	2705	3680	2435	3310	2030	2760
1 1/2	6	1.5000	1.4050	126500	3165	4305	2845	3870	2370	3225
	12	1.5000	1.5800	142200	3555	4835	3200	4350	2665	3625

NO. 5000059 REV. J

NOTES: 1. THESE TORQUE VALUES DO NOT APPLY TO CADMIUM PLATED FASTENERS
2. ALL TORQUE VALUES ARE STATIC TORQUE MEASURED PER STANDARD AUDIT METHODS TOLERANCE = ±10%
*3. ASSEMBLY USES HARDENED WASHER OR FASTENER IS PLACED AGAINST PLATED STEEL OR RAW ALUMINUM
4. CLAMP LOAD LISTED FOR SHCS IS SAME AS GRADE 8 OR CLASS 10.9 AND DOES NOT REPRESENT FULL STRENGTH CAPABILITY OF SHCS. IF HIGHER LOAD IS REQUIRED, ADDITIONAL TESTING IS REQUIRED.

Figure 1-6. Torque Chart (SAE Fasteners - Sheet 4 of 7)

https://truckmanualshub.com/

			Values for Zinc Yellow Chromate Fasteners (Ref 4150707				
			CLASS 8.8 METRIC BOLTS CLASS 8 METRIC NUTS				
Size	PITCH	Tensile Stress Area	Clamp Load	Torque (Dry or Loctite® 263™)	Torque (Lub)	Torque (Loctite® 262™ OR Vibra-TITE™ 131)	Torque (Loctite® 242™ or 271™ OR Vibra-TITE™ 111 or 140)
		Sq mm	KN	[N.m]	[N.m]	[N.m]	[N.m]
3	0.5	5.03	2.19	1.3	1.0	1.2	1.4
3.5	0.6	6.78	2.95	2.1	1.6	1.9	2.3
4	0.7	8.78	3.82	3.1	2.3	2.8	3.4
5	0.8	14.20	6.18	6.2	4.6	5.6	6.8
6	1	20.10	8.74	11	7.9	9.4	12
7	1	28.90	12.6	18	13	16	19
8	1.25	36.60	15.9	26	19	23	28
10	1.5	58.00	25.2	50	38	45	55
12	1.75	84.30	36.7	88	66	79	97
14	2	115	50.0	140	105	126	154
16	2	157	68.3	219	164	197	241
18	2.5	192	83.5	301	226	271	331
20	2.5	245	106.5	426	320	383	469
22	2.5	303	132.0	581	436	523	639
24	3	353	153.5	737	553	663	811
27	3	459	199.5	1080	810	970	1130
30	3.5	561	244.0	1460	1100	1320	1530
33	3.5	694	302.0	1990	1490	1790	2090
36	4	817	355.5	2560	1920	2300	2690
42	4.5	1120	487.0	4090	3070	3680	4290

NO. 5000059 REV. J

NOTES: 1. THESE TORQUE VALUES DO NOT APPLY TO CADMIUM PLATED FASTENERS
2. ALL TORQUE VALUES ARE STATIC TORQUE MEASURED PER STANDARD AUDIT METHODS TOLERANCE = ±10%
*3. ASSEMBLY USES HARDENED WASHER OR FASTENER IS PLACED AGAINST PLATED STEEL OR RAW ALUMINUM
4. CLAMP LOAD LISTED FOR SHCS IS SAME AS GRADE 8 OR CLASS 10.9 AND DOES NOT REPRESENT FULL STRENGTH CAPABILITY OF SHCS. IF HIGHER LOAD IS REQUIRED, ADDITIONAL TESTING IS REQUIRED.

Figure 1-7. Torque Chart (METRIC Fasteners - Sheet 5 of 7))

https://truckmanualshub.com/

			Values for Zinc Yellow Chromate Fasteners (Ref 4150707)			
			CLASS 10.9 METRIC BOLTS CLASS 10 METRIC NUTS CLASS 12.9 SOCKET HEAD CAP SCREWS M3 - M5*			
Size	PITCH	Tensile Stress Area	Clamp Load	Torque (Dry or Loctite® 263™) K = 0.20	Torque (Lub OR Loctite® 242™ or 271™ OR Vibra-TITE™ 111 or 140) K= 0.18	Torque (Loctite® 262™ OR Vibra-TITE™ 131) K=0.15
		Sq mm	KN	[N.m]	[N.m]	[N.m]
3	0.5	5.03	3.13			
3.5	0.6	6.78	4.22			
4	0.7	8.78	5.47			
5	0.8	14.20	8.85			
6	1	20.10	12.5			
7	1	28.90	18.0	25.2	22.7	18.9
8	1.25	36.60	22.8	36.5	32.8	27.4
10	1.5	58.00	36.1	70	65	55
12	1.75	84.30	52.5	125	115	95
14	2	115	71.6	200	180	150
16	2	157	97.8	315	280	235
18	2.5	192	119.5	430	385	325
20	2.5	245	152.5	610	550	460
22	2.5	303	189.0	830	750	625
24	3	353	222.0	1065	960	800
27	3	459	286.0	1545	1390	1160
30	3.5	561	349.5	2095	1885	1575
33	3.5	694	432.5	2855	2570	2140
36	4	817	509.0	3665	3300	2750
42	4.5	1120	698.0	5865	5275	4395

NO. 5000059 REV. J

NOTES: 1. THESE TORQUE VALUES DO NOT APPLY TO CADMIUM PLATED FASTENERS
2. ALL TORQUE VALUES ARE STATIC TORQUE MEASURED PER STANDARD AUDIT METHODS TOLERANCE = ±10%
*3. ASSEMBLY USES HARDENED WASHER OR FASTENER IS PLACED AGAINST PLATED STEEL OR RAW ALUMINUM
4. CLAMP LOAD LISTED FOR SHCS IS SAME AS GRADE 8 OR CLASS 10.9 AND DOES NOT REPRESENT FULL STRENGTH CAPABILITY OF SHCS. IF HIGHER LOAD IS REQUIRED, ADDITIONAL TESTING IS REQUIRED.

Figure 1-8. Torque Chart (METRIC Fasteners - Sheet 6 of 7)

https://truckmanualshub.com/

			Magni Coating (Ref 4150701)*			
			CLASS 12.9 SOCKET HEAD CAP SCREWS M6 AND ABOVE*			
Size	PITCH	Tensile Stress Area	Clamp Load See Note 4	Torque (Dry or Loctite® 263™) K = .17	Torque (Lub OR Loctite® 242™ or 271™ OR Vibra-TITE™ 111 or 140) K = .16	Torque (Loctite® 262™ OR Vibra-TITE™ 131) K = .15
		Sq mm	kN	[N.m]	[N.m]	[N.m]
3	0.5	5.03				
3.5	0.6	6.78				
4	0.7	8.78				
5	0.8	14.20				
6	1	20.10	12.5	13	12	11
7	1	28.90	18.0	21	20	19
8	1.25	36.60	22.8	31	29	27
10	1.5	58.00	36.1	61	58	54
12	1.75	84.30	52.5	105	100	95
14	2	115	71.6	170	160	150
16	2	157	97.8	265	250	235
18	2.5	192	119.5	365	345	325
20	2.5	245	152.5	520	490	460
22	2.5	303	189.0	705	665	625
24	3	353	220.0	900	845	790
27	3	459	286.0	1315	1235	1160
30	3.5	561	349.5	1780	1680	1575
33	3.5	694	432.5	2425	2285	2140
36	4	817	509.0	3115	2930	2750
42	4.5	1120	698.0	4985	4690	4395

NO. 5000059 REV. J

NOTES: 1. THESE TORQUE VALUES DO NOT APPLY TO CADMIUM PLATED FASTENERS
2. ALL TORQUE VALUES ARE STATIC TORQUE MEASURED PER STANDARD AUDIT METHODS TOLERANCE = ±10%
*3. ASSEMBLY USES HARDENED WASHER OR FASTENER IS PLACED AGAINST PLATED STEEL OR RAW ALUMINUM
4. CLAMP LOAD LISTED FOR SHCS IS SAME AS GRADE 8 OR CLASS 10.9 AND DOES NOT REPRESENT FULL STRENGTH CAPABILITY OF SHCS. IF HIGHER LOAD IS REQUIRED, ADDITIONAL TESTING IS REQUIRED.

Figure 1-9. Torque Chart (METRIC Fasteners - Sheet 7 of 7)

https://truckmanualshub.com/

SECTION 2. GENERAL

2.1 MACHINE PREPARATION, INSPECTION, AND MAINTENANCE

General

This section provides the necessary information needed by those personnel that are responsible to place the machine in operation readiness and maintain its safe operating condition. For maximum service life and safe operation, ensure that all the necessary inspections and maintenance have been completed before placing the machine into service.

Preparation, Inspection, and Maintenance

It is important to establish and conform to a comprehensive inspection and preventive maintenance program. The following table outlines the periodic machine inspections and maintenance recommended by JLG Industries, Inc. Consult your national, regional, or local regulations for further requirements for aerial work platforms. The frequency of inspections and maintenance must be increased as environment, severity and frequency of usage requires.

Pre-Start Inspection

It is the User's or Operator's primary responsibility to perform a Pre-Start Inspection of the machine prior to use daily or at each change of operator. Reference the Operator's and Safety Manual for completion procedures for the Pre-Start Inspection. The Operator and Safety Manual must be read in its entirety and understood prior to performing the Pre-Start Inspection.

Pre-Delivery Inspection and Frequent Inspection

The Pre-Delivery Inspection and Frequent Inspection shall be performed by a qualified JLG equipment mechanic. JLG Industries, Inc. recognizes a qualified JLG equipment mechanic as a person who, by possession of a recognized degree, certificate, extensive knowledge, training, or experience, has successfully demonstrated the ability and proficiency to service, repair, and maintain the subject JLG product model.

The Pre-Delivery Inspection and Frequent Inspection procedures are performed in the same manner, but at different times. The Pre-Delivery Inspection shall be performed prior to each sale, lease, or rental delivery. The Frequent Inspection shall be accomplished for each machine in service for 3 months or 150 hours (whichever comes first); out of service for a period of more than 3 months; or when purchased used. The frequency of this inspection must be increased as environment, severity and frequency of usage requires.

Reference the JLG Pre-Delivery and Frequent Inspection Form and the Inspection and Preventative Maintenance Schedule for items requiring inspection during the performance of these inspections. Reference the appropriate areas of this manual for servicing and maintenance procedures.

Annual Machine Inspection

JLG recommends that an annual machine inspection be performed by a Factory-Certified Service Technician on an annual basis, no later than thirteen (13) months from the date of the prior Annual Machine Inspection. JLG Industries, Inc. recognizes a Factory-Certified Service Technician as a person who has successfully completed the JLG Service Training School for the subject JLG product model. Reference the machine Service and Maintenance Manual and appropriate JLG inspection form for performance of this inspection.

Reference the JLG Annual Machine Inspection Form and the Inspection and Preventative Maintenance Schedule for items requiring inspection during the performance of this inspection. Reference the appropriate areas of this manual for servicing and maintenance procedures.

For the purpose of receiving safety-related bulletins, it is important that JLG Industries, Inc. has updated ownership information for each machine. When performing each Annual Machine Inspection, notify JLG Industries, Inc. of the current machine ownership.

Preventative Maintenance

In conjunction with the specified inspections, maintenance shall be performed by a qualified JLG equipment mechanic. JLG Industries, Inc. recognizes a qualified JLG equipment mechanic as a person who, by possession of a recognized degree, certificate, extensive knowledge, training, or experience, has successfully demonstrated the ability and proficiency to service, repair, and maintain the subject JLG product model.

Reference the Preventative Maintenance Schedule and the appropriate areas of this manual for servicing and maintenance procedures. The frequency of service and maintenance must be increased as environment, severity and frequency of usage requires.

https://truckmanualshub.com/

Table 2-1. Inspection and Maintenance

Type	Frequency	Primary Responsibility	Service Qualification	Reference
Pre-Start Inspection	Prior to use each day; or At each Operator change.	User or Operator	User or Operator	Operator and Safety Manual
Pre-Delivery Inspection	Prior to each sale, lease, or rental delivery.	Owner, Dealer, or User	Qualified JLG Mechanic	Service and Maintenance Manual and applicable JLG inspection form.
Frequent Inspection	In service for 3 months or 150 hours, whichever comes first; or Out of service for a period of more than 3 months; or Purchased used.	Owner, Dealer, or User	Qualified JLG Mechanic	Service and Maintenance Manual and applicable JLG inspection form.
Annual Machine Inspection	Annually, no later than 13 months from the date of the prior inspection.	Owner, Dealer, or User	Factory-Certified Service Technician or a Qualified JLG Mechanic	Service and Maintenance Manual and applicable JLG inspection form.
Preventative Maintenance	At intervals as specified in the Service and Maintenance Manual.	Owner, Dealer, or User	Qualified JLG Mechanic	Service and Maintenance Manual

2.2 SERVICE AND GUIDELINES

General

The following information is provided to assist you in the use and application of servicing and maintenance procedures contained in this book.

Safety and Workmanship

Your safety, and that of others, is the first consideration when engaging in the maintenance of equipment. Always be conscious of weight. Never attempt to move heavy parts without the aid of a mechanical device. Do not allow heavy objects to rest in an unstable position. When raising a portion of the equipment, ensure that adequate support is provided.

Cleanliness

NOTICE

IT IS GOOD PRACTICE TO AVOID PRESSURE-WASHING ELECTRICAL/ELECTRONIC COMPONENTS. IN THE EVENT PRESSURE-WASHING THE MACHINE IS NEEDED, ENSURE THE MACHINE IS SHUT DOWN BEFORE PRESSURE-WASHING. SHOULD PRESSURE WASHING BE UTILIZED TO WASH AREAS CONTAINING ELECTRICAL/ELECTRONIC COMPONENTS, JLG INDUSTRIES, INC. RECOMMENDS A MAXIMUM PRESSURE OF 750 PSI (52 BAR) AT A MINIMUM DISTANCE OF 12 INCHES (30.5 CM) AWAY FROM THESE COMPONENTS. IF ELECTRICAL/ELECTRONIC COMPONENTS ARE SPRAYED, SPRAYING MUST NOT BE DIRECT AND BE FOR BRIEF TIME PERIODS TO AVOID HEAVY SATURATION.

1. The most important single item in preserving the long service life of a machine is to keep dirt and foreign materials out of the vital components. Precautions have been taken to safeguard against this. Shields, covers, seals, and filters are provided to keep air, fuel, and oil supplies clean; however, these items must be maintained on a scheduled basis in order to function properly.

2. At any time when air, fuel, or oil lines are disconnected, clear adjacent areas as well as the openings and fittings themselves. As soon as a line or component is disconnected, cap or cover all openings to prevent entry of foreign matter.

3. Clean and inspect all parts during servicing or maintenance, and assure that all passages and openings are unobstructed. Cover all parts to keep them clean. Be sure all parts are clean before they are installed. New parts should remain in their containers until they are ready to be used.

Components Removal and Installation

1. Use adjustable lifting devices, whenever possible, if mechanical assistance is required. All slings (chains, cables, etc.) should be parallel to each other and as near perpendicular as possible to top of part being lifted.

2. Should it be necessary to remove a component on an angle, keep in mind that the capacity of an eyebolt or similar bracket lessens, as the angle between the supporting structure and the component becomes less than 90°.

3. If a part resists removal, check to see whether all nuts, bolts, cables, brackets, wiring, etc., have been removed and that no adjacent parts are interfering.

https://truckmanualshub.com/

Component Disassembly and Reassembly

When disassembling or reassembling a component, complete the procedural steps in sequence. Do not partially disassemble or assemble one part, then start on another. Always recheck your work to assure that nothing has been overlooked. Do not make any adjustments, other than those recommended, without obtaining proper approval.

Pressure-Fit Parts

When assembling pressure-fit parts, use an anti-seize or molybdenum disulfide base compound to lubricate the mating surface.

Bearings

1. When a bearing is removed, cover it to keep out dirt and abrasives. Clean bearings in nonflammable cleaning solvent and allow to drip dry. Compressed air can be used but do not spin the bearing.
2. Discard bearings if the races and balls (or rollers) are pitted, scored, or burned.
3. If bearing is found to be serviceable, apply a light coat of oil and wrap it in clean (waxed) paper. Do not unwrap reusable or new bearings until they are ready to install.
4. Lubricate new or used serviceable bearings before installation. When pressing a bearing into a retainer or bore, apply pressure to the outer race. If the bearing is to be installed on a shaft, apply pressure to the inner race.

Gaskets

Check that holes in gaskets align with openings in the mating parts. If it becomes necessary to hand-fabricate a gasket, use gasket material or stock of equivalent material and thickness. Be sure to cut holes in the right location, as blank gaskets can cause serious system damage.

Bolt Usage and Torque Application

1. Use bolts of proper length. A bolt which is too long will bottom before the head is tight against its related part. If a bolt is too short, there will not be enough thread area to engage and hold the part properly. When replacing bolts, use only those having the same specifications of the original, or one which is equivalent.
2. Unless specific torque requirements are given within the text, standard torque values should be used on heat-treated bolts, studs, and steel nuts, in accordance with recommended shop practices. (See Torque Chart Section 1.)

Hydraulic Lines and Electrical Wiring

Clearly mark or tag hydraulic lines and electrical wiring, as well as their receptacles, when disconnecting or removing them from the unit. This will assure that they are correctly reinstalled.

Hydraulic System

1. Keep the system clean. If evidence of metal or rubber particles are found in the hydraulic system, drain and flush the entire system.
2. Disassemble and reassemble parts on clean work surface. Clean all metal parts with non-flammable cleaning solvent. Lubricate components, as required, to aid assembly.

Lubrication

Service applicable components with the amount, type, and grade of lubricant recommended in this manual, at the specified intervals. When recommended lubricants are not available, consult your local supplier for an equivalent that meets or exceeds the specifications listed.

Battery

Clean battery, using a non-metallic brush and a solution of baking soda and water. Rinse with clean water. After cleaning, thoroughly dry battery and coat terminals with an anti corrosion compound.

Lubrication and Servicing

Components and assemblies requiring lubrication and servicing are shown in the Lubrication Chart in Section 1.

2.3 LUBRICATION AND INFORMATION

Hydraulic System

1. The primary enemy of a hydraulic system is contamination. Contaminants enter the system by various means, e.g., using inadequate hydraulic oil, allowing moisture, grease, filings, sealing components, sand, etc., to enter when performing maintenance, or by permitting the pump to cavitate due to insufficient system warm-up or leaks in the pump supply (suction) lines.
2. The design and manufacturing tolerances of the component working parts are very close, therefore, even the smallest amount of dirt or foreign matter entering a system can cause wear or damage to the components and generally results in faulty operation. Every precaution must be taken to keep hydraulic oil clean, including reserve oil in storage. Hydraulic system filters should be checked, cleaned, and/or replaced as necessary, at the specified intervals required in the Lubrication Chart in

https://truckmanualshub.com/

Section 1. Always examine filters for evidence of metal particles.

3. Cloudy oils indicate a high moisture content which permits organic growth, resulting in oxidation or corrosion. If this condition occurs, the system must be drained, flushed, and refilled with clean oil.

4. It is not advisable to mix oils of different brands or types, as they may not contain the same required additives or be of comparable viscosities. Good grade mineral oils, with viscosities suited to the ambient temperatures in which the machine is operating, are recommended for use.

NOTE: *Metal particles may appear in the oil or filters of new machines due to the wear-in of meshing components.*

Hydraulic Oil

1. Refer to Section 1 for recommendations for viscosity ranges.

2. JLG recommends Mobilfluid 424 hydraulic oil, which has an SAE viscosity of 10W-30 and a viscosity index of 152.

NOTE: *Start-up of hydraulic system with oil temperatures below -15°F (-26°C) is not recommended. If it is necessary to start the system in a sub-zero environment, it will be necessary to heat the oil with a low density, 100VAC heater to a minimum temperature of -15°F (-26°C).*

3. The only exception to the above is to drain and fill the system with Mobil DTE 13 oil or its equivalent. This will allow start up at temperatures down to -20° F (-29° C). However, use of this oil will give poor performance at temperatures above 120°F (49°C). Systems using DTE 13 oil should not be operated at temperatures above 200°F (94°C) under any condition.

Changing Hydraulic Oil

1. Use of any of the recommended hydraulic oils eliminates the need for changing the oil on a regular basis. However, filter elements must be changed after the first 50 hours of operation and every 300 hours thereafter. If it is necessary to change the oil, use only those oils meeting or exceeding the specifications appearing in this manual. If unable to obtain the same type of oil supplied with the machine, consult local supplier for assistance in selecting the proper equivalent. Avoid mixing petroleum and synthetic base oils. JLG Industries recommends changing the hydraulic oil annually.

2. Use every precaution to keep the hydraulic oil clean. If the oil must be poured from the original container into another, be sure to clean all possible contaminants from the service container. Always clean the mesh element of the filter and replace the cartridge any time the system oil is changed.

3. While the unit is shut down, a good preventive maintenance measure is to make a thorough inspection of all hydraulic components, lines, fittings, etc., as well as a functional check of each system, before placing the machine back in service.

Lubrication Specifications

Specified lubricants, as recommended by the component manufacturers, are always the best choice, however, multi-purpose greases usually have the qualities which meet a variety of single purpose grease requirements. Should any question arise, regarding the use of greases in maintenance stock, consult your local supplier for evaluation. Refer to Section 1 for an explanation of the lubricant key designations appearing in the Lubrication Chart.

2.4 CYLINDER DRIFT TEST

Maximum acceptable cylinder drift is to be measured using the following methods.

Platform Drift

Measure the drift of the platform to the ground. Fully elevate the platform. Maximum allowable drift is 2 in. (5 cm) in 10 minutes. If the machine does not pass this test, proceed with the following.

Cylinder Drift

Table 2-2. Cylinder Drift

Cylinder Bore Diameter		Max. Acceptable Drift in 10 Minutes	
inches	mm	inches	mm
3	76.2	0.026	0.66
3.5	89	0.019	0.48
4	101.6	0.015	0.38
5	127	0.009	0.22
6	152.4	0.006	0.15
7	177.8	0.005	0.13

Drift is to be measured at the cylinder rod with a calibrated dial indicator. The cylinder oil must be at ambient temperature and temperature stabilized.

The cylinder must have the normal load, which is the normal platform load applied.

If the cylinder passes this test, it is acceptable.

NOTE: *This information is based on 6 drops per minute cylinder leakage.*

https://truckmanualshub.com/

2.5 PINS AND COMPOSITE BEARING REPAIR GUIDELINES

Filament wound bearings.

1. Pinned joints should be disassembled and inspected if the following occurs:
   a. Excessive sloppiness in joints.
   b. Noise originating from the joint during operation.
2. Filament wound bearings should be replaced if any of the following is observed:
   a. Frayed or separated fibers on the liner surface.
   b. Cracked or damaged liner backing.
   c. Bearings that have moved or spun in their housing.
   d. Debris embedded in liner surface.
3. Pins should be replaced if any of the following is observed (pin should be properly cleaned prior to inspection):
   a. Detectable wear in the bearing area.
   b. Flaking, pealing, scoring, or scratches on the pin surface.
   c. Rusting of the pin in the bearing area.
4. Re-assembly of pinned joints using filament wound bearings.
   a. Housing should be blown out to remove all dirt and debris...bearings and bearing housings must be free of all contamination.
   b. Bearing / pins should be cleaned with a solvent to remove all grease and oil...filament wound bearing are a dry joint and should not be lubricated.
   c. Pins should be inspected to ensure it is free of burrs, nicks, and scratches which would damage the bearing during installation and operation.

2.6 PREVENTIVE MAINTENANCE AND INSPECTION SCHEDULE

The preventive maintenance and inspection checks are listed and defined in the following table. This table is divided into two basic parts, the “AREA” to be inspected, and the “INTERVAL” at which the inspection is to take place. Under the “AREA” of the table, the various systems along with components that make up that system are listed. The “INTERVAL” portion of the table is divided into five columns representing the various inspection time periods. The numbers listed within the interval column represent the applicable inspection code for which that component is to be checked.

The checks and services listed in this schedule are not intended to replace any local or regional regulations that may pertain to this type of equipment nor should the lists be considered as all inclusive. Variances in interval times may occur due to climate and/or conditions and depending on the location and use of the machine.

JLG Industries requires that a complete annual inspection be performed in accordance with the “Annual Machine Inspection Report” form. Forms are supplied with each new machine and are also available from JLG Customer Service. Forms must be completed and returned to JLG Industries.

NOTICE

JLG INDUSTRIES REQUIRES THAT A COMPLETE ANNUAL INSPECTION BE PERFORMED IN ACCORDANCE WITH THE “ANNUAL MACHINE INSPECTION REPORT” FORM.

NOTE: *This machine requires periodic safety and maintenance inspections by a JLG Dealer. A decal located on the frame affords a place to record (stamp) inspection dates. Notify dealer if inspection is overdue.*

The inspection and maintenance code numbers are as follows:

1. Check for proper and secure installation.
2. Check for visible damage and legibility.
3. Check for proper fluid level.
4. Check for any structural damage; cracked or broken welds; bent or warped surfaces.
5. Check for leakage.
6. Check for presence of excessive dirt or foreign material.
7. Check for proper operation and freedom of movement.
8. Check for excessive wear or damage.
9. Check for proper tightness and adjustment.
10. Drain, clean and refill.
11. Check for proper operation while unit power is on.
12. Check for proper lubrication.
13. Check for evidence of scratches, nicks or rust and for straightness of rod.
14. Check for condition of element; replace as necessary.
15. Check for proper inflation.
16. Clean or replace suction screen.

https://truckmanualshub.com/

Table 2-3. Preventive Maintenance and Inspection Schedule

AREA	INTERVAL				
PLATFORM	10 HOURS DAILY	50 HOURS WEEKLY	200 HOURS MONTHLY	500 HOURS 3 MONTHS	1000 HOURS 6 MONTHS
1. Controller	1, 11				
2. Switches	1, 11				
3. Placards and Decals	1, 2				
4. Control Tags	1, 2				
5. Hoses and Cables	1	5, 8			
6. Wear Pads			8		
7. Handrail and Chains	1, 4				
CHASSIS					
1. Batteries	3	5			
2. Battery Charger	1				
3. Hydraulic Pump/Motor	1	5			
4. Valves	1	5			
5. Hydraulic Filter* (Also see note)		5, 14	14		
6. Hydraulic Hoses and Tubing	1	5			
7. Hydraulic Oil Tank*	3	5	4		
8. Breather - Hydraulic Tank		6, 14			
9. Lift Cylinder	1	5, 6,13	4		
10. Limit Switch	1, 7				
11. Placards and Decals	1, 2				
12. Wheel and Tire Assemblies	1	8, 9			
13. Drive Motors	1, 5	1, 6			
14. Drive Torque Hubs	1, 3, 5	1, 3, 5, 6			6
15. Drive Brakes		1, 6			8
16. Steer Cylinder	1	5, 6, 13	4		
17. Steer Components	1	4, 6	8		
18. Wheel Bearings					8
19. Sizzor Arms	1, 4				
20. Safety Prop	1, 4				
21. Wear Pads			8		
22. Pivot Pins/Bolts	1, 4		7, 8		
23. Switches, Ground Control	1, 11				
24. Control Tags	1,2				
25. Hose and Cable	1	4, 8			
*** Inspection and Maintenance Code 10 to be performed annually.**					

NOTE: *If function speeds are slow on a fully charged machine a clogged filter may be indicated. Change filter.*

https://truckmanualshub.com/

SECTION 3. CHASSIS & SCISSOR ARMS

3.1 CALIBRATIONS

Elevation Sensor Calibration (Prior to Software V13.6)

NOTE: *Make sure your analyzer is in ACCES LEVEL 1.*

When using the analyzer the terms referring to ROTARY & PROXIMITY sensors are ELEV SENSOR & ELEV PROX.

Use ELEV SENSOR sub level menu for rotary switch adjustments.

Use SET ELEV SENSOR top level menu for proximity switch adjustment and final calibrations.

NOTE: *If the Always set the rotary switch first before the proximity switch because they back each other up in the case of a component failure.*

1. When mounting, make sure the rotary switch is aligned with the bladed pin mounted on the scissor arm. There must be a preload when installing the rotary switch on the bladed pin bracket, similar to a throttle actuator.
2. There are (3) 3/8 mounting screws that hold the switch onto the scissor arm mounting lug, make sure they are snug, not loose, so you are able to rotate the rotary switch.
3. Make sure the deck is fully lowered. Plug in the analyzer and scroll through DIAGNOSTICS/ELEV SENSOR to ANGLE SNSR. This should read 0.40v - 0.45v.

NOTE: *Anytime the ground control board or if the rotary sensor is replaced the rotary sensor must be reset (zeroed out).*

4. If the reading is not within the spec, adjust the rotary switch by rotating the bracket and viewing the analyzer.
5. Loosen the hardware that holds the proximity switch and allow the switch to drop to the bottom of the slide bracket. Using the analyzer, press escape twice and scroll through ACCESS LEVEL 2. enter the password to get into ACCESS LEVEL 1. Scroll to SET ELEV SENSOR and after pressing ENTER you should hear the motion alarm sounding off. This puts the machine in adjustment mode.

NOTE: *If your machine does not have a motion alarm, the following procedures will still apply.*

6. Lift the platform up until it stops lifting, this will be the lift cut-out height.
7. Using the analyzer, press ESCAPE, scroll to DIAGNOSTICS, press ENTER, scroll to ELEV SENSOR and press ENTER. You should now see ANGLE SNSR. The setting here should be 0.60v - 0.70v. This is the rotary switch output voltage that is being sent to J2-15 of GEC at the lift cutout mark. A fully elevated platform will read 2.95 volts.
8. Press ESCAPE on the analyzer, scroll to SYSTEM then to ELEV PROX OPEN. Now manually adjust the proximity switch until you see the analyzer read ELEV PROX CLOSED. At this point make sure you have the maximum 5/16 in of clearance between the eye of the proximity switch and the scissor arm. If you don't, shim it. If everything is okay at this point tighten it down, this setting is required in case the rotary switch fails. The proximity switch is a back up to assure proper lift cut-out.

NOTE: *If the gap ever increases beyond 5/16 in., the switch may cause intermittent operation.*

9. Completely lower the platform. Using the analyzer press escape and scroll through DIAGNOSTICS and then go to ELEV SENSOR, press ENTER. Check to see that the following items are reading correctly.

   ANGLE SNSR 0.40 - 0.45

   ZEROED 0.00V

   SENSOR OK

   STOWED? YES

   ELEVATED? NO

   DRIVE? YES

   CALIB 0.40 - 0.45
10. If CALIB; reads whatever you set your rotary switch to (0.40 - 0.45) then press ENTER.
11. Press ESCAPE until you arrive at DIAGNOSTICS, then scroll over to top level menu SET ELV SENSOR, press ENTER, an alarm will sound off if your machine is equipped with one. The analyzer will now ask to SET ELEV SENSOR. At this point press ENTER key. If everything tested properly the analyzer will read COMPLETE.
12. Now lift the machine up until it stops lifting, measure the cutback height;

    M3369/3369LE - 8 ft - 9.5 ft (2.4 - 2.9 m)

    M4069/4069LE - 9.5 ft - 11.7 ft (2.9 - 3.6 m)

https://truckmanualshub.com/

13. Press ESCAPE, remove analyzer and assure all hardware is tight.

Elevation Sensor Calibration (Software V13.6 and Higher)

Using the Analyzer, in Access Level 1, go to MENU: CALIBRATION:

1. SET STOW ELEV;
   a. Completely lower platform to stowed position.
   b. Enter YES on the Analyzer.
   c. COMPLETE will show on the analyzer when calibrated.
2. SET 25FT ELEV (3369LE) or SET 30FT ELEV (4069LE);
   a. Raise platform to a height of 25 feet for the 3369LE or 30 feet for the 4069LE (measured deck to ground).
   b. Enter YES on the Analyzer.
   c. COMPLETE will show on the analyzer when calibrated.
3. SET 30FT ELEV (3369LE) or SET 36FT ELEV (4069LE);
   a. Raise platform to a height of 30 feet on the 3369LE or 36 feet for the 4069LE (measured deck to ground).
   b. Enter YES on the Analyzer.
   c. COMPLETE will show on the analyzer when calibrated.

NOTE: *Elevation Proximity Switch must be mounted and functioning properly to calibrate the Elevation Sensor.*

Speed Sensor

The speed sensor is located at the lower side of the left, front drive motor. If removing the speed sensor for any reason use the following procedure.

1. Using an 18mm wrench, remove the speed sensor from the left, front drive motor.
2. If reusing the speed sensor note the location of the brass feral on the sensor. Do not remove, this will be the depth gauge when you replace the sensor.
3. When replacing, seat the sensor so that it fits snug in the motor on the brass feral.

NOTE: *If replacing the speed sensor, the new sensor will have a wax pill on the end of the sensor. Tighten down until you feel the wax pill bottom out inside the motor.*

4. Tighten up the packing nut.

Tilt Sensor Calibration:

1. Drive the machine onto a measured level surface (±0.5° for both x and y axis).
2. Using the Analyzer, go to MENU: CALIBRATION; TILT SENSOR. Press Enter. LEVEL VEHICLE will display. Press Enter again to calibrate.
3. Both axis' raw angles need to be within ±5.0°, otherwise the machine is to unlevel and the software will prohibit calibration. Should this occur, attempt to dissect the three areas of error to find the primary contributor:
   a. Machine mounting and/or grade:
   With a digital level, measure the top of the Ground Control box for levelness. If unable to get a good reading, check the box's mounting surface for levelness.

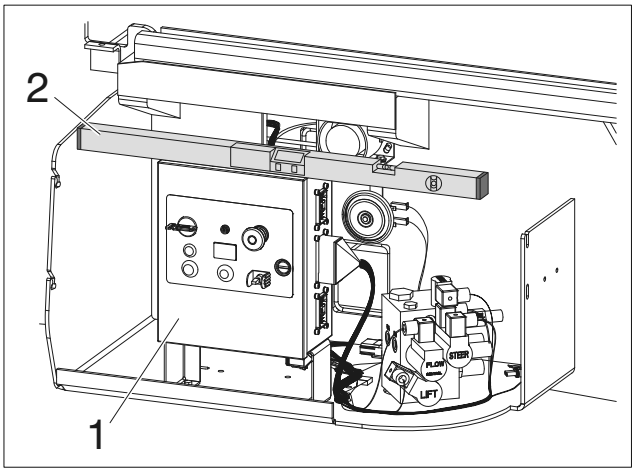

1. Ground Control Box
2. Digital Level

https://truckmanualshub.com/

b. Tilt sensor mounting on machine or wedged crooked in control box:
If the machine mounting/grade appears acceptable, open the Ground Control box carefully. Observe whether the tilt sensor is properly seated.

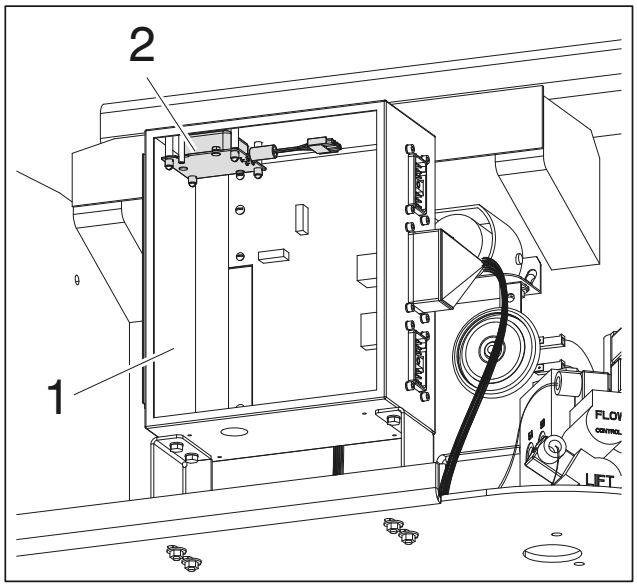

1. Ground Control Box
2. Tilt Sensor

c. Tilt sensor has developed an offset shift:
Remove the tilt sensor from the Ground Control box, but keep both the tilt sensor and Ground Control box electrically connected. Level one axis of the tilt sensor and observe the raw reading (should be within ±2.0°). Do the same for the other axis. If either axis is greater than ±2.0°, replace the tilt sensor.

Some possible reasons that the tilt sensor will not calibrate are:

a. The surface the machine is sitting on is off level by a few degrees (flat doesn't imply level; parking lots are often not level).

b. The tilt sensor has failed one or both of the channels (X axis and Y axis).

c. Tilt sensor has moisture intrusion that has shifted its output.

d. Water and/or corrosion in the box has corrupted electrical connections or caused a tilt sensor or ground control board failure (observe any cracks in the box).

e. The Ground Control Box, as mounted on the machine, does not allow the tilt sensor to be level.

For the following troubleshooting steps, a bubble level (smaller is better) will be needed and the machine must be on a level surface:

1. On the Analyzer, go to Diagnostics/System and read the tilt angle. If either angle reports +20.0°, there is an electrical/electronic failure (tilt sensor, control board, electrical connections).
   a. Open the Ground Control Box.
   b. Disconnect the sensor and clean any corrosion off of the tilt sensor and control board connections.
   c. Reassemble and test. If fault persists, replace tilt sensor.
2. If the Analyzer displays angles other than +20.0°, attempt to calibrate. If machine will not calibrate, note the reason displayed on Analyzer:
   a. SENSOR FAILURE – tilt sensor internal frequency is out of range (replace sensor).
   b. NOT LEVEL - tilt sensor has either developed an offset or it is to unlevel as mounted on the machine.

Joystick Calibration (SW V13.5 & Higher and P1.0 & Higher)

Using the Analyzer, in Access Level 1, go to MENU: CALIBRATION: JOYSTICK and press ENTER.

1. Following the analyzer screen prompts:
   a. Move the Joystick FORWARD and press ENTER.
   b. Allow Joystick to be in CENTER position and press ENTER.
   c. Move the Joytstick REVERSE and press ENTER.
2. CAL COMPLETE or CAL FAILED will display on the analyzer.
3. Possible reasons if calibration failed:
   a. The forward position must be a lower voltage than reverse position.
   b. The difference between center and forward & center and reverse must be atleast 1V.

https://truckmanualshub.com/

3.2 TILT SENSOR

Tilt Sensor, JLG P/N 4000006:

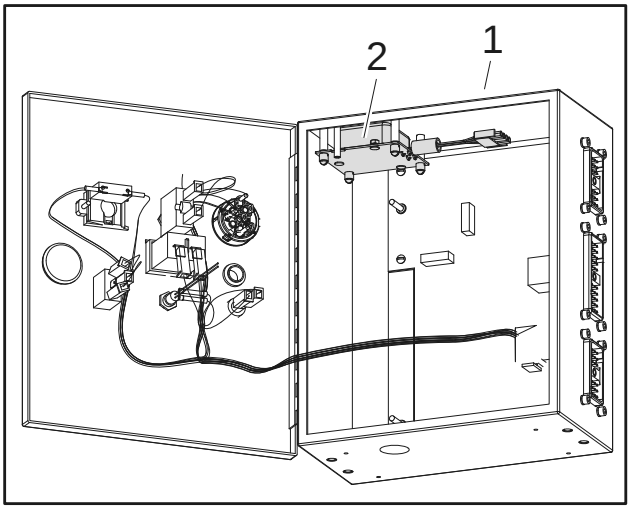

1. Ground Control Box
2. Tilt Sensor (JLG P/N 4000006)

Figure 3-1. Tilt Sensor Location

Tilt Sensor Removal:

NOTE: *Refer to Figure 3-2., Tilt Sensor Removal for numbers in parenthesis.*

1. Disconnect the batteries.
2. Open the Ground Control Box to gain access to the Tilt Sensor Assembly.
3. Remove the four Screws (2) and Lockwashers (3) to remove the Tilt Sensor (1) from the Ground Control Box.

NOTE: *Follow the above procedures in reverse order when installing the tilt sensor assembly. After installing, be sure to calibrate the tilt sensor (refer to Section 3.1, Calibrations).*

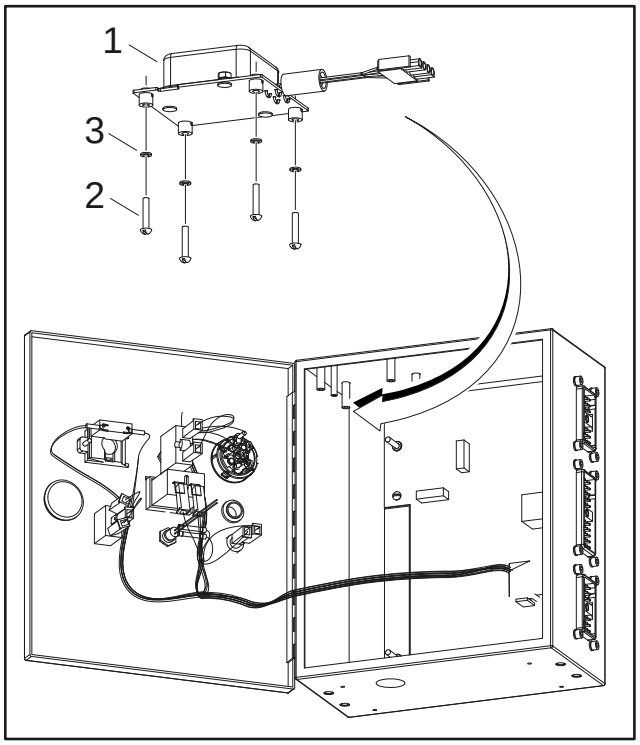

1. Tilt Sensor (JLG P/N 4000006)
2. Screw, 6-32 x 3/4
3. Lockwasher

Figure 3-2. Tilt Sensor Removal

Table 3-1. Tilt Sensor Harness Chart

Wire Color	Function	Connector Pin
Red	VCC	1
Black	Ground	4
Blue	PWMX	2
Yellow	PWMY	3

https://truckmanualshub.com/

Tilt Sensor, JLG P/N 4000021:

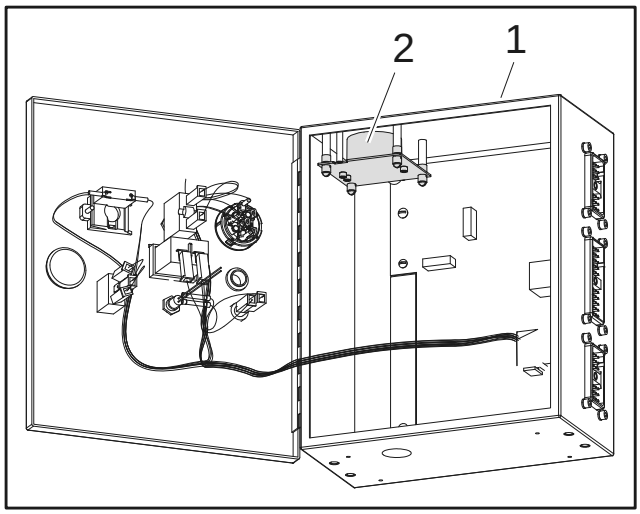

1. Ground Control Box
2. Tilt Sensor Assembly (JLG P/N 1810140)

Figure 3-3. Tilt Sensor Location

NOTE: *Refer to Figure 3-4., Tilt Sensor Removal for numbers in parenthesis.*

1. Disconnect the batteries.
2. Open the Ground Control Box to gain access to the Tilt Sensor Assembly.
3. Remove the four Screws (3), Lockwashers (4), Standoff Insulators (5), and Washers (6) to remove the Tilt Sensor (1) and Sensor Mount (2) from the Ground Control Box.
4. The Tilt Sensor (1) can be removed from the Sensor Mount (2) by removing the three Screws (7).

NOTE: *Follow the above procedures in reverse order when installing the tilt sensor assembly. After installing, be sure to calibrate the tilt sensor (refer to Section 3.1, Calibrations).*

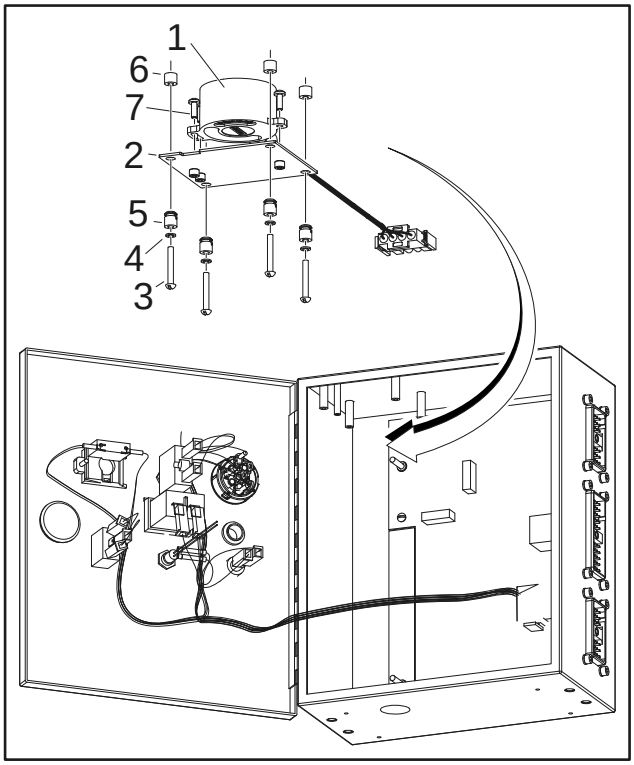

1. Tilt Sensor (JLG P/N 4000021)
2. Sensor Mount
3. Screw, 6-32 x 1
4. Lockwasher
5. Standoff Insulator
6. Washer, 0.313 x 0.250 Nylon
7. Screw, M3.5 x 0.6 x 10

Figure 3-4. Tilt Sensor Removal

Table 3-2. Tilt Sensor Harness

Wire Color	Function	Connector Pin
Red	VCC	1
Green	PWMX	2
White	PWMY	3
Black	Ground	4

https://truckmanualshub.com/

3.3 BATTERY MAINTENANCE AND CHARGING

WARNING

IF REPLACING A BATTERY, EACH NEW BATTERY MUST WEIGH AT LEAST 52 KG (115 LB). FAILURE TO REPLACE THE BATTERY WITH ONE OF THE CORRECT WEIGHT WILL RESULT IN A TIPOVER HAZARD WHICH COULD RESULT IN SERIOUS INJURY OR DEATH.

NOTICE

JLG MACHINES EQUIPPED WITH DELTA Q BATTERY CHARGERS ARE DESIGNED FOR THE BEST PERFORMANCE WITH OEM FACTORY APPROVED BATTERIES.
APPROVED JLG REPLACEMENT BATTERIES ARE AVAILABLE THROUGH JLG' S AFTERMARKET PARTS DISTRIBUTION CENTERS OR JLG' S AFTERMARKET PROGRAMS. FOR ASSISTANCE WITH PROPER BATTERY REPLACEMENT, PLEASE CONTACT YOUR LOCAL JLG SUPPORT OFFICE.
BATTERIES APPROVED BY JLG HAVE BEEN TESTED FOR COMPATIBILITY WITH THE ALGORITHM PROGRAMMING OF THE DELTA Q BATTERY CHARGER TO OPTIMIZE BATTERY LIFE AND MACHINE CYCLE TIMES. THE USE OF NON APPROVED BATTERIES IN YOUR JLG EQUIPMENT MAY RESULT IN PERFORMANCE ISSUES OR BATTERY CHARGER FAULT CODES. JLG ASSUMES NO RESPONSIBILITY FOR SERVICE OR PERFORMANCE ISSUES ARISING FROM THE USE OF NON APPROVED BATTERIES.

Battery Maintenance, Quarterly

1. Open battery compartment cover to allow access to battery terminals and (vent caps-wet batteries only).

CAUTION

WHEN ADDING WATER TO (WET) BATTERIES, ADD WATER UNTIL ELECTROLYTE COVERS PLATES. DO NOT CHARGE BATTERIES UNLESS ELECTROLYTE COVERS THE PLATES.

NOTE: *When adding distilled water to (wet) batteries, non-metallic containers and/or funnels must be used.*
To avoid electrolyte overflow, add distilled water to batteries after charging.
When adding water to the battery, fill only to level indicated or 3/8" above separators.

2. Remove all vent caps (wet batteries only) and inspect electrolyte level of each cell. Electrolyte level should be to the ring approximately one inch from top of battery. Fill batteries with distilled water only. Replace and secure all vent caps.

3. Remove battery cables from each battery post one at a time, negative first. Clean cables with acid neutralizing solution (e.g. baking soda and water or ammonia) and wire brush. Replace cables and/or cable clamp bolts as required.

4. Clean battery post with wire brush then re-connect cable to post. Coat non-contact surfaces with mineral grease or petroleum jelly.

5. When all cables and terminal posts have been cleaned, ensure all cables are properly positioned and do not get pinched. Close battery compartment cover.

6. Start hydraulic system and ensure that it functions properly.

Optional On Board Generator

WARNING

EXHAUST GAS HAZARD. RUN THE GENERATOR IN A WELL VENTILATED AREA ONLY.

NOTICE

WHEN THE GENERATOR ENABLE CONTROL LOCATED IN THE PLATFORM CONTROL BOX IS IN THE ON POSITION AND THE GROUND EMERGENCY STOP SWITCH IN ON (PULLED OUT), THE GENERATOR WILL START AUTOMATICALLY WHEN THE BATTERIES REACH A LOW-CHARGE STATE AUTOMATICALLY CHARGING THE BATTERIES.

NOTE: *The engine will automatically shut down under the following conditions:*

Charged Batteries
High Engine Oil Temperature
Low Engine Oil Pressure
Engine Overspeed
Generator Overvoltage

WARNING

TO AVOID INJURY FROM AN EXPLOSION, DO NOT SMOKE OR ALLOW SPARKS OR A FLAME NEAR BATTERY DURING SERVICING. ALWAYS WEAR EYE AND HAND PROTECTION WHEN SERVICING BATTERIES.

Battery Charging (On Board Charger) (MAC)

1. For maximum battery life:
   a. Avoid completely discharging the batteries.
   b. Fully charge the batteries each day the machine is used.
   c. Charge the batteries at available times between charging.
   d. Be sure the battery fluid covers the battery plates before charging, but to avoid overflow, do not top off the fluid level until charging.

https://truckmanualshub.com/

2. To charge the batteries, connect the charger to a 230 volt source with a 15 amp minimum capacity.
3. The charge cycle is complete when the 100% LED is lit. Any other reading indicates the charge cycle is not complete.
4. The Charger will shut off automatically when the batteries are fully charged.

Depleted batteries will take approximately 17 hours to charge.

Charging Sequence of Remote LED Card

1. Plug in charger.
2. All three LED's (light emitting diode) flash three times.
3. In sequence:
   a. Green LED flashes once
   b. Yellow LED flashes once
   c. Red LED flashes once
4. All Three LED flash three times.
5. Yellow LED comes on indicates charger is charging.
6. Yellow LED will stay on until fully charged and green LED will illuminate.
7. If Red LED remains on, this indicates a fault.

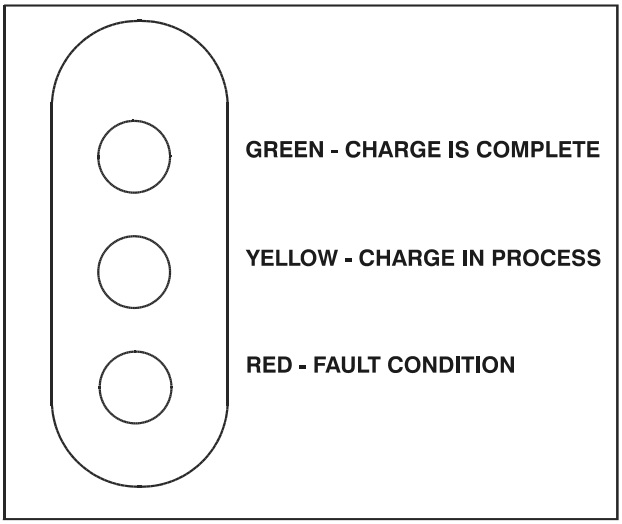

Figure 3-5. Remote LED Card

Battery Charger (Delta-Q)

The battery charger is located on a tray behind the hinged JLG cover at the front of the machine, or on the sliding engine tray on the (M) model machines.

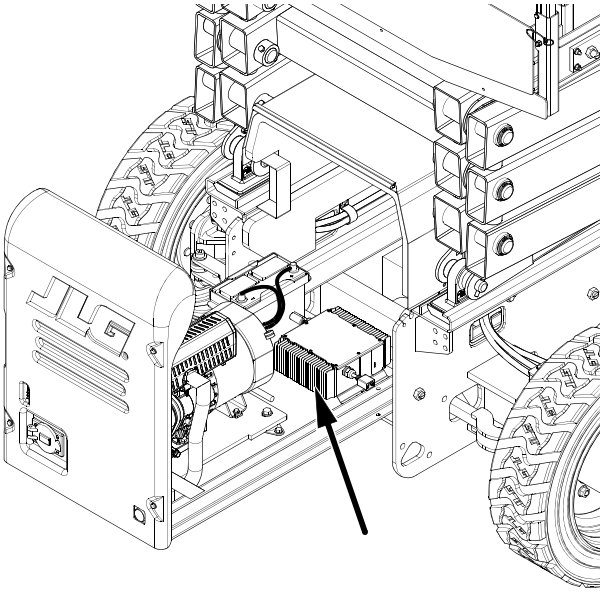

Figure 3-6. Battery Charger Location (M model shown)

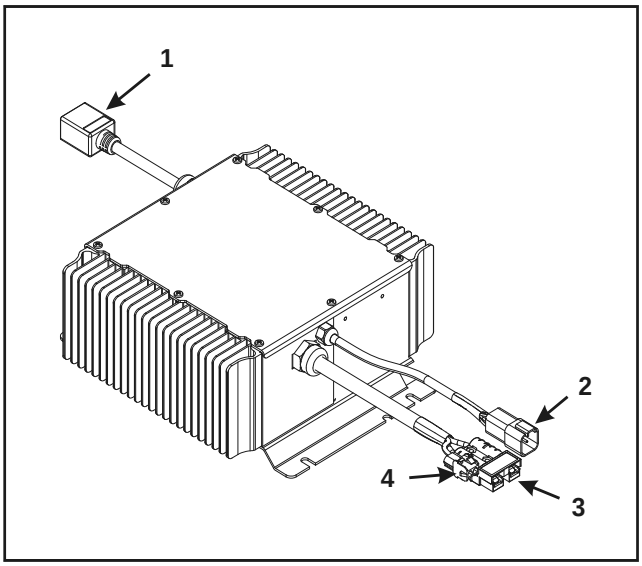

1. AC Voltage - Input Cable
2. Charger Interlock Cable
3. DC Power Cable to Batteries
4. LED Indicator Cable

Figure 3-7. Battery Charger

https://truckmanualshub.com/

Table 3-3. Delta-Q - Battery Charger Specs

BATTERY CHARGER	SPECIFICATION
OUTPUT	
Nominal DC Output Voltage	48V
Maximum DC Output Voltage	52V
Maximum DC Output Current	20A
Maximum Interlock Current	1A
INPUT	
AC Input Voltage	85-265VAC
Nominal AC Input Voltage	120VAC - 230VAC RMS
AC Input Frequency	45-65 HZ
Maximum AC Input Current	12A RMS@108VAC
OPERATION	
Charging Indicator	Yellow LED
100% Charge Indicator	Green LED
Fault Indicator	Red LED
External Temp Sensor	Automatic - Input wire/Output Connector
PROTECTION	
Output Reverse Polarity	Electronic Protection - Automatic Reset
Output Short Circuit	Electronic Protection - Automatic Reset
AC Overload	Current Limited
DC Overload	Current Limited
MECHANICAL	
Operating Temperature	–22°F to +122°F (–30°C to +50°C)
Housing	Shock and Water Resistant Aluminum

Battery Charger Maintenance

WARNING

USE CHARGER ONLY ON BATTERY SYSTEMS WITH AN ALGORITHM SELECTED THAT IS APPROPRIATE TO THE SPECIFIC BATTERY TYPE. OTHER USAGE MAY CAUSE PERSONAL INJURY AND DAMAGE.

LEAD ACID BATTERIES MAY GENERATE EXPLOSIVE HYDROGEN GAS DURING NORMAL OPERATION. KEEP SPARKS, FLAMES, AND SMOKING MATERIALS AWAY FROM BATTERIES. PROVIDE ADEQUATE VENTILATION DURING CHARGING. NEVER CHARGE A FROZEN BATTERY.

STUDY ALL BATTERY MANUFACTURERS' SPECIFIC PRECAUTIONS SUCH AS RECOMMENDED RATES OF CHARGE AND REMOVING OR NOT REMOVING CELL CAPS WHILE CHARGING.

DANGER

RISK OF ELECTRIC SHOCK. CONNECT CHARGER POWER CORD TO AN OUTLET THAT HAS BEEN PROPERLY INSTALLED AND GROUNDED IN ACCORDANCE WITH ALL LOCAL CODES AND ORDINANCES. A GROUNDED OUTLET IS REQUIRED TO REDUCE RISK OF ELECTRIC SHOCK - DO NOT USE GROUND ADAPTERS OR MODIFY PLUG. DO NOT TOUCH UNINSULATED PORTION OF OUTPUT CONNECTOR OR UNINSULATED BATTERY TERMINAL. DISCONNECT THE AC SUPPLY BEFORE MAKING OR BREAKING THE CONNECTIONS TO THE BATTERY WHILE CHARGING. DO NOT OPEN OR DISASSEMBLE CHARGER. DO NOT OPERATE CHARGER IF THE AC SUPPLY CORD IS DAMAGED OR IF THE CHARGER HAS RECEIVED A SHARP BLOW, BEEN DROPPED, OR OTHERWISE DAMAGED IN ANY WAY - REFER ALL REPAIR WORK TO QUALIFIED PERSONNEL. NOT FOR USE BY CHILDREN.

1. For flooded lead-acid batteries, regularly check water levels of each battery cell after charging and add distilled water as required to level specified by battery manufacturer. Follow the safety instructions recommended by the battery manufacturer.
2. Make sure charger connections to battery terminals are tight and clean.
3. Do not expose charger to oil or to direct heavy water spraying when cleaning vehicle.

https://truckmanualshub.com/

Battery Charger Troubleshooting

No Lights at all

No Lights at all indicate that AC power to the charger is not connected or that the AC voltage is too low. It could also indicate an internal failure in the charger.

1. Check the connections to AC power. Check for AC voltage between 90 and 260 VAC at the charger.
2. If the AC voltage is verified to be correct at the connection to the charger, and the charger still displays no lights at all, return the charger for service.

FAULT LED Flashing

The Fault LED flashes to indicate the microcontroller inside the battery charger has detected a fault. The fault detected is indicated by the number of flashes. Count the number of flashes to determine the fault.

With any battery system, the most common problem will be a faulty battery connection. Because of the high likelihood of a battery connection problem, it is always worthwhile to confirm that all connections are good before checking for any other problems.

[1 Flash] - High Battery Voltage

1. Indicates a high battery voltage. Check that the battery charger voltage is consistent with the battery pack voltage. The first two digits of the four digit model name indicate the battery voltage the charger supports.
2. Check for wiring errors.
3. This fault will automatically clear and the charger will restart charging when this problem is removed.
4. High battery voltage could also occur if there is another source charging the battery. Disconnect any other sources during charging.
5. If this problem does not clear after the battery voltage is confirmed to be less than 2.4V per cell, return the charger for service.

[2 Flashes] - Low Battery Voltage

1. Indicates either a battery failure, no battery connected, or a lower than expected battery voltage. Check the battery and battery connections.
2. Check the nominal battery voltage. The first two digits of the four digit model name indicate the battery voltage the charger supports. Confirm that a nominal battery voltage is the same as the charger voltage.
3. This fault will clear automatically when the low battery voltage problem is rectified.
4. If this problem does not clear after the battery voltage is confirmed to be higher than 1.0V per cell and all connections are good, return the charger for service.

[3 Flashes] - Charge Timeout

Indicates the battery failed to charge within the allowed time. This could occur if the battery is of larger capacity than the algorithm is intended for. In unusual cases it could mean charger output is reduced due to high ambient temperature. It can also occur if the battery is damaged, old, or in poor condition.

1. Check the battery for damage such as shorted cells and insufficient water. Try the charger on a good battery.
2. If the same fault occurs on a good battery, check the connections on the battery and connection to AC, and the AC voltage itself.
3. Confirm that the nominal battery pack voltage is the same as the battery charger voltage.
4. This fault must be cleared manually by unplugging the AC, waiting 30 seconds and reconnecting the AC power.
5. If a charger displays this fault on a battery pack, and the pack is of questionable status, reset the charger by disconnecting AC for 30 seconds, and then reconnect the AC to start a new charge cycle. After a few charge cycles, this problem could stop occurring as the pack "recovers."

[4 Flashes] - Check Battery

This fault indicates the battery pack could not be trickle charged up to the minimum level required for the normal charge cycle to be started.

1. Check that none of the battery pack connections between modules are reversed or incorrectly connected.
2. Check that one or more cells in the battery are no shorted.
3. Confirm that the nominal battery pack voltage is the same as the battery charger voltage.
4. Try the charger on a good battery.
5. If this fault occurs, the battery is likely in poor condition. Try to recover the pack with a charger that can charge the individual cells - such as an automotive charger. Be sure to set this charger to the appropriate voltage - 6V per 6V battery, 12V per 12V string/battery.

https://truckmanualshub.com/

[5 Flashes] - Over Temperature

This fault indicates the charger has become too hot during operation. Though not damanging to the charger, charge time will be extended significantly.

1. This fault indication will not clear automatically, but the charger will restart charging automatically when the temperature drops. The fault indicaiton must be cleared manually by unplugging the AC, waiting 30 seconds and reconnecting the AC power.
2. If possible, move the machine to a cooler location.
3. Confirm that dirt or mud is not blocking the cooling fins of the charger. Clean the charger. Rinse the charger with a low pressure hose if required. Do no use high pressure. Do not us a pressure washer.

[6 Flashes] - Over Load/Over Temperature

This fault indicates that the batteries will not accept charge current, or an internal fault has been detected in the charger. This fault will nearly always be set within the first 30 seconds of operation. If it occurs after the charger has started charging normally, be sure to make a note of it.

1. Remove excessive AC loads from inverter if installed.
2. Try to clear the fault by unplugging the AC, waiting 30 seconds and reconnecting the ac power.
3. Check all battery connections. Look for a high resistance connection.The most likely reason for this fault is a fault in the battery such as a bad battery connection, an open cell, or insufficient water.
4. This fault will occur if an internal fuse inside the charger blows. If the green wire is shorted to ground even momentarily, this fuse will blow. To check the fuse, measure with an ohmmeter between the green and red wires with the AC disconnected. If a short circuit is not measured, the fuse has blown. Return unit to a service depot to have this fuse replaced.
5. If this fault occurs after battery charging has started, confirm that AC power was not interrupted and that all battery connections are good.
6. If all battery connections are good, an internal fault has been detected and the charger must be brought to a qualified service depot.

Excessive Battery Watering Requirements or Strong Sulphur (Rotten Egg) Smell

These symptoms indicate over-charging or high battery temperature. These symptoms are unlikely to be caused by too high a charge current since the maximum charge current of the charger will be small compared to even a moderately sized battery pack. The most likely cause for this problem is incorrect charge algorithm setting and/or high ambient temperatures.

1. Confirm that the battery pack is not too small - usually > 50Ah.
2. Confirm that the nominal battery voltage matches the charger output voltage.
3. Confirm the correct battery charge algorithm. If the battery pack is new, the algorthm will need to be changed if the pack is not the same as the old one. for instructions on how to determine and change the battery charge algorithm see the following sub-section.
4. If the output voltage of the charger seems excessive, return the charger for service. Contact JLG to get the expected battery voltage settings for the charger in question. Be sure to have the charger's serial number and charge algorithm setting available when calling.

https://truckmanualshub.com/

Checking/Changing the Battery Charge Algorithm

The charger is pre-loaded with programming algorithms for the specific batteries detailed in Table 3-4, Battery Algorithms. Contact JLG if your specific battery model is not listed.
Each time AC power is applied with the battery pack not connected, the charger enters an algorithm select/display mode for approximately 11 seconds. During this time, the current Algorithm # is indicated on the Yellow Charging LED. A single digit Algorithm # is indicated by the number of blinks separated by a pause. A two digit Algorithm # is indicated by the number of blinks for the first digit followed by a short pause, then the number of blinks for the second digit followed by a longer pause.

To check / change the charging algorithm:

1. Disconnect the charger positive connector from the battery pack. Apply AC power and after the LED test, the Algorithm # will display for 11 seconds.
2. To change the algorithm, touch the connector to the battery's positive terminal for 3 seconds during the 11 second display period and then remove. The Algorithm # will advance after 3 seconds. Repeat this procedure until the desired Algorithm # is displayed. A 30 second timeout is extended for every increment. Incrementing beyond the last Algorithm will recycle back to the first Algorithm. When the desired Algorithm is displayed, touch the charger connector to the battery positive terminal until the output relay makes a clicking noise (approx. 10 seconds). The algorithm is now in the permanent memory.
3. Remove the AC power from the charger and reconnect the charger's positive connector to the battery.

NOTE: *It is recommended to check a newly changed algorithm by repeating the above steps 1 and 3.*

Table 3-4. Battery Algorithms

Algorithm #	Battery Type
143	DISCOVER EVL1GA-A
43	Harris Battery Discover EVGGC6A-A
35	JLG P/N 0400242
23	Douglas Flooded (JLG default) GES Battery A1055 Trojan T105 US BATT GC-110-WNL Trojan T105 PLUS Champion CHGC2 GC2 US BATT EV-145-WNL
8	Concorde 10xAh AGM
7	J305 DV/DT CP
6	DEKA 8G31 Gel
5	Trojan 30/31XHS
4	US Battery USB2200
3	T105 DV/DT CP
2	Trojan T105 tapped
1	Trojan T105

Battery Temperature Sensor

Machines equipped with the Delta-Q battery charger include a battery temperature sensor. The sensor is mounted to the negative terminal post of the inboard, front battery on the machine's left side mounted battery pack. (See Figure 3-8.) The sensor is wired directly to the battery charger.

https://truckmanualshub.com/

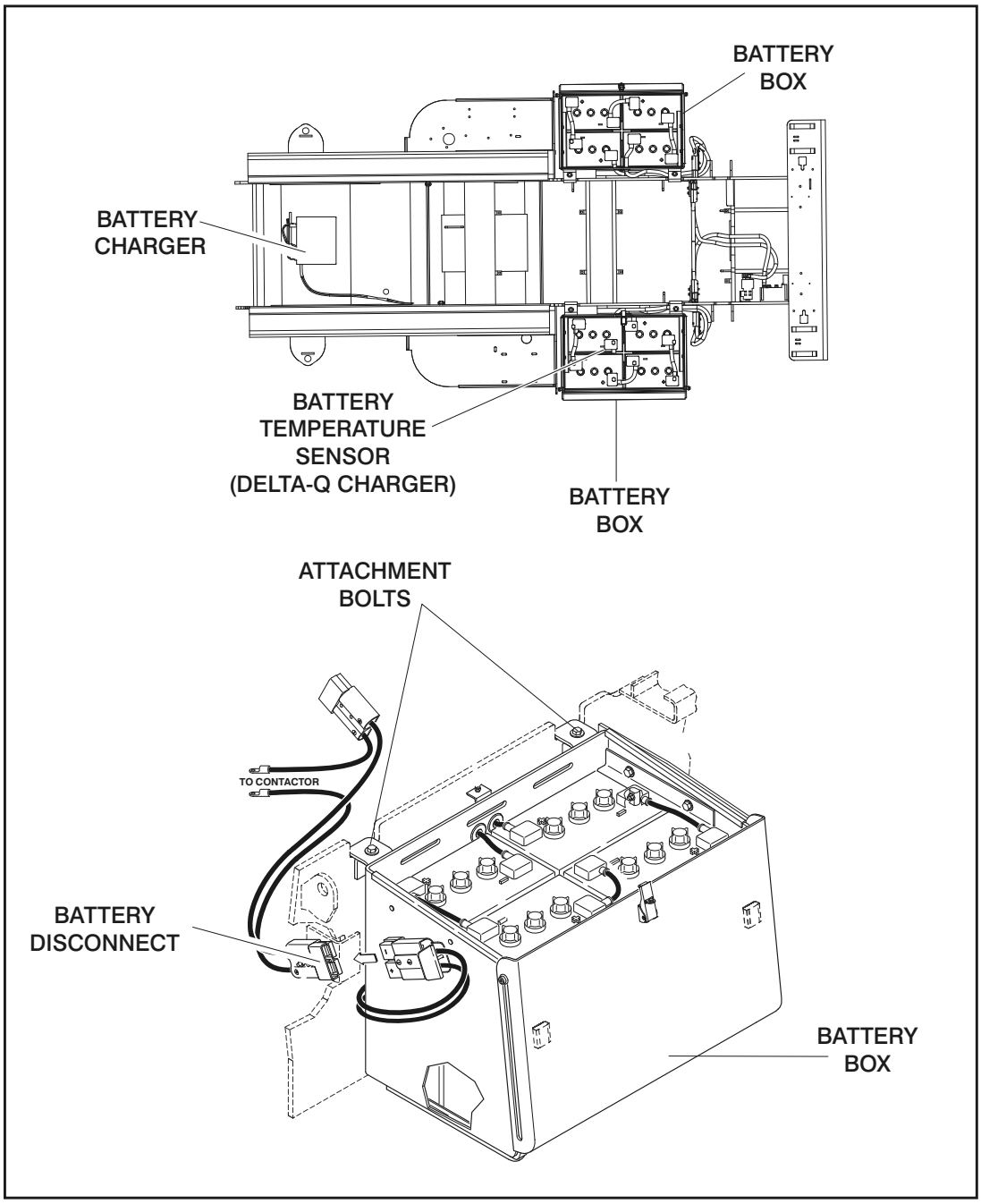

Figure 3-8. Batteries and Battery Charger

Removing the Battery Box

To remove the battery box, perform the following steps.

1. Pull the handle on the battery disconnect to disconnect the batteries.
2. Remove the two attachment bolts that secure the battery box to the frame.

NOTE: *The battery box and batteries complete weigh approximately 670 lbs (304 kg).*

3. Using a forklift, lift the battery box up enough to clear the brackets on the back of the battery box and remove the battery box from the machine.

NOTE: *To make battery box removal easier, when possible, raise the arms of the machine and install the safety prop.*

https://truckmanualshub.com/

3.4 GENERATOR

NOTE: *Throughout the Generator section, the abbreviations RBS and CTS are used. RBS stands for Rotary Battery System, which is the generator system. CTS stands for Call To Start, which is the electronic inputs which signal the generator to start and charge the batteries.*

The generator consists of a drive engine, controller, and related components.

- **Alternator**

The alternator is a brushless, DC output alternator. The 3 phase output of the alternator is full wave rectified and directed to the output terminator.

The output rating is 58 volts DC at 45 amps. Voltage regulation and current limiting is provided by the Engine/Generator Controller.

The rectifier diodes and output current sensor are located in the alternator end.

- **Dynamo and Dynamo Voltage Regulator**

The engine is equipped with a 12 Volt, 15 Amp DC output dynamo.

- **Dynamo Output Fuse**

The dynamo output fuse is used to protect the output of the dynamo. This fuse is rated at 20 Amps DC, slow blow and is located on the left side of the engine.

- **Control Fuse**

This fuse provides power to the engine/generator and the relays for start control, fuel control, and pre-heater. This fuse is rated at 15 Amps DC and is located on the right side of the engine.

- **Start Battery**

A 12 volt lead-acid battery is utilized to provide starting power for the generator and power for the generator controls. This battery is charged by the engine dynamo and dynamo regulator when the engine is running.

- **Engine Starter**

The engine is equipped with a 12 Volt DC starter. This starter provides mechanical power to crank the engine. Electrical power for the starter is provided by the start battery. The starter is energized by the start control relay.

- **Start Control Relay**

The start control relay energizes the solenoid of the engine starter and the pull coil of the engine fuel solenoid. The start control relay is located on the fuel solenoid bracket on the right side of the engine. The start control relay is energized by the engine/generator controller.

- **Fuel Control Relay**

The fuel control relay energizes the hold coil of the fuel solenoid. The fuel control relay is energized by the engine/generator controller.

- **Fuel Solenoid**

The fuel solenoid actuates the run/stop lever of the engine. This solenoid has a pull and hold coil. The pull coil is energized by the start control relay and the hold coil is energized by the fuel control relay.

- **Engine Oil Temperature Sensor**

The engine oil temperature sensor is used to sense the temperature of the oil in the sump of the engine. This sensor provides a signal to the engine/generator controller for high engine temperature shutdown.

- **Alternator Output Current Sensor**

The alternator output current sensor provides a signal proportional to the output current of the alternator to the engine/generator controller. This signal is used by the controller to regulate the current output of the alternator. The output current is regulated at 55 Amps DC. The alternator output current sensor is located inside the rear cover of the alternator.

- **Engine Speed Sensor**

The engine speed sensor provides a signal proportional to the rotational speed of the engine to the engine/generator controller. This signal is used by the controller to determine starter cut-out, overspeed fault, and underspeed fault. This signal has failsafe protection, if it is not present at the controller, the unit will fault with a loss of speed signal indication. The engine speed sensor is located inside the recoil starter cover at the front of the engine.

- **Engine Low Oil Pressure Switch**

The engine is equipped with a low oil pressure switch. The switch is closed when the oil pressure is below 14.2 psi (1 Bar).

https://truckmanualshub.com/

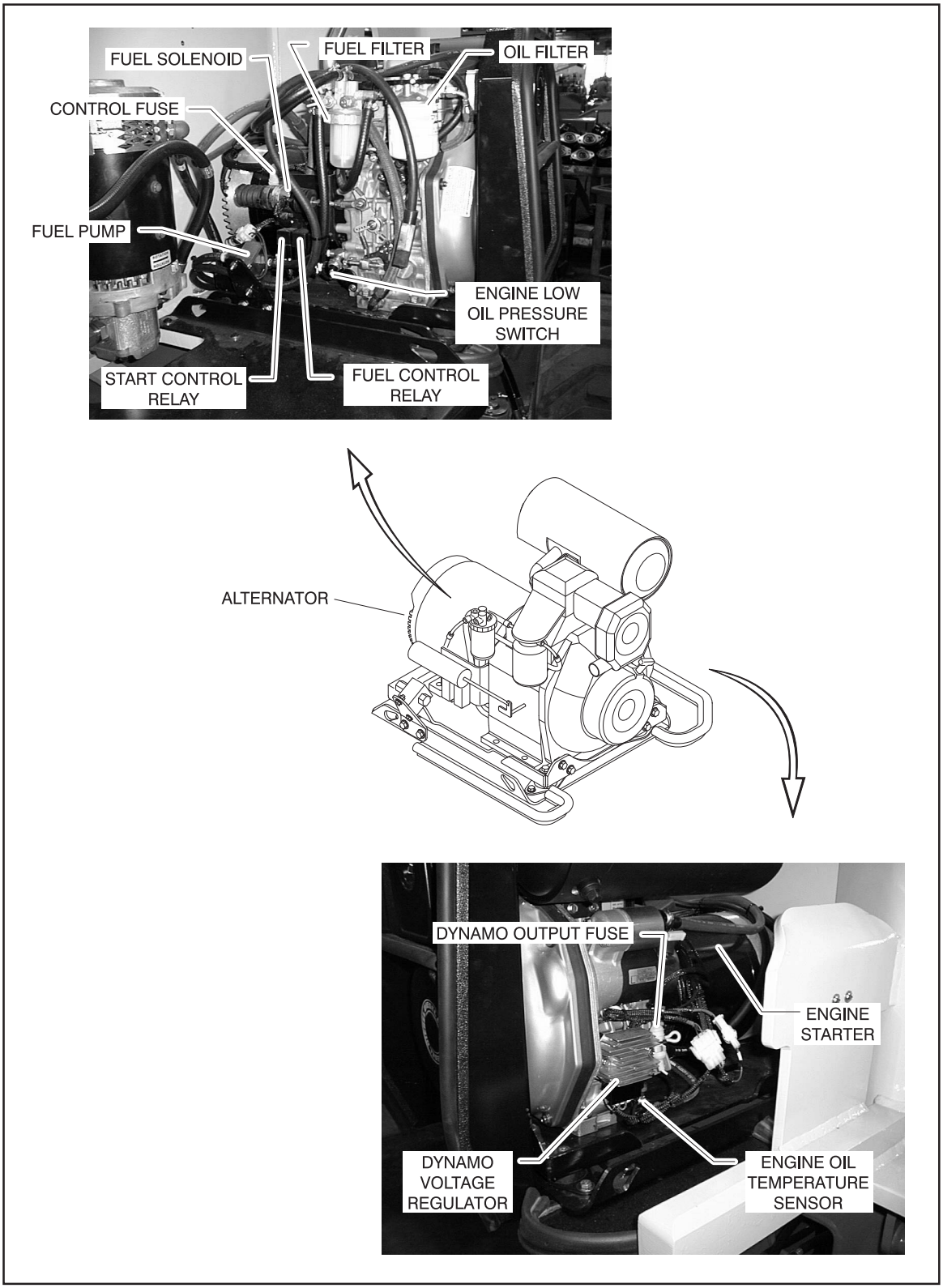

Figure 3-9. Generator Components

https://truckmanualshub.com/

Timing Sequences

- **RBS Pre start Sequence**

1. Time Delay Engine Start (TDES)

   TDES is the period which the RBS waits to verify that the CTS is valid rather than a transient condition.

2. Time Delay Pre-Heat (TDPH)

   TDPH, if enabled, occurs after TDES has elapsed and the engine temperature is below the factory set engine preheat temperature setting. The engine pre heater will be energized for the factory set preheat delay period.

Table 3-5. RBS Pre start Sequence

CTS (Call to Start)
TDES (Engine Start)
Preheat Delay
RBS Startup Sequence

- **RBS Startup Sequence**

1. Crank Time

   The RBS will crank for a period up to the crank time or until the engine starts.

2. Rest Time

   If the engine does not successfully start, the RBS will wait for the rest time before attempting to crank the engine again.

3. Crank Cycles

   The RBS will attempt to start the engine up until the number of crank cycles is reached. If the RBS does not start, an Overcrank fault is indicated.

4. Time Delay Bypass (TDBP)

   Once the engine starts, TDBP must elapse before low oil pressure and underspeed shutdowns are activated. This allows the engine to come up to normal operating conditions before enabling these shutdowns are monitored.

Table 3-6. RBS Startup Sequence

Crank Time -> Rest Time (Until Engine Start or # of Crank Cycles)
TDBP Bypass
Normal Running Operation

- **RBS Shutdown Sequence**

Once all CTS conditions have been removed, the RBS will begin the shutdown sequence. If a CTS condition is initiated during the shutdown sequence, the RBS will return to normal running operation until the CTS is removed.

1. Time Delay Engine Run (TDER)

   Once the CTS condition is removed, the TDER period begins. This period ensures that no further CTS conditions occur prior to the cool down period.

2. Time Delay Cool down (TDC)

   Once the TDER period ends, the alternator output is reduced to a minimal level in order to allow the engine to cool down for the TDC period. If a CTS is received during the TDC period, the CTS must last for at least the TDES period for the RBS to return to normal running operation.

Table 3-7. RBS Shutdown Sequence

Remove CTS
TDER Engine Run
TDC Cool down
Engine Stop

To Connect the JLG Control System Analyzer to the Generator

The JLG Control System Analyzer can be used to monitor generator settings and conditions. Connect the analyzer as follows:

1. Connect the four pin end of the cable supplied with the analyzer, to the connector behind the ground control module located on the right side of the machine next to the ground control station and connect the remaining end of the cable to the analyzer.

https://truckmanualshub.com/

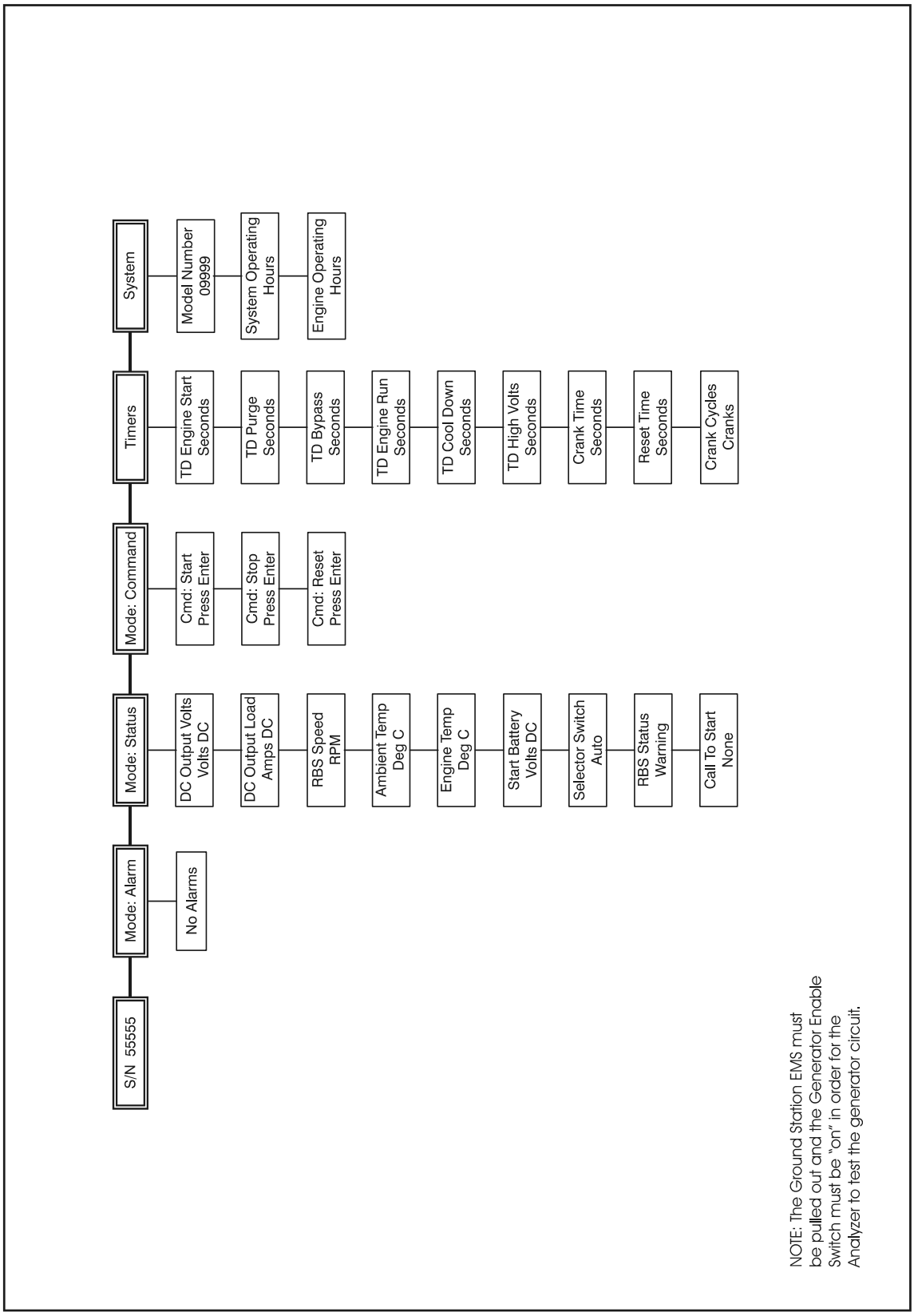

Figure 3-10. Generator System Analyzer Flow Chart

https://truckmanualshub.com/

The ground control module contains the settings for the generator.

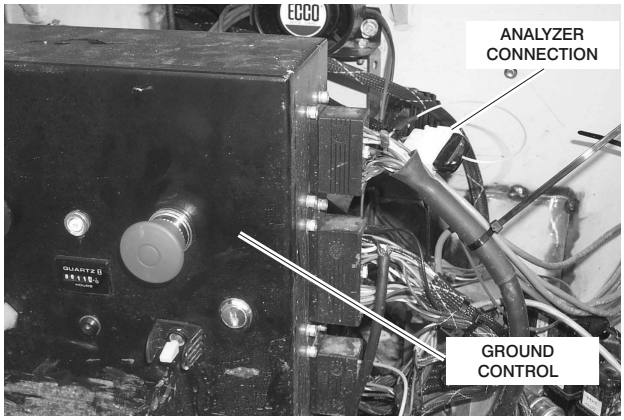

NOTE: *The cable has a four pin connector at each end of the cable; the cable cannot be connected backwards.*

2. Power up the Analyzer by pulling out the ground station EMS and positioning the Generator Enable switch on the platform control box to the "on" position. Refer to Figure 3-10., Generator System Analyzer Flow Chart.

Alarms and Fault Flash Codes

In the event of an RBS alarm, a flash code will be issued and an alarm indicated on the analyzer.

NOTE: *Alarms must be reset once the fault has been corrected.*

Table 3-8. Generator System Flash Codes

Code	Alarm	Description
1-1	Low Oil Pressure	Shutdown due to low engine oil pressure
1-2	High Engine Temperature	Shutdown due to high engine oil temperature
1-3	Engine Overspeed	Shutdown due to high engine speed
1-4	Engine Underspeed/ Overcrank	Shutdown due to engine overcrank or underspeed
1-5	No Speed Signal	Shutdown due to loss of speed signal
2-1	Overvoltage	Shutdown due to high output voltage
2-2	Engine Starting System fault	Alarm not a shutdown; Indicates problem with the engine starting system
2-3	Not Used	Not Used
2-4	Loss of Voltage Sense	Shutdown due to loss of voltage sensing
Continuous	Unit Disabled	No Faults. RBS enabled and can respond to any CTS
Off	Unit Disabled	RBS off or disabled; Will not respond to any CTS

- **Low Oil Pressure**

Enabled once TDBP (time delay bypass) period has elapsed after engine startup. If the low engine oil pressure switch closes, the engine will stop immediately and a low oil pressure alarm will be indicated.

- **High Engine Temperature**

If the engine oil temperature exceeds the high engine temperature setting, the engine will stop immediately and a low oil pressure alarm will be indicated.

- **Overspeed**

If the engine speed exceeds the overspeed limit, the engine will stop immediately and an overspeed alarm will be indicated.

https://truckmanualshub.com/

- **Underspeed**

Enabled once TDBP (time delay bypass) period has elapsed after engine startup. If the engine speed drops below the underspeed limit, the engine will stop immediately and an engine underspeed alarm will be indicated.

- **Overcrank**

If the engine fails to start after a set number of start attempts, the RBS will cease attempts to restart and an engine overcrank alarm will be indicated.

- **No Speed Signal**

In the event of a loss of speed signal, the RBS will shutdown and an engine no speed signal alarm will be indicated. This shutdown is delayed by a factory set period to ensure the fault was not momentary.

- **Overvoltage**

If the voltage measured at the alternator output exceeds the high voltage setting, the RBS will stop immediately and an RBS high output alarm will be indicated. This shutdown is delayed by a factory set period to ensure the fault was not caused by a transient condition. This feature protects the batteries and load from high DC voltages.

- **Engine Starting System Fault**

Indicates a problem with either the engine start battery, engine magneto, or magneto voltage regulator.

- **Loss Of Voltage Sense**

If the voltage measured at the alternator output is less than half of the system nominal voltage, the RBS will stop immediately and an RBS loss of voltage sense alarm will be indicated. This feature protects the batteries and load from high DC voltages due to a loss of output control.

- **Run Inhibited**

The RBS unit is disabled by the run inhibited input.

Output Current and Voltage Settings

- **Normal/Extended Output Voltage**

The normal/extended output voltage setting is the voltage at which the alternator changes under normal operating conditions.

- **Current Limit**

The current limit setting determines the maximum alternator output current.

- **High Voltage Shutdown Level**

This setting determines the alternator output voltage at which the high voltage shutdown occurs. This protects the load from abnormally high voltages.

- **Finish Charging Current**

The finish charging current determines the level of the current alternator output must drop below for a low battery voltage CTS to be removed. This ensures that the batteries have accepted sufficient charge prior to shutting down the RBS. This level is used along with the low battery voltage remove CTS level to determine when the RBS removes the CTS after a low battery voltage CTS. If the charging current falls below the finish charging current while another CTS is active, the RBS will continue to operate at the normal/extended output voltage until all CTS's are removed.

Priming the Fuel Line

The following procedure is for re-priming the fuel line on the generator engine in the event fuel system components have been replaced or the unit has been run dry of fuel..

1. Make sure the fuel line isn't blocked or kinked.
2. Make sure fuel tank has fuel.
3. Disconnect the rubber fuel line at the fuel injector pump.

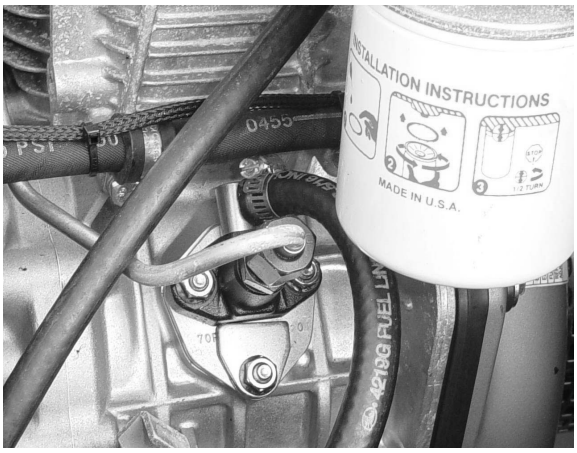

4. When fuel starts to flow out of the rubber line, reconnect the fuel line to the fuel injector pump.
5. Clean up any spilled fuel and try to start the generator again.
6. If the engine still doesn't start, remove the steel line from the fuel injectoe pump.
7. Once fuel starts to flow, reconnect the fuel line to the fuel injector pump.
8. Clean up any spilled fuel and try to start the generator again.
9. If no fuel flows there are some possibilities:
   a. There is no fuel getting to the injector pump. No fuel in tank, or obstruction in fuel line, or clogged in line fuel filter.
   b. The engine/camshaft rotation is not opening the injection fuel pump. Using the recoil starter, rotate the engine 1/3 of a turn and fuel should spill from the fuel injector pump.

https://truckmanualshub.com/

10. Engine might run rough for 20 seconds or so, but it will clean out.

3.5 SUPPLEMENTARY FUSE FOR APU

The purpose of this section is to describe the procedure to add a supplementary fuse for the Engine Generator Controller for the APU.

Tools And Material

- - Weather proof fuse holder - JLG P/N 2400081
- - AGC1, 1 Amp fuse - JLG P/N 2400080
- - 45 cm of #16 AWG wire - JLG P/N 4920019
- - 2 X insulated butt splice connectors - JLG P/N 4460035
- - 6 X medium length wire ties - JLG P/N 4240033
- - Wire/Side cutters
- - 5/32” Allen Key
- - Crimping tool

Procedure

⚠ WARNING

BEFORE BEGINNING THIS PROCEDURE, ENSURE THAT ALL SOURCES OF POWER ARE DISCONNECTED FROM THE APU!

This procedure is common for all applications of the APU. The photos contained in this document illustrate the modification performed to an APU supplied in a JLG M450 lift.

1. Locate the harness at the rear of the APU.

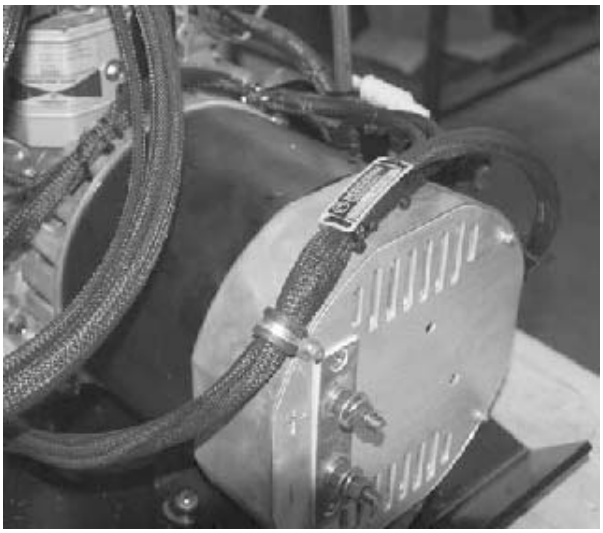

2. Find where the harness attaches to the rear cover of the generator and the connection point for the new inline fuse.

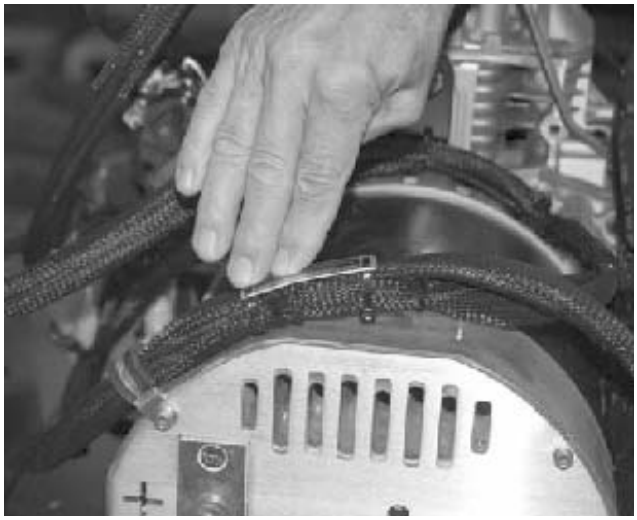

3. Remove the socket head drive screw with a 5/32” Allen key. Next remove the cable clamp from the harness.

https://truckmanualshub.com/

4. Cut and remove the Wire Ties holding the Harness label to the harness. Next, remove the Wire Ties so that the cable sleeve can be moved, exposing the conductors of the harness.

5. Cut wire 106 going to the Engine/Generator Controller after the existing connection point and install the conductors that lead to the new inline fuse holder. Use insulated butt splice connectors for these conductors.

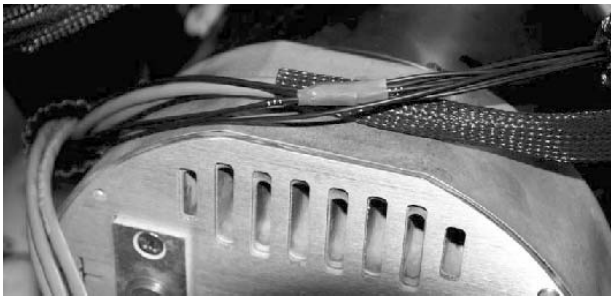

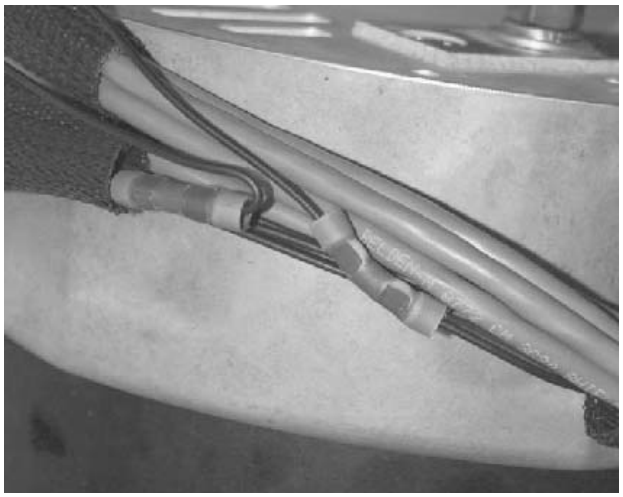

6. Re-install the harness with the new fuse in place.

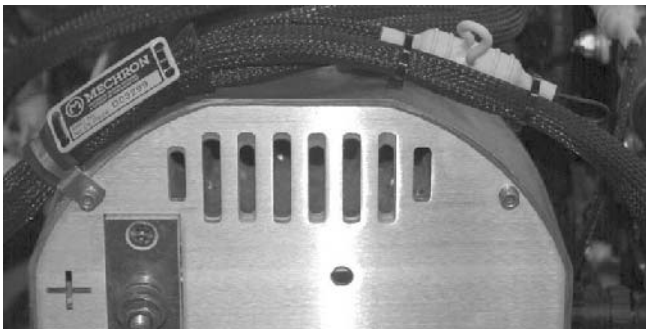

7. Reconnect the lift and APU start battery. The APU is now ready for use.

https://truckmanualshub.com/

3.6 JOYSTICK CONTROLLER

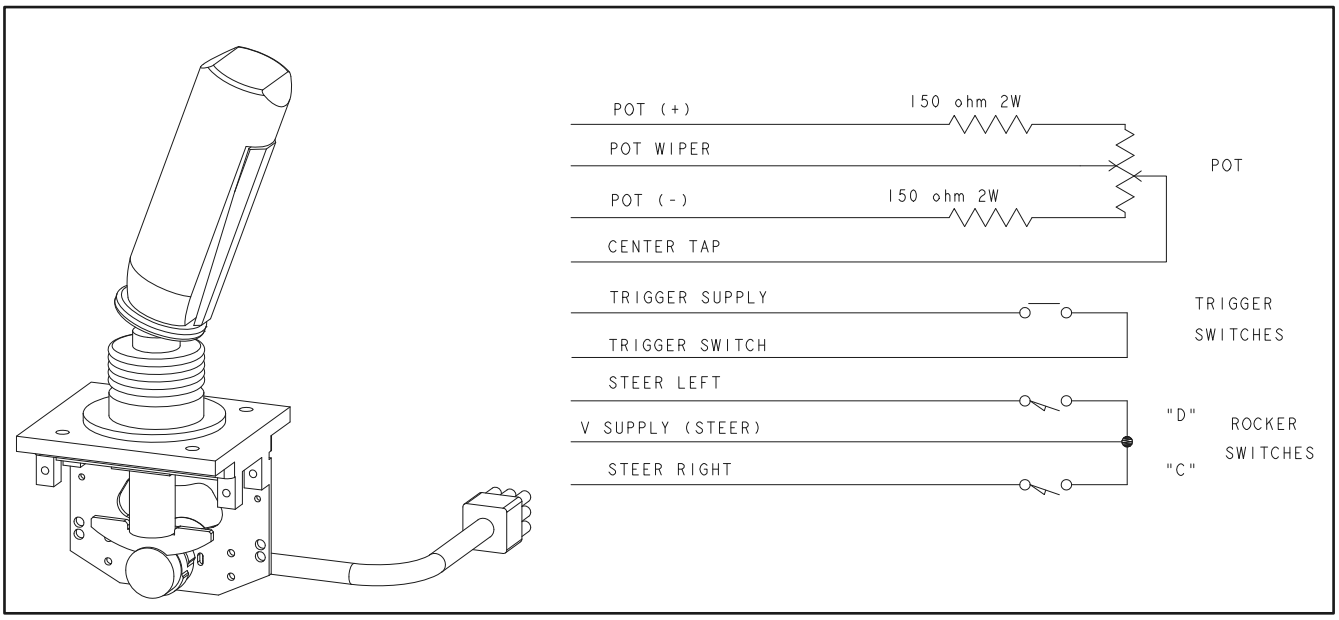

Figure 3-11. Joystick Controller - (JLG P/N 1600308)

Table 3-9. Joystick Specifications

Input Voltage	4.3V (±0.1V)
Centered Output Voltage	2.2V (±0.1V)
Full Positive (Rev) Deflection Output Voltage	4.0V (±0.1V)
Full Negative (Fwd) Output Voltage	0.4V (±0.1V)

Table 3-10. Joystick Plug Loading Chart

Terminal	Color	Function
1	Yellow	Steer Right
2	Green	Steer Left
3	Brown	Pot Wiper
4	Red	Handle Common
5	N/A	Not Connected
6	White/Red	Pot (+)
7	Violet	Trigger Switch
8	Blue	Trigger Supply
9	White/Black	Pot (-)

https://truckmanualshub.com/

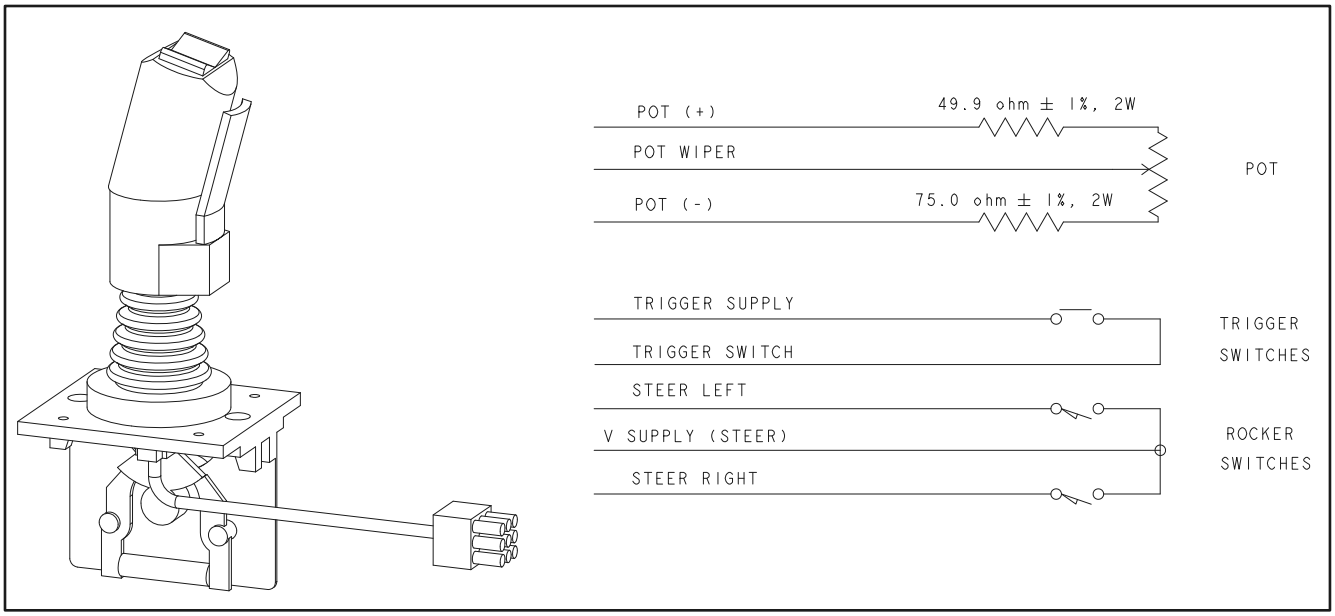

Figure 3-12. Joystick Controller - (JLG P/N 1600403)

Table 3-11. Joystick Specifications

Input Voltage	5V
Centered Output Voltage	4.25V to 2.60V
Reverse Voltage	4.60V to 4.80V
Forward Voltage	0.40V to 0.60V

Table 3-12. Joystick Plug Loading Chart

Terminal	Color	Function
1	Yellow	Steer Right
2	Green	Steer Left
3	Brown	Pot Wiper
4	Red	Handle Common
5	N/A	Not Connected
6	White/Red	Pot (+)
7	Violet	Trigger Switch
8	Blue	Trigger Supply
9	White/Black	Pot (-)

https://truckmanualshub.com/

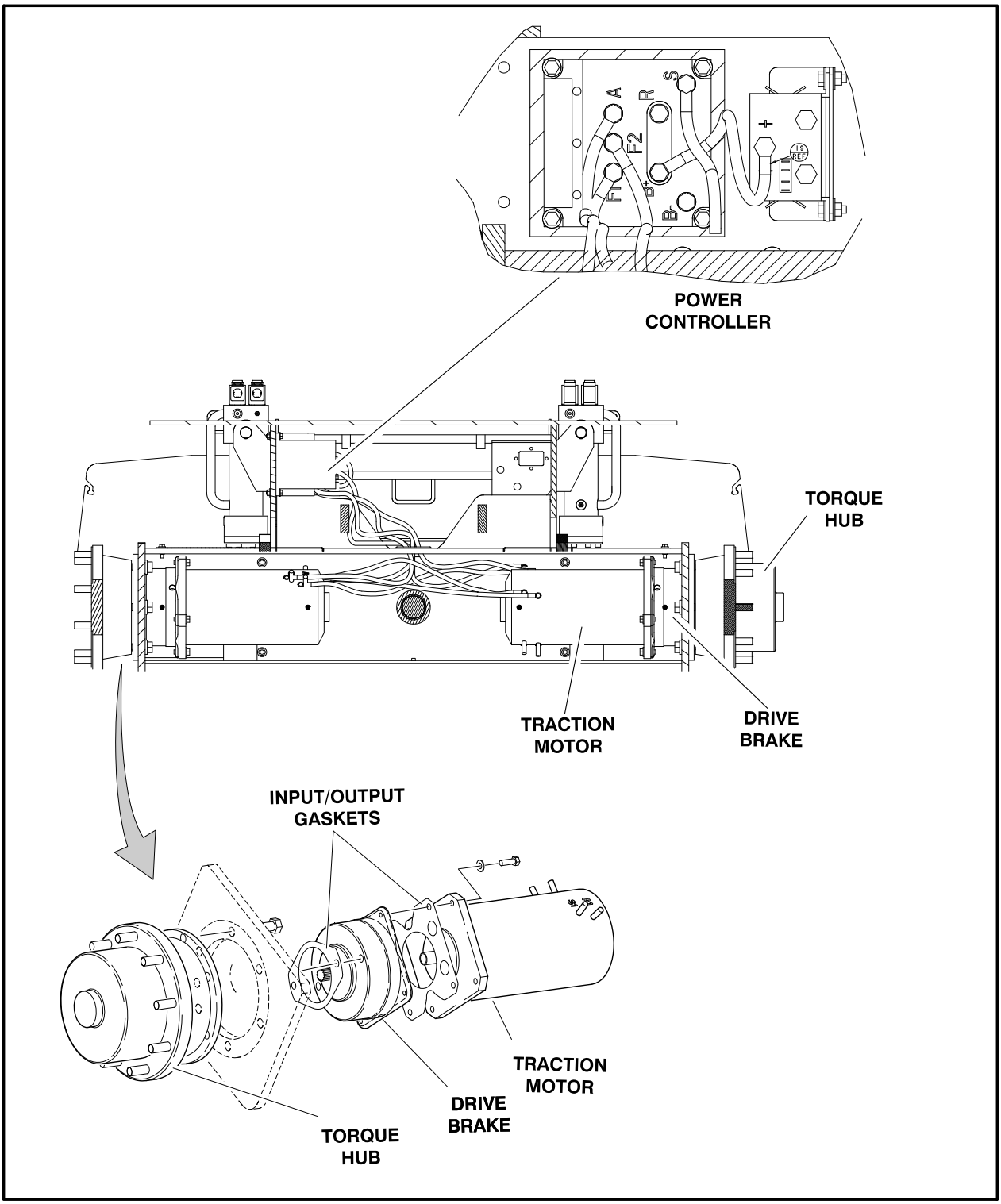

Figure 3-13. Drive Components

https://truckmanualshub.com/

Power Controller

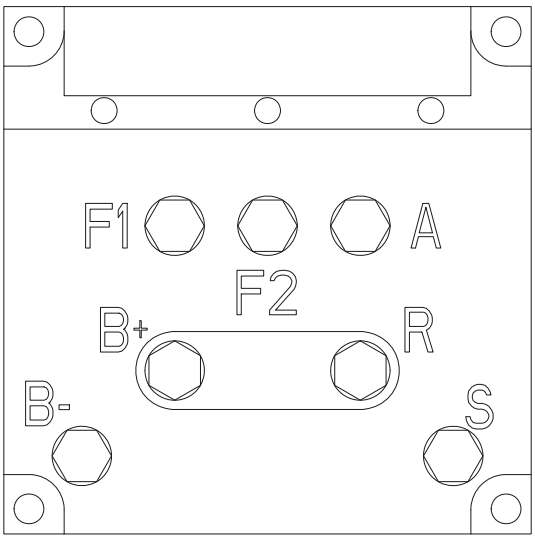

Figure 3-14. Power Controller

Table 3-13. Power Controller Cable Descriptions

From		To	
Power Controller	F2	Right Side Drive Motor	F1
Right Side Drive Motor	F2	Left Side Drive Motor	F2
Power Controller	F1	Left Side Drive Motor	F1
Power Controller	S	Left Side Drive Motor	A2
Right Side Drive Motor	A1	Left Side Drive Motor	A1
Power Controller	A	Right Side Drive Motor	A1
Left Side Drive Motor	A2	Right Side Drive Motor	A2
Power Controller	B+	Contactor	++

3.7 TOWING

Disengaging for Towing

NOTICE

PRIOR TO OPERATING THE DISCONNECT THE MACHINE HAS TO BE ON LEVEL GROUND AND COMPLETELY SECURED FROM ANY MOVEMENT, I.E. VIA TOW BAR TO PULLING VEHICLE. THE MACHINE SHOULD NOT BE MOVED UNLESS IT IS SECURED TO THE TOWING VEHICLE TO PREVENT RUNAWAY.

⚠ CAUTION

ENSURE THE DISCONNECT MECHANISM IS ONLY OPERATED WITH THE MACHINE AT A STANDSTILL.

⚠ WARNING

THE GEAR DRIVE TEMPERATURE SHOULD BE CHECKED PRIOR TO ANY WORK BEING DONE. THIS IS IMPORTANT IF THE GEAR DRIVE HAS RECENTLY BEEN OPERATED SINCE IT MAY BE HOT AND CAUSE INJURY.

⚠ CAUTION

ENSURE THE AREA SURROUNDING THE DISCONNECT IS CLEANED PRIOR TO OPERATION. ENSURE THAT DIRT OR OTHER CONTAMINANTS DO NOT ENTER THE GEAR DRIVE.

1. Remove the two hex head bolts from the cover.

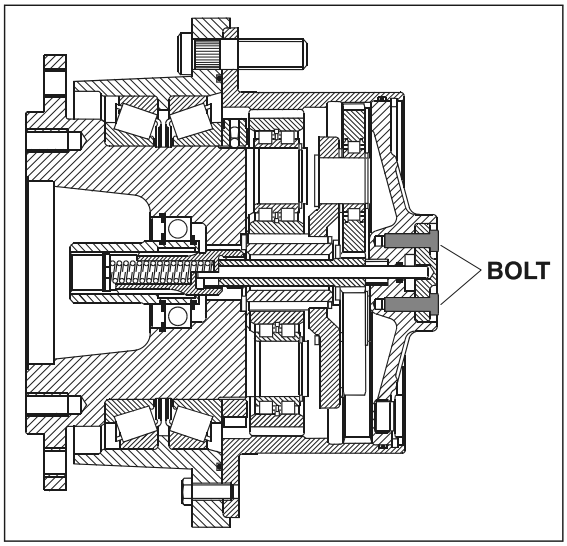

2. Remove the cover.

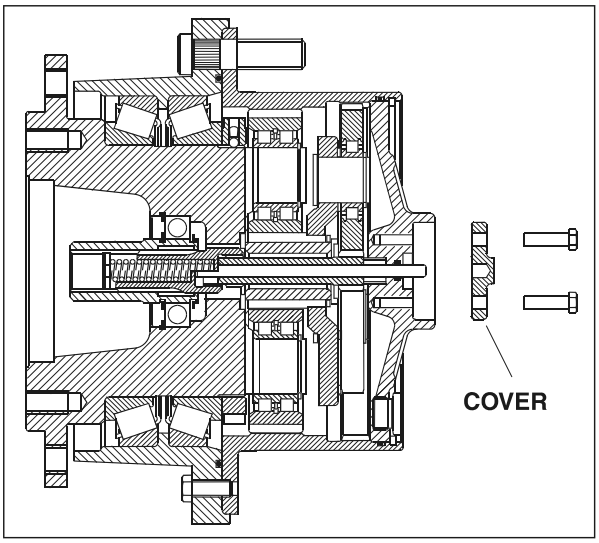

3. Rotate the cover to show the inside diameter.

https://truckmanualshub.com/

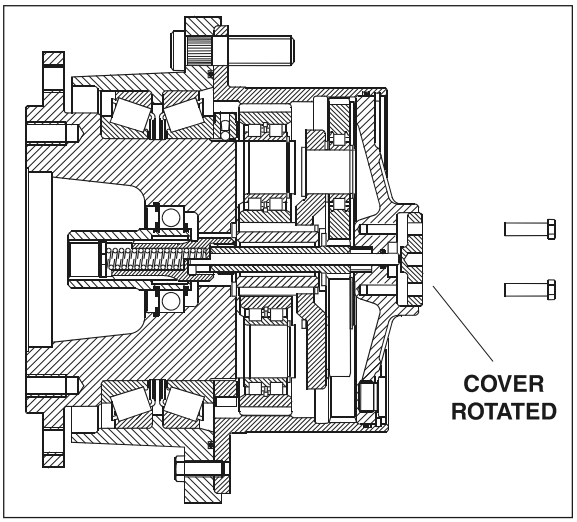

4. Press the cover sufficiently against the shift rod to insert the bolts at least 2 to 3 threads into the cover. This will subject the shift rod to spring force.
5. Install the bolts and torque 6.3 ft lbs (8.8 Nm) until they are flush with the cover.
6. The sun gear shaft and input shaft are now disconnected and the machine is ready to be towed.

WARNING

BEFORE THE MACHINE IS SEPARATED FROM THE TOWING VEHICLE, EITHER THE GEAR DRIVE HAS TO BE REENGAGED OR SUITABLE MEASURES MUST BE TAKEN TO SECURE THE MACHINE FROM MOVEMENT.

Engaging after Towing is Complete

NOTICE

PRIOR TO OPERATING THE DISCONNECT THE MACHINE HAS TO BE ON LEVEL GROUND AND COMPLETELY SECURED FROM ANY MOVEMENT, I.E. VIA TOW BAR TO PULLING VEHICLE. THE MACHINE SHOULD NOT BE MOVED UNLESS IT IS SECURED TO THE TOWING VEHICLE TO PREVENT RUNAWAY.

CAUTION

ENSURE THE DISCONNECT MECHANISM IS ONLY OPERATED WITH THE MACHINE AT A STAND STILL.

WARNING

THE GEAR DRIVE TEMPERATURE SHOULD BE CHECKED PRIOR TO ANY WORK BEING DONE. THIS IS IMPORTANT IF THE GEAR DRIVE HAS RECENTLY BEEN OPERATED SINCE IT MAY BE HOT AND CAUSE INJURY.

CAUTION

ENSURE THE AREA SURROUNDING THE DISCONNECT IS CLEANED PRIOR TO OPERATION. ENSURE THAT DIRT OR OTHER CONTAMINANTS DO NOT ENTER THE GEAR DRIVE.

WARNING

THE COVER IS UNDER SPRING FORCE

1. Remove the 2 hex head bolts securing the cover evenly and remove the cover.
2. Rotate the cover 180° and secure with the two hex head bolts.
3. Torque the hex head bolts 6.3 ft lbs (8.8 Nm).

NOTICE

PULL VERY SLOWLY WITH THE TOWING VEHICLE CONNECTED TO THE MACHINE TO ALLOW THE SPLINE OF THE SUN GEAR SHAFT TO ENGAGE WITH THE SPLINE OF THE INPUT SHAFT.

CAUTION

DO NOT OPERATE THE MOTOR TO MAKE THE SUN GEAR SHAFT TO ENGAGE WITH THE SPLINE OF THE INPUT SHAFT.

4. Check to ensure all bolts are tight and all components are returned to their original positions.
5. The gear drive should now be reengaged and the machine can be disconnected from the towing vehicle.

https://truckmanualshub.com/

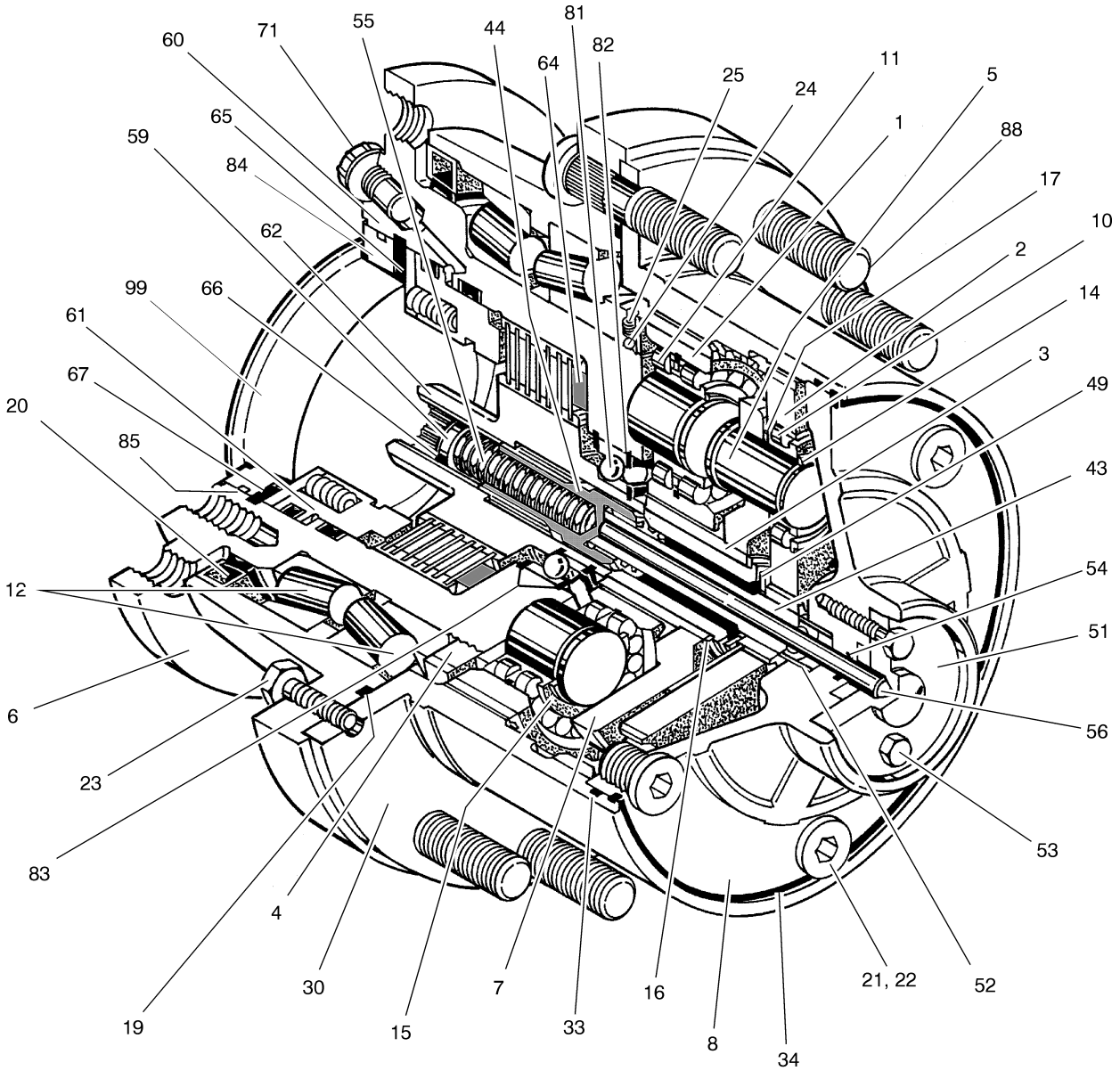

1. Planet Gear
2. Planet Gear
3. Sun Gear
4. Shaft Nut
5. Planet Bolt
6. Support Ring
7. Planet Carrier
8. Cover
9. (Not Used)
10. Roller Bearing
11. Roller Bearing
12. Tapered Roller Bearing
13. (Not Used)
14. Retaining Ring
15. Retaining Ring
16. Retaining Ring
17. Support Disc
18. (Not Used)
19. O Ring
20. Ring Seal
21. Screw Plug
22. Seal Ring
23. Bolt
24. Ball
25. Expander
26. thru 29. (Not Used)
30. Ring Gear
31. thru 32. (Not Used)
33. O Ring
34. Spring
35. thru 42 (Not Used)
43. Sun Gear
44. Input Shaft
45. thru 48. (Not Used)
49. Washer
50. (Not Used)
51. Cover
52. Disc
53. Bolt
54. Ball
55. Pressure Spring
56. Shaft Rod
57. thru 58. (Not Used)
59. Rotor Disc
60. Spindle
61. Brake
62. Coupler
63. (Not Used)
64. Plate Back-Up
65. Plate Back-Up
66. Retaining Ring
67. Retaining Ring
68. thru 70. (Not Used)
71. Plug
72. thru 80. (Not Used)
81. Bearing
82. Retaining Ring
83. Retaining Rings
84. Ring Seal
85. thru 87. (Not Used)
88. Stud Wheel
89, thru 98. (Not Used)
99. Plug

Figure 3-15. Torque Hub

https://truckmanualshub.com/

3.8 DRIVE HUB

The final drive consists of two stages with an integrated disconnect mechanism. Each stage incorporates a set of matched planetary gears, which provide an equal load of distribution. All torque transmitting components are made of forged, quenched and tempered high-alloy steels. External gears are carborized. Precision roller bearings are used exclusively. Two large, tapered roller bearings support the sprocket or wheel loads. A shaft seal protects the unit against contamination.

Disassembly

1. Position drive so that one of the fill holes is at the bottom of the end cover and drain the gear oil.
2. Remove all bolts holding motor and remove motor from drive.
3. Compress the disc (59) using a simple fixture or other suitable device.
4. Remove snap ring (66) and release pressure on disc until loose. Remove tool and disc (59).
5. Remove the spring (55) from the input shaft (44) and turn the unit so that cover (8) is in the up position.
6. Remove screw plugs (22) and seal rings (21).
7. Remove snap ring (34), cover unit (8) from drive and O-ring (33).
8. Remove first stage planetary assembly (7).
9. Remove hex. hd. bolts (23) to remove gear (33) and O-ring (19).
10. Remove Snap rings (15) to pull off planet gears (1) together with cylindrical roller bearings (11) from spindle (60).

NOTE: *Further disassembly of the hub is discouraged. Reinstallation of the shaft nut (4) requires a special tool and a torque of 626 ft lbs (876 Nm) for proper reassembly. These components WILL fail if not properly reassembled.*

11. Inspect the planetary stage assemblies as complete units. Thoroughly clean and check both the gearing and the bearings for damage and apply new oil. If gears or bearings need replacing, they must be replaced as complete units.

NOTE: *The first stage planetary bearings (10)* ***must*** *be replaced in sets of three pieces.*

The first stage planetary gears (11) ***must*** *be changed as a complete set of four and the manufacturer recommends changing the sun gear shaft (43) along with this set of planets.*

NOTE: *The second stage planetary bearings (11)* ***must*** *be replaced in sets of four pieces.*

Disassembly of Cover Unit (8)

1. Loosen and remove hex. hd. bolts (53) and remove cover (51).
2. Remove Shaft rod (56), O-ring (54), and sleeve (52).

Disassembly of First Stage Planetary Assembly

1. Push the sun gear shaft (43) out of the first stage.
2. Remove snap rings (14) and press planet pins (5) out of planet carrier (7) and planet gears (2).
3. Pull cylindrical roller bearing (10) out of planet gears (2).
4. Remove snap ring (16) from sun gear (3) and remove the thrust washer (49).

Disassembly of the Second Stage Planet Gears (1)

Press cylindrical roller bearings out of planet gears (1).

https://truckmanualshub.com/

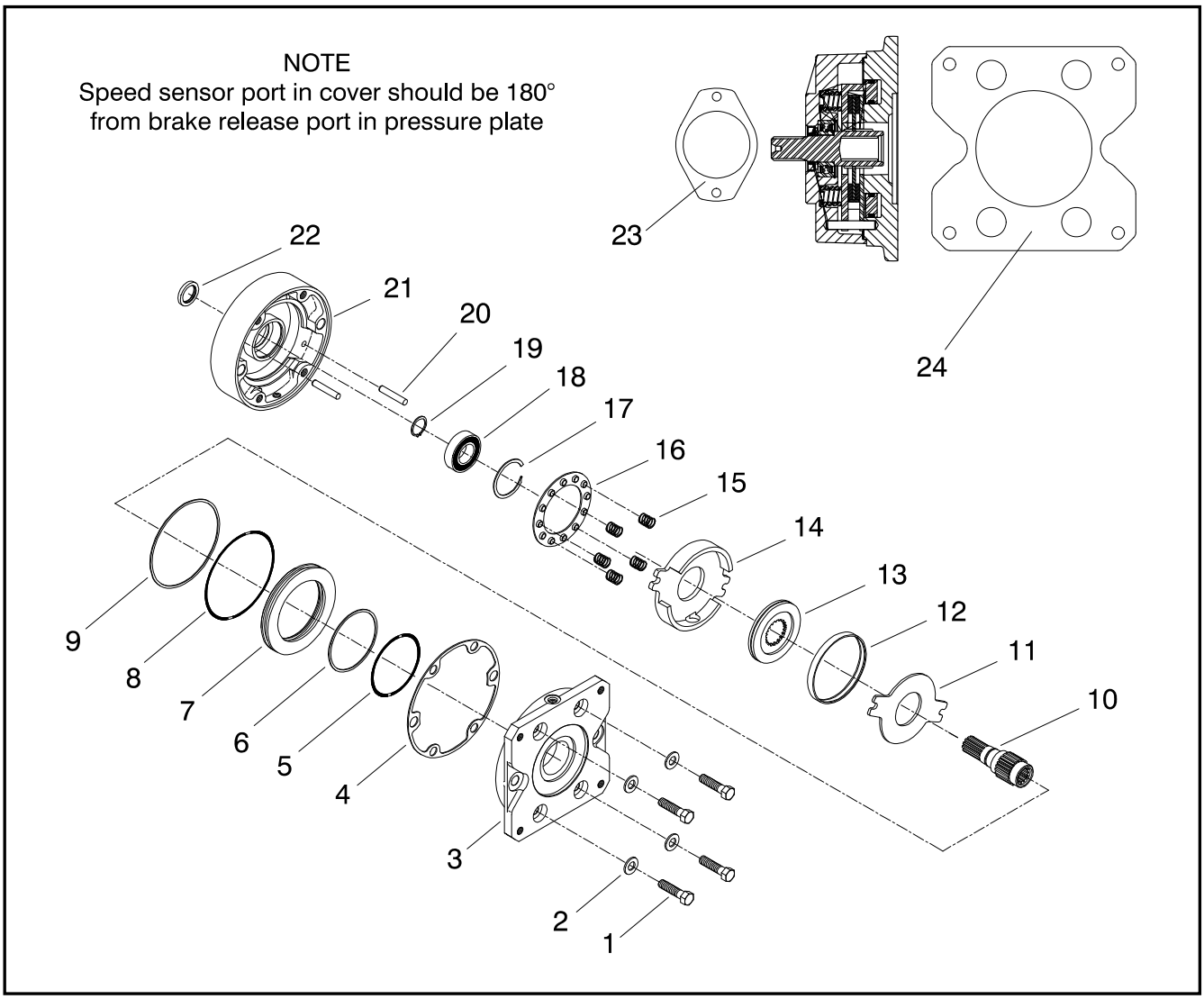

1. Retaining Screws
2. Washers
3. Pressure Plate
4. Case Seal
5. O-ring
6. Back-up Ring
7. Piston
8. O-ring
9. Back-up Ring
10. Shaft
11. Stator Disc
12. Sensor Ring
13. Rotor Disc
14. Plate
15. Springs
16. Spring Retainer
17. Retaining Ring
18. Bearing
19. Retaining Ring
20. Dowel Pins
21. Cover
22. Rotary Oil Seal
23.
24.

Figure 3-16. Brake Assembly

https://truckmanualshub.com/

3.9 DRIVE BRAKE - MICO

Disassembly

1. After removing the brake from its installation, place brake on a clean dry work bench with mounting plate uppermost.
2. Remove pressure plate (3) from cover (21) by removing cap screws (1) and washers (2).

CAUTION

PRESSURE PLATE IS UNDER SPRING TENSION OF APPROXIMATELY 680 KG (1500 LB). THE FOUR CAP SCREWS SHOULD BE LOOSENED EVENLY TO RELIEVE THE FORCE. IF A HYDRAULIC PRESS IS AVAILABLE, 3000 LBS (1361 KGF) MINIMUM, THE PRESSURE PLATE CAN BE HELD IN POSITION WHILE REMOVING THE CAP SCREWS AND WASHERS.

3. Remove case seal (4) from cover (21).
4. Remove piston (7) from pressure plate (3).
5. Remove o-rings (5, 8) and back-up rings (6, 9) from piston (7).

NOTICE

IF THE SENSOR RING (12) IS DAMAGED OR NEEDS REPLACED, THE ENTIRE BRAKE MUST BE REPLACED AS A UNIT. THE SENSOR RING IS NOT AVAILABLE AS A SERVICE PART.

6. Remove stack assembly, consisting of stator disc (11), sensor ring (12), rotor disc (13), and plate (14) from cover (21).
7. Remove dowel pins (20), springs (15), and spring retainer (16) from cover (21).

NOTE: *Not all models use the same number of springs or spring pattern. Record this information for reassembly purposes.*

8. Remove retaining ring (17) from cover (21).
9. Remove shaft (10) by pressing or using a soft mallet on male end of shaft (10).
10. Remove retaining ring (19) and bearing (18) from shaft (10).
11. Press rotary oil seal (22) from cover (21).

Assembly

NOTE: *Lubricate all rubber type components from repair kit with clean type fluid used in the system.*

1. Clean all parts thoroughly before assembly.
2. Press new rotary oil seal (22) into cover (21) taking note to direction of seal.
3. Install new bearing (18) and retaining ring (19) on shaft (10).
4. Install shaft assembly and retaining ring (17) in cover (21).
5. Install dowel pins (20), spring retainer (16) and springs (15) in cover (21).

NOTE: *Be sure to use the same number of springs and spring pattern as recorded during disassembly.*

6. Position plate (14) on springs (15). Hole in plate (14) must line up with hole in cover (21).

NOTE: *Discs* (13, 11) *and plate* (14) *must remain dry during installation. No oil residue must be allowed to contaminate disc surfaces.*

7. Press sensor ring (12) on rotor disc (13). Place a new rotor disc (13) on shaft (10) until it contacts plate (14). Install stator disc (11).
8. Install new o-rings (5, 8) and new back-up rings (6, 9) on piston (7). Note order of o-rings and back-up rings. Insert piston (7) into pressure plate (3). Be careful not to shear o-rings or back-up rings.
9. Install new case seal (4) in cover (21).
10. Position pressure plate (3) on cover (21) aligning dowel pins (20) with holes in pressure plate.
11. Install cap screws (1) and washers (2) and tighten evenly to draw pressure plate (3) to cover (21). Torque cap screws to 55 lb ft (74.6 NM).

NOTE: *A hydraulic press will simplify the installation of the pressure plate. Clamp pressure plate in position while tightening the cap screws.*

CAUTION

IF HYDROSTATIC BENCH TESTING IS PERFORMED ON THE BRAKE ASSEMBLY, RELEASE PRESSURE SHOULD NOT EXCEED 2000 PSI (137.9 BAR) UNLESS TWO ADDITIONAL BOLTS ARE USED FOR SUPPLEMENTAL CLAMPING.

Bleeding

1. Install brake in system and connect pressure lines.
2. Bleed pressure release section of brake by pressurizing side inlet port and allowing air to escape from top port. Pressure should not exceed 100 psi (6.9 bar) during bleeding.
3. Apply sufficient pressure to release brake and check for proper operation in system.

NOTE: *If damaged, replace the input and output gaskets before assembling the brake to the hub and motor. (See Figure 3-13. and Figure 3-16.)*

https://truckmanualshub.com/

3.10 TORQUE HUB

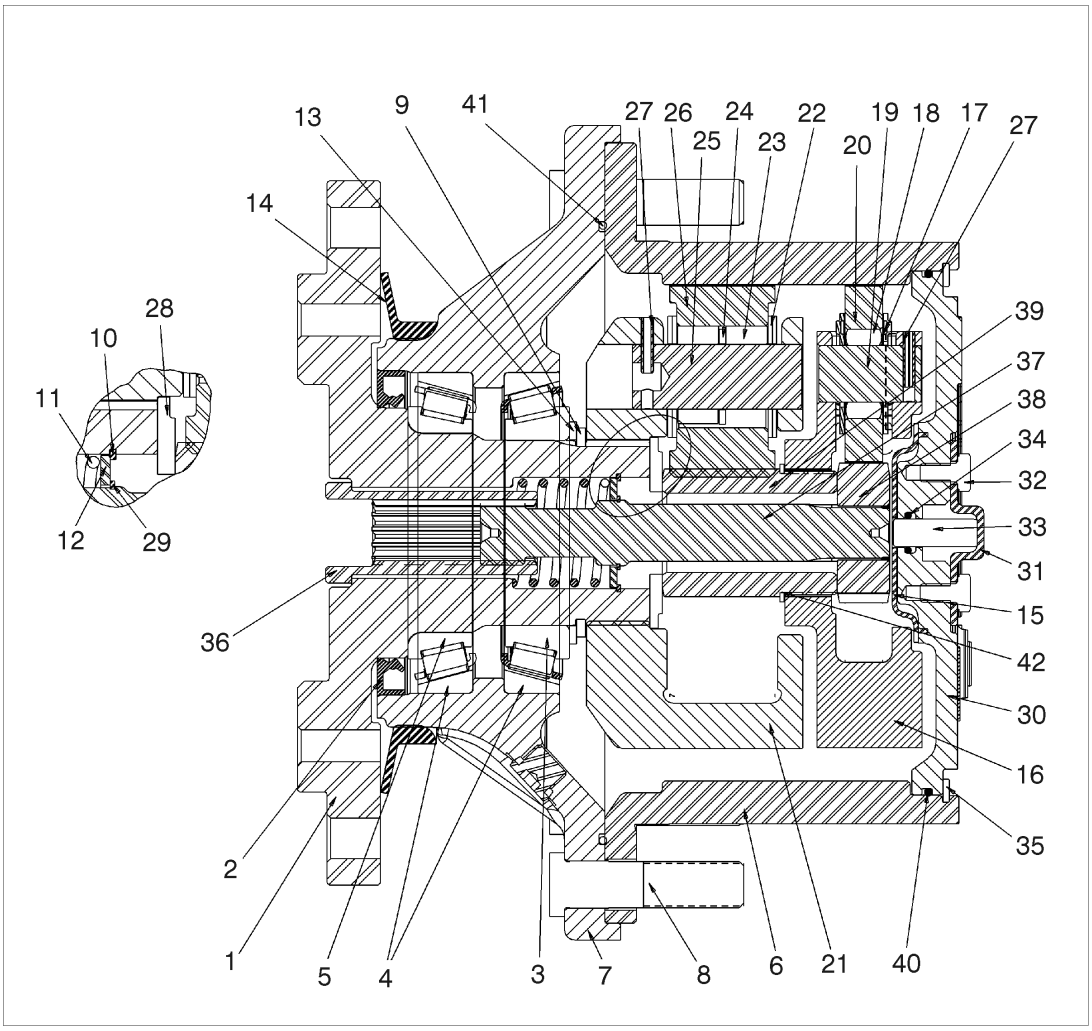

1.	Spindle	12.	Thrust Washer	23.	Needle Bearing	34.	O-ring
2.	Lip Seal	13.	Spacer	24.	Thrust Spacer	35.	Retaining Ring, Int.
3.	Tapered Bearing Cone	14.	Seal Boot	25.	Planet Shaft	36.	Coupling
4.	Tapered Bearing Cup	15.	Thrust Spacer	26.	Planet Gear	37.	Input Shaft
5.	Tapered Bearing cone	16.	Input Carrier	27.	Roll Pin	38.	Input Sun Gear
6.	Ring Gear	17.	Thrust Washer	28.	Thrust Washer	39.	Output Sun Gear
7.	Hub (Housing)	18.	Needle Bearing	29.	Retaining Ring, Ext.	40.	O-ring
8.	Stud	19.	Planet Shaft	30.	Cover	41.	O-ring
9.	Retaining Ring, Ext.	20.	Planet Gear	31.	Disengage Cap	42.	Retaining Ring, Ext.
10.	Retaining Ring, Int.	21.	Output Carrier	32.	Hex Bolt		
11.	Spring (1.460, 1.500)	22.	Thrust Washer	33.	Dowel Pin		

Figure 3-17. Torque Hub Assembly

https://truckmanualshub.com/

Roll Test

The purpose of the roll test is to determine if the unit's gears are rotating freely and properly. You should be able to rotate the gears in your unit by applying constant force to the roll checker. If you feel more drag in the gears only at certain points, then the gears are not rolling freely and should be examined for improper installation or defects. Some gear packages roll with more difficulty than others. Do not be concerned if the gears in your unit seem to roll hard as long as they roll with consistency.

Leak Test (Main Unit)

The purpose of a leak test is to make sure the unit is air tight. You can tell if your unit has a leak if the pressure gauge reading on your leak checking fitting starts to fall after the unit has been pressurized and allowed to equalize. Leaks will most likely occur at the pipe plugs, the main seal or wherever o-rings or gaskets are located. The exact location of a leak can usually be detected by brushing a soap and water solution around the main seal and where the o-rings or gaskets meet on the exterior of the unit, then checking for air bubbles. If a leak is detected in a seal, o-ring or gasket, the part must be replaced, and the unit rechecked. Leak test at 10 psi for 20 minutes.

Tightening and Torquing Bolts

If an air impact wrench is used to tighten bolts, extreme care should be taken to ensure theat the bolts are not tightened beyond their specified torque.

The following steps describe how to tighten and torque bolts or socket head cap screws in a bolt circle.

1. Tighten (but do not torque) bolt "A" until snug.
2. Go to the opposite side of the botl circle and tighen bolt "B" until equally snug.
3. Crisscross around the bolt circle and tighen remaining bolts.
4. Now use a torque wrench to apply a specified torque to bolt "A".
5. Using the same sequence, crisscross around the bolt circle and apply an equal torque to the remaining bolts.

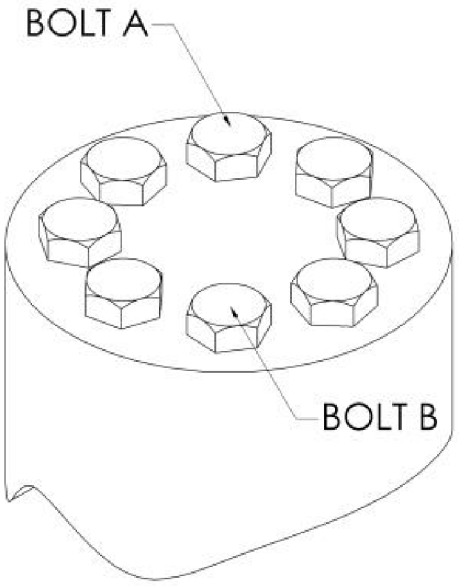

Figure 3-18. Bolt Torquing Sequence

https://truckmanualshub.com/

Main Disassembly

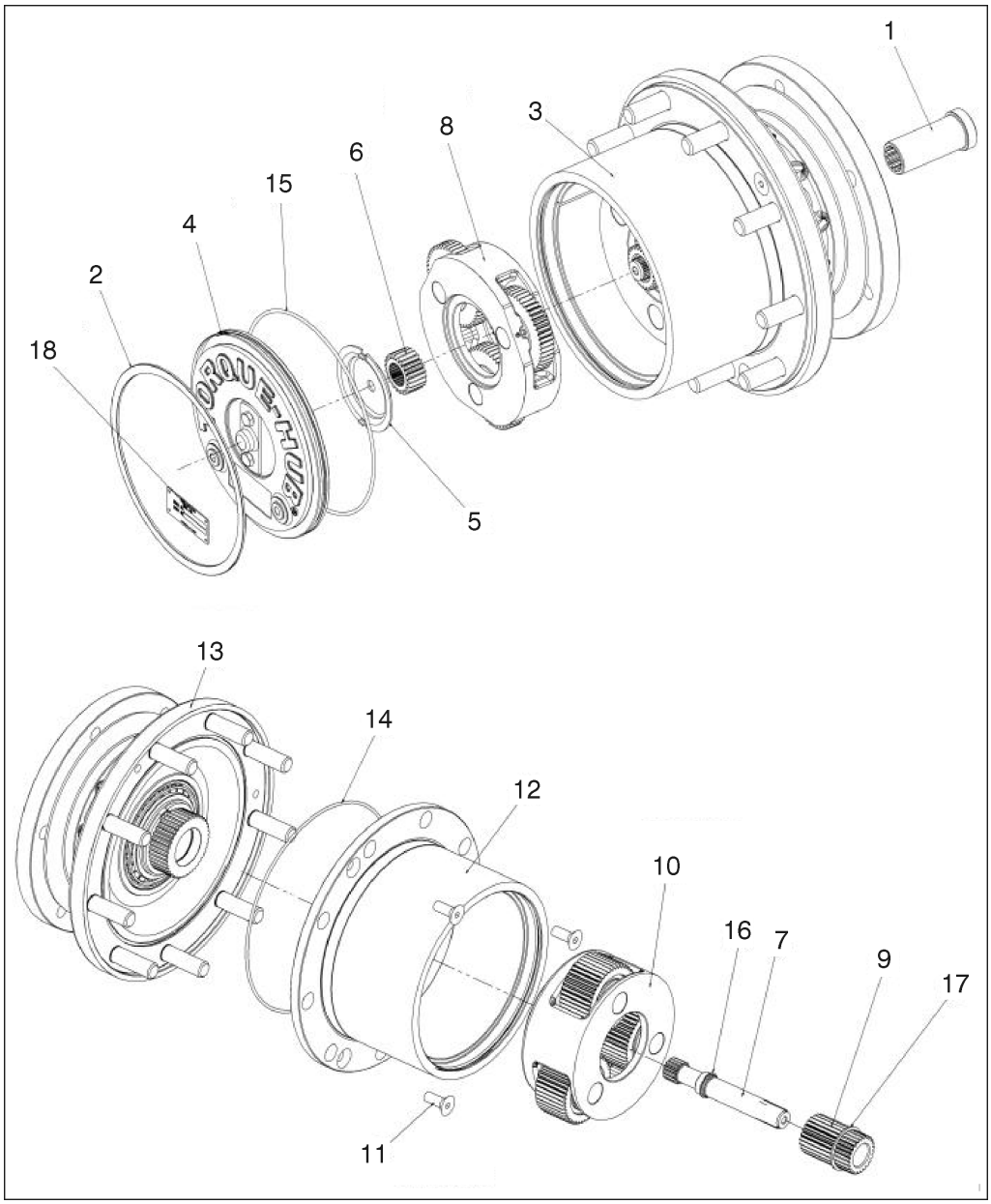

1. Coupling
2. Retaining Ring
3. Ring Gear
4. Cover Subassembly
5. Washer
6. First Stage Sun Gear
7. Input Shaft
8. Carrier Subassembly
9. Second Stage Sun Gear
10. Output Stage Carrier Subassembly
11. Flat Head Bolts
12. Ring Gear
13. Housing
14. O-Ring
15. O-Ring
16. Retaining Ring, Ext.
17. Retaining Ring, Ext.
18. ID Plate

Figure 3-19. Hub Main Disassembly

https://truckmanualshub.com/

Disassembly Instructions:

1. Perform the Roll Check and Leak Check, if applicable prior to disassembling the unit.
2. Drain oil from the unit.
3. Remove the Coupling (1) from Spindle End first.
4. Remove the Retaining Ring (2) by prying the open end of the Retaining Ring out of the groove in the Ring Gear (3) with a screwdriver, then grasp the loose end with pliers and pull the Retaining Ring completely out of the groove.
5. Remove the Cover Subassembly (4) from the unit. The unit can be carefully pressurized with air to pop the cover out of the unit. The Washer (5) may have to be removed separately because of the loose attachment.
6. Remove the First Stage Sun Gear (6) if applicable.

NOTE: *On units with ratios greater than 36:1 numerically, there will not be a separate First Stage Sun Gear (6), as the gear teeth will be integral to the Input Shaft (7).*

7. Remove the Input Carrier Subassembly (8).
8. Remove the Second Stage Sun Gear (9).
9. Remove the Input Shaft (7).

NOTE: *On units with a ratio 48:1, the Sun Gear (9) and the Input Shaft (7) wil need to be removed together.*

10. Remove the Output Stage Carrier Subassembly (10).
11. Loosen and remove the three Flat Head Bolts (11) that retain the Ring Gear (12) to the Housing (13).
12. Lift the Ring Gear (12) off of the Housing (13).
13. Remove the O-ring (14) from between the Housing (13) and the Ring Gear (12).

https://truckmanualshub.com/

Output Carrier Disassembly

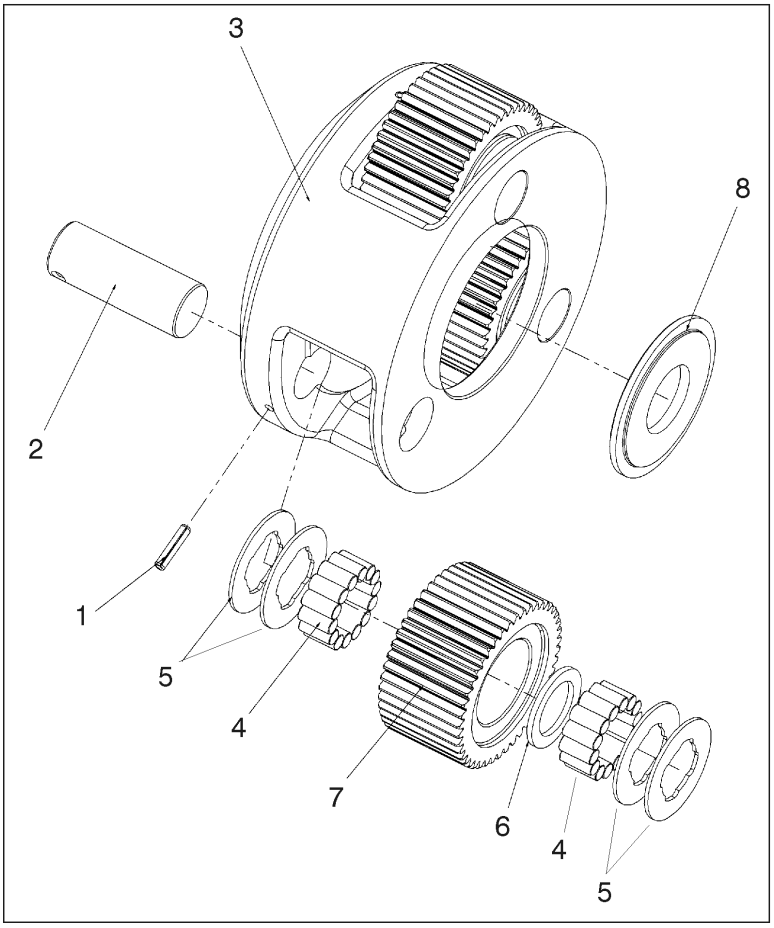

1. Roll Pin
2. Planet Shaft
3. Carrier
4. Needle Bearings
5. Thrust Washers
6. Thrust Spacer
7. Planet Gears
8. Thrust Washer

Figure 3-20. Output Carrier Disassembly

1. Using a 1/8" diameter punch, drive the Roll Pin (1) into the Planet Shaft (2) until it bottoms against the Carrier (refer to Figure 3-17.).
2. Using a soft face hammer, tap the Planet Shaft (2) out of the Carrier (3).
3. Using a 1/8" diameter punch, drive the Roll Pin (1) out of the Planet Shaft (2).

NOTE: *The Roll Pins (1) should not be reused when reassembling the unit.*

4. Slide the Planet Gear Sub-assembly (4 - 7) out of the Output Carrier (3) being careful to not drop the Needle Bearings (4) in the process.
5. Remove the 4 Thrust Washers (5), 28 Needle Rollers (4) and the Thrust Spacer (6) from the Second Stage Planet Gear (7).
6. Repeat Steps 1-5 for the remaining two Planet Gears (7).
7. Remove the Thrust Washer (8) from the counterbore in the Output Carrier (3).

https://truckmanualshub.com/

Input Carrier Disassembly

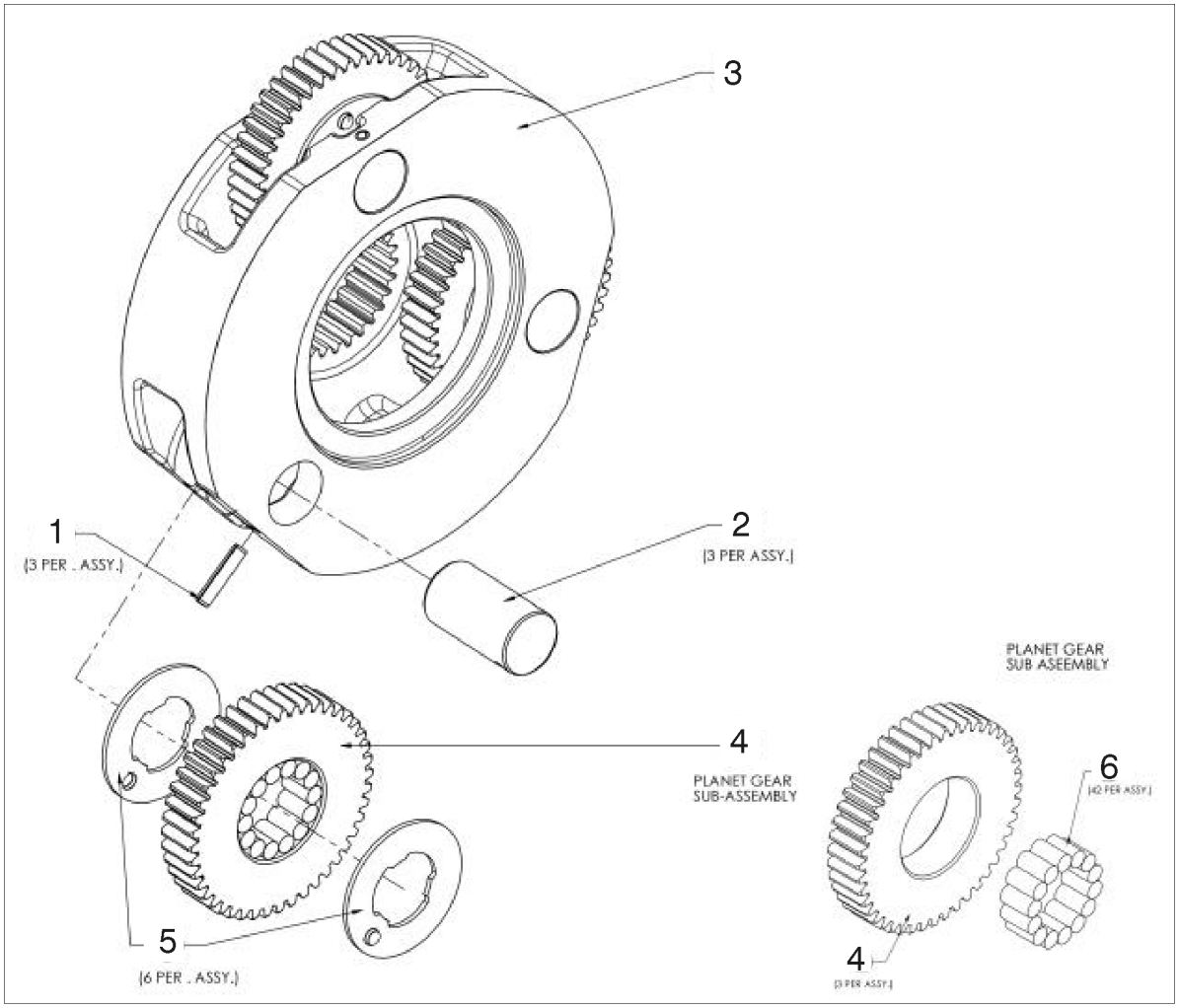

1. Roll Pin
2. Planet Shaft
3. Carrier
4. Planet Gears
5. Thrust Spacer
6. Needle Bearings

Figure 3-21. Input Carrier Disassembly

1. Using a 1/8" diameter punch, drive the Roll Pin (1) into the Planet Shaft (2) until it bottoms against the Carrier (3).
2. Using a soft face hammer, tap the Planet Shaft (2) out of the Carrier (3).
3. Using a 1/8" diameter punch, drive the Roll Pin (1) out of the Planet Shaft (2).

NOTE: *The Roll Pins (1) should not be reused when reassembling the unit.*

4. Slide the Planet Gear (4) and the two Thrust Washers (5) out of the Carrier (3).
5. Remove the 14 Needle Bearings (6) from the bore of the Planet Gear (4).
6. Repeat steps 1-5 for each of the two remaining Planet Gears.

https://truckmanualshub.com/

Hub-Spindle Disassembly

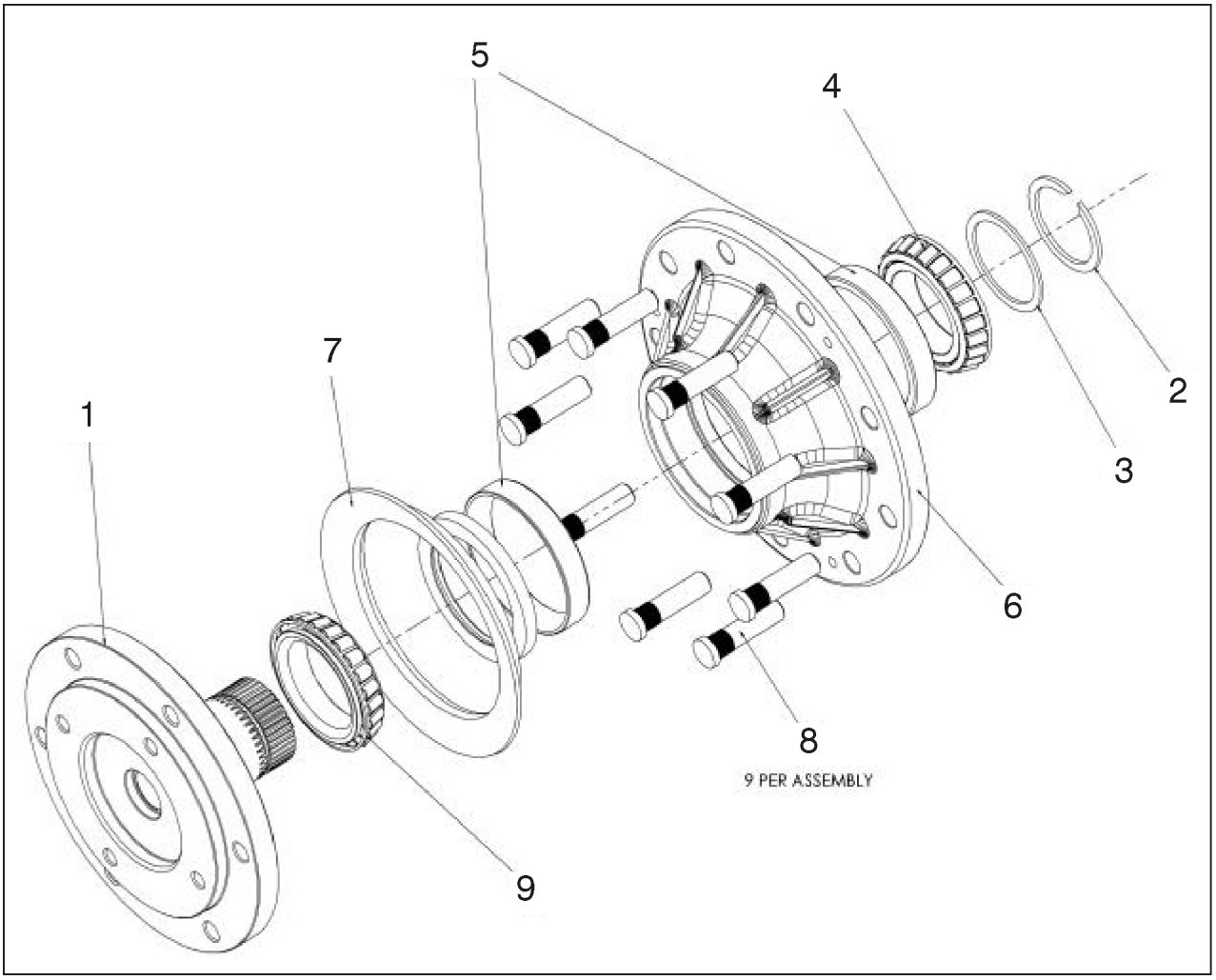

1. Spindle	4. Bearing Cone	7. Boot Seal
2. Retaining Ring	5. Bearing Cup	8. Studs
3. Spacer	6. Hub	9. Bearing Cone

Figure 3-22. Hub-Spindle Disassembly

1. Place unit on bench with Spindle (1) end down.
2. Remove Retaining Ring (2) with appropriate tool.
3. Remove Spacer (3).
4. Remove "A" position Bearing Cone (4) from Bearing Cup (5) in Hub (6).
5. Lift Hub (6) off of Spindle (1). Remove Boot Seal (7) from Hub if applicable.
6. If necessary, press 9 Studs (8) out of Hub. Locate Hub on Seal (refer to Figure 3-17.) end.
7. Remove Seal from Hub.

NOTE: *The Seal should NOT be reused when reassembling the unit.*

8. Remove "B" position Bearing Cone (9) from Hub.
9. Using a soft steel rod, knock both Bearing Cups (5) out of the Hub.

https://truckmanualshub.com/

Cover Disassembly

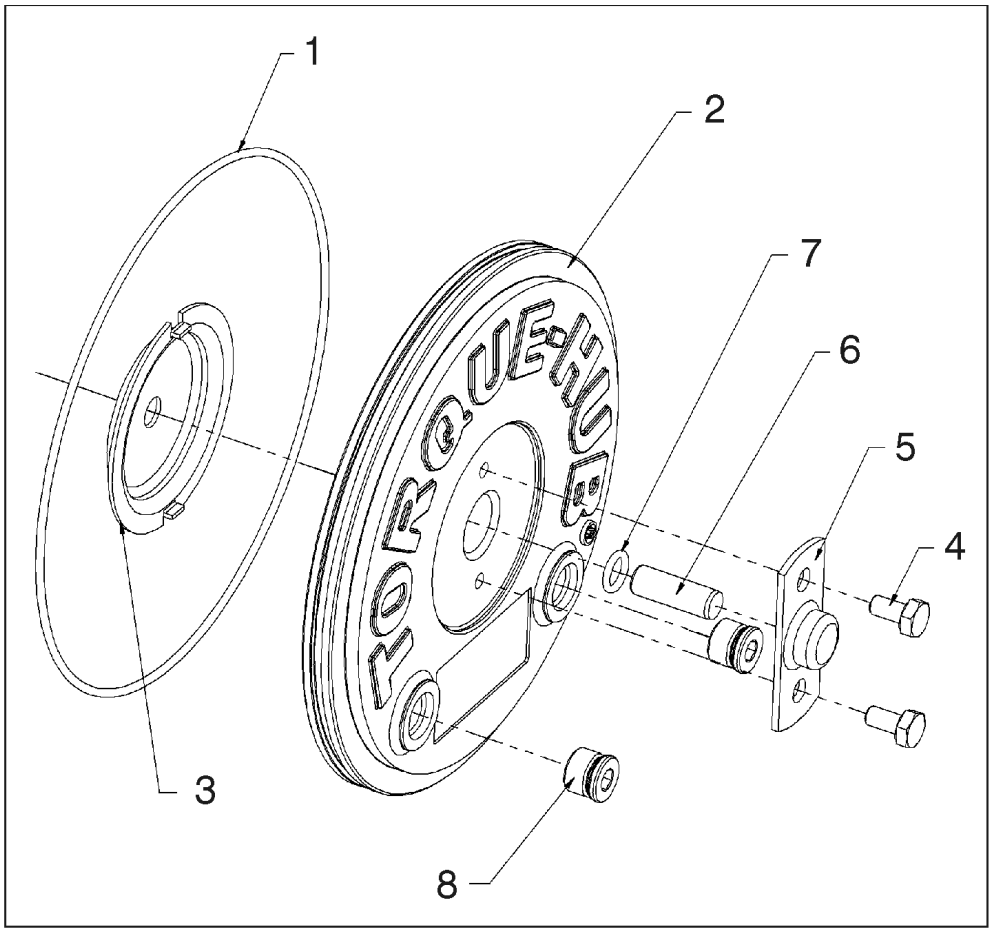

1. O-Ring
2. Cover
3. Thrust Washer
4. Hex Head Bolts
5. Disengage Cap
6. Disengage Rod
7. O-ring
8. O-ring Pipe Plugs

Figure 3-23. Cover Disassembly

1. Remove O-ring (1) from the groove in the Cover (2).
2. Remove the Thrust Washer (3) from Cover pockets.
3. Unscrew the two Hex Head Bolts (4) and remove the Disengage Cap (5) from the Cover.
4. Pull Disengage Rod (6) out of the Cover.
5. Use an appropriate tool to remove the O-ring (7) from the internal groove in the Cover.
6. Remove the two O-ring Pipe Plugs (8) from the Cover.

https://truckmanualshub.com/

Input Carrier Sub-Assembly

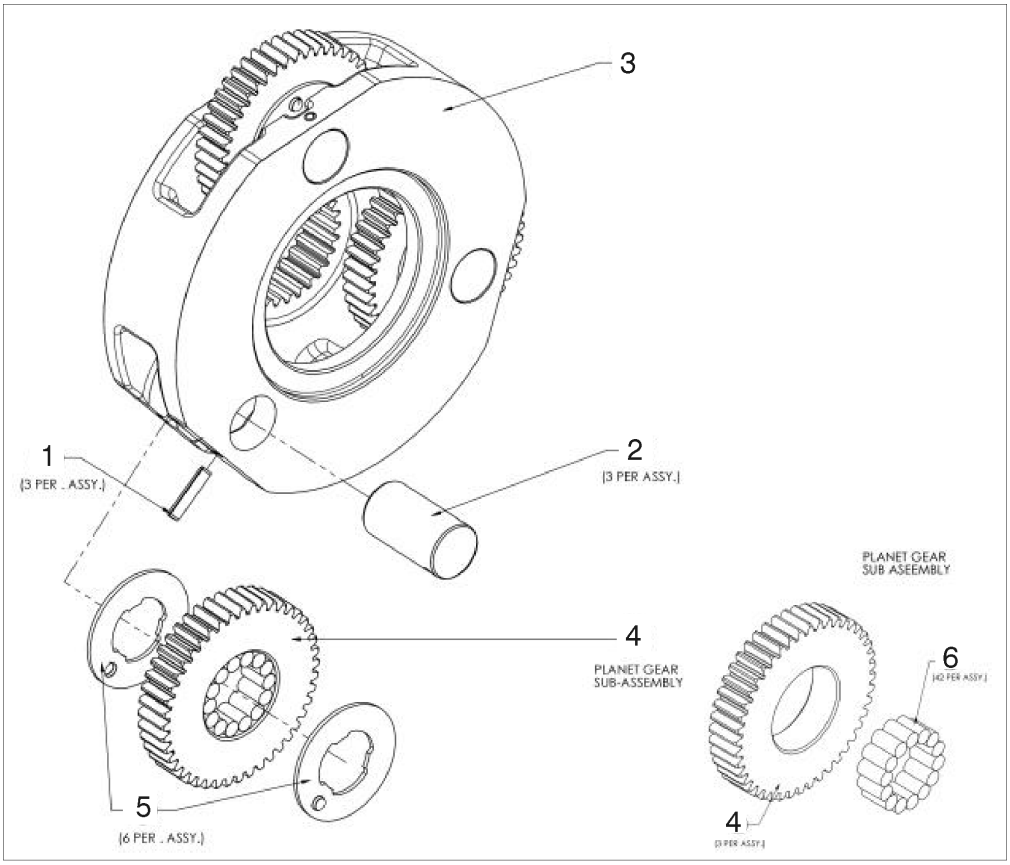

1. Roll Pin
2. Planet Shaft
3. Carrier
4. Planet Gears
5. Thrust Spacer
6. Needle Bearings

Figure 3-24. Input Carrier Sub-Assembly

1. Apply a liberal coat of grease to the bore of one Input Planet Gear (4).
2. Line the inside of the Planet Gear with 14 Needle Bearings (6).

NOTE: *The last roller installed must be installed end wise. That is, the end of the last roller must be placed in between the ends of the two rollers which form the space, and then slid, parallel to the other rollers, into place.*

3. Set Carrier (3) in an upright position.
4. Insert a Planet Shaft (2) into the planet shaft hole in the end of the Carrier opposite the splined end. The end of the Planet Shaft that does NOT have the roll pin hole should be inserted into the carrier FIRST.
5. Place one Thrust Washer (5) onto the end of the Planet Shaft. Make sure the flat faces towards the inside of the carrier and make sure the button fits in the pocket on the inside of the Carrier towards the OD.
6. Following the Thrust Washer, place the Planet Gear with Needle Bearings onto the Planet Shaft.
7. Following the Planet Gear, place one more Thrust Washer onto the Planet Shaft. Align the Thrust Washer in the same manner described in Step 5.
8. Now insert the Planet Shaft through the opposite planet shaft hole on the Carrier. Use an alignment punch or similar tool to align the roll pin holes on the Carrier and Planet Shaft.

NOTE: *Be sure not to hit the Planet Gears when driving in the Roll Pins (1).*

9. Drive the Roll Pins down into the aligned roll pin holes. Pin should be flush with the flat of the Carrier.
10. Repeat Steps 1-9 for the installation of the two remaining Planet Gears.

NOTE: *Some grease may need to be applied tothe Thrust Washers to hold them in place while installing the Planet Gears.*

https://truckmanualshub.com/

Output Carrier Sub-Assembly

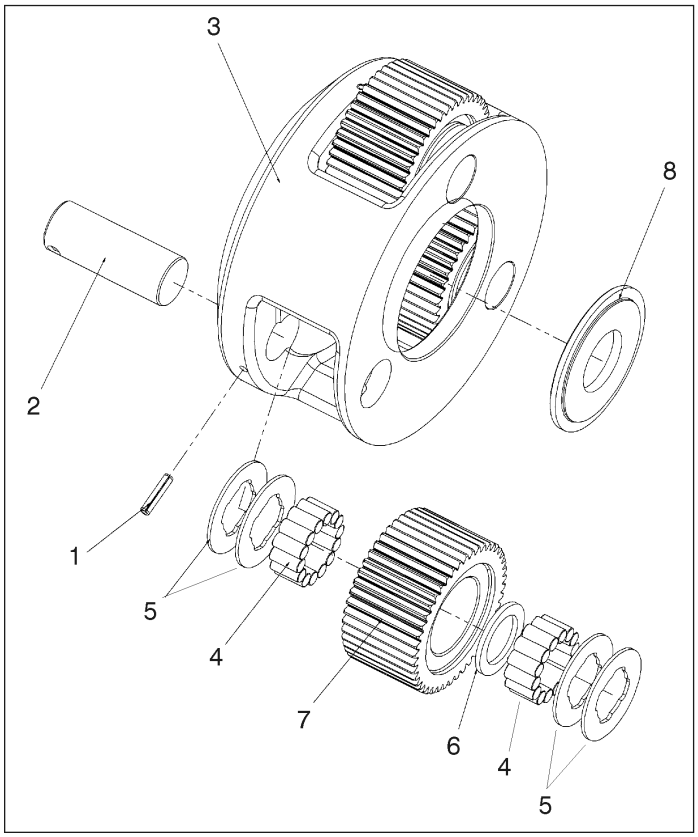

1. Roll Pin
2. Planet Shaft
3. Carrier
4. Needle Bearings
5. Thrust Washers
6. Thrust Spacer
7. Planet Gears
8. Thrust Washer

Figure 3-23. Output Carrier Sub-Assembly

1. Apply a liberal coat of grease to the bore of one Output Planet Gear (7).
2. Line the inside of the Planet Gear with 14 Needle Bearings (4).

NOTE: *The last roller installed must be installed end wise. That is, the end of th last roller must be placed in between the ends of the two rollers which form the space, and then slid, parallel to the other rollers, into place.*

3. Place the Spacer (6) into the bore of the Output Planet.
4. Repeat Step 2 to put in second roll of Needle Bearings.
5. Apply grease to hold two Thrust Washers together and onto Output Planet Gear counterbore. Do the same to the other side.
6. Repeat Steps 1-5 to finish the assembly of the two remaining Output Planet Gears.
7. Place the Thrust Washer (8) into counterbore of the Carrier (3). BE SURE the small diameter side of the Thrust Washer is facing the planet gear side.
8. Place the Planet Gear Sub-assembly into the Carrier. Visually align the planet gear bore with one of the planet shaft holes on the Carrier.
9. Insert a Planet Shaft (2) into the planet shaft hole described in Step 8 on the Carrier. The end of the planet shaft that does NOT have the roll pin hole should be inserted into the Carrier FIRST.
10. Now insert the Planet Shaft through the first set of Thrust Washers, Planet Gear, then the second set of Thrust Washers. Use an alignment punch or similar tool to align the roll pin holes on the Carrier and Planet Shaft.

NOTE: *Be sure not to hit the Planet Gears when driving in the Roll Pins (1).*

11. Drive the Roll Pin down into the aligned roll pin holes. Pin should be flush with OD of Carrier.
12. Repeat Steps 7-11 for the installation of the two remaining Planet Gears.

https://truckmanualshub.com/

Hub-Spindle Sub-Assembly

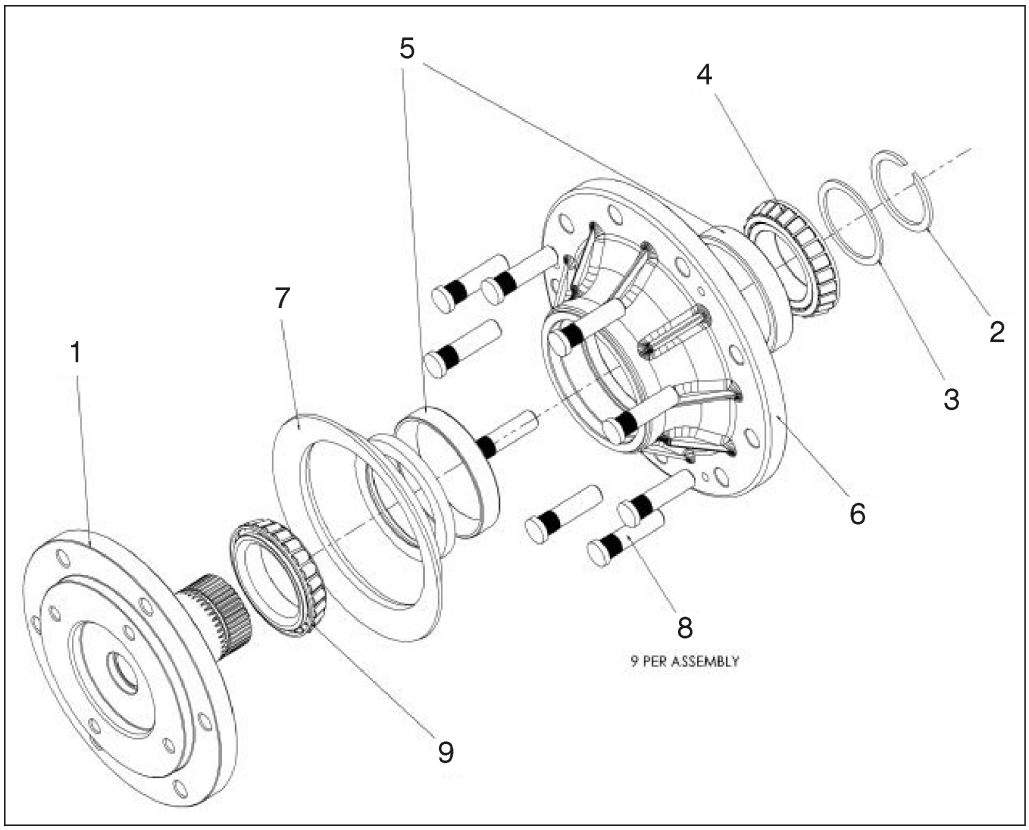

1. Spindle
2. Retaining Ring
3. Spacer
4. Bearing Cone
5. Bearing Cup
6. Hub
7. Boot Seal
8. Studs
9. Bearing Cone

Figure 3-24. Hub-Spindle Sub-Assembly

NOTE: *Apply a light coat of oil on all component parts during assembly.*

1. Place the Hub (6) into a pressing base. Press 9 Studs (8) into the Hub.

NOTE: *Use enough pressure to press in studs. Don't use excessively high pressure to press in Studs as this may crack Hub.*

Spray a generous amount of oil on bearings during installation.

2. Press Bearing Cup (5), position "A" into Hub using appropriate pressing tool.
3. Turn Hub over and press Bearing Cup, position "B" into Hub using appropriate pressing tool.
4. Place Bearing Cone (9) into Bearing Cup, position "B".
5. Grease Seal (refer to Figure 3-17.) lip and press Seal into Hub using appropriate tool until seal is flush with end of Hub.
6. Press Seal Boot (7) onto Hub, if required. Turn Hub over and lower onto Spindle (1).
7. Install Bearing Cone (4) into Bearing Cup, position "A".
8. Place Bearing Spacer (3) on top of Bearing Cone.
9. Using appropriate tool, install Retaining Ring (2) into Spindle groove. Make sure ring is completely seated in groove.

NOTE: *Extra bearing pre-load caused by using tool in Step #9 must be removed. This should be done by placing a tool (NOT THE SAME TOOL USED IN STEP #9) on the end of the Spindle, and then striking the tool with a piece of barstock. This should be adequate to remove any additional bearing pre-load.*

https://truckmanualshub.com/

Cover Sub-Assembly

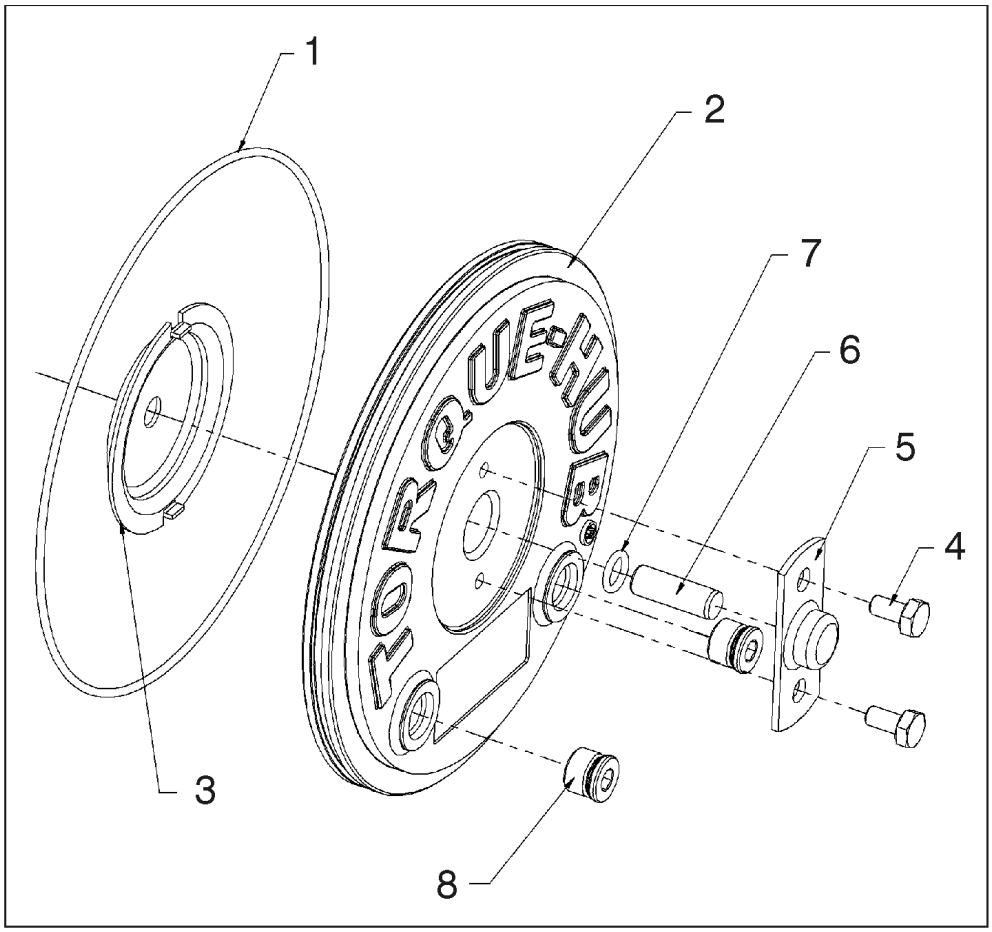

1. O-Ring
2. Cover
3. Thrust Washer
4. Hex Head Bolts
5. Disengage Cap
6. Disengage Rod
7. O-ring
8. O-ring Pipe Plugs

Figure 3-25. Cover Sub-Assembly

1. Grease O-Ring (7) and insert groove in Cover (2).
2. Assemble Disengage Cap (5) onto Cover using two Hex Head Bolts (4). Torque bolts to 70-80 in-lbs.
3. Insert Disengage Rod (6) into hole in Cover until it touches the inside of the Disengage Cap.

NOTE: *The Disengage Rod can be inserted either end first.*

4. Grease the face of the Thrust Washer (3) and place in the Cover making sure the tangs on the Washer seat into the pockets in the Cover.
5. Install the O-ring Pipe Plugs (8) into the Cover. The plugs should be hand tight according to SAE standard.

https://truckmanualshub.com/

Main Assembly

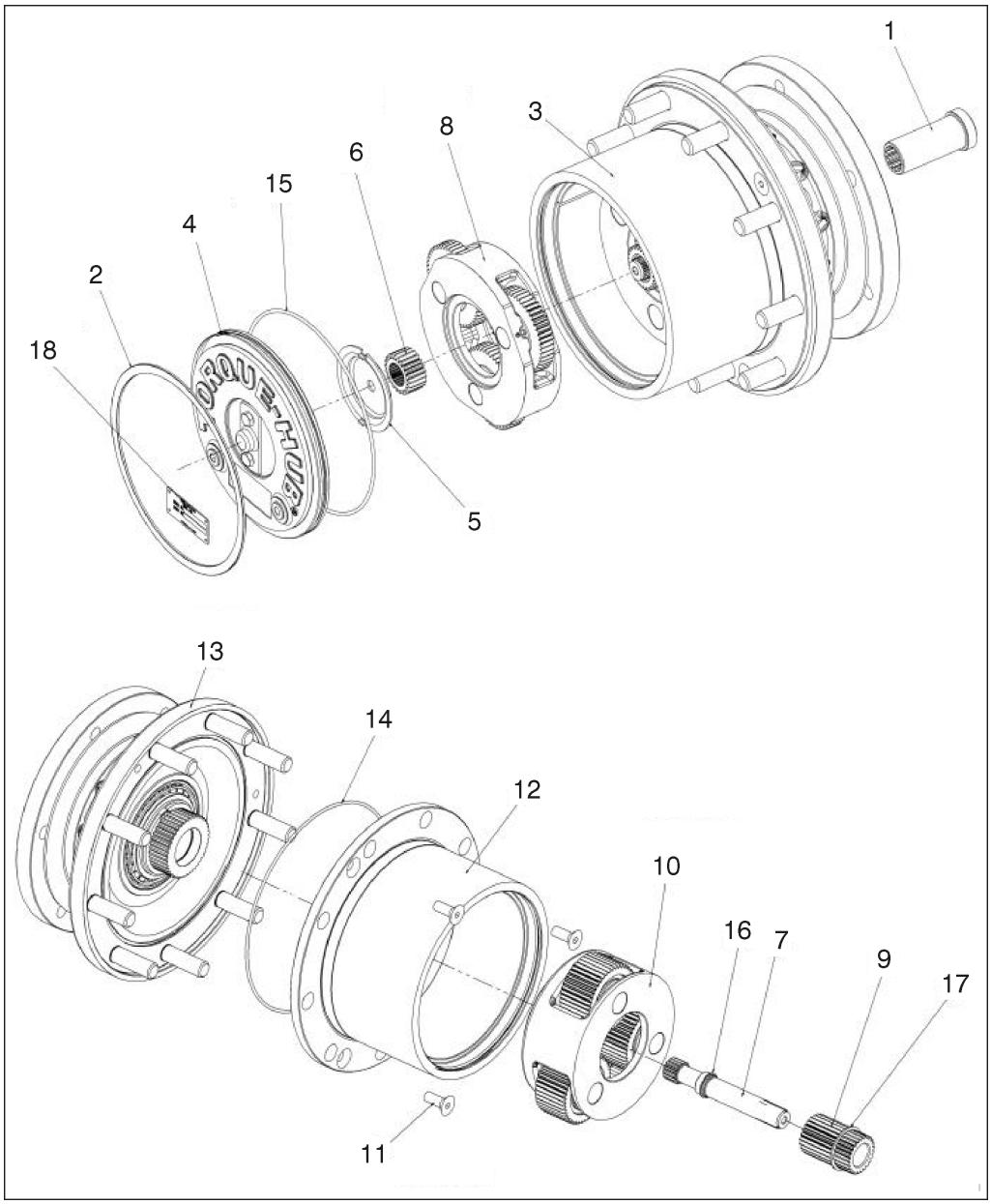

1. Coupling
2. Retaining Ring
3. Ring Gear
4. Cover Subassembly
5. Washer
6. First Stage Sun Gear
7. Input Shaft
8. Carrier Subassembly
9. Second Stage Sun Gear
10. Output Stage Carrier Subassembly
11. Flat Head Bolts
12. Ring Gear
13. Housing
14. O-Ring
15. O-Ring
16. Retaining Ring, Ext.
17. Retaining Ring, Ext.
18. ID Plate

Figure 3-26. Hub Main Assembly

https://truckmanualshub.com/

NOTE: *All components should receive a generous amount of lubricant oil as they are being assembled.*

1. Place Hub-Spindle Sub-Assembly on a bench.
2. Grease O-Ring (14) and place it into the groove of the Housing (13).
3. Place the Ring Gear (12) onto the Hub. Align the 3 shipping cap screw holes on the Hub and Ring Gear.
4. Install the 3 Flat Head Bolts (11) into the Ring Gear and Hub. Torque the Bolts to 15-20 ft-lbs.
5. Place Output Stage Carrier Subassembly (10) into mesh with the Spindle splines.
6. Place the External Retaining Ring (16) over the 13T spline to the retaining groove on the Input Shaft (7).

NOTE: *For ratio 48:1, assemble the Second Stage Sun Gear (9) over the Input Shaft first, then install the External Retaining Ring.*

7. Using an appropriate tool, install the Retaining Ring (17) into the groove on the Output Sun.
8. Place the Input Shaft spline end into mesh with the Internal Coupling (1) splines.
9. With the modified spline end facing up, place the Output Sun Gear into mesh with the Output Planet Gears.
10. Place the Input Carrier Sub-Assembly (8) onto the Output Sun Gear splines. Drop the First Stage Sun Gear (6) into mesh with the planet gears for specific ratios, if required. (No timing required).
11. Grease the O-Ring (15) and insert into the groove in the Cover Subassembly (4).
12. Install the Cover Subassembly into the Ring Gear (3) counterbore and install the Retaining Ring (2) into the groove in the Ring Gear.
13. Attach the ID Plate (18) onto the unit using the Drive Screw (not shown).
14. Check disconnect, roll and air check the unit, leak check the brake, and record release pressure.
15. Insert the Plastic Plug (not shown) into place, if applicable.

https://truckmanualshub.com/

NOTES:

https://truckmanualshub.com/

SECTION 4. HYDRAULICS

4.1 SERVICING AND MAINTENANCE GUIDELINES

General

The following information is provided to assist you in the use and application of servicing and maintenance procedures contained in this chapter.

Safety and Workmanship

Your safety and that of others is the first consideration when engaging in the maintenance of equipment. Always be conscious of weight. Never attempt to move heavy parts without the aid of a mechanical device. Do not allow heavy objects to rest in an unstable position. When raising a portion of the equipment, ensure that adequate support is provided.

Cleanliness

1. The most important single item in preserving the long service life of a machine is to keep dirt and foreign materials out of the vital components. Precautions have been taken to safeguard against this. Shields, covers, seals and filters are provided to keep oil supplies clean; however, these items must be maintained on a scheduled basis in order to function properly.
2. At any time when hydraulic oil lines are disconnected, clear adjacent areas as well as the openings and fittings themselves. As soon as a line or component is disconnected, cap or cover all openings to prevent entry of foreign matter.
3. Clean and inspect all parts during servicing or maintenance, and assure that all passages and openings are unobstructed. Cover all parts to keep them clean. Be sure all parts are clean before they are installed. New parts should remain in their containers until they are ready to be used.

Component Removal and Installation

1. Use adjustable lifting devices, whenever possible, if mechanical assistance is required. All slings (chains, cables, etc.) should be parallel to each other and as near perpendicular as possible to top of part being lifted.
2. Should it be necessary to remove a component on an angle, keep in mind that the capacity of an eyebolt or similar bracket lessens, as the angle between the supporting structure and the component becomes less than 90°.
3. If a part resists removal, check to see whether all nuts, bolts, cables, brackets, wiring, etc. have been removed and that no adjacent parts are interfering.

Component Disassembly and Reassembly

When disassembling or reassembling a component, complete the procedural steps in sequence. Do not partially disassemble or assemble one part, then start on another. Always recheck your work to assure that nothing has been overlooked. Do not make any adjustments, other than those recommended, without obtaining proper approval.

Pressure Fit Parts

When assembling pressure fit parts, use an “anti-seize” or molybdenum disulfide base compound to lubricate the mating surface.

Bearings

1. When a bearing is removed, cover it to keep out dirt and abrasives. Clean bearings in nonflammable cleaning solvent and allow to drip dry. Compressed air can be used but do not spin the bearing.
2. Discard bearings if the races and balls (or rollers) are pitted, scored or burned.
3. If bearing is found to be serviceable, apply a light coat of oil and wrap it in clean (waxed) paper. Do not unwrap reusable or new bearings until they are ready to be installed.
4. Lubricate new or used serviceable bearings before installation. When pressing a bearing into a retainer or bore, apply pressure to the outer race. If the bearing is to be installed on a shaft, apply pressure to the inner race.

Gaskets

Check that holes in gaskets align with openings in the mating parts. If it becomes necessary to hand fabricate a gasket, use gasket material or stock of equivalent material and thickness. Be sure to cut holes in the right location as blank gaskets can cause serious system damage.

Bolt Usage and Torque Application

1. Use bolts of proper length. A bolt which is too long will bottom before the head is tight against its related part. If a bolt is too short, there will not be enough thread area to engage and hold the part properly. When replacing bolts, use only those having the same specifications of the original, or one which is equivalent.

https://truckmanualshub.com/

2. Unless specific torque requirements are given within the text, standard torque values should be used on heat treated bolts, studs and steel nuts, in accordance with recommended shop practices.

Hydraulic Lines and Electrical Wiring

Clearly mark or tag hydraulic lines and electrical wiring, as well as their receptacles, when disconnecting or removing them from the unit. This will assure that they are correctly reinstalled.

Hydraulic System

1. Keep the system clean. If evidence of metal or rubber particles are found in the hydraulic system, drain and flush the entire system.
2. Disassemble and reassemble parts on clean work surface. Clean all metal parts with non-flammable cleaning solvent. Lubricate components, as required, to aid assembly.

Lubrication

Service applicable components with the amount, type, and grade of lubricant recommended in this manual, at the specified interval. When recommended lubricants are not available, consult your local supplier for an equivalent that meets or exceeds the specifications listed.

Batteries

Clean batteries using a non-metallic brush and a solution of baking soda and water. Rinse with clean water. After cleaning, thoroughly dry batteries and coat terminals with an anti-corrosion compound.

Lubrication and Servicing

Components and assemblies requiring lubrication and servicing are shown in Section 1.

4.2 LUBRICATION INFORMATION

Hydraulic System

1. The primary enemy of a hydraulic system is contamination. Contaminants enter the system by various means, e.g.; inadequate hydraulic oil, allowing moisture, grease, filings, sealing components, sand, etc. to enter when performing maintenance, or by permitting the pump to cavitate due to insufficient system warm-up.
2. The design and manufacturing tolerances of the component working parts are very close, therefore, even the smallest amount of dirt or foreign matter entering a system can cause wear or damage to the components and generally results in faulty operation. Every precaution must be taken to keep hydraulic oil clean, including reserve oil in storage. Hydraulic system filters should be checked, cleaned, and/or replaced at the specified intervals required in Section 1. Always examine filters for evidence of metal particles.
3. Cloudy oils indicate a high moisture content which permits organic growth, resulting in oxidation or corrosion. If this condition occurs, the system must be drained, flushed, and refilled with clean oil.
4. It is not advisable to mix oils of different brands or types, as they may not contain the same required additives or be of comparable viscosities. Good grade mineral oils, with viscosities suited to the ambient temperatures in which the machine is operating, are recommended for use.

NOTE: *Metal particles may appear in the oil or filters of new machines due to the wear-in of meshing components.*

Hydraulic Oil

1. Refer to Section 1 for recommendations for viscosity ranges.
2. JLG recommends DTE 11Hydraulic Oil, which has an SAE viscosity of 10W and a viscosity index of 140.

NOTE: *Start-up of hydraulic system, not using DTE 11, with oil temperatures below -15°F (-26°C) is not recommended. If it is necessary to start the system in a sub-zero environment, it will be necessary to heat the oil with a low density, 100VAC heater to a minimum temperature of -15°F (-26°C).*

Changing Hydraulic Oil

1. Use of any of the recommended hydraulic oils eliminates the need for changing the oil on a regular basis. However, filter elements must be changed after the first 50 hours of operation and every 250 hours thereafter. If it is necessary to change the oil, use only those oils meeting or exceeding the specifications appearing in this manual. If unable to obtain the same type of oil supplied with the machine, consult local supplier for assistance in selecting the proper equivalent. Avoid mixing petroleum and synthetic base oils. JLG Industries recommends changing the hydraulic oil annually.
2. Use every precaution to keep the hydraulic oil clean. If the oil must be poured from the original container into another, be sure to clean all possible contaminants from the service container. Always replace the filter cartridge any time the system oil is changed.

https://truckmanualshub.com/

3. While the unit is shut down, a good preventive maintenance measure is to make a thorough inspection of all hydraulic components, lines, fittings, etc., as well as a functional check of each system, before placing the machine back in service.

Lubrication Specifications

Specified lubricants, as recommended by the component manufacturers, are always the best choice, however, multi-purpose greases usually have the qualities which meet a variety of single purpose requirements. Should any question arise regarding the use of greases in maintenance stock, consult your local supplier for evaluation. Refer to Section 1 for an explanation of the lubricant key designations appearing in the Lubrication Chart.

4.3 CYLINDERS - THEORY OF OPERATION

1. Cylinders are of the double acting type. The Lift and Steer systems incorporate double acting cylinders. A double acting cylinder is one that requires oil flow to operate the cylinder rod in both directions. Directing oil, by actuating the corresponding control valve to the piston side of the cylinder, forces the piston to travel toward the rod end of the barrel, extending the cylinder rod piston attached to rod. When the oil flow is stopped, movement of the rod will stop. By directing oil to the rod side of the cylinder, the piston will be forced in the opposite direction and the cylinder rod will retract.

2. Holding valves are used in the lift circuits to prevent retraction of the cylinder rod should a hydraulic line rupture or leak develop between the cylinder and its related control valve.

4.4 VALVES - THEORY OF OPERATION

Control Valves

The main control valve consists of cartridge type valves in an aluminum manifold. The cartridge valves provide for control of flow, volume of flow and pressure in the hydraulic system.

The flow to the lift cylinder(s) is provided by a solenoid operated 3 way spool valve.When flow is required to lift the load the solenoid is energized in one direction. When the solenoid is not energized the cylinder is held in place by the holding valve mounted on the cylinder.

The directional control valve for steer is a solenoid operated, three position, 4-way sliding spool type valve. Energizing one of the electrical coils on a valve will divert the supply of hydraulic oil to provide motion of that function in one direction. Energizing the other coil will divert the oil for motion in the other direction. When neither coil is energized, the supply of hydraulic oil is blocked.

A solenoid operated three way spool valve controls flow to the brakes to release the brakes.When energized it allows flow to the brake parts until the brake pressure switch is satisfied.

Pressure relief valves limit the pressure in the steer circuit and the rod end of each lift cylinder. When the pressure in one of those circuits reaches the set point of the valve, the valve opens, allowing enough flow to return to the reservoir so that the set pressure is not exceeded. An adjusting screw on each cartridge relief valve allows the set pressure to be adjusted.

The aluminum manifold provides the passages through which the hydraulic oil is diverted to provide the desired movement of the actuators. No moving parts of the valves slide against the manifold and so it is not subject to wear.

4.5 COMPONENT FUNCTIONAL DESCRIPTION

Hydraulic Pump

The single stage gear pump is attached to the electric motor located in the left side tray of the machine.

Manual Descent

The manual descent cable handle is located at the rear of the machine frame.

4.6 WEAR PADS

The original thickness of the sliding wear pads is 5 in (12.7 cm). Replace sliding pads when worn to 4.7 in (11.9 cm).

4.7 MOTOR CONTROLLER - MODES OF OPERATION

Traction Motor (Drive)

Drive in either forward or reverse will start only if the following conditions are satisfied:

1. Function switches off.
2. No procedure or diagnostic faults present.
3. Depress drive select. Lights indicating drive at the platform control will flash. The controller must be moved within 3 seconds after the drive select illuminates.
4. FWD or REV selected as appropriate.

Once in “drive” mode, activating a function switch shall not cause drive mode to be exited, the pump/traction contactor drive shall not be energized it will be left at the traction position. If a function switch is selected during traction, a procedure fault will occur when neutral is

https://truckmanualshub.com/

selected, remaining until a function switch and both directions are no longer selected.

When the controller is returned to neutral, the controller will control smooth stopping of the machine, using plug braking, before the brake is allowed to operate.

NOTE: *Depressing the lift function switch while driving will not interrupt drive function.*

Pump Motor (LIft)

Pump motor drive will start only if the following conditions are satisfied:

1. Accelerator in neutral position.
2. Traction mode off (brake applied).
3. Depress lift select. the lights indicating lift select at the platform control will flash. The accelerator must be moved within 3 seconds after the lift light illuminates.

NOTE: *Depressing the drive function switch while lifting will not interrupt lift function.*

Any time brushes are being replaced in a drive motor or pump motor, all brushes in the motor should be replaced.

4.8 FEATURES

Traction Mode

NOTE: *The lift up and drive functions are proportional.*

The drive function is fully proportional with automatic speed cutback above elevation. The system is designed for maximum traction to be delivered to both wheels at all times.

Machines equipped with oscillating axle will have oscillation below elevation cutback speed only.

Table 4-1. Cutout Heights

Function	M3369/3369LE	M4069/4069LE
Elevated Cutback Height	8 ft - 9 ft 6 in (2.4 m - 2.9 m)	9 ft 6 in - 11 ft 8 in (2.9m - 3.6m)
Drive Cutout Height	N/A	28 ft - 30 ft (8.5 m - 9.1m)

4.9 CYLINDER CHECKING PROCEDURES

NOTE: *Cylinder checks must be performed any time a cylinder component is replaced or when improper system operation is suspected.*

Cylinder Without Counterbalance Valves (Steer)

1. Using all applicable safety precautions, activate hydraulic system and fully extend cylinder to be checked. Shut down hydraulic system.
2. Carefully disconnect hydraulic hose from retract port of cylinder. There will be initial weeping of hydraulic fluid which can be caught in a suitable container. After initial discharge, there should be no further leakage from the retract port.
3. Activate hydraulic system, and activate cylinder extend function.
4. If cylinder retract port leakage is less than 6-8 drops per minute, carefully reconnect hose to retract port and retract cylinder. If leakage continues at a rate of 6-8 drops per minute or more, cylinder repairs must be made.
5. With cylinder fully retracted, shut down motor and carefully disconnect hydraulic hose from cylinder extend port.
6. Activate hydraulic system and activate cylinder retract function. Check extend port for leakage.
7. If extend port leakage is less than 6-8 drops per minute, carefully reconnect hose to extend port, then activate cylinder through one complete cycle and check for leaks. If leakage continues at a rate of 6-8 drops per minute or more, cylinder repairs must be made.

Cylinders With Single Counterbalance Valve (Lift Cylinder)

NOTICE

OPERATE ALL FUNCTIONS FROM GROUND CONTROL STATION ONLY.

1. Using all applicable safety precautions, activate hydraulic system.
2. Raise platform completely and place a suitable overhead lifting device approximately 1 in (2.5 cm) below the platform.
3. After completing the above, shut down hydraulic system and allow machine to sit for 10-15 minutes. This is done to relieve pressure in the hydraulic

https://truckmanualshub.com/

lines. Carefully remove hydraulic hoses from appropriate cylinder port block.

4. There will be initial weeping of hydraulic fluid, which can be caught in a suitable container. After the initial discharge, there should not be any further leakage from the ports. If leakage continues at a rate of 6-8 drops per minute or more, the following cylinder repairs must be made. If the retract port is leaking, the piston is leaking, the piston seals are defective and must be replaced. If the extend port is leaking, the counterbalance is defective and must be replaced.

5. If no repairs are necessary or when repairs have been made, carefully reconnect hydraulic hoses to the appropriate ports.

6. Remove lifting device from platform, activate hydraulic system and run cylinder through complete cycle to check for leaks and operation.

Cylinders with Duel Counterbalance Valves (Oscillating Cylinders)

NOTICE

OPERATE ALL FUNCTIONS FROM GROUND CONTROL STATION ONLY.

1. When working on oscillating axle cylinder, place machine on firm level surface.

2. Using all applicable safety precautions, activate hydraulic system.

3. Shut down hydraulic system and allow machine to sit for 10-15 minutes. This is done to relieve pressure in the hydraulic lines. Carefully remove hydraulic hoses from appropriate cylinder port block.

4. There will be initial weeping of hydraulic fluid, which can be caught in a suitable container. After the initial discharge, there should not be any further leakage from the ports. If leakage continues at a rate of 6-8 drops per minute or more, the following cylinder repairs must be made. If the retract port is leaking, the piston is leaking, the piston seals are defective and must be replaced. If the extend port is leaking, the counterbalance is defective and must be replaced.

5. To check piston seals, carefully remove the counterbalance valve from the retract port. After initial discharge there should not be any further leakage from the ports. If leakage occurs at a rate of 6-8 drops per minute or more, the piston seals are defective and must be replaced.

6. If no repairs are necessary or when repairs have been made, carefully reconnect hydraulic hoses to the appropriate ports.

7. Activate hydraulic system and run cylinder through complete cycle to check for leaks and operation.

4.10 CYLINDER REMOVAL AND INSTALLATION

Lift Cylinder Removal

1. Place the machine on a flat and level surface. Turn power on and raise the platform. Turn power off and attach a suitable lifting device to the platform.

2. Remove the bolt, locknut and keeper shaft securing the cylinder rod attach pin to the upper inner arm assembly. Using a suitable brass drift, drive out the rod end attach pin from the arm assembly.

3. Retract the cylinder rod completely.

4. Tag and disconnect, then cap the lift cylinder hydraulic lines and ports.

5. Remove the bolt, locknut and keeper shaft securing the cylinder barrel attach pin to the upper inner arm assembly. Using a suitable brass drift, drive out the rod end attach pin from the arm assembly.

6. Carefully remove the cylinder from the scissor lift and place in a suitable work area.

Lift Cylinder Installation

1. Install lift cylinder in place using a suitable slings, aligning barrel end attaching pin mounting holes on lower arm assembly.

2. Using a suitable drift, drive the barrel end attach pin through the mounting holes in the lift cylinder and the lower arm assembly. Secure in place with bolt, locknut and keeper shaft.

3. Remove cylinder port plugs and hydraulic line caps and correctly attach lines to cylinder ports.

4. Extend the cylinder rod until the attach pin hole aligns with those in the upper arm assembly. Using a suitable drift, drive the cylinder rod attach pin through the aligned holes, taking care to align the pin retaining holes with the hole on the arm assembly. Secure the pin in place with bolt, locknut and keeper shaft.

5. Lower platform to stowed position and shut down motor. Check hydraulic fluid level and adjust accordingly.

NOTE: *Always check hydraulic fluid level after completely elevating and lowering machine.*

https://truckmanualshub.com/

4.11 CYLINDER REPAIR

NOTE: *The following are general procedures that apply to all of the cylinders on this machine. Procedures that apply to a specific cylinder will be so noted.*

Disassembly

NOTICE

DISASSEMBLY OF THE CYLINDER SHOULD BE PERFORMED ON A CLEAN WORK SURFACE IN A DIRT FREE WORK AREA.

1. Operate the hydraulic power source and extend the cylinder. Shut down and disconnect the power source. Adequately support the cylinder rod, if necessary.
2. If applicable, remove the cartridge-type holding valve and fittings from the cylinder port block. Discard o-rings.

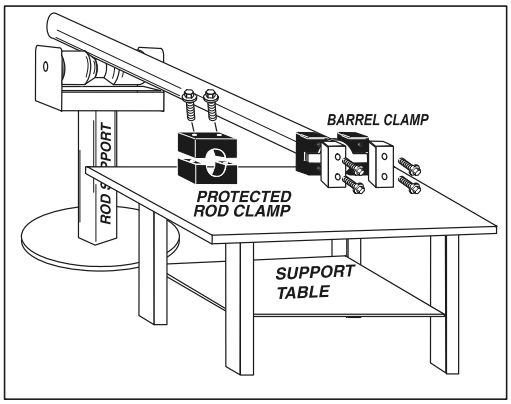

Figure 4-1. Barrel Support

3. Place the cylinder barrel into a suitable holding fixture.

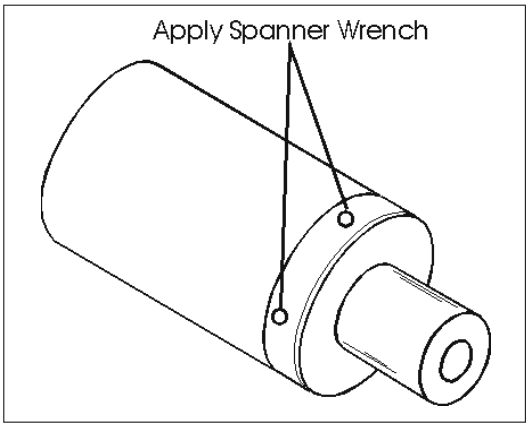

Figure 4-2. Capscrew Removal

4. To aid in realignment, mark cylinder head and barrel with a center punch.
5. Using a suitable spanner wrench, loosen the spanner nut retainer and remove the spanner nut from the cylinder barrel.
6. Attach a suitable pulling device to the cylinder rod port block or cylinder rod end, as applicable.

NOTICE

EXTREME CARE SHOULD BE TAKEN WHEN REMOVING THE CYLINDER ROD, HEAD, AND PISTON. AVOID PULLING THE ROD OFF-CENTER, WHICH COULD CAUSE DAMAGE TO THE PISTON AND CYLINDER BARREL SURFACES.

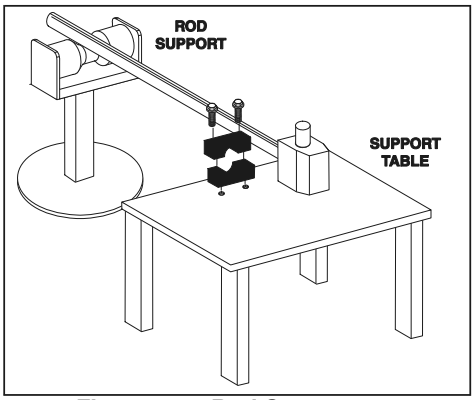

Figure 4-3. Rod Support

7. With the barrel clamped securely, apply pressure to the rod pulling device and carefully withdraw the complete rod assembly from the cylinder barrel.
8. Using suitable protection, clamp the cylinder rod in a vise or similar holding fixture as close to the piston as possible.
9. If applicable, loosen and remove the nut which attaches the piston to the rod, then remove the piston from the rod.
10. If applicable, loosen and remove the cap screw(s) securing the tapered bushing to the piston.
11. Insert the capscrew(s) in the threaded holes in the outer piece of the tapered bushing. Progressively tighten the cap screw(s) until the bushing is loose on the piston, then remove the bushing from the piston.
12. Screw the piston counter-clockwise, by hand, and remove the piston from the cylinder rod.
13. Remove and discard the piston o-rings, back-up rings, guidelock rings and hydrolock seals.
14. If applicable, remove the piston spacer from the rod.
15. Remove the rod from the holding fixture. Remove the cylinder head and retainer plate from the rod.

https://truckmanualshub.com/

Cleaning and Inspection

1. Clean all parts thoroughly in an approved cleaning solvent.
2. Inspect the cylinder rod for scoring, tapering, ovality, or other damage. If necessary, dress rod with Scotch Brite or equivalent. Replace rod if necessary.
3. Inspect threaded portion of rod for damage. Dress threads as necessary.
4. Inspect inner surface of cylinder barrel tube for scoring or other damage. Check inside diameter for tapering or ovality. Replace if necessary.
5. Inspect threaded portion of barrel for damage. Dress threads as necessary.
6. Inspect piston surface for damage and scoring and for distortion. Dress piston surface or replace piston as necessary.
7. Inspect threaded portion of piston for damage. dress threads as necessary.
8. Inspect seal and o-ring grooves in piston for burrs and sharp edges. Dress applicable surfaces as necessary.
9. Inspect cylinder head inside diameter for scoring or other damage and for ovality and tapering. Replace as necessary.
10. Inspect threaded portion of head for damage. Dress threads as necessary.
11. Inspect seal and o-ring grooves in head for burrs and sharp edges. Dress applicable surfaces as necessary.
12. Inspect cylinder head outside diameter for scoring or other damage and ovality and tapering. Replace as necessary.
13. If applicable, inspect rod and barrel bearings for signs of correct lubrication and excessive wear. If necessary, replace bearings as follows:
    a. Thoroughly clean steel bushing hole of burrs, dirt, etc. to facilitate bearing installation.
    b. Inspect steel bushing for wear or other damage. If steel bushing is worn or damaged, rod or barrel (as applicable) must be replaced.
    c. Using arbor of the correct size, carefully press the bearing into the steel bushing.

NOTE: *Install the cylinder pin into the Garmax bearing dry. Lubrication is not required with chrome pins and bearings.*

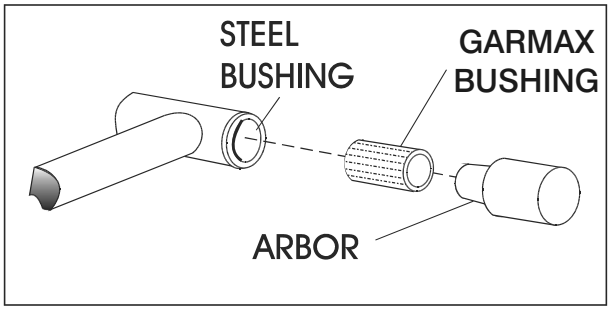

Figure 4-4. Oil-lite Bearing Installation

14. Inspect travel limiting collar or spacer for burrs and sharp edges. If necessary, dress inside diameter surface with Scotch Brite or equivalent.
15. If applicable, inspect port block fittings and holding valve. Replace as necessary.
16. Inspect the oil ports for blockage or the presence of dirt or other foreign material. Repair as necessary.
17. If applicable, inspect piston rings for cracks or other damage. Replace as necessary.

Assembly

NOTE: *Prior to cylinder assembly, ensure that the proper cylinder seal kit is used.*

Apply a light film of hydraulic oil to all components prior to assembly.

1. Using a special tool, pictured in the following illustration, install a new rod seal into the applicable cylinder head gland groove. Refer to the following illustration for the proper tool size.

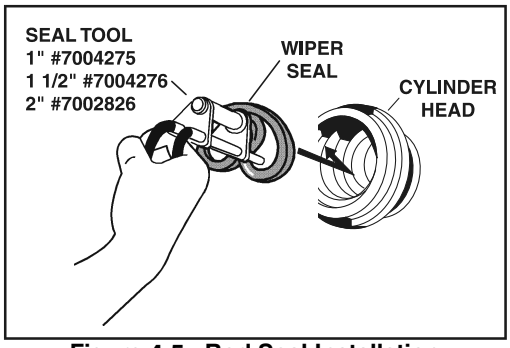

Figure 4-5. Rod Seal Installation

NOTICE

WHEN INSTALLING NEW "POLY-PAK" TYPE PISTON SEALS, ENSURE SEALS ARE INSTALLED PROPERLY. (SEE FIGURE 4-9.) FOR CORRECT SEAL ORIENTATION. IMPROPER SEAL INSTALLATION COULD RESULT IN CYLINDER LEAKAGE AND IMPROPER CYLINDER OPERATION.

https://truckmanualshub.com/

2. Using a soft mallet, tap a new wiper seal into the applicable cylinder head gland groove. Install a new wear ring into the applicable head gland groove.

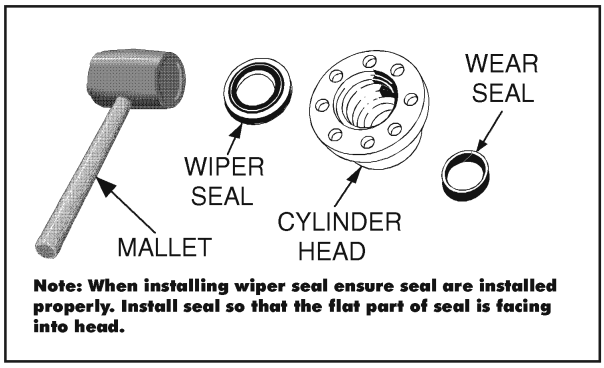

Figure 4-6. Wiper Seal Installation

3. Place a new o-ring and back-up seal in the applicable outside diameter groove of the cylinder head.

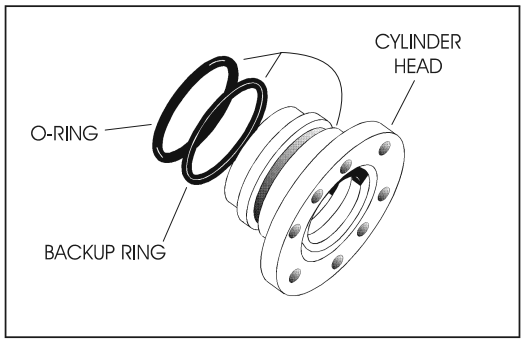

Figure 4-7. Installation of Head Seal Kit

4. Install a washer ring onto the rod, then carefully install the head gland on the rod, ensuring that the wiper and rod seals are not damaged or dislodged. Push the head along the rod to the rod end, as applicable.
5. Carefully slide the piston spacer onto the rod.
6. If applicable, correctly place a new o-ring and back-up rings in the inner piston diameter groove.
7. Using suitable protection, clamp the cylinder rod in a vise or similar holding fixture as close to the piston as possible.
8. Carefully thread the piston on the cylinder rod hand tight, ensuring that the o-ring and back-up rings are not damaged or dislodged.
9. Thread the piston onto the rod until it abuts the spacer end and install the tapered bushing.

NOTE: *When installing the tapered bushing, the piston and mating end of the rod must be free of oil.*

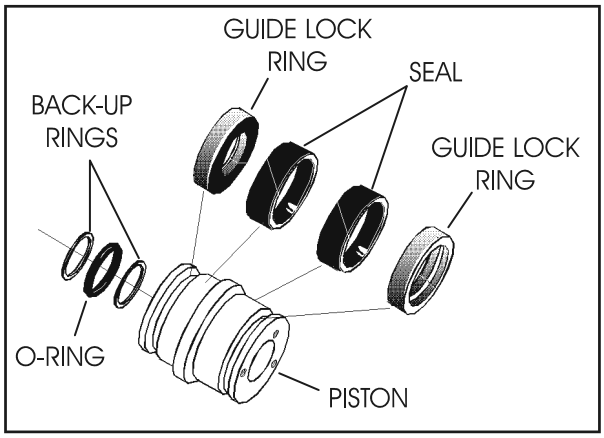

Figure 4-8. Piston Seal Kit Installation

⚠ WARNING

WHEN REBUILDING THE LIFT CYLINDER, APPLY LOCTITE #242 TO TAPERED BUSHING BOLTS, THEN TIGHTEN BOLTS SECURELY. REFER TO TABLE 4-2, CYLINDER PISTON NUT TORQUE SPECIFICATIONS AND TABLE 4-3, HOLDING VALVE TORQUE SPECIFICATIONS FOR PROPER BOLT TORQUE VALUES.

10. Install the bolts into the bushing using Loctite #242. Refer to Cylinder Component Torque Specifications Table for proper bolt torque values.
11. Remove the cylinder rod from the holding fixture.
12. Place new guidelock and hydrolock seals in the applicable outside diameter grooves of both the piston and the cylinder head.
13. Position the cylinder barrel in a suitable holding fixture.

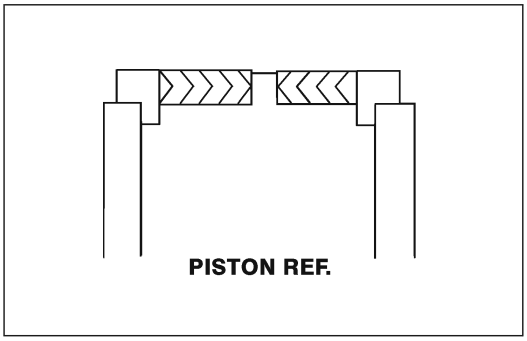

Figure 4-9. Poly-Pak Piston Seal Installation

https://truckmanualshub.com/

NOTICE

EXTREME CARE SHOULD BE TAKEN WHEN INSTALLING THE CYLINDER ROD, HEAD, AND PISTON. AVOID PULLING THE ROD OFF-CENTER, WHICH COULD CAUSE DAMAGE TO THE PISTON AND CYLINDER BARREL SURFACES.

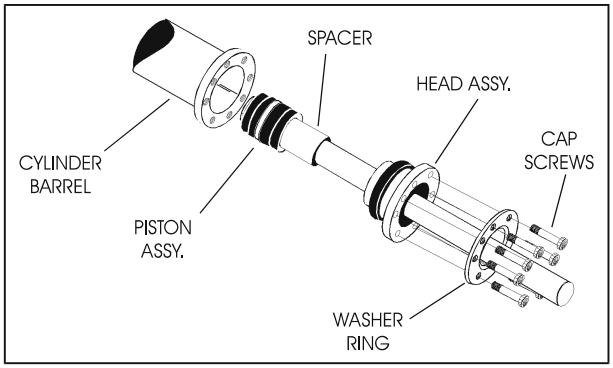

Figure 4-10. Rod Assembly Installation

14. With the barrel clamped securely, and while adequately supporting the rod, insert the piston end into the cylinder barrel. Ensure that the piston loading o-ring and seal ring are not damaged or dislodged.
15. Continue pushing the rod into the barrel until the cylinder head gland can be inserted into the cylinder barrel.
16. Secure the cylinder head gland using the washer ring and socket head bolts.
17. After the cylinder has been reassembled, the rod should be pushed all the way in (fully retracted) prior to the reinstallation of any holding valve or valves.
18. If applicable, install the cartridge-type holding valve and fittings in the port block using new o-rings as applicable.

⚠ WARNING

WHEN REBUILDING THE LIFT CYLINDERS, APPLY LOCTITE 242 TO PISTON NUT AND SETSCREWS.

Table 4-2. Cylinder Piston Nut Torque Specifications

Description	Nut Torque Value (Wet)
Lift Cylinder (3369)	800 - 1000 ft lbs (1120 - 1400 Nm)
LIft Cylinder (4069)	1125 - 1375 ft lbs (1575 - 1925 Nm)
Steer Cylinder	150 ft lbs (210 Nm)

Table 4-3. Holding Valve Torque Specifications

Description	Torque Value
Sun - 7/8 hex M20 x1.5 thds	30 - 35 ft lbs (41 - 48 Nm)
Sun - 1-1/8 hex 1 - 14 UNS thds	45 - 50 ft lbs (61 - 68 Nm)
Sun - 1-1/4 hex M36 x 2 thds	150 - 160 ft lbs (204 - 207 Nm)
Racine - 1-1/8 hex 1-1/16 - 12 thds	50 - 55 ft lbs (68 - 75 Nm)
Racine - 1-3/8 hex 1-3/16 - 12 thds	75 - 80 ft lbs (102 - 109 Nm)
Racine - 1-7/8 hex 1-5/8 - 12 thds	100 - 110 ft lbs (136 - 149 Nm)

NOTE: *These cylinders use setscrews which should be discarded and replaced whenever they are removed.*

19. Remove cylinder rod from the holding fixture.
20. Place new o-rings and seals in the applicable outside diameter grooves of both the piston and the cylinder head.
21. Position the cylinder barrel in a suitable holding fixture.

NOTICE

EXTREME CARE SHOULD BE TAKEN WHEN INSTALLING THE CYLINDER ROD, HEAD AND PISTON. AVOID PULLING THE ROD OFF-CENTER, WHICH COULD CAUSE DAMAGE TO THE PISTON AND CYLINDER BARREL SURFACES.

22. With barrel clamped securely, and while adequately supporting the rod, insert the piston end into the cylinder barrel. Ensure that the piston loading o-ring and seal ring are not damaged or dislodged.
23. Continue pushing the rod into the barrel until the cylinder head gland can be inserted into the barrel cylinder or if applicable until the cylinder head threads engage the barrel threads.
24. If applicable, apply loctite #222 and secure the cylinder head retainer using a suitable chain wrench.
25. Insert the other cylinder head gland into the barrel cylinder. Secure the cylinder head retainer using a suitable chain wrench.
26. After the cylinder has been reassembled, the rod should be pushed all the way in (fully retracted) prior to the reinstallation of any holding valves.

https://truckmanualshub.com/

27. If applicable, install the cartridge type holding valve and fittings in the rod port block using new o-rings as applicable. Refer to Table 4-3, Holding Valve Torque Specifications for proper torque.

⚠ CAUTION

IF THE CYLINDER IS TO BE TESTED PRIOR TO INSTALLATION ON THE MACHINE, EXTREME CARE SHOULD BE USED TO INSURE THAT THE OUTER END OF THE ROD IS SUPPORTED. USE EITHER A TRAVELING OVERHEAD HOIST, FORKLIFT, OR OTHER MEANS TO SUPPORT THE OVERHANGING WEIGHT OF THE EXTENDING ROD.

4.12 STEER CYLINDER REMOVAL

1. Park the machine on a firm and level surface.
2. Using proper lifting devices raise the machine to access the steer cylinder form underneath.

NOTE: *Be sure and use proper equipment to stabilize the machine while performing maintenance underneath.*

3. Remove both hydraulic lines from the steer cylinder and allow excess oil in lines to drain into a suitable container.
4. Remove the nut and bolt from the barrel end of the cylinder from underneath the machine.
5. Remove the nut and bolt from the rod end of the cylinder from out at the spindle.
6. Remove cylinder from machine.

4.13 OSCILLATION CYLINDER BLEEDING

Bleeding Procedure

1. Run one side wheel onto a ramp or block of wood. On the other side, the lockout cylinder should be extended.
2. Block the rear wheels and disconnect the drive hubs.
3. Open up the bleeder screw on the bottom of the extended side lockout cylinder. Disconnect coil on the flow control valve. Have an assistant hold lift up switch (causing pump to run continually) for approx. 10 seconds or until all the air bubbles are no longer visible. Then close the bleeder screw while pump is running.
4. Open bleeder on the top of the retracted lockout cylinder. Let hydraulic oil run for approx. 10 seconds or until air bubbles are no longer visible. Then close the bleeder screw.
5. Fully oscillate the axle in the opposite direction and repeat step three.

Checking Oscillation Cylinders

After bleeding the lockout cylinders, check to see that they are holding their position when oscillated.

1. Run one wheel onto a ramp or a block of wood, mark the retracted cylinder with a marker, elevate platform above high speed cutout.
2. Back the unit off of the ramp, check the retracted cylinder for drive no more than ½".
3. Repeat this procedure for the other side. If the lockout cylinders do not hold, repeat the bleeding procedure or check for the following:
   a. Air in lockout system
   b. Bad cylinder seals
   c. Bad holding valves

https://truckmanualshub.com/

Oscillating Axle Lockout Test (If Equipped)

NOTICE

LOCKOUT SYSTEM TEST MUST BE PERFORMED QUARTERLY, ANY TIME A SYSTEM COMPONENT IS REPLACED, OR WHEN IMPROPER SYSTEM OPERATION IS SUSPECTED.

NOTE: *Ensure platform is fully lowered prior to beginning lockout cylinder test.*

1. Place a 6 inch (15.2 cm) high block with ascension ramp in front of left front wheel.
2. From platform control station, select LOW drive speed.
3. Place DRIVE control switch to FORWARD position and carefully drive the machine up ascension ramp until left front wheel is on top of block.
4. Raise machine platform approximately 7 ft (2.1 m) on the 3369LE or 9 ft (2.7 m) on the 4069LE.
5. Place DRIVE control switch to REVERSE position and carefully drive the machine off the block and ramp.
6. Have an assistant check to see that the left front wheel remains locked in position off the ground.
7. Lower the machine platform; the lockout cylinder should then release and allow wheel to rest on the ground. It may be necessary to activate DRIVE to release cylinders.
8. Place the 6 inch (15.2 cm) high block with ascension ramp in front of right front wheel.
9. From platform control station, select LOW drive speed.
10. Place DRIVE control switch to FORWARD position and carefully drive the machine up ascension ramp until right front wheel is on top of block.
11. Raise machine platform approximately 7 ft (2.1 m) on the 3369LE or 9 ft (2.7 m) on the 4069LE.
12. Place DRIVE control switch to REVERSE position and carefully drive the machine off the block and ramp.
13. Have an assistant check to see that the right front wheel remains locked in position off the ground.
14. Lower the machine platform; the lockout cylinder should then release and allow wheel to rest on the ground. It may be necessary to activate DRIVE to release cylinders.
15. If the lockout cylinders do not function properly, have qualified personnel correct the malfunction prior to any further operation.

https://truckmanualshub.com/

4.14 CYLINDER ASSEMBLIES

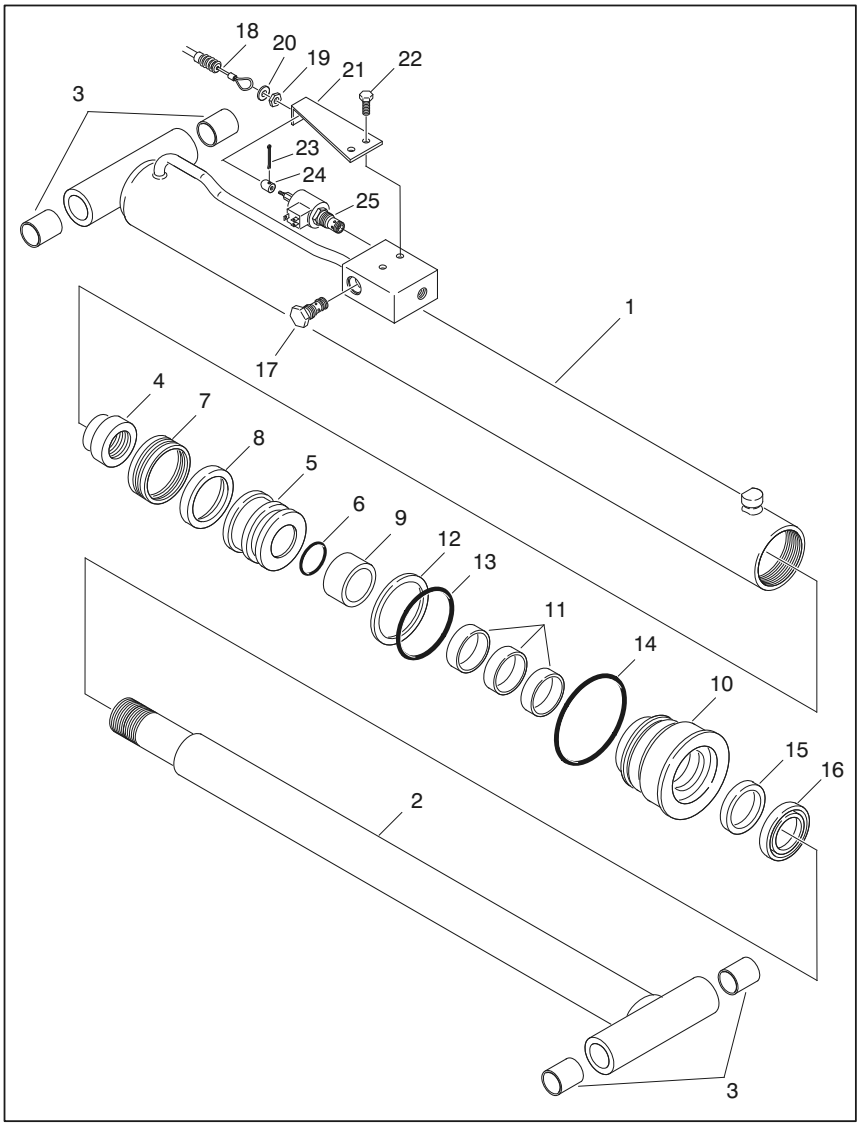

1. Barrel Weldment
2. Rod Weldment
3. Garmax Bushings
4. Locknut
5. Piston
6. O-Ring
7. Wear Ring
8. Seal
9. Spacer
10. Head
11. Wear Ring
12. Back-Up Ring
13. O-Ring
14. O-Ring
15. Seal
16. Wiper
17. Check/Restrictor Valve
18. Manual Descent Cable
19. Jam Nut, 1/4" - 28F
20. Flatwasher, 1/4"
21. Bracket
22. Bolt, 5/16" - 18NC x 3/4"
23. Cotter Pin, 1/8" x 1 1/4"
24. Adapter
25. Solenoid Valve

Figure 4-11. Lift Cylinder - 3369LE & M3369

NOTE: *Torque Locknut (4) to 1125 - 1375 ft lbs (1525.3 - 1864 Nm).*

- Approximate cylinder dry weight = 220 lbs (99.8 kg)
- Operating Pressure = 2100 psi (145 bar)

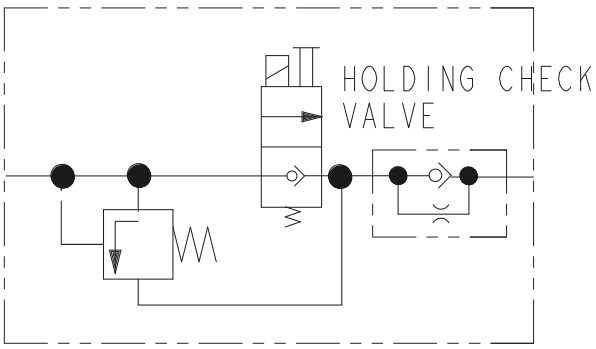

https://truckmanualshub.com/

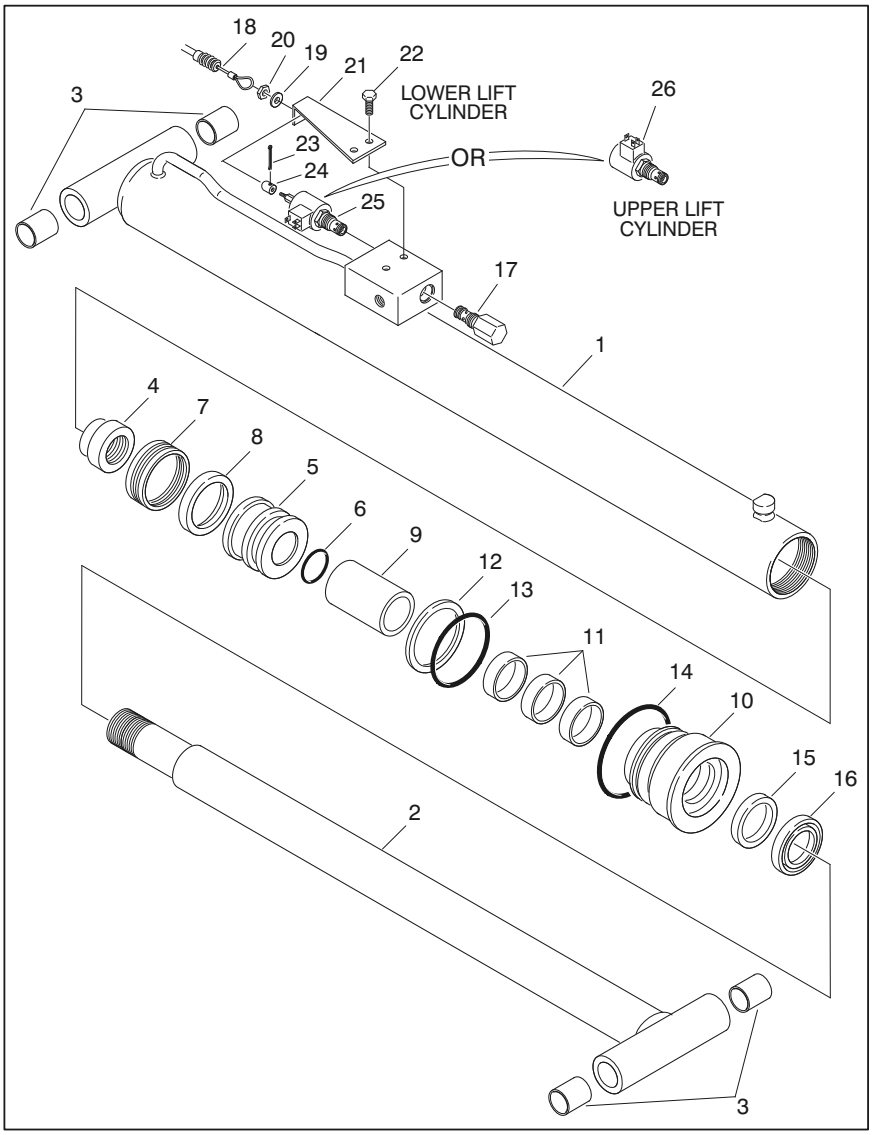

1. Barrel Weldment
2. Rod Weldment
3. Garmax Bushings
4. Locnut
5. Piston
6. O-Ring
7. Wear Ring
8. Seal
9. Spacer
10. Head
11. Wear Ring
12. Back-Up Ring
13. O-Ring
14. O-Ring
15. Seal
16. Wiper
17. Relief Valve
18. Manual Descent Cable
19. Flatwasher, 1/4"
20. Jam Nut, 1/4" - 28NF
21. Bracket
22. Bolt, 5/16" - 18NC x 3/4"
23. Cotter Pin, 1/8" x 1 1/4"
24. Adapter
25. Solenoid Valve (Lower Cylinder)
26. Solenoid Valve (Upper Cylinder)

Figure 4-12. Lift Cylinder - 4069LE & M4069

NOTE: *Torque Locknut (4) to 1125 - 1375 ft lbs (1525.3 - 1864 Nm).*

- Approximate cylinder dry weight = 224 lbs (101.6 kg)
- Operating Pressure = 2100 psi (145 bar)

https://truckmanualshub.com/

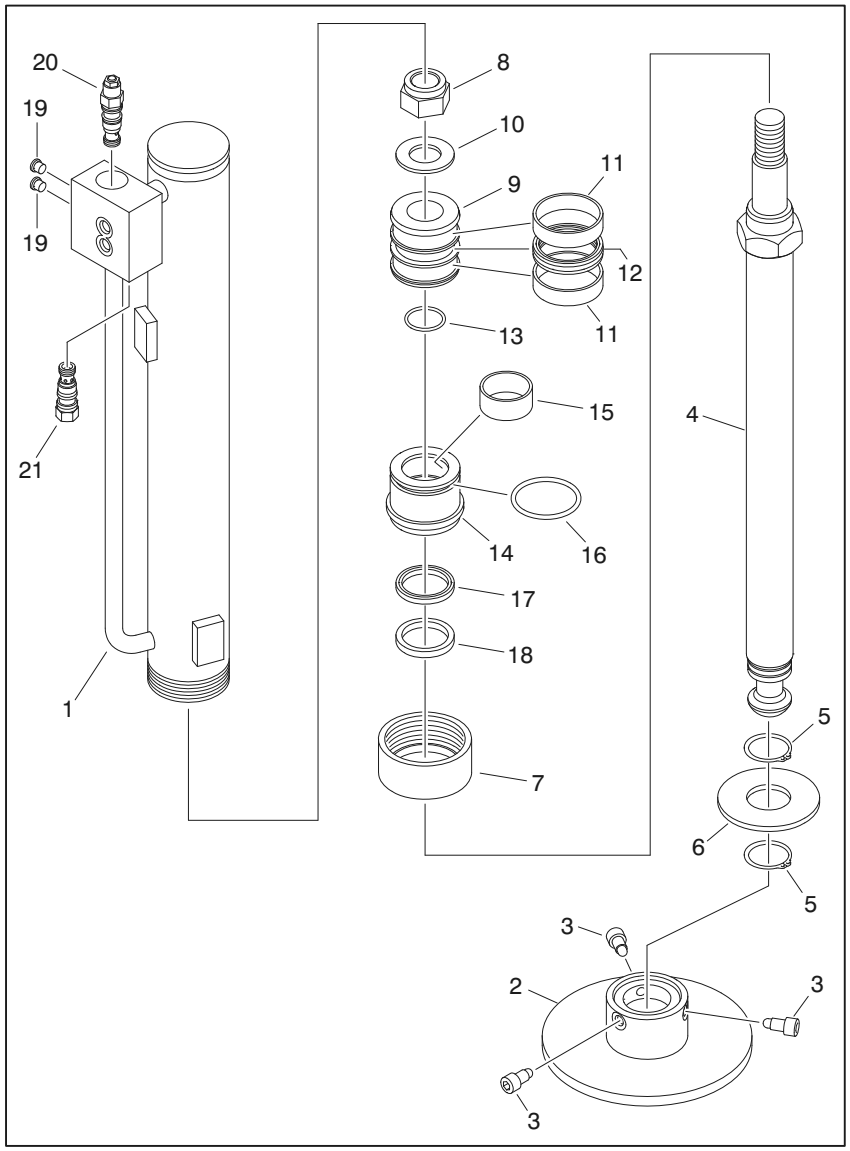

1. Cylinder Barrel
2. Jack Pad
3. Special Screw, 1/2" - 13NC x 1 1/4
4. Cylinder Rod
5. Retaining Ring
6. Plate
7. End Cap
8. Locknut
9. Piston
10. Flatwasher, 1 1/4"
11. Wear Ring
12. Piston Seal
13. O-Ring
14. Head
15. Wear Ring
16. O-Ring
17. Polyseal
18. Wiper Seal
19. Plug
20. Counter Balance Valve (see note)
21. Check Valve (see note)

Figure 4-13. Leveling Jack Cylinder - USA Built Machines S/N 0200112735 to Present)

NOTE: *Torque Locknut (8) to 400 ft lbs (542.3 Nm). Torque Counter Balance Valve (20) and Check Valve (21) to 30-35 ft. lb. (40-47 Nm).*

When servicing, apply a light coat of grease to the Jack Pad (2) before installing.

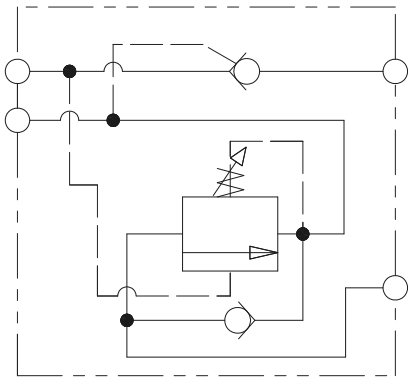

SCHEMATIC FOR PORT BLOCK

https://truckmanualshub.com/

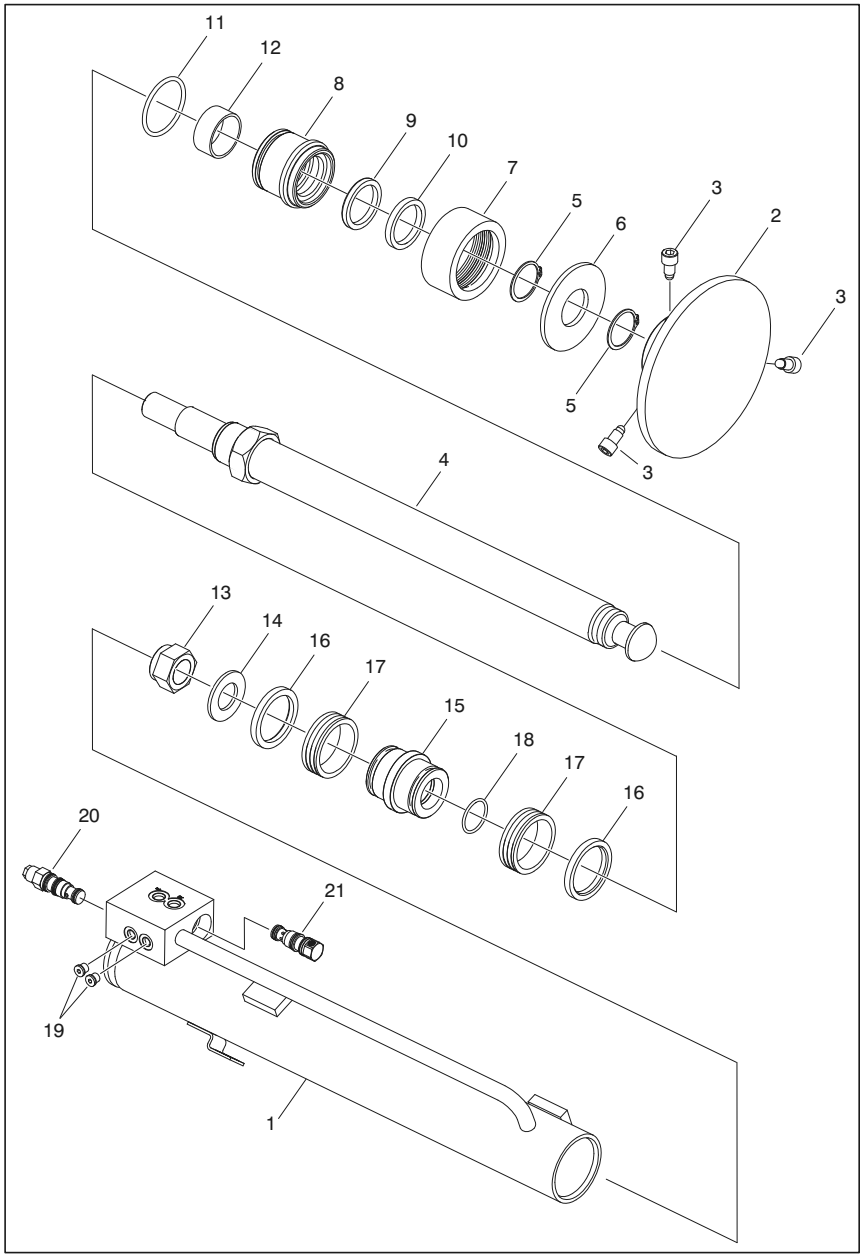

1. Cylinder Barrel
2. Jack Pad
3. Special Screw, 1/2" - 13NC x 1 1/4
4. Cylinder Rod
5. Retaining Ring
6. Plate
7. End Cap
8. Head
9. Hydrolock
10. Wiper Seal
11. O-Ring
12. Wear Ring
13. Locknut
14. Flatwasher, 1 1/4"
15. Piston
16. Guidelock
17. Polyseal
18. O-Ring
19. Plugs
20. Counter Balance Valve (see note)
21. Check Valve (see note)

Figure 4-14. Leveling Jack Cylinder - USA Built Machines S/N 0200104829 to S/N 0200112735 & All Belgium Built Machines)

NOTE: *Torque Locknut (8) to 400 ft lbs (542.3 Nm).*
Torque Counter Balance Valve (20) and Check Valve (21) to 30-35 ft. lb. (40-47 Nm).

When servicing, apply a light coat of grease to the Jack Pad (2) before installing.

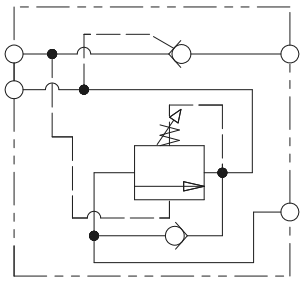

SCHEMATIC FOR PORT BLOCK

https://truckmanualshub.com/

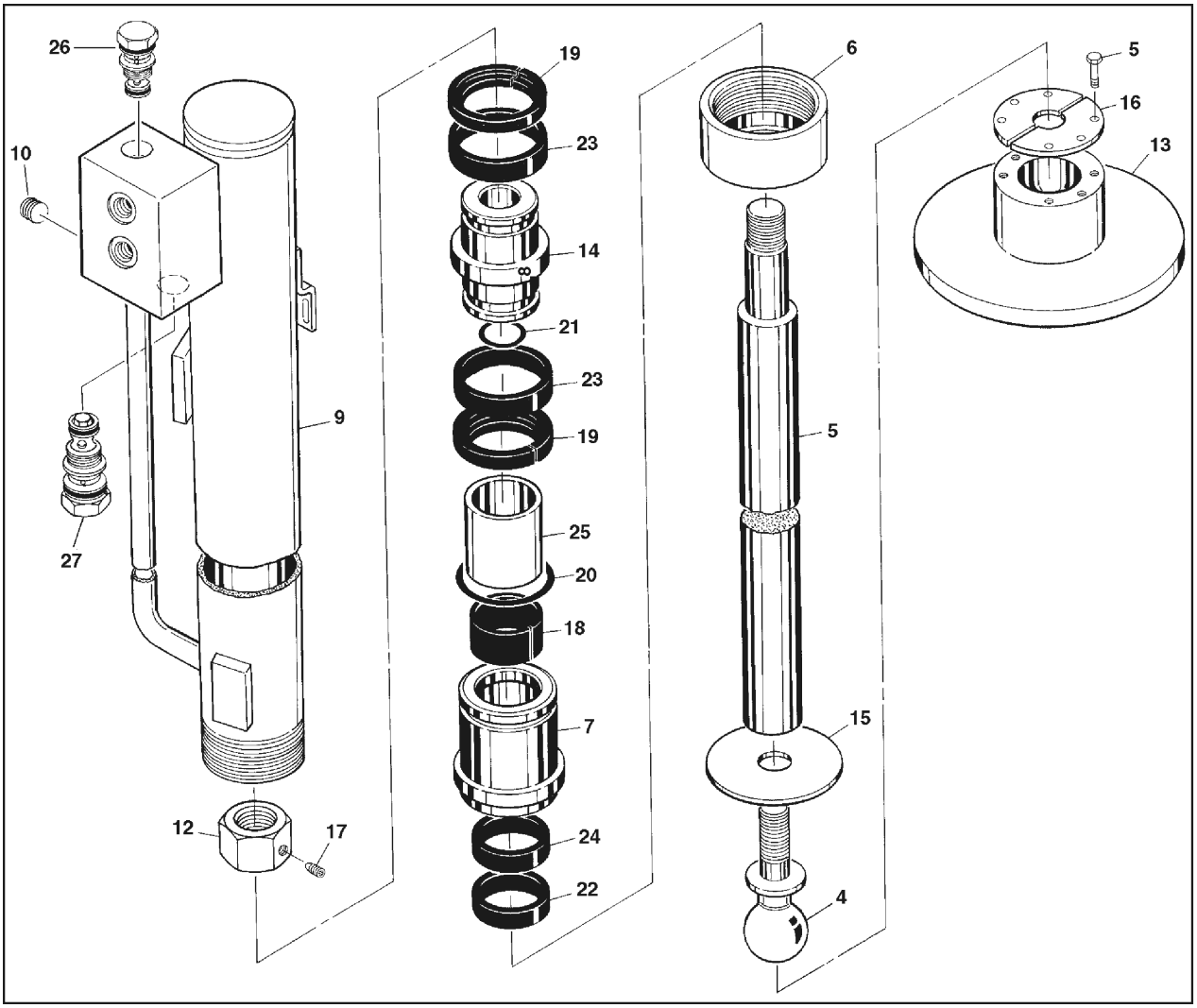

(1 - 3 not used)

4. Trailer Ball
5. Bolt, 3/8" - 16NC Grade 8
6. Cap
7. Head
8. Rod
9. Barrel
10. Plug
11. (not used)
12. Nut
13. Jack Pad
14. Piston
15. Plate
16. Retainer Ring
17. Locking Screw
18. Wear Ring
19. Guidelock
20. O-Ring
21. O-Ring
22. Wiper Seal
23. Polyseal
24. Hydrolock
25. Spacer Tube
26. Counter Balance Valve (see note)
27. Check Valve (see note)

Figure 4-15. Leveling Jack Cylinder - USA Built Machines Prior to S/N 0200104829

NOTE: *Torque Nut (12) to 400 ft lbs (542.3 Nm).*
Torque Locking Screw (17) to 100 in lbs (11.3 Nm).
Torque Counter Balance Valve (26) and Check Valve (27) to 30-35 ft. lb. (40-47 Nm).

https://truckmanualshub.com/

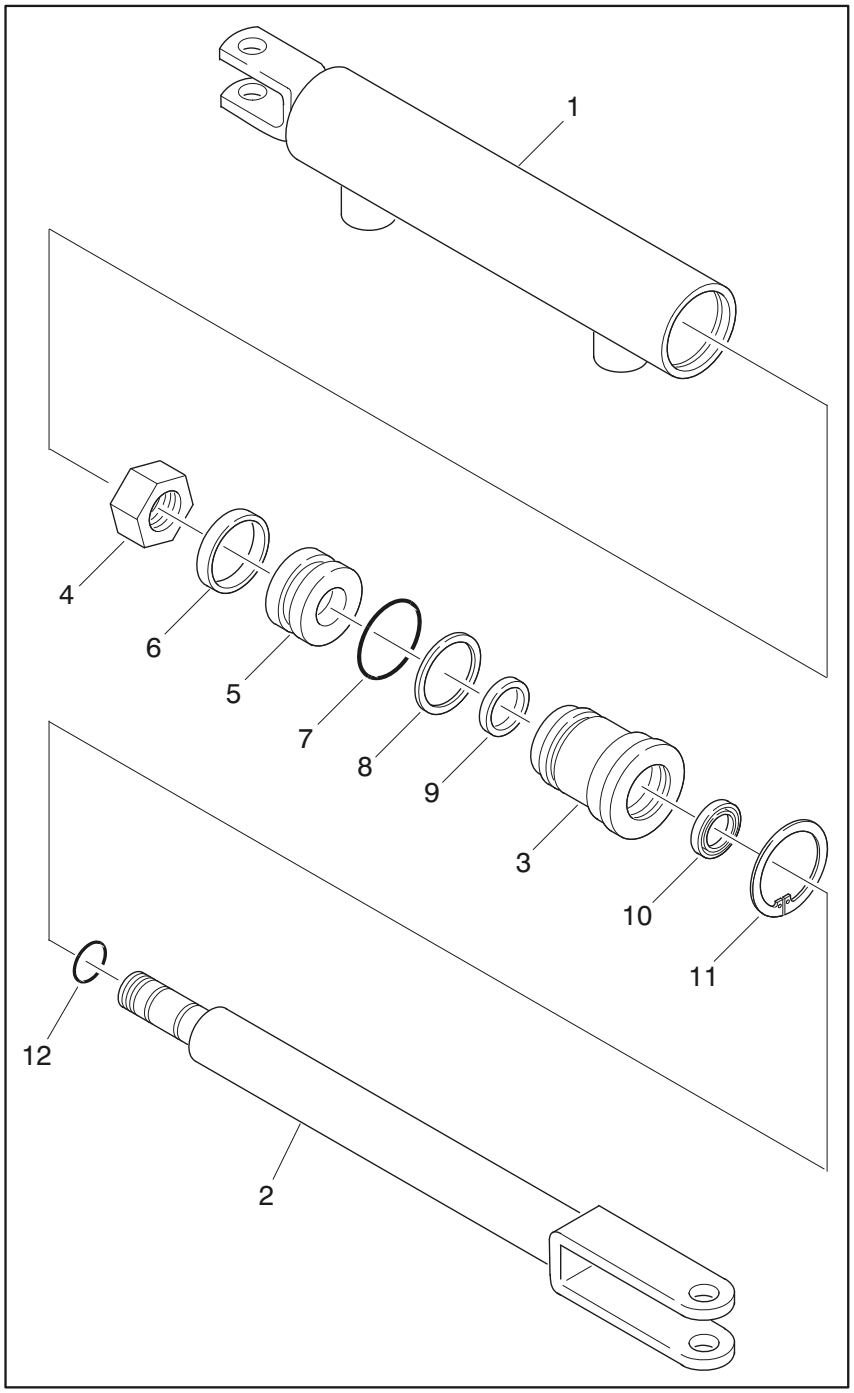

1. Barrel
2. Rod
3. Guide
4. Locknut
5. Piston
6. Piston Seal
7. O-Ring
8. Back-Up Ring
9. Seal
10. Wiper
11. Retainer Ring
12. O-Ring

Figure 4-16. Steer Cylinder

https://truckmanualshub.com/

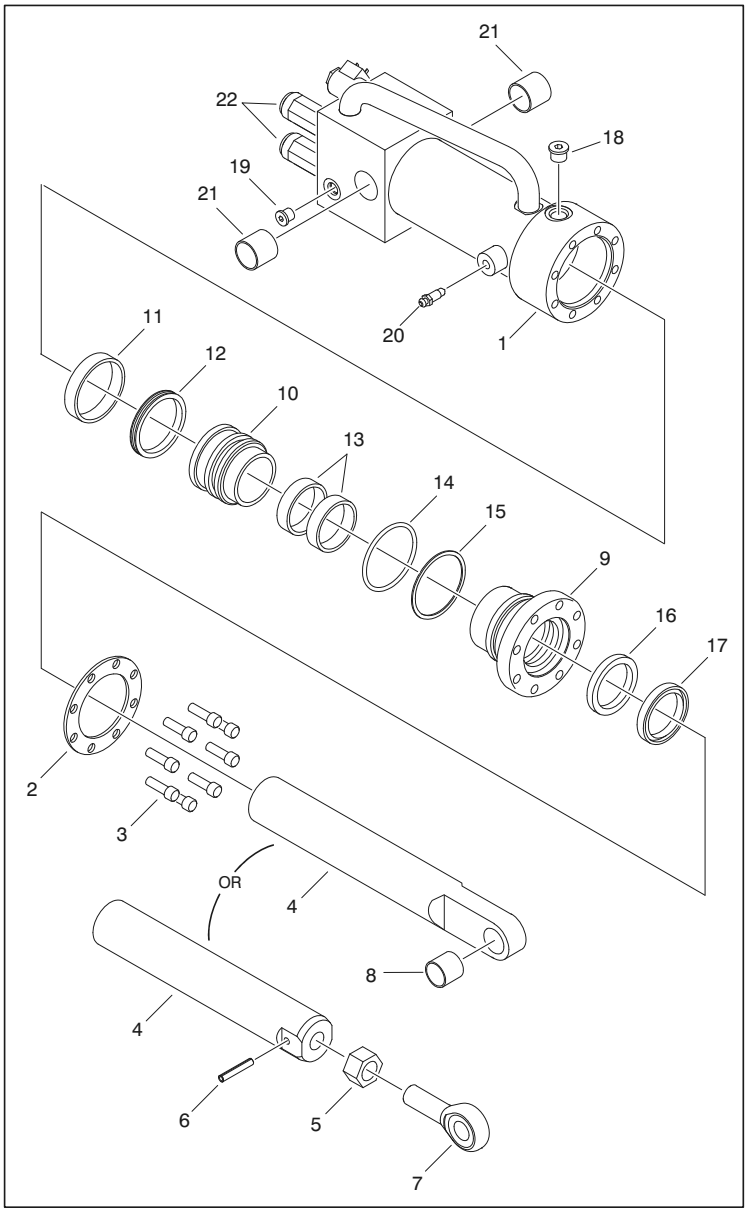

1. Barrel Weldment
2. Washer Ring
3. Capscrews, 5/16" - 18NC x 1"
4. Cylinder Rod
5. Jam Nut, 3/4" - 16NF
6. Rollpin
7. Rod End
8. Composite Bearing
9. Head
10. Piston
11. Wear Ring
12. T-Seal
13. Wear Ring
14. O-Ring
15. Back-Up Ring
16. Rod Seal
17. Wiper Seal
18. O-Ring Plug #6
19. O-Ring Plug #4
20. Bleeder Valve
21. Bushing
22. Thermal Relief Valve

Figure 4-17. Axle Lockout Cylinder

NOTE: *Torque Capscrews (3) to 30 ft lbs (41 Nm). Torque* Thermal Relief Valve *(22) to 20 - 25 ft lbs (27 - 34 Nm).*

https://truckmanualshub.com/

4.15 PRESSURE SETTING PROCEDURES

Main Relief at Pump

1. Install pressure gauge at port “MP” on control valve.
2. Remove the plug from the lift coil.
3. Activate and bottom out Lift Up. Adjust Main Relief to 3000 psi (207 bar).
4. Replace the plug on the lift coil.

Lift Relief

1. With pressure gauge at “MP” port on control valve, activate and bottom out Lift Up.
2. Adjust Lift Relief to 2500 psi (172 bar) on the M3369/3369LE and 2800 psi (193 bar) on the M4069/4069LE.

Steer Relief

1. With pressure gauge at “MP” port on control valve, activate and bottom out Steer Left.
2. Adjust Steer Relief to 2500 psi (172 bar).
3. Repeat step one activating Steer Right.
4. Shut down hydraulic system and remove pressure gauge.

NOTE: *On the back of the control valve is a flow control valve. This valve is used to adjust the lift down speed.*

Table 4-4. Valve Component Torque Values

COMPONENT	Ft lb	Nm
Main Relief	25	35
Lift Relief	25	35
Steer Relief	20	28
Pressure Switch	12	16.8
Brake	20	28
High Pressure Filter	50	70
Steer	20	28
Lift	25	35
Flow Control	25	35
Coil Nuts	7	9.8

https://truckmanualshub.com/

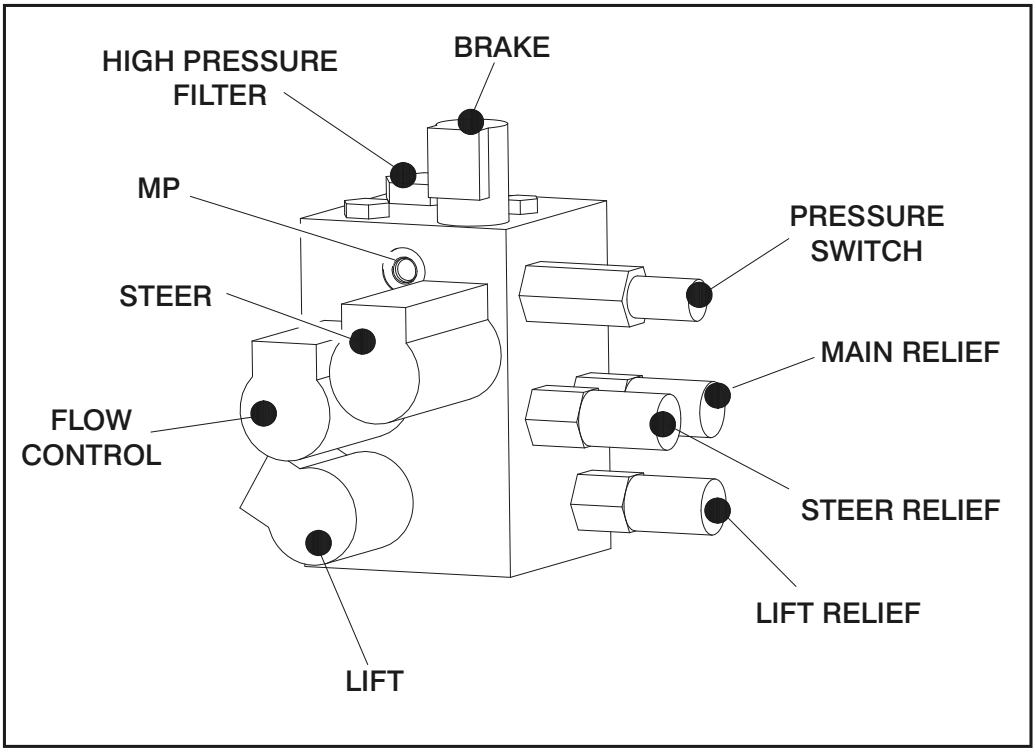

Figure 4-18. Control Valve

4.16 DRIVE TORQUE HUB

Disassembly

1. Loosen all cover bolts and drain oil from unit.
2. Remove the cover bolts and lift off input cover. Remove and discard o-ring from counterbore of input cover.
3. Remove sun gear and thrust washer.
4. Lift out the carrier and thrust washer.
5. Remove input spacer.
6. Lift out internal gear and thrust washer.
7. While wearing eye protection, remove the retaining ring from the output shaft and discard.
8. Remove thrust washer from the output shaft.
9. The output shaft may now be pressed out of the housing.
10. The bearing cups will remain in hub as will the inner bearing cone. The outer bearing cone will remain on the output shaft. The lip seal will be automatically removed during this procedure.

NOTE: *If bearing replacement is necessary, the bearing cups can be removed with a slide hammer puller or driven out with a punch.*

11. To remove the cluster gears from the carrier, drive the roll pin into the planet shaft. The planet shaft may now be tapped out of the carrier. After planet shaft has been removed, the roll pin can be driven out The cluster gear can now be removed from the carrier). The tanged thrust washer will be removed from the cluster gear.
12. The needle bearings and thrust spacer are now removed from cluster gear.

NOTE: *When rebuilding or repairing the unit, the retaining ring, o-rings, and seal should always be replaced.*

https://truckmanualshub.com/

Assembly

1. With the hub shaft sub-assembly resting on the shaft install internal gear. The spline of the internal gear. bore will mesh with the spline of the output shaft.
2. Thrust washer is installed on the face of the output shaft. Sufficient grease or petroleum jelly should be used to hold thrust washer in place.
3. Place o-ring into hub counterbore. Use petroleum jelly to hold in place. Locate and mark the four counter beamed holes in the face of the housing. This is for identification later in the assembly.
4. Thrust spacer is installed into the bore of the output shaft. This should be a slip fit and the thrust spacer should rotate in this location.
5. Place carrier assembly on a flat surface with the gear cluster up. Find the punch marked tooth on each large gear and locate at 12 o'clock (straight up) from each planet pin.
6. With shoulder side of ring gear facing down, place ring gear over (into mesh with) cluster gear. Be sure that punch marks remain in correct location during installation. The side of the ring gear with an "X" stamped on it should be up.
7. While holding ring gear and cluster gear in mesh, place small side of cluster gear into mesh with the internal gear and sun gear. On the ring gear, locate the hole marked "X" over one of the marked counterbored holes in hub.

NOTE: *If gears do not mesh easily or carrier assembly does not rotate freely, then remove the carrier and ring gear and check the cluster gear timing.*

8. Sun gear is installed, meshing with the teeth of the large diameter cluster gear. The counterbore on the sun gear locates on the shoulder of the input spacer. This is to be a slip fit and should operate freely.
9. Thrust washer is installed onto the sun gear and should locate on the gear teeth shoulder.
10. Thrust washer is installed into the counterbore of the carrier.
11. Place o-ring into input cover counterbore. Use petroleum jelly to hold o-ring in place.
12. The input cover is now installed on this assembly. Taking care to correctly align pipe plug hole with those in the hub, usually 90° to one another, locate the four counterbore holes in housing, marked in step (3) and install four shoulder bolts. A tap with a hammer may be necessary to align shoulder bolt with hub counterbore.
13. Install bolts into remaining holes.
14. Pipe plugs are to be installed into input cover using a lubricant seal.
15. Torque bolts to 23 - 27 ft lbs (31- 36 NM).
16. Fill unit one-half full with EP90 lubricant.

https://truckmanualshub.com/

4.17 DRIVE ASSIST VALVE

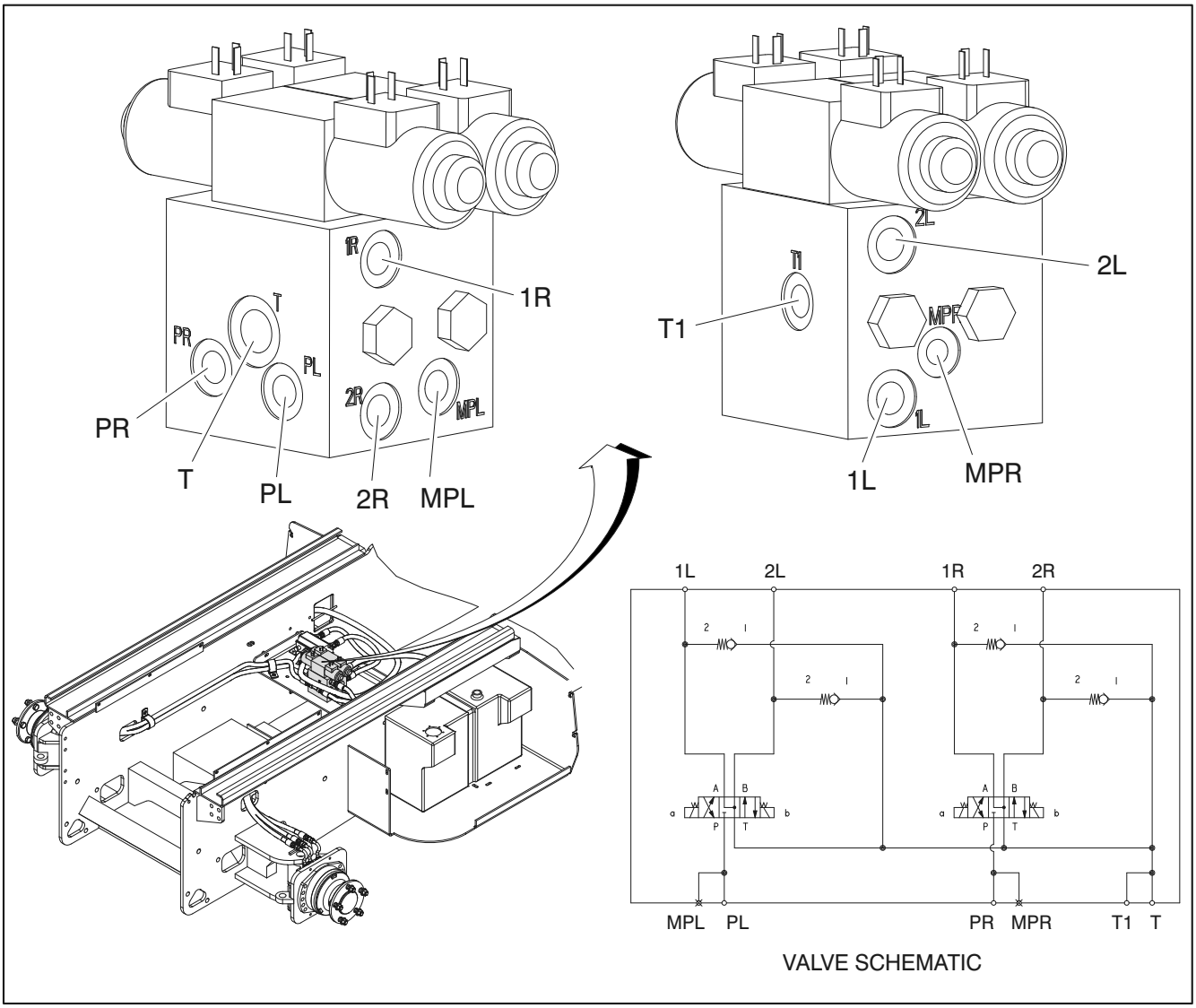

Figure 4-19. Drive Assist Valve

https://truckmanualshub.com/

SECTION 5. JLG CONTROL SYSTEM

5.1 HAND HELD ANALYZER

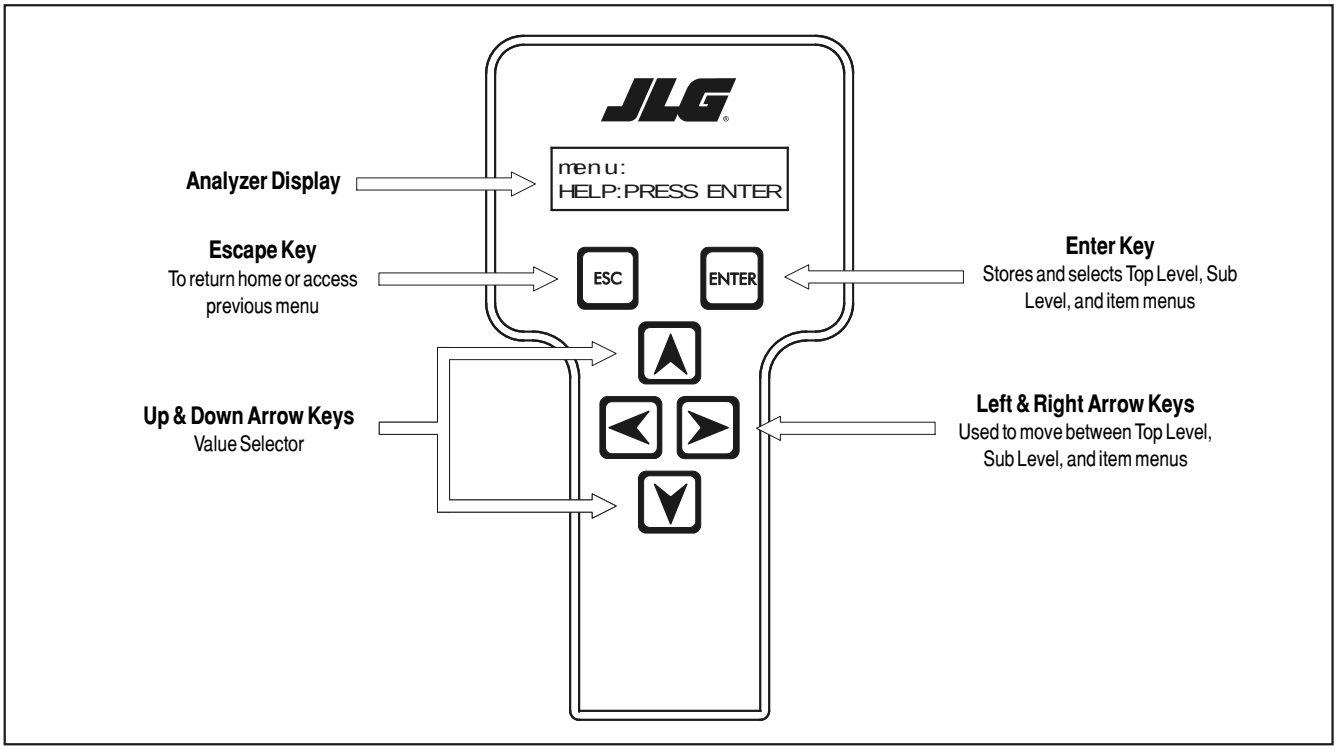

Figure 5-1. Hand Held Analyzer

To Connect the Hand Held Analyzer:

1. Connect the four pin end of the cable supplied with the analyzer, to the four position connector on the PCB and connect the remaining end of the cable to the analyzer.

NOTE: *The cable has a four pin connector at each end of the cable; the cable cannot be connected backwards.*

2. Power up the Control System by turning the lower key to the platform position and pulling both emergency stop buttons on.

https://truckmanualshub.com/

Using the Analyzer:

With the machine power on and the analyzer connected properly, the analyzer will display the following:

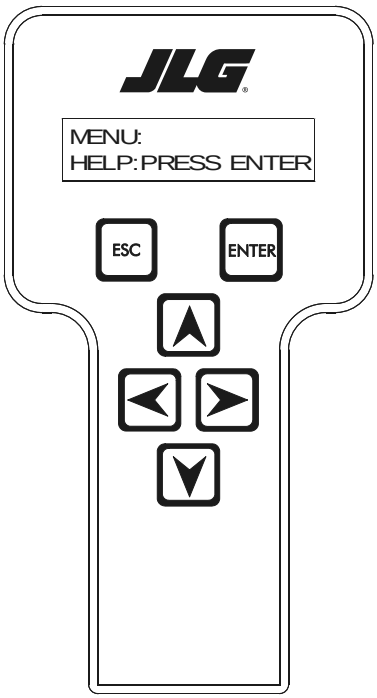

HELP:

PRESS ENTER

At this point, using the **RIGHT** and **LEFT** arrow keys, you can move between the top level menu items. To select a displayed menu item, press **ENTER.** To cancel a selected menu item, press **ESC**; then you will be able to scroll using the right and left arrow keys to select a different menu item.

The top level menus are as follows:

HELP

DIAGNOSTICS

ACTIVATE TESTS

ACCESS LEVEL

PERSONALITIES

MACHINE SETUP

CALIBRATION: (Access level 1 only)

If you press **ENTER**, at the HELP:PRESS ENTER display, and a fault is present, the analyzer display will scroll the fault across the screen. If more than one fault is present only the highest priority fault will show. The other active faults are viewable in Logged Help. If there was no fault detected, the display will read:

In platform mode**:**

HELP:

EVERYTHING OK,

In ground mode**:**

HELP:

GROUND MODE OK

If **ENTER** is pressed again, the display moves to the following display:

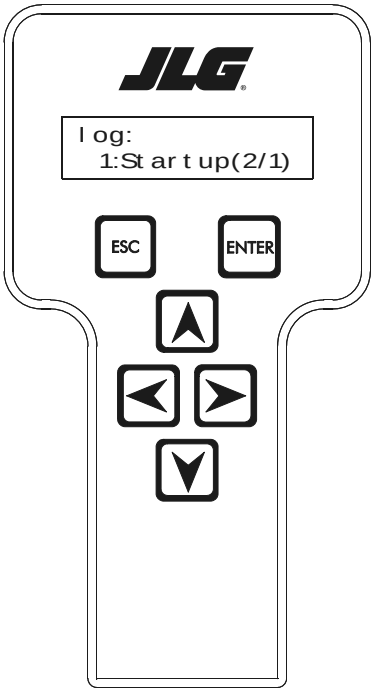

LOGGED HELP

1: STARTUP (2/1): (Or last recorded fault)

At this point, the analyzer will display the highest priority active fault, if any are present. You may scroll through the fault logs to view what the last 15 faults were. Use the right and left arrow keys to scroll through the fault logs. The active faults, are listed before the first POWER CYCLE. To return to the top menu, press **ESC** two times.

When a top level menu is selected, a new set of menu items may be offered; If for example you choose Personalities:

DRIVE

LIFT

STEER

JOYSTICK

Pressing **ENTER** with any of the above displayed menus, will display additional sub-menus within the selected menu. In some cases the next level is the parameter or information to be changed. Refer to the flow chart for what menus are available within the top level menus. You may only view the personality settings for selected menus

https://truckmanualshub.com/

while in access level 2. Remember, you may always cancel a selected menu item by pressing the **ESC** key.

Changing the Access Level of the Hand Held Analyzer:

When the analyzer is first connected, you will be in access level 2 which enables you to only view most configuration settings which cannot be changed until you enter a password to advance to a lower level. This ensures that a setting cannot be accidentally altered. To change the access level, the correct password must be entered. To enter the password, scroll to the **ACCESS LEVEL** menu. For example:

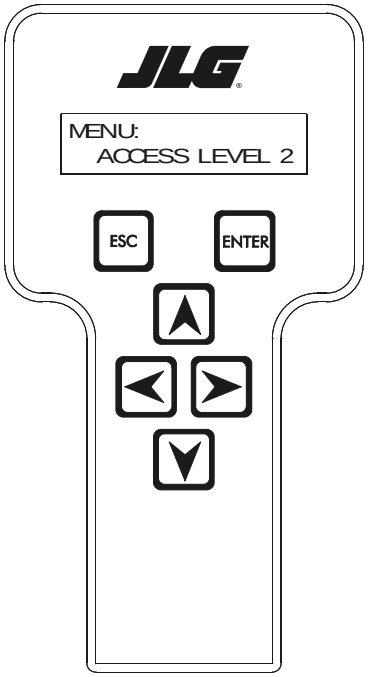

MENU:

ACCESS LEVEL 2

Press **ENTER** to select the **ACCESS LEVEL** menu.

Using the **UP** or **DOWN** arrow keys, enter the first digit of the password, 3.

Then using the **RIGHT** arrow key, position the cursor to the right one space to enter the second digit of the password.

Use the **UP** or **DOWN** arrow key to enter the second digit of the password which is 3.

Repeat this process until you have entered all five digits of the password which is **33271**.

Once the correct password is displayed, press **ENTER**. The access level should display the following, if the password was entered correctly:

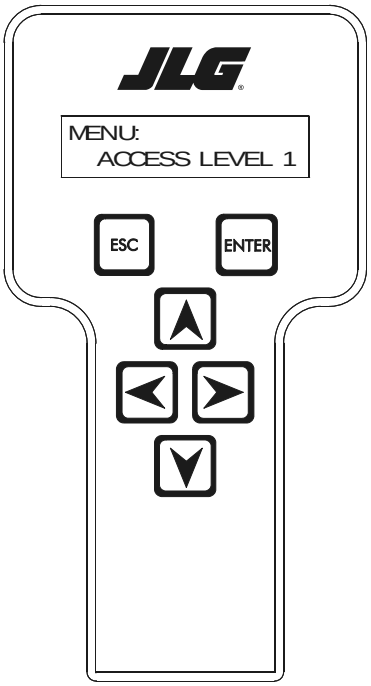

MENU:

ACCESS LEVEL 1

Repeat the above steps if the correct access level is not displayed or you can not adjust the personality settings:

https://truckmanualshub.com/

Adjusting Parameters Using the Hand Held Analyzer

Once you have gained access to level 1, and a personality item is selected, press the UP or DOWN arrow keys to adjust its value, for example:

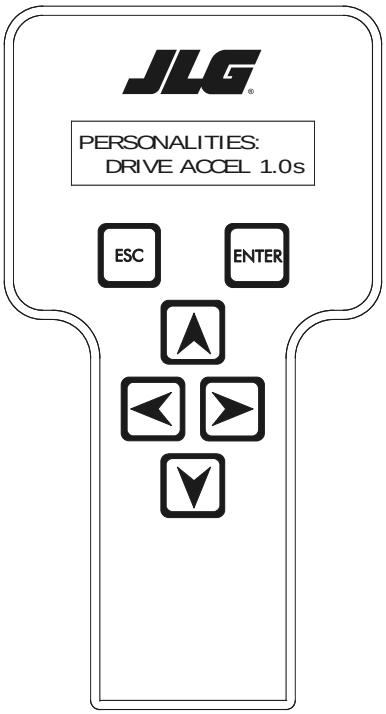

PERSONALITIES:
DRIVE ACCEL 1.0s

There will be a minimum and maximum for the value to ensure efficient operation. The Value will not increase if the **UP** arrow is pressed when at the maximum value nor will the value decrease if the **DOWN** arrow is pressed and the value is at the minimum value for any particular personality. If the value does not change when pressing the up and down arrows, check the access level to ensure you are at access level 1.

Machine Setup

When a machine digit item is selected, press the **UP** or **DOWN** arrow keys to adjust its value, for example:

⚠ WARNING

FAILURE TO MAKE THE PROPER SETTINGS FOR THE PARTICULAR MACHINE CAN RESULT IN IMPROPER OPERATION.

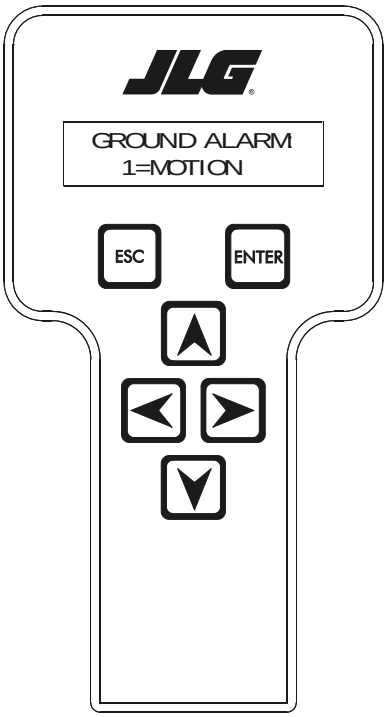

GROUND ALARM:
1=DESCENT

The effect of the machine digit value is displayed along with its value. The above display would be selected if the machine was equipped with a ground alarm and you wanted it to sound when driving. There are certain settings allowed to install optional features or select the machine model.

When selecting the machine model to match the size of the machine, the personality settings will return to default settings.

https://truckmanualshub.com/

NOTE: *Refer to Table 5-3, Machine Model Adjustment, and Table 5-4, Machine Configuration Programming Information for the default settings.*

Password 33271 will give you access to level 1, which will permit you to change all machine personality and/or machine setup settings.

⚠ WARNING

CHANGING THESE SETTINGS MAY ADVERSELY AFFECT THE PERFORMANCE OF YOUR MACHINE.

The flash code is indicated on the face of the platform control box as shown:

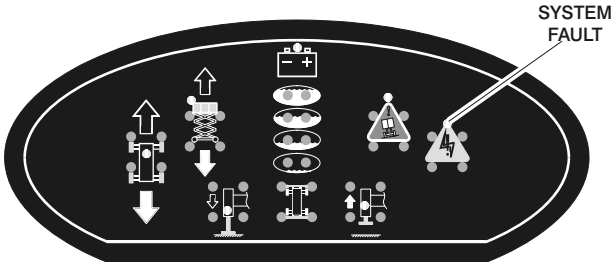

NOTE: *For machines with software prior to P1.0, flash codes are also displayed on the handheld analyzer . For descriptions see,Table 5-1, Flash Codes/DTC's.*

NOTICE

IT IS A GOOD PRACTICE TO AVOID PRESSURE-WASHING ELECTRICAL/ELECTRONIC COMPONENTS. SHOULD PRESSURE-WASHING BE UTILIZED TO WASH AREAS CONTAINING ELECTRICAL/ELECTRONIC COMPONENTS, JLG INDUSTRIES, INC. RECOMMENDS A MAXIMUM PRESSURE OF 750 PSI (52 BAR) AT A MINIMUM DISTANCE OF 12 INCHES (30.5 CM) AWAY FROM THESE COMPONENTS. IF ELECTRICAL/ELECTRONIC COMPONENTS ARE SPRAYED, SPRAYING MUST NOT BE DIRECT AND BE FOR BRIEF TIME PERIODS TO AVOID HEAVY SATURATION.

5.2 PC BOARDS

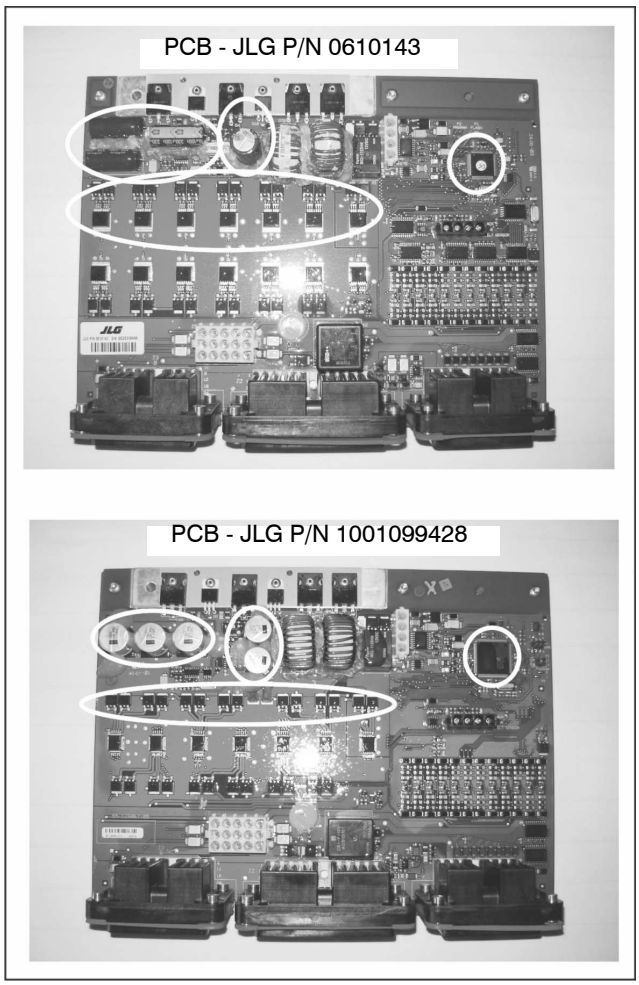

Figure 5-2. PC Boards

NOTE: *Figure 5-2., PC Boards, is shown for part distinguishing purposes. PC Board (p/n 1001099428) is used on machines with Software P1.0 and higher. PC Board (p/n 0610143) is used on machines prior to Software P1.0. Visually reference the circuits and chips circled in Figure 5-2. to determine which PC Board is in the machine.*

https://truckmanualshub.com/

5.3 FLASH CODES/DTC'S AND DESCRIPTIONS

NOTE: *Machines with software prior to P1.0 will display the Flash Code on the JLG Analyzer as shown below. The 2 digit Flash Code is scrolled at the end of the Help Message. Refer to "Flash Code" column of Table 5-1.*

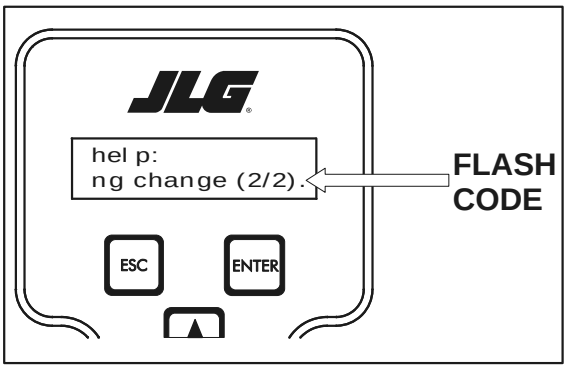

NOTE: *Diagnostic Trouble Codes (DTC's) will only show for machines with software P1.0 and above. The 3 to 5 digit DTC will display in parenthesis on the JLG Analyzer in the upper right corner of the display screen as shown below. Refer to Table 5-1 for DTC's.*

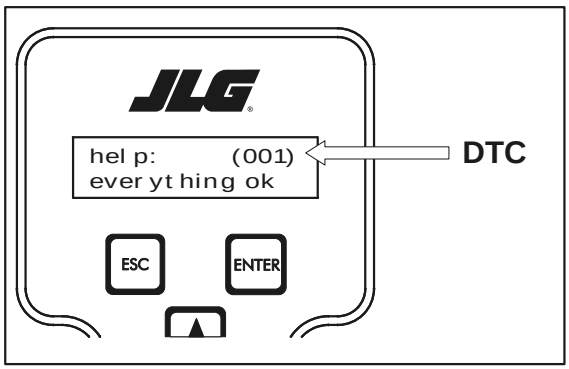

Table 5-1. Flash Codes/DTC's

FLASH CODE	DTC	HELP MESSAGE AND DESCRIPTION
No Flash Code	000	HELP COMMENT
	001	EVERYTHING OK The normal help message in Plaform Mode.
	002	GROUND MODE OK The normal help message in Ground Mode.
	0022	DIFFERENT FUNCTION SELECTED & IGNORED A function (i.e. Drive, Lift, etc.) is active and the operator has selected another function. The system has ignored the new selection.
	0023	FUNCTION SELECTED BUT TRIGGER SWITCH OPEN A function (i.e. Drive, Lift, etc.) has been selected by the operator, but the trigger switch is not active (closed).
	0024	JOYSTICK MOVED BUT NO FUNCTION SELECTED The joystick was moved out of the center position before a function was selected.
	0025	ALARM SOUNDING - PLATFORM OVERLOADED Load Sensing System indicates that the platform is overloaded. Applicable when Machine Setup's Load is set to "1 = CUTOUT PLT" and the vehicle is operating in Ground Mode.
	003	ALARM SOUNDING - TILTED & ABOVE ELEVATION Platform is elevated and the chassis is not level. Applicable when Machine Setup's TILT CUTOUT is set to 0 = NO.
	004	DRIVING AT CUTBACK - ABOVE ELEVATION Platform is elevated and the machine is in the drive mode of operation.
	005	DRIVE & LIFT UP PREVENTED - TILTED & ELEVATED Machine is exceeding tilt allowance and platform is elevated above allowed height. Applicable when Machine Setup's TILT CUTOUT is set to 1 = YES.
	009	DRIVE PREVENTED - ELEVATED ABOVE DRIVE CUTOUT HEIGHT Machin is elevated above the drive cutout height. Not applicable when Machine Setup's MODEL is set to 0 = 3369LE.

https://truckmanualshub.com/

Table 5-1. Flash Codes/DTC's

FLASH CODE	DTC	HELP MESSAGE AND DESCRIPTION
2-1	210	POWER UP
	211	POWER CYCLE A new system power up has occurred since the last help message.
	212	KEYSWITCH FAULTY Both Platform and Ground modes are selected simultaneously.
2-2	220	PLATFORM CONTROLS
	221	FUNCTION PROBLEM - HORN PERMANENTLY SELECTED Horn switch in platform control box closed at start up. Release switch to clear fault.
	2210	TRIGGER CLOSED TOO LONG WHILE IN NEUTRAL Trigger switch in the platform control box closed for more than ten seconds while the joystick is in the neutral position. Release switch to clear fault.
	2234	FUNCTION PROBLEM - DRIVE PERMANENTLY SELECTED Drive select switch in the platform control box closed at start up or for more than ten seconds. Release switch to clear fault.
	2235	FUNCTION PROBLEM - LIFT PERMANENTLY SELECTED Lift select switch in the platform control box closed at start up or for more than ten seconds. Release switch to clear fault.
	2236	FUNCTION PROBLEM - O/R PERMANENTLY SELECTED An outrigger select switch in the platform control box closed at start up or for more than ten seconds. Release switch to clear fault.
	2237	JOYSTICK FAULTY - STEER SWITCHES ACTIVE TOGETHER Both the steer left and steer right inputs are closed at the same time. A short in the steer switch wiring or a failed steer switch can cause this.
	2238	FUNCTIONS LOCKED OUT - SHORT TO PLATFORM ROW INPUT A short circuit to IGN has been detected in the platform cable wiring.
	2239	FUNCTION PROBLEM - JOYSTICK CALIBRATION FAULTY The Personalities for theJoystick are improperly adjusted or a joystick calibration attempt failed. Re-adjust or recalibrate.
	224	FUNCTION PROBLEM - STEER LEFT PERMANENTLY SELECTED Steer left switch in the platform control box closed at start up. Release switch to clear fault.
	225	FUNCTION PROBLEM - STEER RIGHT PERMANENTLY SELECTED Steer right switch in the platform control box closed at start up. Release switch to clear fault.
	226	ACCELERATOR (or JOYSTICK) FAULTY - WIPER OUT OF RANGE The joystick wiper signal input is outside the acceptable voltage range. The wiper wire being off, the wiper wire shorted to battery power, or the wiper wire shorted to battery negative could cause this.
	228	FUNCTION LOCKED OUT - JOYSTICK NOT CENTERED Selected function is not allowed because the joystick is not centered. Return joystick to center and reselect function.
	229	FUNCTION PROBLEM - TRIGGER PERMANENTLY CLOSED Trigger switch in the platform control box closed at start up. Release switch to clear fault.
	N/A	ELEV ANGLE SENSOR NOT DETECTING CHANGE Platform elevated for 5 sec. and elevation voltage change not detected. Faulty sensor, wire harness, or ground module. Return platform to stowed position to clear. Reset model or recalibrate elev angle sensor.
	N/A	TRIGGER CLOSED TOO LONG WHILE IN NEUTRAL Trigger switch in the platform control box closed for more than ten seconds while the joystick is in the neutral position. Release switch to clear fault.
2-3	230	GROUND CONTROLS
	231	FUNCTION PROBLEM - LIFT PERMANENTLY SELECTED Lift switch (up or down) in the ground control box closed at start up. Release switch to clear fault.
	N/A	NO DATA FROM TILT SENSOR - NOT CONNECTED OR FAULTY No signal from the tilt switch. Check wiring and plug connections at the level sensor and at the ground control board.

https://truckmanualshub.com/

Table 5-1. Flash Codes/DTC's

FLASH CODE	DTC	HELP MESSAGE AND DESCRIPTION
2-5	250	FUNCTION PREVENTED
	251	ELEV ANGLE SESOR FAULTY - VOLTAGE OUT OF RANGE The sensor signal input voltage is outside acceptable range. This could be a short to IGN, short to B+, short to ground, or sensor not properly mounted.
	2512	ELEV ANGLE SENSOR NOT DETECTING CHANGE Platform elevated for 5 sec. and elevation voltage change not detected. Fault sensor, wire harness, or ground module. Return platform to stowed position to clear. Reset Model or recalibrate elev angle sensor
	252	ELEV ANGLE SENSOR HAS NOT BEEN CALIBRATED Calibrate elevation rotary sensor using calibration procedure.
	2535	SHORT DETECTED ON IGNITION WIRING - CHECK HARNESS A short to ground has been detected on one of the following: J2-21, J2-22, J2-23, J2-27, J2-28, J3-7, J3-10, J5-5
	2536	ALL FUNCTIONS PREVENTED - FUNCTION CUTOUT ACTIVE Machine Setup's FUNCTION CUTOUT is set for "2 = ALL FUNCTIONS" and Ground Module J2-11 is de-energized by an external safety device.
	2537	DRIVE & LIFT UP PREVENTED - FUNCTION CUTOUT ACTIVE Machine Setup's FUNCTION CUTOUT is set for "1 = DRV & LFT UP" and Ground Module J2-11 is de-energized by an external safety device.
	2538	FUNCTION PREVENTED - CHARGER CONNECTED Disconnect AC line from charger to clear fault.
	255	PLATFORM OVERLOADED Machine Setup's LOAD is set to "1 = CUTOUT PLT" or "2 = CUTOUT ALL" and the Load Sensing System indicates that the platform is overloaded.
	257	ELEV PROX PERMANENTLY CLOSED - CHECK PROX AND ANGLE ADJUSTMENT Elevation proximity sensor closed. This could be due to a misadjustment of the prox or angle mount sensor or metal debris on the prox.
	N/A	ELEV PROX PERMANENTLY OPEN - CHECK PROX AND ANGLE ADJUSTMENT
3-1	310	LINE CONTACTOR OPEN CIRCUIT
	311	OPEN CIRCUIT LINE CONTACTOR Line contactor did not close.
	313	OPEN CIRCUIT PUMP CONTACTOR Pump contactor did not close.
3-2	320	LINE CONTACTOR SHORT CIRCUIT
	321	LINE CONTACTOR MISWIRED ON OR WELDED The line contactor is permanently closed or the coil is wired improperly.
	323	PUMP CONTACTOR MISWIRED ON OR WELDED The pump contactor is permanently closed or the auxiliary contacts are wired improperly.
3-3	330	GROUND OUTPUT DRIVER
	33330	SHORT CIRCUIT LINE/PUMP CONTACTOR COIL The line or pump contactor coils are shorted to ground or mis-wired.
4-2	420	THERMAL LIMIT
	421	POWER MODULE TOO HOT - PLEASE WAIT The power module over the rear axle is too hot. Allow to cool by powering down.
	425	POWER CONVERTER TOO HOT - PLEASE WAIT Switching power supply in ground control box too hot. Allow to cool by powering down to clear fault.

https://truckmanualshub.com/

Table 5-1. Flash Codes/DTC's

FLASH CODE	DTC	HELP MESSAGE AND DESCRIPTION
4-4	440	BATTERY SUPPLY
	441	BATTERY VOLTAGE TOO LOW - SYSTEM SHUTDOWN Recharge batteries or check for damaged batteries.
	442	BATTERY VOLTAGE TOO HIGH - SYSTEM SHUTDOWN Disconnect battery charger. Check that the correct voltage batteries are being used.
	N/A	BATTERY CHARGE TOO LOW - SYSTEM SHUTDOWN
6-6	660	COMMUNICATION
	661	CANBUS FAILURE: POWER MODULE Lost communication to power module. Check wiring at ground control and power module. Recycle power to clear fault.
7-7	770	ELECTRIC MOTOR
	773	CAPACITOR BANK FAULT - CHECK POWER CIRCUITS Check power wiring. If no error in power wiring, replace power controller.
	775	OPEN CIRCUIT FIELD (or TRACTION) WIRING Open circuit between F1 and F2 terminals on power module and the drive motors. Check wiring.
8-1	810	TILT SENSOR
	812	NO DATA FROM TILT SENSOR - NOT CONNECTED OR FAULTY No signal from the tilt switch. Check wiring and plug connections at the level sensor and at the ground control box.
9-9	990	HARDWARE
	995	POWER MODULE FAILURE - PERSONALITY RANGE ERROR Toggle MODEL then re-configure Machine Setup and Personalities. If this does not resolve issue, replace power controller.
	996	POWER MODULE FAILURE - INTERNAL ERROR Toggle MODEL then re-configure Machine Setup and Personalities. If this does not resolve issue, replace power controller.
	997	POWER MODULE FAILURE - CHECK POWER CIRCUITS OR MOSFET SHORT CIRCUIT Check power wiring. If no error in power wiring module, replace power controller.
	9980	POWER MODULE FAILURE - PERSONALITY CRC ERROR Toggle MODEL then re-configure Machine Setup and Personalities. If this does not resolve issue, replace power controller.
	N/A	POWER MODULE FAILURE - CAPACITOR BANK FAULT Replace power module.

https://truckmanualshub.com/

Table 5-2. Power Module Diagnostic LED Flash Codes

Flash Code	Fault
Constant Illumination	No Fault, Normal Condition
LED Extinguished	Internal Controller Fault
1 Flash	Personality Out of Range
2 Flashes	Illegal Start Condition or Illegal Steer Switch Input
3 Flashes	MOSFET Short Circuit
4 Flashes	Contactor Fault or Motor Open Circuit
5 Flashes	Not Used
6 Flashes	Accelerator, Steer Pot or Speed Probe Wire Default
7 Flashes	Low or High Battery Voltage or BDI Cut-Out Operating
8 Flashes	Over Temperature
9 Flashes	Contactor Coil Short Circuit
12 Flashes	CAN Bus Fault

https://truckmanualshub.com/

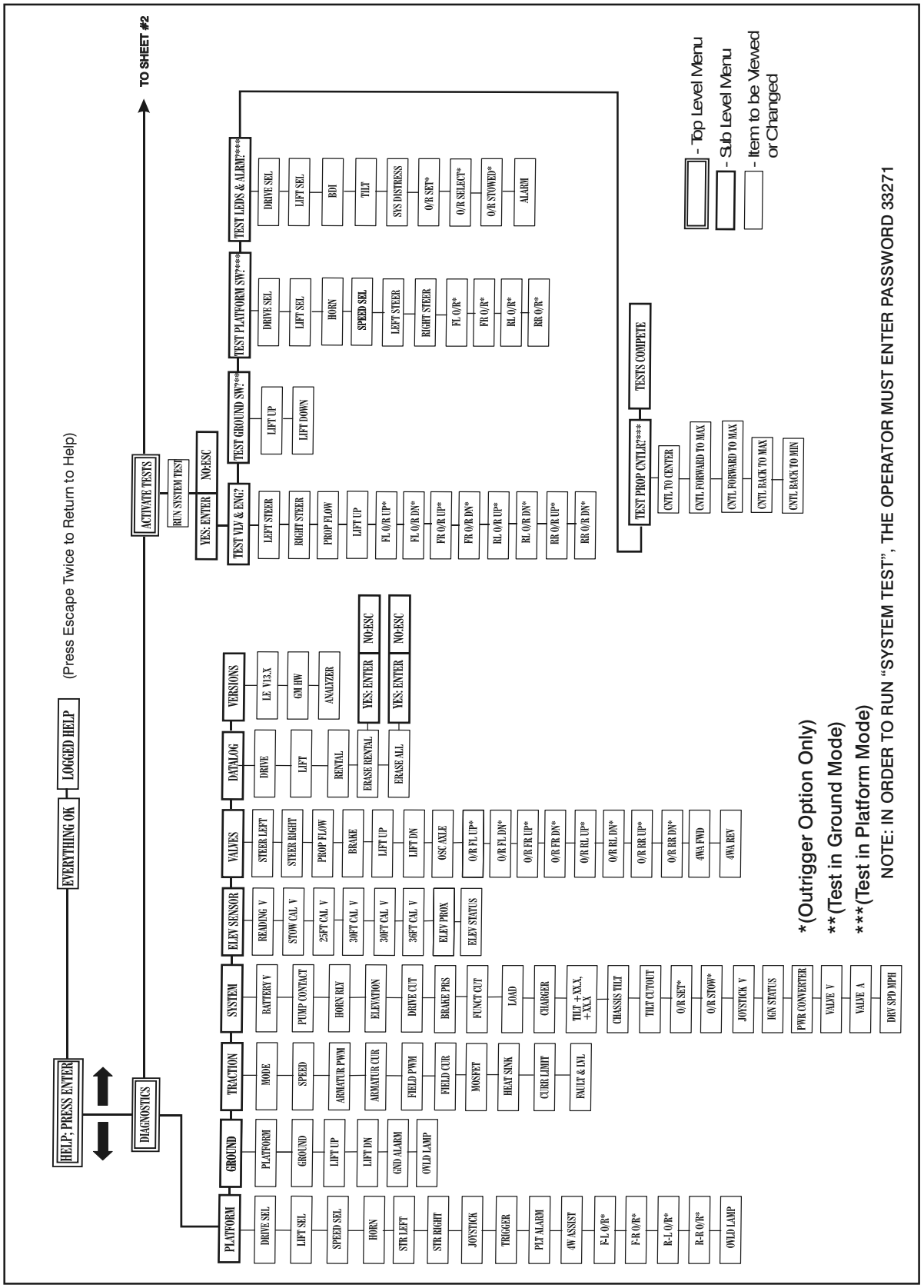

Figure 5-2. Analyzer Flow Chart - SW V13.X - Sheet 1 of 3

https://truckmanualshub.com/

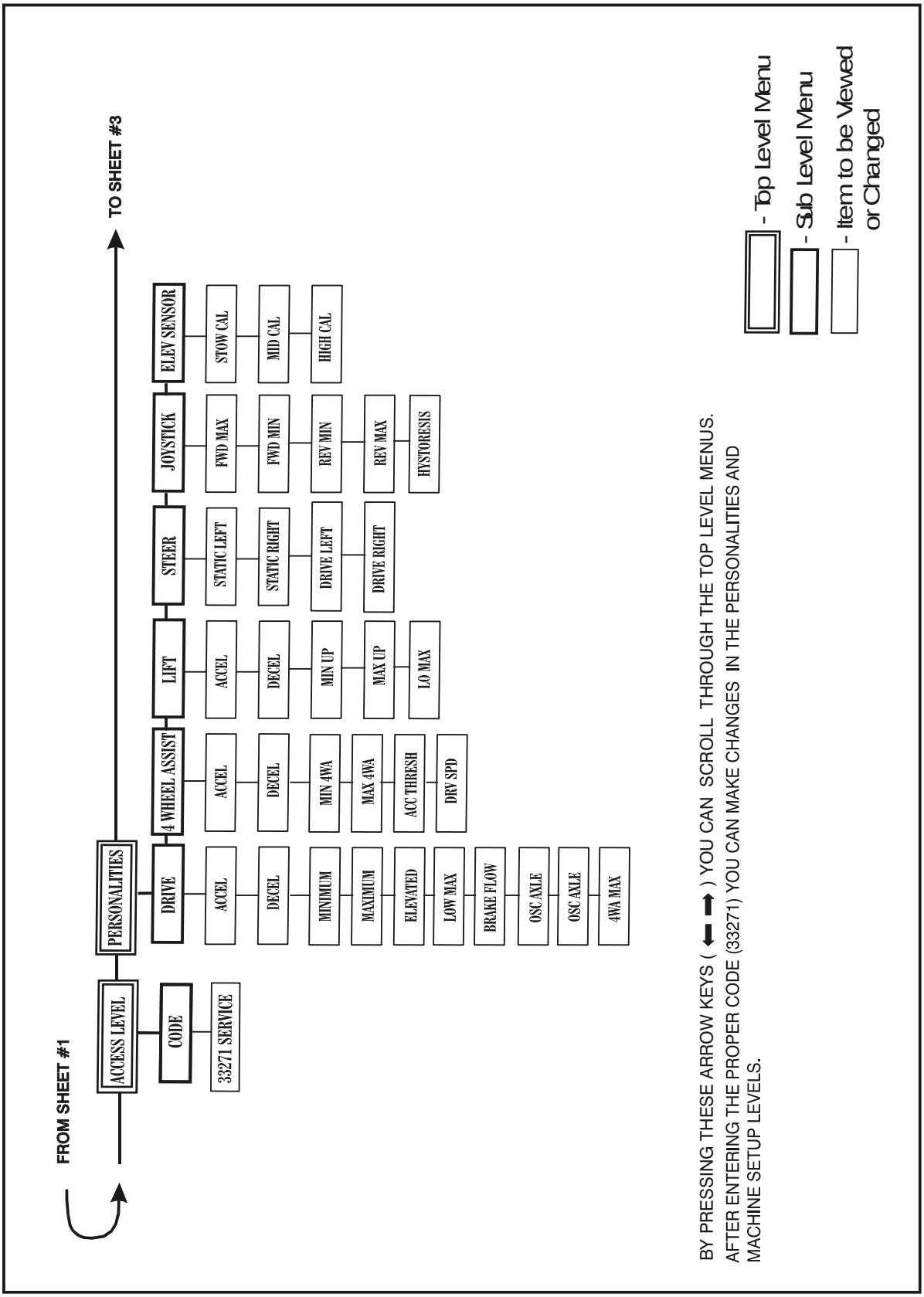

Figure 5-3. Analyzer Flow Chart - SW V13.X - Sheet 2 of 3

https://truckmanualshub.com/

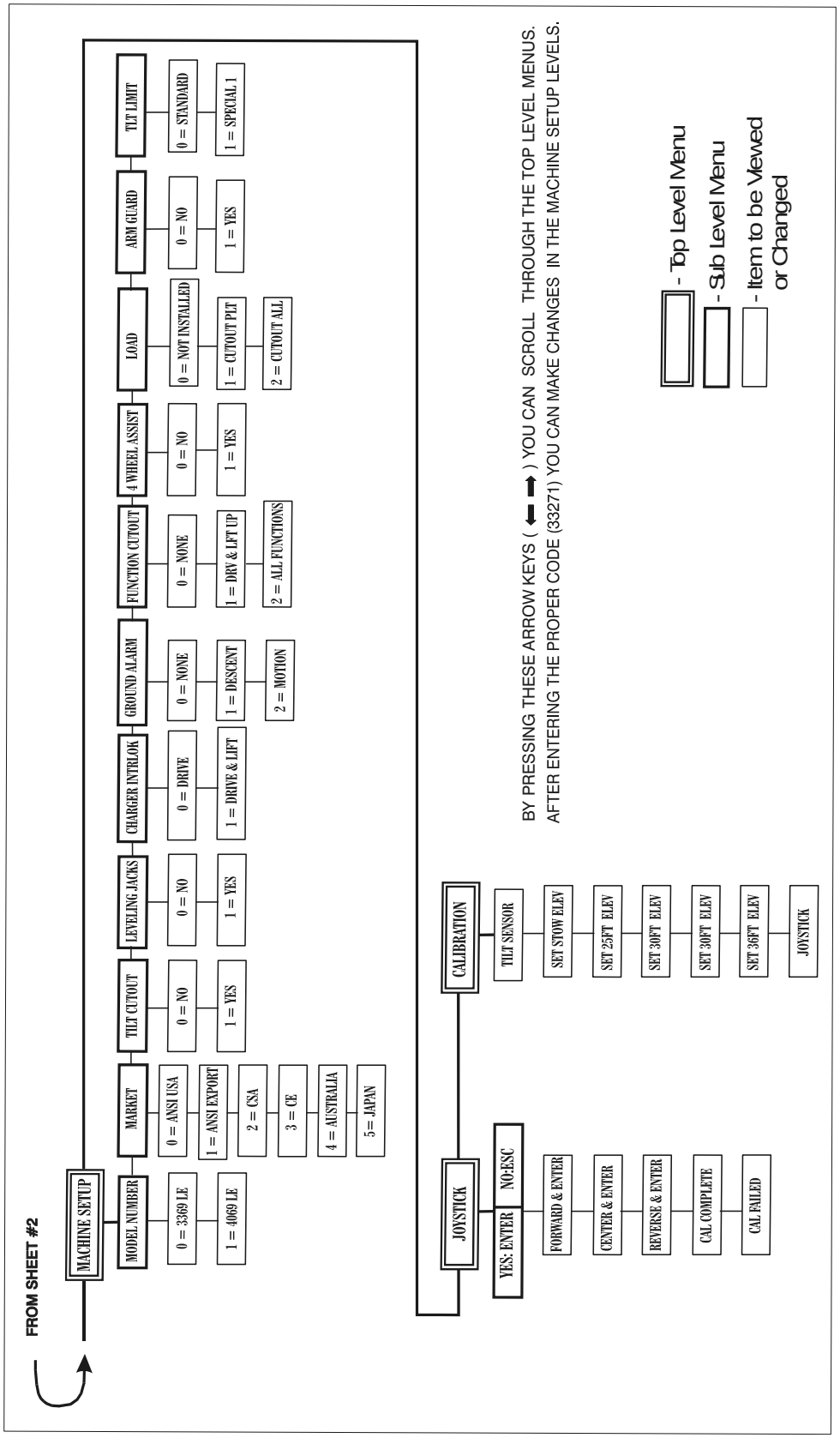

Figure 5-4. Analyzer Flow Chart - SW V13.X - Sheet 3 of 3

https://truckmanualshub.com/

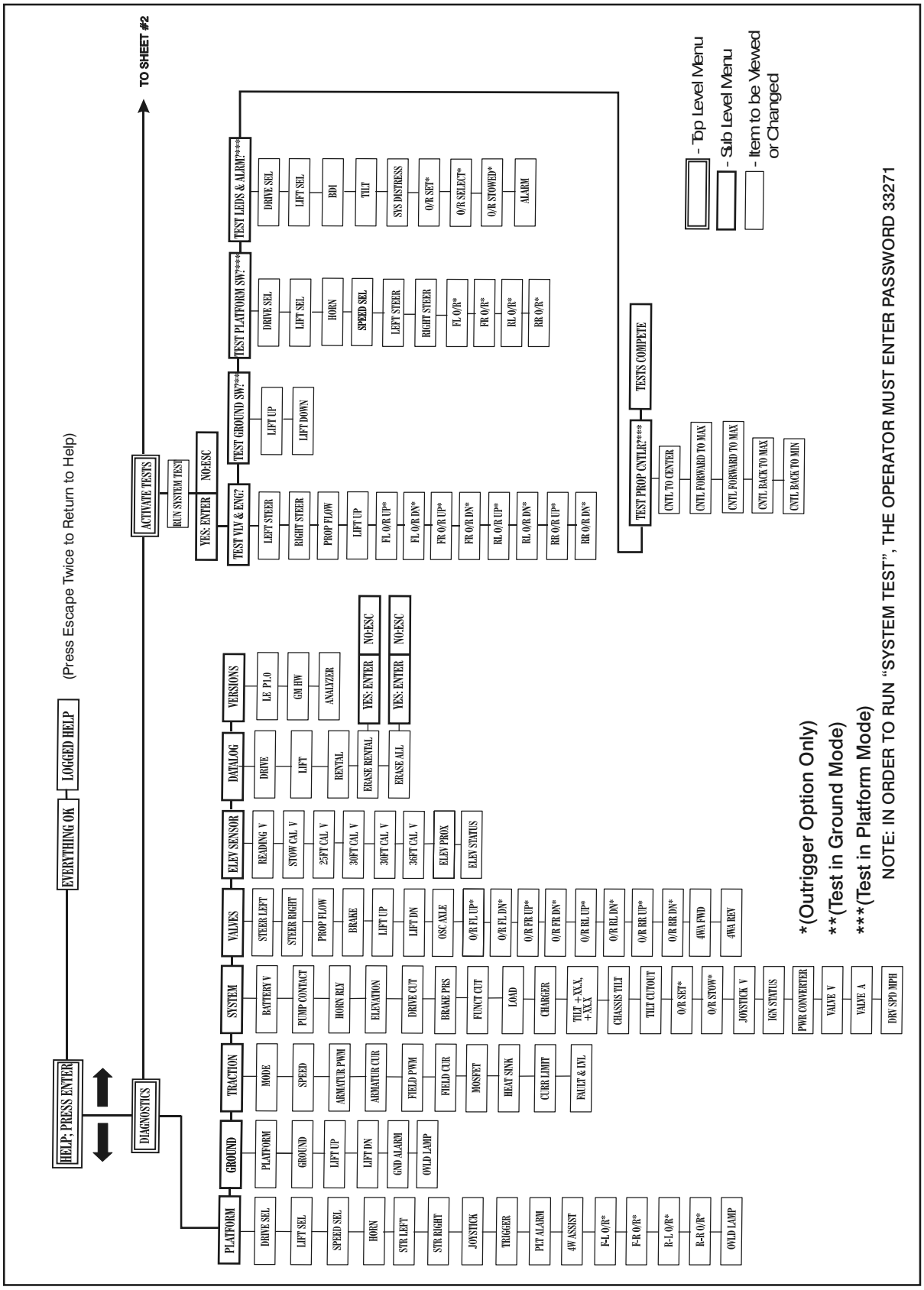

Figure 5-5. Analyzer Flow Chart - Software P1.X - Sheet 1 of 3

https://truckmanualshub.com/

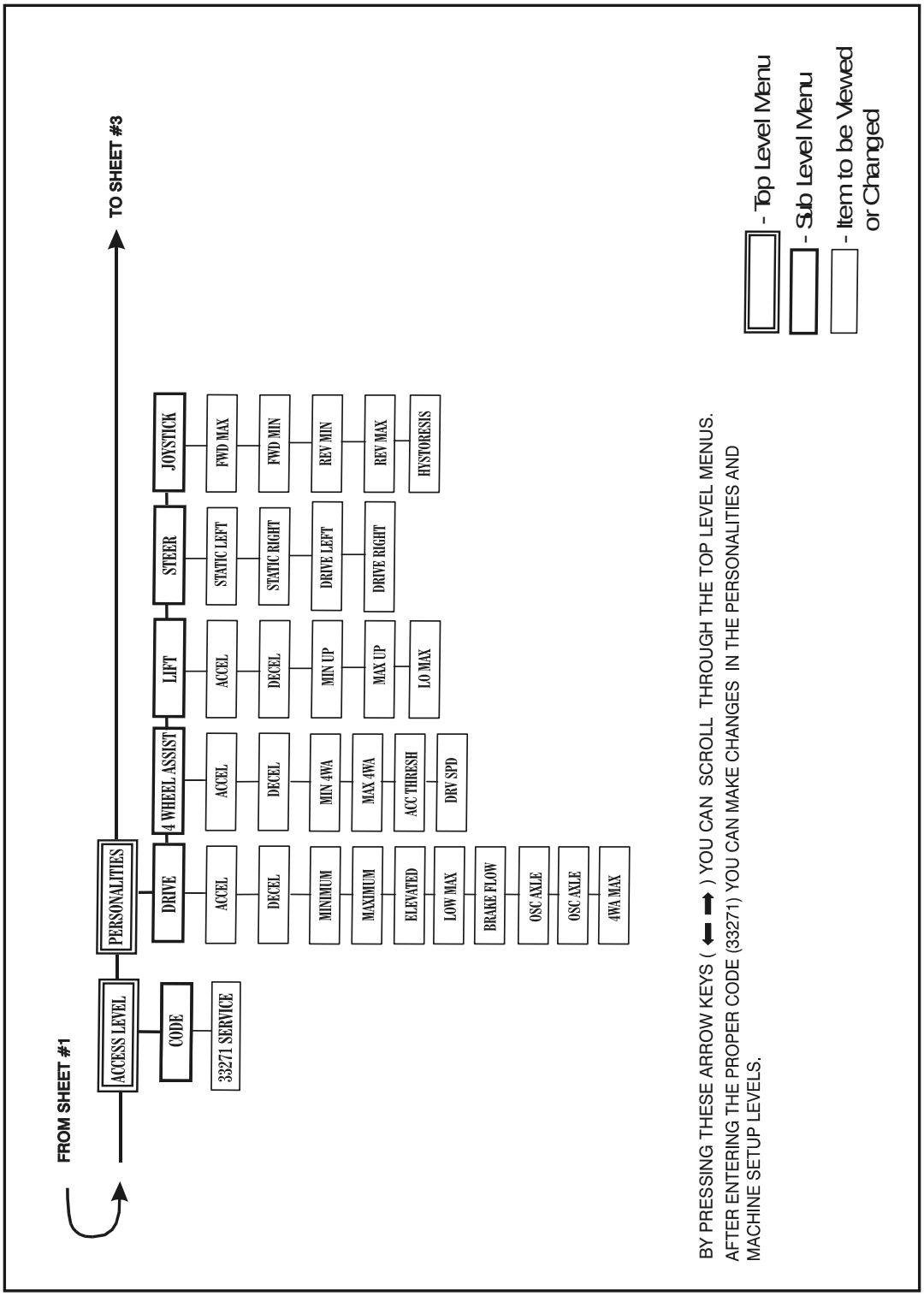

Figure 5-6. Analyzer Flow Chart - Software P1.X - Sheet 2 of 3

https://truckmanualshub.com/

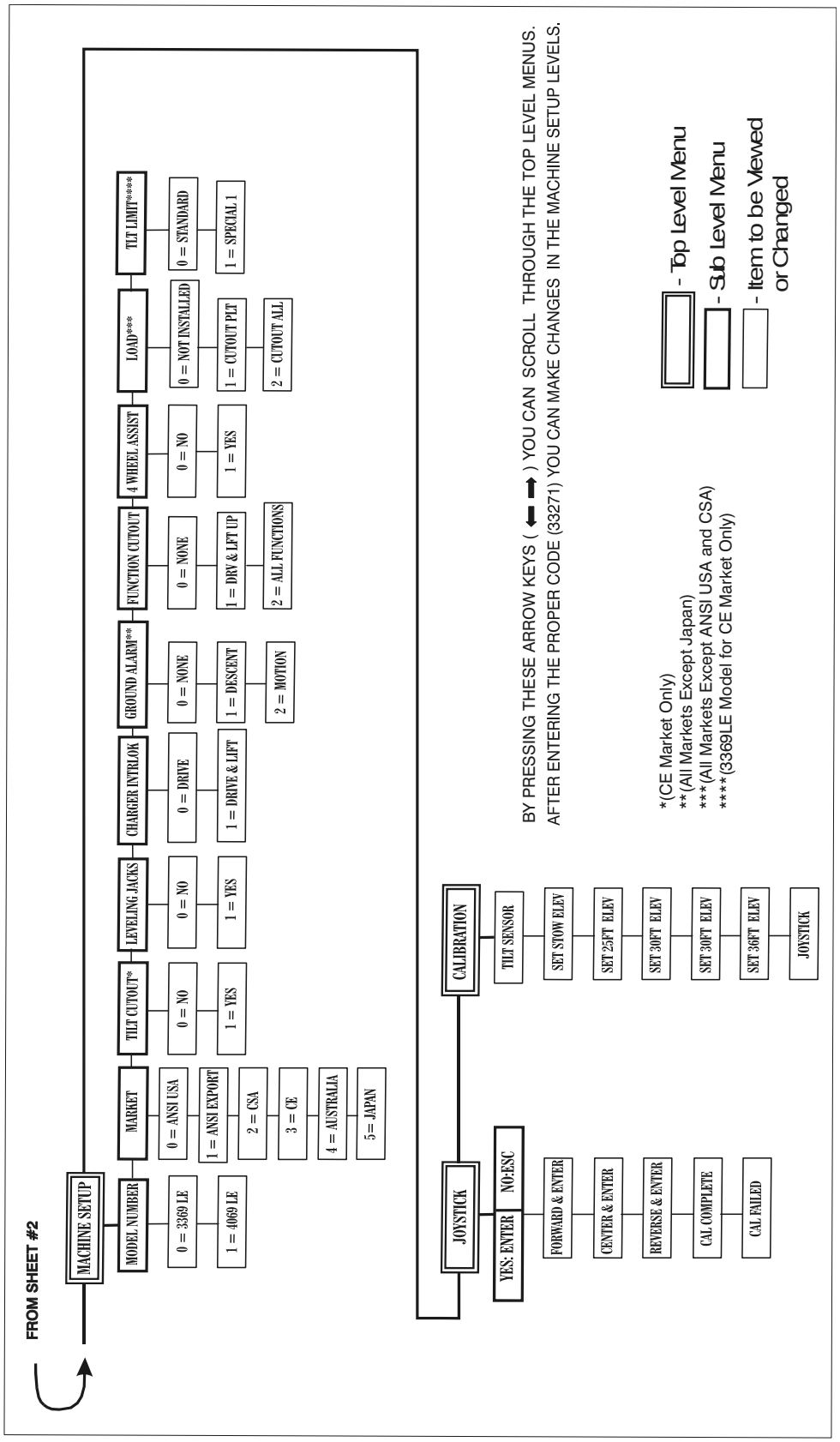

Figure 5-7. Analyzer Flow Chart - Software P1.X - Sheet 3 of 3

https://truckmanualshub.com/

Table 5-3. Machine Model Adjustment

Adjustment	Adjustment Range	Default Values - 3369LE	Default Values - 4069LE
DRIVE			
ACCEL	1.0 - 5.0 (sec)	3.5	3.5
DECEL	0.1 - 5.0 s(sec)	0.1	0.1
MINIMUM	1 - 6%	4	4
MAXIMUM	30 - 100%	100	100
ELEVATED	1 - 15%	10	10
LOW MAX	35 - 65%	50	50
BRAKE FLOW	15 - 100%	75	75
OSC AXLE	15 - 100%	50	50
OSC AXLE	0.1 - 5.0 (sec)	1.0	1.0
4WA MAX	35 - 65%	40	40
4 WHEEL ASSIST*			
ACCEL	1.0 - 5.0 (sec)	2.0	2.0.
DECEL	0.1 - 5.0 (sec)	0.1	0.1
MIN 4WA	0 - 25%	16	16
MAX 4WA	25 - 100%	75	75
ACCELERATOR THRESH	0 - 100%	75	75
DRIVE SPEED	0 -1.5 MPH	0.5	0.5
LIFT			
ACCEL	0.2 - 5.0 (sec)	2.0	2.0
DECEL	0.2 - 5.0 (sec)	0.5	0.5
MIN UP	0 - 25%	16	16
MAX UP	25 - 100%	65	65
LOW MAX	35 - 65%	35	35
STEER			
STATC LEFT	15 - 100%	31	31
STATIC RIGHT	15 - 100%	37	37
DRIVE LEFT	15 - 100%	23	23
DRIVE RIGHT	15 - 100%	25	25
JOYSTICK			
FWD MAX	0 - 5.0 V	0.65	0.65
FWD MIN	0 - 5.0 V	2.25	2.25
REV MIN	0 - 5.0 V	2.80	2.80
REV MAX	0 - 5.0 V	4.45	4.45

4150351_E

NOTE: *These settings may change in order to achieve optimal performance on a machine by machine basis.*
** The 4 Wheel Assist Menu will not be available if the option is not configured.*

https://truckmanualshub.com/

NOTE: *When configuring an LE scissors machine, the machine configuration must be completed before any personality settings can be changed. Changing the personality settings first and then changing the model number of the machine configuration will cause the personality settings to return to default.*

Table 5-4. Machine Configuration Programming Information

Configuration Digit	Number	Description	Default Number					
			0	1	2	3	4	5
1 (MODEL #)	0 1	3369LE 4069LE	0					
2 (MARKET)	0 1 2 3 4 5	ANSI USA ANSI EXPORT CSA CE AUSTRALIA JAPAN	0					
3 (TILT CUTOUT)	0 1	NO - Drive & Lift Up not prevented when Tilted & Elevated YES - Drive & Lift Up prevented when Tilted & Elevated.	1	1	1	0	1	1
4 (LEVELING JACKS)	0 1	NO - Leveling Jacks are not installed. YES - Leveling Jacks are installed.	0					
5 (CHARGER INTRLOK)	0 1	DRIVE - Drive is prevented when the vehicle is being charged. DRIVE & LIFT - Drive & Lift Up are prevented when the vehicle is being charged.	0					
6 (GROUND ALARM)	0 1 2	NOT INSTALLED - The Ground Alarm shall not sound DESCENT - The Ground Alarm shall sound during Lift Down MOTION - The Ground Alarm shall sound during any vehicle motion.	1	1	1	1	1	2
7 (FUNCTION CUTOUT)	0 1 2	NONE DRV & LFT UP - Only allows Lift Down when Function Cutout is active. ALL FUNCTIONS - All functions are prevented when Function Cutout is active	0					
8 (4 WHEEL ASSIST)	0 1	NO - The 4 Wheel Assist option is not installed. YES - The 4 Wheel Assist option is installed.	0					
9 (LOAD)	0 1 2	NOT INSTALLED - Load Sensing System (LSS) is not fitted to the vehicle. CUTOUT PLT - LSS is fitted, and Platform Controls are prevented in the event of an Overload. Ground Controls remain functional. This is the default setting for CE machines. CUTOUT ALL - LSS is fitted. Platform and Ground Controls are prevented in the event of an Overload	0	1	0	1	0	1
10 (TILT LIMIT)*	0 1	STANDARD - Normal tilt limits. SPECIAL 1 - Vehicle tilt limits restricted to allow operation of a standard 3369LE in 16.7 m/s wind speeds for the CE Market. ***NOTE:*** *Tilt Limit selection is only visible for the 3369LE configured for the CE Market. The selection will default to STANDARD otherwise.*	0	0	0	0	0	0

4150352_G

https://truckmanualshub.com/

5.4 GROUND CONTROL CIRCUIT BOARD

Software Version 13.6

Table 5-5. J1 Connector

PIN	TAGNAME	FUNCTION	TYPE	
1	PLTS	Platform Select	POWER	OUTPUT
2	PLTE	Platform EMS	POWER	INPUT
3	GND	Ground	POWER	OUTPUT
4	COL0	Column 0 Output	DIGITAL	OUTPUT
5	COL1	Column 1 Output	DIGITAL	OUTPUT
6	COL2	Column 2 Output	DIGITAL	OUTPUT
7	PCTL	Joystick Input (0 - 5VDC)	ANALOG	INPUT
8	ROW0	Row 0 Input	DIGITAL	INPUT
9	ROW1	Row 1 Input	DIGITAL	INPUT
10	COL3	Column 3 Output	DIGITAL	OUTPUT
11	COL4	Column 4 Output	DIGITAL	OUTPUT
12	COL5	Column 5 Output	DIGITAL	OUTPUT
13	ROW2	Row 2 Input	DIGITAL	INPUT
14	LCLK	LED Latch Clock Output	DIGITAL	OUTPUT
15	ALRM	Platform Alarm	DIGITAL	OUTPUT
16	IGN	Ignition Power (+12V; 750mA Limit)	POWER	OUTPUT
17	GALR	Ground Alarm	DIGITAL	OUTPUT
18	DO9	Spare High-Side Digital Output 9 (12V, 5A)	DIGITAL	OUTPUT
19	QPRX	Trigger Switch	POWER	INPUT
20	GNDE	Ground EMS (from J5-2; 500mA Limit)	POWER	OUTPUT
21	GINH	Generator Inhibit Start Switch	POWER	I/O
22	GND	Ground	POWER	OUTPUT
23	GND	Ground	POWER	OUTPUT
24	GND	Ground	POWER	OUTPUT

https://truckmanualshub.com/

Table 5-6. J2 Connector

PIN	TAGNAME	FUNCTION	TYPE	
1	B+	Control System Supply (+48V)	POWER	INPUT
2	GND	Control System Ground	POWER	INPUT
3	LTS	Steer Left Solenoid Valve	DIGITAL	OUTPUT
4	RTS	Steer Right Solenoid Valve	DIGITAL	OUTPUT
5	DPS	Flow Control Solenoid Valve	FWM	OUTPUT
6	BRS	Brake Solenoid Valve	DIGITAL	OUTPUT
7	UPS	Lift Up Solenoid Valve	DIGITAL	OUTPUT
8	DDNS	Lift Down Solenoid Valve	FWM	OUTPUT
9	HORN	Horn Relay (+48V)	DIGITAL	OUTPUT
10	GND	Ground	POWER	OUTPUT
11	FCU	Load Sensing System / Function Cutout Input	DIGITAL	INPUT
12	BPS	Brake Pressure Switch	DIGITAL	INPUT
13	ELPX	Elevation Prox Switch	DIGITAL	INPUT
14	APWR	+5V Analog Excitation for Elevation Angle Sensor	POWER	OUTPUT
15	ANGL	Elevation Angle Sensor Analog Input (0 -5VDC)	ANALOG	INPUT
16	12V	12V Sensor Supply	POWER	OUTPUT
17	SPD	4 Wheel Assist Speed Sensor Analog Input (FRBQ)	ANALOG	INPUT
18	CANH	CANbus High	SERIAL	I/O
19	CANL	CANbus Low	SERIAL	I/O
20	CANS	CANbus Shield (Ground)	POWER	OUTPUT
21	IGN	Ignition Power (+12V)	POWER	OUTPUT
22	IGN	Ignition Power (+12V)	POWER	OUTPUT
23	IGN	Ignition Power (+12V)	POWER	OUTPUT
24	GND	Ground	POWER	OUTPUT
25	GND	Ground	POWER	OUTPUT
26	PWRON	Power On (GNDS or PLTE Powered; 1.8A Limit)	POWER	OUTPUT
27	IGN	Ignition Power (+12V)	POWER	OUTPUT
28	IGN	Ignition Power (+12V)	POWER	OUTPUT
29	GND	Ground	POWER	OUTPUT
30	GND	Ground	POWER	OUTPUT
31	CHGI	Charger Interlock Input	DIGITAL	INPUT
32	DI9	Spare High-Sensing Digital Input 9	DIGITAL	INPUT
33	DI10	Spare High-Sensing Digital Input 10	DIGITAL	INPUT
34	DI11	Spare High-Sensing Digital Input 11	DIGITAL	INPUT
35	DO17	Spare High-Sensing Digital Output 17 (12V, 5A)	DIGITAL	OUTPUT
36	DO18	Spare High-Sensing Digital Output 18 (12V, 5A)	DIGITAL	OUTPUT

https://truckmanualshub.com/

Table 5-6. J2 Connector

PIN	TAGNAME	FUNCTION	TYPE	
37	4WAF	4 Wheel Assist Forward Solenoid Valve	DIGITAL	OUTPUT
38	4AWR	4 Wheel Assist Reverse Solenoid Valve	DIGITAL	OUTPUT
39	OSAX	Oscillating Axle Solenoid Valves	DIGITAL	OUTPUT
40	DO22	Spare High-Side Digital Otput 22 (12V, 5A)	DIGITAL	OUTPUT

Table 5-7. J3 Connector

PIN	TAGNAME	FUNCTION	TYPE	
1	DO23	High-Side Digital Output 23 (12V, 5A)	DIGITAL	OUTPUT
2	DO24	High-Side Digital Output 24 (12V, 5A)	DIGITAL	OUTPUT
3	DO25	High-Side Digital Output 25 (12V, 5A)	DIGITAL	OUTPUT
4	DO26	High-Side Digital Output 26 (12V, 5A)	DIGITAL	OUTPUT
5	DI12	High-Sensing Digital Input 12	DIGITAL	INPUT
6	DI13	High-Sensing Digital Input 13	DIGITAL	INPUT
7	IGN	Ignition Power (+12V)	POWER	OUTPUT
8	ORSTO	Outrigger Set Input	DIGITAL	INPUT
9	ORSET	Outrigger Stow Input	DIGITAL	INPUT
10	IGN	Ignition Power (+12V)	POWER	OUTPUT
11	FLU	Front-Left O/R Up Solenoid Valve	DIGITAL	OUTPUT
12	FLD	Front-Left O/R Down Solenoid Valve	DIGITAL	OUTPUT
13	FRU	Front-Right O/R Up Solenoid Valve	DIGITAL	OUTPUT
14	FRD	Front-Right O/R Down Solenoid Valve	DIGITAL	OUTPUT
15	RLU	Rear-Left O/R Up Solenoid Valve	DIGITAL	OUTPUT
16	RLD	Rear-Left O/R Down Solenoid Valve	DIGITAL	OUTPUT
17	RRU	Rear-Right O/R Up Solenoid Valve	DIGITAL	OUTPUT
18	RRD	Front-Right O/R Down Solenoid Valve	DIGITAL	OUTPUT
19	GMST	Generator Manual Start (to J5-13)	POWER	I/O
20	GINH	Generator Inhibit Start (to J1-21)	POWER	I/O
21	GFLT	Generator Fault LED (to J5-14)	POWER	I/O
22	GNDE	Ground EMS (from J5-2; 500mA Limit)	POWER	OUTPUT
23	GND	Ground	POWER	OUTPUT
24	GND	Ground	POWER	OUTPUT

https://truckmanualshub.com/

Table 5-8. J4 Connector

PIN	TAGNAME	FUNCTION	TYPE	
1	12V	12V Sensor Supply	POWER	OUTPUT
2	TILTX	X-Axis Tilt Input (PWM)	ANALOG	INPUT
3	TILTY	Y-Axis Tilt Input (PWM)	ANALOG	INPUT
4	GND	Ground	POWER	OUTPUT

Table 5-9. J5 Connector

PIN	TAGNAME	FUNCTION	TYPE	
1	B+	Master Supply Connection (from J2-1)	POWER	OUTPUT
2	GNDE	Ground EMS (to J1-20, J3-22)	POWER	INPUT
3	PLTS	Platform Select Input (to J1-1)	POWER	INPUT
4	GNDS	Ground Select Input	POWER	INPUT
5	IGN	Ignition Power (+12V)	POWER	OUTPUT
6	GND	Ground	POWER	OUTPUT
7	UPG	Ground Lift Up Switch	DIGITAL	INPUT
8	DNG	Ground Lift Down Switch	DIGITAL	INPUT
9	FDH	Full Drive Height Input	DIGITAL	INPUT
10	DI19	High-Sensing Digital Input 19	DIGITAL	INPUT
11	DI20	High-Sensing Digital Input 20	DIGITAL	INPUT
12	DI21	High-Sensing Digital Input 21	DIGITAL	INPUT
13	GMST	Generator Manual Start (to J3-19)	POWER	I/O
14	GFLT	Generator Fault LED (to J3-21)	POWER	I/O
15	HRMT	Hourmeter	DIGITAL	OUTPUT

Table 5-10. J6 Connector

PIN	TAGNAME	FUNCTION	TYPE	
1	12V	Ignition Power (+12V)	POWER	OUTPUT
2	RX	RS-232 Serial Receive	SERIAL	INPUT
3	TX	RS-232 Serial Transmit	SERIAL	OUTPUT
4	GND	Ground	POWER	OUTPUT

https://truckmanualshub.com/

Software Version P1.0

Table 5-11. J1 Connector

PIN	TAGNAME	FUNCTION	TYPE	
1	PLTS	Platform Select	POWER	OUTPUT
2	PLTE	Platform EMS	POWER	INPUT
3	GND	Ground	POWER	OUTPUT
4	COL0	Column 0 Output	DIGITAL	OUTPUT
5	COL1	Column 1 Output	DIGITAL	OUTPUT
6	COL2	Column 2 Output	DIGITAL	OUTPUT
7	PCTL	Joystick Input (0 - 5VDC)	ANALOG	INPUT
8	ROW0	Row 0 Input	DIGITAL	INPUT
9	ROW1	Row 1 Input	DIGITAL	INPUT
10	COL3	Column 3 Output	DIGITAL	OUTPUT
11	COL4	Column 4 Output	DIGITAL	OUTPUT
12	COL5	Column 5 Output	DIGITAL	OUTPUT
13	ROW2	Row 2 Input	DIGITAL	INPUT
14	LCLK	LED Latch Clock Output	DIGITAL	OUTPUT
15	ALRM	Platform Alarm	DIGITAL	OUTPUT
16	IGN	Ignition Power (+12V; 750mA Limit)	POWER	OUTPUT
17	GALR	Ground Alarm	DIGITAL	OUTPUT
18	DO9	Spare High-Side Digital Output 9 (12V, 5A)	DIGITAL	OUTPUT
19	QPRX	Trigger Switch	POWER	INPUT
20	GNDE	Ground EMS (from J5-2; 500mA Limit)	POWER	OUTPUT
21	GINH	Generator Inhibit Start Switch	POWER	I/O
22	CANH1	CANBUS High CH1	SERIAL	I/0
23	GND	Ground	POWER	OUTPUT
24	CANL1	CANBUS High CH1	SERIAL	I/0

https://truckmanualshub.com/

Table 5-12. J2 Connector

PIN	TAGNAME	FUNCTION	TYPE	
1	B+	Control System Supply (+48V)	POWER	INPUT
2	GND	Control System Ground	POWER	INPUT
3	LTS	Steer Left Solenoid Valve	DIGITAL	OUTPUT
4	RTS	Steer Right Solenoid Valve	DIGITAL	OUTPUT
5	DPS	Flow Control Solenoid Valve	FWM	OUTPUT
6	BRS	Brake Solenoid Valve	DIGITAL	OUTPUT
7	UPS	Lift Up Solenoid Valve	DIGITAL	OUTPUT
8	DDNS	Lift Down Solenoid Valve	FWM	OUTPUT
9	HORN	Horn Relay (+48V)	DIGITAL	OUTPUT
10	GND	Ground	POWER	OUTPUT
11	FCU	Load Sensing System / Function Cutout Input	DIGITAL	INPUT
12	BPS	Brake Pressure Switch	DIGITAL	INPUT
13	ELPX	Elevation Prox Switch	DIGITAL	INPUT
14	APWR	+5V Analog Excitation for Elevation Angle Sensor	POWER	OUTPUT
15	ANGL	Elevation Angle Sensor Analog Input (0 -5VDC)	ANALOG	INPUT
16	12V	12V Sensor Supply	POWER	OUTPUT
17	SPD	4 Wheel Assist Speed Sensor Analog Input (FRBQ)	ANALOG	INPUT
18	CANH	CANbus High to Power Module	SERIAL	I/O
19	CANL	CANbus Low to Power Module	SERIAL	I/O
20	CANS	CANbus Shield (Ground)	POWER	OUTPUT
21	IGN	Ignition Power (+12V)	POWER	OUTPUT
22	IGN	Ignition Power (+12V)	POWER	OUTPUT
23	IGN	Ignition Power (+12V)	POWER	OUTPUT
24	GND	Ground	POWER	OUTPUT
25	GND	Ground	POWER	OUTPUT
26	PWRON	Power On (GNDS or PLTE Powered; 1.8A Limit)	POWER	OUTPUT
27	IGN	Ignition Power (+12V)	POWER	OUTPUT
28	IGN	Ignition Power (+12V)	POWER	OUTPUT
29	GND	Ground	POWER	OUTPUT
30	GND	Ground	POWER	OUTPUT
31	CHGI	Charger Interlock Input	DIGITAL	INPUT
32	DI9	Spare High-Sensing Digital Input 9	DIGITAL	INPUT
33	DI10	Spare High-Sensing Digital Input 10	DIGITAL	INPUT
34	DI11	Spare High-Sensing Digital Input 11	DIGITAL	INPUT
35	DO17	Spare High-Sensing Digital Output 17 (12V, 5A)	DIGITAL	OUTPUT
36	DO18	Spare High-Sensing Digital Output 18 (12V, 5A)	DIGITAL	OUTPUT
37	4WAF	4 Wheel Assist Forward Solenoid Valve	DIGITAL	OUTPUT

https://truckmanualshub.com/

Table 5-12. J2 Connector

PIN	TAGNAME	FUNCTION	TYPE	
38	4AWR	4 Wheel Assist Reverse Solenoid Valve	DIGITAL	OUTPUT
39	OSAX	Oscillating Axle Solenoid Valves	DIGITAL	OUTPUT
40	DO22	Spare High-Side Digital Otput 22 (12V, 5A)	DIGITAL	OUTPUT

Table 5-13. J3 Connector

PIN	TAGNAME	FUNCTION	TYPE	
1	DO23	High-Side Digital Output 23 (12V, 5A)	DIGITAL	OUTPUT
2	DO24	High-Side Digital Output 24 (12V, 5A)	DIGITAL	OUTPUT
3	DO25	High-Side Digital Output 25 (12V, 5A)	DIGITAL	OUTPUT
4	DO26	High-Side Digital Output 26 (12V, 5A)	DIGITAL	OUTPUT
5	DI12	High-Sensing Digital Input 12	DIGITAL	INPUT
6	DI13	High-Sensing Digital Input 13	DIGITAL	INPUT
7	IGN	Ignition Power (+12V)	POWER	OUTPUT
8	ORSTO	Outrigger Set Input	DIGITAL	INPUT
9	ORSET	Outrigger Stow Input	DIGITAL	INPUT
10	IGN	Ignition Power (+12V)	POWER	OUTPUT
11	FLU	Front-Left O/R Up Solenoid Valve	DIGITAL	OUTPUT
12	FLD	Front-Left O/R Down Solenoid Valve	DIGITAL	OUTPUT
13	FRU	Front-Right O/R Up Solenoid Valve	DIGITAL	OUTPUT
14	FRD	Front-Right O/R Down Solenoid Valve	DIGITAL	OUTPUT
15	RLU	Rear-Left O/R Up Solenoid Valve	DIGITAL	OUTPUT
16	RLD	Rear-Left O/R Down Solenoid Valve	DIGITAL	OUTPUT
17	RRU	Rear-Right O/R Up Solenoid Valve	DIGITAL	OUTPUT
18	RRD	Front-Right O/R Down Solenoid Valve	DIGITAL	OUTPUT
19	GMST	Generator Manual Start (to J5-13)	POWER	I/O
20	GINH	Generator Inhibit Start (to J1-21)	POWER	I/O
21	GFLT	Generator Fault LED (to J5-14)	POWER	I/O
22	GNDE	Ground EMS (from J5-2; 500mA Limit)	POWER	OUTPUT
23	GND	Ground	POWER	OUTPUT
24	GND	Ground	POWER	OUTPUT

https://truckmanualshub.com/

Table 5-14. J4 Connector

PIN	TAGNAME	FUNCTION	TYPE	
1	12V	12V Sensor Supply	POWER	OUTPUT
2	TILTX	X-Axis Tilt Input (PWM)	ANALOG	INPUT
3	TILTY	Y-Axis Tilt Input (PWM)	ANALOG	INPUT
4	GND	Ground	POWER	OUTPUT

Table 5-15. J5 Connector

PIN	TAGNAME	FUNCTION	TYPE	
1	B+	Master Supply Connection (from J2-1)	POWER	OUTPUT
2	GNDE	Ground EMS (to J1-20, J3-22)	POWER	INPUT
3	PLTS	Platform Select Input (to J1-1)	POWER	INPUT
4	GNDS	Ground Select Input	POWER	INPUT
5	IGN	Ignition Power (+12V)	POWER	OUTPUT
6	GND	Ground	POWER	OUTPUT
7	UPG	Ground Lift Up Switch	DIGITAL	INPUT
8	DNG	Ground Lift Down Switch	DIGITAL	INPUT
9	FDH	Full Drive Height Input	DIGITAL	INPUT
10	DI19	High-Sensing Digital Input 19	DIGITAL	INPUT
11	DI20	High-Sensing Digital Input 20	DIGITAL	INPUT
12	DI21	High-Sensing Digital Input 21	DIGITAL	INPUT
13	GMST	Generator Manual Start (to J3-19)	POWER	I/O
14	GFLT	Generator Fault LED (to J3-21)	POWER	I/O
15	HRMT	Hourmeter	DIGITAL	OUTPUT

Table 5-16. J6 Connector

PIN	TAGNAME	FUNCTION	TYPE	
1	12V	Ignition Power (+12V)	POWER	OUTPUT
2	RX	RS-232 Serial Receive	SERIAL	INPUT
3	TX	RS-232 Serial Transmit	SERIAL	OUTPUT
4	GND	Ground	POWER	OUTPUT

https://truckmanualshub.com/

SECTION 6. GENERAL ELECTRICAL INFORMATION & SCHEMATICS

6.1 GENERAL

This section contains schematics to be used for locating and correcting most of the operating problems which may develop. If a problem should develop which is not presented in this section or which is not corrected by listed corrective actions, technically qualified guidance should be obtained before proceeding with any maintenance.

NOTICE

IT IS GOOD PRACTICE TO AVOID PRESSURE-WASHING ELECTRICAL/ELECTRONIC COMPONENTS. IN THE EVENT PRESSURE-WASHING THE MACHINE IS NEEDED, ENSURE THE MACHINE IS SHUT DOWN BEFORE PRESSURE-WASHING. SHOULD PRESSURE WASHING BE UTILIZED TO WASH AREAS CONTAINING ELECTRICAL/ELECTRONIC COMPONENTS, JLG INDUSTRIES, INC. RECOMMENDS A MAXIMUM PRESSURE OF 750 PSI (52 BAR) AT A MINIMUM DISTANCE OF 12 INCHES (30.5 CM) AWAY FROM THESE COMPONENTS. IF ELECTRICAL/ELECTRONIC COMPONENTS ARE SPRAYED, SPRAYING MUST NOT BE DIRECT AND BE FOR BRIEF TIME PERIODS TO AVOID HEAVY SATURATION.

6.2 MULTIMETER BASICS

A wide variety of multimeters or Volt Ohm Meters (VOM) can be used for troubleshooting your equipment. A digital meter with reasonable accuracy (within 7%) is recommended for the measurements in these procedures. This section shows diagrams of a common, digital VOM configured for several different circuit measurements. Instructions for your VOM may vary. Please consult the meter operator's manual for more information.

Grounding

"Grounding the meter" means to take the black lead (which is connected to the COM (common) or negative port) and touch it to a good path to the negative side of the voltage source.

Backprobing

To "backprobe" means to take the measurement by accessing a connector's contact on the same side as the wires, the back of the connector. Readings can be done while maintaining circuit continuity this way. If the connector is the sealed type, great care must be taken to avoid damaging the seal around the wire. It is best to use probes or probe tips specifically designed for this technique, especially on sealed connectors. Whenever possible insert probes into the side of the connector such that the test also checks both terminals of the connection. It is possible to inspect a connection within a closed connector by backprobing both sides of a connector terminal and measuring resistance. Do this after giving each wire a gentle pull to ensure the wires are still attached to the contact and contacts are seated in the connector.

Min/Max

Use of the "Min/Max" recording feature of some meters can help when taking measurements of intermittent conditions while alone. For example, you can read the voltage applied to a solenoid when it is only operational while a switch, far from the solenoid and meter, is held down.

Polarity

Finding a negative voltage or current reading when expecting a positive reading frequently means the leads are reversed. Check what reading is expected, the location of the signal and that the leads are connected to the device under test correctly. Also check that the lead on the "COM" port goes to the ground or negative side of the signal and the lead on the other port goes to the positive side of the signal.

Scale

M = Mega = 1,000,000 * (Displayed Number)
k = kilo = 1,000 * (Displayed Number)
m = milli = (Displayed Number) / 1,000
μ = micro = (Displayed Number) / 1,000,000
Example: 1.2 kΩ = 1200 Ω
Example: 50 mA = 0.05 A

https://truckmanualshub.com/

Voltage Measurement

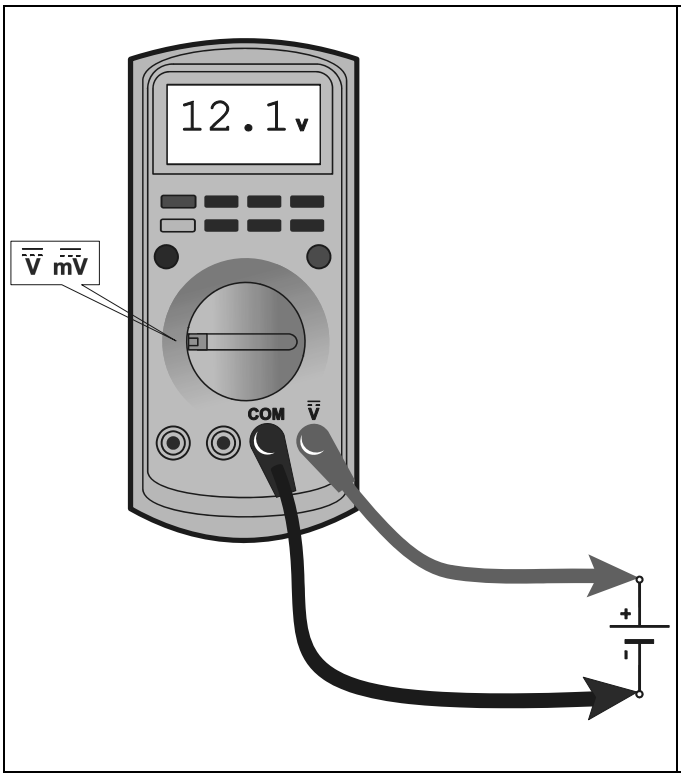

Figure 6-1. Voltage Measurement (DC)

- If meter is not auto ranging, set it to the correct range (See multimeter's operation manual)
- Use firm contact with meter leads

Resistance Measurement

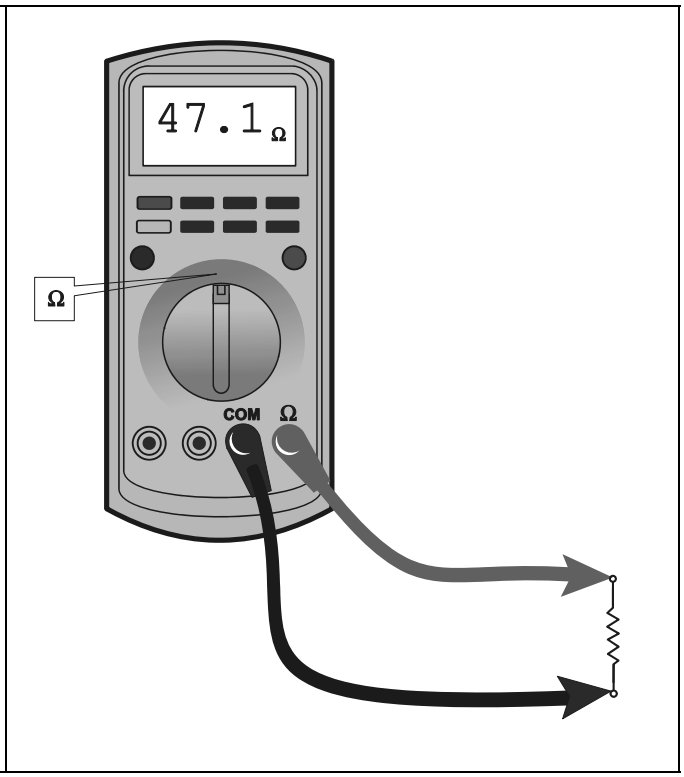

Figure 6-2. Resistance Measurement

- First test meter and leads by touching leads together. Resistance should read a short circuit (very low resistance)
- Circuit power must be turned OFF before testing resistance
- Disconnect component from circuit before testing
- If meter is not auto ranging, set it to the correct range (See multimeter's operation manual)
- Use firm contact with meter leads

https://truckmanualshub.com/

Continuity Measurement

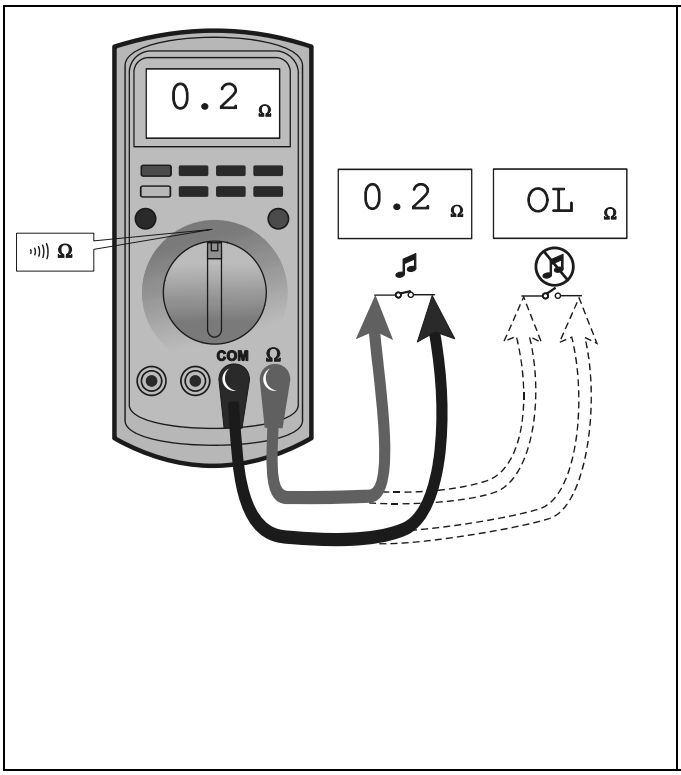

Figure 6-3. Continuity Measurement

- Some meters require a separate button press to enable audible continuity testing
- Circuit power must be turned OFF before testing continuity
- Disconnect component from circuit before testing
- Use firm contact with meter leads
- First test meter and leads by touching leads together. Meter should produce an audible alarm, indicating continuity

Current Measurement

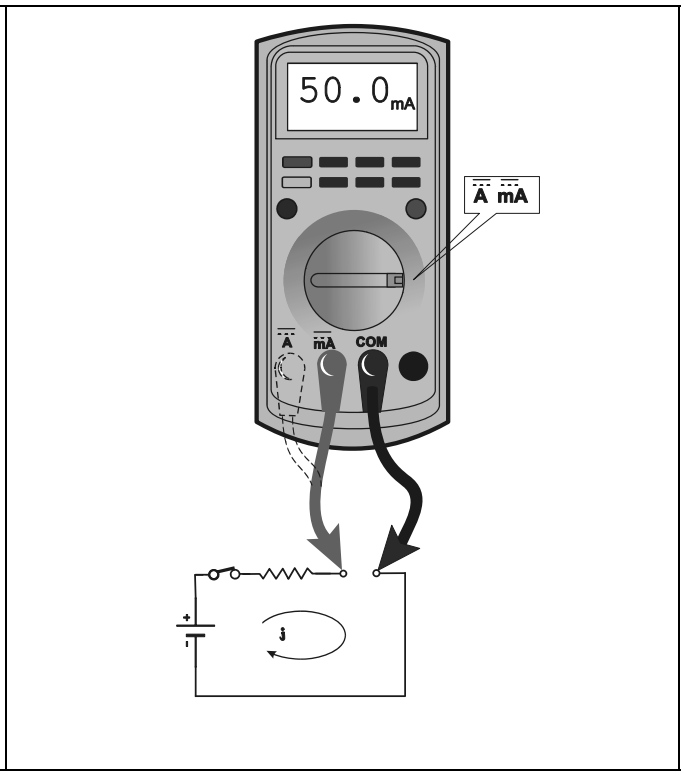

Figure 6-4. Current Measurement (DC)

- Set up the meter for the expected current range
- Be sure to connect the meter leads to the correct jacks for the current range you have selected
- If meter is not auto ranging, set it to the correct range (See multi meter's operation manual)
- Use firm contact with meter leads

https://truckmanualshub.com/

Continuity Measurement Over Long Distances

When trying to determine continuity of a harness or wire, longer than the reach of standard instrument leads, is possible to perform the check without excessively long leads. Using the other wires in the harness one can determine the condition of a particular wire in the harness.

Requirements:

- Harness with at least three separate wires including the wire under test.
- These wires must be able to be isolated from other wires, etc.
- Jumper or method to connect contacts on one side of harness.
- Meter that can measure resistance or continuity.

Procedure

Test multimeter leads resistance. Subtract this value from the measured resistance of the wires to get a more accurate measurement.

Consult the circuit schematic to determine which wires to use in addition to wire under test, here called wire #1 and wire #2, and how to isolate these wires. These wires should appear in the same connectors as the wire under test or are within reach of the jumper.

1. Disconnect all connections associated with the wire under test and the two additional wires. If harness is not completely isolated disconnect battery terminals also, as a precaution.
2. Measure continuity between all three wires, the wire under test, wire #1 and wire #2. These should be open. If not, repair the shorted wires or replace the harness.
3. On one side, jumper from contact of wire #1 and wire #2.
4. Measure continuity between wire #1 and wire #2. If there is continuity, both wires are good and can be used for this test. If there is not continuity, either wire could be bad. Check connections and measurement setup. Redo measurement. If still no continuity, repair wires or consult schematic for other wires to use for test.
5. Jumper from wire under test to wire #1.
6. Measure continuity. If there is continuity, the wire under test is good. Resistance of a wire increases as the length increases and as the diameter decreases.

One can find the continuity of two wires, here #1 and #2, at once by following steps 1 through 4. If there is a problem the third wire is used to troubleshoot the other wires. To find the problem, start at step 1 and use the entire procedure.

https://truckmanualshub.com/

6.3 APPLYING SILICONE DIELECTRIC COMPOUND TO AMP CONNECTORS

Silicone Dielectric Compound must be used on the AMP connections for the following reasons:

- To prevent oxidation at the mechanical joint between male and female pins.
- To prevent electrical malfunction caused by low level conductivity between pins when wet.

Use the following procedure to apply Silicone Dielectric Compound to the electrical connectors.

1. To prevent oxidation and low level conductivity, silicone dielectric grease must be packed completely around male and female pins on the inside of the connector after the mating of the housing to the header. This is easily achieved by using a syringe to fill the header with silicone dielectric compound, to a point just above the top of the male pins inside the header. When assembling the housing to the header, it is possible that the housing will become air locked, thus preventing the housing latch from engaging.
2. Pierce one of the unused wire seals to allow the trapped air inside the housing to escape.
3. Install a hole plug into this and/or any unused wire seal that has silicone dielectric compound escaping from it.

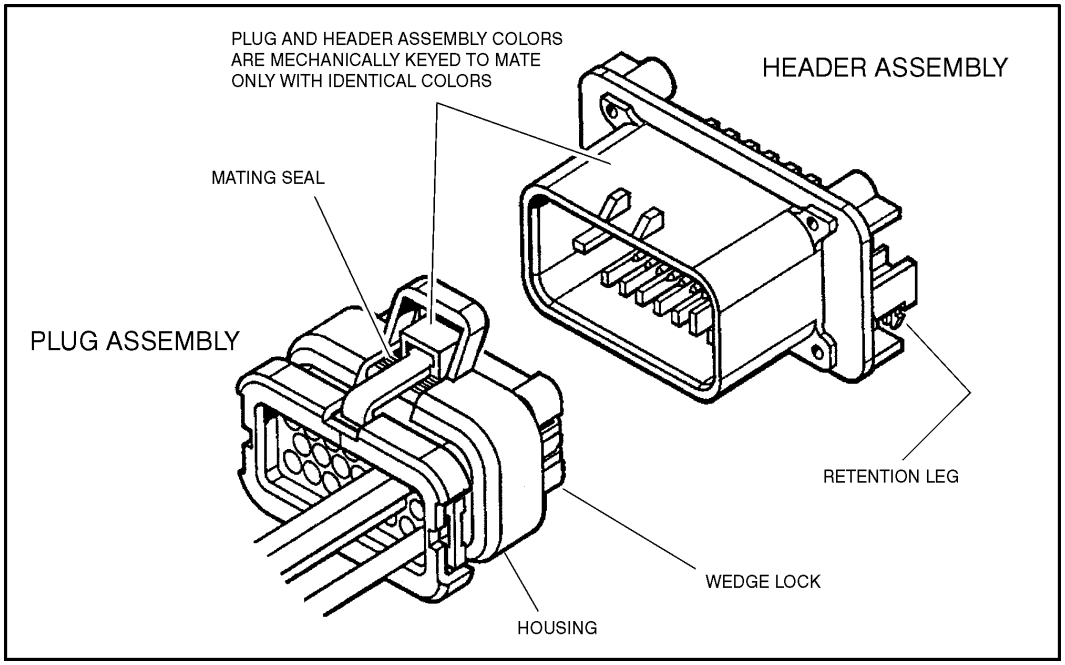

Figure 6-5. AMP Connector

https://truckmanualshub.com/

Assembly

Check to be sure the wedge lock is in the open, or as-shipped, position (See Figure 6-6. Connector Assembly (1 of 4)). Proceed as follows:

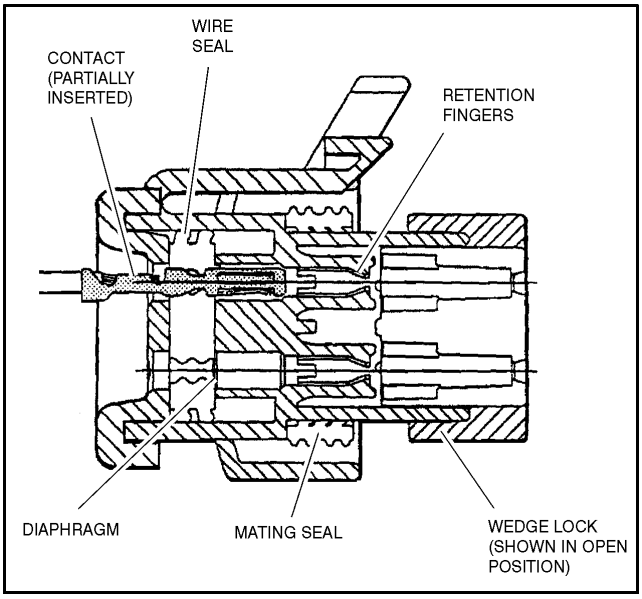

Figure 6-6. Connector Assembly (1 of 4)

1. To insert a contact, push it straight into the appropriate circuit cavity as far as it will go (See Figure 6-7. Connector Assembly (2 of 4)).
2. Pull back on the contact wire with a force of 1 or 2 lbs. to be sure the retention fingers are holding the contact (See Figure 6-7. Connector Assembly (2 of 4)).
3. After all required contacts have been inserted, the wedge lock must be closed to its locked position. Release the locking latches by squeezing them inward (See Figure 6-8. Connector Assembly (3 of 4)).
4. Slide the wedge lock into the housing until it is flush with the housing (See Figure 6-9. Connector Assembly (4 of 4)).

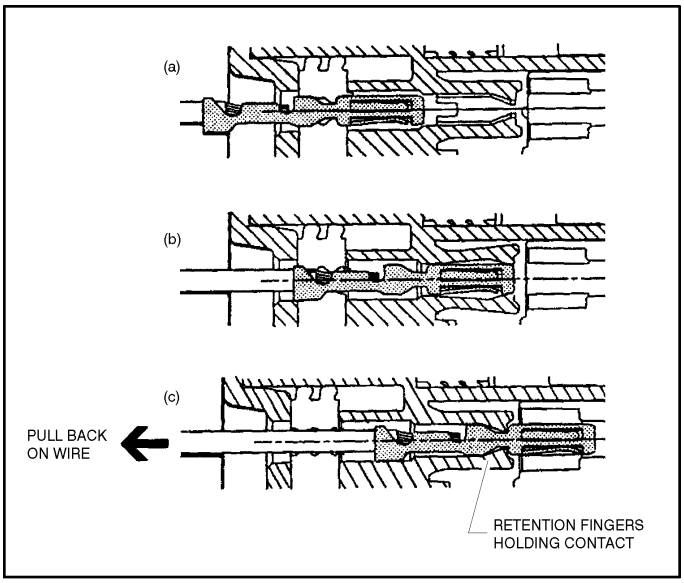

Figure 6-7. Connector Assembly (2 of 4)

https://truckmanualshub.com/

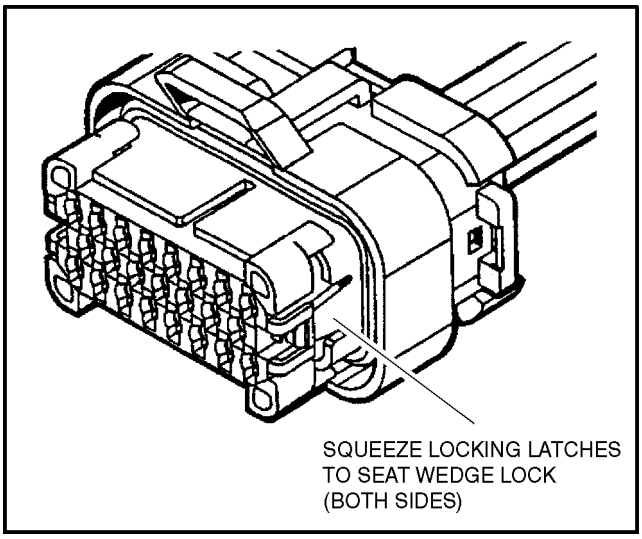

Figure 6-8. Connector Assembly (3 of 4)

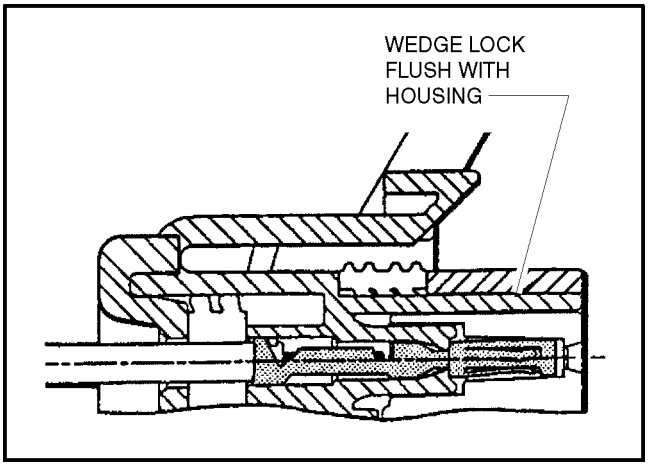

Figure 6-9. Connector Assembly (4 of 4)

https://truckmanualshub.com/

Disassembly

5. Insert a 4.8 mm (3/16”) wide screwdriver blade between the mating seal and one of the red wedge lock tabs.
6. Pry open the wedge lock to the open position.
7. While rotating the wire back and forth over a half turn (1/4 turn in each direction), gently pull the wire until the contact is removed.

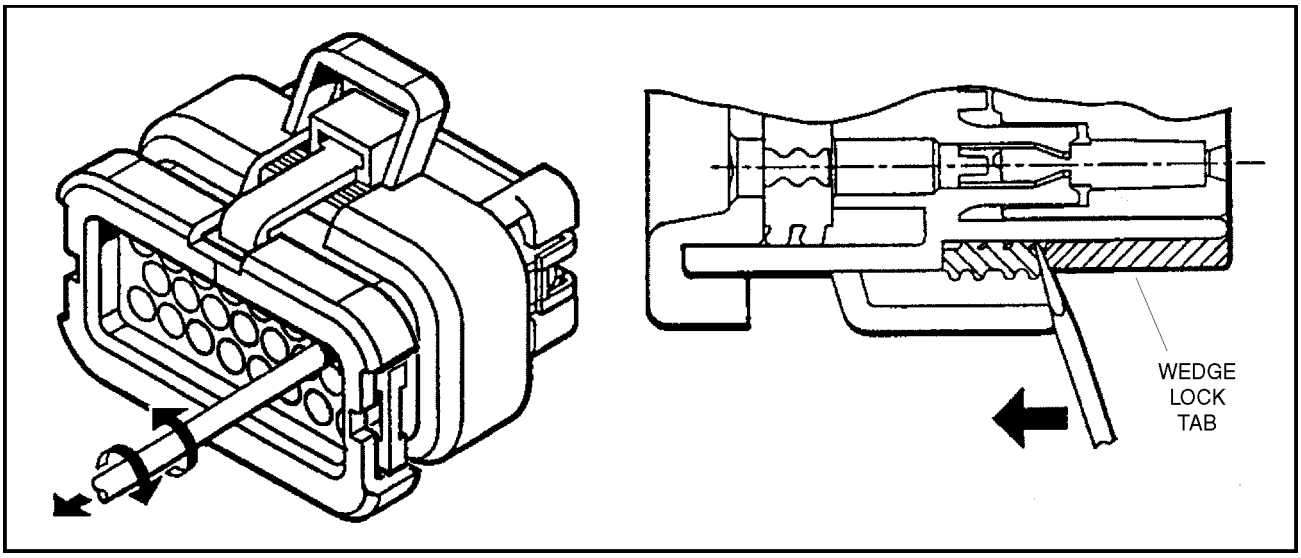

Figure 6-10. Connector Disassembly

NOTE: *The wedge lock should never be removed from the housing for insertion or removal of the contacts.*

Wedge Lock

The wedge lock has slotted openings in the forward, or mating end. These slots accommodate circuit testing in the field, by using a flat probe such as a pocket knife. DO NOT use a sharp point such as an ice pick.

https://truckmanualshub.com/

Service - Voltage Reading

⚠ CAUTION

DO NOT PIERCE WIRE INSULATION TO TAKE VOLTAGE READINGS.

It has been common practice in electrical troubleshooting to probe wires by piercing the insulation with a sharp point. This practice should be discouraged when dealing with the AMPSEAL plug assembly, or any other sealed connector system. The resulting pinholes in the insulation will allow moisture to invade the system by traveling along the wire strands. This nullifies the effectiveness of the connector seals and could result in system failure.

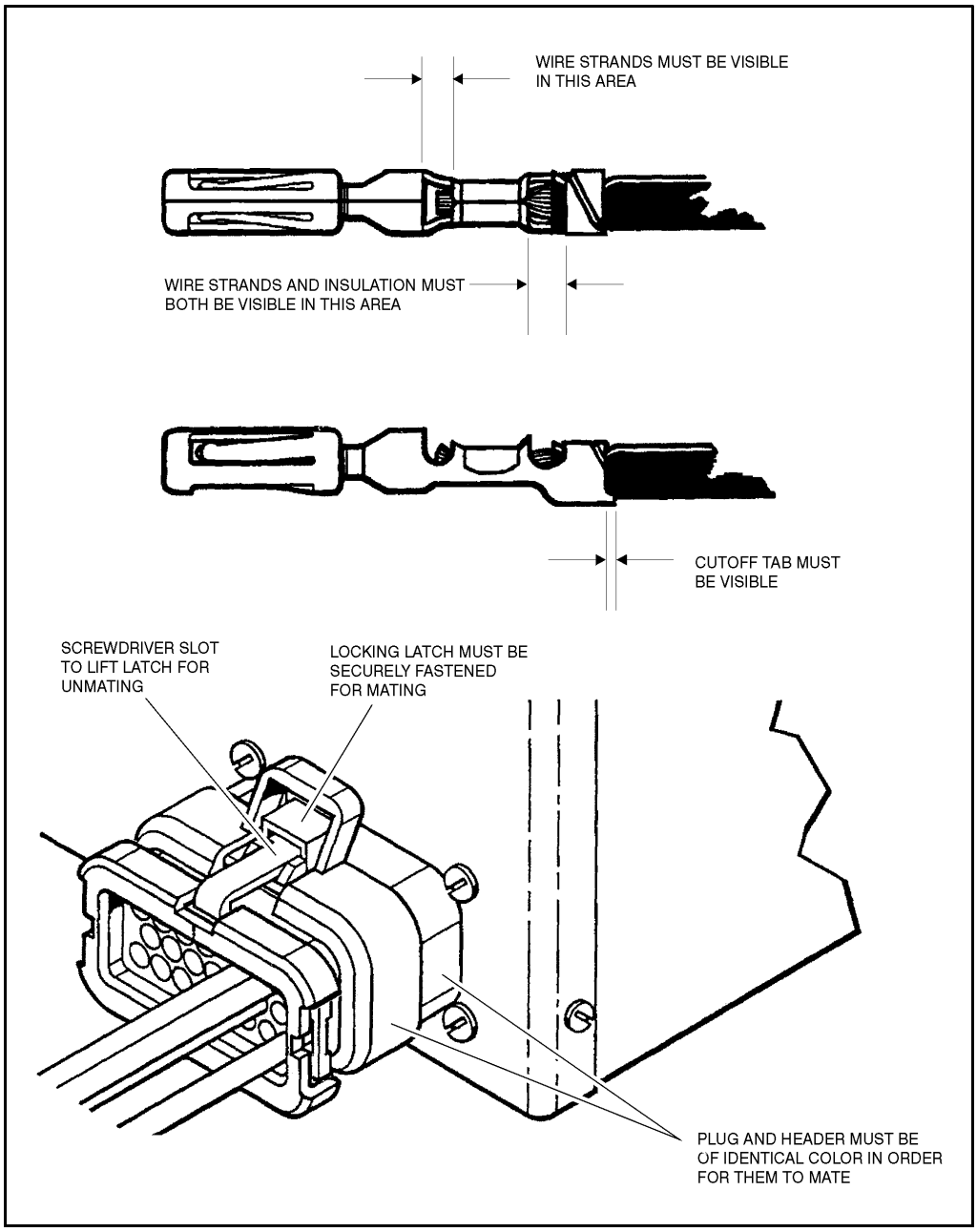

Figure 6-11. Connector Installation

https://truckmanualshub.com/

6.4 WORKING WITH DEUTSCH CONNECTORS

DT/DTP Series Assembly

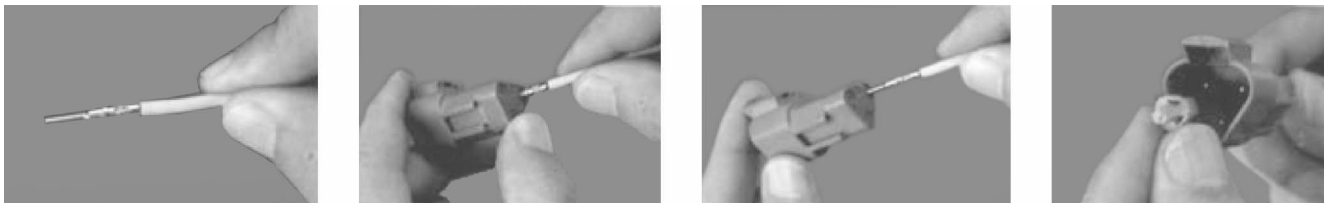

Figure 6-12. DT/DTP Contact Installation

1. Grasp crimped contact about 25mm behind the contact barrel.
2. Hold connector with rear grommet facing you.
3. Push contact straight into connector grommet until a click is felt. A slight tug will confirm that it is properly locked in place.
4. Once all contacts are in place, insert wedgelock with arrow pointing toward exterior locking mechanism. The wedgelock will snap into place. Rectangular wedges are not oriented. Thy may go in either way.

NOTE: *The receptacle is shown - use the same procedure for plug.*

DT/DTP Series Disassembly

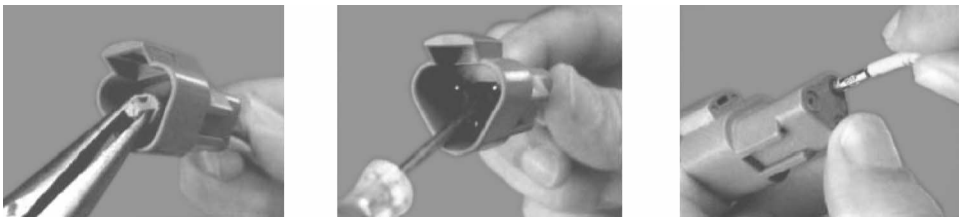

Figure 6-13. DT/DTP Contact Removal

5. Remove wedgelock using needlenose pliers or a hook shaped wire to pull wedge straight out.
6. To remove the contacts, gently pull wire backwards, while at the same time releasing the locking finger by moving it away from the contact with a screwdriver.
7. Hold the rear seal in place, as removing the contact may displace the seal.

HD30/HDP20 Series Assembly

Figure 6-14. HD/HDP Contact Installation

8. Grasp contact about 25mm behind the contact crimp barrel.
9. Hold connector with rear grommet facing you.

https://truckmanualshub.com/

10. Push contact straight into connector grommet until a positive stop is felt. A slight tug will confirm that it is properly locked in place.

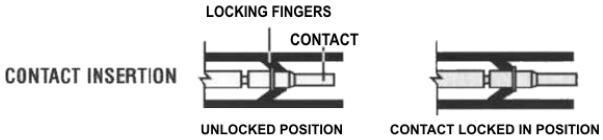

Figure 6-15. HD/HDP Locking Contacts Into Position

NOTE: *For unused wire cavities, insert sealing plugs for full environmental sealing.*

HD30/HDP20 Series Disassembly

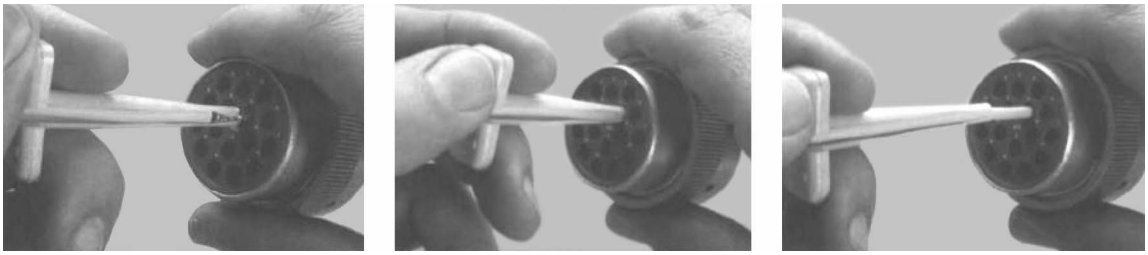

Figure 6-16. HD/HDP Contact Removal

11. With rear insert toward you, snap appropriate size extractor tool over the wire of contact to be removed.
12. Slide tool along into the insert cavity until it engages contact and resistance is felt.
13. Pull contact-wire assembly out of connector.

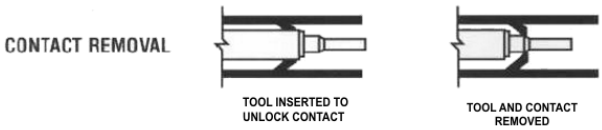

Figure 6-17. HD/HDP Unlocking Contacts

NOTE: *Do Not twist or insert tool at an angle.*

https://truckmanualshub.com/

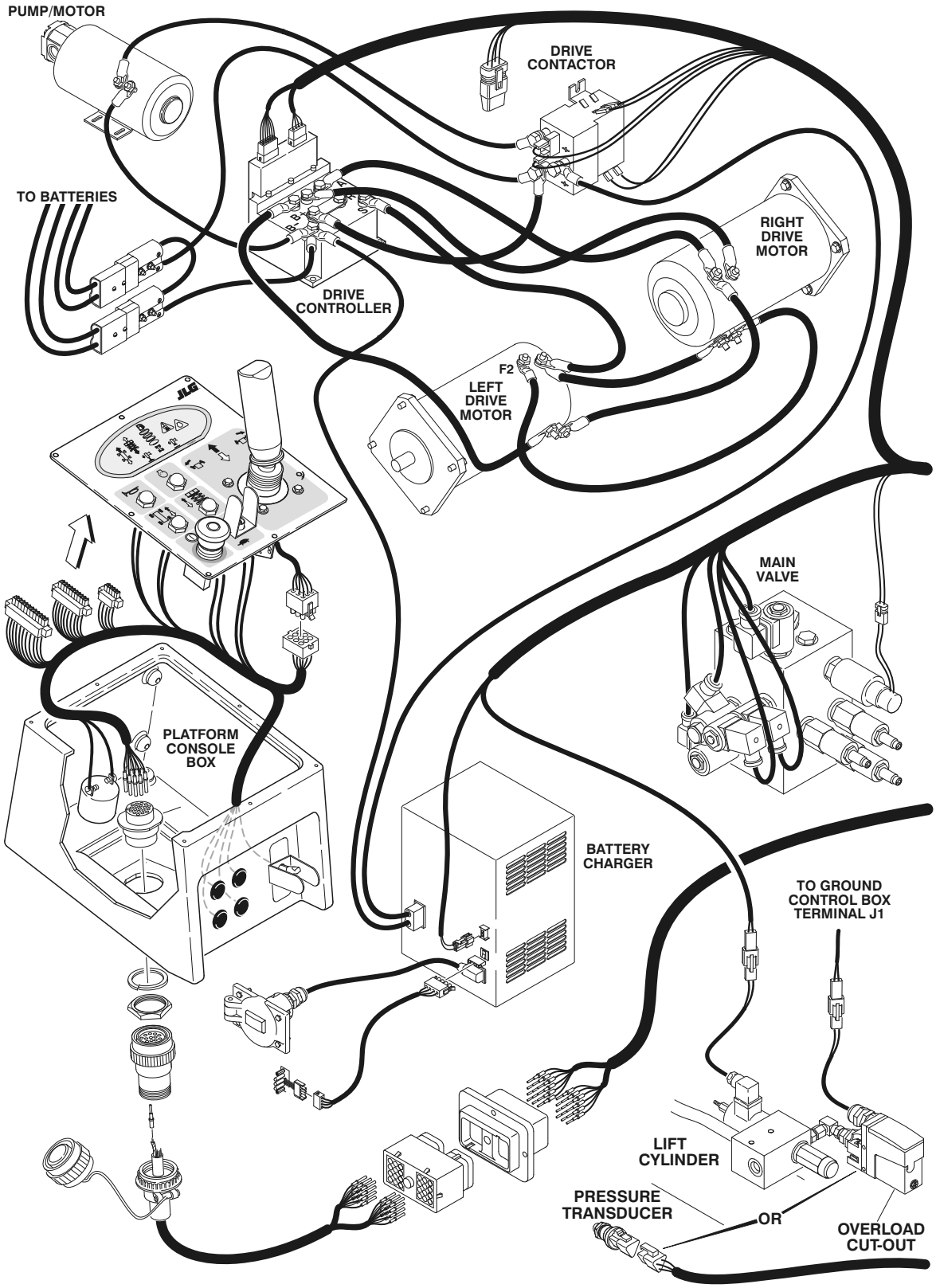

Figure 6-18. Electrical Components Installation - (Sheet 1 of 4)

https://truckmanualshub.com/

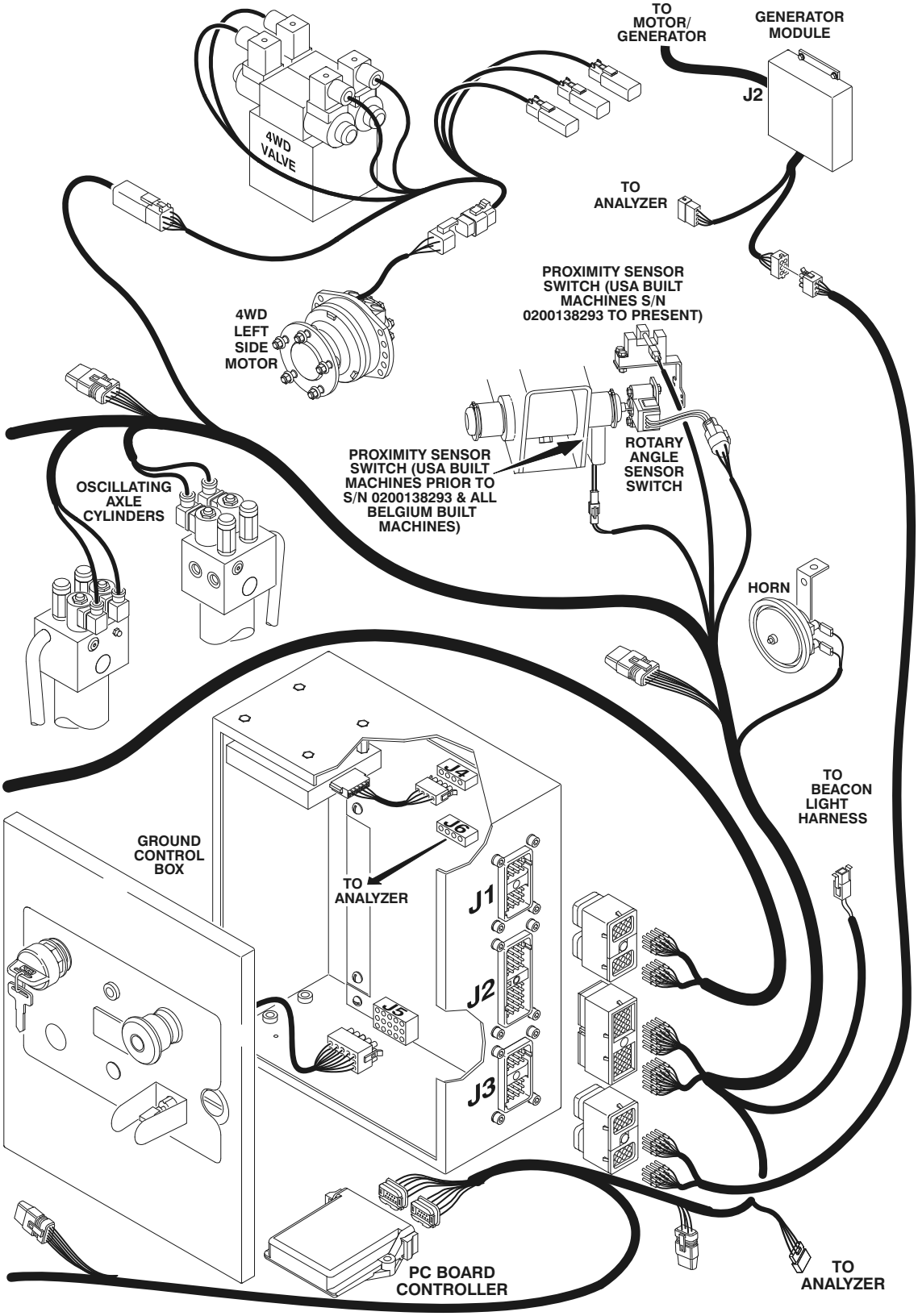

Figure 6-19. Electrical Components Installation - (Sheet 2 of 4)

https://truckmanualshub.com/

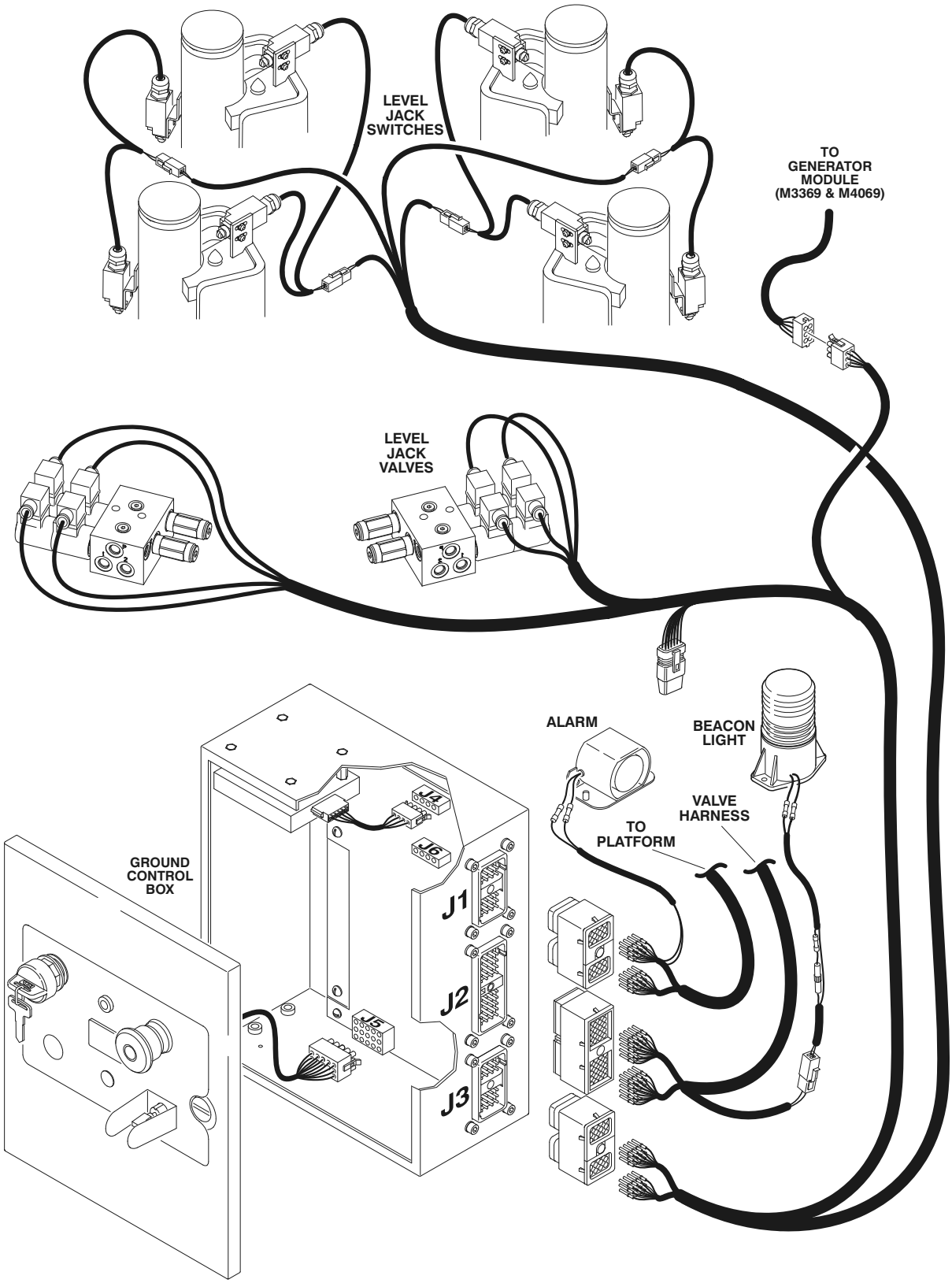

Figure 6-20. Electrical Components Installation - (Sheet 3 of 4)

https://truckmanualshub.com/

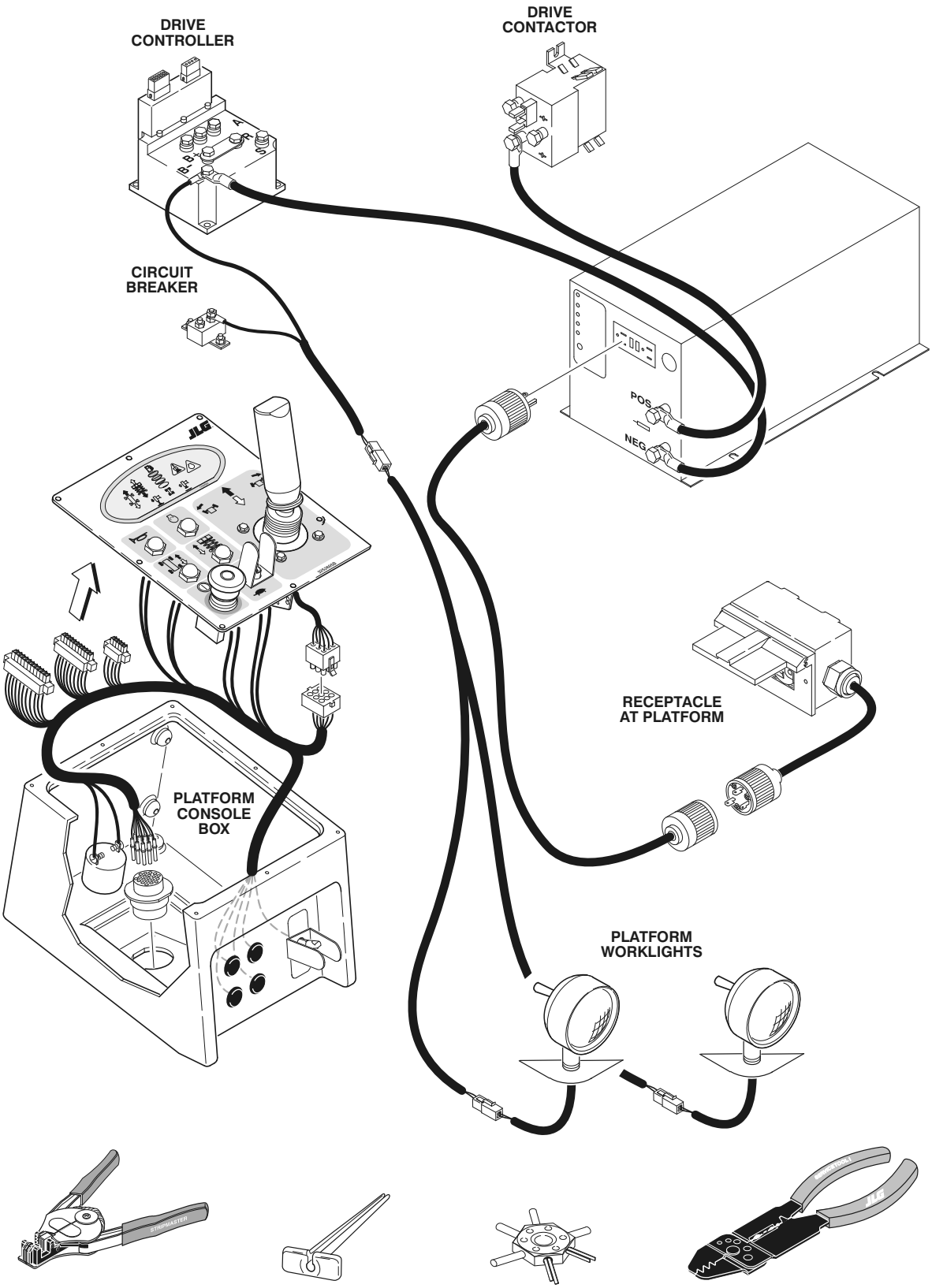

Figure 6-21. Electrical Components Installation - (Sheet 4 of 4)

https://truckmanualshub.com/

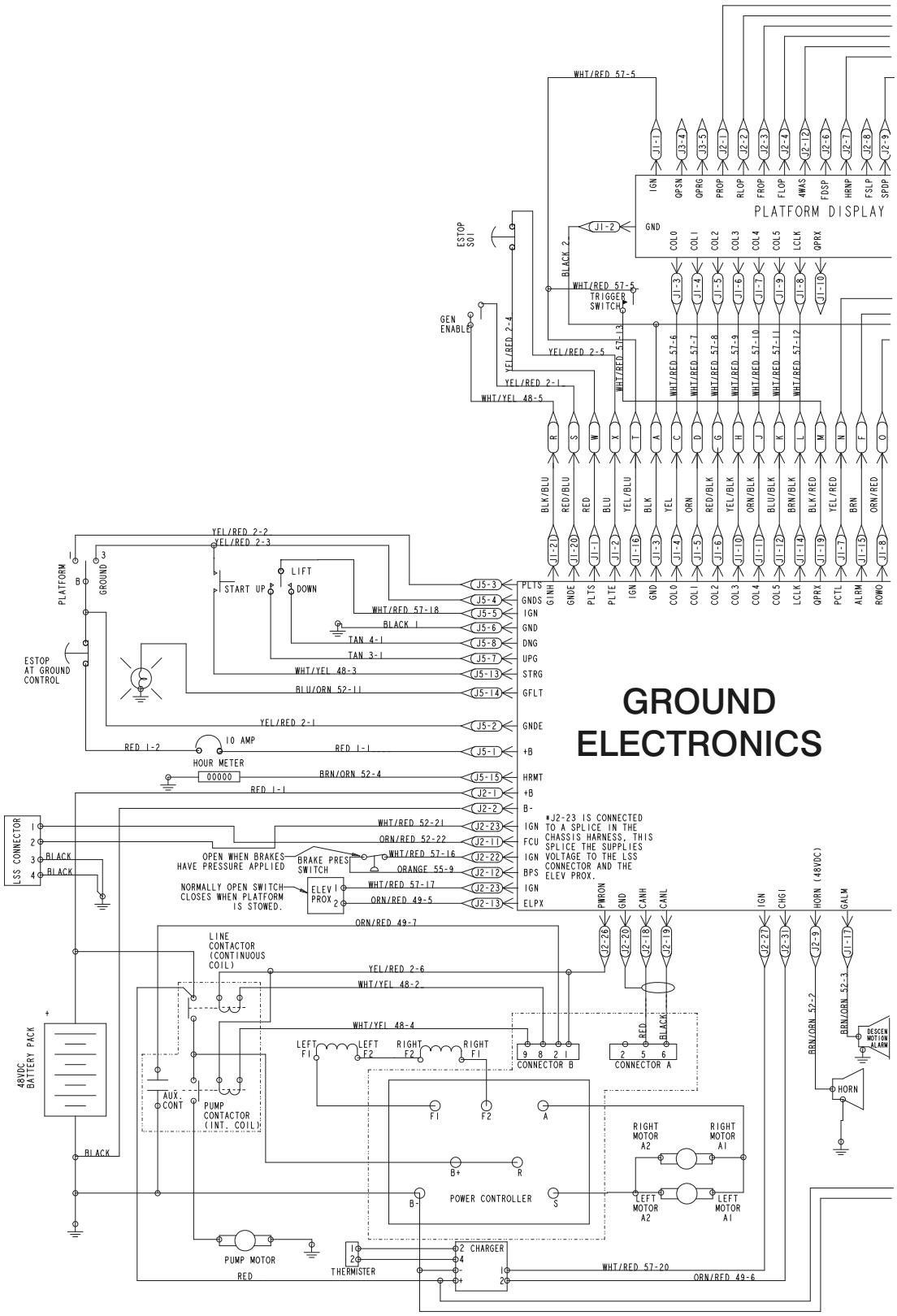

Figure 6-22. Electrical Schematic - Sheet 1 of 2

https://truckmanualshub.com/

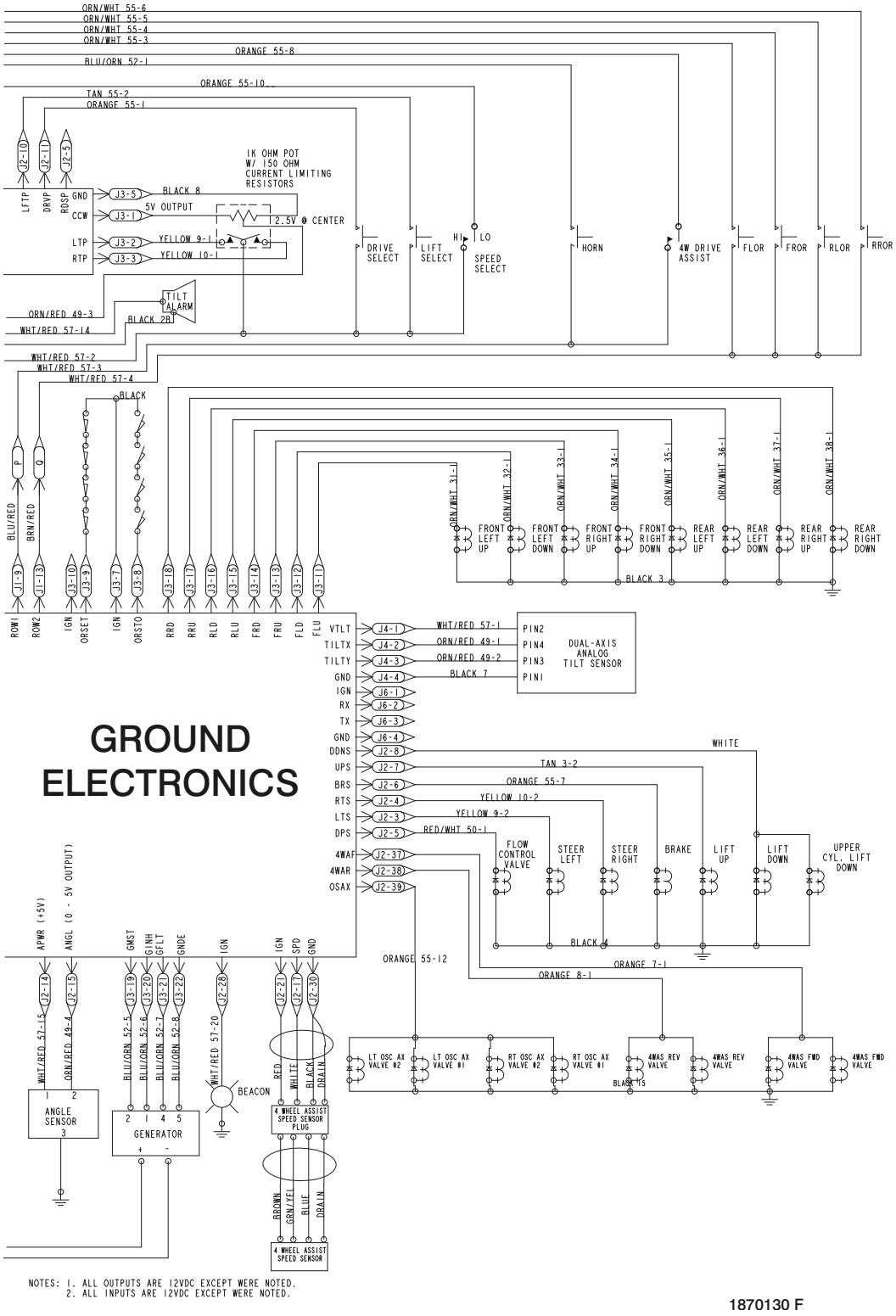

Figure 6-23. Electrical Schematic - Sheet 2 of 2

https://truckmanualshub.com/

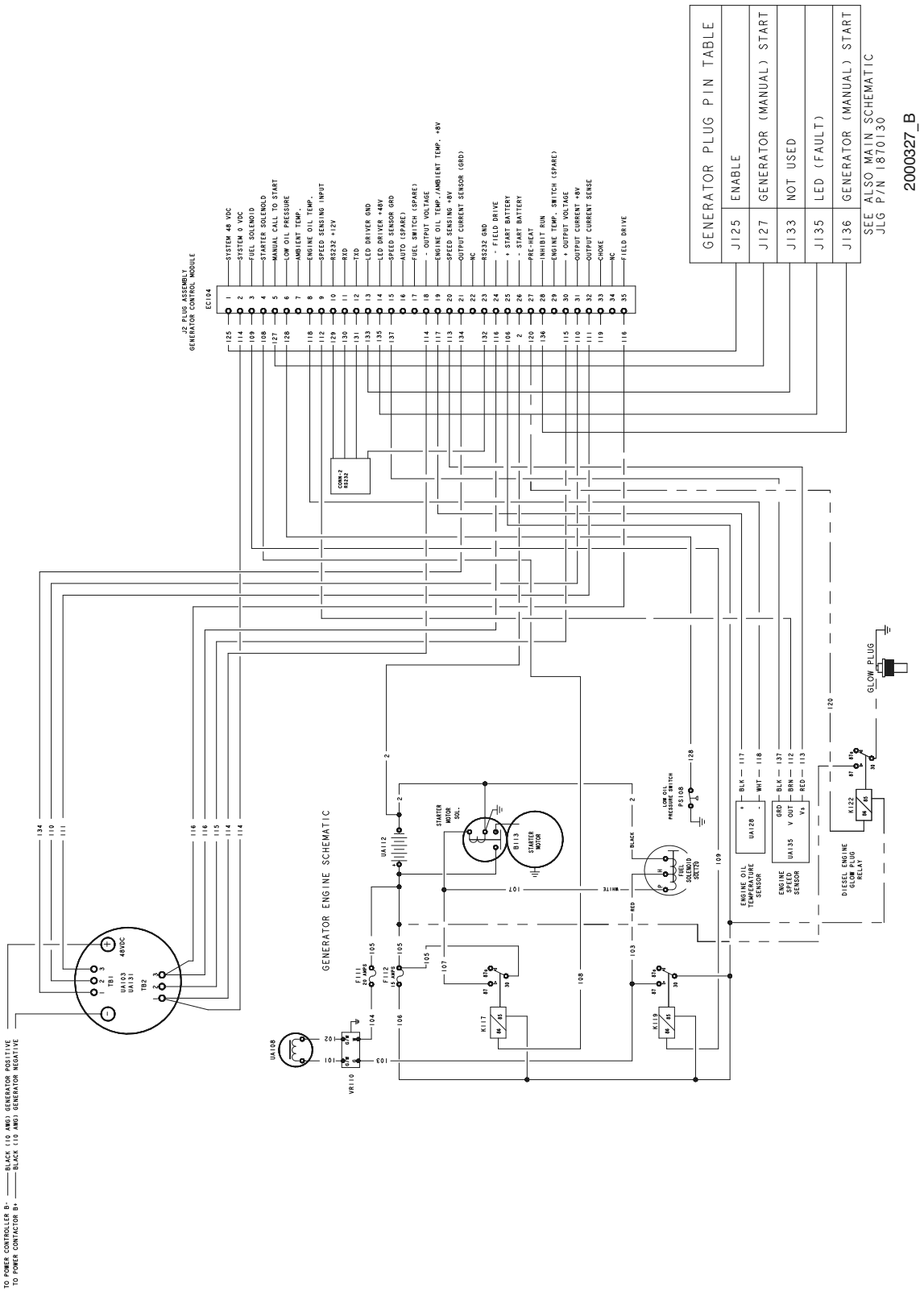

Figure 6-24. Electrical Schematic - Kubota Engine (M3369 & 3369LE only)

https://truckmanualshub.com/

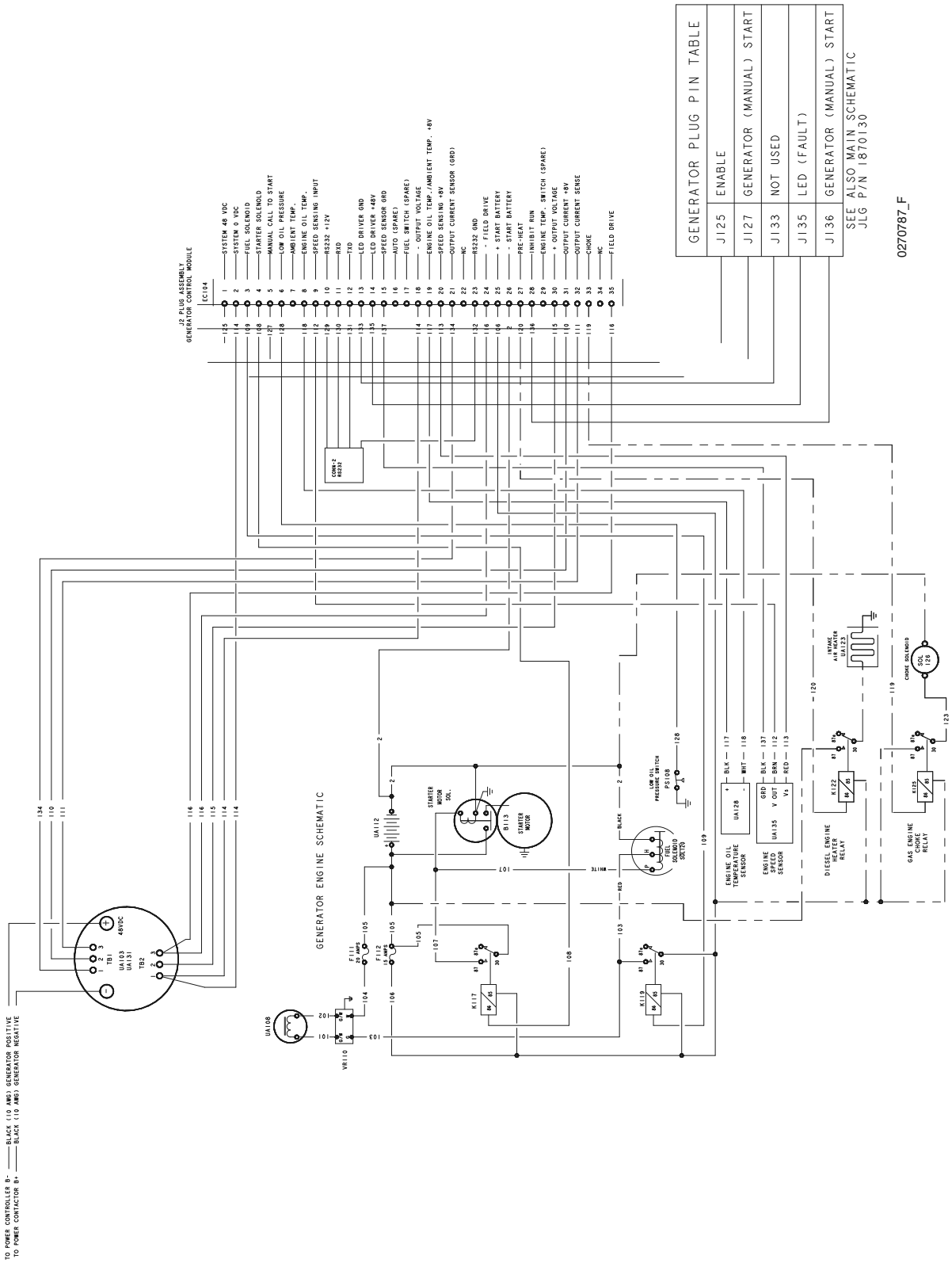

Figure 6-25. Electrical Schematic - Yanmar Engine (M3369 & 3369LE only)

https://truckmanualshub.com/

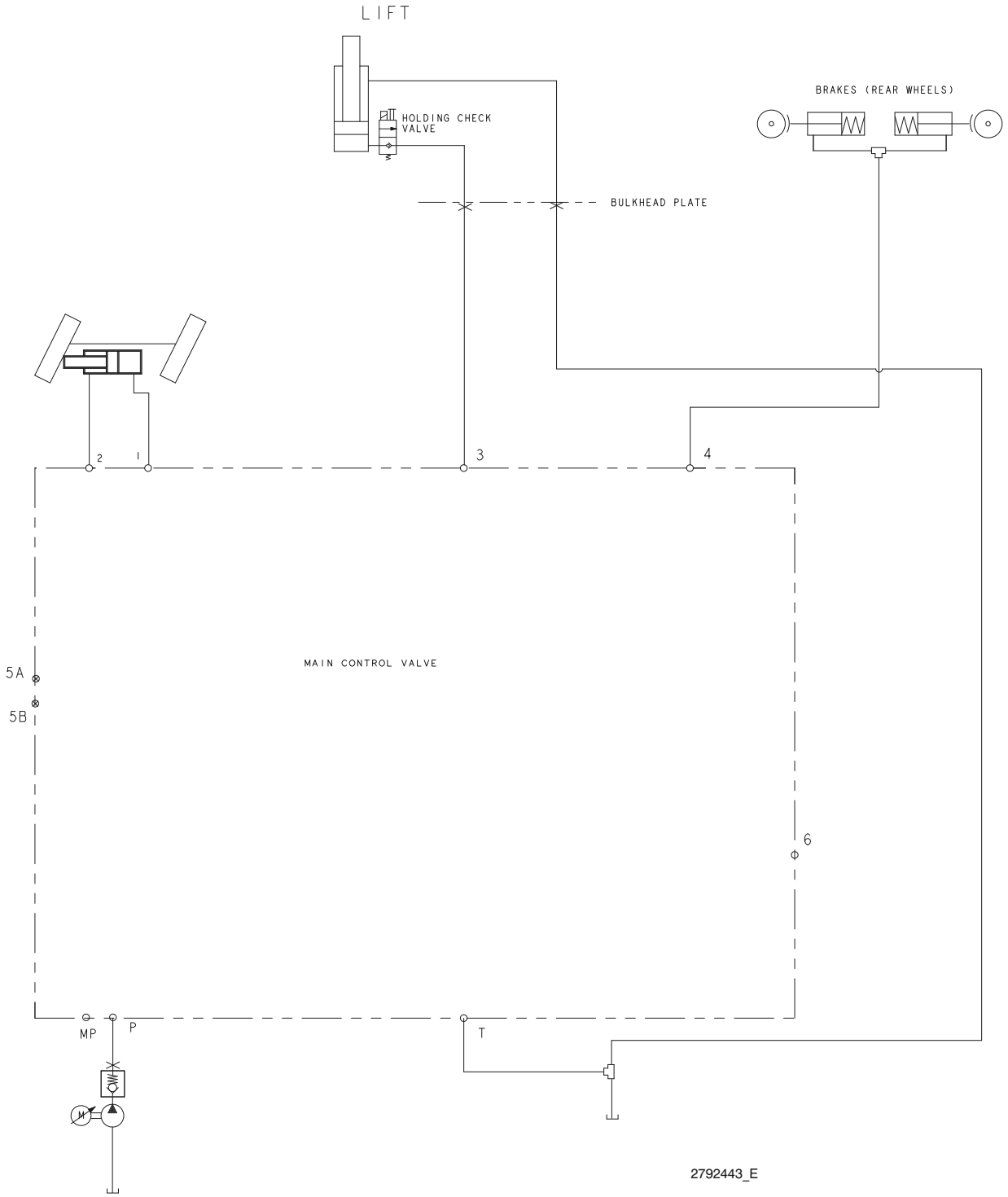

Figure 6-26. Hydraulic Diagram - 3369LE and M3369 (Fixed Axle)

https://truckmanualshub.com/

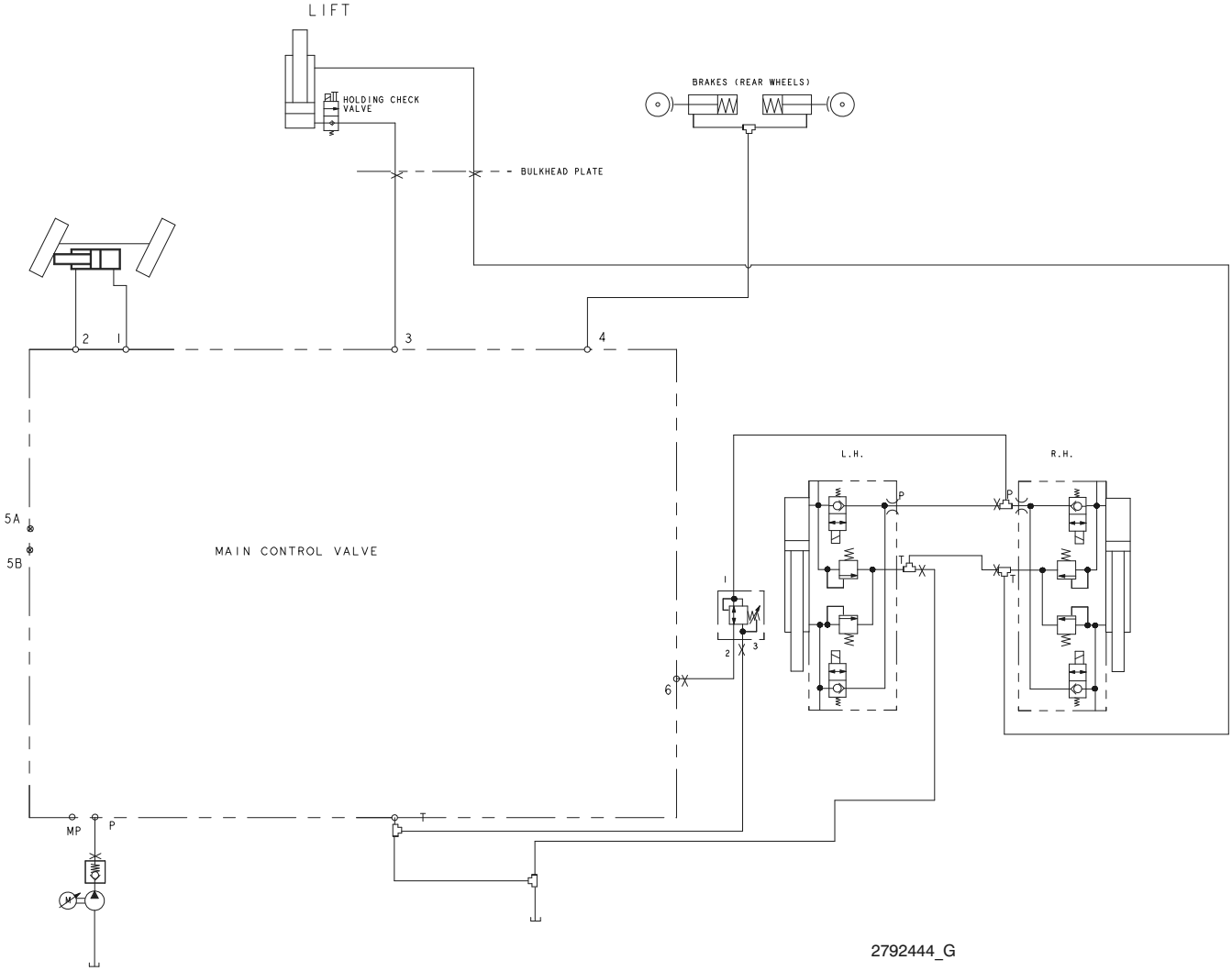

Figure 6-27. Hydraulic Diagram - 3369LE and M3369 (Oscillating Axle)

https://truckmanualshub.com/

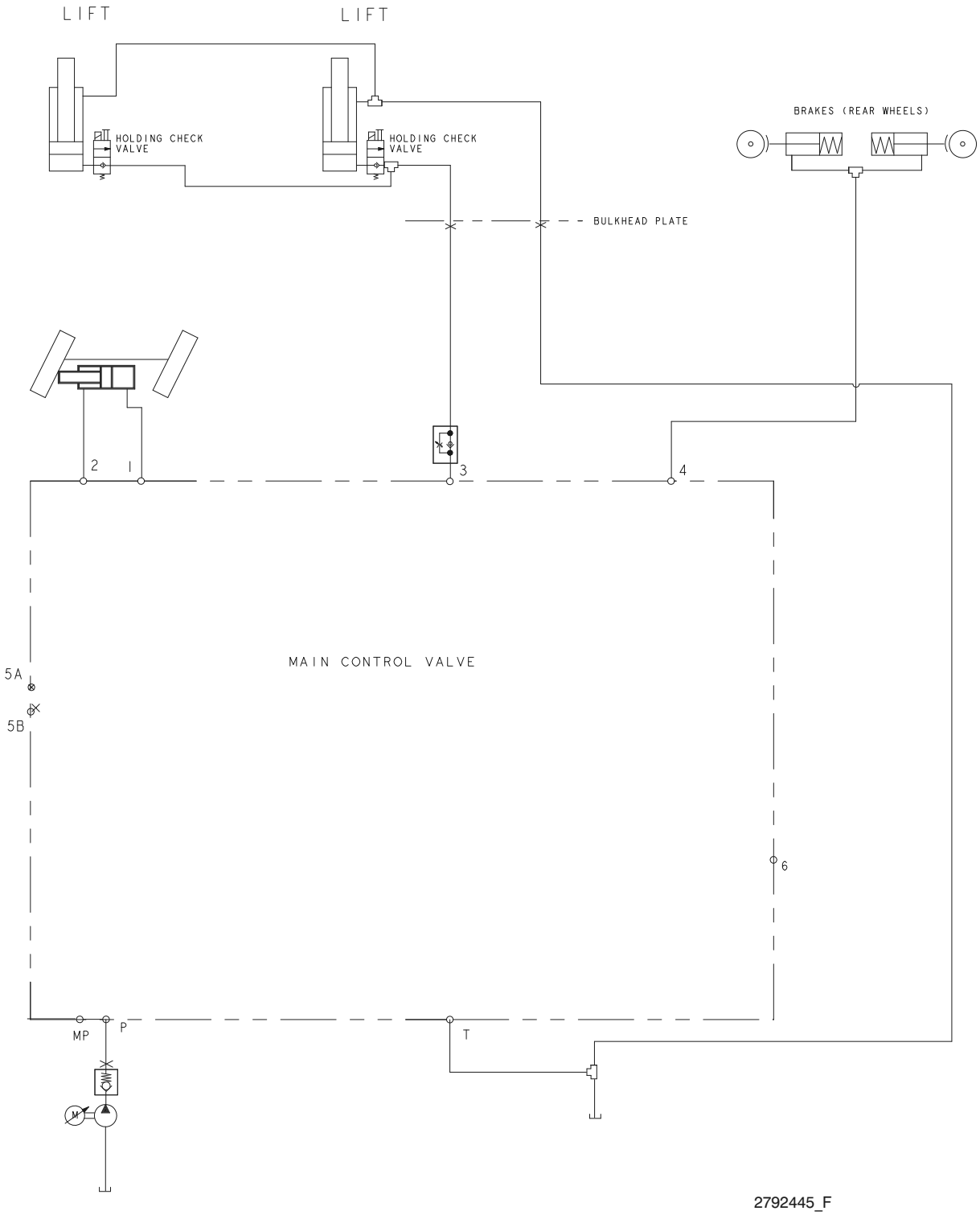

Figure 6-28. Hydraulic Diagram - 4069LE and M4069 (Fixed Axle)

https://truckmanualshub.com/

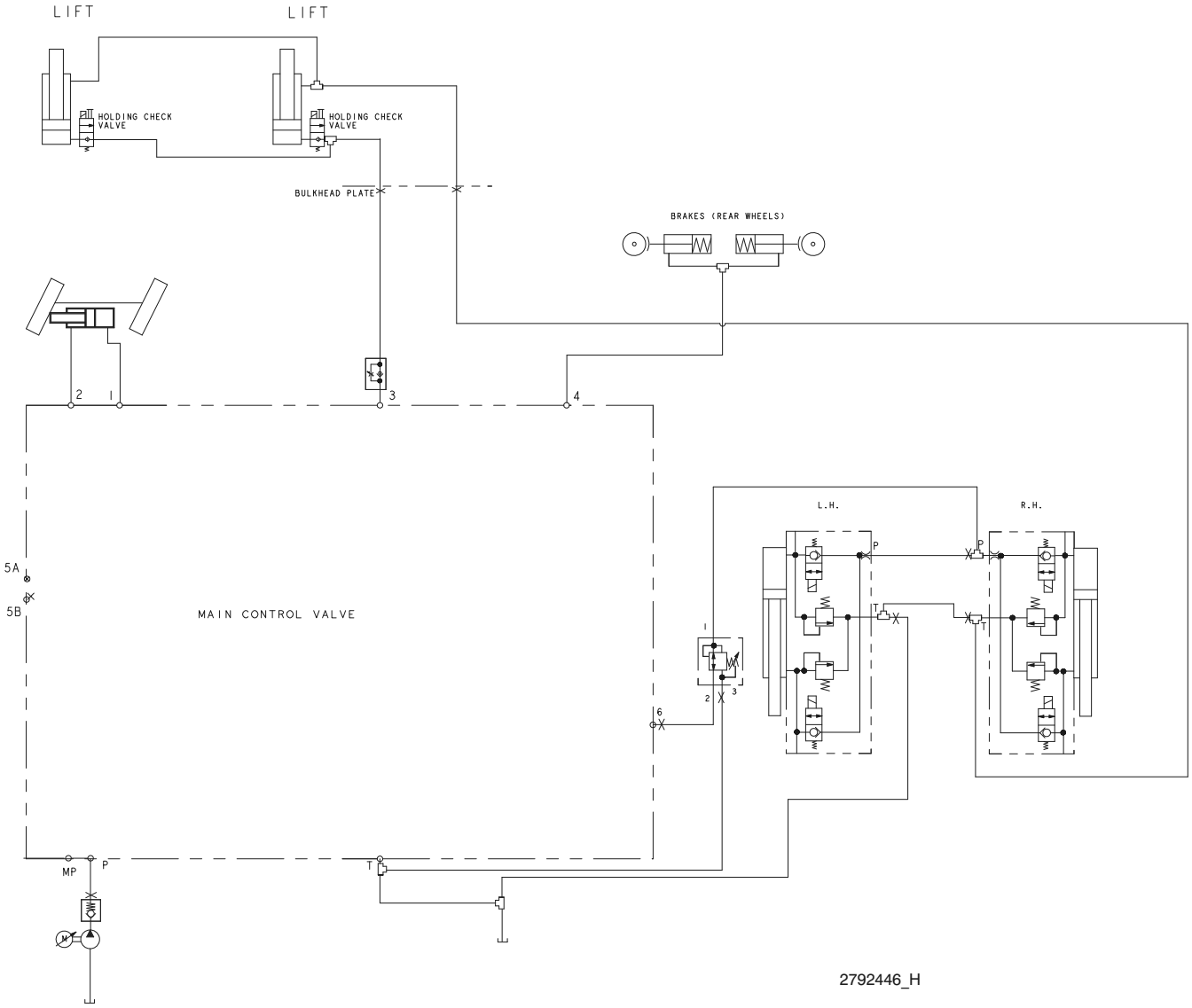

Figure 6-29. Hydraulic Diagram - 4069LE and M4069 (Oscillating Axle)

https://truckmanualshub.com/

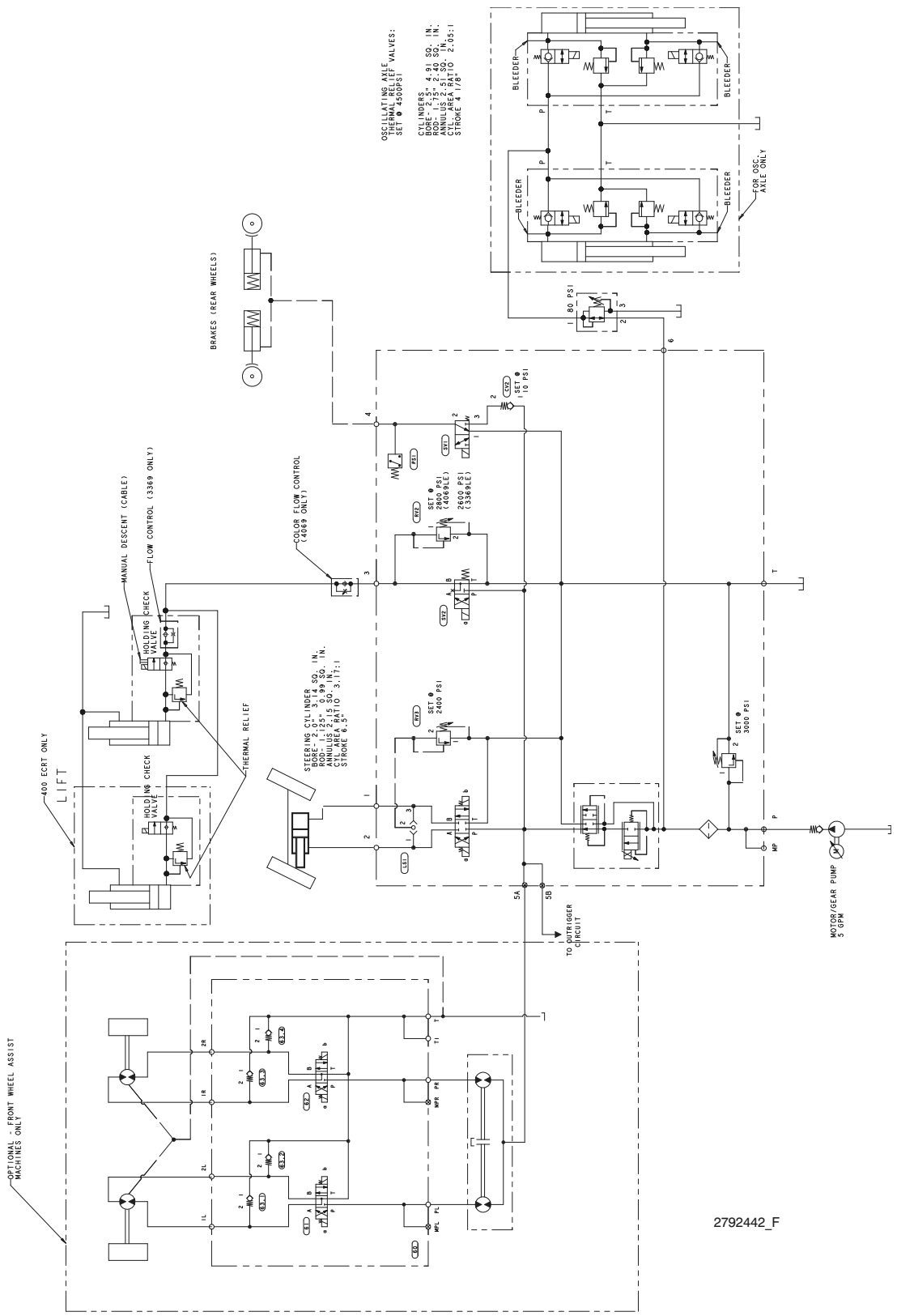

Figure 6-30. Hydraulic Schematic

https://truckmanualshub.com/

https://truckmanualshub.com/

3121122

An Oshkosh Corporation Company

Corporate Office
JLG Industries, Inc.
1 JLG Drive
McConnellsburg PA. 17233-9533
USA
(717) 485-5161
(717) 485-6417

JLG Worldwide Locations

JLG Industries (Australia)
P.O. Box 5119
11 Bolwarra Road
Port Macquarie
N.S.W. 2444
Australia
+61 2 65 811111
+61 2 65 810122

JLG Latino Americana Ltda.
Rua Eng. Carlos Stevenson,
80-Suite 71
13092-310 Campinas-SP
Brazil
+55 19 3295 0407
+55 19 3295 1025

JLG Industries (UK) Ltd
Bentley House
Bentley Avenue
Middleton
Greater Manchester
M24 2GP - England
+44 (0)161 654 1000
+44 (0)161 654 1001

JLG France SAS
Z.I. de Baulieu
47400 Fauillet
France
+33 (0)5 53 88 31 70
+33 (0)5 53 88 31 79

JLG Deutschland GmbH
Max-Planck-Str. 21
D - 27721 Ritterhude - Ihlpohl
Germany
+49 (0)421 69 350 20
+49 (0)421 69 350 45

JLG Equipment Services Ltd.
Rm 1107 Landmark North
39 Lung Sum Avenue
Sheung Shui N. T.
Hong Kong
(852) 2639 5783
(852) 2639 5797

JLG Industries (Italia) s.r.l.
Via Po. 22
20010 Pregnana Milanese - MI
Italy
+39 029 359 5210
+39 029 359 5845

Oshkosh-JLG Singapore
Technology Equipment Pte Ltd.
29 Tuas Ave 4
Jurong Industrial Estate
639379 - Singapore
+65-6591-9030
+65-6591-9031

JLG Polska
Ul. Krolewska
00-060 Warsawa
Poland
+48 (0)914 320 245
+48 (0)914 358 200

JLG Industries (Scotland)
Wright Business Centre
1 Lonmay Road
Queenslie, Glasgow G33 4EL
Scotland
+44 (0)141 781 6700
+44 (0)141 773 1907

Plataformas Elevadoras
JLG Iberica, S.L.
Trapadella, 2
P.I. Castellbisbal Sur
08755 Castellbisbal, Barcelona
Spain
+34 93 772 4700
+34 93 771 1762

JLG Sverige AB
Enkopingsvagen 150
Box 704
SE - 176 27 Jarfalla
Sweden
+46 (0)850 659 500
+46 (0)850 659 534

www.jlg.com