https://truckmanualshub.com/

WSM

WORKSHOP MANUAL
DIESEL ENGINE

05-E2B SERIES,
05-E2BG SERIES

Kubota

KiSC issued 06, 2011 A

https://truckmanualshub.com/

TO THE READER

This Workshop Manual has been prepared to provide servicing personnel with information on the mechanism, service and maintenance of 05-E2B and 05-E2BG series. It is divided into three parts, “General”, “Mechanism” and “Servicing”.

■ General

Information on the engine identification, the general precautions, maintenance check list, check and maintenance and special tools are described.

■ Mechanism

Information on the construction and function are included. This part should be understood before proceeding with troubleshooting, disassembling and servicing.

Refer to Diesel Engine Mechanism Workshop Manual (Code No. 9Y021-01870) for the one which has not been described to this workshop manual.

■ Servicing

Information on the troubleshooting, servicing specification lists, tightening torque, checking and adjusting, disassembling and assembling, and servicing which cover procedures, precautions, factory specifications and allowable limits.

All information illustrations and specifications contained in this manual are based on the latest product information available at the time of publication.

The right is reserved to make changes in all information at any time without notice.

Do to covering many models of this manual, information or picture being used have not been specified as one model.

August 2005

© KUBOTA Corporation 2005

KiSC issued 06, 2011 A

https://truckmanualshub.com/

SAFETY FIRST

This symbol, the industry's "Safety Alert Symbol", is used throughout this manual and on labels on the machine itself to warn of the possibility of personal injury. Read these instructions carefully.

It is essential that you read the instructions and safety regulations before you attempt to repair or use this unit.

DANGER : **Indicates an imminently hazardous situation which, if not avoided, will result in death or serious injury.**

WARNING : **Indicates a potentially hazardous situation which, if not avoided, could result in death or serious injury.**

CAUTION : **Indicates a potentially hazardous situation which, if not avoided, may result in minor or moderate injury.**

■ **IMPORTANT** : **Indicates that equipment or property damage could result if instructions are not followed.**

■ **NOTE** : **Gives helpful information.**

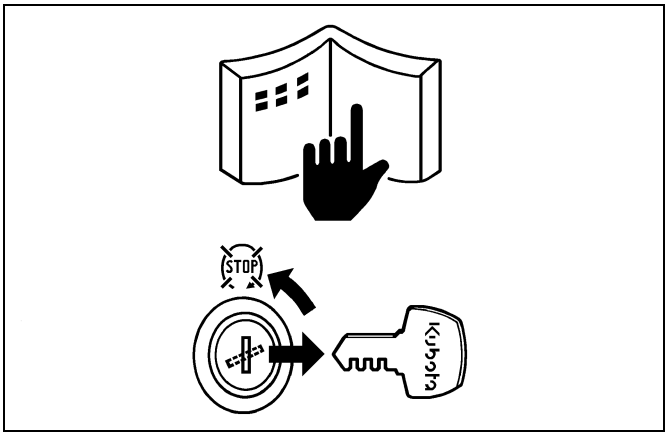

BEFORE SERVICING AND REPAIRING

- Read all instructions and safety instructions in this manual and on your engine safety decals.
- Clean the work area and engine.
- Park the machine on a firm and level ground.
- Allow the engine to cool before proceeding.
- Stop the engine, and remove the key.
- Disconnect the battery negative cable.
- Hang a "**DO NOT OPERATE**" tag in operator station.

https://truckmanualshub.com/

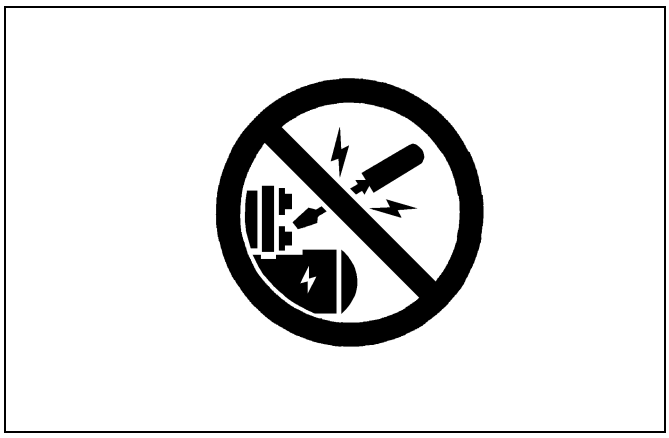

SAFETY STARTING

- Do not start the engine by shorting across starter terminals or bypassing the safety start switch.
- Unauthorized modifications to the engine may impair the function and / or safety and affect engine life.

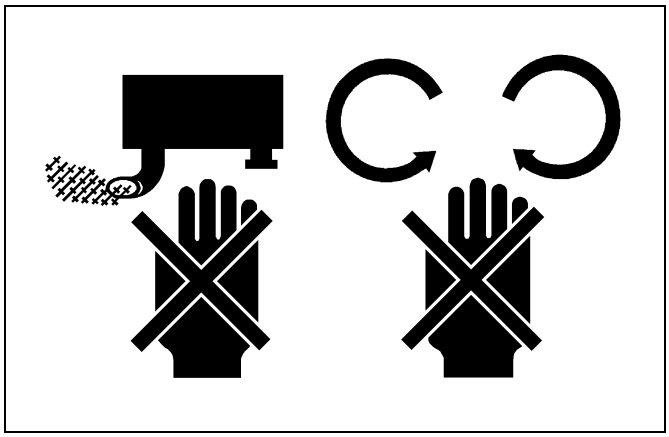

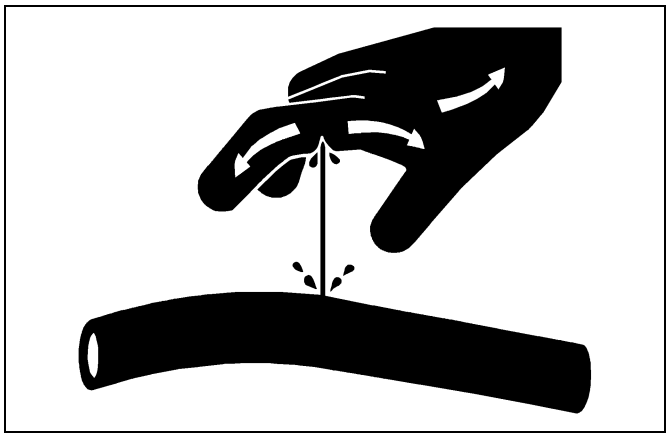

SAFETY WORKING

- Do not work on the machine while under the influence of alcohol, medication, or other substances or while fatigued.
- Wear close fitting clothing and safety equipment appropriate to the job.
- Use tools appropriate to the work. Makeshift tools, parts, and procedures are not recommended.
- When servicing is performed together by two or more persons, take care to perform all work safely.
- Do not touch the rotating or hot parts while the engine is running.
- Never remove the radiator cap while the engine is running, or immediately after stopping. Otherwise, hot water will spout out from radiator. Only remove radiator cap when cool enough to touch with bare hands. Slowly loosen the cap to first stop to relieve pressure before removing completely.
- Escaping fluid (fuel or hydraulic oil) under pressure can penetrate the skin causing serious injury. Relieve pressure before disconnecting hydraulic or fuel lines. Tighten all connections before applying pressure.
- Wear a suitable hearing protective device such as earmuffs or earplugs to protect against objectionable or uncomfortable loud noises.

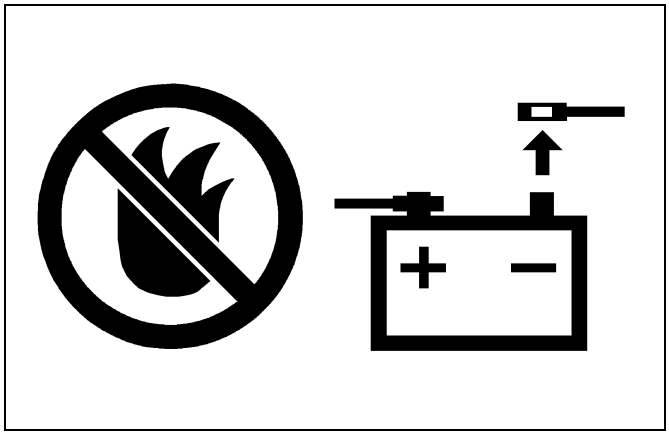

AVOID FIRES

- Fuel is extremely flammable and explosive under certain conditions. Do not smoke or allow flames or sparks in your working area.
- To avoid sparks from an accidental short circuit, always disconnect the battery negative cable first and connect it last.
- Battery gas can explode. Keep sparks and open flame away from the top of battery, especially when charging the battery.
- Make sure that no fuel has been spilled on the engine.

https://truckmanualshub.com/

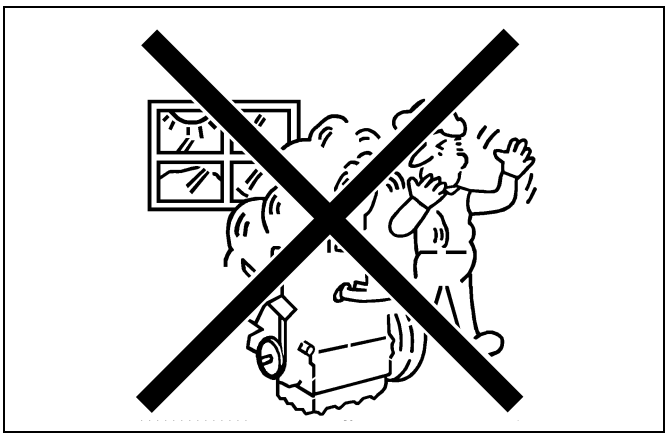

VENTILATE WORK AREA

- If the engine must be running to do some work, make sure the area is well ventilated. Never run the engine in a closed area. The exhaust gas contains poisonous carbon monoxide.

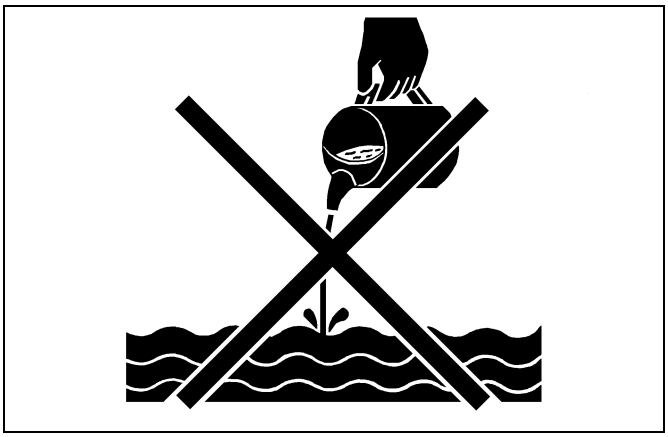

DISPOSE OF FLUIDS PROPERLY

- Do not pour fluids into the ground, down a drain, or into a stream, pond, or lake. Observe relevant environmental protection regulations when disposing of oil, fuel, coolant, electrolyte and other harmful waste.

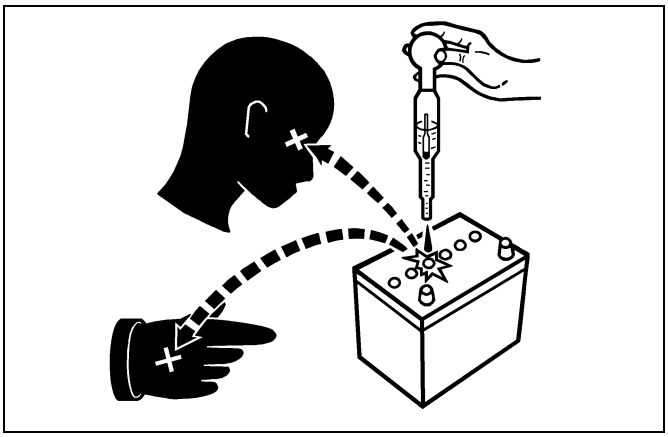

PREVENT ACID BURNS

- Sulfuric acid in battery electrolyte is poisonous. It is strong enough to burn skin, clothing and cause blindness if splashed into eyes. Keep electrolyte away from eyes, hands and clothing. If you spill electrolyte on yourself, flush with water, and get medical attention immediately.

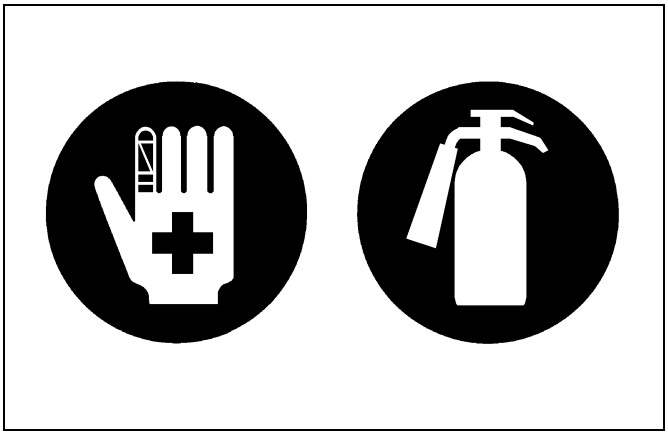

PREPARE FOR EMERGENCIES

- Keep a first aid kit and fire extinguisher handy at all times.
- Keep emergency numbers for doctors, ambulance service, hospital and fire department near your telephone.

https://truckmanualshub.com/

SPECIFICATIONS

Model	D905-E2B		D1005-E2B		V1305-E2B	
Number of Cylinders	3				4	
Type	Vertical, Water-cooled, 4 cycle diesel engine					
Bore × Stroke mm (in.)	72 × 73.6 (2.83 × 2.90)		76 × 73.6 (2.99 × 2.90)			
Total Displacement cm^3 (cu.in.)	898 (54.80)		1001 (61.08)		1335 (81.46)	
ISO Net Continuous kW/min^{-1} (rpm) (HP/min^{-1} (rpm))	13.0 / 3000 (17.4 / 3000)	15.2 / 3600 (20.4 / 3600)	14.5 / 3000 (19.5 / 3000)	16.8 / 3600 (22.5 / 3600)	19.0 / 3000 (26.0 / 3000)	22.4 / 3600 (30.0 / 3600)
ISO/SAE Net Intermittent kW/min^{-1} (rpm) (HP/min^{-1} (rpm))	14.9 / 3000 (20.0 / 3000)	17.5 / 3600 (23.5 / 3600)	16.8 / 3000 (22.5 / 3000)	19.4 / 3600 (26.0 / 3600)	22.4 / 3000 (30.0 / 3000)	25.7 / 3600 (34.5 / 3600)
SAE Gross Intermittent kW/min^{-1} (rpm) (HP/min^{-1} (rpm))	15.5 / 3000 (20.8 / 3000)	18.5 / 3600 (24.8 / 3600)	17.5 / 3000 (23.5 / 3000)	20.4 / 3600 (27.3 / 3600)	23.4 / 3000 (31.4 / 3000)	27.2 / 3600 (36.5 / 3600)
Maximum Bare Speed (min^{-1} (rpm))	3200	3800	3200	3800	3200	3800
Minimum Bare Idling Speed (min^{-1} (rpm))	900					
Combustion Chamber	Spherical type (E-TVCS)					
Fuel Injection Pump	Bosch MD type mini pump					
Governor	All speed mechanical governor					
Direction of Rotation	Counter-clockwise (viewed from flywheel side)					
Injection Nozzle	Mini Nozzle (DNOPD)					
Injection Timing	0.31 rad (18 °) before T.D.C.	0.37 rad (21 °) before T.D.C.	0.31 rad (18 °) before T.D.C.	0.37 rad (21 °) before T.D.C.	0.31 rad (18 °) before T.D.C.	0.37 rad (21 °) before T.D.C.
Firing Order	1-2-3				1-3-4-2	
Injection Pressure	13.73 MPa (140 kgf/cm^2, 1991 psi)					
Compression Ratio	23 : 1		24 : 1			
Lubricating System	Forced lubrication by trochoid pump					
Oil Pressure Indicating	Electrical type switch					
Lubricating Filter	Full flow paper filter (Cartridge type)					
Cooling System	Pressurized radiator, forced circulation with water pump					
Starting System	Electric Starting with Starter					
Starting Motor	12 V, 0.9 kW		12 V, 1.0 kW			
Starting Support Device	By glow plug in combustion chamber					
Battery	12 V, 60 AH, equivalent					
Charging Alternator	12 V, 150 W		12 V, 360 W			
Fuel	Diesel Fuel No.2-D (ASTM D975)					
Lubricating Oil	Class CF lubricating oil as per API classification is recommended. If this class of lubricating oil is not available, preferably use Class CD or CE lubricating oil. For details on recommended lubricating oils, see page G-5, 8.					
Lubricating Oil Capacity (Oil Pan Depth 125 mm (4.92 in.))	5.1 L (1.35 U.S.gals)				6.0 L (1.59 U.S.gals)	
Weight (Dry) kg (lbs)	93.0 (205.0)				110.0 (242.5)	

* The specification described above is of the standard engine of each model.
* Conversion Formula : HP = 0.746 kW, PS = 0.7355 kW

W10275180

https://truckmanualshub.com/

Model	D1105-E2B	V1505-E2B	D1105-T-E2B	V1505-T-E2B
Number of Cylinders	3	4	3	4
Type	Vertical, Water-cooled, 4 cycle diesel engine			
Bore × Stroke mm (in.)	78 × 78.4 (3.07 × 3.09)			
Total Displacement cm^3 (cu.in.)	1123 (68.53)	1498 (91.41)	1123 (68.53)	1498 (91.41)
ISO Net Continuous kW/min^{-1} (rpm) (HP/min^{-1} (rpm))	16.2 / 3000 (21.7 / 3000)	21.7 / 3000 (29.1 / 3000)	20.4 / 3000 (27.4 / 3000)	27.2 / 3000 (36.4 / 3000)
ISO/SAE Net Intermittent kW/min^{-1} (rpm) (HP/min^{-1} (rpm))	18.7 / 3000 (25.0 / 3000)	25.0 / 3000 (33.5 / 3000)	23.5 / 3000 (31.5 / 3000)	31.3 / 3000 (42.0 / 3000)
SAE Gross Intermittent kW/min^{-1} (rpm) (HP/min^{-1} (rpm))	19.4 / 3000 (26.0 / 3000)	26.5 / 3000 (35.5 / 3000)	24.5 / 3000 (32.8 / 3000)	33.0 / 3000 (44.2 / 3000)
Maximum Bare Speed (min^{-1} (rpm))	3200			
Minimum Bare Idling Speed (min^{-1} (rpm))	900			
Combustion Chamber	Spherical type (E-TVCS)			
Fuel Injection Pump	Bosch MD type mini pump			
Governor	All speed mechanical governor			
Direction of Rotation	Counter-clockwise (viewed from flywheel side)			
Injection Nozzle	Mini Nozzle (DNOPD)			
Injection Timing	0.31 rad (18 °) before T.D.C.			
Firing Order	1-2-3	1-3-4-2	1-2-3	1-3-4-2
Injection Pressure	13.73 MPa (140 kgf/cm^2, 1991 psi)			
Compression Ratio	24 : 1		23 : 1	
Lubricating System	Forced lubrication by trochoid pump			
Oil Pressure Indicating	Electrical type switch			
Lubricating Filter	Full flow paper filter (Cartridge type)			
Cooling System	Pressurized radiator, forced circulation with water pump			
Starting System	Electric Starting with Starter			
Starting Motor	12 V, 1.0 kW	12 V, 1.2 kW	12 V, 1.0 kW	12 V, 1.2 kW
Starting Support Device	By glow plug in combustion chamber			
Battery	12 V, 65 AH equivalent	12 V, 75 AH equivalent	12 V, 65 AH equivalent	12 V, 56 AH equivalent
Charging Alternator	12 V, 360 W			
Fuel	Diesel Fuel No.2-D (ASTM D975)			
Lubricating Oil	Class CF lubricating oil as per API classification is recommended. If this class of lubricating oil is not available, preferably use Class CD or CE lubricating oil. For details on recommended lubricating oils, see page G-5, 8.			
Lubricating Oil Capacity (Oil Pan Depth 125 mm (4.92 in.))	5.1 L (1.35 U.S.gals)	6.0 L (1.59 U.S.gals)	5.1 L (1.35 U.S.gals)	6.7 L (1.77 U.S.gals)
Weight (Dry) kg (lbs)	93.0 (205.0)	110.0 (242.5)	97.0 (213.8)	114.0 (251.3)

* The specification described above is of the standard engine of each model.
* Conversion Formula : HP = 0.746 kW, PS = 0.7355 kW

W10316890

https://truckmanualshub.com/

Model			D905-E2BG	D1005-E2BG	V1305-E2BG
			BG1	BG1	BG1
Number of Cylinders			3		4
Type			Vertical, Water-cooled, 4 cycle diesel engine		
Bore × Stroke		mm (in.)	72 × 73.6 (2.83 × 2.90)	76 × 73.6 (2.99 × 2.90)	
Total Displacement		cm^3 (cu.in.)	898 (54.86)	1001 (61.08)	1335 (81.46)
STAND-BY	ISO 3046	kW/min^{-1} (rpm)	8.9 / 1800	9.8 / 1800	13.1 / 1800
	SAE J-1349	$(HP/min^{-1}$ (rpm))	11.9 / 1800	13.7 / 1800	17.5 / 1800
NET CONT.	ISO 3046	kW/min^{-1} (rpm)	7.8 / 1800	8.6 / 1800	11.6 / 1800
	SAE J-1349	$(HP/min^{-1}$ (rpm))	10.5 / 1800	11.6 / 1800	15.5 / 1800
Governor Regulation			Less than 5 %		
Combustion Chamber			Spherical type (E-TVCS)		
Fuel Injection Pump			Bosch type		
Governor			All speed mechanical governor		
Direction of Rotation			Counter-clockwise (viewed from flywheel side)		
Injection Nozzle			Bosch “Throttle” type		
Injection Timing			0.29 rad (16.5 °) before T.D.C.		
Firing Order			1-2-3		1-3-4-2
Injection Pressure			13.73 MPa (140 kgf/cm^2, 1991 psi)		
Compression Ratio			23 : 1	24 : 1	
Lubricating System			Forced lubrication by trochoid pump		
Oil Pressure Indicating			Electrical type switch		
Lubricating Filter			Full flow paper filter (Cartridge type)		
Cooling System			Pressurized radiator, forced circulation with water pump		
Starting System			Electric Starting with Starter		
Starting Motor			12 V, 0.9 kW	12 V, 1.0 kW	12 V, 1.2 kW
Starting Support Device			By glow plug in combustion chamber		
Battery			12 V, 35 AH equivalent	12 V, 65 AH equivalent	12 V, 75 AH equivalent
Charging Alternator			12 V, 360 W		
Fuel			Diesel Fuel No.2-D (ASTM D975)		
Lubricating Oil			Class CF lubricating oil as per API classification is recommended. If this class of lubricating oil is not available, preferably use Class CD or CE lubricating oil. For details on recommended lubricating oils, see page G-5, 8.		
Lubricating Oil Capacity (Oil Pan Depth)			5.1 L (1.35 U.S.gals) (125 mm, 4.92 in.)		6.7 L (1.77 U.S.gals) (130 mm 5.12 in.)
Weight		kg (lbs)	89 (196.2)		106 (233.7)

* The specification described above is of the standard engine of each model.
* Conversion Formula : HP = 0.746 kW, PS = 0.7355 kW

W10336300

https://truckmanualshub.com/

Model			D1105-E2BG	V1505-E2BG
			BG1	BG1
Number of Cylinders			3	4
Type			Vertical, Water-cooled, 4 cycle diesel engine	
Bore × Stroke		mm (in.)	78 × 78.4 (3.07 × 3.09)	
Total Displacement		cm^3 (cu.in.)	1123 (68.53)	1498 (91.41)
STAND-BY	ISO 3046	kW/min^{-1} (rpm)	11.5 / 1800	15.1 / 1800
	SAE J-1349	$(HP/min^{-1}$ (rpm))	15.4 / 1800	20.2 / 1800
NET CONT.	ISO 3046	kW/min^{-1} (rpm)	10.1 / 1800	13.4 / 1800
	SAE J-1349	$(HP/min^{-1}$ (rpm))	13.6 / 1800	17.9 / 1800
Governor Regulatiln			Less than 5 %	
Combustion Chamber			Spherical type (E-TVCS)	
Fuel Injection Pump			Bosch type	
Governor			All speed mechanical governor	
Direction of Rotation			Counter-clockwise (viewed from flywheel side)	
Injection Nozzle			Bosch “Throttle” type	
Injection Timing			0.29 rad (16.5 °) before T.D.C.	
Firing Order			1-2-3	1-3-4-2
Injection Pressure			13.73 MPa (140 kgf/cm^2, 1991 psi)	
Compression Ratio			24 : 1	
Lubricating System			Forced lubrication by trochoid pump	
Oil Pressure Indicating			Electrical type switch	
Lubricating Filter			Full flow paper filter (Cartridge type)	
Cooling System			Pressurized radiator, forced circulation with water pump	
Starting System			Electric Starting with Starter	
Starting Motor			12 V, 1.0 kW	12 V, 1.2 kW
Starting Support Device			By glow plug in combustion chamber	
Battery			12 V, 65 AH equivalent	12 V, 70 AH equivalent
Charging Alternator			12 V, 360 W	
Fuel			Diesel Fuel No.2-D (ASTM D975)	
Lubricating Oil			Class CF lubricating oil as per API classification is recommended. If this class of lubricating oil is not available, preferably use Class CD or CE lubricating oil. For details on recommended lubricating oils, see page G-5, 8.	
Lubricating Oil Capacity (Oil Pan Depth)			5.1 L (1.35 U.S.gals) (125 mm, 4.92 in.)	6.7 L (1.77 U.S.gals) (130 mm 5.12 in.)
Weight		kg (lbs)	89 (196.2)	106 (233.7)

* The specification described above is of the standard engine of each model.
* Conversion Formula : HP = 0.746 kW, PS = 0.7355 kW

W10362750

https://truckmanualshub.com/

PERFORMANCE CURVES

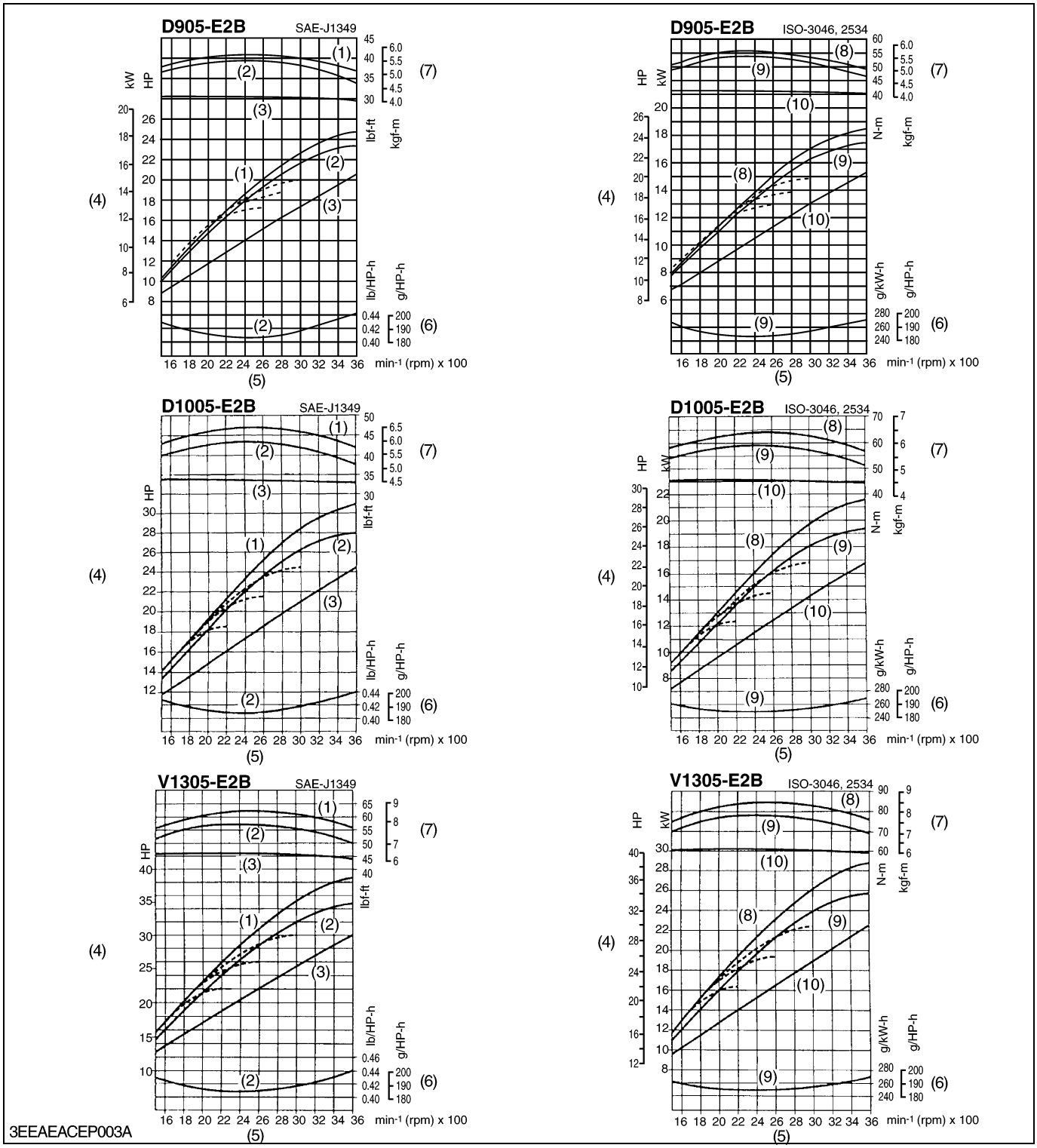

https://truckmanualshub.com/

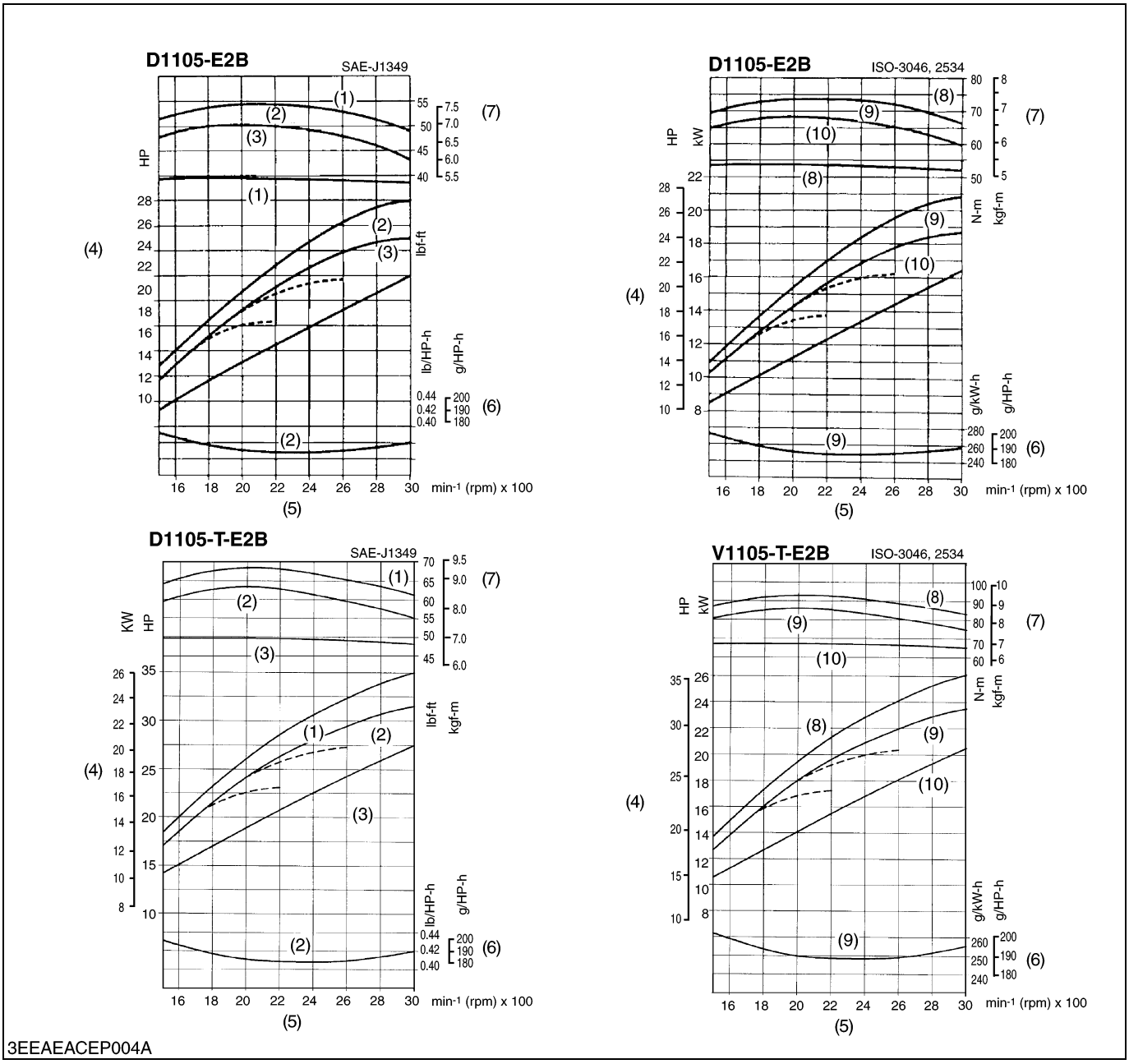

(1) Gross Int.
(2) Net Int.
(3) Net Cont.
(4) Brake Horsepower
(5) Engine Speed
(6) Specified Fuel
(7) Torque
(8) Gross
(9) Overload
(10) Continuous

https://truckmanualshub.com/

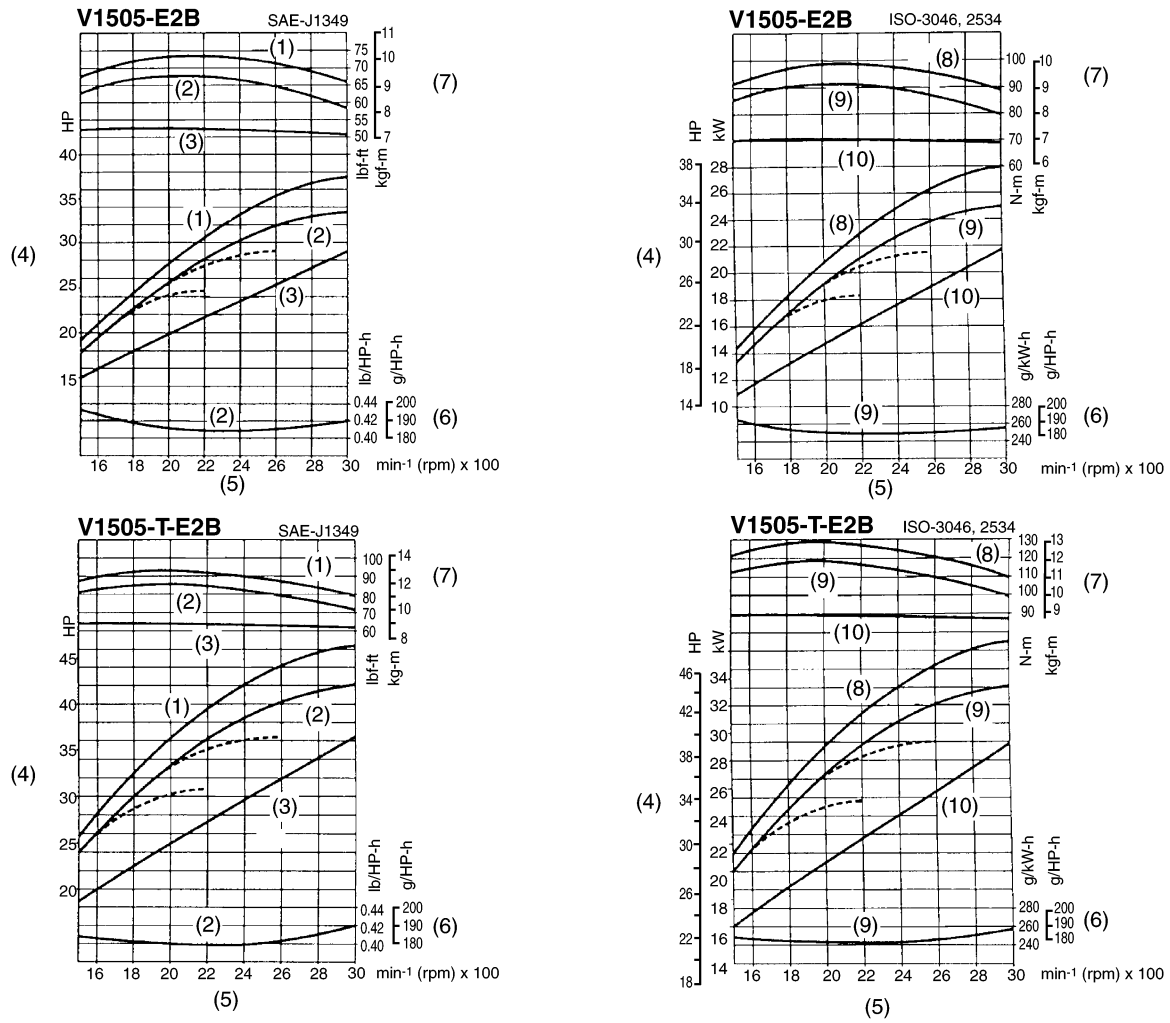

3EEAEACEP005A

https://truckmanualshub.com/

DIMENSIONS

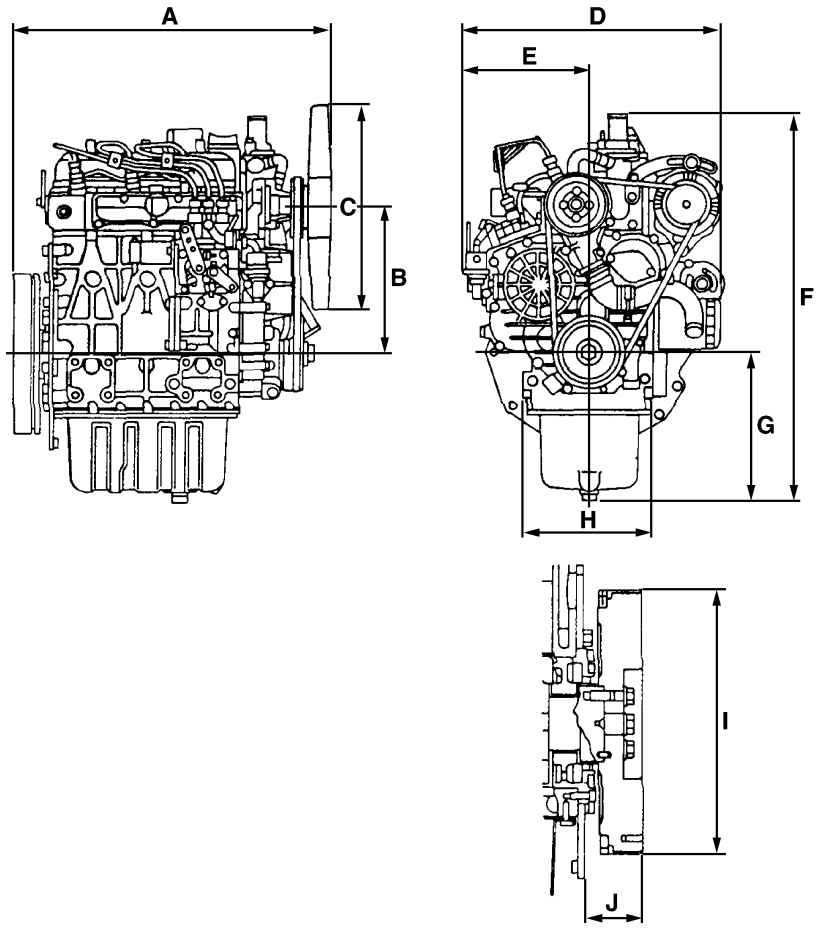

3EEAEACFP001A

Unit : mm (in.)

	D905-E2B	D1005-E2B	D1105-E2B	D1105-T-E2B
A	497.8 (19.60)	497.8 (19.60)	497.8 (19.60)	497.8 (19.60)
B	230 (9.06)	230 (9.06)	230 (9.06)	230 (9.06)
C	320 dia. (12.6 dia.)	330 dia. (12.99 dia.)	330 dia. (12.99 dia.)	330 dia. (12.99 dia.)
D	396 (15.59)	396 (15.59)	396 (15.59)	396 (15.59)
E	194 (7.64)	194 (7.64)	194 (7.64)	194 (7.64)
F	608.7 (23.96)	608.7 (23.96)	608.7 (23.96)	608.7 (23.96)
G	233.5 (9.19)	233.5 (9.19)	233.5 (9.19)	233.5 (9.19)
H	200 (7.87)	200 (7.87)	200 (7.87)	200 (7.87)
I	250.81 to 251.12 dia. (9.874 to 9.887 dia.)	250.81 to 251.12 dia. (9.874 to 9.887 dia.)	250.81 to 251.12 dia. (9.874 to 9.887 dia.)	250.81 to 251.12 dia. (9.874 to 9.887 dia.)
J	56 (2.20)	56 (2.20)	56 (2.20)	56 (2.20)

W1038971

https://truckmanualshub.com/

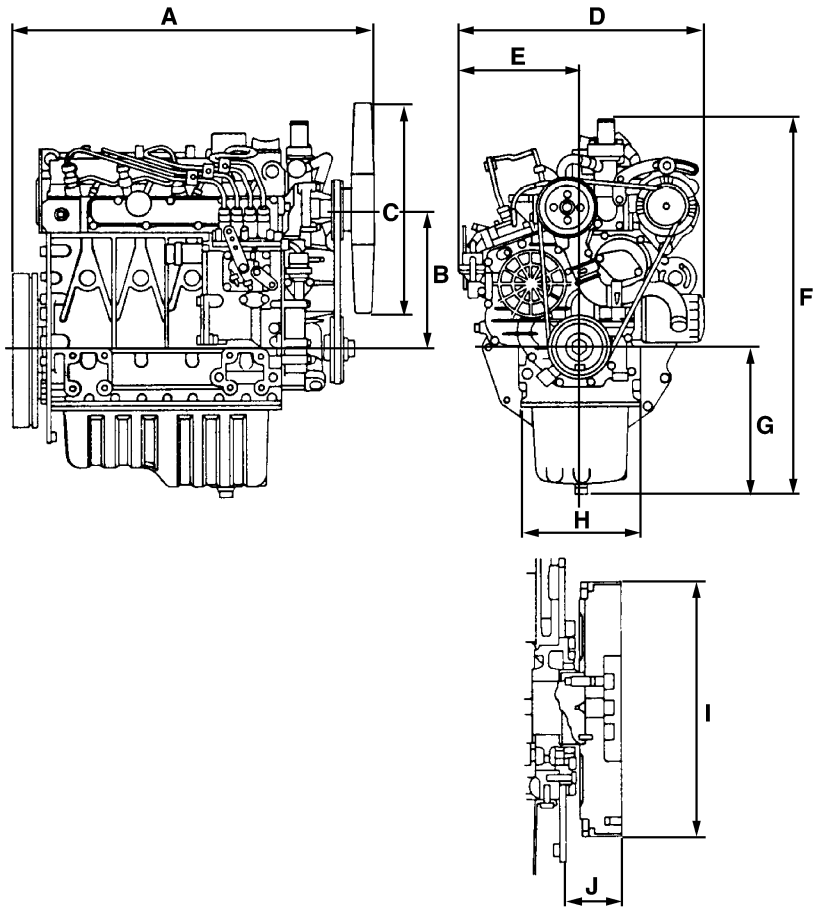

3EEAEACFP002A

Unit : mm (in.)

	V1305-E2B	V1505-E2B	V1505-T-E2B
A	583.8 (22.98)	591.3 (23.28)	591.3 (23.28)
B	230 (9.06)	230 (9.06)	230 (9.06)
C	350 dia. (13.78 dia.)	370 dia. (14.57 dia.)	370 dia. (14.57 dia.)
D	396 (15.59)	396 (15.59)	396 (15.59)
E	194 (7.64)	194 (7.64)	194 (7.64)
F	613.7 (24.16)	613.7 (24.16)	629.3 (24.16)
G	238.5 (9.39)	238.5 (9.39)	238.5 (9.39)
H	200 (7.87)	200 (7.87)	200 (7.87)
I	250.81 to 251.12 dia. (9.874 to 9.887 dia.)	250.81 to 251.12 dia. (9.874 to 9.887 dia.)	250.81 to 251.12 dia. (9.874 to 9.887 dia.)
J	56 (2.20)	56 (2.20)	56 (2.20)

W1039589

https://truckmanualshub.com/

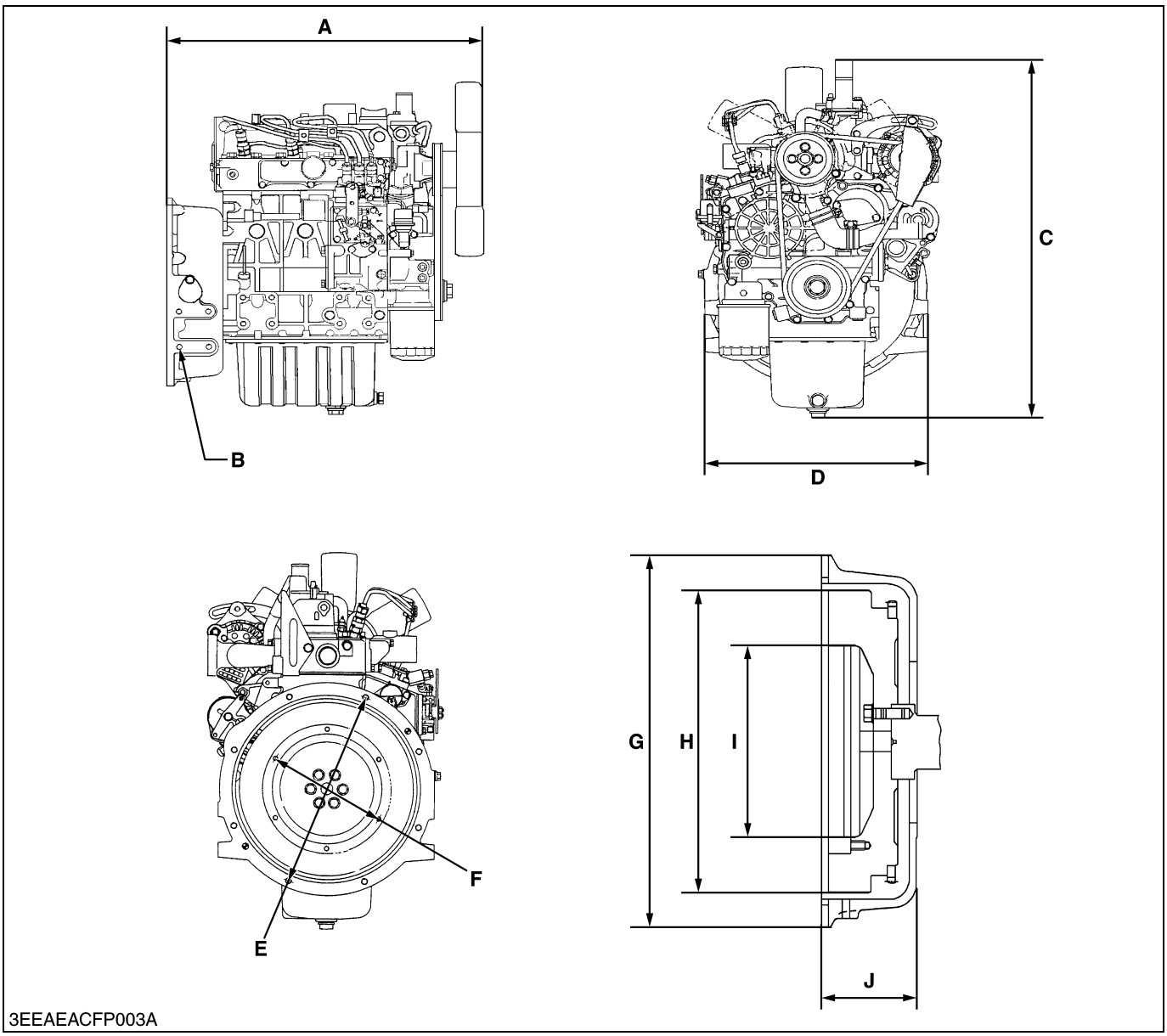

Unit : mm (in.)

	D905-E2BG	D1005-E2BG	D1105-E2BG	V1305-E2BG	V1505-E2BG
A	546.6 (21.52)	546.6 (21.52)	546.6 (21.52)	634.3 (24.97)	634.3 (24.97)
B	4-3/8-16 UNC-2B Depth 16 (0.63)	4-3/8-16 UNC-2B Depth 16 (0.63)	4-3/8-16 UNC-2B Depth 16 (0.63)	4-3/8-16 UNC-2B Depth 16 (0.63)	4-3/8-16 UNC-2B Depth 16 (0.63)
C	608.7 (23.96)	608.7 (23.96)	608.7 (23.96)	613.7 (24.16)	613.7 (24.16)
D	360 (14.17)	360 (14.17)	360 (14.17)	360 (14.17)	360 (14.17)
E	333.38 dia. (13.13 dia.)	333.38 dia. (13.13 dia.)	333.38 dia. (13.13 dia.)	333.38 dia. (13.13 dia.)	333.38 dia. (13.13 dia.)
F	200.02 dia. (7.87 dia.)	200.02 dia. (7.87 dia.)	200.02 dia. (7.87 dia.)	200.02 dia. (7.87 dia.)	200.02 dia. (7.87 dia.)
G	356 dia. (14.02 dia.)	356 dia. (14.02 dia.)	356 dia. (14.02 dia.)	356 dia. (14.02 dia.)	356 dia. (14.02 dia.)
H	290 dia. (11.42 dia.)	290 dia. (11.42 dia.)	290 dia. (11.42 dia.)	290 dia. (11.42 dia.)	290 dia. (11.42 dia.)
I	184.2 dia. (7.25 dia.)	184.2 dia. (7.25 dia.)	184.2 dia. (7.25 dia.)	184.2 dia. (7.25 dia.)	184.2 dia. (7.25 dia.)
J	98 dia. (3.86 dia.)	98 dia. (3.86 dia.)	98 dia. (3.86 dia.)	98 dia. (3.86 dia.)	98 dia. (3.86 dia.)

W1040012

https://truckmanualshub.com/

GENERAL

CONTENTS

1. ENGINE IDENTIFICATION G-1
   [1] MODEL NAME AND ENGINE SERIAL NUMBER G-1
   [2] E2B ENGINE G-2
   [3] CYLINDER NUMBER G-2
2. GENERAL PRECAUTIONS G-3
3. MAINTENANCE CHECK LIST G-4
4. CHECK AND MAINTENANCE G-6
   [1] DAILY CHECK POINTS G-6
   [2] CHECK POINTS OF INITIAL 50 HOURS G-8
   [3] CHECK POINTS OF EVERY 50 HOURS G-10
   [4] CHECK POINTS OF EVERY 100 HOURS G-11
   [5] CHECK POINTS OF EVERY 200 HOURS G-13
   [6] CHECK POINTS OF EVERY 400 HOURS G-14
   [7] CHECK POINTS OF EVERY 500 HOURS G-15
   [8] CHECK POINTS OF EVERY 1 OR 2 MONTHS G-17
   [9] CHECK POINTS OF EVERY YEAR G-18
   [10]CHECK POINTS OF EVERY 800 HOURS G-19
   [11]CHECK POINTS OF EVERY 1500 HOURS G-20
   [12]CHECK POINTS OF EVERY 3000 HOURS G-21
   [13]CHECK POINTS OF EVERY 2 YEARS G-24
5. SPECIAL TOOLS G-28

https://truckmanualshub.com/

1. ENGINE IDENTIFICATION

[1] MODEL NAME AND ENGINE SERIAL NUMBER

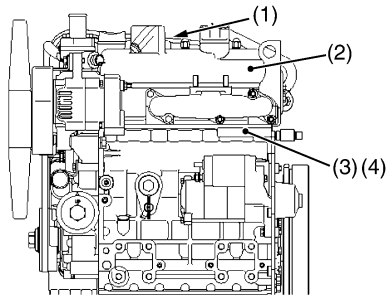

3EEAEAC0P001B

When contacting the manufacture, always specify your engine model name and serial number.

The engine model and its serial number need to be identified before the engine can be serviced or parts replaced.

■ **Engine Serial Number**

The engine serial number is an identified number for the engine. It is marked after the engine model number.

It indicates month and year of manufacture as follows.

- **Year of manufacture**

Alphabet or Number	Year	Alphabet or Number	Year
1	2001	F	2015
2	2002	G	2016
3	2003	H	2017
4	2004	J	2018
5	2005	K	2019
6	2006	L	2020
7	2007	M	2021
8	2008	N	2022
9	2009	P	2023
A	2010	R	2024
B	2011	S	2025
C	2012	T	2026
D	2013	V	2027
E	2014		

(1) Engine Label
(2) Emission Label
(3) Engine Model
(4) Serial Number

W1010477

https://truckmanualshub.com/

- **Month of manufacture**

Month	Engine Serial Number	
	0001 ~ 9999	10000 ~
January	A0001 ~ A9999	B0001 ~
February	C0001 ~ C9999	D0001 ~
March	E0001 ~ E9999	F0001 ~
April	G0001 ~ G9999	H0001 ~
May	J0001 ~ J9999	K0001 ~
June	L0001 ~ L9999	M0001 ~
July	N0001 ~ N9999	P0001 ~
August	Q0001 ~ Q9999	R0001 ~
September	S0001 ~ S9999	T0001 ~
October	U0001 ~ U9999	V0001 ~
November	W0001 ~ W9999	X0001 ~
December	Y0001 ~ Y9999	Z0001 ~

e.g. D1105-4A0001
"4" indicates 2004 and "A" indicates January.
So, 4A indicates that the engine was manufactured in January, 2004.

W1011076

[2] E2B ENGINE

[ex. Model Name D1105-E2B]

The emission controls that have been put into effect in various countries to prevent air pollution will be stepped up. The time to enforce the regulations differs depending on the engine output classifications.

Kubota has been supplying the diesel engines conforming to the emission regulations in respective countries. Exhaust emissions regulations shift to the second stage. Kubota executed the improvement of the engine according to this regulation.

In order to discriminate the engines conforming to Tier 1 / Phase 1 requirements and those conforming to Tier 2 / Phase 2 requirements, we have adopted E2B as a new model name for the engines conforming Tier 2 / Phase 2 regulations.

In the after-sale services for 05-E2B and 05-E2BG series engines, only use the dedicated parts for E2B models and carry out the maintenance services accordingly.

[3] CYLINDER NUMBER

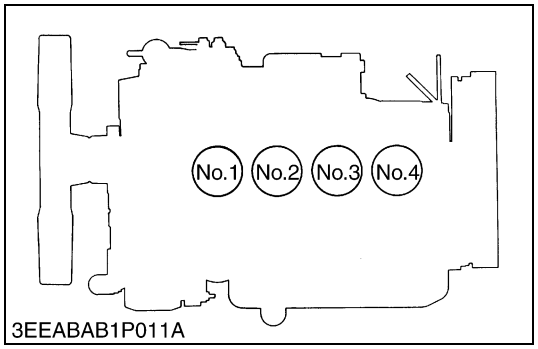

The cylinder numbers of kubota diesel engine are designated as shown in the figure.

The sequence of cylinder numbers is given as No.1, No.2, No.3 and No.4 starting from the gear case side.

W1011077

https://truckmanualshub.com/

2. GENERAL PRECAUTIONS

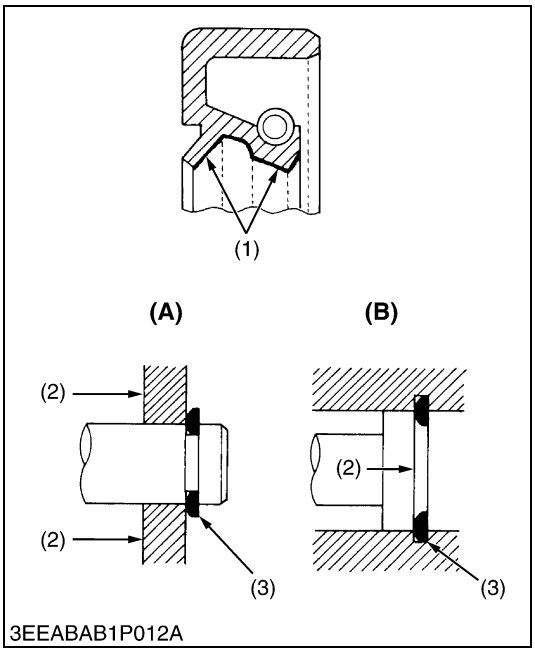

- During disassembly, carefully arrange removed parts in a clean area to prevent confusion later. Screws, bolts and nuts should be replaced in their original position to prevent reassembly errors.
- When special tools are required, use KUBOTA genuine special tools. Special tools which are not frequently used should be made according to the drawings provided.
- Before disassembling or servicing live wires, make sure to always disconnect the grounding cable from the battery first.
- Remove oil and dirt from parts before measuring.
- Use only KUBOTA genuine parts for parts replacement to maintain engine performance and to ensure safety.
- Gaskets and O-rings must be replaced during reassembly. Apply grease to new O-rings or oil seals before assembling.
- When reassembling external or internal snap rings, position them so that the sharp edge faces against the direction from which force is applied.
- Be sure to perform run-in the serviced or reassembled engine. Do not attempt to give heavy load at once, or serious damage may result to the engine.

(1) Grease
(2) Force
(3) Place the Sharp Edge against the Direction of Force

(A) External Snap Ring
(B) Internal Snap Ring

W1011734

https://truckmanualshub.com/

3. MAINTENANCE CHECK LIST

To maintain long-lasting and safe engine performance, make it a rule to carry out regular inspections by following the table below.

Item	Service Interval										
	Every										
	50 hrs	100 hrs	200 hrs	400 hrs	500 hrs	1 or 2 months	1 year	800 hrs	1500 hrs	3000 hrs	2 years
* Checking fuel hoses and clamp bands	☆										
* Changing engine oil (Oil pan depth : 125 mm (4.92 in.), 130 mm (5.12 in.))	★		☆								
* Cleaning air cleaner element (Replace the element after 6 times cleaning)		☆									
Cleaning fuel filter element		☆									
Check fan belt tension and damage		☆									
Checking battery electrolyte level		☆									
* Replacing oil filter cartridge (Oil pan depth : 125 mm (4.92 in.), 130 mm (5.12 in.))	★		☆								
Checking radiator hoses and clamp bands			☆								
* Checking intake air line			☆								
Replacing fuel filter cartridge				☆							
Cleaning water jacket and radiator interior					☆						
Replacing fan belt					☆						
Recharging battery						☆					
* Replacing air cleaner element							☆				
Checking valve clearance								☆			
* Checking injection nozzle pressure									☆		
* Checking turbocharger										☆	
Checking injection pump										☆	
Checking injection timing										☆	
Changing radiator coolant (L.L.C.)											☆
Replacing radiator hoses and clamp bands											☆
* Replacing fuel hoses and clamps											☆
* Replacing intake air line											☆
Replacing battery											☆

★ Change engine oil and replace oil filter cartridge after the first 50 hours of operation.

* The items listed above (* marked) are registered as emission related critical parts by KUBOTA in the U.S. EPA nonroad emission regulation. As the engine owner, you are responsible for the performance of the required maintenance on the engine according to the above instruction.

W1029462

https://truckmanualshub.com/

CAUTION

- **When changing or inspecting, be sure to level and stop the engine.**

■ NOTE

Lubricating Oil

With the emission control now in effect, the CF-4 and CG-4 lubricating oils have been developed for use of a low-sulfur fuel on-road vehicle engines. When an off-road vehicle engine runs on a high-sulfur fuel, it is advisable to employ the CF, CD or CE lubricating oil with a high total base number. If the CF-4 or CG-4 lubricating oil is used with a high-sulfur fuel, change the lubricating oil at shorter intervals.

- **Lubricating oil recommended when a low-sulfur or high-sulfur fuel is employed.**

Fuel / Lubricating oil class	Low sulfur (0.5 % ≥)	High sulfur	Remarks
CF	❍	❍	TBN ≥ 10
CF-4	❍	X	
CG-4	❍	X	

❍ : Recommendable X : Not recommendable

W1035555

https://truckmanualshub.com/

4. CHECK AND MAINTENANCE

[1] DAILY CHECK POINTS

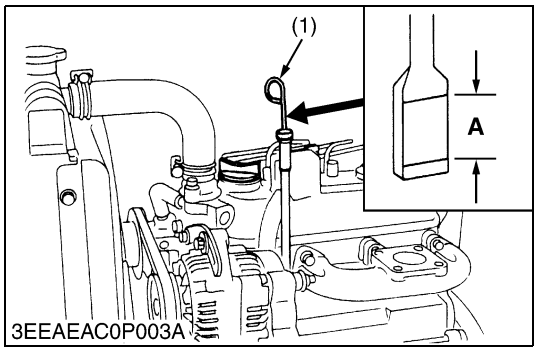

Checking Engine Oil Level

1. Level the engine.
2. To check the oil level, draw out the dipstick (1), wipe it clean, reinsert it, and draw it out again.
   Check to see that the oil level lies (**A**) between the two notches.
3. If the level is too low, add new oil to the specified level.

■ **IMPORTANT**

- **When using an oil of different maker or viscosity from the previous, drain old oil. Never mix two different types of oil.**

■ **NOTE**

- **Be sure to inspect the engine, locating it on a horizontal place. If placed on gradients, accurately, oil quantity may not be measured.**
- **Be sure to keep the oil level between upper and lower limits of the dipstick. Too much oil may cause a drop in output or excessive blow-by gas. On the closed breather type engine in which mist is sucked through port, too much oil may caused oil hammer. While too little oil, may seize the engine's rotating and sliding parts.**

(1) Dipstick **A : Oil Level**

W1016222

https://truckmanualshub.com/

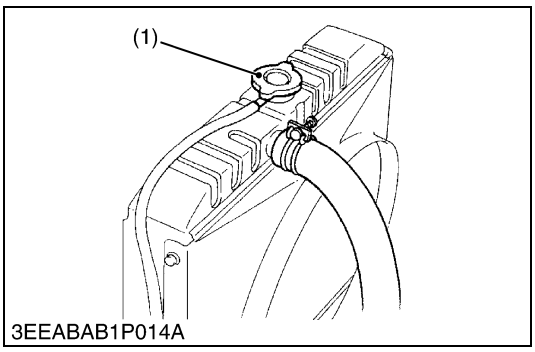

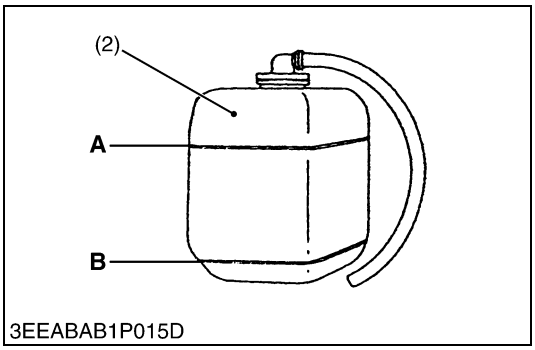

Checking and Replenish Coolant

1. Without recovery tank :
   Remove the radiator cap (1) and check to see that the coolant level is just below the port.
   With recovery tank (2) :
   Check to see that the coolant level lies between **FULL** (**A**) and **LOW** (**B**).
2. If coolant level is too low, check the reason for decreasing coolant.
   (Case 1)
   If coolant is decreasing by evaporation, replenish only fresh, soft water.
   (Case 2)
   If coolant is decreasing by leak, replenish coolant of the same manufacture and type in the specified mixture ratio (fresh, soft water and L.L.C.). If the coolant brand cannot be identified, drain out all of the remaining coolant and refill with a totally new brand of coolant mix.

CAUTION

- **Do not remove the radiator cap until coolant temperature is below its boiling point. Then loosen the cap slightly to relieve any excess pressure before removing the cap completely.**

IMPORTANT

- **During filling the coolant, air must be vented from the engine coolant passages. The air vents by jiggling the radiator upper and lower hoses.**
- **Be sure to close the radiator cap securely. If the cap is loose or improperly closed, coolant may leak out and the engine could overheat.**
- **Do not use an antifreeze and scale inhibitor at the same time.**
- **Never mix the different type or brand of L.L.C..**

(1) Radiator Cap
(2) Recovery Tank

A: FULL
B: LOW

W1035779

https://truckmanualshub.com/

[2] CHECK POINTS OF INITIAL 50 HOURS

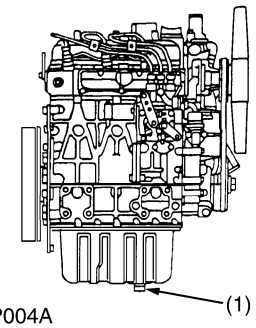

3EEAEAC0P004A

Changing Engine Oil

CAUTION

- **Be sure to stop engine before changing engine oil.**

1. Start and warm up the engine for approx. 5 minutes.
2. Place an oil pan underneath the engine.
3. To drain the used oil, remove the drain plug (1) at the bottom of the engine and drain the oil completely.
4. Screw the drain plug (1).
5. Fill new oil up to upper line on the dipstick.

■ **IMPORTANT**

- **When using an oil of different maker or viscosity from the previous one, remove all of the old oil.**
- **Never mix two different types of oil.**
- **Engine oil should have properties of API classification CD/CE/CF/CF-4/CG-4.**
- **Use the proper SAE Engine Oil according to ambient temperature.**
- **Upon an oil change, be sure to replace the gasket with new one.**

Above 25 °C (77 °F)	SAE 30 or SAE 10W-30 SAE 10W-40
0 °C to 25 °C (32 °F to 77 °F)	SAE 20 or SAE 10W-30 SAE 10W-40
Below 0 °C (32 °F)	SAE 10W or SAE 10W-30 SAE 10W-40

Models \ Oil pan depth	Capacity	
	125 mm (4.92 in.)	130 mm (5.12 in.)
D905-E2B / E2BG D1005-E2B /E2BG D1105-E2B /E2BG D1105-T-E2B	5.1 L 1.35 U.S.gals	–
V1305-E2B V1505-E2B	6.0 L 1.59 U.S.gals	–
V1305-E2BG V1505-E2BG	–	6.7 L 1.77 U.S.gals
V1505-T-E2B	–	6.7 L 1.77 U.S.gals

Tightening torque	Drain plug with copper gasket	M12 × 1.25	32.4 to 37.3 N·m 3.3 to 3.8 kgf·m 23.9 to 27.5 ft-lbs
		M22 × 1.5	63.7 to 73.5 N·m 6.5 to 7.5 kgf·m 47.0 to 54.2 ft-lbs
	Drain plug with rubber coated gasket	M22 × 1.5	44.1 to 53.9 N·m 4.5 to 5.5 kgf·m 32.5 to 39.8 ft-lbs

(1) Drain Plug

W1016604

https://truckmanualshub.com/

Replacing Oil Filter Cartridge

CAUTION

- **Be sure to stop the engine before changing filter cartridge.**

1. Remove the oil filter cartridge with the filter wrench.
2. Apply a slight coat of oil onto the new cartridge gasket.
3. To install the new cartridge, screw it in by hand. Over tightening may cause deformation of rubber gasket.
4. After the new cartridge has been replaced, the engine oil normally decrease a little. Thus see that the engine oil does not leak through the seal and be sure to read the oil level on the dipstick. Then, replenish the engine oil up to the specified level.

■ **IMPORTANT**

- **To prevent serious damage to the engine, replacement element must be highly efficient. Use only a KUBOTA genuine filter or its equivalent.**

W1017137

https://truckmanualshub.com/

[3] CHECK POINTS OF EVERY 50 HOURS

[A]

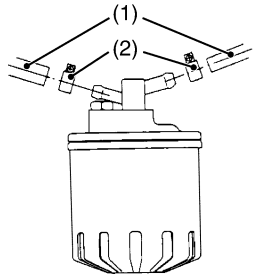

3EEACAA1P057D

[B]

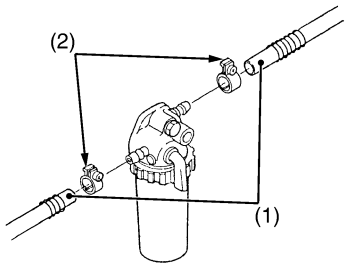

3EEACAA1P058B

[A]

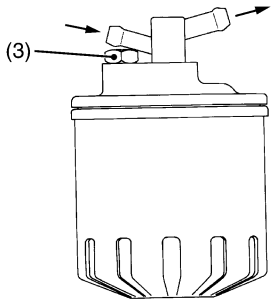

3EEACAA1P059A

[B]

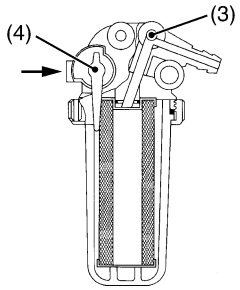

3EEACAA1P060A

Checking Fuel Hose

1. If the clamp (2) is loose, apply oil to the threads and securely retighten it.
2. The fuel hose (1) is made of rubber and ages regardless of the period service.
   Change the fuel hose together with the clamp every two years.
3. However, if the fuel hose and clamp are found to be damaged or deteriorate earlier than two years, then change or remedy.
4. After the fuel hose and the clamp have been changed, bleed the fuel system.

CAUTION

- **Stop the engine when attempting the check and change prescribed above.**

(When bleeding fuel system)

1. Fill the tank with fuel and open the cock (4).
2. Loosen the air vent plug (3) of the fuel filter a few turns.
3. Screw back the plug when bubbles do not come up any more.
4. Open the air vent cock on top of the fuel injection pump.
5. If equipped electrical fuel feed pump, turn the key to **AC** position and pump the fuel up for 10 to 15 seconds.
   If equipped mechanical fuel feed pump, set the stop lever on stop position and crank the engine for 10 to 15 seconds.
6. Close securely the air vent cock after air bleeding.

■ **NOTE**

- **Always keep the air vent cock on the fuel injection pump closed except when air is vented, or it may cause the engine to stop.**

(1) Fuel Hose
(2) Clamp
(3) Air Vent Plug
(4) Fuel Cock

[A] Cartridge Type
[B] Element Type

W1035921

https://truckmanualshub.com/

[4] CHECK POINTS OF EVERY 100 HOURS

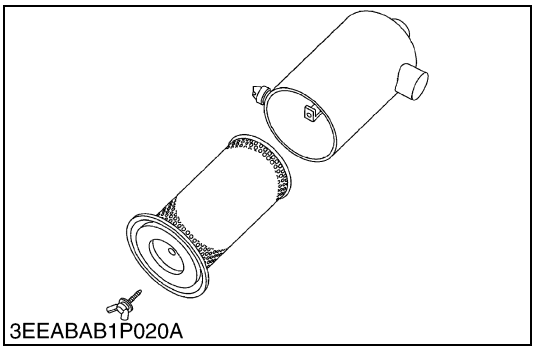
3EEABAB1P020A

Cleaning Air Cleaner Element

1. Remove the air cleaner element.
2. Use clean dry compressed air on the inside of the element. Pressure of compressed air must be under 205 kPa (2.1 kgf/cm^2, 30 psi).
   Maintain reasonable distance between the nozzle and the filter.

■ **NOTE**
- **The air cleaner uses a dry element. Never apply oil to it.**
- **Do not run the engine with filter element removed.**
- **Change the element once a year or every 6th cleaning.**

W1045746

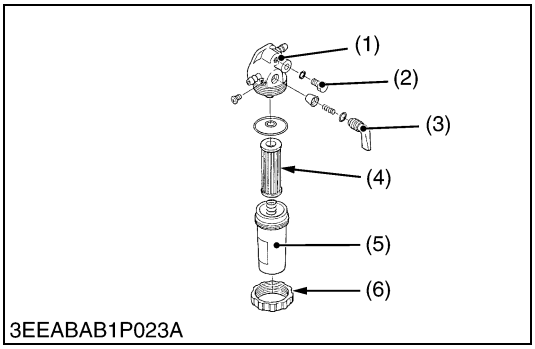

3EEABAB1P023A

Cleaning Fuel Filter (Element Type only)

1. Close the fuel cock (3).
2. Unscrew the retaining ring (6) and remove the filter cup (5), and rinse the inside with kerosene.
3. Take out the element (4) and dip it in the kerosene to rinse.
4. After cleaning, reassemble the fuel filter, keeping out dust and dirt.
5. Bleed the fuel system.

■ **IMPORTANT**
- **If dust and dirt enter the fuel, the fuel injection pump and injection nozzle will wear quickly. To prevent this, be sure to clean the fuel filter cup (5) periodically.**

(1) Cock Body
(2) Air Vent Plug
(3) Fuel Cock
(4) Filter Element
(5) Filter Cup
(6) Retaining Ring

W1046058

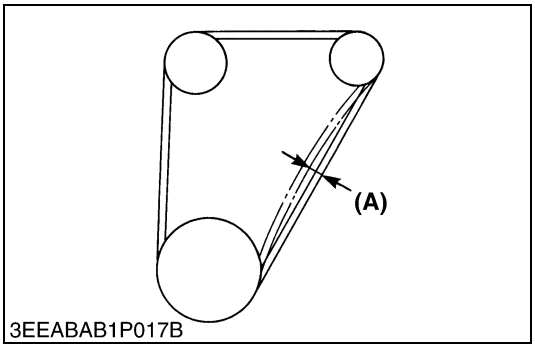

3EEABAB1P017B

Fan Belt Tension

1. Measure the deflection **(A)**, depressing the belt halfway between the fan drive pulley and alternator pulley at specified force 98 N (10 kgf, 22 lbs).
2. If the measurement is not within the factory specifications, loosen the alternator mounting screws and relocate the alternator to adjust.

Deflection **(A)**	Factory spec.	7.0 to 9.0 mm 0.28 to 0.35 in.

(A) Deflection

W1208957

https://truckmanualshub.com/

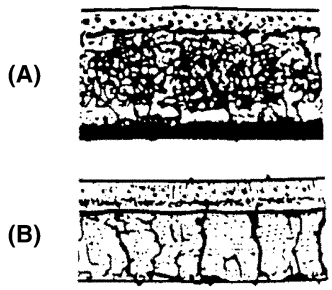

3EEABAB1P019B

Fan Belt Damage and Wear

1. Check the fan belt for damage.
2. If the fan belt is damaged, replace it.
3. Check if the fan belt is worn and sunk in the pulley groove.
4. If the fan belt is nearly worn out and deeply sunk in the pulley groove, replace it.

(A) Good **(B) Bad**

W1209480

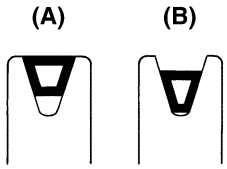

3EEABAB1P018A

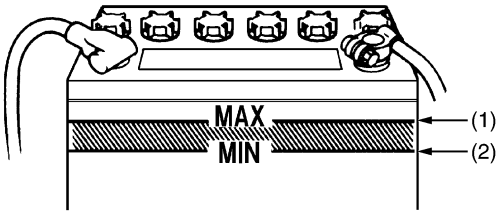

3EEABAB1P024A

Checking Battery Electrolyte Level

1. Check the battery electrolyte level.
2. If the level is below than lower level line (2), and the distilled water to pour level of each cell.

(1) Upper Level Line (2) Lower Level Line

W1047154

https://truckmanualshub.com/

[5] CHECK POINTS OF EVERY 200 HOURS

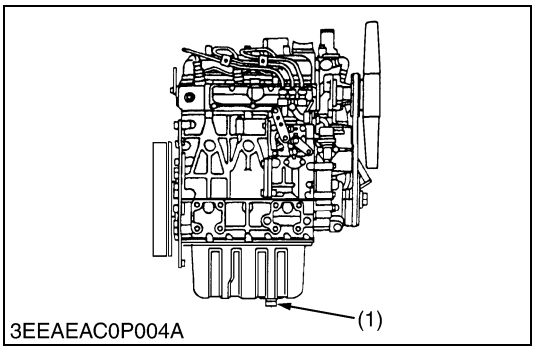

Changing Engine Oil

CAUTION

- **Be sure to stop engine before changing engine oil.**

1. Start and warm up the engine for approx. 5 minutes.
2. Place an oil pan underneath the engine.
3. To drain the used oil, remove the drain plug (1) at the bottom of the engine and drain the oil completely.
4. Screw the drain plug (1).
5. Fill new oil up to upper line on the dipstick.

■ IMPORTANT

- **When using an oil of different maker or viscosity from the previous one, remove all of the old oil.**
- **Never mix two different types of oil.**
- **Engine oil should have properties of API classification CD/CE/CF/CF-4/CG-4.**
- **Use the proper SAE Engine Oil according to ambient temperature.**
- **Upon an oil change, be sure to replace the gasket with new one.**

Above 25 °C (77 °F)	SAE 30 or SAE 10W-30 SAE 10W-40
0 °C to 25 °C (32 °F to 77 °F)	SAE 20 or SAE 10W-30 SAE 10W-40
Below 0 °C (32 °F)	SAE 10W or SAE 10W-30 SAE 10W-40

Models \ Oil pan depth	Capacity	
	125 mm (4.92 in.)	130 mm (5.12 in.)
D905-E2B / E2BG D1005-E2B /E2BG D1105-E2B /E2BG D1105-T-E2B	5.1 L 1.35 U.S.gals	–
V1305-E2B V1505-E2B	6.0 L 1.59 U.S.gals	–
V1305-E2BG V1505-E2BG	–	6.7 L 1.77 U.S.gals
V1505-T-E2B	–	6.7 L 1.77 U.S.gals

Tightening torque	Drain plug with copper gasket	M12 × 1.25	32.4 to 37.3 N·m 3.3 to 3.8 kgf·m 23.9 to 27.5 ft-lbs
		M22 × 1.5	63.7 to 73.5 N·m 6.5 to 7.5 kgf·m 47.0 to 54.2 ft-lbs
	Drain plug with rubber coated gasket	M22 × 1.5	44.1 to 53.9 N·m 4.5 to 5.5 kgf·m 32.5 to 39.8 ft-lbs

(1) Drain Plug

W1018298

https://truckmanualshub.com/

Replacing Oil Filter Cartridge

CAUTION

- **Be sure to stop the engine before changing filter cartridge.**

1. Remove the oil filter cartridge with the filter wrench.
2. Apply a slight coat of oil onto the new cartridge gasket.
3. To install the new cartridge, screw it in by hand. Over tightening may cause deformation of rubber gasket.
4. After the new cartridge has been replaced, the engine oil normally decrease a little. Thus see that the engine oil does not leak through the seal and be sure to read the oil level on the dipstick. Then, replenish the engine oil up to the specified level.

IMPORTANT

- **To prevent serious damage to the engine, replacement element must be highly efficient. Use only a KUBOTA genuine filter or its equivalent.**

W1018617

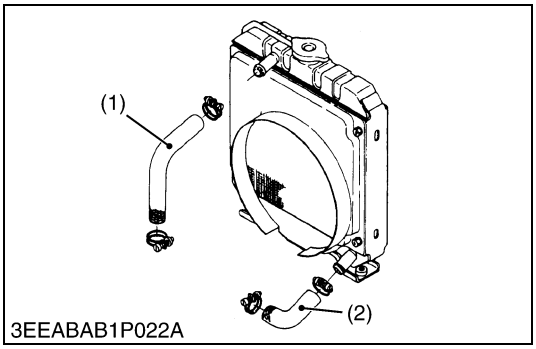

3EEABAB1P022A

Checking Radiator Hoses and Clamp Bands

1. Check to see if the radiator hoses are properly fixed every 200 hours of operation or every six months, whichever comes first.
2. If the clamp is loose, apply oil to the threads and retighten it securely.
3. The water hose is made of rubber and tens to age. It must be replaced every two years. Also replace the clamp and tighten it securely.

(1) Upper Hose (2) Lower Hose

W1029518

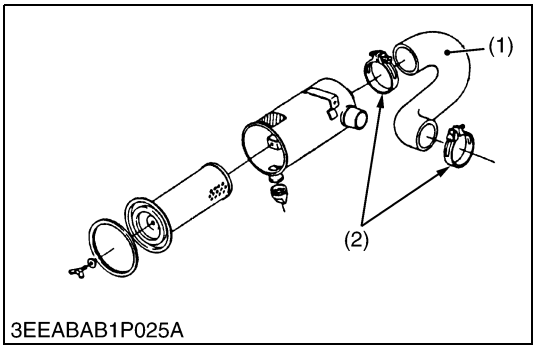

3EEABAB1P025A

Checking Intake Air Line

1. Check to see if the intake air hose(s) are properly fixed every 200 hours of operation.
2. If the clamp is loose, apply oil to the threads and retighten it securely.
3. The intake air hose(s) is made of rubber and tends to age. It must be changed every two years. Also change the clamp and tighten it securely.

IMPORTANT

- **To prevent serious damage to the engine, keep out any dust inside the intake air line.**

(1) Intake Air Hose (2) Clamp

W1029631

[6] CHECK POINTS OF EVERY 400 HOURS

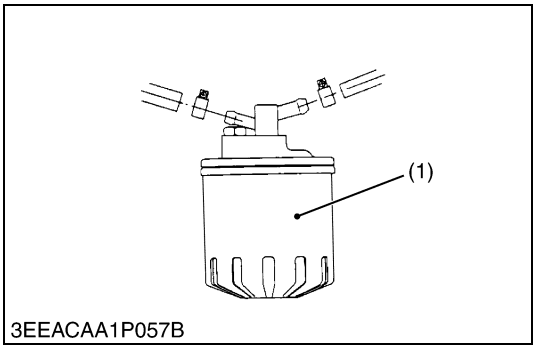

3EEACAA1P057B

Replacing Fuel Filter Cartridge (Cartridge Type)

Water and dust in fuel are collected in the filter cartridge. So, change the filter cartridge every 400 hours service.

1. Remove the used filter cartridge with filter wrench.
2. Apply a thin film of fuel to the surface of new filter cartridge gasket before screwing on.
3. Then tighten enough by hand.
4. Loosen the air vent plug to let the air out.
5. Start engine and check for fuel leakage.

(1) Fuel Filter Cartridge

W1050548

https://truckmanualshub.com/

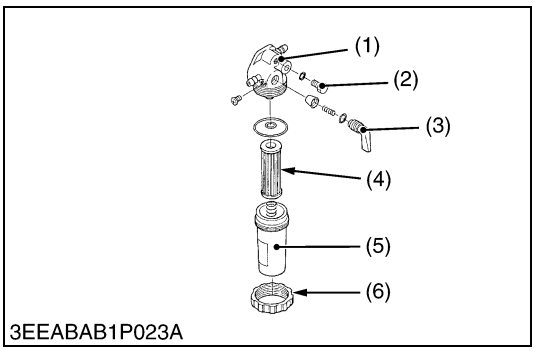

Replacing Fuel Filter Element (Element Type)

1. Close the fuel cock (3).
2. Unscrew the retaining ring (6) and remove the filter cup (5), and rinse the inside with kerosene.
3. Replace the filter element (4).
4. Reassemble the fuel filter, keeping out dust and dirt.
5. Bleed the fuel system.

(1) Cock Body
(2) Air Vent Plug
(3) Fuel Cock
(4) Filter Element
(5) Filter Cup
(6) Retaining Ring

W1050583

[7] CHECK POINTS OF EVERY 500 HOURS

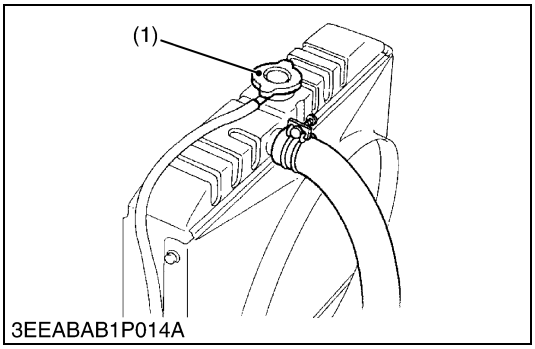

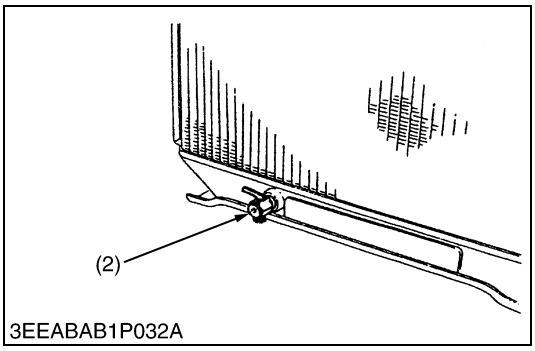

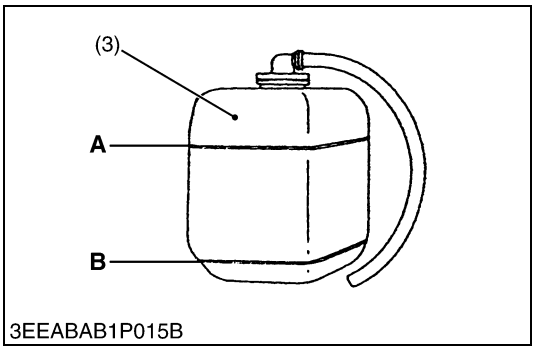

Cleaning Water Jacket and Radiator Interior

CAUTION

- **Do not remove the radiator cap when the engine is hot. Then loosen cap slightly to the stop to relieve any excess pressure before removing cap completely.**

1. Stop the engine and let cool down.
2. To drain the coolant, open the radiator drain plug (2) and remove the radiator cap (1). Then radiator cap (1) must be removed to completely drain the coolant. And open the drain cock of engine body.
3. After all coolant is drained, close the drain plug.
4. Fill with clean water and cooling system cleaner.
5. Follow directions of the cleaner instruction.
6. After flushing, fill with clean water and anti-freeze until the coolant level is just below the port. Install the radiator cap (1) securely.
7. Fill with coolant up to “FULL” (**A**) mark on the recovery tank (3).
8. Start and operate the engine for few minutes.
9. Stop the engine and let cool. Check coolant level of radiator and recovery tank (3) and add coolant if necessary.

■ **IMPORTANT**

- **Do not start engine without coolant.**
- **Use clean, fresh, soft water and anti-freeze to fill the radiator and recovery tank.**
- **When the anti-freeze is mixed with fresh, soft water, the anti-freeze mixing ratio must be less than 50 %.**
- **Securely tighten radiator cap. If the cap is loose or improperly fitted, water may leak out and the engine could overheat.**

(1) Radiator Cap
(2) Drain Plug
(3) Recovery Tank

A : Full
B : Low

W1038102

https://truckmanualshub.com/

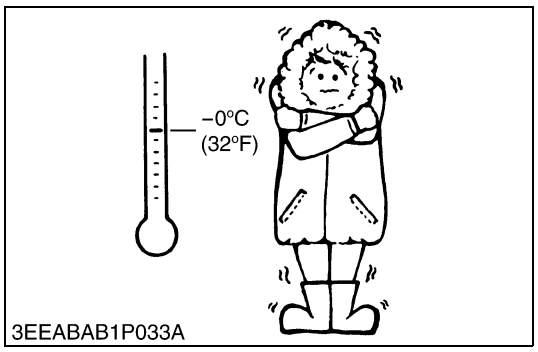

Anti-Freeze

- There are two types of anti-freeze available: use the permanent type (PT) for this engine.
- Before adding anti-freeze for the first time, clean the radiator interior by pouring fresh, soft water and draining it a few times.
- The procedure for mixing water and anti-freeze differs according to the make of the anti-freeze and the ambient temperature. Basically, it should be referred to SAE J1034 standard, more specifically also to SAE J814c.
- Mix the anti-freeze with fresh, soft water, and then fill into the radiator.

■ **IMPORTANT**

- **When the anti-freeze is mixed with fresh, soft water, the anti-freeze mixing ratio must be less than 50 %.**

Vol % anti-freeze	Freezing point		Boiling point*	
	°C	°F	°C	°F
40	–24	–11.2	106	222.8
50	–37	–34.6	108	226.4

* At 1.013 × 100000 Pa (760 mmHg) pressure (atmospheric). A higher boiling point is obtained by using a radiator pressure cap which permits the development of pressure within the cooling system.

■ **NOTE**

- **The above data represents industrial standards that necessitate a minimum glycol content in the concentrated anti-freeze.**
- **When the coolant level drops due to evaporation, add fresh, soft water only to keep the anti-freeze mixing ratio less than 50 %. In case of leakage, add anti-freeze and fresh, soft water in the specified mixing ratio.**
- **Anti-freeze absorbs moisture. Keep unused anti-freeze in a tightly sealed container.**
- **Do not use radiator cleaning agents when anti-freeze has been added to the coolant.**
  (Anti-freeze contains an anti-corrosive agent, which will react with the radiator cleaning agent forming sludge which will affect the engine parts.)

W1039218

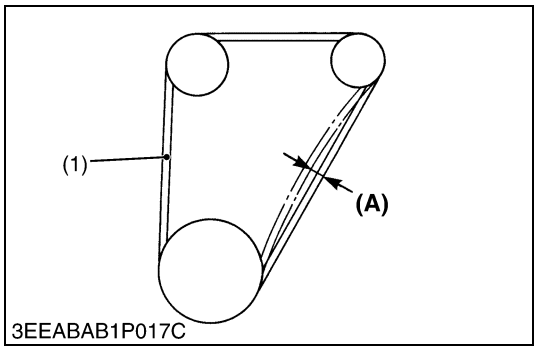

Replacing Fan Belt

1. Remove the alternator.
2. Remove the fan belt (1).
3. Replace new fan belt.
4. Install the alternator.
5. Check the fan belt tension.

Deflection **(A)**	Factory spec.	7.0 to 9.0 mm / 98 N 0.28 to 0.35 in. / 98 N (10 kgf, 22 lbs)

(1) Fan Belt **(A) Deflection**

W1052220

https://truckmanualshub.com/

[8] CHECK POINTS OF EVERY 1 OR 2 MONTHS

Recharging

CAUTION

- **When the battery is being activated, hydrogen and oxygen gases in the battery are extremely explosive. Keep open sparks and flames away from the battery at all times, especially when charging the battery.**
- **When charging battery, remove battery vent plugs.**
- **When disconnecting the cable from the battery, start with the negative terminal first. When connecting the cable to the battery, start with the positive terminal first.**
- **Never check battery charge by placing a metal object across the posts.**
  Use a voltmeter or hydrometer.

1) Slow Charging

1. Add distilled water if the electrolyte level is low. When charging, the amount of electrolyte should be slightly lower than the specified level to prevent overflow.
2. Connect the battery to the charging unit, following the manufacture's instructions.
3. As the electrolyte generates gas while charging, remove all port caps.
4. The electrolyte temperature must not exceed 40 °C (104 °F) during charging.
   If it exceed 40 °C (104 °F), decrease the charging amperage or stop charging for a while.
5. When charging several batteries in series, charg at the rate of the smallest battery in the line.

2) Quick Charging

1. Determine the proper charging current and charging time with the tester attached to the quick charger.
2. Determine the proper charging current as 1/1 of the battery capacity. If the battery capacity exceeds 50 Ah, consider 50 A as the maximum.

■ Precaution for Operating a Quick Charger

- Operate with a quick charger differs according to the type.
  Consult the instruction manual and use accordingly.

W1052658

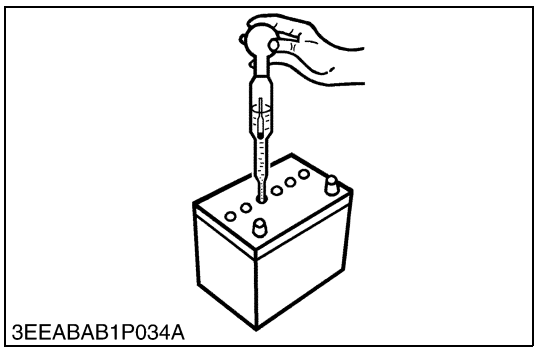
3EEABAB1P034A

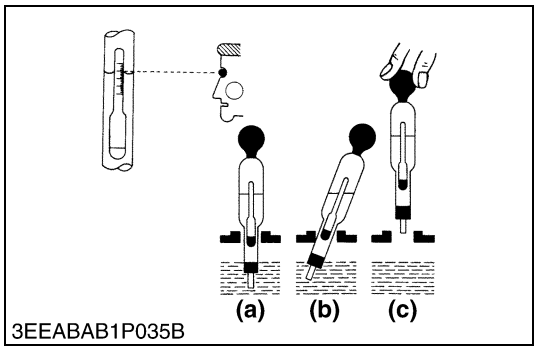

3EEABAB1P035B

Battery Specific Gravity

1. Check the specific gravity of the electrolyte in each cell with a hydrometer.
2. When the electrolyte temperature differs from that at which the hydrometer was calibrated, correct the specific gravity reading following the formula mentioned in **(Reference)**.
3. If the specific gravity is less than 1.215 (after it is corrected for temperature), charge or replace the battery.
4. If the specific gravity differs between any two cells by more than 0.05, replace the battery.

■ **NOTE**

- **Hold the hydrometer tube vertical without removing it from the electrolyte.**
- **Do not suck too much electrolyte into the tube.**
- **Allow the float to move freely and hold the hydrometer at eye level.**
- **The hydrometer reading must be taken at the highest electrolyte level.**

(Reference)

- Specific gravity slightly varies with temperature. To be exact, the specific gravity decreases by 0.0007 with an increase of 1 °C (0.0004 with an increase of 1 °F) in temperature, and increases by 0.0007 with a decreases of 1 °C (0.0004 with a decrease of 1 °F).
  Therefore, using 20 °C (68 °F) as a reference, the specific gravity reading must be corrected by the following formula :
  - Specific gravity at 20 °C = Measured value + 0.0007 × (electrolyte temperature : 20 °C)
  - Specific gravity at 68 °F = Measured value + 0.0004 × (electrolyte temperature : 68 °F)

Specific Gravity	State of Charge
1.260 Sp. Gr.	100 % Charged
1.230 Sp. Gr.	75 % Charged
1.200 Sp. Gr.	50 % Charged
1.170 Sp. Gr.	25 % Charged
1.140 Sp. Gr.	Very Little Useful Capacity
1.110 Sp. Gr.	Discharged

At an electrolyte temperature of 20 °C (68 °F)

(a) Good
(b) Bad
(c) Bad

W1012763

[9] CHECK POINTS OF EVERY YEAR

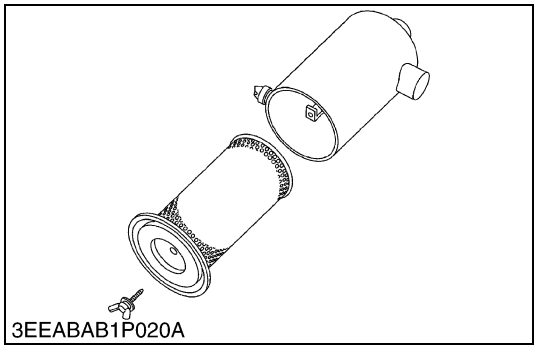
3EEABAB1P020A

Replacing Air Cleaner Element

1. Remove used air cleaner element.
2. Replace new air cleaner element.

■ **NOTE**

- **The air cleaner uses a dry element. Never apply oil to it.**
- **Do not run the engine with filter element removed.**

W1020554

https://truckmanualshub.com/

[10] CHECK POINTS OF EVERY 800 HOURS

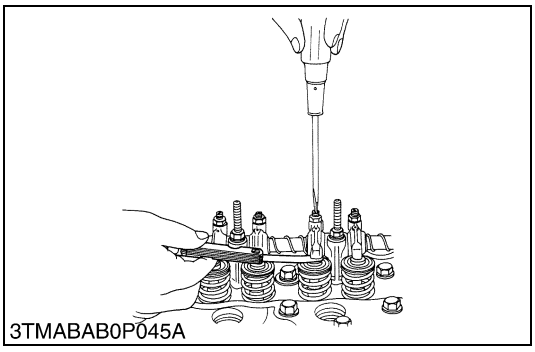
3TMABAB0P045A

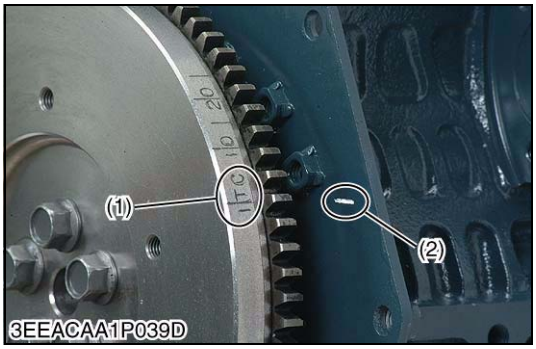

3EEACAA1P039D

Checking Valve Clearance

■ **IMPORTANT**
- **Valve clearance must be checked and adjusted when engine is cold.**

1. Remove the cylinder head cover and the glow plugs.
2. Align the **"1TC"** mark (1) on the flywheel and alignment mark (2) on the rear end plate so that the No. 1 piston comes to the compression top dead center.
3. Check the following valve clearance marked with "☆" using a thickness gauge.
4. If the clearance is not within the factory specifications, adjust with the adjusting screw.
5. Then turn the flywheel 6.28 rad (360 °), and align the **"1TC"** mark (1) on the flywheel and alignment mark (2) on the rear end plate so that the No. 1 piston comes to the overlap position.
6. Check the following valve clearance marked with "☆" using a feeler gauge.
7. If the clearance is not within the factory specifications, adjust with the adjusting screw.

Number of cylinders / Valve arrangement / Adjustable cylinder location of piston		3 cylinder		4 cylinder	
		IN.	EX.	IN.	EX.
When No. 1 piston is compression top dead center	1st	☆	☆	☆	☆
	2nd		☆	☆	
	3rd	☆			☆
	4th				
When No. 1 piston is overlap position	1st				
	2nd	☆			☆
	3rd		☆	☆	
	4th			☆	☆

Valve clearance	Factory spec.	0.145 to 0.185 mm 0.00571 to 0.00728 in.

■ **NOTE**
- **The sequence of cylinder numbers is given as No. 1, No. 2, No. 3 and No. 4 starting from the gear case side.**
- **After adjusting the valve clearance, secure the adjusting screw with the lock nut.**

(1) **"1TC"** Mark (2) Alignment Mark

W10113200

https://truckmanualshub.com/

[11] CHECK POINTS OF EVERY 1500 HOURS

CAUTION

- **Check the injection pressure and condition after confirming that there is nobody standing in the direction the fume goes.**
  If the fume from the nozzle directly contacts the human body, cells may be destroyed and blood poisoning may be caused.

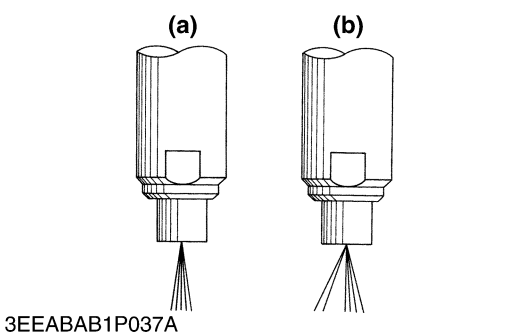

3EEABAB1P037A

Nozzle Spraying Condition

1. Set the injection nozzle to a nozzle tester, and check the nozzle spraying condition.
2. If the spraying condition is defective, replace the nozzle piece.

(a) Good **(b) Bad**

W10411400

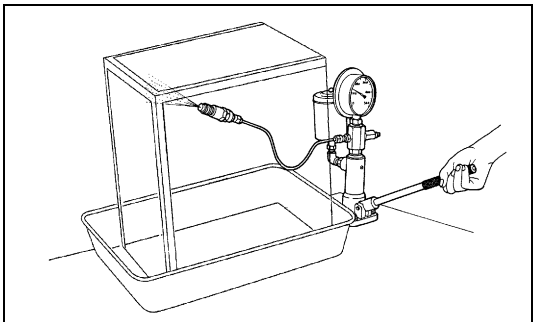
3TLABAB1P040A

Fuel Injection Pressure

1. Set the injection nozzle to a nozzle tester.
2. Slowly move the tester handle to measure the pressure at which fuel begins jetting out from the nozzle.
3. If the measurement is not within the factory specifications, replace the adjusting washer in the nozzle holder to adjust it.

Fuel injection pressure	Factory spec.	13.73 to 14.71 MPa 140 to 150 kgf/cm^2 1991 to 2134 psi

W10408820

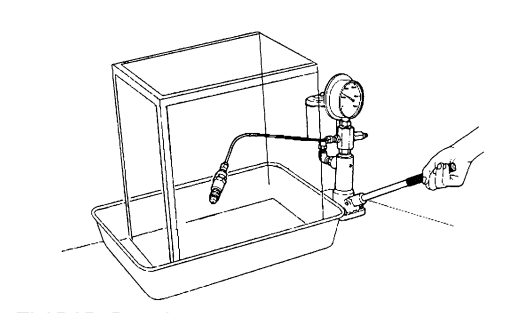
3TLABAB1P041A

Valve Seat Tightness

1. Set the injection nozzle to a nozzle tester.
2. Raise the fuel pressure, and keep at 12.75 MPa (130 kgf/cm^2, 1849 psi) for 10 seconds.
3. If any fuel leak is found, replace the nozzle piece.

Valve seat tightness	Factory spec.	No fuel leak at 12.75 MPa 130 kgf/cm^2 1849 psi

W10412730

https://truckmanualshub.com/

[12] CHECK POINTS OF EVERY 3000 HOURS

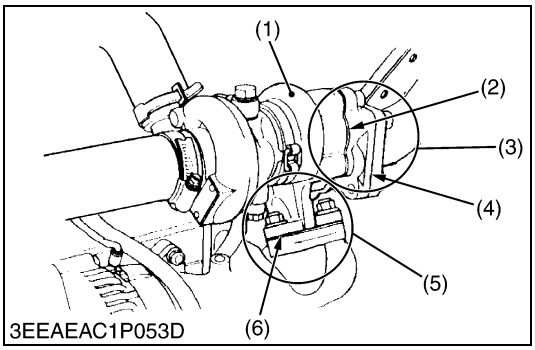

3EEAEAC1P053D

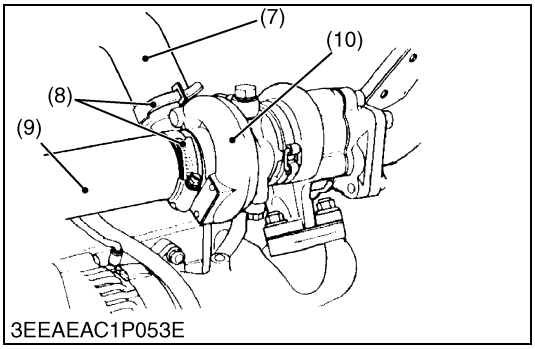

3EEAEAC1P053E

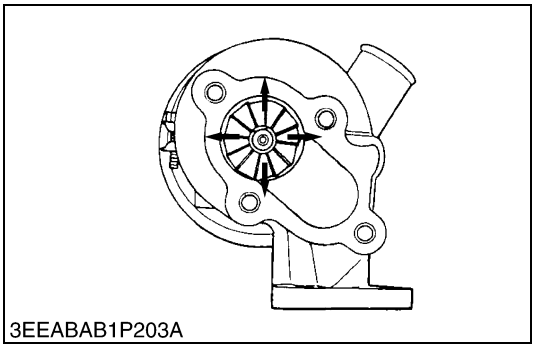
3EEABAB1P203A

Checking Turbocharger

(Turbine Side)

1. Check the exhaust port (3) and inlet port (5) side of turbine housing (1) to see if there is no exhaust gas leak.
2. If any gas leak is found, retighten the bolts and nuts or replace the gasket (2) / (4) / (6) with new one.

(Compressor Side)

1. Check the inlet hose (9) of the compressor cover (10) to see if there is no air leak.
2. If any air leak is found, change the clamp (8) and / or inlet hoses.
3. Check the intake hose (7) and the clamp to see if there is not loose or crack.
4. If any loose or crack is found, tighten the cramp or change the hose to prevent dust from entry.

(Radial Clearance)

1. If the wheel contact to the housing, replace the turbocharger assembly with new one.

(1) Turbine Housing
(2) Gasket
(3) Exhaust Port
(4) Gasket
(5) Inlet Port
(6) Gasket
(7) Intake Hose
(8) Clamp
(9) Inlet Hose
(10) Compressor Cover

W1022082

https://truckmanualshub.com/

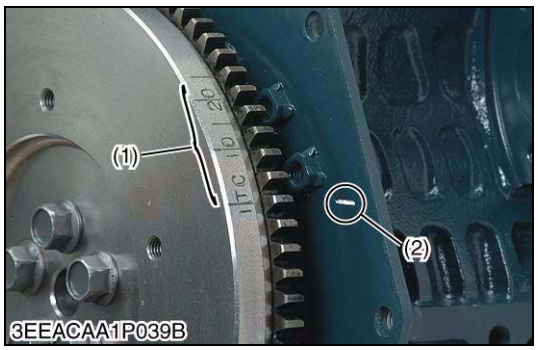

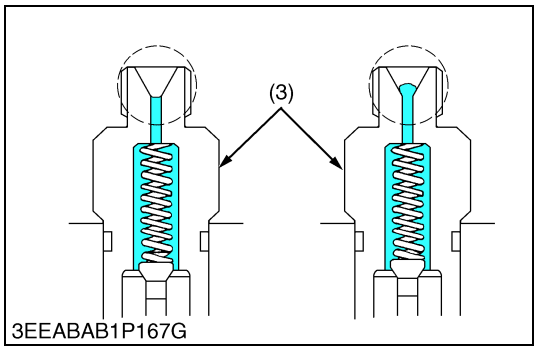

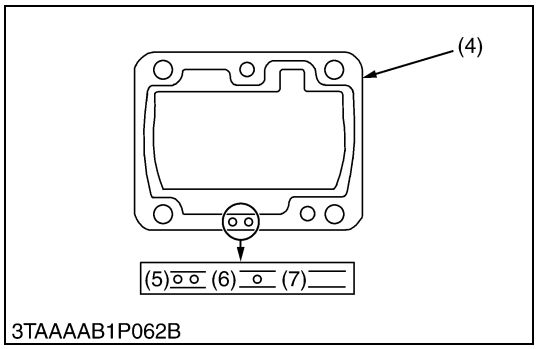

Injection Timing

1. Remove the injection pipes.
2. Remove the engine stop solenoid.
3. Turn the flywheel counterclockwise (viewed from flywheel side) until the fuel fills up to the hole of the delivery valve holder (3) for No. 1 cylinder.
4. After the fuel fills up to the hole of the delivery valve holder for No. 1 cylinder, turn back (clockwise) the flywheel around 1.57 rad (90 °).
5. Turn the flywheel counterclockwise to set at around 0.44 rad (25 °) before T.D.C..
6. Slowly turn the flywheel counterclockwise and stop turning when the fuel begins to come up, to get the present injection timing.
7. Check to see the degree on flywheel.
   The flywheel gas mark “1TC”, “10” and “20” for the crank angle before the top dead center of No. 1 cylinder.
8. If injection timing is out of adjustment, readjust the timing with shims.

Injection timing (3000 min^{-1} (rpm))	Factory spec.	0.30 to 0.33 rad (17 to 19 °) before T.D.C.
Injection timing (3600 min^{-1} (rpm))	Factory spec.	0.35 to 0.39 rad (20 to 22 °) before T.D.C.
Injection timing for BG type (1800 min^{-1} (rpm))	Factory spec.	0.27 to 0.31 rad (15.5 to 17.5 °) before T.D.C.

■ **NOTE**

- **The liquid gasket is not required for assembling.**
- **Shims are available in thickness of 0.20 mm (0.0079 in.), 0.25 mm (0.0098 in.) and 0.30 mm (0.0118 in.). Combine these shims for adjustments.**
- **Addition or reduction of shim (0.05 mm, 0.0020 in.) delays or advances the injection timing by approx. 0.0087 rad (0.5 °).**
- **In disassembling and replacing the injection pump, be sure to use the same number of new shims with the same thickness.**

(1) Timing Line
(2) Alignment Mark
(3) Delivery Valve Holder
(4) Shim (Soft Metal Gasket Shim)
(5) Two-holes : 0.20 mm (0.0079 in.)
(6) One-hole : 0.25 mm (0.0098 in.)
(7) Without hole : 0.30 mm (0.0118 in.)

W1023147

https://truckmanualshub.com/

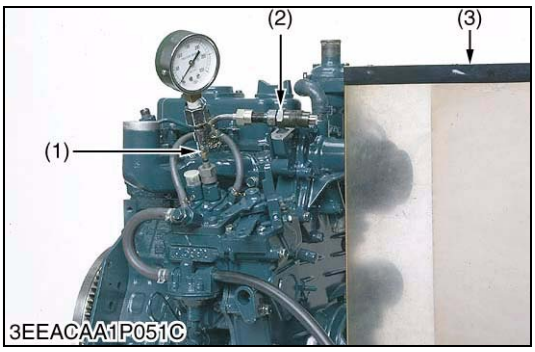

Checking Injection Pump

(Fuel Tightness of Pump Element)

1. Remove the engine stop solenoid.
2. Remove the injection pipes and glow plugs.
3. Install the injection pump pressure tester to the injection pump.
4. Install the injection nozzle (2) jetted with the proper injection pressure to the injection pump pressure tester (1). (Refer to the photo.)
5. Set the speed control lever to the maximum speed position.
6. Run the starter to increase the pressure.
7. If the pressure can not reach the allowable limit, replace the pump with new one or repair with a Kubota-authorized pump service shop.

(Fuel Tightness of Delivery Valve)

1. Remove the engine stop solenoid.
2. Remove the injection pipes and glow plugs.
3. Set a pressure tester to the fuel injection pump.
4. Install the injection nozzle (2) jetted with the proper injection pressure to the injection pump pressure tester (1).
5. Run the starter to increase the pressure.
6. Stop the starter when the fuel jets from the injection nozzle. After that, turn the flywheel by the hand and raise the pressure to approx. 13.73 MPa (140 kgf/cm^2, 1991 psi).
7. Now turn the flywheel back about half a turn (to keep the plunger free). Maintain the flywheel at this position and clock the time taken for the pressure to drop from 13.73 to 12.75 MPa (from 140 to 130 kgf/cm^2, from 1991 to 1849 psi).
8. Measure the time needed to decrease the pressure from 13.73 to 12.75 MPa (140 to 130 kgf/cm^2, 1991 to 1849 psi).
9. If the measurement is less than allowable limit, replace the pump with new one or repair with a Kubota-authorized pump service shop.

Fuel tightness of pump element	Allowable limit	13.73 MPa 140 kgf/cm^2 1991 psi
Fuel tightness of delivery valve	Factory spec.	10 seconds 13.73 → 12.75 MPa 140 → 130 kgf/cm^2 1991 → 1849 psi
	Allowable limit	5 seconds 13.73 → 12.75 MPa 140 → 130 kgf/cm^2 1991 → 1849 psi

■ **NOTE**

- **Never try to disassemble the injection pump assembly. For repairs, you are strongly requested to contact a Kubota-authorized pump service shop.**

(1) Injection Pump Pressure Tester
(2) Injection Nozzle
(3) Protection Cover for Jetted Fuel

W1022357

[13] CHECK POINTS OF EVERY 2 YEARS

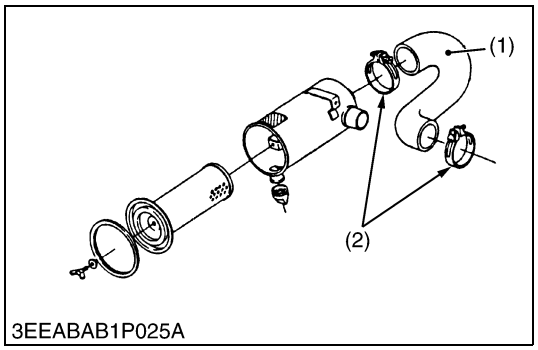

3EEABAB1P025A

Replacing Intake Air Line

1. Loosen the clamp (2).
2. Remove the intake air hose (1) and clamp (2).
3. Replace new intake air hose (1) and new clamp (2).
4. Tighten the clamp (2).

■ **NOTE**

- **To prevent serious damage to the engine, keep out any dust inside the intake air line.**

(1) Intake Air Hose (2) Clamp

W1023867

Replacing Battery

CAUTION

- **When the battery is being activated, hydrogen and oxygen gases in the battery are extremely explosive. Keep open sparks and flames away from the battery at all times, especially when charging the battery.**
- **When charging battery, remove battery vent plugs.**
- **When disconnecting the cable from the battery, start with the negative terminal first. When connecting the cable to the battery, start with the positive terminal first.**
- **Never check battery charge by placing a metal object across the posts.**

1. Disconnect the negative terminal and positive terminal.
2. Remove the battery holder.
3. Remove the used battery.
4. Replace the new battery.
5. Tighten the battery holder.
6. Connect the positive terminal.
7. Connect the negative terminal.

W1023996

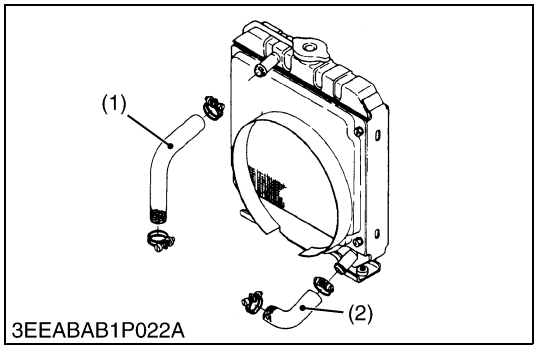

3EEABAB1P022A

Replacing Radiator Hoses and Clamp Bands

CAUTION

- **Do not remove the radiator cap when the engine is hot. Then loosen cap slightly to the stop to relieve any excess pressure before removing cap completely.**

1. Drain the coolant.
2. Loosen the clamp bands.
3. Remove the upper hose (1) and lower hose (2).
4. Replace new upper / lower hose (1), (2) and clamp bands.
5. Tighten the clamp bands.
6. Fill with clean water and anti-freeze until the coolant level is just below the port. Install the radiator cap securely.

(1) Upper Hose (2) Lower Hose

W1024178

https://truckmanualshub.com/

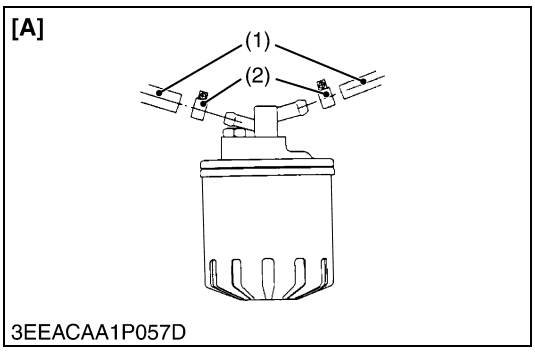

3EEACAA1P057D

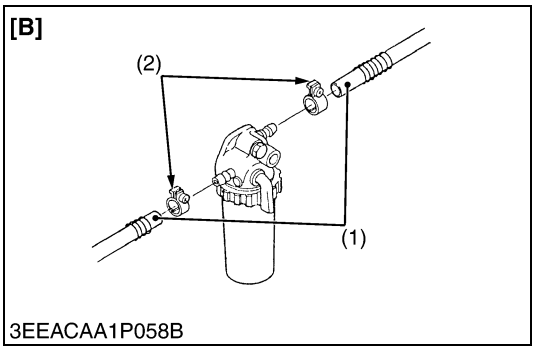

3EEACAA1P058B

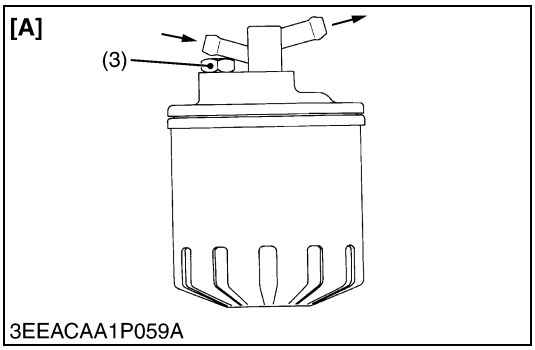

3EEACAA1P059A

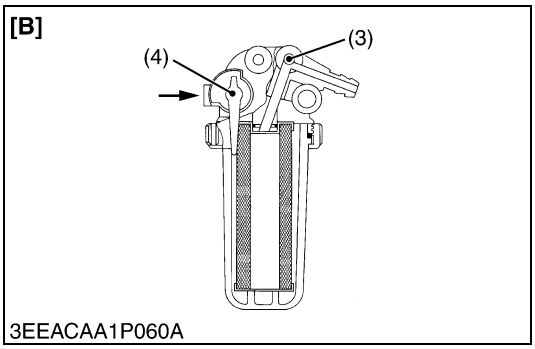

3EEACAA1P060A

Replacing Fuel Hoses and Clamp Bands

1. Loosen the clamp (2) and remove the fuel hose (1).
2. Replace new fuel hose (1) and new clamp (2).
3. Tighten the clamp (2).

CAUTION

- **Stop the engine when attempting the check and change prescribed above.**

(When bleeding fuel system)

1. Fill the tank with fuel and open the cock (4).
2. Loosen the air vent plug (3) of the fuel filter a few turns.
3. Screw back the plug when bubbles do not come up any more.
4. Open the air vent cock on top of the fuel injection pump.
5. If equipped electrical fuel feed pump, turn the key to **AC** position and pump the fuel up for 10 to 15 seconds.
   If equipped mechanical fuel feed pump, set the stop lever on stop position and crank the engine for 10 to 15 seconds.
6. Close securely the air vent cock after air bleeding.

NOTE

- **Always keep the air vent cock on the fuel injection pump closed except when air is vented, or it may cause the engine to stop.**

(1) Fuel Hose
(2) Clamp
(3) Air Vent Plug
(4) Fuel Cock

[A] Cartridge Type
[B] Element Type

W1024305

https://truckmanualshub.com/

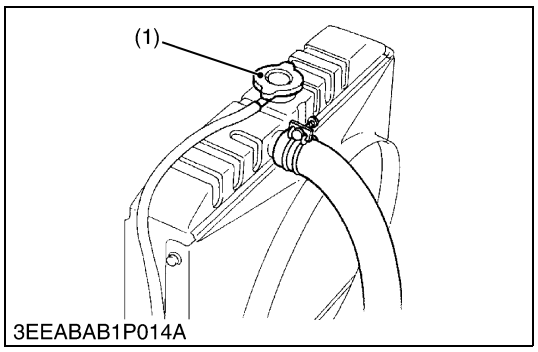

3EEABAB1P014A

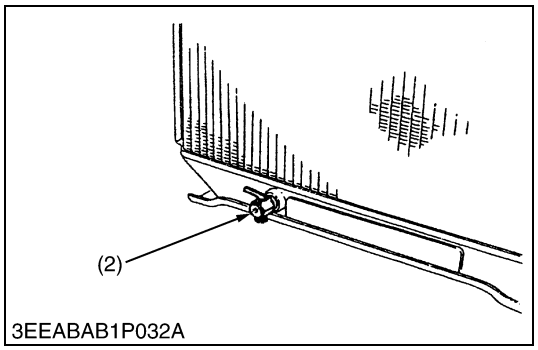

3EEABAB1P032A

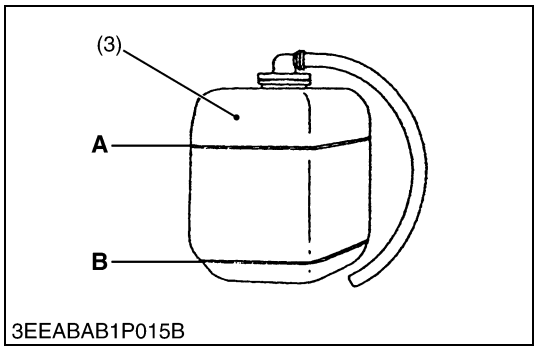

3EEABAB1P015B

Changing Radiator Coolant (L.L.C.)

CAUTION

- **Do not remove the radiator cap when the engine is hot. Then loosen cap slightly to the stop to relieve any excess pressure before removing cap completely.**

1. Stop the engine and let cool down.
2. To drain the coolant, open the radiator drain plug (2) and remove the radiator cap (1). Then radiator cap (1) must be removed to completely drain the coolant. And open the drain cock of engine body.
3. After all coolant is drained, close the drain plug.
4. Fill with clean water and cooling system cleaner.
5. Follow directions of the cleaner instruction.
6. After flushing, fill with clean water and anti-freeze until the coolant level is just below the port. Install the radiator cap (1) securely.
7. Fill with coolant up to “FULL” (**A**) mark on the recovery tank (3).
8. Start and operate the engine for few minutes.
9. Stop the engine and let cool. Check coolant level of radiator and recovery tank (3) and add coolant if necessary.

■ **IMPORTANT**

- **Do not start engine without coolant.**
- **Use clean, fresh, soft water and anti-freeze to fill the radiator and recovery tank.**
- **When the anti-freeze is mixed with fresh, soft water, the anti-freeze mixing ratio must be less than 50 %.**
- **Securely tighten radiator cap. If the cap is loose or improperly fitted, water may leak out and the engine could overheat.**

(1) Radiator Cap
(2) Drain Plug
(3) Recovery Tank

A : Full
B : Low

W1024599

https://truckmanualshub.com/

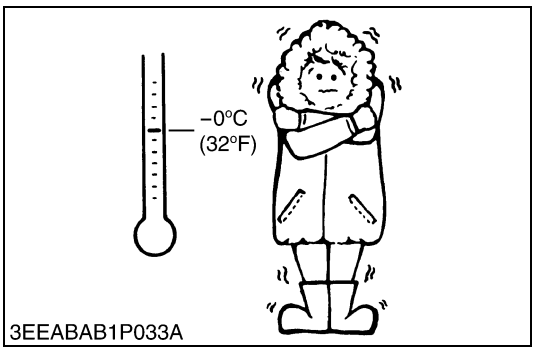

Changing Radiator Coolant (L.L.C.) (Continued)

(Anti-freeze)

- There are two types of anti-freeze available: use the permanent type (PT) for this engine.
- Before adding anti-freeze for the first time, clean the radiator interior by pouring fresh, soft water and draining it a few times.
- The procedure for mixing water and anti-freeze differs according to the make of the anti-freeze and the ambient temperature. Basically, it should be referred to SAE J1034 standard, more specifically also to SAE J814c.
- Mix the anti-freeze with fresh, soft water, and then fill into the radiator.

■ **IMPORTANT**

- **When the anti-freeze is mixed with fresh, soft water, the anti-freeze mixing ratio must be less than 50 %.**

Vol % anti-freeze	Freezing point		Boiling point*	
	°C	°F	°C	°F
40	–24	–11.2	106	222.8
50	–37	–34.6	108	226.4

* At 1.013 × 100000 Pa (760 mmHg) pressure (atmospheric). A higher boiling point is obtained by using a radiator pressure cap which permits the development of pressure within the cooling system.

■ **NOTE**

- **The above data represents industrial standards that necessitate a minimum glycol content in the concentrated anti-freeze.**
- **When the coolant level drops due to evaporation, add fresh, soft water only to keep the anti-freeze mixing ratio less than 50 %. In case of leakage, add anti-freeze and fresh, soft water in the specified mixing ratio.**
- **Anti-freeze absorbs moisture. Keep unused anti-freeze in a tightly sealed container.**
- **Do not use radiator cleaning agents when anti-freeze has been added to the coolant.**
  (Anti-freeze contains an anti-corrosive agent, which will react with the radiator cleaning agent forming sludge which will affect the engine parts.)

W1024852

5. SPECIAL TOOLS

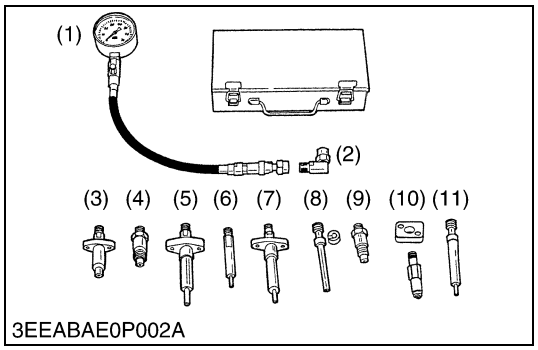

Diesel Engine Compression Tester (for Nozzle Hole)

Code No: 07909-30208 (Assembly) 07909-31251 (**G**)
07909-30934 (**A** to **F**) 07909-31271 (**I**)
07909-31211 (**E** and **F**) 07909-31281 (**J**)
07909-31231 (**H**)

Application: Use to measure diesel engine compression and diagnosis of need for major overhaul.

Adaptor : **H** for 05-E2B series.

(1) Gauge
(2) **L** Joint
(3) Adaptor **A**
(4) Adaptor **B**
(5) Adaptor **C**
(6) Adaptor **E**
(7) Adaptor **F**
(8) Adaptor **G**
(9) Adaptor **H**
(10) Adaptor **I**
(11) Adaptor **J**

W1024200

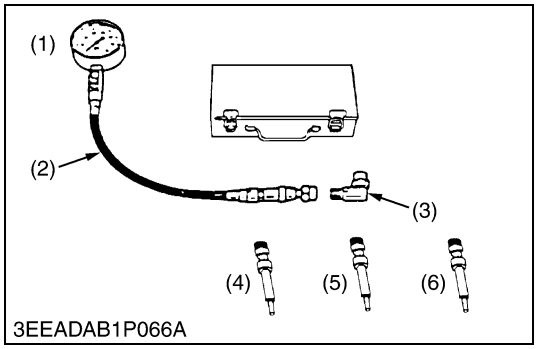

Diesel Engine Compression Tester (for Glow Plug Hole)

Code No: 07909-39081 (Assembly) 07909-31301 (**L**)
07909-31291 (**K**) 07909-31311 (**M**)

Application: Use to measure diesel engine compression and diagnosis of need for major overhaul.

Adaptor : **L** for 05-E2B series.

(1) Gauge
(2) **L** Joint
(3) Adaptor **K**
(4) Adaptor **L**
(5) Adaptor **M**

W1025289

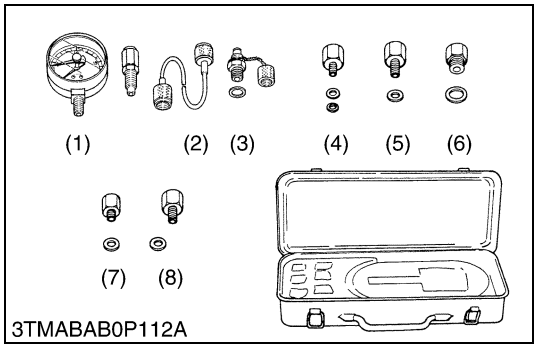

Oil Pressure Tester

Code No: 07916-32032

Application: Use to measure lubricating oil pressure.

(1) Gauge
(2) Cable
(3) Threaded Joint
(4) Adaptor **1**
(5) Adaptor **2**
(6) Adaptor **3**
(7) Adaptor **4**
(8) Adaptor **5**

W1024318

https://truckmanualshub.com/

■ **NOTE**

- **The following special tools are not provided, so make them referring to the figure.**

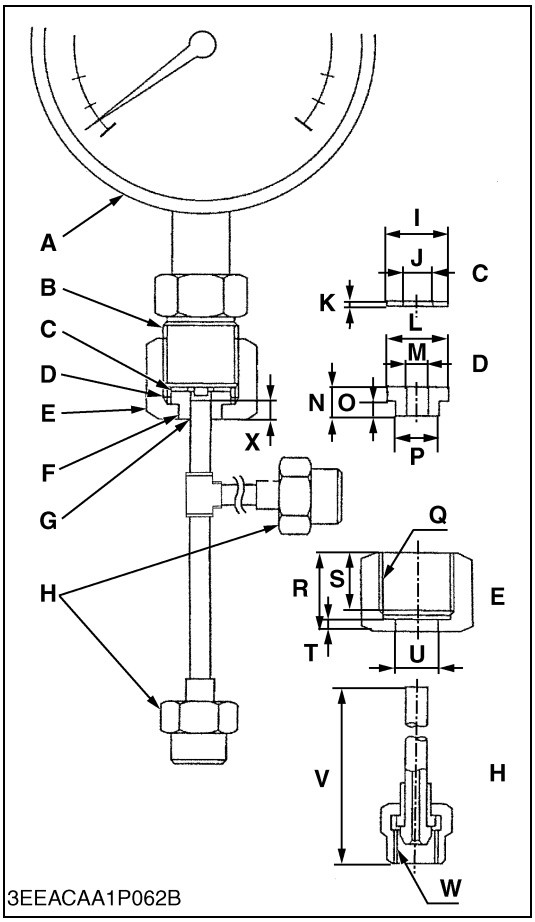

3EEACAA1P062B

Injection Pump Pressure Tester

Application: Use to check fuel tightness of injection pumps.

A	Pressure gauge full scale : More than 29.4 MPa (300 kgf/cm^2, 4267 psi)
B	PF 1/2
C	Copper gasket
D	Flange (Material : Steel)
E	Hex. nut 27 mm (1.06 in.) across the plat
F	Adhesive application
G	Fillet welding on the enter circumference
H	Retaining nut
I	17 mm dia. (0.67 in. dia.)
J	8 mm dia. (0.31 in. dia.)
K	1.0 mm (0.039 in.)
L	17 mm dia. (0.67 in. dia.)
M	6.10 to 6.20 mm dia. (0.2402 to 0.2441 in. dia.)
N	8 mm (0.31 in.)
O	4 mm (0.16 in.)
P	11.97 to 11.99 mm dia. (0.4713 to 0.4720 in. dia.)
Q	PF 1/2
R	23 mm (0.91 in.)
S	17 mm (0.67 in.)
T	4 mm (0.16 in.)
U	12.00 to 12.02 mm dia. (0.4724 to 0.4732 in. dia.)
V	100 mm (3.94 in.)
W	M12 × P1.5
X	5 mm (0.20 in.)

W10252400

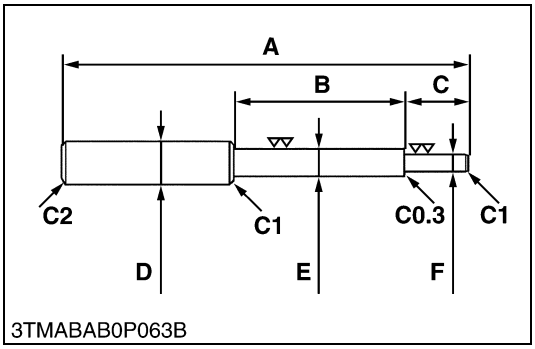

3TMABAB0P063B

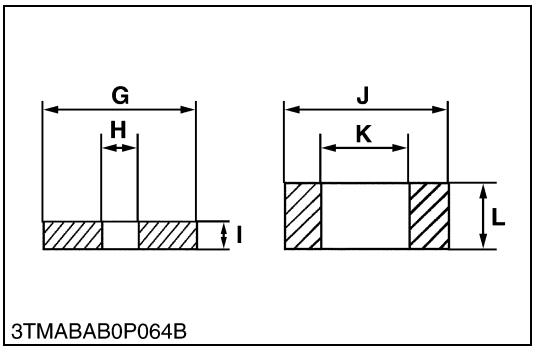

3TMABAB0P064B

Valve Guide Replacing Tool

Application: Use to press out and press fit the valve guide.

A	225 mm (8.86 in.)
B	70 mm (2.76 in.)
C	45 mm (1.77 in.)
D	20 mm dia. (0.79 in. dia.)
E	11.7 to 11.9 mm dia. (0.461 to 0.469 in. dia.)
F	6.5 to 6.6 mm dia. (0.256 to 0.260 in. dia.)
G	25 mm (0.98 in.)
H	6.7 to 7.0 mm dia. (0.264 to 0.276 in. dia.)
I	5 mm (0.197 in.)
J	20 mm dia. (0.787 in. dia.)
K	12.5 to 12.8 mm dia. (0.492 to 0.504 in. dia.)
L	8.9 to 9.1 mm (0.350 to 358 in.)
C1	Chamfer 1.0 mm (0.039 in.)
C2	Chamfer 2.0 mm (0.079 in.)
C0.3	Chamfer 0.3 mm (0.012 in.)

W10250170

https://truckmanualshub.com/

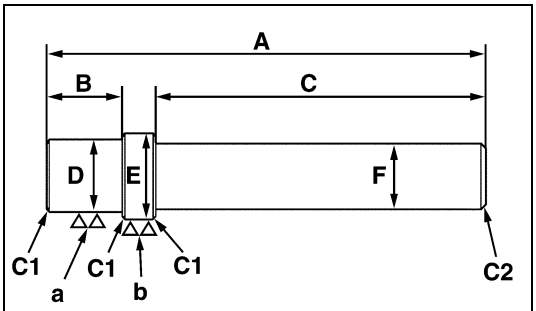

3EEABAB1P038A

Bushing Replacing Tool

Application: Use to press out and press fit the bushing.

1. For small end bushing

A	157 mm (6.1811 in.)
B	24 mm (0.9449 in.)
C	120 mm (4.7244 in.)
D	21.8 to 21.9 mm dia. (0.8583 to 0.8622 in. dia.)
E	24.8 to 24.9 mm dia. (0.9764 to 0.9803 in. dia.)
F	20 mm dia. (0.7874 in. dia.)
a	6.3 μm (250 μin.)
b	6.3 μm (250 μin.)

2. For idle gear bushing

A	196 mm (7.7165 in.)
B	26 mm (1.0236 in.)
C	150 mm (5.9055 in.)
D	25.8 to 25.9 mm dia. (1.0157 to 1.0197 in. dia.)
E	28.8 to 28.9 mm dia. (1.1339 to 1.1378 in. dia.)
F	20 mm dia. (0.7874 in. dia.)
a	6.3 μm (250 μin.)
b	6.3 μm (250 μin.)

W12358870

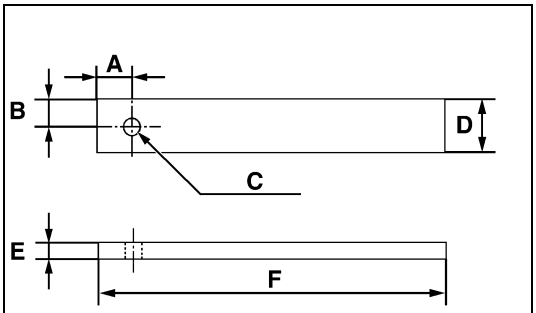

3TMABAB0P067E

Flywheel Stopper

Application: Use to loosen and tighten the flywheel screw.

A	20 mm (0.79 in.)
B	15 mm (0.59 in.)
C	10 mm dia. (0.39 in. dia.)
D	30 mm (1.18 in.)
E	8 mm (0.31 in.)
F	200 mm (7.87 in.)

W10259480

https://truckmanualshub.com/

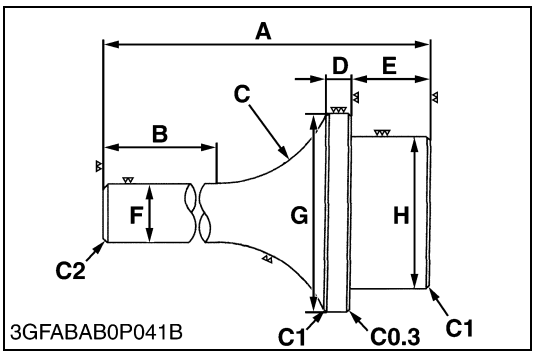

Crankshaft Bearing 1 Replacing Tool

Application: Use to press out and press fit the crankshaft bearing 1.

[Press Out]

A	135 mm (5.31 in.)
B	72 mm (2.83 in.)
C	40 mm radius (1.57 in. radius)
D	10 mm (0.39 in.)
E	24 mm (0.95 in.)
F	20 mm dia. (0.79 in. dia.)
G	51.2 to 51.4 mm dia. (2.0157 to 2.0236 in. dia.)
H	47.3 to 47.5 mm dia. (1.862 to 1.870 in. dia.)
C1	Chamfer 1.0 mm (0.039 in.)
C2	Chamfer 2.0 mm (0.079 in.)
C0.3	Chamfer 0.3 mm (0.012 in.)

[Press Fit]

A	135 mm (5.31 in.)
B	72 mm (2.83 in.)
C	40 mm radius (1.57 in. radius)
D	10 mm (0.39 in.)
E	24 mm (0.95 in.)
F	20 mm dia. (0.79 in. dia.)
G	68 mm dia. (2.68 in. dia.)
H	47.3 to 47.5 mm dia. (1.862 to 1.870 in. dia.)
C1	Chamfer 1.0 mm (0.039 in.)
C2	Chamfer 2.0 mm (0.079 in.)
C0.3	Chamfer 0.3 mm (0.012 in.)

W10261390

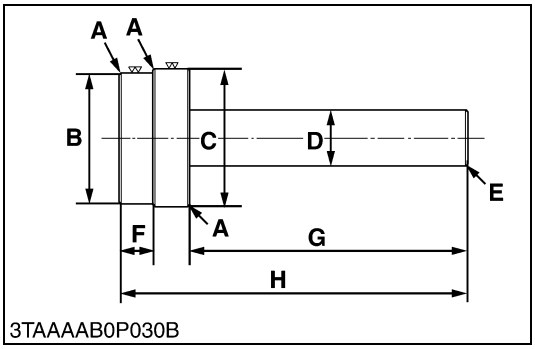

Governor Gear Holder Bushing Replacing Tool

Application: Use to press out and to press fit the governor gear holder bushing.

A	C1 : Chamfer 1.0 mm (0.039 in.)
B	73.9 to 74.0 mm dia. (29.09 to 29.13 in. dia.)
C	69.8 to 69.9 mm (2.748 to 2.751 in. dia.)
D	30 mm dia. (1.181 in. dia.)
E	C2 : Chamfer 2.0 mm (0.079 in.)
F	18 mm (0.7 in.)
G	150 mm (5.9 in.)
H	188 mm (7.4 in.)

W1023337

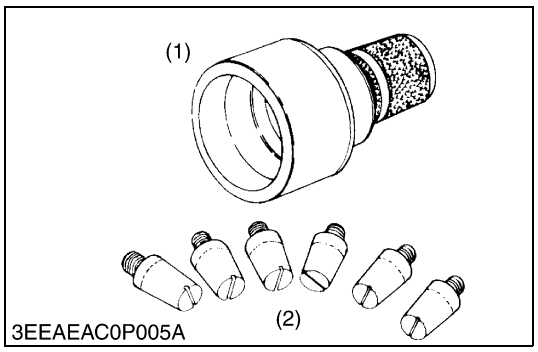

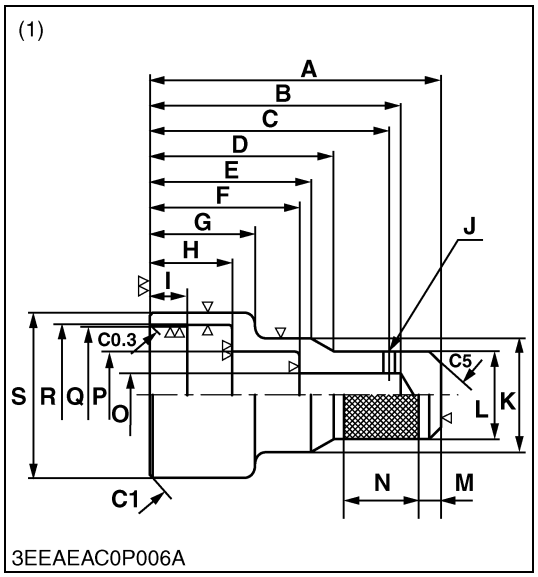

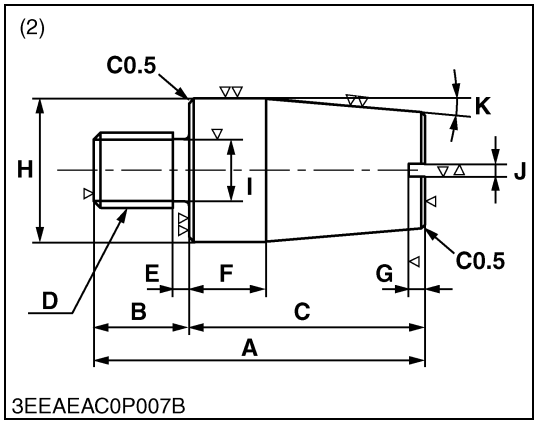

Crank Sleeve Setter

Application: Use to fix the crankshaft sleeve.

(1) Auxiliary Socket for Pushing

A	130 mm (5.12 in.)
B	112 mm (4.41 in.)
C	107 mm (4.21 in.)
D	82 mm (3.23 in.)
E	72 mm (2.83 in.)
F	67 mm (2.64 in.)
G	47 mm (1.85 in.)
H	36.0 to 36.2 mm (1.417 to 1.425 in.)
I	17 mm (0.67 in.)
J	5 mm dia. (0.20 in. dia.)
K	52 mm dia. (2.05 in. dia.)
L	40 mm dia. (1.57 in. dia.)
M	10 mm (0.39 in.)
N	33 mm (1.30 in.)
O	20 mm dia. (0.79 in. dia.)
P	40 mm dia. (1.57 in. dia.)
Q	72.10 to 72.15 mm dia. (2.840 to 2.841 in. dia.)
R	73 mm dia. (2.87 in. dia.)
S	83 mm dia. (3.27 in. dia.)
C0.3	Chamfer 0.3 mm (0.01 in.)
C1	Chamfer 1 mm (0.04 in.)
C5	Chamfer 5 mm (0.2 in.)

(2) Sleeve Guide

A	42 mm (1.65 in.)
B	12 mm (0.47 in.)
C	30 mm (1.18 in.)
D	M10 × Pitch 1.25
E	2 mm (0.08 in.)
F	10 mm (0.39 in.)
G	2.0 mm (0.08 in.)
H	17.90 to 17.95 mm dia. (0.700 to 0.707 in. dia.)
I	8 mm dia. (0.31 in. dia.)
J	1.8 mm (0.07 in.)
K	0.09 rad (5 °)
C0.5	Chamfer 0.5 mm (0.02 in.)

W1026961

https://truckmanualshub.com/

MECHANISM

CONTENTS

1. ENGINE BODY M-1
[1] CLOSED BREATHER (NATURAL ASPIRATION TYPE ONLY)..... M-1
[2] GOVERNOR M-2
[3] BOOST COMPENSATOR M-4

https://truckmanualshub.com/

1. ENGINE BODY

[1] CLOSED BREATHER (NATURAL ASPIRATION TYPE ONLY)

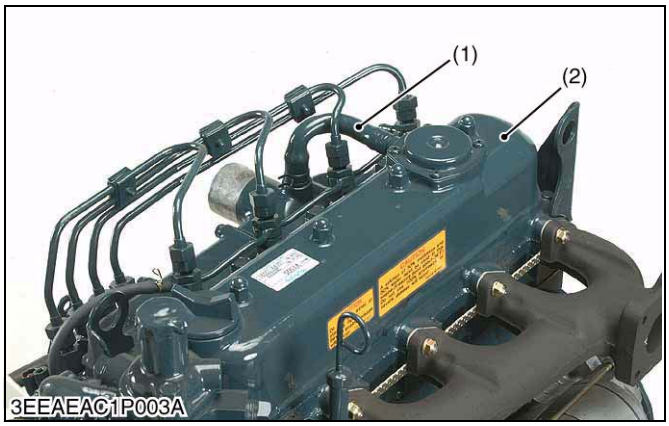

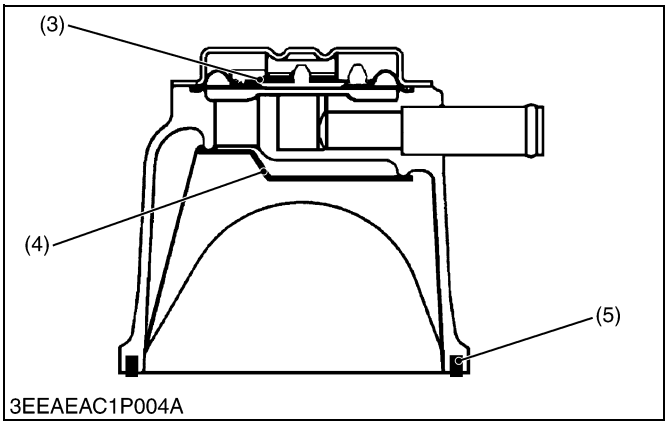

Closed breather system has been adopted to prevent the release of blow-by gas into the atmosphere.

After its oil content is filtered by oil shield (4), the blow-by gas in fed back to the intake manifold through breather valve (3) to be used for re-combustion.

(1) Breather Tube
(2) Cylinder Head Cover
(3) Breather Valve
(4) Oil Shield
(5) Rubber Packing

W1012956

https://truckmanualshub.com/

[2] GOVERNOR

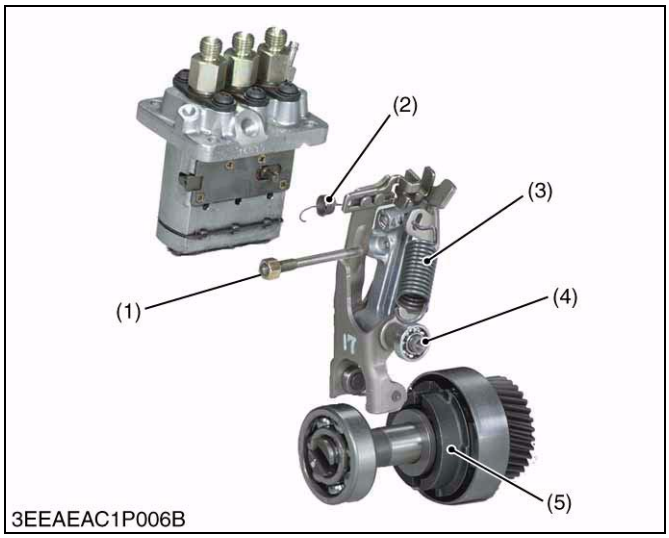

3EEAEAC1P006B

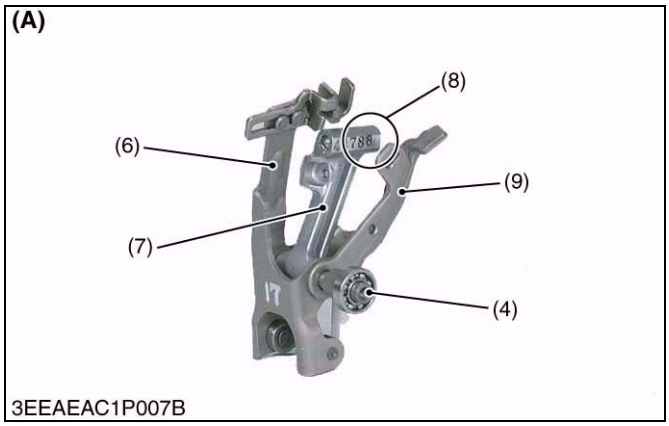

3EEAEAC1P007B

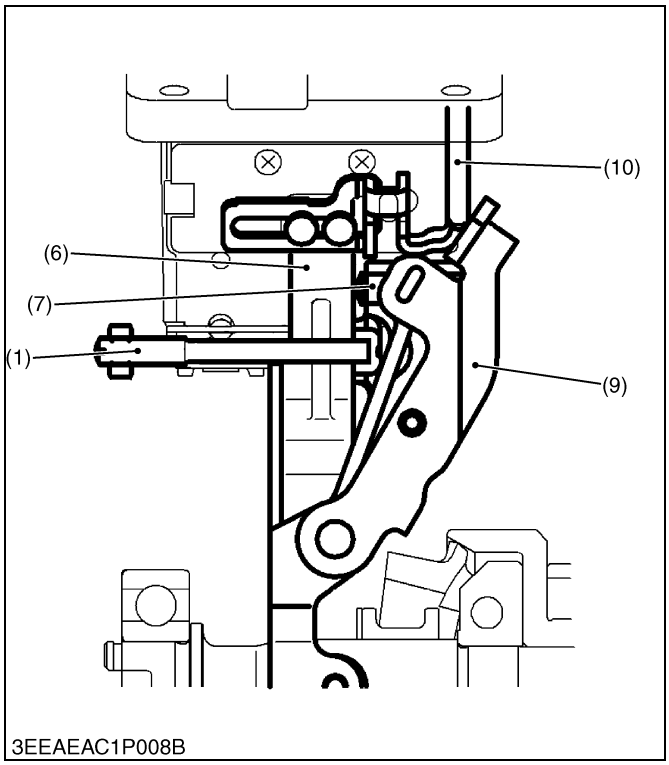

3EEAEAC1P008B

■ Three Lever Type Fork Lever (for General)

The governor system is a mechanical governor that used the flyweight (5).

The flyweight (5) is mounted on the governor shaft that rotates at the same speed as the crankshaft.

Because the feature of this mechanism takes out the engine speed directly as a centrifugal force of weight, the speed control that the change in the engine rotational speed is sensitively transmitted to fork lever assembly **(A)** and accuracy is high is enabled.

The fork lever assembly of this engine is composed of fork lever 1 (6), for lever 2 (9), and the floating lever (7). A slide plate is installed in fork lever 1. The governor spring (3) is hooked to fork lever 2 (9).

The floating lever (7) installs the torque pin (8) of the output drop prevention at the overload. The start spring (2) is hooked to a slide plate, and holds the control rack in the direction of the full fuel position.

Fork lever 2 (9) and the floating lever are installed in fork lever 1 (6) with the fork lever shaft (4). The max torque limitation (1) device limits the amount of the fuel exhalation at the overload with the torque pin.

(1) Max Torque Limiter
(2) Start Spring
(3) Governor Spring
(4) Fork Lever Shaft
(5) Flyweight
(6) Fork Lever 1
(7) Floating Lever
(8) Torque Pin
(9) Fork Lever 2
(A) Fork Lever Assembly

W1012753

(At Rated Operation)

When the engine is running, the fork lever 2 (9) and the floating lever (7) are moving with the fork lever 1 (6) due to the tension of the governor spring (3).

During the time, the torque pin (8) is pressed into the floating lever by centrifugal force of the governor weight (5).

The fork lever 2 (9) comes in contact with the fuel limitation bolt (10), and the fuel injection pump supplies a fuel necessary for rated operation.

(1) Max Torque Limiter
(6) Fork Lever 1
(7) Floating Lever
(9) Fork Lever 2
(10) Fuel Limitation Bolt

W1012924

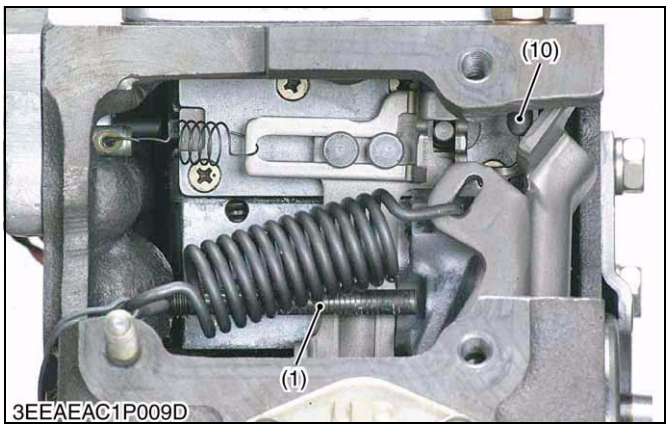

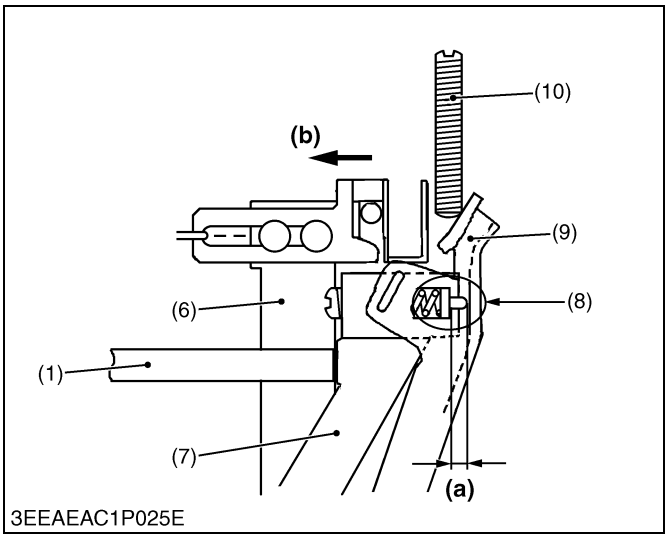

(Overloaded Operation)

The amount of the movement of the fork lever assembly is limited with the fuel limitation bolt (10) and can not be moved in the direction of the fuel increase.

As overload reduces the centrifugal force of the governor weight, which is pressing the torque pin (8) into the floating lever (7), the floating lever pushes the fork lever 1 (6) in the way to increase the fuel supply with the help of the torque spring tension.

The fuel supply increases **(b)** in relation to the degree of the torque pin motion, thus preventing the engine speed from dropping.

At the time, the maximum torque limiter (1) prevents superfluous fuel supply and suppresses the generation of black smoke.

(1) Max Torque Limiter
(6) Fork Lever 1
(7) Floating Lever
(8) Torque Pin
(9) Fork Lever 2
(10) Fuel Limitation Bolt

(a) Distance to which torque pin (8) pushes fork lever 1 (6) out
(b) Increase of fuel

W1013023

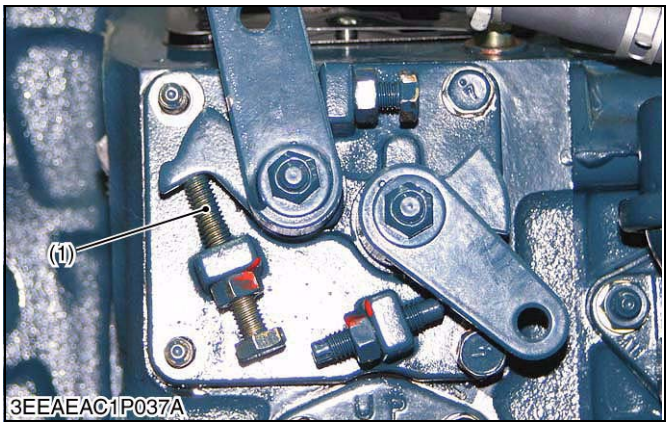

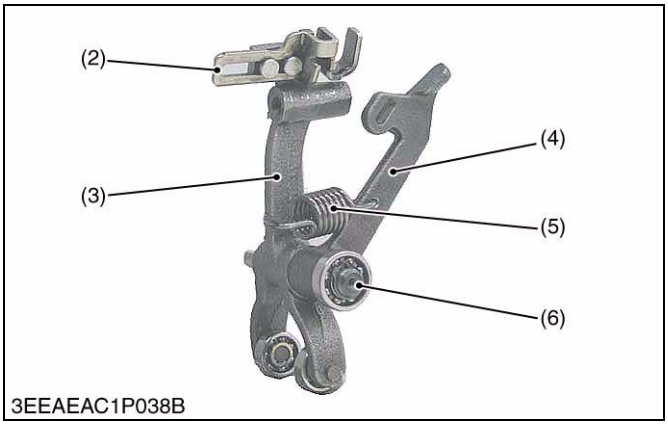

■ Two Lever Type Fork Lever (for BG Series)

The engine speeds of BG engine are 1500 min^{-1} (rpm) and 1800 min^{-1} (rpm) specifications.

The fork lever assembly of BG series is composed of fork lever 1 (3), fork lever 2 (4).

A slide plate is installed in fork lever 1. The governor spring (5) is hooked to fork lever 2 (4).

The start spring is hooked to a slide plate, and holds the control rack in the direction of full fuel position.

Fork lever 2 (4) and fork lever 1 (3) are installed with the fork lever shaft (4).

(1) Idle Speed Adjust Bolt
(2) Slide Plate
(3) Fork Lever 1
(4) Fork Lever 2
(5) Governor Spring
(6) Fork Lever Shaft

W1013377

https://truckmanualshub.com/

[3] BOOST COMPENSATOR

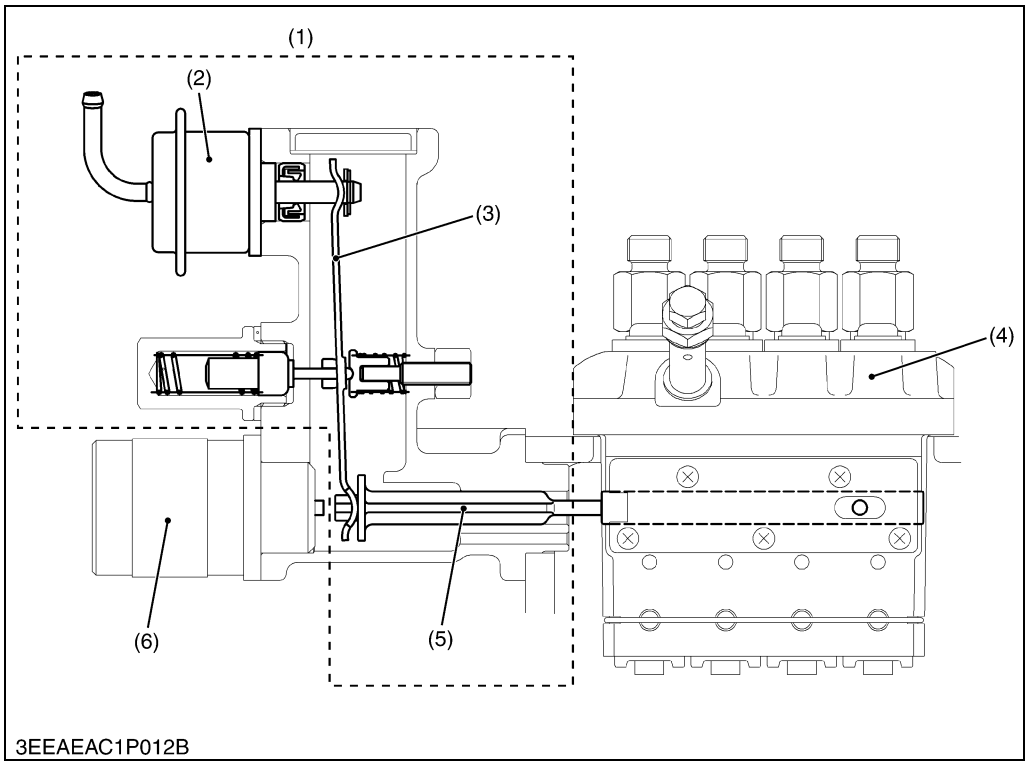

(1) Boost Compensator Assembly
(2) Actuator
(3) Plate
(4) Injection Pump Assembly
(5) Guide
(6) Stop Solenoid

A : Fulcrum

W1013537

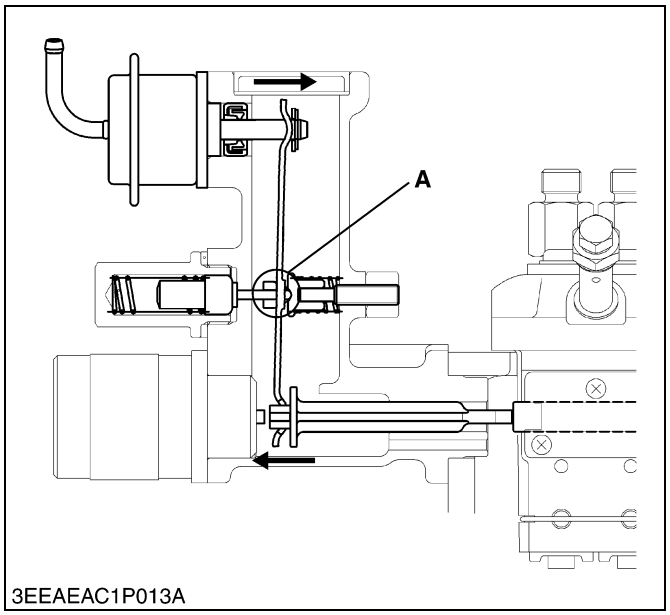

Boost compensator is the device that reduces black smoke during the engine startup and acceleration.

The rod of actuator (2) is pushed out by the rise of boost pressure, and the plate (3) moves in the direction of the fuel increase around the fulcrum (**A**).

W1013615

https://truckmanualshub.com/

SERVICING

CONTENTS

1. TROUBLESHOOTING S-1
2. SERVICING SPECIFICATIONS S-5
3. TIGHTENING TORQUES S-13
   [1] TIGHTENING TORQUES FOR GENERAL USE SCREWS, BOLTS AND NUTS S-13
   [2] TIGHTENING TORQUES FOR SPECIAL USE SCREWS, BOLTS AND NUTS S-14
4. CHECKING, DISASSEMBLING AND SERVICING S-15
   [1] CHECKING AND ADJUSTING S-15
      (1) Engine Body S-15
      (2) Lubricating System S-17
      (3) Cooling System S-17
      (4) Fuel System S-19
      (5) Electrical System S-22
      (6) Turbocharger S-26
   [2] DISASSEMBLING AND ASSEMBLING S-27
      (1) Draining Oil and Coolant S-27
      (2) External Components S-27
      (3) Cylinder Head and Valve S-28
      (4) Gear Case and Timing Gears S-32
      (5) Piston and Connecting Rod S-37
      (6) Flywheel and Crankshaft S-40
      (7) Starter S-42
      (8) Alternator S-44
   [3] SERVICING S-45
      (1) Cylinder Head and Valves S-45
      (2) Timing Gears, Camshaft and Governor Gear S-51
      (3) Piston and Connecting Rod S-54
      (4) Crankshaft S-58
      (5) Cylinder S-63
      (6) Oil Pump S-64
      (7) Starter S-65
      (8) Alternator S-68

https://truckmanualshub.com/

1. TROUBLESHOOTING

Symptom	Probable Cause	Solution	Reference Page
Engine Does Not Start	No fuel	Replenish fuel	G-10
	Air in the fuel system	Vent air	G-10
	Water in the fuel system	Change fuel and repair or replace fuel system	–
	Fuel pipe clogged	Clean or replace	G-10
	Fuel filter clogged	Replace	G-14, 15
	Excessively high viscosity of fuel or engine oil at low temperature	Use specified fuel or engine oil	4, G-8
	Fuel with low cetane number	Use specified fuel	–
	Fuel leak due to loose injection pipe retaining nut	Tighten retaining nut	–
	Incorrect injection timing	Adjust	S-19
	Fuel camshaft worn	Replace	S-36
	Injection nozzle clogged	Clean or replace	S-21, 22
	Injection pump malfunctioning	Repair or replace	S-20, 35
	Seizure of crankshaft, camshaft, piston, cylinder or bearing	Repair or replace	S-58 to 64 S-36 to 39
	Compression leak from cylinder	Replace head gasket, tighten cylinder head screw, glow plug and nozzle holder	S-29, 30, 31
	Improper valve timing	Correct or replace timing gear	S-36
	Piston ring and cylinder worn	Replace	S-37, 38, 39
	Excessive valve clearance	Adjust	S-16
	Stop solenoid malfunctioning	Replace	S-34
Starter Does Not Run	Battery discharged	Charge	–
	Starter malfunctioning	Repair or replace	S-27, 65, 66, 67
	Key switch malfunctioning	Replace	–
	Wiring disconnected	Connect	–

W1014322

https://truckmanualshub.com/

Symptom	Probable Cause	Solution	Reference Page
Engine Revolution Is Not Smooth	Fuel filter clogged or dirty	Replace	G-14, 15
	Air cleaner clogged	Clean or replace	G-11, 14, 18
	Fuel leak due to loose injection pipe retaining nut	Tighten retaining nut	–
	Injection pump malfunctioning	Repair or replace	S-20, 35
	Incorrect nozzle opening pressure	Adjust	S-21
	Injection nozzle stuck or clogged	Repair or replace	S-21, 22
	Governor malfunctioning	Repair	S-35, 36
	Turbocharger bearing worn out	Replace the turbocharger assembly	S-28
	Turbocharger shaft bent	Replace the turbocharger assembly	S-28
	Turbocharger fin or other part damaged due to foreign matters	Replace the turbocharger assembly	S-28
Either White or Blue Exhaust Gas Is Observed	Excessive engine oil	Reduce to specified level	–
	Piston ring and cylinder worn or stuck	Repair or replace	S-38, 39, 64
	Incorrect injection timing	Adjust	S-19
Oil Leak into Exhaust Pipe or Suction Pipe	Waste oil pipe clogged or deformed	Repair or replace	S-28
	Piston ring seal faulty	Replace the turbocharger assembly	S-28
Either Black or Dark Gray Exhaust Gas Is Observed	Overload	Lessen the load	–
	Low grade fuel used	Use specified fuel	4
	Fuel filter clogged	Replace	G-14, 15
	Air cleaner clogged	Clean or replace	G-11, 14, 18
	Deficient nozzle injection	Repair or replace nozzle	S-21, 22

W1014322

https://truckmanualshub.com/

Symptom	Probable Cause	Solution	Reference Page
Deficient Output	Incorrect injection timing	Adjust	S-19
	Engine's moving parts seem to be seizing	Repair or replace	–
	Injection pump malfunctioning	Repair or replace	S-20, 35
	Deficient nozzle injection	Repair or replace nozzle	S-21, 22
	Compression leak	Check the compression pressure and repair	S-15
	Gas leak from exhaust system	Repair or replace	S-26, 28
	Air leak from compressor discharge side	Repair or replace	S-26, 28
	Air cleaner dirty or clogged	Clean or replace	G-11, 14, 18
	Compressor wheel turning heavily	Replace the turbocharger assembly	S-28
Excessive Lubricant Oil Consumption	Piston ring's gap facing the same direction	Shift ring gap direction	S-38
	Oil ring worn or stuck	Replace	S-38, 39
	Piston ring groove worn	Replace piston	S-37 to 39
	Valve stem and valve guide worn	Replace	S-31, 47
	Crankshaft bearing and crank pin bearing worn	Replace	S-41
	Oil leaking due to defective seals or packing	Replace	–
Fuel Mixed into Lubricant Oil	Injection pump's plunger worn	Repair or replace	S-20, 35
	Deficient nozzle injection	Repair or replace nozzle	S-21, 22
	Injection pump broken	Replace	S-35
Water Mixed into Lubricant Oil	Head gasket defective	Replace	S-30, 31
	Cylinder block or cylinder head flawed	Replace	S-30, 31
Low Oil Pressure	Engine oil insufficient	Replenish	G-8
	Oil strainer clogged	Clean	S-37
	Relief valve stuck with dirt	Clean	–
	Relief valve spring weaken or broken	Replace	–
	Excessive oil clearance of crankshaft bearing	Replace	S-40
	Excessive oil clearance of crankpin bearing	Replace	S-40
	Excessive oil clearance of rocker arm	Replace	S-29
	Oil passage clogged	Clean	–
	Different type of oil	Use specified type of oil	G-8
	Oil pump defective	Replace	–

W1014322

https://truckmanualshub.com/

Symptom	Probable Cause	Solution	Reference Page
High Oil Pressure	Different type of oil	Use specified type of oil	G-8
	Relief valve defective	Replace	–
Engine Overheated	Engine oil insufficient	Replenish	G-8
	Fan belt broken or elongated	Replace or adjust	G-11, 12
	Coolant insufficient	Replenish	G-15, 16
	Radiator net and radiator fin clogged with dust	Clean	–
	Inside of radiator corroded	Clean or replace	G-15
	Coolant flow route corroded	Clean or replace	G-15, 16
	Radiator cap defective	Replace	–
	Overload running	Reduce the load	–
	Head gasket defective	Replace	S-30, 31
	Incorrect injection timing	Adjust	S-19
	Unsuitable fuel used	Use specified fuel	4
Battery Quickly Discharged	Battery electrolyte insufficient	Replenish distilled water and charge	G-12
	Fan belt slips	Adjust belt tension or replace	G-11, 12
	Wiring disconnected	Connect	–
	Rectifier defective	Replace	–
	Alternator defective	Replace	–
	Battery defective	Replace	–

W1014322

https://truckmanualshub.com/

2. SERVICING SPECIFICATIONS

ENGINE BODY

Item		Factory Specification	Allowable Limit
Valve Clearance (Cold)		0.145 to 0.185 mm 0.00571 to 0.00728 in.	–
Compression Pressure	D905-E2B / E2BG D1005-E2B / E2BG D1105-E2B / E2BG V1305-E2B / E2BG V1505-E2B / E2BG	3.72 to 4.12 MPa 38 to 42 kgf/cm^2 539 to 596 psi	2.25 MPa 23.0 kgf/cm^2 327 psi
	D1105-T-E2B V1505-T-E2B	3.14 to 3.53 MPa 32 to 36 kgf/cm^2 454 to 511 psi	2.25 MPa 23.0 kgf/cm^2 327 psi
Difference among Cylinders		–	10 % or less
Top Clearance		0.55 to 0.70 mm 0.0217 to 0.0276 in.	–
Cylinder Head Surface	Flatness	–	0.05 mm 0.0020 in.
Valve Recessing	Intake and Exhaust	–0.05 to 0.25 mm –0.0020 to 0.0098 in.	0.40 mm 0.0157 in.
Valve Stem to Valve Guide	Clearance	0.035 to 0.065 mm 0.0014 to 0.0025 in.	0.10 mm 0.0039 in.
Valve Stem	O.D.	6.960 to 6.975 mm 0.2741 to 0.2746 in.	–
Valve Guide	I.D.	7.010 to 7.025 mm 0.2760 to 0.2765 in.	–
Valve Face	Angle (Intake)	1.047 rad 60 °	–
	Angle (Exhaust)	0.785 rad 45 °	–
Valve Seat	Angle (Intake)	1.047 rad 60 °	–
	Angle (Exhaust)	0.785 rad 45 °	–
	Width	2.12 mm 0.0835 in.	
Valve Spring	Free Length	37.0 to 37.5 mm 1.457 to 1.476 in.	36.5 mm 1.437 in.
	Tilt	–	1.0 mm 0.039 in.
	Setting Load	117.4 N / 31.0 mm 11.97 kgf / 31.0 mm 26.4 lbs / 1.22 in.	100.0 N / 31.0 mm 10.2 kgf / 31.0 mm 22.5 lbs / 1.22 in.

W10138740

https://truckmanualshub.com/

ENGINE BODY (Continued)

Item		Factory Specification	Allowable Limit
Rocker Arm Shaft to Rocker Arm	Clearance	0.016 to 0.045 mm 0.00063 to 0.00177 in.	0.10 mm 0.0039 in.
Rocker Arm Shaft	O.D.	11.973 to 11.984 mm 0.4714 to 0.4718 in.	–
Rocker Arm	I.D.	12.000 to 12.018 mm 0.4724 to 0.4731 in.	–
Push Rod	Alignment	–	0.25 mm 0.0098 in.
Tappet to Tappet Guide	Clearance	0.020 to 0.062 mm 0.0008 to 0.0024 in.	0.07 mm 0.0028 in.
Tappet	O.D.	19.959 to 19.980 mm 0.7858 to 0.7866 in.	–
Tappet Guide	I.D.	20.000 to 20.021 mm 0.7874 to 0.7882 in.	–
Timing Gear			
Crank Gear to Idle Gear 1	Backlash	0.032 to 0.115 mm 0.0013 to 0.0045 in.	0.15 mm 0.0059 in.
Idle Gear 1 to Cam Gear	Backlash	0.036 to 0.114 mm 0.0014 to 0.0045 in.	0.15 mm 0.0059 in.
Idle Gear 1 to Injection Pump Gear	Backlash	0.034 to 0.116 mm 0.0013 to 0.0046 in.	0.15 mm 0.0059 in.
Idle Gear 1 to Idle Gear 2	Backlash	0.033 to 0.117 mm 0.0013 to 0.0046 in.	0.15 mm 0.0059 in.
Idle Gear 2 to Governor Gear	Backlash	0.030 to 0.117 mm 0.0012 to 0.0046 in.	0.15 mm 0.0059 in.
Governor Gear Governor Gear to Injection Pump Gear	Backlash	0.030 to 0.117 mm 0.0012 to 0.0046 in.	0.15 mm 0.0059 in.

W1013874

https://truckmanualshub.com/

ENGINE BODY (Continued)

Item		Factory Specification	Allowable Limit
Idle Gear Shaft to Gear Bushing			
Idle Gear 1	Clearance	0.020 to 0.054 mm 0.0008 to 0.0021 in.	0.10 mm 0.0039 in.
Idle Gear Bushing	I.D.	26.000 to 26.021 mm 1.0236 to 1.0244 in.	–
Idle Gear Shaft 1	O.D.	25.967 to 25.980 mm 1.0223 to 1.0228 in.	–
Idle Gear 2	Clearance	0.020 to 0.054 mm 0.0008 to 0.0021 in.	0.10 mm 0.0039 in.
Idle Gear Bushing	I.D.	26.000 to 26.021 mm 1.0236 to 1.0244 in.	–
Idle Gear Shaft 2	O.D.	25.967 to 25.980 mm 1.0223 to 1.0228 in.	–
Idle Gear			
Idle Gear 1	Side Clearance	0.20 to 0.51 mm 0.0079 to 0.0201 in.	0.80 mm 0.0315 in.
Idle Gear 2	Side Clearance	0.20 to 0.51 mm 0.0079 to 0.0201 in.	0.80 mm 0.0315 in.
Camshaft	Side Clearance	0.07 to 0.22 mm 0.0028 to 0.0087 in.	0.30 mm 0.0118 in.
	Alignment	–	0.01 mm 0.0004 in.
Cam Height	Intake	28.80 mm 1.1339 in.	28.75 mm 1.1319 in.
	Exhaust	29.0 mm 1.1417 in.	28.95 mm 1.1398 in.
Camshaft Journal to Cylinder Block Bore	Oil Clearance	0.050 to 0.091 mm 0.00197 to 0.00358 in.	0.15 mm 0.0059 in.
Camshaft Journal	O.D.	35.934 to 35.950 mm 1.4147 to 1.4153 in.	–
Cylinder Block Bore	I.D.	36.000 to 36.025 mm 1.4173 to 1.4183 in.	–
Piston Pin Bore	I.D.	22.000 to 22.013 mm 0.8661 to 0.8667 in.	22.03 mm 0.8673 in.
Piston Pin to Small End Bushing	Clearance	0.014 to 0.038 mm 0.00055 to 0.00150 in.	0.15 mm 0.0059 in.
Piston Pin	O.D.	22.002 to 22.011 mm 0.8662 to 0.8666 in.	–
Small End Bushing	I.D.	22.025 to 22.040 mm 0.8671 to 0.8677 in.	–

W10138740

https://truckmanualshub.com/

ENGINE BODY (Continued)

Item		Factory Specification	Allowable Limit
Piston Ring Gap **[D905-E2B]**	Top Ring	0.25 to 0.40 mm 0.0098 to 0.0157 in.	1.25 mm 0.0492 in.
	Second Ring	0.25 to 0.40 mm 0.0098 to 0.0157 in.	1.25 mm 0.0492 in.
	Oil Ring	0.25 to 0.40 mm 0.0098 to 0.0157 in.	1.25 mm 0.0492 in.
Piston Ring Gap **[D1005-E2B]** **[V1305-E2B]** **[D1105-E2B]** **[V1505-E2B]**	Top Ring	0.30 to 0.45 mm 0.0118 to 0.0177 in.	1.25 mm 0.0492 in.
	Second Ring	0.30 to 0.45 mm 0.0118 to 0.0177 in.	1.25 mm 0.0492 in.
	Oil Ring	0.25 to 0.40 mm 0.0098 to 0.0157 in.	1.25 mm 0.0492 in.
Piston Ring Gap **[D1105-T-E2B]** **[V1505-T-E2B]**	Top Ring	0.20 to 0.35 mm 0.0079 to 0.0138 in.	1.20 mm 0.0472 in.
	Second Ring	0.40 to 0.55 mm 0.0157 to 0.0217 in.	1.20 mm 0.0472 in.
	Oil Ring	0.30 to 0.55 mm 0.0118 to 0.0217 in.	1.25 mm 0.0492 in.
Piston Ring Gap **[D905-E2BG]** **[D1005-E2BG]** **[V1305-E2BG]**	Top Ring	0.25 to 0.40 mm 0.0098 to 0.0157 in.	1.25 mm 0.0492 in.
	Second Ring	0.25 to 0.40 mm 0.0098 to 0.0157 in.	1.25 mm 0.0492 in.
	Oil Ring	0.25 to 0.40 mm 0.0098 to 0.0157 in.	1.25 mm 0.0492 in.
Piston Ring Gap **[D1105-E2BG]** **[V1505-E2BG]**	Top Ring	0.30 to 0.45 mm 0.0118 to 0.0177 in.	1.25 mm 0.0492 in.
	Second Ring	0.30 to 0.45 mm 0.0118 to 0.0177 in.	1.25 mm 0.0492 in.
	Oil Ring	0.25 to 0.40 mm 0.0098 to 0.0157 in.	1.25 mm 0.0492 in.
Piston Ring to Piston Ring Groove Second Ring	Clearance	0.085 to 0.112 mm 0.0033 to 0.0044 in.	0.2 mm 0.0079 in.
Oil Ring	Clearance	0.020 to 0.055 mm 0.0008 to 0.0021 in.	0.15 mm 0.0059 in.
Connecting Rod	Alignment	–	0.05 mm 0.0020 in.
Crankshaft	Alignment	–	0.02 mm 0.0008 in.
Crankshaft to Crankshaft Bearing 1	Oil Clearance	0.034 to 0.114 mm 0.0013 to 0.0045 in.	0.20 mm 0.0079 in.
Crankshaft	O.D.	47.934 to 47.950 mm 1.8872 to 1.8878 in.	–
Crankshaft Bearing 1	I.D.	47.984 to 48.048 mm 1.8891 to 1.8916 in.	–

W10138740

https://truckmanualshub.com/

ENGINE BODY (Continued)

Item		Factory Specification	Allowable Limit
Crankshaft to Crankshaft Bearing 2	Oil Clearance	0.034 to 0.095 mm 0.0013 to 0.0037 in.	0.20 mm 0.0079 in.
Crankshaft Journal	O.D.	47.934 to 47.950 mm 1.8872 to 1.8878 in.	–
Crankshaft Bearing 2	I.D.	47.984 to 48.029 mm 1.8891 to 1.8909 in.	–
Crankshaft to Crankshaft Bearing 3	Oil Clearance	0.034 to 0.098 mm 0.0013 to 0.0039 in.	0.20 mm 0.0079 in.
Crankshaft Journal	O.D.	51.921 to 51.940 mm 2.0441 to 2.0449 in.	–
Crankshaft Bearing 3	I.D.	51.974 to 52.019 mm 2.0462 to 2.0480 in.	–
Crankpin to Crankpin Bearing	Oil Clearance	0.029 to 0.091 mm 0.0011 to 0.0036 in.	0.20 mm 0.0079 in.
Crankpin	O.D.	39.959 to 39.975 mm 1.5732 to 1.5738 in.	–
Crankpin Bearing	I.D.	40.004 to 40.050 mm 1.5750 to 1.5768 in.	–
Crankshaft	Side Clearance	0.15 to 0.31 mm 0.0059 to 0.0122 in.	0.50 mm 0.0197 in.
Cylinder Liner I.D.	D905-E2B / E2BG	72.000 to 72.019 mm 2.8346 to 2.8354 in.	72.15 mm 2.8406 in.
	D1005-E2B / E2BG V1305-E2B / E2BG	76.000 to 76.019 mm 2.9921 to 2.9929 in.	76.15 mm 2.9980 in.
	D1105-E2B / E2BG D1105-T-E2B V1505-E2B / E2BG V1505-T-E2B	78.000 to 78.019 mm 3.0709 to 3.0716 in.	78.15 mm 3.0768 in.
Cylinder (Oversized)	D905-E2B / E2BG	72.500 to 72.519 mm 2.85433 to 3.85507 in.	72.65 mm 2.8602 in.
	D1005-E2B / E2BG V1305-E2B / E2BG	76.500 to 76.519 mm 3.0118 to 3.0126 in.	76.65 mm 3.0177 in.
	D1105-E2B / E2BG D1105-T-E2B V1505-E2B / E2BG V1505-T-E2B	78.500 to 78.519 mm 3.0906 to 3.0913 in.	78.65 mm 3.0965 in.

W10138740

https://truckmanualshub.com/

LUBRICATING SYSTEM

Item		Factory Specification	Allowable Limit
Engine Oil Pressure	At Idle Speed	More than 49 kPa 0.5 kgf/cm^2 7 psi	–
	At Rated Speed	196 to 441 kPa 2.0 to 4.5 kgf/cm^2 28 to 64 psi	147 kPa 1.5 kgf/cm^2 21 psi
Inner Rotor to Outer Rotor	Clearance	0.06 to 0.18 mm 0.0024 to 0.0071 in.	–
Outer Rotor to Pump Body	Clearance	0.100 to 0.180 mm 0.0039 to 0.0071 in.	–
Inner Rotor to Cover	Clearance	0.025 to 0.075 mm 0.0010 to 0.0030 in.	–

W10139730

COOLING SYSTEM

Fan Belt	Tension	7.0 to 9.0 mm / 98 N 0.28 to 0.35 in. / 98 N (10 kgf, 22 lbs)	–
Thermostat	Valve Opening Temperature (At Beginning)	69.5 to 72.5 °C 157.1 to 162.5 °F	–
	Valve Opening Temperature (Opened Completely)	85 °C 185 °F	–
Radiator Cap	Pressure Falling Time	10 seconds or more 88 → 59 kPa 0.9 → 0.6 kgf/cm^2 13 → 9 psi	–
Radiator	Water Leakage Test Pressure	No leak at specified pressure 137 kPa 1.4 kgf/cm^2 20 psi	–

W10135990

https://truckmanualshub.com/

FUEL SYSTEM

Item		Factory Specification	Allowable Limit
Injection Pump	Injection Timing (3000 min^{-1} (rpm))	0.30 to 0.33 rad (17 to 19°) before T.D.C.	–
	Injection Timing (3600 min^{-1} (rpm))	0.35 to 0.39 rad (20 to 22°) before T.D.C.	–
Injection Pump (BG Type)	Injection Timing (60 Hz / 1800 min^{-1} (rpm))	0.27 to 0.31 rad (15.5 to 17.5 °) before T.D.C.	–
Pump Element	Fuel Tightness	–	13.73 MPa 140 kgf/cm^2 1991 psi
Delivery Valve	Fuel Tightness	10 seconds 13.73 → 12.75 MPa 140 → 130 kgf/cm^2 1991 → 1849 psi	5 seconds 13.73 → 12.75 MPa 140 → 130 kgf/cm^2 1991 → 1849 psi
Injection Nozzle	Injection Pressure	13.73 to 14.71 MPa 140 to 150 kgf/cm^2 1991 to 2134 psi	–
Injection Nozzle Valve Seat	Valve Seat Tightness	When the pressure is 12.75 MPa (130 kgf/cm^2, 1849 psi), the valve seat must be fuel tightness.	–

W10139730

https://truckmanualshub.com/

ELECTRICAL SYSTEM

Item		Factory Specification	Allowable Limit
Glow Plug	Resistance	Approx. 0.9 Ω	–
Starter (Planetary Gear Reduction Type)			
Commutator	O.D.	30.0 mm 1.181 in.	29.0 mm 1.142 in.
Difference	O.D.	Less than 0.02 mm 0.0008 in.	0.05 mm 0.0020 in.
Mica	Undercut	0.50 to 0.80 mm 0.0197 to 0.0315 in.	0.20 mm 0.0079 in.
Brush	Length	16.0 mm 0.630 in.	10.5 mm 0.413 in.
Starter (Electromagnetic Drive Type)			
Commutator	O.D.	28.0 mm 1.102 in.	27.0 mm 1.063 in.
Difference	O.D.	Less than 0.05 mm 0.0002 in.	0.4 mm 0.016 in.
Mica	Undercut	0.50 to 0.80 mm 0.0197 to 0.0315 in.	0.20 mm 0.0079 in.
Brush	Length	16.0 mm 0.630 in.	10.5 mm 0.413 in.
Alternator			
Stator	Resistance	Less than 1.0 Ω	–
Rotor	Resistance	2.9 Ω	–
Slip Ring	O.D.	14.4 mm 0.5669 in.	14.0 mm 0.5512 in.
Brush	Length	10.0 mm 0.3937 in.	8.4 mm 0.331 in.

W1013973

https://truckmanualshub.com/

3. TIGHTENING TORQUES

Screws, bolts and nuts must be tightened to the specified torque using a torque wrench, several screws, bolts and nuts such as those used on the cylinder head must be tightened in proper sequence and the proper torque.

[1] TIGHTENING TORQUES FOR GENERAL USE SCREWS, BOLTS AND NUTS

When the tightening torques are not specified, tighten the screws, bolts and nuts according to the table below.

Grade / Nominal Diameter / Unit	Standard Screw and Bolt 4			Special Screw and Bolt 7		
	N·m	kgf·m	ft-lbs	N·m	kgf·m	ft-lbs
M6	7.9 to 9.3	0.80 to 0.95	5.8 to 6.9	9.8 to 11.3	1.00 to 1.15	7.23 to 8.32
M8	17.7 to 20.6	1.8 to 2.1	13.0 to 15.2	23.5 to 27.5	2.4 to 2.8	17.4 to 20.3
M10	39.2 to 45.1	4.0 to 4.6	28.9 to 33.3	48.1 to 55.9	4.9 to 5.7	35.4 to 41.2
M12	62.8 to 72.6	6.4 to 7.4	46.3 to 53.5	77.5 to 90.2	7.9 to 9.2	57.1 to 66.5

W10371750

Screw and bolt material grades are shown by numbers punched on the screw and bolt heads. Prior to tightening, be sure to check out the numbers as shown below.

Punched number	Screw and bolt material grade
None or 4	Standard screw and bolt SS41, S20C
7	Special screw and bolt S43C, S48C (Refined)

W1012705

https://truckmanualshub.com/

[2] TIGHTENING TORQUES FOR SPECIAL USE SCREWS, BOLTS AND NUTS

■ **NOTE**

- **For "*" marked screws, bolts and nuts on the table, apply engine oil to their threads and seats before tightening.**
- **The letter "M" in Size x Pitch means that the screw, bolt or nut dimension stands for metric. The size is the nominal outside diameter in mm of the threads. The pitch is the nominal distance in mm between two threads.**

Item	Size x Pitch	N·m	kgf·m	ft-lbs
*Cylinder head cover screw	M7 x 1.0	6.9 to 8.8	0.7 to 0.9	5.1 to 6.5
*Cylinder head screw	M10 x 1.25	63.7 to 68.6	6.5 to 7.0	47.0 to 50.6
*Main bearing case screw 1	M8 x 1.25	29.4 to 34.3	3.0 to 3.5	21.7 to 25.3
*Main bearing case screw 2	M9 x 1.25	49.0 to 53.9	5.0 to 5.5	36.2 to 39.8
*Flywheel screw	M10 x 1.25	53.9 to 58.8	5.5 to 6.0	39.8 to 43.4
*Connecting rod screw	M8 x 1.0	41.2 to 46.1	4.2 to 4.7	30.4 to 34.0
*Rocker arm bracket nuts	M7 x 1.0	21.6 to 26.5	2.2 to 2.7	15.9 to 19.5
*Idle gear shaft screws	M6 x 1.0	9.8 to 11.3	1.00 to 1.15	7.2 to 8.3
*Fan drive pulley screw	M14 x 1.5	235.4 to 245.2	24.0 to 25.0	173.6 to 180.8
*Bearing case cover mounting screw	M6 x 1.0	9.8 to 11.3	1.00 to 1.15	7.2 to 8.3
Glow plugs	M8 x 1.0	7.8 to 14.7	0.8 to 1.5	5.8 to 10.8
Nozzle holder assembly	M20 x 1.5	49.0 to 68.6	5.0 to 7.0	36.2 to 50.6
Nozzle holder	–	34.3 to 39.2	3.5 to 4.0	25.3 to 28.9
Oil pressure switch	PT 1/8	14.7 to 19.6	1.5 to 2.0	10.8 to 14.5
Injection pipe retaining nuts	M12 x 1.5	24.5 to 34.3	2.5 to 3.5	18.1 to 25.3
Overflow pipe assembly retaining screw	M12 x 1.5	19.6 to 24.5	2.0 to 2.5	14.5 to 18.1
Starter's terminal **B** mounting nut (Electromagnetic drive type)	M8	7.8 to 9.8	0.8 to 1.0	5.8 to 7.2
Starter's terminal **B** mounting nut (Planetary gear reduction type)	M8	5.9 to 11.8	0.6 to 1.2	4.3 to 8.7
Alternator's pulley nut	–	58.3 to 78.9	5.95 to 8.05	43.0 to 58.2
Drain plug with copper gasket	M12 x 1.25	32.4 to 37.3	3.3 to 3.8	23.9 to 27.5
Drain plug with copper gasket	M22 x 1.5	63.7 to 73.5	6.5 to 7.5	47.0 to 54.2
Drain plug with rubber coated gasket	M22 x 1.5	44.1 to 53.9	4.5 to 5.5	32.5 to 39.8

W1013236

https://truckmanualshub.com/

4. CHECKING, DISASSEMBLING AND SERVICING

[1] CHECKING AND ADJUSTING

(1) Engine Body

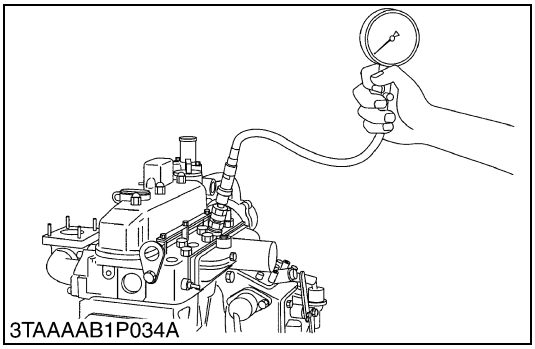

Compression Pressure

1. Run the engine until it is warmed up.
2. Stop the engine.
3. Remove the air cleaner, the muffler and all glow plugs (or nozzles).
4. Set a compression tester with the adaptor to the glow plug hole (or nozzle hole).
   Nozzle hole : Adaptor **H** (07909-31231)
   Glow plug hole : Adaptor **L** (07909-31301)
5. After making sure that the stop lever is set at the stop position (non-injection), run the engine with the starter and measure the compression pressure.
6. Repeat steps 4 and 5 for each cylinder.
7. If the measurement is below the allowable limit, apply a small amount of oil to the cylinder wall through the glow plug hole (or nozzle hole) and measure the compression pressure again.
8. If the compression pressure is still less than the allowable limit, check the top clearance, valve clearance and cylinder head.
9. If the compression pressure increases after applying oil, check the cylinder wall and piston rings.

■ **NOTE**

- **Check the compression pressure with the specified valve clearance.**
- **Always use a fully charged battery for performing this test.**
- **Variances in cylinder compression values should be under 10 %.**

Compression pressure	D905-E2B / E2BG D1005-E2B / E2BG D1105-E2B / E2BG V1305-E2B / E2BG V1505-E2B / E2BG	Factory spec.	3.72 to 4.12 MPa 38 to 42 kgf/cm^2 539 to 596 psi
		Allowable limit	2.25 MPa 23.0 kgf/cm^2 327 psi
	D1105-T-E2B V1505-T-E2B	Factory spec.	3.14 to 3.53 MPa 32 to 36 kgf/cm^2 454 to 511 psi
		Allowable limit	2.25 MPa 23.0 kgf/cm^2 327 psi

W10178940

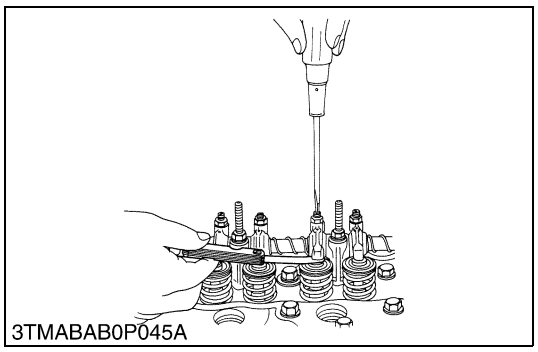
3TMABAB0P045A

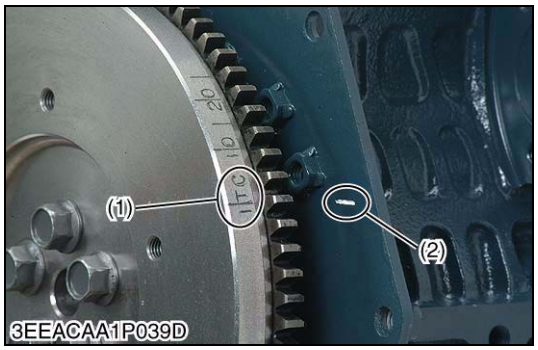

Valve Clearance

■ **IMPORTANT**

- **Valve clearance must be checked and adjusted when engine is cold.**

1. Remove the cylinder head cover and the glow plugs.
2. Align the **"1TC"** mark (1) on the flywheel and alignment mark (2) on the rear end plate so that the No. 1 piston comes to the compression top dead center.
3. Check the following valve clearance marked with "☆" using a thickness gauge.
4. If the clearance is not within the factory specifications, adjust with the adjusting screw.
5. Then turn the flywheel 6.28 rad (360 °), and align the **"1TC"** mark (1) on the flywheel and alignment mark (2) on the rear end plate so that the No. 1 piston comes to the overlap position.
6. Check the following valve clearance marked with "☆" using a feeler gauge.

Number of cylinders / Valve arrangement / Adjustable cylinder location of piston		3 cylinder		4 cylinder	
		IN.	EX.	IN.	EX.
When No. 1 piston is at compression top dead center	1st	☆	☆	☆	☆
	2nd		☆	☆	
	3rd	☆			☆
	4th				
When No. 1 piston is at overlap position	1st				
	2nd	☆			☆
	3rd		☆	☆	
	4th			☆	☆

Valve clearance	Factory spec.	0.145 to 0.185 mm 0.00571 to 0.00728 in.

■ **NOTE**

- **The sequence of cylinder numbers is given as No. 1, No. 2, No. 3 and No. 4 starting from the gear case side.**
- **After adjusting the valve clearance, secure the adjusting screw with the lock nut.**

(1) **"1TC"** Mark (2) Alignment Mark

W10155550

https://truckmanualshub.com/

(2) Lubricating System

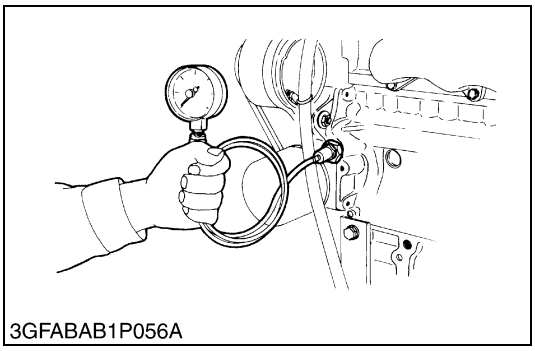
3GFABAB1P056A

Engine Oil Pressure

1. Remove the engine oil pressure switch, and set an oil pressure tester.
2. Start the engine. After warming up, measure the oil pressure of both idling and rated speeds.
3. If the oil pressure is less than the allowable limit, check the following.

- Engine oil insufficient
- Oil pump defective
- Oil strainer clogged
- Oil filter cartridge clogged
- Oil gallery clogged
- Excessive oil clearance
- Foreign matter in the relief valve

Engine oil pressure	At idle speed	Factory spec.	More than 49 kPa 0.5 kgf/cm^2 7 psi
	At rated speed	Factory spec.	196 to 441 kPa 2.0 to 4.5 kgf/cm^2 28 to 64 psi
		Allowable limit	147 kPa 1.5 kgf/cm^2 21 psi

(When reassembling)

- After checking the engine oil pressure, tighten the engine oil pressure switch to the specified torque.

Tightening torque	Oil pressure switch	14.7 to 19.6 N·m 1.5 to 2.0 kgf·m 10.8 to 14.5 ft-lbs

W10349520

(3) Cooling System

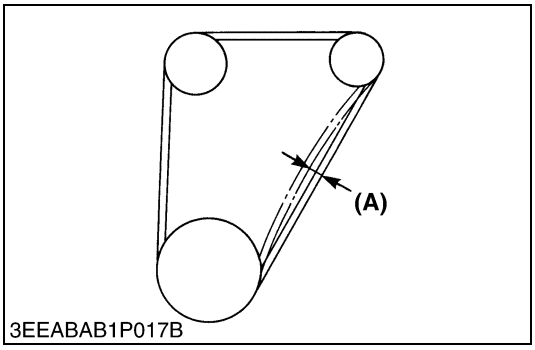

3EEABAB1P017B

Fan Belt Tension

1. Measure the deflection **(A)**, depressing the belt halfway between the fan drive pulley and alternator pulley at specified force 98 N (10 kgf, 22 lbs).
2. If the measurement is not within the factory specifications, loosen the alternator mounting screws and relocate the alternator to adjust.

Deflection **(A)**	Factory spec.	7.0 to 9.0 mm 0.28 to 0.35 in.

(A) Deflection

W10356670

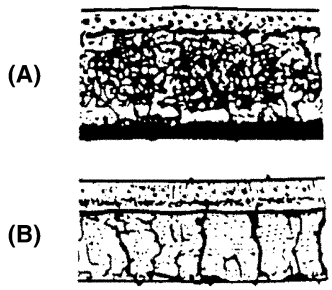

3EEABAB1P019B

Fan Belt Damage and Wear

1. Check the fan belt for damage.
2. If the fan belt is damaged, replace it.
3. Check if the fan belt is worn and sunk in the pulley groove.
4. If the fan belt is nearly worn out and deeply sunk in the pulley groove, replace it.

(A) Good **(B) Bad**

W1016443

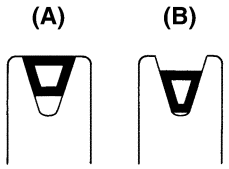

3EEABAB1P018A

CAUTION

- **When removing the radiator cap, wait at least ten minutes after the engine has stopped and cooled down. Otherwise, hot water may gush out, scalding nearby people.**

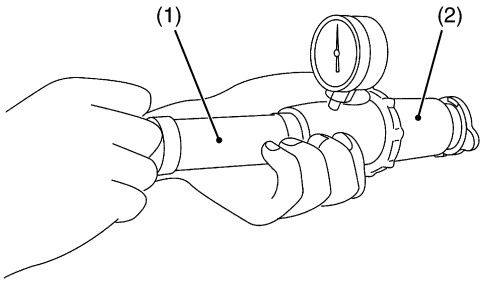

3TAAAAB1P060A

Radiator Cap Air Leakage

1. Set a radiator tester (1) and an adaptor (2) on the radiator cap.
2. Apply the specified pressure 88 kPa (0.9 kgf/cm^2, 13 psi), and measure the time for the pressure to fall to 59 kPa (0.6 kgf/cm^2, 9 psi).
3. If the measurement is less than the factory specification, replace the radiator cap.

Pressure falling time	Factory spec.	More than 10 seconds for pressure fall from 88 to 59 kPa (from 0.9 to 0.6 kgf/cm^2, from 13 to 9 psi)

(1) Radiator Tester (2) Adaptor

W1054156

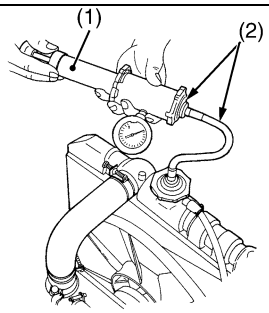

3EEABAB1P161B

Radiator Water Leakage

1. Pour a specified amount of water into the radiator.
2. Set a radiator tester (1) and an adaptor (2) and raise the water pressure to the specified pressure.
3. Check the radiator for water leaks.
4. For water leak from the pinhole, repair with the radiator cement. When water leak is excessive, replace the radiator.

Radiator water leakage test pressure	Factory spec.	137 kPa 1.4 kgf/cm^2 20 psi

(1) Radiator Tester (2) Adaptor

W1016903

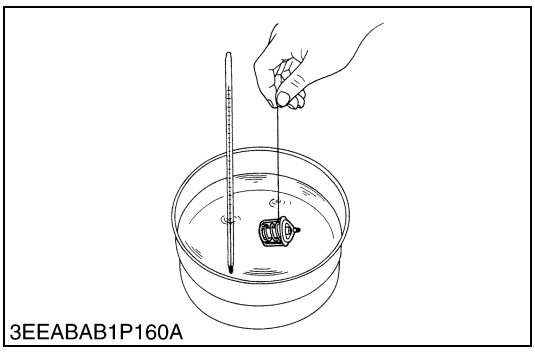
3EEABAB1P160A

Thermostat Valve Opening Temperature

1. Suspend the thermostat in the water by a string with its end inserted between the valve and seat.
2. Heating the water gradually, read the temperature when the valve opens and leaves the string.
3. Continue heating and read the temperature when the valve opens approx. 8 mm (0.315 in.).
4. If the measurement is not within the factory specifications, replace the thermostat.

Thermostat's valve opening temperature	Factory spec.	69.5 to 72.5 °C 157.1 to 162.5 °F
Temperature at which thermostat completely opens	Factory spec.	85 °C 185 °F

W1035849

(4) Fuel System

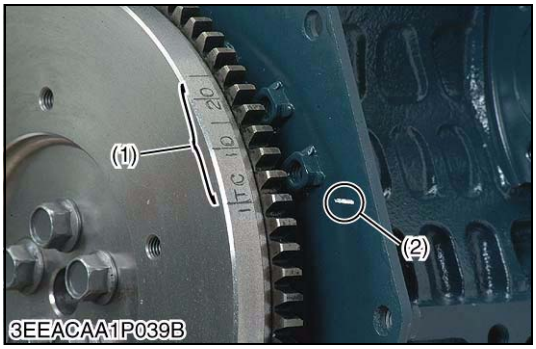

3EEACAA1P039B

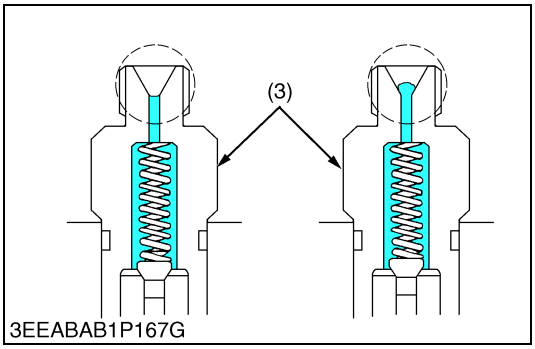

3EEABAB1P167G

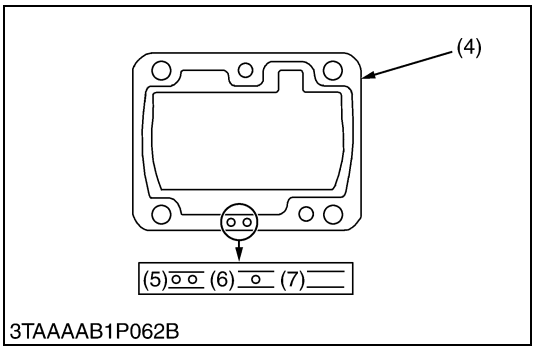

3TAAAAB1P062B

Injection Timing

1. Remove the injection pipes.
2. Remove the engine stop solenoid.
3. Turn the flywheel counterclockwise (viewed from flywheel side) until the fuel fills up to the hole of the delivery valve holder (3) for No. 1 cylinder.
4. After the fuel fills up to the hole of the delivery valve holder for No. 1 cylinder, turn back (clockwise) the flywheel around 1.57 rad (90 °).
5. Turn the flywheel counterclockwise to set at around 0.44 rad (25 °) before T.D.C..
6. Slowly turn the flywheel counterclockwise and stop turning when the fuel begins to come up, to get the present injection timing.
7. Check to see the degree on flywheel.
   The flywheel gas mark "1TC", "10" and "20" for the crank angle before the top dead center of No. 1 cylinder.
8. If injection timing is out of adjustment, readjust the timing with shims.

Injection timing (3000 min^{-1} (rpm))	Factory spec.	0.30 to 0.33 rad (17 to 19 °) before T.D.C.
Injection timing (3600 min^{-1} (rpm))	Factory spec.	0.35 to 0.39 rad (20 to 22 °) before T.D.C.
Injection timing for BG type (1800 min^{-1} (rpm))	Factory spec.	0.27 to 0.31 rad (15.5 to 17.5 °) before T.D.C.

■ **NOTE**

- **The liquid gasket is not required for assembling.**
- **Shims are available in thickness of 0.20 mm (0.0079 in.), 0.25 mm (0.0098 in.) and 0.30 mm (0.0118 in.). Combine these shims for adjustments.**
- **Addition or reduction of shim (0.05 mm, 0.0020 in.) delays or advances the injection timing by approx. 0.0087 rad (0.5 °).**
- **In disassembling and replacing the injection pump, be sure to use the same number of new shims with the same thickness.**

(1) Timing Line
(2) Alignment Mark
(3) Delivery Valve Holder
(4) Shim (Soft Metal Gasket Shim)
(5) Two-holes : 0.20 mm (0.0079 in.)
(6) One-hole : 0.25 mm (0.0098 in.)
(7) Without hole : 0.30 mm (0.0118 in.)

W1017170

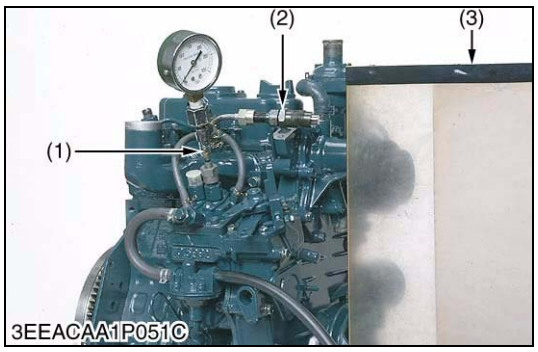

Fuel Tightness of Pump Element

1. Remove the engine stop solenoid.
2. Remove the injection pipes and glow plugs.
3. Install the injection pump pressure tester to the injection pump.
4. Install the injection nozzle (2) jetted with the proper injection pressure to the injection pump pressure tester (1). (Refer to the photo.)
5. Set the speed control lever to the maximum speed position.
6. Run the starter to increase the pressure.
7. If the pressure can not reach the allowable limit, replace the pump with new one or repair with a Kubota-authorized pump service shop.

Fuel tightness of pump element	Allowable limit	13.73 MPa 140 kgf/cm^2 1991 psi

■ **NOTE**

- **Never try to disassemble the injection pump assembly. For repairs, you are strongly requested to contact a Kubota-authorized pump service shop.**

(1) Injection Pump Pressure Tester
(2) Injection Nozzle
(3) Protection Cover for Jetted Fuel

W1017430

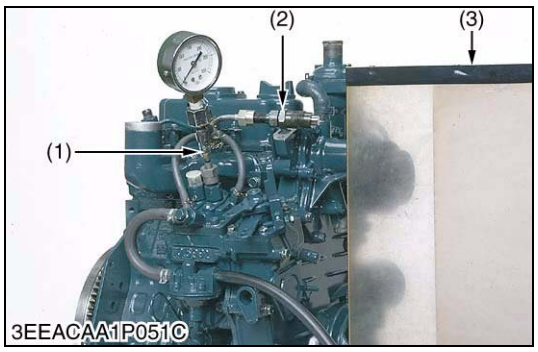

Fuel Tightness of Delivery Valve

1. Remove the engine stop solenoid.
2. Remove the injection pipes and glow plugs.
3. Set a pressure tester to the fuel injection pump.
4. Install the injection nozzle (2) jetted with the proper injection pressure to the injection pump pressure tester (1).
5. Run the starter to increase the pressure.
6. Stop the starter when the fuel jets from the injection nozzle. After that, turn the flywheel by the hand and raise the pressure to approx. 13.73 MPa (140 kgf/cm^2, 1991 psi).
7. Now turn the flywheel back about half a turn (to keep the plunger free). Maintain the flywheel at this position and clock the time taken for the pressure to drop from 13.73 to 12.75 MPa (from 140 to 130 kgf/cm^2, from 1991 to 1849 psi).
8. Measure the time needed to decrease the pressure from 13.73 to 12.75 MPa (140 to 130 kgf/cm^2, 1991 to 1849 psi).
9. If the measurement is less than allowable limit, replace the pump with new one or repair with a Kubota-authorized pump service shop.

Fuel tightness of delivery valve	Factory spec.	10 seconds 13.73 → 12.75 MPa 140 → 130 kgf/cm^2 1991 → 1849 psi
	Allowable limit	5 seconds 13.73 → 12.75 MPa 140 → 130 kgf/cm^2 1991 → 1849 psi

■ **NOTE**

- **Never try to disassemble the injection pump assembly. For repairs, you are strongly requested to contact a Kubota-authorized pump service shop.**

(1) Injection Pump Pressure Tester
(2) Injection Nozzle
(3) Protection Cover for Jetted Fuel

W1017786

https://truckmanualshub.com/

CAUTION

- **Check the nozzle injection pressure and condition after confirming that there is nobody standing in the direction the fume goes. If the fume from the nozzle directly contacts the human body, cells may be destroyed and blood poisoning may be caused.**

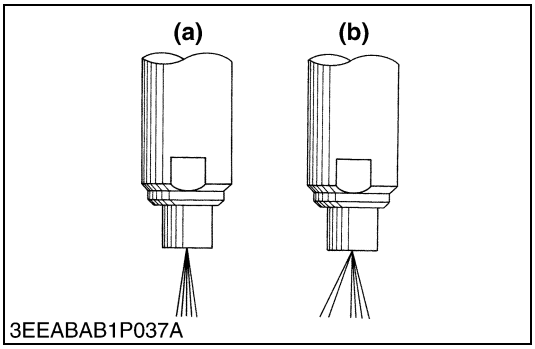

3EEABAB1P037A

Nozzle Spraying Condition

1. Set the injection nozzle to a nozzle tester, and check the nozzle spraying condition.
2. If the spraying condition is defective, replace the nozzle piece.

(a) Good **(b) Bad**

W10181310

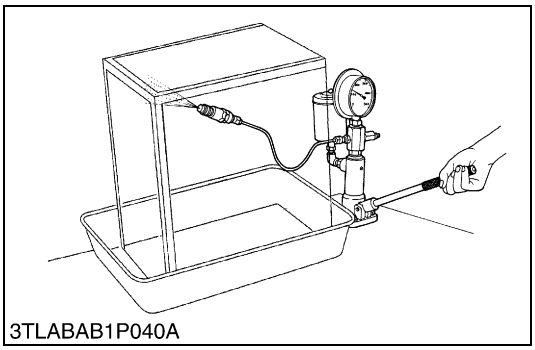
3TLABAB1P040A

Fuel Injection Pressure

1. Set the injection nozzle to a nozzle tester.
2. Slowly move the tester handle to measure the pressure at which fuel begins jetting out from the nozzle.
3. If the measurement is not within the factory specifications, replace the adjusting washer (1) in the nozzle holder to adjust it.

(Reference)

- Pressure variation with 0.01 mm (0.0004 in.) difference of adjusting washer thickness.
  Approx. 235 kPa (2.4 kgf/cm^2, 34 psi)

Fuel injection pressure	Factory spec.	13.73 to 14.71 MPa 140 to 150 kgf/cm^2 1991 to 2134 psi

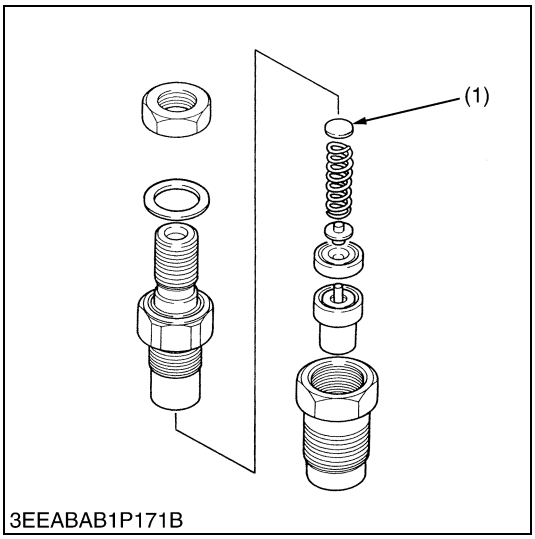

3EEABAB1P171B

(1) Adjusting Washer

W10182100

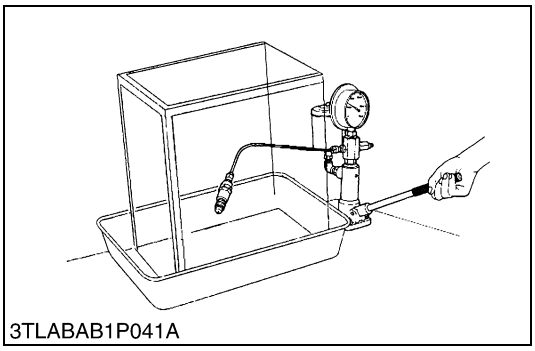
3TLABAB1P041A

Valve Seat Tightness

1. Set the injection nozzle to a nozzle tester.
2. Raise the fuel pressure, and keep at 12.75 MPa (130 kgf/cm^2, 1849 psi) for 10 seconds.
3. If any fuel leak is found, replace the nozzle piece.

Valve seat tightness	Factory spec.	No fuel leak at 12.75 MPa 130 kgf/cm^2 1849 psi

W10183690

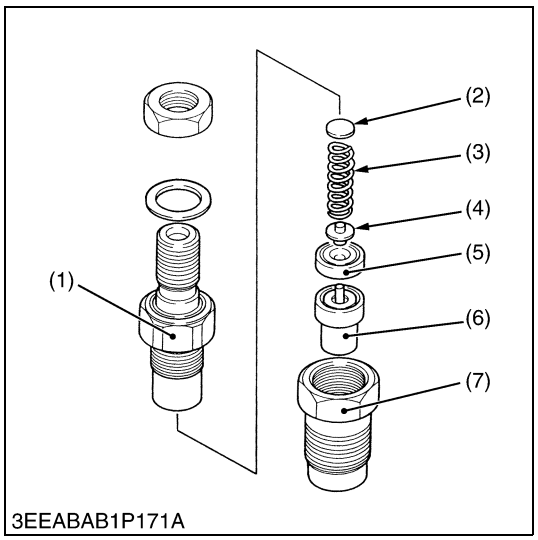

Nozzle Holder

1. Secure the nozzle retaining nut (7) with a vise.
2. Remove the nozzle holder (1), and take out parts inside.

(When reassembling)

- Assemble the nozzle in clean fuel oil.
- Install the push rod (4), noting its direction.
- After assembling the nozzle, be sure to adjust the fuel injection pressure.

Tightening torque	Nozzle holder	34.3 to 39.2 N·m 3.5 to 4.0 kgf·m 25.3 to 28.9 ft-lbs
	Overflow pipe retaining nut	19.6 to 24.5 N·m 2.0 to 2.5 kgf·m 14.5 to 18.1 ft-lbs
	Nozzle holder assembly	49.0 to 68.6 N·m 5.0 to 7.0 kgf·m 36.2 to 50.6 ft-lbs

(1) Nozzle Holder
(2) Adjusting Washer
(3) Nozzle Spring
(4) Push Rod
(5) Distance Piece
(6) Nozzle Piece
(7) Nozzle Retaining Nut

W1018491

(5) Electrical System

CAUTION

- **To avoid accidental short circuit, be sure to attach the positive cable to the positive terminal before the negative cable is attached to the negative terminal.**
- **Never remove the battery cap while the engine is running.**
- **Keep electrolyte away from eyes, hands and clothes. If you are spattered with it, wash it away completely with water immediately.**
- **Keep open sparks and flames away from the battery at all times. Hydrogen gas mixed with oxygen becomes very explosive.**

■ **IMPORTANT**

- **If the machine is to be operated for a short time without battery (using a slave battery for starting), use additional current (lights) while engine is running and insulate terminal of battery. If this advice is disregarded, damage to alternator and regulator may result.**

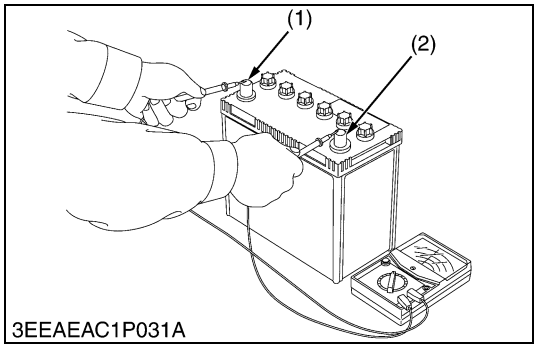

Battery Voltage

1. Stop the engine.
2. Measure the voltage with a circuit tester between the battery terminals.
3. If the battery voltage is less than the factory specification, check the battery specific gravity and recharge the battery.

Battery voltage	Factory spec.	More than 12 V

(1) Positive Terminal
(2) Negative Terminal

W10125620

https://truckmanualshub.com/

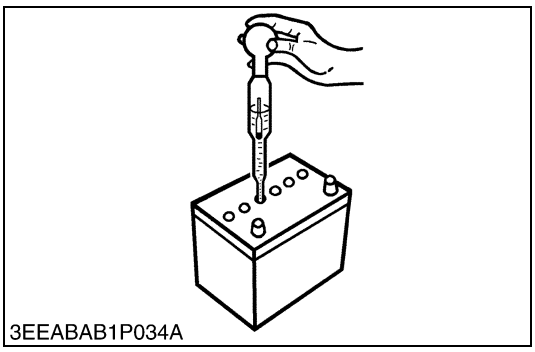
3EEABAB1P034A

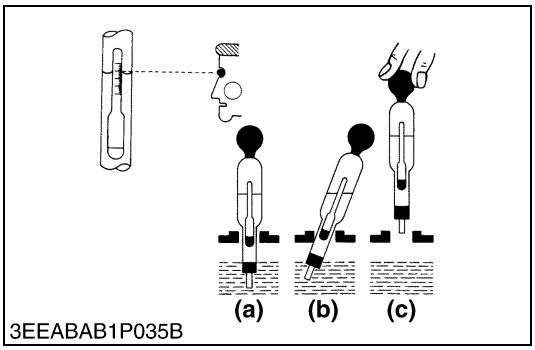

3EEABAB1P035B

Battery Specific Gravity

1. Check the specific gravity of the electrolyte in each cell with a hydrometer.
2. When the electrolyte temperature differs from that at which the hydrometer was calibrated, correct the specific gravity reading following the formula mentioned in **(Reference)**.
3. If the specific gravity is less than 1.215 (after it is corrected for temperature), charge or replace the battery.
4. If the specific gravity differs between any two cells by more than 0.05, replace the battery.

■ **NOTE**

- **Hold the hydrometer tube vertical without removing it from the electrolyte.**
- **Do not suck too much electrolyte into the tube.**
- **Allow the float to move freely and hold the hydrometer at eye level.**
- **The hydrometer reading must be taken at the highest electrolyte level.**

(Reference)

- Specific gravity slightly varies with temperature. To be exact, the specific gravity decreases by 0.0007 with an increase of 1 °C (0.0004 with an increase of 1 °F) in temperature, and increases by 0.0007 with a decreases of 1 °C (0.0004 with a decrease of 1 °F).
  Therefore, using 20 °C (68 °F) as a reference, the specific gravity reading must be corrected by the following formula :
  - Specific gravity at 20 °C = Measured value + 0.0007 × (electrolyte temperature : 20 °C)
  - Specific gravity at 68 °F = Measured value + 0.0004 × (electrolyte temperature : 68 °F)

Specific Gravity	State of Charge
1.260 Sp. Gr.	100 % Charged
1.230 Sp. Gr.	75 % Charged
1.200 Sp. Gr.	50 % Charged
1.170 Sp. Gr.	25 % Charged
1.140 Sp. Gr.	Very Little Useful Capacity
1.110 Sp. Gr.	Discharged

At an electrolyte temperature of 20 °C (68 °F)

(a) Good
(b) Bad
(c) Bad

W1019017

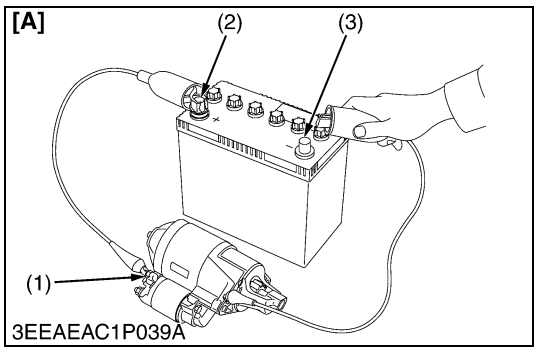

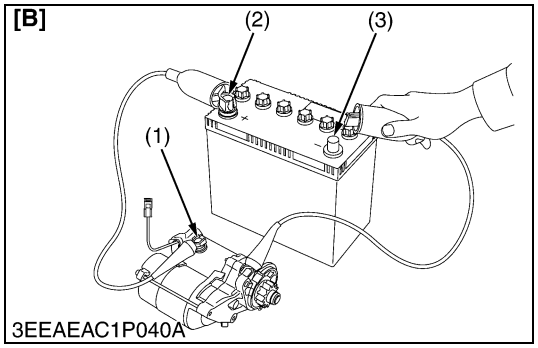

Motor Test

CAUTION

- **Secure the starter to prevent it from jumping up and down while testing the motor.**

1. Disconnect the battery negative cable from the battery.
2. Disconnect the battery positive cable from the battery.
3. Disconnect the leads from the starter **B** terminal.
4. Remove the starter from the engine.
5. Connect a jumper lead from the starter **C** terminal (1) to the battery positive terminal (2).
6. Connect a jumper lead momentarily between the starter's body and the battery negative terminal (3).
7. If the motor does not run, starter is failure.
   Repair or replace the starter.

■ **NOTE**

- **B terminal : It is the terminal which connects the cable from the battery to the starter.**
- **C terminal : It is the terminal which connects the cable from the motor to the magnet switch.**

(1) **C** Terminal
(2) Positive Terminal
(3) Negative Terminal

[A] Electromagnetic Drive Type
[B] Planetary Gear Reduction Type

W1019297

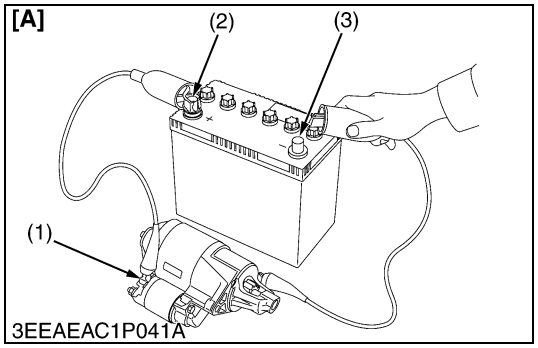

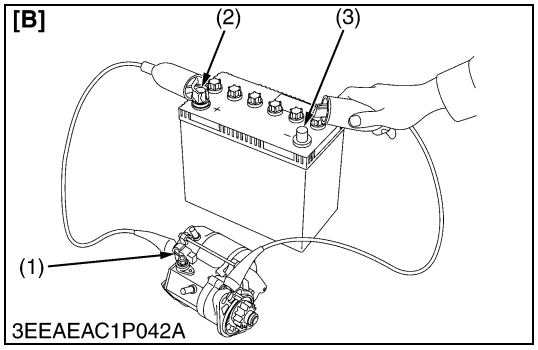

Magnetic Switch Test

1. Disconnect the battery negative cable from the battery.
2. Disconnect the battery positive cable from the battery.
3. Disconnect the leads from the starter **B** terminal.
4. Remove the starter from the engine.
5. Connect a jumper lead from the starter **S** terminal (1) to the battery positive terminal (2).
6. Connect a jumper lead momentarily between the starter's body and the battery negative terminal (3).
7. If the pinion gear does not pop out, the magnetic switch is failure.
   Repair or replace the starter.

■ **NOTE**

- **B terminal : It is the terminal which connects the cable from the battery to the starter.**
- **S terminal : It is the terminal which connects the cable from the starter switch to the magnet switch.**

(1) **S** Terminal
(2) Positive Terminal
(3) Negative Terminal

[A] Electromagnetic Drive Type
[B] Planetary Gear Reduction Type

0000010743E

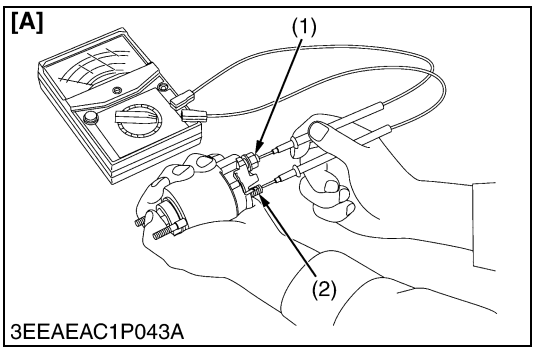

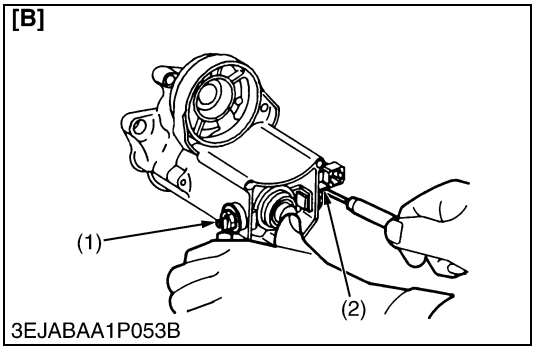

Magnet Switch Continuity Test

1. Check the continuity across the **C** terminal (1) and the **B** terminal (2) with a circuit tester, pushing in the plunger.
2. If not continuous or if a certain value is indicated, replace the magnet switch.

(1) **C** Terminal
(2) **B** Terminal

[A] Electromagnetic Drive Type
[B] Planetary Gear Reduction Type

0000010771E

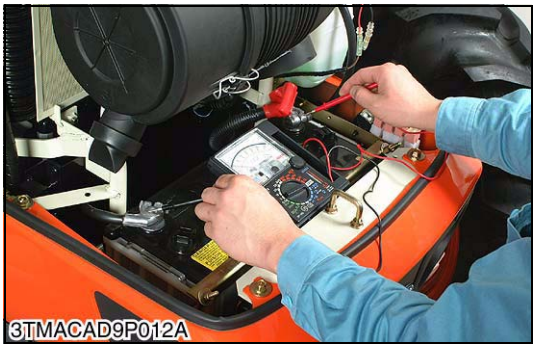

Alternator on Unit Test

(Before testing)

- Before alternator on unit test, check the battery terminal connections, circuit connection, fan belt tension, charging indicator lamp, fuses on the circuit, and abnormal noise from the alternator.
- Prepare full charged battery for the test.

■ **NOTE**

- **Be careful not to touch the rotating engine parts while engine is running.**
  Keep safety distance from the engine rotating parts.

1. Start the engine.
2. When the engine is operating measure the voltage between two battery terminals. If the voltage is between 13.8 V and 14.8 V, the alternator is operating normally.
3. If the results of alternator on unit test are not within the specifications, disassemble the alternator and check the each component part for finding out the failure. See the “DISASSEMBLING AND ASSEMBLING” and “SERVICING” for alternator.

Regulating voltage at no load	Factory spec.	13.8 to 14.8 V at 25 °C (77 °F)

0000010745E

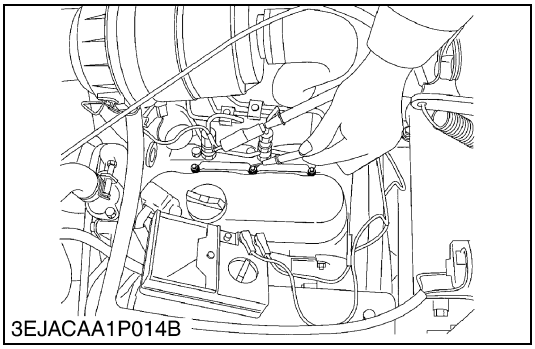

Glow Plug Lead Terminal Voltage

1. Turn the key switch to the “**GLOW** (or **PREHEAT**)” position, and measure the voltage with a circuit tester between the lead terminal and the engine body.
2. If the voltage differs from the battery voltage, the wiring harness or main switch is faulty.

Voltage	Main switch key at **GLOW** (or **PREHEAT**)	Approx. battery voltage

0000010725E

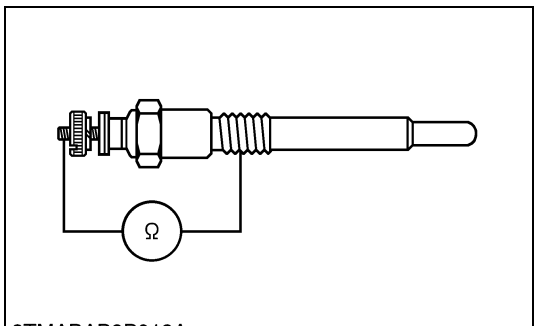

3TMABAB9P012A

Glow Plug Continuity

1. Remove the glow plug.
2. Measure the resistance with a circuit tester between the glow plug terminal and the glow plug housing.
3. If the factory specification is not indicated, glow plug is faulty.

Resistance	Factory spec.	Approx. 0.9 Ω

0000010726E

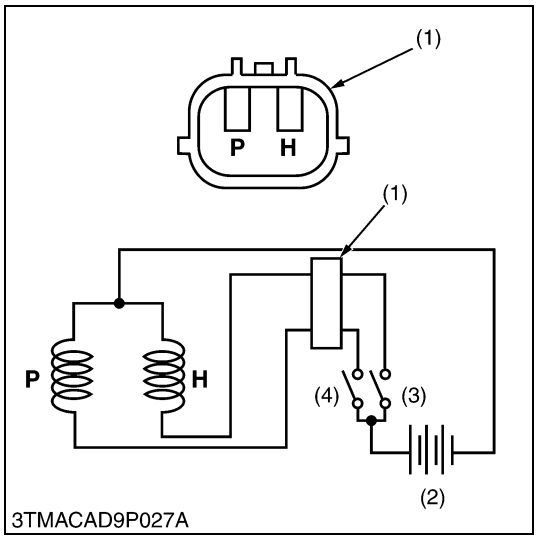

3TMACAD9P027A

Engine Stop Solenoid

1. Remove the engine stop solenoid from the engine.
2. Connect the jumper leads from the pulling coil **P** terminal to the switch (3), and from switch (3) to the battery positive terminal.
3. Connect the jumper leads from the holding coil **H** terminal to the switch (4), and from switch (4) to the battery positive terminal.
4. Connect the jumper leads from the engine stop solenoid body to the battery negative terminal.
5. When switch (4) is turn on, the plunger pull into the solenoid body and then turn off the switch (4), the plunger comes out.
6. Turn on the switch (3) then turn on the switch (4), the plunger pull into the solenoid body and it keep in holding position after turn off the switch (4).
7. If the plunger is not attracted, the engine stop solenoid is faulty.

■ **IMPORTANT**

- **Never apply the current for pulling coil more than two seconds when inspecting.**

(1) Connector
(2) Battery
(3) Switch for Holding Coil
(4) Switch for Pulling Coil

P : Terminal for Pulling Coil
H : Terminal for Holding Coil

W1020600

(6) Turbocharger

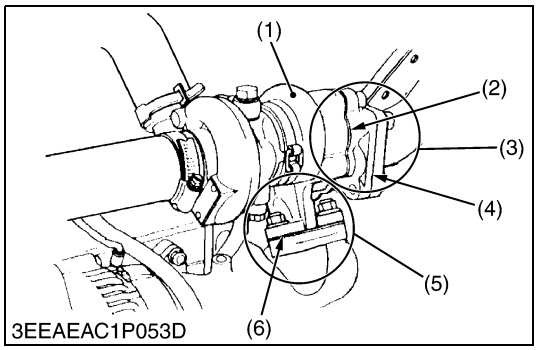

3EEAEAC1P053D

Turbine Side

1. Check the exhaust port (3) and inlet port (5) side of turbine housing (1) to see if there is no exhaust gas leak.
2. If any gas leak is found, retighten the bolts and nuts or replace the gasket (2) / (4) / (6) with new one.

(1) Turbine Housing
(2) Gasket
(3) Exhaust Port
(4) Gasket
(5) Inlet Port
(6) Gasket

W1076917

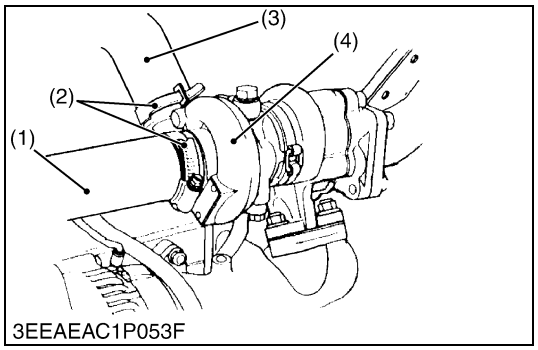

3EEAEAC1P053F

Compressor Side

1. Check the inlet hose (3) of the compressor cover (4) to see if there is no air leak.
2. If any air leak is found, change the clamp (2) and / or inlet hoses.
3. Check the intake hose (1) and the clamp to see if there is no loose or crack.
4. If any loose or crack is found, tighten the clamp or change the hose to prevent dust from entry.

(1) Intake Hose
(2) Clamp
(3) Inlet Hose
(4) Compressor Cover

W1077032

https://truckmanualshub.com/

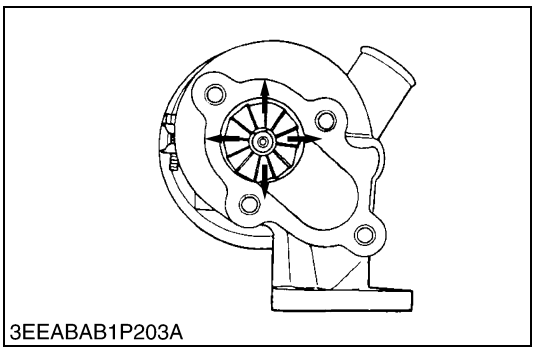
3EEABAB1P203A

Radial Clearance

1. If the wheel contact to the housing, replace the turbocharger assembly with new one.

W1077353

[2] DISASSEMBLING AND ASSEMBLING

(1) Draining Oil and Coolant

Draining Oil and Coolant

CAUTION

- **Never remove radiator cap until coolant temperature is below its boiling point. Then loosen cap slightly to the stop to relieve any excess pressure before removing cap completely.**

1. Prepare a bucket. Open the drain cock to drain coolant.
2. Prepare an oil pan. Remove the drain plug to drain engine oil in the pan.

W1021151

(2) External Components

Air Cleaner and Muffler

1. Remove the air cleaner.
2. Remove muffler retaining nuts to remove the muffler.

(When reassembling)

- Install the muffler gasket so that its steel side face the muffler.

W1021239

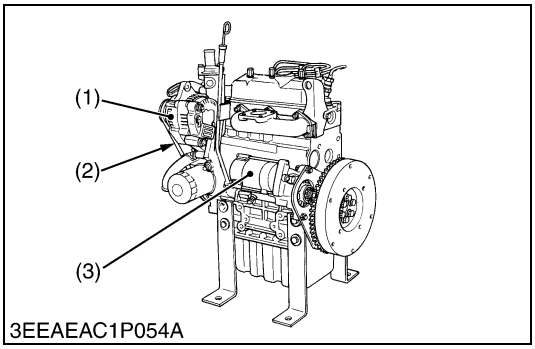

3EEAEAC1P054A

Alternator and Fan Belt

1. Remove the alternator (1).
2. Remove the fan belt (2).
3. Remove the starter (3).

(When reassembling)

- Check to see that there are no cracks on the belt surface.

■ **IMPORTANT**

- **After reassembling the fan belt, be sure to adjust the fan belt tension.**

(1) Alternator
(2) Fan Belt
(3) Starter

W1021324

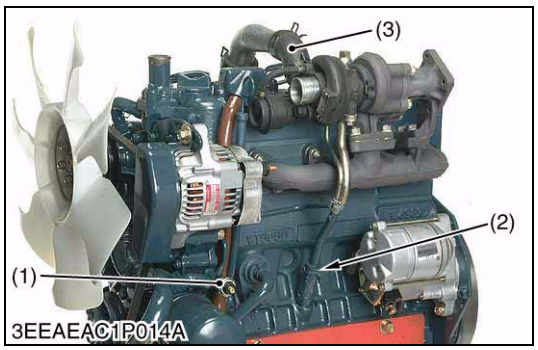

Turbocharger (equipped with Turbocharger Model)

CAUTION

- **While the engine is running and or just after it stops, the turbocharger is hot, be careful not to touch the turbocharger.**

■ **NOTE**

- **When detaching and attaching the turbocharger assembly, be very careful not to allow dust, dirt and other foreign matters in the oil pipes.**
- **When the turbocharger assembly has been replaced, pour fresh engine oil through the oil filter port of the turbocharger.**
- **Before starting the engine, make sure that the air cleaner position.**

1. Disconnect the intake hose (3).
2. Remove the oil switch (1).
3. Disconnect the pipe band (2).
4. Remove the exhaust manifold with turbocharger.

(1) Oil Switch
(2) Pipe Band
(3) Intake Hose

W1021474

(3) Cylinder Head and Valve

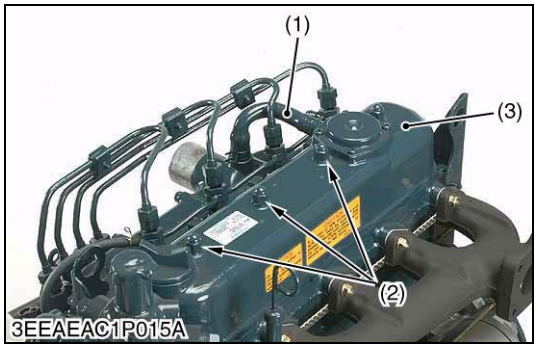

Cylinder Head Cover

1. Disconnect the breather hose (1).
2. Remove the cylinder head cover screw (2).
3. Remove the cylinder head cover (3).

(When reassembling)

- Check to see if the cylinder head cover gasket is not defective.

Tightening torque	Cylinder head cover screw	6.9 to 8.8 N·m 0.7 to 0.9 kgf·m 5.1 to 6.5 ft-lbs

(1) Breather Hose
(2) Cylinder Head Cover Screw
(3) Cylinder Head Cover

W1028468

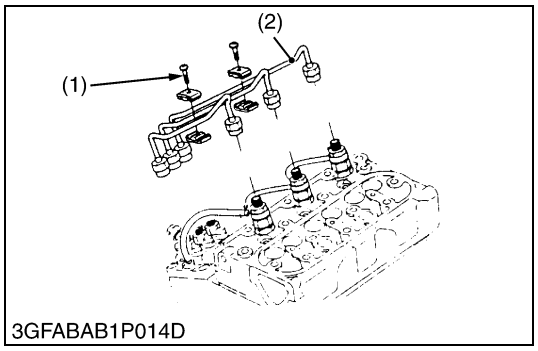

Injection Pipes

1. Loosen the screws to the pipe clamp (1).
2. Detach the injection pipes (2).

(When reassembling)

- Sent compressed air into the pipes to blow out dust. Then, reassemble the pipes in the reverse order.

Tightening torque	Injection pipe retaining nut	24.5 to 34.3 N·m 2.5 to 3.5 kgf·m 18.1 to 25.3 ft-lbs

(1) Pipe Clamp
(2) Injection Pipe

W1028640

https://truckmanualshub.com/

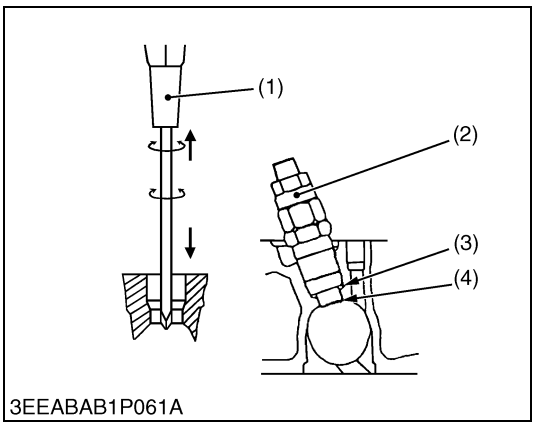

3EEABAB1P061A

Nozzle Heat Seal Service Removal Procedure

■ **IMPORTANT**
- **Use a plus (phillips head) screw driver (1) that has a diameter which is bigger than the heat seal hole (Approx. 6 mm (1/4 in.)).**

1. Drive screw driver (1) lightly into the heat seal hole.
2. Turn screw driver three or four times each way.
3. While turning the screw driver, slowly pull the heat seal (4) out together with the injection nozzle gasket (3).
4. If the heat seal drops, repeat the above procedure.

(When reassembling)
- Heat seal and injection nozzle gasket must be changed when the injection nozzle is removed for cleaning or for service.

(1) Plus Screw Driver
(2) Nozzle Holder
(3) Injection Nozzle Gasket
(4) Heat Seal

W1021255

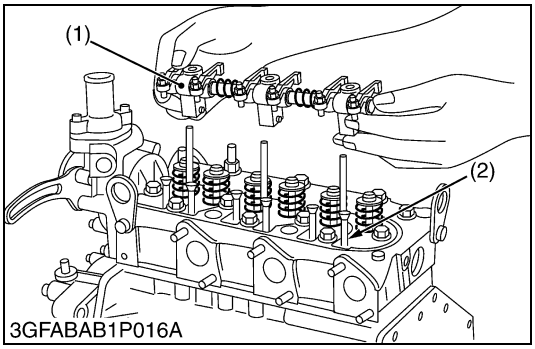

3GFABAB1P016A

Rocker Arm and Push Rod

1. Remove the rocker arm bracket screws.
2. Detach the rocker arm assembly (1).
3. Remove the push rods (2).

(When reassembling)
- When putting the push rods (2) onto the tappets (3), check to see if their ends are properly engaged with the dimples.

■ **IMPORTANT**
- **After installing the rocker arm, be sure to adjust the valve clearance.**

Tightening torque	Rocker arm bracket screw	21.6 to 26.5 N·m 2.2 to 2.7 kgf·m 15.9 to 19.5 ft-lbs

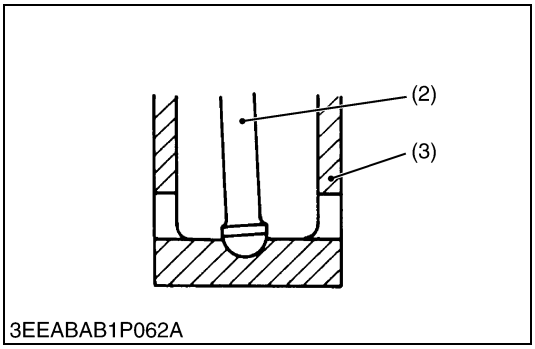

3EEABAB1P062A

(1) Rocker Arm Assembly
(2) Push Rod
(3) Tappet

W1021437

https://truckmanualshub.com/

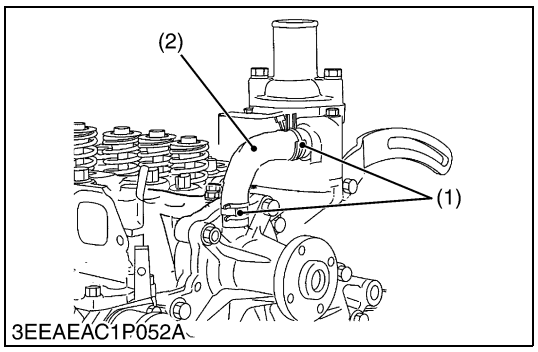

3EEAEAC1P052A

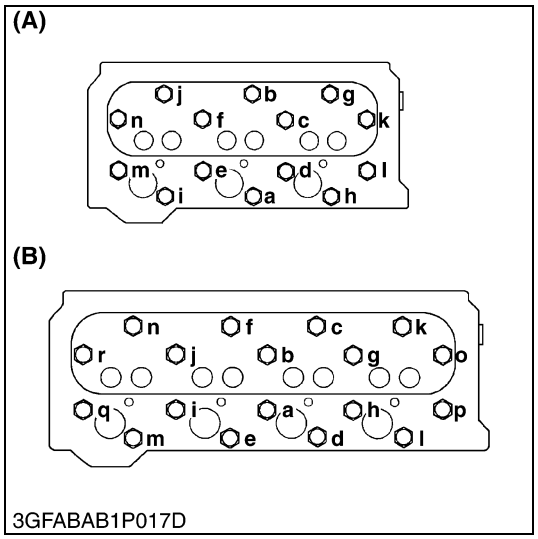

3GFABAB1P017D

Cylinder Head and Cylinder Head Gasket (To be continued)

1. Loosen the pipe clamps (1), and remove the water return pipe (2).
2. Remove the cylinder head screw in the order of (**n** or **r**) to (**a**) and remove the cylinder head.
3. Remove the cylinder head gasket.
4. Remove the O-ring. (Carbon gasket type only.)

■ **NOTE**

- **Material of cylinder head gasket has been changed from carbon to metal. When replacing a cylinder head gasket, be sure to check with the following table and notes to chose a correct part.**
- **The carbon gasket can be used for the engine with the metal gasket specified using the O-ring (15221-33700).**
- **The metal gasket cannot be used for the carbon type specification engine.**
- **Engine serial number and cylinder head gasket.**

Model	Type of Gasket	Parts Number	Serial Number
D905-E2B / E2BG	Carbon gasket	16221-03310	4R0300 and below
	Metal gasket	1G032-03310	4R0301 and above
D1005-E2B / E2BG	Carbon gasket	16231-03310	4Z0452 and below
	Metal gasket	1G040-03310	4Z0453 and above
D1105-E2B / E2BG D1105-T-E2B	Carbon gasket	1E010-03310	4J0010 and below
	Metal gasket	1G063-03310	4J0011 and above
V1305-E2B / E2BG	Carbon gasket	16271-03310	5E0009 and below
	Metal gasket	1G078-03310	5E0010 and above
V1505-E2B / E2BG V1505-T-E2B	Carbon gasket	16292-03310	4E9455 and below
	Metal gasket	16394-03310	4E9456 and above

Tightening torque	Cylinder head screw	63.7 to 68.6 N·m 6.5 to 7.0 kgf·m 47.0 to 50.6 ft-lbs

(1) Clamp
(2) Return Pipe

(A) 3 Cylinder
(B) 4 Cylinder
n or r to a : To Loosen
a to n or r : To Tighten

W10205250

https://truckmanualshub.com/

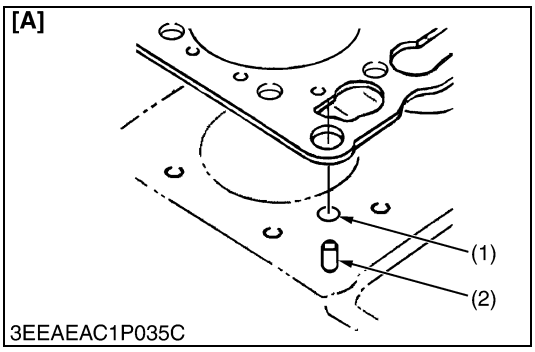

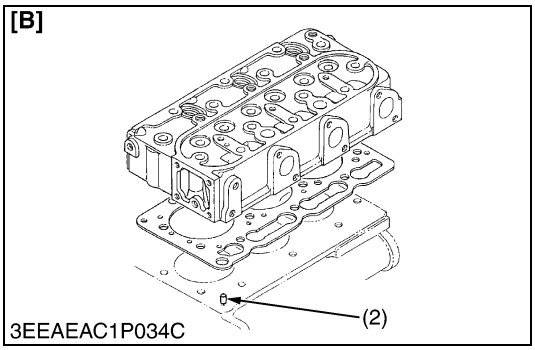

Cylinder Head and Cylinder Head Gasket (Continued)

(When reassembling the carbon gasket type)

- Replace the cylinder head gasket with new one.
- Securely fit the O-ring (1) to the pin pipe (2).
- When mounting the gasket, set it to the pin pipe holes. Take care not to mount it reversely.
- The cylinder head should be free of scratches and dust.
- Install the cylinder head, using care not to damage the gasket.
- After applying engine oil to the thread of screws, tighten them in several steps and specified sequence (**a**) to (**n** or **r**).
- Retighten the cylinder head screws after running the engine for 30 minutes and after cooling, adjust valve clearance.

(When reassembling the metal gasket type)

- Replace the cylinder head gasket with new one.
- When mounting the gasket, set it to the pin pipe holes. Take care not to mount it reversely.
- The cylinder head should be free of scratches and dust.
- Install the cylinder head, using care not to damage the gasket.
- After applying engine oil to the thread of screws, tighten them in several steps and specified sequence (**a**) to (**n** or **r**).

■ **NOTE**

- **Do not use O-ring on the pin pipe.**
- **It is not necessary to retighten the cylinder head screw and to readjust valve clearance after engine warmed up.**

(1) O-ring
(2) Pin Pipe

[A] Carbon Gasket Type
[B] Metal Gasket Type

W1030042

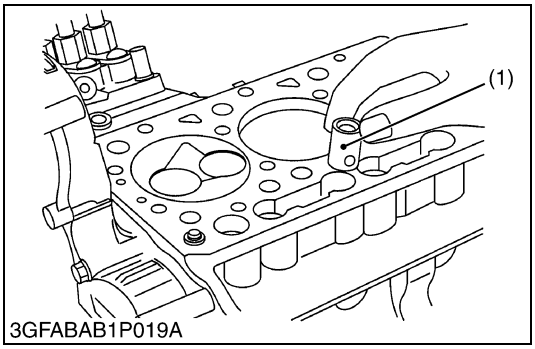

Tappets

1. Remove the tappets (1) from the crankcase.

(When reassembling)

- Visually check the contact between tappets and cams for proper rotation. If defect is found, replace tappets.
- Before installing the tappets, apply engine oil thinly around them.

■ **IMPORTANT**

- **Do not change the combination of tappet and tappet guide.**

(1) Tappet

W10209700

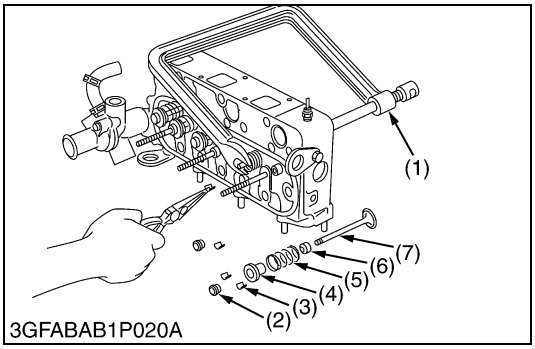

Valves

1. Remove the valve caps (2).
2. Remove the valve spring collet (3), pushing the valve spring retainer (4) by valve spring replacer (1).
3. Remove the valve spring retainer (4), valve spring (5) and valve stem seal (6).
4. Remove the valve (7).

(When reassembling)

- Wash the valve stem and valve guide hole, and apply engine oil sufficiently.
- After installing the valve spring collets, lightly tap the stem to assure proper fit with a plastic hammer.

■ **IMPORTANT**

- **Don't change the combination of valve and valve guide.**

(1) Valve Spring Replacer
(2) Valve Cap
(3) Valve Spring Collet
(4) Valve Spring Retainer
(5) Valve Spring
(6) Valve Stem Seal
(7) Valve

W10211070

https://truckmanualshub.com/

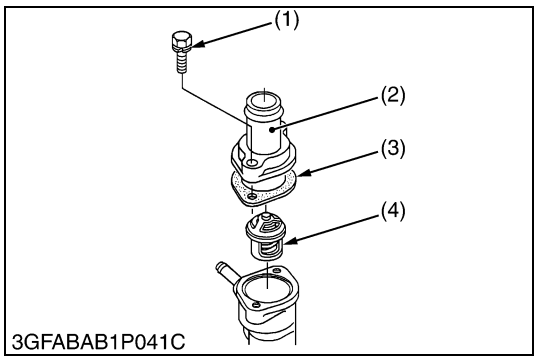

Thermostat Assembly

1. Remove the thermostat cover mounting screws (1), and remove the thermostat cover (2).
2. Remove the thermostat assembly (4).

(When reassembling)

- Apply a liquid gasket (Three Bond 1215 or equivalent) only at the thermostat cover side of the gasket (3).

(1) Thermostat Cover Mounting Screw
(2) Thermostat Cover
(3) Thermostat Cover Gasket
(4) Thermostat Assembly

W10363950

(4) Gear Case and Timing Gears

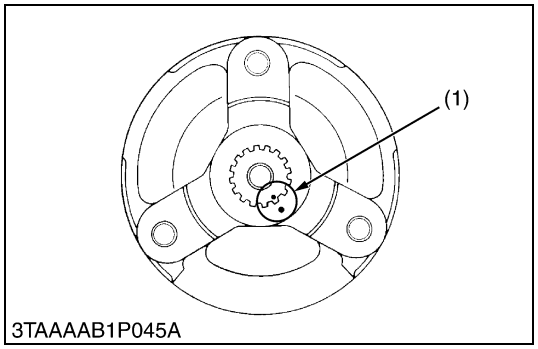

Fan Drive Pulley

1. Secure the flywheel to keep it from turning.
2. Remove the fan drive pulley screw.
3. Draw out the fan drive pulley with a puller.

(When reassembling)

- Install the pulley to crankshaft, aligning the mark (1) on them (3-cylinder engine).
- Apply engine oil to the fan drive pulley retaining screw. And tighten it.

Tightening torque	Fan drive pulley screw	235.4 to 245.2 N·m 24.0 to 25.0 kgf·m 173.6 to 180.8 ft-lbs

(1) Aligning Mark

W10181950

https://truckmanualshub.com/

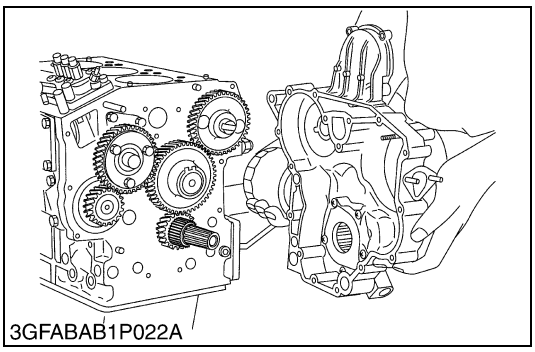
3GFABAB1P022A

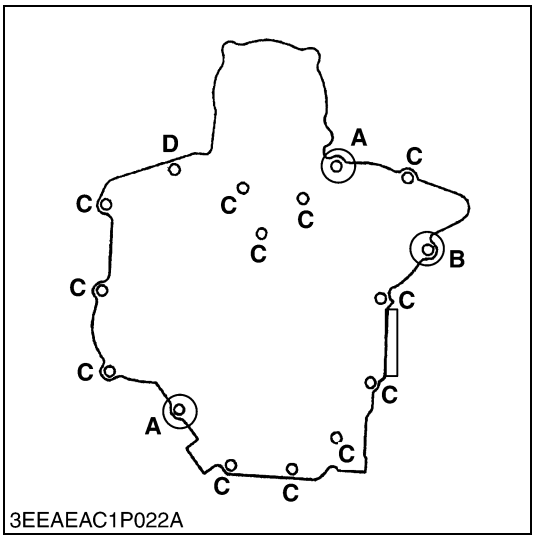

3EEAEAC1P022A

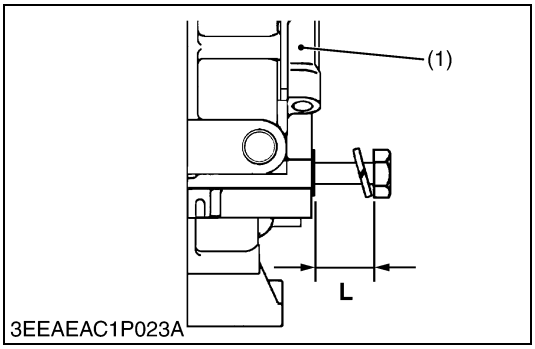

3EEAEAC1P023A

Gear Case

1. Remove the gear case.

(When reassembling)

- Grease thinly to the oil seal, and install it, ensuring the lip does not come off.
- Measure (**L**) when the gear case mounting bolt is inserted in the gear case bolt hole and judge the installation position of the mounting bolt when you do not understand the installation position of the mounting bolt.
  A : L = 18 mm (0.71 in.) (Pipe Pin Position)
  B : L = 13 mm (0.51 in.) (Water Pipe Mounting)
  C : L = 10 mm (0.39 in.)
  D : Nut

(1) Gear Case

W1030917

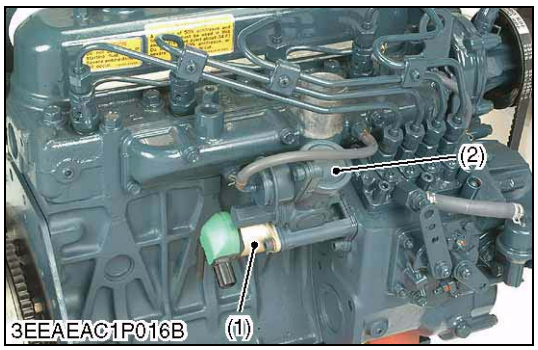

3EEAEAC1P016B

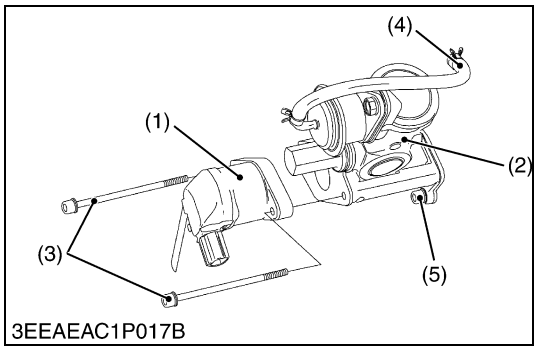

3EEAEAC1P017B

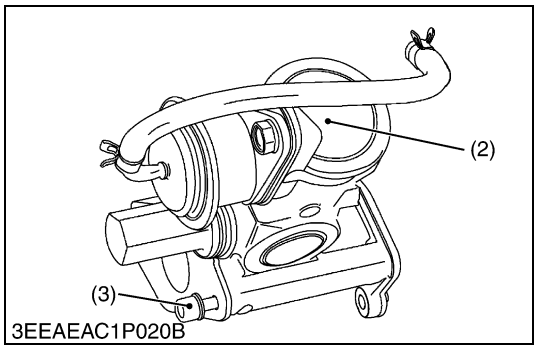

3EEAEAC1P020B

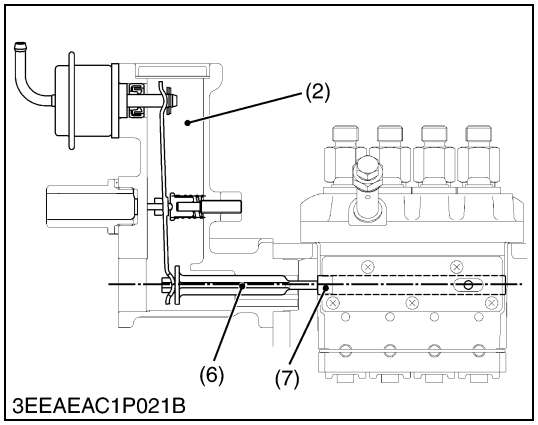

3EEAEAC1P021B

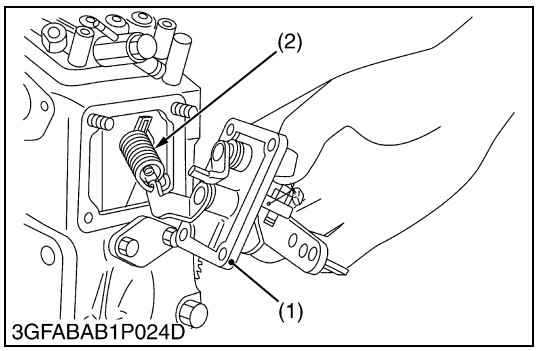

3GFABAB1P024D

Boost Compensator (equipped with Turbocharger Model)

■ **IMPORTANT**

- **Use the stop solenoid mounting bolt (3) for the dropout prevention of boost compensator (2) and the damage prevention of the guide (6) when detach the boost compensator.**
- **The guide (6) of boost compensator and the control rack (7) should be made the level when you install boost compensator assembly.**

1. Disconnect the hose (4).
2. Remove the stop solenoid mounting bolt (M6 × 87 mm) (3).
3. Remove the stop solenoid (1).
4. Install the stop solenoid mounting bolt (3) in an original position again.
5. Remove the boost compensator mounting bolt (5).
6. Detach the boost compensator assembly (2).
7. Remove the stop solenoid mounting bolt (3) with boost compensator assembly (2).

(When reassembling)

1. Install the stop solenoid mounting bolt (3) in boost compensator assembly (2) and assemble it to the boost compensator installation position at the same time.
2. Tighten the boost compensator mounting bolt (5).
3. Remove the stop solenoid mounting bolt (3).
4. Install the stop solenoid (1) and tighten the mounting bolt (3).

■ **NOTE**

- **Apply a liquid gasket (Three Bond 1217D or equivalent) to the boost compensator body.**

(1) Stop Solenoid
(2) Boost Compensator Assembly
(3) Stop Solenoid Mounting Bolt
(4) Hose
(5) Boost Compensator Mounting Bolt
(6) Guide
(7) Control Rack

W1031295

Speed Control Plate

1. Remove the engine stop solenoid (without turbocharger model).
2. Remove the speed control plate (1).

(When reassembling)

- Apply a liquid gasket (Three Bond 1215 or equivalent) to both sides of the solenoid cover gasket and control plate gasket.
- Be careful not to drop the governor spring (2) into the crankcase.

(1) Speed Control Plate
(2) Governor Spring

W1031942

https://truckmanualshub.com/

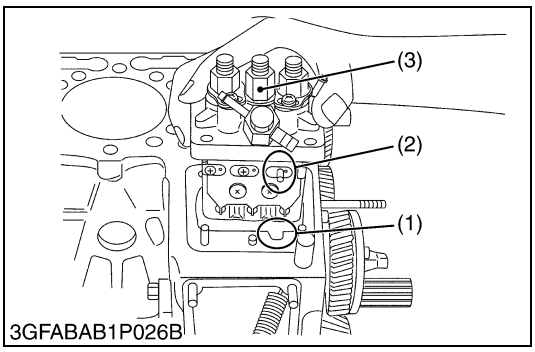

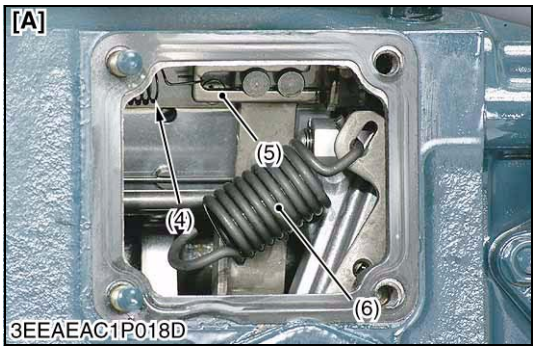

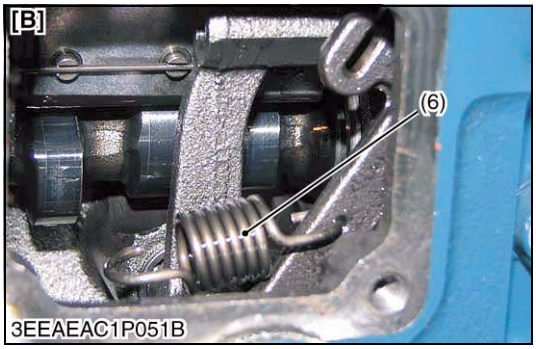

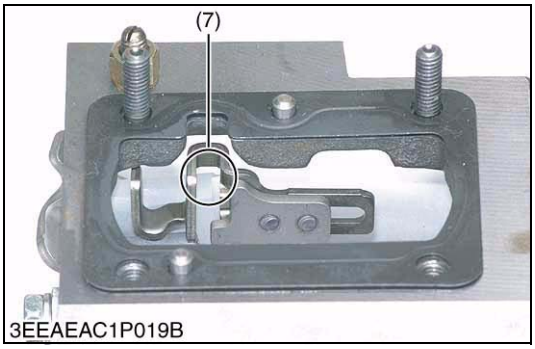

Injection Pump

1. Disconnect the start spring (4) on the thrust lever side (5).
2. Align the control rack pin (2) with the notch (1) on the crankcase, and remove the injection pump (3).
3. Remove the injection pump shims.
4. In principle, the injection pump should not be disassembled.

(When reassembling)

- When installing the injection pump, insert the control rack pin (2) firmly into the groove (7) of the thrust lever of fork lever.

■ **NOTE**

- **Addition or reduction of shim (0.05 mm, 0.0020 in.) delays or advances the injection timing by approx. 0.0087 rad (0.5 °).**
- **In disassembling and replacing, be sure to use the same number or new gasket shims with the same thickness.**

(1) Notch
(2) Control Rack Pin
(3) Injection Pump
(4) Start Spring
(5) Thrust Lever
(6) Governor Spring
(7) Groove

[A] Basic Model
[B] BG Model

W1033441

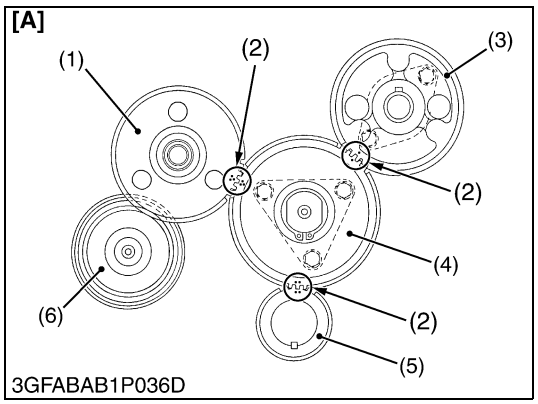

3GFABAB1P036D

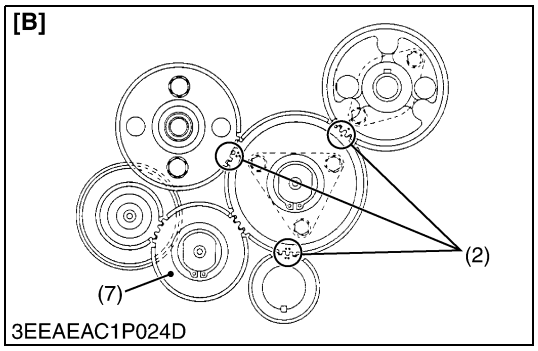

3EEAEAC1P024D

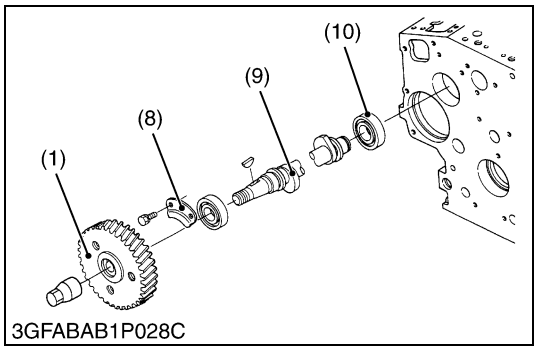

3GFABAB1P028C

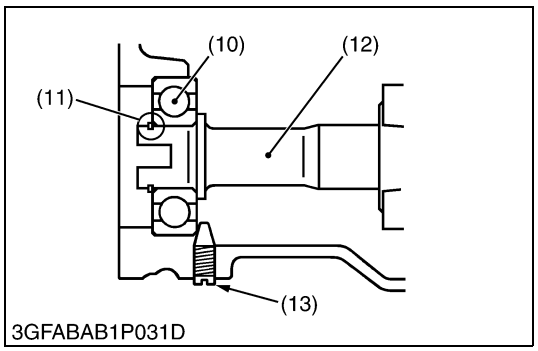

3GFABAB1P031D

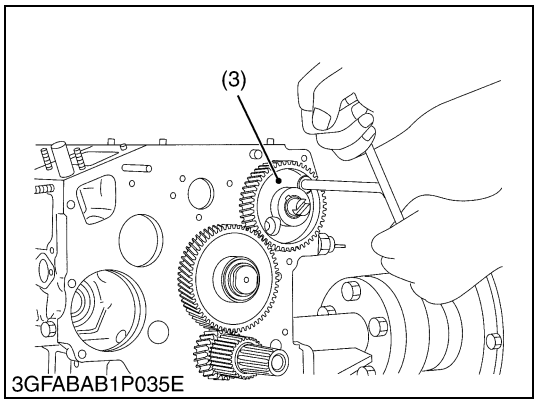

3GFABAB1P035E

Cam Gear, Idle Gear 1, 2 and Governor Gear

1. Remove the idle gear 2 (7) / idle gear 1 (4).
2. Remove the fuel camshaft stopper (8).
3. Draw out the fuel cam gear (1) with fuel camshaft (9).
4. Remove the camshaft stopper bolt.
5. Remove the cam gear (3) with camshaft.
6. Remove the external snap ring (11) from the governor shaft (12).
7. Remove the governor gear (6) with governor shaft (12).

■ **NOTE**

- **Three-lever type fork lever**
  To remove the governor shaft, follow the procedures in 5, 6 above and never remove fork lever and the max torque limiter.

(When reassembling)

- Apply engine oil thinly to the fuel camshaft before installation.
- Make sure to assemble the external snap ring of the governor shaft.
- Check the governor shaft for smooth rotation.

■ **IMPORTANT**

- **There is a model of idle gear 1 (4) and idle gear 2 (7) by the difference of the method of transmission the power to the governor gear (6).**
- **When replacing the ball bearing of governor shaft, securely fit the ball bearing (10) to the crankcase, apply an adhesive (Three Bond 1324B or equivalent) to the set screw (13), and fasten the screw until its tapered part contacts the circumferential end of the ball bearing.**
- **When installing the idle gear, be sure to align the alignment marks on each gears.**

(1) Fuel Cam Gear
(2) Alignment Mark
(3) Cam Gear
(4) Idle Gear 1
(5) Crank Gear
(6) Governor Gear
(7) Idle Gear 2
(8) Fuel Camshaft Stopper
(9) Fuel Camshaft
(10) Ball Bearing
(11) External Snap Ring
(12) Governor Shaft
(13) Set Screw

[A] One Idle Gear Type
[B] Two Idle Gear Type

W1033942

https://truckmanualshub.com/

(5) Piston and Connecting Rod

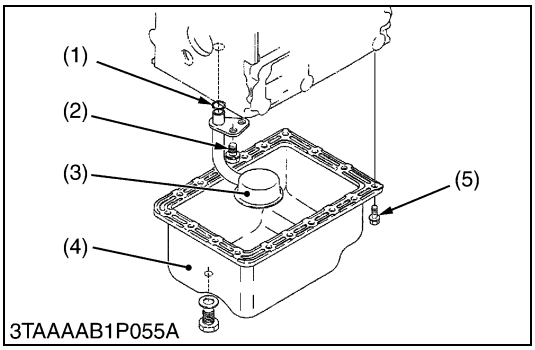

3TAAAAB1P055A

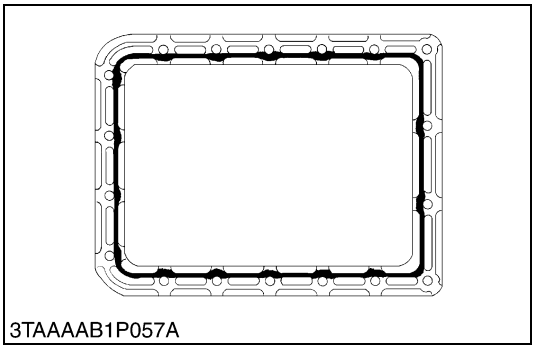
3TAAAAB1P057A

Oil Pan and Oil Strainer

1. Remove the oil pan mounting screws (5).
2. Remove the oil pan (4).
3. Remove the oil strainer (3).

(When reassembling)

- After cleaning the oil strainer, check to see that the filter mesh in clean, and install it.
- Visually check the O-ring (1), apply engine oil, and install it.
- Securely fit the O-ring to the oil strainer.
- To avoid uneven tightening, tighten oil pan mounting screws in diagonal order form the center.

■ **IMPORTANT**

- **Scrape off the old adhesive completely. Wipe the sealing surface clean using waste cloth soaked with gasoline. Now apply new adhesive 3 to 5 mm (0.12 to 0.20 in.) thick all over the contact surface. Apply the adhesive also on the center of the flange as well as on the inner wall of each screw hole.**
- **Cut the nozzle of the "liquid gasket" container at its second notch. Apply "liquid gasket" about 5 mm (0.20 in.) thick. Within 20 minutes after the application of fluid sealant, reassemble the components. Wait then for about 30 minutes, and pour oil in the crankcase.**

(1) O-ring
(2) Screw
(3) Oil Strainer
(4) Oil Pan
(5) Oil Pan Mounting Screw

W10236610

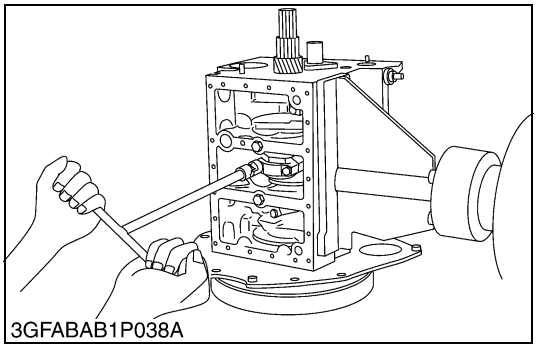
3GFABAB1P038A

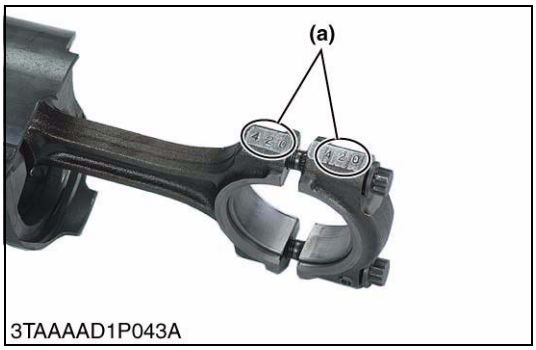

3TAAAAD1P043A

Connecting Rod

1. Remove the connecting rod cap.

(When reassembling)

- Align the marks **(a)** with each other. (Face the marks toward the injection pump.)
- Apply engine oil to the connecting rod screws and lightly screw it in by hand, then tighten it to the specified torque.
  If the connecting rod screw won't be screwed in smoothly, clean the threads.
  If the connecting rod screw is still hard to screw in, replace it.

Tightening torque	Connecting rod screw	41.2 to 46.1 N·m 4.2 to 4.7 kgf·m 30.4 to 34.0 ft-lbs

(a) Mark

W10242740

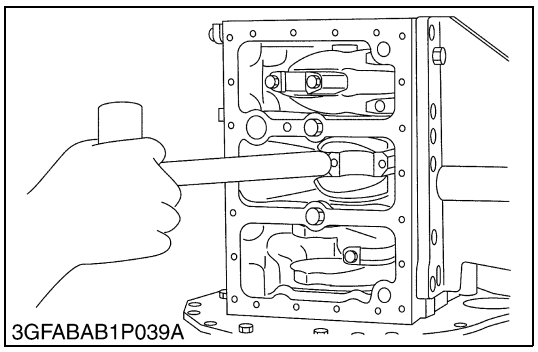
3GFABAB1P039A

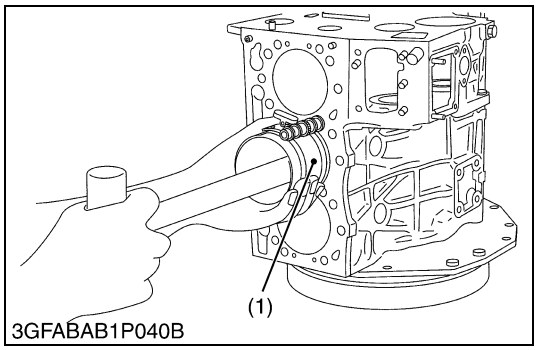

3GFABAB1P040B

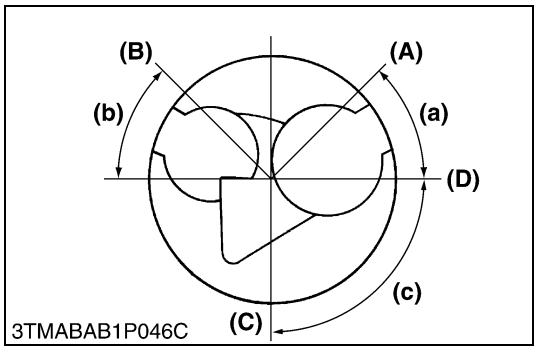

3TMABAB1P046C

Pistons

1. Turn the flywheel and bring the piston to top dead center.
2. Draw out the piston upward by lightly tapping it from the bottom of the crankcase with the grip of a hammer.
3. Draw out the other piston in the same method as above.

(When reassembling)

- Before inserting the piston into the cylinder, apply enough engine oil to the piston.
- When inserting the piston into the cylinder, face the mark on the connecting rod to the injection pump.

■ **IMPORTANT**

- **Do not change the combination of cylinder and piston. Make sure of the position of each piston by marking. For example, mark "1" on the No.1 piston.**
- **When installing the piston into the cylinder, place the gaps of all the piston rings as shown in the figure.**
- **Carefully insert the pistons using a piston ring compressor (1). Otherwise, their chrome-plated section may be scratched, causing trouble inside the cylinder.**

(1) Piston Ring Compressor
(A) Top Ring Gap
(B) Second Ring Gap
(C) Oil Ring Gap
(D) Piston Pin Hole
(a) 0.785 rad (45 °)
(b) 0.785 rad (45 °)
(c) 1.57 rad (90 °)

W10277450

https://truckmanualshub.com/

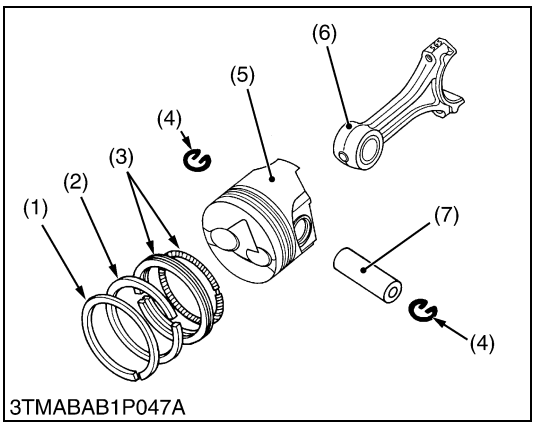

3TMABAB1P047A

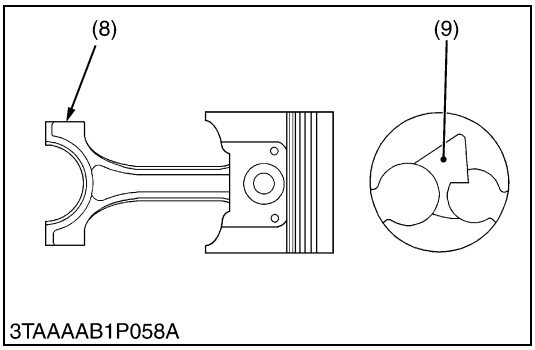

3TAAAAB1P058A

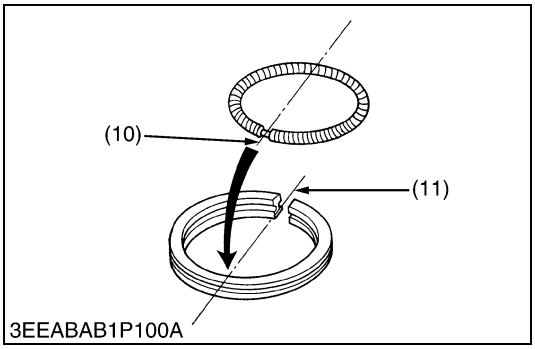

3EEABAB1P100A

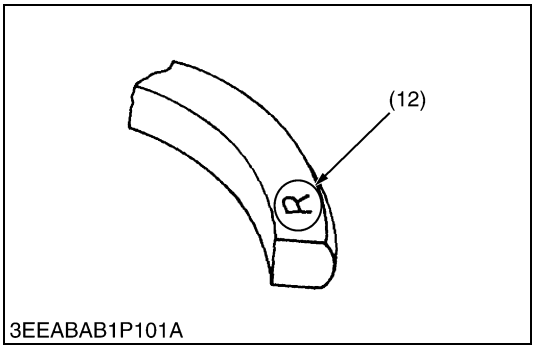

3EEABAB1P101A

Piston Ring and Connecting Rod

1. Remove the piston rings using a piston ring tool.
2. Remove the piston pin (7), and separate the connecting rod (6) from the piston (5).

(When reassembling)

- When installing the ring, assemble the rings so that the manufacturer's mark (12) near the gap faces the top of the piston.
- When installing the oil ring onto the piston, place the expander joint (10) on the opposite side of the oil ring gap (11).
- Apply engine oil to the piston pin.
- When installing the connecting rod to the piston, immerse the piston in 80 °C (176 °F) oil for 10 to 15 minutes and insert the piston pin to the piston.
- When installing the connecting rod to the piston, align the mark (8) on the connecting rod to the fan-shaped concave (9).

■ **NOTE**

- **Mark the same number on the connecting rod and the piston so as not to change the combination.**

(1) Top Ring
(2) Second Ring
(3) Oil Ring
(4) Piston Pin Snap Ring
(5) Piston
(6) Connecting Rod
(7) Piston Pin
(8) Mark
(9) Fan-shaped Concave
(10) Expander Joint
(11) Oil Ring Gap
(12) Manufacturer's Mark

W10281670

(6) Flywheel and Crankshaft

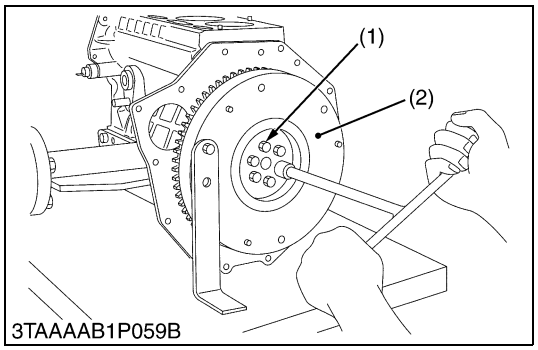

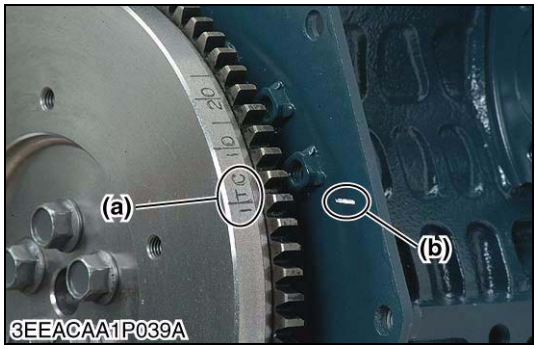

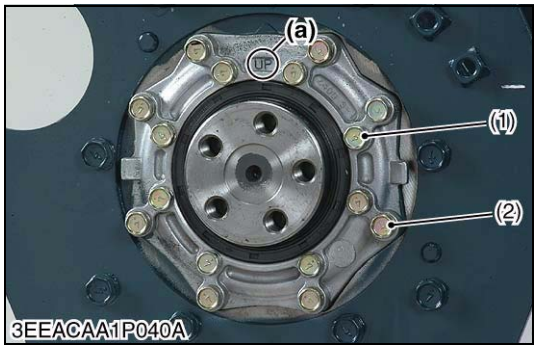

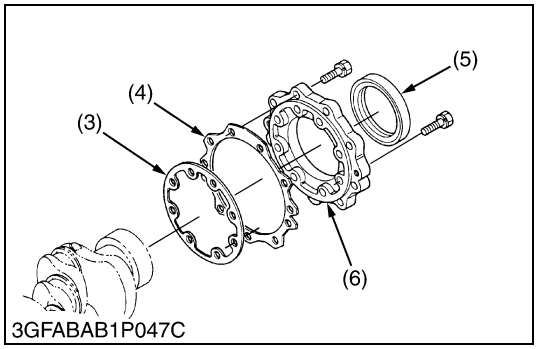

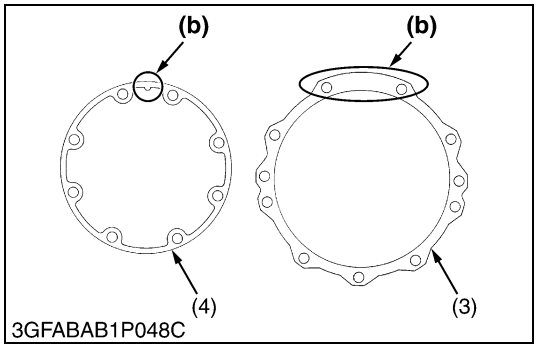

Flywheel

1. Secure the flywheel to keep it from turning, using a flywheel stopper.
2. Remove all flywheel screws (1) and then remove the flywheel (2).

(When reassembling)

- Align the **"1TC"** mark **(a)** on the outer surface of the flywheel horizontally with the alignment mark **(b)** on the rear end plate. Now fit the flywheel in position.
- Apply engine oil to the threads and the undercut surface of the flywheel screw and fit the screw.

Tightening torque	Flywheel screw	53.9 to 58.8 N·m 5.5 to 6.0 kgf·m 39.8 to 43.4 ft-lbs

(1) Flywheel Screw
(2) Flywheel
(a) 1TC Mark
(b) Alignment Mark

W10290240

Bearing Case Cover

1. Remove the bearing case cover mounting screws.
2. Remove the bearing case cover (6).

(When reassembling)

- Fit the bearing case gasket (3) and the bearing case cover gasket (4) with correct directions.
- Install the bearing case cover (6) to position the casting mark **"UP"** on it upward.
- Apply engine oil to the oil seal (5) lip and take care that it is not rolled when installing.
- Tighten the bearing case cover mounting screws with even force on the diagonal line.

Tightening torque	Bearing case cover mounting screw	9.8 to 11.3 N·m 1.00 to 1.15 kgf·m 7.2 to 8.3 ft-lbs

(1) Bearing Case Cover Mounting Screw (Inside)
(2) Bearing Case Cover Mounting Screw (Outside)
(3) Bearing Case Gasket
(4) Bearing Case Cover Gasket
(5) Oil Seal
(6) Bearing Case Cover
(a) Top Mark "UP"
(b) Upside

W10292140

https://truckmanualshub.com/

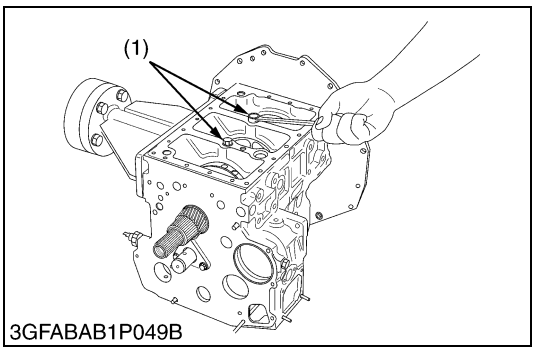

3GFABAB1P049B

Crankshaft Assembly

1. Remove the main bearing case screw 2 (1).
2. Pull out the crankshaft assembly.

■ **IMPORTANT**

- **Take care to protect crankshaft bearing 1 from scratches, caused by the crank gear, etc.. (Wrap the gear in vinyl tape, etc.)**

(When reassembling)

- Clean the oil passage of the crankshaft with compressed air.
- Apply oil to the main bearing case screw 2 (1).
- Install the crankshaft assembly, aligning the screw hole of main bearing case with the screw hole of crankcase.
- Clean the oil passage of the crankshaft with compressed air.

Tightening torque	Main bearing case screw 2	49.0 to 53.9 N·m 5.0 to 5.5 kgf·m 36.2 to 39.8 ft-lbs

(1) Main Bearing Case Screw 2

W10295750

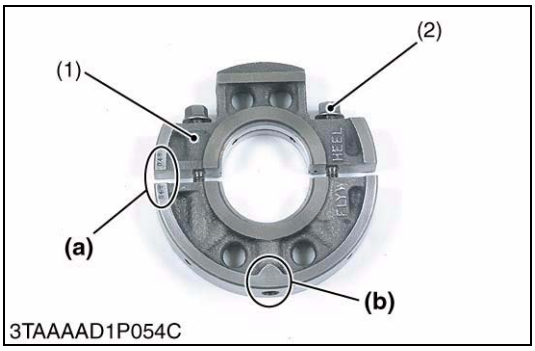

3TAAAAD1P054C

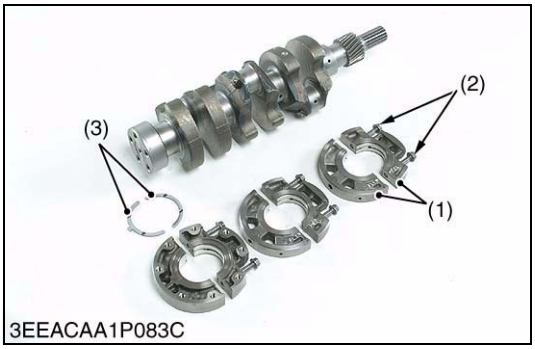

3EEACAA1P083C

Main Bearing Case Assembly

1. Remove the two main bearing case screws 1 (2) of each main bearing cases.
2. Remove the main bearing case from crankshaft.

(When reassembling)

- Clean the oil passage in the main bearing cases.
- Apply clean engine oil on the bearings.
- Install the main bearing case assemblies in the original positions. Since diameters of main bearing cases vary, install them in order of makings **(b)** (**A**, **B**, **C**) from the gear case side.
- Match the alignment numbers **(a)** on the main bearing case assembly 1.
- When installing the main bearing case 1 and 2, face the mark **"FLYWHEEL"** to the flywheel.
- Install the thrust bearing (3) with its oil groove facing outward.
- Confirm that the main bearing case moves smoothly after tightening the main bearing case screw 1 to the specified torque.

Tightening torque	Main bearing case screw 1	29.4 to 34.3 N·m 3.0 to 3.5 kgf·m 21.7 to 25.3 ft-lbs

(1) Main Bearing Case Assembly 1
(2) Main Bearing Case Screw 1
(3) Thrust Bearing
(a) Alignment Number
(b) Marking (A, B, C)

W1037295

https://truckmanualshub.com/

(7) Starter

■ Electromagnetic Drive Type

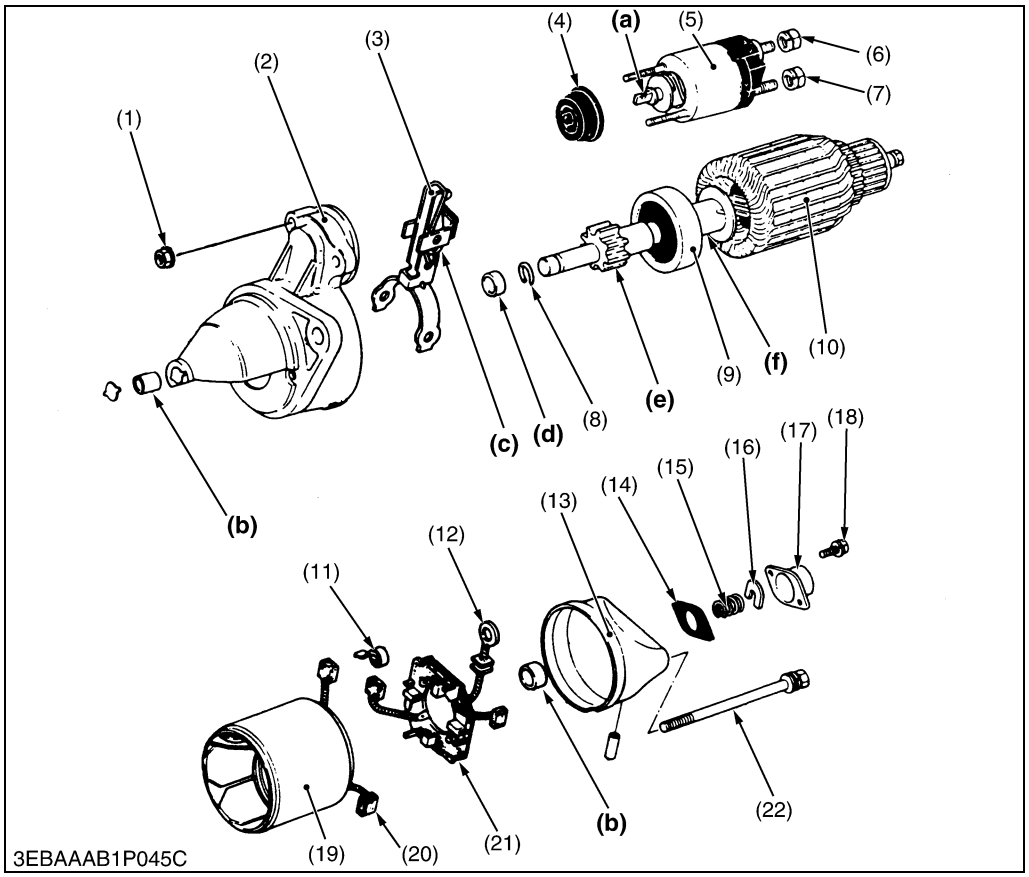

(1) Solenoid Switch Mounting Nut
(2) Starter Drive Housing
(3) Drive Lever
(4) Gasket
(5) Solenoid Switch
(6) **B** Terminal Nut
(7) **C** Terminal Nut
(8) Snap RIng
(9) Overrunning Clutch
(10) Armature
(11) Brush Spring
(12) Connecting Lead
(13) Rear End Frame
(14) Gasket
(15) Brake Spring
(16) Brake Shoe
(17) End Frame Cap
(18) Screw
(19) Yoke
(20) Brush
(21) Brush Holder
(22) Through Bolt

W1037593

1. Unscrew the **C** terminal nut (7), and disconnect the connecting lead (12).
2. Unscrew the solenoid switch mounting nuts (1), and remove the solenoid switch (5).
3. Remove the end frame cap (17).
4. Remove the brake shoe (16), brake spring (15) and gasket (14).
5. Unscrew the through bolts (22), and remove the rear end frame (13).
6. Remove the brush from the brush holder while holding the spring up.
7. Remove the brush holder (21).
8. Draw out the yoke (19) from the starter drive housing (2).
9. Draw out the armature (10) with the drive lever (3).

■ NOTE

- **Do not damage to the brush and commutator.**

(When reassembling)

- Apply grease (DENSO.CO.LTD. No. 50 or equivalent) to the parts indicated in the figure.
  - Joint of solenoid switch **(a)**
  - Bushing **(b)**
  - Drive lever **(c)**
  - Collar **(d)**
  - Teeth of pinion gear **(e)**
  - Armature shaft **(f)**

Tightening torque	**B** terminal nut	7.8 to 9.8 N·m 0.8 to 1.0 kgf·m 5.8 to 7.2 ft-lbs

W1012736

https://truckmanualshub.com/

■ Planetary Gear Reduction Type

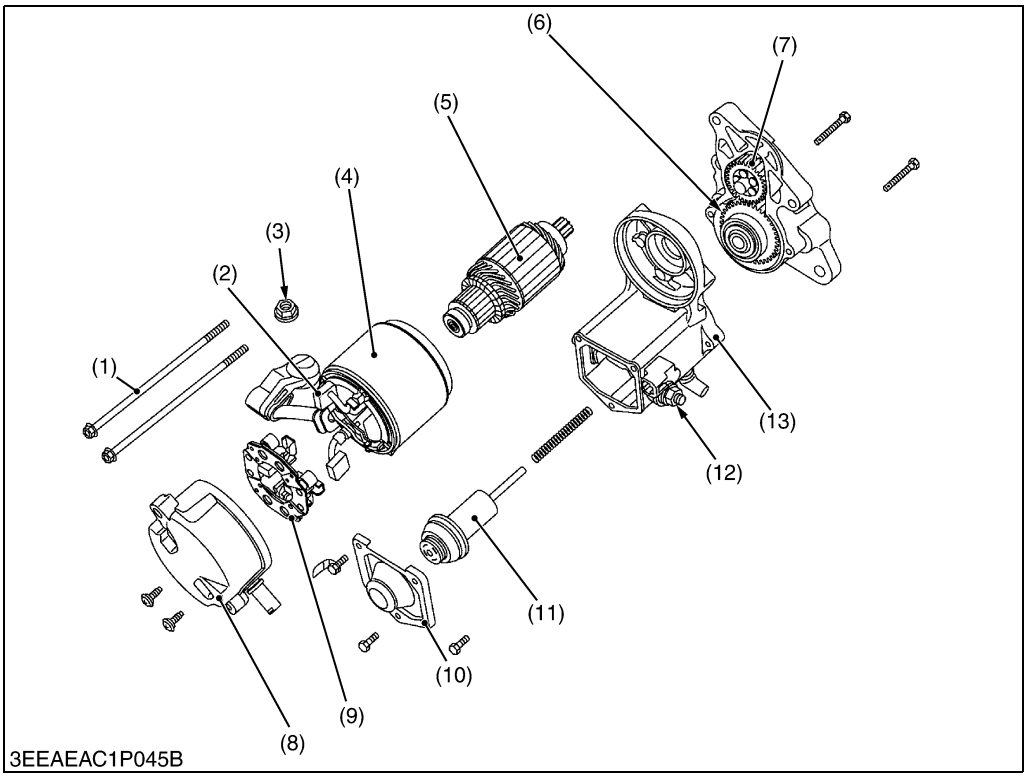

(1) Through Bolt
(2) Brush
(3) Yoke
(4) Armature
(5) Overrunning Clutch
(6) Idle Gear
(7) End Frame
(8) Brush Holder
(9) Magnet Switch Cover
(10) Plunger
(11) Housing
(12) **C** Terminal Nut
(13) **B** Terminal Nut

W1222714

1. Unscrew the **C** terminal nut (12), and disconnect the connecting lead.
2. Remove the two through bolts (1).
3. Detach the motor.
4. Remove the end frame (7).
5. Remove the brush from the brush holder while holding the spring up.
6. Remove the brush holder (8).
7. Draw out the armature (4) from the yoke (3).
8. Remove the housing (11).
9. Remove the idle gear (6) and the overrunning clutch (5).
10. Remove the magnet switch cover (9).
11. Remove the plunger (10).

■ NOTE

- **Do not damage to the brush and commutator.**

(When reassembling)

- Apply grease (DENSO No. 50 or equivalent) to the idle gear and overrunning clutch portions.

Tightening torque	**B** terminal nut	5.9 to 11.8 N·m 0.6 to 1.2 kgf·m 4.3 to 8.7 ft-lbs

W1012736

https://truckmanualshub.com/

(8) Alternator

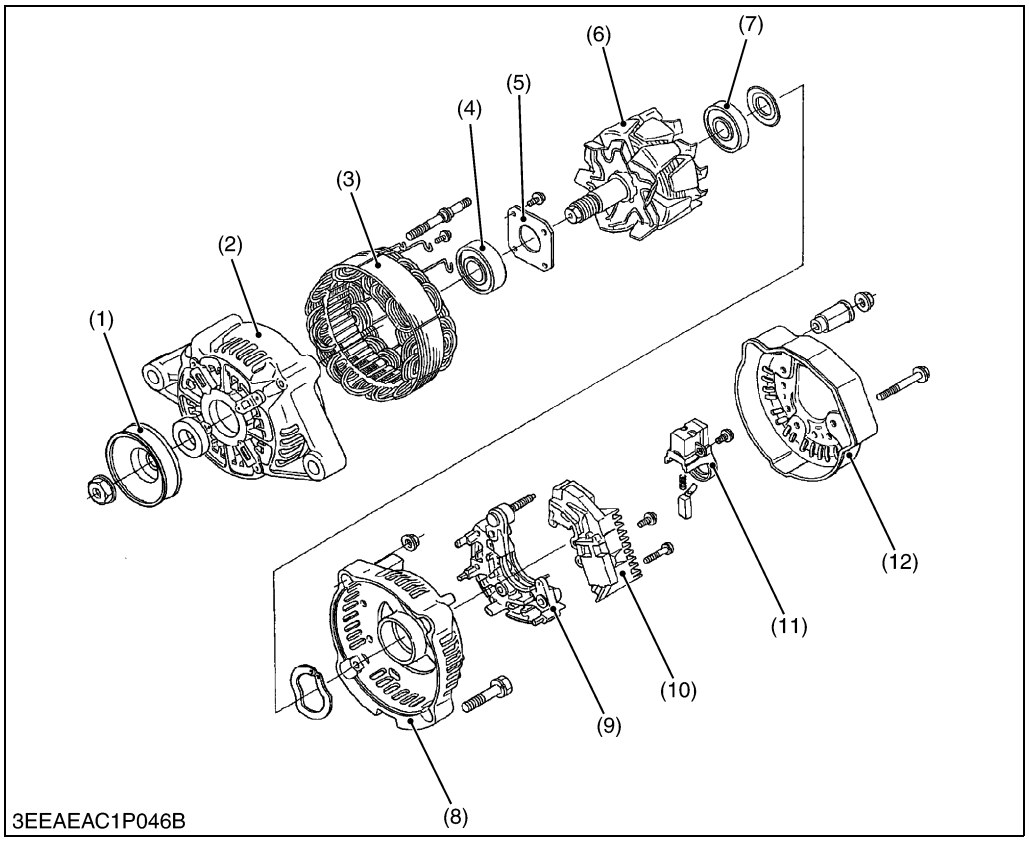

(1) Pulley
(2) Drive End Frame
(3) Stator
(4) Bearing
(5) Retainer Plate
(6) Rotor
(7) Bearing
(8) Rear End Frame
(9) Rectifier
(10) IC Regulator
(11) Brush Holder
(12) Rear End Cover

W1224079

1. Remove the pulley (1).
2. Remove the rear end cover (12).
3. Remove the brush holder (11).
4. Remove the IC regulator (10).
5. Remove the four screws holding the stator lead wires.
6. Remove the rectifier (9).
7. Remove the rear end frame (8).
8. Press out the rotor (6) from drive end frame (2).
9. Remove the retainer plate (5).
10. Press out the bearing (4) from drive end frame (2) with a press and jig.
11. Lightly secure the rotor with a vise to prevent damage, and remove the bearing (7) with a puller.

(When reassembling)

Tightening torque	Pulley nut	58.3 to 78.9 N·m 5.95 to 8.05 kgf·m 43.0 to 58.2 ft-lbs

W1224556

https://truckmanualshub.com/

[3] SERVICING

(1) Cylinder Head and Valves

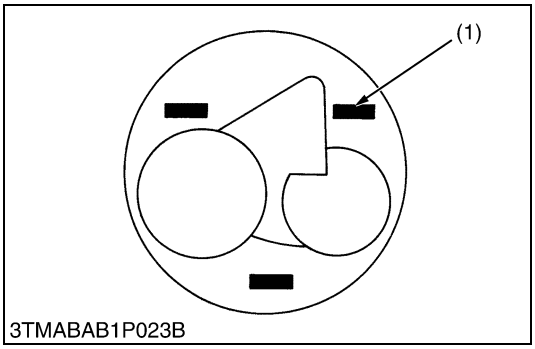

3TMABAB1P023B

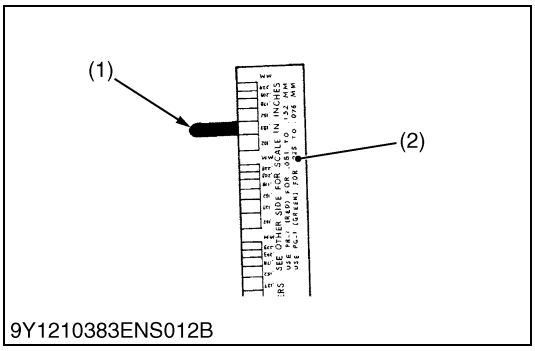

9Y1210383ENS012B

Top Clearance

1. Remove the cylinder head.
2. With the piston at TDC, use grease to affix three or four plastigauges of a diameter 1.5 mm (0.059 in.) x 5.0 to 7.0 mm (0.20 to 0.27 in.) long to the crown of the piston; keep the gauges away from the intake valve and combustion chamber fittings.
3. Take the piston to an intermediate position, install the cylinder head and tighten the head bolts to the specified torque.
4. Turn the crankshaft so the piston goes through TDC.
5. Remove the cylinder head and compare the width of the crushed plastigages with the scale.
6. If they are out of spec, check the oil clearance of the crank pin, journals and piston pin.

■ **NOTE**

- **Top clearance = Width of the crushed plastigauge.**

Top clearance	Factory spec.	0.55 to 0.70 mm 0.0217 to 0.0276 in.

Tightening torque	Cylinder head screws	63.7 to 68.6 N·m 6.5 to 7.0 kgf·m 47.0 to 50.6 ft-lbs

(1) Plastigauge (2) Scale

W1020190

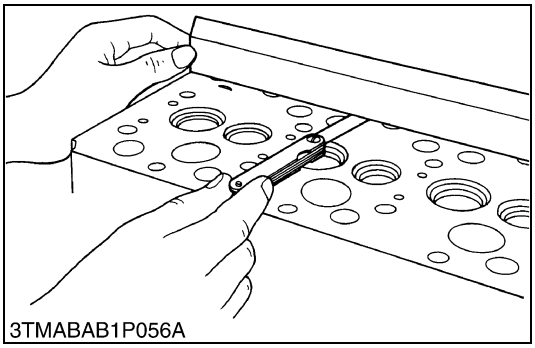
3TMABAB1P056A

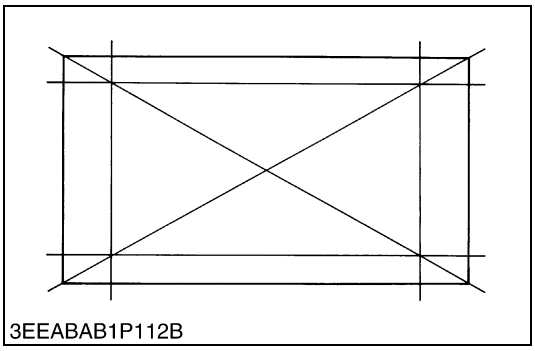
3EEABAB1P112B

Cylinder Head Surface Flatness

1. Clean the cylinder head surface.
2. Place a straightedge on the cylinder head's four sides and two diagonal as shown in the figure.
3. Measure the clearance with a thickness gauge.
4. If the measurement exceeds the allowable limit, correct it with a surface grinder.

■ **IMPORTANT**

- **Do not place the straightedge on the combustion chamber.**
- **Be sure to check the valve recessing after correcting.**

Cylinder head surface flatness	Allowable limit	0.05 mm 0.0020 in.

W1027737

https://truckmanualshub.com/

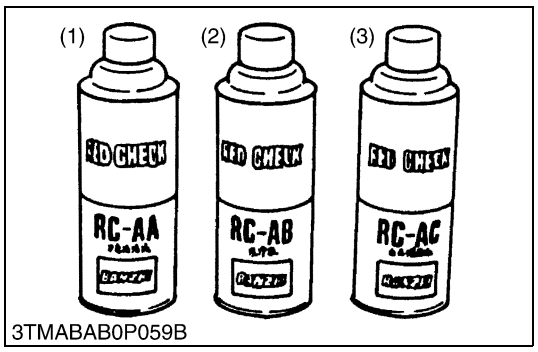

3TMABAB0P059B

Cylinder Head Flaw

1. Prepare an air spray red check.
2. Clean the surface of the cylinder head with detergent (2).
3. Spray the cylinder head surface with the red permeative liquid (1). Leave it five to ten minutes after spraying.
4. Wash away the read permeative liquid on the cylinder head surface with the detergent (2).
5. Spray the cylinder head surface with white developer (3).
6. If flawed, it can be identified as red marks.

(1) Red Permeative Liquid
(2) Detergent
(3) White Developer

W1076542

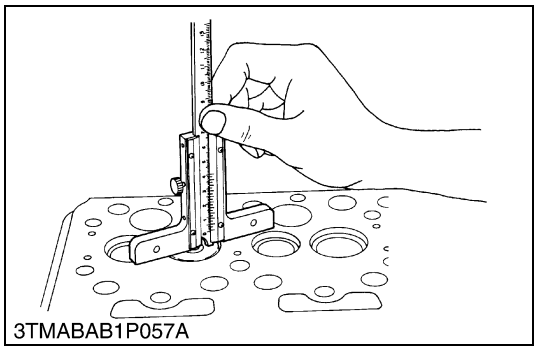
3TMABAB1P057A

Valve Recessing

1. Clean the cylinder head surface, valve face and valve seat.
2. Insert the valve into the valve guide.
3. Measure the valve recessing with a depth gauge.
4. If the measurement exceeds the allowable limit, replace the valve.
5. If it still exceeds the allowable limit after replacing the valve, replace the cylinder head.

Valve recessing	Factory spec.	0.05 (protrusion) to 0.25 (recessing) mm 0.0020 (protrusion) to 0.0098 (recessing) in.
	Allowable limit	0.40 (recessing) mm 0.0157 (recessing) in.

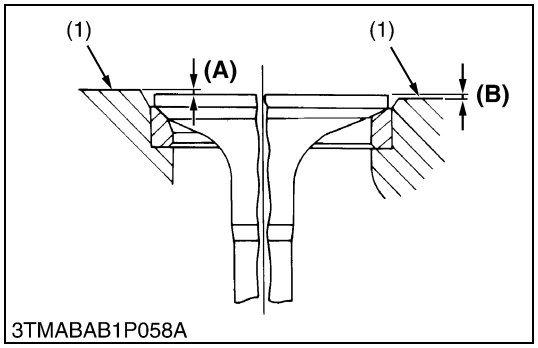

3TMABAB1P058A

(1) Cylinder Head Surface
(A) Recessing
(B) Protrusion

W10768800

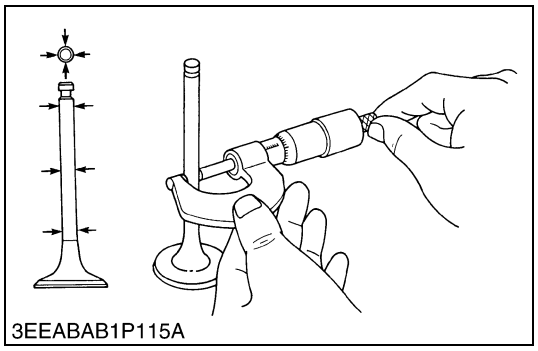
3EEABAB1P115A

Clearance between Valve Stem and Valve Guide

1. Remove carbon from the valve guide section.
2. Measure the valve stem O.D. with an outside micrometer.
3. Measure the valve guide I.D. with a small hole gauge, and calculate the clearance.
4. If the clearance exceeds the allowable limit, replace the valves. If it still exceeds the allowable limit, replace the valve guide.

Clearance between valve stem and valve guide	Factory spec.	0.035 to 0.065 mm 0.0014 to 0.0025 in.
	Allowable limit	0.10 mm 0.0039 in.

Valve stem O.D.	Factory spec.	6.960 to 6.975 mm 0.2741 to 0.2746 in.
Valve guide I.D.	Factory spec.	7.010 to 7.025 mm 0.2760 to 0.2765 in.

W10774950

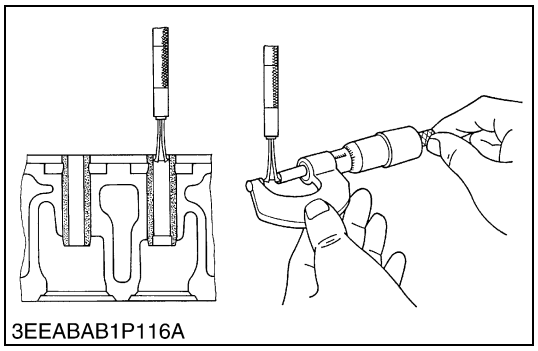
3EEABAB1P116A

https://truckmanualshub.com/

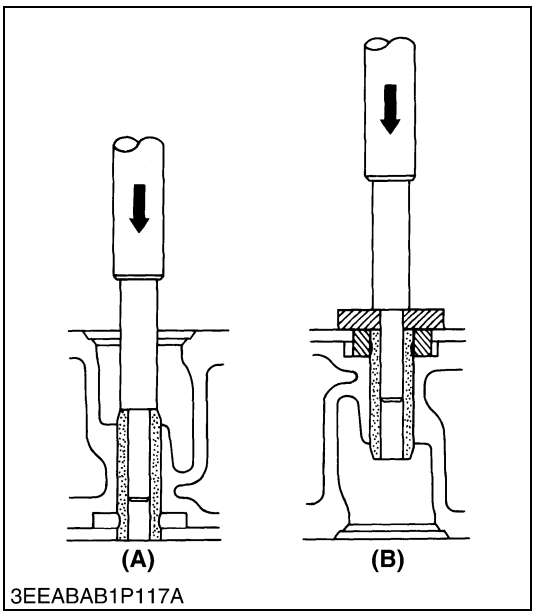

3EEABAB1P117A

Replacing Valve Guide

(When removing)

1. Press out the used valve guide using a valve guide replacing tool. (See page **"SPECIAL TOOLS"**.)

(When installing)

1. Clean a new valve guide and valve guide bore, and apply engine oil to them.
2. Press in a new valve guide using a valve guide replacing tool.
3. Ream precisely the I.D. of the valve guide to the specified dimension.

Valve guide I.D. (Intake and exhaust)	Factory spec.	7.010 to 7.025 mm 0.2760 to 0.2765 in.

■ **IMPORTANT**

- **Do not hit the valve guide with a hammer during replacement.**

(A) When Removing **(B) When Installing**

W10278890

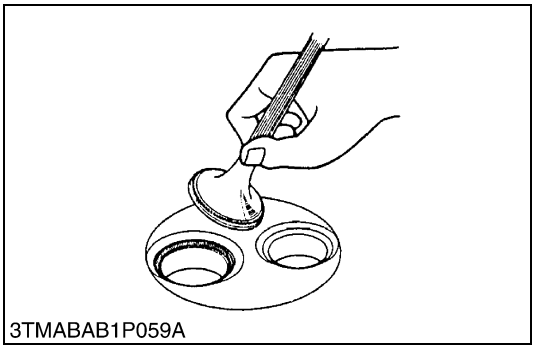
3TMABAB1P059A

Valve Seating

1. Coat the valve face lightly with prussian blue and put the valve on its seat to check the contact.
2. If the valve does not seat all the way around the valve seat or the valve contact is less than 70 %, correct the valve seating as follows.
3. If the valve contact does not comply with the reference value, replace the valve or correct the contact of valve seating.

Valve seat width	Factory spec.	2.12 mm 0.0835 in.

(1) Correct
(2) Incorrect
(3) Incorrect

W10282190

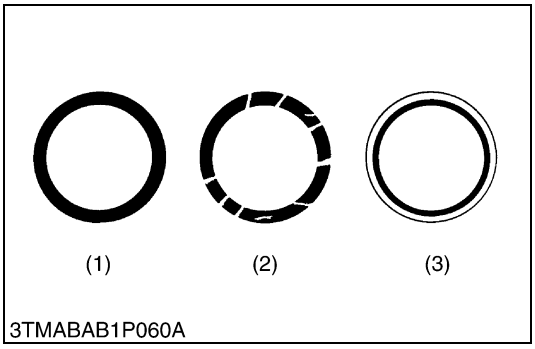

3TMABAB1P060A

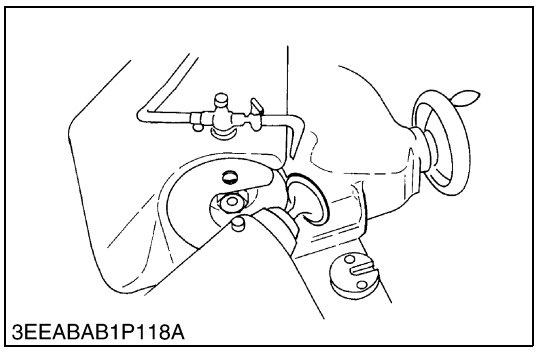
3EEABAB1P118A

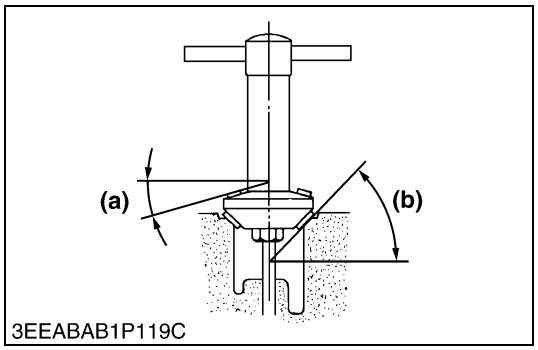

3EEABAB1P119C

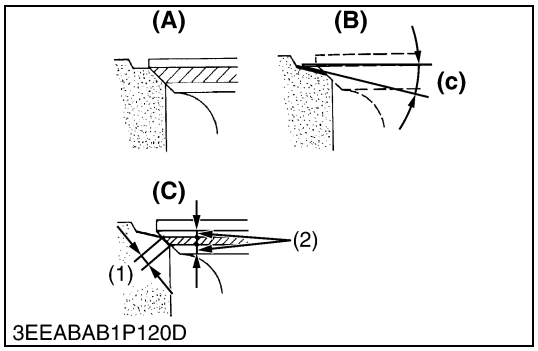

3EEABAB1P120D

Correcting Valve and Valve Seat

■ **NOTE**
- **Before correcting the valve and seat, check the valve stem and the I.D. of valve guide section, and repair them if necessary.**
- **After correcting the valve seat, be sure to check the valve recessing.**

1) Correcting Valve

1. Correct the valve with a valve refacer.

Valve face angle	Factory spec.	IN.	1.047 rad 60 °
		EX.	0.785 rad 45 °

2) Correcting Valve Seat

1. Slightly correct the seat surface with a 1.047 rad (60 °) (intake valve) or 0.785 rad (45 °) (exhaust valve) valve seat cutter.
2. Resurface the seat surface with a 0.523 rad (30 °) valve seat cutter to intake valve seat and with a 0.262 rad (15 °) valve seat cutter to exhaust valve seat so that the width is close to specified valve seat width (2.12 mm, 0.0835 in.).
3. After resurfacing the seat, inspect for even valve seating, apply a thin film of compound between the valve face and valve seat, and fit them with valve lapping tool.
4. Check the valve seating with prussian blue. The valve seating surface should show good contact all the way around.

Valve seat angle	Factory spec.	IN.	1.047 rad 60 °
		EX.	0.785 rad 45 °

(1) Valve Seat Width
(2) Identical Dimensions

(A) Check Contact
(B) Correct Seat Width
(C) Check Contact
(a) 0.262 rad (15 °) or 0.523 rad (30 °)
(b) 0.785 rad (45 °) or 1.047 rad (60 °)
(c) 0.523 rad (30 °) or 0.262 rad (15 °)

W10283500

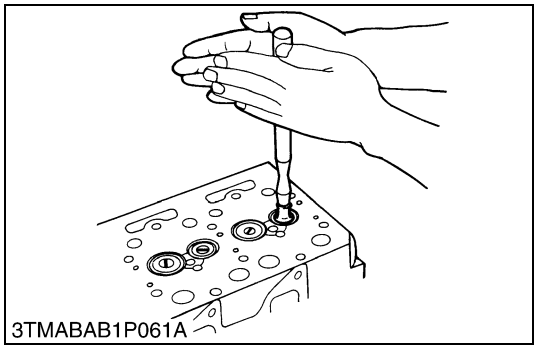
3TMABAB1P061A

Valve Lapping

1. Apply compound evenly to the valve lapping surface.
2. Insert the valve into the valve guide. Lap the valve onto its seat with a valve flapper or screwdriver.
3. After lapping the valve, wash the compound away and apply oil, then repeat valve lapping with oil.
4. Apply prussian blue to the contact surface to check the seated rate. If it is less than 70 %, repeat valve lapping again.

■ **IMPORTANT**
- **When valve lapping is performed, be sure to check the valve recessing and adjust the valve clearance after assembling the valve.**

W10288140

https://truckmanualshub.com/

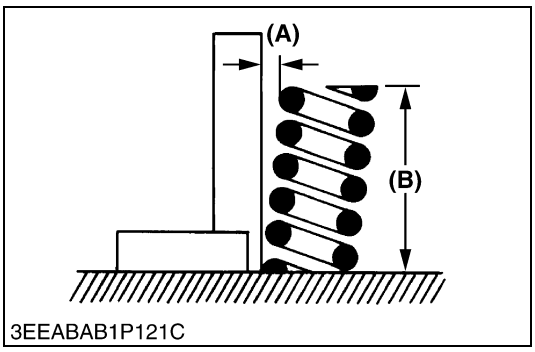

3EEABAB1P121C

Free Length and Tilt of Valve Spring

1. Measure the free length **(B)** of valve spring with vernier calipers. If the measurement is less than the allowable limit, replace it.
2. Put the valve spring on a surface plate, place a square on the side of the valve spring.
3. Check to see if the entire side is in contact with the square. Rotate the valve spring and measure the maximum tilt **(A)**. If the measurement exceeds the allowable limit, replace it.
4. Check the entire surface of the valve spring for scratches. If there is any defect, replace it.

Tilt **(A)**	Allowable limit	1.0 mm 0.039 in.

Free length **(B)**	Factory spec.	37.0 to 37.5 mm 1.457 to 1.456 in.
	Allowable limit	36.5 mm 1.437 in.

(A) Tilt **(B) Free Length**

W10289350

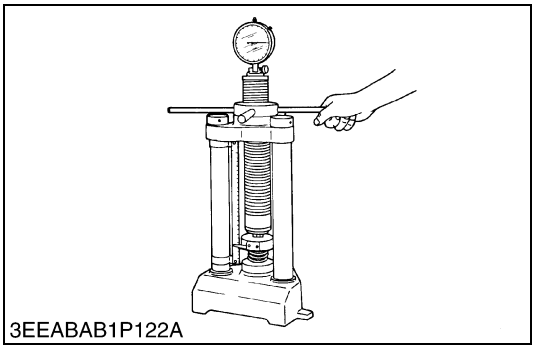
3EEABAB1P122A

Valve Spring Setting Load

1. Place the valve spring on a tester and compress it to the same length it is actually compressed in the engine.
2. Read the compression load on the gauge.
3. If the measurement is less than the allowable limit, replace it.

Setting load / Setting length	Factory spec.	117.4 N / 31.0 mm 11.97 kgf / 31.0 mm 26.4 lbs / 1.22 in.
	Allowable limit	100.0 N / 31.0 mm 10.2 kgf / 31.0 mm 22.5 lbs / 1.22 in.

W10784360

3TAAAAD1P060A

Oil Clearance between Rocker Arm and Rocker Arm Shaft

1. Measure the rocker arm shaft O.D. with an outside micrometer.
2. Measure the rocker arm I.D. with an inside micrometer, and then calculate the oil clearance.
3. If the oil clearance exceeds the allowable limit, replace the rocker arm and measure the oil clearance again. If it still exceeds the allowable limit, replace also the rocker arm shaft.

Oil clearance between rocker arm and rocker arm shaft	Factory spec.	0.016 to 0.045 mm 0.00063 to 0.00177 in.
	Allowable limit	0.10 mm 0.0039 in.

Rocker arm shaft O.D.	Factory spec.	11.973 to 11.984 mm 0.4714 to 0.4718 in.
Rocker arm I.D.	Factory spec.	12.000 to 12.018 mm 0.4724 to 0.4731 in.

W10291500

https://truckmanualshub.com/

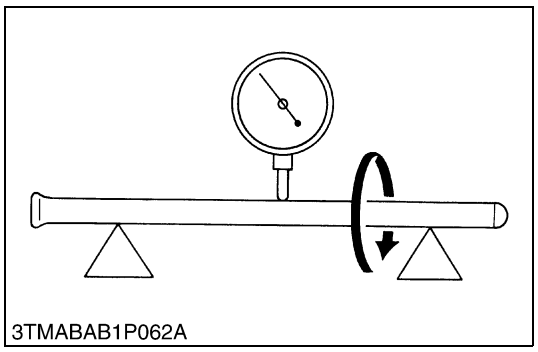
3TMABAB1P062A

Push Rod Alignment

1. Place the push rod on V blocks.
2. Measure the push rod alignment.
3. If the measurement exceeds the allowable limit, replace the push rod.

Push rod alignment	Allowable limit	0.25 mm 0.0098 in.

W10292900

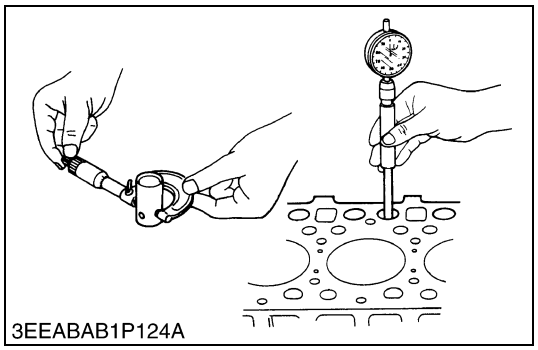
3EEABAB1P124A

Oil Clearance between Tappet and Tappet Guide Bore

1. Measure the tappet O.D. with an outside micrometer.
2. Measure the I.D. of the tappet guide bore with a cylinder gauge, and calculate the oil clearance.
3. If the oil clearance exceeds the allowable limit or the tappet is damaged, replace the tappet.

Oil Clearance between tappet and tappet guide bore	Factory spec.	0.020 to 0.062 mm 0.0008 to 0.0024 in.
	Allowable limit	0.07 mm 0.0028 in.

Tappet O.D.	Factory spec.	19.959 to 19.980 mm 0.7858 to 0.7866 in.
Tappet guide bore I.D.	Factory spec.	20.000 to 20.021 mm 0.7874 to 0.7882 in.

https://truckmanualshub.com/

W10293660

(2) Timing Gears, Camshaft and Governor Gear

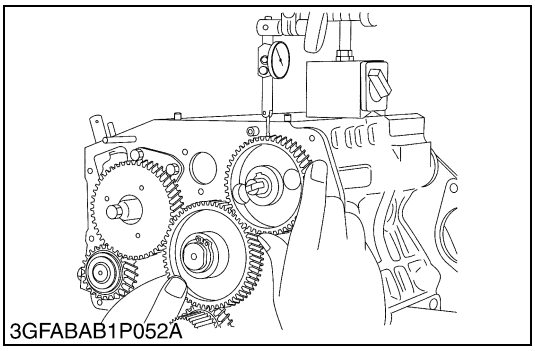
3GFABAB1P052A

Timing Gear Backlash

1. Set a dial indicator (lever type) with its tip on the gear tooth.
2. Move the gear to measure the backlash, holding its mating gear.
3. If the backlash exceeds the allowable limit, check the oil clearance of the shafts and the gear.
4. If the oil clearance is proper, replace the gear.

Backlash between idle gear 1 and crank gear	Factory spec.	0.032 to 0.115 mm 0.0013 to 0.0045 in.
	Allowable limit	0.15 mm 0.0059 in.

Backlash between idle gear 1 and cam gear	Factory spec.	0.036 to 0.114 mm 0.0014 to 0.0045 in.
	Allowable limit	0.15 mm 0.0059 in.

Backlash between idle gear 1 and injection pump gear	Factory spec.	0.034 to 0.116 mm 0.0013 to 0.0046 in.
	Allowable limit	0.15 mm 0.0059 in.

(equipped with idle gear 2) Backlash between idle gear 1 and idle gear 2	Factory spec.	0.033 to 0.117 mm 0.0013 to 0.0046 in.
	Allowable limit	0.15 mm 0.0059 in.

W10280630

Governor Gear Backlash

Backlash between injection pump gear and governor gear	Factory spec.	0.030 to 0.117 mm 0.0012 to 0.0046 in.
	Allowable limit	0.15 mm 0.0059 in.

(equipped with idle gear 2) idle gear 2 and governor gear	Factory spec.	0.030 to 0.117 mm 0.0012 to 0.0046 in.
	Allowable limit	0.15 mm 0.0059 in.

W1041576

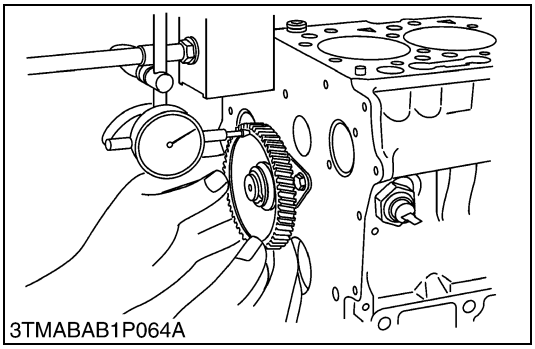
3TMABAB1P064A

Idle Gear 1 and 2 Side Clearance

1. Set a dial indicator with its tip on the idle gear.
2. Measure the side clearance by moving the idle gear to the front and rear.
3. If the measurement exceeds the allowable limit, replace the idle gear collar.

Idle gear 1 and 2 side clearance	Factory spec.	0.20 to 0.51 mm 0.0079 to 0.0201 in.
	Allowable limit	0.8 mm 0.0315 in.

W10285590

https://truckmanualshub.com/

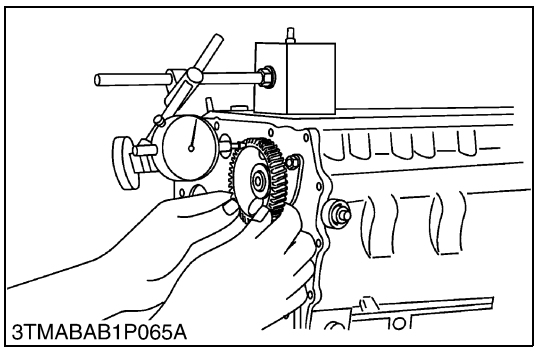
3TMABAB1P065A

Camshaft Side Clearance

1. Set a dial indicator with its tip on the camshaft.
2. measure the side clearance by moving the cam gear to the front to rear.
3. If the measurement exceeds the allowable limit, replace the camshaft stopper.

Camshaft side clearance	Factory spec.	0.07 to 0.22 mm 0.0028 to 0.0087 in.
	Allowable limit	0.30 mm 0.0118 in.

W10295630

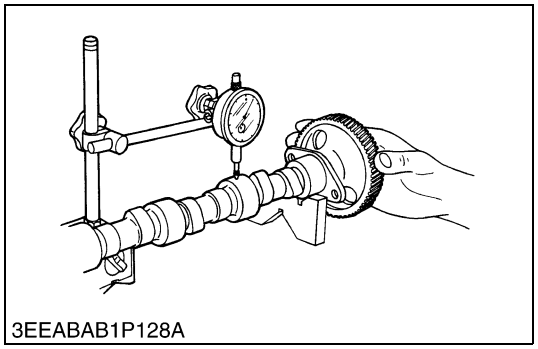
3EEABAB1P128A

Camshaft Alignment

1. Support the camshaft with V blocks on the surface plate at both end journals.
2. Set a dial indicator with its tip on the intermediate journal.
3. Measure the camshaft alignment.
4. If the measurement exceeds the allowable limit, replace the camshaft.

Camshaft alignment	Allowable limit	0.01 mm 0.0004 in.

W10296710

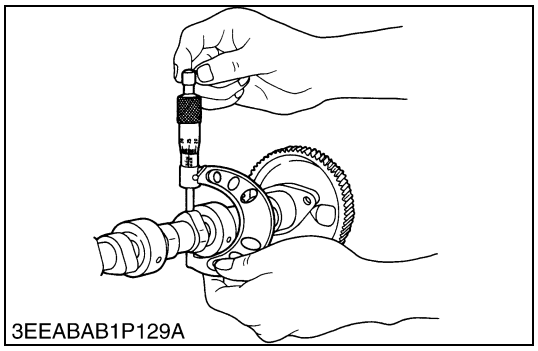
3EEABAB1P129A

Cam Height

1. Measure the height of the cam at its highest point with an outside micrometer.
2. If the measurement is less than the allowable limit, replace the camshaft.

Cam height of intake	Factory spec.	28.80 mm 1.1339 in.
	Allowable limit	28.75 mm 1.1319 in.

Cam height of exhaust	Factory spec.	29.00 mm 1.1417 in.
	Allowable limit	28.95 mm 1.1398 in.

W10297880

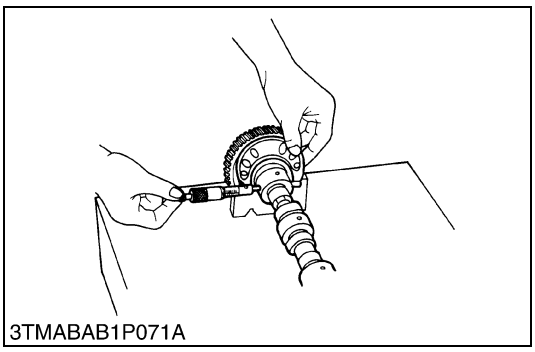
3TMABAB1P071A

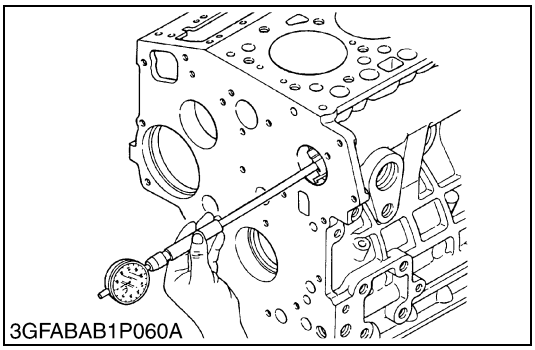
3GFABAB1P060A

Oil Clearance of Camshaft Journal

1. Measure the camshaft journal O.D. with an outside micrometer.
2. Measure the cylinder block bore I.D. for camshaft with a cylinder gauge, and calculate the oil clearance.
3. If the oil clearance exceeds the allowable limit, replace the camshaft.

Oil clearance of camshaft journal	Factory spec.	0.050 to 0.091 mm 0.00197 to 0.00358 in.
	Allowable limit	0.15 mm 0.0059 in.

Camshaft journal O.D.	Factory spec.	35.934 to 35.950 mm 1.4147 to 1.4153 in.
Camshaft bearing I.D. (Cylinder block bore I.D.)	Factory spec.	36.000 to 36.025 mm 1.4173 to 1.4183 in.

W10299330

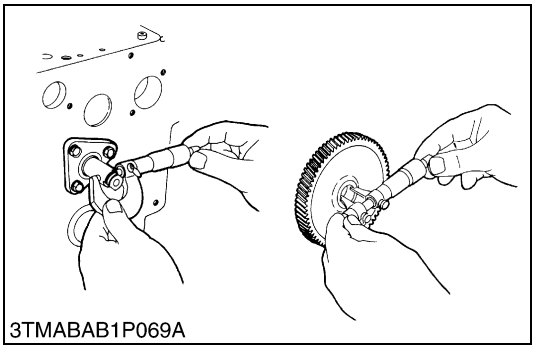
3TMABAB1P069A

Oil Clearance between Idle Gear 1 and 2 Shaft and Idle Gear Bushing

1. Measure the idle gear shaft O.D. with an outside micrometer.
2. Measure the idle gear bushing I.D. with an inside micrometer, and calculate the oil clearance.
3. If the oil clearance exceeds the allowable limit, replace the bushing.
   If it still exceeds the allowable limit, replace the idle gear shaft.

Oil clearance between idle gear shaft (1 and 2) and idle gear bushing	Factory spec.	0.020 to 0.054 mm 0.0008 to 0.0021 in.
	Allowable limit	0.10 mm 0.0039 in.

Idle gear shaft 1 and 2 O.D.	Factory spec.	25.967 to 25.980 mm 1.0223 to 1.0228 in.
Idle gear bushing 1 and 2 I.D.	Factory spec.	26.000 to 26.021 mm 1.0236 to 1.0244 in.

W10301050

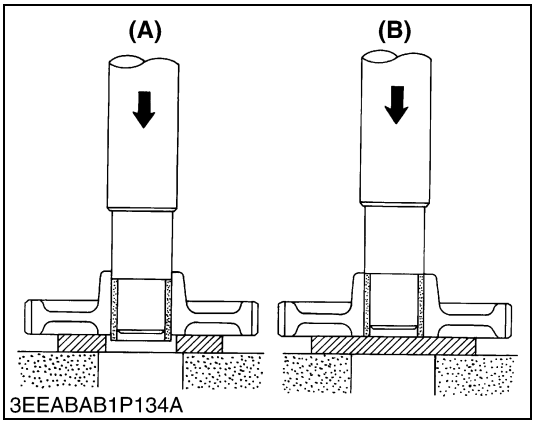

3EEABAB1P134A

Replacing Idle Gear Bushing

(When removing)

1. Press out the used idle gear bushing using an idle gear bushing replacing tool. (See page **"SPECIAL TOOLS"**.)

(When installing)

1. Clean a new idle gear bushing and idle gear bore, and apply engine oil to them.
2. Press in a new bushing using an idle gear bushing replacing tool, until it is flush with the end of the idle gear.

(A) When Removing **(B) When Installing**

W10302410

(3) Piston and Connecting Rod

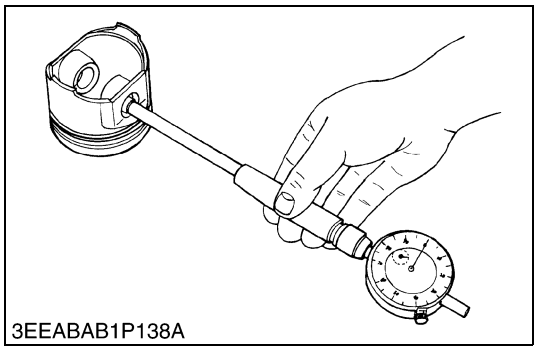
3EEABAB1P138A

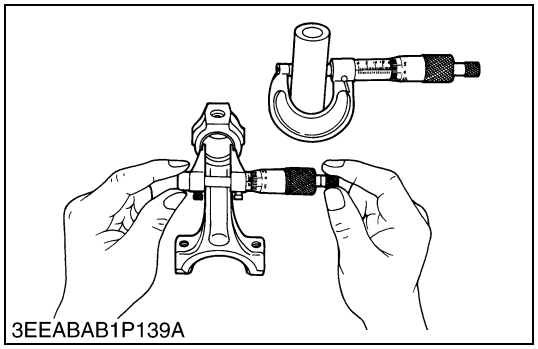
3EEABAB1P139A

Piston Pin Bore I.D.

1. Measure the piston pin bore I.D. in both the horizontal and vertical directions with a cylinder gauge.
2. If the measurement exceeds the allowable limit, replace the piston.

Piston pin bore I.D.	Factory spec.	22.000 to 22.013 mm 0.8661 to 0.8667 in.
	Allowable limit	22.03 mm 0.8673 in.

W10304770

Oil Clearance between Piston Pin and Small End Bushing

1. Measure the piston pin O.D. where it contacts the bushing with an outside micrometer.
2. Measure the small end bushing I.D. with an inside micrometer, and calculate the oil clearance.
3. If the oil clearance exceeds the allowable limit, replace the bushing. If it still exceeds the allowable limit, replace the piston pin.

Oil clearance between piston pin and small end bushing	Factory spec.	0.014 to 0.038 mm 0.00055 to 0.00150 in.
	Allowable limit	0.15 mm 0.0059 in.

Piston pin O.D.	Factory spec.	22.002 to 22.011 mm 0.8662 to 0.8666 in.
Small end bushing I.D.	Factory spec.	22.025 to 22.040 mm 0.8671 to 0.8677 in.

W10305740

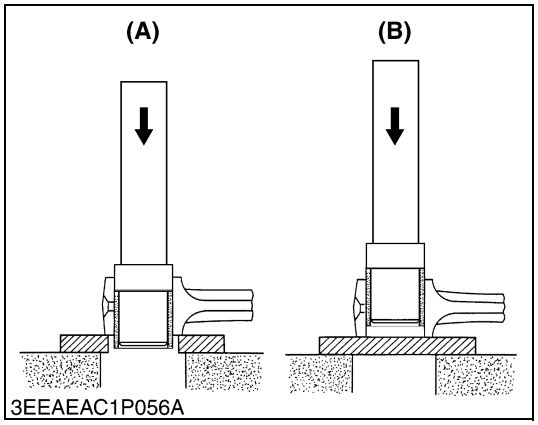

3EEAEAC1P056A

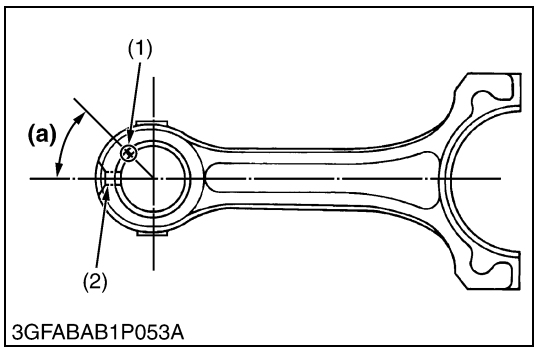

3GFABAB1P053A

Replacing Small End Bushing

(When removing)

1. Press out the used bushing using a small end bushing replacing tool. (See page **"SPECIAL TOOLS"**.)

(When installing)

1. Clean a new small end bushing and bore, and apply engine oil to them.
2. Using a small end bushing replacing tool, press in a new bushing (service parts) taking due care to see that the connecting rod oil hole matches the bushing hole.

Oil clearance between piston pin and small end bushing (Spare parts)	Factory spec.	0.015 to 0.075 mm 0.00059 to 0.00295 in.
	Allowable limit	0.15 mm 0.0059 in.

Small end bushing I.D. (Spare parts)	Factory spec.	22.026 to 22.077 mm 0.86717 to 0.86917 in.

(1) Seam
(2) Oil Hole

(A) When Removing
(B) When Installing
(a) 0.785 rad (45 °)

W10307120

https://truckmanualshub.com/

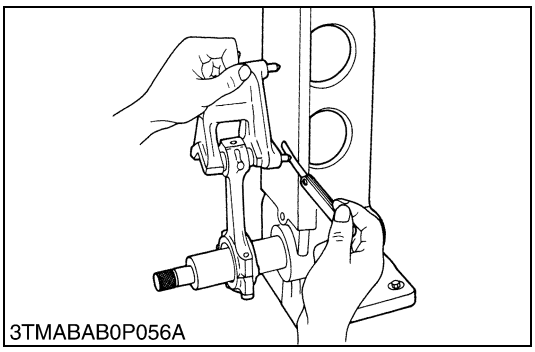
3TMABAB0P056A

Connecting Rod Alignment

■ **NOTE**

- **Since the I.D. of the connecting rod small end bushing is the basis of this check, check bushing for wear beforehand.**

1. Install the piston pin into the connecting rod.
2. Install the connecting rod on the connecting rod alignment tool.
3. Put a gauge over the piston pin, and move it against the face plate.
4. If the gauge does not fit squarely against the face plate, measure the space between the pin of the gauge and the face plate.
5. If the measurement exceeds the allowable limit, replace the connecting rod.

Connecting rod alignment	Allowable limit	0.05 mm 0.0020 in.

W10314620

https://truckmanualshub.com/

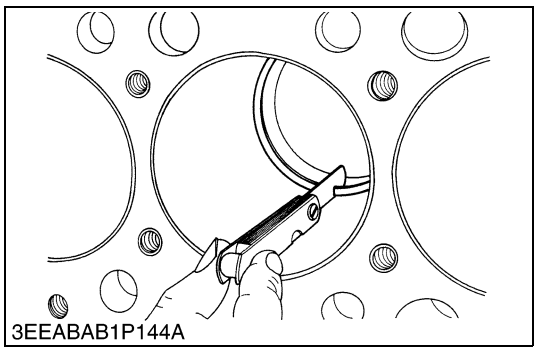

Piston Ring Gap (To be continued)

1. Insert the piston ring into the lower part of the cylinder (the least worn out part) with a piston.
2. Measure the ring gap with a thickness gauge.
3. If the measurement exceeds the allowable limit, replace the piston ring.

Piston ring gap **[D905-E2B]**	Top ring	Factory spec.	0.25 to 0.40 mm 0.0098 to 0.0157 in.
		Allowable limit	1.25 mm 0.0492 in.
	Second ring	Factory spec.	0.25 to 0.40 mm 0.0098 to 0.0157 in.
		Allowable limit	1.25 mm 0.0492 in.
	Oil ring	Factory spec.	0.25 to 0.40 mm 0.0098 to 0.0157 in.
		Allowable limit	1.25 mm 0.0492 in.
Piston ring gap **[D1005-E2B] [V1305-E2B] [D1105-E2B] [V1505-E2B]**	Top ring	Factory spec.	0.30 to 0.45 mm 0.0118 to 0.0177 in.
		Allowable limit	1.25 mm 0.0492 in.
	Second ring	Factory spec.	0.30 to 0.45 mm 0.0118 to 0.0177 in.
		Allowable limit	1.25 mm 0.0492 in.
	Oil ring	Factory spec.	0.25 to 0.40 mm 0.0098 to 0.0157 in.
		Allowable limit	1.25 mm 0.0492 in.
Piston ring gap **[D1105-T-E2B] [V1505-T-E2B]**	Top ring	Factory spec.	0.20 to 0.35 mm 0.0079 to 0.0138 in.
		Allowable limit	1.20 mm 0.0472 in.
	Second ring	Factory spec.	0.40 to 0.55 mm 0.0157 to 0.0217 in.
		Allowable limit	1.20 mm 0.0472 in.
	Oil ring	Factory spec.	0.30 to 0.55 mm 0.0118 to 0.0217 in.
		Allowable limit	1.25 mm 0.0492 in.

W10310120

https://truckmanualshub.com/

Piston Ring Gap (Continued)

Piston ring gap **[D905-E2BG] [D1005-E2BG] [V1305-E2BG]**	Top ring	Factory spec.	0.25 to 0.40 mm 0.0098 to 0.0157 in.
		Allowable limit	1.25 mm 0.0492 in.
	Second ring	Factory spec.	0.25 to 0.40 mm 0.0098 to 0.0157 in.
		Allowable limit	1.25 mm 0.0492 in.
	Oil ring	Factory spec.	0.25 to 0.40 mm 0.0098 to 0.0157 in.
		Allowable limit	1.25 mm 0.0492 in.
Piston ring gap **[D1105-E2BG] [V1505-E2BG]**	Top ring	Factory spec.	0.30 to 0.45 mm 0.0118 to 0.0177 in.
		Allowable limit	1.25 mm 0.0492 in.
	Second ring	Factory spec.	0.30 to 0.45 mm 0.0118 to 0.0177 in.
		Allowable limit	1.25 mm 0.0492 in.
	Oil ring	Factory spec.	0.25 to 0.40 mm 0.0098 to 0.0157 in.
		Allowable limit	1.25 mm 0.0492 in.

W1043413

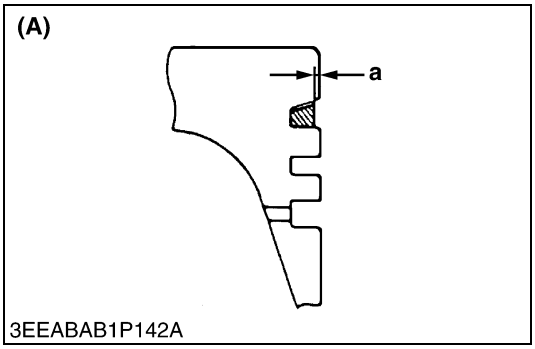

3EEABAB1P142A

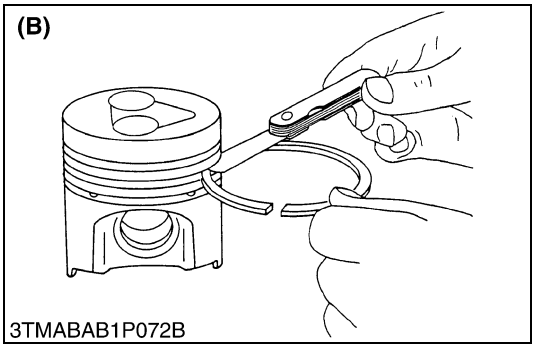

3TMABAB1P072B

Clearance between Piston ring and Piston Ring Groove

1. Clean the rings and the ring grooves, and install each ring in its groove.
2. Measure the clearance between the ring and the groove with a feeler gauge or depth gauge.
3. If the clearance exceeds the allowable limit, replace the piston ring.
4. If the clearance still exceeds the allowable limit with new ring, replace the piston.

Clearance between piston ring and piston ring groove	Second ring	Factory spec.	0.085 to 0.112 mm 0.0033 to 0.0044 in.
		Allowable limit	0.20 mm 0.0079 in.
	Oil ring	Factory spec.	0.020 to 0.055 mm 0.0008 to 0.0021 in.
		Allowable limit	0.15 mm 0.0059 in.

Factory specification : **a**	More than 0.2 mm 0.0079 in.

(A) Top Ring (Key Stone Type) **(B) 2nd, Oil Ring**

W10312390

(4) Crankshaft

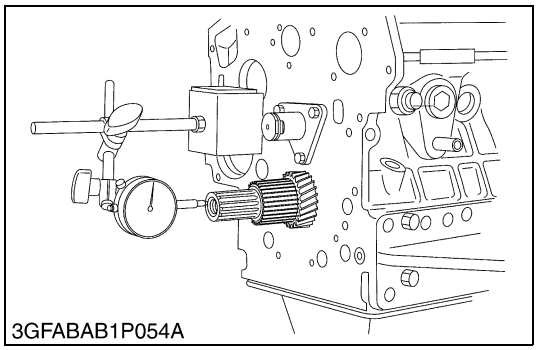
3GFABAB1P054A

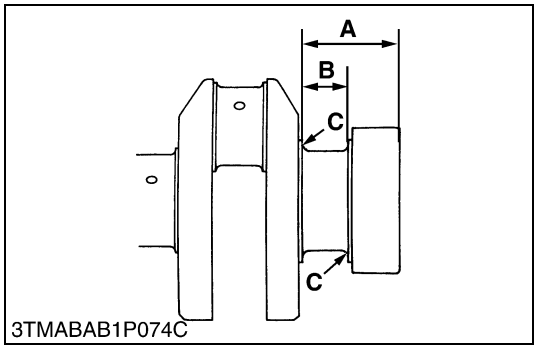

3TMABAB1P074C

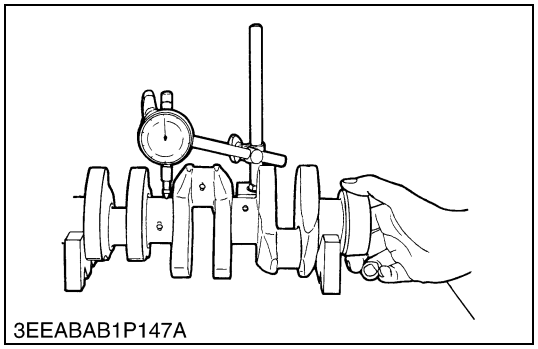
3EEABAB1P147A

Crankshaft Side Clearance

1. Set a dial indicator with its tip on the end of the crankshaft.
2. Measure the side clearance by moving the crankshaft to the front and rear.
3. If the measurement exceeds the allowable limit, replace the thrust bearings.
4. If the same size bearing is useless because of the crankshaft journal wear, replace it with an oversize one referring to the table and figure.

Crankshaft side clearance	Factory spec.	0.15 to 0.31 mm 0.0059 to 0.0122 in.
	Allowable limit	0.50 mm 0.0197 in.

(Reference)

- Oversize dimensions of crankshaft journal

Oversize	0.2 mm 0.008 in.	0.4 mm 0.016 in.
Dimension **A**	51.5 to 51.7 mm 2.028 to 2.035 in.	51.6 to 51.8 mm 2.031 to 2.039 in.
Dimension **B**	28.20 to 28.25 mm 1.1102 to 1.1122 in.	28.40 to 28.45 mm 1.1181 to 1.1201 in.
Dimension **C**	2.3 to 2.7 mm radius 0.091 to 0.106 in. radius	2.3 to 3.7 mm radius 0.091 to 0.106 in. radius
The crankshaft journal must be fine-finished to higher than ∇∇∇∇ (0.8-S)		

W10317070

Crankshaft Alignment

1. Support the crankshaft with V blocks on the surface plate at both end journals.
2. Set a dial indicator with its tip on the intermediate journal.
3. Measure the crankshaft alignment.
4. If the measurement exceeds the allowable limit, replace the crankshaft.

Crankshaft alignment	Allowable limit	0.02 mm 0.0008 in.

W10330010

https://truckmanualshub.com/

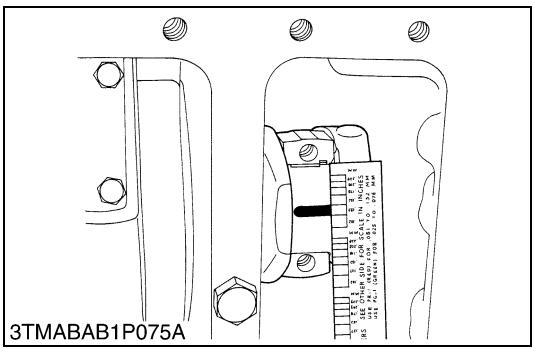
3TMABAB1P075A

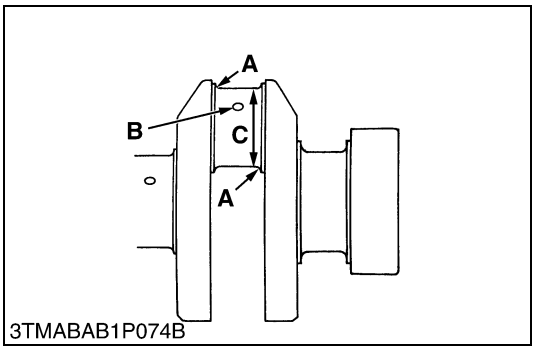

3TMABAB1P074B

Oil Clearance between Crankpin and Crankpin Bearing

1. Clean the crankpin and crankpin bearing.
2. Put a strip of plastigage on the center of the crankpin.
3. Install the connecting rod cap and tighten the connecting rod screws to the specified torque, and remove the cap again.
4. Measure the amount of the flattening with the scale, and get the oil clearance.
5. If the oil clearance exceeds the allowable limit, replace the crankpin bearing.
6. If the same size bearing is useless because of the crankpin wear, replace it with an undersize one referring to the table and figure.

■ **NOTE**

- **Never insert the plastigage into the crankpin oil hole.**
- **Be sure not to move the crankshaft while the connecting rod screws are tightened.**

Oil clearance between crankpin and crankpin bearing	Factory spec.	0.029 to 0.091 mm 0.0011 to 0.0036 in.
	Allowable limit	0.20 mm 0.0079 in.

Crankpin O.D.	Factory spec.	39.959 to 39.975 mm 1.5732 to 1.5738 in.
Crankpin bearing I.D.	Factory spec.	40.004 to 40.050 mm 1.5750 to 1.5768 in.

(Reference)

- Undersize dimensions of crankpin

Undersize	0.2 mm 0.008 in.	0.4 mm 0.016 in.
Dimension **A**	2.8 to 3.2 mm radius 0.1102 to 0.1260 in. radius	2.8 to 3.2 mm radius 0.1102 to 0.1260 in. radius
*Dimension **B**	1.0 to 1.5 mm relief 0.0394 to 0.0591 in. relief	1.0 to 1.5 mm relief 0.0394 to 0.0591 in. relief
Dimension **C**	39.759 to 39.775 mm dia. 1.5653 to 1.5659 in. dia.	39.559 to 39.575 mm dia. 1.5574 to 1.5581 in. dia.
The crankpin must be fine-finished to higher than ∇∇∇∇ (0.8-S) *Holes to be de-burred and edges rounded with 1.0 to 1.5 mm (0.0394 to 0.0591 in.) relief.		

W10331060

https://truckmanualshub.com/

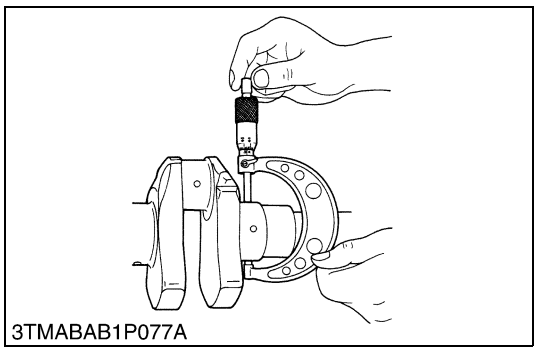
3TMABAB1P077A

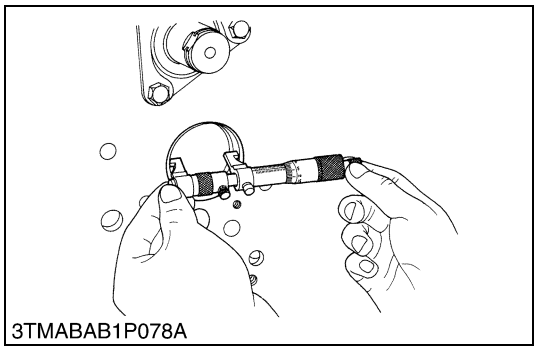
3TMABAB1P078A

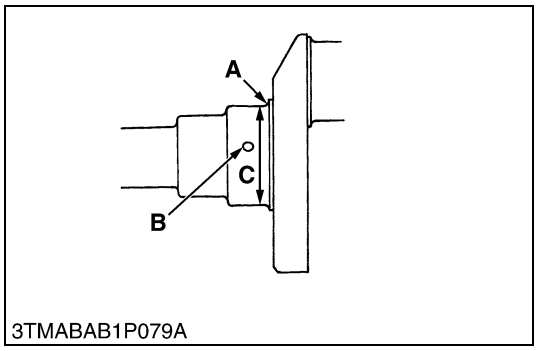

3TMABAB1P079A

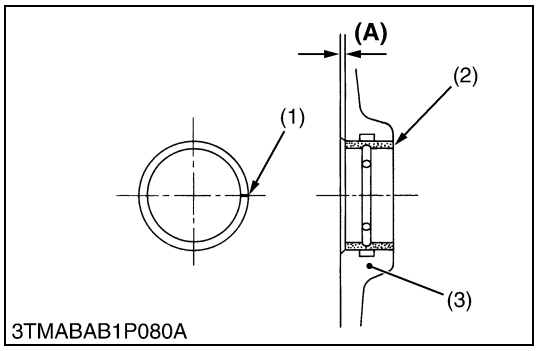

3TMABAB1P080A

Oil Clearance between Crankshaft Journal and Crankshaft Bearing 1

1. Measure the O.D. of the crankshaft front journal with an outside micrometer.
2. Measure the I.D. of the crankshaft bearing 1 with an inside micrometer, and calculate the oil clearance.
3. If the clearance exceeds the allowable limit, replace the crankshaft bearing 1.
4. If the same size bearing is useless because of the crankshaft journal wear, replace it with an undersize one referring to the table and figure.

Oil clearance between crankshaft journal and crankshaft bearing 1	Factory spec.	0.034 to 0.114 mm 0.0013 to 0.0045 in.
	Allowable limit	0.20 mm 0.0079 in.

Crankshaft journal O.D.	Factory spec.	47.934 to 47.950 mm 1.8872 to 1.8878 in.
Crankshaft bearing 1 I.D.	Factory spec.	47.984 to 48.048 mm 1.8891 to 1.8916 in.

(Reference)

- Undersize dimensions of crankshaft journal

Undersize	0.2 mm 0.008 in.	0.4 mm 0.016 in.
Dimension **A**	2.3 to 2.7 mm radius 0.0906 to 0.1063 in. radius	2.3 to 2.7 mm radius 0.0906 to 0.1063 in. radius
*Dimension **B**	1.0 to 1.5 mm relief 0.0394 to 0.0591 in. relief	1.0 to 1.5 mm relief 0.0394 to 0.0591 in. relief
Dimension **C**	47.734 to 47.750 mm dia. 1.8793 to 1.8799 in. dia.	47.534 to 47.550 mm dia. 1.8714 to 1.8720 in. dia.
The crankshaft journal must be fine-finished to higher than ∇∇∇∇ (0.8-S) *Holes to be de-burred and edges rounded with 1.0 to 1.5 mm (0.0394 to 0.0591 in.) relief.		

W10337170

Replacing Crankshaft Bearing 1

(When removing)

1. Press out the used crankshaft bearing 1 using a crankshaft bearing 1 replacing tool. (See page **"SPECIAL TOOLS"**.)

(When installing)

1. Clean a new crankshaft bearing 1 and crankshaft journal bore, and apply engine oil to them.
2. Using a crankshaft bearing 1 replacing tool, press in a new bearing 1 (2) so that its seam (1) directs toward the exhaust manifold side. (See figure.)

Dimension **(A)**	Factory spec.	0 to 0.3 mm 0 to 0.0118 in.

(1) Seam
(2) Crankshaft Bearing 1
(3) Cylinder Block
(A) Dimension

W10339460

https://truckmanualshub.com/

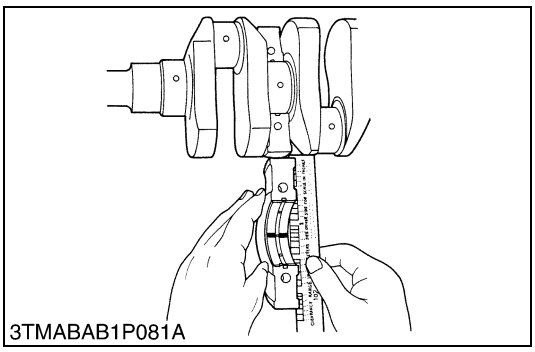
3TMABAB1P081A

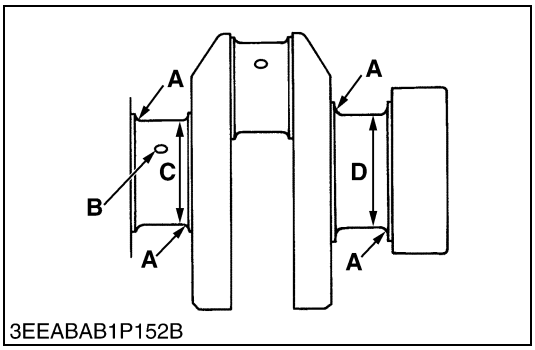

3EEABAB1P152B

Oil Clearance between Crankshaft Journal and Crankshaft Bearing 2 (Crankshaft Bearing 3)

1. Put a strip of plastigage on the center of the journal.
2. Install the bearing case and tighten the baring case screws 1 to the specified torque, and remove the bearing case again.
3. Measure the amount of the flattening with the scale and get the oil clearance.
4. If the clearance exceeds the allowable limit, replace the crankshaft bearing 2 (1) and crankshaft bearing (3).
5. If the same size bearing is useless because of the crankshaft journal wear, replace it with an undersize one referring to the table and figure.

■ **NOTE**

- **Be sure not to move the crankshaft while the bearing case screws are tightened.**

Oil clearance between crankshaft journal and crankshaft bearing 2	Factory spec.	0.034 to 0.095 mm 0.0013 to 0.0037 in.
	Allowable limit	0.20 mm 0.0079 in.

Crankshaft journal O.D. (Intermediate)	Factory spec.	47.934 to 47.950 mm 1.8872 to 1.8878 in.
Crankshaft bearing 2 I.D.	Factory spec.	47.984 to 48.029 mm 1.8891 to 1.8909 in.

Oil clearance between crankshaft journal and crankshaft bearing 3	Factory spec.	0.034 to 0.103 mm 0.0013 to 0.00405 in.
	Allowable limit	0.20 mm 0.0079 in.

Crankshaft journal O.D. (Flywheel side)	Factory spec.	51.921 to 51.940 mm 2.0441 to 2.0449 in.
Crankshaft bearing 3 I.D.	Factory spec.	51.974 to 52.024 mm 2.0463 to 2.0481 in.

(Reference)

- Undersize dimensions of crankshaft journal

Undersize	0.2 mm 0.008 in.	0.4 mm 0.016 in.
Dimension **A**	2.3 to 2.7 mm radius 0.0906 to 0.1063 in. radius	2.3 to 2.7 mm radius 0.0906 to 0.1063 in. radius
*Dimension **B**	1.0 to 1.5 mm relief 0.0394 to 0.0591 in. relief	1.0 to 1.5 mm relief 0.0394 to 0.0591 in. relief
Dimension **C**	47.734 to 47.750 mm dia. 1.8793 to 1.8799 in. dia.	47.534 to 47.550 mm dia. 1.8714 to 1.8720 in. dia.
Dimension **D**	51.721 to 51.740 mm dia. 2.0362 to 2.0370 in. dia.	51.521 to 51.540 mm dia. 2.0284 to 2.0291 in. dia.
The crankshaft journal must be fine-finished to higher than ∇∇∇∇ (0.8-S) *Holes to be de-burred and edges rounded with 1.0 to 1.5 mm (0.0394 to 0.0591 in.) relief.		

W10340750

https://truckmanualshub.com/

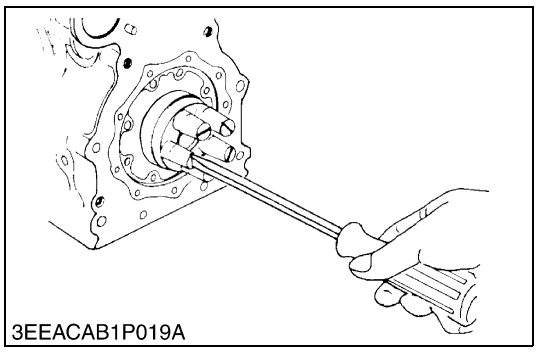
3EEACAB1P019A

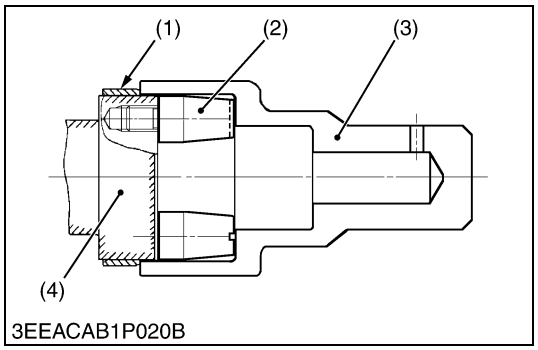

3EEACAB1P020B

Replacing Crankshaft Sleeve

1. Remove the used crankshaft sleeve.
2. Set the sleeve guide (2) to the crankshaft.
3. Heat a new sleeve to a temperature between 150 and 200 °C (302 and 392 °F), and fix the sleeve to the crankshaft as shown in figure.
4. Press fit the sleeve using the auxiliary socket for pushing (3).

■ **NOTE**

- **Mount the sleeve with its largely chamfered surface facing outward.**
- **Should heating is not enough, a sleeve might stop halfway, so careful.**

(1) Crankshaft Sleeve
(2) Sleeve Guide
(3) Auxiliary Socket for Pushing
(4) Crankshaft

W1045923

https://truckmanualshub.com/

(5) Cylinder

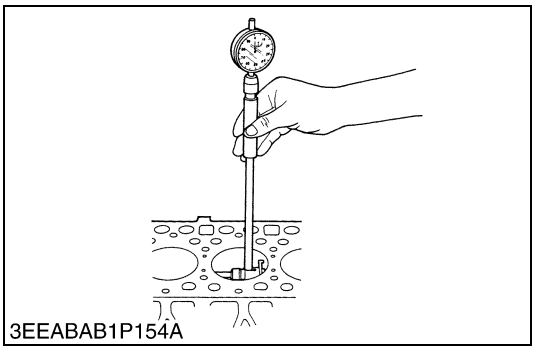
3EEABAB1P154A

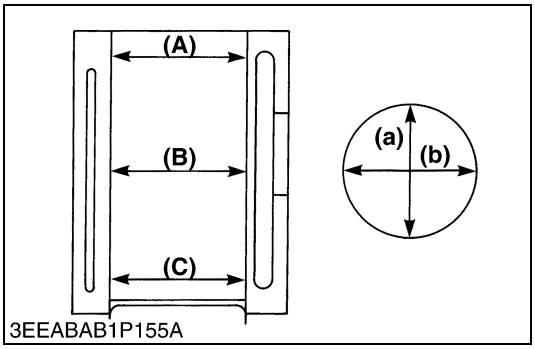

3EEABAB1P155A

Cylinder Wear

1. Measure the I.D. of the cylinder at the six positions (see figure) with a cylinder gauge to find the maximum and minimum I.D.'s.
2. Get the difference (Maximum wear) between the maximum and the minimum I.D.'s.
3. If the wear exceeds the allowable limit, bore and hone to the oversize dimension. (Refer to **"Correcting Cylinder"**.)
4. Visually check the cylinder wall for scratches. If deep scratches are found, the cylinder should be bored. (Refer to **"Correcting Cylinder"**.)

Cylinder I.D.	Factory spec.	D905-E2B / E2BG	72.000 to 72.019 mm 2.8346 to 2.8354 in.
		D1005-E2B / E2BG V1305-E2B / E2BG	76.000 to 76.019 mm 2.9921 to 2.9929 in.
		D1105-E2B / E2BG D1105-T-E2B V1505-E2B / E2BG V1505-T-E2B	78.000 to 78.019 mm 3.0709 to 3.0716 in.
	Allowable limit	D905-E2B / E2BG	72.15 mm 2.8406 in.
		D1005-E2B / E2BG V1305-E2B / E2BG	76.15 mm 2.9980 in.
		D1105-E2B / E2BG D1105-T-E2B V1505-E2B / E2BG V1505-T-E2B	78.15 mm 3.0768 in.

(A) Top
(B) Middle
(C) Bottom (Skirt)
(a) Right-angled to Piston Pin
(b) Piston Pin Direction

W10343890

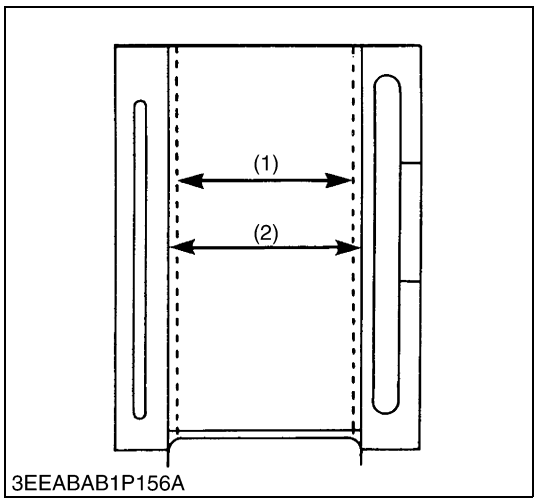

Correcting Cylinder

1. When the cylinder is worn beyond the allowable limit, bore and hone it to the specified dimension.

Oversized cylinder liner I.D.	Factory spec.	D905-E2B / E2BG	72.500 to 72.519 mm 2.85433 to 2.85507 in.
		D1005-E2B / E2BG V1305-E2B / E2BG	76.500 to 76.519 mm 3.0118 to 3.0126 in.
		D1105-E2B / E2BG D1105-T-E2B V1505-E2B / E2BG V1505-T-E2B	78.500 to 78.519 mm 3.0906 to 3.0913 in.
	Allowable limit	D905-E2B / E2BG	72.65 mm 2.8602 in.
		D1005-E2B / E2BG V1305-E2B / E2BG	76.65 mm 3.0177 in.
		D1105-E2B / E2BG D1105-T-E2B V1505-E2B / E2BG V1505-T-E2B	78.65 mm 3.0965 in.
Finishing	Hone to 1.2 to 2.0 mm μR max. ∇∇∇ (0.000047 to 0.000079 in. μR max.)		

2. Replace the piston and piston rings with oversize ones.
   Oversize : 0.5 mm (0.0197 in.)

■ **NOTE**

- **When the oversize cylinder is worn beyond the allowable limit, replace the cylinder block with a new one.**

(1) Cylinder I.D. (Before Correction) (2) Cylinder I.D. (Oversize)

W10344480

(6) Oil Pump

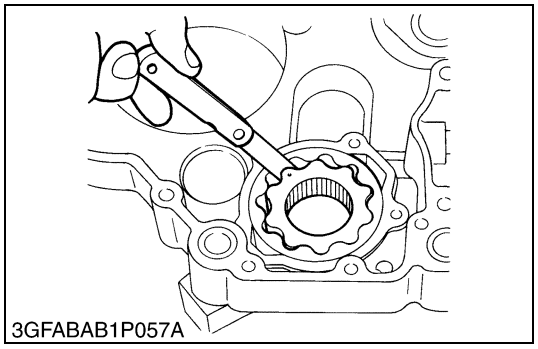

Rotor Lobe Clearance

1. Measure the clearance between lobes of the inner rotor and the outer rotor with a feeler gauge.
2. If the clearance exceeds the factory specifications, replace the oil pump rotor assembly.

Rotor lobe clearance	Factory spec.	0.06 to 0.18 mm 0.0024 to 0.0071 in.

W10355630

https://truckmanualshub.com/

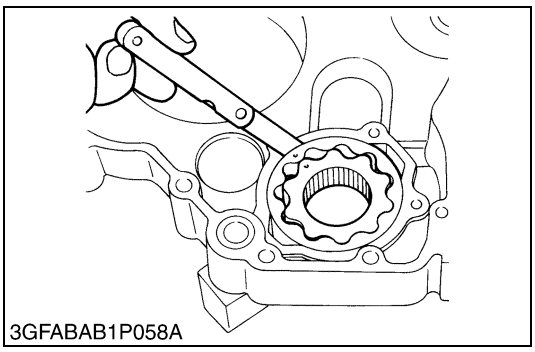
3GFABAB1P058A

Clearance between Outer Rotor and Pump Body

1. Measure the clearance between the outer rotor and the pump body with a feeler gauge.
2. If the clearance exceeds the factory specifications, replace the oil pump rotor assembly.

Clearance between outer rotor and pump body	Factory spec.	0.100 to 0.180 mm 0.0039 to 0.0071 in.

W10356560

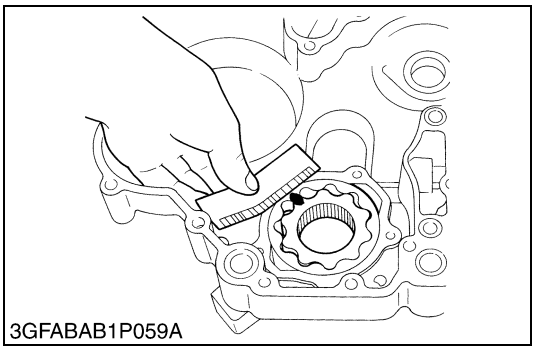
3GFABAB1P059A

Clearance between Rotor and Cover

1. Put a strip of plastigage onto the rotor face with grease.
2. Install the cover and tighten the screws.
3. Remove the cover carefully, and measure the amount of the flattening with the scale and get the clearance.
4. If the clearance exceeds the factory specifications, replace the oil pump rotor assembly.

Clearance between rotor and cover	Factory spec.	0.025 to 0.075 mm 0.0010 to 0.0030 in.

W10357320

(7) Starter

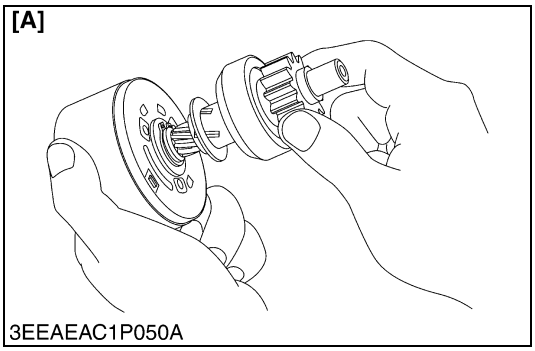

3EEAEAC1P050A

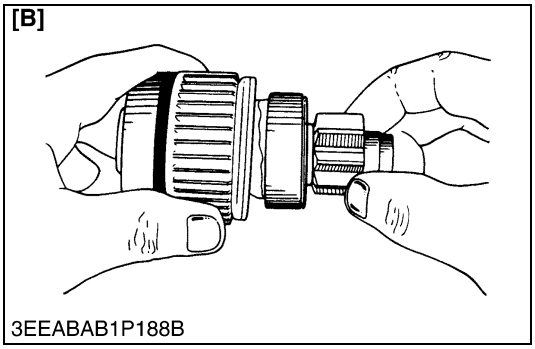

3EEABAB1P188B

Overrunning Clutch

1. Check the pinion and if worn or damage, replace the clutch assembly.
2. Check that the pinion turns freely and smoothly in the overrunning direction and does not slip in the cranking direction.
3. If the pinion slips or does not turn in both directions, replace the overrunning clutch assembly.

■ **NOTE**

- **Do not wash off the grease in the overrunning clutch with the chemicals or oils.**

[A] Electromagnetic Drive Type **[B] Planetary Gear Reduction Type**

W1156799

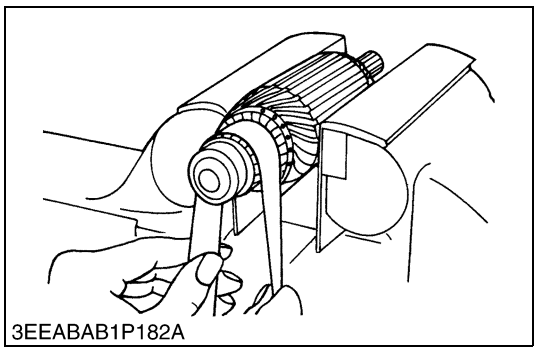
3EEABAB1P182A

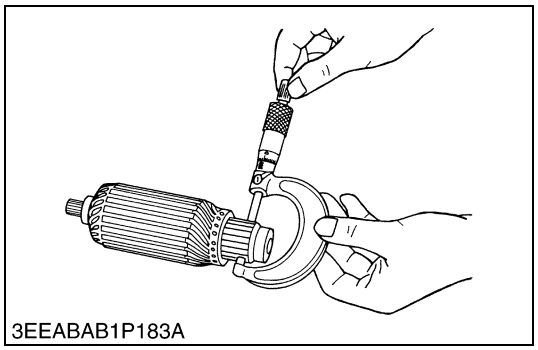
3EEABAB1P183A

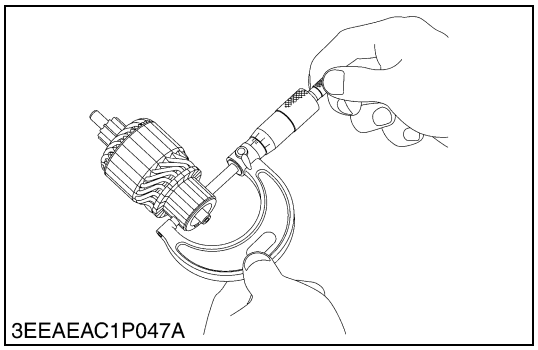
3EEAEAC1P047A

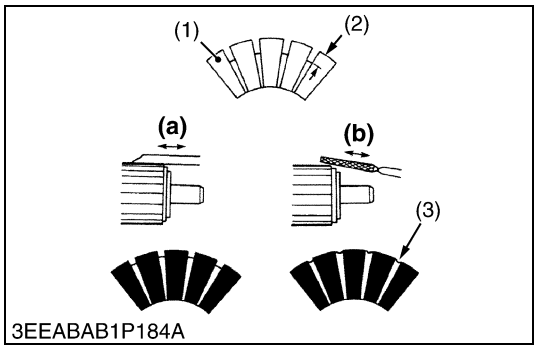

3EEABAB1P184A

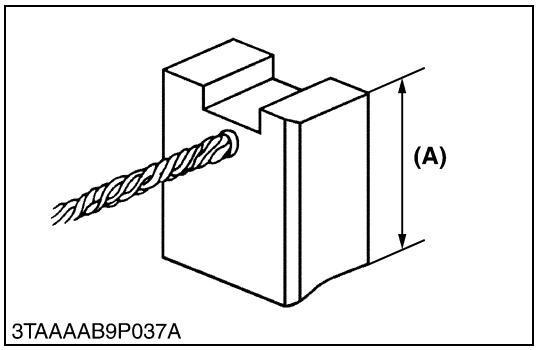

3TAAAAB9P037A

Commutator and Mica

1. Check the contact of the commutator for wear, and grind the commutator with emery paper if it is slightly worn.
2. Measure the commutator O.D. with an outside micrometer at several points.
3. If the minimum O.D. is less than the allowable limit, replace the armature.
4. If the difference of the O.D.'s exceeds the allowable limit, correct the commutator on a lathe to the factory specification.
5. Measure the mica undercut.
6. If the undercut is less than the allowable limit, correct it with a saw blade and chamfer the segment edges.

Commutator O.D.	Factory spec.	Electromagnetic drive type	28.0 mm 1.102 in.
		Planetary gear reduction type	30.0 mm 1.181 in.
	Allowable limit	Electromagnetic drive type	27.0 mm 1.063 in.
		Planetary gear reduction type	29.0 mm 1.142 in.

Difference of O.D.'s	Factory spec.	Electromagnetic drive type	Less than 0.05 mm 0.002 in.
		Planetary gear reduction type	Less than 0.02 mm 0.0008 in.
	Allowable limit	Electromagnetic drive type	0.4 mm 0.016 in.
		Planetary gear reduction type	0.05 mm 0.0020 in.

Mica under cut	Factory spec.	0.50 to 0.80 mm 0.0197 to 0.0315 in.
	Allowable limit	0.20 mm 0.0079 in.

(1) Segment
(2) Depth of Mica
(3) Mica

(a) Correct
(b) Incorrect

W1155802

Brush Wear

1. If the connect face of the brush is dirty or dusty, clean it with emery paper.
2. Measure the brush length **(A)** with vernier caliper.
3. If the length is than the allowable limit, replace the yoke assembly and brush holder.

Brush length **A**	Factory spec.	16.0 mm 0.630 in.
	Allowable limit	10.5 mm 0.413 in.

W1156360

https://truckmanualshub.com/

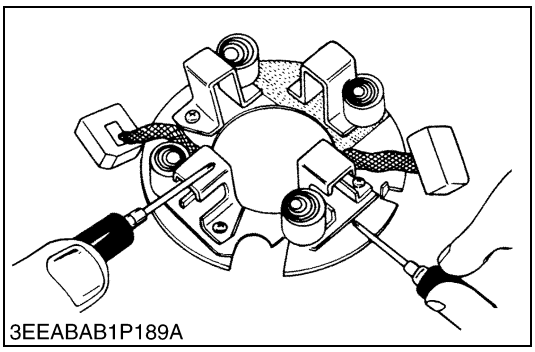
3EEABAB1P189A

Brush Holder

1. Check the continuity across the brush holder and the holder support with a circuit tester.
2. If it conducts, replace the brush holder.

W1156895

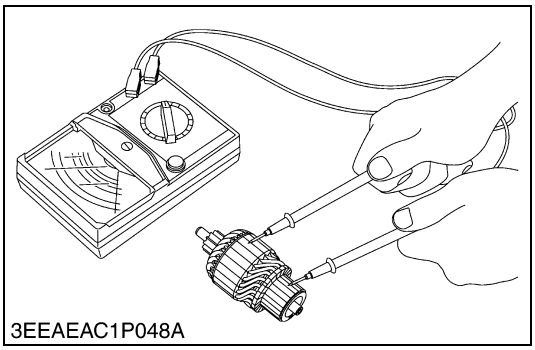
3EEAEAC1P048A

Armature Coil

1. Check the continuity across the commutator and armature coil core with resistance range of circuit tester.
2. If it conducts, replace the armature.
3. Check the continuity across the segments of the commutator with resistance range of circuit tester.
4. If it dose not conduct, replace the armature.

W1156507

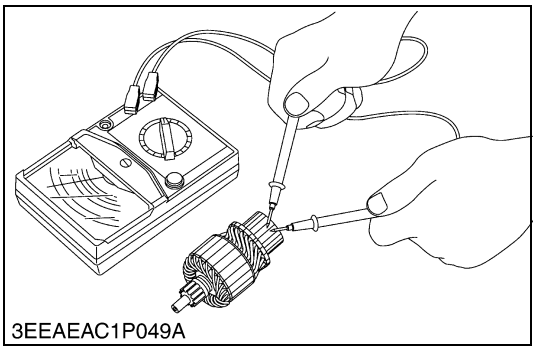
3EEAEAC1P049A

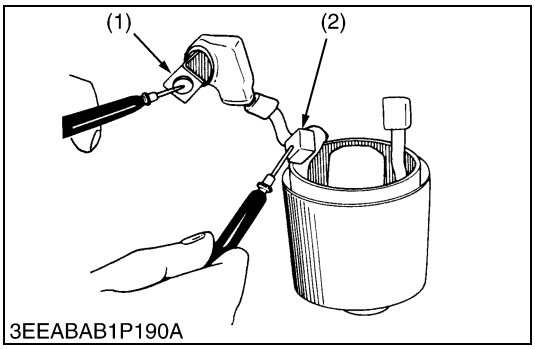

3EEABAB1P190A

Field Coil

1. Check the continuity across the lead (1) and brush (2) with a circuit tester.
2. If it dose not conduct, replace the yoke assembly.
3. Check the continuity across the brush (2) and yoke (3) with a circuit tester.
4. If it conducts, replace the yoke assembly.

(1) Lead
(2) Bush
(3) Yoke

W1156968

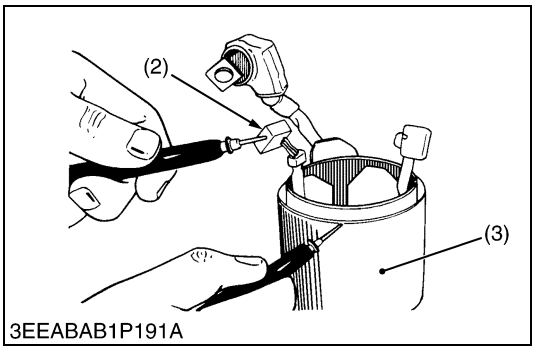

3EEABAB1P191A

https://truckmanualshub.com/

(8) Alternator

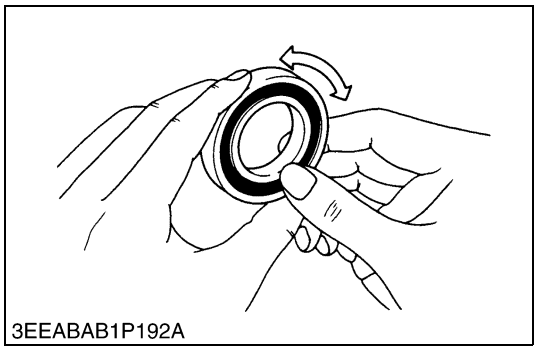
3EEABAB1P192A

Bearing

1. Check the bearing for smooth rotation.
2. If it does not rotate smoothly, replace it.

W1019790

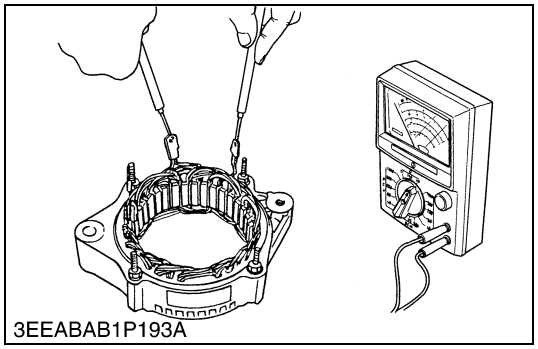
3EEABAB1P193A

Stator

1. Measure the resistance across each lead of the stator coil with resistance range of circuit tester.
2. If the measurement is not within factory specification, replace it.
3. Check the continuity across each stator coil lead and core with resistance range of circuit tester.
4. If infinity is not indicated, replace it.

Resistance	Factory spec.	Less than 1.0 Ω

W1019964

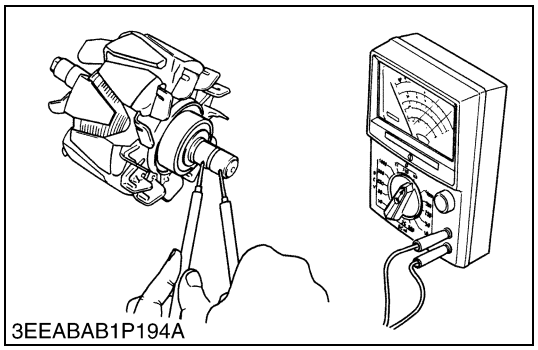
3EEABAB1P194A

Rotor

1. Measure the resistance across the slip rings.
2. If the resistance is not the factory specification, replace it.
3. Check the continuity across the slip ring and core with resistance range of circuit tester.
4. If infinity is not indicated, replace it.

Resistance	Factory spec.	2.9 Ω

W1020094

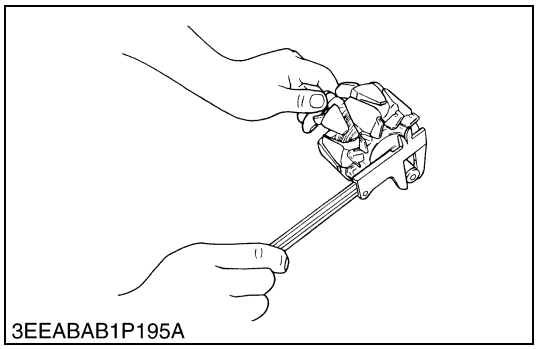
3EEABAB1P195A

Slip Ring

1. Check the slip ring for score.
2. If scored, correct with an emery paper or on a lathe.
3. Measure the O.D. of slip ring with vernier calipers.
4. If the measurement is less than the allowable limit, replace it.

Slip ring O.D.	Factory spec.	14.4 mm 0.567 in.
	Allowable limit	14.0 mm 0.551 in.

W1020208

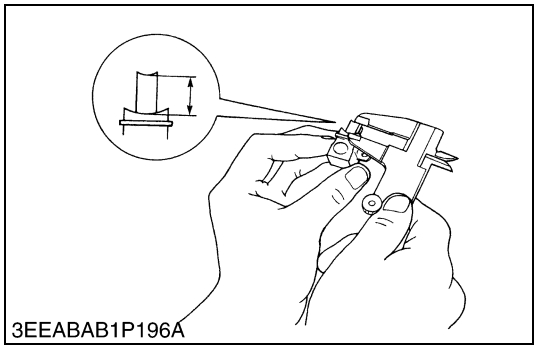
3EEABAB1P196A

Brush Wear

1. Measure the brush length with vernier calipers.
2. If the measurement is less than allowable limit, replace it.
3. Make sure that the brush moves smoothly.
4. If the brush is defective, replace it.

Brush length	Factory spec.	10.0 mm 0.3937 in.
	Allowable limit	8.4 mm 0.331 in.

W1020329

https://truckmanualshub.com/

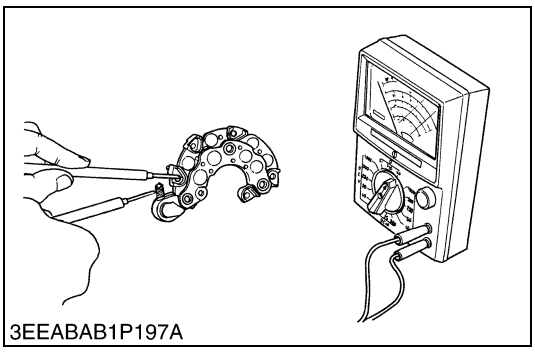
3EEABAB1P197A

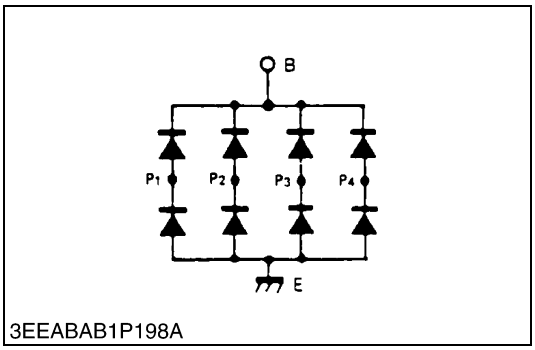

3EEABAB1P198A

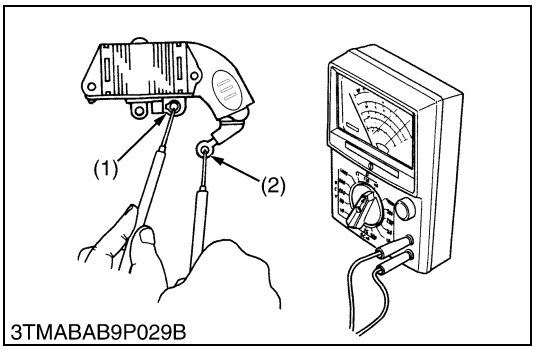

3TMABAB9P029B

Rectifier

1. Check the continuity across each diode of rectifier with resistance range of circuit tester.
2. The rectifier is normal if the diode in the rectifier conducts in one direction and does not conduct in the reverse direction.

W1020452

IC Regulator

1. Check the continuity across the **B** terminal (2) and the **F** terminal (1) of IC regulator with resistance range of circuit tester.
2. The IC regulator is normal if the conducts in one direction and does not conduct in the reverse direction.

(1) **F** Terminal (2) **B** Terminal

W1020645

https://truckmanualshub.com/

EDITOR:
KUBOTA FARM & INDUSTRIAL MACHINERY SERVICE, LTD.
64, ISHIZU-KITAMACHI, SAKAI-KU, SAKAI-CITY, OSAKA, 590-0823, JAPAN
PHONE : (81)72-241-1129
FAX : (81)72-245-2484
E-mail : ksos-pub@kubota.co.jp

KUBOTA Corporation

Printed in Japan 2011. 06, S, EI, EI, e Code No.9Y011-02754
2004. 02, S, EI, EI, e