Menzi Muck **M5**25x
Menzi Muck **M5**35x
Menzi Muck **M5**45x

https://truckmanualshub.com/

M5 Generation X

https://truckmanualshub.com/

Menzi Muck, the technologic leader. Details that make us number one.

Menzi Boom
Patented, tried and tested as well as unrivalled boom with a maximum lifting force of 9800 kg and unique kinematics. Boom cylinder positioned horizontally in the centre section. Rules out collisions at the boom cylinder.

Wide-angle kinematics with power booster
Menzi power booster provides maximum output over the entire working range.

Swivelling with large slewing ring
Maximum swivelling force across the entire engine speed range featuring maintenance-free slewing motor.

Chassis
Innovative, patented chassis concept with ideal kinematics while maintaining ideal power ratios. P-Vation for horizontal and vertical parallel adjustment of the wheels. Vx-Drive for infinitely variable Power drive up to 15 km/h with maximum torque across the entire adjustment range.

Secure hose system
Hydraulic hoses are protected at the chassis and installed at the boom within the operator's field of vision.

Up to 800 mm wide tyres available
For special applications and situations.

Mountain stabilizers (optional)
Installed at the rear and/or front to guarantee safe working conditions in extreme terrain.

SWISSPOWER

https://truckmanualshub.com/

Deutz diesel engine
Powerful, efficient and reliable 4-cylinder diesel engine complying with EU emission standards IIIA, IV and V. Deutz system: selective, catalytic reduction in combination with active diesel particulate filter. Environmental protection while maintaining the output!

APM - up to 30% fuel savings
The APM controller (Anticipating Power Management) guarantees fast and harmonious interplay between engine and hydraulics.

Powerline
Separate pump to boost attachments' efficiency. Individual pressure and flow adaptations for a large number of tools.

Panorama cockpit
Maximum, all-round vision and optimised ergonomics for fatigue-free working.

Tool management
Definition of comprehensive parameters on the display for up to 15 attachments.

Personalised working environment
Intuitive navigation and individually adjustable parameters for safe and efficient operation.

Steel structure
Ideal pivot point positioning reduces forces applicable to the steel structure. Largely dimensioned bearings and solid material thicknesses increase safety levels in the most challenging applications.

Hydraulic cable winch
Interface for installation of the cable winch at the front and rear including optimum cable guide.

menzi muck

https://truckmanualshub.com/

Panorama cockpit
Unobstructed view of the entire working environment and chassis for safety and full control in any situation. Low-vibration, noise-insulated cab for a perfect feeling of space and relaxed work.

Comfort
Ergonomic joystick with proportional rollers, hand rest, adjustable armrests and foot pedals, air-suspension comfort operator's seat, powerful heating with 7 individual nozzles, air conditioning, DAB+ radio and many more features for maximum comfort.

Dashboard with LCD
Clearly arranged dials with integrated colour display. Separate display and tumbler switch with LED lighting.

Safety
ROPS as per DIN ISO 3471 and FOPS as per DIN ISO 3449, four-point seat belt, reversing camera, LED headlights, different protective grid variants and many more features for maximum safety.

Remote machine monitoring (Track Unit Service):
Comprehensive service tool to remotely record relevant machine data.

menzi muck

https://truckmanualshub.com/

The panorama cockpit. Focusing on the operator.

https://truckmanualshub.com/

P-VATION by Menzi Muck (M545x). Revolutionary, symmetric stabilisation.

Outstanding kinematics
Replacement of the tried-and-tested P-Matik system by the completely new, automatic P-Vation support development at the front and rear. Sophisticated arrangement of pivot points on the chassis for horizontal and vertical parallel adjustment of all wheels. Maximum adjustment range and steering angle to boost safety and application options.

Unrivalled, incredible fording depth
Maximum ground clearance guarantees a fording depth of 2200 mm for municipal use and deployments in water.

Unmatched gradients
P-Vation support for gradients other machines can't handle. Unparalleled proximity to slopes and maximum width adjustment of the wheels of over 6000mm for genuine stability. Working on slopes (moving across the slope) on even steeper dams and embankments possible.

Smooth running and simplified steering
+ Linear travel sensors in the cylinder
+ Angle sensors
+ Automatic direction sensors
+ Central wheel bearing suspension

Perfected mountain stabilizers
For working in very steep terrain, installation of solid mountain stabilizers at the front and rear possible. Ideal design guarantees perfect anchor point to the slope angle.

Chain mode
Collision protection thanks to electrical actuation of forestry and snow chain mode.

Different steering modes
- Front-axle steering
- Rear-axle steering
- 4-wheel steering
- Crab steering

Mountain stabilizers automatically not within operating range

Intelligent arrangement of pivot points

Solid steel design for most challenging deployments

https://truckmanualshub.com/

Vx-DRIVE by Menzi Muck. Intelligent drive technology.

Infinitely variable
Infinitely variable power drive up to 15 km/h at maximum torque across the entire adjustment range and every driving phase. Synchronous, efficient engine speed and drive pump actuation using the driving pedal.

Protects substrate and tyres
Automatic wheel speed adaptation thanks to innovative steering angle measurement to protect the ground. Improved traction thanks to universal steering angle of all 4 wheels to protect the ground while driving.

Manual differential lock for off-road mode
Self-locking differential lock on slippery or soft ground for maximum traction and strong traction.

Tyres up to 800 mm
In special applications and situations, wide tyres up to 800 mm boost safety and application options.

20% more traction
Quicker and unrestricted uphill driving thanks to ample hub motor adjustment range.

M545x speciality
Work up to 30° across the line of greatest slope or 45° downhill

https://truckmanualshub.com/

Technical data, dimensions and values of generation x.

Engine

Deutz 4-cylinder diesel	TCD 4.1 L4
Emission standards	IIIA/IV/V
Engine capacity	4038 cm3/246 cu in
Output as per ISO 3046	115 kW (156 hp) at 2000 rpm
SCR catalytic converter	with AdBlue supply (IV/V)
Integrated diesel particulate filter	with automatic regeneration (IV/V)

Vx-Drive traction drive

Infinitely adjustable speed	15 km/h
Separate hydraulic pump	210 l/min., max. 420 bar
Driving brake	Hydrostatic
Parking brake	Spring loaded accumulator

Weight in kg

M545x excluding tools from	13500 kg

Unrivalled forces

Lifting force @ 3.0 m boom length	9800 kg
Lifting force @ 4.5 m boom length	6400 kg
Lifting force @ 6.0 m boom length	4300 kg
Breakaway force	109 kN
Shear force	74 kN
Thrust, telescope	191 kN

Slewing

A radial piston motor with automatic front multi-disc brake acts on the internal gears of the large-scale double-row slewing ring.	
Slewing range	360° endless
Slewing torque	52000 Nm gross
Slewing speed	Up to 10 rpm
Slewing ring module 10	Ø 1200 mm

Hydraulics

Working hydraulics	Rexroth LUDV load sensing
Pumps	Swash-plate axial piston pumps
Working pump	290 l/min at 320 bar
Fan pump	52 l/min at 200 bar
Additional connections	6

Hydraulic control circuits

Hydraulic auxiliary connections are adjusted using the colour display	
Control circuit 1 on boom: proportional, litres adjustable	Max. 200 l/min
Control circuit 2 on boom: proportional, litres adjustable	Max. 100 l/min
Control circuit 3 on boom (digital, litres adjustable)	Max. 50 l/min
Control circuit 4 on boom (quick changer)	30 - 300 bar
Powerline (digital, litres and pressure adjustable)	max. 220 l/min / 350 bar
Cable winch connection on chassis (proportional, litres adjustable)	max. 120 l/min
Return line (on boom)	
Leak oil line	

Filling quantities

Fuel tank	180 litres
Spare tank in chassis	240 litres
AdBlue tank	20 litres
Hydraulic oil system capacity	220 litres

Tyres

CH and EU road traffic licence without special permit up to 710 mm tyre width	
Standard	**B/Ø in mm**
600/50-22.5 (forestry)	600/1170
Option	
600/55-23.0	570/1370
600/55-26.5 (forestry)	600/1340
710/45-26.5 (forestry)	710/1340
800/40-26.5 (forestry)	800/1340

menzi muck

https://truckmanualshub.com/

Innovative standard equipment and useful options.

serial + optional o

Upper carriage

Diesel input pump including limit stop	+
Gas shock supports opening the side and rear panels	+
Integrated tool compartment	+
Additional tool crate	o
Cast parts on upper structure as ram protection	+
Identifies direction of travel and automatically switches over	+

Cab

"Roll-Over-Protection-System" – ROPS as per DIN ISO 3471	+
FOPS protective grid roof as per DIN ISO 3449	o
Demountable windshield OPS-proofed	o
Low levels of vibrations and noise in cab	+
Grammer comfort operator's seat	+
Grammer Evolution comfort operator's seat with seat ventilation	o
Ergonomic joystick	+
Cab tilts with hydraulic hand pump	+
Headlight crown on the roof with up to 10 LED headlights	o
5 LED headlights	+
One or two LED additional headlights on boom	o
Turning light	o
Protective grid (different variants)	o
Safety glass panels (different variants)	o
Door with sliding window	o
Spacious, ergonomic cockpit	+
Rear-view camera	+
Powerful heating with 7 adjustable air nozzles	+
Air-conditioning unit	o
Auxiliary heating	o
Pollen filter	+
DAB+ radio with CD/USB/MP3 player	+
Four-point seat belt	o
Windscreen washer and wiper system	+
Immobilizer	o
Trackunit remote diagnostics	+
LCD Display	+
USB charger station	o

Generation x chassis

Ideally protected components	+
Mountain stabilizers at the front	o
Mountain stabilizers at the rear (M545x)	o
Hydraulic wheel height adjustment (M535x)	+
Cable winch can be installed at the front or rear	+
Vx-Drive	+
Wheel speed adaptation	+
Swing axle (M545x)	o
Automatic parking brake	+
Max. engine speed restriction/resolution, driving pedal	+
Substrate protector	+
Differential lock	+
Linear travel sensors in the steering cylinder	+
Active angle sensors	+
Electric chain collision protection	+

Other specalties

Cylinders on chassis with check valves	+
Cylinders on boom with end position damping	+
Leak oil line	o
Reversible fan	o
Cable winch connection	o
1st + 2nd control circuit	+
3rd + 4th control circuit	o
Powerline	o
Automatic idling	o
Equipment for lifting gear (CH and EU)	o
Electric height limiter	o
Road traffic licence (CH and DE)	o
Automatic central lubrication (entire machine or upper structure only)	o
Biodegradable hydraulic oil	o
Hydraulic bypass filter	o
Forestry version	o
Remote control for forestry cable winch	o
Drilling equipment	o
Track equipment	o
Paint finish to specification	o
Stroke and swivel limiter	o

https://truckmanualshub.com/

The Menzi Muck M525x. Dimensions.

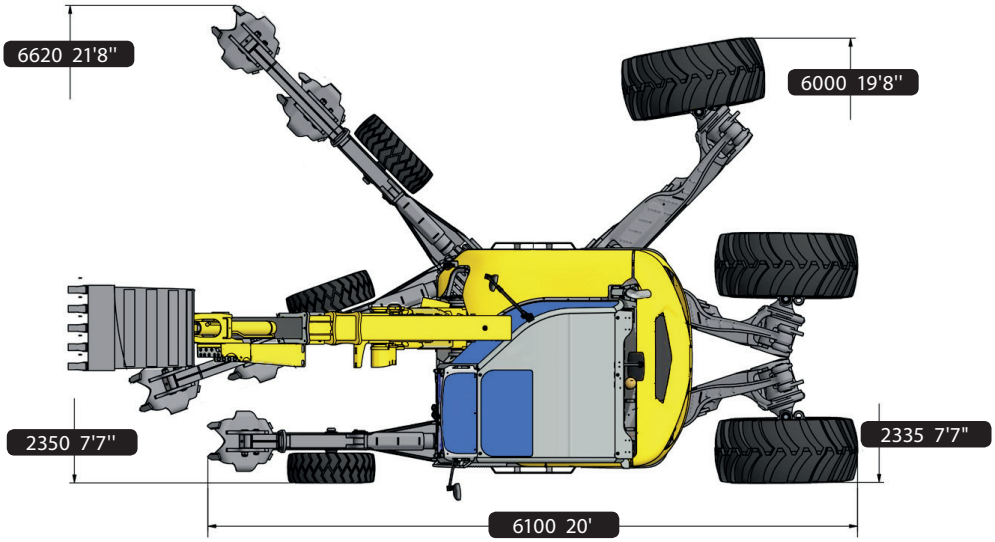

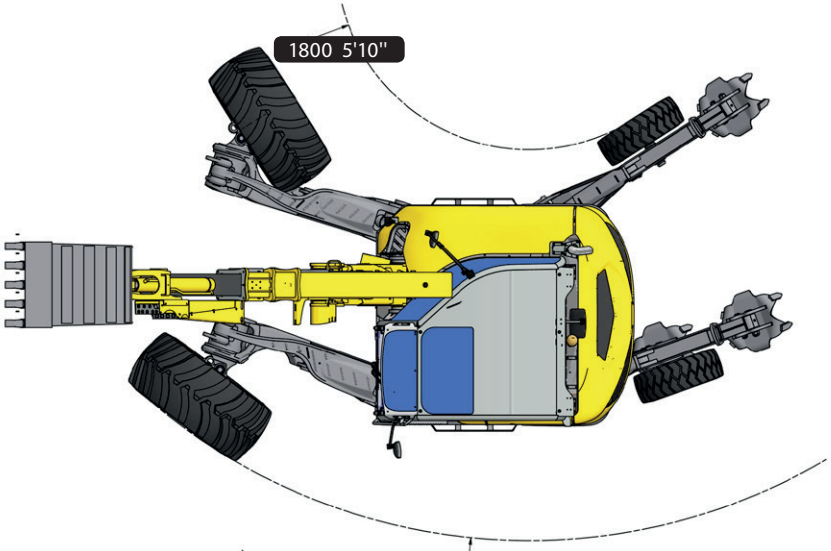

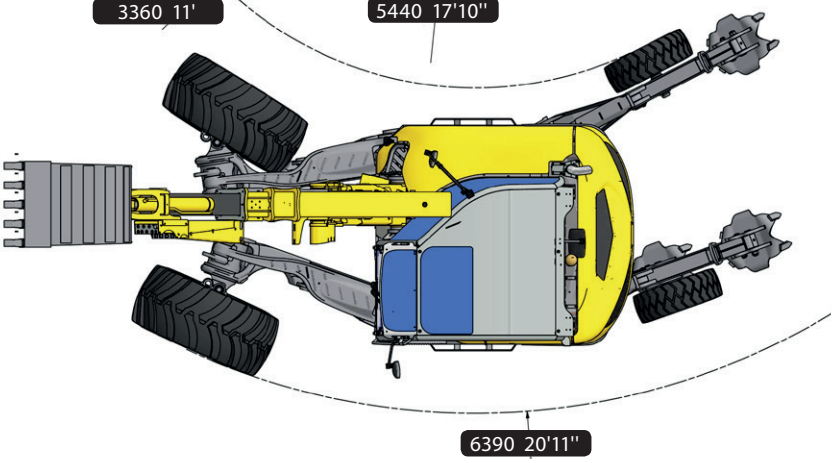

https://truckmanualshub.com/

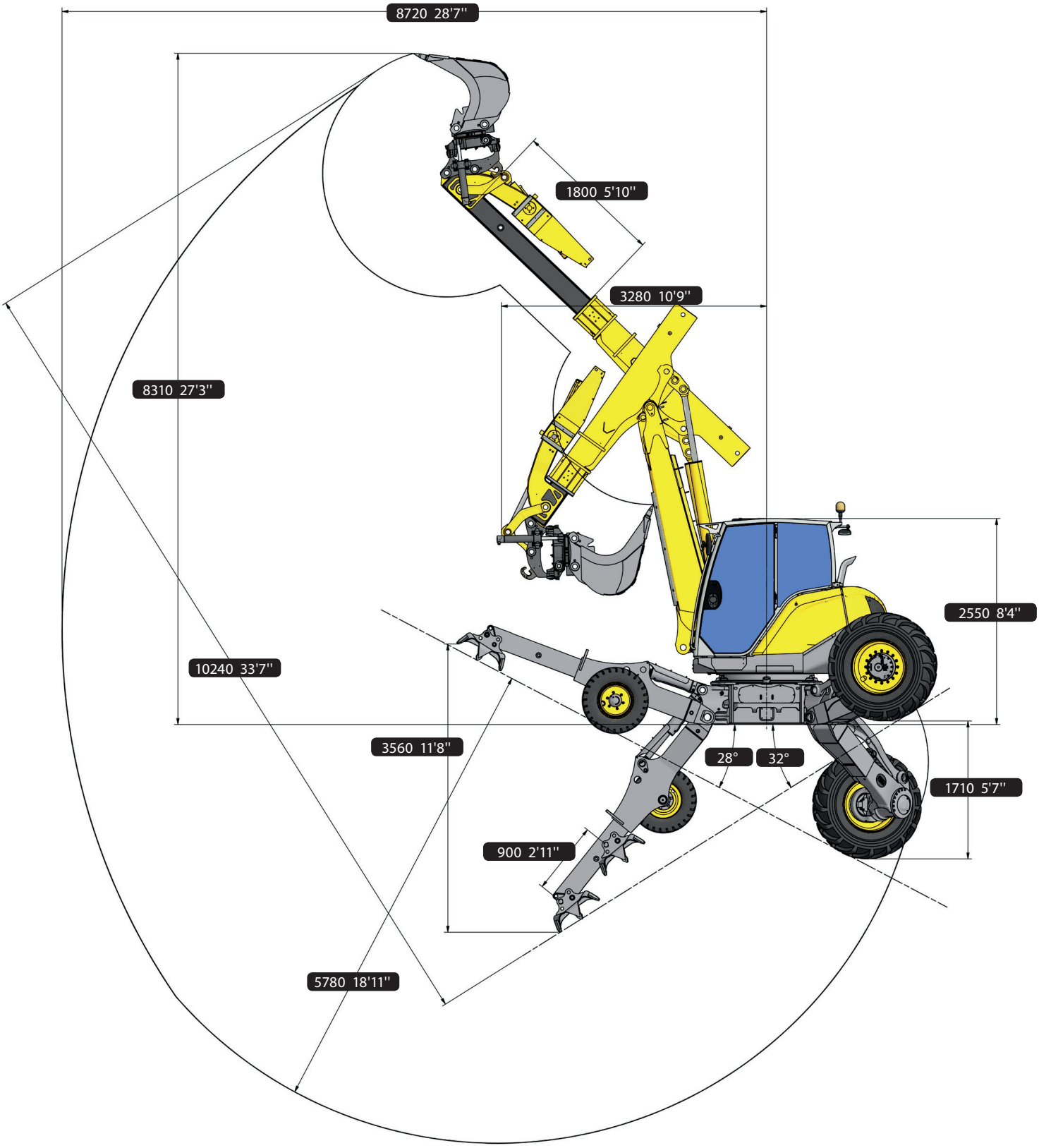

Dimensions with tiltrotator in mm/inch. Technical data vary upon tyre/tool.

https://truckmanualshub.com/

The Menzi Muck M535x.
Dimensions.

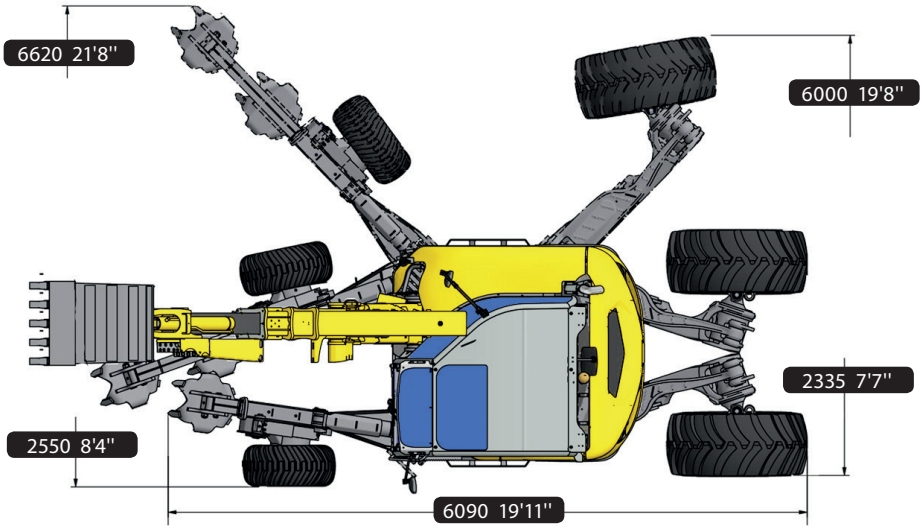

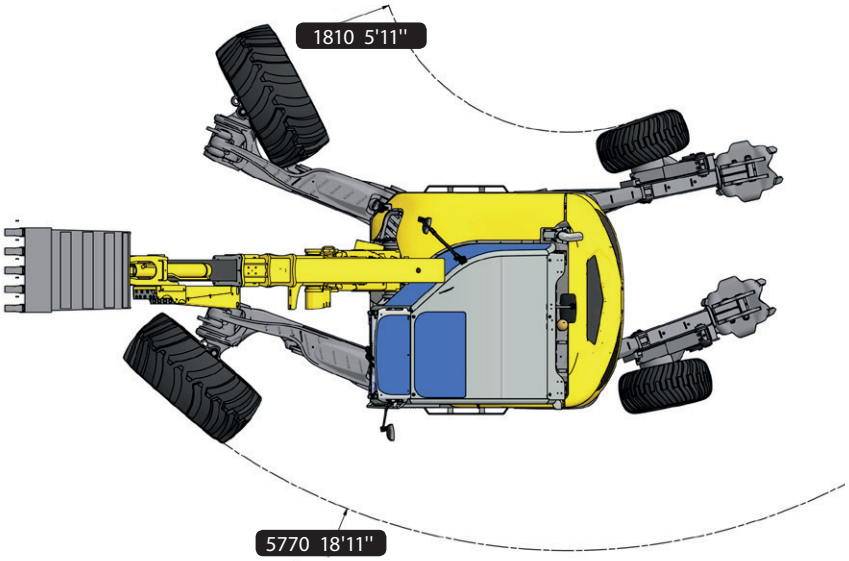

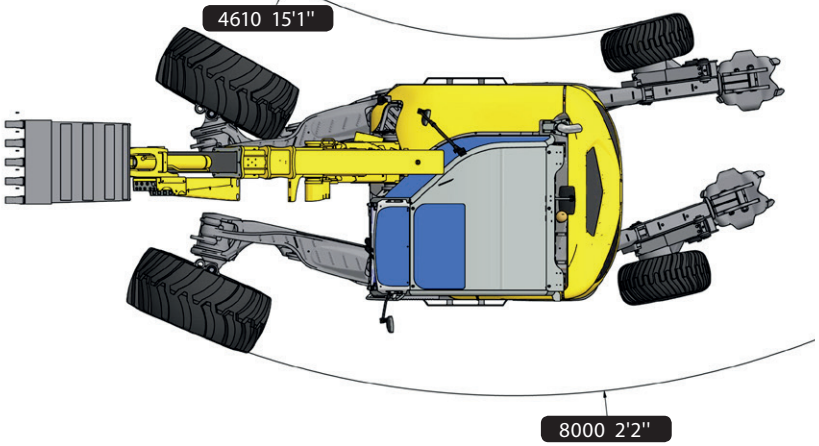

https://truckmanualshub.com/

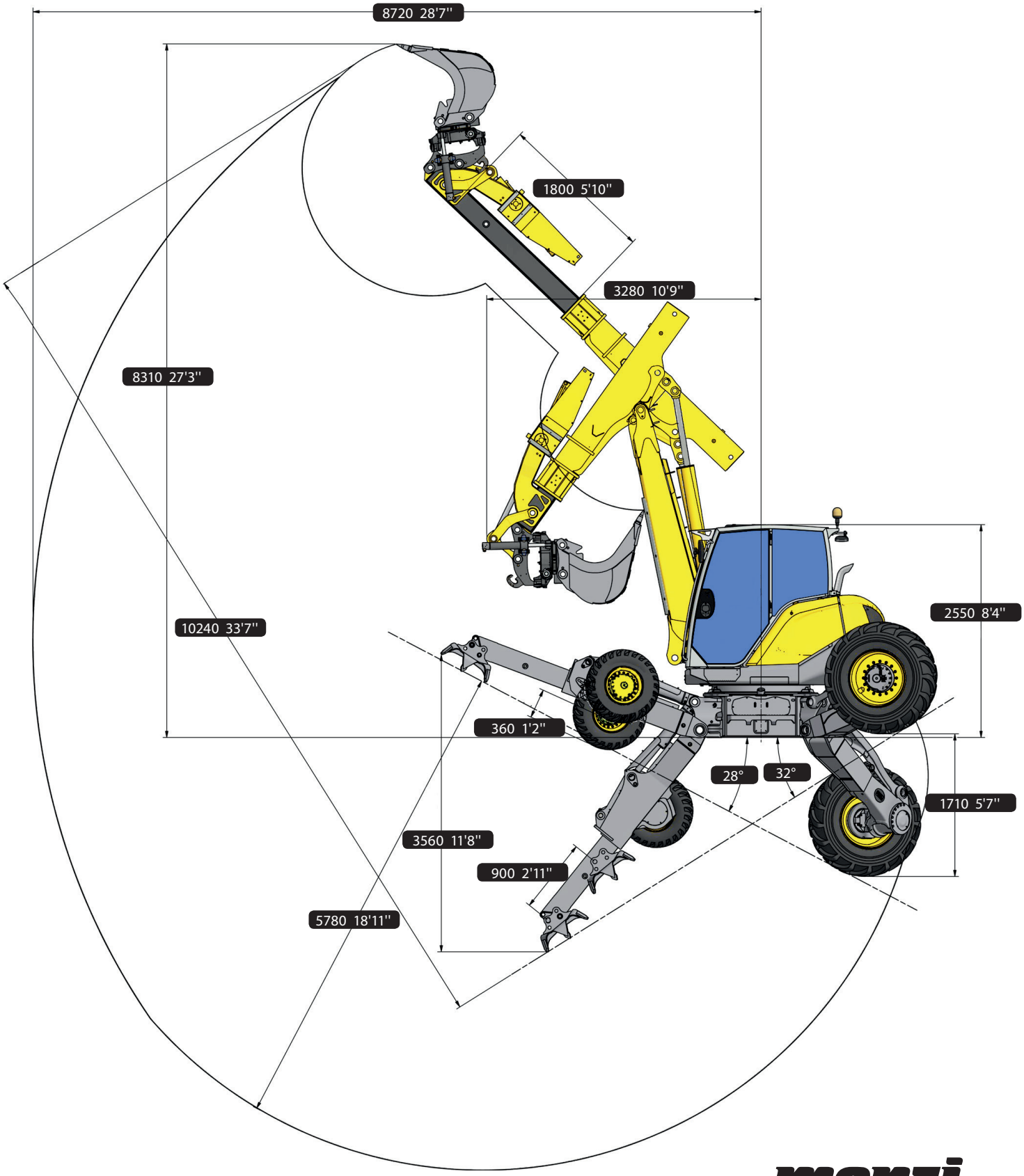

Dimensions with tiltrotator in mm/inch. Technical data vary upon tyre/tool.

https://truckmanualshub.com/

The Menzi Muck M545x. Dimensions.

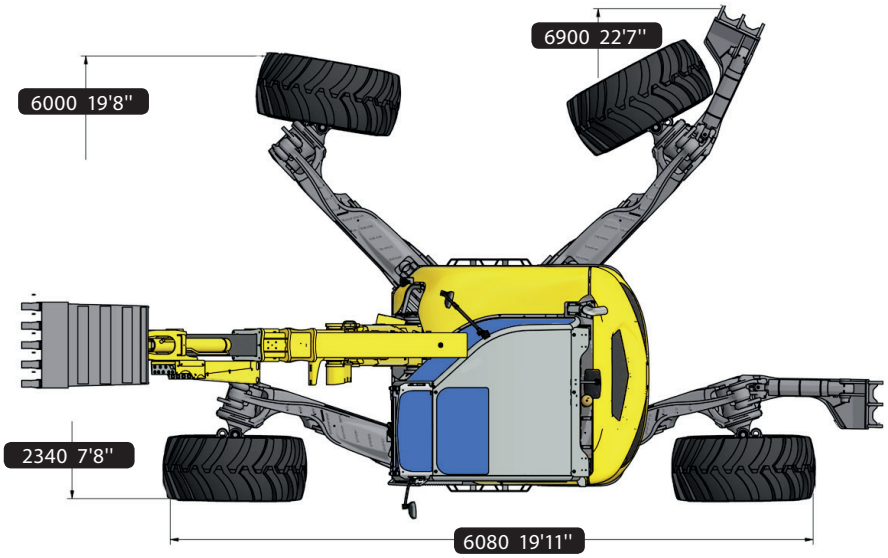

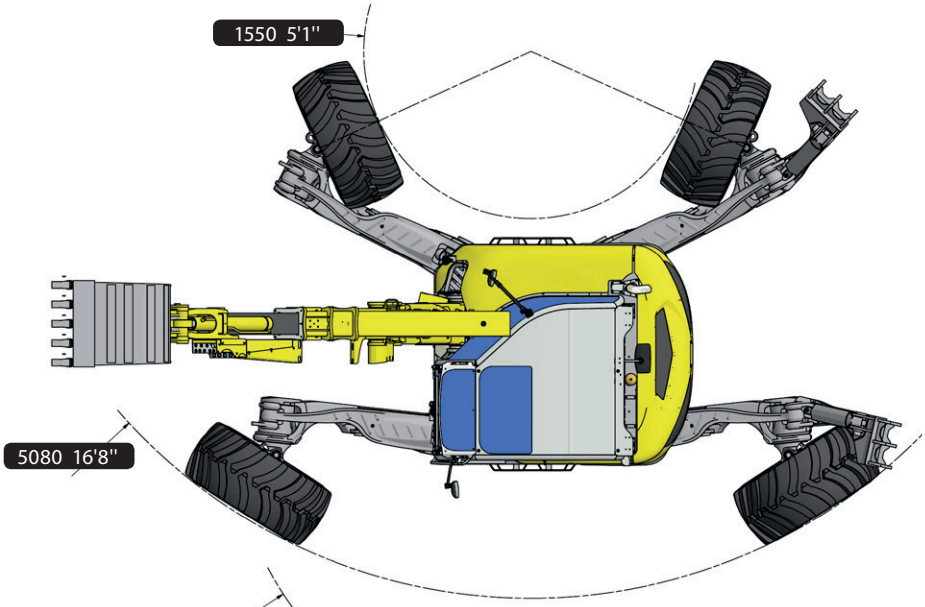

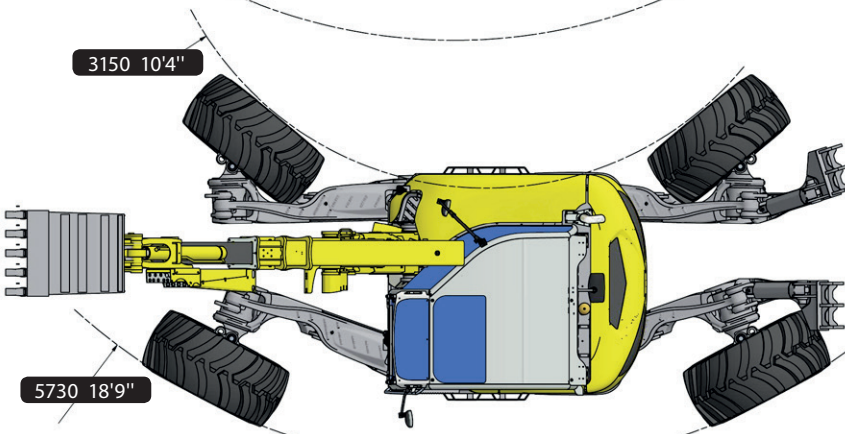

https://truckmanualshub.com/

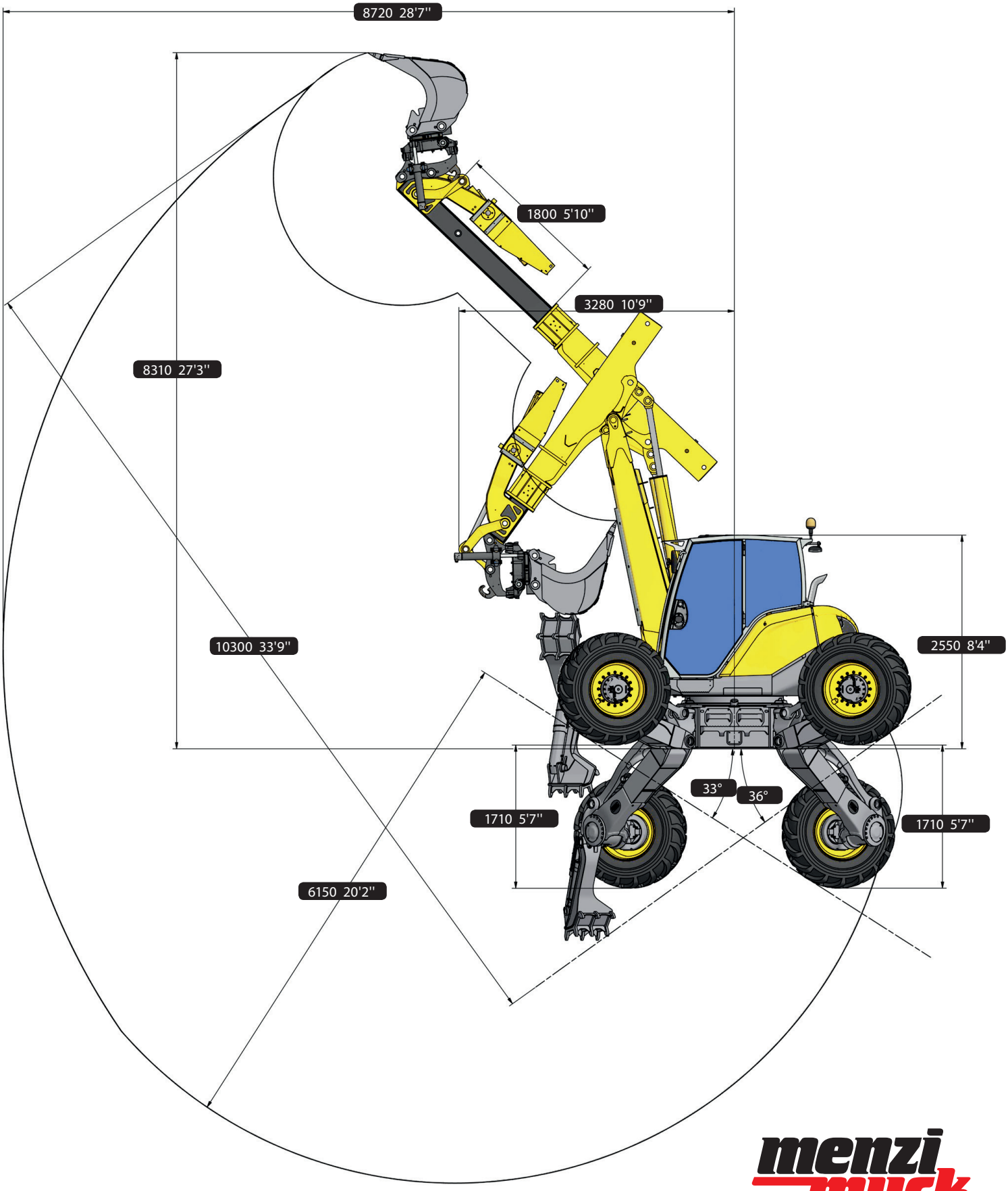

Dimensions with tiltrotator in mm/inch. Technical data vary upon tyre/tool.

https://truckmanualshub.com/

More informations.

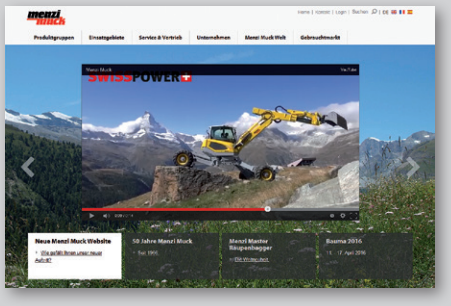

www.menzimuck.com
- entire product range
- distributors and service network
- company infos
- calendar of trade fairs and open doors
- multimedia (brochures, guides, photographs, videos, ...)
- multilingual
- and much more

www.facebook.com/menzimuckcom
- product and company news
- discussions over the Menzi Muck
- events
- contributions from other Menzi Muck operators and fans
- history of the Menzi Muck

www.youtube.com/menzimuckcom
- events and special reports
- TV-reports
- Menzi Muck working
- accessories in action

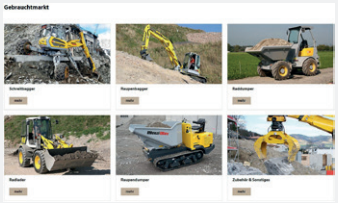

https://www.menzimuck.com/gebrauchtmarkt/
- several used machines/accessories with foto
- free ads for private offers and requests

Technical data subject to change / 1219

Menzi Muck AG · 9464 Rüthi/Switzerland
T +41 71 727 12 12 · info@menzimuck.com · menzimuck.com
Ein Unternehmen der Menzi Muck Gruppe