https://truckmanualshub.com/

TADANO

資料番号 W301-0411E

Service Manual

01

Load Moment Indicator

Model **AML-C**

TADANO LTD.

https://truckmanualshub.com/

Foreword

This service manual (this document) is compiled to provide information on the AML-C that is equipped on the crane.

"Input/Output Signals of the AML System" in this document offers the general description on the electrical circuit of the crane. For the detailed electrical circuit, refer to the service manual (Circuit diagrams and Data) of each model.

For the actual works, perform appropriate repair and service with referring to the separate operation and maintenance manual, parts catalog, and service manual of the applicable model.

When part replacement is needed, refer to the parts catalog first to check the disassembly unit as well as the parts sales unit.

1. Applicable Crane Model / Spec. No.

Crane model	
GR-1000XL-2	
Spec. No.	GR-1000-2-00101 GR-1000-2-00103
GR-750XL-2	
Spec. No.	GR-750-2-00101
With the crane models not shown in the above table, refer to this service manual when the document number of this manual is noted in the service manual for each model.	

Figures and contents in this manual are subject to change depending on improvements, etc.

https://truckmanualshub.com/

2. Table of Contents

Foreword

1.Applicable Crane Model / Spec. No..... i
2.Table of Contents.....ii
3.Acronyms and Abbreviations.....iv
4.International Standard v
5.Crane Performance vii
6.Reduction of Rated Capacity.....viii

Chapter A (Component of AML System)

A-1 Components of the AML System 1

A-2 Input/Output Signals of the AML System 11
2.1 AML Control Unit (Pin Assignment) CN1 – CN9

Chapter B (User Mode)

B-1 Functions and How to use the User Mode..... 26

B-2 Registration of Operating State and AML Function Check 28

B-3 Alarm and Recovery Operation 38
3.1 Type of Warning Codes and Buzzer .. 38
3.2 Warning Code and Crane Model Comparison Table 39
3.3 Warning code and Remedy List..... 40

B-4 Other Functions 43
4.1 Working Range Limit Function..... 43
4.2 TARE Function..... 49
4.3 Mute Alarm Function..... 49
4.4 Fuel Consumption Indicator..... 50
4.5 User Adjustment Menu 51

B-5 Action against AML System Error 58

B-6 Do Output Control..... 59
6.1 Cause for AML Automatic Stop Output 59
6.2 Do Output Abnormality Processing.... 64
6.3 Drum Indicator Control Function..... 65
6.4 Output of warning 66

B-7 AML Control..... 67
7.1 Backward Stability Stop Function 67
7.2 Working Range Limit Stop Function .. 67
7.3 Output of Interference Prevention Warning 70
7.4 Winch Drum Position Selection Function 71

B-8 Proportional Control Function..... 75

B-9 AML Cancel Function 76

Chapter C (Maintenance Mode)

Outline of Maintenance Mode..... 80

C-1 Operation Keys and Menu..... 81

C-2 Individual Main Menu Functions..... 85

C-3 Integrated Information Display Screen ...117

C-4 Error Code 122
4.1 Classification of Error Code 122
4.2 Error History.....122
4.3 Error Notification 123
4.4 Error Code Table.....124
4.5 CPU State Indicator LED 133

C-5 Required Adjustment after AML System Part Replacement 134

C-6 Disassembly and Assembly..... 135

https://truckmanualshub.com/

Chapter D
(Adjustment Mode)

Outline of Adjustment Mode..... 150

D-1 Operation Keys and Menu 151

D-2 Detector Adjustment 156

D-3 Valve Adjustment 166
- 3.1 Adjustment Sub Menu 166
- 3.2 Swing Output Adjustment (Offset Method) 167
- 3.3 Swing Output Adjustment (Characteristics Measurement Method) 168
- 3.4 Elevating / Telescoping Output Adjustment..... 170
- 3.5 Function of Slow Stop..... 171

D-4 Performance Setup..... 172

D-5 Operation History Erase 174

D-6 Option Select 175

D-7 AML Emergency / Override Switch History Erase..... 178

D-8 Outrigger Emergency Setting History Erase..... 179

Chapter E
(Information and Data)

E-1 AML Adjustment Value List..... 180

E-2 Detector Check..... 184

E-3 AML Control Function List 190

E-4 AML Input/Output List..... 192

https://truckmanualshub.com/

3. Acronyms and Abbreviations

The following list contains some of the acronyms and abbreviations used in this manual.

AML: Load Moment Indicator
AML override: Refer to Chapter B-9
Actuator: A mechanical device which converts supplied energy into mechanical work (Ex. hydraulic motor, hydraulic cylinder)
Ai: Analog Input
A/D conversion: Analog/Digital conversion
Ao: Analog Output
Aux.: Auxiliary
ASME: American Society of Mechanical Engineers
CAN: Controller Area Network (SAE1939)
CHG: Charge
CPU: Central Processing Unit
C/W: Counter weight
D/A: Digital/ Analog conversion
DCU: Display Control Unit (Meter controller)
Di: Digital Input
Do: Digital Output
Eco mode: Environmental communication mode
ECU: Engine Control Unit
FET: Field-effect Transistor
F.B.: Feed back
Fig.: Figure
Flash memory: A Semiconductor memory device which can be electrically erased and rewritten.
FMI: Failure Mode Identifier
FLJ: Full auto Luffing Jib
F/J: Front Jack
F/R: Front Right
F/L: Front Left
ICF: Information Controller for Telematics
ID: Identification
ISO: International Organization for Standardization
J/S: Joystick
LCD: Liquid Crystal Display
LED: Light Emitting Diode
MDT: Multiplex Data Transmitter
MMT: Moment
OE: Output Enable signal (Fail-safe is active when the signal is ON.)
O/R: Outrigger
PC: Personal Computer
Pi: Pulse input
Pin Assignment: Assignment of signals to the pins of connectors
PT: Power Tilt
PTO: Power Take-off
RAM: Random Access Memory
ROM: Read Only Memory
rpm: Revolution per minute
RY: Relay
R/J: Rear Jack
SAE: Society of Automotive Engineers
Si: Serial input
SOL: Solenoid
SPN: Suspect Parameter Number (Data Classification Number)
STM: Signal Transmitter (D, E type)
SW: Switch
S/T: Single Top
Tr: Transistor
T/C: Torque Converter
T/M: Transmission
USB: Universal Serial Bus
VCU: Vehicle Control Unit (node)
WDT: Watched dog timer
3S: 3 Second
20ms: 20 millisecond (20/1000 second)

Rated capacity = Max. Hoist medium load
Hoist medium load = Net load + Hook Assy
Net load = Payload + Sling

https://truckmanualshub.com/

4. International Standard

ISO 4306-1

(Only description in English is shown here.)

Cranes – Vocabulary - Part 1: General

Fourth edition 2007.10.15

6 Lifted loads

6.1 Terms, definitions and symbols

6.1.1	**payload** load, having a mass, m_{PL}, which is lifted by the crane and suspended from the non-fixed load-lifting attachment(s) or, if such an attachment is not used, directly from the fixed load-lifting attachments NOTE If cranes are used for lifting gates at hydro-power stations or for lifting the load from water, the payload may also include forces due to waterflow suction or water adhering by suction.

6.1.2	**non-fixed load-lifting attachment** any equipment, having a mass, m_{NA}, which connects the payload with the crane and which is neither part of the crane nor the payload NOTE Non-fixed load-lifting attachments are easily detachable from the crane and from the payload.

6.1.3	**net load** load, having a mass, m_{NL}, which is lifted by the crane and suspended from the fixed load-lifting attachment(s) NOTE Mass m_{NL} is the sum of the payload, m_{PL}, and the non-fixed load-lifting attachment(s), m_{NA}: $m_{NL} = m_{PL} + m_{NA}$

6.1.4	**fixed load-lifting attachment** any equipment, having a mass, m_{FA}, from which the net load can be suspended and which is permanently fastened to the lower end(s) of the hoist medium(s) NOTE Fixed load-lifting attachments are part of the crane.

6.1.5	**hoist medium load** load, having a mass, m_{HL}, which is lifted by the crane and suspended from the lower end(s) of the hoist medium NOTE Mass m_{HL} is the sum of the payload, m_{PL}, the non-fixed load-lifting attachment(s), m_{NA}, and the fixed load-lifting attachment, m_{FA}: $m_{HL} = m_{PL} + m_{NA} + m_{FA}$

6.1.6	**hoist medium** wire rope(s), chain(s) or any other equipment, having a mass, m_{HM}, hanging down from the crane, for example from the crab or the jib head, operated by a winch, etc., used to lift and lower loads suspended from the lower end(s) of the hoist medium(s) NOTE Hoist mediums are part of the crane.

6.1.7	**gross load** load, having a mass, m_{GL}, which is suspended directly from the crane, for example from the crab or the jib head NOTE Mass m_{GL} is the sum of the payload, m_{PL}, the non-fixed load-lifting attachments, m_{NA}, the fixed load-lifting attachment(s) m_{FA} and the hoist medium(s), m_{HM}: $m_{GL} = m_{PL} + m_{NA} + m_{FA} + m_{HM}$

6.1.8	**rated capacity** maximum net load or, for **mobile cranes** (1.1.3.3), **hoist medium load** (6.1.5) that the crane is designed to lift for a given crane configuration and load location during normal operation
6.1.9	**maximum capacity** maximum value of the rated capacity

https://truckmanualshub.com/

(Only description in English is shown here.)

6.2 Examples of use of terms

Examples of the use of crane load terms are given in Figures 1 and Tables 1 .

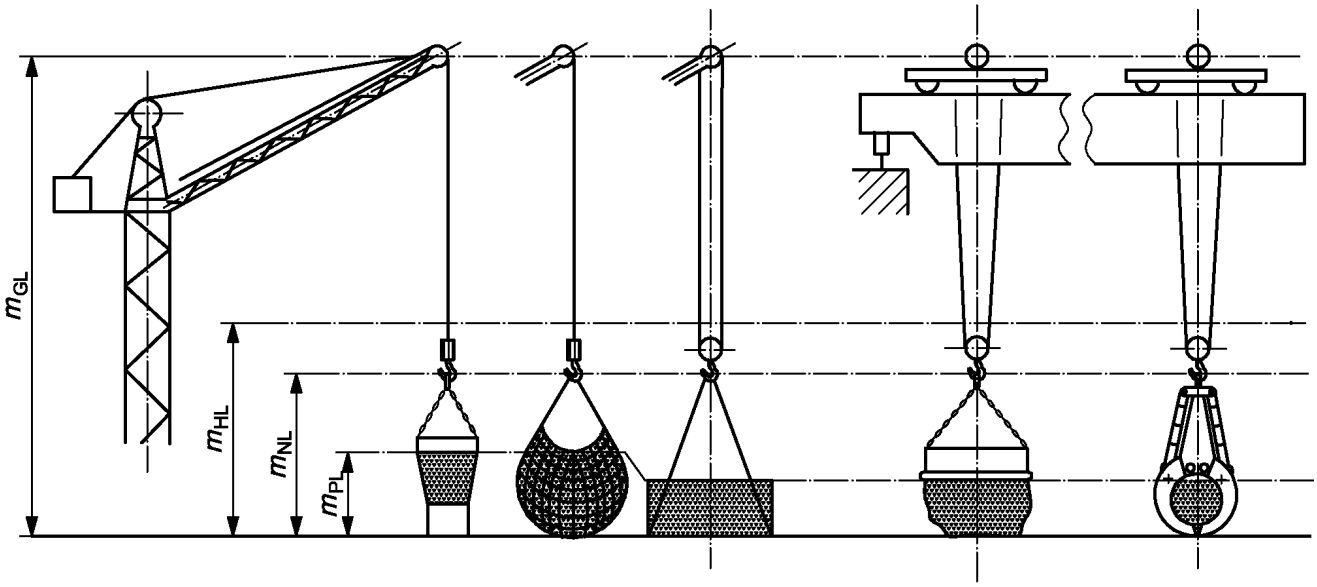

Figure 1 (see Table 1)

Gross load	Hoist medium			m_{HM}	Hoist rope hanging down from jib head			Hoist rope hanging down from crab	
	Hoist medium load = Net load + Hook	Fixed load-lifting attachment(s)		m_{FA}	Hook assembly	Hook assembly	Bottom block	Bottom block	Bottom block
		Net load = Payload + Slings	Non-fixed load-lifting attachment(s)	m_{NA}	Skip and chain	Net	Rope slings	Electromagnet and chain	Grab
			Payload	m_{PL}	Contents of skip	Contents of net	Box and contents	Scrap iron	Contents of grab
m_{GL}	m_{HL}	m_{NL}							

Table 1

https://truckmanualshub.com/

5. Crane Performance

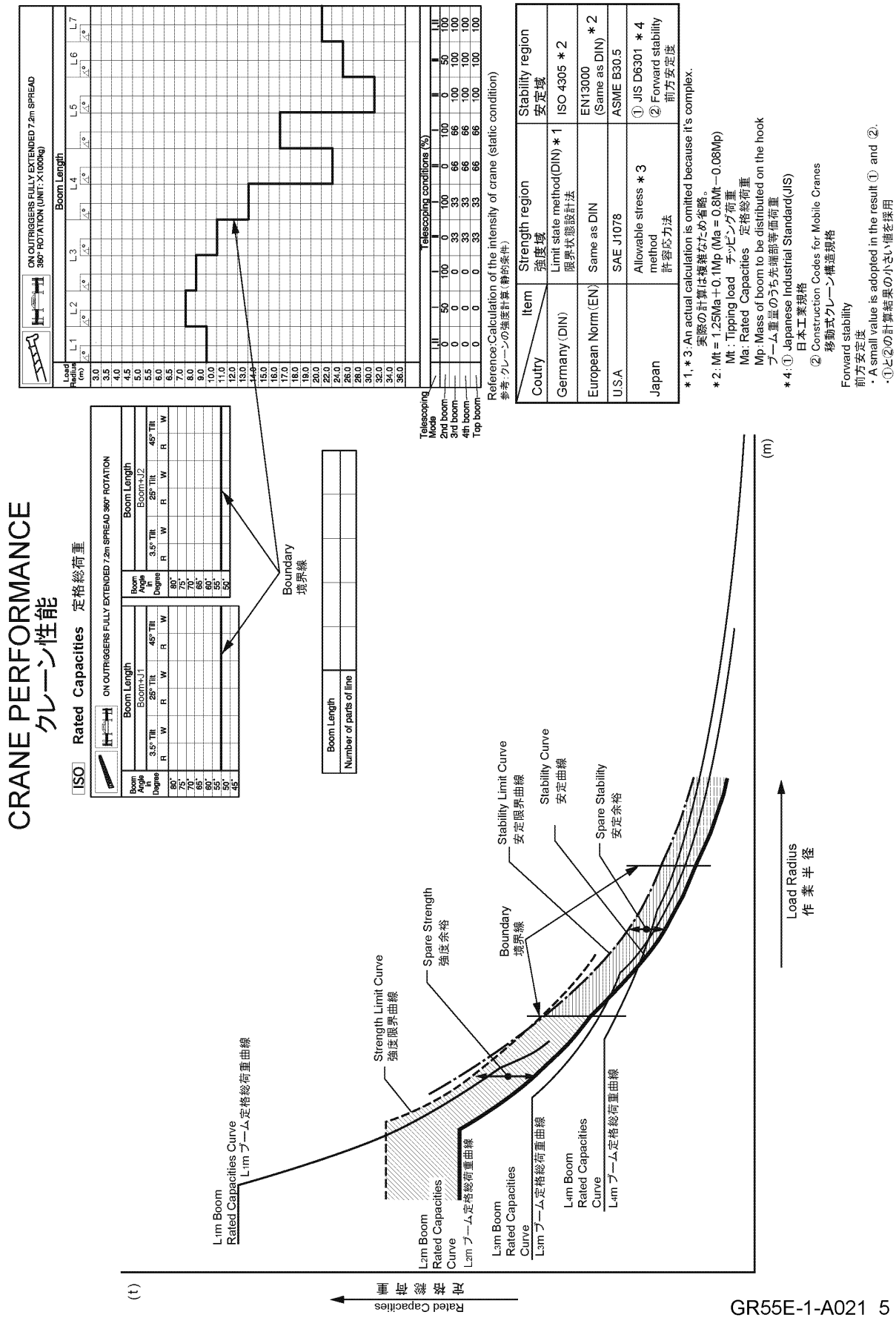

Coutry / Item	Strength region 強度域	Stability region 安定域
Germany (DIN)	Limit state method(DIN) ＊1 限界状態設計法	ISO 4305 ＊2
European Norm (EN)	Same as DIN	EN13000 (Same as DIN) ＊2
U.S.A	SAE J1078	ASME B30.5
Japan	Allowable stress ＊3 method 許容応力法	① JIS D6301 ＊4 ② Forward stability 前方安定度

＊1, ＊3 : An actual calculation is omitted because it's complex.
実際の計算は煩雑なため省略。
＊2 : Mt = 1.25Ma + 0.1Mp (Ma = 0.8Mt − 0.08Mp)
Mt : Tipping load チッピング荷重
Ma : Rated Capacities 定格総荷重
Mp : Mass of boom to be distributed on the hook
ブーム重量のうち先端部等価荷重
＊4 : ① Japanese Industrial Standard(JIS)
日本工業規格
② Construction Codes for Mobile Cranes
移動式クレーン構造規格

Forward stability
前方安定度
・A small value is adopted in the result ① and ②.
・①と②の計算結果の小さい値を採用

GR55E-1-A021 5

https://truckmanualshub.com/

6. Reduction of Rated Capacity

Boom Lift

The rated capacities for boom lift assume that the jib is stowed in the specified position and the main winch is used. When the jib is attached to the boom end during boom lift, subtract the value in the table below from the rated capacity.

Single Top Lift and Jib Lift

The rated capacities for single top lift or jib lift assume that the main winch is used. If you perform single top lift or jib lift using the auxiliary winch, subtract the mass of the main hook block from the rated lifting capacity values.

(ex. : GR-750XL-2)

WEIGHT REDUCTIONS FOR AUXILIARY
LOAD HANDLING EQUIPMENT

Load Handling Equipment		
75ton,7Sheave Hook Block(See Hook Block for actual weight)	1,300	(lbs.)
Aux.Hook(See Hook for actual weight)	330	(lbs.)

Lifting from Main Boom with															
Base and/or Top Jib stowed on base boom													0 (lbs.)		
#1 Single Top stowed on top boom													0 (lbs.)		
Single Top erected but not used													0 (lbs.)		Fig.1
33.2'(10.1m)Base Jib erected but not used													(lbs.)		Fig.2
Boom Length	36.1'	49.2'	62.3'		75.5'		88.6'		101.7'		114.8'		128.0'	141.1'	
Telescoping Mode	Ⅰ,Ⅱ	Ⅰ	Ⅰ	Ⅱ	Ⅰ	Ⅱ	Ⅰ	Ⅱ	Ⅰ	Ⅱ	Ⅰ	Ⅱ	Ⅱ	Ⅰ,Ⅱ	
	18,100	12,400	10,500	7,600	7,800	7,500	7,700	6,800	6,800	6,100	5,900	5,300	5,100	4,900	
33.2'(10.1m)Base Jib erected but not used + Aux.Hook on Base Jib													(lbs.)		Fig.3
Boom Length	36.1'	49.2'	62.3'		75.5'		88.6'		101.7'		114.8'		128.0'	141.1'	
Telescoping Mode	Ⅰ,Ⅱ	Ⅰ	Ⅰ	Ⅱ	Ⅰ	Ⅱ	Ⅰ	Ⅱ	Ⅰ	Ⅱ	Ⅰ	Ⅱ	Ⅱ	Ⅰ,Ⅱ	
	18,900	13,200	11,300	8,400	8,500	8,300	8,400	7,500	7,400	6,700	6,500	5,900	5,700	5,500	
58.1'(17.7m)Base and Top Jib erected but not used													(lbs.)		Fig.4
Boom Length	36.1'	49.2'	62.3'		75.5'		88.6'		101.7'		114.8'		128.0'	141.1'	
Telescoping Mode	Ⅰ,Ⅱ	Ⅰ	Ⅰ	Ⅱ	Ⅰ	Ⅱ	Ⅰ	Ⅱ	Ⅰ	Ⅱ	Ⅰ	Ⅱ	Ⅱ	Ⅰ,Ⅱ	
	20,400	14,700	12,600	9,800	9,800	9,500	9,500	8,600	8,400	7,700	7,300	6,800	6,600	6,300	
58.1'(17.7m)Base and Top Jib erected but not used + Aux.Hook on Top Jib													(lbs.)		Fig.5
Boom Length	36.1'	49.2'	62.3'		75.5'		88.6'		101.7'		114.8'		128.0'	141.1'	
Telescoping Mode	Ⅰ,Ⅱ	Ⅰ	Ⅰ	Ⅱ	Ⅰ	Ⅱ	Ⅰ	Ⅱ	Ⅰ	Ⅱ	Ⅰ	Ⅱ	Ⅱ	Ⅰ,Ⅱ	
	21,700	15,900	13,800	11,000	10,900	10,600	10,500	9,600	9,300	8,600	8,200	7,600	7,400	7,100	
Lifting from 33.2'(10.1m)Base Jib with															
24.9'(7.6m)Top Jib erected but not used											Prohibited				
24.9'(7.6m)Top Jib stowed on 33.2'(10.1m)Base Jib											Prohibited				

IW301-0411E08

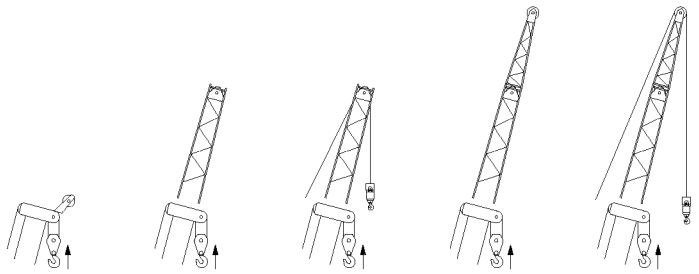

Fig.1 Fig.2 Fig.3 Fig.4 Fig.5

Note * Capacity deductions are for TADANO supplied equipment only.
* When lifting from Jib,deduct total weight of all load handling devices reeved on Main Boom nose directly from Jib capacity. (#2)
#1. Correct state of Jib, equipped or removed, should be inputted into the LOAD MOMENT INDICATOR(AML-C) by Jib state key switch.
#2. The winch which is lifting load should be defined in the LOAD MOMENT INDICATOR(AML-C) by main winch/auxiliary winch selector switch.

IW301-0411E09

343-979-01200 ⚠1
343-979-01190 ⚠1

https://truckmanualshub.com/

Chapter A

Components of AML System

Contents

A-1 Components of the AML System....1

1.1 System configuration 1
1.1.1 Diagram of the Main System 1
1.1.2 AML-C Block diagram 2

1.2 Display Unit..... 3
1.2.1 Display panel 4
1.2.2 LED Display..... 6
1.2.3 Control switches 7

1.3 AML Main Unit 8
1.3.1 Construction 8
1.3.2 Panel outside view (CN1 – CN9)..... 9
1.3.3 Boards and Inner connectors 10

A-2 Input/Output Signals of the AML System 11

2.1 AML Control Unit (Pin Assignment) 11
2.1.1 CN1 Connector (8-Pin) 11
2.1.2 CN2-1 Connector (20-Pin) 12
2.1.3 CN2-2 Connector (16-Pin) 14
2.1.4 CN3 Connector (12-Pin) 16
2.1.5 CN4 Connector (6-Pin) 17
2.1.6 CN5 Connector (16-Pin) 18
2.1.7 CN6 Connector (14-Pin) 22
2.1.8 CN7 Connector (20-Pin) 23
2.1.9 CN8 Connector (8-Pin) 24
2.1.10 CN9 (USB) Connector (4-Pin).....25
2.1.11 Explanation of the Signals (Di, Do) 25

https://truckmanualshub.com/

A-1 Components of the AML System

1.1 System configuration

1.1.1 Diagram of the Main System

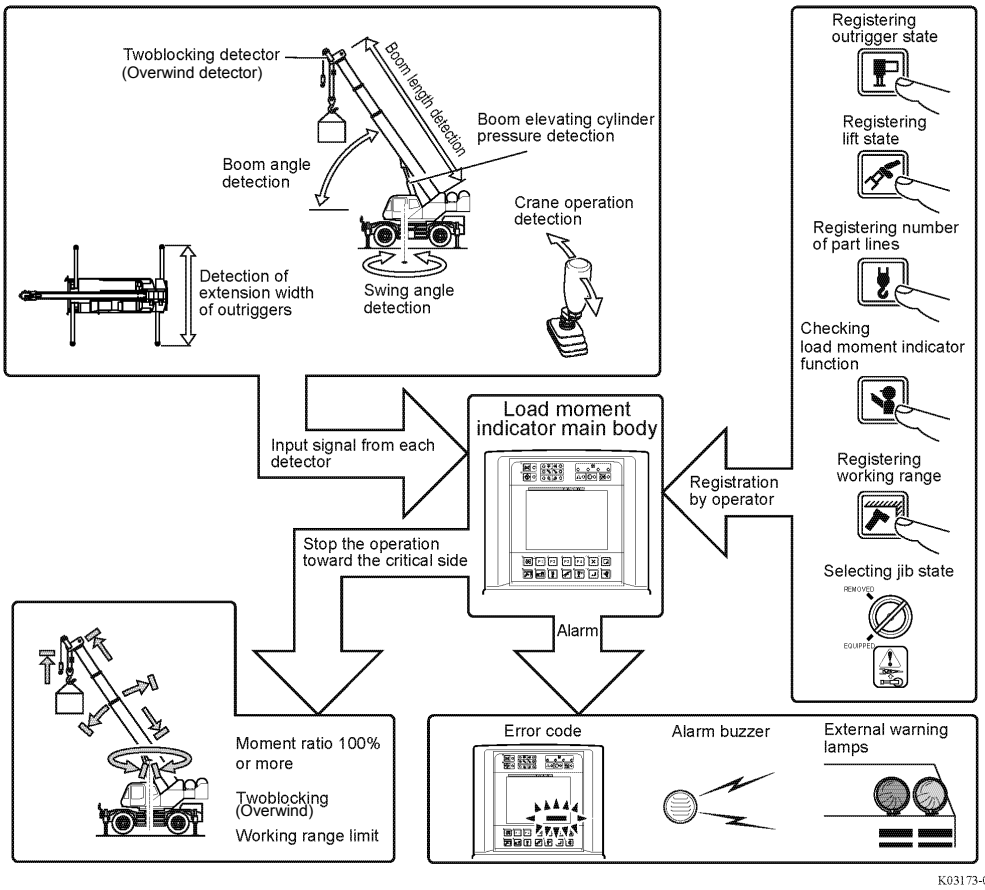

1. Load moment ratio ≥ 100%
   AML vent / compulsory unload of the main relief valve.
   - If an overload occurs, the AML stops the 24-V output from Do1. Thus the solenoid valve for VENT is returned to neutral by the spring and vents the oil in the spring side of the balance piston in the main-circuit safety valve into the tank circuit. The whole oil discharged by the pump is unloaded into the tank, making crane operation toward critical sides impossible.
   - When crane operation toward non-critical sides (hoisting down, boom raising, boom retraction) is detected, no oil is vented from the safety valve into the tank. Thus the crane operation becomes available.

2. Anti-twoblock (overwind) stop:
   If operation toward critical sides (hoisting up, boom lowering, boom extension) is attempted while the hook block is over wound, 24-V output from Do1 stops. Thus the crane operation toward critical sides becomes impossible due to AML vent (compulsory unload) in the same way as overload.
   When operation toward non-critical sides is detected, the operation becomes available.

3. Backward stability stop:
   When the boom is raised over the specified angle, the output from Do1 stops and the crane operation stops automatically due to AML vent. Recovery from the automatic stop is possible only by boom raising.

4. Working range limit stop:
   When the boom head approaches a pre-registered limit of the working range, slow stop function works and the AML energizes the corresponding proportional solenoid valve. It slowly closes the pilot pressure circuit for the main control valve to decelerate crane operation until the main control valve becomes neutral and the output from Do1 stops to make AML vent disable crane operation. For swing limit, however, the proportional solenoid valve makes the main control valve immediately to stop the crane. In this case the crane does not swing beyond the limit even if the AML override is activated, and it swings only toward within of the limit.

https://truckmanualshub.com/

1.1.2 AML-C Block diagram

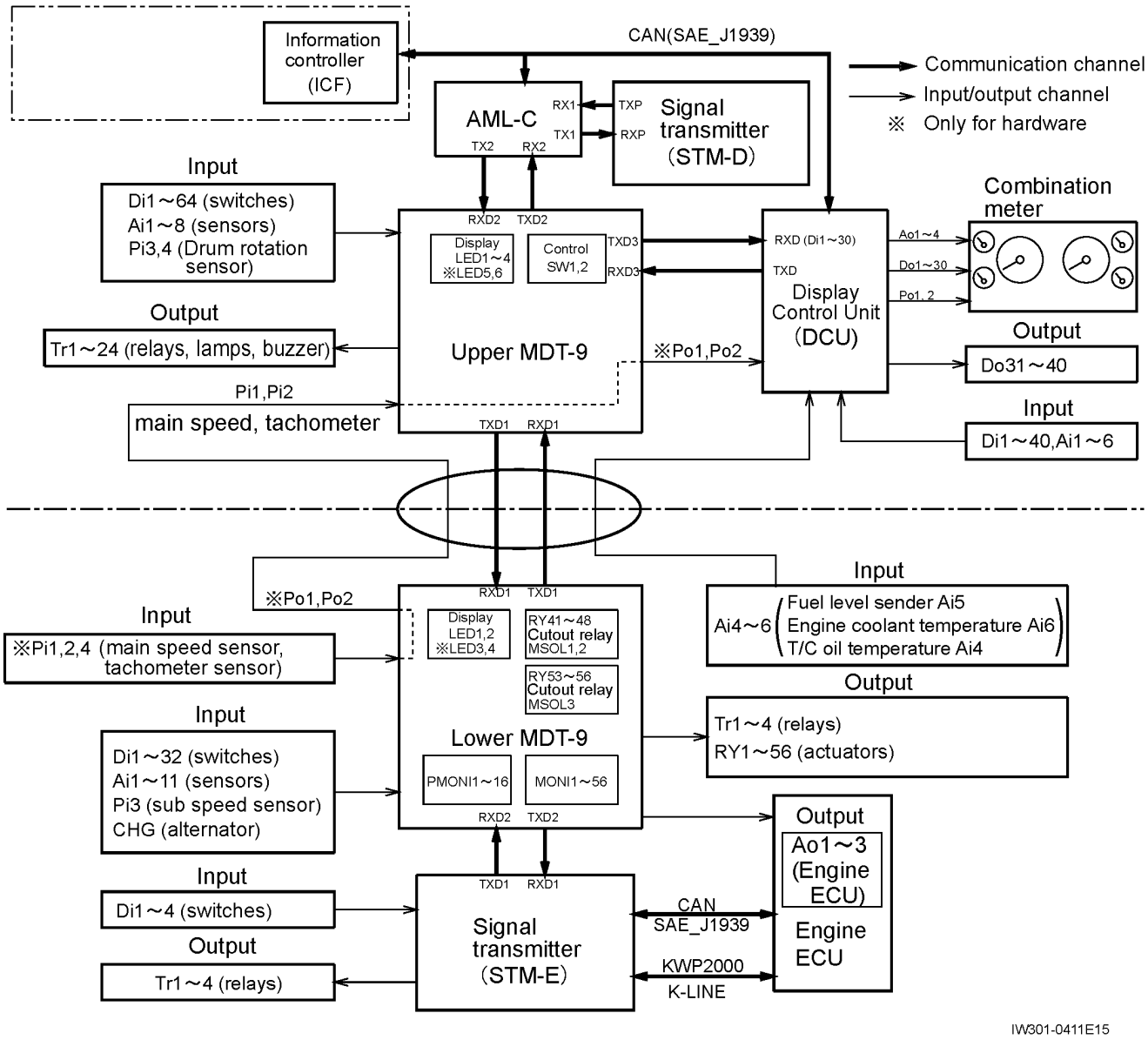

1. While the PTO switch is ON, AML-C and DCU give and take the data on the version No. of the DCU and error occurring in the DCU.
   For details of the data, refer to the "N-1 DCU" section in the service manual for the corresponding model.

2. The signal transmitter (STM-E) is common to all GR model.
   For details of the data, refer to the "N-1 STM-E" section in the service manual for the corresponding model.

3. Communication between STM-E and ECU on the machine with Mitsubishi engine (GR-750XL-2, GR-1000XL-2) is sent via K-LINE.

https://truckmanualshub.com/

1.2 Display Unit

Composition of the display Unit

1. The LED display indicates the limit state of each working range, rotation state of the winch drum, and AML control state. The display panel indicates the moment ratio, crane state, outrigger state, swing position, and error code.

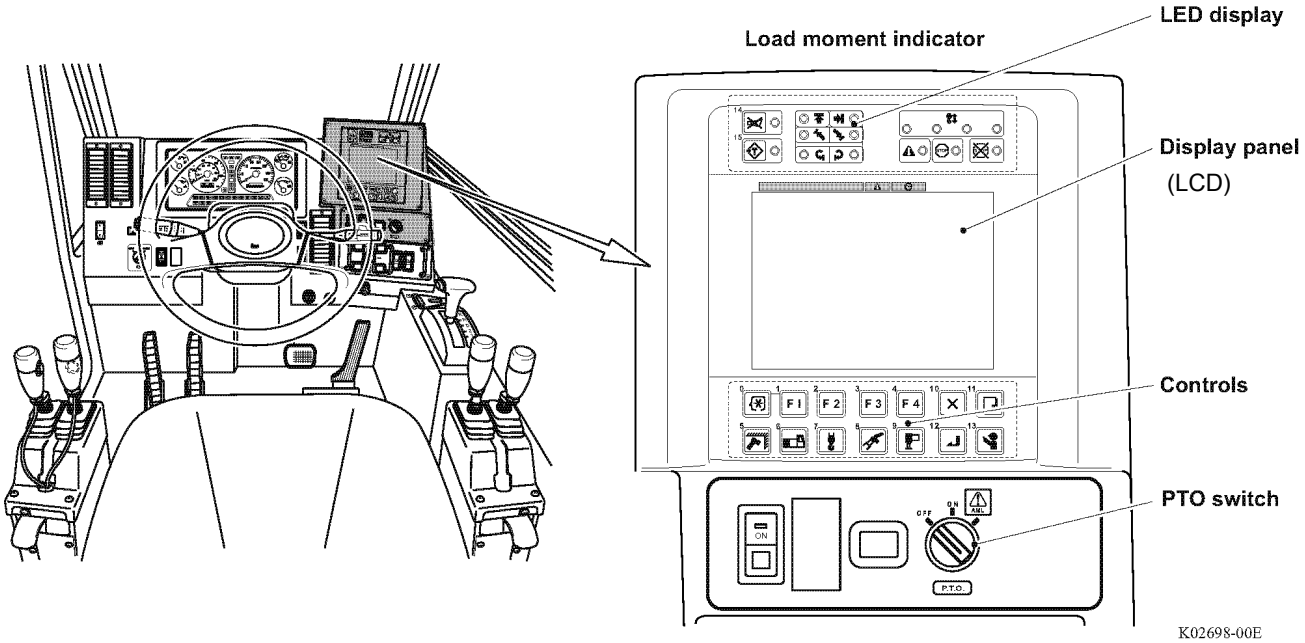

2. AML startup
   When the PTO switch is set to "ON," the AML starts.

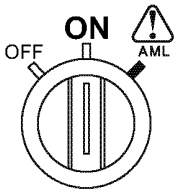

https://truckmanualshub.com/

1.2.1 Display panel

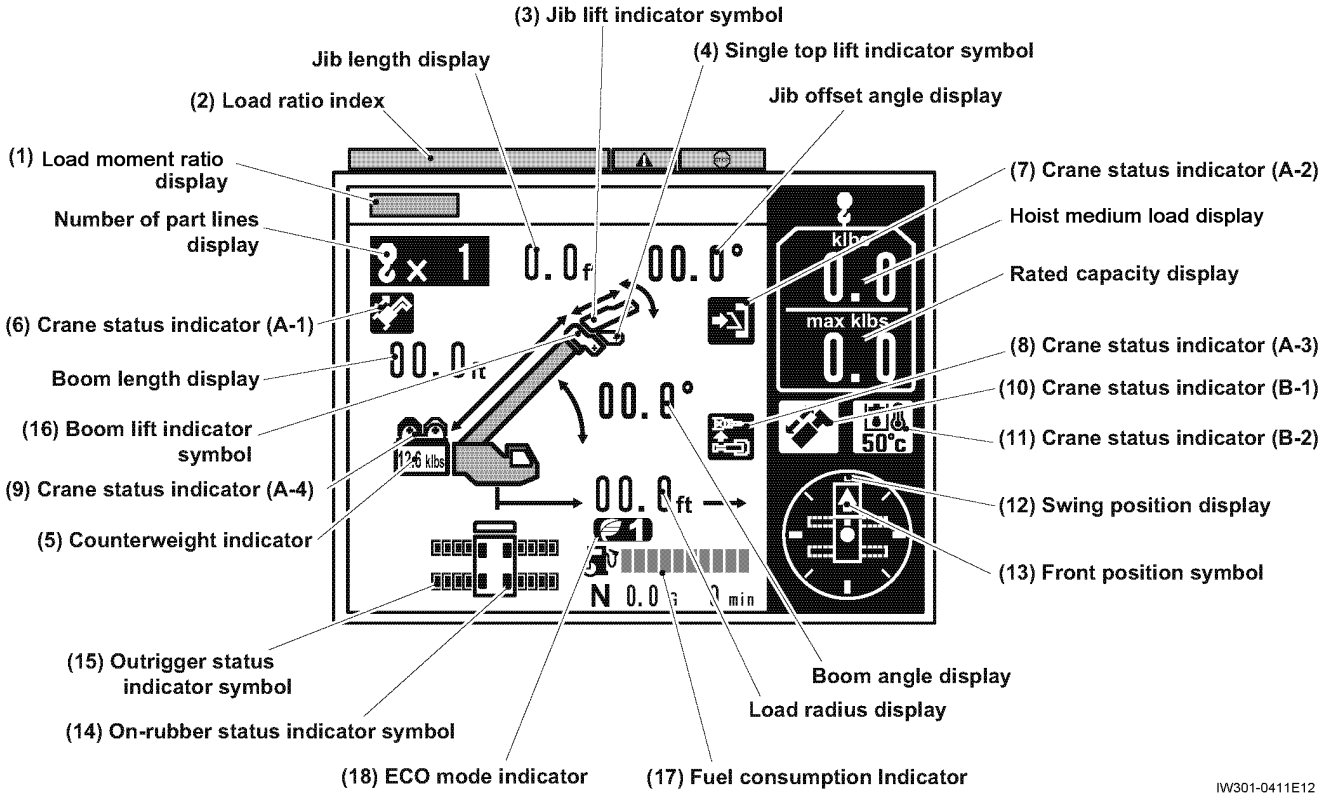

NOTICE

- **Load moment ratio is not a ratio of the hoist medium load to the rated capacity. Find the correct hoist medium load from the rated capacity.**
- **The AML is not a hoist medium load indicator. The hoist medium load indication is a reference value, and not a correct mass of the lifted load.**

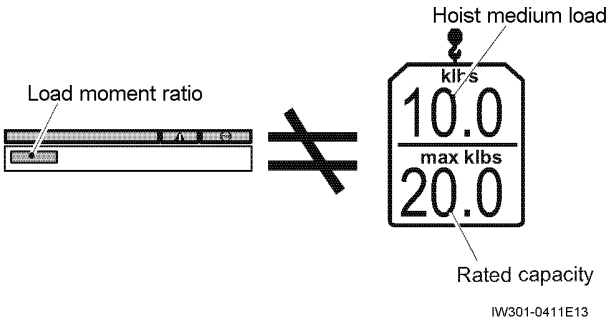

(1) Load moment ratio display

Shows the load moment ratio with a bar graph.

(2) Load moment ratio index

Serves as an index how critical the load moment ratio is by the bar graph; safe (green), warning (yellow), orcritical (red).

(3) Jib lift indicator symbol

Appears when the jib lift is registered.

Flashes when the jib set state is registered to the load moment indicator.

https://truckmanualshub.com/

(4) Single top lift indicator symbol
Appears when the single top lift is registered.

(5) Counterweight indicator
Indicates the state of the mounted counterweight.

(6) Crane status indicator (A-1) Boom telescope

(7) Crane status indicator (A-2) Jib lock

(8) Crane status indicator (A-3) Jib dismount

(9) Crane status indicator (A-4) Winch selection

(10) Crane status indicator (B-1) Boom telescoping or Auxiliary winch Control

(11) Crane status indicator (B-2) Hydraulic oil temperature, Outrigger switch out of neutral or Outrigger state emergency registration
The indicator (icon) shows a crane state.
Refer to "Operation Indicator Display" (Chapter B-1) for the meaning of the icons.

(12) Swing position display
Shows the current swing position.
The display is graduated in 45°.

(13) Front position symbol
Appears when the boom is directed to the front of the vehicle.

(14) On-rubber status indicator symbol
Flashes during on-rubber creep operation, and turns on steadily during on-rubber stationary operation.

(15) Outrigger status indicator symbol
Indicates the extension width of outriggers.
The outer frames of the symbol represent the maximum available steps of the outrigger extension, and the inner frames (black-filled segments) represent the current step of outrigger extension.

(16) Boom Lift Indicator Symbol
Appears when the boom lift is registered to the AML.

(17) Fuel consumption indicator
The fuel consumption rate during crane operation is indicated.

(18) Eco mode indicator
Lights up when Eco mode switch is on and displays current mode such as Eco mode 1 or Eco mode 2.

https://truckmanualshub.com/

1.2.2 LED Display

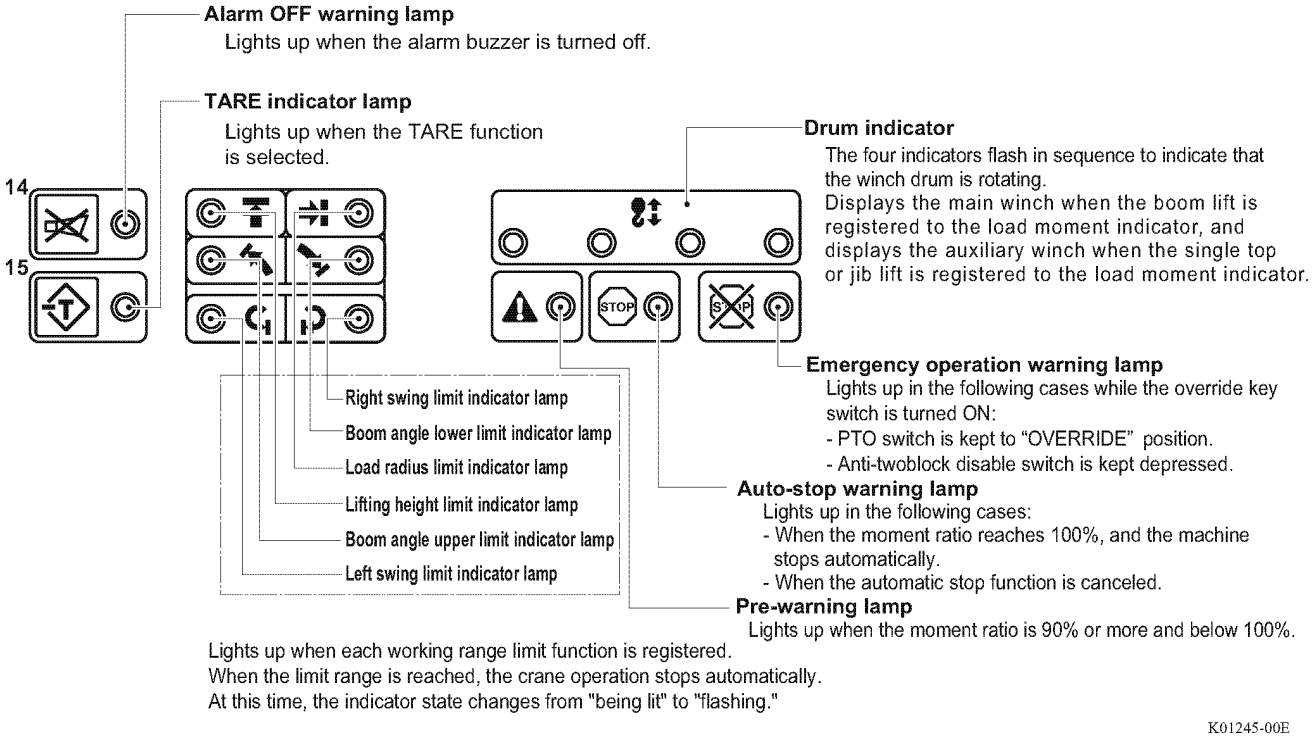

https://truckmanualshub.com/

1.2.3 Control switches

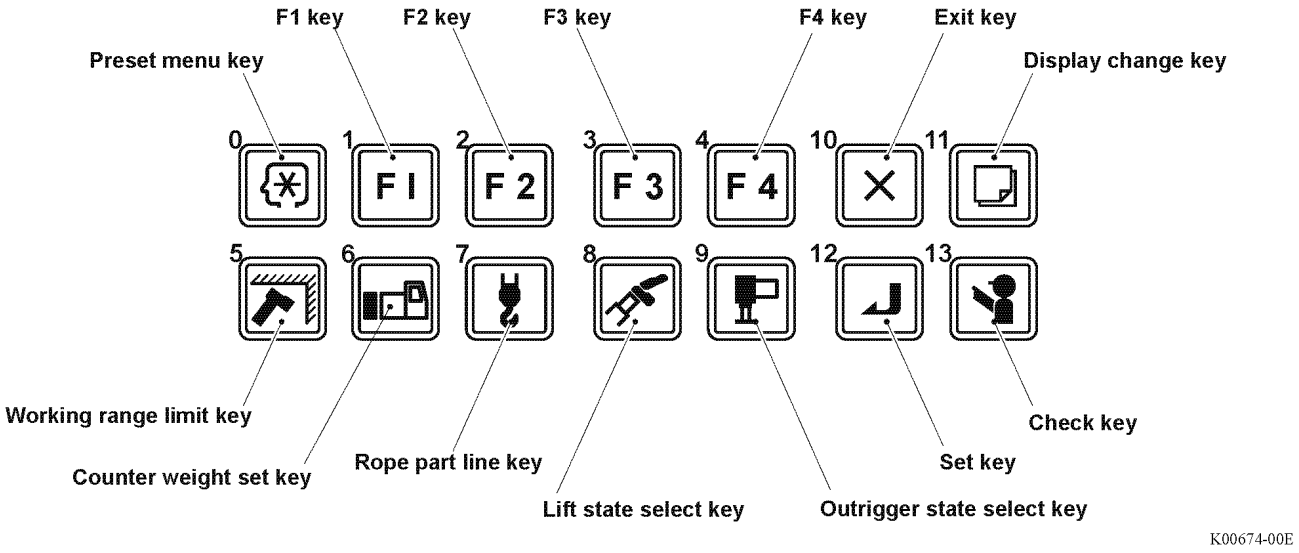

Table 1.2.3

No.	Name	Description
0	Preset menu key	Used for go to the preset menu.
1	F1 key	Used to select the function shown as “F1” in the pop-up window.
2	F2 key	Used to select the function shown as “F2” in the pop-up window.
3	F3 key	Used to select the function shown as “F3” in the pop-up window.
4	F4 key	Used to select the function shown as “F4” in the pop-up window.
5	Working range limit key	Used to register/cancel the working range limit.
6	Counterweight set key	Used to select the mass of the mounted counterweight on AML.
7	Rope part line key	Used to select the number of part lines on AML.
8	Lift state select key	Used to select the lift state (boom, jib in various length and offset angle) on AML.
9	Outrigger state select key	Used to select the outrigger extension width on AML.
10	Exit key	Used to close the pop-up window.
11	Display change key	Used to change the display content.
12	Set key	Used to confirm (register) the selected state.
13	Check key	Used during pre-operational inspection.

https://truckmanualshub.com/

1.3 AML Main Unit

1.3.1 Construction

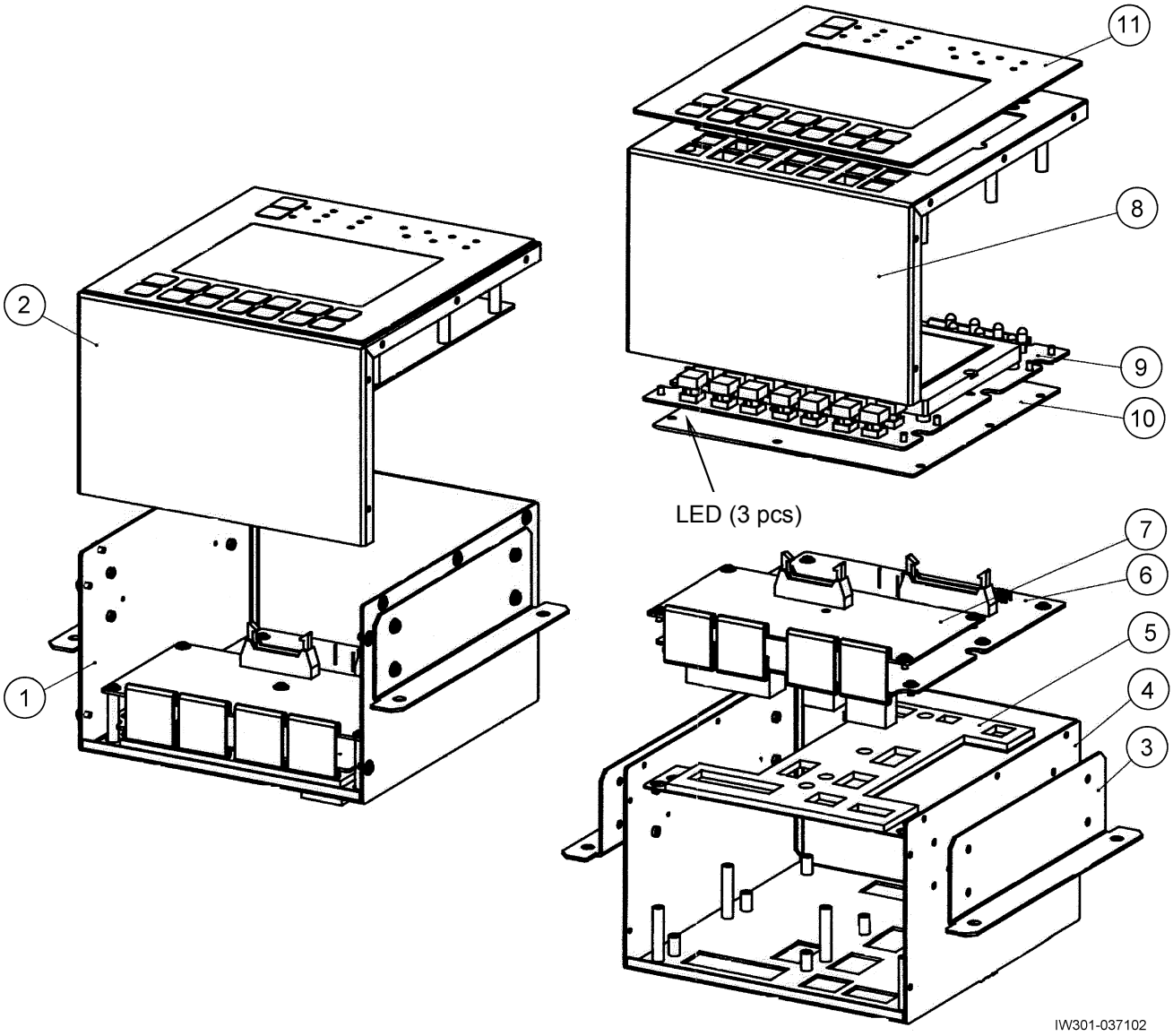

1. Case assembly
2. Case assembly
3. Bracket
4. Case 1
5. Dustproof sponge assembly
6. CON1 board
7. CON2 circuit board
8. Case 2
9. Display board
10. CPU board
11. Surface sheet assembly

https://truckmanualshub.com/

1.3.2 Panel outside view (CN1 – CN9)

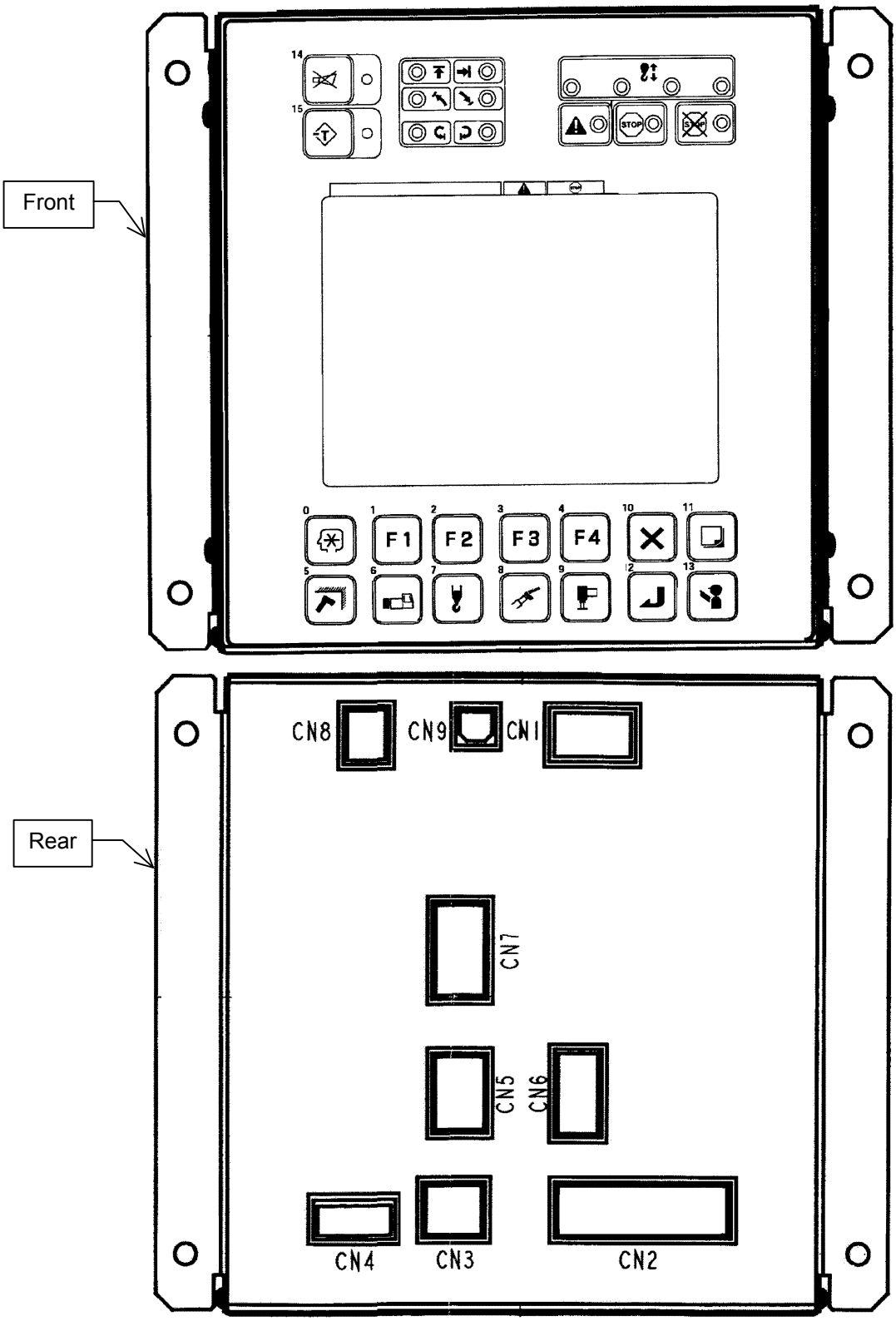

IW301-037103

361-933-41030

https://truckmanualshub.com/

1.3.3 Boards and Inner connectors

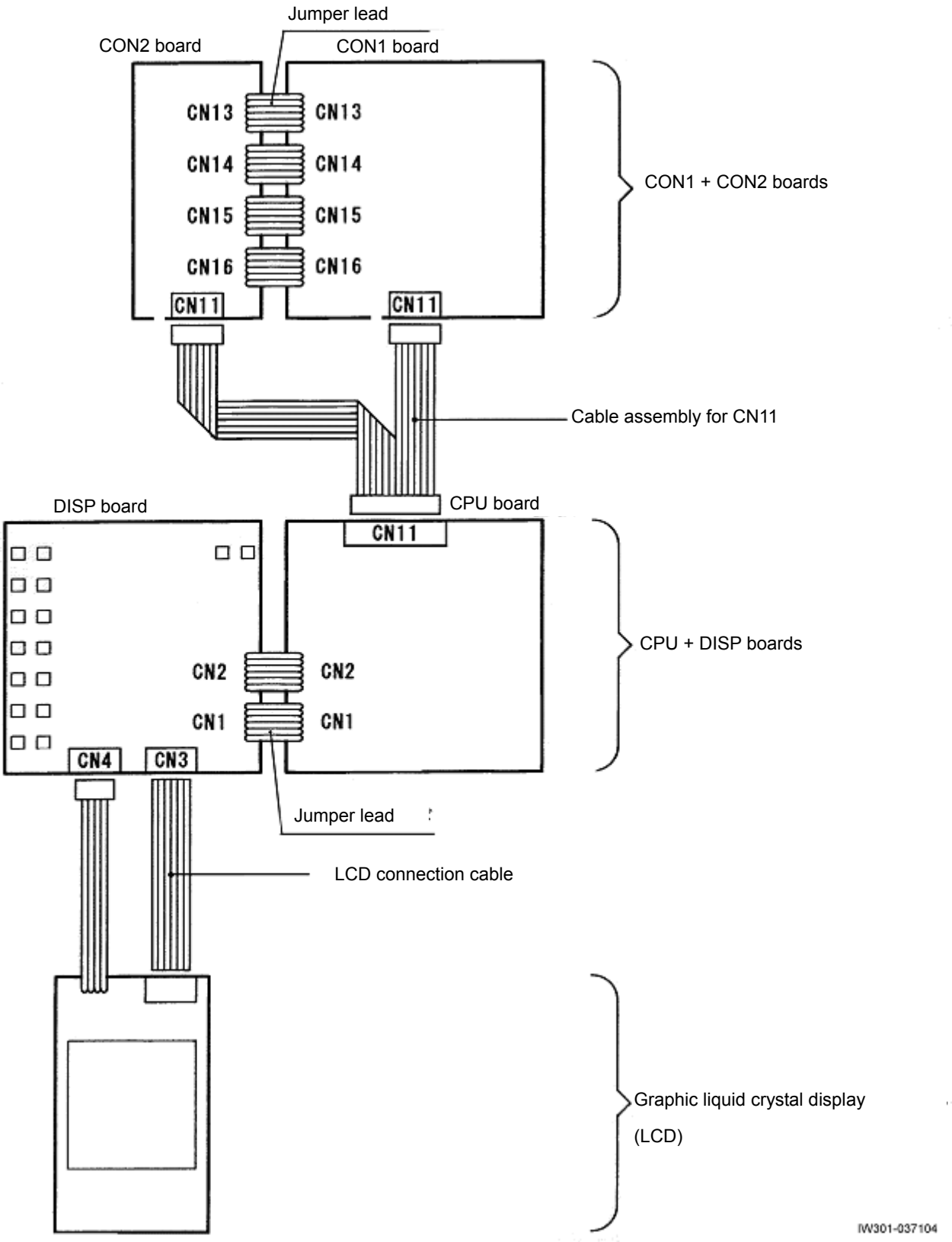

https://truckmanualshub.com/

A-2 Input/Output Signals of the AML System

2.1 AML Control Unit (Pin Assignment)

Below are the names of the signals that are input to/output from the connectors, and the descriptions of their functions. (Refer to 1.3.2 Panel outside view, from the back)

2.1.1 CN1 Connector (8-Pin)

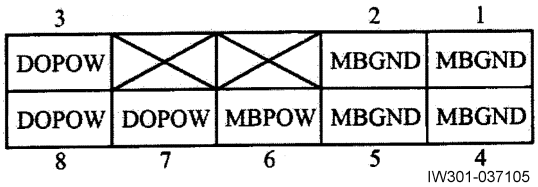

CN1 connector		Signal names and functions	
Pin No.	Name		
1	MBGND	Signal name: Ground	Output voltage: DC 0 V
2	MBGND	Signal name: Ground	Output voltage: DC 0 V
3	DOPOW	Signal name: Power for circuit	Output voltage: DC 24 V
4	MBGND	Signal name: Ground	Output voltage: DC 0 V
5	MBGND	Signal name: Ground	Output voltage: DC 0 V
6	MBPOW	Signal name: Power for AML main body	Input voltage: DC 24 V
7	DOPOW	Signal name: Power for circuit	Output voltage: DC 24 V
8	DOPOW	Signal name: Power for circuit	Output voltage: DC 24 V

https://truckmanualshub.com/

2.1.2 CN2-1 Connector (20-Pin)

10	9	8	7	6	5	4	3	2	1
Di10	Di9	Di8	Di7	Di6	Di5	Di4	Di3	Di2	Di1
Di20	Di19	Di18	Di17	Di16	Di15	Di14	Di13	Di12	Di11
20	19	18	17	16	15	14	13	12	11

IW301-037106

CN2-1 connector		Signal names and functions (Data No. #---)	SW status in AML	
Pin No.	Name		ON (0)	OFF (1)
1	Di1+	(#17206-21) - Signal name: Boom telescoping / Aux. winch operation selection Detects whether boom telescoping or auxiliary winch operation is selected.	Aux. winch operation selected	Boom telescoping selected
2	Di2+	(#17204-11) - Signal name:2nd boom section full retraction detection Detects that 2nd boom section is fully retracted.	Full retraction	No full retraction
3	Di3+	(#17204-12) - Signal name:3rd—top boom section full retraction detection Detects that 3rd, 4th and top boom sections are fully retracted.	Full retraction	No full retraction
4	Di4+	(#17204-31) - Signal name: Swing free detection Detects swing free/lock status.	Swing free	Swing lock
5	Di5+	(#17206-3) - Signal name: Anti-twoblock cancel Cancels the anti-twoblock function of the hook.	Stop disabled	Stop enabled
		(#17206-7) - Signal name: Anti-twoblock cancel indication Detects the indication of anti-twoblock cancel.	Cancel indication	No cancel indication
6	Di6+	(#17206-2) - Signal name: 100% stop cancel (AML cancel) Cancels the overload stop function.	Stop disabled	Stop enabled
		(#17206-6) - Signal name: 100% stop cancel indication Detects the indication of 100% stop cancel.	Cancel indication	No cancel indication
7	Di7+	(#17204-24) - Signal name: Jib connecting (lock) pin insertion detection Detects that the jib connecting (lock) pin is inserted when the jib is stowed.	Inserted (fixed)	Not inserted
		(#17204-33) - Signal name: Jib extension detection Detects the jib extension status.	Jib stowed	Jib extension
8	Di8+	(#17204-23) - Signal name: Swing over-front detection Detects the swing position is in over-front (within 2° over-front).	Over-front position	Other than over-front
9	Di9+	(#17202-1) - Signal name: Main hoist-up detection Detects the main winch hoist-up operation.	No operation	Operation

https://truckmanualshub.com/

CN2-1 connector		Signal names and functions (Data No. #---)	SW status in AML	
Pin No.	Name		ON (0)	OFF (1)
10	Di10+	(#17202-2) - Signal name: Main hoist-down detection Detects the main winch hoist-down operation.	No operation	Operation
11	Di11+	(#17202-3) - Signal name: Auxiliary hoist-up detection Detects the auxiliary winch hoist-up operation.	No operation	Operation
12	Di12+	(#17202-4) - Signal name: Auxiliary hoist-down detection Detects the auxiliary winch hoist-down operation.	No operation	Operation
13	Di13+	(#17202-9) - Signal name: Boom extension detection Detects the boom extending operation.	No operation	Operation
14	Di14+	(#17202-10) - Signal name: Boom retraction detection Detects the boom retraction operation.	No operation	Operation
15	Di15+	(#17202-11) - Signal name: Boom raising detection Detects the boom raising operation.	No operation	Operation
16	Di16+	(#17202-12) - Signal name: Boom lowering detection Detects the boom lowering operation.	No operation	Operation
17	Di17+	(#17202-17) - Signal name: Swing right detection Detects the swing operation to the right.	No operation	Operation
18	Di18+	(#17202-18) - Signal name: Swing left detection Detects the swing operation to the left.	No operation	Operation
19	Di19+	(#17206-41) - Signal name: Outrigger emergency setting Detects the selection of outrigger emergency setting.	Normal setting	Emergency setting
20	Di20+	(Spare)		

https://truckmanualshub.com/

2.1.3 CN2-2 Connector (16-Pin)

8	7	6	5	4	3	2	1
P1A(P1)	P2A(P2)	P3	FG	Di24	Di23	Di22	Di21
P1B	P2B	PSRC	FG	Di28	Di27	Di26	Di25
16	15	14	13	12	11	10	9

IW301-037107

CN2-2 connector		Signal names and functions (Data No. #---)	SW status in AML	
Pin No.	Name		ON (0)	OFF (1)
1	Di21+	(Spare)		
2	Di22+	(#17204-3) - Signal name: Counterweight fitting detection Detects fitting status of the counterweight.	Mounted	Not mount
3	Di23+	(#17202-37) - Signal name: Main over-unwind detection Detects the over-unwinding status of the main winch drum. (Europe spec.)	Not over-unwind	Over-unwind
4	Di24+	(#17202-38) - Signal name: Aux. winch over-unwind detection Detects the over-unwinding status of the auxiliary winch drum. (Europe spec.)	Not over-unwind	Over-unwind
5	FG	Frame ground (Connected with ground on circuit board)		
6	P3	(Spare)		
7	P2A（P2）	Signal name: Drum indicator input (Aux.) Detects the rotation of auxiliary winch drum.		
8	P1A（P1）	Signal name: Drum indicator input (Main) Detects the rotation of main winch drum.		
9	Di25+	(#17204-9) - Signal name: Jib removal detection Detects removal of the jib from the crane boom.	Mounted	Removed
10	Di26+	(#17206-64) - Signal name: Deactivation of over-unwinding cutout Deactivates stop due to over-unwinding only among the automatic stop functions of the AML. (Europe spec.)	Over-unwinding stop deactivated	Over-unwinding stop activated
11	Di27+	(#17206-55) - Signal name:3rd—top boom section extension switch Shifting operation of boom telescoping cylinder (from No. 1 to No. 2)	Extension	Not extension

https://truckmanualshub.com/

CN2-2 connector		Signal names and functions (Data No. #---)	SW status in AML	
Pin No.	Name		ON (0)	OFF (1)
12	Di28+	(#17202-36) - Signal name: Twoblocking detection Detects the twoblocking.	Not twoblocking	Twoblocking
13	FG	Frame ground (Connected with ground on circuit board)		
14	PSRC	(Spare)		
15	P2B	Signal name: Drum indicator input (Aux.) Detects the rotation of auxiliary winch drum.		
16	P1B	Signal name: Drum indicator input (Main) Detects the rotation of main winch drum.		

https://truckmanualshub.com/

2.1.4 CN3 Connector (12-Pin)

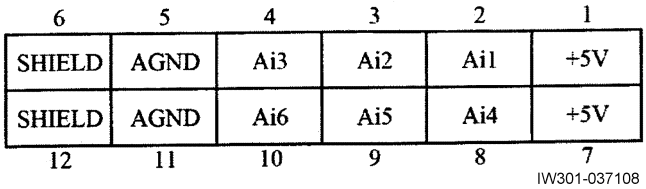

CN3 connector		Signal names and functions
Pin No.	Name	
1	+5V	- Signal name: 5-V impressed voltage power output for detectors Impressed voltage output to boom length detector, boom angle detector, swing angle detector 1, and swing angle detector 2
2	Ai1	- Signal name: Boom length Input voltage of boom length detector (DC 0 to 5 V)
3	Ai2	- Signal name: Boom angle Input voltage of boom angle detector (DC 0 to 5 V)
4	Ai3	- Signal name: Swing angle detector 1 Input voltage of 2-potentiometer type swing angle detector 1 (DC 0 to 5 V)
5	AGND	- Signal name: Analog ground Ground for boom length detector, boom angle detector, swing angle detector 1, and swing angle detector 2
6	SHIELD	Signal name: Shield (Connected with ground on circuit board) Shield for boom length detector, boom angle detector, swing angle detector 1, and swing angle detector 2
7	+5V	- Signal name: 5-V impressed voltage power output for detector Impressed voltage output to elevating cylinder pressure sensor
8	Ai4	Signal name: Swing angle detector 2 Input voltage of 2-potentiometer type swing angle detector 2 (DC 0 to 5 V)
9	Ai5	- Signal name: Elevating cylinder extension side pressure Detects the pressure of elevating cylinder tube side chamber (elevation raising). Usage: Used for moment detection
10	Ai6	- Signal name: Elevating cylinder retraction side pressure Detects the pressure of elevating cylinder rod side chamber (elevation lowering). Usage: Used for moment detection
11	AGND	- Signal name: Analog ground Ground for elevating cylinder pressure sensor
12	SHIELD	- Signal name: Shield (Connected with ground on circuit board) Shield for elevating cylinder pressure sensor

https://truckmanualshub.com/

2.1.5 CN4 Connector (6-Pin)

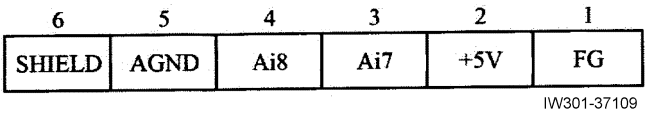

CN4 connector		Signal names and functions
Pin No.	Name	
1	FG	(Spare)
2	+5V	Signal name: 5-V impressed voltage power for detector Impressed voltage to main pressure detector
3	Ai7	Signal name: Main pressure Input voltage to main pressure detector
4	Ai8	(Spare)
5	AGND	Signal name: Analog ground Ground for main pressure detector
6	SHIELD	Signal name: Shield Shield for main pressure detector

https://truckmanualshub.com/

2.1.6 CN5 Connector (16-Pin)

8	7	6	5	4	3	2	1
Do8	Do7	Do6	Do5	Do4	Do3	Do2	Do1
Do16	Do15	Do14	Do13	Do12	Do11	Do10	Do9
16	15	14	13	12	11	10	9

IW301-037110

CN5 connector		Signal names and functions (Data No. #---)
Pin No.	Name	
1	Do1+	(#17802-1) - Signal name: AML stop output (AML vent / compulsory unload) Controls the unload solenoid valve, and performs the automatic stop output.
2	Do2+	(#17802-147) - Signal name: Lever non-operation output Shifts the flow volume in the hydraulic circuit from the stand-by status to large-volume status when a control lever is operated.
3	Do3+	(#17802-142) - Signal name: Telescoping control output 1 Output of telescoping cylinder change solenoid valve Output (ON) condition: (1) or (2) or (3) (1) Boom length is (B) or more. (2) Boom length is between (A) and (B), and the next boom section extension input is ON. (3) Boom length is between (A) and (B), and the boom full retraction 2 detection is OFF. Output (OFF) condition: (4) or (5) (4) Boom length is (A) or less. (5) Boom length is between (A) and (B), and the boom full retraction 2 detection is ON. The values for (A) and (B) are as follows: GR-750XL-2 : (A) 18.60m, (B):19.40m - for tel. mode I (#20586) GR-1000XL-2 : (A) 20.35m, (B):21.15m - for tel. mode I
4	Do4+	(#17802-143) Applied to special telescoping mode (Tel. mode II) - Signal name: Telescoping control output 2 Output of No.2 telescoping cylinder retraction prevention solenoid valve Output (ON) condition: (1) or (2) (1) Boom length is(B) or more. (2) Boom length is between (A) and (B), and the extension input of next boom section is ON. Output (OFF) condition: (3) or (4) (3) Boom length is (A) or less. (4) Boom length is between (A) and (B), and the boom full retraction 2 detection is ON and the next boom section extension input is OFF. (A), (B) data is/are as follows. GR-750XL-2 : (A) 34.60m, (B) :35.40m (#20584) GR-1000XL-2 : (A)37.85m, (B) : 38.65m

https://truckmanualshub.com/

CN5 connector		Signal names and functions (Data No. #---)
Pin No.	Name	
5	Do5+	(#17802-122) - Signal name: Tactile type drum indicator (Main) Interlocked with the drum indicator LED, output is performed to the tactile type drum indicator.
6	Do6+	(#17802-123) - Signal name: Tactile type drum indicator (Aux.) Interlocked with the drum indicator LED, output is performed to the tactile type drum indicator.
7	Do7+	(#17802-132) - Signal name: Jib set output Improves the winch capacity when in the jib set status.
8	Do8+	(#17802-124) -Signal name: AML normal output (Normal: 24V output, Abnormal: 0V) Detects the reckless driving of task, and outputs the result.
9	Do9-	(Spare)
10	Do10-	(#17802-148) [GR-1000XL-2] - Signal name: Main winch high-speed hoist-down Output to drive the high-speed hoist-down valve of main winch
		(Spare) [GR-750XL-2]
11	Do11-	(#17802-149) [GR-1000XL-2] - Signal name: Auxiliary winch high-speed hoist-down Output to drive the high-speed hoist-down valve of auxiliary winch
		(Spare) [GR-750XL-2]
12	Do12-	(#17802-12) - Signal name: Buzzer output (AML warning) Controls the external buzzer depending on the load moment ratio. There are two outputs: intermittent output for when notice is made and continuous output for when limit is reached. Output condition: Load moment ratio of 90% or more and less than 100%; intermittent output with 0.8 s interval Load moment ratio of 100% or more: Continuous output Output when condition(s) is/are met: OFF output
13	Do13-	(#17802-38) - Signal name: Buzzer output (twoblocking warning) Twoblocking warning buzzer sounds when the twoblocking status is reached. Output when in twoblocking status: ON output

https://truckmanualshub.com/

<table>
<tr><th colspan="2">CN5 connector</th><th rowspan="2">Signal names and functions
(Data No. #---)</th></tr>
<tr><th>Pin No.</th><th>Name</th></tr>
<tr><td>14</td><td>Do14-</td><td>(#17802-9)
- Signal name: External indicator lamp (up to 90%, green)
When the moment load factor is less than 90%, the green external indicator lamp lights.
Output condition:
<u>(1) and (2) and (3)</u>
(1): Load moment ratio is less than 90%.
(2): 100% cancel indication (Di6) is "Not canceled" status.
(3): Twoblocking cancel indication (Di5) is "Not canceled" status.

When in the boom operation with jib elected (during main operation with jib elected), the green external indicator lamp lights when the load moment ratio described below is reached.
 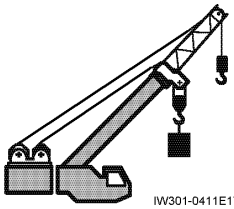
IW301-0411E17
(#20803)
<table><tr><th rowspan="2">Outrigger extension width</th><th colspan="2">Output</th></tr><tr><th>GR-750XL-2</th><th>GR-1000XL-2</th></tr><tr><td>Maximum extension</td><td>Less than 78%</td><td>Less than 84%</td></tr><tr><td>Middle extension 2</td><td>Less than 77%</td><td>Less than 83%</td></tr><tr><td>Middle extension 1</td><td>Less than 70%</td><td>Less than 82%</td></tr></table>
Output when condition is met: OFF output</td></tr>
<tr><td>15</td><td>Do15-</td><td>(#17802-10)
- Signal name: External indicator lamp (90% to 100%, yellow)
When the moment load factor is 90% or more and less than 100%, the yellow external indicator lamp lights.
Output condition:
<u>(1) and (2) and (3)</u>
(1): Load moment ratio is 90% or more and 100% or less.
(2) 100% cancel indication (Di6) is "Not canceled" status.
(3): Twoblocking cancel indication (Di5) is "Not canceled" status.

When in the boom operation with jib elected (during main operation with jib elected), the yellow external indicator lamp lights when the load moment ratio described below is reached.
 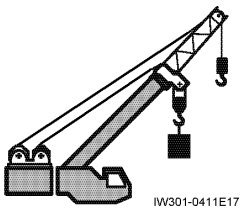
IW301-0411E17
(#20803)
<table><tr><th rowspan="2">Outrigger extension width</th><th colspan="2">Output</th></tr><tr><th>GR-750XL-2</th><th>GR-1000XL-2</th></tr><tr><td>Maximum extension</td><td>78% or more
Less than 88%</td><td>84% or more
Less than 94%</td></tr><tr><td>Middle extension 2</td><td>77% or more
Less than 87%</td><td>83% or more
Less than 93%</td></tr><tr><td>Middle extension 1</td><td>70% or more
Less than 80%</td><td>82% or more
Less than 92%</td></tr></table>
Output when condition is met: OFF output</td></tr>
</table>

https://truckmanualshub.com/

CN5 connector		Signal names and functions (Data No. #---)
Pin No.	Name	
16	Do16-	(#17802-11) - Signal name: External indicator lamp (100% or more, red) When the load moment ratio is 100% or more, the red external indicator lamp lights. Output condition: (1) or (2) or (3) (1): Load factor exceeds 100%. (2) 100% cancel indication (Di6) is "Canceled" status. (3): Twoblocking cancel indication (Di5) is "Canceled" status. When in the boom operation with jib elected (during main operation with jib elected), the red external indicator lamp lights when the load moment ratio described below is reached. 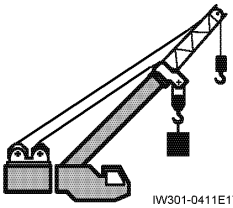 IW301-0411E17 (#20803) Output when condition is met: OFF output

Outrigger extension width	Output	
	GR-750XL-2	GR-1000XL-2
Maximum extension	88% or more	94% or more
Middle extension 2	87% or more	93% or more
Middle extension 1	80% or more	92% or more

https://truckmanualshub.com/

2.1.7 CN6 Connector (14-Pin)

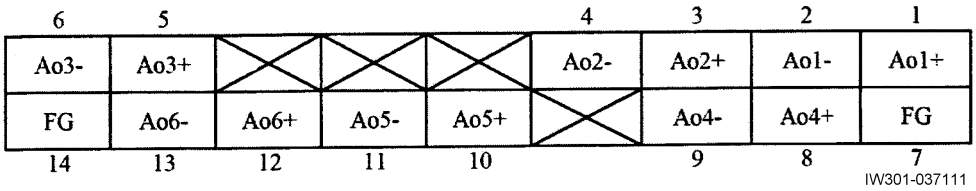

CN6 connector		Signal names and functions (Data No. #---)
Pin No.	Name	
1	Ao1+	(#17804-1) - Signal name: Swing right proportional solenoid valve Drives the proportional reducing valve for right swing.
2	Ao1-	- Signal name: Swing right proportional solenoid valve COM (Output return terminal)
3	Ao2+	(#17804-2) - Signal name: Swing left proportional solenoid valve Drives the proportional reducing valve for left swing.
4	Ao2-	- Signal name: Swing left proportional solenoid valve COM (Output return terminal)
5	Ao3+	(#17804-9) - Signal name: Boom raising proportional solenoid valve Drives the proportional reducing valve for boom raising.
6	Ao3-	- Signal name: Boom raising proportional solenoid valve COM (Output return terminal)
7	FG	Frame ground
8	Ao4+	(#17804-10) - Signal name: Boom lowering proportional solenoid valve Drives the proportional reducing valve for boom lowering.
9	Ao4-	- Signal name: Boom lowering proportional solenoid valve COM (Output return terminal)
10	Ao5+	(#17804-16) - Signal name: Swing relief proportional solenoid valve Drives the proportional reducing valve for swing relief.
11	Ao5-	- Signal name: Swing relief proportional solenoid valve COM (Output return terminal)
12	AO6+	(Spare)
13	AO6-	(Spare)
14	FG	Frame ground

https://truckmanualshub.com/

2.1.8 CN7 Connector (20-Pin)

10	9	8	7	6	5	4	3	2	1
SHIELD	CAN1 H	CAN1 L	DGND	SHIELD	TX2-	TX2+	SHIELD	TX1-	TX1+
SHIELD	CAN2 H	CAN2 L	DGND	SHIELD	RX2-	RX2+	SHIELD	RX1-	RX1+
20	19	18	17	16	15	14	13	12	11

IW301-037112

CN7 connector		Signal names and functions
Pin No.	Name	
1	TX1+	(Spare)
2	TX1-	
3	SHIELD	
4	TX2+	- Signal name: Serial port 2 transmission (+) output signal [Transmission data to MDT (Multiplex Data Transmitter)]
5	TX2-	Signal name: Serial port 2 transmission (-) output signal [Transmission data to MDT (Multiplex Data Transmitter)]
6	SHIELD	- Signal name: Serial port 2 shield Input voltage: DC 0 V
7	DGND	(Spare)
8	CAN1_L	
9	CAN1_H	
10	SHIELD	
11	RX1+	
12	RX1-	
13	SHIELD	
14	RX2+	- Signal name: Serial port 2 reception (+) input signal [Reception data from MDT (Multiplex Data Transmitter)]
15	RX2-	- Signal name: Serial port 2 reception (-) input signal [Reception data from MDT (Multiplex Data Transmitter)]
16	SHIELD	(Spare)
17	DGND	
18	CAN2_L	CAN communication
19	CAN2_H	CAN communication
20	SHIELD	Shield

https://truckmanualshub.com/

2.1.9 CN8 Connector (8-Pin)

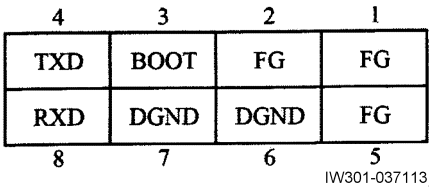

CN8 connector		Signal names and functions
Pin No.	Name	
1	FG	(Spare)
2	FG	(Spare)
3	BOOT	Boot (Boot mode activation with GND connection) For maintenance (data readout and rewriting)
4	TXD	RS232C communication For maintenance (data readout and rewriting)
5	FG	(Spare)
6	DGND	Digital ground For maintenance (data readout and rewriting)
7	DGND	Digital ground For maintenance (data readout and rewriting)
8	RXD	RS232C communication For maintenance (data readout and rewriting)

https://truckmanualshub.com/

2.1.10 CN9 (USB) Connector (4-Pin)

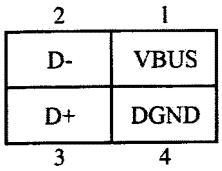

IW301-037114

CN9 connector		Signal names and functions
Pin No.	Name	
1	VBUS	(Spare)
2	D-	
3	D+	
8	DGND	

2.1.11 Explanation of the Signals (Di, Do)

[NOTICE]

◆ For the detailed electrical circuit, refer to the service manual (circuit diagrams) for each model.

1. Di signals

Di (+) and Di (-) indicate the digital input signal with the connection status shown in the figure below.

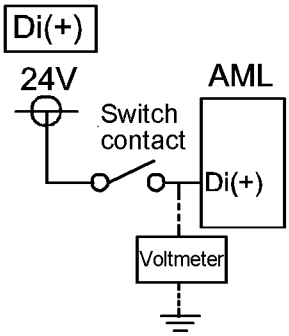

Switch contact	Di signal	Measured value of voltage
ON (Close)	1	H (24V)
OFF (Open)	0	L (0 V)

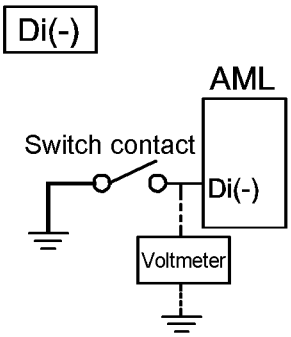

Switch contact	Di signal	Measured value of voltage
ON (Close)	1	L (0 V)
OFF (Open)	0	H (*1)

(*1): 24 V or 5 V

IW301-0221E09

2. Do signals

Do (+) and Do (-) indicate the digital output signal with the connection status shown in the figure below.

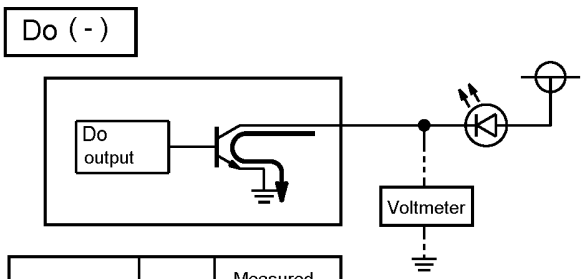

Do output	Do signal	Measured value of voltage
ON (High)	1	Low (0 V)
OFF (0 V)	0	High (*1)

IW301-0411E10

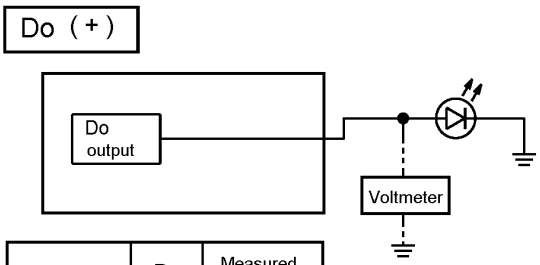

Do output	Do signal	Measured value of voltage
ON (High)	1	High (*1)
OFF (0 V)	0	Low (0 V)

(*1): Voltage varies depending on unit equipment.

IW301-0411E11

https://truckmanualshub.com/

Chapter B

B

User Mode

Contents

B-1 Functions and How to use the User Mode.....26

1.1 Mode Structure 26

1.2 Display Selection 26

1.3 Operation Indicator Display 27

B-2 Registration of Operating State and AML Function Check.....28

2.1 Registration of Outrigger State 28

2.2 Registration of Crane State..... 31

2.3 Registration of counterweight state..... 33

2.4 Registration of Number of Part-lines of Wire Rope 34

2.5. Pre-operational Inspection on AML..... 36

B-3 Alarm and Recovery Operation 38

3.1 Type of Warning Codes and Buzzer 38

3.2 Warning Code and Crane Model Comparison Table... 39

3.3 Warning code and Remedy List..... 40

3.3.1 Stop warning code 40

3.3.2 Warning Code (ex.: GR-750XL-2, GR-1000XL-2) 41

B-4 Other Functions 43

4.1 Working Range Limit Function 43

4.1.1 Display of Limit Function State 44

4.1.2 Registering Boom Angle, Lifting Height, and Load Radius Limit.....44

4.1.3 Registration of Swing Range Limit Function 46

4.1.4 Alarm for Work Range Limit and Recovery Operation.....48

4.2 TARE Function 49

4.3 Mute Alarm Function..... 49

4.4 Fuel Consumption Indicator..... 50

4.5 User Adjustment Menu 51

4.5.1 Adjustment menu/model comparison table.....51

4.5.2 User Adjustment Menu.....51

4.5.3 Eco mode selection.....52

4.5.4 Activating/Deactivating the Winch Drum Rotation Buzzer Function 53

4.5.5 Fuel Consumption History Display.....54

4.5.6 Selection of Winch to be used 55

4.5.7 Adjustment of Display Panel Contrast 57

4.5.8 Transmission of Telematics alarm data.....57

https://truckmanualshub.com/

B-5 Action against AML System Error 58

B-6 Do Output Control 59

6.1 Cause for AML Automatic Stop Output 59
6.1.1 100% Lifting Performance Stop 60
6.1.2 Anti-twoblock Stop 61
6.1.3 Backward Stability Stop 61
6.1.4 Boom Upper Limit Stop 62
6.1.5 Boom Lower Limit Stop 62
6.1.6 Lifting Height Limit Stop 62
6.1.7 Load radius Limit Stop 62
6.1.8 Elevation Lower Limit 63
6.1.9 Elevation Upper Limit 63

6.2 Do Output Abnormality Processing 64

6.3 Drum Indicator Control Function 65
6.3.1 Outline of Drum Indicator Control Function65
6.3.2 Input 65
6.3.3 Output 65
6.3.4 Panel LED Control 65
6.3.5 Drum Indicator Do Output Control 65
6.3.6 Drum Indicator Do Output Restriction 65

6.4 Output of warning 66
6.4.1 Safety signal 66
6.4.2 90% warning 66
6.4.3 100% warning 66

B-7 AML Control 67

7.1 Backward Stability Stop Function 67
7.1.1 Outline of Function 67
7.1.2 Restriction Contents 67

7.2 Working Range Limit Stop Function 67
7.2.1 Outline of Function 67
7.2.2 Restriction Contents 68
7.2.3 Cancel Condition 69
7.2.4 Storing of Setting Condition 69

7.3 Output of Interference Prevention Warning 70
7.3.1 Function 70
7.3.2 Data Specification 70
7.3.3 Input 70
7.3.4 Warning Condition 70
7.3.5 Warning Code 70

7.4 Winch Drum Position Selection Function 71
7.4.1 Function 71
7.4.2 Processing Effective Condition 72
7.4.3 Information Relevant to Winch Drum Position Selection 73
7.4.4 Output 73
7.4.5 Processing Contents 73
7.4.6 Special Notes 74

B-8 Proportional Control Function 75

8.1 Factors for Control 75

8.2 Elevation Slow Stop 75

8.3 Swing Slow Stop 75

B-9 AML Cancel Function 76

9.1 Introduction 76

9.2 Canceling Method 77
9.2.1 Cancel Status Judgment 77
9.2.2 Cancel Switch Abnormality Judgment 77

9.3 Interlock Stop 78
9.3.1 Cancel Contents 78

9.4 Overload Cancel 78
9.4.1 Cancel Contents 78

9.5 Detector Abnormality 79
9.5.1 Stop Processing at Detector Abnormality (Compulsory unload output) 79

https://truckmanualshub.com/

B-1 Functions and How to use the User Mode

1.1 Mode Structure

The AML has the following three basic operation modes.
This chapter describes the operation method in user mode.

- User Mode: Used by the operator to operate the crane.
- Maintenance Mode: Used to perform the AML operation check, reference of history information, etc. Also, some adjustment functions such as clock adjustment are included in the maintenance mode.
  For operation method of maintenance mode, refer to "Chapter C, Maintenance Mode."
- Adjustment Mode: Used to adjust detectors, actuators, etc.
  For operation method of adjustment mode, refer to "Chapter D, Adjustment Mode."

1.2 Display Selection

When the display change key <> is pushed during normal state, the content of the display panel changes as shown below.

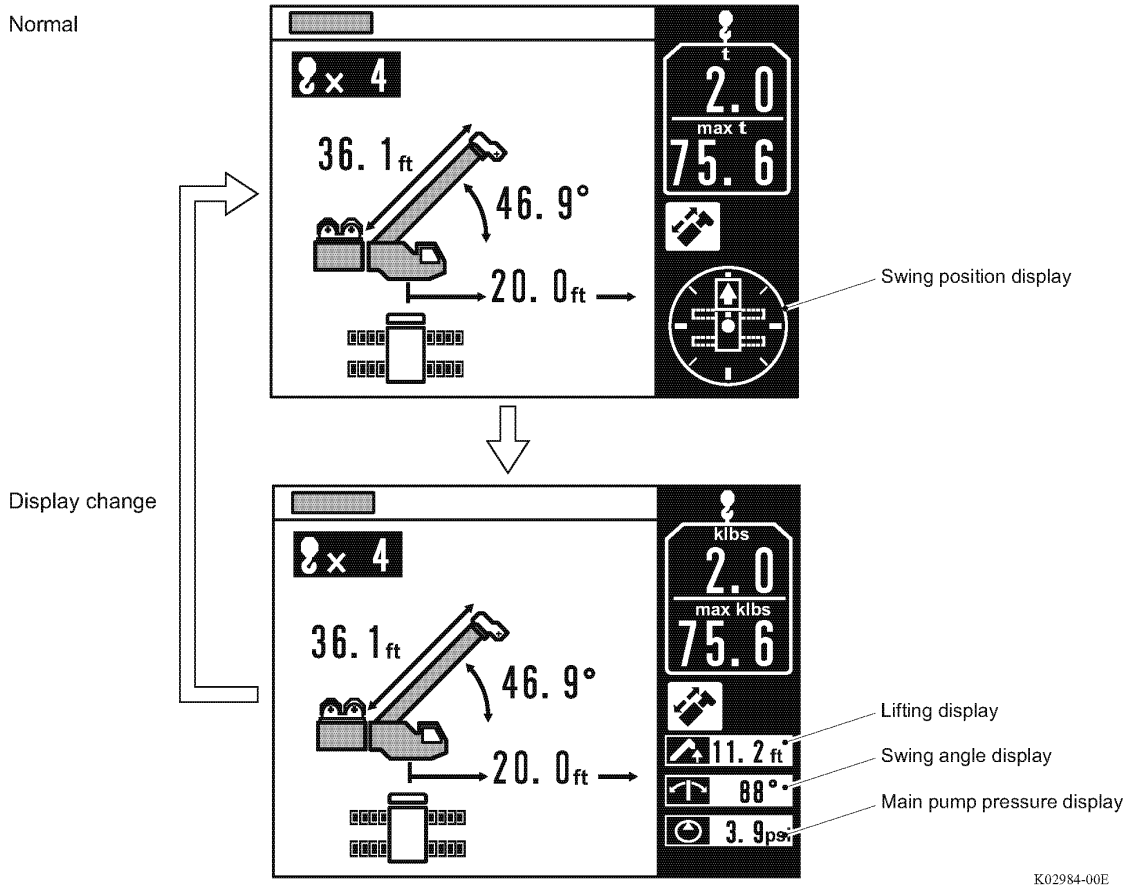

https://truckmanualshub.com/

1.3 Operation Indicator Display

The crane state is displayed by the indicator (icon).
Operation indicators and displayed contents are as follows.

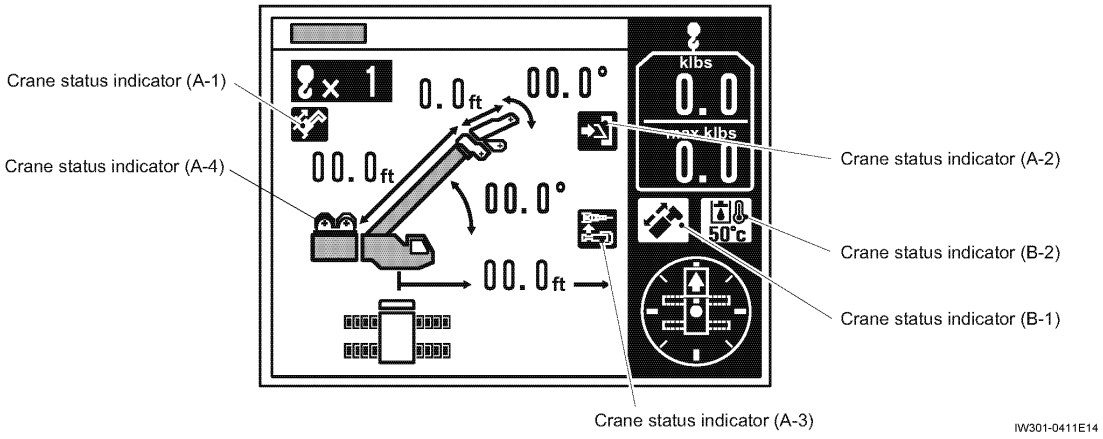

Icon	Designation	Position	Display condition
	Telescoping mode I	A-1	The boom telescoping mode I is selected.
K01825-000	Telescoping mode II		The boom telescoping mode II is selected.
K00734-000	Jib lock	A-2	Under the jib set state, the jib extension/retraction switch is set to "Ext". and the jib offset cylinder is fully extended.
K01826-000	Jib dismount	A-3	The jib is dismounted from the boom, and the jib status switch is set to "REMOVED".
K01828-000	Winch selection (Main winch)	A-4	The main winch is selected.
K01827-000	Winch selection (Auxiliary winch)		The auxiliary winch is selected during single top lift or jib lift.
K00737-000	Boom telescoping control	B-1	The boom telescoping/auxiliary hoist control selector switch is set to "Boom telescoping".
K01829-000	Auxiliary Winch Control		The boom telescoping/auxiliary hoist control selector switch is set to "Auxiliary winch".
K00739-000	Hydraulic oil temperature 50°C	B-2	Flashes when the hydraulic oil temperature is between 122° F (50°C) and 185°F (85°C). (If more than one icon are to appear in this area, they appear alternately at each 3 seconds.)
K00740-000	Hydraulic oil temperature 85°C		Flashes when the hydraulic oil temperature exceeds 185°F (85°C). (If more than one icon are to appear in this area, they appear alternately at each 3 seconds.)
K00741-000	Outrigger switch out of neutral		Flashes when the extend/retract selector switch or jack/slide selector switch is set to the positions other than neutral position. (If more than one icon are to appear in this area, they appear alternately at each 3 seconds.)
K01830-000	Outrigger state emergency registration		Flashes when the emergency outrigger control switch is set to "ON". (If more than one icon are to appear in this area, they appear alternately at each 3 seconds.)

https://truckmanualshub.com/

B-2 Registration of Operating State and AML Function Check

⚠WARNING

Before you start the crane operation, make sure that correct operation state is registered and the AML system functions normally. If you register the operation state incorrectly or the AML system does not operate normally, the machine can overturn or suffer damage, and this can cause a fatal injury.

Before the crane operation, observe the steps below to register the operation state and be sure to do the AML function check.

1. Set the PTO switch to "ON".
   - The PTO indicator lights up, and the power is supplied to the AML.
2. Set up the outriggers.

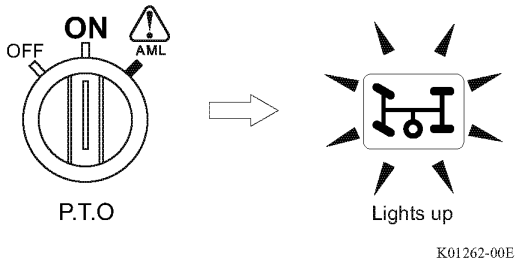

2.1 Registration of Outrigger State

3. Push the <F> key (outrigger state select).
   - The pop-up window for the outrigger state registration is shown on the display panel. Each time the <F> key (outrigger state select) is pushed, the display changes as shown below..

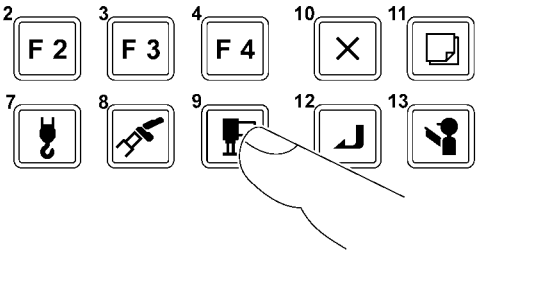

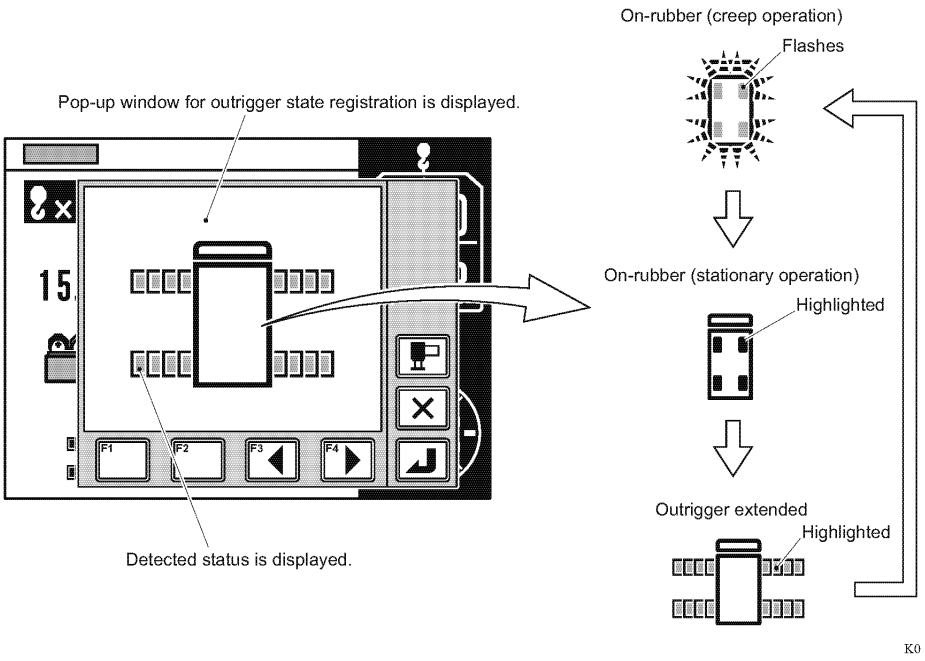

☞ When the power for the AML is turned on, the "On-rubber (creep) operation" state is automatically set.

☞ Instead of the outrigger state select key, you can use the <F3> key (backward) or <F4> key (forward)to change the display of the outrigger state.

https://truckmanualshub.com/

4. Make sure that the display agrees with the actual outrigger state.

   - The meanings of each indication of the outrigger state symbol are as shown in the illustration on the right.

	GR-750XL-2 GR-1000XL-2	
Maximum extension	23' 11-3/8"	(7.3m)
Middle extension 2	21' 11-3/4"	(6.7m)
Middle extension 1	18' 1/2"	(5.5m)
Minimum extension	8' 10-1/4"	(2.7m)

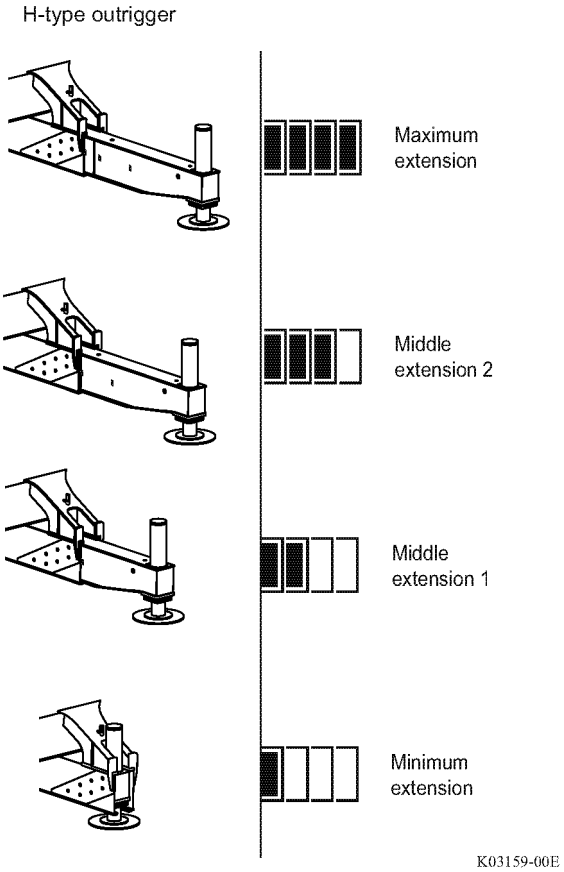

When you want to stop registration, push the <⊠> key (EXT).

The pop-up window closes and the AML returns to the state before start of the registration.

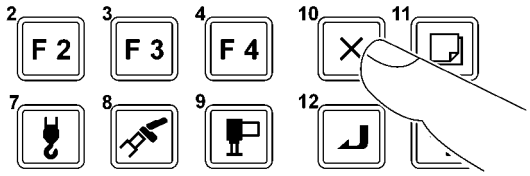

https://truckmanualshub.com/

5. If the display agrees with the actual condition, push the <⏎> key (set) to register the state.
   - After registration is completed, the pop-up window closes and the AML returns to the crane operation state.

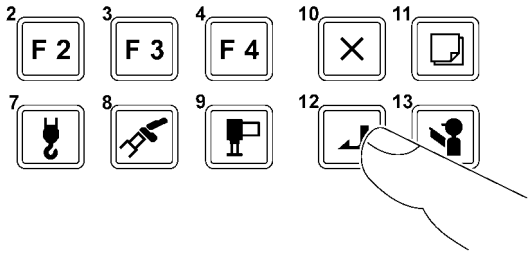

K00678-000

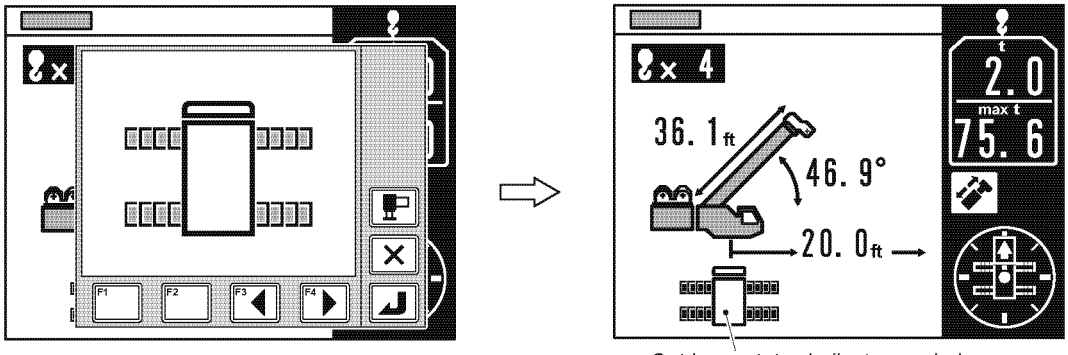

Outrigger status indicator symbol represents the registered status.

K02986-00E

6. Take out the main and auxiliary hook blocks from the stowing positions.

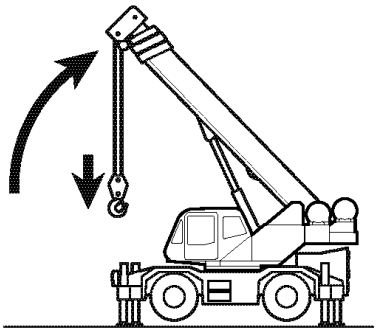

K02822-000

https://truckmanualshub.com/

2.2 Registration of Crane State

7. Push the <> key (lift state select) to register the lift state (single top/jib/boom).
   - The pop-up window for the outrigger state registration is shown on the display panel.
     Each time you push the<> key (lift state select), the display changes as shown in the illustration.

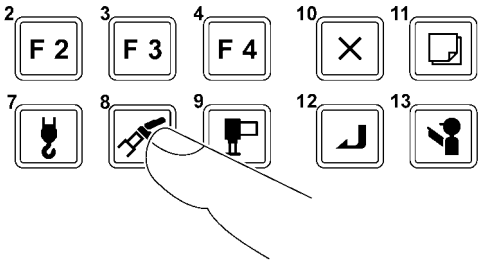

K00681-000

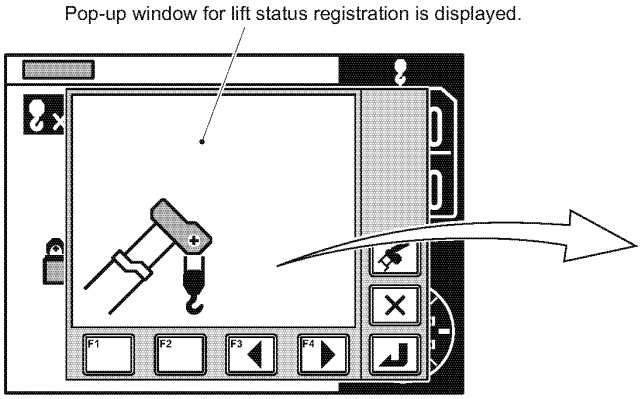

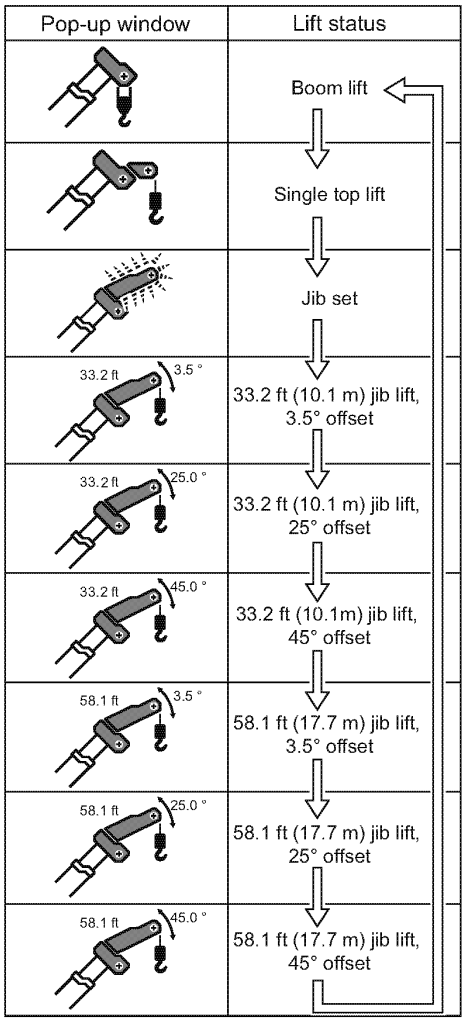

K02987-00E

☞ When the power of the AML is turned on, the boom lift state is automatically set.

☞ Instead of the lift state select key, you can use the <F 3> key (backward) or <F 4> key (forward) to change the display of the lift state.

☞ When you want to stop registration, push the <> key (EXT). The pop-up window closes and the AML returns to the state before start of the registration.

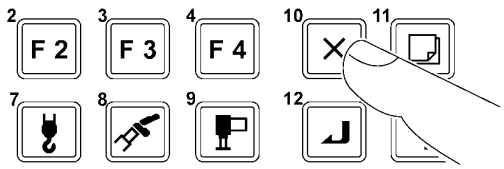

K00680-000

https://truckmanualshub.com/

8. Push the <↵> key (set).
   - When the booms are fully retracted, the popup window for boom telescoping mode selection appears on the display panel.

   ☞ When a boom is extended, the boom telescoping modes cannot be selected.

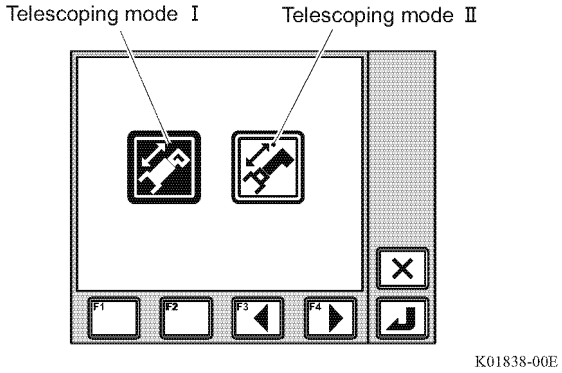

9. Push the <F3> key (backward) or <F4> key (forward) to select one of the telescoping mode icons.
   - The selected icon is highlighted.

10. Push the <↵> key (set) to register the setting.
    - After registration is completed, the pop-up window closes and the AML returns to the crane operation state.

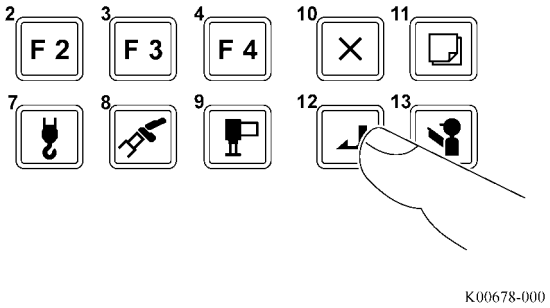

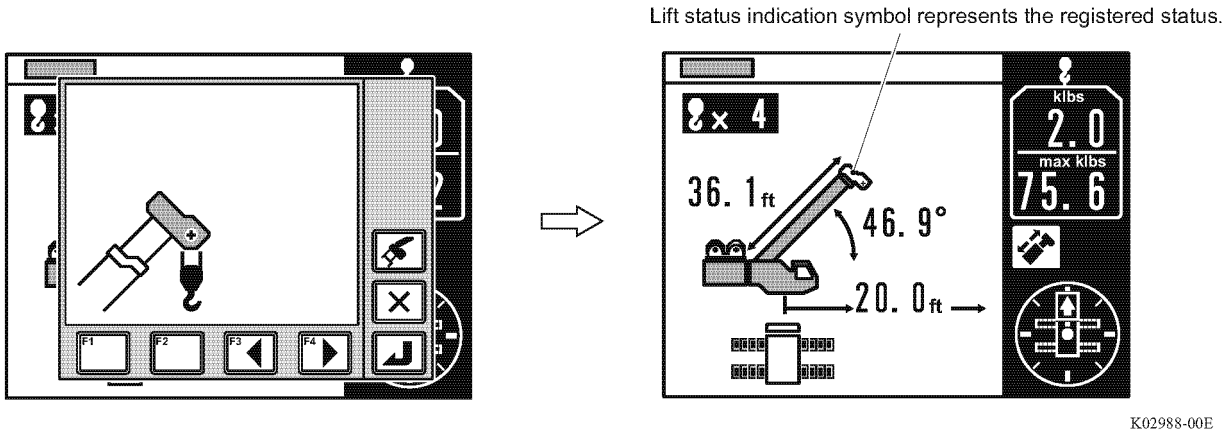

https://truckmanualshub.com/

2.3 Registration of counterweight state

11. Push the counterweight state select key.
    - The pop-up window for counterweight state registration appears on the display panel.

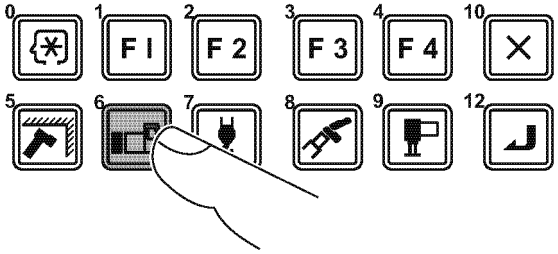

K02531-000

12. Check that the value of the counterweight indicated on the AML agrees with the actual crane state.

⚠WARNING

If the indication on the AML and actual counterweight state does not agree, an overturning accident or a crane damage can occur.

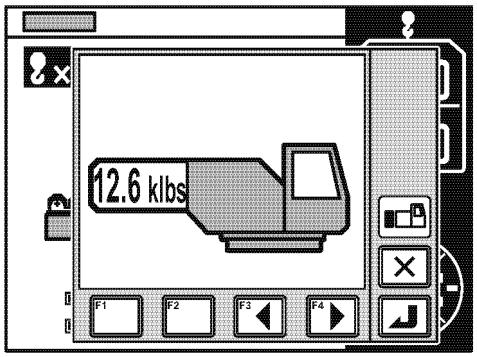

K02923-000

13. Push the <⏎> key (set) to register the setting.
    - After the registration is completed, the pop-up window closes, and the AML returns to the crane operation state.

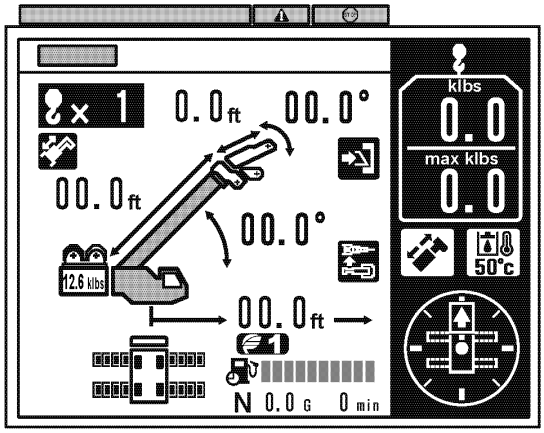

IW301-0411E16

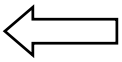

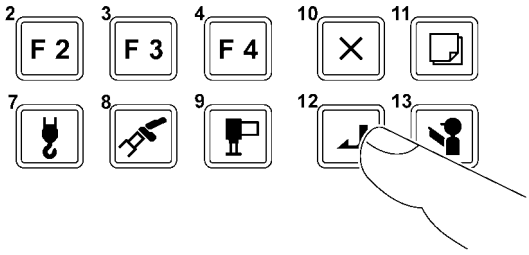

K00678-000

https://truckmanualshub.com/

2.4 Registration of Number of Part-lines of Wire Rope

14. Push the <> key (rope part line) to register the number of part lines to be used.
    - The pop-up window for rope part line registration appears on the display panel.
      Each time you push the <> key (rope part line), the number of part lines changes.

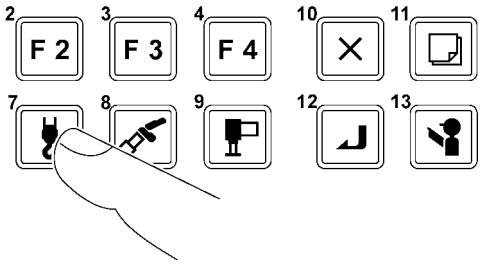

K00684-000

The hook block is automatically selected and shown according to the registered lift state. If the displayed hook block symbol is not the one you want to register, push the <> key (main hook block) to change the indication.

Pop-up window for main hook block registration is displayed.

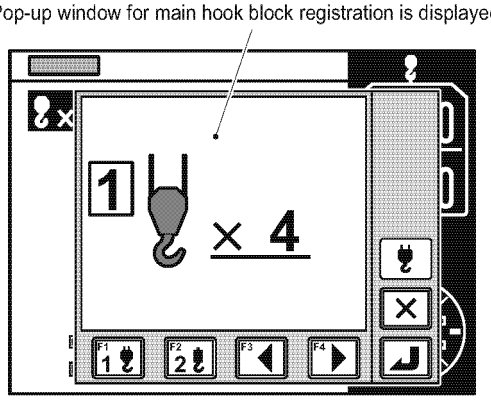

When boom lift is registered

Pop-up window for auxiliary hook block registration is displayed.

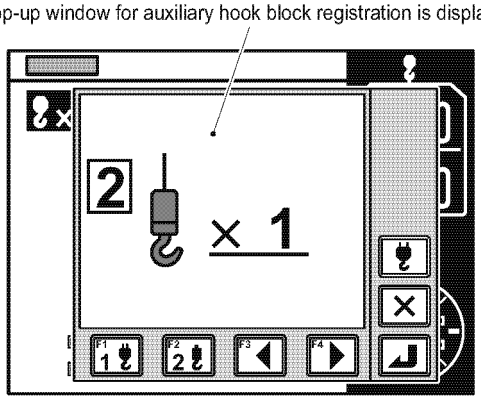

When single top/jib lift is registered

K03063-00E

☞ You can register only the number of part lines specified for each model.

☞ Instead of the rope part line key, you can use the <> key (backward) or <> key (forward) to change the display of the number of part lines.

☞ When you want to stop registration, push the <> key (EXT).
The pop-up window closes and the AML returns to the state before the start of the registration.

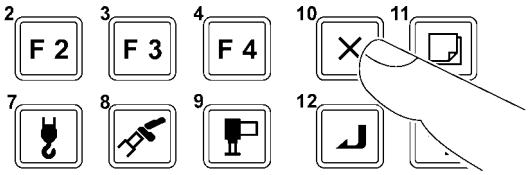

K00680-000

https://truckmanualshub.com/

15. Push the <↵> key (set) to register the setting.
    - After registration is completed, the pop-up window closes and the AML returns to the crane operation state.

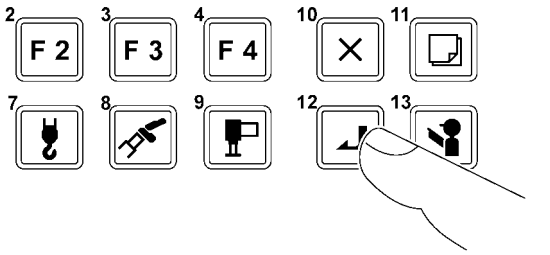

K00678-000

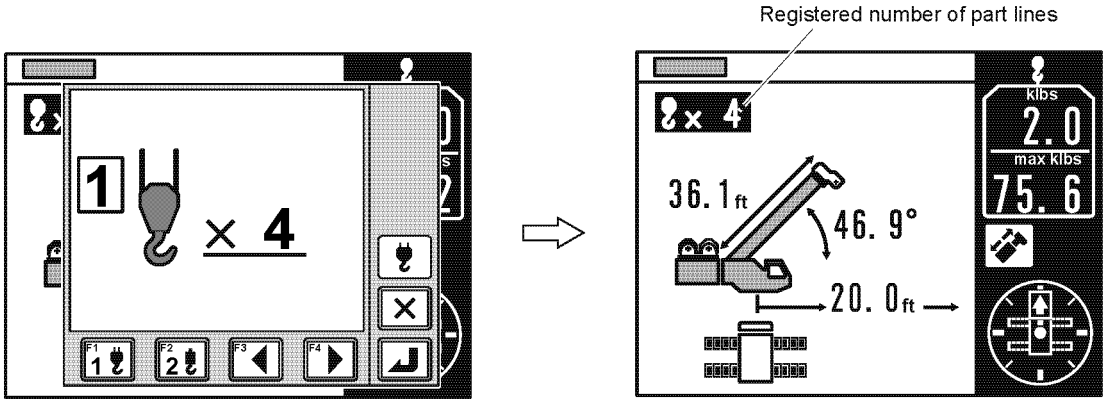

K02989-00E

16. Set the jib status switch to register the jib state.

    • REMOVED: Jib dismounted

    • EQUIPPED: Jib mounted

    When the switch is set to "REMOVED", the jib dismount icon appears on the display panel of the AML.

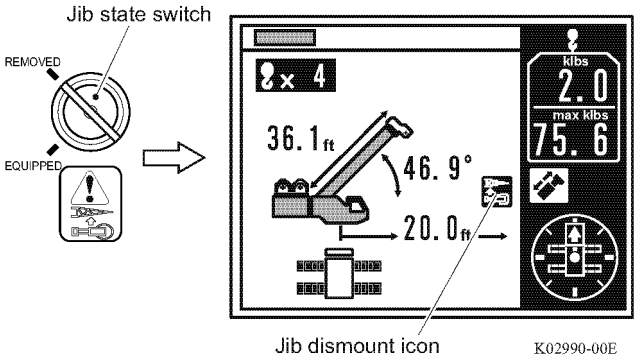

K02990-00E

⚠WARNING

Make sure that the switch position corresponds to the actual jib mounting state. Otherwise, the calculation base of the AML is inaccurate, and the machine can overturn or be damaged.

☞ When the jib is dismounted, the reduction of the mass affects the measurement of the AML.

☞ You can insert/remove the switch key either in the "REMOVED" or "EQUIPPED" position.

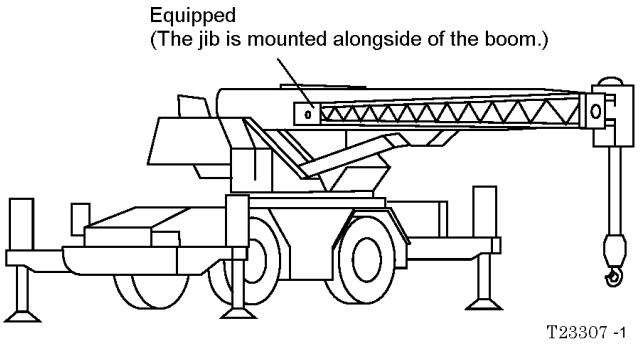

T23307 -1

https://truckmanualshub.com/

2.5. Pre-operational Inspection on AML

17. Push the <> key (inspeciton) and make sure that the AML is in the condition below.
    - LED Display : All lit
    - Display Panel : All highlighted
    - Alarm buzzer : Continuously sounds.

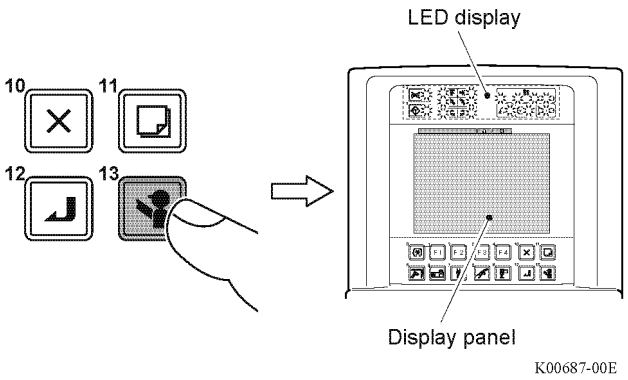

18. Attempt hoist-up, boom extension, and boom lowering operations to make sure that the crane does not operate.

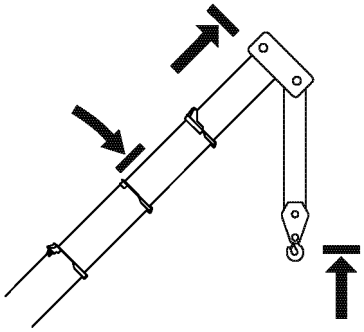

19. Push the <> key (inspeciton) again to return the AML to the crane operation state.

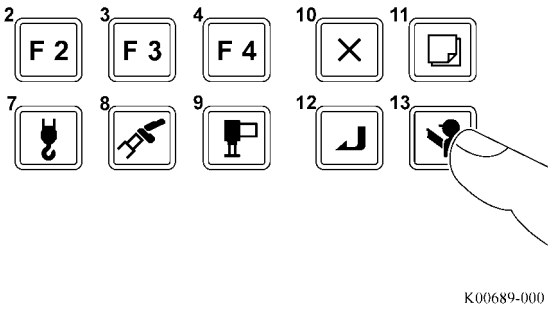

https://truckmanualshub.com/

20. Make sure that the items on the display panel listed below agree with the actual state.
    (1) Hoist medium load
        Make sure that approximate main hook mass is shown under a no-load condition.
    (2) Swing position display
    (3) Front position symbol
        (only when the boom is directed toward the front of the vehicle)
    (4) Boom angle
    (5) Outrigger status indicator symbol
    (6) Boom length
    (7) Number of part lines
    (8) Jib length (When jib lift is registered)
    (9) Jib offset angle (When jib lift is registered)

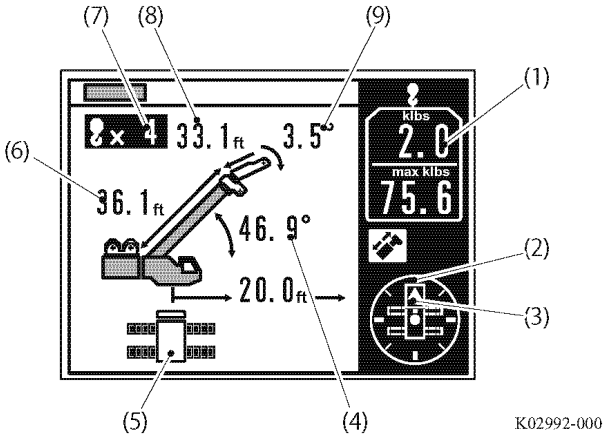

☞ The hook block mass shown varies depending on the crane configuration, etc.

Now, operation state registration and AML function check are completed.

You can start crane operation.

☞ Even after you turn off the AML, the registered information is retained for approximately 2 hours.
When the AML is turned on, the operation starts with the retained information.
The registered information is erased approximately 2 hours after the AML is turned off. In this case, it is necessary to register the operation state from the beginning.

https://truckmanualshub.com/

B-3 Alarm and Recovery Operation

NOTICE
Repair/recovery is necessary if any of the events below occurs: **• The warning code other than given here is/are shown.** **• The warning code remains even after you register the state that corresponds to the warning code or perform the recovery operation.** **• The crane stops and you cannot operate it.**

When any failure occurs or improper operation is performed during crane operation, the buzzer sounds and an warning code is/are shown to ensure safety and to prevent damage to the machine. Examine the contents of the warning code, and perform the recovery operation.

3.1 Type of Warning Codes and Buzzer

The warning codes appear on the display panel.

There are 3 types of buzzers, and each buzzer sounds differently according to the cause of the alarm.

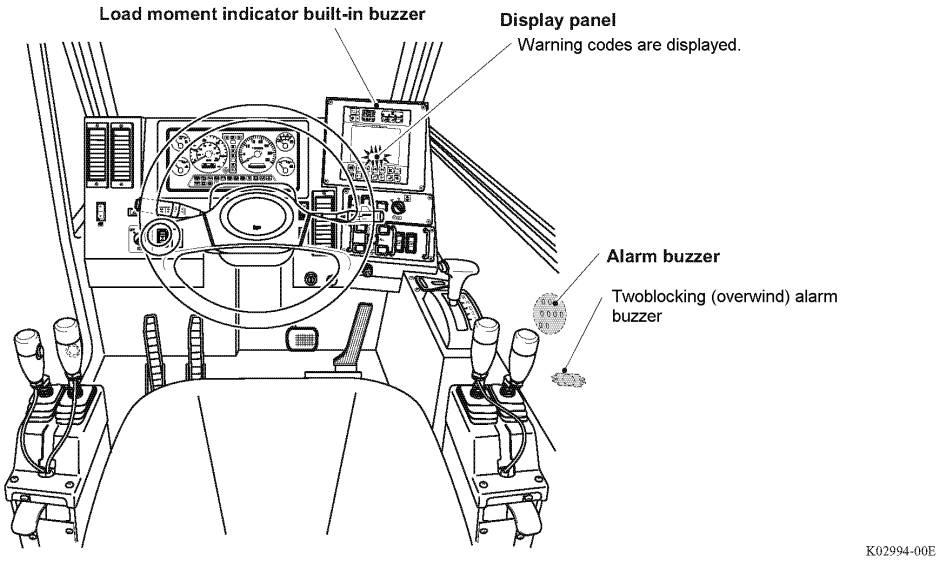

Warning codes appear on the display panel.

While the warning code(s) is/are displayed, pushing the <F1> key opens the pop-up window and displays the code(s) individuality.

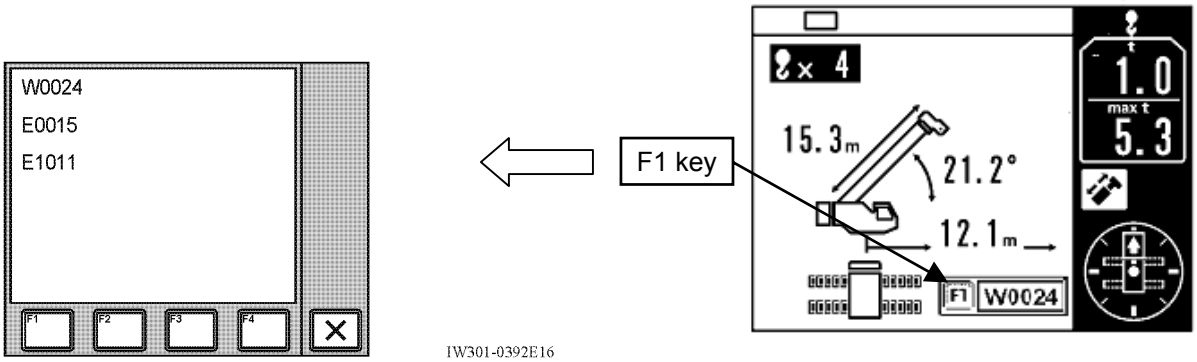

https://truckmanualshub.com/

3.2 Warning Code and Crane Model Comparison Table

Table 3.2.1 ● : Stop Warning Code, ○ : Warning Code

Code	Cause	GR-750XL-2	GR-1000XL-2
W0001	Right front outrigger beam retraction	○	○
W0002	Right rear outrigger beam retraction	○	○
W0003	Left front outrigger beam retraction	○	○
W0004	Left rear outrigger beam retraction	○	○
W0005	Boom angle value becomes out of specified range		
W0006	Improperly inserted jib lock pin		
W0007	Stop at swing angle limit	●	●
W0012	Rear stability auto. stop range		
W0013	Over-front detection switch is defective	○	○
W0015	Twoblocking condition (When Anti-twoblock stop function is cancelled)	○	○
W0016	State 1 is not applied (Outrigger, Swing angle, C/W, combinations)	○	○
W0017	State 2 is not applied (Boom and Jib combination)	○	○
W0018	Boom full retraction switch 1 faulty	○	○
W0019	Boom full retraction switch 2 faulty	○	○
W0020	Boom full retraction switch 3 faulty		
W0021	Boom full retraction switch 4 faulty		
W0022	Jib full retraction switch 1 faulty		
W0023	Stopped at 100% of crane performance	●	●
W0024	Stop due to twoblocking (overwind)	●	●
W0025	Stopped due to backward stability	●	●
W0026	Stopped at upper boom angle limit restriction	●	●
W0027	Stopped at lower boom angle limit restriction	●	●
W0028	Stopped at lifting height restriction	●	●
W0029	Stopped at load radius restriction	●	●
W0034	Stopped by main winch over-unwinding prevention device (Europe spec.)	●	●
W0035	Stopped by aux. winch over-unwinding prevention device (Europe spec.)	●	●
W0040	AML override sw “ON” condition (EN13000 spec.)		
W0042	Right swing restriction limit	●	●
W0043	Left swing restriction limit	●	●
W0044	Jib stowed condition		
W0054	Stopped by elevating cylinder stroke end (Ret.)	●	●
W0055	Stopped by elevating cylinder stroke end (Ext.)	●	●
W0056	Swing operation is dangerous	○	○
W0057	Right front outrigger state change	○	○
W0058	Right rear outrigger state change	○	○
W0059	Left front outrigger state change	○	○
W0060	Left rear outrigger state change	○	○
W0078	Altered counterweight state	○	○
W0106	Elevating speed is reducing	○	○
W0107	Telescoping speed is reducing		
W0108	Swing speed is reducing	○	○
W0121	Stopped at elevating cylinder stroke end	●	●
W0122	Out of working range		
W0123	During jib stowing		
W0124	Stopped at limit range of boom with jib	●	●
W0189	Boom angle out of specified range for hook-in		
W0190	Auto. stopped at critical range		
W0191	Auto. stop override sw is defective (STD spec.)		
W0197	Boom interference condition	○	○
W0198	Special lifting performance		
W0214	Stopped due to Tension rod interference		
W0215	Boom length detection is inconsistent		
W0219	Stopped due to boom full extension		
W0999	Back-up battery running down	○	○

https://truckmanualshub.com/

3.3 Warning code and Remedy List

3.3.1 Stop warning code

[Warning code]	Buzzer	Cause	Remedy
Ordinary bar graph display (no warning code) 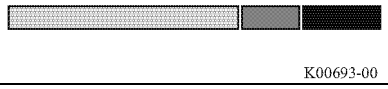	Alarm buzzer: Continuous sound (low tone)	Load moment ratio is 100% or more.	Unwind the winch, retract or raise the boom, or swing to the non-critical side.
[W0023]		Crane is operated toward a critical side while the load moment ratio is 100% or more.	
[W0024]	Overwind (twoblocking) alarm buzzer: Tremolo sound	Crane is operated toward a critical side while the hook block is overwound (twoblocking).	Unwind the winch or retract the boom to lower the hook block.
[W0007]	AML built-in buzzer: beep-beep-beep (Short beeps repeat for 3 seconds.)	Overload occurs during the swing operation.	Swing in the opposite direction, or retract or raise the boom.
[W0025]		Backward stability decreases and the crane can overturn.	Lower or extend the boom.
[W0034]		Remaining wire rope on the main winch drum is short.	Wind up the winch.
[W0035]		Remaining wire rope on the auxiliary winch drum is short.	
[W0054]		Boom is lowered at elevation lower limit stroke end.	Raise the boom.
[W0055]		During the elevation slow stop cancel, the boom is raised at the elevation upper limit stroke end.	Lower the boom.
[W0121]		Boom is raised at elevation upper limit stroke end when the elevation slow stop is activated.	
[W0124] 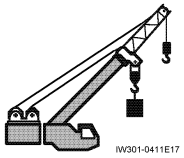		Load moment ratio exceeds 80% during the boom lift with the jib extended.	• Unwind the winch, or retract or raise the boom. • Stow the jib.

https://truckmanualshub.com/

3.3.2 Warning Code (ex.: GR-750XL-2, GR-1000XL-2)

[Warning code]	Buzzer	Cause	Remedy
Ordinary bar graph display (no warning code) K00694-010	Alarm buzzer: Intermittent sound (low tone)	Load moment ratio is 90% or more and less than 100%.	Carefully monitor the load ratio.
[W0015]	Overwind (twoblocking) alarm buzzer: Tremolo sound	The stop function is canceled with the anti-twoblock disable switch while the hook block is overwound (twoblocking).	Unwind the winch or retract the boom to lower the hook block.
[W0001] [W0002] [W0003] [W0004]	AML built-in buzzer: beep-beep-beep (Short beeps repeat for 3 seconds.)	Outrigger beams are retracted during crane operation: R/F, R/R, L/F, L/R	Extend the outrigger again, and insert the pin. Then, register the outrigger state again.
[W0057] [W0058] [W0059] [W0060]		An outrigger beam retracts during crane operation, and the performance (lifting capacity) changes to the one with smaller extension width of outriggers.	
[W0013]		The state of front position detector switch and actual swing angle do not agree.	Inspect and maintain the crane.
[W0016] [W0017]		• Crane operation state goes out of the states that are registered to the AML. • An operation state with no capacity rated is registered to the AML.	• Register the operation state again. • For on-rubber operation, retract the boom to the capacity range.
[W0018] [W0019]		The state of the boom full retraction detector switch and actual boom length do not agree.	Inspect and maintain the crane.
[W0056]		The outriggers are unequally extended, and further swing operation causes overloading.	Swing in the opposite direction, or retract or raise the boom.
[W0078]		The state of the counterweight mounted on the crane does not agree with the state of registration on the AML.	• Register the state of counterweight on the AML. • Never operate a crane while counterweight is dismounted.

https://truckmanualshub.com/

[Warning code]	Buzzer	Cause	Remedy
[W0197]	AML built-in buzzer: beep-beep-beep (Short beeps repeat for 3 seconds.)	When the boom (or jib) may touch the engine cover or the mirror.	Carefully lower or swing a boom.
[W0999]		When the power is turned on, the battery for the AML built-in clock is low.	Replace the battery.
[W0106]	AML built-in buzzer: beep-beep-beep (Long beeps repeat for 3 seconds.)	The elevation slow stop function is activated and boom elevating operation is decelerating.	The crane is approaching the stop position. Operate with care.
[W0108]		The swing stop function is activated and swing operation is decelerating.	

https://truckmanualshub.com/

B-4 Other Functions

There are other 5 functions as shown below.

1. Working range limit function
2. TARE function
3. Mute alarm function
4. Fuel consumption display function
5. User control menu
   - Eco mode selection (Eco1, Eco2)
   - Winch drum rotation buzzer selection
   - Fuel consumption history display
   - Selection of the winch to be used
   - Adjustment of display panel contrast
   - Transmission of Telematics alarm data

Each function is as follows:

4.1 Working Range Limit Function

NOTICE
If the work range limit is registered too close to an obstacle, the machine can hit the obstacle depending on the crane configuration and operation methods. Consider a sufficient allowance when you register the limit.

The work range limit function restricts the operation of the crane to the pre-registered boom angle (upper limit, lower limit), lifting height, load radius, and swing angle (left, right). Use this function when operating the machine in a place where there are obstacles around the machine or when requiring the working range limit of the boom.

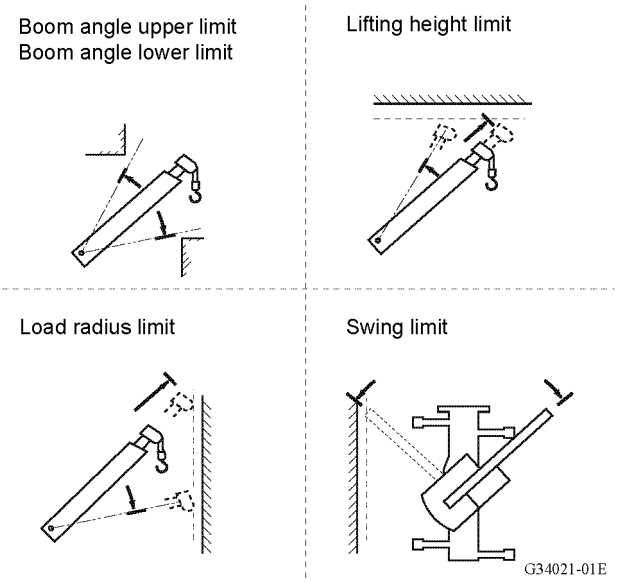

When the crane reaches the registered working range, the limit function works as shown below:

Working range limit function	Crane state
Boom angle upper limit Boom angle lower limit Lifting height limit Load radius limit Left swing limit Right swing limit	• Crane stops automatically. • AML built-in buzzer beep-beep-beep (Short beeps repeat for 3 seconds.)

https://truckmanualshub.com/

4.1.1 Display of Limit Function State

You can monitor the registered state of the work range limit by the limit indicator lamps on the LED display. The limit indicator lamp representing the work range limit currently activated lights up. When the crane reaches the limit and stops automatically, the condition of the limit indicator lamp changes from "staying lit" to "flashing".

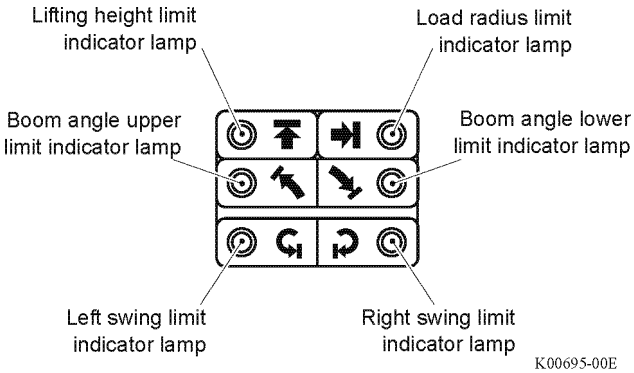

4.1.2 Registering Boom Angle, Lifting Height, and Load Radius Limit

1. Push the <> key (working range limit) to select the item to be registered.
   - The pop-up window for work range limit registration appears on the display panel.
   - Every time you push the <> key (working range limit), the item to be selected changes in the following sequence.
     1. Lifting height limit
     2. Load radius limit
     3. Boom angle upper limit
     4. Boom angle lower limit
     5. Left swing limit
     6. Right swing limit
   - The illustration on the right shows an example of display where "load radius limit" is registered and "boom angle upper limit" is selected.

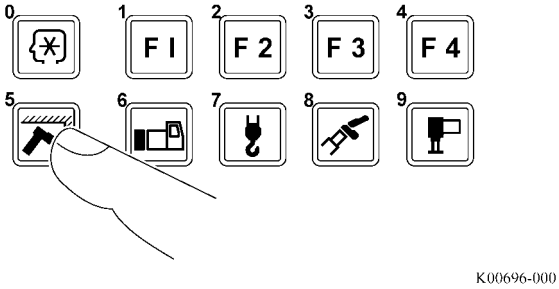

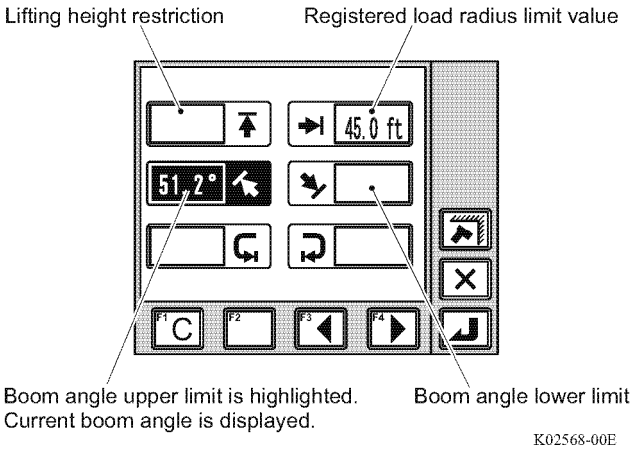

☞ Instead of the <> key (working range limit), you can use the <F3> key (backward) or <F4> key (forward) to change the display of the item to be selected.

☞ When you want to stop registration, push the <> key (EXT). The pop-up window closes and the AML returns to the state before start of the registration.

https://truckmanualshub.com/

2. After you operate the boom (jib) to the desired boom angle, height, and load radius, push the <> key (set).
   - The corresponding limit indicator flashes in the LED display, and the work range limit is registered.
   - After registration is completed, the pop-up window closes and the AML returns to the crane operation state.

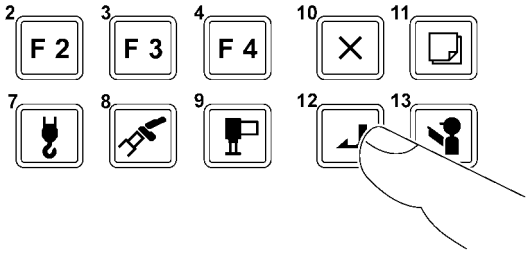

K00678-000

If you select the item with the limit value already registered, remember that pushing the <> key (set) cancels the registration of the work range limit.

3. Move the boom (jib) within the limit range.
   - The indicator lamp turns to staying lit.
   - When the state of the crane reaches the registered limit, the indicator lamp flashes.
     The corresponding operation of the boom (jib) automatically stops, and the warning code is shown on the display panel. The AML built-in buzzer repeats short beeps for 3 seconds.

4. To cancel the limit function, push the <> key (working range limit) to select the item to be canceled.
   - The pop-up window for work range limit registration appears on the display panel.

5. Push the <> key (set).
   - The corresponding limit indicator lamp goes out.
   - The pop-up window closes and the AML returns to the basic display.

When you push the <> key (clear), all the work range limits are canceled.

https://truckmanualshub.com/

4.1.3 Registration of Swing Range Limit Function

1. Push the <> key (working range limit) repeatedly and select the item (left swing limit or right swing limit) to be registered.
   - The symbol for the selected item flashes.
   - Every time you push the <> key (working range limit), the item to be selected changes in the following sequence.
     1. Lifting height limit
     2. Load radius limit
     3. Boom angle upper limit
     4. Boom angle lower limit
     5. Left swing limit
     6. Right swing limit
   - The illustration on the right shows an example of the display where "left swing limit" is selected.

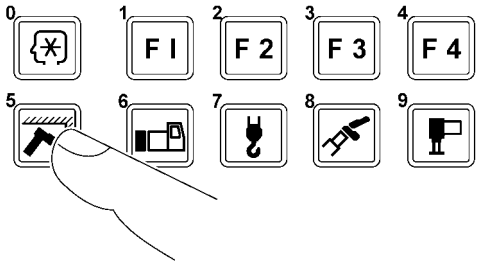

K00696-000

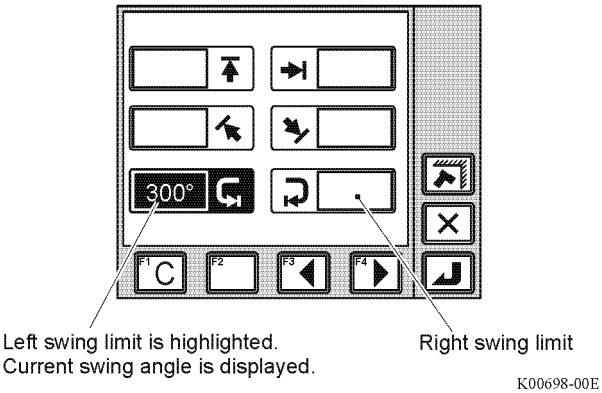

K00698-00E

☞ Instead of the <> key (working range limit), you can use the <F3> key (backward) or <F4> key (forward) to change the display of the item to be selected.

☞ When you want to stop registration, push the <> key (EXT). The pop-up window closes and the AML returns to the state before start of the registration.

https://truckmanualshub.com/

2. After you swing the boom to the desired position where the limit is to be set, push the <↵> key (set).
   - The corresponding limit indicator lamp flashes, and the swing limit is registered.
   - After registration is completed, the pop-up window closes and the AML returns to the crane operation state.

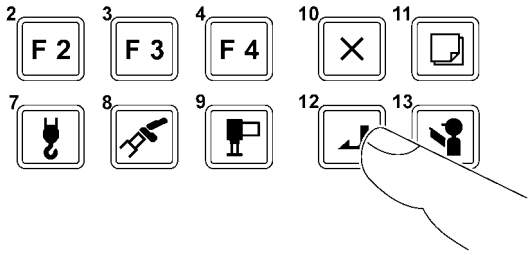

K00678-000

☞ If you select the item with the limit value already registered, remember that pushing the <↵> key (set) cancels the registration of the work range limit.

- The illustration on the right shows an example of display, in which "swing limit" is registered.

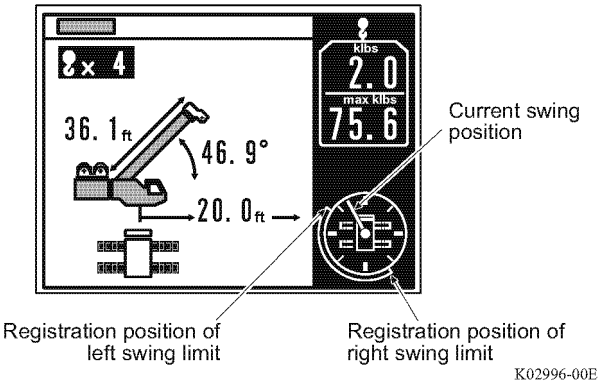

NOTICE

Registration of swing range limit is the function to set the allowable swing range. Register it for both the left swing and right swing.

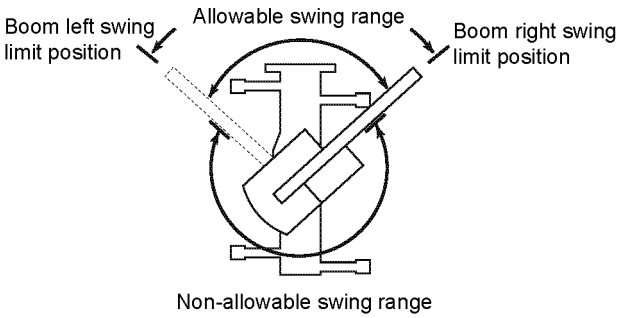

3. Move the boom (jib) within the limit range.
   - The indicator lamp turns to staying lit.
   - When the boom reaches a registered swing limit, the indicator lamp flashes.
     The swing operation automatically stops, and warning code appears on the display panel.
     The AML built-in buzzer repeats short beeps for 3 seconds.

☞ If you register the swing range limit only for one side (right or left), the crane does not operate properly.

https://truckmanualshub.com/

4. To cancel the limit function, push the <> key (working range limit) to select the item to be canceled.
   - The pop-up window for work range limit registration appears on the display panel.

5. Push the <> key (set).
   - The corresponding limit indicator lamp goes out.
   - The pop-up window closes and the AML returns to the crane operation state.

☞ When you push the <> key (clear), all the work range limits are canceled.

☞ Even after you turn off the AML, the registered information is retained for approximately 2 hours.
When the AML is turned on, the operation starts with the retained information.
The registered information is erased approximately 2 hours after the AML is turned off. In this case, it is necessary to register the operation state from the beginning.

4.1.4 Alarm for Work Range Limit and Recovery Operation

When the crane state reaches the registered limit value, the AML buzzer sounds, and the warning code appears on the display panel.
Examine the meaning of the warning code, and perform recovery operation.

[Warning code]	Buzzer	Cause	Remedy
[W0026]	AML built-in buzzer: "Beep-beep-beep" (Long beeps repeat for 3 seconds)	The boom angle reaches the upper limit.	Lower the boom.
[W0027]		The boom angle reaches the lower limit.	Raise the boom.
[W0028]		The boom head or jib head reaches the lifting height limit.	Retract or lower the boom.
[W0029]		The load radius reaches the limit.	Retract or raise the boom.
[W0042] [W0043]		The boom is swung to the swing limit.	Swing the boom in the opposite direction.

https://truckmanualshub.com/

4.2 TARE Function

The mass of the load only is shown on the hoist medium load display.

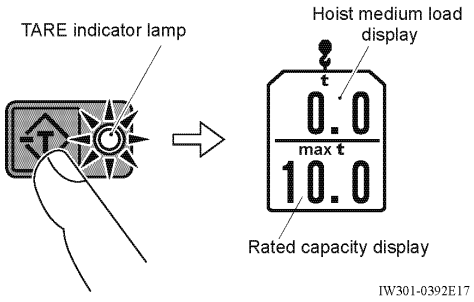

1. Before you lift a load, push the <⊡> key (TARE).
   - The indication of the hoist medium load display turns to "0", and the TARE indicator lamp lights up.
2. Perform hoist-up operation to lift up the load.
   - The mass of the load is shown on the hoist medium load display.
3. To cancel the TARE function, push the <⊡> key (TARE) again.
   - The hoist medium load display returns to the normal hoist medium load display, and the TARE indicator lamp goes out.

4.3 Mute Alarm Function

NOTICE
If the mute alarm function is activated, only the error code(s) and warning lamp indicate an error, and the buzzer does not sound. **Be sure to deactivate the mute alarm function.**

The following alarm buzzers can be muted.

- Alarm buzzer that sounds when the load moment ratio reaches or exceeds 90% (intermittent sound)
- Alarm buzzer that sounds when the load moment ratio reaches or exceeds 100% (continuous sound)

To activate the function, push the <⊡> key (mute alarm) while the alarm buzzer sounds.

- The mute alarm warning lamp lights up, and the buzzer stops sounding.

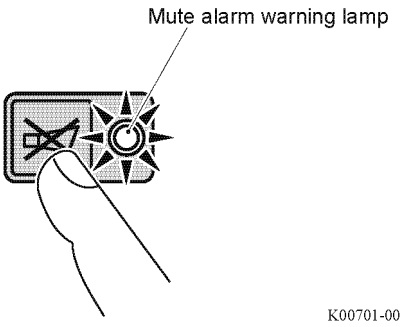

To deactivate the function, push the <⊡> key (mute alarm) again.

- The mute alarm warning lamp goes out, and the alarm buzzer sounds.

☞ In the cases below, the mute alarm function is automatically deactivated.

- The AML is turned off.
- The alarm buzzer is necessary for other causes.
- The causes to sound buzzer no longer exist.

https://truckmanualshub.com/

4.4 Fuel Consumption Indicator

⚠CAUTION
When you check the fuel consumption indicator, be careful that a crane operation is not hindered. Distraction can cause a serious accident.

This function shows the fuel consumption during a crane operation or standby.

Checking the indication enables you to operate a crane in a environmentally friendly way.

The fuel consumption is displayed when the PTO is "ON", the following items are shown.

☞The fuel consumption includes the moment when outriggers are not used (when traveling).

1.Current Fuel Consumption.....

The current fuel consumption (hour/gallon) during a crane operation is shown.

The max. value in a bargraph is 1.0 hour/gallon.

2.Average Fuel Consumption.....

The average fuel consumption (hour/gallon) during a crane operation is shown as a bargraph.

The average fuel consumption is reset during standby or when PTO switch is turned to "OFF".

3.Fuel Consumption during Standby.....

The fuel consumption (gallon) during standby is shown.

4.Standby Period.....

The crane standby period (min) is shown.

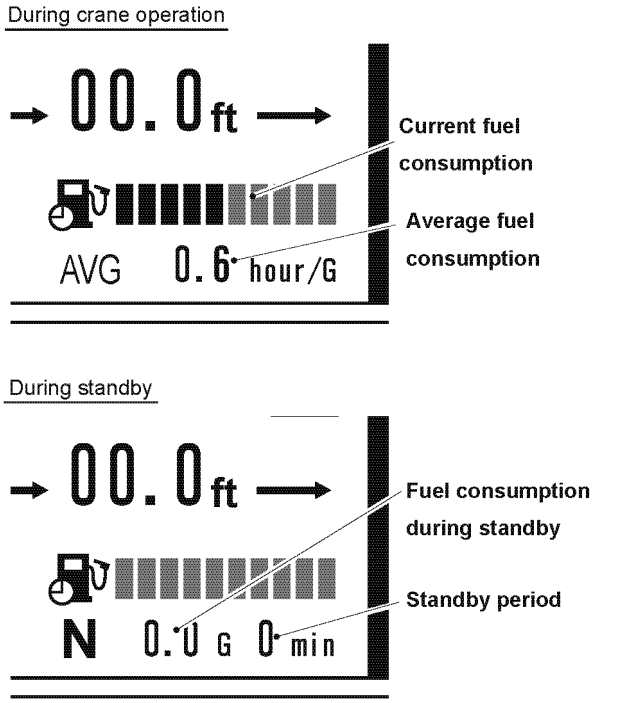

☞ The crane standby period is the period when each operation lever and pedal are in neutral position.

☞ Fuel Consumption during Standby and Standby Period are displayed when a crane has been in standby mode for a specified period.

☞ The displayed data may be different from the actual data depending on work conditions.
Check the fuel gauge to see the remaining fuel amount.

☞ The fuel consumption history during a crane operation and standby is displayed.
Refer to ”4.5 User Adjustment Menu”.

https://truckmanualshub.com/

4.5 User Adjustment Menu

4.5.1 Adjustment menu/model comparison table

The following functions are available as the user adjustment menu.

Table 4.5.1

	GR-750XL-2	GR-1000XL-2
1. Eco mode selection	○	○
2. Activating/Deactivating the Winch Drum Rotation Buzzer Function	○	○
3. Fuel Consumption History Display	○	○
4. Selection of Winch to be used	○	○
5. Adjustment of Display Panel Contrast	○	○
6. Transmission of Telematics alarm data	○	○

More details, refer to each model's Operation and Maintenance Manual.

4.5.2 User Adjustment Menu

1. Push the <⊛> key (User preset menu).
   - The pop-up window for the preset menu selection appears on the display panel.

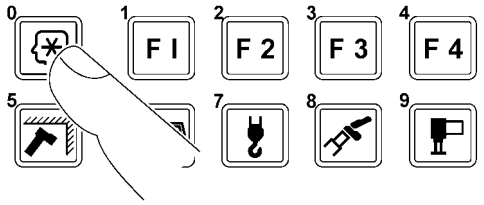

K00702-000

2. Push the <F3> key (backward) key or <F4> key (forward) to select the preset icon..
   - The selected preset icon is highlighted.

☞ Push <⊠> key (EXT) to exit the preset menu. The pop-up window closes, and the crane operation state before the adjustment is restored.

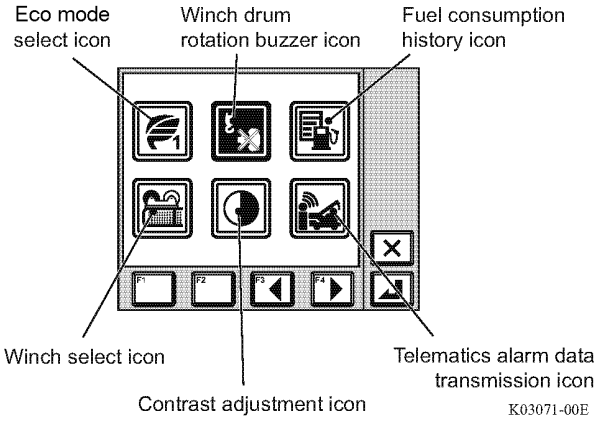

Fig. 4.5.1

3. Push the <⏎> key (set).
   - The selected preset screen appears.

https://truckmanualshub.com/

4.5.3 Eco mode selection

Select a crane operation mode when Eco mode switch is "ON".

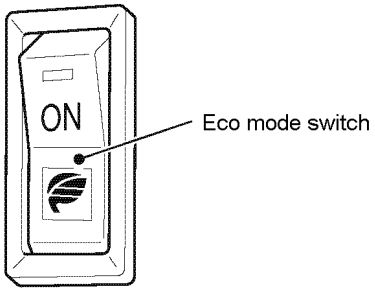

K03532-00E

- Eco mode 1 :
  In this mode, a crane restricts the maximum engine speed, consumes less fuel and makes less noise compared with when Eco mode is "OFF".

- Eco mode 2 :
  In this mode, a crane consumes further less fuel and makes further less noise compared with when Eco mode 1 is selected.

☞ A crane operation becomes slower by restricting the maximum engine speed. Select a suitable Eco mode depending on crane operation.

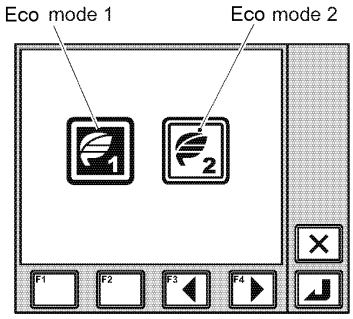

Fig. 4.5.2

K03072-00E

1. Select the Eco mode selection icon, and then push the <⏎> key (set).
   - The pop-up window for Eco mode selection appears on the display panel.

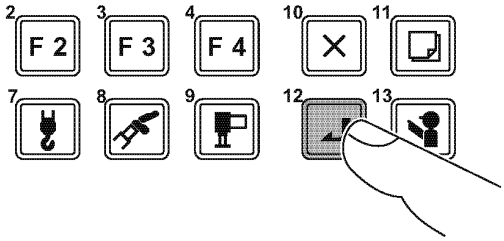

K00678-000

2. Push the <F3> key (backward) or <F4> key (forward) to select one of the Eco mode icons.
   - The selected icon is highlighted.

3. Push the <⏎> key (set).
   - After the registration is completed, the pop-up window closes and the AML returns to the crane operation state.
   - When Eco mode switch is turned "ON", Eco mode indicator (Eco mode 1 or Eco mode 2) is displayed.

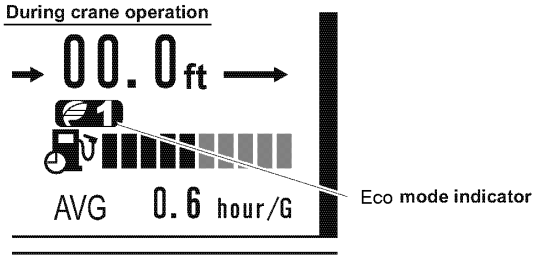

K03533-00E

☞ When you want to cancel the selection, push the <⊠> key (EXT). The pop-up window closes and the AML returns to the crane operation state without changing registration.

☞ Even after the AML is turned off, the registered information is retained. When the AML is turned on, the operation starts with the retained information.

https://truckmanualshub.com/

4.5.4 Activating/Deactivating the Winch Drum Rotation Buzzer Function

This is the function to sound the buzzer according to the rotation speed of the winch drum.
Select whether or not to sound the buzzer.

☞ The buzzer sounds only while the winch drum turns at a low speed.
When the winch drum rotation speed increases, the buzzer stops sounding.

1. Select the winch drum rotation buzzer selection menu icon, and push the <⏎> key (set).
   - The pop-up window for winch drum rotation buzzer selection appears on the display panel.

2. Push the <F 3> key (backward) or <F 4> key (forward) to select one of the rotation buzzer icons.
   - The selected icon is highlighted.

3. Push the <⏎> key (set).
   - After the registration is completed, the pop-up window closes and the AML returns to the crane operation state.

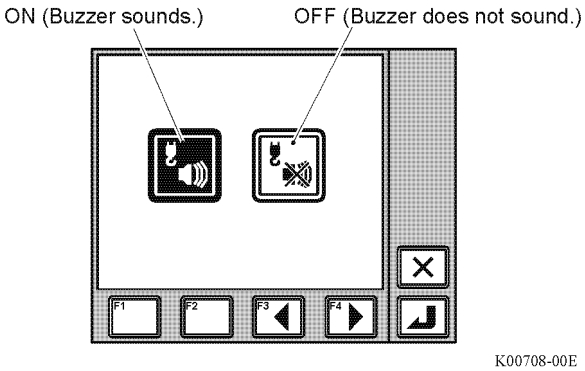

Fig. 4.5.3

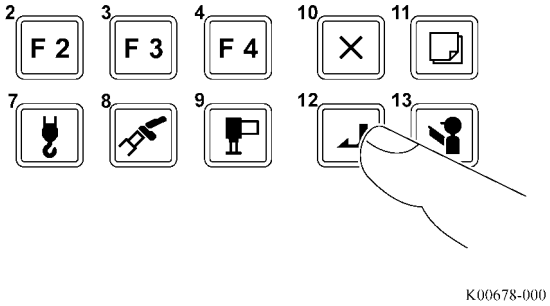

☞ When you want to cancel the registration, push the <⊠> key (exit). The pop-up window closes and the AML returns to the crane operation state without changing registration.

☞ Even after the AML is turned off, the registered information is retained. When the AML is turned on, the operation starts with the retained information.

https://truckmanualshub.com/

4.5.5 Fuel Consumption History Display

The fuel consumption history is displayed.

1. Hoist down a load and set each operation lever and pedal to the neutral position.
2. Select the fuel consumption history icon, and then push the <⏎> key (set).
   - The screen for fuel consumption history appears.

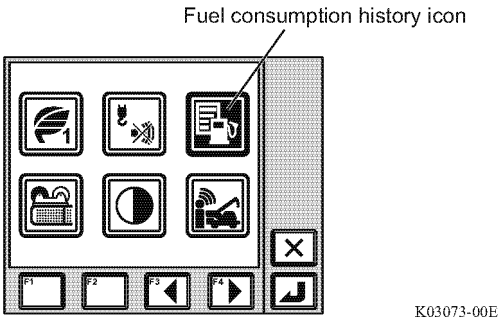

Fig. 4.5.4

3. The display changes when the <⊡> key (display change) is pushed.
   - The fuel consumption history is shown in either a bargraph or number.
   - The items shown on the numeric display screen are as follows.

G(N) ..... Fuel consumption during standby (gallon)

G(D) ..... Fuel consumption during crane operation (gallon)

h/G ..... Fuel consumption ratio during crane operation (hour/gallon) You can change the unit of fuel consumption ratio in h/G (hour/ gallon) or G/h (gallon/hour) by pushing F2 (unit change) key.

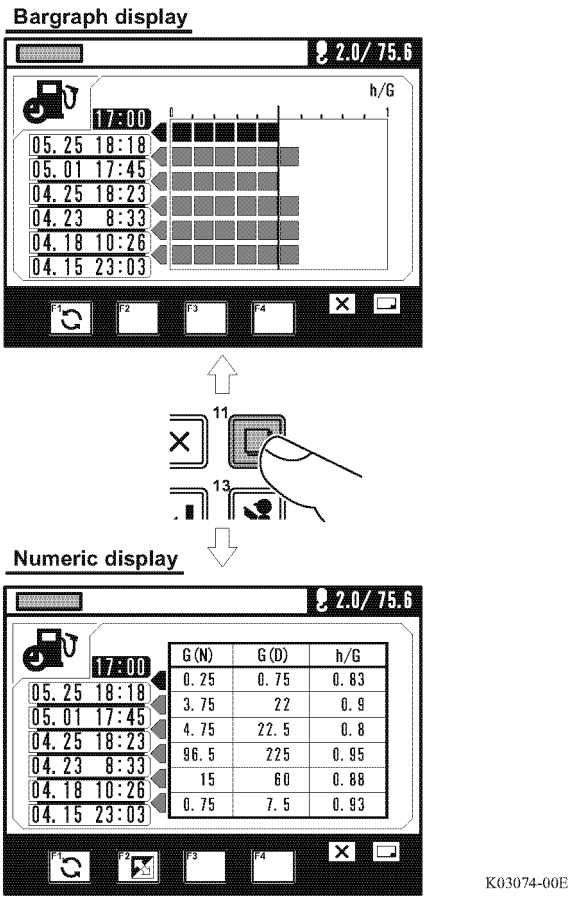

☞ The measurements restart when <F1> key (reset) is pushed. The previous records are moved down by pushing <F1> key (reset). 6 previous records including the current rate are displayed.

☞ Push <⊠> key (exit) to exit the history display. The pop-up window closes and the AML returns to the crane operation state.

☞ The fuel consumptions of G(N) and G(D) include when the crane is operated without outriggers (when traveling).

https://truckmanualshub.com/

4.5.6 Selection of Winch to be used

⚠WARNING

If the selection of the winch to be used does not agree with the actual state of the crane, the AML does not indicate the correct value of the load. If you operate the crane in this state, the crane may overturn or be damaged, resulting in an accident.
Make sure that the state of actual crane operation and the selection of the winch for use agree before starting operation.

NOTICE

The crane operations other than those shown in the illustrations below are prohibited. Use the specified combinations only.

Select the winch (main winch/auxiliary winch) to be used.

☞ <Standard>Main winch should be selected when boom lift, S/T lift or Jib lift is registered following conditions.(Memorized in the AML with main winch used)

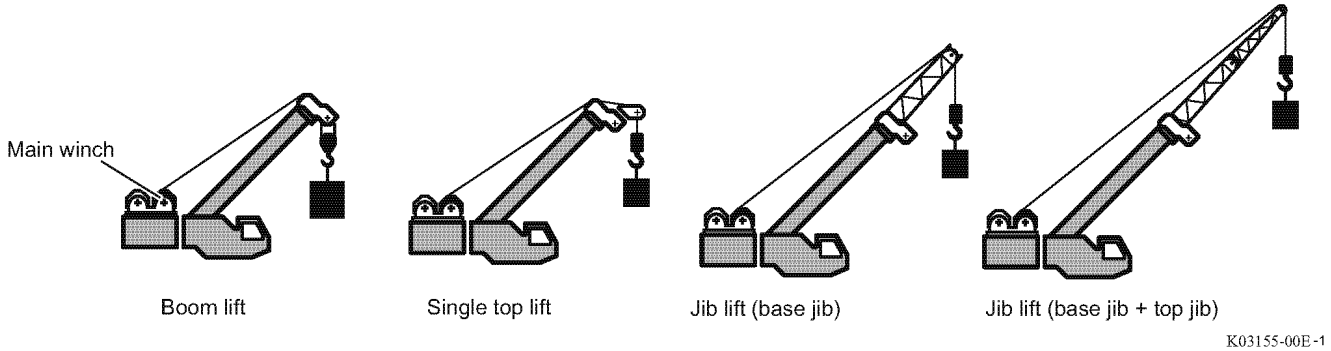

☞ When S/T lift or Jib lift status is registered following conditions, should be selected Aux. winch (Rear side used by user adjustment menu). Then, subtract the mass of the main hook from the Rated capacity, gives actual hoist medium load. (Refer to "Reduction of Rated Capacity" Foreword 6. Viii)

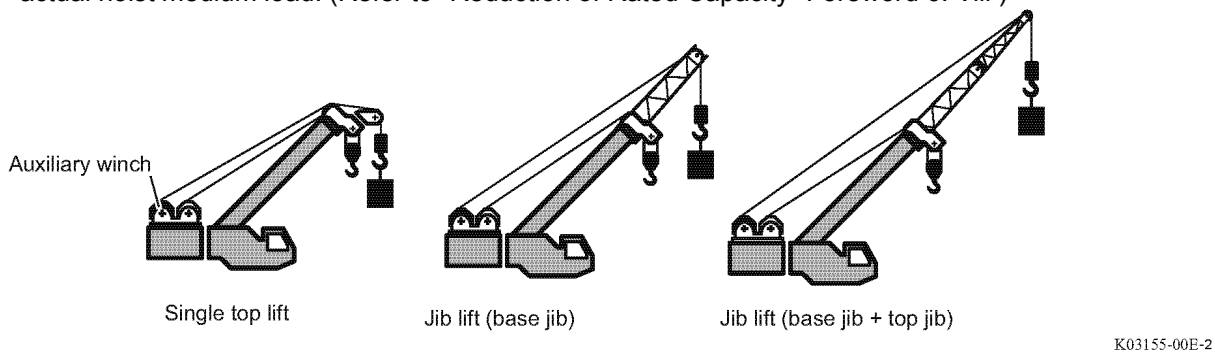

1. Select the winch select icon, and then push the <↵> key (set).
   · The pop-up window for winch selection appears on the display panel.
2. Push the <F3> key (backward) or <F4> key (forward) to select one of the winch icons.
   · The selected icon (Aux. winch) is highlighted.

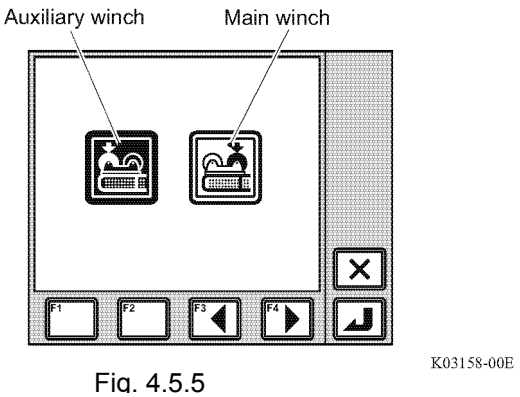

Fig. 4.5.5

https://truckmanualshub.com/

3. Push the <⏎> key (set).

· After registration is completed, the pop-up window closes and the AML returns to the normal display.

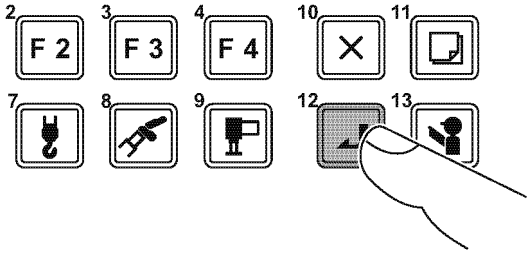

K00678-000

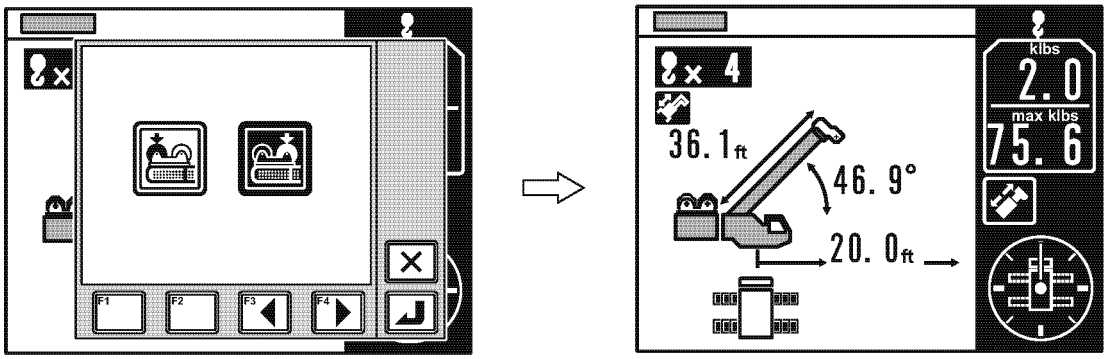

K02997-00E

☞ When you want to cancel the registration, push the <⊠> key (exit).
The pop-up window closes and the AML returns to the status before start of the registrati

☞ When the AML (PTO switch) is turned off, the registered information is not retained.
When the AML (PTO switch) is turned on, the operation starts with "main winch" automatically.

https://truckmanualshub.com/

4.5.7 Adjustment of Display Panel Contrast

1. Select the contrast adjustment menu icon, and push the set key.
   - The pop-up window for contrast adjustment appears on the display panel.

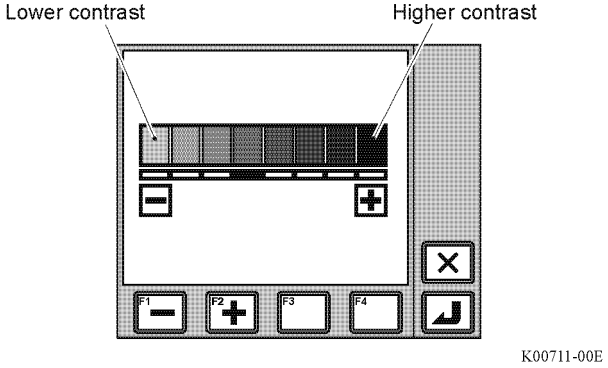

Fig. 4.5.6

2. Push the <F1> key (-) or <F2> key (+) to adjust the contrast.
   - Push the <F2> key (+) to increase contrast and the <F1> key (-) to decrease contrast.

3. Push the <⏎> key (set).
   - When registration is completed, the pop-up window closes and the AML returns to the crane operation state.

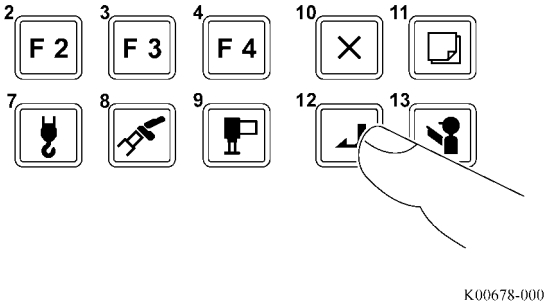

☞ When you want to stop registration, push the <✕> key (EXT). The pop-up window closes and the AML returns to the crane operation state without changing registration.

☞ If you push the <✕> key (EXT) for 3 seconds or more, the contrast returns to the initial setting.

☞ Even after the AML is turned off, the registered information is retained. When the AML is turned on, the operation starts with the retained information.

4.5.8 Transmission of Telematics alarm data

(Refer to Chapter C "2.16 Telematics Check)

https://truckmanualshub.com/

B-5 Action against AML System Error

⚠DANGER

When override key switch is turned to "ON" and the PTO switch is turned to "OVERRIDE", load moment indicator automatic stop function is canceled. Never operate the crane in this condition. The crane can overturn or suffer damage, and this can cause a serious accident.

NOTICE

The person having supervisory or management duties of the machine or the job shall keep the key for the override key switch.

When the load moment indicator system is in error, the crane may not operate normally.
In this case, stow the crane by the following procedure.

1. When a load is suspended, unwind the winch to lower the load to the ground.

2. Insert the key into the override key switch, and turn it to "ON".

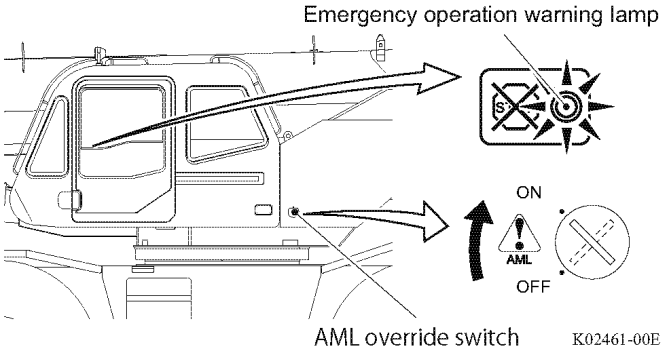

3. Set the PTO switch to "OVERRIDE".

The emergency operation warning lamp on the load moment indicator will light up.

☞ When the switch is release, it will automatically return to "ON".

4. Stow the crane.

5. Return the override key switch to "OFF", and remove the key.

6. Set the PTO switch to "OFF".

https://truckmanualshub.com/

B-6 Do Output Control

6.1 Cause for AML Automatic Stop Output

The AML automatic stop output is an output to drive the solenoid of unload valve for main pumps circuit. ON is output during crane operation, and OFF is output while the operation is being stopped. Once the operation is stopped, in order to prevent the repetition of detection signal (stop <=> operation), the unload status is maintained for 2 seconds even after the stop condition is resolved.

However, during this period of 2 seconds, when an operation is performed only to return to the safe side, the on-load output is performed immediately to allow the return operation to be performed.

In the stop status, a warning is given using the AML built-in buzzer. At the same time, an warning code is displayed on the graphic display.

The causes for stop are as follows:

	Stop item	Warning code
1	100% lifting performance stop	W0023 or W0124 (In the case of main winch used for jib)
2	Anti-twoblock stop	W0024
3	Backward stability stop	W0025
4	Boom upper limit stop (When area limit is set)	W0026
5	Boom lower limit stop (When area limit is set)	W0027
6	Lifting height limit stop	W0028
7	Load radius limit stop	W0029
8	Elevation lower limit (At cylinder stroke end)	W0054
9	Elevation upper limit (At cylinder stroke end)	W0055

https://truckmanualshub.com/

6.1.1 100% Lifting Performance Stop

When the load moment ratio (load ratio) exceeds 100%, the operation in the load ratio-increasing direction is stopped. However, for the main boom operation with jib, the automatic stop is performed when the load moment ratio (load ratio) becomes as follows: (#20803)

	Outrigger extension width		Output	
	GR-750XL-2	GR-1000XL-2	GR-750XL-2	GR-1000XL-2
Maximum extension	7.3m		88% or more	94% or more
Middle extension 2	6.7m		87% or more	93% or more
Middle extension 1	5.5m		80% or more	92% or more

Main boom with jib judgment: (1) and (2)

(1) Jib extension detection is in "extension" status (Di7: OFF).

(2) "Boom operation" is set with AML.

Code at stop: W0023

W0124 (For the main boom with jib)

Cancel: 100% stop cancel (Di6: ON)

Stop operation: (×: Stop operation)

M winch		A winch		Boom telescoping		Boom elevation		Jib telescoping		Jib tilt		Swing		Jib mounting	
Up	Down	Up	Down	Ext.	Ret.	Rse.	Lwr.	Ext.	Ret.	Rse.	Lwr.	Right	Left	Ext.	Stw.
×		×		×		×	×	×			×				

Special note: The load ratio exceeds 100% when the boom raising stroke end is reached.

Therefore, when the boom angle is A° or more, the automatic stop will not be performed for the boom lowering operation even when the load ratio is 100% or more.

(#2782)

	GR-750XL-2	GR-1000XL-2
Angle A°	80.1	80.1

https://truckmanualshub.com/

6.1.2 Anti-twoblock Stop

In the case of twoblocking, the operation in the hook block hoist-up direction is stopped.
However, while the jib is being set, anti-twoblock stop is not performed.

Code at stop: W0024

Cancel: Twoblocking cancel (Di5: ON)

Stop operation: (×: Stop operation)

M winch		A winch		Boom telescoping		Boom elevation		Jib telescoping		Jib tilt		Swing		Jib mounting	
Up	Down	Up	Down	Ext.	Ret.	Rse.	Lwr.	Ext.	Ret.	Rse.	Lwr.	Right	Left	Ext.	Stw.
×		×		×		×	×	×			×				

6.1.3 Backward Stability Stop

When the backward stability is lost, the operations that reduce the backward stability are stopped.
Stop condition: During on-rubber operation, the boom angle becomes as follows:

(data No.: #10722, #10724 to 10733, #10736)

Model			Stop angle	Remark
GR-750XL-2	Boom length	11.00m	Boom angle of 76° or more	Boom lift Single top lift
		19.00m	Boom angle of 80° or more	
		11.00m	Boom angle of 40° or more	Jib lift
GR-1000XL-2	Boom length	12.00m	Boom angle of 68° or more	Boom lift Single top lift
		20.75m	Boom angle of 75° or more	
		29.50m	Boom angle of 78° or more	
		12.00m	Boom angle of 40° or more	Jib lift

Stop condition: While either of the outriggers is at minimum extension, the boom angle becomes as follows:

Model			Stop angle	Remark
GR-750XL-2	---		---	
GR-1000XL-2	Boom length	12.00m	Boom angle of 78° or more	Boom lift Single top lift

Code at stop: W0025

Cancel: None (Not allowed)

Stop operation: (×: Stop operation)

M winch		A winch		Boom telescoping		Boom elevation		Jib telescoping		Jib tilt		Swing		Jib mounting	
Up	Down	Up	Down	Ext.	Ret.	Rse.	Lwr.	Ext.	Ret.	Rse.	Lwr.	Right	Left	Ext.	Stw.
					×	×									

https://truckmanualshub.com/

6.1.4 Boom Upper Limit Stop

Restriction is implemented to the operations exceeding the boom angle that is set with the area limit.

Code at stop: W0026

Cancel: 100% stop cancel (Di6: ON)

Stop operation: (×: Stop operation)

M winch		A winch		Boom telescoping		Boom elevation		Jib telescoping		Jib tilt		Swing		Jib mounting	
Up	Down	Up	Down	Ext.	Ret.	Rse.	Lwr.	Ext.	Ret.	Rse.	Lwr.	Right	Left	Ext.	Stw.
						×									

6.1.5 Boom Lower Limit Stop

Restriction is implemented to the operations falling short of the boom angle that is set with the area limit.

Code at stop: W0027

Cancel: 100% stop cancel (Di6: ON)

Stop operation: (×: Stop operation)

M winch		A winch		Boom telescoping		Boom elevation		Jib telescoping		Jib tilt		Swing		Jib mounting	
Up	Down	Up	Down	Ext.	Ret.	Rse.	Lwr.	Ext.	Ret.	Rse.	Lwr.	Right	Left	Ext.	Stw.
							×								

6.1.6 Lifting Height Limit Stop

Restriction is implemented to the operations exceeding the lifting height that is set with the area limit.

Code at stop: W0028

Cancel: 100% stop cancel (Di6: ON)

Stop operation: (×: Stop operation)

M winch		A winch		Boom telescoping		Boom elevation		Jib telescoping		Jib tilt		Swing		Jib mounting	
Up	Down	Up	Down	Ext.	Ret.	Rse.	Lwr.	Ext.	Ret.	Rse.	Lwr.	Right	Left	Ext.	Stw.
				×		×		×		×					

6.1.7 Load radius Limit Stop

Restriction is implemented to the operations exceeding the load radius that is set with the area limit.

Code at stop: W0029

Cancel: 100% stop cancel (Di6: ON)

Stop operation: (×: Stop operation)

M winch		A winch		Boom telescoping		Boom elevation		Jib telescoping		Jib tilt		Swing		Jib mounting	
Up	Down	Up	Down	Ext.	Ret.	Rse.	Lwr.	Ext.	Ret.	Rse.	Lwr.	Right	Left	Ext.	Stw.
				×			×	×			×				

https://truckmanualshub.com/

6.1.8 Elevation Lower Limit

As for the cranes whose moment detection is the differential pressure detection type, the moment detection becomes no longer possible when the elevating stroke end is reached. This function stops the elevation before the lowering stroke end is reached. However, to achieve the traveling configuration, when the swing angle and boom length condition (#2784) are satisfied, the lowering can be performed to the stroke end without a stop.

Stop condition: Boom angle ≤ Boom lowering stop angle (#2784), and in the crane status other than the one specified by data (#2784)

	GR-750XL-2	GR-1000XL-2
Angle A°	-30.0	-30.0

Cancel: 100% stop cancel

Code at stop: W0054

Stop operation:

M winch		A winch		Boom telescoping		Boom elevation		Jib telescoping		Jib tilt		Swing		Jib mounting	
Up	Down	Up	Down	Ext.	Ret.	Rse.	Lwr.	Ext.	Ret.	Rse.	Lwr.	Right	Left	Ext.	Stw.
							×								

The crane status (traveling retraction) specified by (#2784) is as follows:

	Boom length (m)	Left swing limit (°)	Right swing limit (°)	Boom angle (°)
GR-750XL-2	11.10	355.0	5.0	3.5
GR-1000XL-2	12.10	355.0	5.0	3.5

6.1.9 Elevation Upper Limit

With cranes whose moment detection is the differential pressure detection type, the moment detection becomes no longer possible when the elevating stroke end is reached. This function stops the elevation before the raising stroke end is reached.
When the raising stroke end is reached, an overload status is reached, and then the lowering operation becomes prohibited, making the stowing impossible. Therefore, at the angle (#2783) or more than the ones specified in the table below, the elevation lowering is allowed even when the moment value is 100% or more.

Stop condition: Detected boom angle ≥ Boom raising stop angle (#16719)

	GR-750XL-2	GR-1000XL-2
Angle A°	80.8	81.0

Cancel: 100% stop cancel (Di6: ON)

Code at stop: W0055

Stop operation:

M winch		A winch		Boom telescoping		Boom elevation		Jib telescoping		Jib tilt		Swing		Jib mounting	
Up	Down	Up	Down	Ext.	Ret.	Rse.	Lwr.	Ext.	Ret.	Rse.	Lwr.	Right	Left	Ext.	Stw.
						×									

https://truckmanualshub.com/

6.2 Do Output Abnormality Processing

The block diagram below shows the Do highside output.

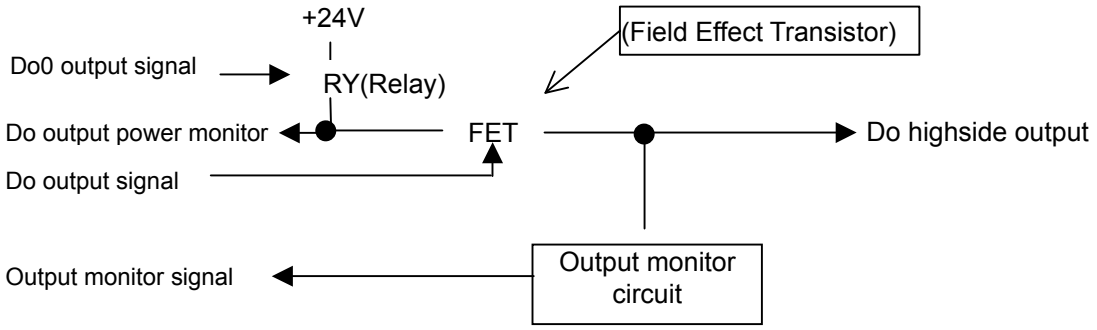

(1) Do output power abnormality

- In case of Do0 operation failure (Do output power monitor is 18 V or less), an error is displayed. At the Do0 operation failure, the Do highside ON output abnormality is not displayed.
- As for the Do highside output abnormality processing of (2), the error will not be displayed when Do0 is turned OFF.
- As for Di, when PTO ON/OFF changeover is possible and PTO is OFF, the abnormality detection is not performed.

(2) Do highside output abnormality

- When an output abnormality (a contradiction between Do output signal and output monitor signal) occurs to the Do highside output (Do1 to 8), an error is displayed.
- When the Do output signal is OFF and the output monitor signal is ON, in order to prevent the dangerous operation caused by the Do highside output clinging (such as FET output short, etc.), the output voltage of Do highside output (Do1 to 8) is cut by turning OFF Do0.

The table below shows the output status of Do0 output signal with each output abnormality.

Table 6.2.1 Output status of Do0 output signal for each output abnormalities

Do No.	Do output signal	Output monitor signal	Do0 output signal status
Do1	On (H)	Off (H)	---
	Off (L)	On (L)	Off
. .	. .	. .	. .
Do8	On (H)	Off (H)	---
	Off (L)	On (L)	Off

- When the Do0 output signal is OFF, the abnormality is not detected for Do output signal ON and output monitor signal OFF.

- To restore from the output voltage cutoff of Do highside output (Do1 to 8), turn OFF the machine main power and then ON again because the error status is retained.

https://truckmanualshub.com/

6.3 Drum Indicator Control Function

6.3.1 Outline of Drum Indicator Control Function

The panel LED changes depending on the drum rotation speed of displayed drum. According to the main drum rotation and auxiliary drum rotation, the Do output (20 ms = 20/1000 second) is performed.

6.3.2 Input

1). #17216-1 Main drum rotation

2). #17216-2 Auxiliary drum rotation

6.3.3 Output

1). #17802-122 Main drum indicator Do output

2). #17708-123 Auxiliary drum indicator Do output

6.3.4 Panel LED Control

According to the rotation of displayed drum, the LED indicators (Fig. 6.3.1) in the AML-C body upper section are sequentially illuminated.

However with models that winch drum position is selected in the user preset menu, the illumination switching timing is calculated based on the information described in the table below (Table 6.3.1) according to the selected winch drum, and the control is performed.

Fig. 6.3.1 Panel drum indicator LED

Table 6.3.1 Models with user preset menu selection, illumination switching timing
(Selection of adjustment method: " Front " ←→ "Front/rear")

Operation status	Winch drum position status	Rotation detector (pulse)	Frequency dividing
Boom lift	Front	Main winch drum	Number of main wire part-lines
Other than boom lift	Front	Main winch drum	Number of auxiliary wire part-lines
	Rear	Auxiliary winch drum	

(Refer to Chapter B, 4.5.6 “Selection of Winch to be use”)

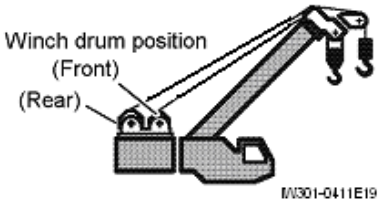

6.3.5 Drum Indicator Do Output Control

The Do (#17802-122) output control corresponding to main drum rotation speed (#17216-1) and the Do (#17802-123) output control corresponding to auxiliary drum rotation speed (#17216-2) are performed concurrently. ON is output for 20 ms, and then OFF is output.

6.3.6 Drum Indicator Do Output Restriction

The drum output exceeding the frequency of 7 Hz is stopped, and the output stop status will be maintained until the frequency becomes to 5 Hz or less.

https://truckmanualshub.com/

6.4 Output of warning

The aim of this output is to give information to operators via external warning lamps and buzzer.

6.4.1 Safety signal

This output controls the external warning lamps. (data No.:#17802-9)

Condition of output: (1), (2) and (3) exist.

(1)The load moment ratio is less than 90%. (When boom lift is performed with the jib mounted on the boom, the ratio is below the value specified in #20803.)

(2)100% stop cancel input (#19206-6) is "no cancel display".

(3)Anti-twoblock stop cancel input (#17206-7) is "no-cancel display".

When the condition is fulfilled, "OFF" is output.

6.4.2 90% warning

This output controls the external warning lamps. (data No.:#17802-10)

Condition of output: (1), (2) and (3) exist.

(1)The load moment ratio is 90% or over and less than 100%. (When boom lift is performed with the jib mounted on the boom, the ratio is in the range specified in #20803.)

(2)100% stop cancel input (#17206-6) is "no-cancel display".

(3) Anti-twoblock stop cancel input(#17206-7) is "no-cancel display".

When the condition is fulfilled, "OFF" is output.

6.4.3 100% warning

This output controls the external warning lamps. (data No.:#17802-11)

Condition of output: ①, ② or ③ exists.

①The load moment ratio is over 100%. (When boom lift is performed with the jib mounted on the boom, the ratio is over the value specified in #20803.)

②100% stop cancel input (#17206-6) is "cancel display".

③Anti-twoblock stop cancel input (#17206-7) is "cancel display".

When the condition is fulfilled, "OFF" is output.

https://truckmanualshub.com/

B-7 AML Control

7.1 Backward Stability Stop Function

7.1.1 Outline of Function

The backward stability stop function prevents the overturning of crane to the direction opposite to the boom side (backward) by the weight of counterweight (C/W) and other components.

Unlike the overload stop and anti-twoblock stop, the stop cannot be canceled with this function.

7.1.2 Restriction Contents

When the boom elevation angle goes over the backward stability performance, a warning code "W0012" is displayed regardless of the operation. Also, the crane stop output is performed while the crane is operated toward the critical side exceeding the stability performance.

The critical side operations are as follows:

(1) Boom retraction

(2) Elevation raising

During the stop output, the code "W0025" is displayed.

Even after the stop output condition is canceled, the stop output is maintained for 2 seconds. In order to suppress the hunting at performance limit, hysteresis is considered in the boom elevation angle judgment.

7.2 Working Range Limit Stop Function

7.2.1 Outline of Function

The working range limit stop function specifies the working range where the crane entry by operator is prohibited, and performs the crane stop output when the crane is operated to enter the specified area. The area is specified by the copying method (the crane is actually operated to before the entry prohibition area, and then the range limit position is set at the position). The following 6 working range limit stops are performed.

(1) Boom height (lifting height)

(2) Boom upper limit angle

(3) Boom lower limit angle

(4) Load radius

(5) Right swing limit (Note)

(6) Left swing limit (Note)

Note: The swing hydraulic circuit adopts a route different from that of other operations, and no stop is performed with the main pumps relief valve’s unload. Consequently, the stop is performed by the output of solenoid proportional valve that is connected to the pilot pressure line for swing operation. Therefore, the swing range limit works only the models equipped with the solenoid proportional valve for swing operation.

https://truckmanualshub.com/

7.2.2 Restriction Contents

When the stored stop set value or higher is reached, the crane stop output is performed while the crane is operated toward to the critical side. Even after the stop output condition is canceled, the stop output is maintained for 2 seconds. In order to suppress the hunting, hysteresis is used in the range limit judgment.
The critical side operations of swing limit and displayed warning codes are as shown below. With the swing limit, the warning code is displayed even when the limit is canceled.

(1) Boom height (lifting height) limit

- Boom extension
- Elevation raising
- Jib extension
- Jib tilt raising

Code at stop: "W0028"

(2) Boom upper limit angle restriction

- Elevation raising

Code at stop: "W0026"

(3) Boom lower limit angle restriction

- Elevation lowering

Code at stop: "W0027"

(4) Load radius limit

- Boom extension
- Elevation lowering
- Jib extension
- Jib tilt lowering

Code at stop: "W0029"

(5) Right swing limit

- Right swing

Code at stop: "W0042"

(6) Left swing limit

- Left swing

Code at stop: "W0043"

https://truckmanualshub.com/

7.2.3 Cancel Condition

Regarding the range limit functions other than the swing, they can be canceled by the AML emergency (override) switch. With the swing limit, swing motion differs depending on the re-stop setting status. The swing range limit cancel conditions are shown in Table 7.2.1.

Table 7.2.1 Cancel condition of swing range limit

Re-stop data Setting (#813)	AML emergency #17206-2	Swing stop cancel #17206-5	Result
Set	---	Cancel	Without stop
		No cancel	With stop
None	Emergency (Override)	---	Without stop
	Normal	Cancel	Without stop
		No cancel	With stop

7.2.4 Storing of Setting Condition

With the range limit function, the set limit value is stored in the backup RAM, and the value is retained and used when the machine is restarted within 2 hours. The set value is stored when the range limit value and limit status are changed.

https://truckmanualshub.com/

7.3 Output of Interference Prevention Warning

7.3.1 Function

With cranes whose boom or stowed jib may contact the carrier side-mirror or engine cover, a warning code is displayed to alert the operator when the boom or others approach an obstacle (stop is not performed).

7.3.2 Data Specification

In order to enable this function, the data below is required.

#12785: Interference warning range data

7.3.3 Input

(1) Swing angle ……. Swing angle calculated with AML

(2) Elevation angle …… Elevation angle calculated with AML

(3) Swing angle left limit ……..… "1. Swing angle left limit" of data #12785

(4) Swing angle right limit …… "2. Swing angle right limit" of data #12785

(5) Elevation angle upper limit … "3. Elevation angle upper limit" of data #12785

Items (3) to (5) can be set concurrently.

7.3.4 Warning Condition

When the condition below is satisfied, the warning code is displayed.

{(3) Swing angle left limit ≤ (1) Swing angle ≤ (4) Swing angle right limit} and

{(2) Elevation angle ≤ (5) Elevation angle upper limit}

＊ When two or more of (3) to (5) are set concurrently, the warning code is displayed when any of the items satisfies the above condition.

- The condition is not dependent on the boom status setting. (In any operating status, the warning code is displayed when the above condition is satisfied.)

7.3.5 Warning Code

[W0197]

＊ The automatic stop output or any output to external buzzer and external indicator lamp are not performed.

https://truckmanualshub.com/

7.4 Winch Drum Position Selection Function

NOTICE
The crane operations other than those shown in the illustrations below are prohibited. **Use the specified combinations only.**

(A) When boom lift or S/T lift or Jib lift is registered following conditions, Main winch should be selected. (Memorized in the AML with Main winch used.)

Fig. 7.7.1

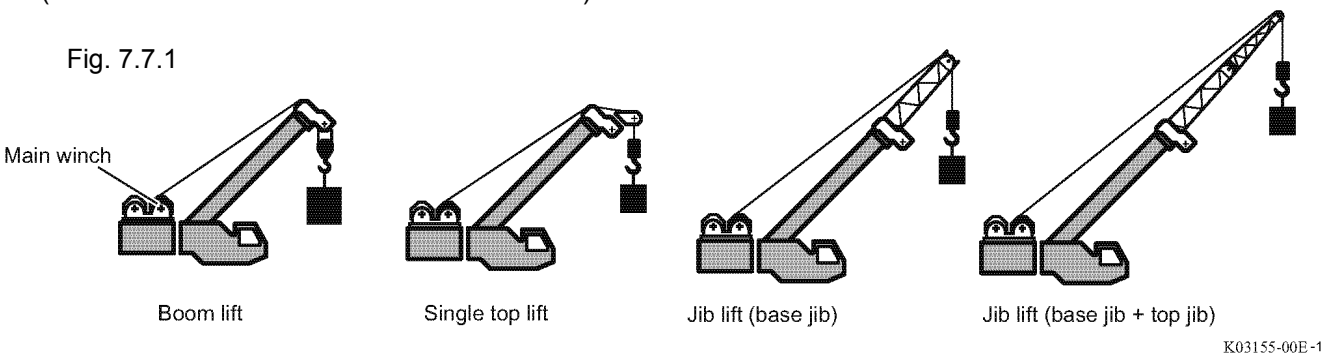

(B) When S/T lift or Jib lift status is registered following conditions, should be selected Aux. winch (front side used by user preset menu). Then, subtract the mass of the main hook from the Rated Capacity, gives actual hoist medium road.

Fig. 7.7.2

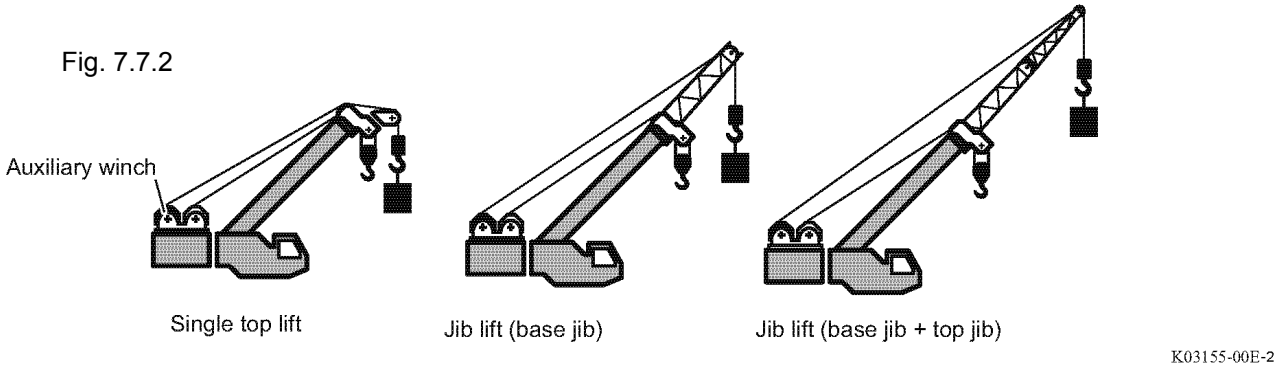

7.4.1 Function

For the machine whose performance is determined on the assumption that the only main winch (drum position: front ∗1) is employed. Use the winch position selection function if both of main and auxiliary winches (drum position: front and rear ∗2) are used.

Select the winch position according to the crane operation status to decrease a lifting capacity reduction (decrease a back moment by Aux. winch wire rope tension due to loosing the distance from the boom pivot pin).

(∗1) Spec. selection flag differs according to #17200-96.

(∗2) Spec. selection flag corresponding to setting of front/rear winch selection differs depending on #17200-96.

When the flag indicates " Front ←→ Front/rear (1), the main winch is in front and the aux. winch is in rear.

https://truckmanualshub.com/

7.4.2 Processing Effective Condition

(1) Specification selection

When a lifting capacity setting winch position selection (#17200-53) is 1 "With setting" and winch drum selection effective (#17200-79) is 1 "Changeover possible":

Select the winch drum position in the user preset menu.

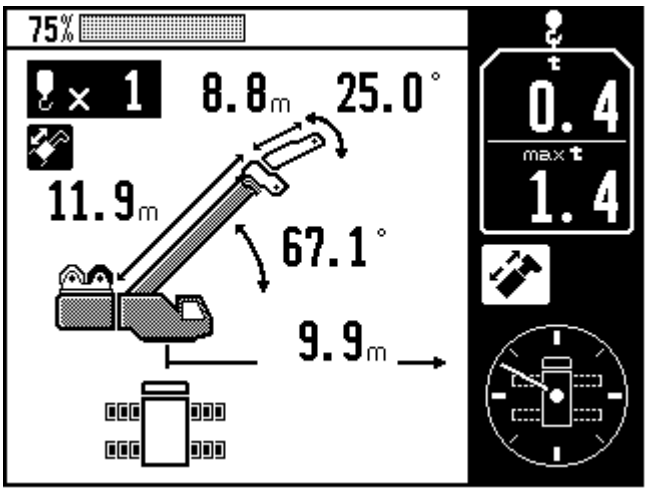

Fig. 7.7.3 Adjusted working status (Main winch front position)

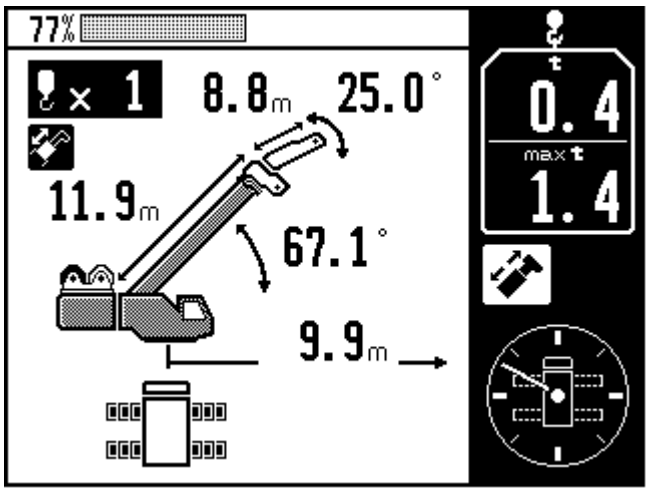

Fig. 7.7.4 Normal (memorized) working status (Aux. winch back position)

https://truckmanualshub.com/

7.4.3 Information Relevant to Winch Drum Position Selection

(1) Specification selection flag

- A lifting capacity setting, winch position selection (#17200-53)
- Winch drum position selection effective flag (#17200-79)
- Winch drum selection method setting (#17200-96)

(2) By-models data

- Frame adjustment data (#10302)

(3) Winch drum select icon (#17204-62)

When the selection method (1) is employed, the winch selection status toggles between "front/rear" and "front" every time the F3 or F4 key is pressed.

"Front" represents the condition that the auxiliary hook block is attached on the main wire rope (i. e., the auxiliary winch is wound up all the way and the main hook block is detached.)

"Front/rear" represents the condition that the main hook block is attached on the main wire rope and the auxiliary hook block is on the auxiliary wire rope.

(4) User preset menu (Refer to Chapter B, “4-5-6 Selection of winch to be used”)

(5) Boom and jib status setting (Refer to Chapter B, “2-2 Registration of Crane State”)

(6) Winch drum position selection adjustment menu (Refer to Chapter D, “4-1 Winch drum position selection”)

7.4.4 Output

(1) Models using user preset menu for winch position change

- Winch drum position icon display to normal operation status screen (Fig. 7.7.3, Fig. 7.7.4)
- Winch drum position icon display to integrated display screen

7.4.5 Processing Contents

(1) Models using user preset menu for winch position change

The winch drum position adjustment value is set in the adjustment menu. Then, the winch drum position is determined in accordance with the adjustment value and with the boom and jib operating status, and the rated capacity is determined. When the adjustment value is set as "Front," by Tadano, therefore, the selection can be made by the winch drum position selection menu of user preset menu.

Adjustment value:

-Winch drum position adjustment value selection method = " Front — Front/Rear" (1)

Winch position = Front and Rear ... Main boom lift status: Front position,
S/T and jib lift status: Rear position

Winch position = Front ……. Main boom lift status: Front position,
S/T and jib lift status: User preset menu selection

https://truckmanualshub.com/

7.4.6 Special Notes

When the winch drum front-and-rear position changeover setting is performed in the user preset menu, an inconsistency occurs with the information that is used to calculate the hook movement as indicated in the table below (Table 7.4.1, 7.4.2). Therefore, the user preset menu drum position adjustment and hook position initialization will be required.

Table 7.4.1 Information used for hook movement calculation
(no winch drum position selection menu available in user preset menu)

Lift status	Winch drum position	Displayed hook status	Hook position information (∗1)	Paid-out length of wire rope	No. of part lines	Position adjustment (∗2)
Boom lift	-	Main hook	For main hook	For main wire rope	For main hook	Hook 1
Other than boom lift	-	Auxiliary hook	For auxiliary hook	For auxiliary wire rope	For auxiliary hook	Hook 2

Table 7.4.2 Information used for hook movement calculation
(with winch drum position selection menu available in user preset menu)

Selected specification (#17200-96)	Lift status	Winch drum position	Displayed hook status	Hook position information (∗1)	Paid-out length of wire rope	No. of part lines	Position adjustment (∗2)
Selecting "Rear" and "Front/rear" (0) (Used)	Boom lift						
	Other than boom lift (S/T, Jib)						
Selecting "Front" and "Front/rear" (1) (Not used)	Boom lift	Front	Main hook	For main hook	For main wire rope	For main hook	Hook 1
	Other than boom lift (S/T, Jib)	Front	Auxiliary hook	For auxiliary hook	For main wire rope	For auxiliary hook	Hook 1
		Rear	Auxiliary hook	For auxiliary hook	For auxiliary wire rope	For auxiliary hook	Hook 2

(∗1) At the calculation of hook movement, the difference between the previous hook position and current hook position is calculated. This is the information that stores the previous hook position.

(∗2) This is the hook that is selected in the drum position adjustment of user preset menu.

https://truckmanualshub.com/

B-8 Proportional Control Function

This section describes the deceleration and slow stop controls by the hydraulic pilot pressure restriction using the solenoid proportional valve.

8.1 Factors for Control

Factors for deceleration and slow stop include the conditions below. The slow stop function can be canceled by the switch input or software setting.

- Elevation slow stop
  Load moment ratio 100% stop: Elevation lowering
  (Load ratio 100% stop)
  Backward stability stop: Elevation raising
  Working Range limit stop: Elevation raising, elevation lowering
  Elevating cylinder stroke end stop: Elevation raising, elevation lowering
  Re-stop: Elevation lowering
  Boom interference stop: Elevation lowering

- Swing slow stop
  Working Range limit stop: Right swing, left swing
  Capacity change at O/R beam differential extension: Right swing, left swing
  Swing free control: Common with left and right swing

- Speed limit
  Elevation speed limit: Elevation raising, elevation lowering
  Swing speed limit: Right swing, left swing

- Other
  Deceleration processing's (specific to particular models, etc.)

＊ When there is duplication of two or more control factors, the one with the largest output value is output.

8.2 Elevation Slow Stop

The elevation slow stop functions with the stop positions by load moment ratio (load ratio) 100% stop, backward stability stop, working range limit stop, elevating cylinder stroke end stop, and boom interference stop adopted as the target stop angle. However, when multiple conditions are met, the control is implemented for the one having the smallest allowable angle in relation to the stop angle.

8.3 Swing Slow Stop

The swing slow stop functions while adopting the stop positions by working range limit stop, shift to lower capacity at outrigger (O/R) slide beam differential extension, and boom interference stop as the target stop angle. However, when multiple conditions are met, the control is implemented for the one having the smallest allowable angle between the target stop angle and current swing angle.

https://truckmanualshub.com/

B-9 AML Cancel Function

9.1 Introduction

This function aims to prevent an occurrence of accident caused by the canceling of AML. However, depending on circumstances, because a returning to normal status is not possible unless the stop function is cancelled, the specification for such circumstances are described below.

The table below indicates the availability of stop function cancel for each cancel mode defined in this specification.

- User mode indicates the normal operation status.

Table 9.1.1 Relationship of cancel mode and stop condition

Cancel mode			Interlock stop ＊1	Load moment ratio 100% stop	Re-stop ＊4	Range limit	Anti-twoblock stop	Backward stability stop
User mode	Normal status (Without cancel)	No detector abnormality	○ (Stop)	○ (Stop)	○ (Stop)	○ (Stop)	○ (Stop)	○ (Stop)
		With detector abnormality	Operation impossible due to vent in this status					
	Cancel status	No detector abnormality	△＊5 (Mixed)	× (Cancel)	○ (Stop)	× (Cancel)	○ (Stop)	○ (Stop)
		With detector abnormality	△＊2 (Mixed)	× (Cancel)	× (Cancel)	× (Cancel)	○ (Stop)	△＊2 (Mixed)

○: Stop function effective △: Stop function is effective or disabled depending on condition

×: Stop function disabled

＊1: Stop function indicated in Table 9.3.1 Relationship between automatic stop function and cancel availability.

＊2: When there is an abnormality with the detector needed for obtaining the machine information that constitutes the stop condition, all stop functions will be canceled. However, when the detector is normal which can detect the stop condition, the cancel-prohibited stop functions will not be canceled even if the cancel status is judged.

＊4: It is the overload stop with which the stop is performed even during normal cancel status.

＊5: The details on the availability of stop function cancel are described in Table 9.3.1.

https://truckmanualshub.com/

9.2 Canceling Method

9.2.1 Cancel Status Judgment

The cancel status is judged by the level detection of momentary type cancel switch. Therefore, the canceling of interlock stop is effective only while the cancel switch is ON.

9.2.2 Cancel Switch Abnormality Judgment

As the cancel switch trouble judgment, if the cancel switch is ON when PTO is ON, a warning code (W0191) ＊ is displayed, and beep is sounded. In the cancel status, the cancel indicator LED of AML display panel lights up.

The external indicator lamp for cancel shall be red.

＊ 1. The warning code and beep sound are maintained for 120 seconds. Even during the warning status, the warning is stopped when the switch is returned to the neutral.

The sounding of warning beep cannot be muted by the alarm OFF function.

2. If the cancel switch is ON when each of the boom/jib selection setting, outrigger status changeover setting, and counterweight setting is performed, the warning code and beep sound are maintained for 5 seconds.

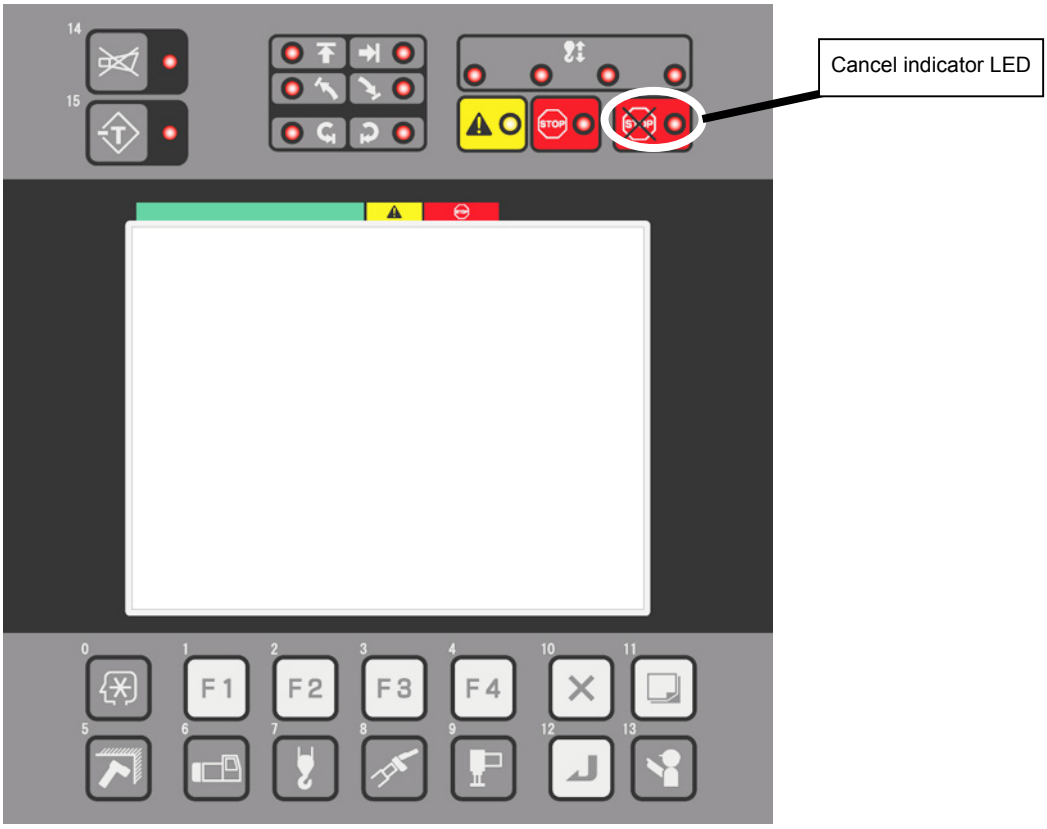

Fig. 9.2.1 Cancel indicator LED

https://truckmanualshub.com/

9.3 Interlock Stop

9.3.1 Cancel Contents

The table below shows the relationship between the automatic stop function and cancel availability described in "6.1 Cause for AML Automatic Stop Output." (Including items that are not applicable depending on models)

Table 9.3.1 Relationship between automatic stop function and cancel availability

Stop function name	Stop function at AML cancel
Elevation lower limit	×
Elevation upper limit	×

○: Stop function enable ×: Stop function disable

9.4 Overload Cancel

When the status ＊1 or ＊2, specific to large-sized crane, is entered at load moment ratio (load ratio) 100% stop, this function aims to return the crane to the safe side.

＊1 During the insertion operation into the indoors, when the lifted load reaches 100% while the boom is being extended and the lifted load is being adjusted by winch hoist-down, the retraction and hoist-up operation will need to be performed at the same time for the recovery operation (the winch hoist-up is recognized as the dangerous operation). Therefore, the overload cancel becomes required.

＊2 During the operation with the boom raising, when the 100% stop is performed due to a physical contact of boom top with an obstacle {if the elevation is raised with boom contacted against an obstacle, the pressure becomes high at the tube (extension) side, resulting in the increase of detected hoist medium load}, the elevation lowering will be needed for recovery operation (the elevation lowering is recognized as the dangerous operation). Therefore, the overload cancel is required.

9.4.1 Cancel Contents

In the load moment ratio (load ratio) 100% stop status, the dangerous operation judgment is disabled.

The dangerous operations with load moment ratio (load ratio) 100% stop are as follows:

- Main winch hoist-up
- Auxiliary winch hoist-up
- Boom elevation lowering
- Boom telescoping extension
- Right and left swing (when a capacity change occurs due to the differential outrigger slide extension status, the capacity of swing destination is smaller than present hoist medium load)

https://truckmanualshub.com/

9.5 Detector Abnormality

9.5.1 Stop Processing at Detector Abnormality (Compulsory unload output)

When a failure occurs with a detector that is needed to calculate the load moment ratio (load ratio) (error code Nos. of 1000s and 2000s), the automatic stop cannot be performed by the "re-stop condition."

Therefore, in the AML cancel status at detector abnormality, all the stop functions are canceled.

However, when the detector needed for stop function is working normally, the relevant automatic stop function is enabled (only the ones canceling is not allowed).

The list of necessary detectors for automatic stop functions is shown in the table below.

When a detector abnormality exists, compulsory unload is always performed due to the abnormality status but not by an operation.

However, the swing operation shall be permitted.

BM: Boom
S/T: Single top
JB: Jib
PJ: Power tilt jib
JS: Jib set
FLJ: Full auto Luff. Jib

Table 9.5.1 Relationship between detector abnormality and automatic stop function (including items that are not applicable depending on models)

Stop item		E1001	E1002	E1003	E1004	E1005	E1006	E1007	E1008	E1009	E1010	E1011	E1012	E2003	E2004	E2005	E2006	E2007	E2009	E2010	E2011	E2012	E2017	E2019	E2021	E2023	E2030
Do output control (Refer to P.59) Stop condition	AML status	AML communication line open	AML transmission line open	AML reception line open	AML reception line open	Transmitter abnormality	Transmitter abnormality	AML transmission data abnormality	AML transmission data abnormality	AML reception data abnormality	AML reception data abnormality	Device type abnormality	Device type abnormality	BM length abnormality	BM angle abnormality	Jib length abnormality	Jib angle abnormality	Jib angle abnormality	Front right O/R length abnormality	Rear right O/R length abnormality	Front left O/R length abnormality	Rear left O/R length abnormality	Swing angle 1 abnormality	Swing angle 2 abnormality	Swing angle abnormality	Moment abnormality	Elevation retraction pressure abnormality
100% lifting performance stop	BM,S/T	×	×	×	×	×	×	×	×	×	×	×	×	×	×	—	—	—	×	×	×	×	×	×	×	×	×
	JB	×	×	×	×	×	×	×	×	×	×	×	×	×	×	×	×	×	×	×	×	×	×	×	×	×	×
Anti-twoblock stop	—	○	○	○	○	○	○	○	○	○	○	○	○	○	○	○	○	○	○	○	○	○	○	○	○	○	○
Backward stability stop	—	○	×	○	×	○	×	○	×	○	×	○	×	×	×	○	○	○	×	×	×	×	×	×	×	○	○
Boom upper limit stop	—	○	○	○	○	○	○	○	○	○	○	○	○	○	×	○	○	○	○	○	○	○	○	○	○	○	○
Boom lower limit stop	—	○	○	○	○	○	○	○	○	○	○	○	○	○	×	○	○	○	○	○	○	○	○	○	○	○	○
Lifting height limit stop	BM,S/T	○	○	○	○	○	○	○	○	○	○	○	○	×	×	○	○	○	○	○	○	○	○	○	○	×	×
	JB	×	○	×	○	×	○	×	○	×	○	×	○	×	×	×	×	×	○	○	○	○	○	○	○	×	×
Load radius limit stop	BM,S/T	○	○	○	○	○	○	○	○	○	○	○	○	×	×	○	○	○	○	○	○	○	○	○	○	×	×
	JB	×	○	×	○	×	○	×	○	×	○	×	○	×	×	×	×	×	○	○	○	○	○	○	○	×	×
Jib tilt lower limit automatic stop	JB	×	○	×	○	×	○	×	○	×	○	×	○	×	○	○	×	○	○	○	○	○	○	○	○	○	○
Jib tilt upper limit automatic stop	JB	×	○	×	○	×	○	×	○	×	○	×	○	×	○	○	×	○	○	○	○	○	○	○	○	○	○
Main winch unwind stop	—	○	○	○	○	○	○	○	○	○	○	○	○	○	○	○	○	○	○	○	○	○	○	○	○	○	○
Auxiliary winch unwind stop	—	○	○	○	○	○	○	○	○	○	○	○	○	○	○	○	○	○	○	○	○	○	○	○	○	○	○
Automatic stop by no-insertion of jib fixing pin	—	×	○	×	○	×	○	×	○	×	○	×	○	○	○	○	×	○	○	○	○	○	○	○	○	○	○
Boom retraction automatic stop	—	×	○	×	○	×	○	×	○	×	○	×	○	×	○	○	○	○	○	○	○	○	○	○	○	○	○
Jib automatic pin stop	—	×	○	×	○	×	○	×	○	×	○	×	○	○	×	○	○	○	○	○	○	○	○	○	○	○	○
Jib set pin stop	—	×	○	×	○	×	○	×	○	×	○	×	○	○	×	○	○	○	○	○	○	○	○	○	○	○	○
Automatic stop by jib set abnormality	PJ-JS	×	○	×	○	×	○	×	○	×	○	×	○	○	○	×	○	○	○	○	○	○	○	○	○	○	○
Automatic stop by unlock the jib connecting pin	—	×	○	×	○	×	○	×	○	×	○	×	○	○	○	○	○	○	○	○	○	○	○	○	○	○	○
Automatic stop by FLJ angle to ground 0°	—	×	○	×	○	×	○	×	○	×	○	×	○	○	○	○	○	×	○	○	○	○	○	○	○	○	○
Minimum elevating capacity stop	—	○	○	○	○	○	○	○	○	○	○	○	○	×	×	○	○	○	○	○	○	○	○	○	○	○	○
Automatic stop by pivot side no-insertion of jib connecting pin	—	×	○	×	○	×	○	×	○	×	○	×	○	○	○	○	○	○	○	○	○	○	○	○	○	○	○
Elevating cylinder stroke end stop	—	○	○	○	○	○	○	○	○	○	○	○	○	○	×	○	○	○	○	○	○	○	○	○	○	○	○
Elevation lower limit	—	○	○	○	○	○	○	○	○	○	○	○	○	○	×	○	○	○	○	○	○	○	○	○	○	○	○
Elevation upper limit	—	○	○	○	○	○	○	○	○	○	○	○	○	○	×	○	○	○	○	○	○	○	○	○	○	○	○

Canceling of automatic stop is not allowed.
○ Stop function is enabled even when cancel is performed while abnormal.
× Stop function is disabled even when cancel is performed while abnormal

https://truckmanualshub.com/

Chapter C

C

Maintenance Mode

Contents

Outline of Maintenance Mode.....80

C-1 Operation Keys and Menu.....81

1.1 Operation Keys 81

1.2 Structure of Maintenance Mode Menu..... 82

1.3 Mode Shift and Menu Structure 83
1.3.1 Shift to Maintenance Mode..... 83
1.3.2 Menu Selection..... 83
1.3.3 Maintenance Main Menu Functions 84

C-2 Individual Main Menu Functions...85

2.1 ROM ID check 85

2.2 Di Check 86

2.3 Ai Check 87

2.4 Pi Check 88

2.5 Si Check 89

2.6 Do Check 91

2.7 Ao Check 92

2.8 MDT Check..... 93
2.8.1 Description of Display Contents.....93
2.8.2 Operation Method 93
2.8.3 Selection of MDT Check Menu Item 94
2.8.4 MDT Check, Display of Upper Section Di Check State 95
2.8.5 MDT Check, Display of Upper Section Ai Check State.....96
2.8.6 MDT Check, Display of Upper Section Do Check State.....97
2.8.7 MDT Check, Display of Lower Section Di Check State 98
2.8.8 MDT Check, Display of Lower Section Ai Check State 99
2.8.9 MDT Check, Display of Lower Section Do Power Check State.....100
2.8.10 MDT Check, Display of Lower Section Do Check State.....101
2.8.11 MDT Check, Display of Lower Section Ao Check State 102
2.8.12 MDT Check, Display of Pi Check State 103

2.9 System Voltage Check 104

2.10 Error History Display..... 105

2.11 Erasing Error History..... 106

2.12 AML Emergency Switch History Display107

2.13 Latest Overload History Display..... 108

https://truckmanualshub.com/

2.14 Maximum Overload History Display 109

2.15 Outrigger Emergency Setting History Display 110

2.16 Telematics Check 111

2.17 Clock Adjustment 112

2.18 Meter Adjustment 114

2.19 Unit Selection 115

2.20 Language Selection 116

C-3 Integrated Information Display Screen 117

3.1 Crane Information Display Screen 117

3.2 Vehicle Information Display Screen 117

3.3 Display Contents 118

3.4 Vehicle Error Information 121

C-4 Error Code 122

4.1 Classification of Error Code 122

4.2 Error History 122

4.3 Error Notification 123

4.4 Error Code Table 124

4.4.1 Communication Device Error (Transmitter, etc.) 124

4.4.2 Detector Abnormality or Abnormal Combination of Detectors 127

4.4.3 AML Internal Abnormality (System Abnormality) 132

4.5 CPU State Indicator LED 133

C-5 Required Adjustment after AML System Part Replacement ... 134

C-6 Disassembly and Assembly 135

6.1 Disassembly of AML Main Unit 135

6.2 Connector 136

6.2.1 Removing and attaching the connector contact 136

6.2.2 Crimping receptacle contact 148

6.3 Replacing the Clock Battery 149

https://truckmanualshub.com/

Outline of Maintenance Mode

The AML has the following three basic operation modes.
This chapter describes the operation method in maintenance mode.

- User Mode: Used by the operator to operate the crane.
  For the operation method of User mode, refer to "Chapter B, User Mode."

- Maintenance Mode: Used to perform the AML maintenance menu (operation check, reference of history information, etc).
  Also, some adjustment functions such as clock adjustment are included in the maintenance mode.

- Adjustment Mode: Used to adjust detectors, actuators, etc.
  For the operation method of adjustment mode, refer to "Chapter D, Adjustment Mode."

https://truckmanualshub.com/

C-1 Operation Keys and Menu

1.1 Operation Keys

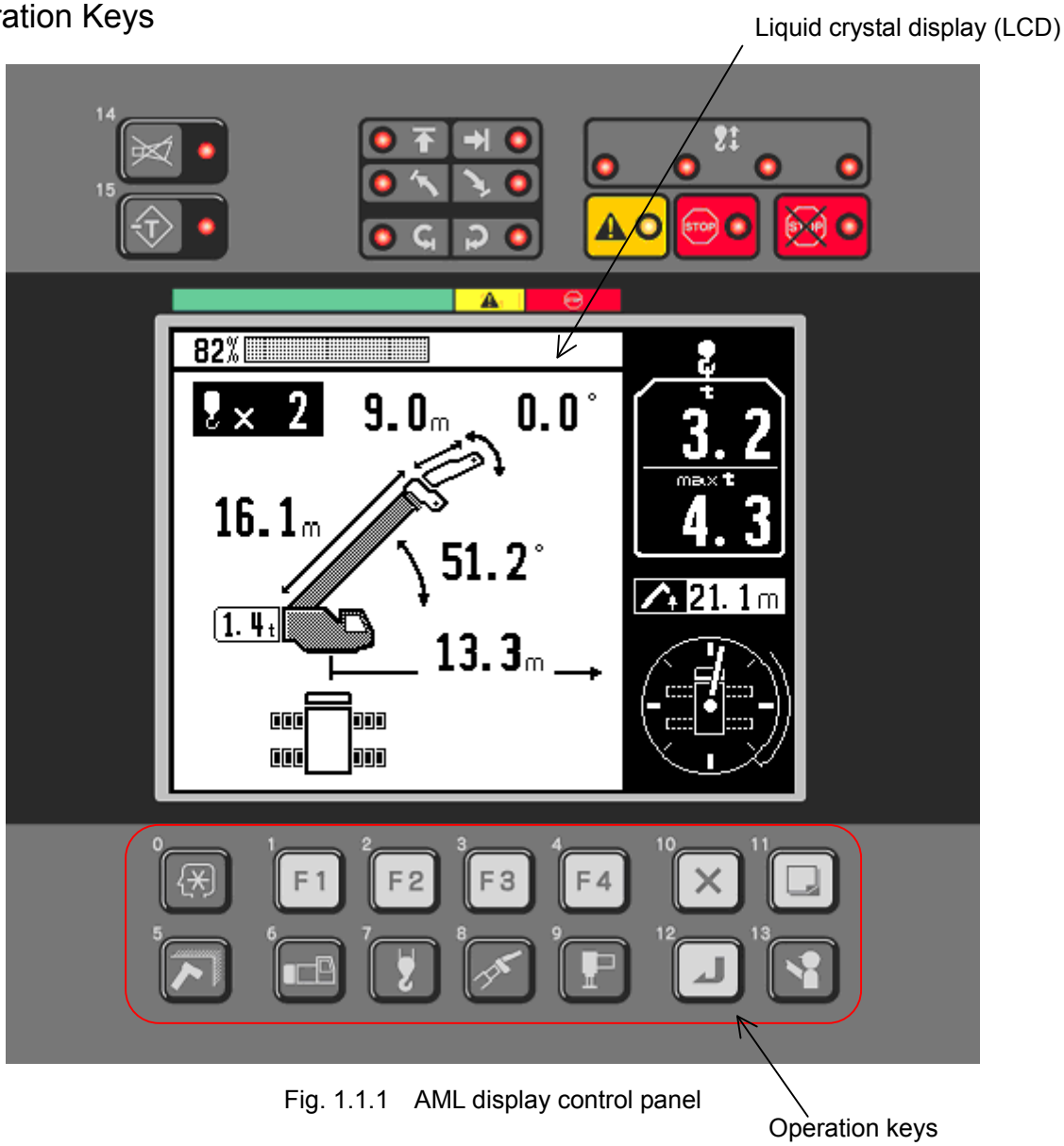

Fig. 1.1.1 AML display control panel

The following keys are used in the maintenance and adjustment mode. On and after, < > in the descriptions indicates the operation key.

Key No.	Key name	Function
1	<F1 Function 1>:	Used for functions displayed on the adjustment mode screen with F1.
2	<F2 Function 2>:	Used for functions displayed on the adjustment mode screen with F2.
3	<F3 Function 3>:	Used for functions displayed on the adjustment mode screen with F3.
4	<F4 Function 4>:	Used for functions displayed on the adjustment mode screen with F4.
10	<× Cancel>:	Used to quit the menu that is running.
11	<Display change>:	Used to change the displayed information.
12	<Set>:	Used to determine the menu selection or to register the adjustment value.
13	<Inspection>:	Used to erase the adjustment value for the precision adjustment.

https://truckmanualshub.com/

1.2 Structure of Maintenance Mode Menu

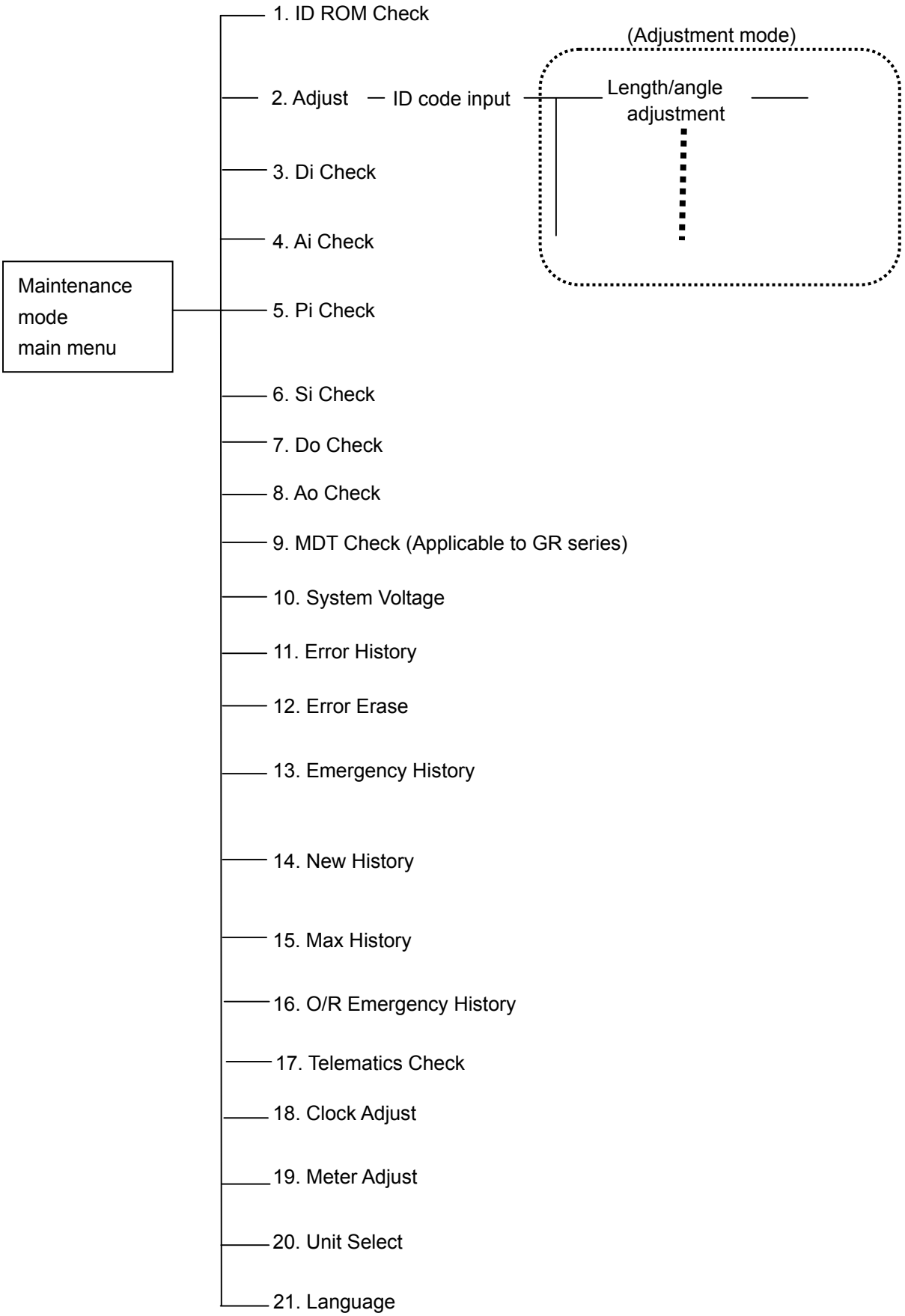

https://truckmanualshub.com/

1.3 Mode Shift and Menu Structure

1.3.1 Shift to Maintenance Mode

In the user mode, when all the three keys of the <F3> key, the <F4> key, and the <↵> key are pressed and held simultaneously for 0.5 seconds or more, the mode shifts to the maintenance mode.
When the maintenance mode is entered, the liquid crystal display (LCD) shows the maintenance main menu as shown in Fig. 1.3.1.

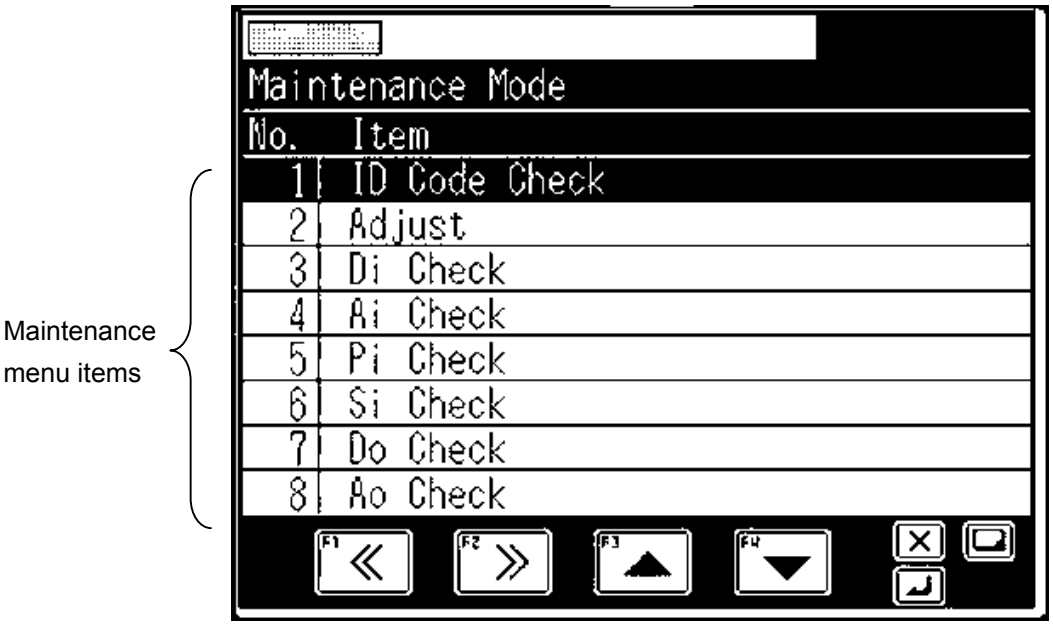

Fig. 1.3.1 Maintenance main menu display

1.3.2 Menu Selection

Pressing the <F3> key (scroll up) or the <F4> key (scroll down) changes the selected maintenance menu item (highlighted).
Pressing the <F1> key (previous page) or the <F2> key (next page) changes the pages.
With the targeted menu selected, pressing the <↵> key starts the selected menu.
To quit the maintenance mode, press the <✕> key while the maintenance main menu is being displayed.

https://truckmanualshub.com/

1.3.3 Maintenance Main Menu Functions

Table 1.3.1 shows the maintenance main menu functions.

Table 1.3.1 Maintenance main menu functions

Displayed menu	Menu function
1. ID ROM Check	For checking the ROM ID. Displays the program ID, data ID, etc.
2. Adjust	Transition to adjustment mode
3. Di Check	Displays the status of digital input.
4. Ai Check	Displays the status of analog input.
5. Pi Check	Displays the value of pulse input counter.
6. Si Check	Displays the status of serial input port.
7. Do Check	Performs the digital output value monitoring and ON/OFF test output.
8. Ao Check	Performs the analog output value monitoring and the command value test output.
9. MDT Check	Monitors the MDT internal information.
10. System Voltage	Displays the voltage value of internal circuit for AML unit.
11. Error History	Displays the error history (maximum of 50 items).
12. Error Erase	Erases the error history.
13. Emergency History	Displays the history of AML override switch input changeover (maximum of 100 items).
14. New History	Displays the latest overload history (maximum of 100 items).
15. Max History	Displays the maximum overload history (maximum of 100 items).
16. O/R Emergency History	Displays the history of outrigger emergency setting history (maximum of 10 items).
17. Telematics Check	Displays various information of Telematics.
18. Clock Adjust	Adjusts the built-in calendar and clock of AML.
19. Meter Adjust	Adjusts the hour meter and odometer of DCU.
20. Unit Select	Selects the unit of display (m / ton, ft / klb).
21. Language	Selects the language to be displayed.

https://truckmanualshub.com/

C-2 Individual Main Menu Functions

2.1 ROM ID check

In the maintenance main menu of Fig. 1.3.1, select "ID Code Check," and press the <↵> key to display the AML ID check screen shown in Fig. 2.1.1.

Pressing the <✕> key quits the menu, and the display returns to the maintenance main menu. Displayed items are listed below.

When the transmitter STM-D is connected, pressing the <F1> key or the <F2> key displays the connected device ID check screen shown in Fig. 2.1.2.

- ROM Code No.
- Crane Specification code
- Data ID
- Program ID
- Making date of data. (From left, year, month, day.)
- RC ChartMask ID (only for FAUN specification)
- STM-D ID (Refer to Chapter A 1.1.2 AML-C Block diagram)

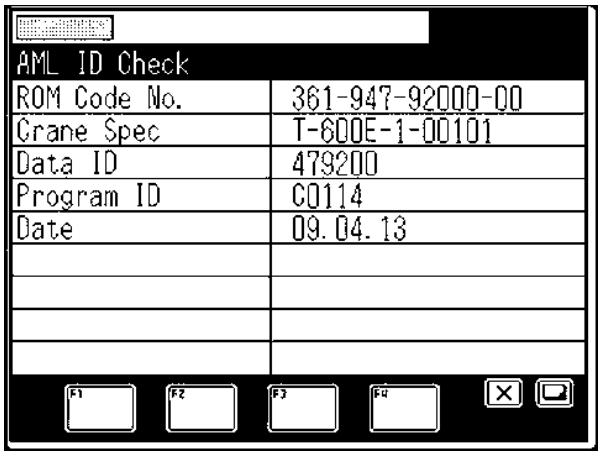

Fig. 2.1.1 AML ID check screen

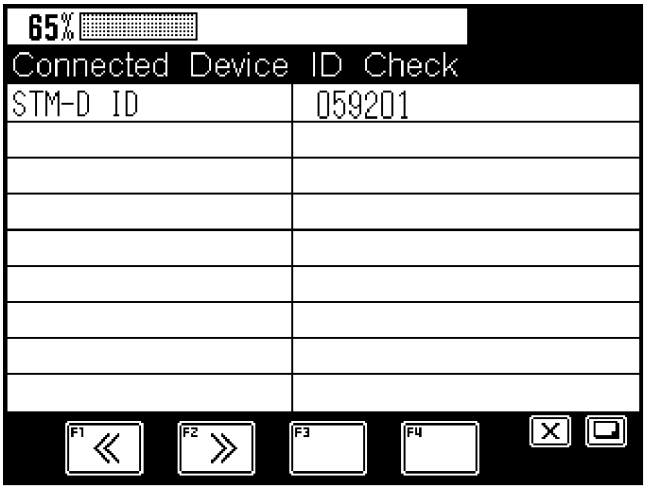

Fig. 2.1.2 Connected device ID check screen

https://truckmanualshub.com/

2.2 Di Check

Displays the status of digital input. In the maintenance main menu of Fig. 1.3.1, select "Di Check," and press the <↵> key to display the Di check screen shown in Fig. 2.2.1.
Pressing the <F1> key (previous page) or the <F2> key (next page) changes the pages.
To go back to the maintenance main menu, press the <✕> key.

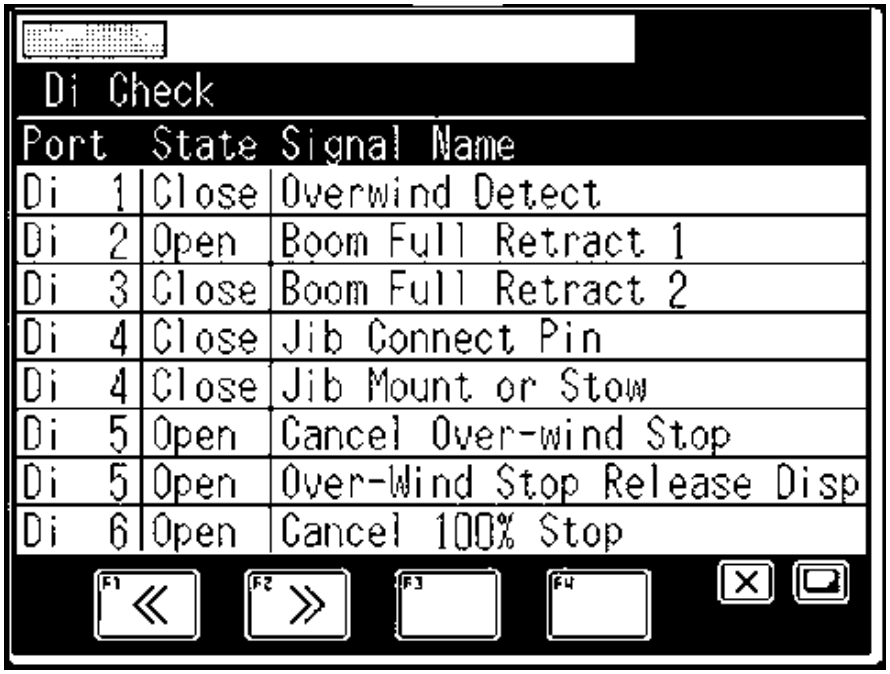

Fig. 2.2.1 Di check screen

<Description of display contents>

Port		State
Di1 to Di28:	Input to AML	Close: Contact ON
Ds11 to Ds18:	Input to serial port 1	Open: Contact OFF
Ds21 to Ds28:	Input to serial port 2	

Reading method of Di signal (State)
Di signal “State” shows “Open” and “Close” of the each switch contact.
However, Main and Aux. winch twoblocking detection switch (circuit) contacted with the series circuit.
Therefore when either switch detects the overwound and the switch contact becomes “Open”, then, both contacts become “Open”. In a word, State of Di5 changes two signals at the same time.
These functions are not provided in other Ai and Pi, etc.

https://truckmanualshub.com/

2.3 Ai Check

Displays the status of analog input. In the maintenance main menu of Fig. 1.3.1, select "Ai Check," and press the <↵> key to display the Ai check screen shown in Fig. 2.3.1.
Pressing the <F1> key (previous page) or the <F2> key (next page) changes the pages.
To go back to the maintenance main menu, press the <✕> key.

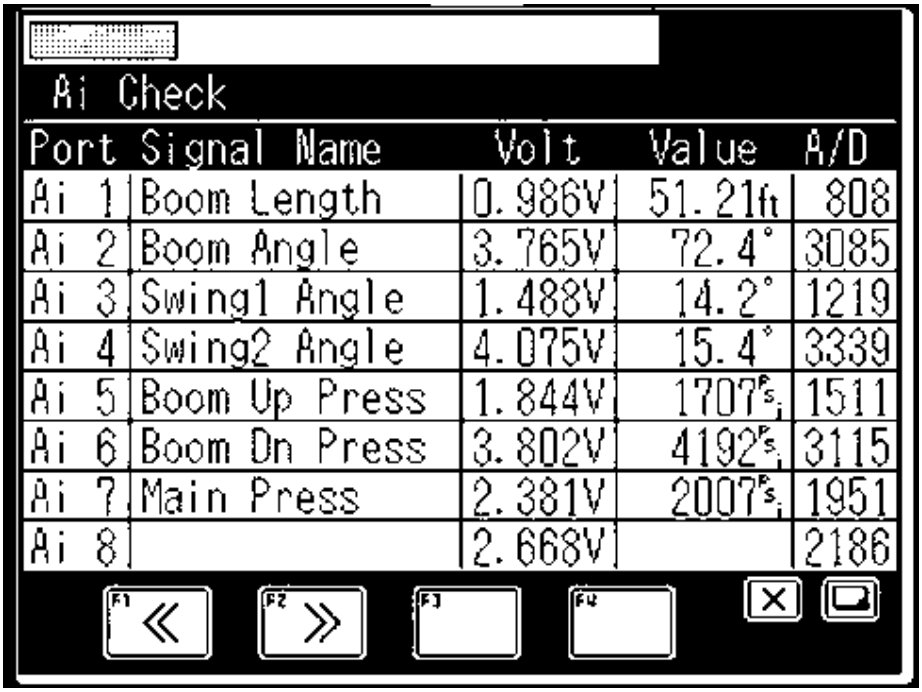

Fig. 2.3.1 Ai check screen

<Description of display contents>

Port

Ai 1 to Ai 8: Input to AML

As11 to As14: Input from serial port 1 transmitter

As21 to As25: Input from serial port 2 transmitter

Volt: Input terminal voltage

Value: Value of input voltage that is converted to the physical quantity

A/D: Value with which the input voltage is converted to digital value (0 to 5 V is converted to 0 to 4095.)

https://truckmanualshub.com/

2.4 Pi Check

Displays the status of pulse input. In the maintenance main menu of Fig. 1.3.1, select "Pi Check," and press the <↵> key to display the Pi check screen shown in Fig. 2.4.1.
To go back to the maintenance main menu, press the <⊠> key.

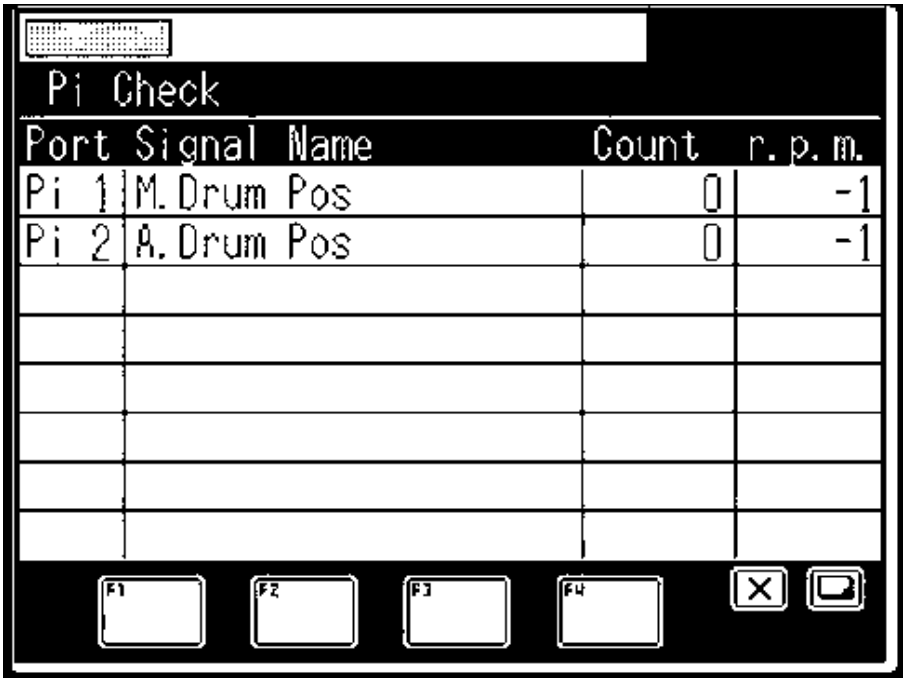

Fig. 2.4.1 Pi check screen

<Description of display contents>
Port
PiA1 to PiA2: 2-phase pulse input
Pi1 to Pi3: Single phase pulse input

Count: Pulse integrated value (Positive value to negative value)

r.p.m.: Winch drum rotation speed

https://truckmanualshub.com/

2.5 Si Check

Displays the status of serial port. In the maintenance main menu of Fig. 1.3.1, select "Si Check," and press the <⏎> key to display the Si check screen shown in Fig. 2.5.1.
To go back to the maintenance main menu, press the <⊠> key.

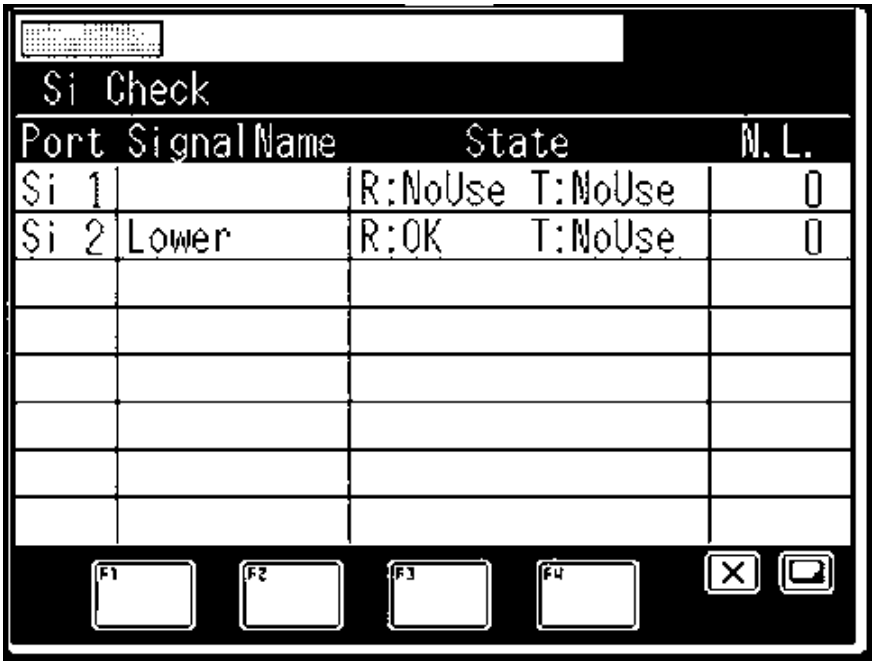

Fig. 2.5.1 Si check screen

<Description of display contents>

Port

Si1 to Si2: Communication port with transmitter

Signal Name

JIB: Transmitter for jib

Lower: Lower transmitter

State

Reception state (R)		Transmission state (T)	
OK:	Normal	OK:	Normal
NG:	Error	NG:	Error
NoUse:	Unused port	NoUse:	Unused port
		?:	Transmission state unknown due to reception error

N.L.: Noise Level

Value for the data reception failure count (since the power is turned on).

Used as a guideline of the communication state.

https://truckmanualshub.com/

When a node is connected to the CAN, the state of each node is also displayed as shown in Fig. 2.5.2.

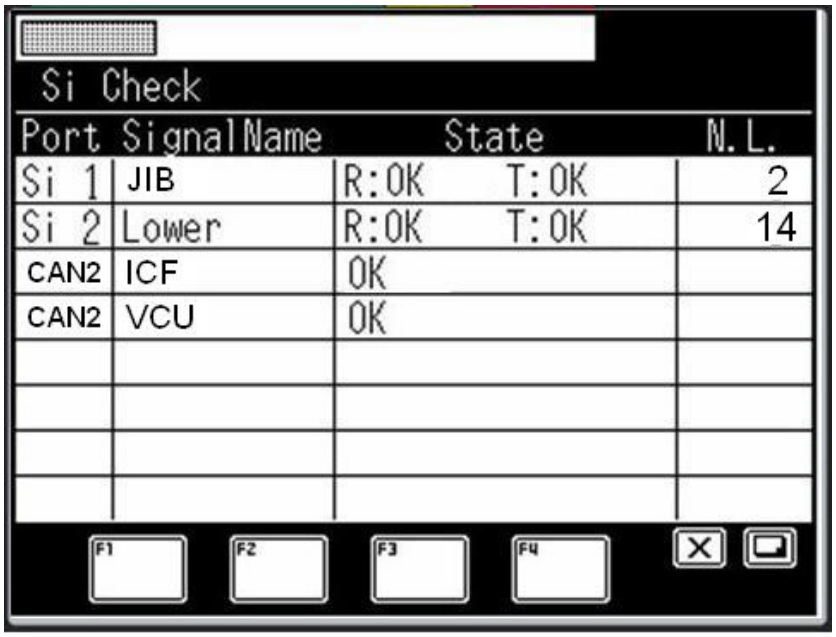

Fig. 2.5.2 Si check screen including CAN node state

<Description of display contents>

Port

CAN1 to CAN2: CAN communication port

Signal Name

ICF: Node name of information controller for Telematics

VCU: Node name of controller for vehicle

(Reference: Represents the DCU, and used for the meter panel control.)

State

OK: Normal

NG: Error

N.L.: Noise Level

Value for the data reception failure count (since the power is turned on).

Used as a guideline of the communication state.

https://truckmanualshub.com/

2.6 Do Check

Displays the status of digital output. In the maintenance main menu of Fig. 1.3.1, select "Do Check," and press the <↵> key to display the Do check screen shown in Fig. 2.6.1.
Pressing the <F1> key (previous page) or the <F2> key (next page) changes the pages. Also, when the Do item is selected (highlighted) using the <F3> key (scroll up) or the <F4> key (scroll down), all type of auto stop solenoid valve is the output status of selected output can be reversed while the <⇅> key is pressed.
To go back to the maintenance main menu, press the <✕> key.

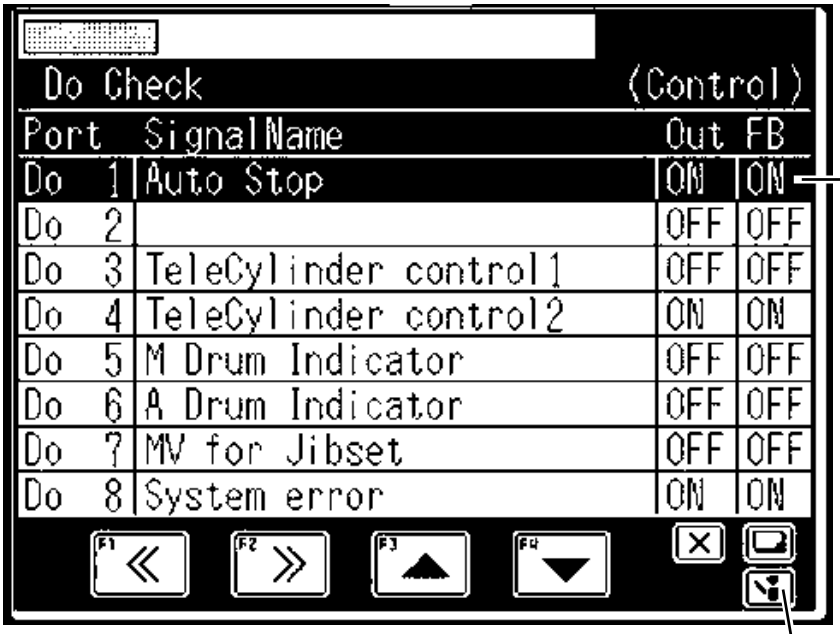

Normally energized type.

Fig. 2.6.1 Do check screen

Output of a selected Do port “out” can be reversed while “Check key” is being pushed (To ON -> OFF and OFF -> ON). Therefore, operation of the output of all Port can be confirmed.

When solenoid valve for Auto stop operates correctly crane is operated while pushing “Check key” even when stopped automatically due to a trouble, and to store it. (While outputting the revers signal of “Do1, Auto Stop signal”.)

<Description of display contents>

Port

Do1 to Do16:	Output from AML
Os11 to Os18:	Transmitter output via serial port 1
Os21 to Os28:	Transmitter output via serial port 2

Out: Current output state
ON: Output ON
OFF: Output OFF

FB: Current output feedback state
ON: Output ON
OFF: Output OFF

State

(Monitor):	Control output monitor
(Check):	Check output monitor

https://truckmanualshub.com/

2.7 Ao Check

Displays the status of analog output. In the maintenance main menu of Fig. 1.3.1, select "Ao Check," and press the <↵> key to display the Ao check screen shown in Fig. 2.7.1.
To perform the test output, select the set value of item (highlighted) using the <F3> key (scroll up) or the <F4> key (scroll down). The set value is increased or decreased using the <F2> key (+) or the <F1> key (-). While the <S> key is pressed, the set test value can be output.
To go back to the maintenance main menu, press the <✕> key.
To perform the continuous test output, press the <S> key and the <↵> key. In this case, the inspection output can be performed while increasing/decreasing the set value by using the <F2> key (+) or the <F1> key (-).
To quit the continuous test output, press any of the <S> key, the <✕> key, the <F3> key (scroll up), or the <F4> key (scroll down).

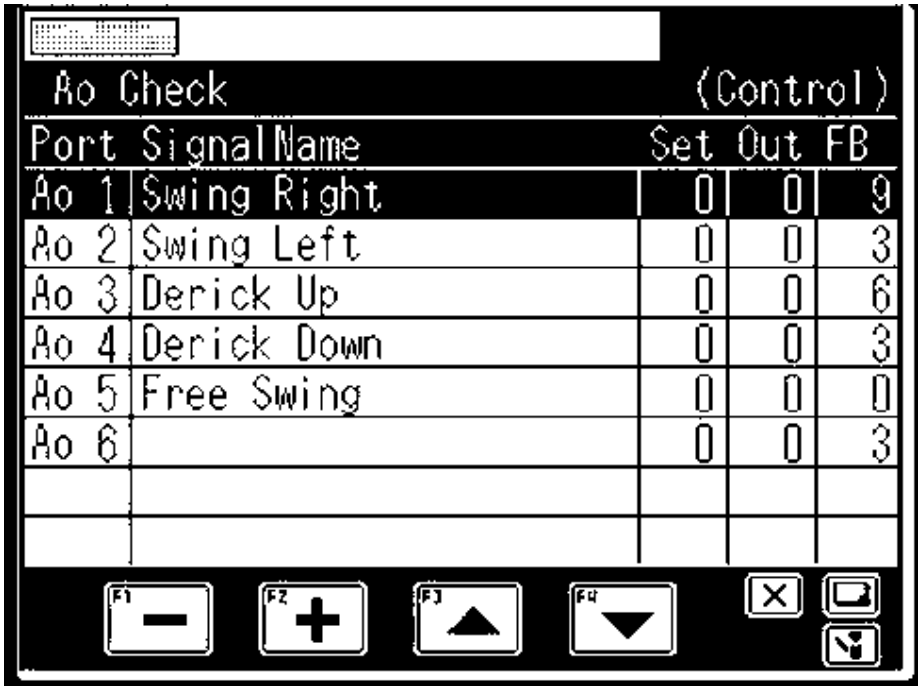

Fig. 2.7.1 Ao check screen

<Description of display contents>

Set: Set value for test output (D/A value: Selectable from 0 to 255)

Out: Current output value (D/A value: 0 to 255)

FB: Feedback current value (D/A value: 0 to 255)

State
(Monitor): Control output monitor
(Check): Check output monitor
(Check): Continuous check output monitor

Can not swing when the output value (D/A value) of “Ao1 Port” is 200 or more. But swing when the output value change to 0 with F4 key (scroll down).

When it becomes “Open completely = Full stroke” when the impressed current is 0, and 0.8 amperes (D/A value 255) are impressed, the Pilot pressure that controls the stroke of “Swing control value” becomes “Close completely = Zero stroke”. Therefore, flow rate from the pump can not supply to the swing motor, and the swing stops.

https://truckmanualshub.com/

2.8 MDT Check

Displays the input/output status of MDT (Multiplex Data Transmitter). In the maintenance main menu of Fig. 1.3.1, select "MDT Check," and press the <↵> key to display the MDT check menu selection screen shown in Fig. 2.8.1. (MDT check menu is only displayed.)
To go back to the maintenance main menu, press the <✕> key.

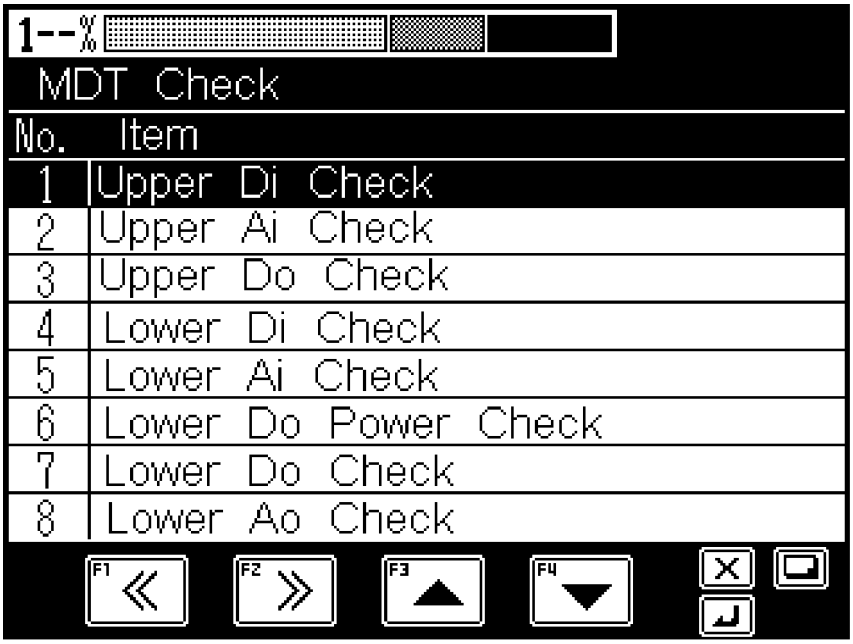

Fig. 2.8.1 MDT check menu selection screen

2.8.1 Description of Display Contents

No.:MDT check item No. (1 to 9)
Item: Name of the item to which MDT check is performed

2.8.2 Operation Method

Pressing the <F3> key (back) or the <F4> key (forward) moves the selected item (highlighted) of maintenance menu.
Pressing the <F1> key (previous page) or the <F2> key (next page) changes the pages. After the targeted menu is selected, pressing the <↵> key displays the status of selected menu item.
To quit the MDT check selection menu, press the <✕> key while the MDT check selection menu is being displayed.

For details of display contents, refer to the service manual (MDT-9) that is provided separately.

https://truckmanualshub.com/

2.8.3 Selection of MDT Check Menu Item

Table 2.8.1 shows the MDT check items.

Table 2.8.1 MDT check item

Menu item	Menu item content
1. Upper Di check	Displays the upper Di signal state (refer to 2.8.4).
2. Upper Ai check	Displays the upper Ai signal state (refer to 2.8.5).
3. Upper Do check	Displays the upper Do signal state (refer to 2.8.6).
4. Lower Di check	Displays the lower Di signal state (refer to 2.8.7).
5. Lower Ai check	Displays the lower Ai signal state (refer to 2.8.8).
6. Lower Do power check	Displays the lower Do power state (refer to 2.8.9).
7. Lower Do check	Displays the lower Do signal state (refer to 2.8.10).
8. Lower Ao check	Displays the lower Ao signal state (refer to 2.8.11).
9. Pi check ＊1)	Displays the upper/lower Pi signal state (refer to 2.8.12).

＊1) “Pi check” is displayed in next screen due to the size of LCD.

https://truckmanualshub.com/

2.8.4 MDT Check, Display of Upper Section Di Check State

Displays the input/output status of MDT. In the MDT check selection menu of Fig. 2.8.1, select "Upper Di Check," and press the <⏎> key to display the MDT check upper Di signal state display screen shown in Fig. 2.8.2.
To go back to the MDT check selection menu, press the <⊠> key.

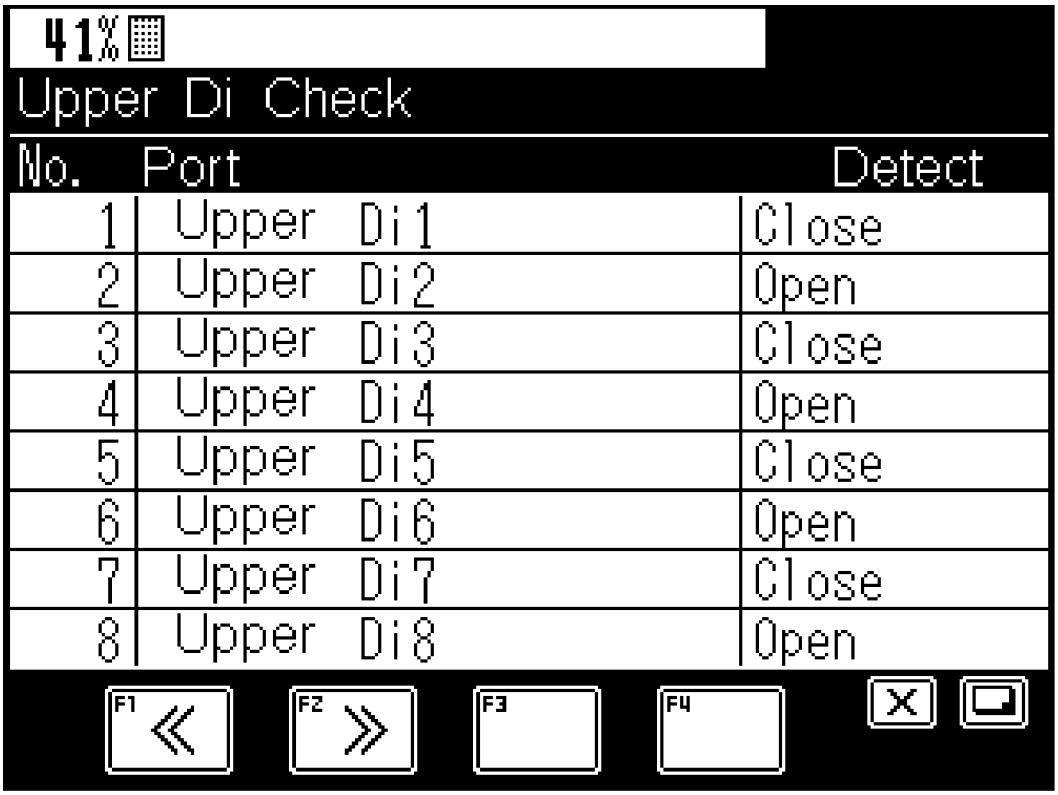

Fig. 2.8.2 Display screen of MDT check upper Di signal state

<Description of display contents>

No.: Input/output number of upper Di signal state display (1 to 64)

Port: Upper Di state display signal name

Detect: Close … Contact ON
Open … Contact OFF

<Operation method>

Pressing the <F1> key (previous page) or the <F2> key (next page) changes the pages.
To go back to the MDT check selection menu, press the <⊠> key.

https://truckmanualshub.com/

2.8.5 MDT Check, Display of Upper Section Ai Check State

Displays the input/output status of MDT. In the MDT check selection menu of Fig. 2.8.1, select "Upper Ai Check," and press the <⏎> key to display the MDT check upper Ai signal state display screen shown in Fig. 2.8.3.
To go back to the MDT check selection menu, press the <✕> key.

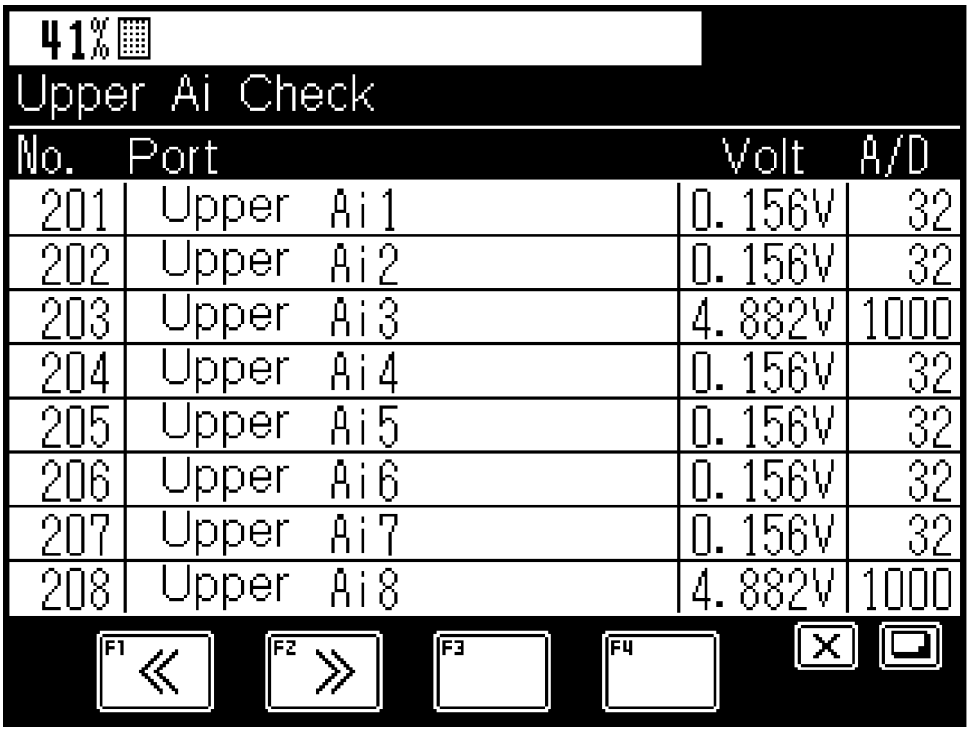

Fig. 2.8.3 Display screen of MDT check upper Ai signal state

<Description of display contents>

No.: Input/output number of upper Di signal state display (201 to 210)

Port: Upper Ai state display signal name

Volt: Input terminal voltage

A/D: Value with which the input voltage is converted to digital value (0 to 5 V is converted to 0 to 1023.)

<Operation method>

Pressing the <F1> key (previous page) or the <F2> key (next page) changes the pages.
To go back to the MDT check selection menu, press the <✕> key.

https://truckmanualshub.com/

2.8.6 MDT Check, Display of Upper Section Do Check State

Displays the input/output status of MDT. In the MDT check selection menu of Fig. 2.8.1, select "Upper Do Check," and press the <↵> key to display the MDT check upper Do signal state display screen shown in Fig. 2.8.4. To go back to the MDT check selection menu, press the <✕> key.

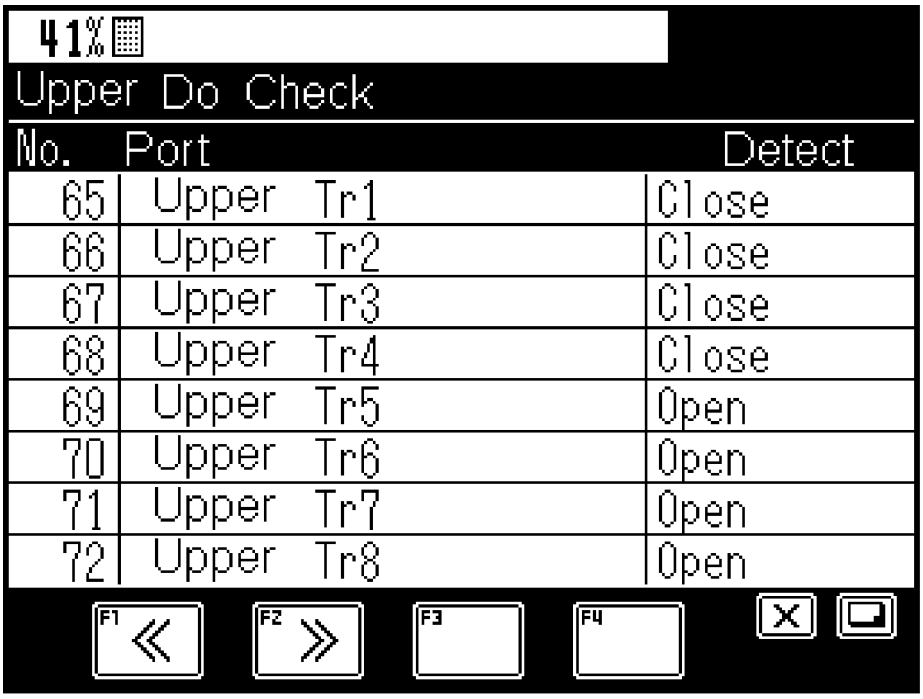

Fig. 2.8.4 Display screen of MDT check upper Do signal state

<Description of display contents>

No.: Input/output number of upper Do signal state display (65 to 88)

Port: Upper Do state display signal name

Detect: Close … Contact ON

Open … Contact OFF

<Operation method>

Pressing the <F1> key (previous page) or the <F2> key (next page) changes the pages.

To go back to the MDT check selection menu, press the <✕> key.

https://truckmanualshub.com/

2.8.7 MDT Check, Display of Lower Section Di Check State

Displays the input/output status of MDT. In the MDT check selection menu of Fig. 2.8.1, select "Lower Di Check," and press the <⏎> key to display the MDT check lower Di signal state display screen shown in Fig. 2.8.5.
To go back to the MDT check selection menu, press the <✕> key.

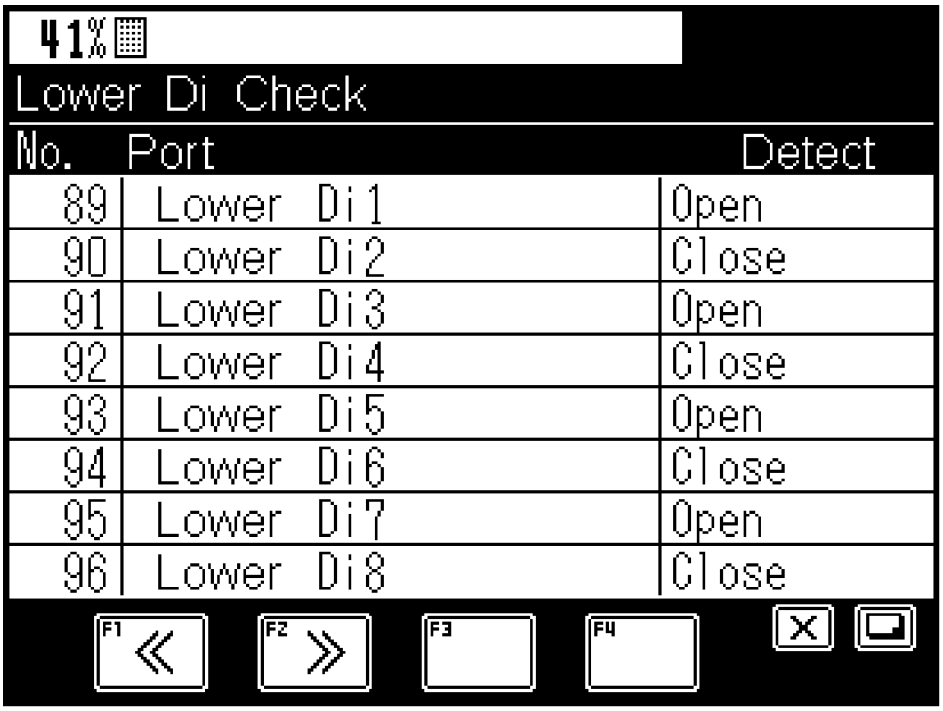

Fig. 2.8.5 Display screen of MDT check lower Di signal state

<Description of display contents>

No.: Input/output number of lower Di signal state display (89 to 120)

Port: Lower Di state display signal name

Detect: Close … Contact ON
Open ... Contact OFF

<Operation method>

Pressing the <F1> key (previous page) or the <F2> key (next page) changes the pages.
To go back to the MDT check selection menu, press the <✕> key.

https://truckmanualshub.com/

2.8.8 MDT Check, Display of Lower Section Ai Check State

Displays the input/output status of MDT. In the MDT check selection menu of Fig. 2.8.1, select "Lower Ai Check," and press the <↵> key to display the MDT check lower Ai signal state display screen shown in Fig. 2.8.6.
To go back to the MDT check selection menu, press the <✕> key.

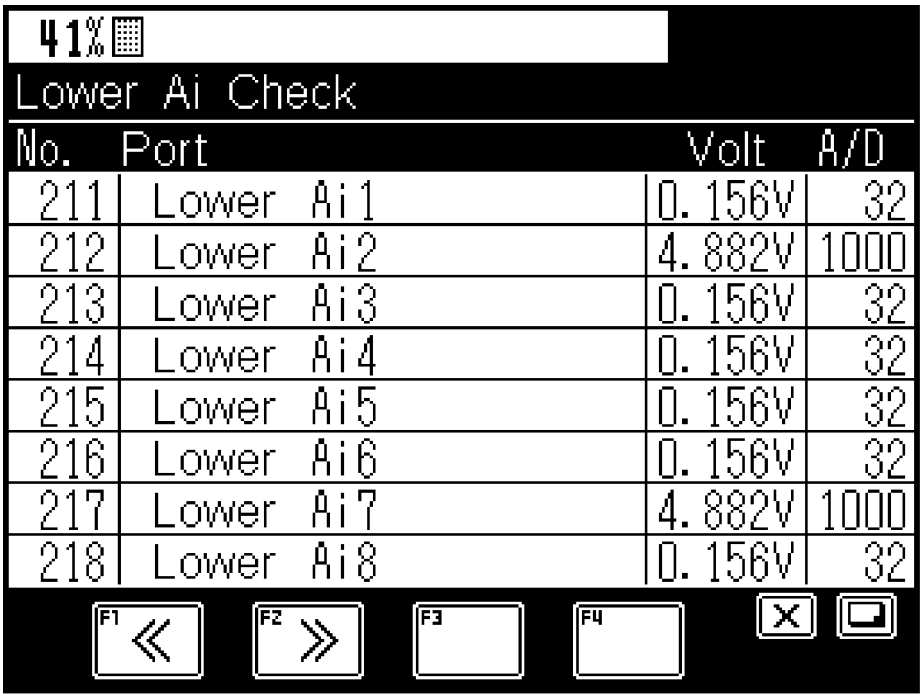

Fig. 2.8.6 Display screen of MDT check lower Ai signal state

<Description of display contents>

No.: Input/output number of lower Ai signal state display (211 to 222)

Port: Lower Ai state display signal name

Volt: Input terminal voltage

A/D: Value with which the input voltage is converted to digital value (0 to 5 V is converted to 0 to 1023.)

<Operation method>

Pressing the <F1> key (previous page) or the <F2> key (next page) changes the pages.
To go back to the MDT check selection menu, press the <✕> key.

https://truckmanualshub.com/

2.8.9 MDT Check, Display of Lower Section Do Power Check State

Displays the input/output status of MDT. In the MDT check selection menu of Fig. 2.8.1, select "Lower Do Power Check," and press the <⏎> key to display the MDT check lower Do power signal state display screen shown in Fig. 2.8.7. To go back to the MDT check selection menu, press the <⊠> key.

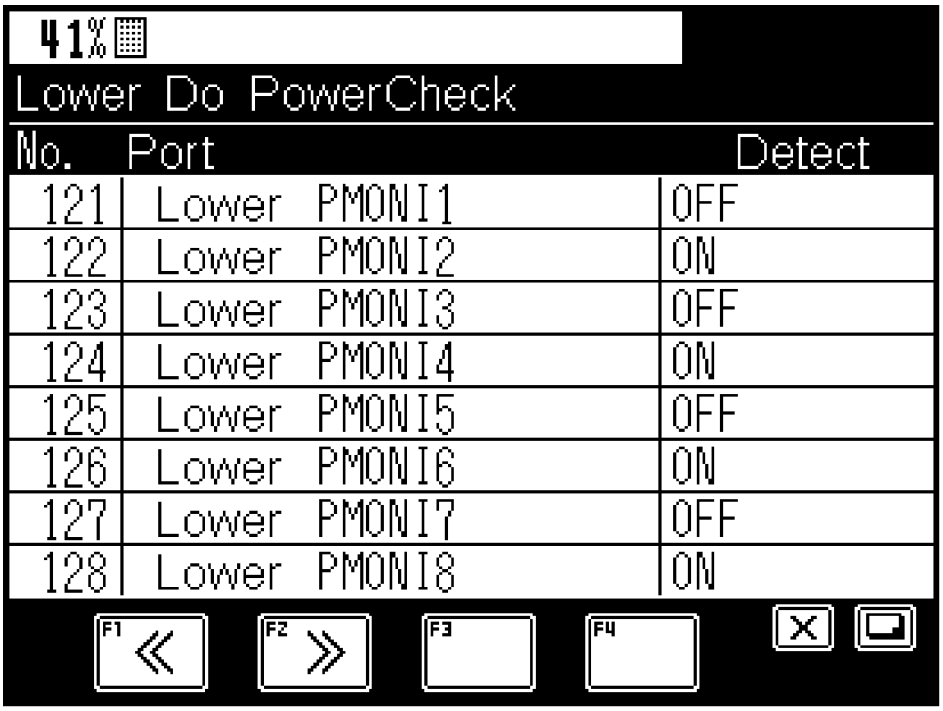

Fig. 2.8.7 Display screen of MDT check lower Do power signal state

<Description of display contents>

No.: Input/output number of lower Do power signal state display (121 to 136)

Port: Lower Do power state display signal name

Detect: ON ….. Output ON

OFF … Output OFF

<Operation method>

Pressing the <F1> key (previous page) or the <F2> key (next page) changes the pages.

To go back to the MDT check selection menu, press the <⊠> key.

https://truckmanualshub.com/

2.8.10 MDT Check, Display of Lower Section Do Check State

Displays the input/output status of MDT. In the MDT check selection menu of Fig. 2.8.1, select "Lower Do Check," and press the <↵> key to display the MDT check lower Do signal state display screen shown in Fig. 2.8.8. To go back to the MDT check selection menu, press the <✕> key.

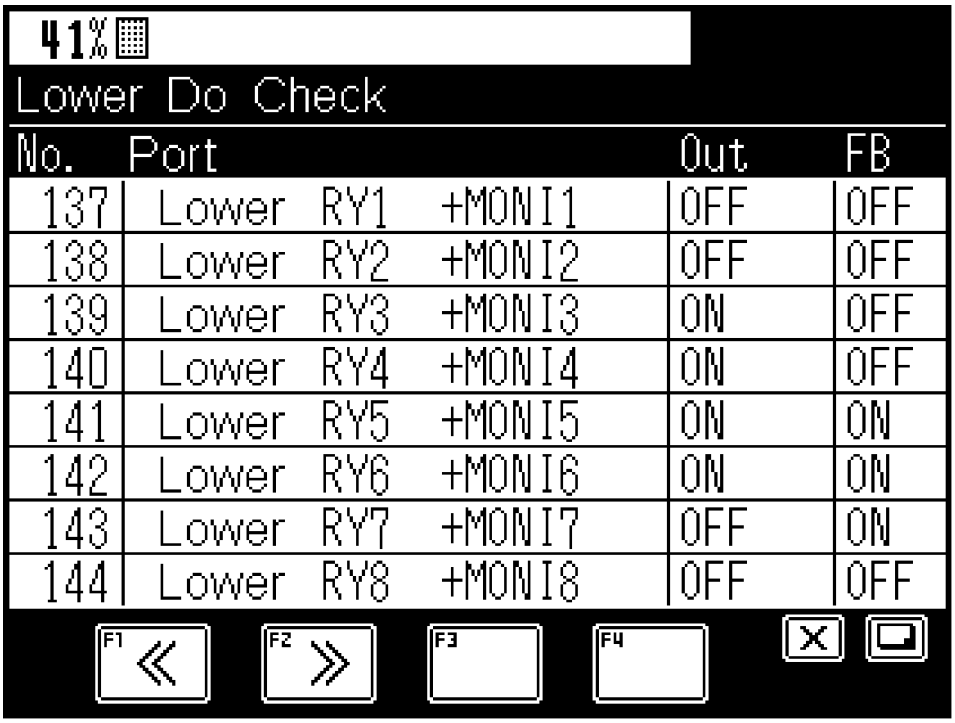

Fig. 2.8.8 Display screen of MDT check lower Do signal state

<Description of display contents>

No.: Input/output number of lower Do signal state display (137 to 199)

Port: Lower Do state display signal name

Out: ON ... Output ON
OFF ... Output OFF

FB: Current output feedback state
ON ... Output ON
OFF ... Output OFF
___ ... No monitor

<Operation method>

Pressing the <F1> key (previous page) or the <F2> key (next page) changes the pages.
To go back to the MDT check selection menu, press the <✕> key.

https://truckmanualshub.com/

2.8.11 MDT Check, Display of Lower Section Ao Check State

Displays the input/output status of MDT. In the MDT check selection menu of Fig. 2.8.1, select "Lower Ao Check," and press the <↵> key to display the MDT check lower Ao signal state display screen shown in Fig. 2.8.9. To go back to the MDT check selection menu, press the <⊠> key.

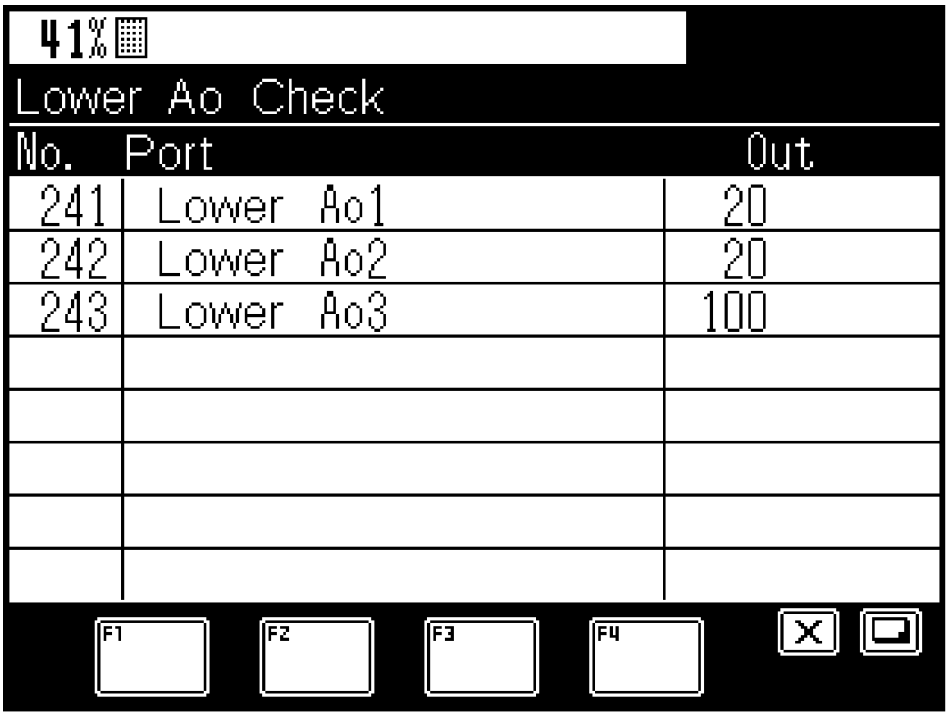

Fig. 2.8.9 Display screen of MDT check lower Ao signal state

<Description of display contents>

No.: Input/output number of lower Ao signal state display (241 to 243)

Port: Lower Ao state display signal name

Out: Current output value (Ao value: 0 to 1023)

<Operation method>

To go back to the MDT check selection menu, press the <⊠> key.

https://truckmanualshub.com/

2.8.12 MDT Check, Display of Pi Check State

Displays the input/output status (pulse) of MDT. In the MDT check selection menu of Fig. 2.8.1, select "Pi Check," and press the <↵> key to display the MDT check Pi signal state display screen shown in Fig. 2.8.10. To go back to the MDT check selection menu, press the <⊠> key.

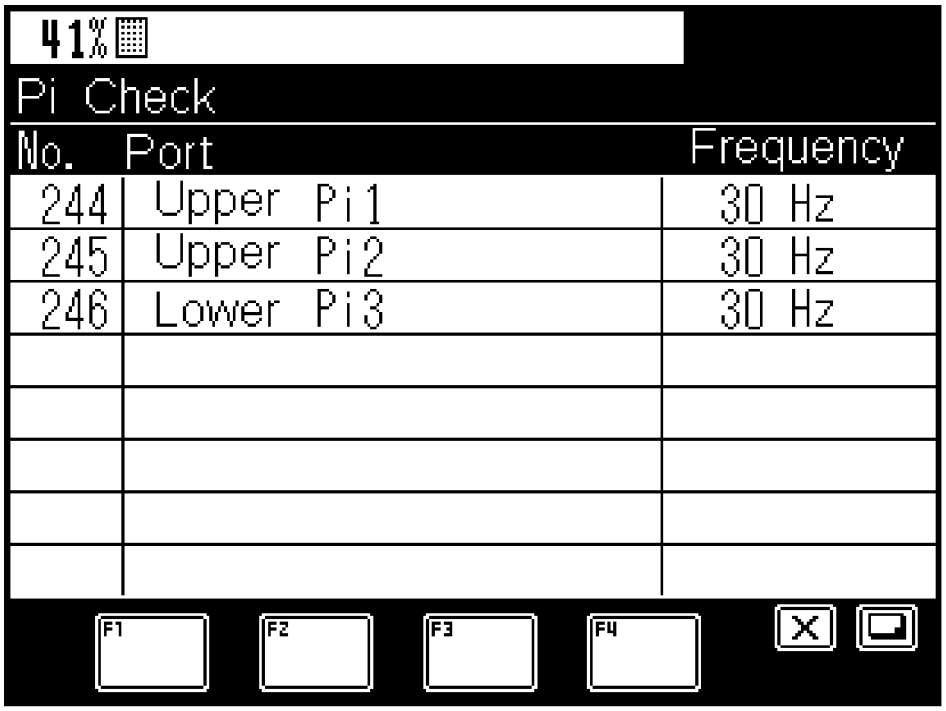

Fig. 2.8.10 Display screen of MDT check Pi signal state

<Description of display contents>

No.: Input/output number of Pi signal state display (244 to 246)

Port: Pi state display signal name

Frequency: Pulse input frequency (Hz)

<Operation method>

To go back to the MDT check selection menu, press the <⊠> key.

https://truckmanualshub.com/

2.9 System Voltage Check

Displays the system voltage state. In the maintenance main menu of Fig. 1.3.1, select "System Voltage," and press the <↵> key to display the system voltage check screen shown in Fig. 2.9.1. To go back to the maintenance main menu, press the <☒> key.

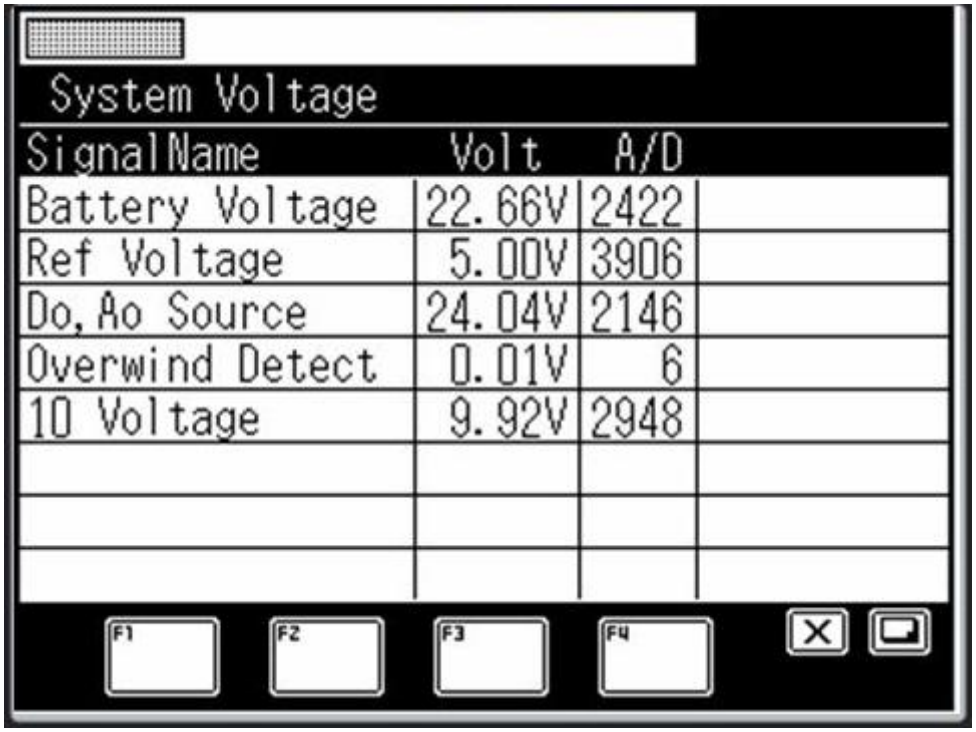

Fig. 2.9.1 System voltage check screen

<Description of display contents>

[Signal Name]

Battery Voltage:	Input power supply voltage (Voltage after the internal rectification, and it is several volts lower than the battery voltage.)
Ref Voltage:	Power supply voltage impressed to analog detector
Do, Ao Source:	Voltage for Do/Ao output
Twoblocking Detect:	Voltage for twoblocking detection circuit
10 Voltage:	Voltage of 10 V internal power supply

[Volt]

Detection voltage

[A/D]

Value with which the detection value is converted to A/D (0 to 4095)

https://truckmanualshub.com/

2.10 Error History Display

Displays the error history of AML. In the maintenance main menu of Fig. 1.3.1, select "Error History," and press the <↵> key to display the error history display screen shown in Fig. 2.10.1. Pressing the <F1> key (previous page) or the <F2> key (next page) changes the pages.
To go back to the maintenance main menu, press the <✕> key.

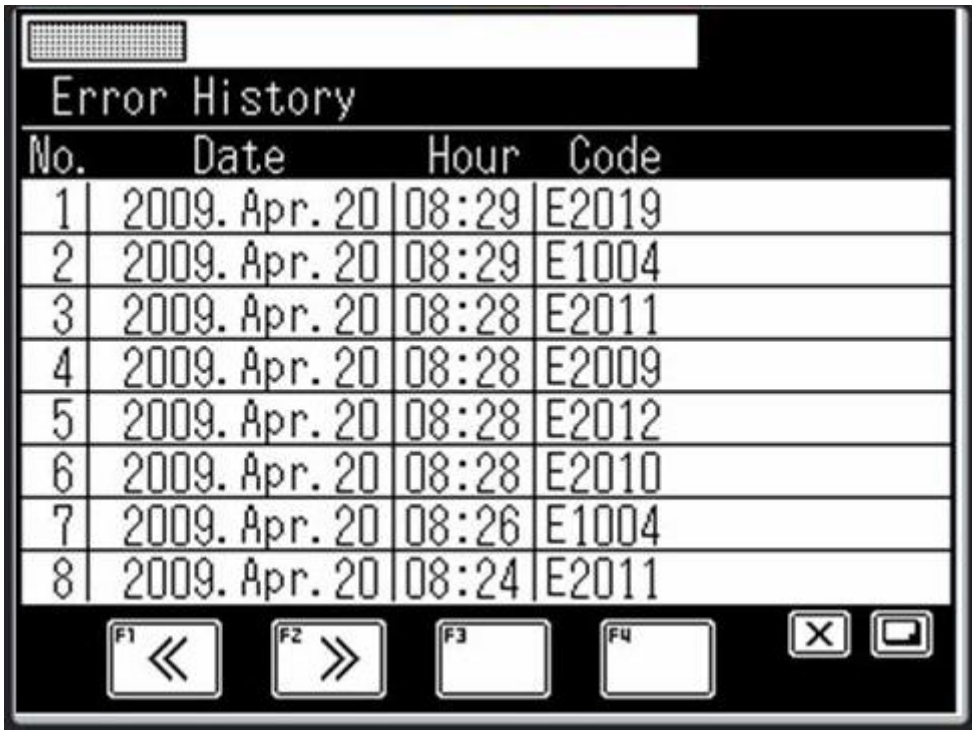

Fig. 2.10.1 Error history display screen

<Description of display contents>
Maximum of 50 error items can be stored, and the items are displayed in the order from the most-recently-stored error. With each of the error item, the information below is displayed.

Date: Error occurrence date [Year (4 digits).Month (3 letters).Day (2 digits)]
When "＊" is attached in front of the occurrence date, it indicates the error is currently occurring.
Hour: Occurrence time (O'clock, Minute)
Code: Error code

https://truckmanualshub.com/

2.11 Erasing Error History

Erases the error history of AML. In the maintenance main menu of Fig. 1.3.1, select "Error Erase," and press the <↵> key to display the error history erase screen shown in Fig. 2.11.1. Pressing the <↵> key erases the error history.
After the history is erased, the display of Fig. 2.11.2 appears. To go back to the maintenance main menu, press the <⊠> key.
When not erasing the error history, without pressing the <↵> key in the status of Fig. 2.11.1, press the <⊠> key to go back to the maintenance main menu.

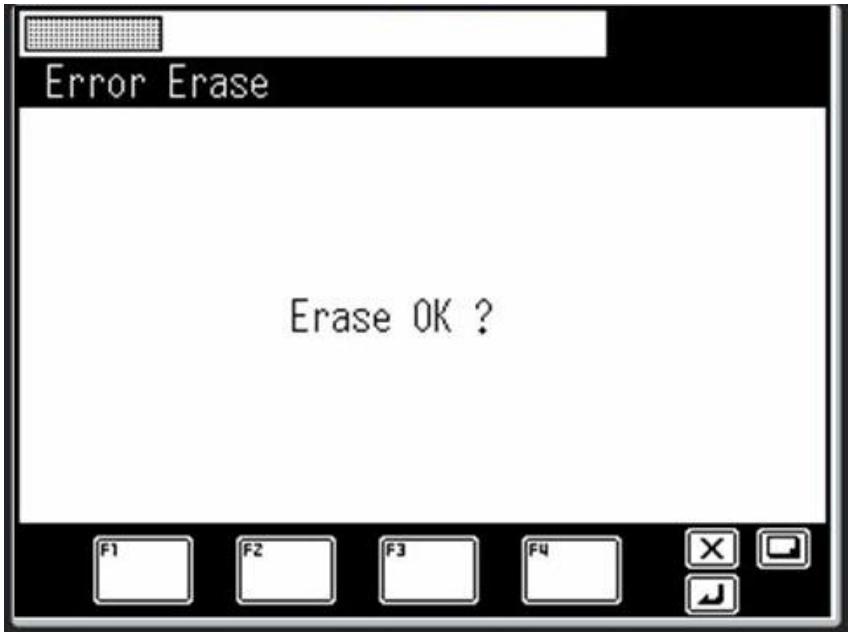

Fig. 2.11.1 Error history erase screen

Fig. 2.11.2 Error history erase completion display

https://truckmanualshub.com/

2.12 AML Emergency Switch History Display

Displays the AML emergency switch history. In the maintenance main menu of Fig. 1.3.1, select "Emergency History," and press the <↵> key to display the AML emergency switch history display shown in Fig. 2.12.1. The items are displayed in the order starting with the one of which changeover time is the newest. Pressing the <F1> key (previous page) or the <F2> key (next page) changes the pages. To go back to the maintenance main menu, press the <✕> key.
However, when the number of displayed items is 8 or less, any input of <F1> key (previous page) or the <F2> key (next page) is disabled.

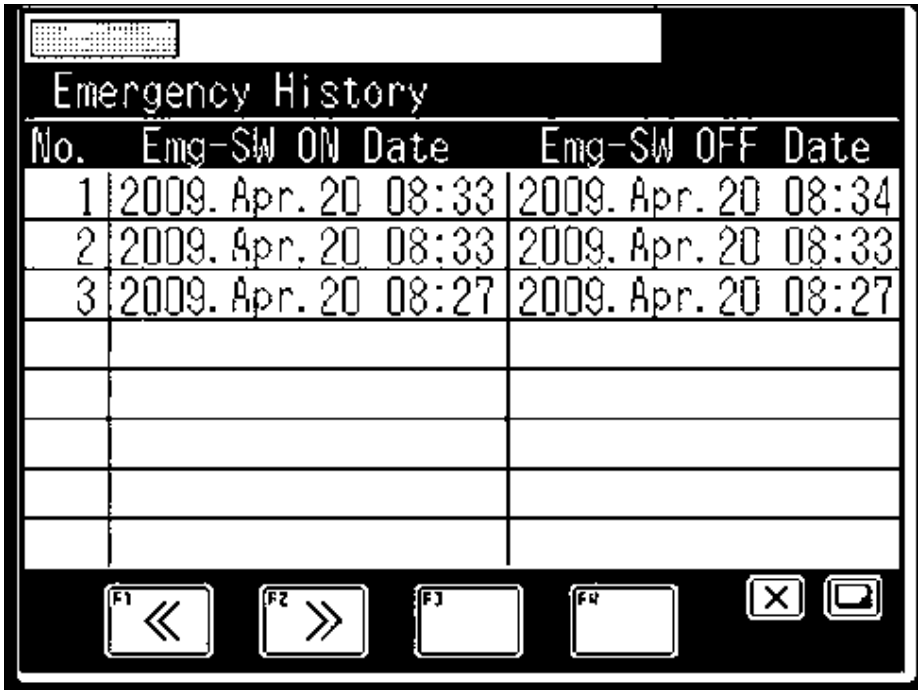

Fig. 2.12.1 AML emergency switch history display screen

<Description of display contents>
The maximum of 100 history information items are displayed starting with the latest item of AML emergency switch changeover history. With each of the history item, the information below is displayed.

AML emergency SW ON input date & time: [Year (4 digits).Month (3 letters).Day (2 digits)] [Hour: Minute]
AML emergency SW OFF input date & time: [Year (4 digits).Month (3 letters).Day (2 digits)] [Hour: Minute]

https://truckmanualshub.com/

2.13 Latest Overload History Display

Displays the latest overload history that is stored in the AML. In the maintenance menu of Fig. 1.3.1, select "New History," and press the <↵> key to display the latest overload history shown in Fig. 2.13.1.
Pressing the <F4> (forward) displays the next newest history item, and pressing the <F3> (back) displays the history item of previous one.
To go back to the maintenance main menu, press the <✕> key.

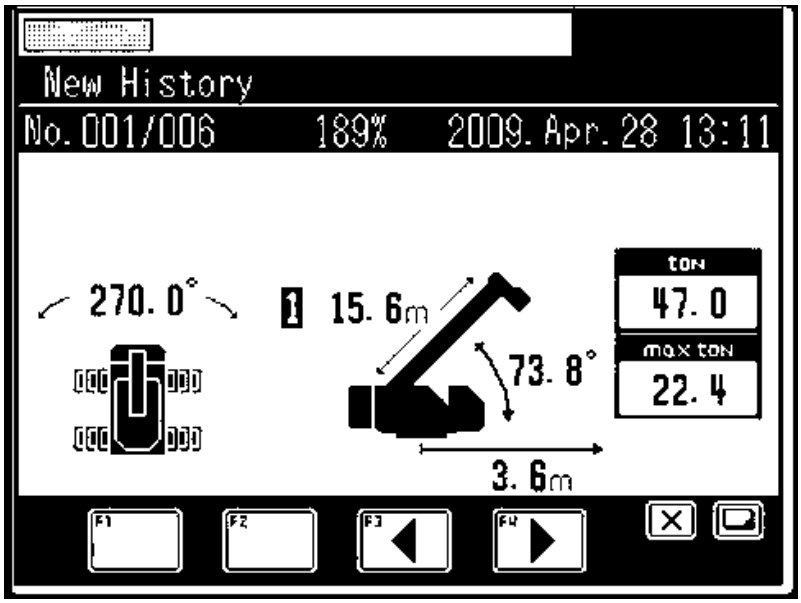

Fig. 2.13.1 Latest overload history display

<Description of display contents>
The maximum of 100 history items are stored.

No.:	Number of display item/Number of stored items
Moment ratio:	Load moment ratio of that time
Date and time:	Date on which the operation was performed [Format: Year (4 digits).Month (3 letters).Day (2 digits)]
Stored information:	Displays the operation status and operation posture with which the operation was performed.

<Storing condition>
During a period starting from when Load moment ratio calculated by the AML becomes 110% or more until it becomes less than 110%, the data D is temporarily stored. Then, after 5 seconds have elapsed since the moment ratio becomes less than 100%, the data is actually stored. If the moment ratio becomes 110% or more before the elapse of 5 seconds, the status returns to the temporary storage of maximum value (refer to the Fig. 2.13.2).
However, the data will not be stored in the cases bellows:
(1) Rated capacity = 0 t (including cases with no capacity and boom full retraction switch abnormality)
(2) Elevation angle is near the raising stroke end (angle differs depending on the model)
(3) Detector abnormality is currently occurring (Error code: E2003 to E2031)

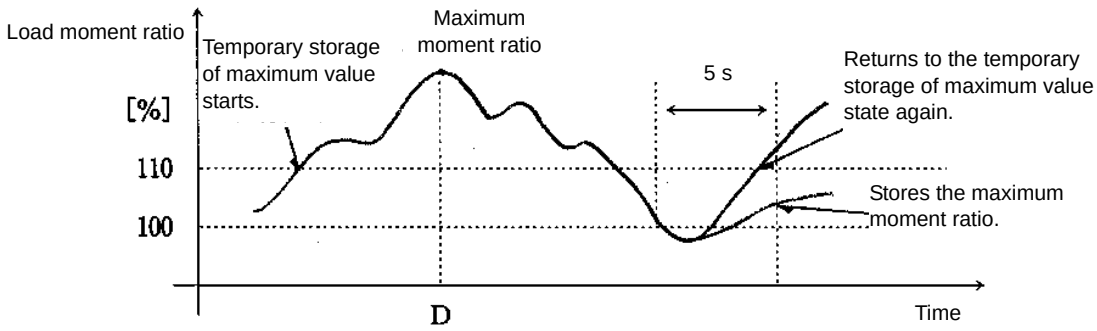

Fig. 2.13.2

https://truckmanualshub.com/

2.14 Maximum Overload History Display

Displays the maximum overload history that is stored in the AML. In the maintenance menu of Fig. 1.3.1, select "Max History," and press the <↵> key to display the maximum overload history shown in Fig. 2.14.1.
Pressing the <F4> (forward) displays the next history item, and pressing the <F3> (back) displays the history item of one before. To go back to the maintenance main menu, press the <✕> key.

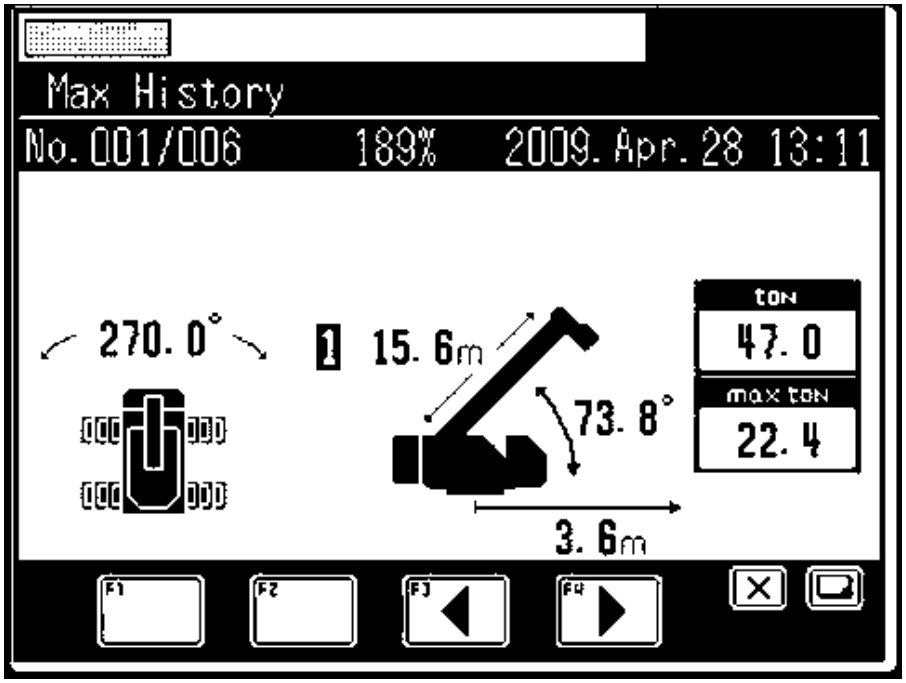

Fig. 2.14.1 Latest overload history display

<Description of display contents>
With the maximum overload history information, the maximum of 100 items are stored in the order starting from the largest clockwise moment around boom pivot pin (not in order of the moment ratio).

No.:	Number of display items/Number of stored items
Moment ratio:	Load moment ratio of that time
Date and time:	Date on which the operation was performed [Format: Year (4 digits).Month (3 letters).Day (2 digits)]
Stored information:	Displays the operation status and operation posture with which the operation was performed.

＊ The stored information is the same as "2.13 Latest Overload History Display."

https://truckmanualshub.com/

2.15 Outrigger Emergency Setting History Display

Displays the outrigger emergency setting history information. In the maintenance main menu of Fig. 1.3.1, select "O/R Emergency History," and press the <⏎> key to display the outrigger emergency setting history display shown in Fig. 2.15.1. The items are displayed in the order starting with the one having the newest emergency setting time. Pressing the <F1> key (-) or the <F2> key (+) changes the displayed history data.

To go back to the maintenance main menu, press the <✕> key.

However, when the stored number of emergency setting history data items is 1, any input of the <F1> key (-) or the <F2> key (+) is disabled.

When there is no stored emergency setting history data, the history screen without data will be displayed as shown in Fig. 2.15.2.

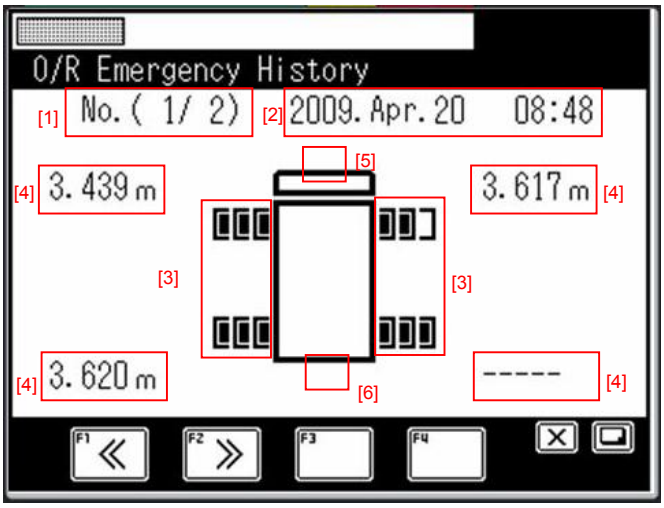

Fig. 2.15.1 Outrigger emergency setting history display

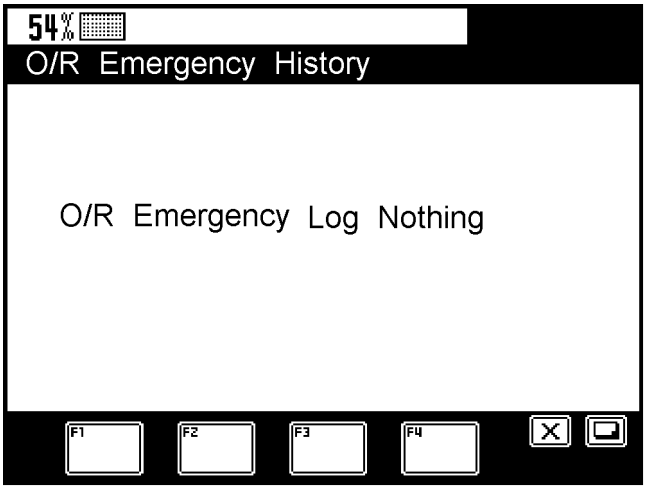

Fig. 2.15.2 Screen without display data of outrigger emergency setting history

<Description of display contents>

With the outrigger emergency setting history, the maximum of 10 items is displayed in the order starting with the newest one.

[1]: Number of display item/Number of stored items
[2]: History storage date and time
[3]: Outrigger emergency setting section
[4]: Outrigger detection length at the time of emergency setting
(Section with abnormality is displayed as "-----.")
[5]: Front jack setting state at the time of emergency setting
[6]: Rear jack setting state at the time of emergency setting

https://truckmanualshub.com/

2.16 Telematics Check

To check various information of current Telematics status, select "Telematics Check" on the maintenance main menu shown in the Fig. 1.3.1 and press the <⏎> key. The display will go to the Telematics check screen shown in Fig. 2.16.1.

When the <⊠> key is pressed, the menu is quitted and the maintenance menu appears again.

The item "Telematics Check is shown in the maintenance menu only while ICF is connected to the AML.

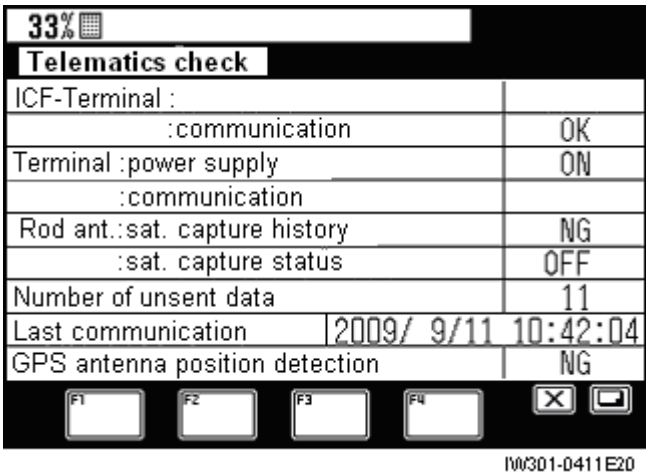

Fig. 2.16.1 Telematics check screen

https://truckmanualshub.com/

2.17 Clock Adjustment

Adjusts the clock and calendar that are integrated in the AML. In the maintenance menu of Fig. 1.3.1, select "Clock Adjust," and press the <↵> key to display the clock adjustment screen shown in Fig. 2.17.1.
When the clock information is obtained from the ICF via CAN port, the clock adjustment screen of Fig. 2.17.2 is displayed which includes the ICF clock information.

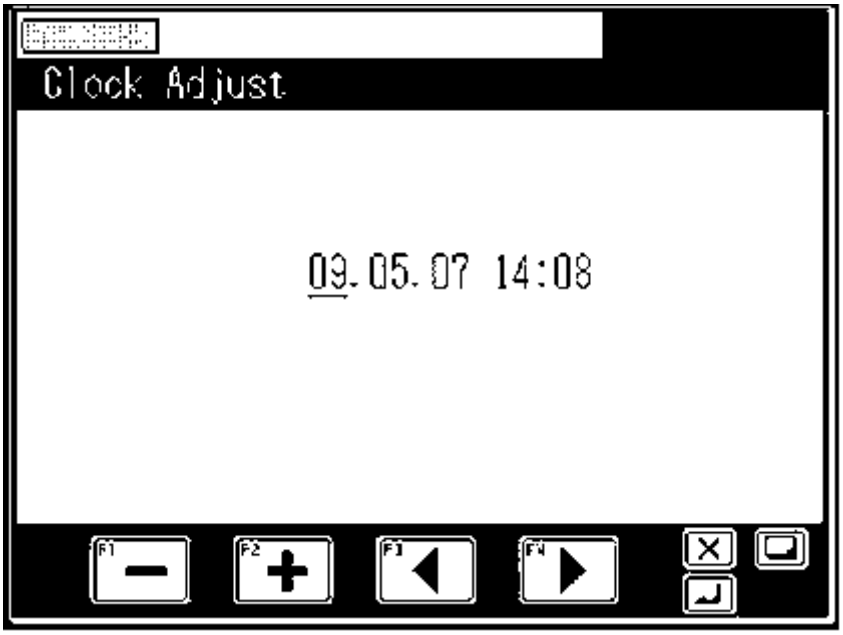

Fig. 2.17.1 Clock adjustment screen

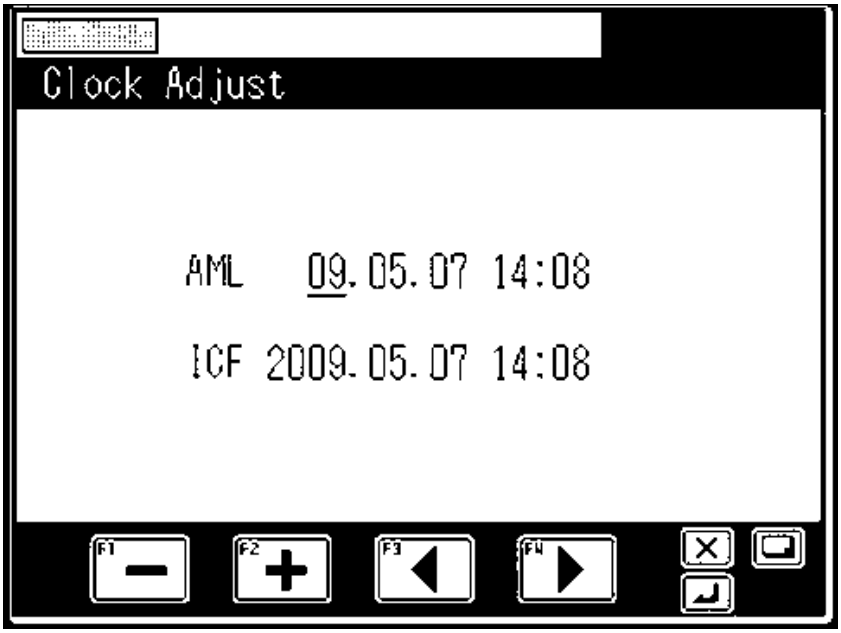

Fig. 2.17.2 Clock adjustment screen (Including ICF clock information)

https://truckmanualshub.com/

<Operation method>

Move the " _ " (cursor) to the right using the <F4> key (forward) or to the left using the <F3> key (back).
With the forward movement, the cursor moves as shown in the Fig. below. (With the backward movement, the cursor movement becomes reversed.)

Year ----- ▶ Month ----- ▶ Day ----- ▶ Hour ----- ▶ Minute

The numerical values at cursor are increased/decreased using the <F2> key (+) and the <F1> key (-). After the numerical setting is completed, press the <↵> key to register the set value. Immediately after the registration, the display returns to the maintenance main menu.
To go back to the maintenance main menu, press the <✕> key.

When the ICF clock information is displayed, the cursor movement and operation methods are exactly the same. (Cursor movement and increase/decrease operation are performed with AML lines.)
When the <↵> key is pressed, the set value is registered to both the built-in clock and ICF. Immediately after the registration, the display returns to the maintenance main menu.

https://truckmanualshub.com/

2.18 Meter Adjustment

[NOTICE]

◆When replacing the DCU (display control unit), adjust the meters in the following procedure.

- Adjust the meters to the values shown on the combination meter.
- In the case that the combination meter has been replaced, adjust the meters shown by HELLO-NET.

Case	Value to be refered to
DCU is replaced.	Display on combination meter
Combination meter has been replaced, and now DCU is replaced.	HELLO-NET

◆When the combination meter is displayed, the meter adjustment described here is not necessary.

Note: Hourmeter indication and odometer indication on the HELLO-NET shows the data calculated by DCU, independent from the combination meter.
When the DCU is replaced, the calculated data is reset and the data cumulating from the day when the DCU is replaced is shown.

Adjusts the hour meter and odometer when the meter information is being received from the CAN port to ICF.
In the maintenance main menu of Fig. 1.3.1, select "Meter Adjust," and press the <⏎> key to display the meter adjustment screen shown in Fig. 2.18.1.

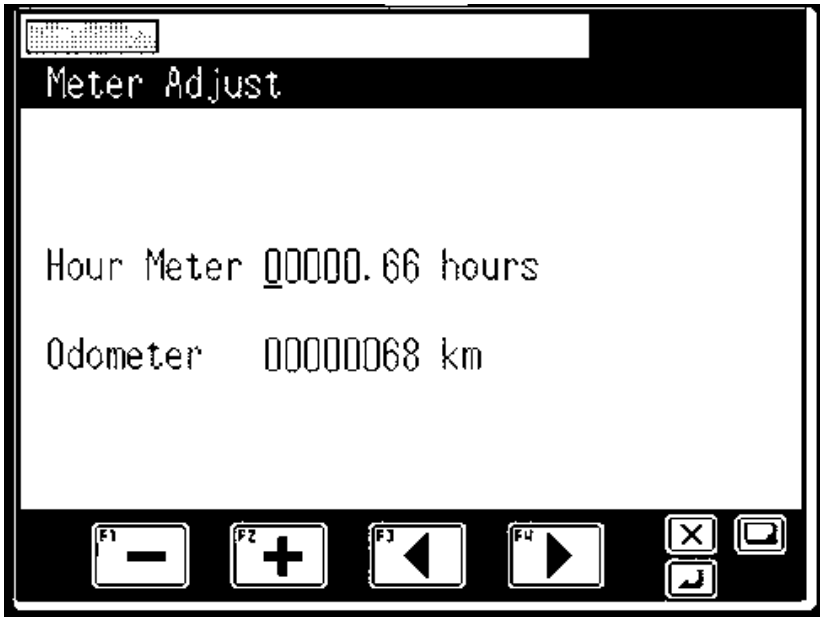

Fig. 2.18.1 Meter adjustment screen

<Operation method>

Using the <F4> key (forward), move the " _ " (cursor) to the right, and to the next item (from the rightmost position of current item). Using the <F3> key (back), move the cursor to the left, and to the previous item (from the leftmost position of current item).

The numerical values at cursor are increased/decreased using the <F2> key (+) and the <F1> key (-).

After setting to the numerical values which show in the Instrument Panel, are completed, press the <⏎> key to register the setting.

To go back to the maintenance main menu without registering the setting, press the <✕> key.

https://truckmanualshub.com/

2.19 Unit Selection

Sets the unit that is used commonly in all of the user mode, adjustment mode, and maintenance mode.
In the maintenance main menu of Fig. 1.3.1, select "Unit Select," and press the <↵> key to display the displayed unit selection screen shown in Fig. 2.19.1.

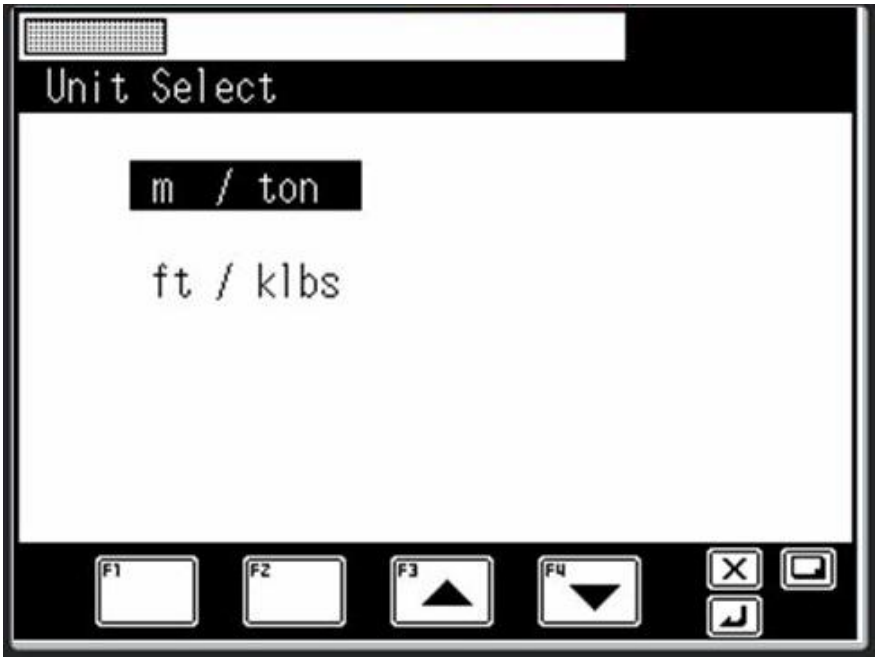

Fig. 2.19.1 Displayed unit selection screen

<Operation method>
The current setting is highlighted by a square frame.
Press the <F3> key (scroll up) or the <F4> key (scroll down) to move the highlight to the desired item, and press <↵> to register the setting.
To go back to the adjustment main menu, press the <✕> key.

https://truckmanualshub.com/

2.20 Language Selection

This is a function to change the displayed language.
In the maintenance main menu of Fig. 1.3.1, select "Language," and press the <↵> key to display the language selection screen shown in Fig. 2.20.1. To go back to the maintenance main menu, press the <✕> key.
The currently selected language is highlighted enclosed by a square frame.
Press the <F3> key (scroll up) or the <F4> key (scroll down) to move the highlight to the desired language, and press <↵> to register the setting.
To go back to the maintenance main menu, press the <✕> key.

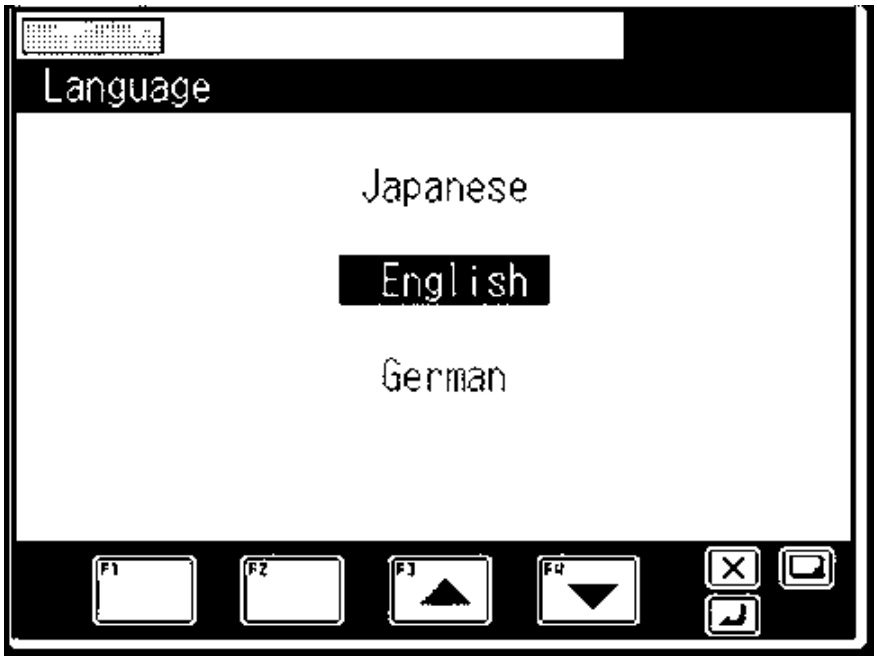

Fig. 2.20.1 Language selection screen

https://truckmanualshub.com/

C-3 Integrated Information Display Screen

This is a screen for checking the current operation status in the maintenance screen or in the adjustment screen.

3.1 Crane Information Display Screen

In the maintenance screen and adjustment screen, pressing the <▣> key displays the integrated information display screen (crane information). Depending on the unit system that is selected, the displayed numerical value changes as shown in Fig. 3.1.1 and Fig. 3.1.2.

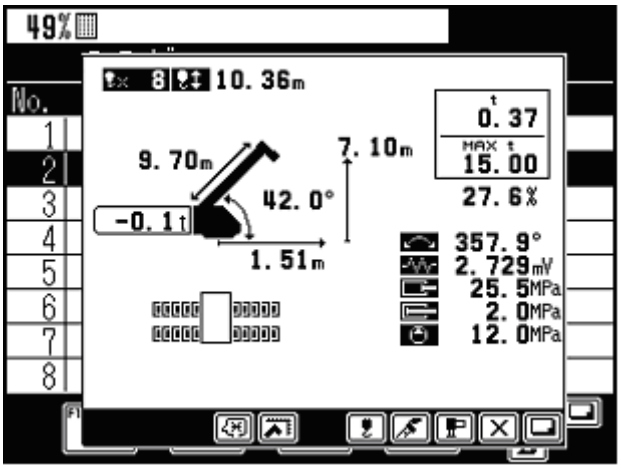

Fig. 3.1.1 Integrated information screen
(Crane information, units in m / ton)

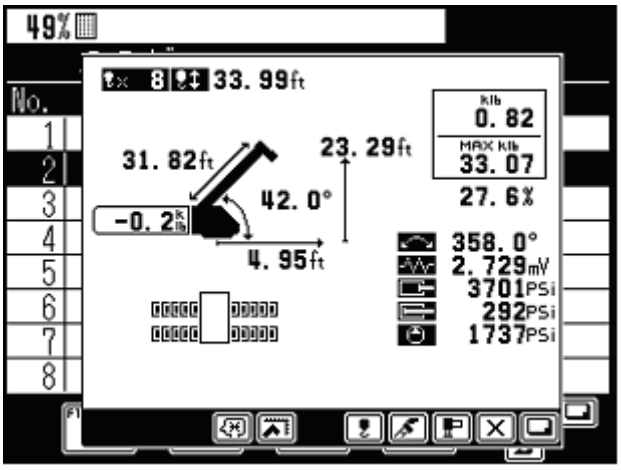

Fig. 3.1.2 Integrated information screen
(Crane information, units in ft / klb)

3.2 Vehicle Information Display Screen

When the vehicle information is obtained from the CAN port, pressing the <▣> key again, while the integrated information screen is being displayed, displays the integrated information display screen (vehicle information). However, the vehicle information is displayed first when PTO is OFF, and pressing the <▣> key again changes the screen to the crane information. Also, as with the crane information display, the displayed numerical value changes as shown in Fig. 3.2.1 and Fig. 3.2.2 depending on the unit system that is selected.

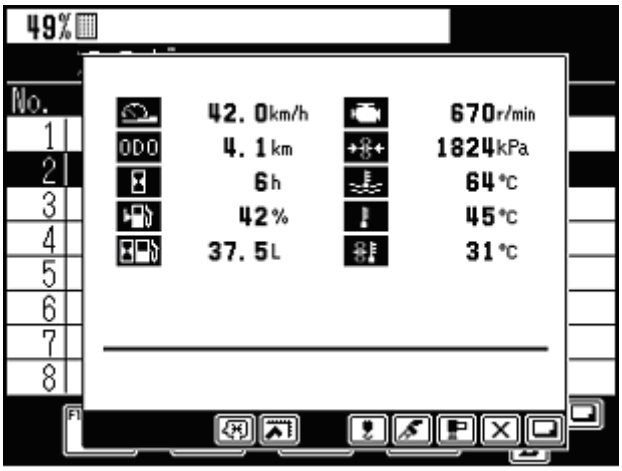

Fig. 3.2.1 Integrated information screen
(Vehicle information, units in m / ton)

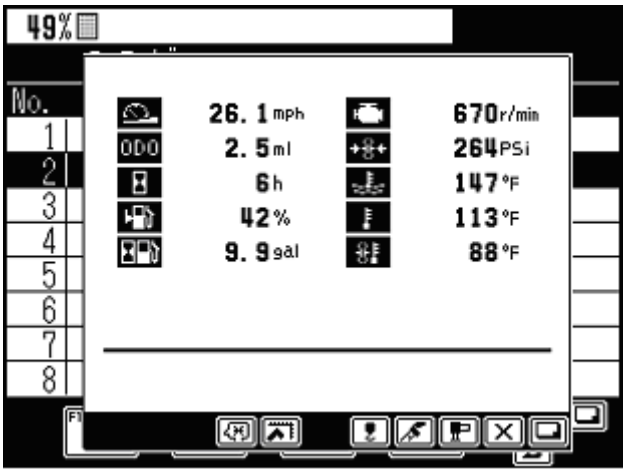

Fig. 3.2.2 Integrated information screen
(Vehicle information, units in ft / klb)

https://truckmanualshub.com/

3.3 Display Contents

The crane information contents displayed in the integrated information screen are shown in Fig. 3.3.1, and the vehicle information contents are shown in Fig. 3.3.2. For the function specific display (slow stop adjustment, over-front special performance, etc.), refer to the corresponding function specification.

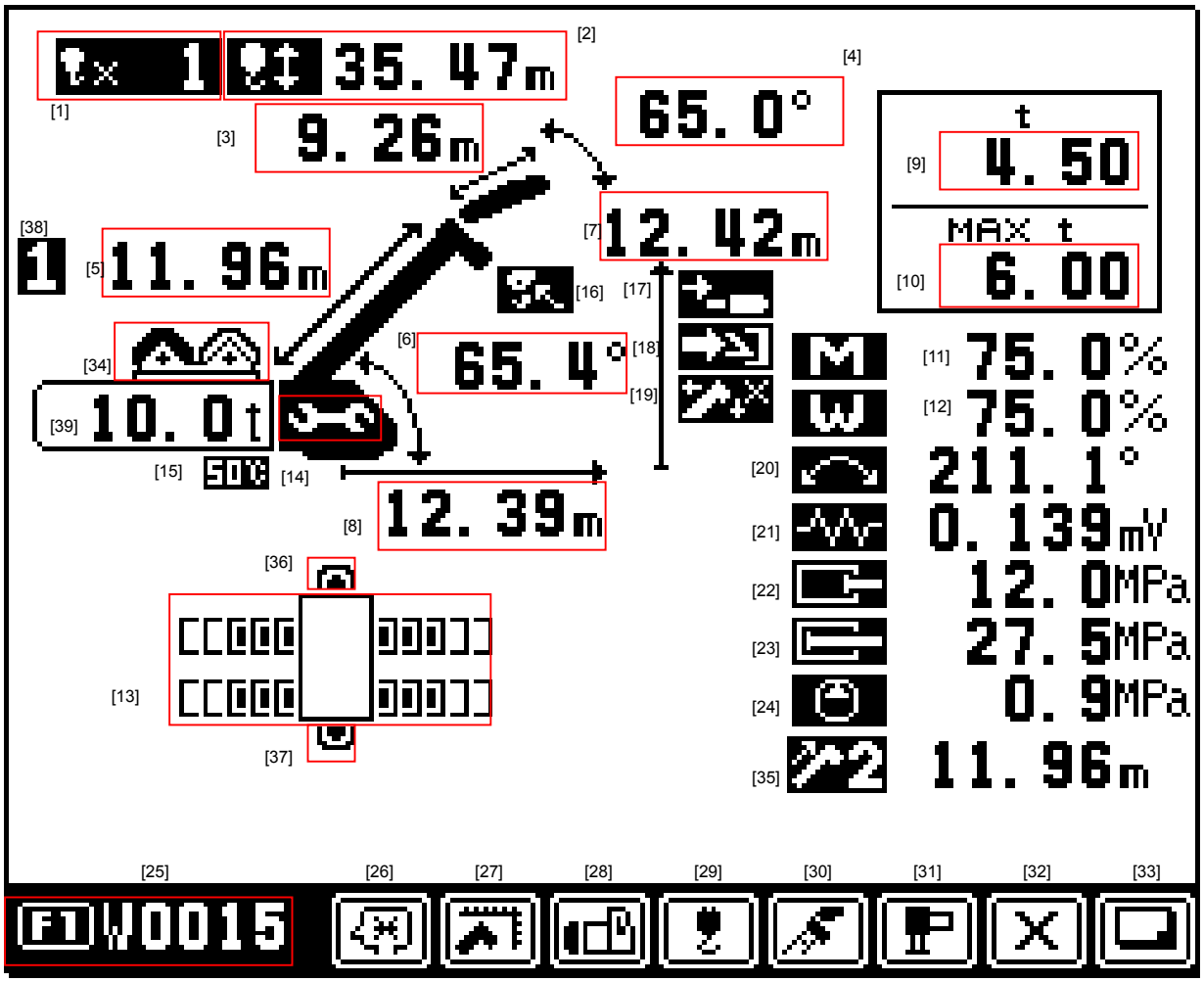

Fig. 3.3.1 Integrated information screen (Display contents)

[1]: Number of part lines

[2]: Hook movement

[3]: Jib length (Displayed only when jib operation is selected)

[4]: Jib angle display (Displayed only when jib operation is selected)

[5]: Boom length

[6]: Boom angle

[7]: Top sheave lift

[8]: Load radius

[9]: Hoist medium load (Payload + Sling + Hook block)

[10]: Rated capacity = Max. hoist medium load

[11]: Load moment ratio

https://truckmanualshub.com/

[12]: Load ratio (∗ EN13000 spec.)

[13]: Outrigger state display

[14]: Maintenance mode display icon

[15]: Oil temperature 50°C icon ∗There is no display of 85°C icon.

[16]: Hook-in icon (Only for hook-in specification)

[17]: Tilt cylinder full retraction icon (Only for SACO-Jib specification)

[18]: Jib lock pin unlock icon

[19]: Boom elevation slow stop cancel icon

[20]: Swing angle

[21]: Distortion voltage

[22]: Elevating cylinder extension pressure

[23]: Elevating cylinder retraction pressure

[24]: Main pump pressure

[25]: Error code display

[26]: Indication showing that user adjustment is effective

[27]: Indication showing that range limit setting is effective

[28]: Indication showing that C/W setting is effective

[29]: Indication showing that number of part lines setting is effective

[30]: Indication showing that boom state setting is effective

[31]: Indication showing that O/R state setting is effective

[32]: Indication showing that <⊠> key is effective

[33]: Indication showing that <▣> key is effective

[34]: Winch drum position (Only when winch drum position selection function is available)
(Refer to Chapter B 4.5 User Preset Menu and 7.4 Winch drum position selection.)

[35]: 2nd boom length (Only for FAUN specification)

[36]: Front jack

[37]: Rear jack

[38]: Boom telescoping type

[39]: C/W mass (-0.1 t is displayed when there is no C/W)
C/W:（counterweight）

https://truckmanualshub.com/

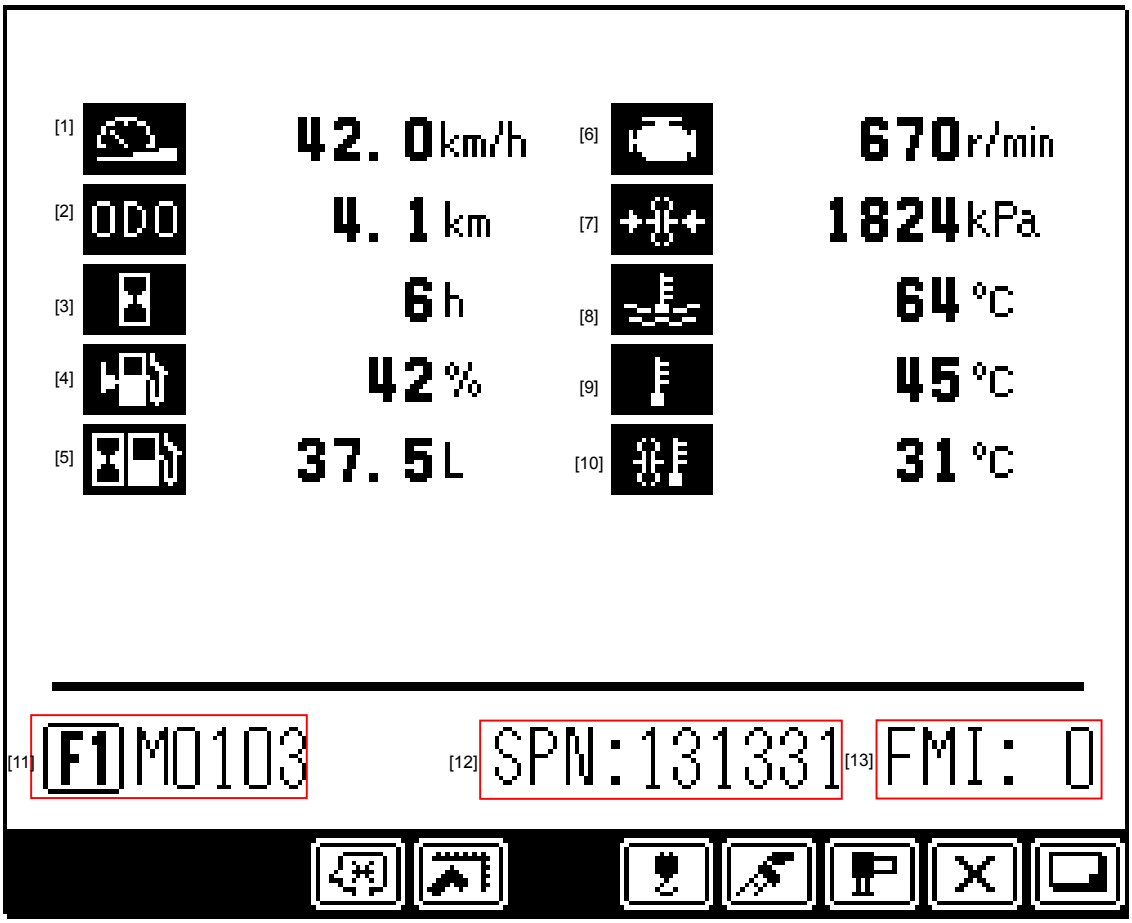

Fig. 3.3.2 Vehicle information display screen (Display contents)

[1]: Vehicle speed

[2]: Odometer

[3]: Hour meter

[4]: Remaining fuel rate

[5]: Accumulated fuel consumption

[6]: Engine speed

[7]: Torque converter pressure

[8]: Engine coolant temperature

[9]: Intake air temperature

[10]: Torque converter oil temperature

[11]: Vehicle error code (e.g.; M0103: Indication of the internal error of the meter ECU)

[12]: Vehicle error SPN (Suspect Parameter Number: data classification number) CAN communication error

[13]: Vehicle error FMI (Failure Mode Idicator: Error mode indication) CAN communication error <SAE1939> (Cummins engine: data displayed, Mitsubishi and ND engine: no data)

https://truckmanualshub.com/

3.4 Vehicle Error Information

When the vehicle error information is obtained from the CAN port, the vehicle error information is displayed cyclically in the bottom section of sub screen shown in Fig. 3.4.1. At this time, pressing the <F1> key displays the error code table of Fig. 3.4.2.

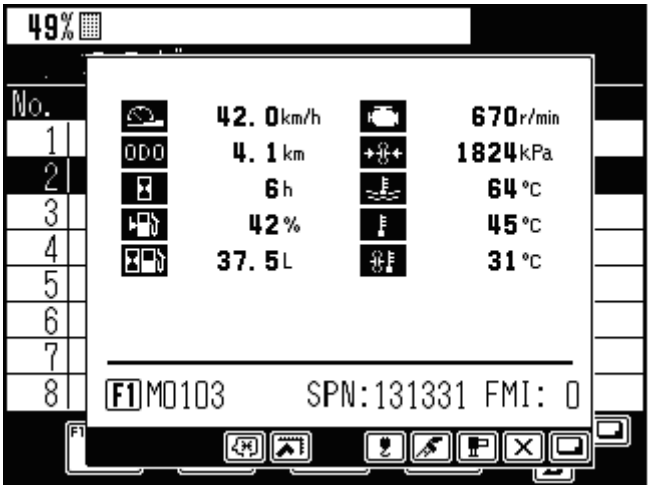

Fig. 3.4.1 Integrated display screen (When vehicle error information is received)

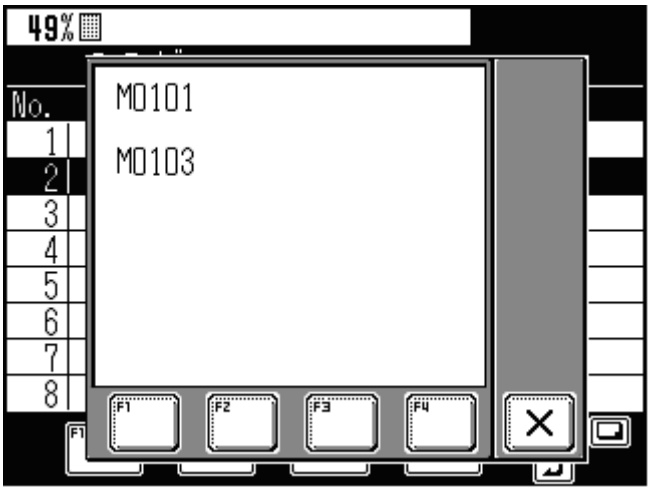

Fig. 3.4.2 Vehicle error information list screen

Reference: Error information table

Error code	Failure code	Name
M0101	131329-00	Interrupted communication from upper MDT to meter ECU
M0102	131330-00	Faulty communication between upper MDT and meter ECU
M0103	131331-00	Meter ECU internal error

https://truckmanualshub.com/

C-4 Error Code

4.1 Classification of Error Code

The error code is displayed with the numerical value having four digits. The first digit (E1) indicates the error group. The following three-digit number indicates the individual code within the error group.

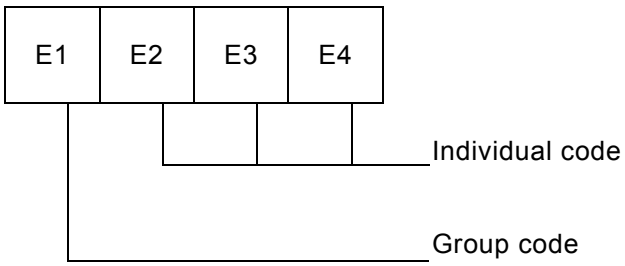

Group 0: Warning (Refer to Chapter B 3.2 Warning Code and Model Comparison Table)

Group 1: Communication device (transmitter, etc.) error

Group 2: Detector abnormality or abnormal combination of detectors

Group 3: AML internal abnormality (system abnormality). When this abnormality occurs, the execution of control software is aborted.

For about the error code table, refer to “4.4 Error Code Table.”

4.2 Error History

The error codes from group 1 to 3 are stored in the AML together with the error occurrence time. (Note 1)
The maximum of 50 error items are stored in the chronological order of occurrence. When the number of error items exceeds 50, the oldest record is deleted each time a new error occurs.

Note 1: The error code in group 3 is rarely stored.

https://truckmanualshub.com/

4.3 Error Notification

When the AML detects an error, it displays the error code on the LCD and, at the same time, it outputs the beep sound to notify that an error has occurred. The error code continues to be displayed while the error exists.

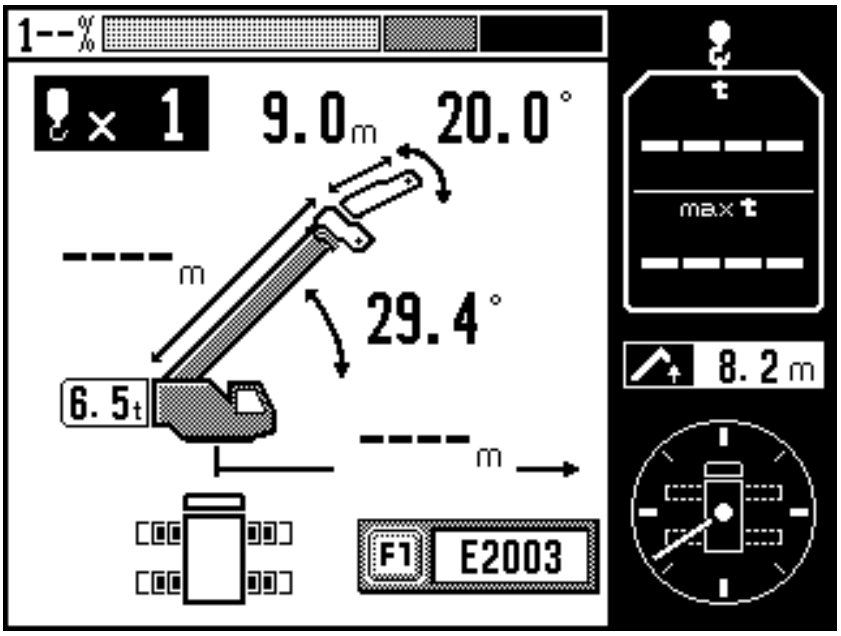

Fig. 4.3.1 Error code display screen

When Japanese is selected for the language, when the <F1> key is pressed while the error code is being displayed, a sub window appears in the LCD to show the error message as shown in Fig. 4.3.2.
Under this status, pressing the <×> key closes the sub window, and the error code display is restored.
When two or more errors occur simultaneously, each of the error codes is displayed.

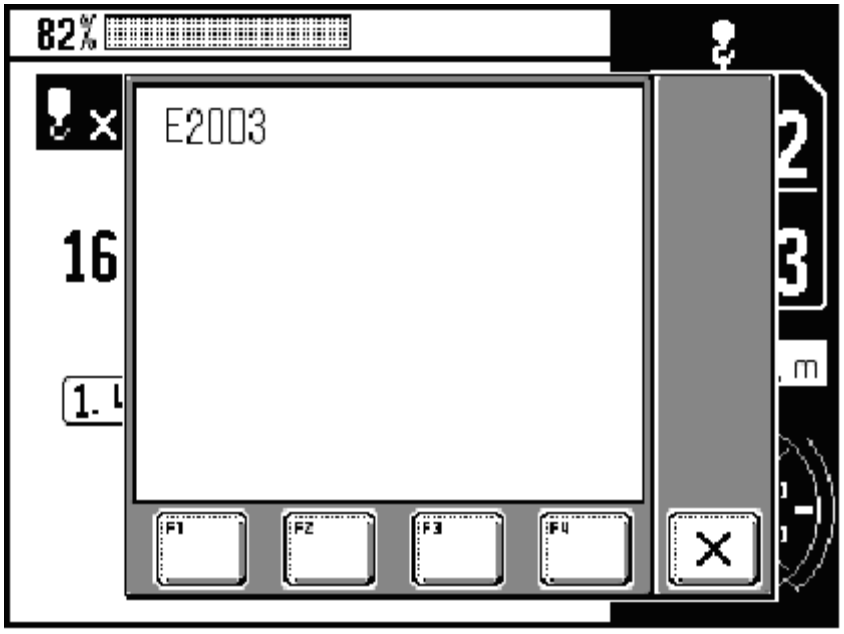

Fig. 4.3.2 Error message display screen

https://truckmanualshub.com/

4.4 Error Code Table

4.4.1 Communication Device Error (Transmitter, etc.)

- Crane operation
  - ○: All the operations are possible.
  - ×: All the operations are stopped.

Port 1: Serial port connected with signal transmitter (for jib)
Port 2: Serial port connected with MDT (Multiplex Data Transmitter)

Error code	Error name	Description	Crane operation
E1001	Serial port transmission line 1 open	Notification is issued that the transmitter connected with port 1 cannot receive data from the AML. (Transmission break)	×
	Cause: Communication line from AML to transmitter is open. Radio wave interference, device malfunction Remedy: Check the wiring to the transmitter for conductivity. If no conductivity exists, replace or repair the wiring. Replace the transmitter or AML's power circuit board.		
E1002	Serial port transmission line 2 open	Notification is issued that the transmitter connected with port 2 cannot receive data from the AML. (Transmission break)	×
	Cause: Communication line from AML to transmitter is open. Radio wave interference, device malfunction Remedy: Check the wiring to the transmitter for conductivity. If no conductivity exists, replace or repair the wiring. Replace the transmitter or AML's power circuit board.		
E1003	Serial port reception line 1 open	The AML cannot receive data from the transmitter connected with port 1. (Reception break)	×
	Cause: Communication line from transmitter to AML is open. Radio wave interference, device malfunction Remedy: Check the wiring to the transmitter for conductivity. If no conductivity exists, replace or repair the wiring. Replace the transmitter or AML's power circuit board. Replace the serial port fuse of AML.		
E1004	Serial port reception line 2 open	The AML cannot receive data from the transmitter connected with port 2. (Reception break)	×
	Cause: Communication line from transmitter to AML is open. Radio wave interference, device malfunction Remedy: Check the wiring to the transmitter for conductivity. If no conductivity exists, replace or repair the wiring. Replace the transmitter or AML's power circuit board. Replace the serial port fuse of AML.		
E1005	Transmitter 1 defect	Transmitter connected with port 1 has detected an internal abnormality.	×
	Cause: Transmitter malfunction. Refer to transmitter repair manual. Remedy: Replace the defective transmitter.		

https://truckmanualshub.com/

Error code	Error name	Description	Crane operation
E1006	Transmitter 2 defect	Transmitter connected with port 2 has detected an internal abnormality.	×
	Cause: Transmitter malfunction. Refer to transmitter repair manual. Remedy: Replace the defective transmitter.		
E1007	Transmitting data error at serial port 1	Transmitter connected with port 1 issued a notification that an abnormality is present in the data received from the AML.	×
	Cause: Communication line from AML to transmitter is open. Radio wave interference, device malfunction Remedy: Turn off any device which is emitting strong noise. Check the signal wire for poor connection. Repair or replace the wiring as appropriate.		
E1008	Transmitting data error at serial port 2	Transmitter connected with port 2 issued a notification that an abnormality is present in the data received from the AML.	×
	Cause: Communication line from AML to transmitter is open. Radio wave interference, device malfunction Remedy: Turn off any device which is emitting strong noise. Check the signal wire for poor connection. Repair or replace the wiring as appropriate.		
E1009	Receiving data error at serial port 1	The AML cannot receive the data correctly from the transmitter connected with port 1.	×
	Cause: Communication line from AML to transmitter is open. Radio wave interference, device malfunction Remedy: Turn off any device which is emitting strong noise. Check the signal wire for poor connection. Repair or replace the wiring as appropriate.		
E1010	Receiving data error at serial port 2	The AML cannot receive the data correctly from the transmitter connected with port 2.	×
	Cause: Communication line from AML to transmitter is open. Radio wave interference, device malfunction Remedy: Turn off any device which is emitting strong noise. Check the signal wire for poor connection. Repair or replace the wiring as appropriate.		
E1011	Transmitter type improper (serial port 1)	The type of transmitter connected with port 1 is incorrect.	×
	Cause: Transmitter malfunction, incorrect connection Remedy: Connect a proper transmitter to the serial port.		

https://truckmanualshub.com/

Error code	Error name	Description	Crane operation
E1012	Transmitter type improper (serial port 2)	The type of transmitter connected with port 2 is incorrect.	×
	Cause: Transmitter malfunction, incorrect connection Remedy: Connect a proper transmitter to the serial port.		
E1101	CAN port 1 reception trouble	The data on the bus connected with the CAN port 1 cannot be acquired correctly. (Reception abnormality)	○
	Cause: Bus connected with CAN1 is open or short. Device malfunction Remedy: Perform inspection for the above possible cause.		
E1102	CAN port 2 reception trouble	The data on the bus connected with the CAN port 2 cannot be acquired correctly. (Reception abnormality)	○
	Cause: Bus connected with CAN2 is open or short. Device malfunction Remedy: Perform inspection for the above possible cause.		

https://truckmanualshub.com/

4.4.2 Detector Abnormality or Abnormal Combination of Detectors

Error code	Error name	Description	Crane operation
E2003	Boom length detector trouble	The detection value of boom length detector is out of the normal range. Normal range: 5 to 95% (0.25 to 4.75 V)	×
	Cause: Detector malfunction, signal line open/short circuit, board malfunction Remedy: Perform inspection for the above possible cause. The status of any input from the detector can be checked using the “Ai check” function from the “Maintenance” menu.		
E2004	Boom angle detector trouble	The detection value of boom angle detector is out of the normal range. Normal range: 5 to 95% (0.25 to 4.75 V)	×
	Cause: Detector malfunction, signal line open/short circuit, board malfunction Remedy: Perform inspection for the above possible cause. The status of any input from the detector can be checked using the “Ai check” function from the “Maintenance” menu.		
E2005	Jib length detector trouble	The detection value of jib length detector is out of the normal range. Normal range: 5 to 95% (0.25 to 4.75 V)	×
	Cause: Detector malfunction, signal line open/short circuit, board malfunction Remedy: Perform inspection for the above possible cause. The status of any input from the detector can be checked using the “Ai check” function from the “Maintenance” menu.		
E2006	Jib angle detector trouble	The detection value of jib angle detector is out of the normal range. Normal range: 5 to 95% (0.25 to 4.75 V)	×
	Cause: Detector malfunction, signal line open/short circuit, board malfunction Remedy: Perform inspection for the above possible cause. The status of any input from the detector can be checked using the “Ai check” function from the “Maintenance” menu.		
E2009	Right front outrigger length detector trouble	The detection value of front right outrigger length detector is out of the normal range. Normal range: 5 to 95% (0.25 to 4.75 V)	×
	Cause: Detector malfunction, signal line open/short circuit, board malfunction Remedy: Perform inspection for the above possible cause. The status of any input from the detector can be checked using the “Ai check” function from the “Maintenance” menu.		
E2010	Right rear outrigger length detector trouble	The detection value of rear right outrigger length detector is out of the normal range. Normal range: 5 to 95% (0.25 to 4.75 V)	×
	Cause: Detector malfunction, signal line open/short circuit, board malfunction Remedy: Perform inspection for the above possible cause. The status of any input from the detector can be checked using the “Ai check” function from the “Maintenance” menu.		

https://truckmanualshub.com/

Error code	Error name	Description	Crane operation
E2011	Left front outrigger length detector trouble	The detection value of front left outrigger length detector is out of the normal range. Normal range: 5 to 95% (0.25 to 4.75 V)	×
	Cause: Detector malfunction, signal line open/short circuit, board malfunction Remedy: Perform inspection for the above possible cause. The status of any input from the detector can be checked using the “Ai check” function from the “Maintenance” menu.		
E2012	Left rear outrigger length detector trouble	The detection value of rear left outrigger length detector is out of the normal range. Normal range: 5 to 95% (0.25 to 4.75 V)	×
	Cause: Detector malfunction, signal line open/short circuit, board malfunction Remedy: Perform inspection for the above possible cause. The status of any input from the detector can be checked using the “Ai check” function from the “Maintenance” menu.		
E2017	Swing angle detector 1 trouble (swing dead angle switch OFF)	Although the swing dead angle detection is OFF, the swing angle detector 1 output is in the ON range of swing dead angle detection. Abnormality is detected only when the swing dead angle detection is available. Normal range: Set with by-models data #207	×
	Cause: Detector malfunction, signal line open/short circuit, board malfunction Remedy: Perform inspection for the above possible cause. The status of any input from the detector can be checked using the “Ai & Di check” function from the “Maintenance” menu.		
E2019	Swing angle detector 2 trouble (swing dead angle switch ON) (same as swing angle detector 1,2 select switch)	Although the swing dead angle detection is ON, the swing angle detector 2 output is in the OFF range of swing dead angle detection. Abnormality is detected only when the swing dead angle detection is available. Normal range: Set with by-models data #271	×
	Cause: Detector malfunction, signal line open/short circuit, board malfunction Remedy: Perform inspection for the above possible cause. The status of any input from the detector can be checked using the “Ai & Di check” function from the “Maintenance” menu.		
E2021	Swing angle detector offset trouble	Swing angle detector 1 and 2 are mounted with 180° positional difference, and the difference has deviated from the normal range. Normal range: Voltage output difference between detectors is 48.6 to 54.3%. (Set with by-models data #272)	×
	Cause: Detector malfunction, signal line open/short circuit, board malfunction Remedy: Perform inspection for the above possible cause. The status of any input from the detector can be checked using the “Ai check” function from the “Maintenance” menu.		
E2023	Moment abnormality	Load calculation value is negative. When the civil engineering input Di (No. 17206-34) is "During civil engineering work," the abnormality will not be judged.	×
	Cause: Detector malfunction, signal line open circuit, board malfunction Remedy: Perform inspection for the above possible cause.		

https://truckmanualshub.com/

Error code	Error name	Description	Crane operation
E2030	Elevating rod pressure abnormality	The detection value of elevating cylinder's rod side pressure detector is out of the normal range, and the status continues for 5 seconds in low pressure side or for 1 second in high pressure side. Normal range: 4 to 95% (0.20 to 4.75 V)	×
	Cause: Detector malfunction, signal line open circuit, board malfunction Remedy: Perform inspection for the above possible cause.		
E2031	Elevating cylinder pressure abnormality	The detection value of elevating cylinder's cylinder side pressure detector is out of the normal range. Normal range: 5 to 95% (0.25 to 4.75 V)	×
	Cause: Detector malfunction, signal line open circuit, board malfunction Remedy: Perform inspection for the above possible cause.		
E2113	Twoblocking signal abnormality	Twoblocking signal is broken or short to the power source line.	Anti-twoblock device works.
	Cause: Twoblocking signal line open/short circuit, board malfunction Remedy: Perform inspection for the above possible cause.		
E2167	2nd boom length detector abnormality	The detection value of 2nd boom length detector is out of the normal range. Normal range: 5 to 95% (0.25 to 4.75 V)	×
	Cause: Detector malfunction, signal line open/short circuit, board malfunction Remedy: Perform inspection for the above possible cause.		
E2200	Do0 output stoppage	Digital output power monitor voltage is out of the normal range. Normal range: 18 V or more	×
	Cause: Signal line short circuit, board malfunction Remedy: Perform inspection for the above possible cause.		
E2201	Do1 output OFF abnormality	Although the Do1 output is OFF, the output monitor incorrectly becomes ON.	×
	Cause: Signal line short circuit, board malfunction Remedy: Perform inspection for the above possible cause.		
E2202	Do2 output OFF abnormality	Although the Do2 output is OFF, the output monitor incorrectly becomes ON.	×
	Cause: Signal line short circuit, board malfunction Remedy: Perform inspection for the above possible cause.		
E2203	Do3 output OFF abnormality	Although the Do3 output is OFF, the output monitor incorrectly becomes ON.	×
	Cause: Signal line short circuit, board malfunction Remedy: Perform inspection for the above possible cause.		

https://truckmanualshub.com/

Error code	Error name	Description	Crane operation
E2204	Do4 output OFF abnormality	Although the Do4 output is OFF, the output monitor incorrectly becomes ON.	×
	Cause: Signal line short circuit, board malfunction Remedy: Perform inspection for the above possible cause.		
E2205	Do5 output OFF abnormality	Although the Do5 output is OFF, the output monitor incorrectly becomes ON.	×
	Cause: Signal line short circuit, board malfunction Remedy: Perform inspection for the above possible cause.		
E2206	Do6 output OFF abnormality	Although the Do6 output is OFF, the output monitor incorrectly becomes ON.	×
	Cause: Signal line short circuit, board malfunction Remedy: Perform inspection for the above possible cause.		
E2207	Do7 output OFF abnormality	Although the Do7 output is OFF, the output monitor incorrectly becomes ON.	×
	Cause: Signal line short circuit, board malfunction Remedy: Perform inspection for the above possible cause.		
E2208	Do8 output OFF abnormality	Although the Do8 output is OFF, the output monitor incorrectly becomes ON.	×
	Cause: Signal line short circuit, board malfunction Remedy: Perform inspection for the above possible cause.		
E2209	Do1 output ON abnormality	Although the Do1 output is ON, the output monitor incorrectly becomes OFF.	○
	Cause: Signal line short to ground, board malfunction Remedy: Perform inspection for the above possible cause.		
E2210	Do2 output ON abnormality	Although the Do2 output is ON, the output monitor incorrectly becomes OFF.	○
	Cause: Signal line short to ground, board malfunction Remedy: Perform inspection for the above possible cause.		
E2211	Do3 output ON abnormality	Although the Do3 output is ON, the output monitor incorrectly becomes OFF.	○
	Cause: Signal line short to ground, board malfunction Remedy: Perform inspection for the above possible cause.		

https://truckmanualshub.com/

Error code	Error name	Description	Crane operation
E2212	Do4 output ON abnormality	Although the Do4 output is ON, the output monitor incorrectly becomes OFF.	○
	Cause: Signal line short to ground, board malfunction Remedy: Perform inspection for the above possible cause.		
E2213	Do5 output ON abnormality	Although the Do5 output is ON, the output monitor incorrectly becomes OFF.	○
	Cause: Signal line short to ground, board malfunction Remedy: Perform inspection for the above possible cause.		
E2214	Do6 output ON abnormality	Although the Do6 output is ON, the output monitor incorrectly becomes OFF.	○
	Cause: Signal line short to ground, board malfunction Remedy: Perform inspection for the above possible cause.		
E2215	Do7 output ON abnormality	Although the Do7 output is ON, the output monitor incorrectly becomes OFF.	○
	Cause: Signal line short to ground, board malfunction Remedy: Perform inspection for the above possible cause.		
E2216	Do8 output ON abnormality	Although the Do8 output is ON, the output monitor incorrectly becomes OFF.	○
	Cause: Signal line short to ground, board malfunction Remedy: Perform inspection for the above possible cause.		

https://truckmanualshub.com/

4.4.3 AML Internal Abnormality (System Abnormality)

×: All the operations are stopped. (AML automatic stop output OFF)

Error code	Error name	Description	Crane operation
-	ROM check sum abnormality	An abnormality has occurred to the ROM check sum.	×
	Cause: Incorrect flash memory writing, memory malfunction Remedy: Perform inspection for the above possible cause.		
E3002	RAM abnormality	RAM writing/readout cannot be performed normally.	×
	Cause: Malfunction due to noise and others, board malfunction Remedy: Perform inspection for the above possible cause.		
E3003	CPU exception	CPU or DMAC address error has occurred.	×
E3004		CPU has executed an abnormal command, including slot illegal instruction.	
E3005		An exception processing has been activated which is not executed in normal cases.	
	Cause: Runaway due to noise and others, board malfunction However, even in the normal status, this may be stored at turning ON/OFF of power. Remedy: Perform inspection for the above possible cause.		
E3006	Internal power supply abnormality	An abnormality has occurred to the analog power supply voltage.	×
	Cause: Board malfunction, detector malfunction, short circuit in wiring to detector Remedy: Perform inspection for the above possible cause.		
E3007	Flash memory abnormality	The area that stores the adjustment value is destructed. Re-adjustment is required.	○
	Cause: Board malfunction, malfunction due to noise and others. Unless the error data is erased, the message remains. Remedy: Perform inspection for the above possible cause.		
E3008	Task execution abnormality	Runaway has occurred to the I/O related program.	×
	Cause: Malfunction due to noise and others, board malfunction Remedy: Perform inspection for the above possible cause.		

https://truckmanualshub.com/

4.5 CPU State Indicator LED

The AML has three LEDs on the circuit board whose illumination is controlled by software. Depending on the lighting status of each LED, the AML operating status can be checked.

Table 4.5.1 CPU state indicator LED

CPU state	LED 3	LED 2	LED 1	Description	Indication priority (Small = High)
In normal processing	○ ●	● ○	○ ○	LED 2 and 3 light up alternately.	7
- In power ON initialization processing - Under execution of program change - System abnormality (CPU exception, etc.)	●	●	○	LED 2 and 3 light up.	2
ROM and RAM check error	○	●	○	LED 2 lights up.	3
Group 1 error (E1∗∗∗)	○	◐	○	LED 2 flashes.	5
Group 2 error (E2∗∗∗)	◐	○	○	LED 3 flashes.	6
Group 3 error (E3∗∗∗)	◐	◐	○	LED 2 and 3 flashes.	4
In WDT operation	○	○	●	LED 1 lights up.	1

Remove the upper case from the AML main body, and check the LED lighting status.

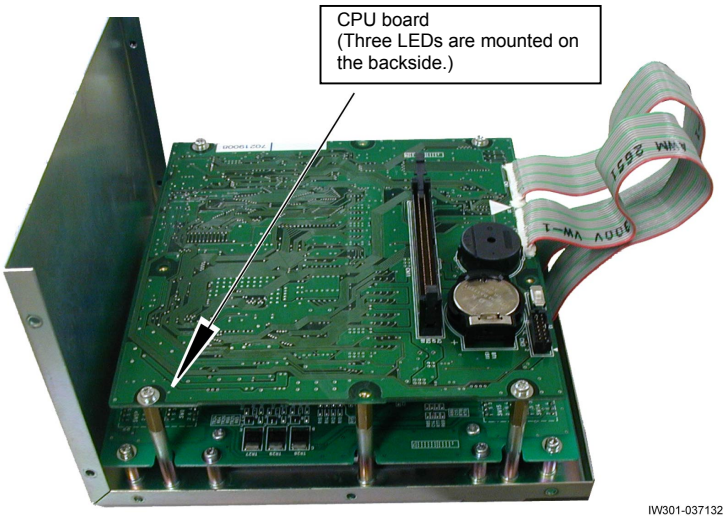

https://truckmanualshub.com/

C-5 Required Adjustment after AML System Part Replacement

[NOTICE]

◆ The adjustment value for each model is stored in the flash memory. When replacing the CPU board, read out the flash memory data from the malfunctioning CPU board to the PC, and write the data to the flash memory of new CPU board again. In that way, the adjustment works other than the clock adjustment become unnecessary. However, always check visually that the numerical value indications, such as boom length and boom angle, as well as the symbol indication that are shown on the AML display unit agree with the actual status.

<table>
<tr><th colspan="3">Name of part to be replaced</th><th>Adjustment item required to be performed</th></tr>
<tr><td rowspan="5">Detector</td><td colspan="2">Outrigger extension length detector</td><td>Outrigger extension length detector adjustment</td></tr>
<tr><td colspan="2">Swing angle detector</td><td>Swing angle detector adjustment</td></tr>
<tr><td colspan="2">Boom length detector</td><td>Boom length detector adjustment</td></tr>
<tr><td colspan="2">Boom angle detector</td><td>Boom angle detector adjustment</td></tr>
<tr><td colspan="2">Pressure sensor for moment detection</td><td>Moment and load radius adjustment</td></tr>
<tr><td rowspan="3">AML control unit</td><td rowspan="2">DISP board
CPU board</td><td>When data can be read by maintenance terminal ∗1)</td><td>Clock adjustment</td></tr>
<tr><td>When data cannot be read by maintenance terminal ∗1)</td><td>Perform all the detector adjustments and valve output adjustment.</td></tr>
<tr><td colspan="2">CON1 board
CON2 board</td><td>Perform all the detector adjustments.</td></tr>
<tr><td rowspan="2">Proportional solenoid valve</td><td colspan="2">Proportional sol. valve for swing control</td><td>Valve output adjustment for swinging</td></tr>
<tr><td colspan="2">Proportional sol. valve for elevation control</td><td>Valve output adjustment for elevating</td></tr>
</table>

∗1): Refer to "Data Readout/Rewriting with Maintenance Tool"

(Can be found in service section of TADANO INTRANET in Japan only)

For the adjustment work, refer to Chapter D, Adjustment Mode.

https://truckmanualshub.com/

C-6 Disassembly and Assembly

[NOTICE]

◆ Before mounting or dismounting the AML, be sure to turn OFF the starter switch of the crane.

◆ During the disassembly and assembly, do not touch the front or back surface of the board directly by hands. (Prevent static electricity)

◆ Securely connect the connector while paying attention to avoiding adhesion of water, dust, exposure of ultraviolet rays and static electricity.

6.1 Disassembly of AML Main Unit

1. Remove the pan head screws (a) (10 positions), and slightly open the upper case from the lower case.

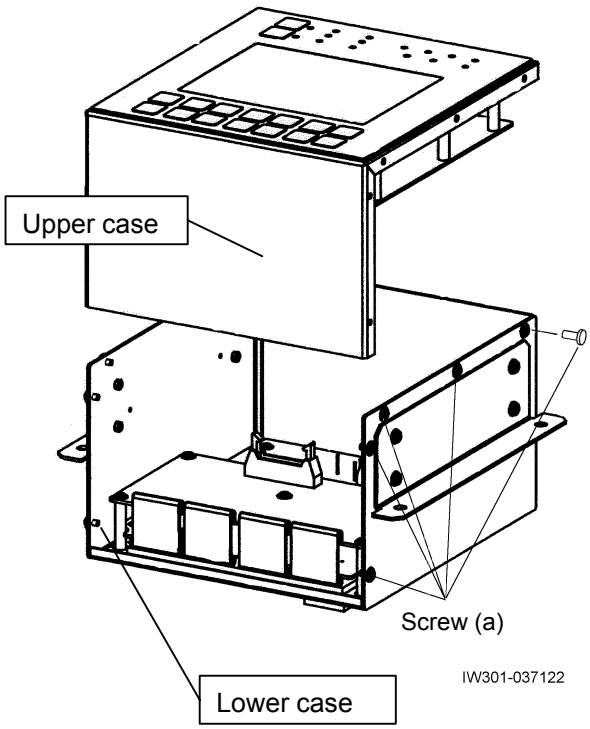

2. Remove the flat cable, and remove the upper case from the lower case.

3. With the upper case, remove the board fixing pan head screws, and remove the display board and CPU board together.

4. With the lower case, remove the board fixing pan head screws, and remove the CON1 board and CON2 board together.

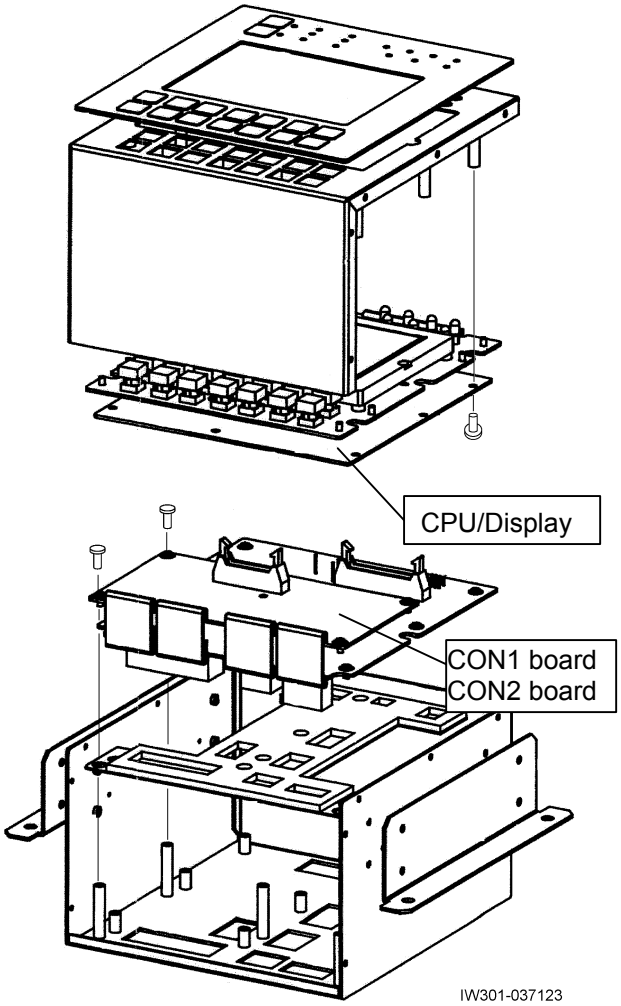

https://truckmanualshub.com/

6.2 Connector

6.2.1 Removing and attaching the connector contact

NOTICE

◆The connector contacts are fixed to the connectors by double-locking mechanism.

Follow the procedure below when removing and attaching the connector contacts.
The following description is based on the manufacturer AMP's instruction sheet.

AMP connector type	Documentation No. of AMP instruction sheet	Part No. of contact extraction tool
.070 Multi-lock connector (Mark Ⅰ)	412-5520	755430-2
.040 Multi-lock connector (Mark Ⅰ)	411-5883	755430-1
.040 Multi-lock connector (Mark Ⅱ)	412-5475-1	
.040Ⅱ Multi-lock connector (Mark Ⅱ)	411-5760-2	715131-1

The part Nos. of the contact extraction tools are designated by AMP.

2.1.1 AMP.070 Multi-lock connector (Mark Ⅰ)

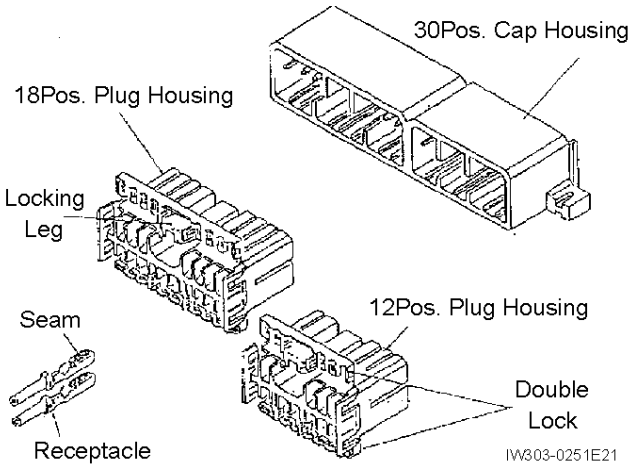

Insertion of Contact

1. Insert the receptacle properly with its seam side up (for both upper and lower cavities) into the housing with its locking side up. Please do not force to insert; make sure the direction is correct.
2. Please make sure that the contact is perfectly locked with the housing until it clicks. Please make it a rule to check the locking by gently pulling forward the contact after insertion.
3. In case the contact must be pulled out again, please care about the deformation of contact. [Refer to contact extraction tool(755430-2) instruction sheet.]
4. Doublelock immediately after insertion of contact. Otherwise it might be damaged in carrying the harness due to doublelock catching things.

https://truckmanualshub.com/

Double lock

1. After the insertion of contact into the housing, doublelock it (hinge type). There are eight places to lock. Please make sure to lock all of them.

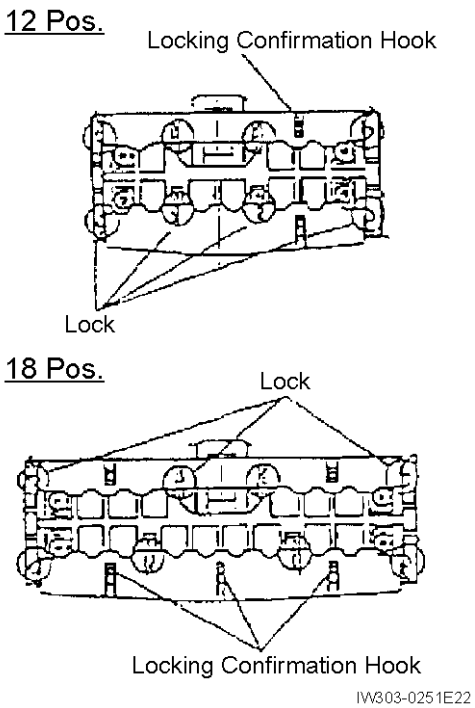

Confirmation of Locking:
Please make certain of the complete of locking by checking the hooks and the locks on both sides.

2. Increase of Contact Keeping Strength can be expected by doublelocking.

3. Releasing Doublelock:
Refer to contact extraction tool(755430-2) instruction sheet.
"Please obey the authorized instruction to release,otherwise the housing could be damaged. Please release it properly."

Harness Checker

1. Please refer to the Fig. below to check the current running of assembled harness.

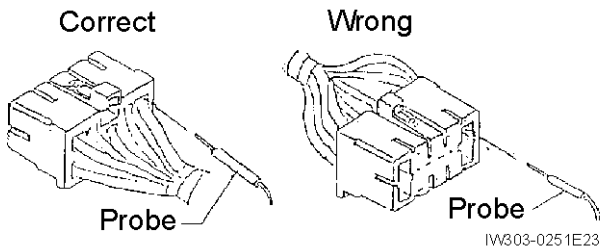

“Use of Current Checker of Spring Pin is preferable.”

https://truckmanualshub.com/

AMP

Tyco Electronics AMP K.K.

AMP EXTRACTION TOOL P/N 755430-2
FOR EXTRACTING 070 SERIES CONTACTS,

INSTRUCTION SHEET

411-5287
(WAS IS-287J)

RELEASED	13FEB85
REV. 01	25 AUG 00

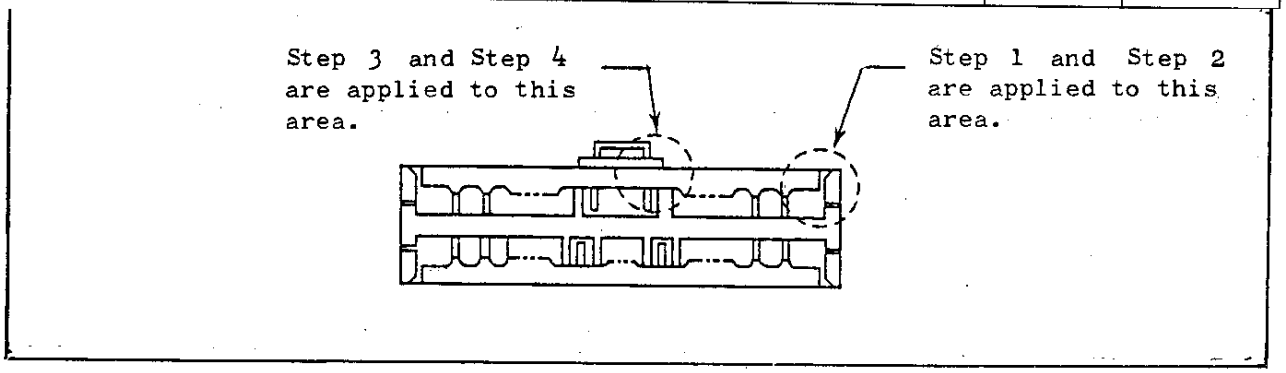

Fig. 1 IW303-0251E24

1.INTRODUCTION:

AMP Extraction Tool, P/N 755430-2 has been designed to extract 070 Series contacts from double lock housing.
Read this instruction sheet carefully, before you start operation.

2.UNLOCKING HINGE-LOCKING DEVICE:

The loaded contacts are locked by the double locking hinge device. It is necessary to unlock the hinge locking device, before to start removal of contacts from the housing.
Opening of hinges should be performed carefully, not to damage them during handling. Open one after one, gradually.

Releasing Side Locking Device:

1. Insert tip end of the tool into the gap between the double-lock hinge and side wall of housing as shown in Fig.2.
2. Tilt the tool so that the tip end digs up the double-lock plate with the side wall partially bending outside to release locking device as shown in Fig.3.

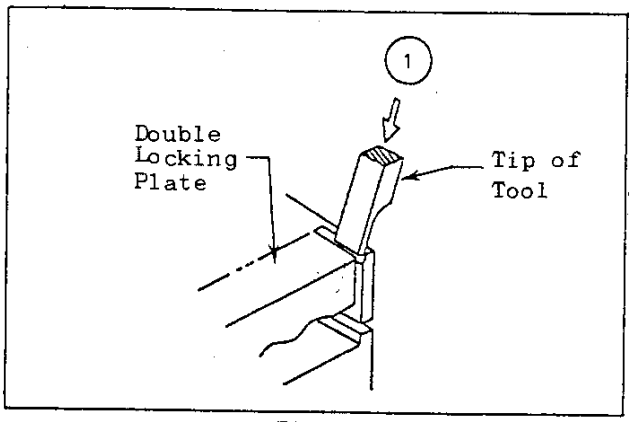

Fig. 2 IW303-0251E25

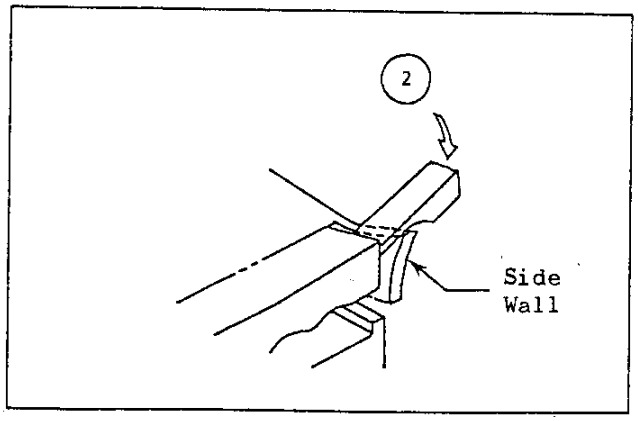

Fig. 3 IW303-0251E26

NOTICE
Care must be taken not to apply an excessive force, lest it should result damage of housing wall etc.

https://truckmanualshub.com/

Releasing Center Locking Device:

3. Insert tip end of the tool into the gap of locking device with its flat sides facing aside as shown in Fig.4.

4. Tilt the tool in the arrowed direction to raise the hinge with the locking arm bending out.
   Repeat the steps from 1 to 4 to release on both sides in the same manner, so that all the locking devices are unlocked and hinges become free for raising up.
   Avoid bending walls excessively to prevent from damage during operation.

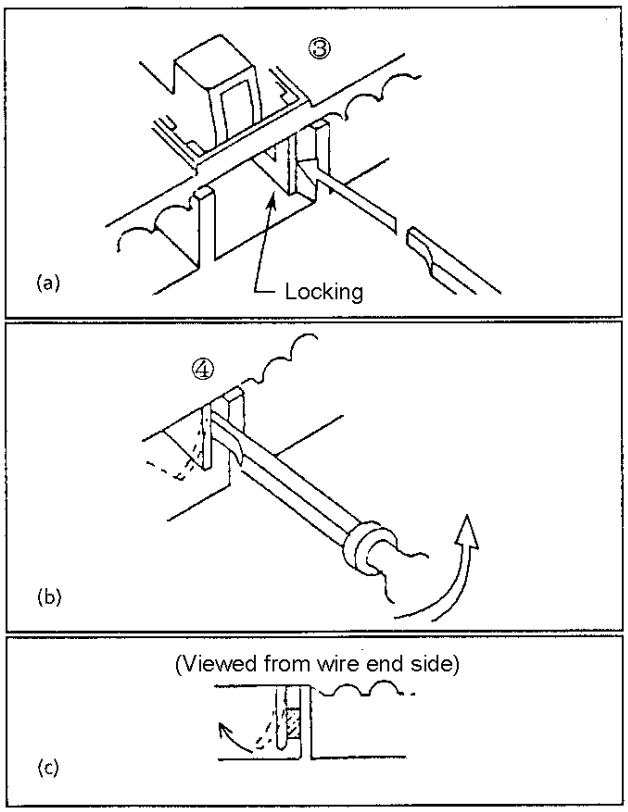

Fig. 4 (a), (b) and (c) IW303-0251E27

3.EXTRACTION OF CONTACTS:

Insert tip end of the tool into the housing cavity from the mating side of housing, so as to raise the locking lance of housing. This will make contact unlocking.

Proceed as follows (Fig.5):

1. Push back the contact into the housing in the direction "A". This will result relaxing of locking tension prior to unlocking.
2. Insert extraction tool into the housing cavity.
3. Raise the locking lance in housing.
4. Pull back the contact from the housing.

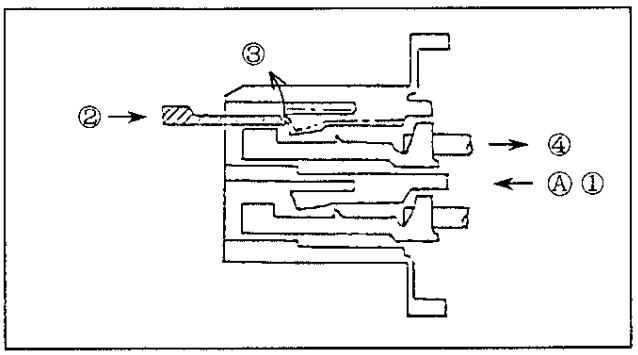

Fig. 5 IW303-0251E28

NOTICE

◆Avoid inserting tool tip from reaching the contact leaf area for prevention from contact deformation and damage.

https://truckmanualshub.com/

2.1.2 AMP.040 Multi-lock connector (Mark I)

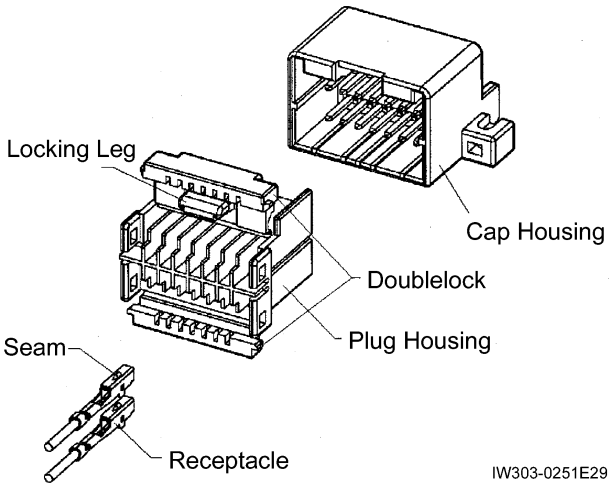

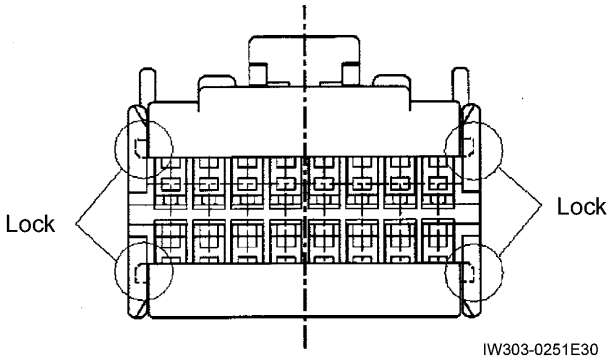

Insertion of Contact

1. Insert the receptacle properly with its seam side up (for both upper and lower cavities) into the housing with its locking side up. Please do not force to insert; make sure the direction is correct.
2. Please make sure that the contact is perfectly locked with the housing until it clicks. Please make it a rule to check the locking by gently pulling forward the contact after insertion.
3. In case the contact must be pulled out again, please care about the deformation of contact. [Refer to contact extraction tool(755430-1) instruction sheet.]
4. Doublelock immediately after insertion of contact. Otherwise it might be damaged in carrying the harness due to doublelock catching things.

Double lock

1. After the insertion of contact into the housing, doublelock it (hinge type). Please make sure to lock all of them.
2. Increase of Contact Keeping Strength can be expected by doublelocking.
3. Releasing Doublelock:
   Refer to contact extraction tool(755430-1) instruction sheet.
   "Please obey the authorized instruction to release,otherwise the housing could be damaged. Please release it properly."

Harness Checker

1. Please refer to the Fig. below to check the current running of assembled harness.

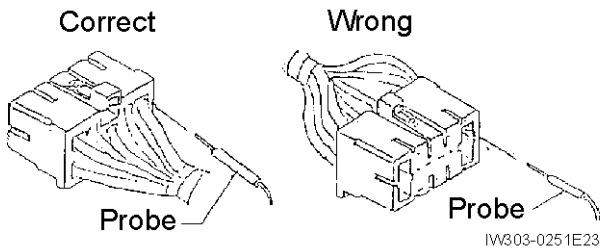

“Use of Current Checker of Spring Pin is preferable.

https://truckmanualshub.com/

AMP

Tyco Electronics AMP K.K.
Kawasaki, Japan

AMP EXTRACTION TOOL P/N 755430-1
FOR EXTRACTING 040 SERIES CONTACTS,
INSTRUCTION SHEET

411-5288
(WAS IS-288J)

RELEASED	13FEB85
REV. O_1	06 AUG 01

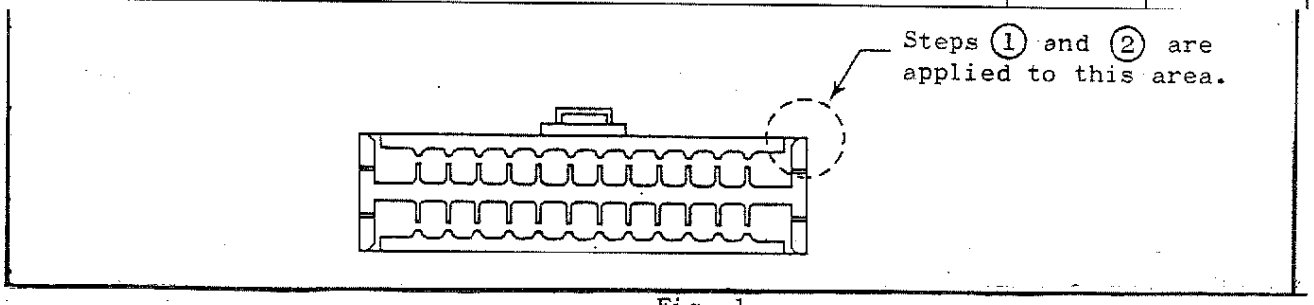

Fig. 1

IW303-0251E31

1.INTRODUCTION:

AMP Extraction Tool, P/N 755430-1 has been designed to extract 040 Series contacts from double lock housing.
Read this instruction sheet carefully, before you start operation.

2.UNLOCKING HINGE-LOCKING DEVICE:

The loaded contacts are locked by the double locking hinge device. It is necessary to unlock the hinge locking device, before to start removal of contacts from the housing.
Opening of hinges should be performed carefully, not to damage them during handling. Open one after one, gradually.

1. Insert tip end of the tool into the gap between the double-lock hinge and side wall of housing as shown in Fig.2.

2. Tilt the tool so that the tip end digs up the double-lock plate with the side wall partially bending outside to release locking device as shown in Fig.3.

NOTICE

Care must be taken not to apply an excessive force, lest it should result damage of housing wall etc.

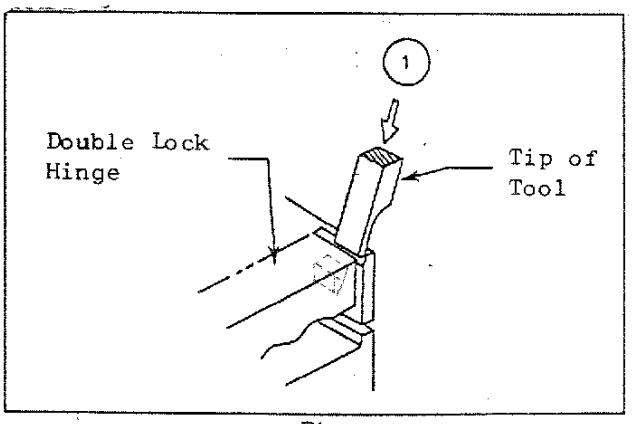

Fig. 2

IW303-0251E32

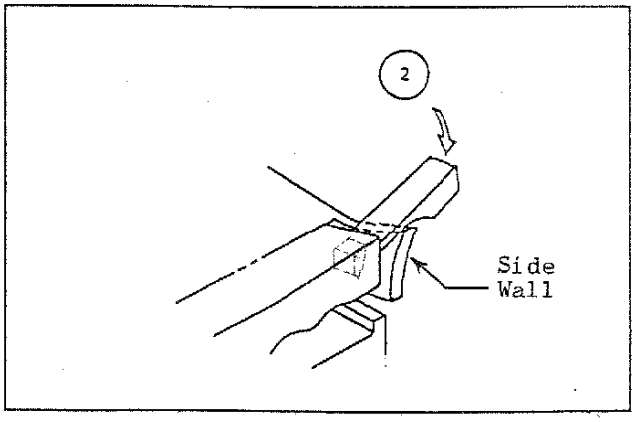

Fig. 3

IW303-0251E33

https://truckmanualshub.com/

3.EXTRACTION OF CONTACTS:

Insert tip end of the tool into the housing cavity from the mating side of housing, so as to raise the locking lance of housing. This will make contact unlocking.

Proceed as follows (Fig.4):

1. Push back the contact into the housing in the direction "A". This will result relaxing of locking tension prior to unlocking.
2. Insert extraction tool into the housing cavity.
3. Raise the locking lance in housing.
4. Pull back the contact from the housing.

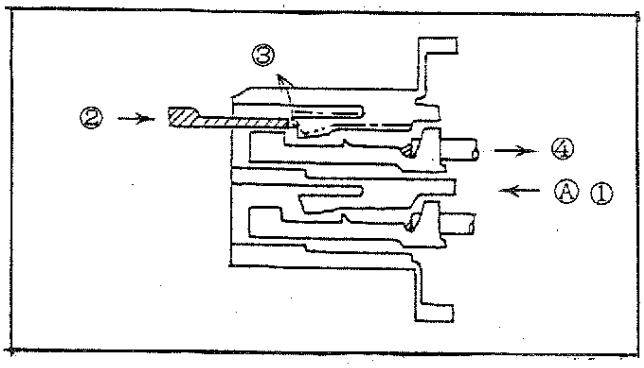

Fig. 4 IW303-0251E34

NOTICE

Avoid inserting tool tip from reaching the contact leaf area for prevention from contact deformation and damage.

https://truckmanualshub.com/

2.1.3 AMP.040 Multi-lock connector (Mark Ⅱ)

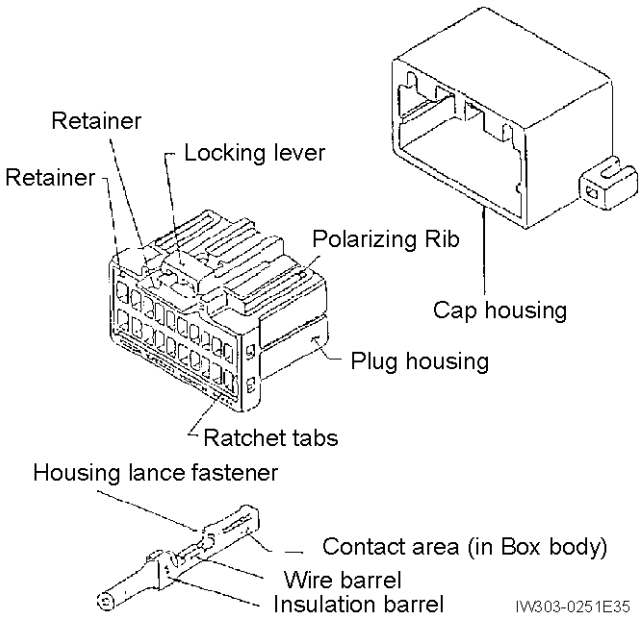

Insertion of Contact

1. Before loading contacts into the housing, verify that there are no incomplete crimps and then place the contact with the locking lever facing upward as shown in Fig.1 and insert the contact straight until it stops at the end of housing cavity. If the contact is not easily seated in housing, do not force it, but make sure that it is going in the right direction.
   Terminals forced in backwards can accidentally scrape the housing lance off.

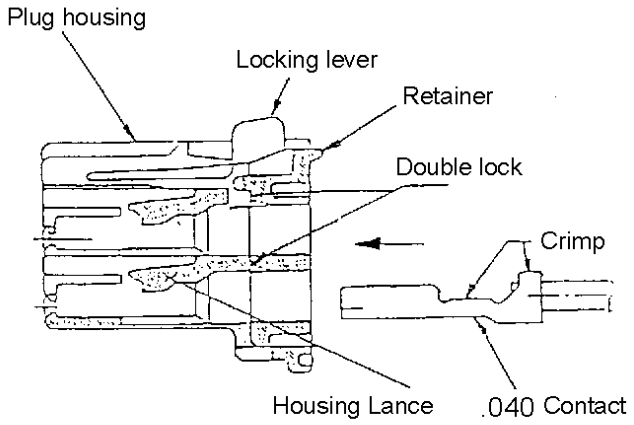

Fig.1 Iw303-0251E36

2. Verify that the terminal has been firmly locked to the housing lance. If the crimp is located at the center of the retainer during contact mounting as shown in Fig.2, contact locking is not engaged rightly, causing the contact to slip out. Push the contact into the lance as shown in Fig.3. Locking it to the housing lance correctly will make a clicking sound.
   After inserting the contact in place, check it by pulling the wire backward. Whenever the contact has to be removed for remounting, use the specified pulling tools.

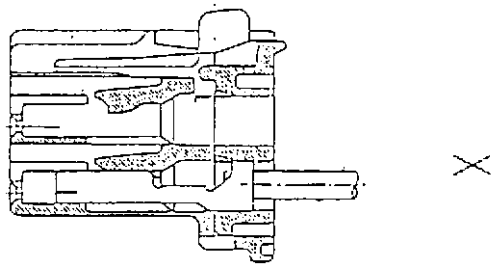

Fig.2 Contact is not locked.
IW303-0251E37

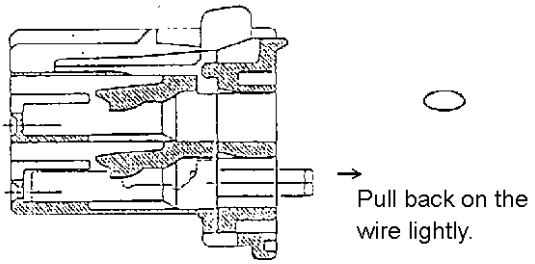

Fig.3 When contact is correctly locked.
IW303-0251E38

https://truckmanualshub.com/

Double Lock Ratchet

1. A double lock ratchet is used to reinforce contact support. The insulation barrel is supported at the retainer type double lock area. See Fig.4.
2. If contacts are not mounted correctly inside the housing, double lock may not completely lock or effectively lock. See Figs.2 and 6.
3. Verify that the double lock is firmly locked. When completing and verifying steps 1 and 2 above, press the retainer press area. The retainer moves downward and the ratchet clicks to be released. Make sure it is locked by lightly pulling the wire outward. The conditions shown in Figs.4 and 5 will be seen if the retainer behaves correctly.
   If any contacts are not completely fixed, the retainer does not work properly resulting in the condition shown in Fig.6, in which the retainer is effective only on one side and the ratchet teeth are lifted on one side. If this happens, remount the contact in the correct position using a removing jig.

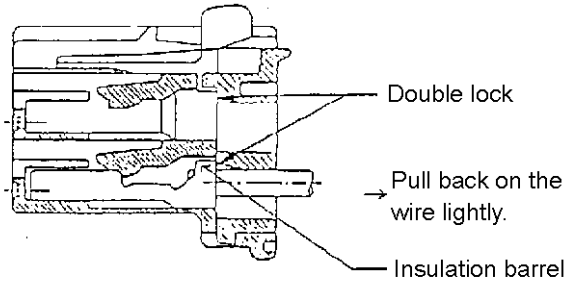

Fig.4 When double lock is completed.

IW303-0251E39

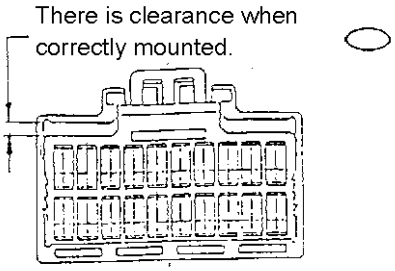

Fig.5 When double lock is completed.

IW303-0251E40

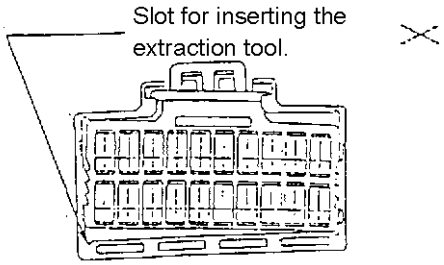

Fig.6 When detent locking is incomplete (Ratchet teeth are effective on only one side).

IW303-0251E41

Unlocking the double lock ratchet

Unlock the detent lock

1. Insert the jig into the insertion slot.
2. Release the ratchet teeth by turning the jig in the direction of the arrow so that the housing wall bends to allow you to lift the retainer press area upward. Repeat the same procedure for the other side as well.

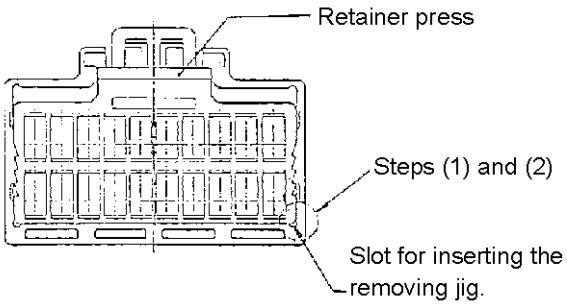

IW303-0251E42

https://truckmanualshub.com/

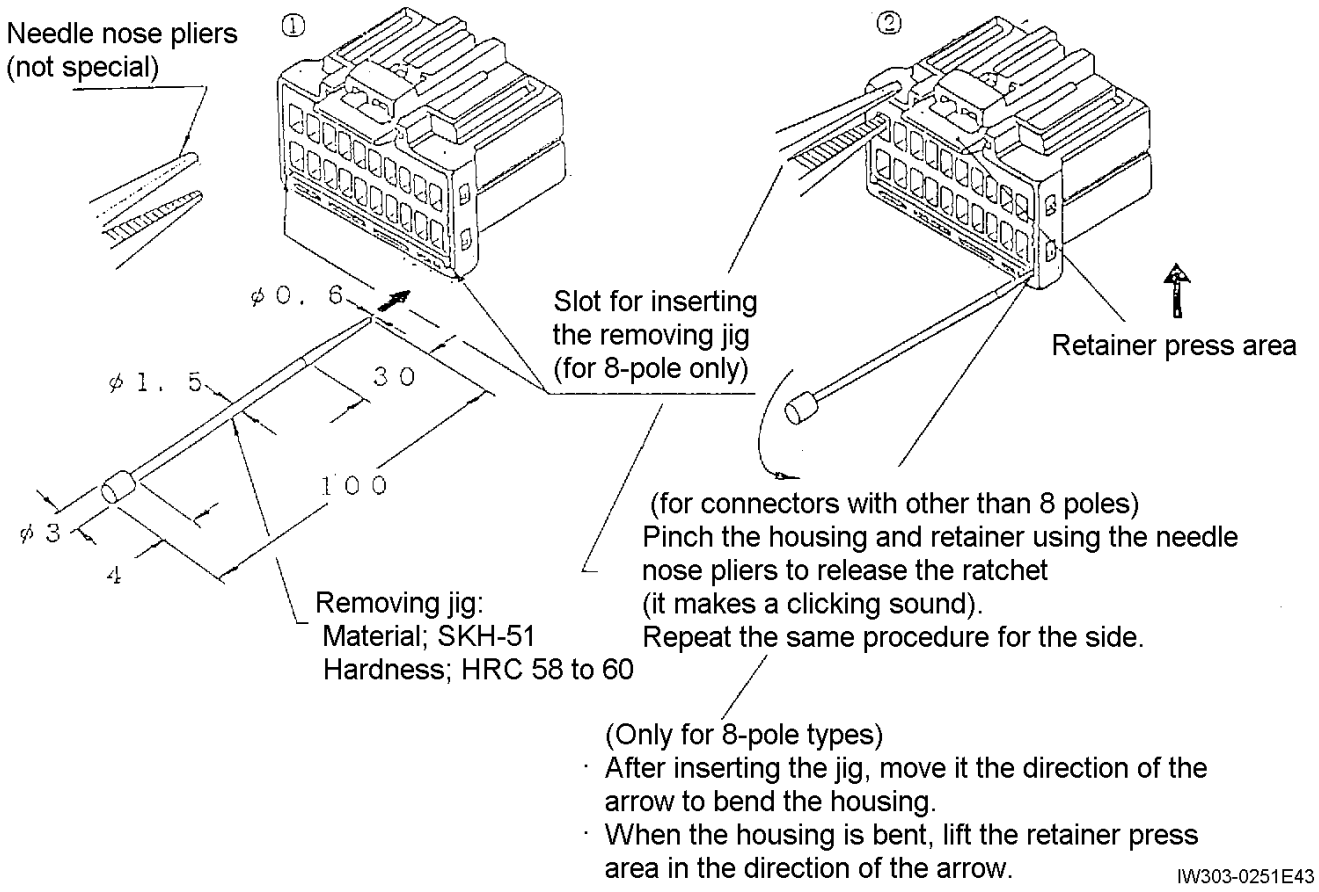

Extracting Contacts

Remove contacts by inserting the jig from the connector fitting side to lift up the connector housing lance.

1. Depress the contact in the direction of the arrow.
2. Insert jig.
3. Lift up the lance.
4. Remove the contact.

NOTICE

Do not insert the removing jig into the contacting area of receptacle contacts (in order to prevent the contact leaf from deforming).

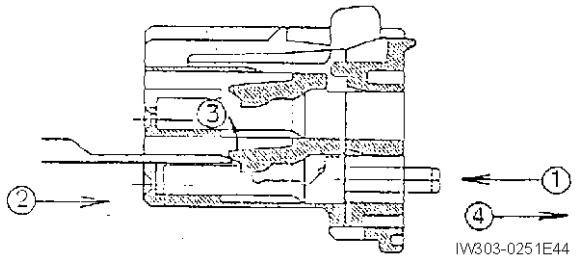

https://truckmanualshub.com/

2.1.4 AMP.040 Ⅱ Multi-lock connector (Mark Ⅱ)

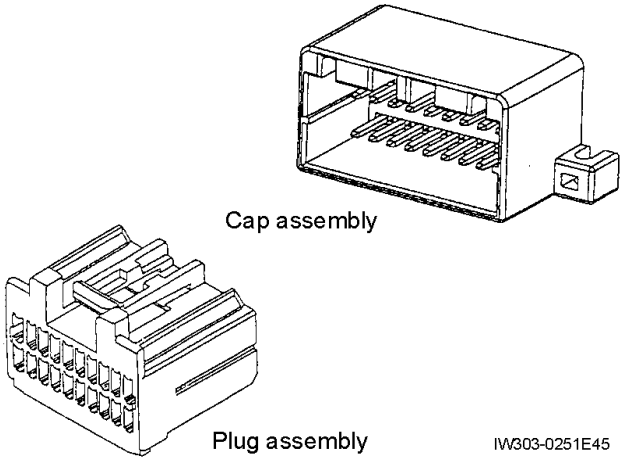

Insertion of Contact

1. Confirm the proper orientation and insert the contact into the retainer until a click sound is noted. Confirm that the contact is inserted fully into the retainer. Then, lightly pull the wire to confirm that it will not come off.
2. Orientation of the contact
   Orient the dimple provided on the contact so that it faces the retainer side of the housing.

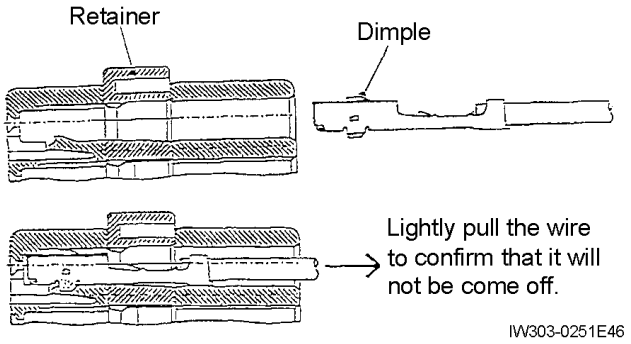

Securing the retainer (From pre-assembled position to the finally assembled position)

1. Note that the retainers provided on the connector are pre-assembled. Thus, they need to be finally assembled as shown in the Fig. below after inserting the contacts into them. The retainers can not be pushed in if any one of the contacts is not completely inserted. Press both ends of the retainer to assemble it.

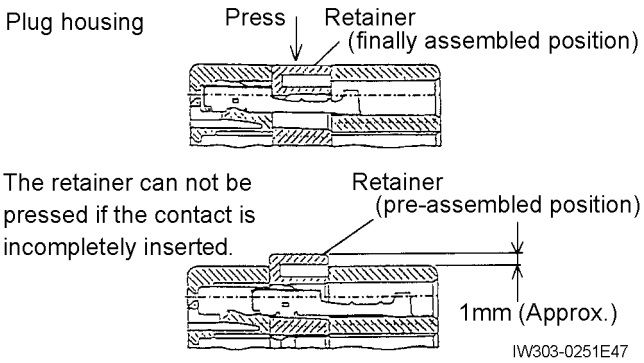

Removing the retainer (From the finally assembled position to the pre-assembled position)

1. To remove the contacts from the housing the retainer must be at pre-assembled position. The contact can not be removed from the retainer if it is finally assembled position. Insert the end of Extraction Tool (AMP part No.715131-1) into the retainer extraction hole and pull up the retainer. Set the retainer to the pre-assembled position by aligning the alignment marks if it is dislocated from the pre-assembled position.

How to extract the contacts

1. Set the retainer to the pre-assembled position.
   The contacts can not be removed with the retainer set to the finally assembled position.
   Be sure to use the Extraction Tool (AMP part No.715131-1) to remove the contact.
   Insert the tool horizontally into the housing. Never allow the tool to face downward to interfere with the contact as shown in the improper example below.

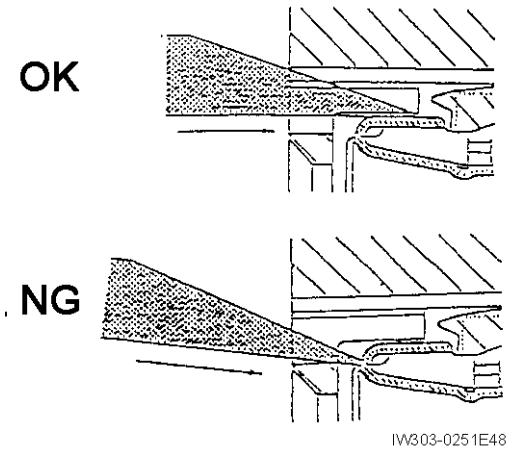

https://truckmanualshub.com/

Extract the contact in accordance with following procedure.

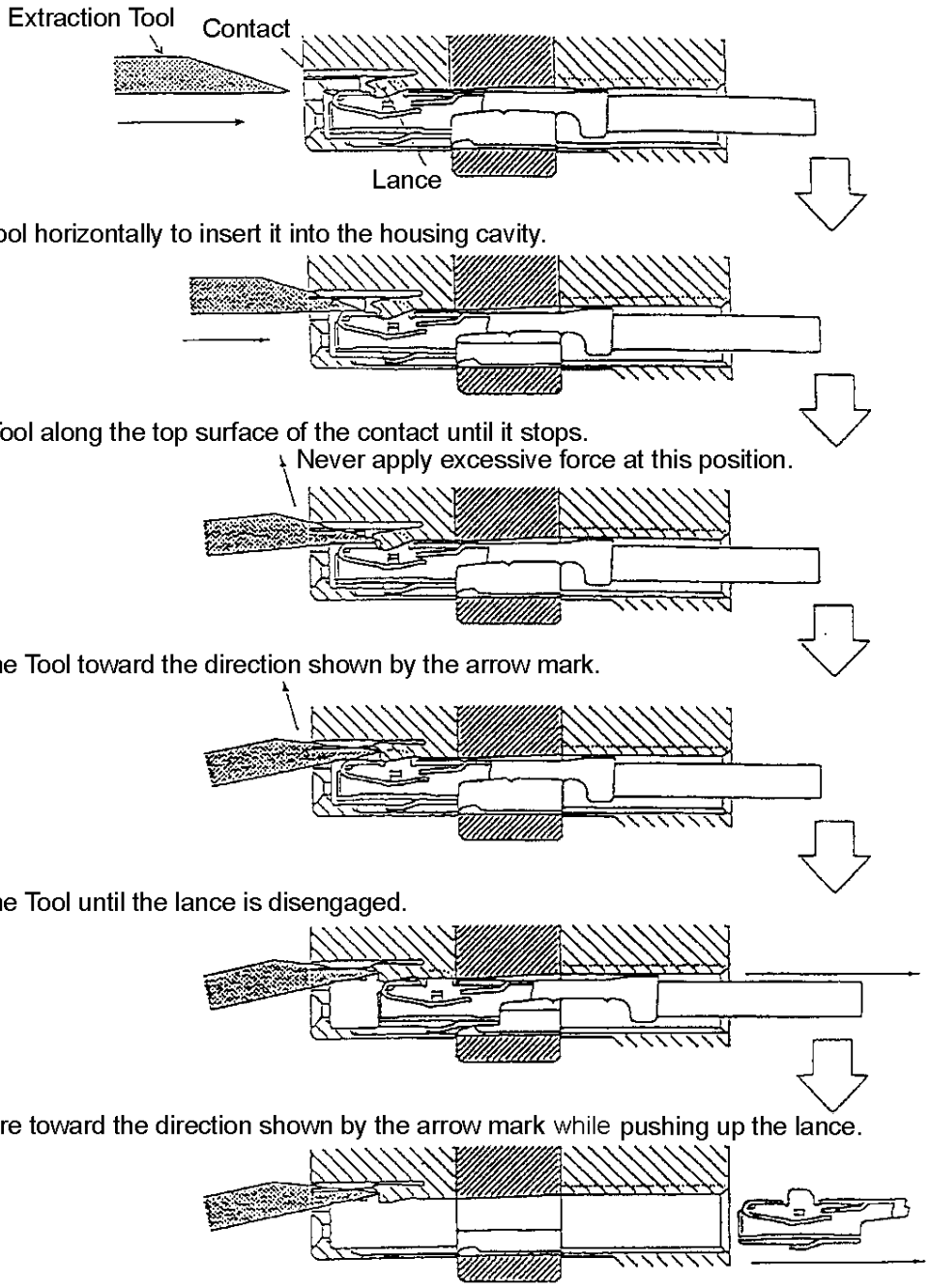

END

https://truckmanualshub.com/

6.2.2 Crimping receptacle contact

1. Applicable contact

AMP connector type	Contact part No.	Finish	Applicable wire size (nominal)	Hand tool Part No.
.040 series	175062-1	Tin-plated	0.3-0.5mm^2	911738-1
	175062-2	Gold-plated		
.070 series	175027-1	Tin-plated	0.5-1.25mm^2	911788-2
	175027-2	Gold-plated		
.040 Ⅱ series	179417-1	Tin-plated	0.3-0.85mm^2	934192-1

The part Nos. of contacts and hand tools are designated by AMP.

2. Nomenclature

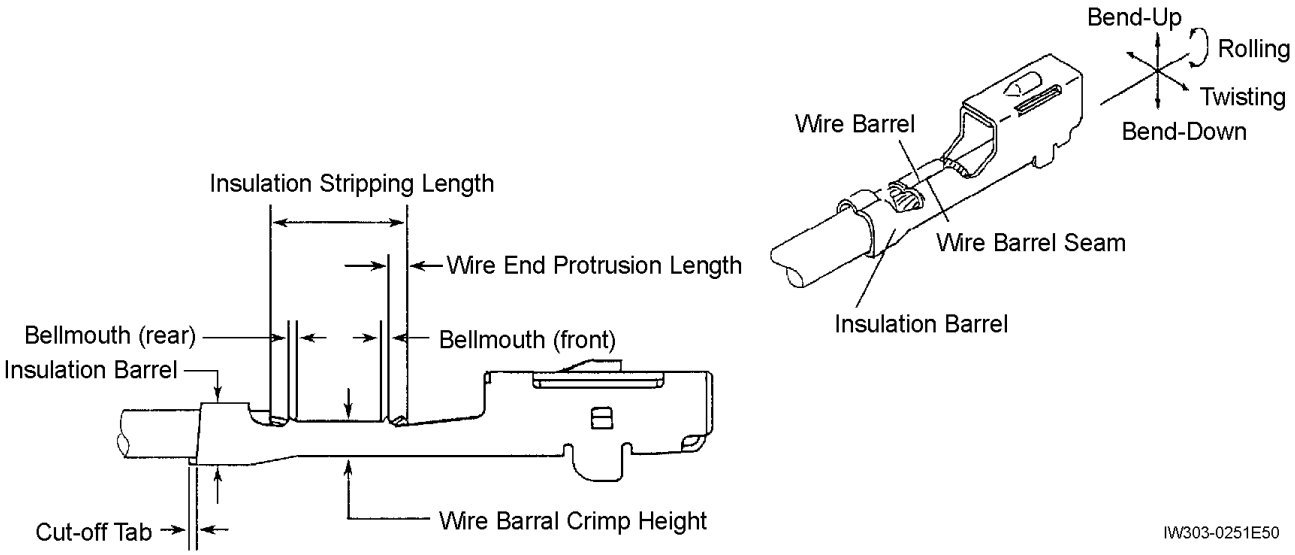

3. Crimping condition

No.	Item		.040 series 175062-1 175062-2	.070 series 175027-1 175027-2	.040 Ⅱ series 179417-1 179418-2
1	Cut-off tab		0.25mm Max.	0.3mm Max.	0.5mm Max.
2	Bellmouth	Front	0.4mm Max.		0.5mm Max.
		Rear	0.15-0.65mm		0.5mm Max.
3	Allowable limit of deformation	Bending	-4°-+2° Max.	-3°-+3° Max.	-4°-+5° Max.
		Twisting	3° Max.		5.5° Max.
		Rolling	5° Max.		10° Max.
4	Wire end protrusion length		0-1.5mm		0-1.0mm
5	Insulation stripping length (ref.)		4.0-4.5mm	3.5-4.5mm	4.0-4.5mm
6	Wire barrel seam		Seam must be neatly closed. (A slight gap is allowable on condition where no strand looses out of the seam.)		

https://truckmanualshub.com/

6.3 Replacing the Clock Battery

[NOTICE]

◆ When the clock battery is worn out, the adjustment values, error codes and driving history cannot be backed up (saving data at power OFF).
Also, when the error code or overload history is recorded in the AML, an accurate date and time cannot be recorded.

◆ One built-in clock batteries is on CPU board.
Battery type: CR2450

◆ When removing the battery, remove while holding the battery upper (positive side) because the battery may pop up.

The built-in clock battery longevity is usually about 10 years.

If the built-in clock batteries are wasted, replace them according to the following procedures.

(Procedure)

1. Remove the upper case (CPU board) from the AML main unit.

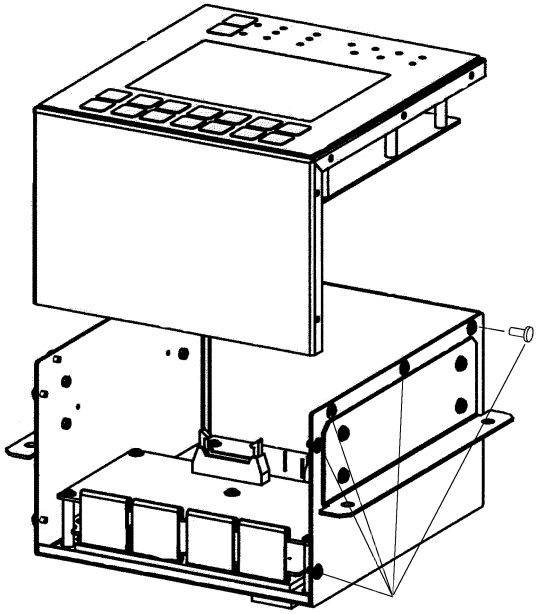

IW301-037122

2. Remove the battery from the battery holder on CPU board (press the protrusion indicated by an arrow).

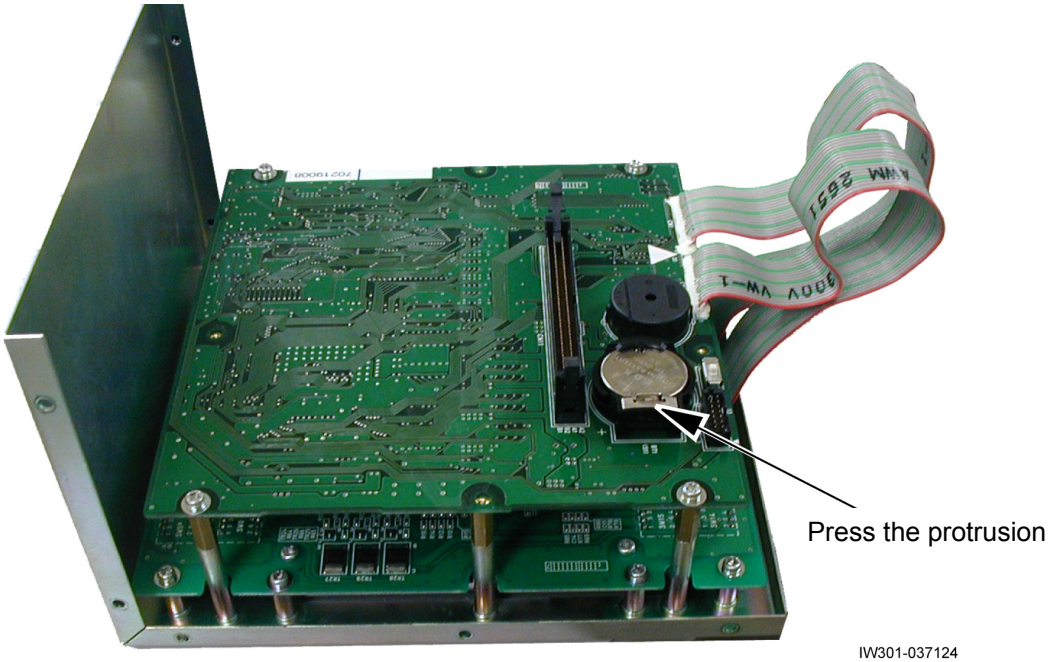

IW301-037124

3. Install a new battery to the CPU board.
The battery positive side must be faced up.

4. Mount the upper case (CPU board) to the AML main unit.

https://truckmanualshub.com/

Chapter D

Adjustment Mode

D

Contents

Outline of Adjustment Mode.....150

D-1 Operation Keys and Menu.....151

1.1 Operation Keys 151

1.2 Structure of Adjustment Mode Menu..... 152

1.3 Mode Shift..... 153
1.3.1 Shift to Maintenance Mode..... 153
1.3.2 Menu Selection..... 153
1.3.3 Shift to Adjustment Mode 154
1.3.4 Adjustment Main Menu..... 155

D-2 Detector Adjustment.....156

2.1 Length and Angle Adjustment Screen.... 156

2.2 Boom Length Adjustment..... 157
2.2.1 Boom Length Zero Adjustment..... 157
2.2.2 Boom Length Span Adjustment..... 157
2.2.3 Adjustment Check 157

2.3 Boom Angle Adjustment..... 158
2.3.1 Boom Angle Zero Adjustment..... 158
2.3.2 Boom Angle Span Adjustment..... 158
2.3.3 Adjustment Check 158

2.4 Swing Angle Adjustment..... 159
2.4.1 Swing Angle 1 Zero Adjustment.....159
2.4.2 Swing Angle 2 Zero Adjustment.....159
2.4.3 Swing Angle 1 Span Adjustment.....160
2.4.4 Swing Angle 2 Span Adjustment.....160
2.4.5 Adjustment Check.....160

2.5 Outrigger Length Adjustment..... 161
2.5.1 Outrigger Length Zero Adjustment.....161
2.5.2 Outrigger Length Span Adjustment.....162
2.5.3 Adjustment Check.....162

2.6 Moment / Load Radius Adjustment..... 163
2.6.1 Moment Zero Adjustment.....164
2.6.2 Moment Span Preliminary / Load Radius Adjustment.....164
2.6.3 Moment Span Adjustment.....165
2.6.4 Moment Adjustment Check.....165

D-3 Valve Adjustment.....166

3.1 Adjustment Sub Menu 166

3.2 Swing Output Adjustment (Offset Method)..... 167

3.3 Swing Output Adjustment (Characteristics Measurement Method)..... 168
3.3.1 Adjustment Procedure 168

3.4 Elevating / Telescoping Output Adjustment..... 170

https://truckmanualshub.com/

3.5 Function of Slow Stop 171
3.5.1 Elevation Slow Stop..... 171
3.5.2 Swing Slow Stop..... 171

D-4 Performance Setup 172

4.1 Winch drum position selection 172

D-5 Operation History Erase 174

5.1 Operation Procedure 174

D-6 Option Select..... 175

6.1 Operation Procedure 175

6.2 Processing Depending on Setting Status 176

6.3 Processing at Setting without Detector .. 176

6.4 Processing at Setting without Function .. 177

D-7 AML Emergency / Override Switch History Erase 178

7.1 Operation Procedure 178

7.2 Operating Conditions 178

D-8 Outrigger Emergency Setting History Erase 179

8.1 Operation Procedure 179

8.2 Operating Conditions 179

https://truckmanualshub.com/

Outline of Adjustment Mode

The AML has the following three basic operation modes.
This chapter describes the operation method in adjustment mode.

- User Mode: Used by the operator to operate the crane.
  For the operation method of user mode, refer to "Chapter B, User Mode."

- Maintenance Mode: Used to perform the AML maintenance menu (operation check, history information reference, etc).
  Also, some adjustment functions such as clock adjustment are included in the maintenance mode.
  For the operation method of maintenance mode, refer to "Chapter C, Maintenance Mode."

- Adjustment Mode: Used to adjust detectors, actuators, etc.

Note: About the integrated information screen

For how to check the current operation state (integrated information screen) from the adjustment screen, refer to Chapter C, Maintenance Mode.

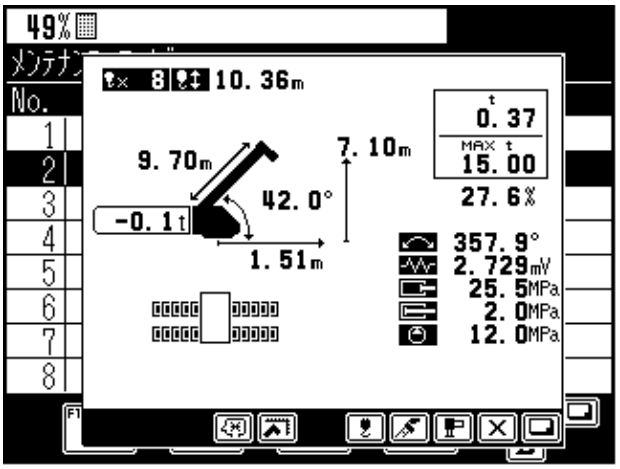

Integrated information screen

https://truckmanualshub.com/

D-1 Operation Keys and Menu

1.1 Operation Keys

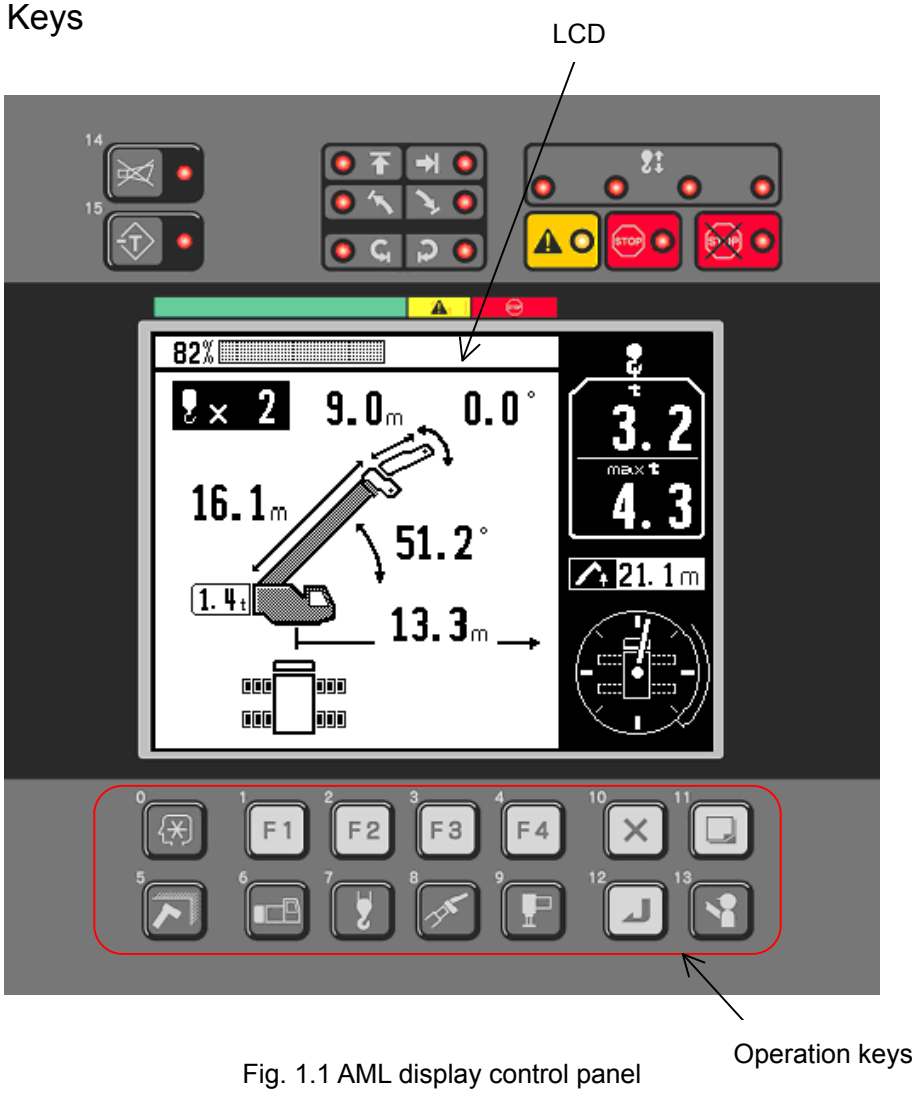

Fig. 1.1 AML display control panel

The following keys are used in the adjustment mode. On and after, < > in the descriptions indicates the operation key.

Key No.	Key name	Function
1	<F1 Function 1>:	Used with functions displayed on the adjustment mode screen with F1.
2	<F2 Function 2>:	Used with functions displayed on the adjustment mode screen with F2.
3	<F3 Function 3>:	Used with functions displayed on the adjustment mode screen with F3.
4	<F4 Function 4>:	Used with functions displayed on the adjustment mode screen with F4.
5	< Range limit>:	Used when copying the adjustment value of precision adjustment.
8	< Lift state>:	Used to perform the compulsory unload at moment adjustment.
10	< Cancel (Exit)>:	Used to terminate the menu that is running.
11	< Display change>:	Used to change the displayed information.
12	< Set>:	Used to determine the menu selection or to register the adjustment value.
13	< Check>:	Used to erase the adjustment value for the precision adjustment.

https://truckmanualshub.com/

1.2 Structure of Adjustment Mode Menu

In the maintenance mode and adjustment mode, a menu having a hierarchical structure is used.

Use the <⊠> key to go back to the previous hierarchical level.

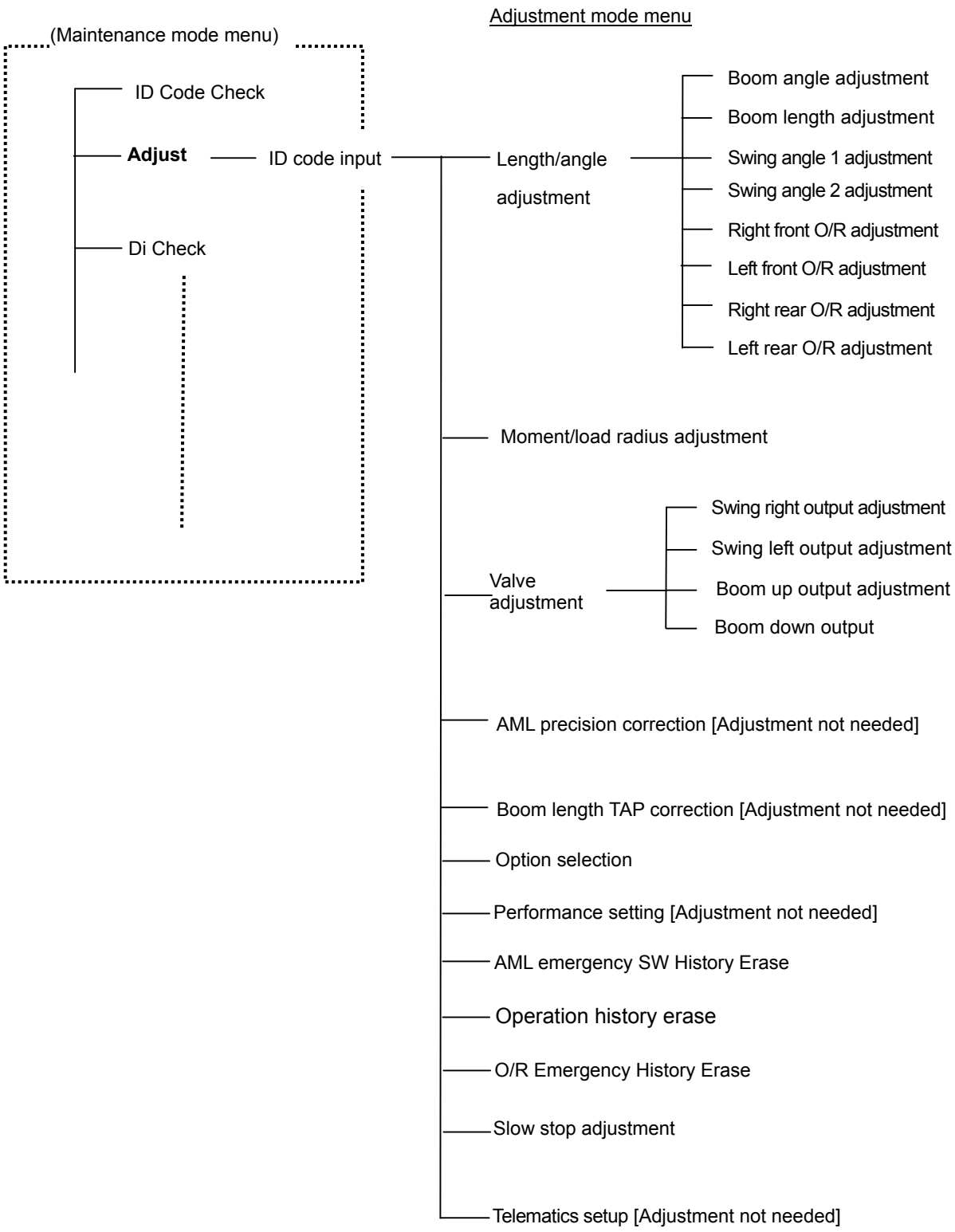

https://truckmanualshub.com/

1.3 Mode Shift

1.3.1 Shift to Maintenance Mode

In the user mode, when all the three keys of the <F3> key, the <F4> key, and the <↵> key are pressed and held simultaneously for 0.5 seconds or more, the mode shifts to the maintenance mode.
When the maintenance mode is entered, the maintenance main menu appears on the LCD as shown in Fig. 1.3.1.

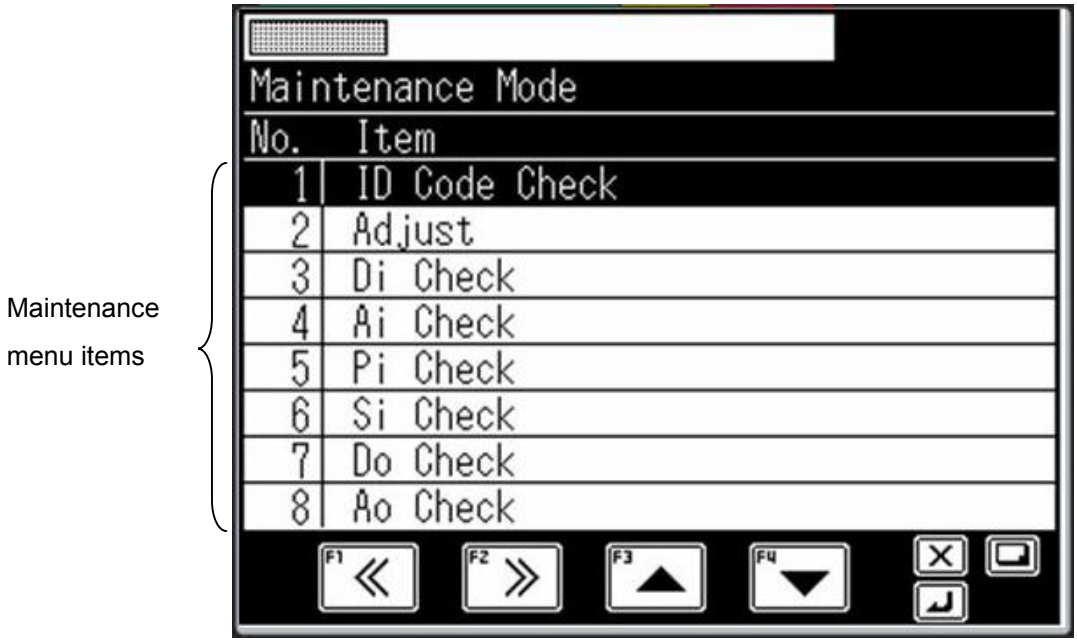

Fig. 1.3.1 Maintenance main menu display

1.3.2 Menu Selection

- Pressing the <F3> key (scroll up) or the <F4> key (scroll down) changes the selected maintenance menu item (highlighted).
- Pressing the <F1> key (previous page) or the <F2> key (next page) changes the pages.
  With the desired menu selected, pressing the <↵> key starts the selected menu.
- To terminate the maintenance mode, press the <×> key while the maintenance main menu is being displayed.

https://truckmanualshub.com/

1.3.3 Shift to Adjustment Mode

To shift to the adjustment mode, select "2. Adjust" in the maintenance main menu of Fig. 1.3.1.
At this time, the LCD shows a screen as shown in Fig. 1.3.2, and the screen waits for the ID code input.
Once the ID code (Note 1) is input correctly, the shift is made to the adjustment mode, and the LCD shows the adjustment main menu shown in Fig. 1.3.3. If the ID code is incorrect, the pressing of <↵> is disabled.
Until the operation history is erased for three times, the ID code input screen is not displayed, shift to the adjustment main menu of Fig. 1.3.3 (Note 2).

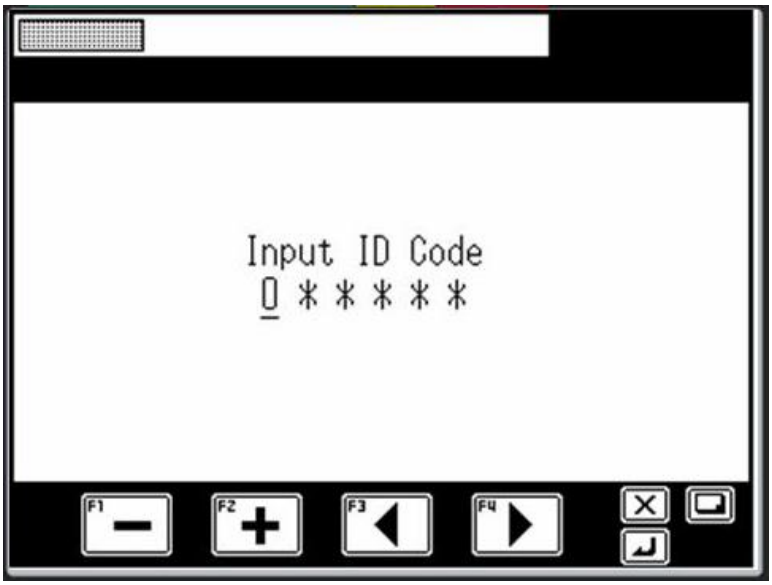

Fig. 1.3.2 ID code input display

Input the ID code (6 digits) according to the steps below.
A numerical value is displayed only for the digit that is being input. A character "*" is shown in other digits.
Move the digit to input using the <F3> key (backward) and the <F4> key (forward).
In the digit that is being input, press the <F1> key (-) or the <F2> key (+) to decrease / increase the value.
Press the <↵> key to confirm the input value.

Note 1: ID code is changed daily based on the date.
(If you need the ID code, contact to Tadano Overseas Div. in Tokyo)
Adjustments of calendar and clock must be done in advance before inputting the ID code.

Note 2: After a replacement of AML related part or CPU board, erase the operation history for three times so that the ID code input screen is displayed.

https://truckmanualshub.com/

1.3.4 Adjustment Main Menu

When the ID code is correctly input, the adjustment main menu is displayed as shown in Fig. 1.3.3.

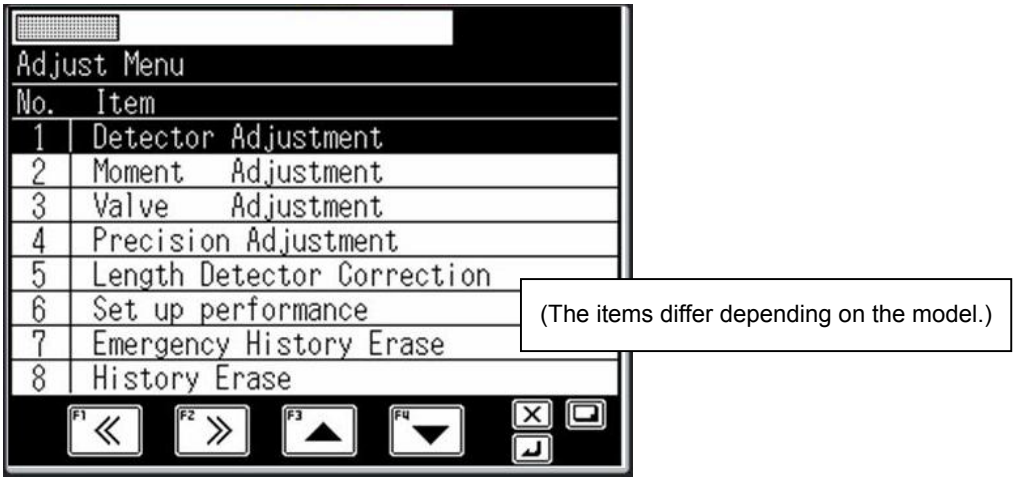

Fig. 1.3.3 Adjustment main menu display

Perform the selection of adjustment menu as described below.

Pressing the <F3> key (scroll up) or the <F4> key (scroll down) moves the selected maintenance menu item (highlighted). After the desired menu is selected, pressing the <↵> key starts the selected menu.

Be sure to perform the adjustment in sequence starting from the menu No.1. To terminate the adjustment mode, press the <×> key while the adjustment main menu is being displayed.

> Note: When performing adjustments, always set up the crane on the firm level surface and fully extend outriggers (except for outrigger length adjustment).
> **For the adjustment notice, condition, and values, refer to the "AML Adjustment Value List" in the Chapter E.**

Table 1.3.1 shows the adjustment main menu list (items differ depending on the model).

Table 1.3.1 Adjustment main menu list

Displayed menu	Work contents
Detector Adjustment	Detector adjustment
Moment Adjustment	Moment and load radius adjustment
Valve Adjustment	Storing of actuator's operating speed characteristics for valve control output
Precision Adjustment	Precision correction (adjustment of displayed load and load radius precision)
Length Detector Correction	Adjustment value setting of boom length detection value
Option Select	Selection of availability of swing angle detector, anemometer, main pressure detector, etc.
Set up performance	Setting of performance-related data
Emergency History Erase	Erasing of AML emergency or override SW history Will not be displayed after erasing for three times.
History Erase	Erasing of operation history Will not be displayed after erasing for three times.
O/R Emergency History Erase	Erasing of outrigger emergency setting history Will not be displayed after erasing the operation history for three times.
Slow Stop Adjustment	Adjustment of slow stop deceleration table
Telematics setup	Adjustment not allowed

When AML board is replaced.

https://truckmanualshub.com/

D-2 Detector Adjustment

2.1 Length and Angle Adjustment Screen

When "Detector Adjustment" is selected in the adjustment main menu, the detector adjustment screen appears on the LCD as shown in Fig. 2.1.1.

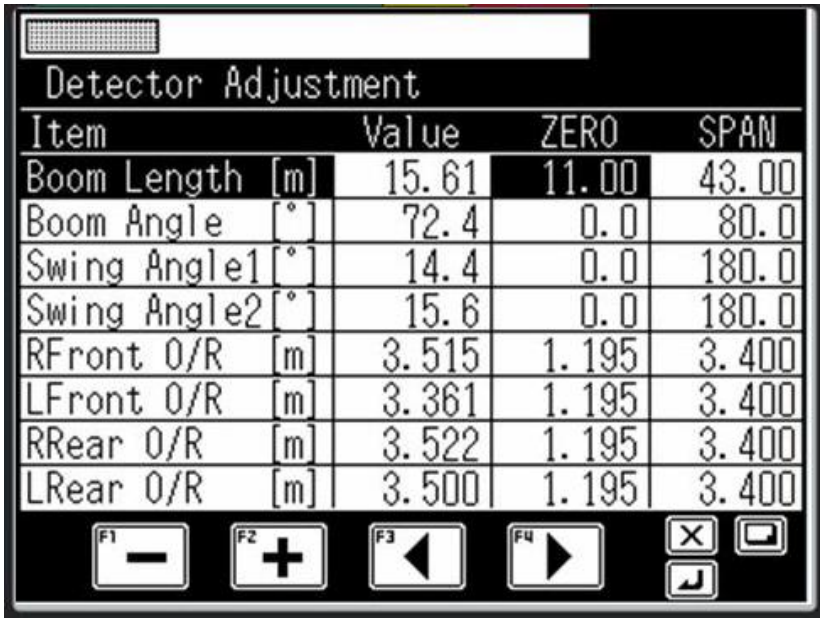

Fig. 2.1.1 Detector adjustment screen

Table 2.1.1 shows the list of adjustment items.

Table 2.1.1 Detector adjustment item list

Adjustment item	Detector to be adjusted
Boom Length	Boom length detector
Boom Angle	Boom angle detector
Swing Angle1	Swing angle detector 1
Swing Angle2	Swing angle detector 2
RFront O/R	Right Front outrigger length detector
LFront O/R	Left Front outrigger length detector
RRear O/R	Right Rear outrigger length detector
LRear O/R	Left Rear outrigger length detector

https://truckmanualshub.com/

2.2 Boom Length Adjustment

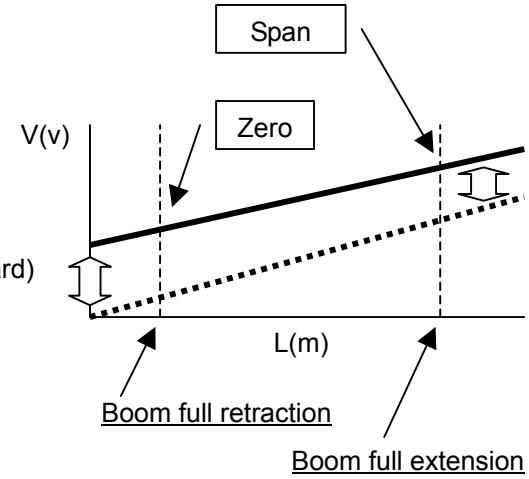

2.2.1 Boom Length Zero Adjustment

- Fully retract the boom.

- Until "Boom Length" and "Zero adjustment value" become highlighted on the LCD (Fig. 2.1.1), press the <F3> key (backward) or the <F4> key (forward).

	Value	ZERO	SPAN
Boom Length [m]	9.60	◎9.50	31.00

Detected boom length

Zero adjustment value
(boom full retraction length depending on the model)

- Operate the <F1> key (-) and the <F2> key (+) so that the detected boom length becomes the zero adjustment value. When the adjustment length is reached, press the <↵> key to register the adjustment value. After the adjustment value is registered, "◎" is shown at the left of zero adjustment value.

  Note: When the zero adjustment value is adjusted, the span adjustment is needed because the span adjusted value changes automatically.

2.2.2 Boom Length Span Adjustment

- Fully extend the boom.

- Until "Boom Length" and "Span adjustment value" become highlighted on the LCD (Fig. 2.1.1), press the <F3> key (backward) or the <F4> key (forward).

	Value	ZERO	SPAN
Boom Length [m]	31.30	◎9.50	◎31.00

Detected boom length

Span adjustment value
(boom full extension length depending on the model)

- Operate the <F1> key (-) and the <F2> key (+) so that the detected boom length becomes the span adjustment value. When the adjustment length is reached, press the <↵> key to register the adjustment value. After the adjustment value is registered, "◎" is shown at the left of span adjustment value.

2.2.3 Adjustment Check

- Fully retract the boom again.

- The adjustment is completed when the detected boom length is within the standard tolerance. If the value is out of the tolerance, perform the zero adjustment and span adjustment again.

https://truckmanualshub.com/

2.3 Boom Angle Adjustment

2.3.1 Boom Angle Zero Adjustment

- **Fully retract the boom.**
- **While measuring the boom angle using the sprit level type angle meter, set the boom by the boom lowering operation to the zero adjustment condition.**
- Until "Boom Angle" and "Zero adjustment value" become highlighted on the LCD (Fig. 2.1.1), press the <F3> key (backward) or the <F4> key (forward).

	Value	ZERO	SPAN
Boom angle [°]	0.3	◎ 0.0	80.0
	Detected boom angle	Zero adjustment value	

- Operate the <F1> key (-) and the <F4> key (+) so that the detected boom angle becomes the zero adjustment value. When the adjustment angle is reached, press the <↵> key to register the adjustment value. After the adjustment value is registered, "◎" is shown at the left of zero adjustment value.

2.3.2 Boom Angle Span Adjustment

- **Fully retract the boom.**
- **While measuring the boom angle using the sprit level type angle meter, set the boom by the boom lowering operation to the span adjustment condition.**
- Until "Boom Angle" and "Span adjustment value" become highlighted on the LCD (Fig. 2.1.1), press the <F3> key (backward) or the <F4> key (forward).

	Value	ZERO	SPAN
Boom Angle [°]	79.5	◎ 0.0	◎80.0
	Detected boom angle	Span adjustment value	

- Operate the <F1> key (-) and the <F2> key (+) so that the detected boom angle becomes the span adjustment value. When the adjustment angle is reached, press the <↵> key to register the adjustment value.
  After the adjustment value is registered, "◎" is shown at the left of span adjustment value.

2.3.3 Adjustment Check

- **Set to the zero adjustment condition again, and measure the boom angle using the sprit level type angle meter.**
- The adjustment is completed when the difference between the detected boom angle display and angle gauge is within the standard tolerance. If the value is out of the tolerance, perform the zero adjustment and span adjustment again.

https://truckmanualshub.com/

2.4 Swing Angle Adjustment

2.4.1 Swing Angle 1 Zero Adjustment

- **By the right (clockwise) swing operation, set the swing angle to the over-front.**

- Until "Swing Angle1" and "Zero adjustment value" become highlighted on the LCD (Fig. 2.1.1), press the <F3> key (backward) or the <F4> key (forward).

	Value	ZERO	SPAN
Swing Angle1 [°]	0.3	◎ 0.0	180.0

Detected swing angle 1 Zero adjustment value

- Operate the <F1> key (-) and the <F2> key (+) so that the detected swing angle 1 becomes the zero adjustment value. When the adjustment angle is reached, press the <↵> key to register the adjustment value.
  After the adjustment value is registered, "◎" is shown at the left of zero adjustment value.

2.4.2 Swing Angle 2 Zero Adjustment

- **Keep the swing positions same as 2.4.1.**

- Until "Swing Angle2" and "Zero adjustment value" become highlighted on the LCD (Fig. 2.1.1), press the <F3> key (backward) or the <F4> key (forward).

	Value	ZERO	SPAN
Swing Angle2 [°]	359.7	◎ 0.0	◎180.0

Detected swing angle 2 Zero adjustment value

- Operate the <F1> key (-) and the <F2> key (+) so that the detected swing angle 2 becomes the zero adjustment value. When the adjustment angle is reached, press the <↵> key to register the adjustment value. After the adjustment value is registered, "◎" is shown at the left of zero adjustment value.

https://truckmanualshub.com/

2.4.3 Swing Angle 1 Span Adjustment

- **By the right (clockwise) swing operation, set the swing angle to the over-rear.**

- Until "Swing Angle1" and "Span adjustment value" become highlighted on the LCD (Fig. 2.1.1), press the <F3> key (backward) or the <F4> key (forward).

	Value	ZERO	SPAN
Swing Angle1 [°]	179.2	◎ 0.0	180.0
	Detected swing angle 1		Span adjustment value

- Operate the <F1> key (-) and the <F2> key (+) so that the detected swing angle 1 becomes the span adjustment value. When the adjustment angle is reached, press the <↵> key to register the adjustment value.
  After the adjustment value is registered, "◎" is shown at the left of span adjustment value.

2.4.4 Swing Angle 2 Span Adjustment

- **Keep the swing positions same as 2.4.3.**

- Until "Swing Angle2" and "Zero adjustment value" become highlighted on the LCD (Fig. 2.1.1), press the <F3> key (backward) or the <F4> key (forward).

	Value	ZERO	SPAN
Swing Angle2 [°]	180.8	◎ 0.0	◎180.0
	Detected swing angle 2		Span adjustment value

- Operate the <F1> key (-) and the <F2> key (+) so that the detected swing angle 2 becomes the span adjustment value. When the adjustment angle is reached, press the <↵> key to register the adjustment value.
  After the adjustment value is registered, "◎" is shown at the left of span adjustment value.

2.4.5 Adjustment Check

- **Set to the zero adjustment condition again.**

- The adjustment is completed when the detected swing angle 1 and 2 are within the standard tolerance.
  If the value is out of the standard tolerance, perform the zero adjustment and span adjustment again.

https://truckmanualshub.com/

2.5 Outrigger Length Adjustment

The outrigger adjustment can be performed with four outriggers at the same time, or separately with each outrigger.

2.5.1 Outrigger Length Zero Adjustment

- **Fully retract all four outrigger beams.**

- Until "RFront O/R" and "Zero adjustment value" become highlighted on the LCD (Fig. 2.1.1), press the <F3> key (backward) or the <F4> key (forward).

	Value	ZERO	SPAN
RFront O/R [m]	1.281	◎1.275	3.600

Detected Right Front outrigger length Zero adjustment value

- Operate the <F1> key (-) and the <F2> key (+) so that the detected Right Front outrigger length becomes the zero adjustment value. When the adjustment length is reached, press the <↵> key to register the adjustment value.
  After the adjustment value is registered, "◎" is shown at the left of zero adjustment value.

- Also for the outrigger length of Left Front, Right Rear, and Left Rear, operate the <F3> key (backward) and the <F4> key (forward) to show the zero adjustment display, and then perform the adjustment and registration.

Display of Left Front outrigger zero adjustment

	Value	ZERO	SPAN
LFront O/R [m]	1.281	◎1.275	3.600

Display of Right Rear outrigger zero adjustment

	Value	ZERO	SPAN
RRear O/R [m]	1.281	◎1.275	3.600

Display of Left Rear outrigger zero adjustment

	Value	ZERO	SPAN
LRear O/R [m]	1.281	◎1.275	3.600

https://truckmanualshub.com/

2.5.2 Outrigger Length Span Adjustment

- **Fully extend all four outrigger beams.**

- Until "RFront O/R" and "Span adjustment value" become highlighted on the LCD (Fig. 2.1.1), press the <F3> key (backward) or the <F4> key (forward).

	Value	ZERO	SPAN
RFront O/R [m]	3.568	◎1.275	◎3.600

Detected Right Front outrigger length Span adjustment value

- Operate the <F1> key (-) and the <F2> key (+) so that the detected Right Front outrigger length becomes the span adjustment value. When the adjustment length is reached, press the <↵> key to register the adjustment value.
  After the adjustment value is registered, "◎" is shown at the left of span adjustment value.

- Also for the outrigger length of Left Front, Right Rear, and Left Rear, operate the <F3> key (backward) and the <F4> key (forward) to show the span point adjustment display, and then perform the adjustment and registration.

Display of Left Front outrigger span adjustment

	Value	ZERO	SPAN
LFront O/R [m]	3.568	◎1.275	◎3.600

Display of Right Rear outrigger span adjustment

	Value	ZERO	SPAN
RRear O/R [m]	3.568	◎1.275	◎3.600

Display of Left Rear outrigger span adjustment

	Value	ZERO	SPAN
LRear O/R [m]	3.568	◎1.275	◎3.600

2.5.3 Adjustment Check

- **Fully retract all four outrigger beams again.**

- The adjustment is completed when the detected outrigger length is within the standard tolerance.
  If the value is out of the standard tolerance, perform the zero adjustment and span adjustment again.

https://truckmanualshub.com/

2.6 Moment / Load Radius Adjustment

Perform the moment adjustment / load radius adjustment according to the description below.

Measurement condition: 1. Perform all the adjustments with the outrigger becomes fully extended.

2. The number of part-lines shall be the standard number of part-lines for boom full extension.

- Select the moment adjustment of Adjustment main menu
- Moment zero adjustment
- Moment span preliminary adjustment / load radius adjustment
- Moment span adjustment
- Moment zero check

When "Moment Adjustment" is selected in the adjustment main menu of Fig. 1.3.3, the detector adjustment screen appears on the LCD as shown in Fig. 2.6.1.

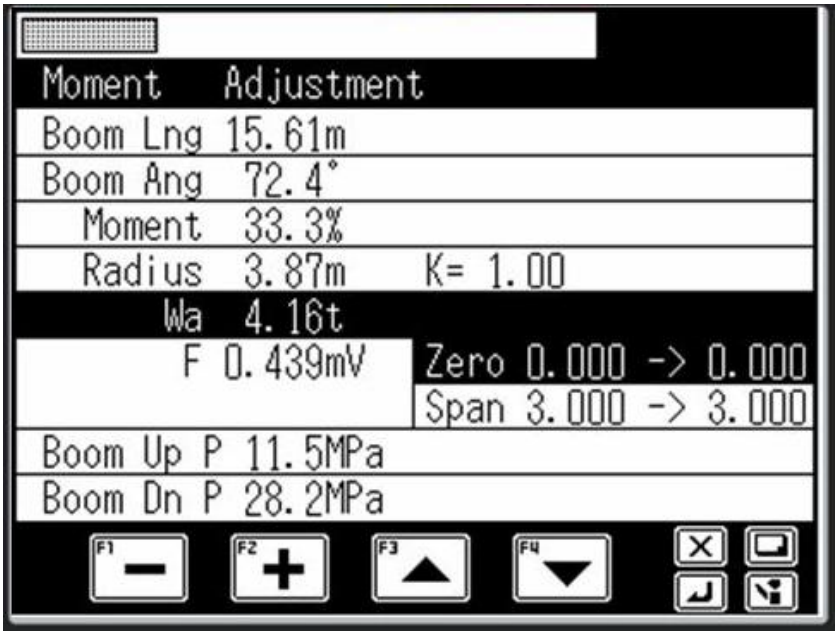

K: Deflection coefficient adjustment multiplication

Wa: Actual hoist medium load

F: Distortion voltage (converted from elevate cylinder's both side pressure)

Zero: Input distortion at zero adjustment
→ Distortion voltage to be corrected

Span: Input distortion at span adjustment
→ Distortion voltage to be corrected

Fig. 2.6.1 Moment adjustment screen

Note:

- With the moment adjustment, be sure to set the boom angle by the boom lowering operation, and always wait until the distortion voltage becomes stable before starting the adjustment.
- Under the moment adjustment status, pressing the lift state <> performs the compulsory unload output.
- During compulsory unload output, the buzzer of display control section is sounded intermittently with a long duration to notify that the compulsory unload output is in progress. During this period, the distortion voltage can be stabilized quickly when the boom lowering operation is performed.
- When the lift state <> is pressed again, the status returns to the normal control.

https://truckmanualshub.com/

2.6.1 Moment Zero Adjustment

- **Fully retract the boom, and lower the boom to the specified boom angle.**

- **With no load (Main hook block only), set the hook to the twoblocking status.**

- In the LCD (Fig. 2.6.1), press the <F3> key (backward) or the <F4> key (forward) until both of "Wa" and "Zero" become highlighted.

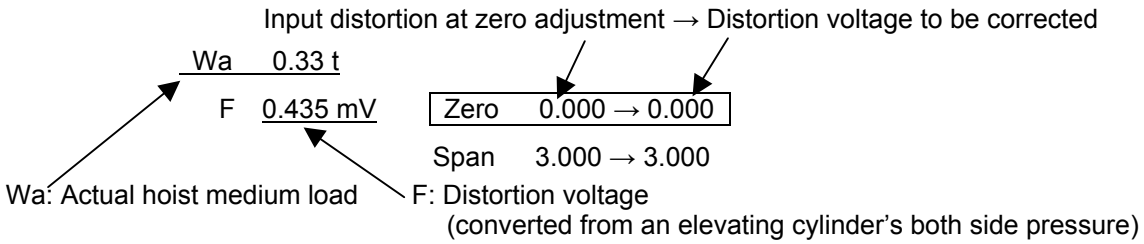

- Operate the <F1> key (-) and the <F2> key (+) so that the displayed actual hoist medium load(Wa) becomes the adjustment value. (The distortion voltage to be corrected changes.)
  When the actual hoist medium load (Wa) becomes the adjustment value, press the <↵> key to register the adjustment value.

2.6.2 Moment Span Preliminary / Load Radius Adjustment

- **Fully extend the boom.**
  Lift the rated capacity (Max. Hoist medium load) for boom full extension, and lower the boom to set to the maximum load radius for the lifted load.

- In the LCD (Fig. 2.6.1), press the <F3> key (backward) or the <F4> key (forward) until both of "Wa" and "Span" become highlighted.

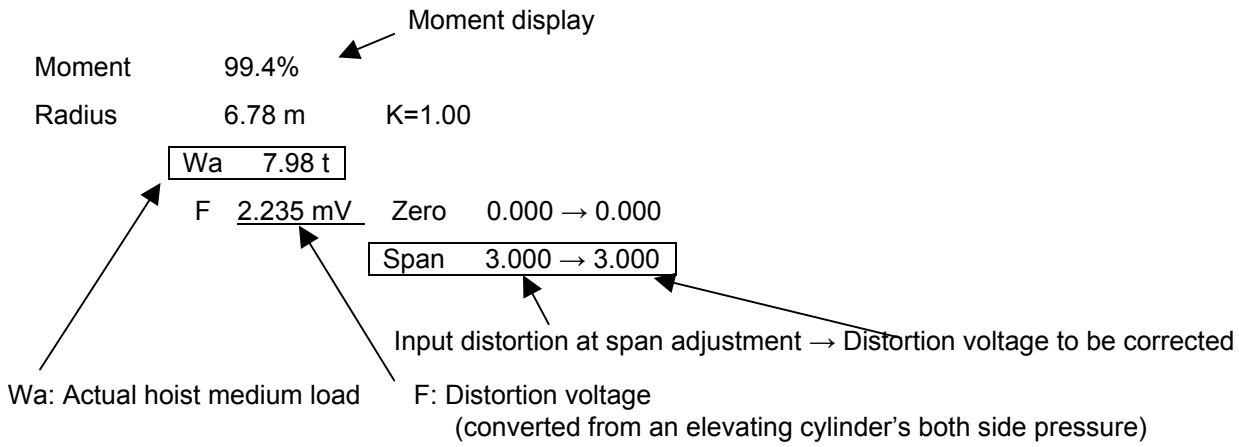

- Operate the <F1> key (-) and the <F2> key (+) so that the displayed moment becomes to 100.0±1.0% (changes the distortion voltage to be corrected).

https://truckmanualshub.com/

- In the LCD (Fig. 2.6.1), press the <F3> key (backward) or the <F4> key (forward) until "Radius, K=" becomes highlighted.

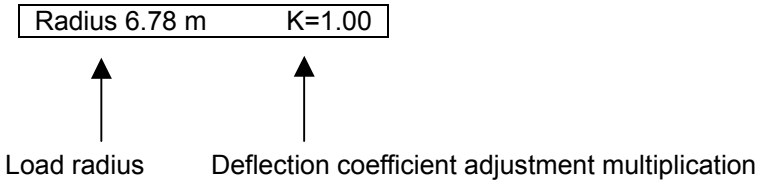

- Operate the <F1> key (-) and the <F2> key (+) so that the displayed load radius becomes the adjustment value. (The deflection coefficient adjustment multiplication changes.)
  When the load radius becomes the adjustment value, press the <↵> key to register the adjustment value.

2.6.3 Moment Span Adjustment

- **Fully extend the boom, and lower the boom to the specified boom angle.**

- **With no load (hook block only), hoist-down the hook block until just before touching the ground.**

- In the LCD (Fig. 2.6.1), press the <F3> key (backward) or the <F4> key (forward) until both of "Wa" and "Span" become highlighted.

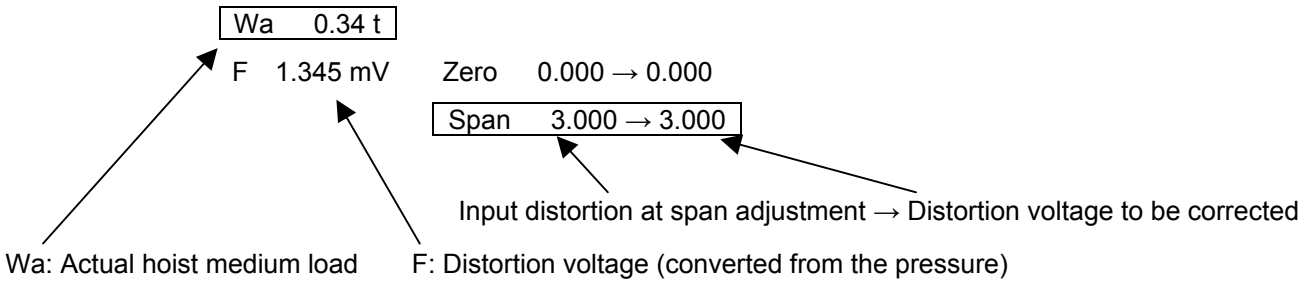

- Operate the <F1> key (-) and the <F2> key (+) so that the displayed actual load Wa becomes the adjustment value (distortion voltage to be corrected).
  When the actual hoist medium load (Wa) becomes the adjustment value, press the <↵> key to register the adjustment value.

2.6.4 Moment Adjustment Check

- **Set to the zero adjustment condition again.** (Refer to 2.6.1.)

- The adjustment is completed when the actual hoist medium load is within the standard tolerance.
  If the value is out of the standard tolerance, perform the moment zero adjustment and moment span adjustment again.

https://truckmanualshub.com/

D-3 Valve Adjustment

The characteristics of actuator operation speed necessary for the slow stop to AML valve control output (D/A command value) are stored as the valve output adjustment value.

Note: Slow stop function corresponding to the proportional solenoid valve does not work until the valve adjustment is completed.

The subjected crane operations are described below.

- Swing (right, left) operation
- Elevation (raising, lowering) operation

3.1 Adjustment Sub Menu

When "Valve Adjustment" is selected in the adjustment main menu of Fig. 1.3.3, the selection screen for subjected adjustment work is displayed as shown in Fig. 3.1.1.

Press the <F3> key (backward) or the <F4> key (forward) to highlight the selected adjustment item. To go back to the adjustment main menu, press the <×> key.

The mark "◎" is shown at the left of the item that is already adjusted.

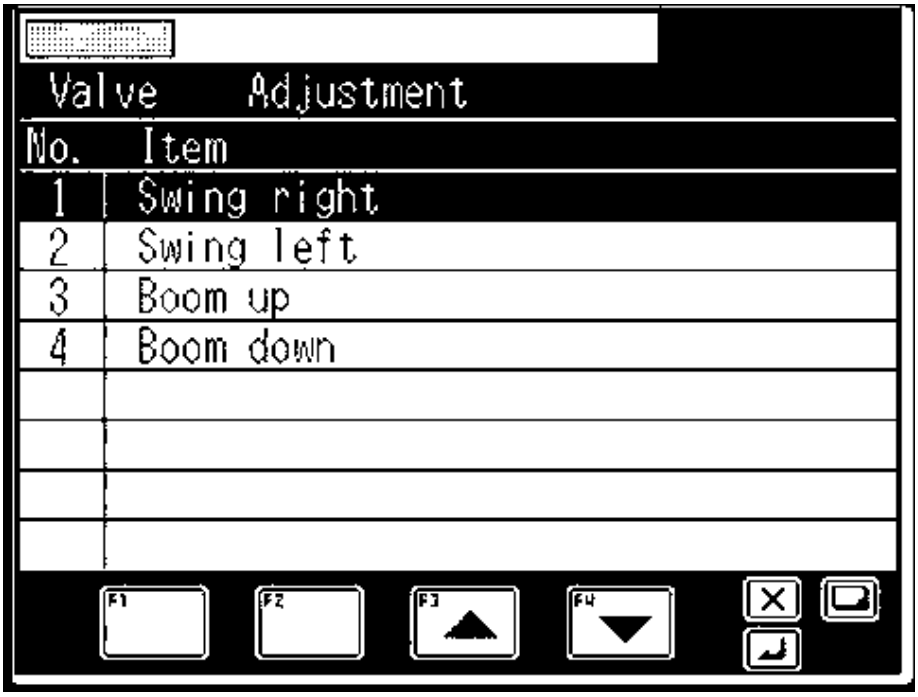

Fig. 3.1.1 Screen for valve adjustment item selection

https://truckmanualshub.com/

3.2 Swing Output Adjustment (Offset Method)

By the adjustment of swing output (current) Ao1, Ao2, (CN6-pin1, pin3), the stop point is adjusted.

The current value to the proportional solenoid valve that controls the pilot pressure given to the swing control valve's spool is increased by the F2 key. The speed of the swing table decreases as the amount of oil supplied from the swing control valve to swing motor is gradually decreases (opening / clearance between the swing control valve body and spool decreases). Finally, hydraulic oil is not supplied to the swing motor any more (the clearance between the valve body and spool becomes none), and the swing table stops. The deceleration condition varies depending on the crane serial No. Adjustment is necessary depending on every serial No.

In the valve adjustment item selection screen shown in Fig. 3.1.1, select "Swing right" or "Swing left," and then press the <⏎> key to display the swing output adjustment display shown in Fig. 3.2.1.

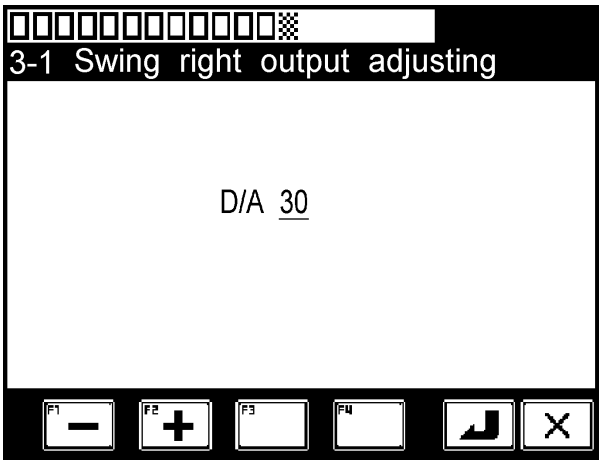

Fig. 3.2.1 Swing output adjustment display

Perform the adjustment according to the procedure below.

- **In the specified condition (boom fully retracted, jib stowed), set the engine speed to the maximum, and change a full lever stroke to the subjected swing direction. (Confirm the level with O/R max. extended)**
- In the swing operation status, while increasing the D/A value by pressing the <F2> key (+), search the position where the value stops.
- Once the position where D/A value stops, press the <⏎> key to store the data. The screen automatically returns to the valve adjustment menu shown in Fig. 3.1.1.
- To go back to the valve adjustment menu of Fig. 3.1.1 without storing the adjustment value, press the <✕> key.

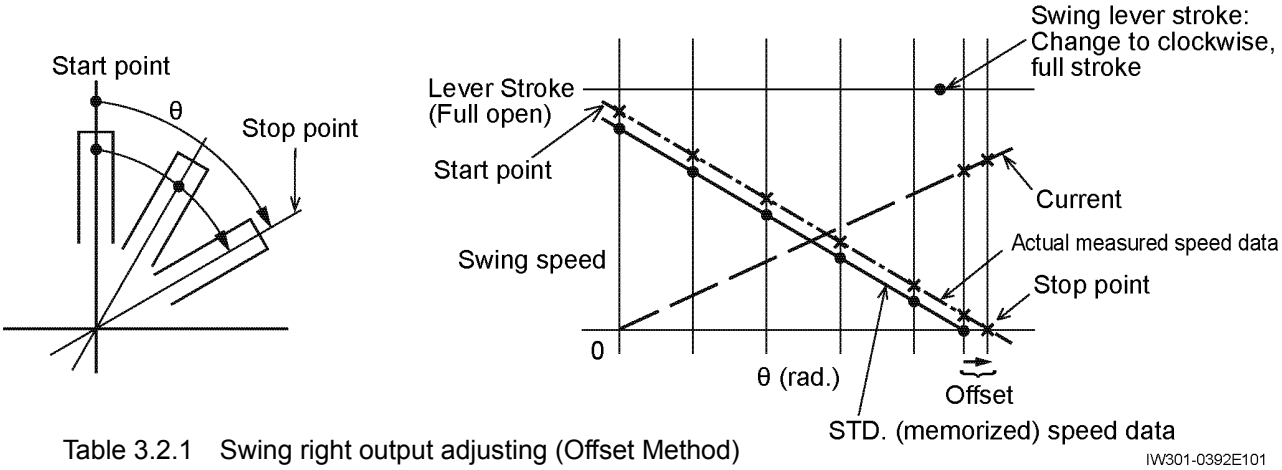

Table 3.2.1 Swing right output adjusting (Offset Method)

https://truckmanualshub.com/

3.3 Swing Output Adjustment (Characteristics Measurement Method)

The offset method keeps only the stop points in memory, so it may fail to decelerate the crane smoothly in some direction clockwise and counterclockwise. To achieve smooth deceleration, characteristics measurement method is used for adjustment of the outputs. With the crane set in the specified configuration for measurement (the crane is set level on extended outriggers; the engine speed is maximum; the swing lever is shifted to the full stroke), the degree of change of the swing speed according to the current output to the proportional solenoid valves is measured. Not only stop points of the swing table but the starting point of deceleration and the data during deceleration are measured and kept in memory. The characteristics measurement method smoothly decelerates and stops boom swing on the basis of these measured characteristics.

Applicable model: GR-750XL-2, GR-1000XL-2

Reference data: E-4 AML Input/Output List, 1.Digital input (1) #17200, No.80

In the valve adj. item selection screen shown in Fig. 3.1.1, select "Swing right" or "Swing left," then press the <↵> key to display the swing output adjustment display of Fig. 3.3.1.

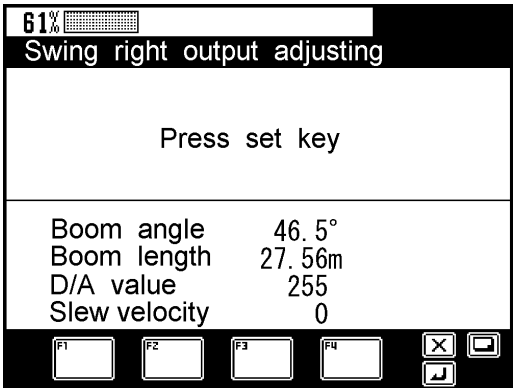

Fig. 3.3.1 Swing output adjustment initial screen

3.3.1 Adjustment Procedure

With the screen of Fig. 3.3.1 displayed, press the <↵> key to change the display to the screen shown in Fig. 3.3.2.

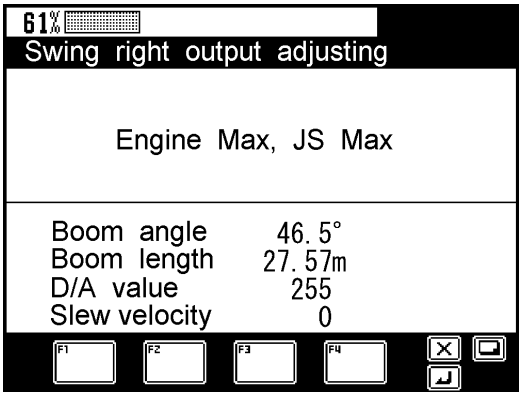

Fig. 3.3.2 Swing output adjustment preparation screen

- **After setting the posture to the specified one, set the engine speed to the maximum, and then perform a full lever operation to start the measurement.**

[Attention]

◆Remember that the measurement will be started as soon as the lever is operated, even if the crane condition differs from the specified crane condition.

◆When the measurement is started unexpectedly, leave the lever at the neutral position to terminate the measurement. Subsequently, start the process again from the status indicated in Fig. 3.3.1.

https://truckmanualshub.com/

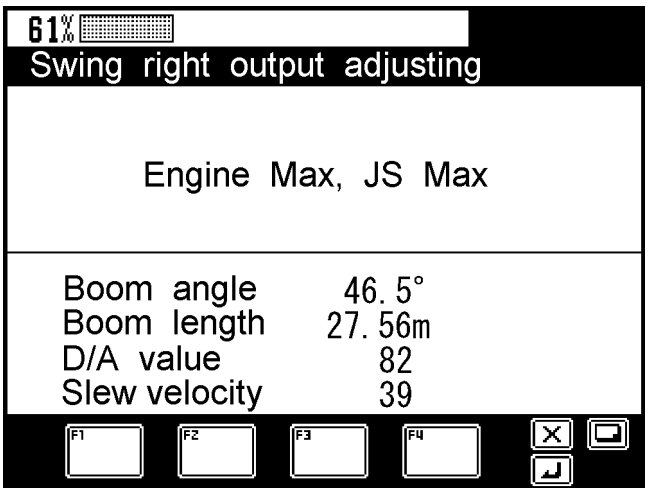

Fig. 3.3.3 Screen during swing output measurement

When the measurement is started, the swing speed is gradually increased. After the maximum swing speed is reached, the speed is decelerated with specified time intervals. When "Slew velocity" in the screen of Fig. 3.3.3 becomes zero, the measurement is completed. Then, the screen changes to the one shown in Fig. 3.3.4.

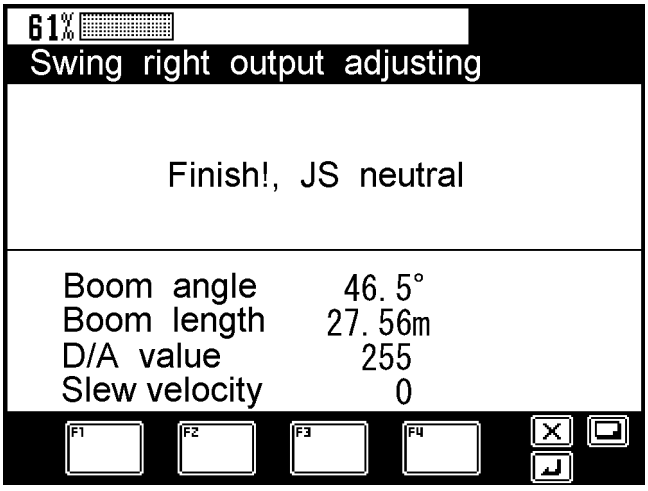

Fig. 3.3.4 Swing output adjustment completion screen

With the screen of Fig. 3.3.4 displayed, **setting the lever to the neutral position** automatically changes the screen to Fig. 3.3.1, and the swing output adjustment is completed.

https://truckmanualshub.com/

3.4 Elevating / Telescoping Output Adjustment

The adjustment of elevating output and telescoping output is performed automatically. Perform the operation according to the guidance message. In the screen shown in Fig. 3.1.1, select "Boom up," "Boom down," or "Boom retract," then pressing the <↵> key changes the screen to the elevating / telescoping output adjustment display shown in Fig. 3.4.1, and the guidance message appears. To go back to the valve adjustment item selection of Fig. 3.1.1 without storing the adjustment value, press the <⊠> key while the adjustment is being displayed.

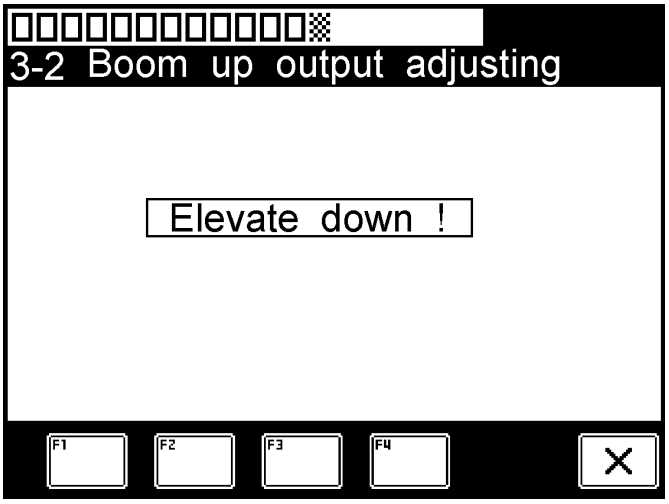

Fig. 3.4.1 Elevating output adjustment display

The guidance messages and operation examples for the boom up output adjustment are shown below.

Elevate down!	Before the measurement, a message is displayed. According to the message, perform the **boom lowering operation** until the message disappears.
Press set key	Press the <↵> key to start the adjustment.
Engine Max, JS Max	If the control lever is in the neutral position when the <↵> key is pressed, the message shown on the left is displayed. **Raise the engine speed to the maximum, and perform a boom up full lever operation**. The measurement will start automatically. When the control lever is not in the neutral position, the message "JS neutral" appears. **Return the lever to the neutral position**.
30.0° (15.0°) 9.8 m 180 20	Maintain the operating states of full lever stroke and of maximum engine speed. During the measurement, the guide message disappears, and the current output status is displayed. The displayed items are as follows from the top: boom angle; boom length; D/A command value; cylinder speed. The item in the parentheses indicates the crane condition change amount since the start of measurement. When the stroke end nears, the message "Elevate down!" appears. When it appears, **stop the boom up operation, and lower the boom**.
Finish !	When the measurement and storage are completed, the message on the left appears. **Return the control lever to neutral,** and the screen for valve adjustment item selection shown in Fig. 3.1.1 appears again.

https://truckmanualshub.com/

3.5 Function of Slow Stop

3.5.1 Elevation Slow Stop

The elevation slow stop functions with the stop positions by load moment ratio 100% stop, backward stability stop, working range limit stop, elevating cylinder stroke end stop, and boom interference stop adopted as the target stop angle. However, when multiple conditions are met, the control is implemented for the one having the smallest allowable angle in relation to the stop angle. Then, a comparison is made between the obtained limit value and the proportional valve characteristics value, and the Ao output value is determined.

The outline of stop angle calculation is described below.

- Load moment ratio 100% stop
  Calculated by the AML task. The stop lower limit angle shall be the elevation angle of load radius that the current hoist medium load (Payload + Hook + Sling) becomes as the rated load.
- Working range limit stop
  Set by the range limit function. Depending on the item that is set, different slow stop will be set either to the raising direction or lowering direction. The items of slow stop to the elevation raising direction are the elevation angle upper limit and lifting height limit. The items of slow stop to the elevation lowering direction are the elevation angle lower limit and load radius limit.
  However, with the lifting height limit and load radius limit, the value is used with which the elevation angle is calculated in relation to the set value.
- Stroke end stop (Elevating cylinder)
  The elevation angle, at which the elevation cylinder set with the by-models data (#16719) becomes to the stroke end status, shall be the stop upper limit angle and lower limit angle.
- Boom interference stop
  The elevation angle, at which an interference occurs between the engine hood cover and elevation cylinder when the elevation is continued to be lowered above the engine hood cover set with the by-models data (#12792), shall be the stop lower limit angle.

3.5.2 Swing Slow Stop

The swing slow stop functions while adopting the stop positions by working range limit stop, shift to lower capacity at outrigger (O/R) slide beam differential extension, and boom interference stop as the target stop angle. However, when multiple conditions are met, the control is implemented for the one having the smallest allowable angle between the target stop angle and current swing angle. Then, after obtaining the limit value in relation to the allowable angle according to each machine status (accelerator, inertia, swing speed) that is set with by-models data based on the allowable angle, the Ao output value is determined.

The outline of stop angle calculation is described below.

- Working range limit stop
  The swing angle set by the right swing limit or left swing limit shall be the stop swing angle.
- Shift to lower capacity at O/R slide beam differential extension
  When a shift is made to the lower capacity at O/R slide beam differential extension, the stop swing angle shall be the swing angle at which the capacity changes when the current hoist medium load is larger than the rated capacity of shifting target.
  The rated capacity is calculated by the AML task, but a lot of calculation items to exist and to require time, only one O/R patterns capacity is calculated per every loop.
- Boom interference stop
  The stop swing angle shall be the swing angle at which an interference occurs between the engine hood cover and elevation cylinder when the swing is performed with low elevation angle (lower than the elevation lower limit stored in the data) that is set with the by-models data (#12792).
- Swing free
  The stop angle judgment shall be the same as the slow stop processing described above. Based on the valve opening data set with by-models data (#1785 to 1797), the Ao output is performed.

https://truckmanualshub.com/

D-4 Performance Setup

<Performance setup menu>

When "Set up performance" is selected in the adjustment main menu of Fig. 1.3.3, the set up performance screen appears as shown in Fig. 4.1.1. Pressing the <F3> key (scroll up) or the <F4> key (scroll down) changes the selected item (highlighted) in the set up performance menu. With the setup menu selected, pressing the <↵> key starts the selected menu. To go back to the adjustment main menu, press the <✕> key.

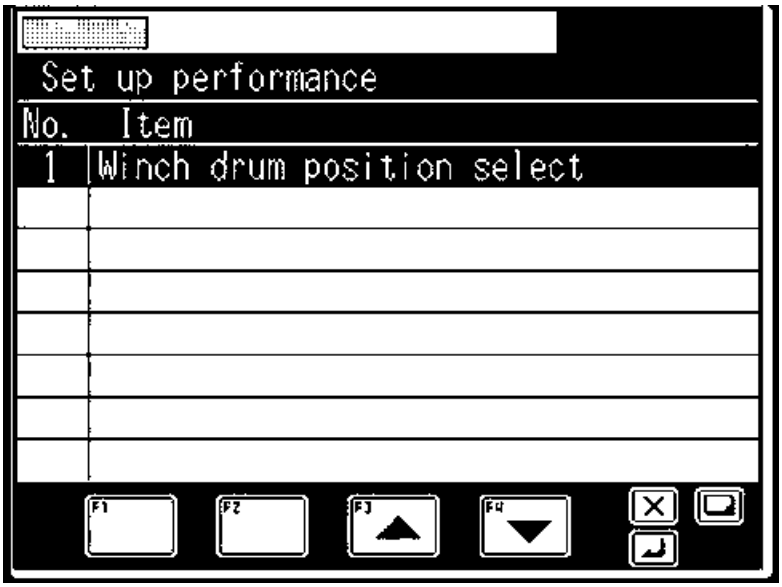

Fig. 4.1.1 Set up performance menu screen

4.1 Winch drum position selection

When "Winch drum position select" is selected in the set up performance menu of Fig. 4.1.1 and the <↵> key is pressed, the winch drum position select screen is displayed as shown in Fig. 4.1.2 according to the specification selection flag of winch drum position adjustment value selection (#17200-36).

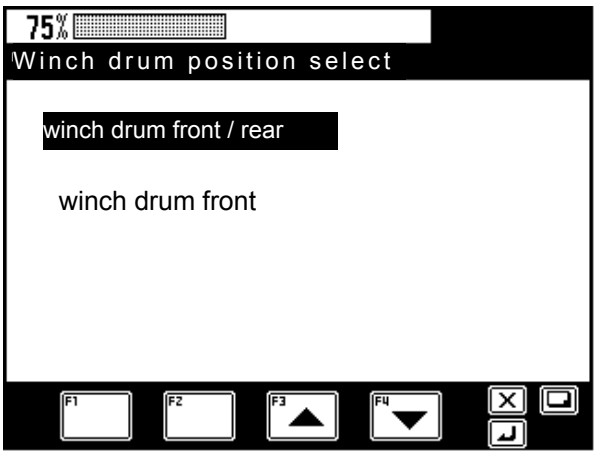

Fig. 4.1.2 Winch drum position select screen

(Selection: front ←→ front / rear)

https://truckmanualshub.com/

<Operation method>

The currrent setup stae is enclosed by a frame. Press the <F3> key (scroll up) or the <F4> key (scroll down) key to select the state to set up, and press the <↵> key to register the selected state and go back to the screen of Fig. 4.1.1. Perss the <✕> key , to go back to the set up performance menu of Fig. 4.1.1 without registartion.

4.1.1 Details of menu items

[1] When specification selection flag of winch drum position adjustment value selection is " front←→front / rear" (1).

(A) When the specification selection flag of winch drum selection availability is "1" (available) and selection is performed by pop-up menu for winch drum position selection from the user prset menu (B-4.5). Change of the winch drum position selection adjustment value is possible only by the setting of the user preset menu. (See B-4.5.6 and B-7.4)

(1) “Winch drum front / rear”

The winch drum position is determined only by the boom / jib lift state, and the winch position cannot be selected in the user preset menu.

The position for boom lift state is fixed in the front position.

The position for S/T and jib lift states is fixed in the rear position.

(2) “Winch drum front”

The winch drum position is determined by the boom / jib lift state, and the selected content of the winch position select in the user preset menu.

The position for boom lift state is fixed in the front position.

The position for S/T and jib lift states is fixed in the position selected in the user preset menu.

(B) When the specification selection flag of winch drum selection availability is "0" (not available)
For a machine with winch drum position selector SW, the selection contents of the adjustment menu can be changed by setting of the adjustment menu and the selector switch. **(Reference Only)**

(1) "Winch drum front / rear"

The winch drum position is determined only by the lift state.

The position for the boom lift state is fixed in the front position.

The position for S/T and jib lift states is fixed in the rear position.

(2) "Winch drum front "

The winch drum position is fixed in the front position.

https://truckmanualshub.com/

D-5 Operation History Erase

This section describes the method to erase the registration contents of operation history information {stored data of when the crane operation is performed while the load moment ratio is exceeding the set limit value}.

[NOTICE]

◆ Before delivery to users, always repeat erasing the operation as described here three times.

5.1 Operation Procedure

In the adjustment main menu of Fig. 1.3.3, select "History Erase" to display the operation history erase screen as shown in Fig. 5.1.1.

Under the status shown in Fig. 5.1.1, pressing the <↵> key erases the operation history. Then, the erase confirmation display appears as shown in Fig. 5.1.2.

To go back to the adjustment main menu of Fig. 1.3.3 without erasing the operation history, press the <⊠> key while the screen shown in Fig. 5.1.1 is being displayed.

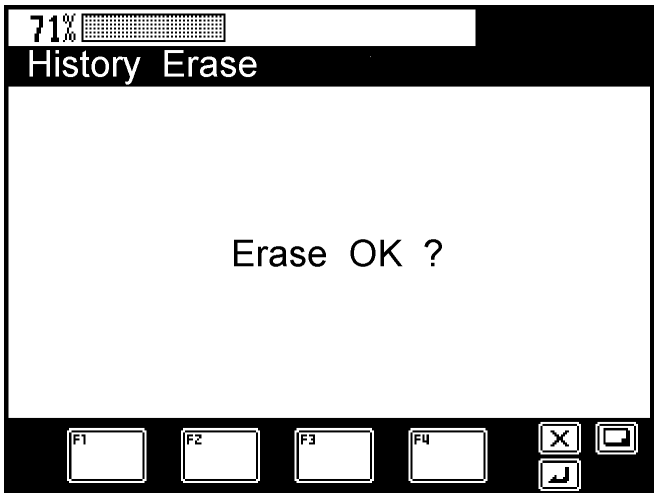

Fig. 5.1.1 Operation history erase display

Fig. 5.1.2 Operation history erase confirmation display

https://truckmanualshub.com/

D-6 Option Select

This function is used to change the detector availability information with the models that detectors are provided as options. However, only the items are displayed whose specification selection flag (#17200-29_32, 37, 49, 54, 94) are set as "Option."

6.1 Operation Procedure

In the adjustment main menu of Fig. 1.3.3, select "Option Select," then press the <⏎> key to display the option selection screen as shown in Fig. 6.1.1.

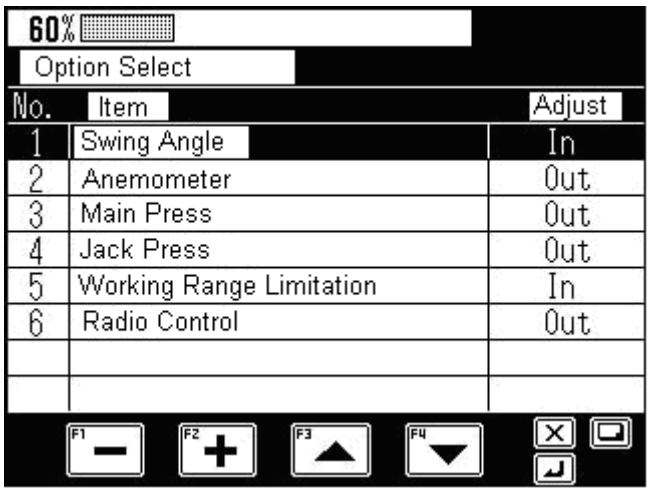

Fig. 6.1.1 Option selection screen

The current setting status is displayed.

Press the <F3> key (backward) and the <F4> key (forward) to move the selected item (highlighted). Pressing the <F1> key (-) and the <F2> key (+) changes the In/Out of the selected item.

Press the <⏎> key to register the setting, and go back to the screen shown in Fig. 1.3.3.

Pressing the <✕> key returns the screen to the adjustment main menu of Fig. 1.3.3 without storing the adjustment value.

https://truckmanualshub.com/

6.2 Processing Depending on Setting Status

In: With detector or with function

Out: With no detector or with no function

The default setting is as listed in the Table 6.2.1.

Table 6.2.1 Default setting of the optional items

Optional item	Default
Swing angle	Detector is not present (Out)
Anemometer	Detector is not present (Out)
Main Press	Detector is not present (Out)
Jack Press	Detector is not present (Out)
Working Range Limitation	With no function (Out)
Radio Control	With no function (Out)
%-Display Utilization	With no function (Out)

6.3 Processing at Setting without Detector

- When swing angle detector is not present: "Swing Angle"
  (1) Swing-angle-related error check will not be performed.
  (2) Setting of swing angle limit is disabled with the work range limit function. The setting itself will not be displayed.
  (3) With the actual hoist medium load check cancel function (#2784), the canceling of error E2023 is disabled.
  (4) LCD swing position and angle display will not be performed.

- When anemometer is not present: "Anemometer"
  LCD will not show the wind speed indication.

- When main pressure detector is not present: "Main Press"
  LCD will not show the main pressure indication.

- When jack supporting pressure detector is not present: "Jack Press"
  LCD will not show the jack supporting pressure indication.

https://truckmanualshub.com/

6.4 Processing at Setting without Function

- When work range limit function is not present: "Working Range Limitation"
  With each of the lifting height limit, load radius limit, boom angle upper limit, and boom angle lower limit, a warning will be issued but no stop will be performed. For the swing range limit, a stop is always performed when the swing angle detector is set as available.

- When radio control function is not present: "Radio Control"
  The radio control operation will be disabled.

https://truckmanualshub.com/

D-7 AML Emergency / Override Switch History Erase

7.1 Operation Procedure

This section describes the method to erase the registration contents of AML emergency / override switch history information (information on the date and time when the AML emergency / override switch is turned ON/OFF).

In the adjustment main menu of Fig. 1.3.3, select "Emergency History Erase" to display the AML emergency / override switch history erase screen as shown in Fig. 7.1.1.

Pressing the <↵> key erases the AML emergency switch history. Then, the erase confirmation display appears as shown in Fig. 7.1.2.

To go back to the adjustment main menu of Fig. 1.3.3 without erasing the AML emergency / override switch history, press the <✕> key while the screen shown in Fig. 7.1.1 is being displayed.

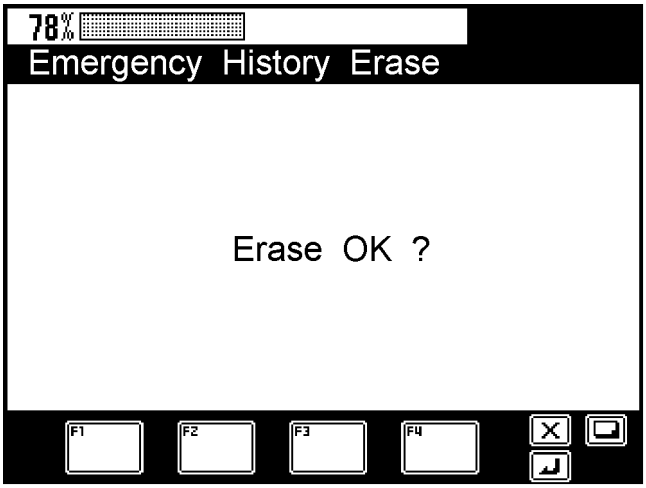

Fig. 7.1.1
Confirmation screen of AML emergency / override switch history erase

Fig. 7.1.2
AML emergency / override switch history erase completion screen

7.2 Operating Conditions

This function will not be available after the operation history is erased for three times. Also, the corresponding item is not shown in the adjustment main menu of Fig. 1.3.3.

https://truckmanualshub.com/

D-8 Outrigger Emergency Setting History Erase

8.1 Operation Procedure

This section describes how to erase the registration contents of outrigger emergency setting history information. In the adjustment main menu of Fig. 1.3.3, select "O/R Emergency History Erase" to display the outrigger history erase screen as shown in Fig. 8.1.1. Pressing the <↵> key erases all the outrigger emergency setting history information. Then, the erase confirmation message appears as shown in Fig. 8.1.1.

To go back to the adjustment main menu of Fig. 1.3.3 without erasing the outrigger emergency setting history, press the <⊠> key while the screen shown in Fig. 8.1.1 is being displayed.

To go back to the adjustment main menu screen of Fig. 1.3.3, press the <⊠> key while in the screen status of Fig. 8.1.2.

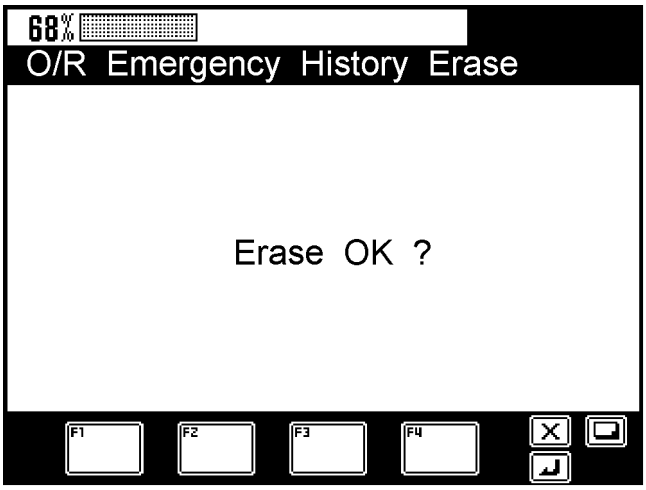

Fig. 8.1.1 Confirmation screen of outrigger emergency setting history erase

Fig. 8.1.2 Outrigger emergency setting history erase completion screen

8.2 Operating Conditions

This function is not available after the operation history is erased for three times, or with models to which the outrigger emergency setting switch (#17206-41) is not provided. Also, the corresponding item is not shown in the adjustment main menu of Fig. 1.3.3.

https://truckmanualshub.com/

Chapter E

Information and Data

E

Contents

E-1 AML Adjustment Value List 180

1.1 Applicable Model: GR-750XL-2 180
1.1.1 Initial Adjustment 180
1.1.2 Detector Adjustment 180
1.1.3 Slow Stop Adjustment..... 181
1.1.4 Setting Item after Adjustment 181
1.1.5 Option Setting..... 181

1.2 Applicable Model: GR-1000XL-2 182
1.2.1 Initial Adjustment 182
1.2.2 Detector Adjustment 182
1.2.3 Slow Stop Adjustment..... 183
1.2.4 Setting Item after Adjustment 183
1.2.5 Option Setting..... 183

E-2 Detector Check.....184

2.1 Applicable Model: GR-750XL-2 184
2.1.1 Boom Length Detector 184
2.1.2 Boom Angle Detector 184
2.1.3 Swing Angle Detector 185
2.1.4 Outrigger Extension Length Detector..... 185
2.1.5 Pressure Sensor for Moment Detection . 186

2.2 Applicable Model: GR-1000XL-2 187
2.2.1 Boom Length Detector 187
2.2.2 Boom Angle Detector 187
2.2.3 Swing Angle Detector 188
2.2.4 Outrigger Extension Length Detector..... 188
2.2.5 Pressure Sensor for Moment Detection . 189

E-3 AML Control Function List 190

3.1 Applicable Model: GR-750XL-2 190

3.2 Applicable Model: GR-1000XL-2 191

E-4 AML Input/Output List 192

4.1 Applicable Model: GR-750XL-2 192

4.2 Applicable Model: GR-1000XL-2 193

https://truckmanualshub.com/

E-1 AML Adjustment Value List

[NOTICE]

◆ For the details of adjustment method, refer to "Adjustment Mode."

1.1 Applicable Model: GR-750XL-2

1.1.1 Initial Adjustment

(1) Clock adjustment

Select the "clock adjust" menu in the maintenance mode, and adjust the date and time.

(2) Use the "Winch drum position" of adjustment mode to set to "Front."

1.1.2 Detector Adjustment

These adjustments are based on condition that crane is set on firm level surface, with outrigger max. extension, with suspension lock applied.

[NOTICE]

1. Adjust so that the center of fluctuation matches with the adjustment value.
2. Always adjust the boom angle and moment by the elevation lowering operation.
3. Always adjust the swing angle by the right (clockwise) swing operation.
4. At the moment adjustment, set the number of part-lines of wire rope to the standard number of part-lines for boom full extension (4 part-lines), and perform the adjustment with AML set to boom status.
5. When using the hook block other than 0.47 t, perform adjustment to the weight of the hook to be used.

Item		Adjustment condition		Adjustment value ( ): Tolerance at inspections
Boom length	(Zero)	- Boom: Fully retracted		11.00±0.04m（±0.08m）
	(Span)	- Boom: Fully extended		43.00±0.04m
Boom angle (NOTICE 2)	(Zero)	- Boom angle: 0.0°		0.0±0.1° (±0.2°)
	(Span)	- Boom angle: 80.0°		80.0±0.1°
Swing angle (NOTICE 3)	(Zero)	- Over-front swing position (Right swing)	Swing angle 1,2	0.0±0.3° (±0.6°)
	(Span)	- Over-rear swing position (Right swing)	Swing angle 1,2	180.0±0.3°
Outrigger length	(Zero)	- Outriggers: Fully retracted		1.350±0.006m（±0.012m）
	(Span)	- Outriggers: Fully extended		3.650±0.006m
Jib length	(Zero/Span)	Adjustment not needed		

https://truckmanualshub.com/

Item		Adjustment condition	Adjustment value ( ): Tolerance at inspections
Power tilt jib offset angle	(Zero/Span)	Adjustment not needed	
Moment	(Zero)	- Boom: Fully retracted - Indicated boom angle: 80.0±0.1° - Load: No load (0.47 t main hook block only) - Hook block: Twoblocking status	Actual hoist medium load (Hook weight): 0.47±0.21 t
	(Load radius)	- Boom: Full extended - Load radius: 9.14 m - Hoist medium load: 9.00 t	Load radius: 9.14±0.07m
(NOTICE 2) (NOTICE 4) (NOTICE 5)	(Span)	- Boom: Full extended - Indicated boom angle: 20.0±0.1° - Load: No load (0.47 t main hook block only) - Hook block: Hoist-down until just before touching the ground	Actual hoist medium load (Hook weight): 0.47±0.01 t

1.1.3 Slow Stop Adjustment

Item	Remarks
Elevation up/down characteristics measurement	Boom: Fully retracted
Swing control characteristics measurement	Boom: Fully retracted Boom angle: Approx. 70°
Telescoping retraction characteristics measurement	Adjustment not needed

1.1.4 Setting Item after Adjustment

Item	Set value
Number of wire part-lines setting	Main: 4; Aux.: 1
Language change	English
Unit select	ft/klbs

1.1.5 Option Setting

Item	Set value
Telematics (alarm event)	In (Adjustment not needed)

https://truckmanualshub.com/

1.2 Applicable Model: GR-1000XL-2

1.2.1 Initial Adjustment

(1) Clock adjustment
Select the "clock adjust" menu in the maintenance mode, and adjust the date and time.

(2) Use the "Winch drum position" of adjustment mode to set to "Front."

1.2.2 Detector Adjustment

These adjustments are based on condition that crane is set on firm level surface, with outrigger max. extension, with suspension lock applied.

[NOTICE]

1. Adjust so that the center of fluctuation matches with the adjustment value.
2. Always adjust the boom angle and moment by the elevation lowering operation.
3. Always adjust the swing angle by the right (clockwise) swing operation.
4. At the moment adjustment, set the number of part-lines of wire rope to the standard number of part-lines for boom full extension (4 part-lines), and perform the adjustment with AML set to boom status..
5. When using the hook block other than 0.47 t, perform adjustment to the weight of the hook to be used.

Item		Adjustment condition		Adjustment value ( ): Tolerance at inspections
Boom length	(Zero)	- Boom: Fully retracted		12.00±0.04m（±0.08m）
	(Span)	- Boom: Fully extended		47.00±0.04m
Boom angle (NOTICE 2)	(Zero)	- Boom angle: 0.0°		0.0±0.1° (±0.2°)
	(Span)	- Boom angle: 80.0°		80.0±0.1°
Swing angle (NOTICE 3)	(Zero)	- Over-front swing position (Right swing)	Swing angle 1,2	0.0±0.3° (±0.6°)
	(Span)	- Over-rear swing position (Right swing)	Swing angle 1,2	180.0±0.3°
Outrigger length	(Zero)	- Outriggers: Fully retracted		1.350±0.006m（±0.012m）
	(Span)	- Outriggers: Fully extended		3.650±0.006m
Jib length	(Zero/Span)	Adjustment not needed		
Power tilt jib offset angle	(Zero/Span)	Adjustment not needed		

https://truckmanualshub.com/

Item		Adjustment condition	Adjustment value ( ): Tolerance at inspections
Moment (NOTICE 2) (NOTICE 4) (NOTICE 5)	(Zero)	- Boom: Fully retracted - Indicated boom angle: 80.0±0.1° - Load: No load (0.47 t main hook block only) - Hook block: Twoblocking status	Actual hoist medium load (Hook weight): 0.47±0.21 t
	(Load radius)	- Boom: Full extended - Load radius: 9.14 m - Hoist medium load: 9.00 t	Load radius: 9.14±0.07 m
	(Span)	- Boom: Full extended - Indicated boom angle: 20.0±0.1° - Load: No load (0.47 t main hook block only) - Hook block: Hoist-down until just before touching the ground	Actual hoist medium load (Hook weight): 0.47±0.01 t

1.2.3 Slow Stop Adjustment

Item	Remarks
Elevation up/down characteristics measurement	Boom: Fully retracted
Swing control characteristics measurement	Boom: Fully retracted Boom angle: Approx. 70°
Telescoping retraction characteristics measurement	Adjustment not needed

1.2.4 Setting Item after Adjustment

Item	Set value
Number of wire part-lines setting	Main: 4; Aux.: 1
Language change	English
Unit select	ft/klbs

1.2.5 Option Setting

Item	Set value
Telematics (alarm event)	In (Adjustment not needed)

https://truckmanualshub.com/

E-2 Detector Check

2.1 Applicable Model: GR-750XL-2

2.1.1 Boom Length Detector

1. Retract the boom fully, set the boom angle to 0°, and set the PTO switch to "OFF."
2. Measure the resistance of the potentiometer.

Checking at the connector of the detector

Pull out the connector(CN576) of the detector, and measure the resistance of the potentiometer.
The specified resistance values are as follows:
G-R: 833±167 Ω
G-W: 458±92 Ω

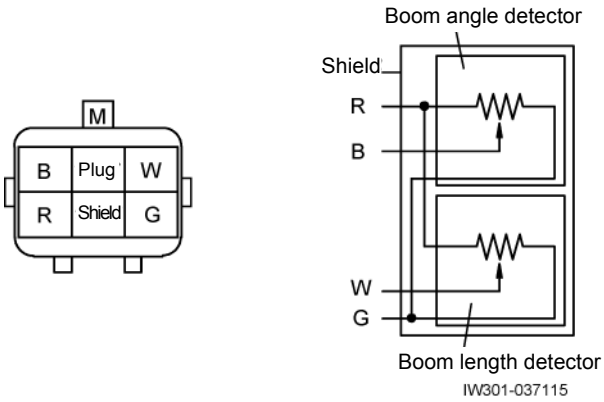

Checking at the connector of the AML

[NOTICE]

◆ Be sure to pull out the swing angle detector connector (CN580) in advance.

Pull out the CN3 connector (CN643) of AML, and measure the resistance of the potentiometer.
The specified resistance values are as follows:
1-5: 833±167 Ω
2-5: 458±92 Ω

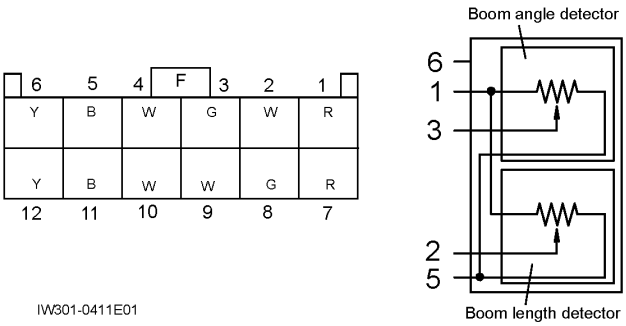

2.1.2 Boom Angle Detector

1. Retract the boom fully, set the boom angle to 0°, and set the PTO switch to "OFF."
2. Measure the resistance of the potentiometer.

Checking at the connector of the detector

Pull out the connector(CN576) of the detector, and measure the resistance of the potentiometer.
The specified resistance values are as follows:
G-R: 833±167 Ω
G-B: 146±29 Ω

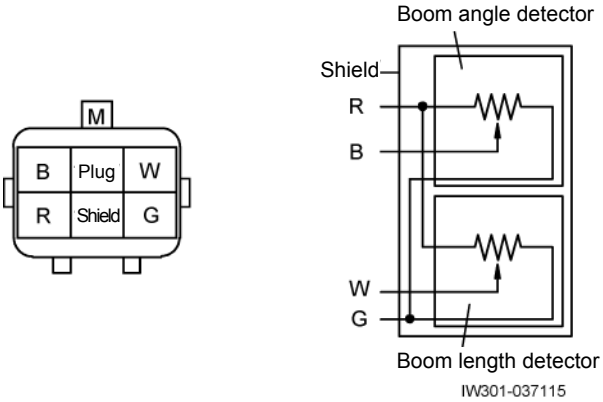

Checking at the connector of the AML

[NOTICE]

◆ Be sure to pull out the swing angle detector connector (CN580) in advance.

Pull out the CN3 connector (CN643) of AML, and measure the resistance of the potentiometer.
The specified resistance values are as follows:
1-5: 833±167 Ω
1-3: 146±29 Ω

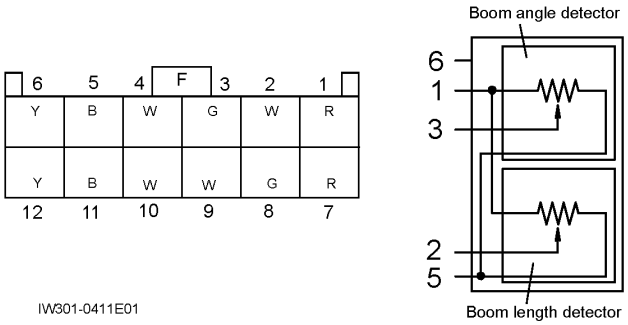

https://truckmanualshub.com/

2.1.3 Swing Angle Detector

1. Swing the boom to the over-front (swing angle: 0°), and set the PTO switch to "OFF."

2. Measure the resistance of the potentiometer.

   Checking at the connector of the detector
   Pull out the connector (CN580) of the detector, and measure the resistance of the potentiometer.
   The specified resistance values are as follows:
   4-6: 2500±375Ω
   3-6: 1062±160Ω
   1-6: 2354±353Ω

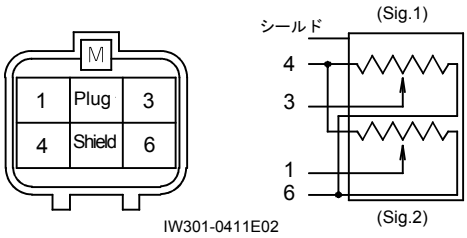

   Checking at the connector of the AML

[NOTICE]

◆ Be sure to pull out the connector (CN576) of boom length and angle detector in advance.

   Pull out the CN3 connector (CN643) of AML, and measure the resistance of the potentiometer.
   The specified resistance values are as follows:
   1-5: 2500±375Ω
   4-5: 1062±160Ω
   5-8: 2354±353Ω

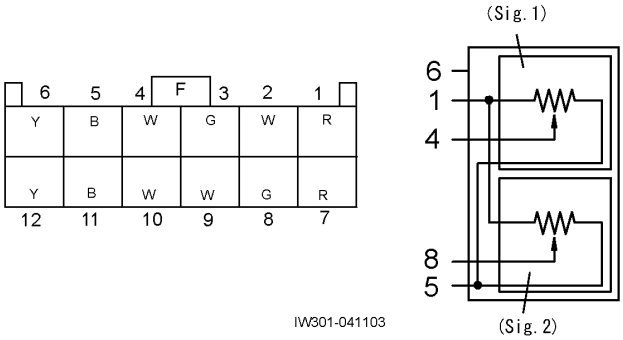

2.1.4 Outrigger Extension Length Detector

1. Stow the outrigger beams, and set the PTO switch to "OFF."

2. Among the 4 detectors equipped to each outrigger, remove the wire of the detector to be inspected. Then, hold the wire while letting it protruding by 80 mm from the guide hole of the detector.

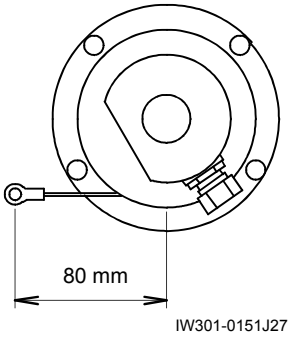

3. Pull out the connector of the detector, and measure the resistance of the potentiometer.
   The specified resistance values are as follows:
   R-B: 2,000±100 Ω
   W-B: 200±30 Ω

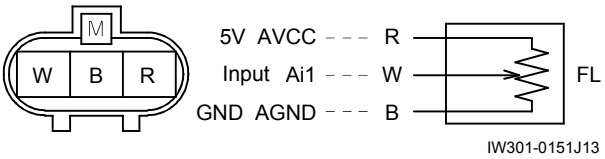

The above figure shows the FL (front left).

https://truckmanualshub.com/

2.1.5 Pressure Sensor for Moment Detection

1. Set the PTO switch to "ON."
   (Between R and B of pressure sensor connector, voltage of DC 5 V is impressed.)

2. Measure the output voltage between W and B of pressure sensor connector.
   Pressure sensor (CN584) of extension side elevating cylinder (361-801-10000)
   Pressure sensor (CN585) of retraction side elevating cylinder (361-801-60000)

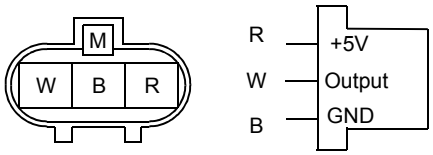

IW301-037119

3. The W-B output voltage is proportional to the elevation cylinder pressure. The specified resistance values are as follows:

Extension side (361-801-10000)

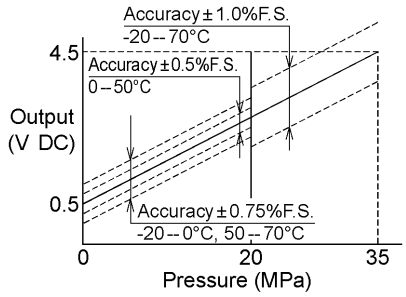

IW337-001302E

Retraction side (361-801-60000)

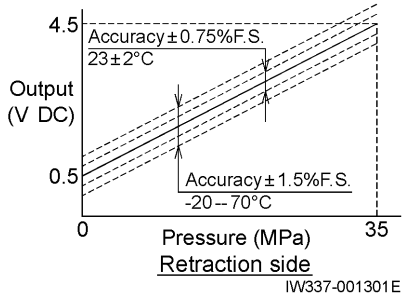

IW337-001301E

361-801-60000 △0
361-801-10000 △1

https://truckmanualshub.com/

2.2 Applicable Model: GR-1000XL-2

2.2.1 Boom Length Detector

1. Retract the boom fully, set the boom angle to 0°, and set the PTO switch to "OFF."
2. Measure the resistance of the potentiometer.

   Checking at the connector of the detector
   Pull out the connector of the detector, and measure the resistance of the potentiometer.
   The specified resistance values are as follows:
   G-R: 833±167 Ω
   G-W: 458±92 Ω

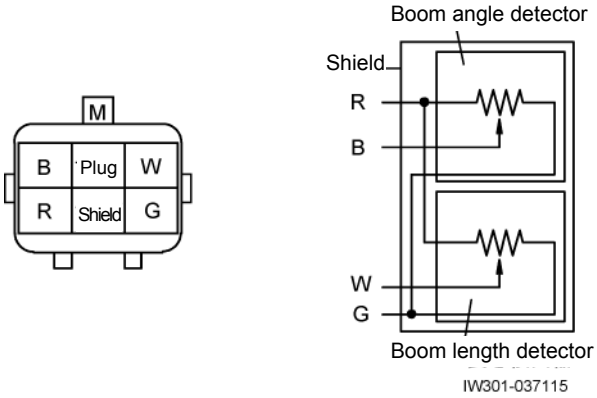

Checking at the connector of the AML

[NOTICE]

◆ Be sure to pull out the swing angle detector connector (CN580) in advance.

Pull out the CN3 connector (CN643) of AML, and measure the resistance of the potentiometer.
The specified resistance values are as follows:
1-5: 833±167 Ω
2-5: 458±92 Ω

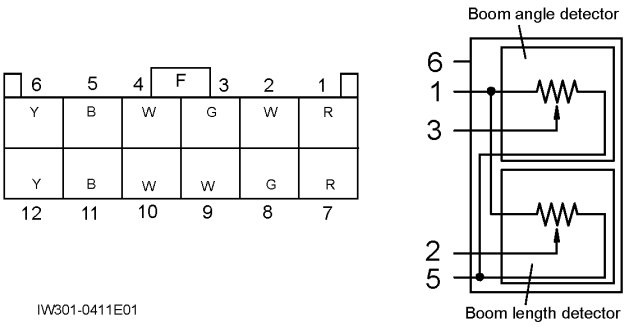

2.2.2 Boom Angle Detector

1. Retract the boom fully, set the boom angle to 0°, and set the PTO switch to "OFF."
2. Measure the resistance of the potentiometer.

   Checking at the connector of the detector
   Pull out the connector of the detector, and measure the resistance of the potentiometer.
   The specified resistance values are as follows:
   G-R: 833±167 Ω
   G-B: 146±29 Ω

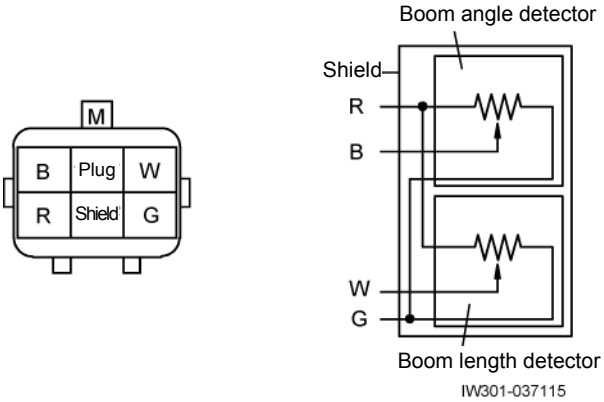

Checking at the connector of the AML

[NOTICE]

◆ Be sure to pull out the swing angle detector connector (CN580) in advance.

Pull out the CN3 connector (CN643) of AML, and measure the resistance of the potentiometer.
The specified resistance values are as follows:
1-5: 833±167 Ω
1-3: 146±29 Ω

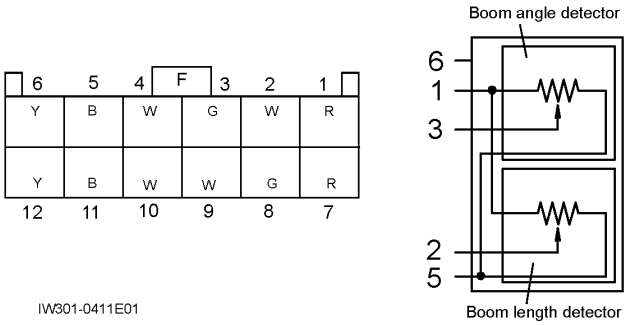

https://truckmanualshub.com/

2.2.3 Swing Angle Detector

1. Swing the boom to the over-front (swing angle: 0°), and set the PTO switch to "OFF."

2. Measure the resistance of the potentiometer.

   Checking at the connector of the detector
   Pull out the connector (CN580) of the detector, and measure the resistance of the potentiometer.
   The specified resistance values are as follows:
   4-6: 2500±375Ω
   3-6: 1062±160Ω
   1-6: 2354±353Ω

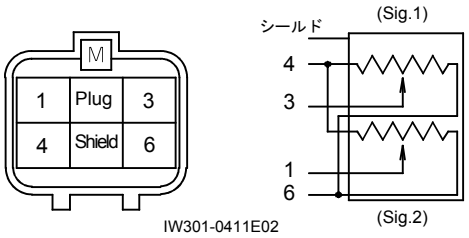

   Checking at the connector of the AML

[NOTICE]

◆ Be sure to pull out the connector (CN576) of boom length and angle detector in advance.

   Pull out the CN3 connector (CN643) of AML, and measure the resistance of the potentiometer.
   The specified resistance values are as follows:
   1-5: 2500±375Ω
   4-5: 1062±160Ω
   5-8: 2354±353Ω

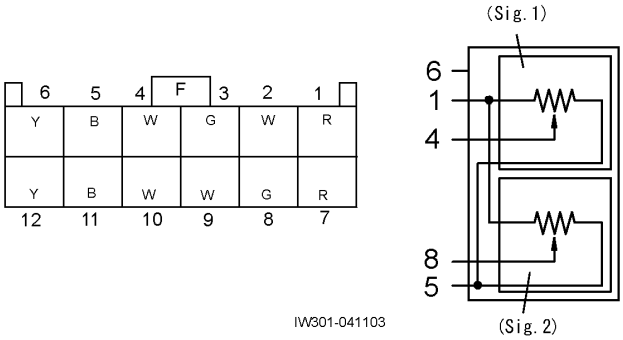

2.2.4 Outrigger Extension Length Detector

1. Stow the outrigger beams, and set the PTO switch to "OFF."

2. Among the 4 detectors equipped to each outrigger, remove the wire of the detector to be inspected. Then, hold the wire while letting it protruding by 80 mm from the guide hole of the detector.

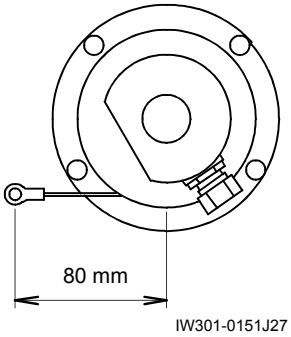

3. Pull out the connector of the detector, and measure the resistance of the potentiometer.
   The specified resistance values are as follows:
   R-B: 2,000±100 Ω
   W-B: 200±30 Ω

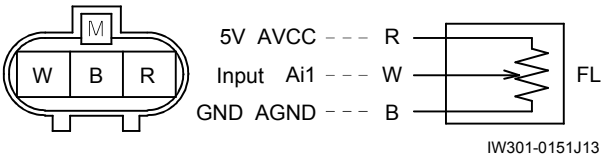

The above figure shows the FL (front left).

https://truckmanualshub.com/

2.2.5 Pressure Sensor for Moment Detection

1. Set the PTO switch to "ON."
   (Between R and B of pressure sensor connector, voltage of DC 5 V is impressed.)

2. Measure the output voltage between W and B of pressure sensor connector.
   Pressure sensor (CN584) of extension side elevating cylinder (361-801-10000)
   Pressure sensor (CN585) of retraction side elevating cylinder (361-801-60000)

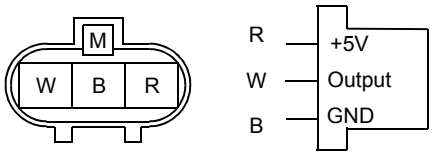

IW301-037119

3. The W-B output voltage is proportional to the elevation cylinder pressure. The specified resistance values are as follows:

Extension side (361-801-10000)

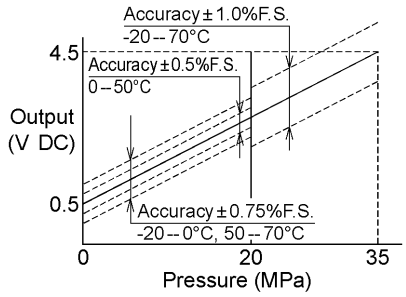

IW337-001302E

Retraction side (361-801-60000)

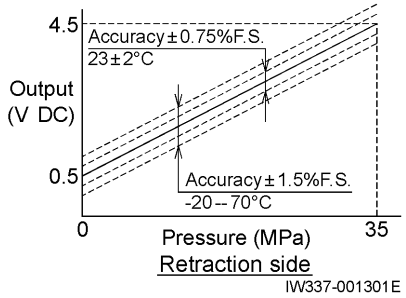

IW337-001301E

361-801-60000 △0
361-801-10000 △1

https://truckmanualshub.com/

3. AML Control Function List

3.1 Applicable Model: GR-750XL-2

1.Setting of operation status No.

① Data No.258 (Status after 2 hours have elapsed)

② Data No.259 (Operation status No. that is set when outrigger length detector is abnormal)

Relevant data

Data No.10236 (Boom and jib No. definition) Data No.10234 (On-rubber No. definition)

Data No.10222 (Outrigger No. definition) Data No.10230 (Counterweight No. definition)

Operation state No.	Boom/jib No.	Front right OR No.	Front left OR No.	Rear right OR No.	Rear left OR No.
After 2 hours	1:M/B	-	-	-	-
At O/R length detector abnormality	1:M/B	-	-	-	-

Operation state No.	Front/rear jack	O/T No.	C/W No.	Jib use set No.
After 2 hours	-	85: Stationary	99: No. C/W	-
At O/R length detector abnormality	-	85: Stationary	99: No. C/W	-

Overseas: M/B
For Japan: S/T

2.Subtraction load at single top

① Data No.525 (This load is subtracted from the selected rated load.)

Subtraction load [t]	0.00

3.Section width setting

① Data No.10572 (Section width setting data for boom length, boom angle, tilt angle, and telescoping jib length)
※Set value shall be the absolute value.

Boom length [m]		Boom angle [deg]		Tilt angle [deg]		Telescoping jib length [m]	
Negative width	Positive width	Negative width	Positive width	Negative width	Positive width	Negative width	Positive width
0.15	0.14	0.0	0.0	0.0	0.0	0.00	0.00

4.Data specifying boom telescoping No. and telescoping sequence

① Data No.20584 (Data specifying telescoping sequence by full retraction SW1)

Boom length section No. when SW is OFF	Length range for full retraction SW abnormality judgment	
	Lower limit length [m]	Upper limit length [m]
2	10.60	11.40
6	34.60	35.40

Full retraction SW1 (full retraction of 2nd boom section) turned OFF
: Capacity reduction for the subsequent boom length is selected.

② Data No.20586 (Data specifying telescoping sequence by full retraction SW2)

Boom length section No. when SW is OFF	Length range for full retraction SW abnormality judgment	
	Lower limit length [m]	Upper limit length [m]
4	18.60	19.40
2	10.60	11.40

Full retraction SW2 (full retraction of top boom section) turned OFF
: Capacity reduction for the subsequent boom length is selected.

5.Number of part-lines of wire rope and limit load

① Data No.10697 (Number of part-lines of wire rope and limit load at auxiliary winch)

② Data No.10698 (Number of part-lines of wire rope and limit load at main winch)

Auxiliary winch	Limit load [t]	5.58	-	-	-	-	-	-
	No. of part-lines of wire rope	1	-	-	-	-	-	-
Main winch	Limit load [t]	5.58	11.16	16.73	22.30	27.89	33.47	39.05
	No. of part-lines of wire rope	1	2	3	4	5	6	7
Auxiliary winch	Limit load [t]	-	-	-	-	-	-	-
	No. of part-lines of wire rope	-	-	-	-	-	-	-
Main winch	Limit load [t]	44.63	50.21	55.79	61.37	66.95	68.04	68.04
	No. of part-lines of wire rope	8	9	10	11	12	13	14

6.Boom telescoping control

① Data No.10715 (Telescoping cylinder switching boom length range)

	Normal	Special
Lower limit length [m]	18.60	34.60
Upper limit length [m]	19.40	35.40

7.Hysteresis data

① Data No.10718 (Hysteresis data)

Boom length [m]	Jib length [m]	Boom angle [deg]	P/T jib angle [deg]
0.02	0.00	0.2	0.0
L/J jib angle [deg]	Load radius [m]	Lifting height [m]	Swing angle [deg]
0.0	0.05	0.05	0.5

8.Stroke end stop

① Data No.16719 (Slow stop control data)

Value in ( ) indecates tolerance angle against mechanical stroke end angle.

	Slow stop angle [deg]	Vent stop angle [deg]	Mechanical end angle [deg]
Boom raising stroke end	80.3 (1.10)	80.8 (0.6)	81.4
Boom lowering stroke end	-1.5 (0.10)	-30.0 (-28.4)	-1.6

② Data No.2784 (Boom lowering stroke end cancel condition, hoist medium load check cancel)

Boom stowing condition	
Boom length [m]	11.10
Left swing limit angle [deg]	355.0
Right swing limit angle [deg]	5.0
Boom angle [deg]	3.5

③ Data No.2782 (Boom lowering allowable angle at 100%)

Boom angle [deg]	80.1

9.Backward stability

① Data No.10736 (Backward stability data)

② Data No.20724 (Main boom)

Front right O/R state	Rear right O/R state	Front left O/R state	Rear left O/R state	Jack state	O/T state	Swing position	C/W state	Stop boom angle by boom length [deg]		
								11.0m	19.0m	27.0m
-	-	-	-	-	85: Stationary	-	-	76.0	80.0	90.0
-	-	-	-	-	86: Traveling	-	-	76.0	80.0	90.0

① Data No.10736 (Backward stability data)

② Data No.20726 (Main boom + single top)

Front right O/R state	Rear right O/R state	Front left O/R state	Rear left O/R state	Jack state	O/T state	Swing position	C/W state	Stop boom angle by boom length [deg]		
								11.0m	19.0m	27.0m
-	-	-	-	-	85: Stationary	-	-	76.0	80.0	90.0
-	-	-	-	-	86: Traveling	-	-	76.0	80.0	90.0

① Data No.10736 (Backward stability data)

② Data No.20728 (Main boom + jib)

Front right O/R state	Rear right O/R state	Front left O/R state	Rear left O/R state	Jack state	O/T state	Swing position	C/W state	Stop boom angle by boom length [deg]		
								11.0m	19.0m	27.0m
-	-	-	-	-	85: Stationary	-	-	40.0	90.0	90.0
-	-	-	-	-	86: Traveling	-	-	40.0	90.0	90.0

10.Interference prevention area

① Data No.12785 (Definition of interference prevention area)

	Posture 1
Left swing limit angle [deg]	135.0
Right swing limit angle [deg]	220.0
Upper limit boom angle [deg]	8.0

② Data No.12792 (Area of interference with engine hood)

Right swing slow stop angle [deg]	135.0
Left swing slow stop angle [deg]	220.0
Boom lowering slow stop angle [deg]	8.0
Default elevation angle at turning power ON [deg]	2.0
Default swing angle at turning power ON [deg]	2.0
Eevation tolerance angle at start of slow stop [deg]	5.0
Swing tolerance angle at start of slow stop [deg]	20.0
Eevation tolerance angle for range with no capacity indecation [deg]	2.0
Swing tolerance angle for range with no capacity indecation [deg]	1.0

Elevation angle triggering slow stop: 8.0 + 5.0 = 13.0
Swing angle triggering slow stop during right swing: 135.0 - 20.0 = 115.0
Swing angle triggering slow stop during left swing: 220.0 + 20.0 = 240.0
Range with no capacity indication: Elevation: (135.0 + 1.0) to (220.0 - 1.0)
Swing: (8.0 - 2.0)

11.Warning and stop % during boom lift with jib extended

① Data No.20803 (Warning and stop % in operating main boom with jib (single top))

Specification	For North America		
O/R state	Warning 1 (intermittent)	Warning 2 (continuous)	Stop %
O/R MID1	70.0	80.0	80.0
O/R MID2	77.0	87.0	87.0
O/R MID3	77.0	87.0	87.0
O/R MAX	78.0	88.0	88.0

12.Hoist medium load check

① Data No.836 (Specifies the boom angle range where the hoist medium load lower limit check is performed)

Lower limit boom angle [deg]	Upper limit boom angle [deg]
-3.0	83.0

② Data No.10837 (Specifies the tolerance load range for each boom length)

Boom length [m]	11.00	15.00	19.00	23.00	27.00
Load tolerance [t]	1.00	1.00	1.00	1.00	1.00
Boom length [m]	31.00	35.00	39.00	43.00	
Load tolerance [t]	1.00	1.00	1.00	1.00	

③ Data No.838 (Hoist medium load to be used with actual load check)

	Hook weight [t]	
For North America	Main hook	0.590
	Auxiliary hook	0.132

13.Fuel consumption monitor

① Data No.17284 (Maximum and Minimum value setting of current and average fuel consumption)

current fuel consumption during crane operation	For North America [hour/G]	Min.	0.0	current fuel consumption during traveling	For North America [hour/G]	Min.	0.0
		Max.	0.6			Max.	2.5
	Except North America [min/L]	Min.	0.0		Except North America [min/L]	Min.	0.0
		Max.	10.0			Max.	1.0
Average fuel consumption during crane operation	For North America [hour/G]	Min.	0.0	Average fuel consumption during traveling	For North America [hour/G]	Min.	0.0
		Max.	0.6			Max.	2.5
	Except North America [min/L]	Min.	0.0		Except North America [min/L]	Min.	0.0
		Max.	10.0			Max.	1.0

14.Eco mode

① Data No.7888 {Setting of Eco mode(accelerator limit opening with accelerator sensor input at 100%)}

Mode	accelerator limit opening
Eco1	5（60%）
Eco2	8（45%）

15.Self diagnosis

① Data No.18241(Checking connection of CAN port CH2)

Node No. (Unit)	Communication timeout [sec]
210(VCU)	10
39(ICF)	10

16.Telematics

① Data No.7825(Load criteria for crane operation)

Load criterion for main hook [ton]	0.20
Load criterion for auxiliary hook [ton]	0.10

② Data No.7886(Conditon of determining load status for telematics)

Type of criteria for load status	1	moment road ratio
Detected period of overload [sec]	2	
Detected period after recovery from overload [sec]	5	
Load ratio for determining overload [%]	103.0	
Load ratio for determining recovery from overload [%]	100.0	

IW301-0411E24

https://truckmanualshub.com/

Chapter E

3.2 Applicable Model: GR-1000XL-2

1.Setting of operation status No.

① Data No.258 (Status after 2 hours have elapsed)

② Data No.259 (Operation status No. that is set when outrigger length detector is abnormal)

Relevant data

Data No.10236 (Boom and jib No. definition)
Data No.10222 (Outrigger No. definition)
Data No.10234 (On-rubber No. definition)
Data No.10230 (Counterweight No. definition)

Operation state No.	Boom/jib No.	Front right OR No.	Front left OR No.	Rear right OR No.
After 2 hours	1:M/B	-	-	-
At O/R length detector abnormality	1:M/B	-	-	-

Operation state No.	Front/rear jack	O/T No.	C/W No.	Jib use set No.
After 2 hours	-	85: Stationary	99: No. C/W	-
At O/R length detector abnormality	-	85: Stationary	99: No. C/W	-

Overseas: M/B
For Japan: S/T

2.Subtraction load at single top

① Data No.525 (This load is subtracted from the selected rated load.)

Subtraction load [t]	0.00

3.Section width setting

① Data No.10572 (Section width setting data for boom length, boom angle, tilt angle, and telescoping jib length)
※Set value shall be the absolute value.

Boom length [m]		Boom angle [deg]		Tilt angle [deg]		Telescoping jib length [m]	
Negative width	Positive width	Negative width	Positive width	Negative width	Positive width	Negative width	Positive width
0.15	0.14	0.0	0.0	0.0	0.0	0.00	0.00

4.Data specifying boom telescoping No. and telescoping sequence

① Data No.20584 (Data specifying telescoping sequence by full retraction SW1)

Boom length section No. when SW is OFF	Length range for full retraction SW abnormality judgment	
	Lower limit length [m]	Upper limit length [m]
2	11.60	12.40
6	37.85	38.65

Full retraction SW1 (full retraction of 2nd boom section) turned OFF
: Capacity reduction for the subsequent boom length is selected.

② Data No.20586 (Data specifying telescoping sequence by full retraction SW2)

Boom length section No. when SW is OFF	Length range for full retraction SW abnormality judgment	
	Lower limit length [m]	Upper limit length [m]
4	20.35	21.15
2	11.60	12.40

Full retraction SW2 (full retraction of top boom section) turned OFF
: Capacity reduction for the subsequent boom length is selected.

5.Number of part-lines of wire rope and limit load

① Data No.10697 (Number of part-lines of wire rope and limit load at auxiliary winch)

② Data No.10698 (Number of part-lines of wire rope and limit load at main winch)

Auxiliary winch	Limit load [t]	6.58	-	-	-	-	-	-	-
	No. of part-lines of wire rope	1	-	-	-	-	-	-	-
Main winch	Limit load [t]	6.58	13.15	19.73	26.30	32.88	39.46	46.03	52.61
	No. of part-lines of wire rope	1	2	3	4	5	6	7	8
Auxiliary winch	Limit load [t]	-	-	-	-	-	-	-	-
	No. of part-lines of wire rope	-	-	-	-	-	-	-	-
Main winch	Limit load [t]	59.19	65.77	72.34	78.92	85.50	90.72	90.72	90.72
	No. of part-lines of wire rope	9	10	11	12	13	14	15	16

6.Boom telescoping control

① Data No.10715 (Telescoping cylinder switching boom length range)

	Normal	Special
Lower limit length [m]	20.35	37.85
Upper limit length [m]	21.15	38.65

7.Hysteresis data

① Data No.10718 (Hysteresis data)

Boom length [m]	Jib length [m]	Boom angle [deg]	P/T jib angle [deg]
0.02	0.00	0.2	0.0
L/J jib angle [deg]	Load radius [m]	Lifting height [m]	Swing angle [deg]
0.0	0.05	0.05	0.5

8.Stroke end stop

① Data No.16719 (Slow stop control data)

Value in ( ) indecates tolerance angle against mechanical stroke end angle.

	Slow stop angle [deg]	Vent stop angle [deg]	Mechanical end angle [deg]
Boom raising stroke end	80.5 (1.10)	81.0 (0.6)	81.6
Boom lowering stroke end	-1.4 (0.10)	-30.0 (-28.5)	-1.5

② Data No.2784 (Boom lowering stroke end cancel condition, hoist medium load check cancel)

Boom stowing condition	
Boom length [m]	12.10
Left swing limit angle [deg]	355.0
Right swing limit angle [deg]	5.0
Boom angle [deg]	3.5

③ Data No.2782 (Boom lowering allowable angle at 100%)

Boom angle [deg]	80.1

9.Backward stability

① Data No.10736 (Backward stability data)

② Data No.20724 (Main boom)

Front right O/R state	Rear right O/R state	Front left O/R state	Rear left O/R state	Jack state	O/T state	Swing position	C/W state	Stop boom angle by boom length [deg]			
								12.00m	20.75m	29.50m	33.875m
-	-	-	-	-	85: Stationary	-	-	68.0	75.0	78.0	90.0
-	-	-	-	-	86: Traveling	-	-	68.0	75.0	78.0	90.0
72:MAX	61:MIN	-	-	-	-	-	-	78.0	90.0	90.0	90.0
-	-	72:MAX	61:MIN	-	-	-	-	78.0	90.0	90.0	90.0
65:MID3	61:MIN	-	-	-	-	-	-	78.0	90.0	90.0	90.0
-	-	65:MID3	61:MIN	-	-	-	-	78.0	90.0	90.0	90.0
64:MID2	61:MIN	-	-	-	-	-	-	78.0	90.0	90.0	90.0
-	-	64:MID2	61:MIN	-	-	-	-	78.0	90.0	90.0	90.0
63:MID1	61:MIN	-	-	-	-	-	-	78.0	90.0	90.0	90.0
-	-	63:MID1	61:MIN	-	-	-	-	78.0	90.0	90.0	90.0
61:MIN	72:MAX	-	-	-	-	-	-	78.0	90.0	90.0	90.0
-	-	61:MIN	72:MAX	-	-	-	-	78.0	90.0	90.0	90.0
61:MIN	65:MID3	-	-	-	-	-	-	78.0	90.0	90.0	90.0
-	-	61:MIN	65:MID3	-	-	-	-	78.0	90.0	90.0	90.0
61:MIN	64:MID2	-	-	-	-	-	-	78.0	90.0	90.0	90.0
-	-	61:MIN	64:MID2	-	-	-	-	78.0	90.0	90.0	90.0
61:MIN	63:MID1	-	-	-	-	-	-	78.0	90.0	90.0	90.0
-	-	61:MIN	63:MID1	-	-	-	-	78.0	90.0	90.0	90.0
61:MIN	61:MIN	-	-	-	-	-	-	78.0	90.0	90.0	90.0
-	-	61:MIN	61:MIN	-	-	-	-	78.0	90.0	90.0	90.0

① Data No.10736 (Backward stability data)

② Data No.20726 (Main boom + single top)

Front right O/R state	Rear right O/R state	Front left O/R state	Rear left O/R state	Jack state	O/T state	Swing position	C/W state	Stop boom angle by boom length [deg]			
								12.00m	20.75m	29.50m	33.875m
-	-	-	-	-	85: Stationary	-	-	68.0	75.0	78.0	90.0
-	-	-	-	-	86: Traveling	-	-	68.0	75.0	78.0	90.0
72:MAX	61:MIN	-	-	-	-	-	-	78.0	90.0	90.0	90.0
-	-	72:MAX	61:MIN	-	-	-	-	78.0	90.0	90.0	90.0
65:MID3	61:MIN	-	-	-	-	-	-	78.0	90.0	90.0	90.0
-	-	65:MID3	61:MIN	-	-	-	-	78.0	90.0	90.0	90.0
64:MID2	61:MIN	-	-	-	-	-	-	78.0	90.0	90.0	90.0
-	-	64:MID2	61:MIN	-	-	-	-	78.0	90.0	90.0	90.0
63:MID1	61:MIN	-	-	-	-	-	-	78.0	90.0	90.0	90.0
-	-	63:MID1	61:MIN	-	-	-	-	78.0	90.0	90.0	90.0
61:MIN	72:MAX	-	-	-	-	-	-	78.0	90.0	90.0	90.0
-	-	61:MIN	72:MAX	-	-	-	-	78.0	90.0	90.0	90.0
61:MIN	65:MID3	-	-	-	-	-	-	78.0	90.0	90.0	90.0
-	-	61:MIN	65:MID3	-	-	-	-	78.0	90.0	90.0	90.0
61:MIN	64:MID2	-	-	-	-	-	-	78.0	90.0	90.0	90.0
-	-	61:MIN	64:MID2	-	-	-	-	78.0	90.0	90.0	90.0
61:MIN	63:MID1	-	-	-	-	-	-	78.0	90.0	90.0	90.0
-	-	61:MIN	63:MID1	-	-	-	-	78.0	90.0	90.0	90.0
61:MIN	61:MIN	-	-	-	-	-	-	78.0	90.0	90.0	90.0
-	-	61:MIN	61:MIN	-	-	-	-	78.0	90.0	90.0	90.0

① Data No.10736 (Backward stability data)

② Data No.20728 (Main boom + jib)

Front right O/R state	Rear right O/R state	Front left O/R state	Rear left O/R state	Jack state	O/T state	Swing position	C/W state	Stop boom angle by boom length [deg]			
								12.00m	20.75m	29.50m	33.875m
-	-	-	-	-	85: Stationary	-	-	40.0	90.0	90.0	90.0
-	-	-	-	-	86: Traveling	-	-	40.0	90.0	90.0	90.0

10.Interference prevention area

① Data No.12785 (Definition of interference prevention area)

	Posture 1
Left swing limit angle [deg]	135.0
Right swing limit angle [deg]	220.0
Upper limit boom angle [deg]	8.0

② Data No.12792 (Area of interference with engine hood)

Right swing slow stop angle [deg]	135.0
Left swing slow stop angle [deg]	220.0
Boom lowering slow stop angle [deg]	8.0
Default elevation angle at turning power ON [deg]	2.0
Default swing angle at turning power ON [deg]	2.0
Eevation tolerance angle at start of slow stop [deg]	5.0
Swing tolerance angle at start of slow stop [deg]	20.0
Eevation tolerance angle for range with no capacity indecation [deg]	2.0
Swing tolerance angle for range with no capacity indecation [deg]	1.0

Elevation angle triggering slow stop: 8.0 + 5.0 = 13.0
Swing angle triggering slow stop during right swing: 135.0 - 20.0 = 115.0
Swing angle triggering slow stop during left swing: 220.0 + 20.0 = 240.0
Range with no capacity indication: Elevation: (135.0 + 1.0) to (220.0 - 1.0)
Swing: (8.0 - 2.0)

11.Warning and stop % during boom lift with jib extended

① Data No.20803 {Warning and stop % in operating main boom with jib (single top)}

Specification	For North America		
O/R state	Warning 1 (intermittent)	Warning 2 (continuous)	Stop %
O/R MID1	82.0	92.0	92.0
O/R MID2	83.0	93.0	93.0
O/R MID3	83.0	93.0	93.0
O/R MAX	84.0	94.0	94.0

12.Hoist medium load check

① Data No.836 (Specifies the boom angle range where the hoist medium load lower limit check is performed)

Lower limit boom angle [deg]	Upper limit boom angle [deg]
-3.0	83.0

② Data No.10837 (Specifies the tolerance load range for each boom length)

Boom length [m]	12.00	16.38	20.75	25.13	29.50
Load tolerance [t]	1.00	1.00	1.00	1.00	1.00
Boom length [m]	33.88	38.25	42.63	47.00	
Load tolerance [t]	1.00	1.00	1.00	1.00	

③ Data No.838 (Hoist medium load to be used with actual load check)

	Hook weight [t]	
For North America	Main hook	0.862
	Auxiliary hook	0.145

13.High speed winch mode

① Data No.12718(Limit road during high speed winch operation)

Limit road [t]	
Main winch	Auxiliary winch
4.0	4.0

14.Fuel consumption monitor

① Data No.17284 (Maximum and Minimum value setting of current and average fuel consumption)

current fuel consumption during crane operation	For North America [hour/G]	Min.	0.0	current fuel consumption during traveling	For North America [hour/G]	Min.	0.0
		Max.	1.0			Max.	3.0
	Except North America [min/L]	Min.	2.0		Except North America [min/L]	Min.	0.0
		Max.	14.0			Max.	1.0
Average fuel consumption during crane operation	For North America [hour/G]	Min.	0.0	Average fuel consumption during traveling	For North America [hour/G]	Min.	0.0
		Max.	1.0			Max.	3.0
	Except North America [min/L]	Min.	2.0		Except North America [min/L]	Min.	0.0
		Max.	14.0			Max.	1.0

15.Eco mode

① Data No.7888 {Setting of Eco mode(accelerator limit opening with accelerator sensor input at 100%)}

Mode	accelerator limit opening
Eco1	5 (60%)
Eco2	8 (45%)

16.Self diagnosis

① Data No.18241(Checking connection of CAN port CH2)

Node No. (Unit)	Communication timeout [sec]
210(VCU)	10
39(ICF)	10

17.Telematics

① Data No.7825(Load criteria for crane operation)

Load criterion for main hook [ton]	0.20
Load criterion for auxiliary hook [ton]	0.10

② Data No.7886(Conditon of determining load status for telematics)

Type of criteria for load status	1
Detected period of overload [sec]	2
Detected period after recovery from overload [sec]	5
Load ratio for determining overload [%]	103.0
Load ratio for determining recovery from overload [%]	100.0

moment road ratio

IW301-0411E22

https://truckmanualshub.com/

4. AML Input/Output List

4.1 Applicable Model: GR-750XL-2

1.Digital input

① 17200 (Only the signals are shown that are activated, and with which the function is selected.)

No	Signal name	Set value	Setting status	Function
5	Jib dead weight subtraction	0 , 1	Subtraction of jib dead weight	Selects whether to subtract the dead weight when jib is not mounted.
22	Load/radius adjustment	0 , 1	Display	Selects whether to display the load/radius in the adjustment menu.
36	Display of indicator for operation	0 , 1	indicator display	Selects whether to display the indicator for operation.
50	Capacity reduction	0 , 1	Function activated	Selects whether to activate capacity reduction function during capacity detemination.
53	Winch position selection function	0 , 1	Winch position selection function available	On the performance setting, selects presence of the winch position selection function.
60	Drum indicator input frequency dividing	0 , 1	Perform frequency dividing	Selects whether to link the drum indicator movement with the number of part-lines.
71	Availability of stop judgment at detector abnormality	0 , 1	Stop processing enabled	Selects whether to enable the stop processing even when detector is abnormal.
74	Slow stop capacity adjustment	0 , 1	Adjustment available	Enables the adjustment of slow stop control data from AML.
78	Spacial telescoping selection method	0 , 1	Selecting by boom state setting	Selects the boom telescoping method.
79	Winch position selection	0 , 1	Winch position selection function available	In the user adjustment, selects presence of the winch position selection function.
80	Swing slow stop valve adjustment method selector	0 , 1	Automatic adjustment available	Selects whether to adjust swing valves by automatic adjustment method.
96	Selecting the winch	0 , 1	Selecting front or front/rear	Selects the winch
98	Prohibition on boom extension during jib set status	0 , 1	Prohibited	Activates the prohibition on boom extension during jib set status.
104	Setting of the back light status during traveling	0 , 1	Turned off at all times	Selects whether to turn the back light on during traveling.

Applicable Di No. → Set value

② 18250 (Data that selects telematics functions)

No	Signal name	Set value	Setting status	Function
1	Sending alarm event data on demand	1 , 2	Function activated (initial setting/function activated)	Selects whether to activate the function of sending alarm event data on demand.
2	Daily data (oil temp.and water temp.)	1 , 0	Sensing temp. directly	Selects the recording method for torque converter oil temp and enginge oil temp for daily data.
3	History (oil temp.)	1 , 0	Sensing temp. directly	Selects the recording method for torque converter oil temp for history.

Applicable Di No. → Set value

③ 17202 (Data that specifies to which Di terminal the automatic stop-related signal is connected. Only the signals are shown that are activated, and with which the terminal is assigned.)

No	Signal name	Set value	Assigned terminal	Setting status	Function
1	Main hoist-up detection	9 , 0	Di9	ON: No operation, OFF: Operation	Detects the hoist-up operation of main winch.
2	Main hoist-down detection	10 , 0	Di10	ON: No operation, OFF: Operation	Detects the hoist-down operation of main winch.
3	Auxiliary hoist-up detection	11 , 0	Di11	ON: No operation, OFF: Operation	Detects the hoist-up operation of auxiliary winch.
4	Auxiliary hoist-down detection	12 , 0	Di12	ON: No operation, OFF: Operation	Detects the hoist-down operation of auxiliary winch.
9	Main boom extension detection	13 , 0	Di13	ON: No operation, OFF: Operation	Detects the extending operation of main boom.
10	Main boom retraction detection	14 , 0	Di14	ON: No operation, OFF: Operation	Detects the retracting operation of main boom.
11	Main boom raise detection	15 , 0	Di15	ON: No operation, OFF: Operation	Detects the raising operation of main boom.
12	Main boom lowering detection	16 , 0	Di16	ON: No operation, OFF: Operation	Detects the lowering operation of main boom.
17	Right swing detection	17 , 0	Di17	ON: No operation, OFF: Operation	Detects the right swing operation.
18	Left swing detection	18 , 0	Di18	ON: No operation, OFF: Operation	Detects the left swing operation.
36	Twoblocking detection	28 , 0	Di28	ON: No twoblocking, OFF: Twoblocking	Detects the twoblocking status.
37	Main winch dead turns detection	23 , 0	Di23	ON: No detection, OFF: Detection	Detects over-unwinding on main winch.
38	Sub winch dead turns detection	24 , 0	Di24	ON: No detection, OFF: Detection	Detects over-unwinding on auxiliary winch.

Applicable Di No. → Set value

④ 17204 (Data that specifies to which Di terminal the crane status detection signal is connected. Only the signals are shown that are activated, and with which the terminal is assigned.)

No	Signal name	Set value	Assigned terminal	Setting status	Function
3	CW mout dismount detection	22 , 0	Di22	ON: Mounted, OFF: Dismounted	Detects the mounting condition of counterwieght for determing capacity.
9	Jib mount/dismout detection	25 , 1	Di25	ON: Dismounted, OFF: Mounted	Detects the by-fold jib mount/dismount.
11	Boom full retraction SW1 detection	2 , 0	Di2	ON: Fully retracted, OFF: Not fully retracted	Detects that 2nd boom section is in the full retraction status.
12	Boom full retraction SW2 detection	3 , 0	Di3	ON: Fully retracted, OFF: Not fully retracted	Detects that 3rd/top boom section is in the full retraction status.
23	Swing over-front detection	8 , 0	Di8	ON: Over-front, OFF: Other than over-front	Detects that the swing position is in over-front.
24	Jib connecting pin detection	7 , 0	Di7	ON: Inserted (fixed), OFF: Removed	Detects the insertion of fixing pin when jib is stowed.
31	Swing free detection	4 , 0	Di4	ON: Free, OFF: Lock	Detects the swing free/lock status.
33	Jib extension detection	7 , 0	Di7	ON: Stowed, OFF: Extended	Detects the boom operation with jib extension.
34	Outrigger stowing operation detection	201 , 0	Ser.P2-Di1	ON: No operation, OFF: Operation	Detects that the outrigger stowing operation is performed.
46	Spring lock detection	0 , 1	-	Lock	Detects the spring lock status.

Applicable Di No. → Set value

⑤ 17206 (Data that specifies to which Di terminal the selector switch status signal is connected. Only the signals are shown that are activated, and with which the terminal is assigned.)

No	Signal name	Set value	Assigned terminal	Setting status	Function
1	Neglect of twoblocking	0 , 1	-	Stop canceled	Detects that anti-twoblock control is deactivated during jib set status.
2	100% stop cancel	6 , 0	Di6	ON: Without stop, OFF: Stop performed	Cancels the overload stop.
3	Anti-twoblock cancel	5 , 0	Di5	ON: Without stop, OFF: Stop performed	Cancels the anti-twoblock.
4	Elevation slow stop cancel	0 , 1	-	Perform slow stop	Cancels the elevation slow stop.
5	Swing slow stop cancel	0 , 1	-	Perform slow stop	Cancels the swing slow stop.
6	100% cancel indication	6 , 1	Di6	ON: Cancel indication, OFF: No cancel indication	Detects the indication of 100% stop cancel.
7	Anti-twoblock cancel indication	5 , 1	Di5	ON: Cancel indication, OFF: No cancel indication	Detects the indication of anti-twoblock cancel.
12	Jib tilt selection	0 , 1	-	Not selected	Detects that the telescoping lever selection is in the jib tilt position.
13	Jib telescoping selection	0 , 1	-	Not selected	Detects that the telescoping lever selection is in the jib telescoping position.
16	PTO	208 , 0	Ser.P2-Di8	ON: PTO ON, OFF: PTO OFF	Detects whether PTO is set to ON.
17	Daytime/nighttime switching detection	206 , 0	Ser.P2-Di6	ON: Daytime, OFF: Nighttime	Selects if the time is in daytime or nighttime for the screen brightness change.
21	Auxiliary winch operation selection	1 , 1	Di1	ON: Boom telescoping operation, OFF: Aux. winch operation	Detects whether boom telescoping operation or aux. winch operation is selected.
41	Outrigger emergency setting	19 , 1	Di19	ON: Emergency setting, OFF: Normal setting	Selects outrigger emergency status.
50	Hydraulic oil temperature 50°C	203 , 0	Ser.P2-Di3	ON: Less than 50°C, OFF: 50°C or more	Detects that the hydraulic oil temperature is 50°C or higher.
51	Hydraulic oil temperature 85°C	204 , 0	Ser.P2-Di4	ON: Less than 85°C, OFF: 85°C or more	Detects that the hydraulic oil temperature is 85°C or higher.
52	Outrigger SW neutral	205 , 0	Ser.P2-Di5	ON: Neutral, OFF: Not in neutral	Detects that outrigger SW is in neutral.
55	Next boom section extension SW	27 , 0	Di27	ON: Operation, OFF: No operation	Telescoping cylinder switching
56	Emergency mission	207 , 0	Ser.P2-Di7	ON: Not selected, OFF: Selected	Detects that the emergency mission is selected.
64	Over-unwinding stop cancel	26 , 0	Di26	ON: Cancel, OFF: No cancel	Among automatic stop functions of AML, only stop related to over-unwinding is canceled.
69	Eco mode SW	212 , 1	Ser.P2-Di12	ON: Not in Eco mode OFF: Eco mode	Selects whether to activate the Eco mode

Applicable Di No. → Set value

2.Analog input

① 17214 (Data that specifies to which Ai terminal the analog detector is connected. Only the signals are shown with which the terminal is assigned.)

② 17218 (ANALOG SCALING)

Set value 1: Ratio between the detector output voltage and full scale voltage when the detected value is 0.
Set value 2: Maximum physical quantity that is detectable by a detector.
Set value 3: Physical quantity the detection subject already possesses under the status that the detector set value is 1.

No	Signal name	Set value	Assigned terminal	ANALOG SCALING (Set value)				Function
					Setting status 1	Setting status 2	Setting status 3	
1	Elevating cylinder extension pressure	5 , 0	Ai5		10.000%	357.000kgf/cm^2	0.000kgf/cm^2	Detects the pressure in the elevating cylinder tube side.
2	Elevating cylinder retraction pressure	6 , 0	Ai6		10.000%	357.000kgf/cm^2	0.000kgf/cm^2	Detects the pressure in the elevating cylinder rod side.
3	Swing angle 1	3 , 0	Ai3		24.200%	350.000deg	0.000deg	Input voltage of swing angle detector 1
4	Swing angle 2	4 , 0	Ai4		75.700%	350.000deg	360.000deg	Input voltage of swing angle detector 2
5	Boom length	1 , 0	Ai1		8.89%	35.675m	11.000m	Input voltage of main boom length detector
6	Boom angle	2 , 0	Ai2		15.000%	120.000deg	0.000deg	Input voltage of main boom angle detector
11	Right front outrigger length	203 , 0	Ser.P2-Ai3	X-O/R	-	-	-	Input voltage of right front outrigger length detector
				H-O/R	17.063%	2.334m	1.350m	
12	Right rear outrigger length	205 , 0	Ser.P2-Ai5	X-O/R	-	-	-	Input voltage of right rear outrigger length detector
				H-O/R	17.063%	2.334m	1.350m	
13	Left front outrigger length	202 , 0	Ser.P2-Ai2	X-O/R	-	-	-	Input voltage of left front outrigger length detector
				H-O/R	17.063%	2.334m	1.350m	
14	Left rear outrigger length	204 , 0	Ser.P2-Ai4	X-O/R	-	-	-	Input voltage of left rear outrigger length detector
				H-O/R	17.063%	2.334m	1.350m	
15	Torque converter pressure	201 , 0	Ser.P2-Ai1		10.000%	30.000kgf/cm^2	0.000kgf/cm^2	Input voltage of torque converter pressure detector
17	Main pressure	7 , 0	Ai7		10.000%	300.000kgf/cm^2	0.000kgf/cm^2	Input voltage of main pressure detector

Applicable Ai No. → Set value

3.Pulse input

① 17216 (Data that specifies to which Pi terminal the pulse input detector is connected. Only the signals are shown with which the terminal is assigned.)

No	Signal name	Set value	Assigned terminal	Function
1	Main drum rotation detection	3 , 0	P1	Detects the rotation of main winch drum.
2	Auxiliary drum rotation detection	4 , 0	P2	Detects the rotation of auxiliary winch drum.

Applicable Pi No. → Set value

② 7217 (Data that converts the pulse into rotation speed.)

No	Rotation speed conversion subject	Set value	Function
2	Main drum rotation detection	54	The number of pulse counts that is output per one rotation of main winch drum.
3	Auxiliary drum rotation detection	54	The number of pulse counts that is output per one rotation of auxiliary winch drum.

4.Digital output

① 17802 (Data that specifies to which terminal the digital control output is performed. Only the signals are shown with which the terminal is assigned.)

No	Signal name	Set value	Assigned terminal	Function
1	AML stop	1 , 0	Do1	Judges whether the automatic stop is activated.
9	Safety % warning	14 , 1	Do14	Judges at all times whether the calculated load % is less than 90%.
10	90% warning	15 , 1	Do15	Judges at all times whether the calculated load % is 90 ≤ load < 100%.
11	100% warning	16 , 1	Do16	Judges at all times whether the calculated load % is 100% or more.
12	Buzzer output	12 , 1	Do12	Judges at all times whether the calculated load % is 90 ≤ load or 100 ≤ load.
38	Twoblocking warning	13 , 0	Do13	Judges at all times whether the status is in the twoblocking status.
64	MDT on-rubber	66 , 0	Ser.P2-Do6	Output to notify to MDT that the on-rubber operation is being performed.
122	Main winch drum indicator output	5 , 0	Do5	Linked to the drum indicator LED, outputs to the tactile-type drum indicator.
123	Auxiliary winch drum indicator output	6 , 0	Do6	Linked to the drum indicator LED, outputs to the tactile-type drum indicator.
124	Abnormality status output	8 , 1	Do8	Detects the reckless driving of task, and outputs the result.
132	Jib set output	7 , 0	Do7	When the boom state setting is jib set, temporalily improve the winch ability.
142	Telescoping control output 1	3 , 0	Do3	Output of telescoping cylinder switching solenoid
143	Telescoping control output 2	4 , 0	Do4	Output of telescoping cylinder switching solenoid No.2
147	Solenoid output of switching the position control valve	2 , 0	Do2	Switches the solenoid to put the hydraulic circuit under pressure.
154	Eco mode selection outout 1	63 , 0	Ser.P2-Do3	Determines engine revolution limit from conbination fo mode selection output 1, 2, 3.
155	Eco mode selection outout 2	64 , 0	Ser.P2-Do4	
156	Eco mode selection outout 3	67 , 0	Ser.P2-Do7	

Applicable Do No. → Set value

5.Analog output

① 17804 (Data that specifies to which terminal the analog control output is performed. Only the signals are shown with which the terminal is assigned.)

No	Signal name	Set value	Assigned terminal	Function
1	Right swing proportional valve	1 , 0	Ao1	Output to the proportional solenoid valve for right swing deceleration
2	Left swing proportional valve	2 , 0	Ao2	Output to the proportional solenoid valve for left swing deceleration
9	Boom raising proportional valve	3 , 0	Ao3	Output to the proportional solenoid valve for boom raising deceleration
10	Boom lowering proportional valve	4 , 0	Ao4	Output to the proportional solenoid valve for boom lowering deceleration
16	Swing free proportional valve	5 , 0	Ao5	Output to the proportional solenoid valve for swing free control

Applicable Ao No. → Set value

IW301-0411E23

https://truckmanualshub.com/

4.2 Applicable Model: GR-1000XL-2

1.Digital input

① 17200 (Only the signals are shown that are activated, and with which the function is selected.)

No	Signal name	Set value	Setting status	Function
5	Jib dead weight subtraction	0 , 1	Subtraction of jib dead weight	Selects whether to subtract the dead weight when jib is not mounted.
22	Load/radius adjustment	0 , 1	Display	Selects whether to display the load/radius in the adjustment menu.
36	Display of indicator for operation	0 , 1	indicator display	Selects whether to display the indicator for operation.
50	Capacity reduction	0 , 1	Function activated	Selects whether to activate capacity reduction function during capacity detemination.
53	Winch position selection function	0 , 1	Winch position selection function available	On the performance setting, selects presence of the winch position selection function.
60	Drum indicator input frequency dividing	0 , 1	Perform frequency dividing	Selects whether to link the drum indicator movement with the number of part-lines.
71	Availability of stop judgment at detector abnormality	0 , 1	Stop processing enabled	Selects whether to enable the stop processing even when detector is abnormal.
74	Slow stop capacity adjustment	0 , 1	Adjustment available	Enables the adjustment of slow stop control data from AML.
78	Spacial telescoping selection method	0 , 1	Selecting by boom state setting	Selects the boom telescoping method.
79	Winch position selection	0 , 1	Winch position selection function available	In the user adjustment, selects presence of the winch position selection function.
80	Swing slow stop valve adjustment method selector	0 , 1	Automatic adjustment available	Selects whether to adjust swing valves by automatic adjustment method.
96	Selecting the winch	0 , 1	Selecting front or front/rear	Selects the winch
98	Prohibition on boom extension during jib set status	0 , 1	Prohibited	Activates the prohibition on boom extension during jib set status.
104	Setting of the back light status during traveling	0 , 1	Turned off at all times	Selects whether to turn the back light on during traveling.

Applicable Di No. ——— Set value

② 18250 (Data that selects telematics functions)

No	Signal name	Set value	Setting status	Function
1	Sending alarm event data on demand	1 , 2	Function activated (initial setting/function activated)	Selects whether to activate the function of sending alarm event data on demand.
2	Daily data (oil temp.and water temp.)	1 , 0	Sensing temp. directly	Selects the recording method for torque converter oil temp and enginge oil temp for daily data.
3	History (oil temp.)	1 , 0	Sensing temp. directly	Selects the recording method for torque converter oil temp for history.

Applicable Di No. ——— Set value

③ 17202 (Data that specifies to which Di terminal the automatic stop-related signal is connected. Only the signals are shown that are activated, and with which the terminal is assigned.)

No	Signal name	Set value	Assigned terminal	Setting status	Function
1	Main hoist-up detection	9 , 0	Di9	ON: No operation, OFF: Operation	Detects the hoist-up operation of main winch.
2	Main hoist-down detection	10 , 0	Di10	ON: No operation, OFF: Operation	Detects the hoist-down operation of main winch.
3	Auxiliary hoist-up detection	11 , 0	Di11	ON: No operation, OFF: Operation	Detects the hoist-up operation of auxiliary winch.
4	Auxiliary hoist-down detection	12 , 0	Di12	ON: No operation, OFF: Operation	Detects the hoist-down operation of auxiliary winch.
9	Main boom extension detection	13 , 0	Di13	ON: No operation, OFF: Operation	Detects the extending operation of main boom.
10	Main boom retraction detection	14 , 0	Di14	ON: No operation, OFF: Operation	Detects the retracting operation of main boom.
11	Main boom raise detection	15 , 0	Di15	ON: No operation, OFF: Operation	Detects the raising operation of main boom.
12	Main boom lowering detection	16 , 0	Di16	ON: No operation, OFF: Operation	Detects the lowering operation of main boom.
17	Right swing detection	17 , 0	Di17	ON: No operation, OFF: Operation	Detects the right swing operation.
18	Left swing detection	18 , 0	Di18	ON: No operation, OFF: Operation	Detects the left swing operation.
36	Twoblocking detection	28 , 0	Di28	ON: No twoblocking, OFF: Twoblocking	Detects the twoblocking status.
37	Main winch dead turns detection	23 , 0	Di23	ON: No detection, OFF: Detection	Detects over-unwinding on main winch.
38	Sub winch dead turns detection	24 , 0	Di24	ON: No detection, OFF: Detection	Detects over-unwinding on auxiliary winch.

Applicable Di No. ——— Set value

④ 17204 (Data that specifies to which Di terminal the crane status detection signal is connected. Only the signals are shown that are activated, and with which the terminal is assigned.)

No	Signal name	Set value	Assigned terminal	Setting status	Function
3	CW mout dismount detection	22 , 0	Di22	ON: Mounted, OFF: Dismounted	Detects the mounting condition of counterwieght for determing capacity.
9	Jib mount/dismout detection	25 , 1	Di25	ON: Dismounted, OFF: Mounted	Detects the by-fold jib mount/dismount.
11	Boom full retraction SW1 detection	2 , 0	Di2	ON: Fully retracted, OFF: Not fully retracted	Detects that 2nd boom section is in the full retraction status.
12	Boom full retraction SW2 detection	3 , 0	Di3	ON: Fully retracted, OFF: Not fully retracted	Detects that 3rd/top boom section is in the full retraction status.
23	Swing over-front detection	8 , 0	Di8	ON: Over-front, OFF: Other than over-front	Detects that the swing position is in over-front.
24	Jib connecting pin detection	7 , 0	Di7	ON: Inserted (fixed), OFF: Removed	Detects the insertion of fixing pin when jib is stowed.
31	Swing free detection	4 , 0	Di4	ON: Free, OFF: Lock	Detects the swing free/lock status.
33	Jib extension detection	7 , 0	Di7	ON: Stowed, OFF: Extended	Detects the boom operation with jib extension.
34	Outrigger stowing operation detection	201 , 0	Ser.P2-Di1	ON: No operation, OFF: Operation	Detects that the outrigger stowing operation is performed.
46	Spring lock detection	0 , 1	-	Lock	Detects the spring lock status.

Applicable Di No. ——— Set value

⑤ 17206 (Data that specifies to which Di terminal the selector switch status signal is connected. Only the signals are shown that are activated, and with which the terminal is assigned.)

No	Signal name	Set value	Assigned terminal	Setting status	Function
1	Neglect of twoblocking	0 , 1	-	Stop canceled	Detects that anti-twoblock control is deactivated during jib set status.
2	100% stop cancel	6 , 0	Di6	ON: Without stop, OFF: Stop performed	Cancels the overload stop.
3	Anti-twoblock cancel	5 , 0	Di5	ON: Without stop, OFF: Stop performed	Cancels the anti-twoblock.
4	Elevation slow stop cancel	0 , 1	-	Perform slow stop	Cancels the elevation slow stop.
5	Swing slow stop cancel	0 , 1	-	Perform slow stop	Cancels the swing slow stop.
6	100% cancel indication	6 , 1	Di6	ON: Cancel indication, OFF: No cancel indication	Detects the indication of 100% stop cancel.
7	Anti-twoblock cancel indication	5 , 1	Di5	ON: Cancel indication, OFF: No cancel indication	Detects the indication of anti-twoblock cancel.
12	Jib tilt selection	0 , 1	-	Not selected	Detects that the telescoping lever selection is in the jib tilt position.
13	Jib telescoping selection	0 , 1	-	Not selected	Detects that the telescoping lever selection is in the jib telescoping position.
16	PTO	208 , 0	Ser.P2-Di8	ON: PTO ON, OFF: PTO OFF	Detects whether PTO is set to ON.
17	Daytime/nighttime switching detection	206 , 0	Ser.P2-Di6	ON: Daytime, OFF: Nighttime	Selects if the time is in daytime or nighttime for the screen brightness change.
21	Auxiliary winch operation selection	1 , 1	Di1	ON: Boom telescoping operation, OFF: Aux. winch operation	Detects whether boom telescoping operation or aux. winch operation is selected.
41	Outrigger emergency setting	19 , 1	Di19	ON: Emergency setting, OFF: Normal setting	Selects outrigger emergency status.
50	Hydraulic oil temperature 50°C	203 , 0	Ser.P2-Di3	ON: Less than 50°C, OFF: 50°C or more	Detects that the hydraulic oil temperature is 50°C or higher.
51	Hydraulic oil temperature 85°C	204 , 0	Ser.P2-Di4	ON: Less than 85°C, OFF: 85°C or more	Detects that the hydraulic oil temperature is 85°C or higher.
52	Outrigger SW neutral	205 , 0	Ser.P2-Di5	ON: Neutral, OFF: Not in neutral	Detects that outrigger SW is in neutral.
55	Next boom section extension SW	27 , 0	Di27	ON: Operation, OFF: No operation	Telescoping cylinder switching
56	Emergency mission	207 , 0	Ser.P2-Di7	ON: Not selected, OFF: Selected	Detects that the emergency mission is selected.
64	Over-unwinding stop cancel	26 , 0	Di26	ON: Cancel, OFF: No cancel	Among automatic stop functions of AML, only stop related to over-unwinding is canceled.
66	Main winch at high speed mode	210 , 1	Ser.P2-Di10	ON: High speed mode OFF: Not in high speed mode	Detects that the high speed mode for the main winch is selected.
67	Auxiliary winch at high speed mode	211 , 1	Ser.P2-Di11	ON: High speed mode OFF: Not in high speed mode	Detects that the high speed mode for the auxiliary winch is selected.
69	Eco mode SW	212 , 1	Ser.P2-Di12	ON: Not in Eco mode OFF: Eco mode	Selects whether to activate the Eco mode

Applicable Di No. ——— Set value

2.Analog input

① 17214 (Data that specifies to which Ai terminal the analog detector is connected. Only the signals are shown with which the terminal is assigned.)

② 17218 (ANALOG SCALING)

Set value 1: Ratio between the detector output voltage and full scale voltage when the detected value is 0.
Set value 2: Maximum physical quantity that is detectable by a detector.
Set value 3: Physical quantity the detection subject already possesses under the status that the detector set value is 1.

No	Signal name	Set value	Assigned terminal	ANALOG SCALING (Set value)				Function
					Setting status 1	Setting status 2	Setting status 3	
1	Elevating cylinder extension pressure	5 , 0	Ai5		10.000%	357.000kgf/cm^2	0.000kgf/cm^2	Detects the pressure in the elevating cylinder tube side.
2	Elevating cylinder retraction pressure	6 , 0	Ai6		10.000%	357.000kgf/cm^2	0.000kgf/cm^2	Detects the pressure in the elevating cylinder rod side.
3	Swing angle 1	3 , 0	Ai3		24.200%	350.000deg	0.000deg	Input voltage of swing angle detector 1
4	Swing angle 2	4 , 0	Ai4		75.700%	350.000deg	360.000deg	Input voltage of swing angle detector 2
5	Boom length	1 , 0	Ai1		10.000%	35.300m	12.000m	Input voltage of main boom length detector
6	Boom angle	2 , 0	Ai2		15.000%	120.000deg	0.000deg	Input voltage of main boom angle detector
11	Right front outrigger length	203 , 0	Ser.P2-Ai3	X-O/R	-	-	-	Input voltage of right front outrigger length detector
				H-O/R	17.063%	2.334m	1.350m	
12	Right rear outrigger length	205 , 0	Ser.P2-Ai5	X-O/R	-	-	-	Input voltage of right rear outrigger length detector
				H-O/R	17.063%	2.334m	1.350m	
13	Left front outrigger length	202 , 0	Ser.P2-Ai2	X-O/R	-	-	-	Input voltage of left front outrigger length detector
				H-O/R	17.063%	2.334m	1.350m	
14	Left rear outrigger length	204 , 0	Ser.P2-Ai4	X-O/R	-	-	-	Input voltage of left rear outrigger length detector
				H-O/R	17.063%	2.334m	1.350m	
15	Torque converter pressure	201 , 0	Ser.P2-Ai1		10.000%	30.000kgf/cm^2	0.000kgf/cm^2	Input voltage of torque converter pressure detector
17	Main pressure	7 , 0	Ai7		10.000%	300.000kgf/cm^2	0.000kgf/cm^2	Input voltage of main pressure detector

Applicable Ai No. ——— Set value

3.Pulse input

① 17216 (Data that specifies to which Pi terminal the pulse input detector is connected. Only the signals are shown with which the terminal is assigned.)

No	Signal name	Set value	Assigned terminal	Function
1	Main drum rotation detection	3 , 0	P1	Detects the rotation of main winch drum.
2	Auxiliary drum rotation detection	4 , 0	P2	Detects the rotation of auxiliary winch drum.

Applicable Pi No. ——— Set value

② 7217 (Data that converts the pulse into rotation speed.)

No	Rotation speed conversion subject	Set value	Function
2	Main drum rotation detection	54	The number of pulse counts that is output per one rotation of main winch drum.
3	Auxiliary drum rotation detection	54	The number of pulse counts that is output per one rotation of auxiliary winch drum.

4.Digital output

① 17802 (Data that specifies to which terminal the digital control output is performed. Only the signals are shown with which the terminal is assigned.)

No	Signal name	Set value	Assigned terminal	Function
1	AML stop	1 , 0	Do1	Judges whether the automatic stop is activated.
9	Safety % warning	14 , 1	Do14	Judges at all times whether the calculated load % is less than 90%.
10	90% warning	15 , 1	Do15	Judges at all times whether the calculated load % is 90 ≤ load < 100%.
11	100% warning	16 , 1	Do16	Judges at all times whether the calculated load % is 100% or more.
12	Buzzer output	12 , 1	Do12	Judges at all times whether the calculated load % is 90 ≤ load or 100 ≤ load.
38	Twoblocking warning	13 , 0	Do13	Judges at all times whether the status is in the twoblocking status.
64	MDT on-rubber	66 , 0	Ser.P2-Do6	Output to notify to MDT that the on-rubber operation is being performed.
122	Main winch drum indicator output	5 , 0	Do5	Linked to the drum indicator LED, outputs to the tactile-type drum indicator.
123	Auxiliary winch drum indicator output	6 , 0	Do6	Linked to the drum indicator LED, outputs to the tactile-type drum indicator.
124	Abnormality status output	8 , 1	Do8	Detects the reckless driving of task, and outputs the result.
132	Jib set output	7 , 0	Do7	When the boom state setting is jib set, temporalily improve the winch ability.
142	Telescoping control output 1	3 , 0	Do3	Output of telescoping cylinder switching solenoid
143	Telescoping control output 2	4 , 0	Do4	Output of telescoping cylinder switching solenoid No.2
147	Solenoid output of switching the position control valve	2 , 0	Do2	Switches the solenoid to put the hydraulic circuit under pressure.
148	Switching the solenoid to select high speed mode for main winch	10 , 0	Do10	Switches the solenoid to select high speed mode for main winch.
149	Switching the solenoid to select high speed mode for auxiliary winch	11 , 0	Do11	Switches the solenoid to select high speed mode for auxiliary winch.
154	Eco mode selection outout 1	63 , 0	Ser.P2-Do3	Determines engine revolution limit from conbination fo mode selection output 1, 2, 3.
155	Eco mode selection outout 2	64 , 0	Ser.P2-Do4	
156	Eco mode selection outout 3	67 , 0	Ser.P2-Do7	

Applicable Do No. ——— Set value

5.Analog output

① 17804 (Data that specifies to which terminal the analog control output is performed. Only the signals are shown with which the terminal is assigned.)

No	Signal name	Set value	Assigned terminal	Function
1	Right swing proportional valve	1 , 0	Ao1	Output to the proportional solenoid valve for right swing deceleration
2	Left swing proportional valve	2 , 0	Ao2	Output to the proportional solenoid valve for left swing deceleration
9	Boom raising proportional valve	3 , 0	Ao3	Output to the proportional solenoid valve for boom raising deceleration
10	Boom lowering proportional valve	4 , 0	Ao4	Output to the proportional solenoid valve for boom lowering deceleration
16	Swing free proportional valve	5 , 0	Ao5	Output to the proportional solenoid valve for swing free control

Applicable Ao No. ——— Set value

IW301-0411E21

https://truckmanualshub.com/

TADANO LTD.

Head Office Ko-34,Sinden-cho, Takamatsu, Japan

Overseas Service Group

Tadano Ryogoku Bldg.
4-12, Kamezawa 2-chome,
Sumida-ku,
Tokyo, Japan
Tel. 81 (3) 3621-7765
Tel fax 81 (3) 3621-7785

History of revision		
1		
2		
3		
4		
5		