https://truckmanualshub.com/

HIRD

www.hird.co.uk

OPERATORS MANUAL

MAEDA MINI CRANE
MC815

MAEDA Mini Cranes

Northern (Head Office)
Tel: +44 (0)1482 227333

Central
Tel: +44 (0)1302 341659

Western
Tel: +44 (0)1384 900388

Southern
Tel: +44 (0)203 174 0658

DISCLAIMER - ALL INSTRUCTIONS ARE SUPPLIED FROM MANUFACTURER AND WHERE CORRECT AT TIME OF PRINT

OM 1704-2

https://truckmanualshub.com/

CONTENTS

Item	Page
INTRODUCTION	1
1. INTRODUCTION	2
2. FOR SAFE USE OF THE MACHINE	3
3. MACHINE OVERVIEW	4
3.1 SPECIFIED OPERATIONS	4
3.2 MACHINE STRUCTURE	4
3.3 MACHINE FUNCTIONS	5
4. QUALIFICATION FOR OPERATION	6
4.1 QUALIFICATION FOR CRANE OPERATION	6
5. TERMINOLOGY	7
5.1 TERMS AND DEFINITIONS	7
5.2 DIAGRAM OF WORKING RADIUS AND LIFTING HEIGHT	8
5.3 RATED TOTAL LOAD CHART	9
5.4 HOW TO LOOK AT THE ANGLE INDICATOR	15
6. OUTLINE OF REMOTE CONTROLLER	16
6.1 FEATURE	16
6.2 CONFIGURATION	16
6.2.1 CONFIGURATION OF REMOTE CONTROLLER	16
6.3 FUNCTIONS	17
6.3.1 FUNCTIONS OF REMOTE CONTROLLER	17
7. DPF OVERVIEW	18
7.1 DPF FUNCTION	18
7.2 DPF REGENERATION	18
SAFETY	21
1. BASIC PRECAUTIONS	22
2. PRECAUTIONS ON HANDLING REMOTE CONTROL SYSTEM	27
3. PRECAUTIONS FOR USE OF ENGINE AND ELECTRIC MOTOR SPECIFICATIONS	31
4. OPERATION RELATED PRECAUTIONS	32
4.1 BEFORE STARTING ENGINE	32
4.2 AFTER STARTING ENGINE	34
4.3 DURING CRANE WORK	39
4.4 PRECAUTIONS FOR TERMINATING CRANE OPERATION (REMOTE CONTROL SYSTEM)	50
5. TRANSPORT PRECAUTIONS	51
6. BATTERY HANDLING PRECAUTIONS	53
7. MAINTENANCE PRECAUTIONS	55
7.1 PRECAUTIONS BEFORE MAINTENANCE	55
7.2 PRECAUTIONS DURING MAINTENANCE	57
8. SAFETY LABEL LOCATIONS	62

https://truckmanualshub.com/

Item	Page
OPERATION	73
1. NAME OF EACH SECTION	74
1.1 MACHINE UNITS	74
1.2. DESCRIPTION OF CONTROLS	75
1.2.1. DESCRIPTION OF MONITOR	76
1.2.2. NAMES AND DESCRIPTION OF CONTROL LEVERS	98
1.2.3 NAMES AND DESCRIPTION OF OUTRIGGER OPERATION PANEL	103
1.2.4 EMERGENCY STOP SWITCH	104
1.2.5 STARTER SWITCH	104
1.2.6 LOCK LEVER	104
1.2.7 ACCELERATOR PEDAL	104
1.2.8 LIGHT SWITCH	105
1.2.9 DISCONNECT SWITCH	105
1.2.10 OVERRIDE SWITCH	106
1.2.11 FUSE BOX	107
1.2.12 CIGAR SOCKET	108
1.2.13 MAIN TENANCE USB PORT	108
1.3 NAMES AND DESCRIPTION OF REMOTE CONTROL PARTS	109
1.3.1. TRANSMITTER AND RECEIVER	109
1.3.2 DESCRIPTION OF REMOTE CONTROLLER ACCESSORIES	113
1.4. OUTRIGGER SAFETY DEVICE	114
1.4.1 FUNCTIONS OF OUTRIGGER SAFETY DEVICES	114
1.5 MOMENT LIMITER (OVERLOAD DETECTOR)	115
1.5.1 CONFIGURATION OF MOMENT LIMITER	115
1.5.2 FUNCTIONS OF MOMENT LIMITER	116
1.5.3 MOMENT LIMITER OPERATION	117
1.5.4 MOMENT LIMITER SETTINGS	119
1.5.5 MOMENT LIMITER FUNCTIONS	122
1.5.6 MOMENT LIMITER START CONDITIONS	125
1.5.7 OVERRIDE SWITCH	126
1.5.8 TROUBLESHOOTING FOR MOMENT LIMITER	126
1.6 OVER HOIST DETECTOR	127
1.7 OPERATOR SEAT	128
1.8 RADIATOR COVER	130
1.9 RADIATOR GRILLE	131
1.10 ENGINE COVER	132
1.11 MACHINERY COVER	133
1.12 OPERATION SIDE COVER	134
1.13 POWER UNIT	135
1.13.1 NAMES OF POWER UNIT PARTS	135
1.13.2 NAMES OF POWER SUPPLY BOX PARTS	135
1.13.3 NAMES OF INVERTER PARTS	136

https://truckmanualshub.com/

Item	Page
2. OPERATION	137
2.1 PRE-OPERATION INSPECTION	137
2.1.1 VISIBLE CHECKS	137
2.1.2 CHECKING BEFORE STARTING ENGINE	137
2.1.3 INSPECTION AFTER STARTING ENGINE	137
2.2 STARTING ENGINE	138
2.2.1 NORMAL STARTING OF ENGINE	138
2.2.2 STARTING ENGINE IN COLD ENVIRONMENT	139
2.3 OPERATIONS AND CHECKS AFTER STARTING ENGINE	140
2.4 BREAK-IN OPERATION	142
2.5 MACHINE TRAVELLING POSTURE	142
2.6 START MOVING MACHINE	143
2.7 CHANGING MACHINE TRAVELLING MODE	144
2.8 CHANGING DIRECTION OF THE MACHINE	144
2.9 STOPPING/PARKING THE MACHINE	146
2.10 STOPPING ENGINE	147
2.11 INSPECTION AFTER STOPPING ENGINE	147
2.12 CAUTIONS IN DRIVING	148
2.13 OUTRIGGER/CRANE RELATED SAFETY DEVICES	150
2.14 OUTRIGGER SETTING OPERATION	153
2.14.1 OUTRIGGER COMPONENTS	155
2.14.2 OUTRIGGER SETUP OPERATION	155
2.15 CAUTIONS BEFORE CRANE OPERATION	160
2.16 OPERATION BEFORE CRANE WORK	161
2.17 CRANE OPERATION POSTURE	162
2.18 WINDING AND UNWINDING	163
2.19 BOOM DERRICKING OPERATION	163
2.20 BOOM TELESCOPING OPERATION	164
2.21 SLEWING OPERATION	165
2.22 ACCELERATOR OPERATION	165
2.23 CRANE STOWAGE OPERATION	166
2.24 OUTRIGGER STOWAGE OPERATION	169
2.25 PROHIBITED OPERATIONS DURING CRANE WORK	173
2.26 PICK & CARRY OPERATION	175
2.26.1 CAUTIONS DURING PICK & CARRY OPERATION	175
2.26.2 PICK & CARRY POSTURE	176
2.26.2.1 CHANGE TO PICK & CARRY POSTURE FROM TRAVELLING POSTURE	176
2.26.2.2 CHANGE TO PICK & CARRY POSTURE FROM CRANE MODE POSTURE	177
2.26.3 PICK & CARRY OPERATIONS	178
2.26.4 CANCELING PICK & CARRY OPERATION POSTURE	179
2.26.4.1 HOW TO RETURN TO TRAVELLING POSTURE	179
2.26.4.2 HOW TO RETURN TO CRANE POSTURE	180
2.27 DPF STATIONARY REGENERATION METHOD	181

https://truckmanualshub.com/

Item	Page
3. OPERATION BY REMOTE CCONTROL	182
3.1 CAUTIONS BEFORE OPERATION	182
3.2 POWERING ON	183
3.3 INDICATIONS OF DISPLAY	184
3.4 STARTING/STOPPING THE ENGINE	188
3.5 OPERATION AFTER ENGINE IS STARTED	188
3.5.1 OPERATION BEFORE WORK	188
3.5.2 SWITCHING OPERATION MODE	188
3.6 TRAVEL OPERATION	189
3.6.1 START MOVING MACHINE	189
3.6.2 CHANGING DIRECTION OF THE MACHINE	190
3.6.3 STOPPING/PARKING THE MACHINE	191
3.7 OUTRIGGER OPERATION	192
3.7.1 OUTRIGGER SETTING OPERATION	193
3.7.2 OUTRIGGER STOWAGE OPERATION	196
3.8 CRANE OPERATION	199
3.8.1 HOOK WINDING AND UNWINDING	200
3.8.2 BOOM DERRICKING OPERATION	200
3.8.3 BOOM TELESCOPING OPERATION	201
3.8.4 SLEWING OPERATION	202
3.8.5 OPERATION WHILE TRAVELING WITH A SUSPENDED LOAD	203
3.8.6 FLY JIB DERRICKING/TELESCOPING OPERATION	203
3.9 OPERATING SPEED SELECTOR/OUTRIGGER SELECT SWITCH	204
3.10 OPERATING ACCELERATOR CONTROL SWITCH	204
3.11 OPERATING HORM SWITCH	204
3.12 EMERGENCYSTOP SWITCH OPERATION	205
3.13 LED LIGHT OPERATIONS	205
3.14 CHECKING AFTER CRANE OPERATION	206
3.14.1 CRANE STOWAGE OPERATION	206
3.14.2 STOPPING OPERATION BY RADIO CONTROL AND INSPECTION	206
4. OPERATING MACHINE WITH ENGINE & ELECTRIC MOTOR	207
4.1 POWER SUPPLY CONNECTION	207
4.2 OPERATION AND CHECKING AFTER POWER CONNECTION	210
4.3 MACHINE OPERATION	212
4.4 MACHINE STOP AND CHECKS AFTER STOPPING MACHINE	212
4.5 POWER SUPPLY SEPARATION	213
5. HANDLING WIRE ROPE	214
5.1 CRITERIA FOR WIRE ROPE REPLACEMENT	214
5.2 CORRETIVE ACTIONS AGAINST TWISTED WIRE ROPE	215
6. TRANSPORTATION	217
6.1 LOADING/UNLOADING	217
6.2 HOISTING MACHINE	218
6.3 CAUTIONS WHEN LOADING MACHINE	219
6.4 CAUTIONS DURING TRANSPORTATION	219

https://truckmanualshub.com/

Item	Page
7. HANDLING MACHINE IN COLD ENVIRONMENT	220
7.1 PREPARING FOR LOW TEMPERATURE	220
8. LONG-TERM STORAGE	222
8.1 BEFORE STORING MACHINE	222
8.2 DURING STORAGE	222
8.3 AFTER STORAGE	223
9. HANDLING BATTERY	224
9.1 CAUTIONS IN HANDLING BATTERY	224
9.2 REMOVING/INSTALLING BATTERY	225
9.3 CAUTIONS IN CHARGING BATTERY	226
9.4 STARTING ENGINE WITH BOOSTER CABLE	227
10. HANDLING REMOTE CONTROLLER BATTERY	229
10.1 REPLACEMENT TIMING OF BATTERY	229
10.2 REPLACEMENT METHOD OF BATTERY	229
10.3 CHARGING METHOD OF BATTERY	230
11. TROUBLESHOOTING	232
11.1 ELECTRICAL COMPONENTS	232
11.2 MACHINE BODY	233
11.3 ENGINE	234
11.4 ELECTRIC MOTOR	235
11.5 BEFORE REMOTE CONTROLLER FAILURE DISGNOSIS	237
11.6 REMOTE CONTROLLER	238
11.7 LIST OF ERROR CODES	239

https://truckmanualshub.com/

Item	Page
INSPECTION AND MAINTENANCE	245
1. PRECAUTIONS FOR MAINTENANCE	246
2. BASIC MAINTENANCE	248
3. LEGAL INSPECTION	251
4. PERIODIC REPLACEMENT OF IMPORTANT COMPONENTS	252
5. CONSUMABLES	253
6. LUBRICATING OIL	254
6.1 USE OF LUBRICATING OIL ACCORDING TO TEMPERATURES	254
7. ACCESSORY TOOLS AND STANDARD TIGHTENING TORQUE	255
7.1 LIST OF STANDARD TIGHTENING TORQUE	255
7.2 LIST OF HOSE TIGHTENING TORQUE	256
8. INSPECTION AND MAINTENANCE LIST	257
9. MAINTENANCE PROCEDURES	260
9.1 PRE-OPERATION INSPECTION	260
9.1.1 INSPECTION BEFORE STARTING ENGINE (PATROL)	260
9.1.2 INSPECTION BEFORE STARTING ENGINE	263
9.1.3 INSPECTION BEFORE STARTING ENGINE (RADIO CONTROL)	275
9.1.4 INSPECTION AFTER STARTING ENGINE	278
9.1.5 INSPECTION OF ENGINE START AND STOP OPERATION (RADIO CONTROL)	285
9.2 IRREGULAR MAINTENANCE	289
9.3 INITIAL 10 HOUR MAINTENANCE	300
9.4 INITIAL 50 HOUR MAINTENANCE	300
9.5 INITIAL 250 HOURS MAINTENANCE	300
9.6 EVERY 50 HOURS MAINTENANCE	301
9.7 EVERY 100 HOURS MAINTENANCE	305
9.8 EVERY 250 HOURS MAINTENANCE	306
9.9 EVERY 500 HOURS MAINTENANCE	310
9.10 EVERY 1000 HOURS MAINTENANCE	318
9.11 EVERY 1500 HOURS MAINTENANCE	326
9.12 EVERY 2000 HOURS MAINTENANCE	326
9.13 EVERY 3000 HOURS MAINTENANCE	327
SPECIFICATIONS	329
1. PRINCIPAL SPECIFICATIONS LIST	330
2. SPECIFICATION DIMENSIONAL DRAWING	333
3. DIMENSIONAL DRAWING OF OUTRIGGER WIDTH	334
4. RATED TOTAL LOAD CHART	335
4.1 6 FALL HOOK	335
4.2 4 FALL HOOK	338
4.3 2 FALL HOOK	341
4.4 SINGLE FALL HOOK	344
5. WORKING RADIUS/LIFTING HEIGHT	347
6. WORKING RADIUS AND LIFTING HEIGHT (DURING PICK & CARRY)	348

https://truckmanualshub.com/

Item	Page
FLY JIB	349
1. CAUTIONS IN USING FLY JIB	350
2. MOUNT POSITION OF FLY JIB SAFETY LABELS	351
3. NAME OF EACH SECTION OF FLY JIB	355
4. MOUNTING AND STORING FLY JIB	356
4.1 MOUNTING FLY JIB	357
4.2 STOWING FLY JIB	365
5. HANDLING MONITOR AND MOMENT LIMITER	373
5.1 NAME OF MONITOR DISPLAY	373
5.1.1 MONITOR DISPLAY IN FLY JIB MODE	373
5.1.2 MONITOR DISPLAY IN FLY JIB STOWAGE MODE	376
5.2 MOMENT LIMITER FUNCTIONS	377
5.3 RECOVERY OPERATION FROM AUTOMATIC STOP	377
6. OPERATION	378
6.1 FLY JIB DERRICKING OPERATION	378
6.2 FLY JIB RETRACT/EXTEND OPERATION	378
7. TROUBLESHOOTING	379
7.1 LIST OF ERROR CODE	379
7.2 WHEN THESE PHENOMENA HAPPEN	380
8. INSPECTION AND MAINTENANCE	381
8.1 PRE-OPERATION INSPECTION	381
8.2 PERIODIC REPLACEMENT OF CRITICAL PARTS	383
8.3 CONSUMABLES	383
8.4 MAINTENANCE EVERY 50 HOURS	384
9. SPECIFICATION	385
9.1 SPECIFICATION TABLE	385
9.2 SPECIFICATION DIMENSIONAL DRAWING	385
9.3 RATED TOTAL LOAD CHART	386
9.4 WORKING RADIUS/LIFTING HEIGHT	387

https://truckmanualshub.com/

Item	Page
SEARCHER HOOK	389
1. CAUTIONS IN USING SEARCHER HOOK	390
2. SEARCHER HOOK SAFETY LABEL LOCATIONS	391
3. NAMES OF SEARCHER HOOK PARTS	394
4. MOUNTING AND STOWING SEARCHER HOOK	395
4.1 MOUNTING SEARCHER HOOK	396
4.2 STOWING SEARCHER HOOK	399
4.3 REMOVING SEARCHER HOOK (CHANGING TO STANDARD SPECIFICATION)	401
4.3.1 REMOVING SEARCHER HOOK BOOM	401
4.3.2 REMOVING BRACKET	402
4.4 MOUNTING SEARCHER HOOK (CHANGING TO SEARCHER HOOK SPECIFICATION)	403
4.4.1 MOUNTING SEARCHER HOOK BOOM	403
4.4.2 ATTACHING BRACKET	404
5. HANDLING MONITOR AND MOMENT LIMITER	405
5.1 NAME OF MONITOR DISPLAY	405
5.1.1 MONITOR DISPLAY IN SEARCHER HOOK MODE	405
5.1.2 CHANGING SEARCHER HOOK MODE	407
5.2 MOMENT LIMITER FUNCTIONS	408
5.3 RECOVERY OPERATION FROM AUTOMATIC STOP	408
6. OPERATION	409
6.1 CHANGING SEARCHER HOOK ANGLE	409
7. TROUBLESHOOTING	410
8. INSPECTION AND MAINTENANCE	411
8.1 PRE-OPERATION INSPECTION	411
9. SPECIFICATION	412
9.1 SPECIFICATION TABLE	412
9.2 SPECIFICATION DIMENSIONAL DRAWING	412
9.3 RATED TOTAL LOAD CHART	413
9.4 WORKING RADIUS/LIFTING HEIGHT	414

https://truckmanualshub.com/

INTRODUCTION

1. INTRODUCTION	2
2. FOR SAFE USE OF THE MACHINE	3
3. MACHINE OVERVIEW	4
4. QUALIFICATION FOR OPERATION	6
5. TERMINOLOGY	7
6. OUTLINE OF REMOTE CONTROLLER	16
7. DPF OVERVIEW	18

https://truckmanualshub.com/

1. INTRODUCTION

Thank you for purchasing Maeda Crawler Crane MC815C.
This manual is a guidebook for safe and effective use of this machine.
This manual describes the procedures and precautions to follow for proper operation and maintenance of the machine.
Many accidents are caused due to failure to observe safety precautions for operation, inspection, and maintenance.
Be sure to read this manual and understand the procedures for machine operation, inspection, and maintenance thoroughly before using this machine.
Failure to observe the basic precautions described in this manual may lead to serious accidents.

⚠ WARNING

Improper operation of this machine can lead to serious injuries or death.
Operators and maintenance personnel must always read this manual prior to operation or maintenance of this machine.
Keep this manual in a designated place so that all personnel that work on this machine will read it for reference periodically.

- **Avoid operating this machine before understanding this manual thoroughly.**
- **Keep this manual at hand so that you can read it when necessary.**
- **If you lose or damage this manual, contact Maeda or our sales service agency immediately to order a new one.**
- **This manual should always accompany this machine upon transfer of the machine to the next owner.**
- **This manual is based on the data that was available at the time of the creation of the manual.**
  The information of this manual, including maintenance specifications, tightening torque, pressure, measuring method, adjustment value, and illustrations, are subject to change without prior notice due to continuous machine improvement.
  These changes may affect the machine maintenance procedure. Always obtain the latest information from Maeda or our sales service agency before performing maintenance of this machine.

For safety instructions, see “2. FOR SAFE USE OF THE MACHINE” on page 3 and “SAFETY” on page 21.

https://truckmanualshub.com/

2. FOR SAFE USE OF THE MACHINE

This manual classifies the risks into the following three categories for easy understanding of the safety information.

⚠ DANGER

This denotes that there is an imminent hazard which will cause serious injury or death.
It also provides information on how to avoid such hazard.

⚠ WARNING

This denotes that there is a hazard which can cause serious injury or death.
It also provides information on how to avoid such hazard.

⚠ CAUTION

This denotes that there is a potential hazard which may cause minor or moderate injury or serious damage to the machine.
It also provides information on how to avoid such hazard.

This manual also uses the following indications to provide other precautions for handling the machine and helpful information.

CAUTION

This denotes that failure to properly handle the machine may damage it or shorten its life.

NOTES

This denotes helpful information.

The operations, inspections, maintenance and safety precautions for this machine that are outlined in this manual are relevant to specified tasks.
It is impossible to anticipate all situations where the machine is used.
Thus, the precautions given in this manual and on this machine do not necessarily cover every safety issue.
When performing the machine operation, inspection or maintenance in a situation that is not covered by this manual, be sure to take necessary measures and actions for safety on your own.
Even in the above case, never attempt work or operations that this manual prohibits you to do.

3. MACHINE OVERVIEW

3.1 SPECIFIED OPERATIONS

This machine is to be used for the following operations:
• Crane operation

This machine is a mobile crane mounted on a crawler-type carrier and equipped with a boom-type crane.
This self-propelled crane is capable of moving (travelling) in the worksite and lifting an object weighing up to the rated total load.
This crane is also equipped with a remote control system.

3.2 MACHINE STRUCTURE

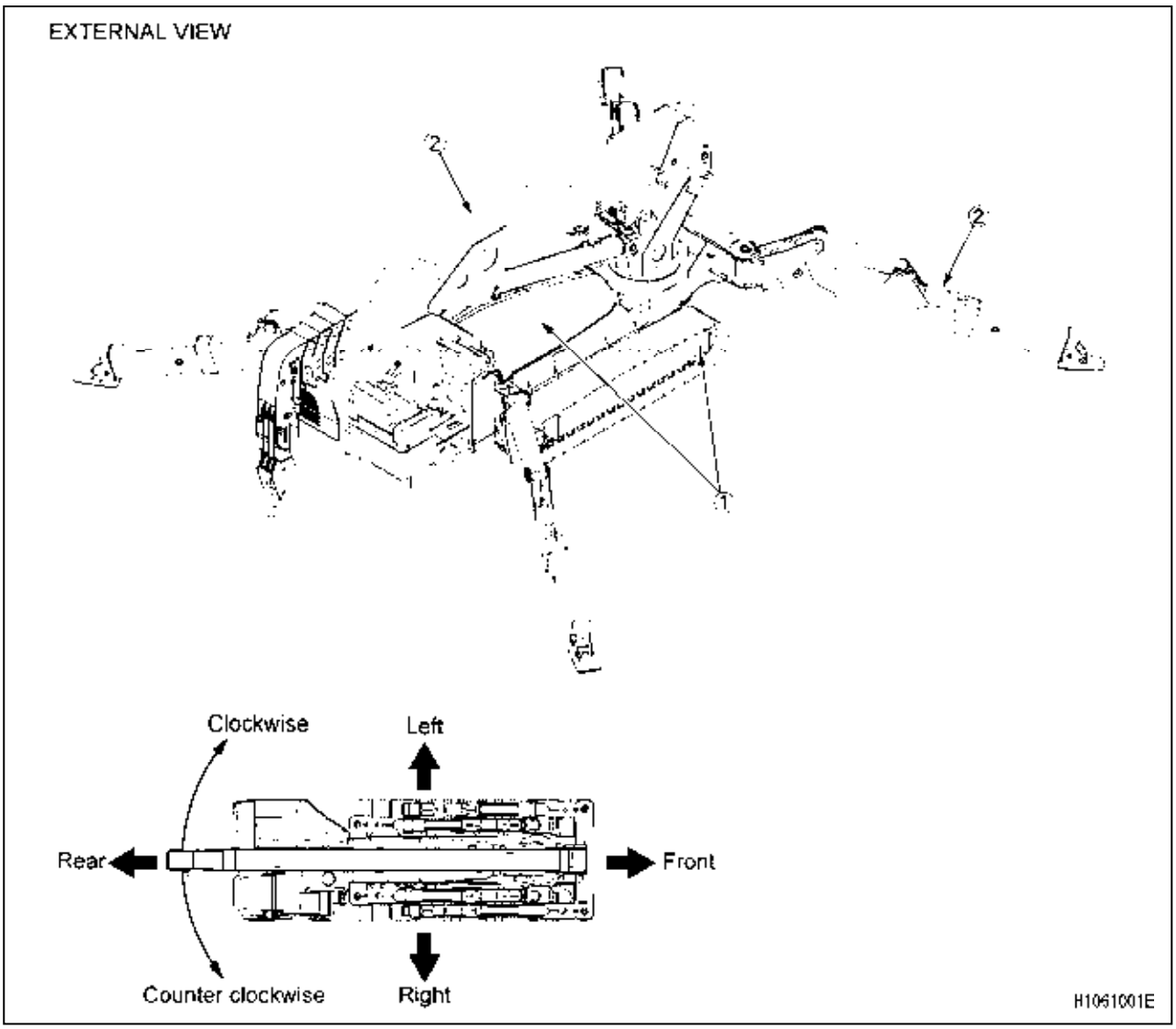

(1) Carrier In this manual, the front, rear, right and left of the machine are determined as viewed from the driver's seat in the traveling direction (forward) of the machine.

(2) Crane The boom slewing directions (clockwise [right] and counterclockwise [left]) are determined as viewed from above the machine.

This machine is composed of the following units and systems:

[1] CARRIER

The carrier consists of the travelling gear, engine, travelling operation unit, and crane operation unit.

[2] CRANE

The crane consists of the telescopic boom, boom derricking system, slewing system, hook block, winch system, and outrigger system.

[3] SAFETY DEVICE

This machine is equipped with the following safety devices: Over-hoist detector/automatic stop system, excessive unwind detector, load indicator, hydraulic safety valve, hydraulic automatic locking device, slinging rope detachment protector, alarm buzzer, leveling instrument, crane tip-over alarm (issued if the machine tilts more than 3 degrees while being operated, or more than 15 degrees while traveling), lock lever, travel/outrigger/crane selector switch (to prevent crane from activated while traveling), outrigger safety device (outrigger interlock, crane interlock), overload preventive device (with working envelope specified) and working status lamp.

3.3 MACHINE FUNCTIONS

[1] CARRIER

- This machine is designed to have a compact overall width when the crane and outriggers are stowed (traveling posture), which facilitates running in confined areas.
- Use of the two operation levers enables not only travel direction changes (forward, backward, rightward and leftward) but also pivot turns and spin turns.
- By using the radio controller, it is possible to remotely control the movement of travel.

[2] CRANE

- This crane is equipped with automatic slide outriggers which enable the operator to extend and set outriggers while seated on the driver's seat.
- Through the combination use of the telescopic boom, derricking and slewing systems besides the winch system, the crane can raise and lower the hook block to move the lifted object to the desired position within the rated total load and the specified working envelope.
- The outrigger setup and the crane operations can also be performed with the remote control system.

https://truckmanualshub.com/

4. QUALIFICATION FOR OPERATION

⚠ WARNING

- **A high incidence of occupational accidents in crane operation has been reported. Be aware that experienced crane drivers are no exception.**
- **Warnings and precautions defined in this manual shall be observed for safety assurance during operation of the machine.**

4.1 QUALIFICATION FOR CRANE OPERATION

Only personnel that have obtained the required license or training stipulated by laws and regulations applicable to the place of use are qualified to operate this machine.

Contact the relevant government office or our sales service agency for further information.

https://truckmanualshub.com/

5. TERMINOLOGY

5.1 TERMS AND DEFINITIONS

[1] RATED TOTAL LOAD

Is the maximum load that can be applied according to the boom length and angle. The load includes the mass (weight) of hoisting accessories (hooks) and slinging ropes.

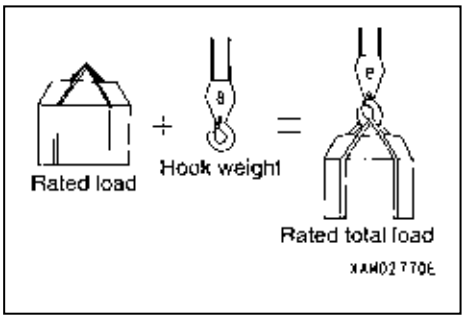

[2] RATED LOAD

Is a load derived by subtracting the mass (weight) of hoisting accessories (hooks) and slinging ropes from the rated total load.

[3] WORKING RADIUS

A horizontal distance between the axis of slewing and the hook center.

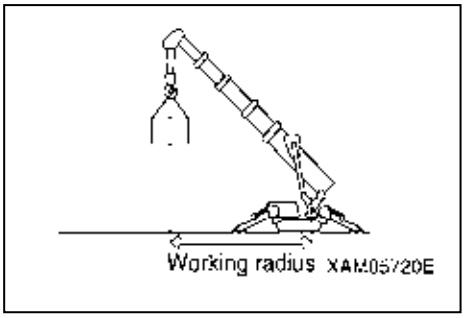

[4] BOOM LENGTH

A distance between the boom primary pin and the sheave pin at the tip of the boom.

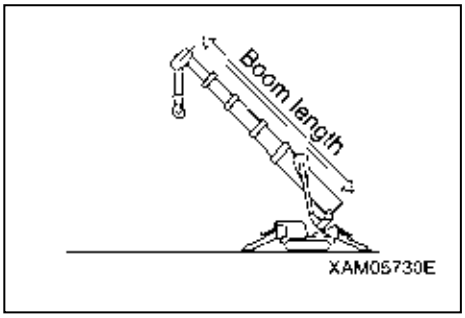

[5] DERRICKING ANGLE

An angle which the boom forms with the horizon.

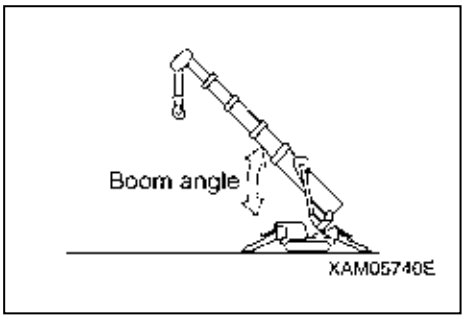

[6] LIFTING HEIGHT ABOVE GROUND

A vertical distance between the hook bottom end and the ground with the hook raised to the upper limit.

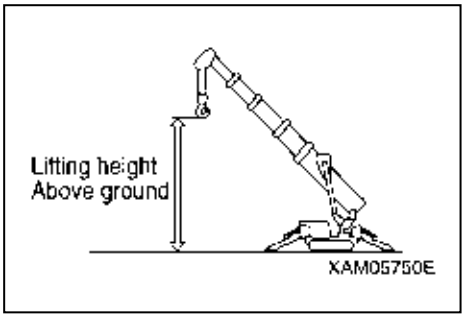

5.2 DIAGRAM OF WORKING RADIUS AND LIFTING HEIGHT

⚠ WARNING

- **The working radius/lifting height shows relationship between working radius, boom angle and lifting height above ground of this machine with no load hoisted, and deflection of the boom is not included.**
- **Status (4) shown in the "diagram of working radius and lifting height" is observed when half of the " ◣ mark" is exposed from the 3rd boom.**

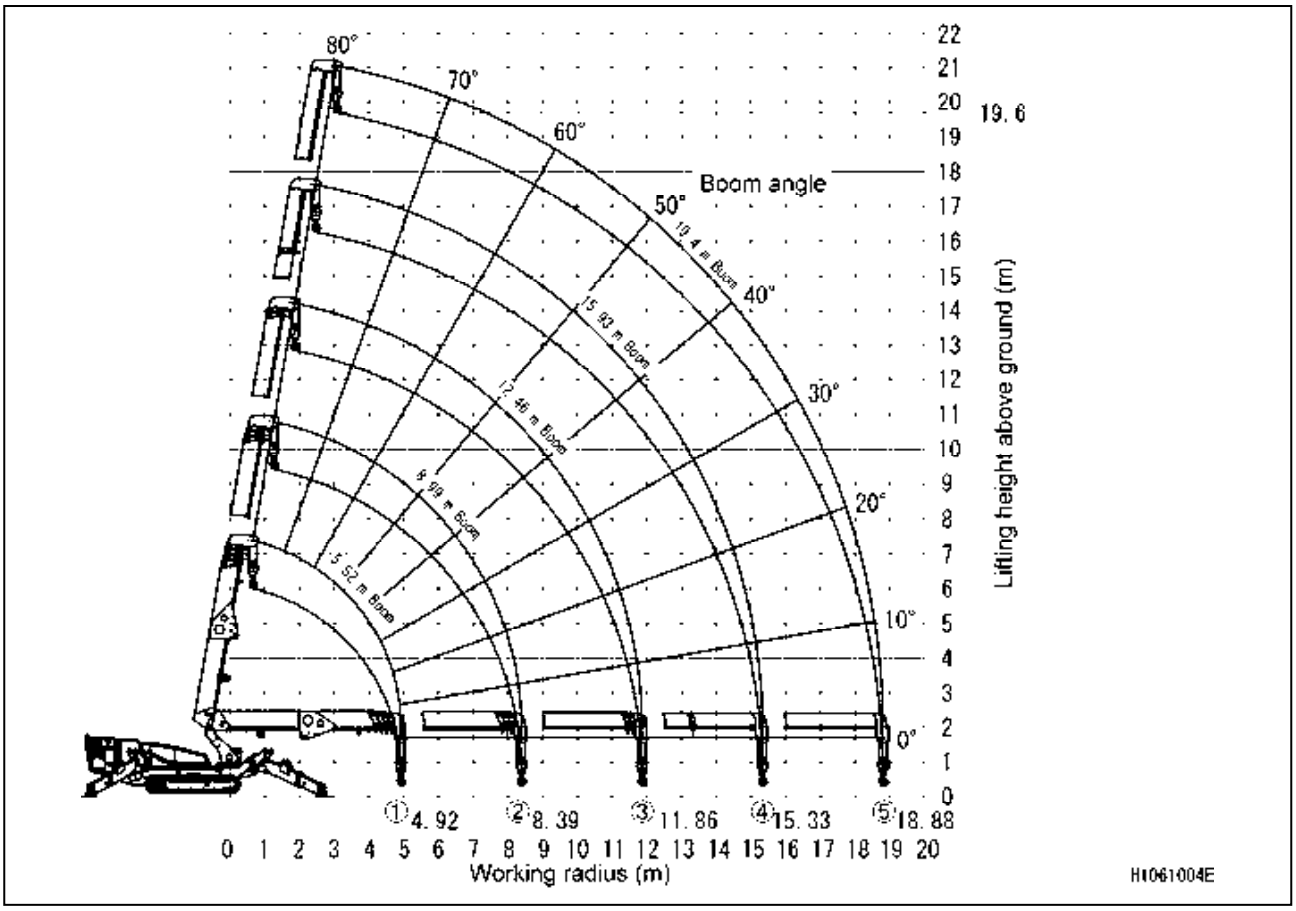

1. In the figure on the right, point A denotes a boom angle and point B denotes a lifting height above ground.
   The same working radius applies to point A and point B.

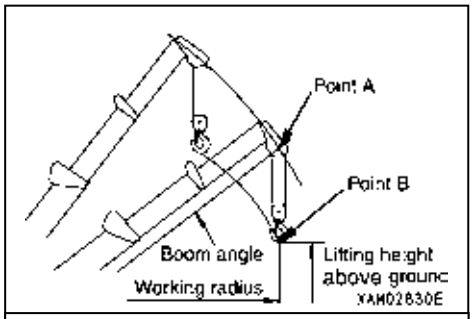

2. The "diagram of working radius and lifting height" shows the relationships between the working radius, boom angle and lifting height at no load, allowing for no deflection in the boom.
   A deflection occurs in the boom when an object is hoisted, which causes the working radius to widen slightly.

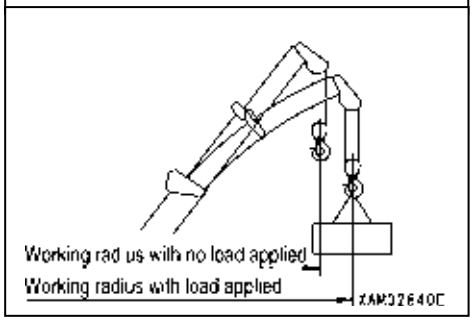

The rated total load decreases with increase in the working radius. Actual crane operation requires the planning of work, allowing for sufficient clearance more than that provided in the diagram.

https://truckmanualshub.com/

5.3 RATED TOTAL LOAD CHART

⚠ CAUTION

- **Rated total load chart is based on that the crane is placed leveled and on firm ground. Depending on the outrigger setting or bad ground conditions the machine may tip over. Be very careful during the work.**
- **The rated total load in the chart is based on actual working radius with deflection which occurs in the boom under load.**
- **If boom (3) is extended to some extent, work should be performed in accordance with the performance given in the “Booms (1) + (2) + (3)” column.**
- **If boom (4) is extended to some extent, work should be performed in accordance with the performance given in the “Booms (1) + (2) + (3) + (4)” column.**
  If more than half of the “ ◣ mark” is exposed from boom (3), work should be performed in accordance with the performance given in “Booms (1) + (2) + (3) + (4) + (5)” column.
- **If working radius exceeds the value of Working Radius column in the chart by any extent, work should be performed within the rated total load in the next column of Working Radius.**
- **The rated total load includes the mass of a hoisting attachment (weight of hook: 90 kg).**
- **Unless the outriggers are extended to maximum, work should always be performed in accordance with the values in “Rated total load chart for outrigger extended to other than maximum”.**

Crane work with outrigger extended to maximum

With outrigger extended to maximum

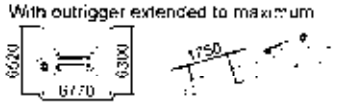

Boom 1												
Working radius (m)		2.4	2.5	3.0	3.5	4.0	4.5	4.92				
Rated total load (kg)		8090	7690	6390	5490	4790	4190	3790				
		8090	7690	6390	5490	4790	4190	3790				
Boom 1+2												
Working radius (m)		3.0	4.0	5.0	6.0	7.0	8.0	8.39				
Rated total load (kg)		6390	4790	3790	3190	2690	2290	2090				
		6390	4790	3790	3190	2690	2290	2090				
Boom 1+2+3												
Working radius (m)		4.0	5.0	6.0	7.0	8.0	9.0	10.0	11.0	11.86		
Rated total load (kg)		4690	3690	3090	2590	2090	1690	1290	1040	890		
		4690	3690	3090	2590	2190	1890	1490	1190	1040		
Boom 1+2+3+4												
Working radius (m)		5.5	6.0	7.0	8.0	9.0	10.0	11.0	12.0	13.0	14.0	15.0	15.33
Rated total load (kg)		3390	2790	2390	2090	1690	1290	1040	890	840	740	640	590
		3390	2790	2390	2090	1890	1490	1190	1040	990	840	740	690
Boom 1+2+3+4+5													
Working radius (m)		6.0	7.0	8.0	9.0	10.0	11.0	12.0	13.0	14.0	15.0	16.0	17.0	18.0	18.90
Rated total load (kg)		2390	1990	1690	1490	1290	1040	890	840	740	640	590	490	440	340
		2390	1990	1690	1490	1290	1090	1040	890	840	740	690	590	540	440

Crane work with outrigger extended to medium

With outrigger extended to medium

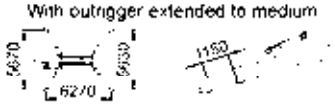

Boom 1												
Working radius (m)		2.4	2.5	3.0	3.5	4.0	4.5	4.92				
Rated total load (kg)				6290	5290	4590	3990	3690				
				6290	5290	4590	3990	3690				
Boom 1+2												
Working radius (m)		3.0	4.0	5.0	6.0	7.0	8.0	8.39				
Rated total load (kg)		5290	4590	3590	2990	2090	1690	1490				
		5290	4590	3590	2990	2190	1790	1590				
Boom 1+2+3												
Working radius (m)		4.0	5.0	6.0	7.0	8.0	9.0	10.0	11.0	11.86		
Rated total load (kg)		4590	3590	2990	2090	1690	1390	990	790	590		
		4590	3590	2990	2090	1790	1490	1090	890	690		
Boom 1+2+3+4												
Working radius (m)		5.5	6.0	7.0	8.0	9.0	10.0	11.0	12.0	13.0	14.0	15.0	15.33
Rated total load (kg)		3290	2690	2090	1690	1390	990	790	590	490	440	390	340
		3290	2690	2090	1690	1490	1090	890	690	590	540	490	440
Boom 1+2+3+4+5													
Working radius (m)		6.0	7.0	8.0	9.0	10.0	11.0	12.0	13.0	14.0	15.0	16.0	17.0	18.0	18.90
Rated total load (kg)		2290	1890	1590	1390	1090	890	790	590	540	490	440	390	340	290
		2290	1890	1590	1390	1090	890	690	640	590	540	490	390	340	290

Crane work with outrigger extended to minimum

With outrigger extended to minimum

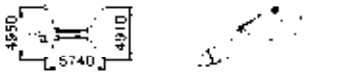

Boom 1												
Working radius (m)		2.4	2.5	3.0	3.5	4.0	4.5	4.92				
Rated total load (kg)				6190	5290	4590	3990	3090				
				6190	5290	4590	3990	3090				
Boom 1+2												
Working radius (m)		3.0	4.0	5.0	6.0	7.0	8.0	8.39				
Rated total load (kg)		6190	4590	3090	2190	1490	1190	1090				
		6190	4590	3090	2290	1590	1290	1190				
Boom 1+2+3												
Working radius (m)		4.0	5.0	6.0	7.0	8.0	9.0	10.0	11.0	11.86		
Rated total load (kg)		4590	3090	2190	1490	1190	990	690	490	390		
		4590	3090	2190	1590	1290	1090	790	590	490		
Boom 1+2+3+4												
Working radius (m)		5.5	6.0	7.0	8.0	9.0	10.0	11.0	12.0	13.0	14.0	15.0	15.33
Rated total load (kg)		3090	2190	1490	1190	990	690	490	390	340	290	240	240
		3090	2190	1490	1290	990	790	590	490	440	390	340	290
Boom 1+2+3+4+5													
Working radius (m)		6.0	7.0	8.0	9.0	10.0	11.0	12.0	13.0	14.0	15.0	16.0	17.0	18.0	18.90
Rated total load (kg)		2190	1490	1190	990	690	540	490	440	390	340	290	240	190	140
		2190	1490	1190	1090	790	640	590	540	490	440	390	290	240	190

H10610IIE

The rated total load chart provides the maximum loads that the crane is capable of hoisting depending on boom length, by working radius.

[1] BOOM LENGTH

“Boom (1)”, “Booms (1) + (2)”, “Booms (1) + (2) + (3)”, “Booms (1) + (2) + (3) + (4)” and “Booms (1) + (2) + (3) + (4) + (5)” shown on the top horizontal column of the Rated Total Load Chart represent the conditions shown in the following figures.

1. Boom (1): All the booms retracted.

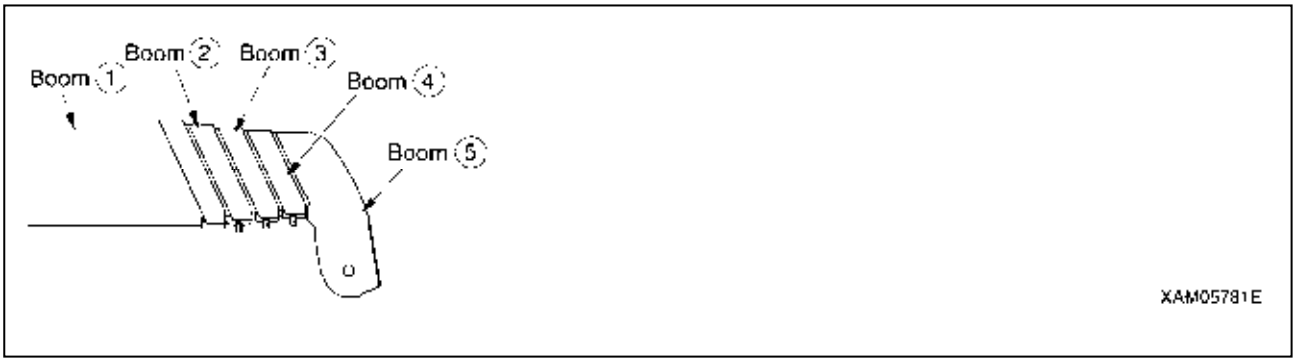

2. Booms (1) + (2): All of booms (3), (4) and (5) are retracted, with boom (2) fully extended.
   If boom (2) is extended to some extent, work should be performed in accordance with the performance of this column.

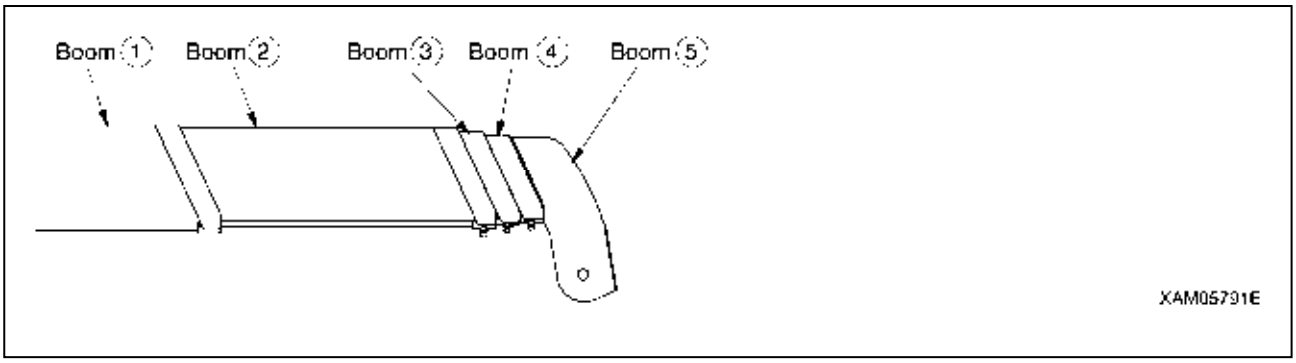

3. Booms (1) + (2) + (3): Both of booms (4) and (5) are retracted, with booms (2) and (3) fully extended.
   If boom (3) is extended to some extent even only slightly, work should be performed in accordance with the performance of this column.

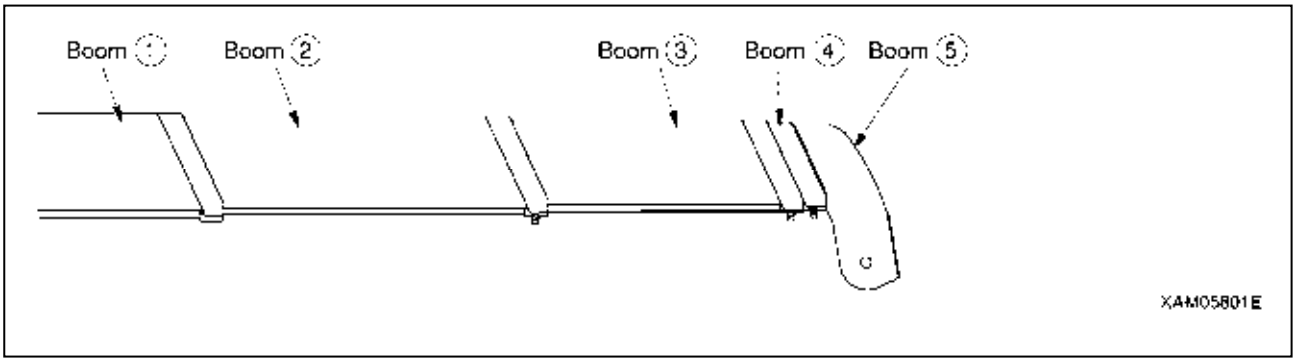

4. Booms (1) + (2) + (3) + (4): With booms (2) and (3) fully extended, booms (4) and (5) are in a state of intermediate extension, where half of the “ mark” is exposed from boom (3).
   If booms (4) and (5) are extended to some extent even only slightly, work should be performed in accordance with the performance of this column.

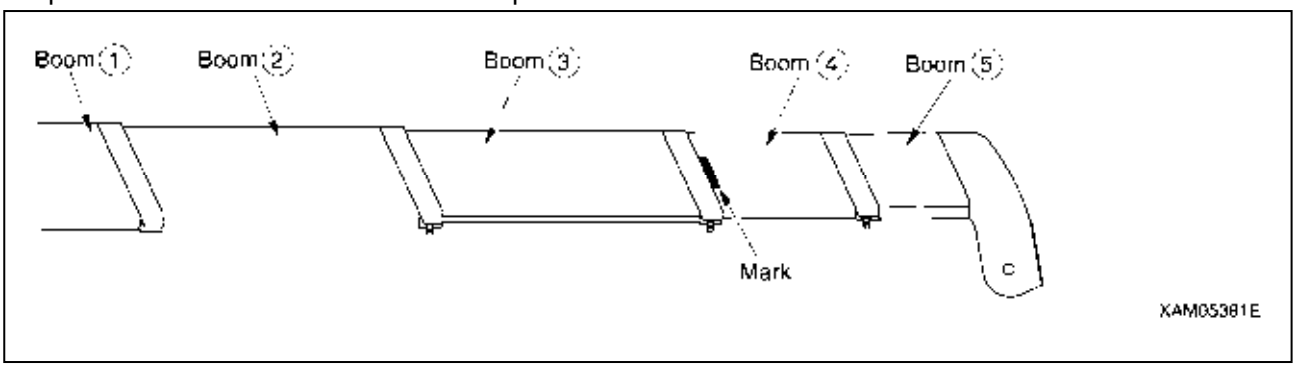

5. Booms (1) + (2) + (3) + (4) + (5): All the main booms extended fully.
   If more than half of the “ mark” of boom (4) is exposed from boom (3), work should be performed in accordance with the performance of this column.

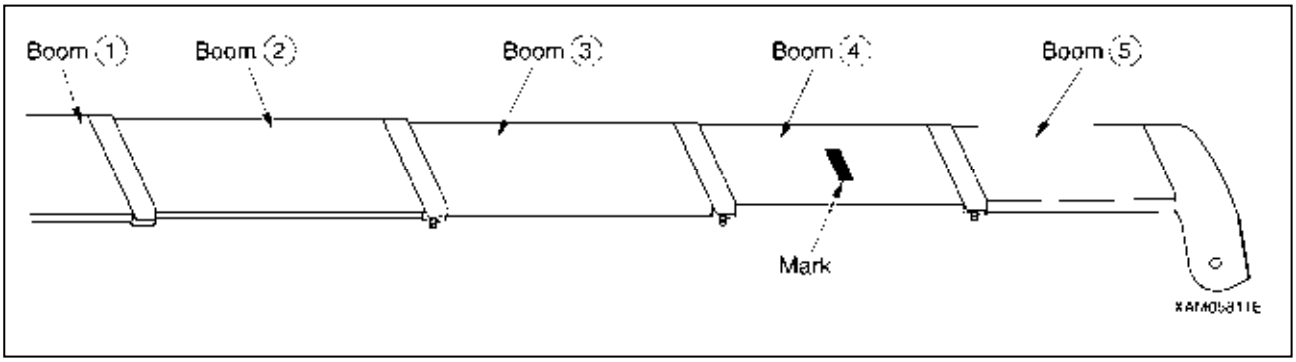

https://truckmanualshub.com/

[2] OUTRIGGER MAXIMUM EXTENSION

⚠ WARNING

- **Always place all outriggers securely before operating the crane.**
  Unless all of the outrigger monitor lamps are lit except for the boom stowing lamp, interlock function works and, as a result, no crane operation can be performed.
- **Outriggers should be set to the ground while watching leveling instrument so that the machine is set horizontally.**
  Tilting the machine more than 3° activates alarm buzzer. To stop the buzzer, place the machine horizontally.
- **There are 3 outrigger modes N, M and P. For M and P mode see" Operation 1.2.1 [4] MONITOR DISPLAY (CRANE MODE) [10] Hanging mode".**
  N Mode: Unless outriggers are extended to maximum, work should be performed in accordance with values shown in the "Use with outriggers extended to medium" column or "Use with outriggers extended to minimum" column of the Rated Total Load Chart.
  Working under improper values may cause the machine to tip over. Be very careful.
- **Even with all the outriggers extended to maximum, the outrigger width is decreased on uneven terrain even if the dimension "a" in the figure on the right is 50 mm. In such a case, work should be performed in accordance with values shown in the "Use with outriggers extended to medium" column of the Rated Total Load Chart.**
- **Slewing 360° with a load lifted may expose the machine to an unstable position. Even if the total combined weight is within the rated total load, reduce the working radius and traveling speed as much as possible, and use sufficient care.**

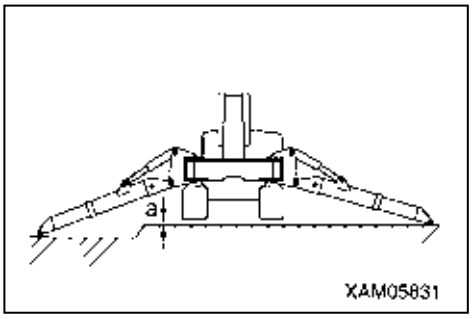

"Outriggers extended to maximum" in Rated Total Load Chart represents the condition in the figure on the right.

Check that all of the outrigger monitor lamps are lit except for the boom stowing lamp.

For N mode: Retraction of inner box extension to some extent represents the condition other than the "Outriggers Extended to Maximum".

For M and P mode see" Operation 1.2.1 [4] MONITOR DISPLAY (CRANE MODE) [10] Hanging mode".

See "Operation 2.14 Outrigger Setup Operation" to set the outriggers.

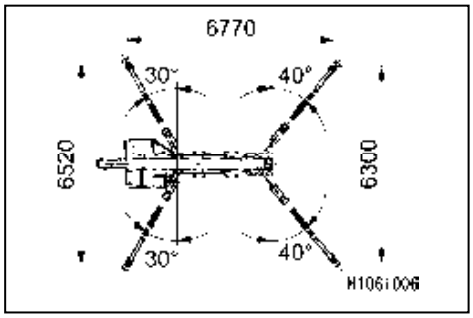

NOTES

"With outriggers extended to maximum" means that,

(1) The outrigger set up angle is set to the position pin position (40° front and 30° rear).
(2) Inner boxes of all the outriggers are pulled out fully.
(3) All the outriggers are placed on level ground.
(4) Dimension **a** (distance between bottom of the outrigger and bottom of the track) in the figure on the right is approximately 50 mm.

The above represents "Outriggers extended to maximum".

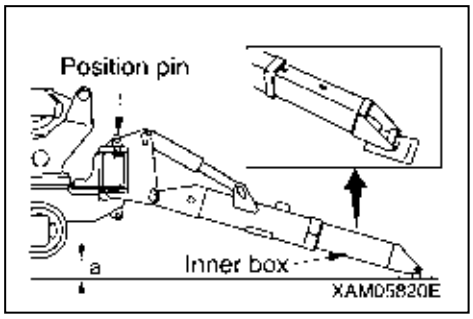

https://truckmanualshub.com/

[3] OUTRIGGER MEDIUM EXTENSION

⚠ WARNING

- **Always place all outriggers securely before operating the crane.**
  If not all of the outrigger monitor lamps are illuminates (except for the boom stowing lamp), The interlock system will be activated and, as a result, no crane operation can be performed.
- **Outriggers should be set to the ground while watching leveling instrument so that the machine is set horizontally.**
  Tilting the machine more than 3° activates alarm buzzer. To stop the buzzer, place the machine horizontally.
- **Unless outriggers are extended to medium, work should be performed in accordance with values shown in the "Use with outriggers extended to medium" column or "Use with outriggers extended to minimum" column of the Rated Total Load Chart.**
  Working under improper values may cause the machine to tip over. Be very careful.
- **Even with all the outriggers extended to medium, the outrigger width is decreased on uneven terrain etc. even if the dimension "a" in the figure on the right is 50 mm. In such a case, work should be performed in accordance with values shown in the "Use with outriggers extended to minimum" column of the Rated Total Load Chart.**
- **Slewing 360° with a load lifted may expose the machine to an unstable position. Even if the total combined weight is within the rated total load, reduce the working radius and traveling speed as much as possible, and use sufficient care.**

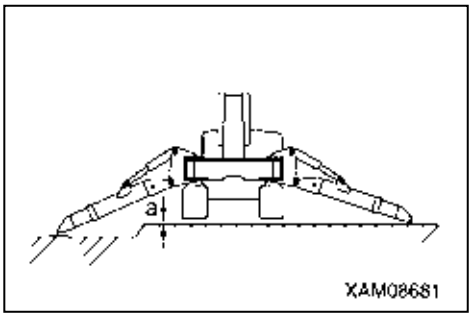

"Outriggers extended to medium" in Rated Total Load Chart represents the condition in the figure on the right.

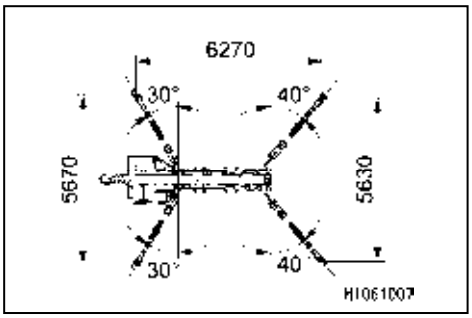

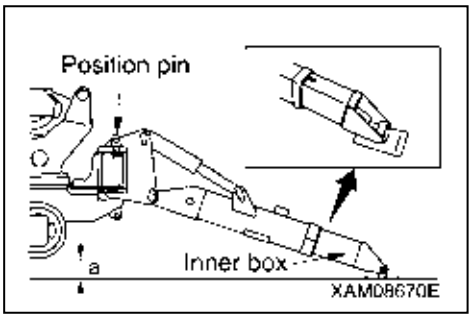

NOTES

"Outriggers extended to medium" means that,

(1) The outrigger set up angle is set to the position pin position (40° front and 30° rear).
(2) Inner boxes on one of the outriggers are pulled out medium.
(3) All the outriggers are placed on level ground.
(4) Dimension **a** (distance between bottom of the outrigger and bottom of the track) in the figure on the right is approximately 50 mm.

The above represents "Outriggers extended to medium".

NOTES

For N mode: Even if a single outrigger is extended to "medium" from the position where all the outriggers are placed at the maximum extended position, the condition is defined as "outriggers extended to medium".

For outrigger mode M and P see" Operation 1.2.1 [4] MONITOR DISPLAY (CRANE MODE) [10] Hanging mode".

https://truckmanualshub.com/

[4] OUTRIGGER MINIMUM EXTENSION

⚠ WARNING

- **When operating the crane, be sure to set all the outriggers securely. No crane work can be done unless all the lamps are lit up except the boom stowage lamp on the outrigger monitor due to the action of the interlock device.**
- **Outriggers should be grounded while watching leveling instrument so that the machine is set horizontally.**
  Tilting the machine more than 3° activates alarm buzzer. To stop the buzzer, place the machine horizontally.
- **Unless outriggers are extended to minimum, work should be performed in accordance with values shown in the "Use with outriggers extended to maximum" column or "Use with outriggers extended to medium" column of the Rated Total Load Chart. Working under improper values may cause the machine to tip over. Be very careful.**
- **When performing work with outriggers extended to minimum, be sure to place the outriggers on level ground in such a way that the distance between the outrigger bottom and the crawler bottom is 50 mm.**
- **The outrigger width is decreased on uneven terrain etc. even if the dimension "a" in the figure on the right is 50 mm. In this state of extension, do not operate the crane. Otherwise the machine may tip over causing serious personal injury.**
- **Slewing 360° with a load lifted may expose the machine to an unstable position. Even if the total combined weight is within the rated total load, reduce the working radius and traveling speed as much as possible, and use sufficient care.**

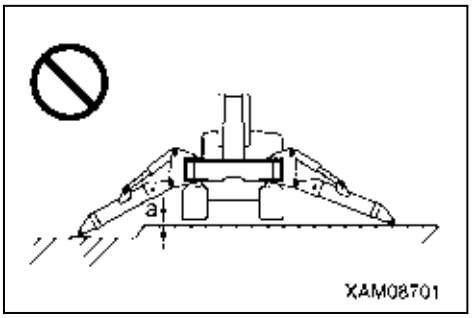

"Outriggers extended to minimum" in Rated Total Load Chart represents the condition in the figure on the right.

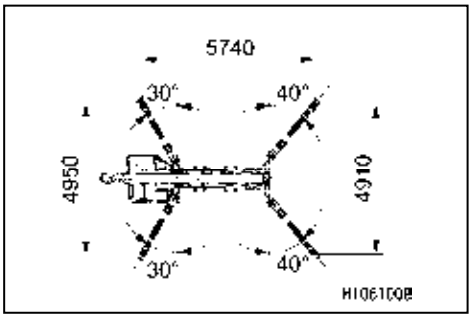

NOTES

"Outriggers extended to minimum" means that,

(1) The outrigger set up angle is set to the position pin position (40° front and 30° rear).
(2) Inner box of one of the outriggers are contracted to the minimum.
(3) All the outriggers are placed on level ground.
(4) Dimension **a** (distance between bottom of the outrigger and bottom of the track) in the figure on the right is approximately 50 mm.

The above represents "Outriggers extended to minimum".

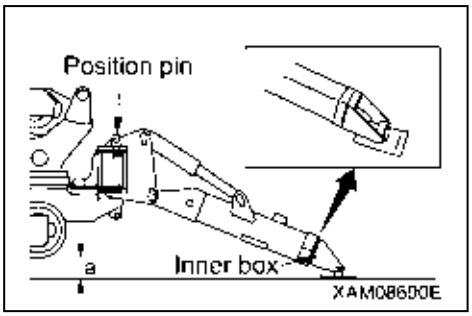

NOTES

For N mode: Even if a single outrigger is contracted to "minimum" from the position where all the outriggers are placed at maximum or medium extended position, the condition is defined as "outrigger extended to minimum". For outrigger mode M and P see" Operation 1.2.1 [4] MONITOR DISPLAY (CRANE MODE) [10] Hanging mode".

https://truckmanualshub.com/

5.4 HOW TO LOOK AT THE ANGLE INDICATOR

⚠ WARNING

- **When hanging a load, decide the length of the boom (number of boom sections) and boom angle, beforehand. Compare the rated total load to the weight of the baggage hung. Make sure that the total weight of the hoisting accessories, baggage and slinging tools do not exceed that rated total load.**

The angle indicator is attached to the left and right sides of the No.1 boom and is composed of a “indicator” and “pointer scale” as shown on the right.

The angle indicator should be used as follows:

- Read the angle shown by the indicator. This value is the “boom angle” at the time.

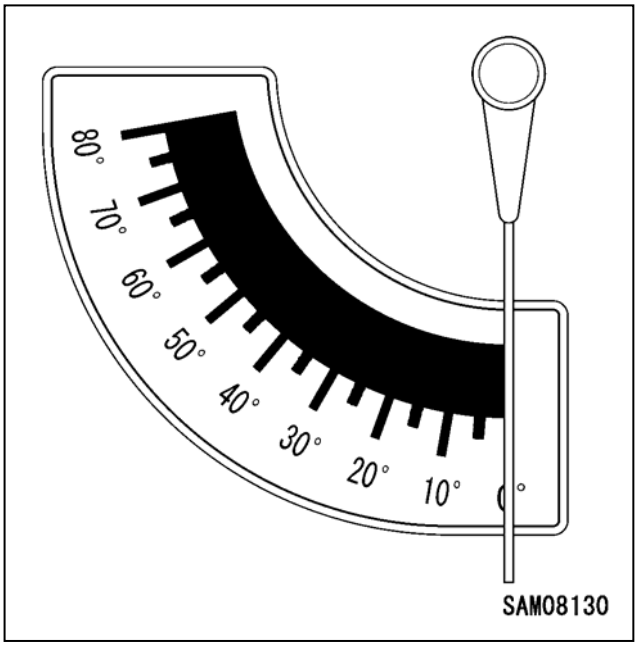

6. OUTLINE OF REMOTE CONTROLLER

6.1 FEATURE

This device is to be used for the following operation.

This Remote Controller includes both the Transmitter and Receiver which facilitate remote control of the Crane.

This is a wireless Remote Controller; the Crane can be operated at the most convenient place away from it within the radio wave range.

6.2 CONFIGURATION

6.2.1 CONFIGURATION OF REMOTE CONTROLLER

This device is composed of the following units and systems:

[1] TRANSMITTER

The transmitter is equipped with left operation lever (1), right operation lever (2) and emergency stop/remote controller OFF switch (10).

The Transmitter sends signals for crane operations to the Receiver mounted on the main body of the Machine so that remote operation of the Crane can be carried out.

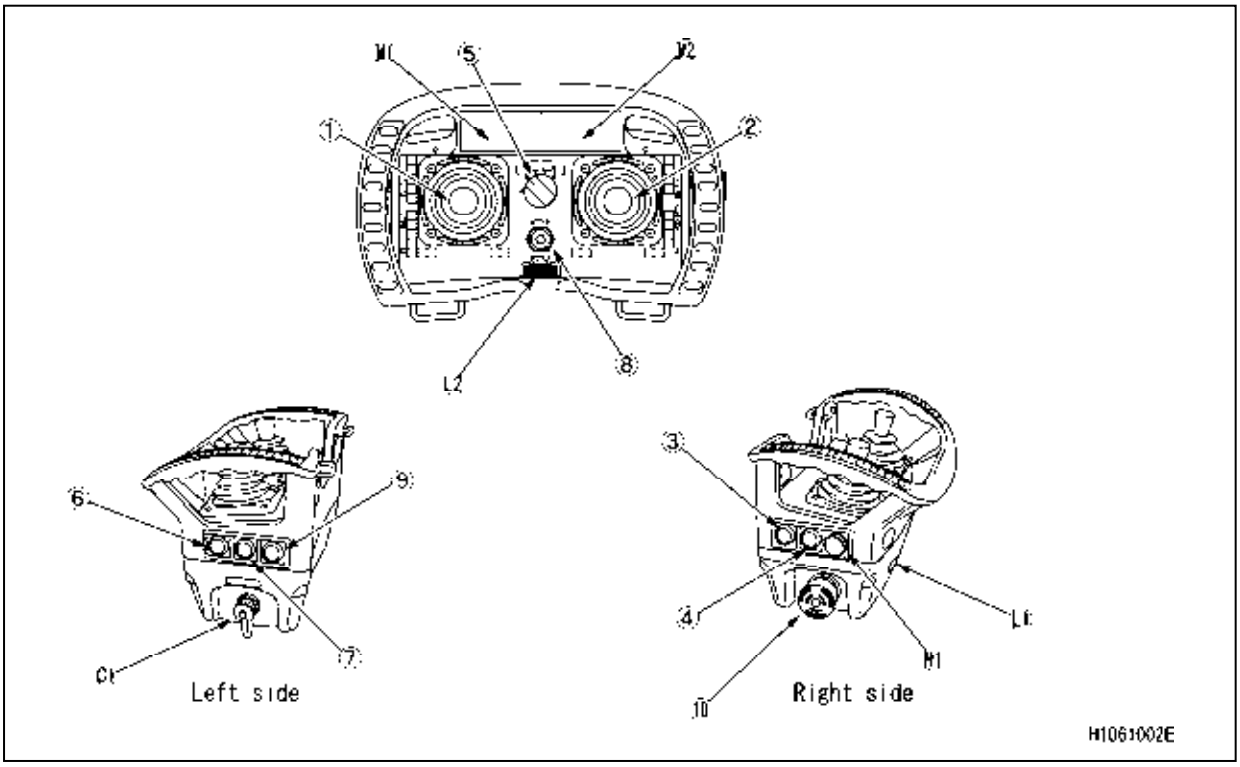

(1) Left operation lever
(2) Right operation lever
(3) Remote controller power ON/OFF switch
(4) Engine Start/Stop Switch
(5) Operation mode selector switch
(6) Speed/Outrigger selector switch
(7) Load carrying/Fly jib selector switch
(8) Acceleration adjustment switch
(9) Horn switch
(10) Emergency stop/Remote controller OFF switch
(C1) Cable connection port
(L1) LED light (Front)
(L2) LED light (Control panel)
(N1) Display operation switch
(M1) Left display
(M2) Right display

https://truckmanualshub.com/

[2] RECEIVER

The Receiver which is installed on the Crane is equipped with Control box (1), Monitor LED (2), Connector (3), Antenna (4), etc.

The Receiver receives operation signals from the Transmitter and controls the Crane.

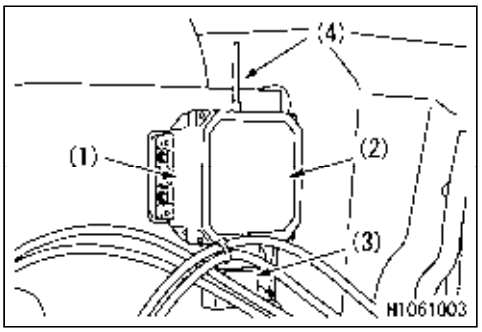

[3] ACCESSORIES OF REMOTE-CONTROL TRANSMITTER

Waist belt to be worn when using transmitter to prevent accidental dropping of the unit during operation.

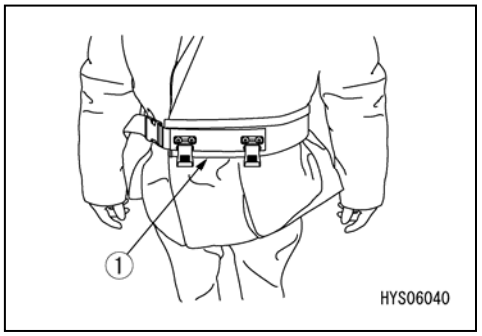

This is a charger to charge the battery for the trasmitter.

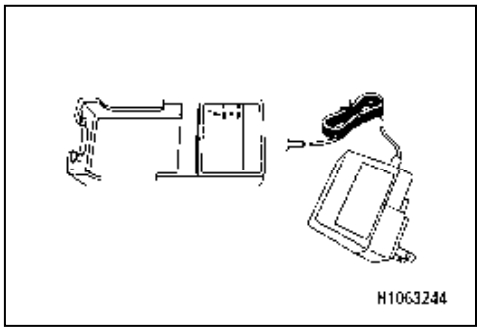

6.3 FUNCTIONS

6.3.1 FUNCTIONS OF REMOTE CONTROLLER

- The Acceleration dial and operation levers control the Crane operation speed continuously from stand-by, up to maximum speed.
- In addition to handling the crane by remote control transmitter, manual operation can be performed on the machine side, depending on the type of operation required. When the power of the remote-control system is turned on, manual operation cannot be performed.
- ID data necessary for the operation of the transmitter is built in this remote control system.
  If communications are not established when the power is turned ON or if they are interrupted (poor reception or beyond reaching distance) during operation, the Forced zero position" function is activated to return to the state in which no operation lever is pressed, to avoid miss-operation or erroneous activation.
- This remote control system detects an unused frequency automatically.

https://truckmanualshub.com/

7. DPF OVERVIEW

7.1 DPF FUNCTION

The DPF (Diesel Particulate Filter) is a device which removes PM (particulate matter) from the poisonous exhaust gas.

⚠ CAUTION

For the DPF to function correctly, be sure to use the specified fuel and engine oil.
- **Light oil with sulfur content of 15ppm or less (Ultra Low Sulfur) should be used.**
- **For the engine oil, use the one specified in "INSPECTION AND MAINTENANCE 6.1 USE OF LUBRICATING OIL ACCORDING TO TEMPERATURE".**

7.2 DPF REGENERATION

⚠ WARNING

Take care of the following during DPF regeneration.
- **Due to the burning/removal process, the temperature of the exhaust gas rises to about 600°C. Do not touch or come close to the DPF muffler, exhaust pipe or exhaust gas. There is the danger of being burnt.**
  Also, if there are flammable objects placed in the surroundings, there is the danger of a fire occurring.
- **Since there is the danger of carbon monoxide poisoning, do not carry out DPF regeneration in places with poor ventilation.**
  As the exhaust gas is being cleaned, the smell of the exhaust gas will differ from normal.

As PM builds up on the filter inside the DPF, the filter becomes clogged, reducing the engine performance.

For that reason, the regeneration process is necessary to burn/remove the PM by raising the exhaust temperature.

The regeneration process can be carried out automatically or manually.

[Reset Regeneration] (Automatic regeneration)

The exhaust temperature is raised and the PM is burnt/removed for filter regeneration after 50 hours of operation for the 1st time only. After that it is carried out every 100 hours of operation.

During regeneration, the DPF regeneration lamp is lit on the monitor.

The reset regeneration is implemented automatically; no special operation is necessary.

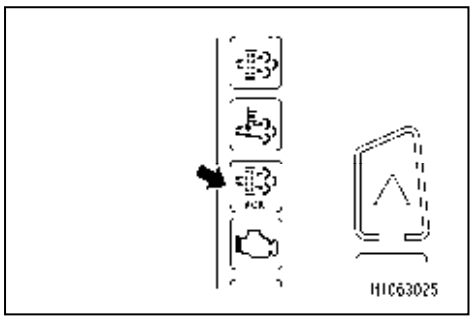

NOTES

Although the DPF regeneration lamp is lit during DPF reset regeneration, this is not a fault or malfunction so the machine may be used as normal.

https://truckmanualshub.com/

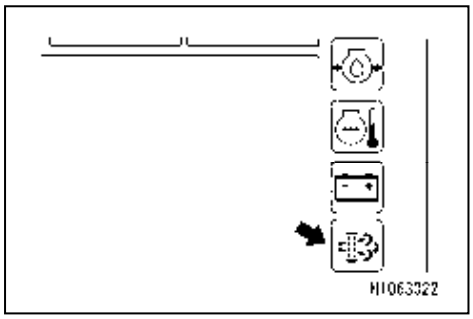

[Stationary Regeneration] (Manual regeneration)

Even if automatic regeneration is carried out, if the machine is idling with no load or operations with low load is repeated, the PM may not be regenerated.

In this case, the DPF regeneration request lamp on the monitor is lit.

If the DPF regeneration request lamp is lit, carry out manual stationary regeneration.

For the procedures for stationary regeneration, refer to “OPERATION 2.27 DPF STATIONARY REGENERATION METHOD” section.

https://truckmanualshub.com/

This Page Intentionally Left Blank.

https://truckmanualshub.com/

SAFETY

1. BASIC PRECAUTIONS	22
2. PRECAUTIONS ON HANDLING REMOTE CONTROL SYSTEM	27
3. PRECAUTIONS FOR USE OF ENGINE AND ELECTRIC MOTOR SPECIFICATIONS	31
4. OPERATION RELATED PRECAUTIONS	32
5. TRANSPORT PRECAUTIONS	51
6. BATTERY HANDLING PRECAUTIONS	53
7. MAINTENANCE PRECAUTIONS	55
8. SAFETY LABEL LOCATIONS	62

⚠ WARNING

All the safety precautions defined in this manual should always be read and observed.
Failure to follow the safety precautions can cause serious personal injury or death.

https://truckmanualshub.com/

1. BASIC PRECAUTIONS

OBSERVE THE MANUAL AND SAFETY LABELS

- Read well and understand this manual as well as the safety labels attached to various parts of this Machine. Attempt to drive/operate without understanding fully may result in wrong operation that may cause personal or equipment accidents.
- Fully understand the proper use and inspection/ maintenance procedures, and perform the work safely.
- Make sure this manual and the safety labels attached to various parts of this Machine are legible all the time.
  Whenever illegibility or loss occurs, order us or our sales service agency and put the safety label back to the original location.

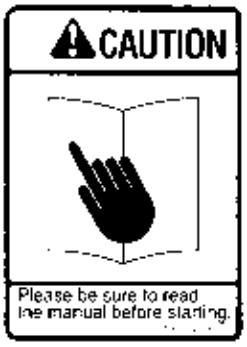

QUALIFICATION FOR OPERATION

- Operators of this machine must have the required qualifications.
  Be sure to acquire the qualifications before operating this machine.
  ★ See “INTRODUCTION 4. QUALIFICATION FOR OPERATION” for details.
- The operators are requested to receive education and training of the handling methods and other subjects at the office, and obtain sufficient operation skills before work.

WEAR PROTECTIVE EQUIPMENT AND CLOTHES SUITABLE FOR WORK

- Always put on a helmet, safety shoes and safety belt.
- Make sure to wear the necessary protective equipment suitable for the relevant working condition.
- Do not wear loose garments or accessories as these may get caught on an operation lever or any protrusions which could lead to unexpected movement of the Machine.

COMMIT TO SAFE OPERATION

- Follow the instructions and signs given by the manager and work supervisor, and observe safety first during work.
- Follow the crane work basics during work.
- Always make sure to carry out inspections before using this machine.
- Do not work under bad weather for instance strong wind, thunder or mist.
- Do not drive under any condition when you are overtired, under the influence of alcohol or after taking soporific drugs.
- Follow all of the workplace rules, safety regulations and operation method sequences during operations and inspection/maintenance.
- Pay attention to surrounding conditions and pedestrians all the time during operation.
  Whenever pedestrian approaches unwarily, abort the operation once, and take a measure such as issuing a warning.
- When operating, be mentally prepared for unexpected situation so that you can take measures immediately.
- Never attempt any use out of the capabilities and purposes described in this manual under any circumstances.
- Observe the designated rated total load and work range when operating.
- Never attempt inattentive driving, harsh driving or awkward operation under any circumstances.
- Pull out the key when leaving the operator's seat.

https://truckmanualshub.com/

USE OF MACHINE THAT WAS RENTED OR PREVIOUSLY USED BY SOMEONE ELSE

Check the following subjects in writing before using any Machine that was rented or previously used by someone else.
In addition, check the inspection record table for the maintenance conditions such as the periodic inspections.

(1) Crane capacity
(2) Crane maintenance conditions
(3) Behaviors and disadvantages unique to the crane
(4) Other subjects that require attention while operating
  (a Operating condition of brakes
  (b) Presence/absence and lighting condition check-up of lighting and rotating lamps
  (c) Operating condition of hook, winch, boom, outriggers and related

PROVIDE SAFETY DEVICES FOR SURE

- Check that all guards and covers are attached properly. Repair immediately if damaged.
- Understand how to use the safety devices well and use properly.
- Do not detach the safety devices under any circumstances. Keep control to achieve proper function all the time.
- Improper use of the safety devices may lead to serious accidents.
- Do not rely too much on the safety devices whilst operating.

FOLLOW INSTRUCTIONS AND SIGNS WHEN WORKING

- When operating the crane, appoint a work supervisor and mutual signs beforehand, and follow the work supervisor and signs during operation.
- When operating at a driver's blind spot, especially follow the instructions and signs of the work supervisor and operate with caution.
- When operating the crane, the clearance between the boom and the carrier and also the gaps between the movable parts of the derrick cylinder may catch body parts such as your arm or finger.
  The operator is requested to make sure no one is within the working radius of the crane before operating.

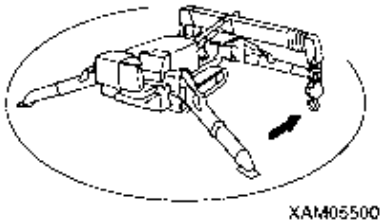

PREPARE FOR ABNORMALITY

- Make sure to carry out inspections and maintenances, and make an effort to prevent accidents before happening.
- Whenever you feel an abnormality in the Machine, abort the operation immediately, ensure safety and report to the manager.
- Assign in advance who takes which solution to prevent secondary accident.
- Never operate the Machine when fuel or hydraulic oil is leaking from the Machine. Report the manager about the abnormality, and repair the leaking point of the fuel/hydraulic oil completely before use.
  The fuel for this Machine is diesel fuel. Be especially careful for the presence of fuel leak.
- Before leaving the Machine, lower the hoisted load to the ground, stop the engine and pull out the starter switch key.

https://truckmanualshub.com/

TEMPORARY STORAGE WHEN ABNORMALITY IS FOUND WITHIN MACHINE

In case the Machine is found with an abnormality and is therefore stored temporarily waiting for service, apply following measures to notify all persons in the office that “the use is prohibited due to failure.”

- Put on warning tags on the operation lever and other applicable parts.
  Write clearly the information such as abnormality contents, name and contact of the storage manager, and the term of storage.
- Keep it immovable when parking by, for instance, putting the blocks on the crawler as pawls.
- Pull out the engine key and keep it with you.

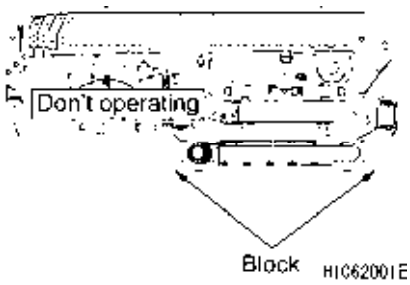

PROVISION OF FIRE EXTINGUISHER AND FIRST AID BOX

Always observe the following to prepare for injuries and fires.

- To prepare in case of fire, decide on a location and install a fire extinguisher, and make sure to read the label for terms of usage.
- Decide the location to store the first aid box. In addition, inspect the first aid box periodically and replenish the contents as necessary.
- Decide the measures to take upon an injury or fire accident.
- Decide how to contact the emergency address (for instance the emergency physician, ambulance or fire department), and put up the contact address at designated position so that anyone can make the contact.

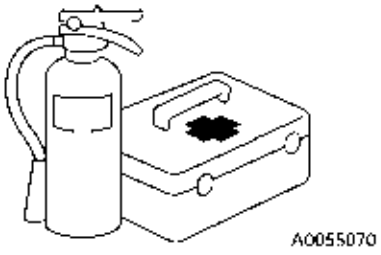

DO NOT RUSH AND BE CAREFUL WHEN OPERATING

- Do not attempt sudden lever operation or harsh driving.
- When 2 or more cranes are within close proximity to each other, drive with care while paying attention to tip-over accident due to mutual contact. If in doubt, appoint a guide to prevent machine contact.
- When any abnormality or danger occurs during the operation, abort the operation immediately to avoid hazard.
- Abort the work under bad weather (heavy rain, strong wind, thunder, thick fog).
  Decide whether to abort working by referring to the “work abort decision standard” in the work schedule and by discretion of the work supervisor of the site.

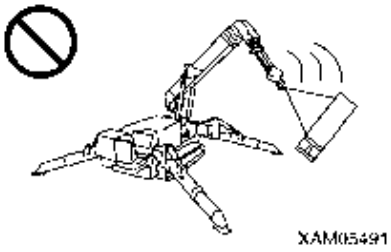

DO NOT MODIFY

Do not modify the Machine without our written consent under any circumstances.
The modification raises a safety issue, so consult us or our sales service agency beforehand.
We cannot be held responsible for any personal injury or failure caused by modification that was performed without consulting us.

https://truckmanualshub.com/

SAFETY WHEN REFILLING FUEL

- Diesel fuel is used as the fuel of this Machine.
  Do not refill wrong kind of fuel.
  Refilling with the wrong kind of fuel may damage the engine.
- Always stop the engine before refilling the fuel.
  Refilling the fuel when engine is running may cause leaked fuel to draw fire from hot silencer or other substance.
- Overfilling the fuel results in spillage and is dangerous. Refill slightly lower than the specified level.
  Always wipe away cleanly whenever the fuel spills.
- Close the tank cap securely after replenishing the fuel.

A0055020

A0055040

KEEP FIRE AWAY FROM OIL

Attempt to let fire approach the fuel, hydraulic oil or engine oil may result in catching fire. Strictly observe the following.

- Do not allow any flames such as cigarettes or matches near flammable components.
- Securely close all of the fuel and oil container caps.
- Keep the fuel and oil in a well-ventilated location.
- Store the fuel and oil in a specified location and prohibit public access.
- Do not leave the site when replenishing the fuel or oil.
  Be especially careful to observe “Safety when refilling fuel” (described earlier in this manual), when replenishing fuel.
- Cleanly wipe away fuel or oil that is spilled during replenishment.

A0055020

A0055040

HANDLING AT HIGH TEMPERATURE

After stopping machine operations, the engine and engine oil, cooling water and hydraulic oil are hot for a short duration. There can also be a small accumulation of pressure within the hydraulic oil tank. Attempts to inspect the engine, remove the radiator cap, drain oil, drain water or replace the filter at this time will result in burns. Wait until the temperature drops.
When removing the filler cap of the hydraulic oil tank, follow the procedure below.

1. To prevent emission of the high temperature oil, stop the engine and wait until the oil temperature drops.
2. Loosen the cap and then turn it slowly to let the pressure out.
3. Remove the cap.

(To gauge the drop in oil temperature, place a hand near the surface of the hydraulic oil tank or similar location (making sure of no contact.))

A0055050

https://truckmanualshub.com/

BEWARE OF ASBESTOS DUST

Inhalation of asbestos dust may result in lung cancer. This Machine does not contain asbestos, but asbestos may be found in the wall, ceiling or other construction locations within the worksite of this Machine. In addition, be careful of the following when working with a material that may contain asbestos.

- Put on designated dust free mask and/or other protection equipment where necessary.
- Do not use compressed air for cleaning.
- Spray water when cleaning to prevent airborne asbestos dust.
- Always work at windward location when operating the Machine at a site that may contain asbestos dust.
- Strictly observe the assigned rules related to the worksite and environmental standard.

A0055060

CRANE INJURY PREVENTION

To prevent serious accidents, do not allow any part of your body to be caught:

- Between the boom and the carrier.
- Between the outrigger support and the ground contact surface.
- Between the boom/post and the derrick cylinder.
- Between winch drum and wire rope
- Between each sheave and wire rope
- Between the crawler and the ground.

A0055060

BEWARE OF EXHAUST GAS

To prevent the risk of petrol poisoning from starting the engine/handling fuel and cleaning oil/painting indoors or at a location with bad ventilation, open the windows and exit doors.

If the ventilation is insufficient even after opening the windows and exit doors, set up a ventilation fan.

A0055060

https://truckmanualshub.com/

2. PRECAUTIONS ON HANDLING REMOTE CONTROL SYSTEM

DO NOT MODIFY

- Never disassemble or modify the Transmitter, Receiver and accessories. Otherwise, an electric shock or fire may be caused.

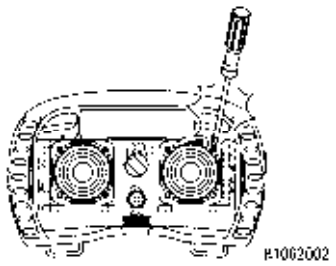

HOLDING THE TRANSMITTER

- See the illustration on the right for the operation method of the Transmitter.
  Wear the waist belt, and operate the control levers and buttons with your thumb.
  Firmly grasp the grip with other fingers and hold the Transmitter.
- Always operate the control levers and switches of the Transmitter with your fingers.
  Do not attempt to operate it by any other method such as a screwdriver etc.
  It may make a hole in the Transmitter which allows water to enter inside the body causing problems or failures which may lead to a serious hazard.

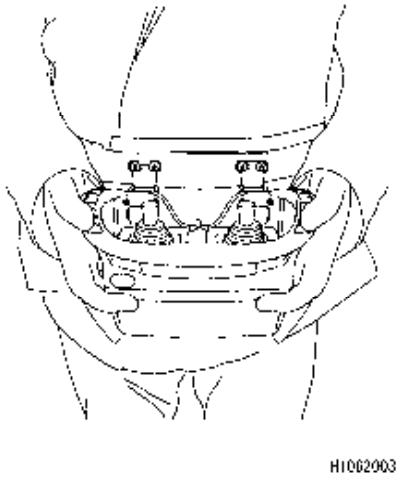

NO WATER WASHING

- Always clean the Transmitter and keep it unsoiled. Oil or mud on surface may cause miss-operation with slipping hands, which may result in a serious hazard.
- Never attempt to high pressure wash or wash with water the Transmitter and Receiver.
  Doing so allows water to enter inside and may cause problems or failures which could cause an electric shock or other serious hazard.
- Scrub the Transmitter and Receiver with a damp cloth or diluted detergent to remove the dirt.
  Avoid alkaline or alcoholic cleaners or sprayer cleaners. Doing so deteriorates plastics and produces cracks.

https://truckmanualshub.com/

Do not allow an object or water to enter the inside of the device.

Do not put metals, flammables or water in the battery storage section of the transmitter or the inside of the opening of the battery charger.
Do not connect the battery storage section of the transmitter or the terminal section of the inside of the opening of the battery charger with a metal or do not insert a metal into these parts.
Doing so may cause an electric shock or fire.

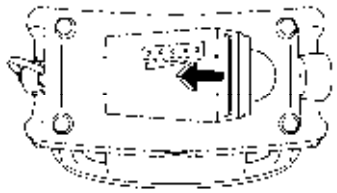

NO SHOCK TO THE TRANSMITTER

- While using the Transmitter, always use a waist belt (1) to prevent accidental dropping of the unit during operation.

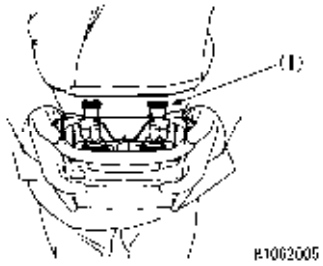

- Try to avoid needless impact to the Transmitter, such as hitting it on any object.
  As this may result in damage to the enclosure or internal components which may cause a failure or malfunction including electrical shock or other serious hazard.
- In the event of such damages, remove the battery in the Transmitter and contact us or our sales service agency for repair.
  Using a damaged Transmitter will result in miss-operation and may cause an electrical shock or other serious hazard.

PRECAUTION FOR OPERATIONS IN COLD SEASONS

- Avoid the use of the Transmitter in a condition where the ambient temperature makes a sudden change or becomes extremely low (-20 °C or below) or cold air is blowing directly to it.
  Sudden change in temperature may cause dew formation inside the Transmitter and can cause failure or malfunction and leads to a serious hazard.
- In cold conditions, warm up sufficiently prior to starting crane operations. In cold conditions, the temperature of the hydraulic fluid is low and its viscosity is high. This can result in a delay in crane operations.
- When storing the Transmitter, make sure to keep it away from conditions listed below.
  Not observing the above may cause deformation or discoloration of the Transmitter case and can cause failure or malfunction of the inside devices, leading to a serious hazard.
  - Extremely low temperature or in direct cold air.
  - Direct sun light.
  - In front of air outlets of vehicles.
  - Adjacent to housing heating system.
  - High humidity.

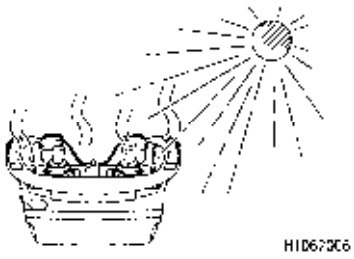

PRECAUTIONS IN OPERATION ENVIRONMENT OF REMOTE CONTROL

This remote control system cannot be used for operation in a place where there is danger of explosion.

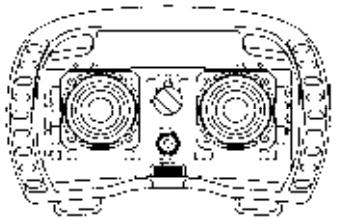

USING SPECIFIED EQUIPMENT

- Use a specified battery for the remote control system.
  The use of battery other than specified may cause electrolyte leakage, heat generation and rupture of the battery.
- When setting a battery in the transmitter of the remote control system, be careful not to turn the battery upside down.
  Doing so may cause a failure of the inside devices of the transmitter, and electrolyte leakage, heat generation and rupture of the battery.

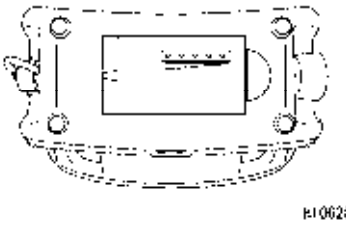

PRECAUTIONS IN HANDLING THE BATTERY

- Do not heat the battery or put it in fire.
  Doing so may cause electrolyte leakage and rupture of the battery.

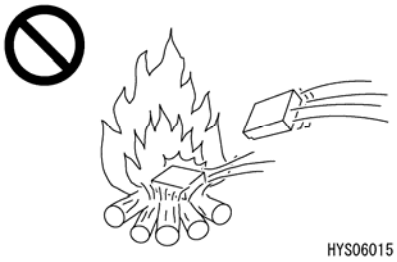

- Do not disassemble or modify the battery.
  Doing so may cause electrolyte leakage, heat generation and rupture of the battery.

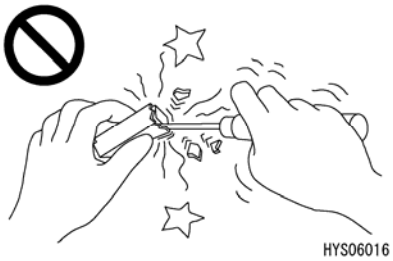

- Do not solder directly to the battery.
  Doing so may cause electrolyte leakage, heat generation and rupture of the battery.

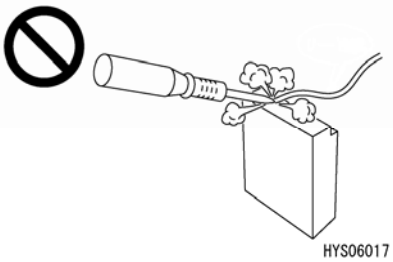

- If leaked electrolyte contacts your eyes, immediately wash it away with plenty of water and promptly see a doctor.
- Periodically charge and discharge the battery within six months.

https://truckmanualshub.com/

TEMPORARY STORAGE WHEN ABNORMALITY IS FOUND WITHIN THIS SYSTEM

In case this system is found with an abnormality and is therefore stored temporarily waiting for service, apply following measures to notify all persons in the office that “the use is prohibited due to failure.”

1. Put up a sign showing “Use Prohibited”.
   Write clearly the information such as abnormality contents, name and contact of the storage manager, and the term of storage.
2. Take out the battery.
3. Never perform operation using a failed remote control system.

CAUTIONS DURING WELDING REPAIR

When performing welding repairs to the main body of the Machine, weld in a location with good facility, and, only authorized personnel are permitted to weld.

- Disconnect the battery terminals to prevent battery explosions.
- Disconnect the electric wiring connection section with the receiver. Otherwise, the electric system of the receiver will be destroyed.

https://truckmanualshub.com/

3. PRECAUTIONS FOR USE OF ENGINE AND ELECTRIC MOTOR SPECIFICATIONS

PRECAUTIONS ON USAGE

The following precautions should always be observed when using this machine. If these, or the engine and electric motor specifications are disregarded, a serious accident may occur.

- **Installation of this machine must comply with laws and regulations of your country. Contact us or our sales service agency if no laws and regulations are applied.**
- **Only personnel qualified according to laws and regulations of your country are allowed to establish power connection between power supply equipment and this machine.**
  Contact us or our sales service agency if no laws and regulations are applied.
- **Operation and storage of this machine must satisfy the requirements listed below:**
  - **Operating temperature: -10 to 40°C (no frost)**
  - **Storage temperature: -20 to 60°C**
  - **Operating humidity: 90%RH or less (no condensation)**
  - **Atmosphere: Outdoor environment free from explosive, flammable, and corrosive gases, moisture, and excessive dust particles**
  - **Altitude: 1000m or less**
  - **Vibration: 0.5G or less**
- **Turn "OFF" the power supply equipment breaker promptly in the event of anything abnormal on the machine during operation. Fire or an electric shock may occur if disregarded.**
- **Turn "OFF" the power supply equipment breaker promptly in the event of a power failure during operation. Otherwise the machine may inadvertantly operate upon energization.**
- **Always turn "OFF" the power supply equipment breaker before performing inspection and maintenance of the electric system. An electric shock may occur during work if disregarded.**
  In addition, notify all personnel at the workplace that inspection and maintenance are being performed and attach a warning tag indicating "Operation Prohibited" to the power supply equipment breaker so that other persons will not accidentally operate the breaker.
- **Always turn "OFF" the power supply equipment breaker and wait for 10 minutes or longer before performing inspection and maintenance of the electric system.**
  Measure the voltage using a tester and ensure that no voltage is applied to the power supply box.
- **All the parts are at elevated temperatures immediately after machine operation.**
  Performing inspection and maintenance of the electric system under this condition causes burns.
  Wait until the temperature lowers, then execute the inspection/maintenance following the procedure described in this manual.
- **Do not spray water directly on the power supply box and inverter board.**
  Water entering the electrical system is dangerous and may cause faulty or improper operations.
- **Contact us or our sales service agency for repair of the inside of the inverter board.**

See "SAFETY 1. BASIC PRECAUTIONS" for safety precautions that are not provided in this section.

https://truckmanualshub.com/

4. OPERATION RELATED PRECAUTIONS

4.1 BEFORE STARTING ENGINE

ESTABLISH SAFETY OF WORKSITE

- Confirm that no danger is present at the worksite before starting work.
- Investigate the ground and road surface condition of the worksite and decide the best working method.
- When working on an inclined ground, flatten the inclination of the work site before starting work. Also, if sand and gravel are excessive, spray water before work.
- When working over the roadway, enforce “keep out” by, for instance, assigning guides or surrounding the site by barriers, and ensure the safety of the traffic vehicles and pedestrians.
- Enforce “keep out” to prevent people from entering the worksite and apply measures to prevent people from approaching.
  Attempt to approach the moving Machine may result in pinching or hard collision by contact, and may result in serious accidents and deaths.
- When travelling in the water or crossing over shallow water, check the ground condition, depth and water velocity beforehand and make sure not to exceed the allowable water depth (no higher than centre of idler **(1)**).
  ★ See “OPERATION 2.12 [2] ALLOWABLE WATER DEPTH”.

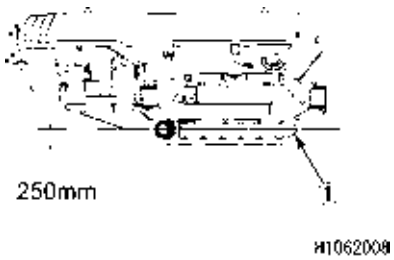

INSPECTION BEFORE STARTING ENGINE

Execute the following inspections before the first engine start-up of the day.
Omitting these inspections may result in serious bodily accidents.

- Inspect for the fuel/oil leak, accumulation of combustibles around the engine and battery systems, and similar potential problems.
  ★See “OPERATION 2.1 PRE-OPERATION INSPECTION”.
- Inspect the quantity of fuel, cooling water, and hydraulic oil tank, air cleaner blockage, electrical wiring damage, and check operations of safety devices and instruments.
  ★See “OPERATION 2.1 PRE-OPERATION INSPECTION”.
- Make sure the operation levers are at neutral position.
  Check that the operation linkages operate adequately.
- When using the remote controller, perform operations carefully upon fully understanding what actions you let it do.
- When an operator operates the remote control system, he/she may mistake the operating direction of the control section of the transmitter depending on the standing position and visibility angle with respect to the system. Always check in advance to avoid a mistake of the operating direction of the system.
- Before starting to operate the remote control system, check that no personnel are under a hoisted load or in the vicinity and perform operations safely.

Always repair if any result of the above is faulty.

https://truckmanualshub.com/

CAUTIONS WHEN STARTING ENGINE

- Make sure no person or object is within the boom slewing radius area before starting the engine.
- Honk the horn for warning before starting the engine.
- Do not start the engine by short-circuiting the starter circuit. This may cause a fire.

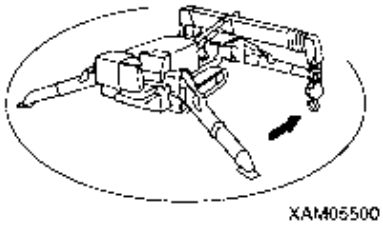

INSPECTION PRIOR TO TURNING ON THE TRANSMITTER (REMOTE CONTROL SYSTEM)

- Check for any dirt, damage or cracks in the enclosure, control levers, and operation switches of the Transmitter.
- Ensure that the control levers and operation switches of the Transmitter move smoothly and properly.
- Check if the battery is correctly installed and if there is any foreign matter such as a metal or paper in the case of the remote control system transmitter.

INSPECTION AFTER TURNING ON THE TRANSMITTER (REMOTE CONTROL SYSTEM)

Check that the display appears on the transmitter.

INSPECTION PRIOR TO TURNING ON THE RECEIVER (REMOTE CONTROL SYSTEM)

- Check for any dirt, damage or cracks in the Control box, Monitor LED, Antenna, etc. of the Receiver.

https://truckmanualshub.com/

4.2 AFTER STARTING ENGINE

INSPECTION AFTER STARTING ENGINE

Omitting the inspections after starting the engine results in delay to discover the Machine abnormalities, and may result in accidents and Machine damages.
Inspection should be carried out in a clear area. No unauthorized persons should be able to approach the Machine.

- Inspect the equipment operation conditions, Machine traveling conditions, outrigger operation conditions, winch winding up/down operation, boom derricking, and crane operation conditions such as extension, retraction and slewing.
- Inspect the sound, vibration, heat and odor of the Machine, and check for instrument errors, air leaks, oil leaks, fuel leaks, water leaks and other bad factors. Be especially careful for the fuel leak.
- Always repair broken part whenever an abnormality is found.
  Attempt to use without servicing may result in unexpected accidents and/or Machine failures.

CAUTIONS WHEN STARTING TO MOVE MACHINE

To prevent serious injuries and accidental deaths, implement the following actions before moving the machine.

- Set the Machine to the travelling posture in the right figure. Before traveling, be sure to stow the hook block completely.
  - Make sure the boom is fully lowered and retracted.
  - Fix the hook block at the stowage position.
  - Retract the outrigger.

  ★ See “OPERATION 2.5 MACHINE TRAVELLING POSTURE” for details.
- Make sure to check around again so that no one or no object is in the vicinity before starting to move.
- Honk the horn for warning before starting to move.
- Be sure to sit in the driver’s seat during traveling operation of this Machine.
- The Machine is prohibited to travel when a person or load is on the carrier or the boom.
- When travelling, stow hook and outrigger, and make sure the surrounding area is safe.
- When stowing outriggers, insert each position pin completely to lock.

H1062009

CAUTIONS WHEN MOVING FORWARD/BACKWARD OR CHANGING DIRECTION

Always observe the following to prevent serious injuries and accidental death when moving the Machine.

- Drop the speed early and wait until the Machine stops before changing from forward to backward, or backward to forward.
- Honk the horn and alert to the people nearby before changing between forward/backward movements or changing direction.
- Check that no one is around the Machine.
  The front of the Machine frame requires special attention because certain part of vision is blocked, so stop the Machine as necessary and make sure no one is in front or around.
- Assign a guide if the location is hazardous or with bad view.
- Make sure to prevent people from encroaching on the machine pathway.

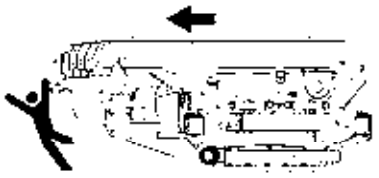

H1062010

https://truckmanualshub.com/

CAUTIONS WHEN TRAVELLING

Always observe the following to prevent serious injuries and accidental death when moving the Machine.

- Do not attempt looking sideways or other dangerous act when driving.
- Do not over speed, start moving/stopping/slewing suddenly, or meander since such acts are dangerous.
- Be sure to sit in the driver's seat while operating this Machine.
- Whenever you find a machine abnormality (sound, vibration, odor, instrument error, fuel/water/oil leak, etc.), immediately park the Machine in a safe location and investigate the cause.
- Do not change the direction suddenly. Such may cause the Machine to lose balance or damage the Machine or nearby object.
- When traveling over uneven terrain, travel slowly to prevent tripping, and avoid acute operation when changing the direction.
- Avoid moving over obstacles.
  Travel slowly when moving over an obstacle for unavoidable reason. Also, do not move diagonally over obstacles that cause the Machine to tilt excessively (10° or more).
- When travelling, ensure extra clearance to prevent accident of contacting other machinery or object.
- When travelling in the water or crossing over shallow water, check the ground condition, depth and water velocity beforehand and make sure not to exceed the allowable water depth (no higher than center of idler (1)).
  ★ See "OPERATION 2.12 [2] ALLOWABLE WATER DEPTH".
- Check the withstand ability against the Machine mass before crossing over a bridge or construction that is a private property.
- Do not travel with a load kept hoisted.

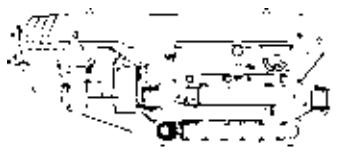

H1062009

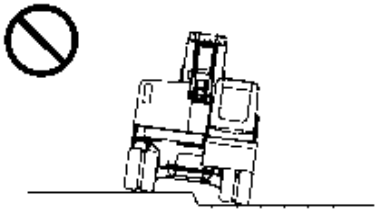

XAM05241

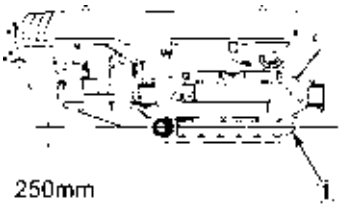

H1062008

BE CAREFUL WHEN TRAVELLING OVER SLOPE

ALWAYS observe the following to prevent serious injuries and death accidents when travelling over a slope for unavoidable reason.

- Be careful of tripping and skids when travelling over slope.
- Do not travel horizontally or change orientation when travelling over slope. Practice safe travelling by for instance lowering to the plain land and divert.
  ★ See "OPERATION 2.12 [3] CAUTIONS ON UPWARD/DOWNWARD SLOPE" for details.
- Beware of skidding on grass, fallen leaves, and on wet steel plates even the slope is gentle.
  Avoid the Machine from being horizontal over the slope as much as possible, and decrease the speed sufficiently.
- Travel slowly at low speeds when going downhill. In addition, apply the brakes (by setting the operation lever to neutral) when necessary.

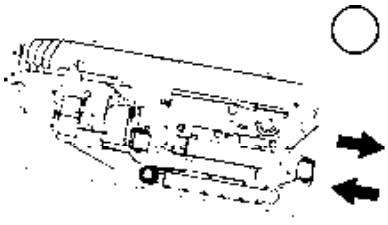

H1062011

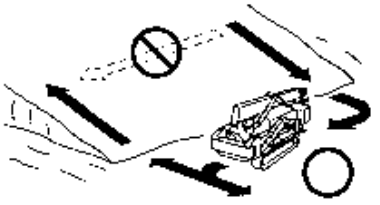

XAM05261

https://truckmanualshub.com/

BE CAREFUL OF TRIPPING ON UNSTABLE GROUND

Always observe the following to prevent serious injuries and death accidents when travelling over an unstable ground for unavoidable reasons.

- Do not enter soft ground area. The machine may get stuck.
- The ground near cliff, roadside and deep gully is unstable, so avoid going near such ground.
  The Machine may trip or fall when the ground loosens due to mass and/or vibration of the Machine. Be especially careful after rain, use of dynamite, or earthquakes, as the ground will be unstable.
- Avoid going near the earth fills or vicinity of dug gutter that are instable.
  Crumbles caused by mass and/or vibration of the Machine may cause the Machine to tilt.

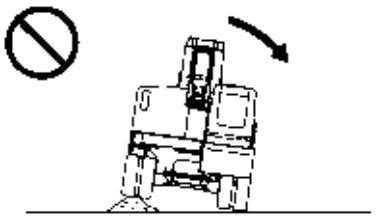

XAM08711

CAUTIONS WHEN TRAVELLING SNOW COVERED OR FROZEN GROUND

ALWAYS observe the following to prevent serious injuries and death accidents when travelling over snow covered ground or frozen road for unavoidable reason.

- The snow covered grounds and frozen roads cause slips even when the inclination is small, so decrease the speed when travelling and avoid sudden starting/stopping/slewing. Uphill and downhill are especially likely to cause slips and thus dangerous.
- Ground of the frozen road becomes soft when the air temperature rises and causes the Machine travels and other operations to be unstable. Be very careful.
- In cold weather conditions, check that the load before being hoisted is not frozen to the ground or other substance. Attempt to hoist without knowing the load is frozen and stuck to the ground or other substance is dangerous.
- Refrain from directly touching metal surface with your hands or fingers in cold and harsh weather conditions.
  Touching metal surface may result in skin freezing to the metal surface.
- Remove snow and/or ice laid on the Machine that causes the safety nameplates to be hard to read. Be especially careful to securely remove those that are on the boom and thus may fall.

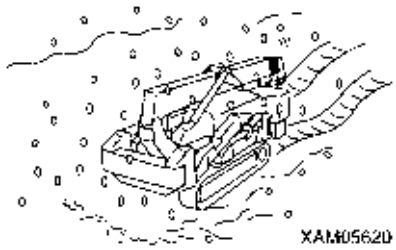

XAM05620

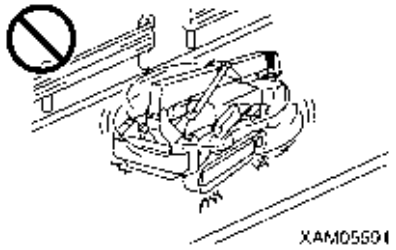

XAM05591

CAUTIONS WHEN PARKING

- Park at a location where the ground is level; rock falls, landslides, and flooding does not occur.
- To park on a slope for unavoidable reason, use blocks as pawls to immobilize the Machine.
- When parking on the street, place the flags, protection barriers, lighting and similar objects, and caution notices without interfering the traffic, so that other travelling machines can notice clearly.
- Stop the engine before leaving the Machine.
  Always bring back the starter key with you and store in a designated location.

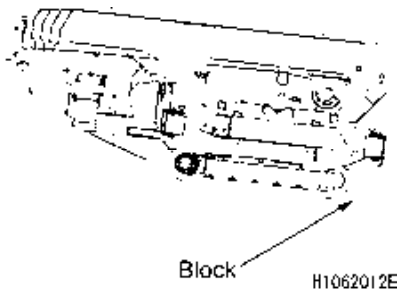

https://truckmanualshub.com/

CAUTIONS UNDER COLD WEATHER

- After end of the work, wipe off and put on a cover if substances such as condensation, snow or mud are stuck to the wire harness, connector (1), switches, sensors or similar part.
  If the infiltrated condensation and/or similar substance freeze, the Machine may operate improperly upon the next use and cause unexpected accidents.
- Remove snow and defrost the slewing gear, boom and winch. Check their movements before starting work.
- Warm up enough.
  Operating levers and switches with a cold engine causes the machine to be lethargic, and may result in unexpected accidents.
- Avoid sudden acceleration of the engine immediately after engine start.
- Increase the oil temperature of the hydraulic circuit by relieving the oil pressure (let the pressure oil to escape to the hydraulic oil tank by raising to above the hydraulic circuit set pressure) by using the operation lever.
  Doing so improves the Machine reactions and prevents improper operations.
- If the battery fluid is frozen, do not charge the battery or start the engine using other power source.
  Such act may cause the battery to catch fire.
  Defreeze the battery fluid and check for battery fluid leak before charging or starting the engine.

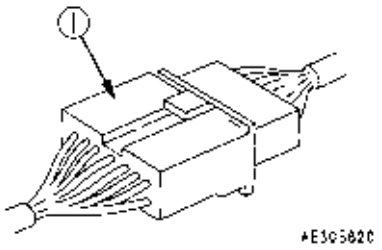

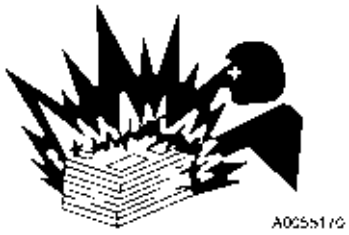

PRECAUTIONS CONCERNING DPF REGENERATION

- Exhaust gas will be at elevated temperatures irrespective of the load. Be careful not to get burn.
- Sound will be generated at the start and end of regeneration control because opening degree of intake throttle and EGR valves have to be controlled. This sound indicates normal operation.
- The odor of the exhaust gases is different from the conventional diesel exhaust odor.
- During regeneration operation, CO can build up in enclosed or partially enclosed spaces. Pay attention to avoid CO poisoning.

https://truckmanualshub.com/

OPERATION CHECK OF OUTRIGGER MODE BY TRANSMITTER AND CAUTIONS DURING OPERATION (REMOTE CONTROL SYSTEM)

- Check that position pins and retainers of the outriggers are securely set.
- By using mode selector switch (8), set to “1,4 Outrigger mode” or “2,3 Outrigger mode”.
- Check that the messages on the display are switched correctly.
- Press the Speed/Outrigger selector switch (5) to check that the message on the display switches between “Outrigger retraction” and “Outrigger extension/stowage”.
- Use the operation lever to check that the outrigger is retracted properly.
- Use the operation lever to check that the outrigger is extended and stowed properly.

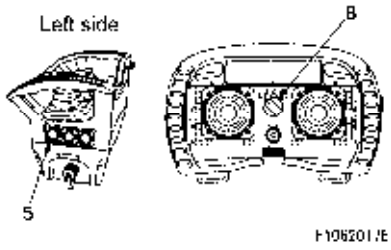

OPERATION CHECK OF CRANE MODE BY TRANSMITTER AND CAUTIONS DURING OPERATION (REMOTE CONTRO LSYSTEM)

- Before switching the operation mode to “CRANE MODE”, make sure all the outriggers are extended and securely placed on the ground.
- Set to the “CRANE MODE” with the mode selector switch (8) and switch to the crane mode with the “Crane” button on the monitor.
- Operate the control lever and check that the crane operates properly.
- When performing crane operations, always refer to the “Rated total load chart” and avoid over-loaded operations.
- Activate the control levers of the Transmitter slowly at all times.
- Before starting operations, check to make sure that the emergency stop switch functions. At this time, the status LED of the Transmitter goes off. If it does not go off, immediately stop the use.
- If you perform compound operation with the remote controller, only one side may operate. As this is very dangerous, do not perform compound operation.

https://truckmanualshub.com/

4.3 DURING CRANE WORK

INSPECTION BEFORE STARTING WORK

Check that the safety devices and crane operate properly.

- Operate each of the operation levers and switches under no load, and check that operations take place without abnormality.
  Repair immediately if any abnormality exists.
- Check that the safety devices such as moment limiter, outrigger safety device, hook over-hoist detector and automatic stop device work properly.

CAUTIONS WHEN HANDLING MONITOR

- Use/store the monitor under the following ranges of ambient temperature.
  ★Operating temperature: -10 to 55 °C Storage temperature: -20 to 60 °C
- Avoid direct sunlight so that the temperature of the monitor body does not exceed the above range.
- Avoid locations with strong acid or alkaline atmosphere. Otherwise, unexpected failures may occur.
- Do not apply impact to the monitor body for instance by colliding with an object.
  Such attempt may damage the case and may result in failures and improper operations.
- Do not push the button of the monitor body by a force more than necessary or push with sharp object such as a tip of a screwdriver. Such attempt may damage the button and may result in failures and improper operations.
- Do not disassemble the monitor body. Such attempt may result in failures and improper operations.

CAUTIONS WHEN SETTING MOMENT LIMITER

- In the moment limiter, the moment is calculated on the assumption that the machine is placed horizontally.
  If crane work is performed without the machine being placed horizontally, no forecast or warning is issued even when the rated total load is approached.
  Be sure to set the outriggers horizontally while checking the level.
- When using the crane, check that the boom angle and length and actual load indicated by the moment limiter are properly displayed in accordance with the crane movement. If the crane is used with no correct indication given, correct measurement results cannot be obtained, causing a serious injury or death due to malfunction or damage to the peripheral equipment.
- When using the crane, be sure to check that the setting of number of falls of wire of the moment limiter matches the number of falls of wire of the crane. If the number of falls of wire does not match, be sure to change either the setting of number of falls of wire of the moment limiter or the number of falls of wire of the crane, to make both match with each other. If the crane is used with the number of falls of wire left unmatched, correct measurement results cannot be obtained, causing a serious injury or death due to malfunction or damage to the peripheral equipment.
- Do not change the setting carelessly during measurement with the moment limiter. Otherwise, correct measurement results cannot be obtained, causing a serious injury or death due to malfunction or damage to the peripheral equipment.

PLACE CRANE ON LEVEL AND HARD SOIL

- Always place the outriggers on a level, stable and solid ground.
  Attempt to operate the crane without outriggers firmly contacting the ground may cause the Machine to trip.
- Always place all outriggers before operating the crane.
- Do not set any outrigger near an unsteady location such as soft ground, verge or drilled hole.
  In case the outriggers need to be placed on soft ground for an unavoidable reason, always reinforce the ground by laying a sufficiently large and strong base plate below each outrigger supports.

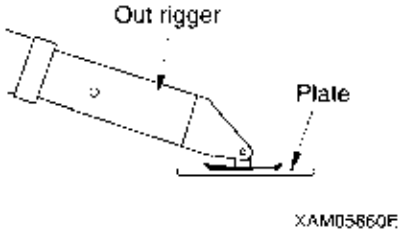

CHECK OUTRIGGER PLACEMENT CONDITION

Always observe the following to prevent serious injuries and accidental death when placing the outriggers.

- When placing the outriggers, always keep the Machine sternly level while looking at the level gauge. Occasionally check the level gauge and make sure to keep the Machine level during the crane operation as well.
- Always place the outriggers at its “maximum extension”.
  If, due to unavoidable reasons, you need to place the outriggers without extending them to its maximum extension, be sure to perform the work in accordance with values shown in the “Outriggers extended to halfway” column or “Outriggers extended to minimum” column of the Rated Total Load Chart.

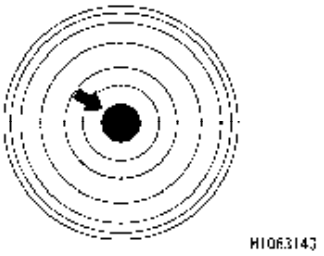

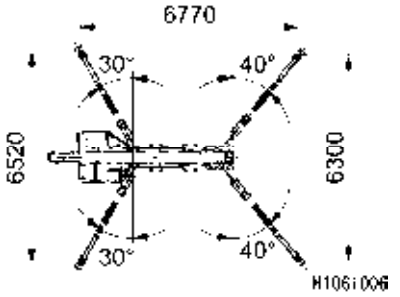

- Place the outriggers so that the crawler is approximately 50 mm above the ground.
- Make sure all of the outrigger position pins are securely fixed.

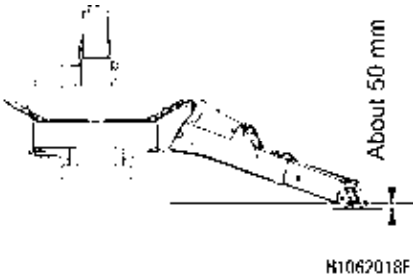

https://truckmanualshub.com/

CAUTIONS WHEN PLACING OUTRIGGER

- Do not let people approach the machine when placing the outriggers.
  Otherwise, serious accidents such as feet being trapped may occur.

https://truckmanualshub.com/

BEWARE OF ELECTRICAL CABLE ABOVE

- Do not let the Machine touch the electrical cables above. High voltage cables may also inflict electrical shock by close proximity.
- Slinging operators are likely to suffer electrical shocks. Always observe the following to prevent accidents.
  - If the boom or the wire ropes may contact an electrical cable in the workplace, consult the electricity company and make sure that the measures (for instance placement of a guard personnel or application of wrap tubes and warning tags to the electrical cable) stipulated by the related regulations are taken before starting work.
  - Put on rubber soled shoes and rubber gloves, and be careful that the body parts unprotected by rubber or other insulation do not contact the wire rope or the Machine frame.
  - Place a guide and let him/her watch so that the boom, wire rope or Machine frame does not go near the electrical cable too much.
    Before doing so, decide the emergency signs and other necessities.
  - Ask the electricity company for the voltage in the electrical cables at the worksite.
  - Ensure the separation (safe distance) shown in the following table between the boom/Machine frame and electrical cables.

	Voltage of Electrical Cable	Minimum Safe Distance
Low voltage (Distribution cable)	220V/400V	2m
	6,600V	2m
Special voltage (Power cable)	22,000V	3m
	66,000V	4m
	154,000V	5m
	187,000V	6m
	275,000V	7m
	500,000V	11m

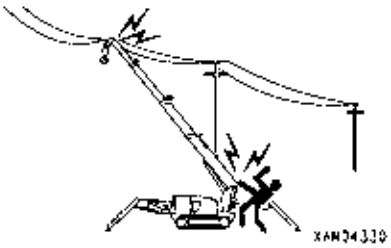

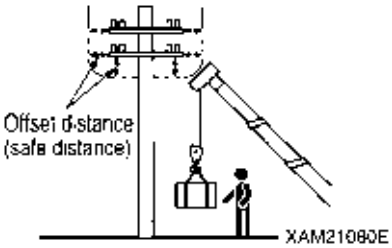

https://truckmanualshub.com/

MEASURES WHEN CHARGE ACCIDENT OCCURS

If a charge accident occurs, react calmly and take measures in the following procedure.

1. **Report**
   Immediately report to the electricity company or related management company, and receive instructions for the power transmission stop, emergency procedures and related matters.
2. **Evacuation of related personnel from vicinity of Machine**
   Evacuate all personnel, including workers, from the vicinity of the machine to prevent secondary disasters.
   Personnel who suffered electrical shock by holding a sling rope, guide rope or other conductor when the Machine was charged should evacuate by his/her own effort.
   Do not try to help personnel affected by electric shock. Otherwise, secondary electrical shock accident will occur.
3. **Emergency procedure**
   In the case of personnel receiving an electric shock due to the machine being electrically charged, do the following:
   (1) If the machine is operational, immediately move it to a safe location away from the cause of the electrical charge. Take care not to break or disrupt the distribution power cable.
   (2) Move the machine to a safe location, and after making sure the machine is not electrically charged, take the affected personnel to the hospital.
4. **Measure after accident**
   After the accident, do not reuse as is. Such attempt may cause unexpected accidents and enhances failures.
   Ask us or our sales service agency for repair.

CAUTIONS WHEN OPERATING CRANE IN LOCATION WITH HIGH OUTPUT MICROWAVE EMISSION

Operating the crane near high output microwave emission equipment such as a radar or TV/radio broadcast antenna causes the crane construction to be exposed to the microwave and generates induced current, therefore is very dangerous. In addition, the mechatronics may become haywire.
Establish grounding between the Machine frame and the ground when working in such location. In addition, slinging operators are requested to wear rubber boots and rubber gloves since risk of electrical shock by contacting parts such as the hook or wire exists.

https://truckmanualshub.com/

PAY ATTENTION TO WEATHER INFORMATION

- A risk of lightning exists in case of a thunderstorm, so abort operating the crane, immediately lower the load and retract the boom.
- Wind can cause the hoisted load to move back and forth, which could cause the machine to become unstable. If the hoisted load is affected, immediately lower the load and retract the boom.
- If the maximum instantaneous wind speed is 10 m/s or greater, abort operating the crane, immediately lower the load and retract the boom.
- Even when the maximum instantaneous wind speed is below 10 m/s, the bigger the hoist load, the higher the hoist load position, or the longer the boom can increase the effect from the wind. Be very careful during the work.
- When a load such as a steel plate that has a large area exposed to wind is being hoisted, the wind arriving from front/rear/side of the boom may cause the Machine to trip or damage the boom. Be very careful during the work.
- When an earthquake occurs, abort the operation and wait until it is over.

★ The following table indicates approximate relation between the wind speed and wind effect. The wind speed mentioned in the weathercast is mean wind velocity (m/s) during 10 minutes at 10 m above the ground.

Force	Wind Speed (m/s)	Effect On Land
0	Less than 0.3	Smoke rises vertically.
1	0.3 - below 1.6	Wind motion visible in smoke.
2	1.6 - below 3.4	Wind felt on exposed skin.
3	3.4 - below 5.5	Leaves and small twigs move in constant motion.
4	5.5 - below 8.0	Dust and loose paper blow up. Small branches begin to move.
5	8.0 - below 10.8	Bushes with leaves start to sway. Waves form on the face of pond/swamp.
6	10.8 - below 13.9	Large branches begin to move. Whistling heard in electrical wires. Use of umbrella becomes difficult.
7	13.9 - below 17.2	Whole trees start to shake. Effort needed to walk against the wind.
8	17.2 - below 20.8	Twigs broke from trees. Progress impeded.
9	20.8 - below 24.5	Light structure damage. Slates blown off.
10	24.5 - below 28.5	Trees uprooted. Considerable structural damage.
11	28.5 - below 32.7	Widespread structural damage.

https://truckmanualshub.com/

CAUTIONS WHEN SLINGING

- Check the following before hoisting a load.
  Attempt to hoist the load without checking may result in serious accidents by dropping the load or tripping.
  - Observe the values in the rated total load chart.
  - Hoist from the centre of gravity of the load.
  - Check that the wire rope of the hook block is vertical.
  - When the load leaves the ground, stop winding up the load once and check whether the load is stable.
- Before hoisting a slung load, always check whether the sling wire rope “retainer device” of the hook block is hung correctly. If the “retainer device” is not hung, the wire rope may leave the hook block and cause the load to fall resulting in a serious accident.
- Larger wire rope angle when hoisting the load increases force that applies to the wire rope even when the load weight is unchanged, thus may cause the wire rope to snip. Give due consideration to slinging operation so that excessive force is not applied to the wire rope.
- Hoist only 1 load at a time.
  Attempts to hoist more than one load may cause the hoist bracket to hit and damage the other hoisted load, or the loads move and lose balance, causing serious accidents such as tripping. Do not hoist more than 2 load at a time even if the total combined weight is within the rated total load.
- Hoisting of lengthy load causes the load to lose balance and is dangerous.
  In the case of such load, hoist vertically by using a cramp, or achieve balance of the hoisted load by applying a rope to both ends of the load.

CAUTIONS WHEN HANDLING WIRE ROPE

- Wire ropes can wear out from constant use or old age, so be sure to inspect every time before work, and replace immediately if at or beyond the replacement standard.
  At the same time, inspect the sheave at the tip of the boom and the sheave of the hook block. Damaged sheaves accelerate the damage of the wire ropes.
- Use wire ropes specified by us.
- Always wear leather gloves when handling the wire rope.
- Do not use a wire rope of which any of the following applies:
  - 10 % or more of strands (except a filler wire) in 1 twist of a wire rope are snipped.
  - The wire rope diameter abrasion is beyond 7% of the nominal diameter.
  - Kinked wire rope.
  - Excessively deformed or corroded wire rope.
  - Affected by heat or sparks.

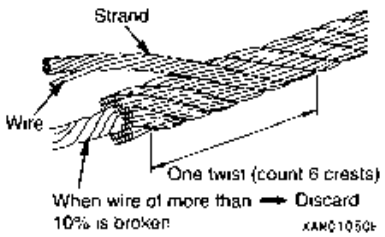

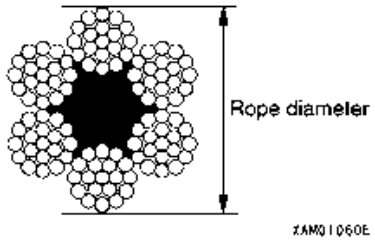

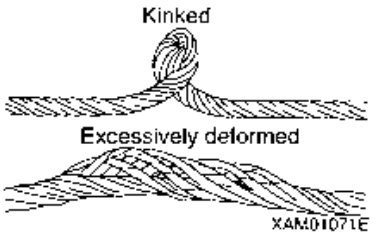

https://truckmanualshub.com/

CAUTIONS WHEN OPERATING CRANE

- Be sure to check that the Override switch is at the “OFF” position before operating the crane. Do not attempt to operate the crane with the Override switch kept set to the “ON” position. Use the Override switch only when the safety device have failed or when conducting a load test, or when cancellation of activation stop is desired as necessary.
  If the Override switch is placed in the “ON” position, the warning buzzer sounds intermittently.
- Crane operations are not possible when the outriggers are placed in extension condition. The crane operation is also interrupted when the outrigger tray leaves the ground during operation. Securely place the crane in the extension condition, and avoid operations and works that may cause the machine to vibrate when operating the crane.
- Attempt to work beyond the capacity of the Machine may cause serious accidents and failures caused by for instance tripping or fluctuation. Observe the rated total load chart when operating the crane.
- Be sure to follow the usage conditions when traveling with a hoisted load.
  This may cause the crane to fall over resulting in serious accidents.
- Perform the crane operation slowly.
  Sudden use of lever or accelerator may cause risks such as shaking, dropping of the load or collision with the surroundings. Be especially careful to be slow during the slewing operations.
- Do not allow unauthorized personnel to approach the working radius or under the load because of risks of falling load and contact with load. This could cause a serious accident. Also consider that the working radius increases when the load is hoisted and the boom is deflected.
- It is dangerous to operate the crane under bad weather or at places where the view is not clear.
  Work lamps or other lighting devices should be used in dark places.
  When the view is bad because of bad weather (rain, fog, snow, etc.), stop the operation and wait until the weather recovers.
- Do not use for purpose, for instance raising a person using a crane, other than the true purpose.
- If the alarm buzzer of the over-hoist detector sounds, immediately release your hand off the operation lever. Winding-up of the hook block stops. Then, operate the operation lever “downward” (push it forward) to wind down the hook block. The hook block also rises when you attempt to extend the boom. Provide sufficient clearance between the boom and hook block when performing crane operation.
- When the boom is extended, the hook block is wound up.
  Operate the operation lever “downward” (push it forward) and extend the boom while lowering the hook block.
- If it becomes overloaded during work, operate the operation lever “downward” (push it forward) and wind down the winch to unload.
  Do not raise or lower the boom acutely. Such attempt may cause serious accidents by tripping.
- The volume of the hydraulic oil in each of the cylinders changes depending on the temperature.
  By leaving idle with a load being hoisted, as the time passes by the oil temperature drops and the hydraulic oil volume decreases, and changes such as the boom derrick angle decrease and boom length decrease may occur.
  In that case, execute boom derricking operations and boom extension operations appropriately to correct.
- Do not leave the driving operation position when a load is hoisted.
  Lower the load before leaving the Machine.
- When the hook block is not used, wind up the winch.
  The hook block of an empty load may hit operators near the load.

https://truckmanualshub.com/

CAUTIONS ABOUT HIGH TEMPERATURE OIL WHEN OPERATING CRANE

When hydraulic oil temperature exceeds 80 °C, high pressure hoses and seals can be damaged by heat, and it may cause burning to skin from oil spray.
If temperature of hydraulic oil exceeds 80 °C, stop the operation and wait until the oil cools down.
Hook raising/lowering operation at high lift or continuous crane operation with the accelerator pedal depressed will increase the hydraulic oil temperature. Take special care during such operation.

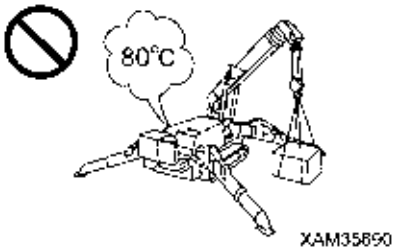

CAUTIONS WHEN OPERATING WINCH

- Do not allow persons to enter the area below the hoisted load.
- When hoisting a load, always stop once at the “takeoff” position where the hoisted load leaves the ground. Check subjects such as load stability and load force, then hoist up the load.
- Do not pull laterally, pull toward you or hoist diagonally. Such attempt may cause the crane to trip or get damaged.
- Overwinding of the hook block may result in collision with the boom, snipping the wire ropes and causing the hook block and load to fall and may lead to serious accidents. Take care not to overwind the hook block.
- Be careful to prevent the wire rope and/or hoisted load from contacting an obstacle such as a tree or steel when hoisting a load.
  If caught by an obstacle, do not forcibly wind up the hoist load, but untangle the caught part before winding up.
- Do not use the winch drum wire that is wound up irregularly. If wound up irregularly, not only the wire rope gets damage and shortens the lifetime, but it may snip and causes serious accidents.
  Observe the following precautions to avoid wire rope from winding up irregularly.
  - Do not let the hook block touch the ground.
  - When lowering the hook block for long distance for underground works, be sure to leave more than 3 turns of the wire rope on the winch drum.
- If the wire rope is twisted and causes the hook block to turn, fully eliminate the twist before work.

  ★ See “OPERATION 5.2 CORRETIVE ACTIONS AGAINST TWISTED WIRE ROPE”.

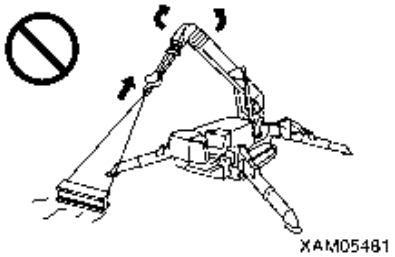

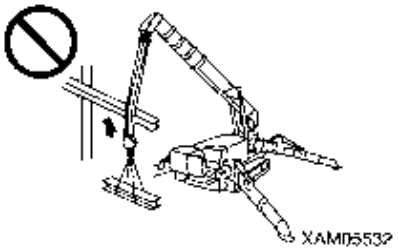

https://truckmanualshub.com/

CAUTIONS WHEN OPERATING BOOM

- Perform operation lever operation slowly.
  Especially avoid sudden lever operations when the load is hoisted, which may cause the load to waggle and give large impact to the Machine, and thus may damage the crane or trip the Machine.
- When the boom is lowered, the working radius increases, and the rated total load that can be hoisted decreases. When working while raising/lowering the boom, pay extra attention so that the mass (weight) of the load at the time the boom is most lowered does not cause overloading.
- Pulling of the load laterally by raising/lowering, and/or extracting/retracting the boom is prohibited. Do not attempt to do the above under any circumstances.
- When extending/retracting the boom, check raising of the winch and take sufficient care.
- When the boom is extended, the working radius increases, and the rated total load that can be hoisted decreases. When working while extending/retracting the boom, pay extra attention so that the mass (weight) of the load at the time the boom is most lowered does not cause overloading.

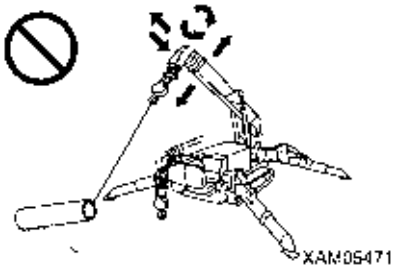

CAUTIONS DURING SLEWING OPERATION

- Check the safety in the vicinity and honk the horn before slewing.
- If the boom derrick angle is small, be careful to prevent the boom from hitting the operator or the Machine.
- Perform operation lever operation slowly. Make sure to start smoothly, slew at low speed, and stop quietly.
  Especially avoid sudden lever operations when the load is hoisted, which may cause the load to waggle and cause the Machine to lose balance, and thus may damage the crane or trip the Machine.
- Attempts to pull the load towards the machine or let the load stand up by slewing operation are strictly prohibited. Do not attempt to do the above under any circumstances.
- Be careful to prevent the wire rope and/or hoisted load from contacting an obstacle such as a tree or steel when hoisting a load or slewing.
  If caught by an obstacle, do not forcibly wind up the hoist load, but untangle the caught part before winding up.
- Certain outrigger extension condition may cause the boom to hit an outrigger during slewing operation and cause the crane to be damaged or the Machine to trip.
  Be careful to prevent the boom from hitting outriggers during slew operation.

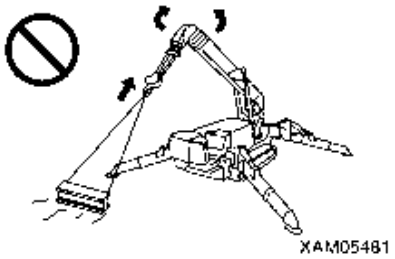

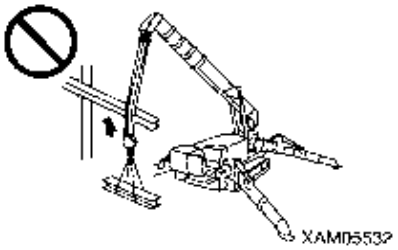

https://truckmanualshub.com/

COOPERATION HOISTING IS PROHIBITED AS A GENERAL RULE

Cooperation hoisting, where 2 or more cranes are used to hoist a single load, is strictly prohibited.
Cooperation hoisting is very hazardous and may cause the machine to fall due to an uneven centre of gravity, unscheduled fall of the hoist load or boom damage.
If cooperation hoisting is required for unavoidable reasons, discuss and establish a work scheme under the responsibility of the user, let the worker fully acknowledge the work method and procedures, and only proceed under the direct leadership of the work supervisor.
Also, observe the following cautions:

- Use the cranes of same model.
- Choose the Machine model that can handle sufficiently larger load than the load to be hoisted.
- Make sure only 1 person gives signals.
- Limit the crane operations to single operations as a rule, and do not attempt any slewing operation.
- Appoint 1 responsible sling operator who is most experienced.

Work at workplace where lift below ground level is performed

- When lowering a wire rope in work underground, leave at least 3 loops of wire rope on the winch drum. This machine is equipped with an excessive unwind detector as a safety device. Take care not to invite situation that requires safety device to function.
- Make sure to give signals.
- Perform crane operation with extra care.

OPERATION CHECK OF CRANE MODE BY TRANSMITTER AND CAUTIONS DURING OPERATION (REMOTE CONTROL SYSTEM)

- Never move your hand off the Transmitter whose power is turned ON. Be sure to turn OFF the power of the Transmitter when moving a place, performing work other than remote control, taking a break and terminating work.
- Immediately press the emergency stop switch to stop the Transmitter in an emergency or when a malfunction, however small it is, occurs in the working range of the machine.

https://truckmanualshub.com/

4.4 PRECAUTIONS FOR TERMINATING CRANE OPERATION (REMOTE CONTROL SYSTEM)

PRECAUTIONS FOR TERMINATING THE OPERATION BY THE TRANSMITTER

- Before stowing the outriggers, ensure that the boom and fly jib are stowed in the correct positions.
- Before stowing the outriggers, set the operation mode to the “OUTRIGGER MODE” and check that the mode is switched correctly.
- When all the operation of the Transmitter is complete, always turn “OFF” the power of the Transmitter.
- Under no condition will the Transmitter be ON unless the Crane is in operation. Be sure to keep the power turned “OFF”. Otherwise, unexpected touching or contact of operation levers or buttons of the Transmitter with any other object may cause undesired motion of the Crane and a serious accident such as tipping or collision may occur.

https://truckmanualshub.com/

5. TRANSPORT PRECAUTIONS

CAUTIONS WHEN LOADING OR UNLOADING

- Be especially careful when loading or unloading the Machine because the risks intervene.
- Select a location that is level and has firm road surface when loading or unloading the Machine. In addition, keep enough distance from the roadside.
- Use the ramps under 15° or smaller angle. In addition, make the clearance between ramps to meet the center of the crawler.
- Always set the Machine in the “travelling posture” and securely insert the position pins (4 pieces) to the outrigger rotary parts before loading or unloading the Machine.
  - ★ See “OPERATION 2.5 MACHINE TRAVELLING POSTURE” for details.
- Always move backward when loading the machine. Moving forward may cause the machine to fall.
- When loading or unloading, set the engine rotation to low idling (low speed rotation) and operate slowly by low speed travels.
- Use the ramps that have fully strong width, length and thickness, and that enable safe loading/unloading.
  Reinforce with blocks or other substances if the ramps deflect much.
- Remove the mud and other substances from the footing to prevent the Machine from skidding over the ramps. Remove the substances stuck on the ramps such as grease, oil or ice, and keep clean.
  Be especially careful on the rainy days where slips easily occur.
- Never change direction over the ramp. Temporarily leave the ramp before correcting the direction.
- Be slow when operating to change the direction on the truck platform where the footing is unstable.
- After loading the Machine, apply the wood blocks so that the Machine does not move, and securely fix with wire ropes or other means.
- Make sure if the hook block is stowed to the hook stowage wire. Or secure the hook block to the truck deck.
  - ★ See “OPERATION 6.1 LOADING/UNLOADING” for details.
  - ★ See “OPERATION 6.3 CAUTIONS WHEN LOADING MACHINE” for details.

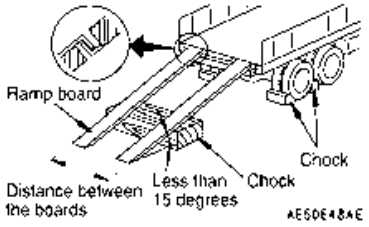

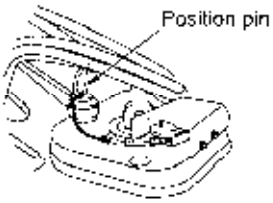

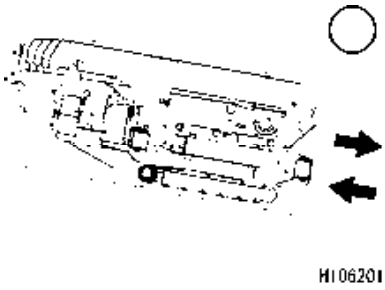

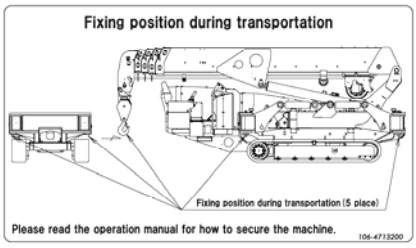

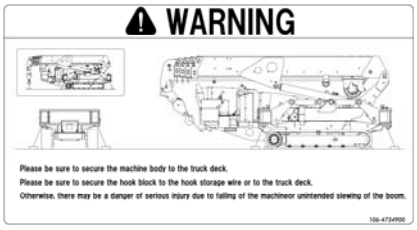

CAUTIONS DURING TRANSPORT

Observe the related regulations and transport safely.

https://truckmanualshub.com/

CAUTIONS WHEN LOADING/UNLOADING WITH CRANE

Be careful of the following when loading or unloading the Machine by hoisting with a crane.

- When hoisting the machine, do not use the brackets on the top face of the boom.
- When hoisting the machine, attach slings (1) such as shackles to the holes (4 locations) of outrigger rotary and hang wire ropes (2) (4 pieces) on the hook (3).
- Only use crane, wire ropes (2) and slings (1) (e.g. shackles) which are approved and capable of lifting the mass (weight) of the machine.
  When lifting up the machine with 4-rope lifting at 4 locations, see the plate shown in the figure on the right for the load applied to each wire rope.
- When hoisting the machine, be sure to set the machine to the “traveling posture” and securely insert the position pins (4 pieces) to the outrigger rotary parts.
  The center of gravity of the machine is determined in the condition where the machine is in the “traveling posture”.
  ★ See “OPERATION 2.5 MACHINE TRAVELLING POSTURE” for details.
- When transporting the machine with a crane, use a proper carriage deck as shown in the figure on the right, for safe transportation.

★ **Recommended sling**

- Wire rope (front 2 ropes): breaking load 10.0 t or more
- Wire rope (rear 2 ropes): breaking load 10.0 t or more
- Shackle: working load 2.5 t or more

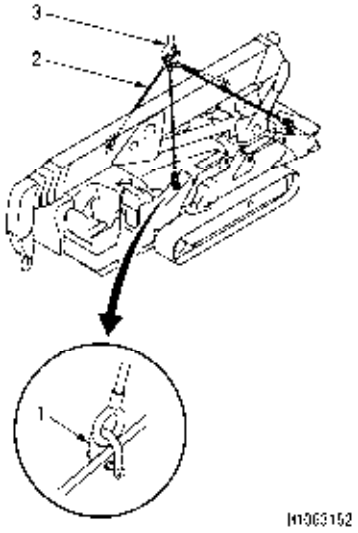

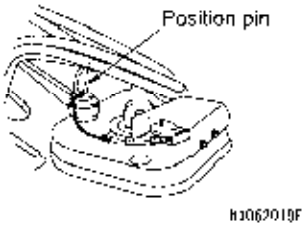

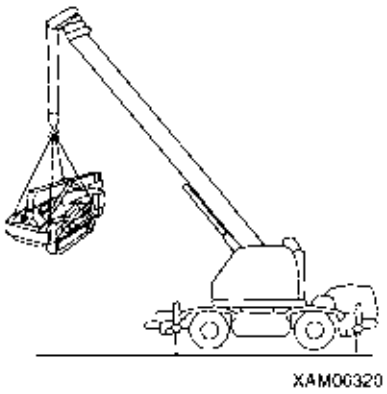

Hoisted weight of main unit (standard specifications)

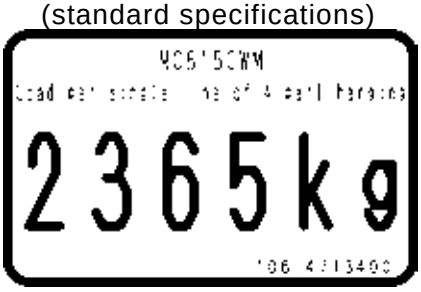

Hoisted weight of main unit (engine and electric motor specifications)

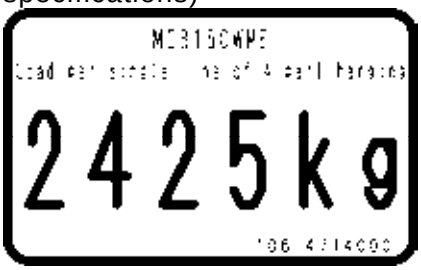

https://truckmanualshub.com/

6. BATTERY HANDLING PRECAUTIONS

CAUTIONS WHEN HANDLING BATTERY

The battery fluid contains diluted sulphuric acid and generates hydrogen gas, and causes accidents and fires if handled improperly, so always observe the following precautions:

- Do not let a cigarette or any fire source approach the battery.
- Always wear protective glasses and rubber gloves before handling the battery.
- If the battery fluid contacted clothing or skin, immediately wash away by huge quantity of water.
- If the battery fluid enters your eyes, wash immediately with water and see a doctor as soon as possible.
- If you have accidentally swallowed the battery fluid, immediately drink a huge quantity of water, milk, raw egg or vegetable oil, and see a doctor as soon as possible.
- Wipe with a wet clean cloth when cleaning the battery upper surface or related part. Do not use organic solvent or detergent such as petrol or paint thinner.
- Fully tighten the battery cap.
- If the battery fluid is frozen, do not charge battery or start the engine using other power source. Such act may cause the battery to catch fire.
- Defrost the battery fluid and check for battery fluid leak before charging or starting the engine.
- Always detach the battery from the Machine frame before charging the battery.

A0055040

A0056090

A0055170

CAUTIONS WHEN STARTING UP USING BOOSTER CABLE

Wrong booster cable connection method may result in fire, so always observe the following.

- Start the engine by two persons, with one standing on the driving operation position in the travel operation panel side.
- When starting the engine using other Machine, be careful to prevent contact between the normal Machine and broken Machine.
- Keep the starter switch key of both the normal Machine and the broken Machine in “OFF” position when the booster cable is connected.
- Do not connect to wrong side [connecting (+) to (-), (-) to (+)] when connecting the booster cable.
- Start connecting from (+) terminal first, but start disconnecting from (-) terminal (ground) first.
- Connect the ground to the negative (-) terminal of the battery of the broken machine when connecting the ground as the last procedure.
  - ★ See “OPERATION 9.4 STARTING ENGINE WITH BOOSTER CABLE” for details.
- Avoid contact between clips of the booster cable, and contact between a clip and the Machine when disconnecting the booster cable.

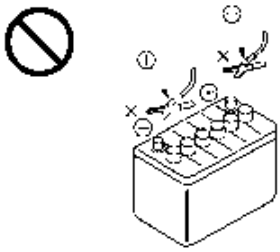

XAM22720

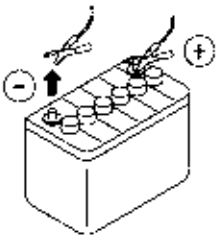

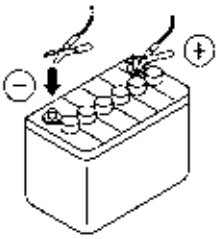

XAM04590

https://truckmanualshub.com/

CAUTIONS WHEN CHARGING BATTERY

Improper handling when charging the battery may cause the battery to explode. Follow the manuals attached to the Machine and the charger, and always observe the following.

★ See “OPERATION 9.3 CAUTIONS IN CHARGING BATTERY” for details.

- Carry the charger to a location with good ventilation, then remove the battery cap. Doing so causes the hydrogen gas to disperse and prevents explosion.
- Adjust the charger voltage to suit the voltage of the battery to charge. Mistake in adjusting the voltage may cause explosions due to overheat and ignition of the charger.
- Securely fix the (+) charge clip of the charger to the (+) terminal of the battery, then securely fix the (-) charge clip to (-) terminal of the battery.
- Set the charge current to no more than 1/10 of the rated capacity of the battery, or, in case of quick charge, set to the rated capacity of the battery or smaller.
- Excessive charge current may cause fire and explosions due to fluid leaks or fluid deficiency.

7. MAINTENANCE PRECAUTIONS

7.1 PRECAUTIONS BEFORE MAINTENANCE

FAILURE REPORT

Execution of maintenance not described in our manual may cause unexpected failures.
Ask us or our sales service agency for repair.

CLEAN BEFORE INSPECTION OR MAINTENANCE

- Before starting an inspection or maintenance, clean the Machine and prevent rubbish from entering the Machine and make sure the safety will be ensured during maintenance.
- Attempt to inspect or maintain the Machine still dirty not only lessens chance of locating faulty part, but may cause rubbish or mud entering your eye, or slipping and tripping that result in injury.
- Always observe the following when washing the vehicle.
  - Use antislip shoes to prevent slips and trips caused by wet foothold.
  - Put on protective equipment when using a high pressure steam car washer. Avoid an accident from high pressure water which causes skin laceration or mud or other substance to fly to eyes.
  - Do not directly spray water onto the electrical system (sensors, connector (1), receiving box and related). Water entering the electrical system is dangerous and will cause faulty or improper operations.

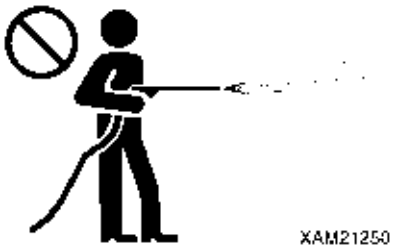

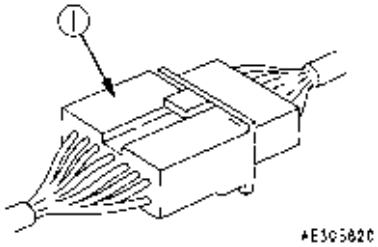

TIDY UP WORKPLACE

Always tidy away tools, hammers and other things that obstruct the working area; grease and oil should be wiped off immediately after use.
An untidy workplace may cause safety hazards and result in injuries to personnel.

FOLLOW SUPERVISOR'S INSTRUCTION DURING TEAMWORK

Appoint a person who supervises the work and follow his/her instructions in case of Machine repair or installing/uninstalling a work device.
Unexpected accidents due to misunderstood communication between workers may occur during teamwork.

USE APPROPRIATE TOOLS

Do not use damaged or deteriorated tool, or use a tool for a purpose other than the proper purpose. Use tools suitable for the maintenance work.
Entrance of a broken piece of a tool such as a boss with crashed head or a hammer may destroy eyesight.

https://truckmanualshub.com/

HANDLING ILLUMINATION DEVICES

- Use explosion proof illumination device when inspecting the fuel, oil, battery fluid or similar substance. Failure to use explosion proof illumination device may cause serious fire and explosion.
- Attempt to work without using illumination device in a dark place may cause injury or other issue. Always use illumination device.
  Do not use a lighter or other burning object instead of the illumination device even if it is dark. Such use may cause fire, and furthermore the battery gas may catch fire and explode.

STOP ENGINE BEFORE INSPECTION OR MAINTENANCE

- Before inspection or maintenance, always park the Machine at a location where the ground is level and firm, and rock-falls, landslides and flooding do not occur, fully retract and lower the boom, and stop the engine.
- Operate each of the crane operation levers back and forth as well as leftward and rightward 2 or 3 times to relieve the pressure remaining in the hydraulic circuits.
- Apply pawls to prevent crawler from moving.
- Persons in charge of the maintenance should pay attention to prevent parts of the body and clothes from contacting the moving parts.

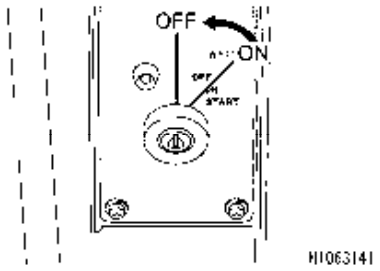

FIRE RISK PREVENTION

Always observe the following during maintenance where the fuel, oil, battery or other substance that may catch fire is handled.

- Keep the fuel, oil and any other easily combustible oil and fats away from fire during storage.
- Do not leave the site when replenishing the fuel or oil.
- Use incombustible cleaning oil for the objects such as the components, and do not use diesel fuel, petrol or anything else that may catch fire.
- Do not smoke during inspection and maintenance. Smoke at a designated location.
- When inspecting fuel, oil, battery fluid or similar, use explosion proof illumination devices but do not use fire of a lighter or a match for illumination.
- Loosened or damaged electrical connections may short the circuit and result in fire. Inspect accordingly before starting the work.
- Check to make sure a fire extinguisher is near the inspection/maintenance site.

https://truckmanualshub.com/

7.2 PRECAUTIONS DURING MAINTENANCE

NO ENTRY OF UNAUTHORIZED PERSONNEL

Do not allow anyone, other than the necessary personnel, to enter the site during maintenance. Post a guard, if necessary.
Take special care in case of polishing, welding work, or digging work.

MEASURES UPON FINDING ABNORMALITY DURING INSPECTION

- Always repair whenever any abnormality is found during inspection.
  Attempt to use without repairing the defect may cause accidents.
- Ask us or our sales service agency for repair depending on the failure type.

DO NOT DROP TOOL OR PART INSIDE MACHINE

- Do not drop any bolt, nut or tool inside the Machine when inspecting while opening the inspection port or tank replenishment port. Dropping object may damage the Machine or cause the Machine to operate improperly and thus may cause accidents.
  If anything drops, always retrieve it.
- Do not keep anything unnecessary for the inspection in your pocket.

NOISE CAUTION

Large noise in the surroundings may cause hearing difficulty or deafness.
Use ear protection or ear plugs during long-term noise exposure, such as engine maintenance.

WORK BY AT LEAST TWO PERSONS DURING MAINTENANCE WITH ENGINE RUNNING

To prevent accidents, do not attempt maintenance when the engine is running.
Always observe the following in case of maintaining with the engine running for unavoidable reason.

- One person should sit at the driver's seat. Keep checking each other while ensuring that the engine can be stopped at any time.
- Be especially careful when working near a rotating part because you may be entangled.
- Do not touch operation levers. If it is unavoidable to use the operation levers, always give a sign to the other person and let him/her evacuate to a safe place.
- Do not touch the alternator belt or other parts, as this may break tools or severe limbs.

A0055210

CAUTIONS WHEN WORKING UNDER MACHINE

- Park the Machine on a level and firm place, and fully retract and lower the boom.
- Before the maintenance under the Machine, extend the outriggers to maximum so the Machine lifts. At this moment, insert support platforms (jack stands) below the front and rear parts of the machine frame to stabilize the machine.

A0055140

https://truckmanualshub.com/

CAUTIONS WHEN WORKING ON MACHINE

- Tidy the footing to avoid falling and always observe the following precautions during maintenance on the Machine.
  - Do not spill oil or grease.
  - Always tidy away tools.
  - Beware of the footing when walking.
- Do not jump from the Machine under any circumstances. Use a platform, and secure your body in three locations (both feet and one hand, or both hands and one foot) when climbing up or down the Machine.
- Use protective equipment that suit the work.
- Never step on the boom, outrigger or machinery cover to prevent accidents such as falling or tripping due to slippage.

CAUTIONS WHEN REPLENISHING FUEL OR OIL

Attempt to let a fire approach the fuel or oil may result in catching fire.
Diesel fuel is used as the fuel and thus requires extra effort to observe the following.

- Stop the engine when refilling.
- Do not smoke when refilling.
- Immediately wipe away spilt fuel or oil.
- Securely tighten the fuel and oil caps.
- Supply fuel/oil at a location with good ventilation.
- Do not leave the site when replenishing the fuel or oil.

BEWARE OF CHIPS WHEN WORKING WITH HAMMER

When using a hammer, always wear protective equipment such as safety goggles and a helmet. Also, insert a brass bar or similar object between the hammer and target object.
Hitting hard metal parts such as a pin or bearing may cause splintering or chipping, which in turn could cause eye injuries if safety precautions are not met.

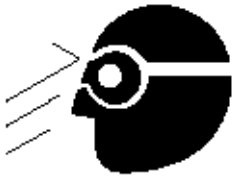

https://truckmanualshub.com/

CAUTIONS DURING WELDING REPAIR

Weld in a location with good facility, and, only authorized personnel are permitted to weld. Unauthorized personnel are strictly prohibited since risks such as gas generation, fire and electrical shock are present when welding.
The personnel authorized to weld are requested to always observe the following.

- Disconnect the battery terminals to prevent battery explosions.
- Peel off the paint from the welding section to prevent gas generation.
- Attempt to heat up a hydraulic machinery, piping or a section near such parts may cause combustible vapor or mist to be generated and catch fire. Avoid heating such section.
- Directly heating a pressurized piping or rubber hose may cause a sudden snip. Apply a fire protection cover.
- Disconnect the electro-tap connectors of the remote control system receiver, controller, and monitor.
- Wear protective equipment.
- Always ventilate the area.
- Keep combustibles away from the area and prepare a fire extinguisher.
- Do not ground to a location near electrical part. Such may cause the electrical part to malfunction.

DISCONNECT BATTERY TERMINAL

Disconnect (-) terminal of the battery and stop the electrical flow before repairing the electrical system or starting an electrical weld.

★ See “OPERATION 9. HANDLING BATTERY” for details.

CAUTIONS WHEN ADJUSTING CRAWLER TENSION

- Grease is sealed inside the crawler tension adjuster. The grease is at a high pressure because of the tension of the crawler. Attempt to release the grease without observing the following precautions may cause the grease valve to pop out and result in serious accident.
- Do not loosen the tension adjustment grease valve one full turn or above. Doing so may cause the grease valve to pop out.
- To avoid the risk during tension adjustment, do not place your body in front of the grease valve.

  ★ See “INSPECTION AND MAINTENANCE 9.2 [1] INSPECTION/ADJUSTMENT OF RUBBER TRACK TENSION”.

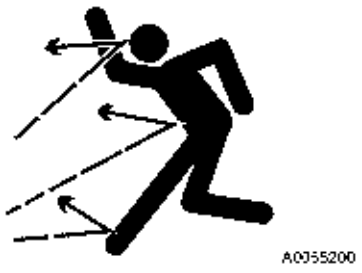

https://truckmanualshub.com/

CAUTIONS WHEN HANDLING HIGH PRESSURE HOSE

Oil leaking from high pressure hose may cause fire or accident due to faulty operation.
Whenever a damaged hose or loosened bolt is found, abort working and ask us or our sales service agency for a repair.

- Replacement of high pressure hose requires experienced skill. In addition, the tightening torque is decided by the hose types and size.
  Customers are prohibited to repair.
- If any of the following conditions is found, replace the applicable parts:
  - Hose sleeve damage or leak.
  - Scratch or truncation of the coat, or exposure of reinforcing layer of a wire.
  - Coat is partially swollen.
  - Indication of twist or collapse on a movable part of hose.
  - Foreign object buried in coating.
  - Hose sleeve deformation.

HIGH PRESSURE OIL CAUTIONS

Failure to check to make sure the pneumatic circuit pressure is relieved before inspection or replacement of a high pressure piping or hose may result in accidents.
Strictly observe the following.

- Do not start any inspection or replacement before the pressure dissipates.
- Put on safety goggles and leather gloves.
- When a piping or hose leak exists, the piping/hose itself or its vicinity or the ground is wet. Crack or inflation of piping or hose is likely. Contact us or our sales service agency for repair.
- High pressure oil leaking through a small hole may puncture the skin or destroy eyesight upon contact.
  If this happens, wash away with flowing water and see the doctor as soon as possible.

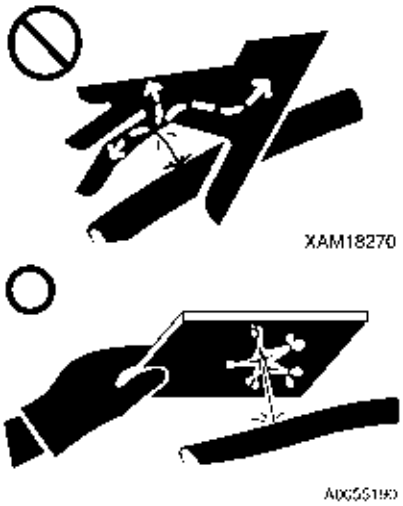

CAUTIONS WHEN TEMPERATURE IS HIGH

Parts such as the engine, oil in various parts, exhaust system manifold and muffler are at high temperature immediately after stopping of the engine.
Attempt to remove the cap or execute maintenance such as oil draining, water draining or filter replacement in this condition may result in burns.
Wait until the temperature lowers, then execute the inspection/maintenance following the procedure described in this manual.

★ “INSPECTION AND MAINTENANCE 9.1.2 INSPECTION BEFORE STARTING ENGINE”: Inspection of cooling water level, oil level in engine oil pan and oil level in hydraulic oil tank

★ “INSPECTION AND MAINTENANCE 9.8 EVERY 250 HOURS MAINTENANCE”: Replacement of engine lubricating oil and filter cartridge

★ “INSPECTION AND MAINTENANCE 9.9 EVERY 500 HOURS MAINTENANCE”: Replacement of hydraulic oil return filter

★ “INSPECTION AND MAINTENANCE 9.10 EVERY 1000 HOURS MAINTENANCE”: Cleaning inside cooling system and replacement of oil in hydraulic oil tank

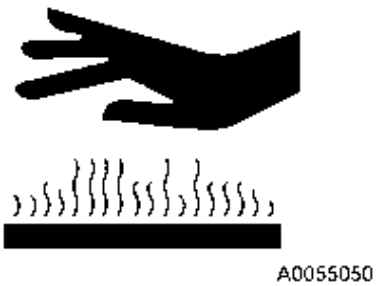

https://truckmanualshub.com/

CHECKS AFTER INSPECTION/MAINTENANCE

Failure to execute an inspection/maintenance item or failure to check the function and operation of the maintained part may cause an unexpected fault which may result in accidents. Strictly observe the following.

- Checks while engine is stopped
  - Check for unexecuted inspection/maintenance.
  - Check that inspection/maintenance was completed without errors.
  - Check for any dropped tools or parts. Ones caught in the inside or lever related link mechanism in particular pose danger.
  - Check for any fuel leak, water leak, oil leak, bolt loose and similar issues.
- Checks while engine is running

  Take special care when checking while the engine is running, referring to “Work by at least two persons during maintenance while engine is running” section.
  - Check that the inspected/maintained parts operate normally.
  - Check that issues such as an oil leak do not occur when load is applied to the oil pressure by increasing the engine rotation.

CAUTIONS WHEN TREATING WASTE

To prevent environmental pollution, strictly observe the following:

- Never allow waste oil to flow into water systems, such as river or sewage system.
- Always drain into a container when draining the oil from the Machine.

  Do not directly drain to the ground under any circumstances.
- Observe the applicable legal regulations and rules when disposing of harmful substance such as the oil, fuel, solvent, filter or battery.

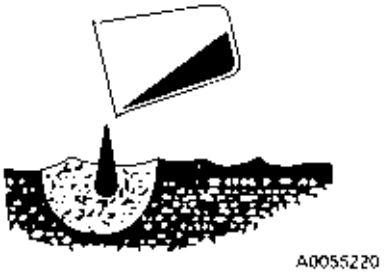

https://truckmanualshub.com/

8. SAFETY LABEL LOCATIONS

These labels should be kept clean at all times.

If these labels come off, re-attach the label or replace with a new one.

As shown below, there are labels other than safety labels which should be treated in the same way.

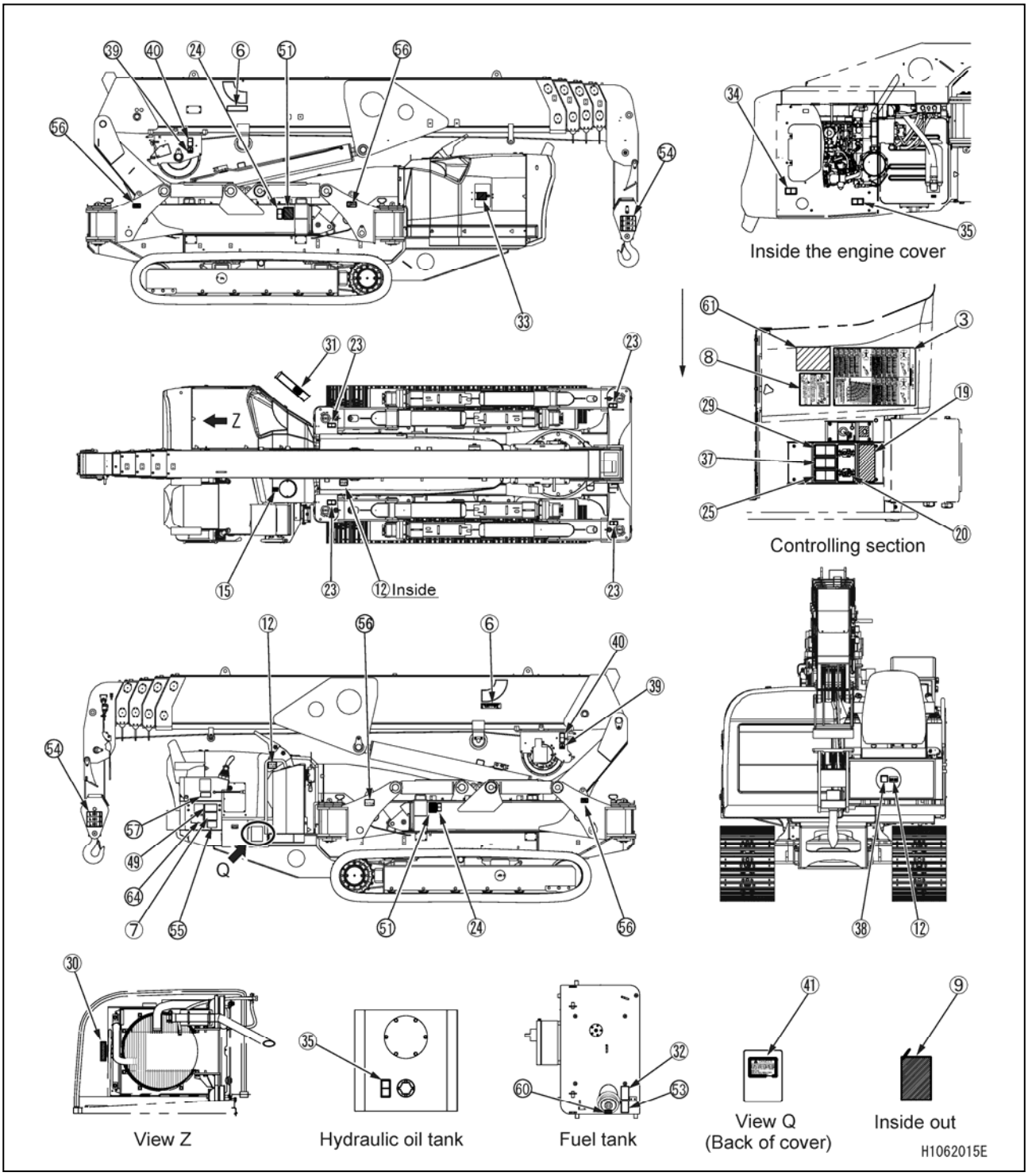

(3) Total load chart (106-2186300)

MINI-CRAWLER CRANE MC815C

MC815C Rated Total Load Chart

With outrigger extended to max span

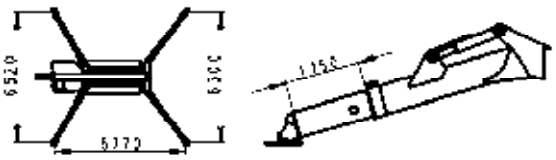

Crane work with outrigger extended to maximum								
Boom ①								
Working radius (m)	2.4	2.5	3.0	3.5	4.0	4.5	4.92	
Rated total load (kg) N	8090	7690	5390	5490	4190	4790	3790	
Rated total load (kg) P	8090	7690	6390	5490	4390	4790	3790	
Boom ①-②								
Working radius (m)	3.0	4.0	5.0	6.0	7.0	8.0	8.39	
Rated total load (kg) N	6390	4790	3790	3190	2690	2290	2090	
Rated total load (kg) P	6390	4790	3790	3190	2690	2290	2090	
Boom ①-②-③								
Working radius (m)	4.0	5.0	6.0	7.0	8.0	9.0	10.0	11.0	11.86
Rated total load (kg) N	4690	3590	3090	2590	2090	1690	1390	1040	990
Rated total load (kg) P	4690	3590	3090	2590	2190	1890	1490	1190	1040
Boom ①-②-③-④													
Working radius (m)	5.0	6.0	7.0	8.0	9.0	10.0	11.0	12.0	13.0	14.0	15.0	15.33
Rated total load (kg) N	3390	2690	2290	1990	1690	1490	1190	990	840	740	640	590
Rated total load (kg) P	3390	2690	2290	1990	1690	1490	1190	1040	890	840	740	690
Boom ①-②-③-④-⑤																
Working radius (m)	6.0	7.0	8.0	9.0	10.0	11.0	12.0	13.0	14.0	15.0	16.0	17.0	18.0	18.30
Rated total load (kg) N	2390	1890	1590	1490	1290	1090	990	840	740	640	590	490	440	340
Rated total load (kg) P	2390	1890	1690	1490	1290	1190	1040	990	840	740	690	590	540	440

With outrigger extended to medium

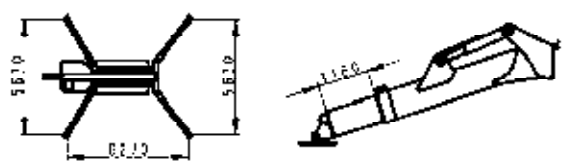

Crane work with outrigger extended to medium								
Boom ①								
Working radius (m)	2.4	2.5	3.0	3.5	4.0	4.5	4.92	
Rated total load (kg) N			6390	5290	4590	3990	3690	
Rated total load (kg) P			6390	5290	4590	3990	3690	
Boom ①-②								
Working radius (m)	3.0	4.0	5.0	6.0	7.0	8.0	8.39	
Rated total load (kg) N	6290	4590	3590	2990	2690	1690	1490	
Rated total load (kg) P	6290	4590	3590	2990	2190	1790	1590	
Boom ①-②-③								
Working radius (m)	4.0	5.0	6.0	7.0	8.0	9.0	10.0	11.0	11.86
Rated total load (kg) N	4590	3590	2990	2990	1690	1390	990	790	590
Rated total load (kg) P	4590	3590	2990	2990	1790	1490	1090	890	690
Boom ①-②-③-④													
Working radius (m)	5.0	6.0	7.0	8.0	9.0	10.0	11.0	12.0	13.0	14.0	15.0	15.33
Rated total load (kg) N	2990	2690	2090	1690	1390	990	790	590	490	440	290	240
Rated total load (kg) P	2990	2690	2090	1690	1490	1090	890	590	590	440	490	440
Boom ①-②-③-④-⑤																
Working radius (m)	6.0	7.0	8.0	9.0	10.0	11.0	12.0	13.0	14.0	15.0	16.0	17.0	18.0	18.30
Rated total load (kg) N	2190	1690	1690	1390	1190	990	990	840	740	640	590	490	440	340
Rated total load (kg) P	2190	1690	1690	1390	1190	990	990	840	740	640	590	490	440	340

With outrigger extended to maximum

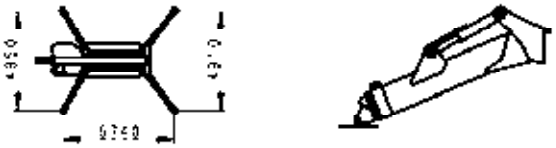

Crane work with outrigger extended to maximum								
Boom ①								
Working radius (m)	2.4	2.5	3.0	3.5	4.0	4.5	4.92	
Rated total load (kg) N			6190	5290	4590	3990	3690	
Rated total load (kg) P			6190	5290	4590	3990	3690	
Boom ①-②								
Working radius (m)	3.0	4.0	5.0	6.0	7.0	8.0	8.39	
Rated total load (kg) N	6190	4690	3890	3190	2690	1790	1590	
Rated total load (kg) P	6190	4690	3890	3190	2690	1790	1590	
Boom ①-②-③								
Working radius (m)	4.0	5.0	6.0	7.0	8.0	9.0	10.0	11.0	11.86
Rated total load (kg) N	4590	3690	2990	2490	1990	1590	1290	990	790
Rated total load (kg) P	4590	3690	2990	2490	1990	1590	1290	990	790
Boom ①-②-③-④													
Working radius (m)	5.0	6.0	7.0	8.0	9.0	10.0	11.0	12.0	13.0	14.0	15.0	15.33
Rated total load (kg) N	3090	2190	1690	1390	1190	990	790	590	490	390	290	240
Rated total load (kg) P	3090	2190	1690	1390	1190	990	790	590	490	390	290	240
Boom ①-②-③-④-⑤																
Working radius (m)	6.0	7.0	8.0	9.0	10.0	11.0	12.0	13.0	14.0	15.0	16.0	17.0	18.0	18.30
Rated total load (kg) N	2190	1490	1190	990	790	590	490	390	340	290	240	190	140	140
Rated total load (kg) P	2190	1490	1190	990	790	590	490	390	340	290	240	190	140	140

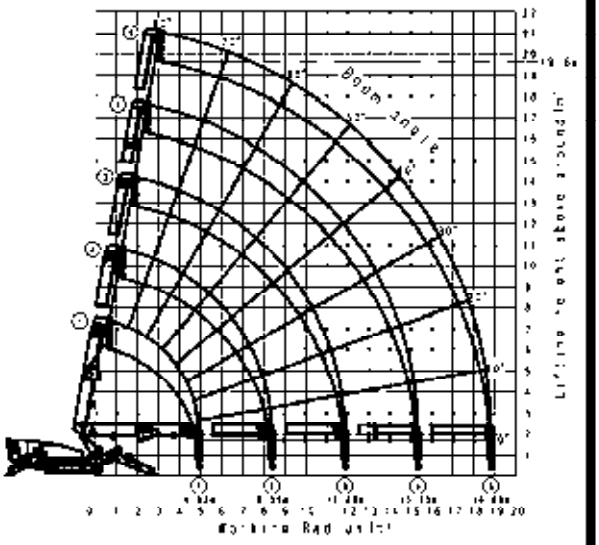

Notes:

1. The Rated Total Load Chart is based on equipment around the crane as your crane may tip over depend on the surface condition and where outrigger is placed.
2. The Rated Total Load Chart is based on geometrical working radius which includes a load due to hoisting. Reckless crane work is dangerous even if the load may be within the range shown in this Chart. Always work safely.
3. Depending on outrigger extent or on slewing, tipping over may occur even within the rated load.
4. The rated load includes the weight of load block(50kg).
5. The operation range chart does not include boom deflections.

106-2186300

(6) Minimum hoisting weight (106-4711700)
(2 places)

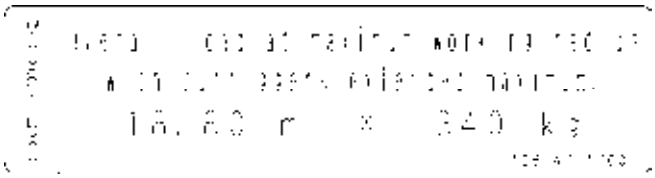

(7) Fixing bracket positions during transportation
(106-4713200)

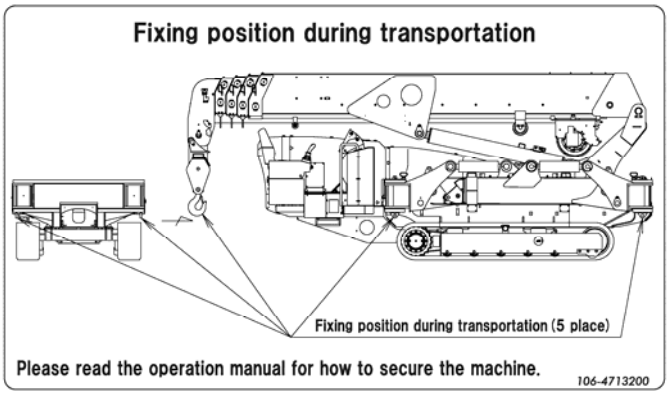

(8) Caution when traveling on slope
(349-4421100)

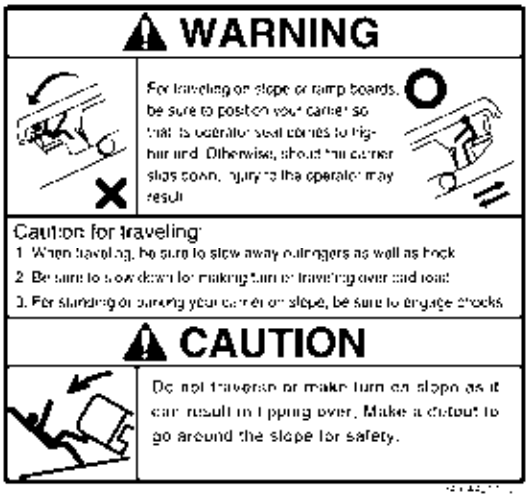

(9) Precautions when using(106-2186600)

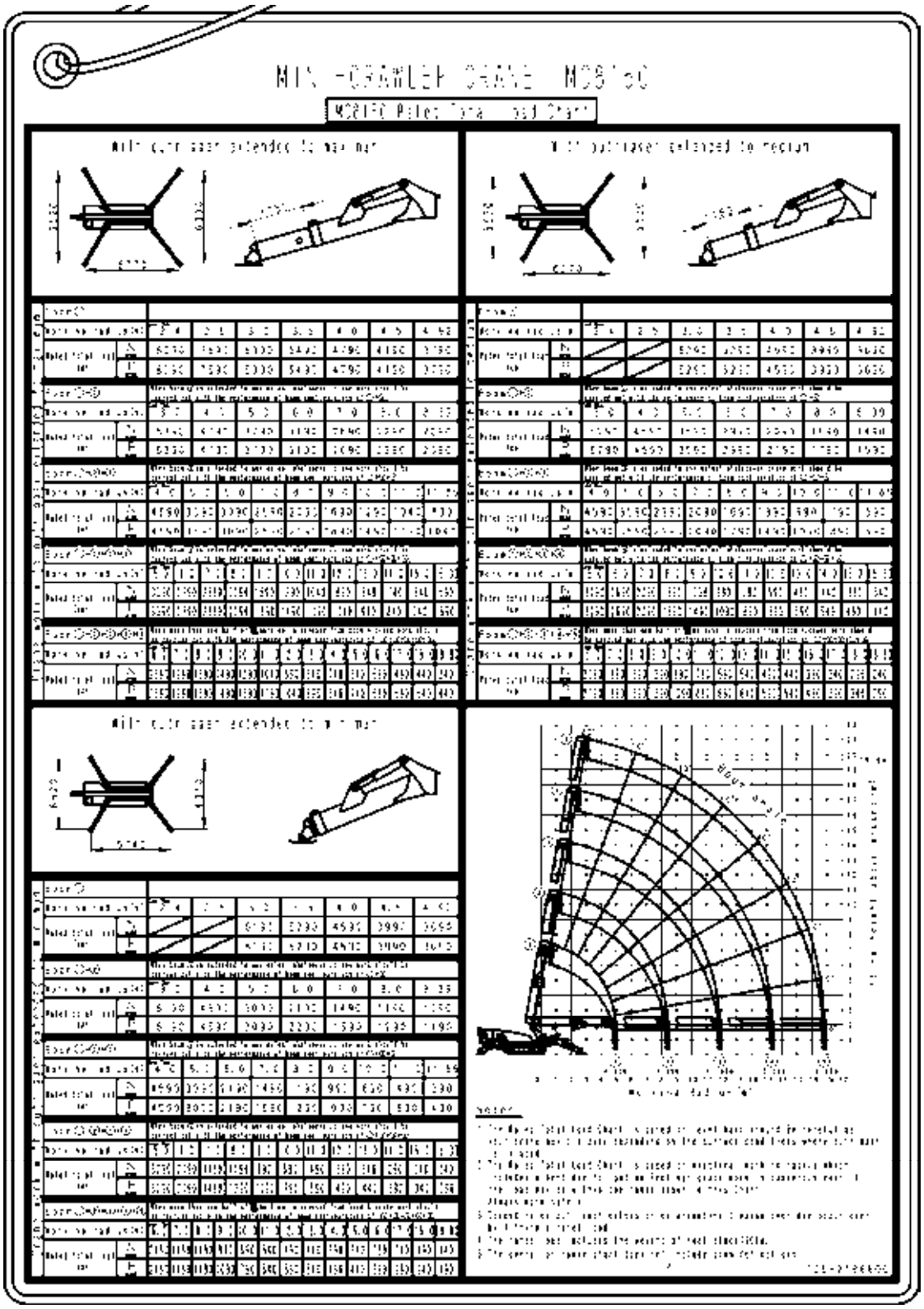

CHARACTERISTICS OF PERFORMANCE

(1) Even with same working radius the capacity varies depending on the slope of boom. In case further with change in working radius causes great change in the work that can be done.
(2) Lift up speed is at prime reduces as the work radius increases.
(3) Lift up speed fluctuation occurring to the extent of the maximum work radius of the crane.
(4) Slewing speed changes according to the direction of boom (forward, lateral, backward)

GENERAL RULES FOR USING CRANE

(1) Before work
1. Read the instruction manual carefully before starting to use your crane
2. Always perform the pre-driving inspection
3. For crane operation sure to secure the safety area so that the machine is in safe. Make sure all the four outriggers are placed
4. Outriggers should be set up to the firm ground or on a plate
5. When the outriggers provided beneath rubber tracks should be lifted off the ground by 50mm
6. Put out the outriggers. Insert the pins into the holes and fix the stopper. Use care not to catch your fingers in the pins
7. Check to see the overhoist alarm device works properly that buzzer sounds and it is not broken
(2) During work
1. Stable operation of crane and various safety devices are ensured and in crane work with the safety devices has failed it is dangerous and should not be continued. Be sure to observe the rated load chart
2. Do not perform overloaded operation which may cause damage to the crane
3. Crane work with erratic running at high speed is dangerous
4. Use care not to allow the load to swing during crane work.
5. Crane rated load (lifting capacity) is the maximum allowable weight. Exceeding the rated load may damage the crane and should be avoided
6. Do not leave your crane with load lifted
7. Do not allow anyone to enter under the boom during crane operation.
8. When crane acceleration button is depressed crane motion will be faster than normal and particular care should be used
(3) During travel
1. During travel, boom and hook block should be placed back respectively.
2. Be sure to place cover for wire rope on drum when travel over bad road.
3. For ranking on slope, be sure to add a chocks.
4. For travelling on public roads or narrow roads be sure to position your carrier so that it can crossing road comes to narrow end
(4) After work
Do not forget of work, be sure to turn OFF the main switch before exit.
(5) Inspection and maintenance
1. Pre-operational inspection and monthly or yearly periodical inspection should be made according to criteria.
2. Any defect should be corrected whenever it is found through inspection
3. Replacement of consumables and lubricating oil, replacement or replacement should be carried out in accordance with the standards as provided in instruction manual of the crane

MISCELLANEOUS

(1) Improper use of crane may cause serious accident including death or severe injury
(2) Before operating the crane, be sure to read manual or manual and learn its safe operation procedure

(12) Washing caution (350-4539700) (3 places)

(15) Hydraulic oil caution (104-4550800)

(19) Lever patterns (crane mode) (106-3397300)

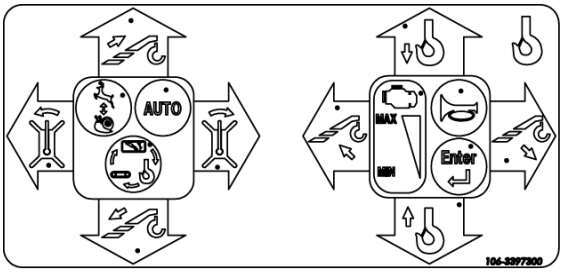

(21) Lever patterns (travel mode) (106-3397400)

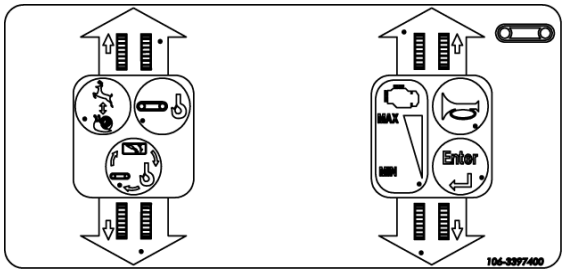

(23) Do not insert fingers into the hole (CL000100000) (4 places)

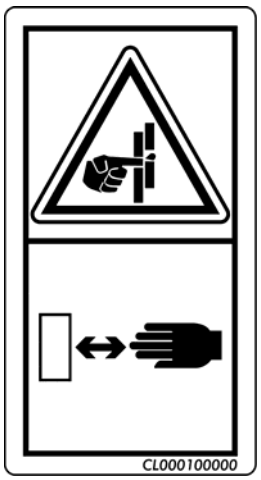

https://truckmanualshub.com/

(24) Outrigger (mind your feet) (CL000110000) (4 places)

(25) Outriggers extended (CL000040000)

(29) Read the user manual (CL000010000)

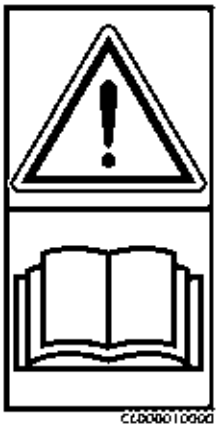

(30) Radiator caution (349-4427300)

(31) Exhaust gas caution (CL000060010)

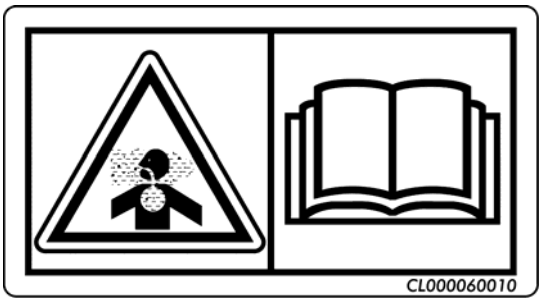

(32) Open flames prohibited (CL000050000)

(33) Engine cover caution (349-4427900)

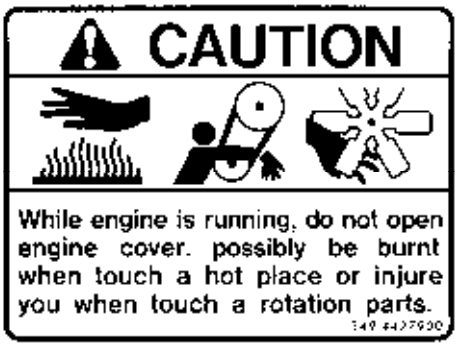

(34) Caution against rotating parts in the engine room (CL000080010)

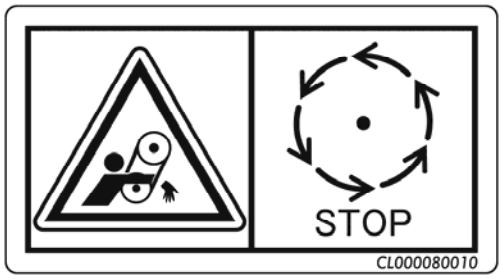

(35) Burn caution (CL000070010) (2 places)

(37) Do not enter under loads (CL000020000)

(38) Electric shock caution (553-4267300)

(39) Warning(553-4268000) (2 places)

(40) Winch entanglement caution (CL000090000) (2 places)

(41) Cautions on override switch (585-4739200)

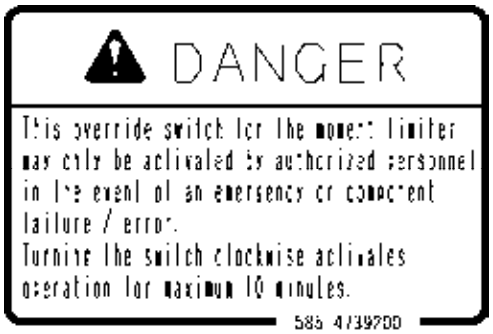

(49) Main unit 4 part hanging positions
(106-4713500)

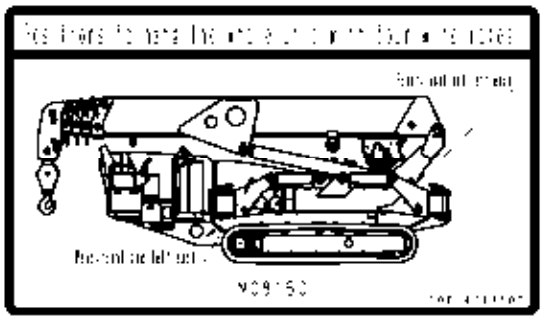

(51) Outrigger caution
(104-4549601) (4 places)

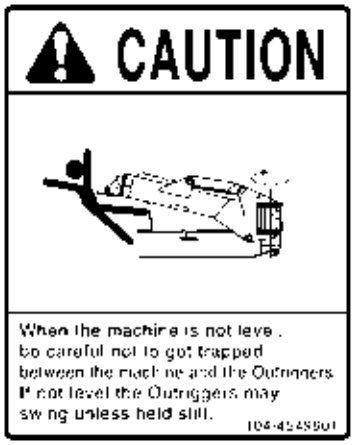

(53) Diesel fuel (585-4738600)

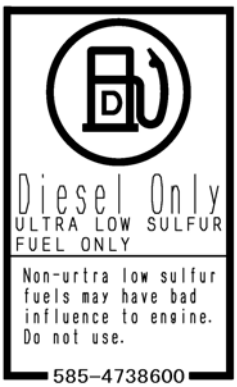

(54) Load for 6/4/2 wires hung
(106-4714400) (2 places)

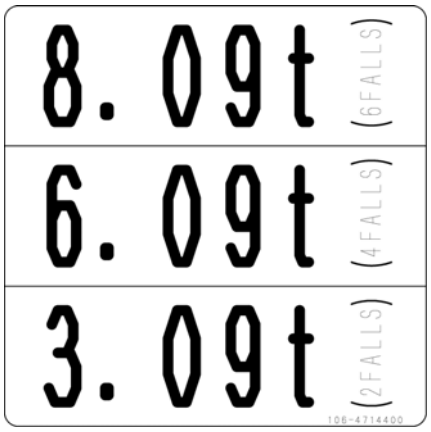

(55) Main unit total weight
(standard specifications)
(106-4718500)

MC815CWM MACHINE WEIGHT	
Component	Weight
Main Unit	9460kg
Electric Unit	+240kg
Fly jib	+490kg
Searcher Hook	+60kg
Rubber Pads	+220kg

106-4718500

(56) Load per single line of 4 part hanging (standard specification) (106-4713400) (4 places)

(56) Load per single line of 4 part hanging (engine with electric motor specification) (106-4714000) (4 places)

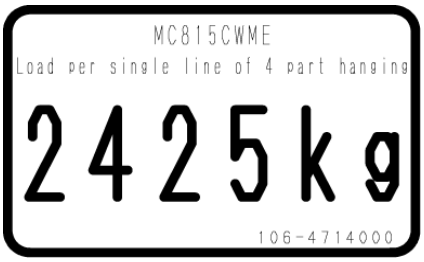

(57) Fire extinguisher caution (103-4604800)

(60) EPA regulation (114110-07761)

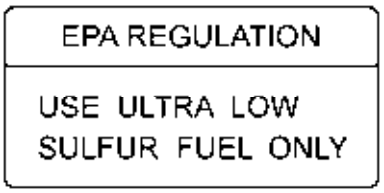

(61) Working radius / Lifting height (Pick & Carry) (106-4722000)

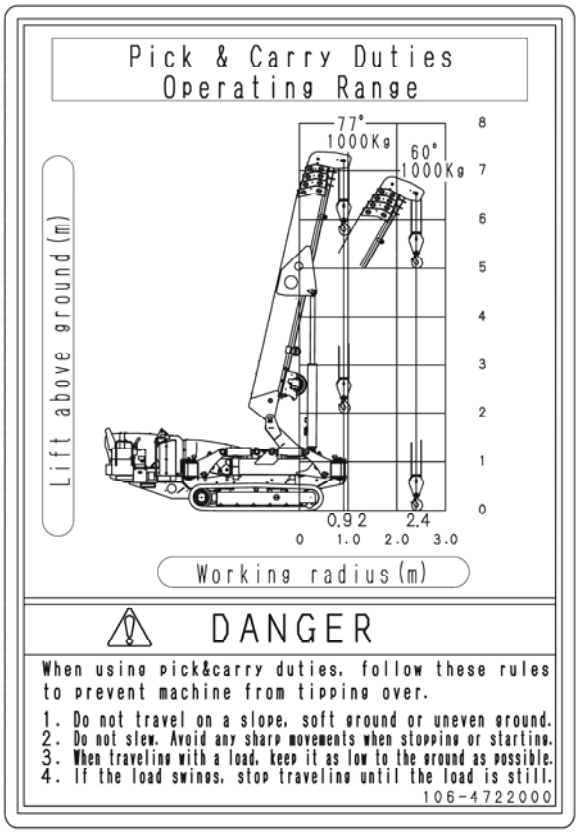

(64) Cautions when loading machine (106-4734900)

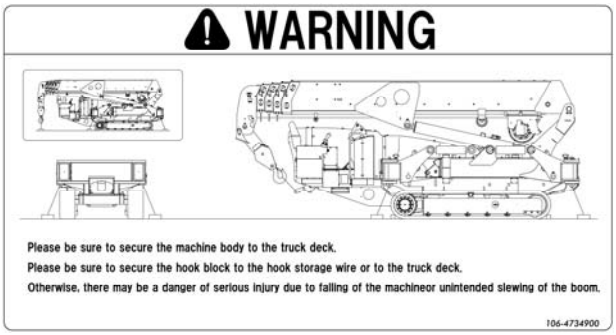

https://truckmanualshub.com/

This Page Intentionally Left Blank.

https://truckmanualshub.com/

OPERATION

1. NAME OF EACH SECTION	74
2. OPERATION	137
3. OPERATING BY REMOTE CONTROL	182
4. OPERATING MACHINE WITH ENGINE & ELECTRIC MOTOR	207
5. HANDLING WIRE ROPE	214
6. TRANSPORTATION	217
7. HANDLING MACHINE IN COLD ENVIRONMENT	220
8. LONG-TERM STORAGE	222
9. HANDLING BATTERY	224
10. HANDLING REMOTE CONTROLLER BATTERY	229
11. TROUBLESHOOTING	232

1. NAME OF EACH SECTION

1.1 MACHINE UNITS

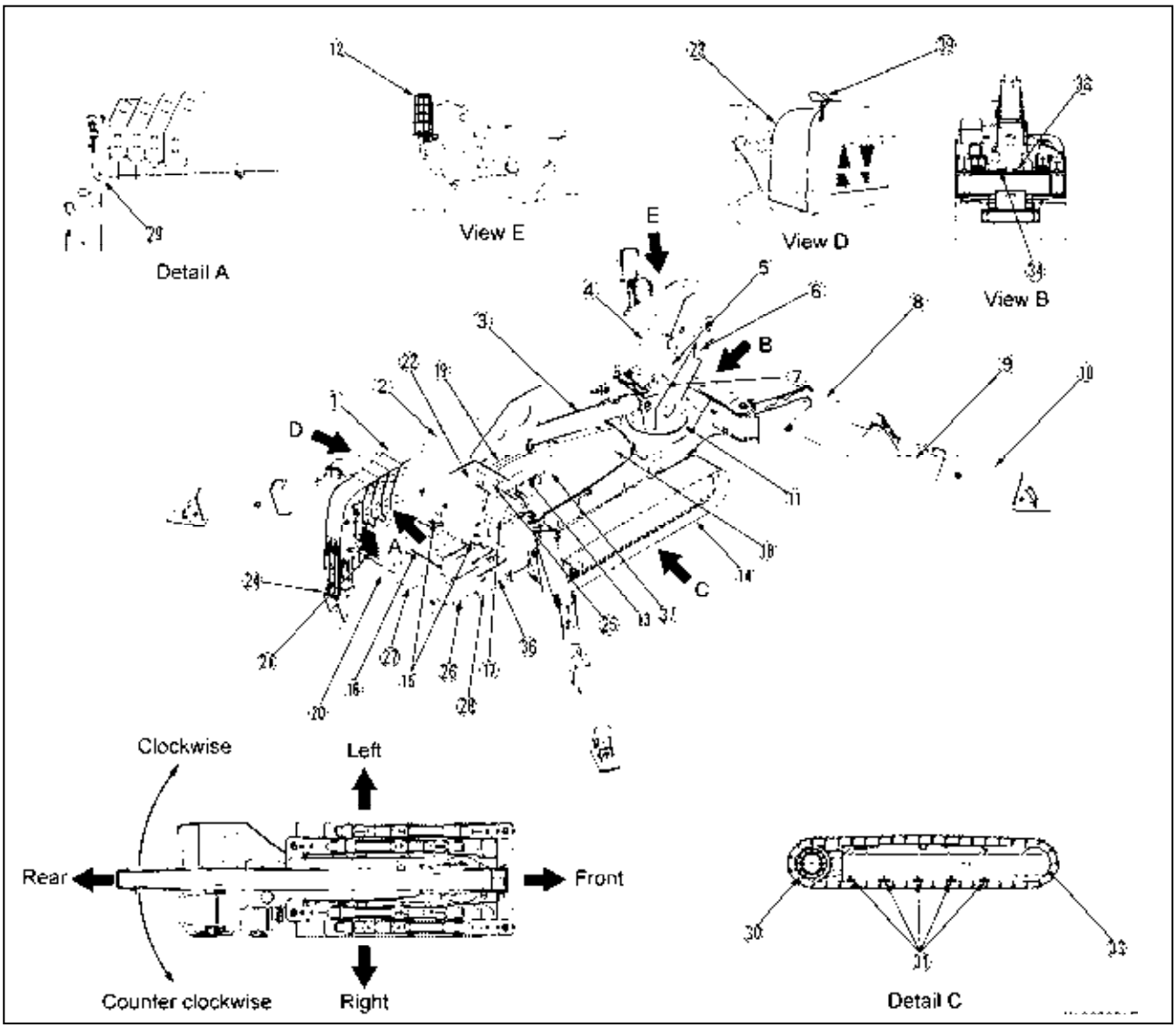

(1) Boom
(2) Boom telescoping cylinder (Inside the boom)
(3) Boom derricking cylinder
(4) Angle indicator
(5) Winch
(6) Post
(7) Moment limiter converter
(8) Outrigger ground cylinder
(9) Outrigger extension cylinder (incorporated into box)
(10) Outrigger
(11) Slewing system
(12) Tricolor revolving light
(13) Inverter panel (inside machinery cover) (for machines with engine & electric motor)
(14) Crawler belt
(15) Operating sections
(16) Operator seat
(17) Monitor
(18) Machinery cover R
(19) Machinery cover L
(20) Radiator grille
(21) Radiator cover
(22) Operation side cover
(23) Engine cover
(24) Hook block
(25) Hydraulic oil tank (inside operation side cover)
(26) Fuel tank
(27) Power supply box (for machines with engine & electric motor)
(28) Battery box
(29) Over hoist detector
(30) Idler
(31) Track roller
(32) Travelling motor and sprocket
(33) Carrier roller
(34) Headlight
(35) Remote-control receiver (radio control)
(36) Override switch
(37) Power unit (inside machinery cover) (for machines with engine & electric motor)
(38) Front view camera
(39) Left side-view camera

https://truckmanualshub.com/

1.2. DESCRIPTION OF CONTROLS

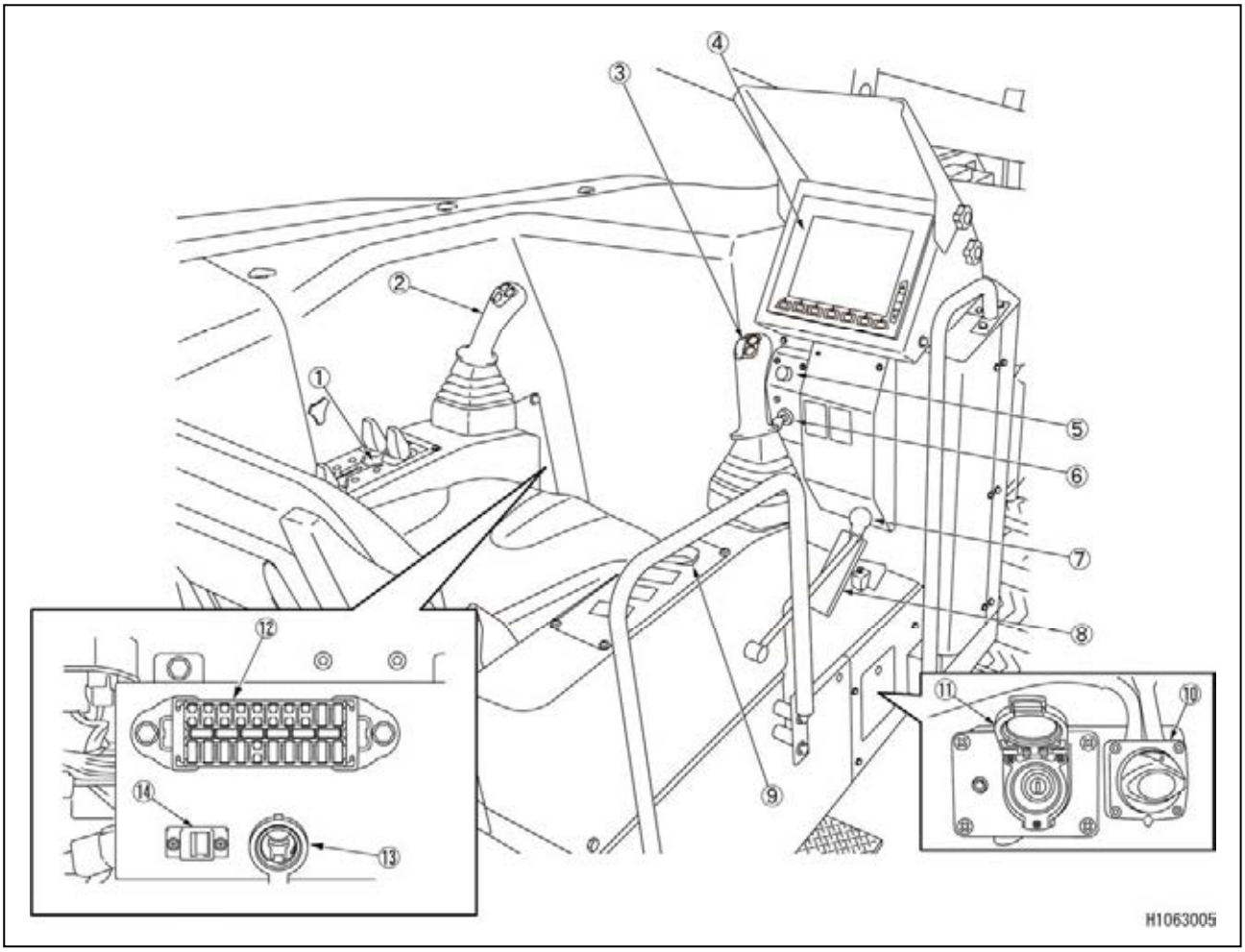

(1) Outrigger operation panel
(2) Left control lever
(3) Right control lever
(4) Monitor
(5) Emergency stop switch
(6) Starter switch
(7) Lock lever
(8) Accelerator pedal
(9) Light switch
(10) Disconnect switch
(11) Override switch
(12) Fuse box
(13) Cigar socket
(14) Maintenance USB port

https://truckmanualshub.com/

1.2.1. DESCRIPTION OF MONITOR

[1] MONITOR DISPLAY (COMMON TO ALL MODES)

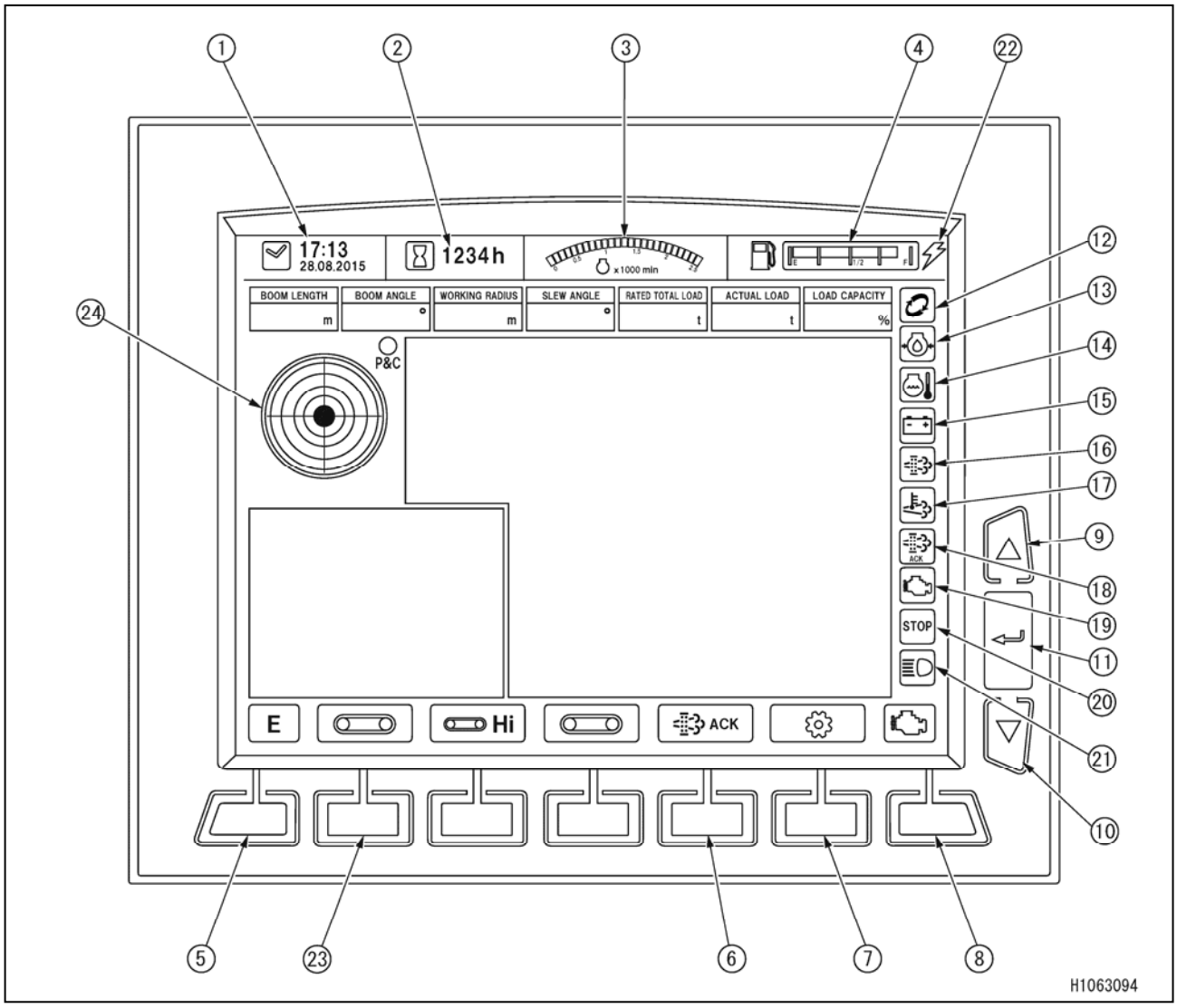

(1) Date & Time display
(2) Hour meter
(3) Engine speed
(4) Fuel gauge
(5) Eco mode switch / Boom lift bypass switch
(6) DPF regeneration switch
(7) Setting switch
(8) Engine and electric motor switch
(9) Pop-up select switch (up)
(10) Pop-up select switch (down)
(11) Enter switch
(12) Replacement reminder
(13) Engine oil pressure
(14) Engine coolant temperature
(15) Charge
(16) DPF regeneration request lamp
(17) Exhaust temperature alarm lamp
(18) DPF regeneration lamp
(19) Failure
(20) Emergency stop lamp
(21) Light
(22) Electricity on lamp
(23) Mode selector switch (travel/outrigger/crane)
(24) Levelling instrument

https://truckmanualshub.com/

[1] Date & Time display
Displays the current time and date.
Example: 17:13 28-08-2015

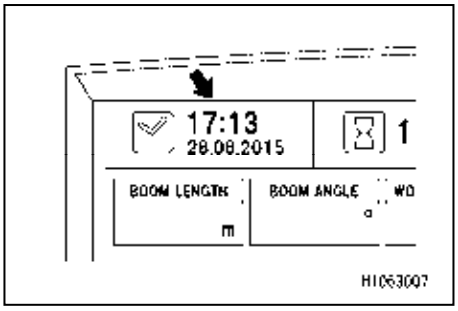

[2] Hour meter
Displays total operation hours of the machine.
Use this value as a reference for periodical check intervals.
When the starter switch is in the “ON” position with the engine running or the machine power source set to the electric motor, the meter indication increases even if the machine or the electric motor is not working.
The meter indication increments are “1” every one hour of machine operation, regardless of the engine or motor speed.

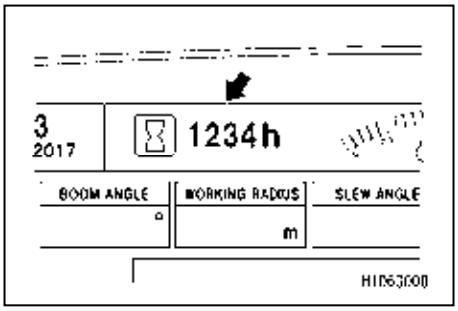

[3] Engine Speed
Indicates the number of engine revolutions per minute with a bar indication.

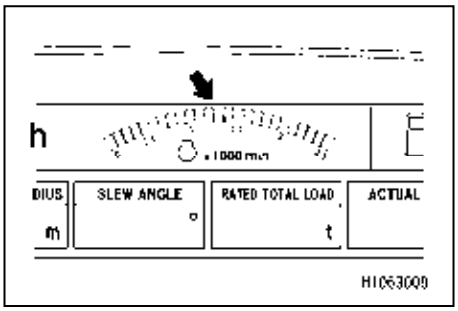

[4] Fuel gauge
Indicates the remaining amount of fuel contained in the tank when the starter switch is set to the “ON” position.
If the fuel level becomes low during operation, immediately stop the operation and replenish.

NOTES
Note that the fuel gauge may not indicate a correct fuel level immediately after the starter switch is set to the “ON” position. This, however, is not an error.

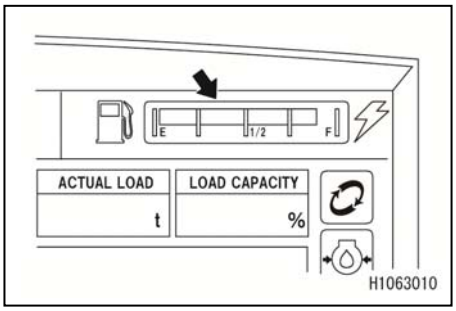

[5] Eco mode switch / Boom lift bypass switch

When Eco mode is selected, the upper limit for the engine speed in crane mode is set, restricting the fuel consumption.

・N : Normal Mode

・E : Eco Mode (setting upper limit for the engine speed)

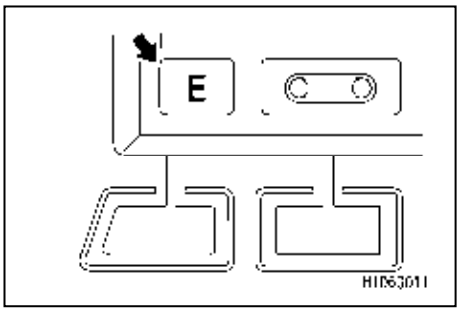

NOTES
Note that Eco Mode can be selected only when the crane is in Crane Mode.

While pushing the switch, or while touching the screen, the boom raise restriction under overload condition is canceled and you can raise the boom.

[6] DPF regeneration switch

If the DPF regeneration request lamp is lit, carry out DPF regeneration by pressing the DPF regeneration switch.

For the procedures for regeneration, refer to “OPERATION 2.27 DPF STATIONARY REGENERATION METHOD” section.

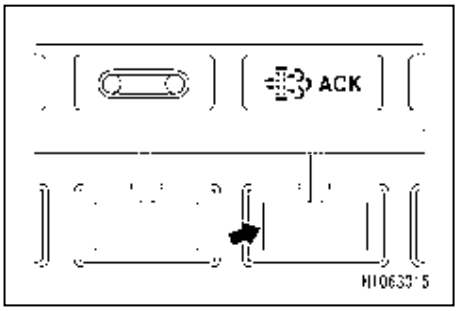

CAUTION
The machine cannot be operated at all during DPF stationary regeneration. **Regeneration takes about 25 to 30 minutes so complete preparations before implementing regeneration.**

[7] Setting switch

Use this switch to change the current screen to the User Initial Mode screen.

For details of the screen, refer to “OPERATION 1.2.1 [5] MONITOR DISPLAY (USER INITIAL MODE)” section.

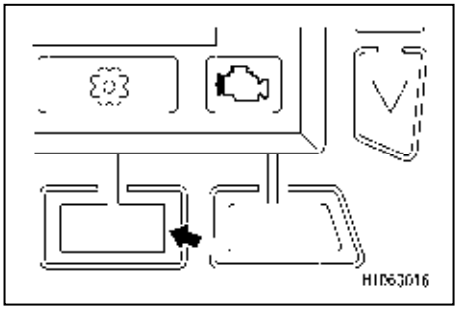

[8] Engine and electric motor switch

Use this to switch the power output source of the machine. Pushing this switch when the starter switch is in the “ON” position will display a pop-up screen. When the pop-up screen appears, you can change the power source mode between “Engine” and “Electric Motor” with the pop-up select switch (up/down) or touchscreen operations.

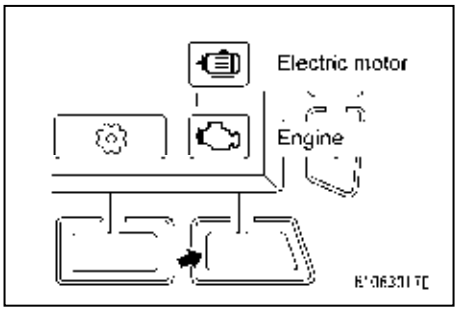

CAUTION
The power source mode cannot be changed during engine startup.

https://truckmanualshub.com/

[9] Pop-up select switch (up)
Use this switch to select a desired function on the currently displayed pop-up screen.

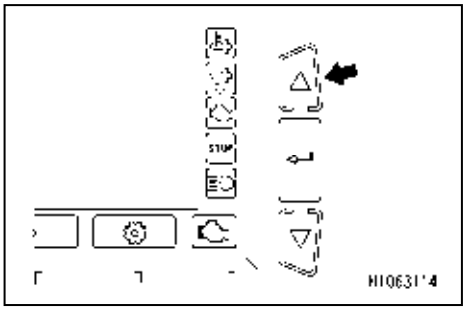

[10] Pop-up select switch (down)
Use this switch to select a desired function on the currently displayed pop-up screen.

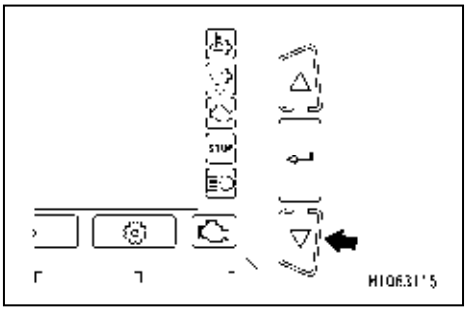

[11] Enter switch
Use this switch to select a desired function on the currently displayed pop-up screen.

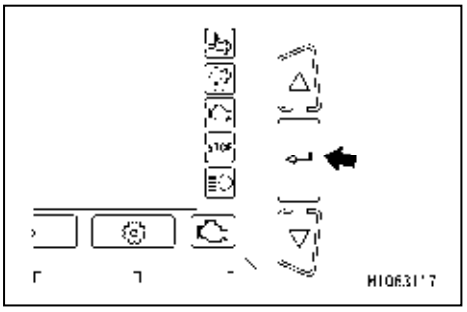

[12] Replacement remainder
Appears when consumables have reached the time for replacement.
See “OPERATION 1.2.1 [5] MONITOR DISPLAY (USER INITIAL MODE) [8] Consumables” for the details of consumables.

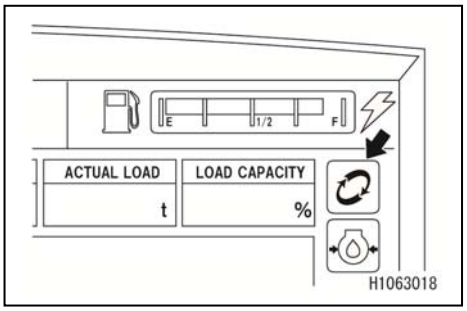

[13] Engine oil pressure
Indicates a drop in engine oil pressure.
If the oil pressure is normal, the monitor lights up when the starter switch is set to the “ON” position and goes out as engine speed increases after engine start.
If the monitor lights up during operation, engine oil pressure is dropping.
Stop the operation immediately, and check the engine oil filter for clogging and the engine lubricant quantity.

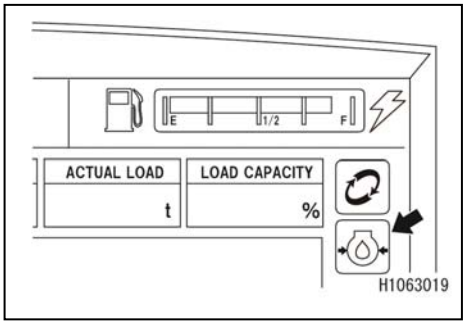

[14] Engine coolant temperature

Indicates an abnormality of engine coolant temperature.
It is normal if the monitor remains OFF during operation.
Engine coolant temperature is exceeding the normal value if the monitor lights up during operation.
Set the engine speed to low idle immediately and wait until the monitor goes OFF (engine coolant temperature drops).
Then, stop the operation and check the radiator for water leakage, radiator core for clogging and alternator belt for damage and tension.

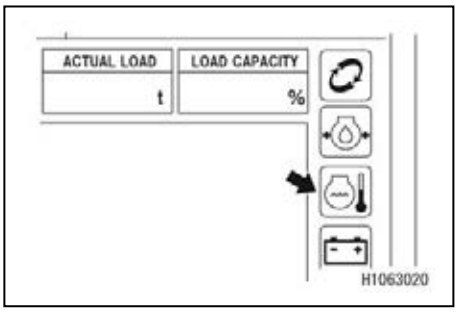

[15] Charge

Indicates an abnormality of the charging system.
If the charging system is normal, the monitor lights up when the starter switch is set to the “ON” position and goes out as engine speed increases after engine start.
The charging system has an error if the monitor lights up during operation.
Stop the operation immediately and check the alternator belt for tension.

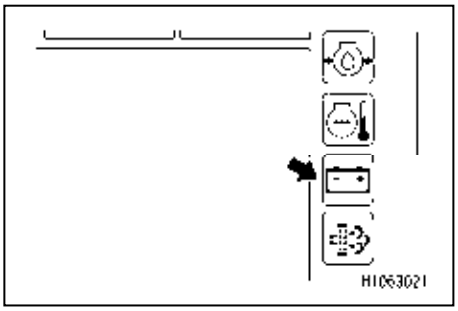

[16] DPF regeneration request lamp

While the DPF will carry out automatic regeneration, the filter may not be regenerated if the machine is idling with no load or operations with low load is repeated.
In this case, the DPF regeneration request lamp on the monitor is lit.
If the DPF regeneration request lamp is lit, carry out manual stationary regeneration.
For the procedures for stationary regeneration, refer to “OPERATION 2.27 DPF STATIONARY REGENERATION METHOD” section.

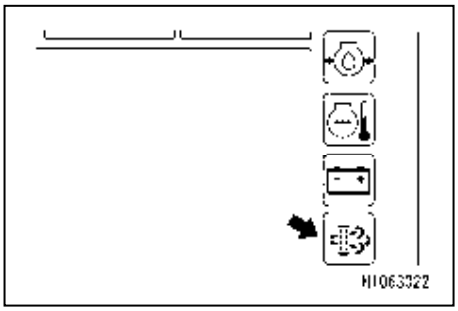

[17] Exhaust temperature alarm lamp

This is used to let the operator know that the exhaust gas temperature is at high temperature due to reset/stationary regeneration.
Lights up when reset/stationary regeneration is in operation.

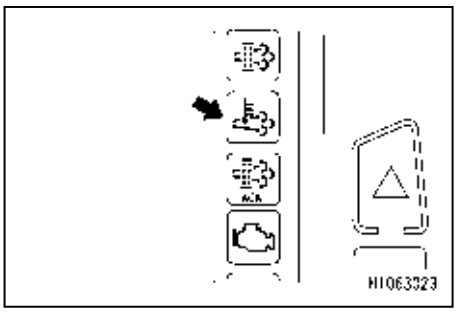

[18] DPF regeneration lamp

During DPF regeneration, the DPF regeneration lamp is lit on the monitor.
Regardless of whether the filter is undergoing Reset Regeneration (automatic regeneration) or Stationary Regeneration (manual regeneration), the regeneration lamp is lit.

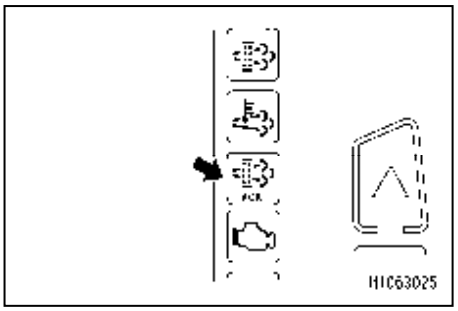

https://truckmanualshub.com/

[19] Failure
Lights up in case of an engine failure.

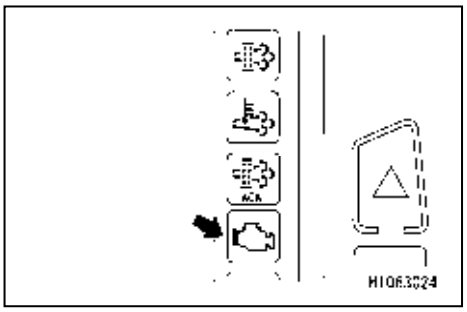

[20] Emergency stop lamp
This lamp is lit when the emergency stop switch is pressed.

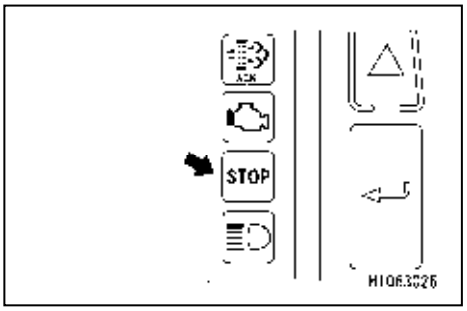

[21] Light
Remains lit while the headlight at the front of the machine is on.

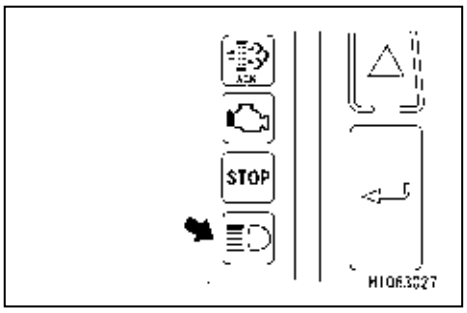

[22] Electricity on lamp
Lights up when the electric unit is being supplied with electricity.

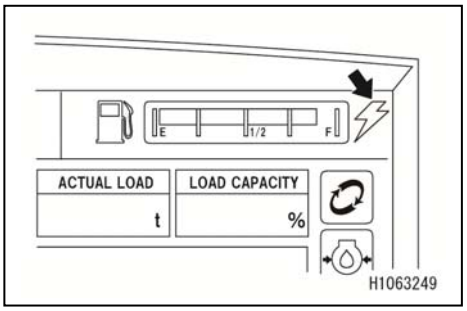

[23] Mode selector switch (1) (travel/outrigger/crane)
Used for changing the machine mode.
A pop up screen is displayed when you press the switch. When the pop up screen is displayed, the machine mode can be changed by either touching the displayed pop up selection switch (upper side or lower side) or by touching the “Travel”, “Outrigger”, “Crane” displayed on the screen.

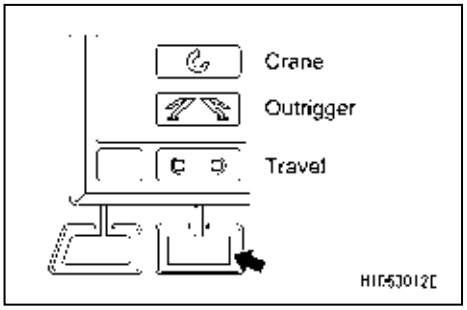

[24] Levelling instrument
Displays the incline condition of the machine. The position of the yellow ball shows the inclination and direction of the machine.

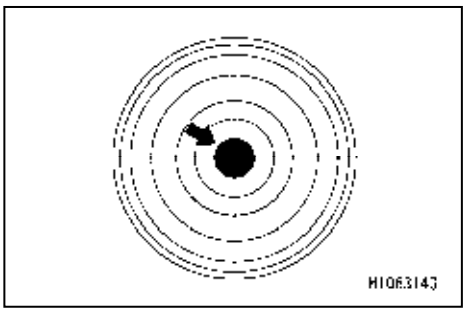

https://truckmanualshub.com/

[2] MONITOR DISPLAY (TRAVELLING MODE)

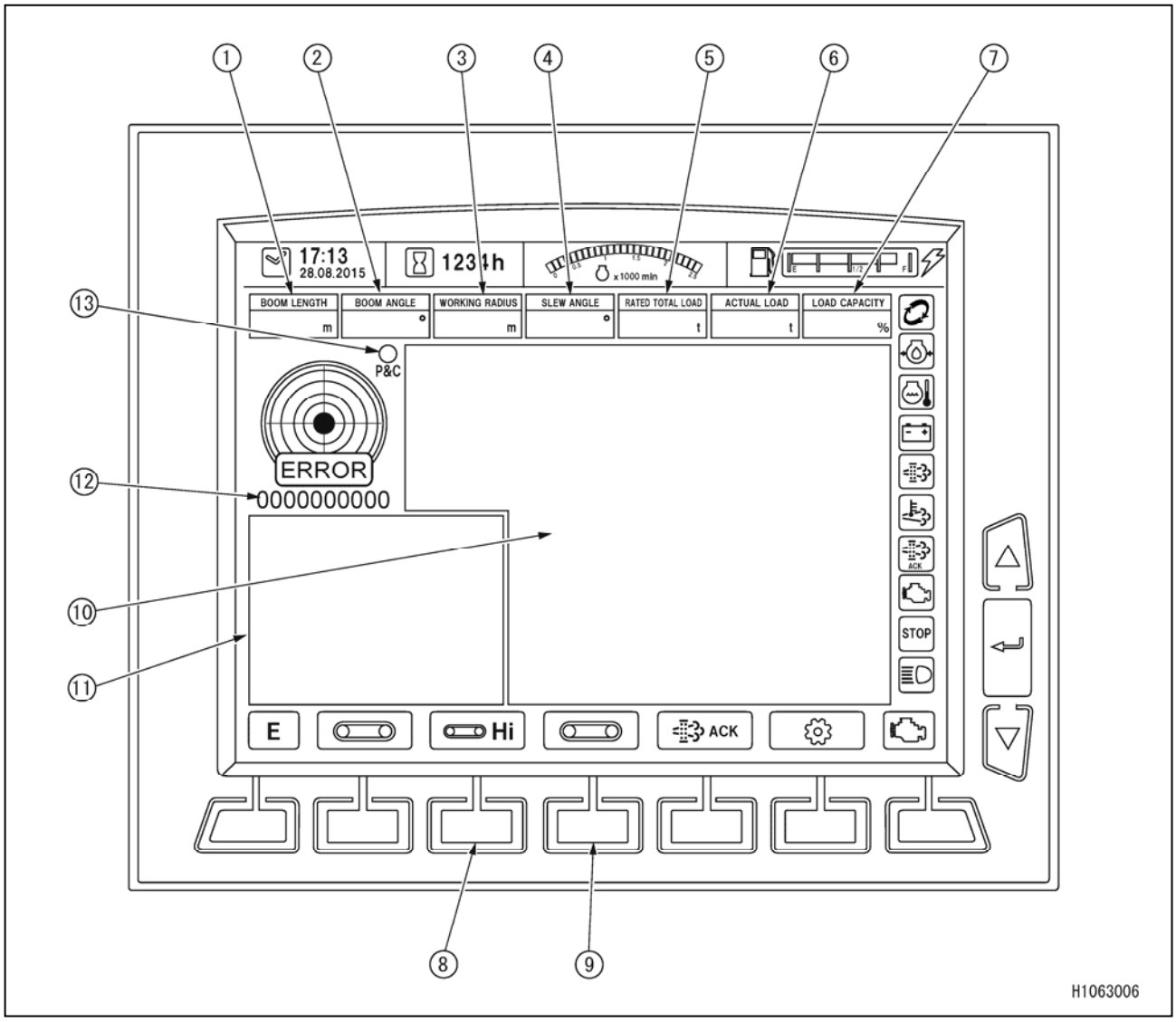

(1) BOOM LENGTH
(2) BOOM ANGLE
(3) WORKING RADIUS
(4) SLEW ANGLE
(5) RATED TOTAL LOAD
(6) ACTUAL LOAD
(7) LOAD CAPACITY
(8) MODE SELECTOR SWITCH (2) (Travelling Hi/Low)
(9) MODE SELECTOR SWITCH (3) (Pick/Carry)
(10) FRONT VIEW CAMERA MONITOR
(11) LEFT SIDE-VIEW CAMERA MONITOR
(12) Error codes
(13) Pick & Carry position

https://truckmanualshub.com/

This section explains the parts other than those explained in “1.2.1 DESCRIPTION OF MONITOR [1] MONITOR DISPLAY (COMMON TO ALL MODES)”

[1] BOOM LENGTH

Continually displays the current boom length during crane operations.

NOTES
The boom length refers to the straight-line distance from the boom foot pin to the sheave pin at the front end of the boom.

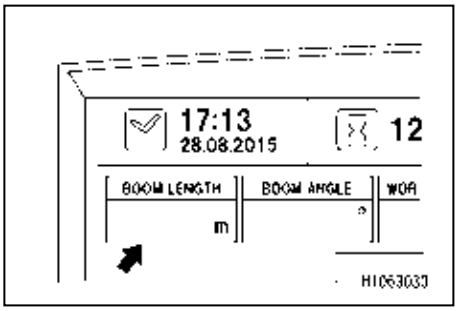

[2] BOOM ANGLE

Continually displays the current boom angle during crane operations.

NOTES
The boom angle refers to the angle between the boom and horizontal line.

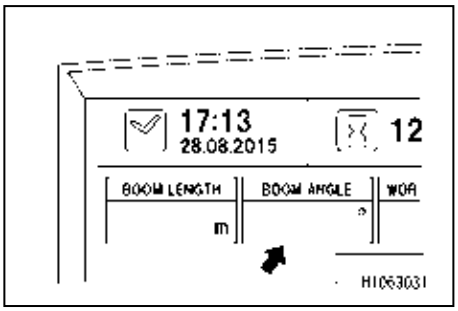

[3] WORKING RADIUS

Continually displays the current working radius during crane operations.

NOTES
The working radius refers to the horizontal distance from the center of slewing of the crane to the center of the hook.

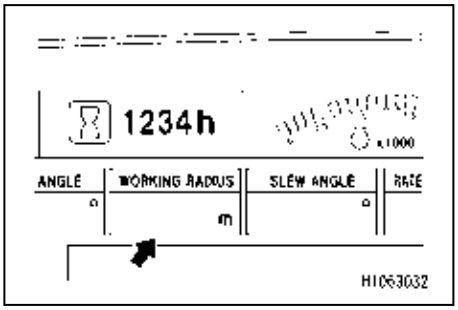

[4] SLEW ANGLE

Shows the current slewing angle when operating the crane.

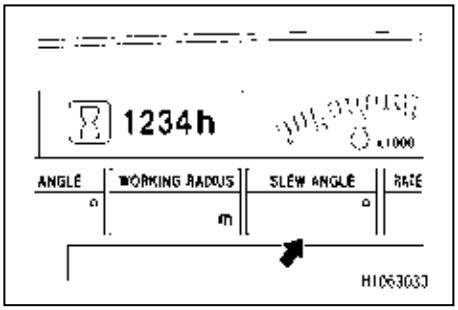

[5] RATED TOTAL LOAD

Indicates the currently applicable rated total load (i.e., the total weight of a hook and slings etc, (and the hoisted load), which is calculated based on the operating conditions, such as the number of wires falls on the hook, the working radius, and the length of the extended outrigger.

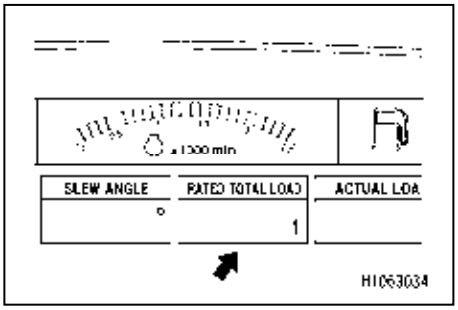

https://truckmanualshub.com/

[6] ACTUAL LOAD

Continually displays the actual load of the hoisted load during crane operations.

This actual load equals the total weight of the hook, sling, and hoisted weight.

When no load is applied, the normal indication becomes “0.0” to “0.1”.

If the indication does not fall within the above range, contact us or our sales service agent.

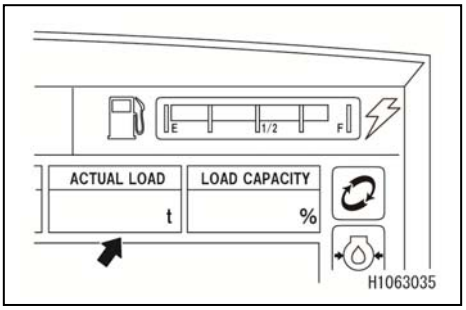

[7] LOAD CAPACITY

Indicates the moment limiter load capacity ratio.

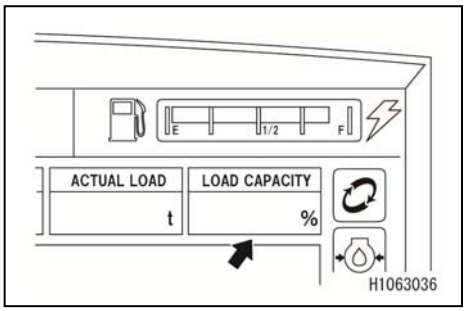

[8] MODE SELECTOR SWITCH (2) (Travelling Hi/Low)

Use this switch to change the travelling speed.

Push to display a pop-up screen. When the pop-up screen appears, you can switch the travelling speed between “Travelling Hi” and “Travelling Low” with the pop-up select switch (up/down) or touchscreen operations.

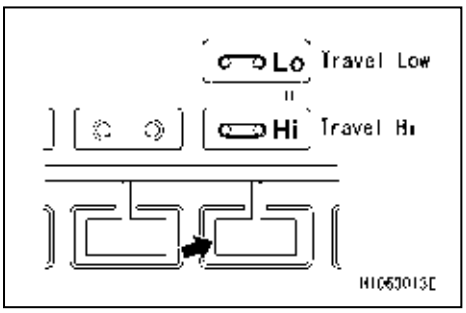

[9] MODE SELECTOR SWITCH (3) (Pick & Carry)

Use this switch when travelling with suspended load.

Push to display a pop-up screen. When the pop-up screen appears, you can change the mode between “Normal”, “Pick & Carry”, and “Hook Stowage” with the pop-up select switch (up/down) or touchscreen operations.

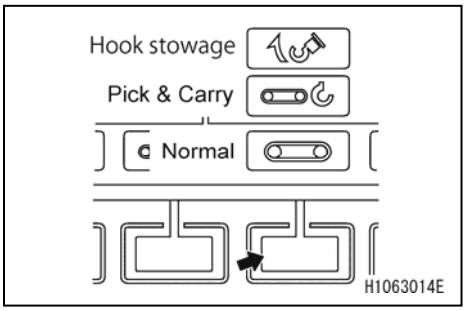

https://truckmanualshub.com/

[10] Front view camera monitor

Displays the view ahead of the machine. To display the view at the left side of the machine, touch the screen.

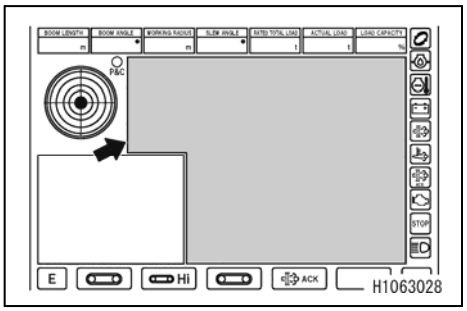

[11] Left side-view camera monitor

Displays the left side-view of the machine. To display the view ahead of the machine, touch the screen.

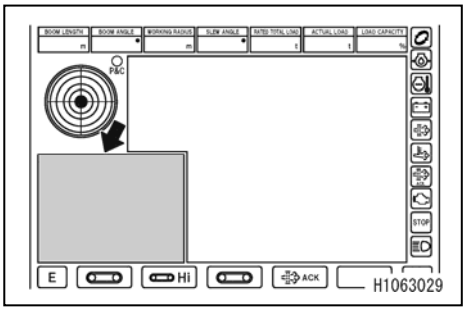

[12] Error codes

If the machine encounters an error, an error code appears in this area.

If an error code appears, contact us or our sales service agent.

For details about the error codes, refer to “OPERATION 11.7 LIST OF ERROR CODES”.

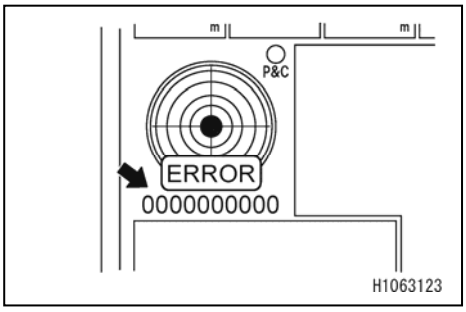

[13] Pick & Carry position

Illuminates in yellow when the machine is in Pick & Carry posture.

For conditions of Pick & Carry posture, read the section “OPERATION 2.26 PICK & CARRY OPERATION”.

NOTES
This may not illuminate when lifting a load, even the crane is in Pick & Carry posture. However this is not a faulty condition.

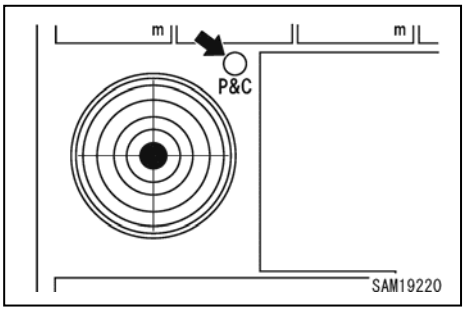

https://truckmanualshub.com/

[3] MONITOR DISPLAY (OUTRIGGER MODE)

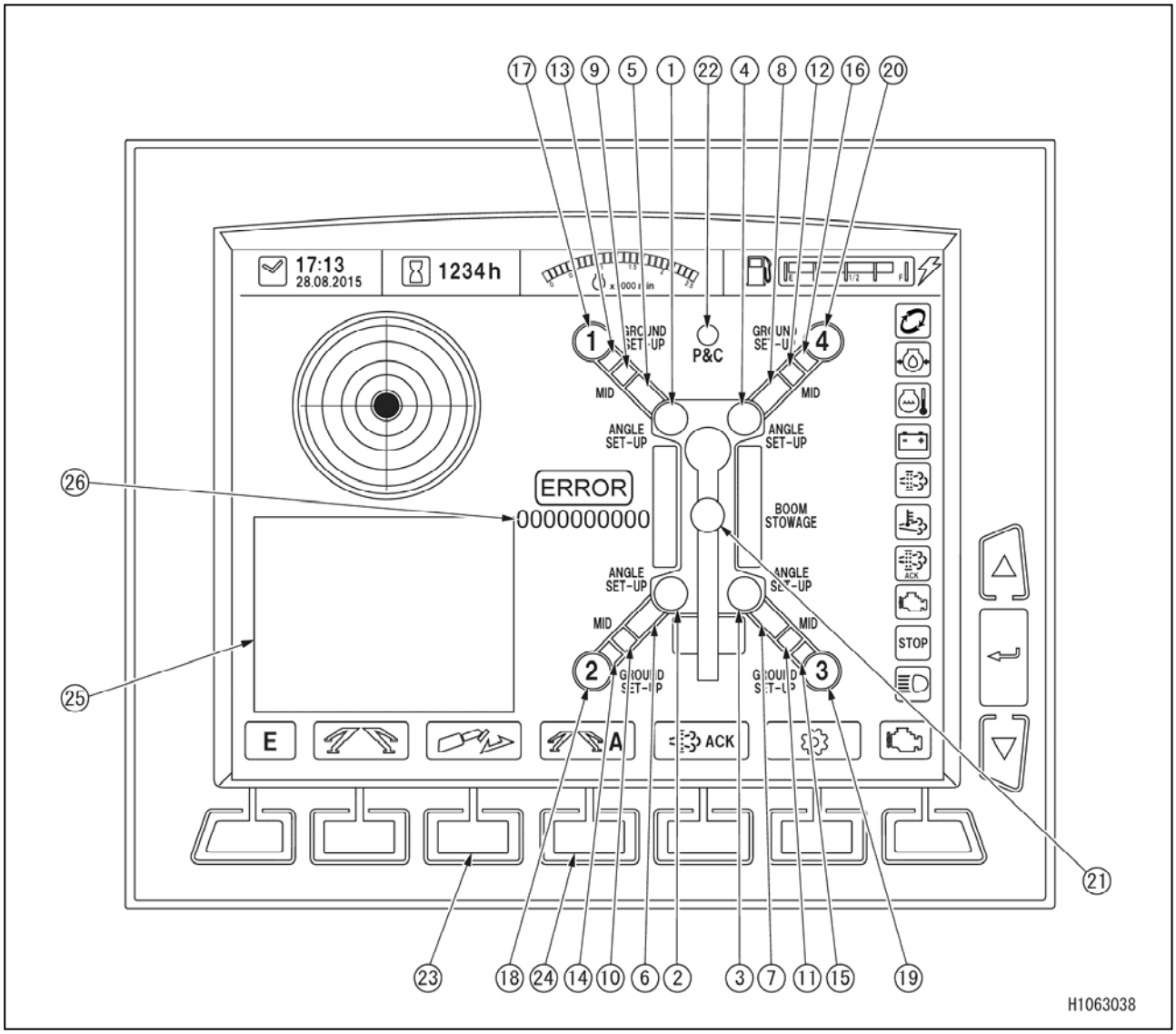

(1) Outrigger (1) Extension (ANGLE SET-UP)
(2) Outrigger (2) Extension (ANGLE SET-UP)
(3) Outrigger (3) Extension (ANGLE SET-UP)
(4) Outrigger (4) Extension (ANGLE SET-UP)
(5) Outrigger (1) (MIN)
(6) Outrigger (2) (MIN)
(7) Outrigger (3) (MIN)
(8) Outrigger (4) (MIN)
(9) Outrigger (1) (MID)
(10) Outrigger (2) (MID)
(11) Outrigger (3) (MID)
(12) Outrigger (4) (MID)
(13) Outrigger (1) (MAX)
(14) Outrigger (2) (MAX)
(15) Outrigger (3) (MAX)
(16) Outrigger (4) (MAX)
(17) Outrigger (1) (GROUND SET-UP)
(18) Outrigger (2) (GROUND SET-UP)
(19) Outrigger (3) (GROUND SET-UP)
(20) Outrigger (4) (GROUND SET-UP)
(21) Crane stow position
(22) Pick & Carry position
(23) Mode selector switch (2) (Extension/Ground)
(24) Mode selector switch (3) (Manual/Auto)
(25) Left side-view camera monitor
(26) Error codes

https://truckmanualshub.com/

The following explains the monitor items except those described in Section “1.2.1, DESCRIPTION OF MONITOR, [1] MONITOR DISPLAY (COMMON TO ALL MODES)”.

[1] Outrigger (1) Extension (ANGLE SET-UP)
[2] Outrigger (2) Extension (ANGLE SET-UP)
[3] Outrigger (3) Extension (ANGLE SET-UP)
[4] Outrigger (4) Extension (ANGLE SET-UP)
These lamps individually light up to indicate which outrigger is currently extended.
The individual lamps illuminate in yellow when the positioning pins are inserted (extended) to the pin holes of their respective outrigger rotaries, and illuminate in red when they are pulled out (stowed).

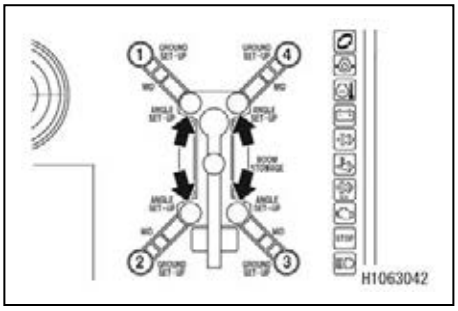

[5] Outrigger (1) minimum (MIN)
[6] Outrigger (2) minimum (MIN)
[7] Outrigger (3) minimum (MIN)
[8] Outrigger (4) minimum (MIN)
These lamps light up individually to indicate that the corresponding outrigger is in the minimum extended state (first stage).

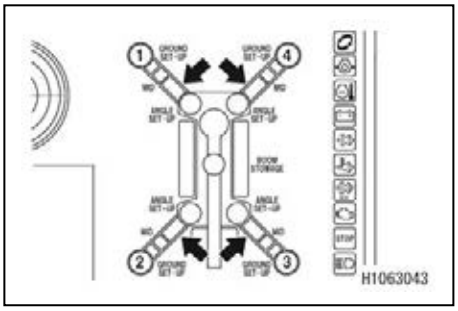

[9] Outrigger (1) middle (MID)
[10] Outrigger (2) middle (MID)
[11] Outrigger (3) middle (MID)
[12] Outrigger (4) middle (MID)
These lamps light up individually to indicate that the corresponding outrigger is in the medium extended state (second stage).

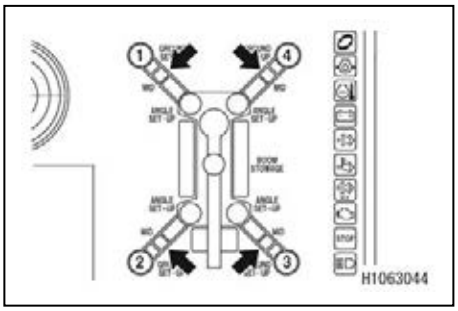

[13] Outrigger (1) maximum (MAX)
[14] Outrigger (2) maximum (MAX)
[15] Outrigger (3) maximum (MAX)
[16] Outrigger (4) maximum (MAX)
These lamps light up individually to indicate that the corresponding outrigger is fully extended (third stage).

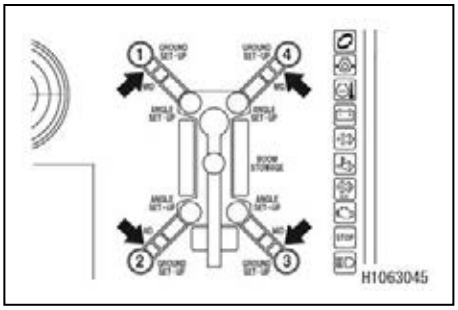

[17] Outrigger (1) grounding (GROUND SET-UP)
[18] Outrigger (2) grounding (GROUND SET-UP)
[19] Outrigger (3) grounding (GROUND SET-UP)
[20] Outrigger (4) grounding (GROUND SET-UP)
This lamp turns on and indicates that the outriggers are set.
These lamps individually illuminate in yellow when the corresponding outrigger adapter touches the ground, and illuminate in red when it leaves the ground (stowed).

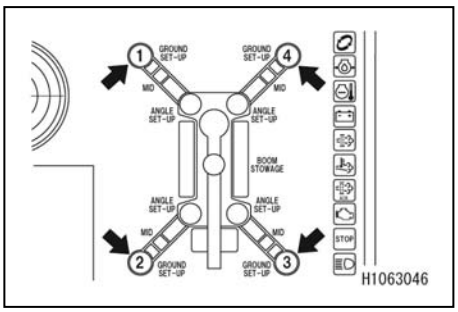

https://truckmanualshub.com/

[21] Crane stow position
Illuminates in yellow when the boom has been completely retracted with a boom angle being 0 to 3° and a slew angle being 3 to 6°.
Otherwise, illuminates in red.

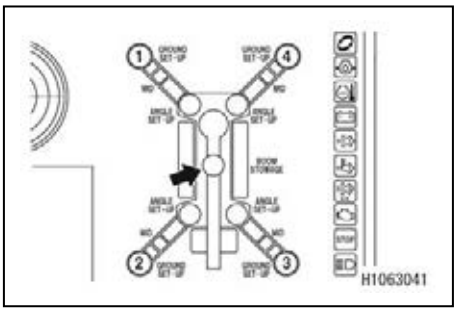

[22] Pick & Carry position
Illuminates in yellow when the machine is in Pick & Carry posture.
When this light illuminates in yellow, outrigger can be operated even the crane is not stowed.
For conditions of Pick & Carry posture, read the section “OPERATION 2.26 PICK & CARRY OPERATION”.

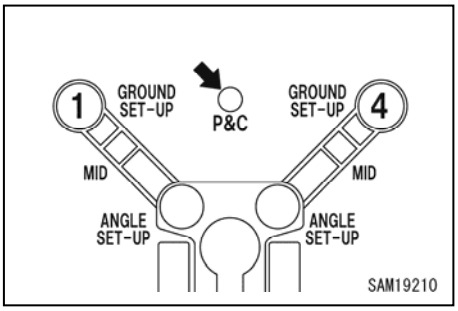

[23] Mode selector switch (2) (Extension/Ground)
Use this switch to change the outrigger operation.
Push to display a pop-up screen. When the pop-up screen appears, you can change the outrigger operation mode between “Extension” and “Ground” with the pop-up select switch (up/down) or touch screen operations.

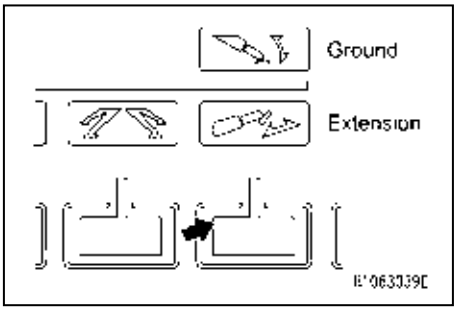

[24] Mode selector switch (3) (Manual/Auto)
Use this switch to change the operation mode for setting the outriggers on the ground between Manual (with the outrigger operation panel) and Auto.
Push to display a pop-up screen. When the pop-up screen appears, you can change the outrigger operation mode between “Manual” and “Auto” with the pop-up select switch (up/down) or touch screen operations.

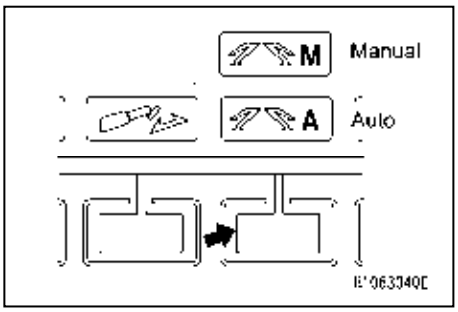

[25] Left side-view camera monitor
Displays the left side-view of the machine.

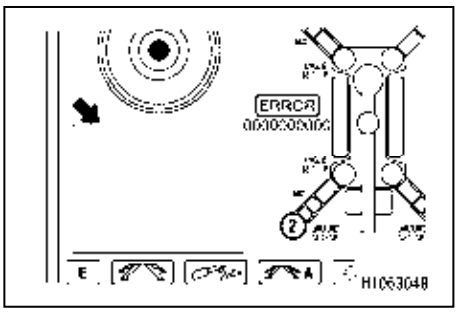

[26] Error codes
If the machine encounters an error, an error code appears in this area.
If an error code appears, contact us or our sales service agent.
For details about the error codes, refer to “OPERATION 11.7 LIST OF ERROR CODES”.

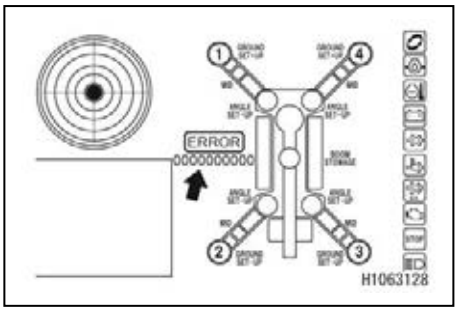

https://truckmanualshub.com/

[4] MONITOR DISPLAY (CRANE MODE)

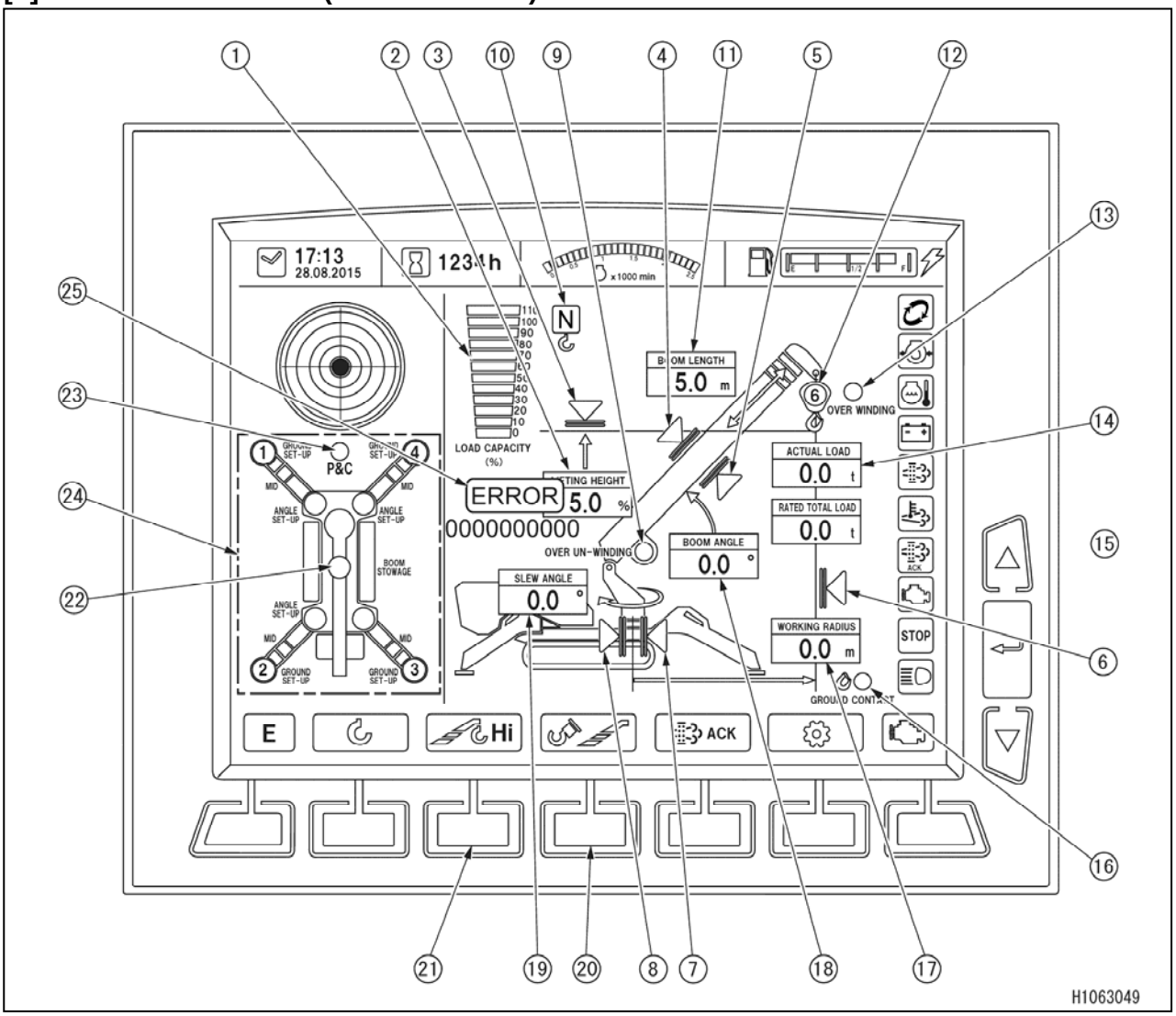

(1) Load capacity ratio indication
(2) Lifting height indication (LIFTING HEIGHT)
(3) Lifting height limiter switch
(4) Boom angle upper limit switch
(5) Boom angle lower limit switch
(6) Working radius limiter switch
(7) Clockwise swing angle limiter switch
(8) Counter-clockwise swing angle limiter switch
(9) Over unwinding indication (OVER UNWINDING)
(10) Lifting mode display (N mode, P mode, M mode)
(11) Boom length indication (BOOM LENGTH)
(12) Indication of the number of wire falls
(13) Over winding indication (OVER WINDING)
(14) Actual load indication (ACTUAL LOAD)
(15) Rated total load indication (RATED TOTAL LOAD)
(16) Hook grounding indication (GROUND CONTACT)
(17) Working radius indication (WORKING RADIUS)
(18) Boom angle indication (BOOM ANGLE)
(19) Slew angle indication
(20) Mode selector switch (3) (Hook stowage/Fully automated stowage)
(21) Mode selector switch (2) (Crane Hi/Low)
(22) Crane stowage position
(23) Pick & Carry position
(24) Outrigger related indication
(25) Error code

https://truckmanualshub.com/

The following explains the monitor items except those described in Section 1.2.1, DESCRIPTION OF MONITOR, [1] Monitor Display (common to all modes)".

[1] Load capacity ratio indication
Indicates the moment limiter load capacity ratio by lighting up and off of the "Bar" indication.

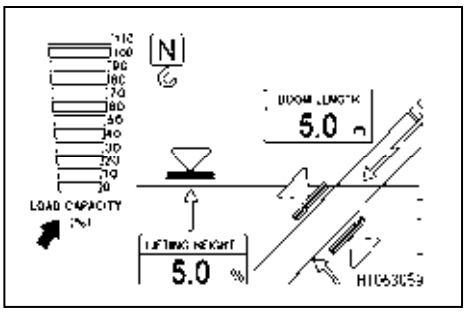

[2] Lifting height indication (LIFTING HEIGHT)
Continuously displays the current lifting height during crane operation.

NOTES
The lifting height refers to the vertical distance from the ground to the lower end of the hook.

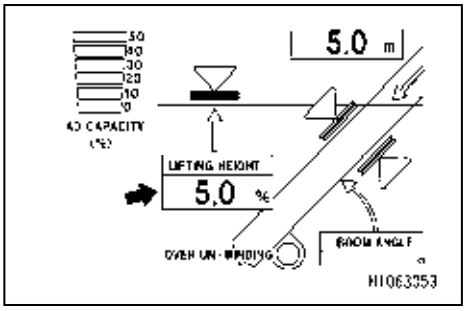

[3] Lifting height limiter switch
[4] Working radius limiter switch
[5] Boom angle upper limit switch
[6] Boom angle lower limit switch
[7] Clockwise slew angle limiter switch
[8] Counter-clockwise slew angle limiter switch
When the working radius of the boom is limited due to workplace factors or other reasons, these switches can be used to specify the working radius of the boom to a desired range. To set the working radius of the boom, move it to a desired position and push and hold the corresponding switch on the touch panel. Once the working radius has been set, the illuminated blue indicator turns to orange.

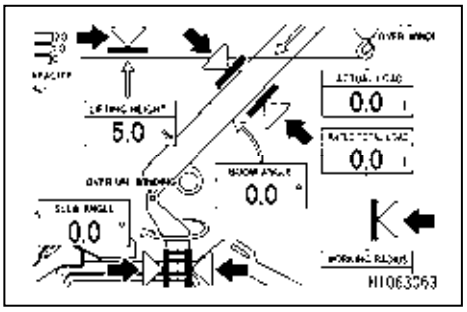

[9] Over unwinding indication (OVER UNWINDING)
Lights up when the hook is unwound excessively (the unwound length of the wire rope becomes maximum) during crane operation.

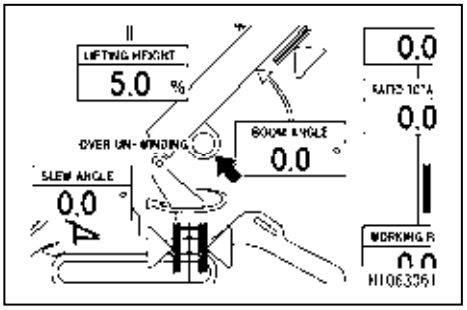

[10] Lifting mode

Displays either one of N-mode/P-mode/M-mode which was selected and set on monitor or in the User Initial Mode.
The rated total load chart changes by switching the lifting mode, but only when under the following conditions.

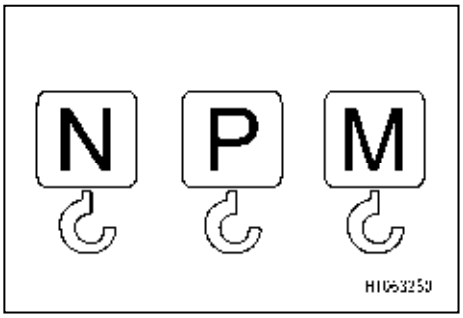

• N-mode (normal mode)

Applies the rated total load chart according to the extended outriggers. The same rated total load is applied to all area within the 360° boom slewing range.

• P-mode (power mode)

Applies the rated total load chart for P-mode only when within the range of 335 to 0°, 0 to 25°.
Other area applies to the same rated total load chart as in N-mode.

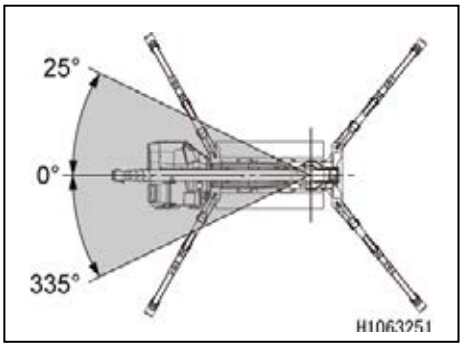

• M-mode (multi-outrigger mode)

When in N-mode, even if one outrigger is at minimum extension, the rated total load chart applied will be for the minimum extension. When in M-mode, if the adjacent outriggers are extended to medium or maximum, work within the range with boom position between those outriggers applies to rated total load of mid or max extension.

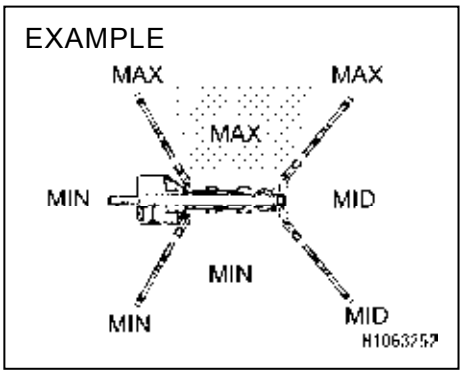

NOTES
For safety, the load is switched to the safe side of the rated total load around the outrigger at an early stage.

[11] Boom length indication (BOOM LENGTH)

Continually displays the current boom length during crane operations.

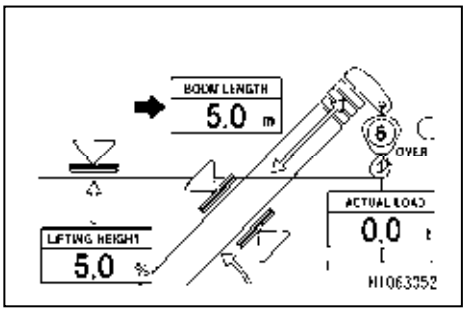

NOTES
The boom length refers to the straight-line distance from the boom foot pin to the sheave pin at the front end of the boom.

[12] Indication of the number of wire falls

Indicates the current number of wire falls during crane operation.

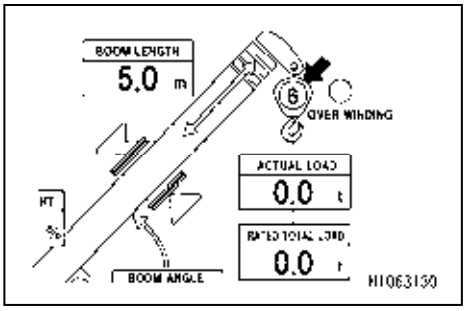

[13] Over winding indication (OVER WINDING)
Lights up when the hook is hoisted too high due to over winding of the wire rope during crane operation.

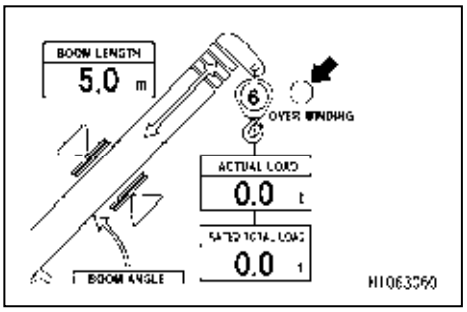

[14] Actual load indication (ACTUAL LOAD)
Continually displays the actual load of the hoisted load during crane operations.

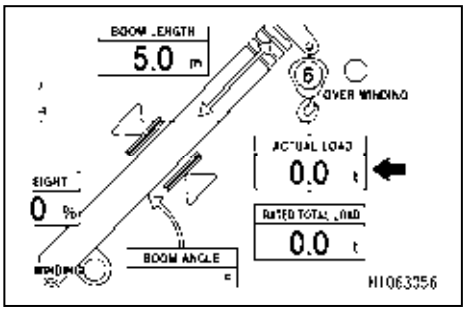

[15] Rated total load indication (RATED TOTAL LOAD)
Indicates the currently applicable rated total load (the total weight of the hook, slings, and hoisting load).

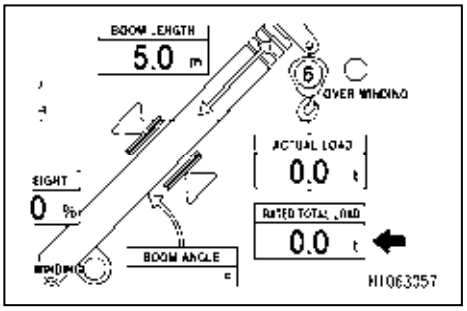

[16] Hook grounding indication (GROUND CONTACT)
Lights up when the hook touches the ground.

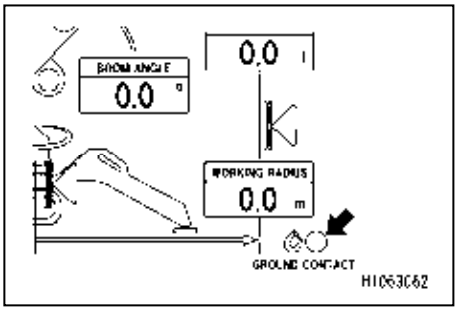

[17] Working radius indication (WORKING RADIUS)
Continually displays the current working radius during crane operations.

NOTES
The working radius refers to the horizontal distance from the center of the crane swing to the center of the hook.

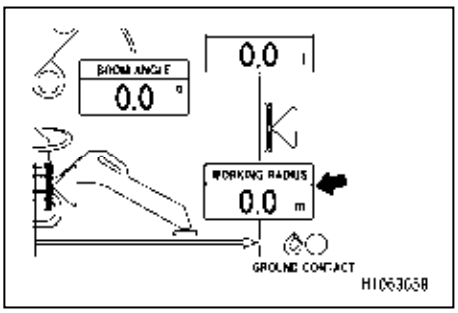

[18] Boom angle indication (BOOM ANGLE)
Continually displays the current boom angle during crane operations.

NOTES
The boom angle refers to the angle which the boom forms with the horizontal line.

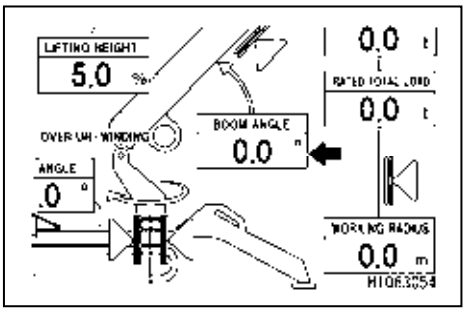

[19] Slew angle indication (SLEW ANGLE)
Shows the current slewing angle when operating the crane.

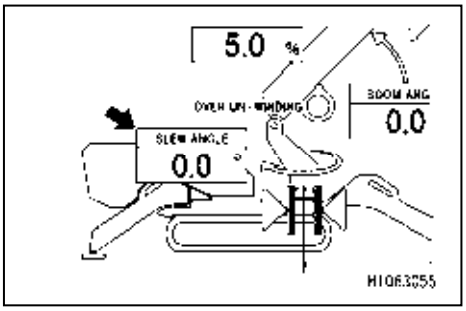

[20] Mode selector switch (3) (Hook stowage/Fully automated stowage)
Use this switch to change the retracting operation of the crane.
Push to display a pop-up screen. When the pop-up screen appears, you can select the retracting operation of the crane from “Hook stowage” or “Fully automated stowage” with the pop-up select switch (up/down) or touch screen operations.

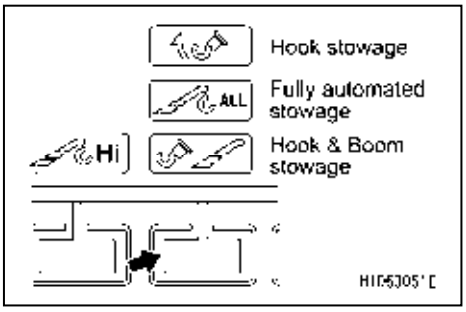

[21] Mode selector switch (2) (Crane Hi/Low)
Use this switch to change the winding speed of the crane.
Push to display a pop-up screen. When the pop-up screen appears, you can change the winding speed of the crane between “Crane Hi” and “Crane Low” with the pop-up select switch (up/down) or touchscreen operations.

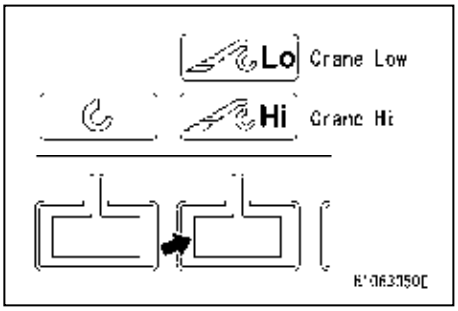

[22] Crane stowage position
Illuminates in yellow when the crane is in stowed position.
The stowed state of crane is defined as below.
・Boom is fully retracted.
・Boom angle is 0° ~3° .
・Slew angle is 0° ~5.9° .

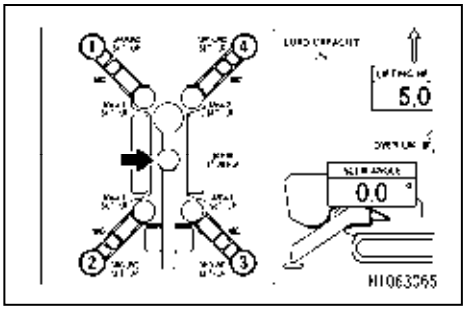

https://truckmanualshub.com/

[23] Pick & Carry position

Illuminates in yellow when the machine is in Pick & Carry posture.

When this light illuminates in yellow, outrigger can be operated even the crane is not stowed.

For conditions of Pick & Carry posture, read the section “OPERATION 2.26 PICK & CARRY OPERATION”.

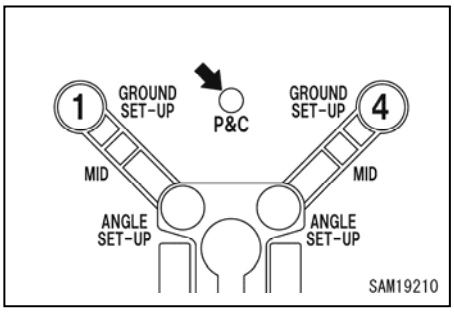

[24] Outrigger related indication

For the following outrigger related indications, refer to 1.2.1, “DESCRIPTION OF MONITOR, [3] MONITOR DISPLAY (OUTRIGGER MODE)”.

- Crane stow position indication
- Outrigger (1) to (4) Extension (ANGLE SET-UP)
- Outrigger (1) to (4) Minimum (MIN)
- Outrigger (1) to (4) Medium (MID)
- Outrigger (1) to (4) Maximum (MAX)
- Outrigger (1) to (4) Ground (GROUND SET-UP)

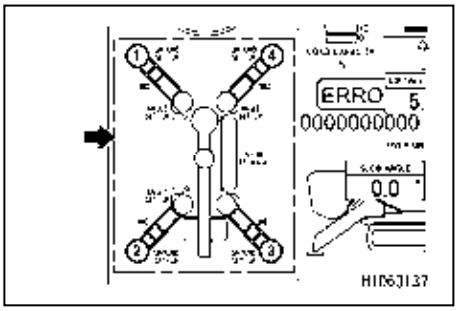

[25] Error code

When a fault occurs in the machine, the panel lets you know by displaying an error code on the display area.

If an error code is displayed, please contact our company or our company’s sales servicing shop.

For details of the error code, refer to “OPERATION 11.7 LIST OF ERROR CODES” section.

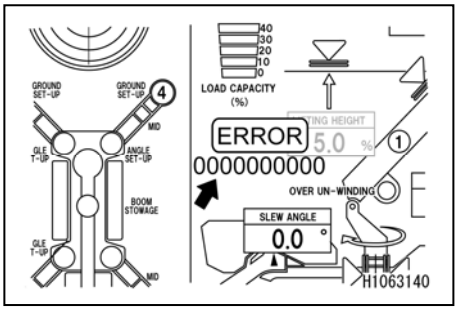

NOTES
In the event outriggers are not set, if you switch to crane mode, error code “EOR00” comes up, but this is not a failure.

https://truckmanualshub.com/

[5] MONITOR DISPLAY (USER INITIAL MODE)

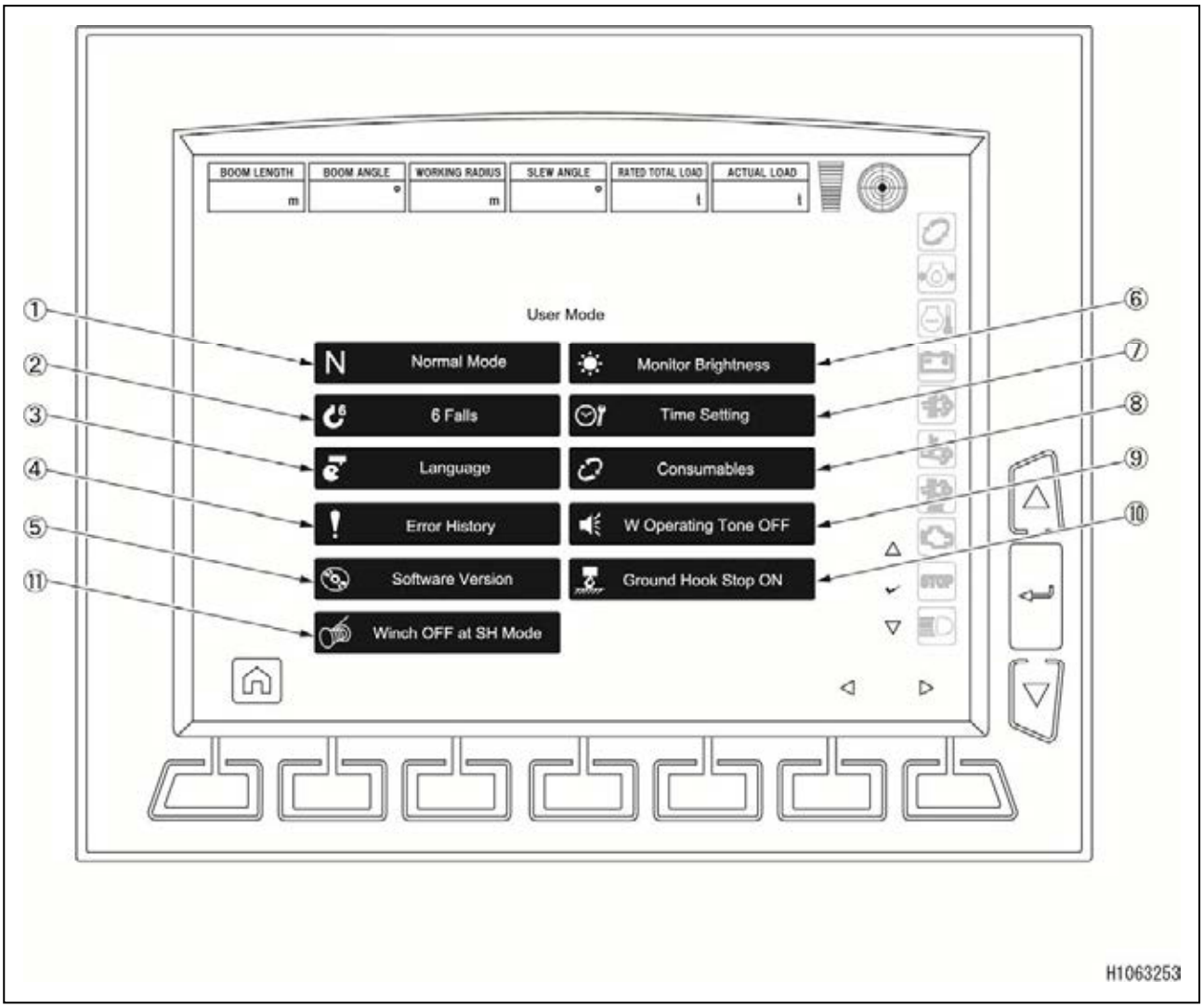

(1) Lifting mode
(2) Number of falls
(3) Language setting
(4) Error history
(5) Software version
(6) Monitor brightness
(7) Time setting
(8) Consumables
(9) Switch operation tone ON/OFF
(10) Switch hook ground detection ON/OFF
(11) Switch winch setting in SH mode ON/OFF
(Only for machine with searcher hook)

https://truckmanualshub.com/

[1] Lifting mode
The lifting mode can be switched by touching the screen.
・N : normal mode
・P : power mode
・M : multi-outrigger mode

For the details of each mode refer to “OPERATION – 1.2.1 [4] [10] Lifting mode” section.

[2] Number of falls
The mode can be changed by touching the screen.
• 6 : 6 Falls
• 4 : 4 Falls
• 2 : 2 Falls
• 1 : Single Falls
• Searcher Hook (only for machine with searcher hook)

By changing the number of the falls setting, the number of falls display will also change in crane mode.
The rated total load automatically changes according to the number of falls, so be sure to match the actual number of falls with the displayed number of falls.
If Searcher Hook is selected, monitor changes to the dedicated screen. Please refer to the section of “Searcher Hook” in this manual for details.

[3] Language setting
The display language can be changed by touching the screen.

[4] Error history
By touching the screen, the screen transitions to the error history display screen where you can see the currently occurring errors/errors that have occurred in the past.
For display details of the error, refer to “OPERATION 11.7 LIST OF ERROR CODES” section.

[5] Software version
By touching the screen, the screen transitions to the check screen where the software version can be checked.

[6] Monitor brightness
By touching the screen, the screen transitions to the brightness control screen where the brightness can be adjusted.

[7] Time setting
By touching the screen, the screen transitions to the time setting screen where the time can be changed.

https://truckmanualshub.com/

[8] Consumables

By touching the screen, a list of consumables and the time until their next their replacement can be checked.

For the consumables of which scheduled dates for replacement come within 30 hours or 3 days, each of them are displayed in yellow letters with outlined characters, and for those scheduled dates for replacement have been reached, each of them are displayed in red letters with a solid red icon. Both are displayed on the top of the screen. Continuing use of the machine with consumables that require replacement will cause a hazardous situation or an adverse effect on the machine. Be sure to immediately replace them.

The consumables included in the list appear on the screen are as follows:

Consumable Items	Replacement cycle
Replace hydraulic oil return filter cartridge	First 50, 500 hours
Oil replacement for hydraulic oil tank	First 50, 1000 hours
Replace oil in winch reduction gear case	First 250, 1000 hours
Oil replacement for slewing reduction gear case	First 250, 1000 hours
Oil replacement for travel motor reduction gear case	First 250, 1000 hours
Replace engine oil	500 hours
Replace engine oil filter	500 hours
Replace fuel pre-filter	500 hours
Replace hydraulic oil tank air filter element	500 hours
Replace fuel main filter	500 hours
Air cleaner	500 hours

[9] Switch operation tone ON/OFF

By touching the screen, the operation tone can be switched ON/OFF.

• ON : operation tone ON

• OFF : operation tone OFF

[10] Switch hook ground detection ON/OFF

By touching the screen, restriction of crane operation when hook block is grounded can be switched ON/OFF.

• ON : Certain operation of crane stops when hook block is grounded.

• OFF : Operation of crane is not restricted when hook block is grounded.

[11] Winch settings in searcher hook mode ON/OFF (only for machine with searcher hook)

Winch movement in searcher hook mode can be switched.

• ON : Winch can be controlled in searcher hook mode.

• OFF : Winch cannot be controlled in searcher hook mode.

1.2.2. NAMES AND DESCRIPTION OF CONTROL LEVERS

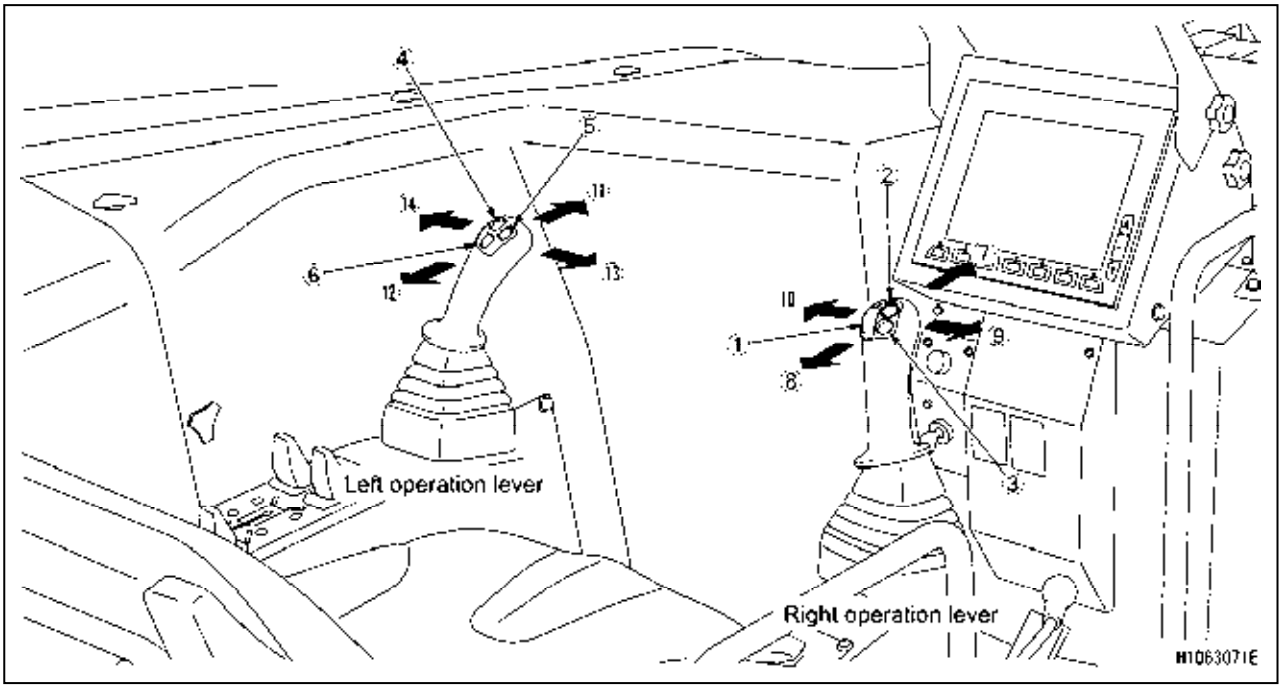

[Traveling mode]

(1) Accelerator up/down (pop-up up/down)
(2) Horn
(3) Pop-up Enter
(4) Mode selector switch (Travelling Hi/Low)
(5) Mode selector switch (Carry/Pick)
(6) Mode selector switch (Travelling/Outrigger/ Crane)
(7) Right travelling forward
(8) Right travelling backward
(9) -
(10) -
(11) Left travelling forward
(12) Left travelling backward
(13) -
(14) -

[Outrigger mode]

(1) Accelerator up/down (pop-up up/down)
(2) Horn
(3) Pop-up Enter
(4) Mode selector switch (Extension/Ground)
(5) Mode selector switch (Manual/Auto)
(6) Mode selector switch (Travelling/Outrigger/ Crane)
(7) -
(8) -
(9) -
(10) -
(11) -
(12) -
(13) -
(14) -

[Crane mode]

(1) Accelerator up/down (pop-up up/down)
(2) Horn
(3) Pop-up Enter
(4) Mode selector switch (Crane Hi/Low)
(5) Mode selector switch (Hook/Fully automated stowage)
(6) Mode selector switch (Travelling/Outrigger/ Crane)
(7) Unwinding
(8) Winding
(9) Boom lowering
(10) Boom raising
(11) Boom extension
(12) Boom retraction
(13) Boom clockwise slewing
(14) Boom counter-clockwise slewing

[Travel mode]

[1] Accelerator up/down (pop-up up/down)

Use these switches to control the engine speed.

The engine speed keeps increasing while the up switch is pressed. The engine speed keeps decreasing while the down side is pressed.

Use these up and down switches to make a selection on the pop-up screen that appears on the monitor.

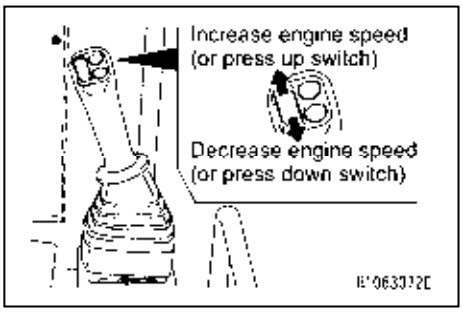

[2] Horn

Use this switch to honk the horn.

The horn keeps blowing while it is pressed.

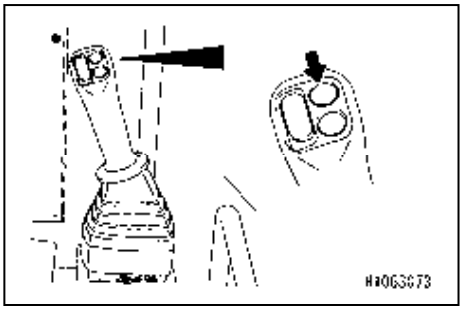

[3] Pop-up Enter

Push to enable the item selected on the pop-up screen that appears on the monitor.

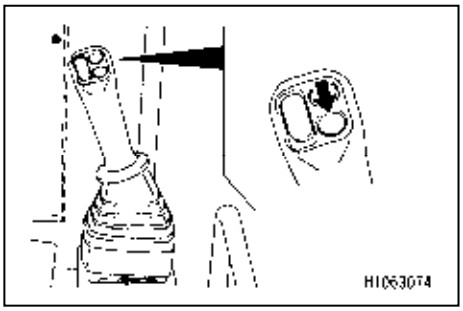

[4] Mode selector switch (Travelling Hi/Low)

Use this switch to change the travelling speed.

Push to display a pop-up screen. When the pop-up screen appears, you can switch the travelling speed of the machine between “Travelling Hi” and “Travelling Low” with the up/down select switch ([1] Accelerator up/down (pop-up up/down)).

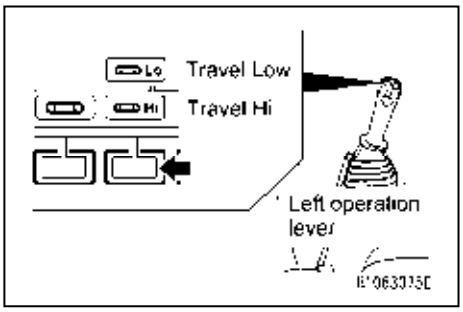

[5] Mode selector switch (Pick/Carry)

Use this switch when travelling with suspended load.

Push to display a pop-up screen. When the pop-up screen appears, you can change the mode between “Normal”, “Pick & Carry”, and “Hook Stowage” with the up/down select switch ([1] Accelerator up/down (pop-up up/down)).

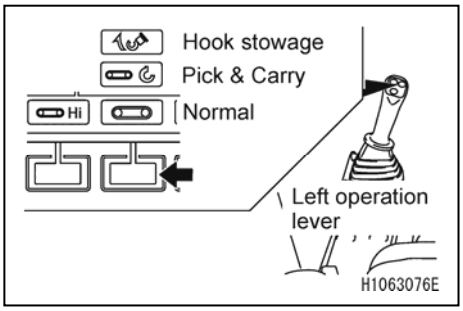

[6] Mode selector switch (Travelling/Outrigger/ Crane)
Use this switch to change the machine mode.
Push to display a pop-up screen. When the pop-up screen appears, you can select the machine mode from “Travel”, “Outrigger” and “Crane” with the up/down select switch ([1] Accelerator up/down (pop-up up/down)).

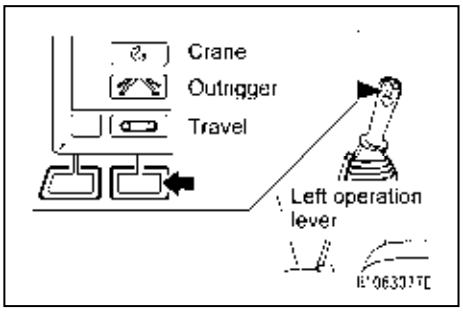

[7] Right travelling forward
The crawler belt at the right side of the machine rotates in the forward direction. To move the machine forward, push the right and left control levers forward at the same time. Operating only one lever allows the machine to rotate, and controlling both levers in the directions opposite each other allows it to spin.

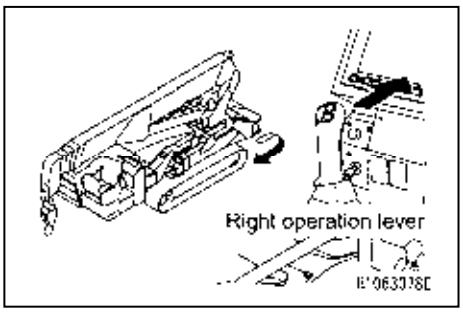

[8] Right travelling backward
The crawler belt at the right side of the machine rotates in the backward direction. To move the machine backward, pull the right and left control levers toward you at the same time. Operating only one lever allows the machine to rotate, and controlling both levers in the directions opposite each other allows it to spin.

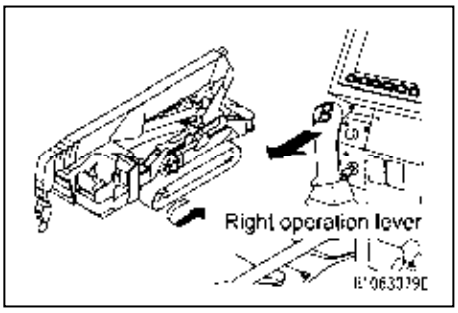

[11] Left travelling forward
The crawler belt at the left side of the machine rotates in the forward direction. To move the machine forward, push the right and left control levers forward at the same time. Operating only one lever allows the machine to rotate, and controlling both levers in the directions opposite each other allows it to spin.

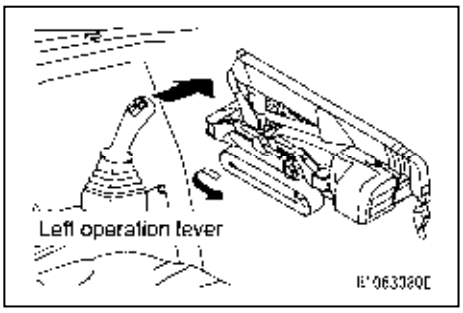

[12] Left travelling backward
The crawler belt at the left side of the machine rotates in the backward direction. To move the machine backward, pull the right and left control levers toward you at the same time. Operating only one lever allows the machine to rotate, and controlling both levers in the directions opposite each other allows it to spin.

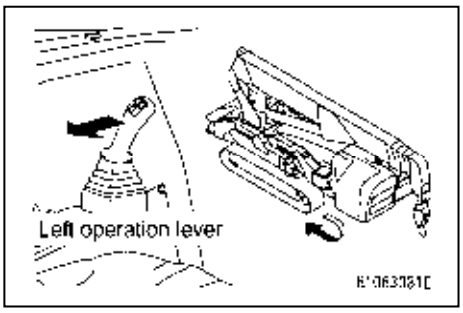

https://truckmanualshub.com/

[Outrigger mode]

Only items different from those in the travel mode are described here.

[4] Mode selector switch (Extension/Ground)

Use this switch to change the outrigger operation.

Push to display a pop-up screen. When the pop-up screen appears, you can change the mode between “Extension” and “Ground” with the up/down selector switch ([1] Accelerator Up/Down (pop-up up/down)).

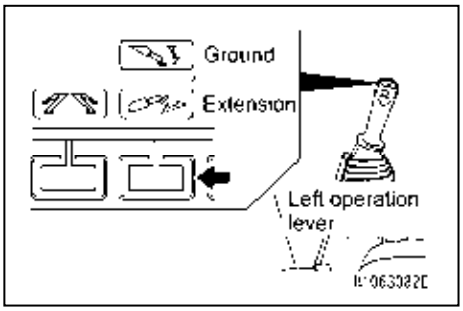

[5] Mode Selector switch (Manual/Auto)

Use this switch to change the operation mode for setting the outriggers on the ground between Manual (with the outrigger operation panel) and Auto.

Push to display a pop-up screen. When the pop-up screen appears, you can change the outrigger operation mode between “Manual” and “Auto” with the up/down select switch ([1] Accelerator Up/Down (pop-up up/down)).

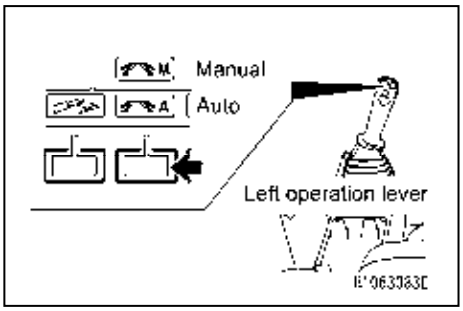

[Crane mode]

Only items different from those in the travel mode are described here.

[4] Mode selector switch (Crane Hi/Low)

Use this switch to change the winding speed of the crane.

Push to display a pop-up screen. When the pop-up screen appears, you can change the mode between “Crane Hi” and “Crane Low” with the up/down select switch ([1] Accelerator Up/Down (pop-up up/down)).

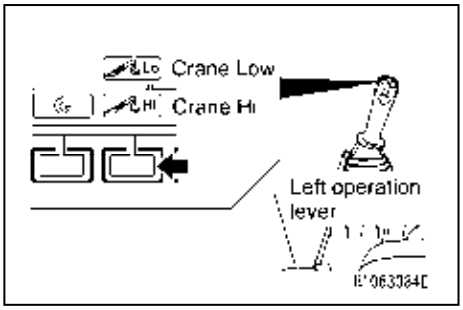

[5] Mode selector switch (Hook/Fully automated stowage)

Use this switch to change the retracting operation of the crane.

Push to display a pop-up screen. When the pop-up screen appears, you can select the mode from “Hook stowage” or “Fully automated stowage” with the up/down select switch ([1] Accelerator Up/Down (pop-up up/down)).

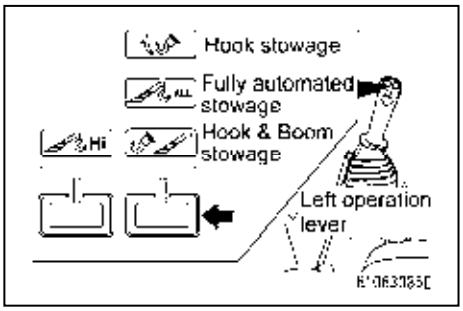

https://truckmanualshub.com/

[7] Unwinding
Unwinds the wire rope while the lever is pushed forward.
[8] Winding
Winds the wire rope while the lever is pulled toward you.

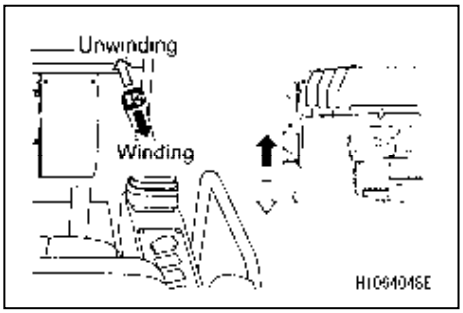

[9] Boom lowering
Lowers the boom while the lever is pushed towards the right side.
[10] Boom raising
Raises the boom while the lever is pushed towards the left side.

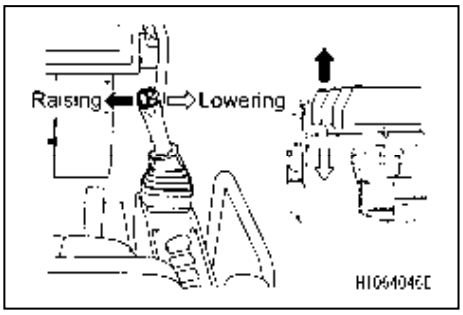

[11] Boom extension
Extends the boom while the lever is pushed forwards.
[12] Boom retraction
Retracts the boom while the lever is pulled towards you.

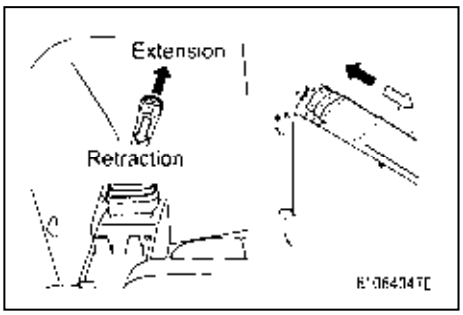

[13] Boom clockwise slewing
Slews the boom in the clockwise direction while the lever is pushed toward the right side.
[14] Boom counter-clockwise slewing
Slews the boom in the counter-clockwise direction while the lever is pushed toward the left side.

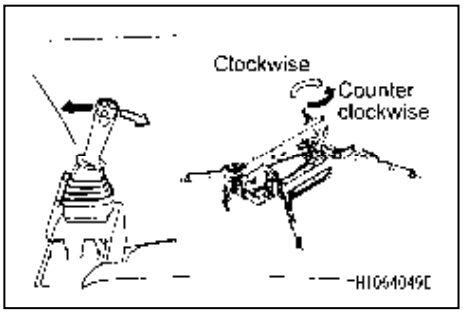

1.2.3 NAMES AND DESCRIPTION OF OUTRIGGER OPERATION PANEL

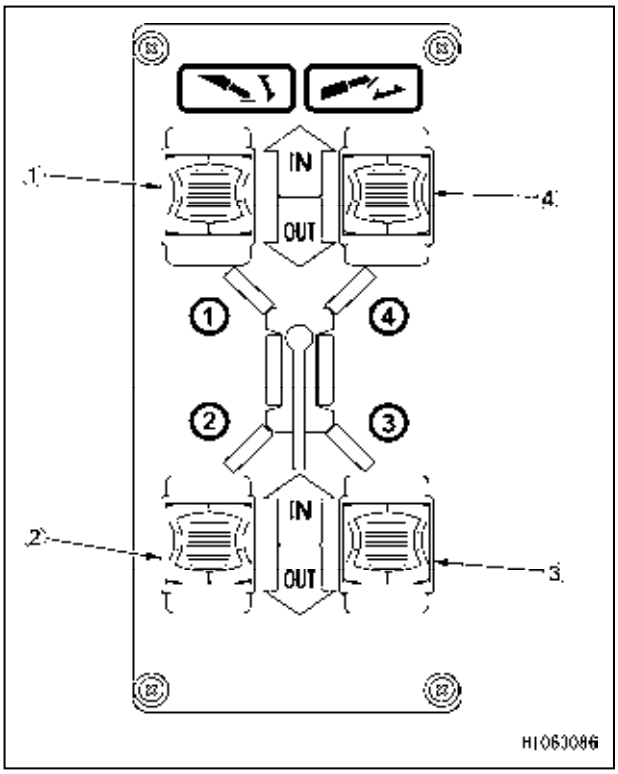

(1) Outrigger (1) switch
(2) Outrigger (2) switch
(3) Outrigger (3) switch
(4) Outrigger (4) switch

[1] Outrigger switch

These switches can be used to deploy, ground, or stow outriggers.

The machine is equipped with four outriggers, (1) to (4), which can be operated independently or simultaneously.

To allow outriggers to extend or to settle on the ground, change the machine mode to Outrigger with the mode selector switch (1) on the monitor, and then select Extension or Ground with the mode selector switch (2).

[In Extension mode]

- IN: Push the switch up. The outrigger extending cylinder contracts, so as to stow the outrigger inner box.
- NEUTRAL: Release your finger from the switch. The switch returns to the “NEUTRAL” position and the outrigger extending cylinder stops.
- OUT: Push the switch down. The outrigger extending cylinder extends to allow the outrigger to extend.

[In Ground mode]

- IN: Push the switch up. The outrigger grounding cylinder contracts to allow the outrigger to be stowed.
- NEUTRAL: Release your finger from the switch. The switch returns to the “NEUTRAL” position and the outrigger grounding cylinder stops.
- OUT: Push the switch down. The outrigger extending cylinder extends to allow the outrigger to settle on the ground.

https://truckmanualshub.com/

1.2.4 EMERGENCY STOP SWITCH

Use this switch to stop the engine or the electric motor immediately in case of an emergency due to an abnormality in the machine.

- ON: Press the switch. The engine or the electric motor stops.
- OFF: Turn the switch clockwise (in the direction shown by the arrow in the figure given at the right). The switch returns to the original position.

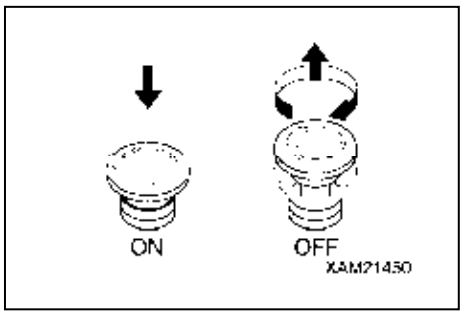

NOTES
Before restarting the engine or the electric motor after an emergency stop, be sure to return the emergency stop switch to the “OFF” position.

1.2.5 STARTER SWITCH

⚠ CAUTION

Be sure to return the starter switch key to the “OFF” position when you finish the work.

Use this switch to start and stop the engine.

- OFF: You can insert/remove the key at this position. All the switches in the electrical system are turned off and the engine or the electric motor stops.
- ON: Electricity runs through all the circuits. When the engine is selected as a power source, wait until the warm-up indicator lamp goes out in a cold environment, without changing the switch position.
- START: Enables the engine or the electric motor to start. When the engine or the electric motor has started, release your hand from the key. The key automatically returns to the “ON” position.

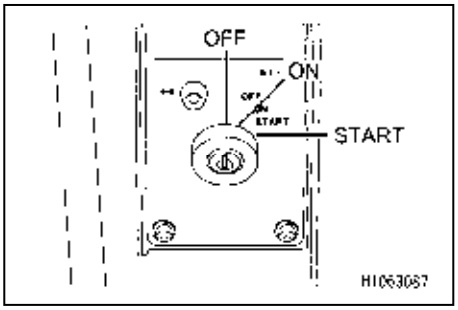

1.2.6 LOCK LEVER

Pulling up the lock lever (1) (together with the console box R (2)) locks out all machine operations. In order to prevent the machine from operating unexpectedly while an operator is getting into or off the machine, be sure to pull the lever up before getting off the machine.

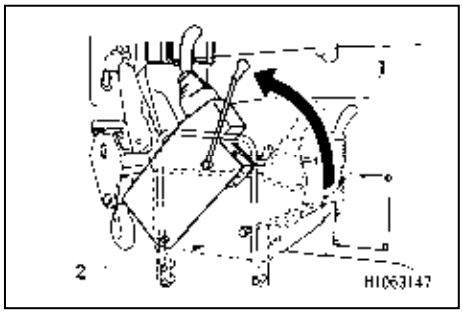

1.2.7 ACCELERATOR PEDAL

Use this lever to adjust the engine speed or output.

- Low idling: Take your foot off the pedal.
- Full speed: Depress the pedal fully.

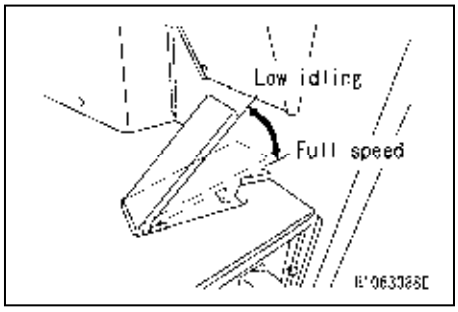

https://truckmanualshub.com/

1.2.8 LIGHT SWITCH

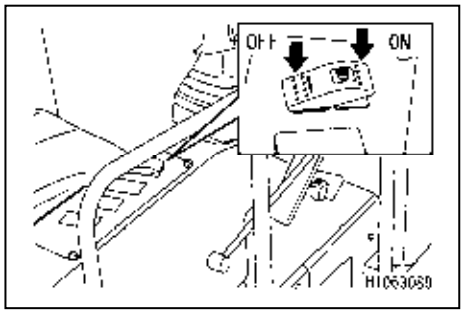

Use this switch to turn on the headlights equipped on the front of the machine.

The pilot lamp on the switch lights up when the switch is set to the “ON” position, and goes out when it is set to the “OFF” position.

・ON: The lamp lights up.

・OFF: The lamp goes out.

1.2.9 DISCONNECT SWITCH

CAUTION

Be sure to place this switch in the “ON” position. Use this switch temporarily only in the case of preventing unexpected startup of electrical equipment during inspection and maintenance.

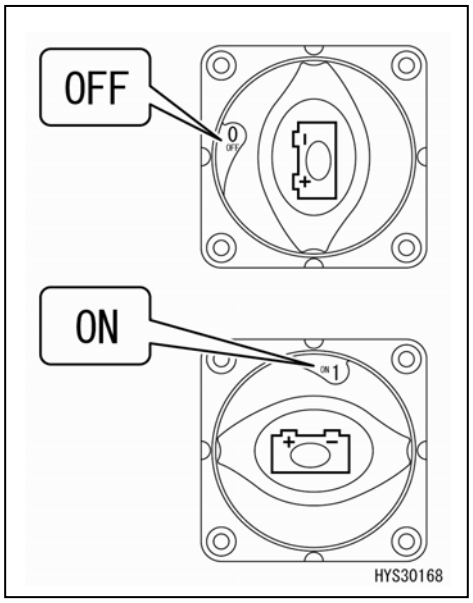

Use this switch to turn off the battery power supply to prevent unexpected startup of electrical equipment during inspection and maintenance.

- OFF: The battery power supply is turned off and no electricity flows through all the electrical systems.
- ON: The battery power supply is connected.

https://truckmanualshub.com/

1.2.10 OVERRIDE SWITCH

⚠ DANGER

Override switch has a function to disable the moment limiter.
For about 3 minutes from this switch is turned ON, the crane does not automatically stop with the moment limiter and is very dangerous. Any crane operation in such conditions may result in dropping of the hoisted load, breakage of crane boom, and/or machine tipping, and may cause a serious accident resulting in death or serious injury. Use this switch only when the moment limiter, which detects the crane conditions, fails or a load test of the crane is conducted. Key for the switch must be detached during normal operations.
In particular, never perform the following uses.

- Never wind up the hook to hoist a load while this switch is turned to the “ON” position.**Even if the weight of hoisted load exceeds the rated total load, the moment limiter cannot detect it, and could result in dropping of the hoisted load, boom breakage or machine tipping due to cutting of the winch wire rope.**
- **After the moment limiter detects that the rated total load is exceeded during crane operation and automatically stops the operation, do not perform hoisting operation, boom lowering operation and boom extension operation while the operation stop function is cancelled by turning this switch to the “ON” position. Such operation may cause boom breakage and machine tipping.**
- **Use the hook storage switch when stowing the hook. If this switch is turned ON to perform hook hoisting operation, automatic stop is not made in an over winding condition.**

Use this switch only when the moment limiter fails or a load test of the crane is conducted.

•ON : Insert the key into the switch. Turn the key clockwise to “ON” position once, and operation stop function is cancelled.

•OFF : The key can be removed or inserted at this position.

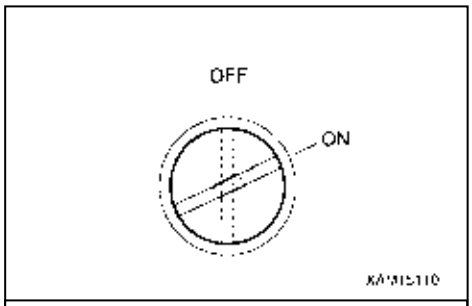

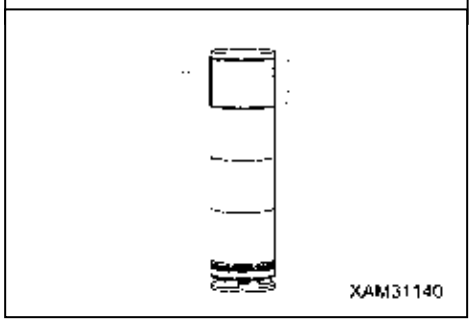

NOTES

The machine condition becomes like the following when the operation stop function is cancelled.

- The red lamp of the rotating warning lamp turns on.
- The LED of the switch box lights up.
- The buzzer sounds continuously.
- The icon will be displayed on the monitor.
- Boom lowering speed and boom extending speed slow down.

If the switch is turned to “ON” position once, the moment limiter function remain cancelled even the switch is returned to “OFF” position, unless 3 minutes is passed or engine key is turned to “OFF”.

However, these behaviors are subject to change depending on the status of the Machine body.

https://truckmanualshub.com/

1.2.11 FUSE BOX

⚠ CAUTION

Before replacing or inspecting fuses, be sure to turn the starter switch to the "OFF" position.

CAUTION

Fuses protect electrical components and wires from being burnt out.
- **This machine uses blade fuses. If a fuse is corroded and shows white powder, be sure to change the fuse.**
- **If a fuse has melted, always check the cause in the circuit and fix the problem before changing the fuse.**
- **Always make sure the replacement fuse is of the same capacity.**

The fuse box is mounted inside the operation side cover at the left side of the operator seat.

Inspect and replace fuses in the following procedure.

1. On the left side of the operator's seat, below the operation side cover, there is a hatch (cover) (1). Open this hatch.
2. Pull out the fuses in the fuse box and inspect them. Replace if necessary. Put back new or inspected fuses into their original places.

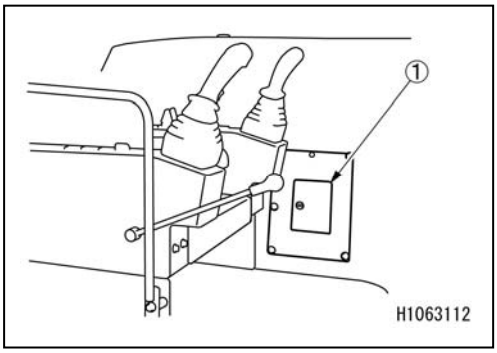

[Fuse Capacities and Circuit Names]

Systems and capacities of fuses are as follows:

Index	Capacity	Name
A	10A	Cigar socket
B	10A	Override
C	15A	Upper power
D	5A	Radio remote control
E	30A	Oil cooler
F	5A	Horn
G	5A	Controller power
H	5A	Key switch
I	30A	Charge
J	20A	EGR
K	20A	Engine control
L	5A	Reserve
M	5A	Reserve
N	10A	Reserve
O	15A	Reserve
P	20A	Reserve
Q	30A	Reserve

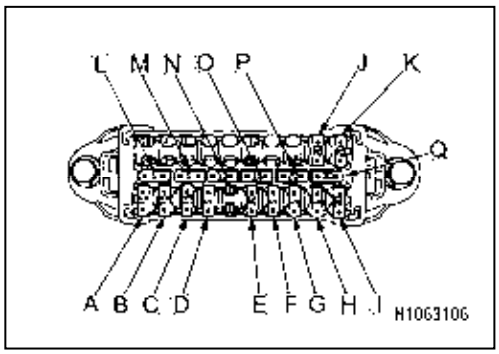

https://truckmanualshub.com/

1.2.12 CIGAR SOCKET

The cigar socket can be used to charge the battery for the radio controller.

The cigarette lighter port is below the fuse box.

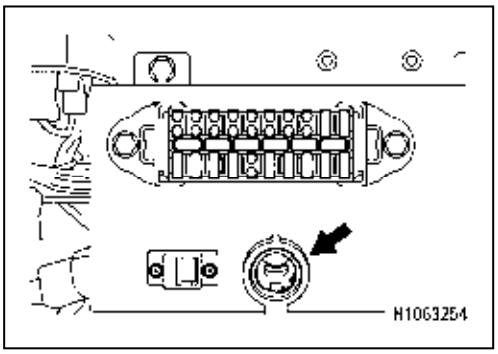

1.2.13 MAINTENANCE USB PORT

This is only used at the time of maintenance. The USB port is located under the fuse box.

NOTES
The maintenance USB port does not have battery charge function.

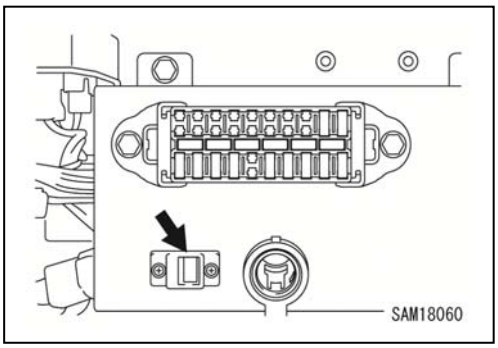

https://truckmanualshub.com/

1.3 NAMES AND DESCRIPTION OF REMOTE CONTROL PARTS

1.3.1. TRANSMITTER AND RECEIVER

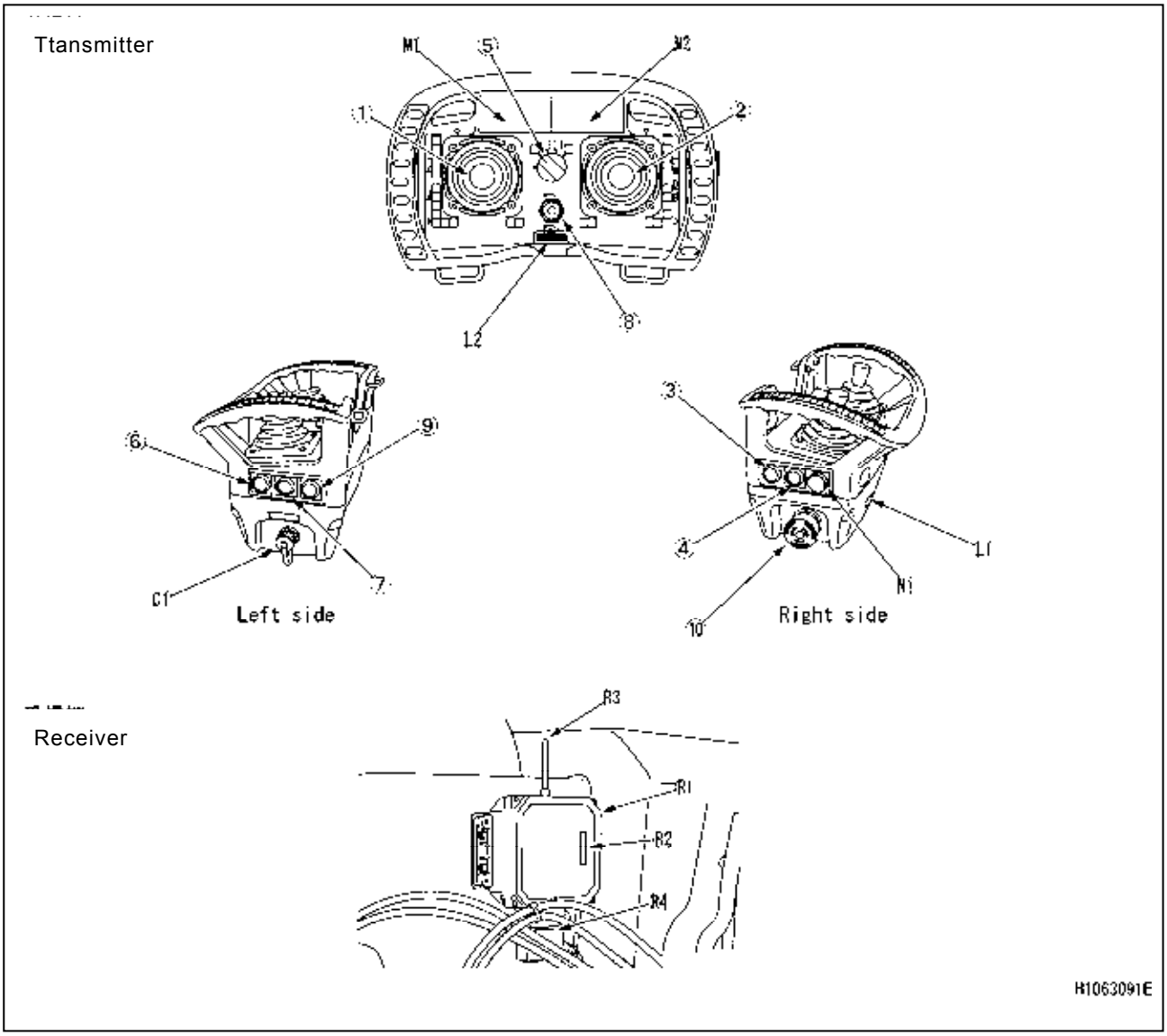

(1) Left control lever
(2) Right control lever
(3) Remote controller power ON/OFF switch
(4) Engine Start/Stop switch
(5) Operation mode selector switch
(6) Speed selector/Outrigger select switch
(7) Load carrying/Fly jib change switch
(8) Accelerator control switch
(9) Horn switch
(10) Emergency stop/Remote controller power OFF switch

(C1) Cable connection port
(L1) LED light (front)
(L2) LED light (control panel)
(M1) Left display
(M2) Right display
(N1) Display operation switch
(R1) Control box
(R2) Monitor LED
(R3) Connector connection port
(R4) Antenna

For detailed operating procedures, refer to “OPERATION 3. OPERATING BY REMOTE CONTROL”.

https://truckmanualshub.com/

[1] Left control lever

[2] Right control lever

These are joystick control levers, which can be used for crane, outrigger and travelling operations.

NOTES
These operations cannot be performed at the same time. It is required to change the operation mode with the operation mode selector switch (5).

[3] Remote controller power ON/OFF switch.

Use this switch to power ON/OFF the remote controller.

[4] Engine Start/Stop Switch

Use this switch to start/stop the engine.

[5] Operation mode selector switch

Use this switch to select the operation mode from Crane, Front outriggers, Rear outriggers, and Travel.

[6] Speed selector/Outrigger select switch

In crane and outrigger operations, the operation speed can be changed.

In outrigger operation, the operation can be switched between extension/retraction and extension stowage.

[7] Load carrying/Fly jib change switch

Only in crane operation, the operation can be switched between boom and fly jib.

NOTES
Operation cannot be changed when a fly jib is not mounted at the front end of the boom.

[8] Accelerator control switch

Use this switch to control the engine speed.

[9] Horn switch

The horn keeps blowing while this switch is pressed.

[10] Emergency stop/Remote controller power OFF switch

Use this switch to bring the engine to an emergency stop. In addition, this switch can be used to turn off the power to the receiver of the remote controller.

CAUTION
Before restarting the engine, be sure to set the switch to the “OFF” position.

[C1] Cable connection port

Use this port to accommodate an optional cable.

[L1] LED light (front)

Use this light to illuminate an area ahead of the machine.

[L2] LED light (control panel)

Use this light to illuminate the control panel.

https://truckmanualshub.com/

[M1] Left display

Use this display to view various kinds of information.

[M2] Right display

Use this display to view various kinds of information.

[N1] Display operation switch

Use this switch to operate the display.

[R1] Control box

Contains the receiver devices and control devices.

⚠ WARNING

Do not disassemble or modify the control box under any circumstances. Otherwise, an electric shock, fire, or a malfunction in the controller may result.

[R2] Monitor LED

The control box is equipped with monitor LEDs that show the operation status of the remote control system.

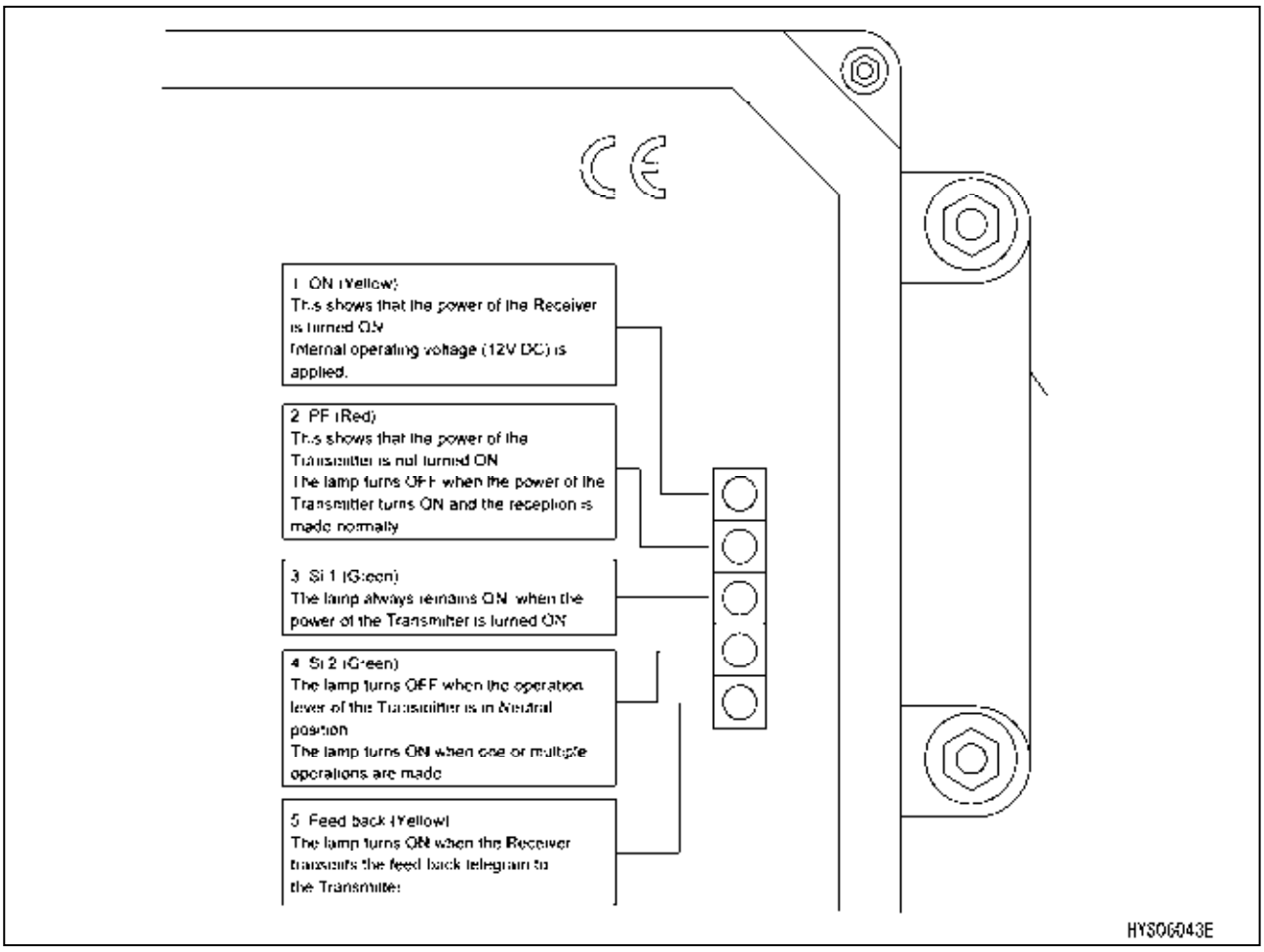

https://truckmanualshub.com/

[R3] Connector connection port

Wiring connector to allow communication with the controller on the machine.

The wire must be kept connected.

⚠ WARNING

Before performing electric welding due to repair work for the machine body or other reasons, be sure to disconnect the wire. Failure to do so may result in a machine failure caused by burn damage to the control box due to high voltage applied to it.

[R4] Antenna

Antenna that allows communication with the transmitter of the remote controller.

https://truckmanualshub.com/

1.3.2 DESCRIPTION OF REMOTE CONTROLLER ACCESSORIES

[1] WAIST BELT (1)

Wear the belt when you operate the Transmitter.

• Wear the waist belt around your waist.

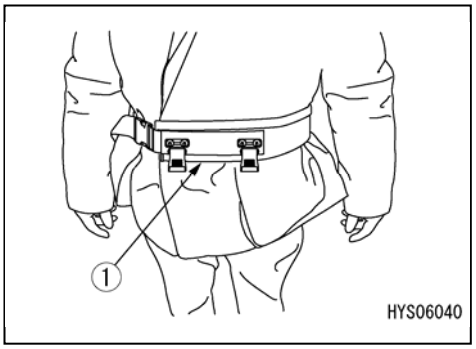

• Attach the Transmitter to the waist belt.

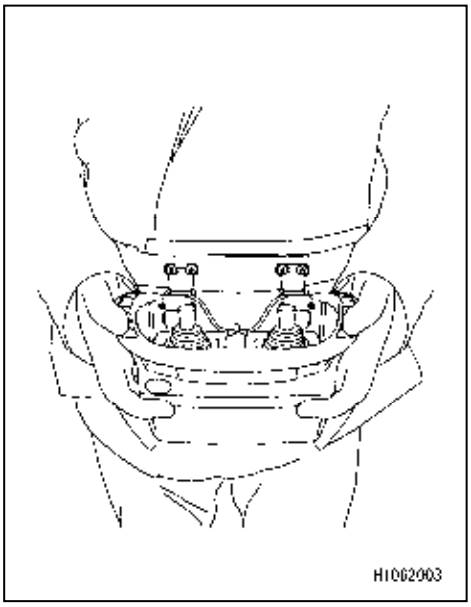

[2] BATTERY CHARGER FOR REMOTE CONTROLLER

Battery charger for charging the remote controller. Use the charging port appropriate for the specifications of respective devices.

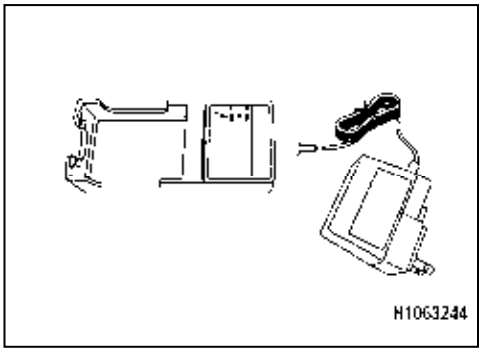

https://truckmanualshub.com/

1.4. OUTRIGGER SAFETY DEVICE

1.4.1 FUNCTIONS OF OUTRIGGER SAFETY DEVICES

The outrigger safety devices have the interlock functions shown in the table below.

	Interlock Function	Description
1	Outrigger Interlock	The outriggers will not operate unless the boom is in stowage position (in the slew stowage position, fully retracted and fully lowered position), and the positioning pins are securely inserted with the outrigger rotaries slewed to the extension side (outward).
2	Crane Interlock	The crane operation (telescoping, raising/lowering hook, derricking, and slewing) is enabled only when all four outriggers are extended and set (overhung and grounded). The outrigger extension status is detected as follows.

CAUTION

- **To enable crane operation, extend the outriggers, and set the mode selector switch on the monitor to the “Crane” position.**
  Even if any one of the four outriggers fails to satisfy the outrigger setting detection conditions (see 2 in the table above), the tricolor revolving light (red) illuminates.
  If two of the four outriggers are detected as un-set, the crane interlock function is activated and the crane operation will be disabled.
- **To enable the setting operation and stowage operation of the outriggers, stow the crane, and set the mode selector switch on the monitor to the “Outrigger” position.**
- **If the crane operation remains disabled even after the outriggers are extended and set, and the mode selector switch on the monitor is set to the “Crane” position, there may be faulty adjustment or failure in any of the outrigger safety devices.**
  Ask us or our sales service agency for repair.
- **If the setting operation and stowing operation of the outriggers remain disabled even after the crane is stowed, and the mode selector switch on the monitor is set to the “Outrigger” position, there may be faulty adjustment or failure in any of the outrigger safety devices. Ask us or our sales service agency for repair.**

https://truckmanualshub.com/

1.5 MOMENT LIMITER (OVERLOAD DETECTOR)

1.5.1 CONFIGURATION OF MOMENT LIMITER

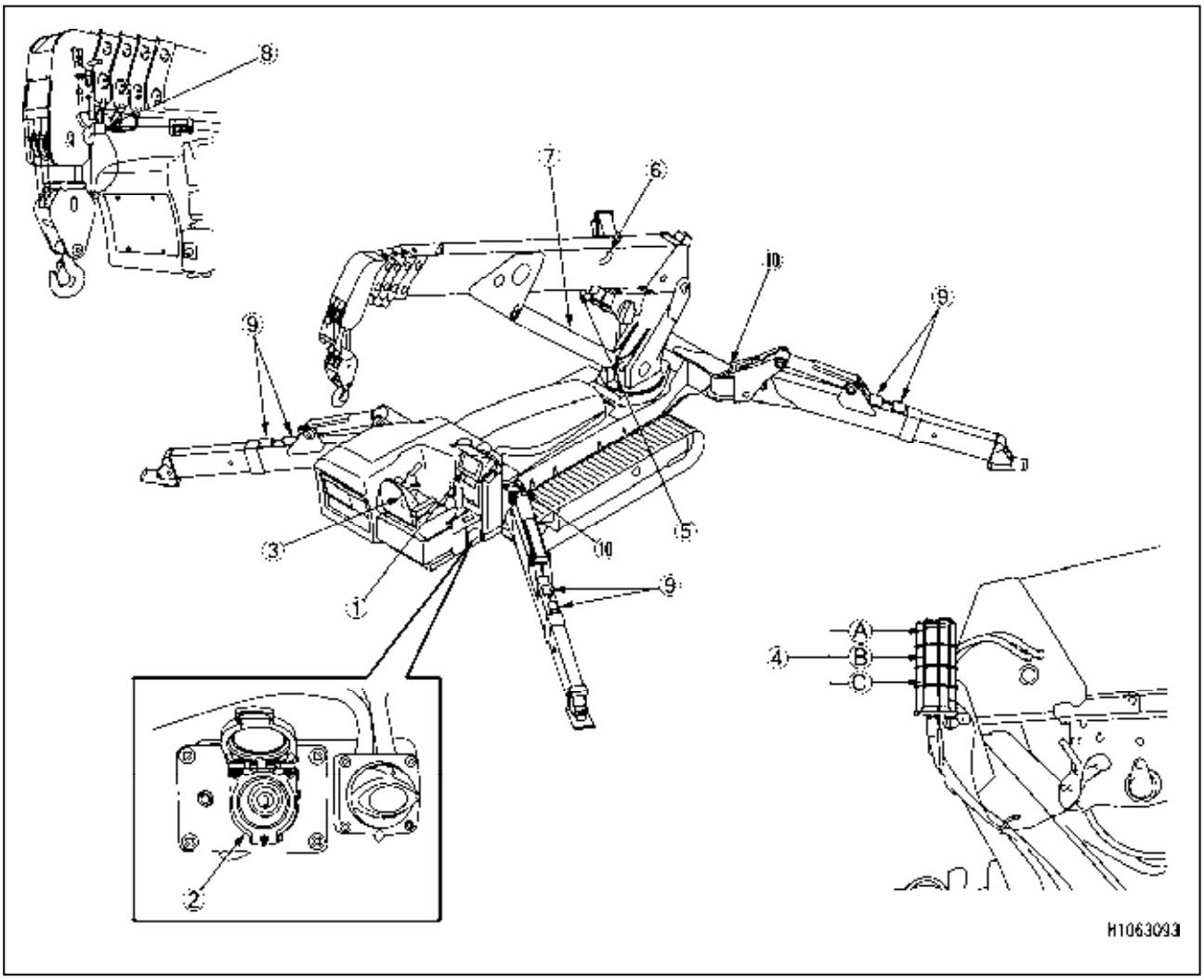

(1) Monitor
(2) Override switch
(3) Controller
(4) Tricolor revolving light
  (A) Red revolving light (warning lamp for a load capacity ratio of 100 % or higher)
  (B) Yellow revolving light (alarm lamp for a load capacity ratio between 90 and less than 100 %)
  (C) Green revolving light (operation indicator lamp for a load capacity ratio of less than 90 %)
(5) Boom length gauge (inside the boom)
(6) Boom angle indicator (Both side faces at the rear end of the boom)
(7) Pressure sensor (derricking cylinder section, 2 pieces)
(8) Over winding alarm detector (at the side surface of the boom front end)
(9) Outrigger position detection switch
(10) Outrigger rotary position detection switch

https://truckmanualshub.com/

1.5.2 FUNCTIONS OF MOMENT LIMITER

⚠ WARNING

- **Do not remove or disassemble, or repair any detectors, such as the boom angle gauge, boom length gauge, or pressure sensor. Never reposition the detector from the original location to another.**
- **When an object hits the detector or damage is found on it, be sure to check the operating condition of the automatic stop.**
  If an abnormality occurs during automatic stop operation due to a failed detector, be sure to repair it.
- **Do not set the override switch to the "ON" (reset) position except in case of an abnormality, or during a load test. Setting the override switch to the "ON" (cancel) position will disable the moment limiter functions. Any crane operation in such conditions will result in dropping of hoisted load, breakage of crane boom, and/or crane tipping due to over load, and may cause a serious accident resulting in death or serious injury.**
  If the emergency stop cancel switch is set to the "ON" (release) position, an alarm buzzer sounds intermittently.

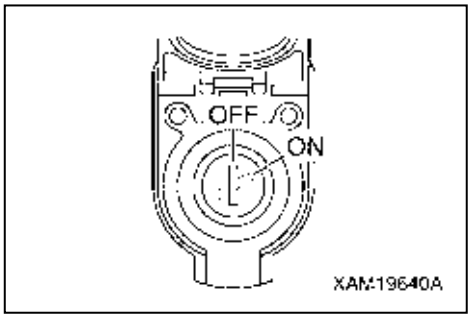

- **The crane slewing operation does not stop automatically when the crane is overloaded. When overloaded, the crane must not be slewed.**
- **When the boom is approaching the stop position while in operation, be sure to lower the operation speed of the boom.**
  Operating the boom at high speeds may result in a serious accident, such as death or serious injury. The boom may fail to stop at the predetermined position, causing the machine to overturn.

The moment limiter is a safety device for preventing accidents arising from overload, such as dropping of a suspended load, damage to the boom or an overturning accident of the machine. Before starting crane operations, be sure to inspect operation of the moment limiter to make sure that there is no abnormality.

[1] MECHANISM OF MOMENT LIMITER

The moment limiter calculates the Rated Total Load in the current condition by (1) detecting the current boom position from the boom angle and the boom angle gauges, (2) detecting the outrigger extension state with the outrigger position detection switch, and further (3) obtaining the number of wires falls (specified by an operator).

When a load is actually hoisted at this time, the pressure sensor for the derrick cylinder section causes the Actual Load (i.e., a hoisting load) to be output to the moment limiter.

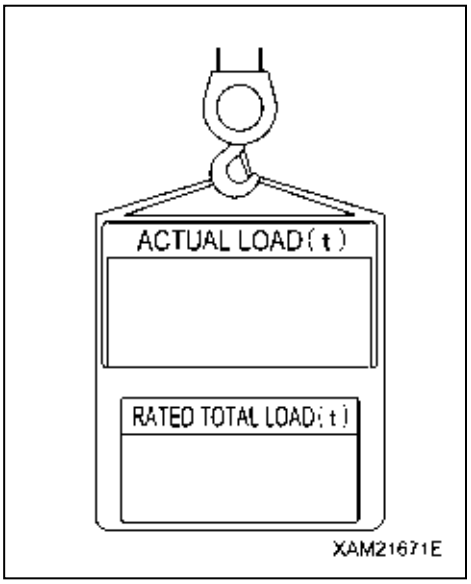

The moment limiter makes a comparison and calculation on the "Actual Load" (hoisting load) and the "Rated Total Load" that was calculated based on the current boom position. Then, an alarm goes off if the result is as follows: "Actual Load/Rated Total Load = 90 to 100 %".

If the result is as follows: Actual Load/Rated Total Load ≥ 100%, then the moment limiter generates an alarm and automatically stops the ongoing boom operation.

https://truckmanualshub.com/

[2] MOMENT LIMITER ERROR MESSAGE DISPLAY

The moment limiter is equipped with a self- diagnostic function at its display section in order to detect the occurrence of an abnormality, such as disconnection of wires or connectors, failure in the boom angle, boom length gauge, or in the pressure sensor.

The moment limiter notifies the operator of the detected results by using error codes, which are displayed on the monitor.

If any error code is displayed, immediately stop the use of the crane.

For details about the error codes and troubleshooting, refer to “OPERATION 11.7 LIST OF ERROR CODES”.

1.5.3 MOMENT LIMITER OPERATION

The moment limiter is a device that is provided for measures available in an emergency case. In actual fact, any operations relying on the device may incur danger.

Pay sufficient attention during operations so that the crane will not stop automatically.

[1] PROHIBITED OPERATIONS AFTER AUTOMATIC STOP

⚠ CAUTION

If the crane has stopped automatically due to overload, the following crane operations are prohibited.
Disobeying this rule may cause critical danger due to tipping of the machine or breakage of the boom, for example.
• Boom lowering • Boom raising • Boom extension • Hook winding • Crane slewing

[2] RECOVERY OPERATION FROM AUTOMATIC STOP

1. For a load capacity ratio: Less than 90 %

The normal green revolving lights stays on as long as the lifting load falls within 90 % of the Rated Total Load.

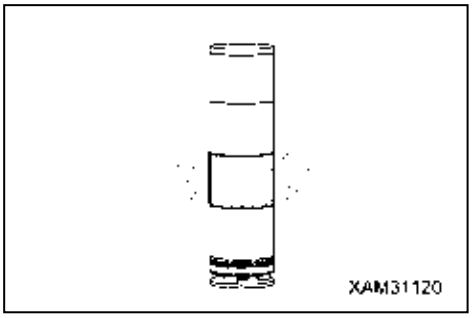

2. For a load capacity ratio: 90 to less than 100 %

In the case of lifting loads being 90 % (warning alarm) of the Rated Total Load, the illuminated green revolving lights turn yellow, and an alarm goes off intermittently to notify operators or people around that the lifting load is approaching the Rated Total Load.

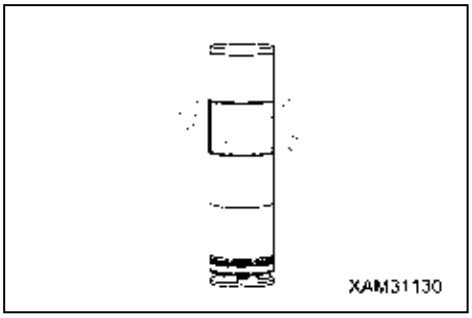

3. For a load capacity ratio: Higher than 100 %

If a lifting load exceeds 90 % (warning alarm) of the Rated Total Load and becomes higher than 100 % after repeated crane operations, the illuminated yellow revolving lights turns red and a alarm goes off constantly, causing the following crane operations to stop automatically.

• Hook winding • Boom extension
• Boom lowering • Boom raising

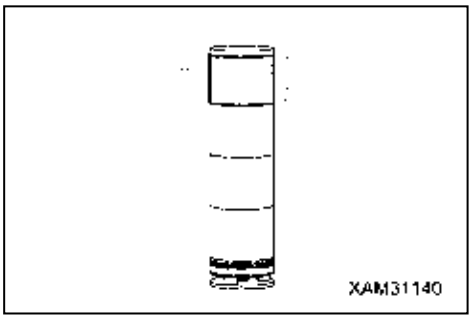

https://truckmanualshub.com/

4. RECOVERY OPERATION FROM AUTOMATIC STOP

To recover from the overload condition, perform one of the following so as to operate the crane in reverse order when it is automatically stopped.

(1) Unwind the wire rope to lower the hook, and place the suspended load on the ground.

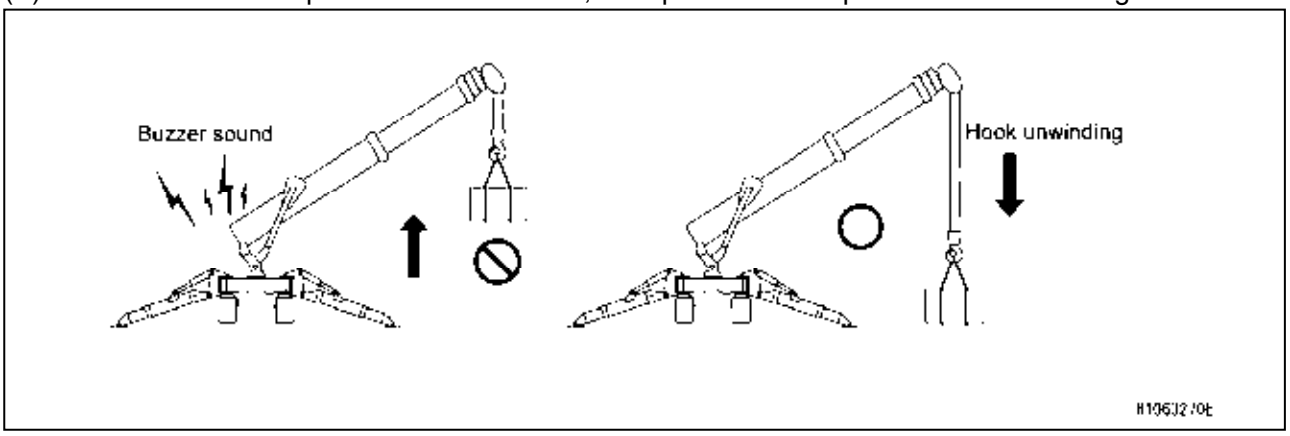

(2) Retract the boom.

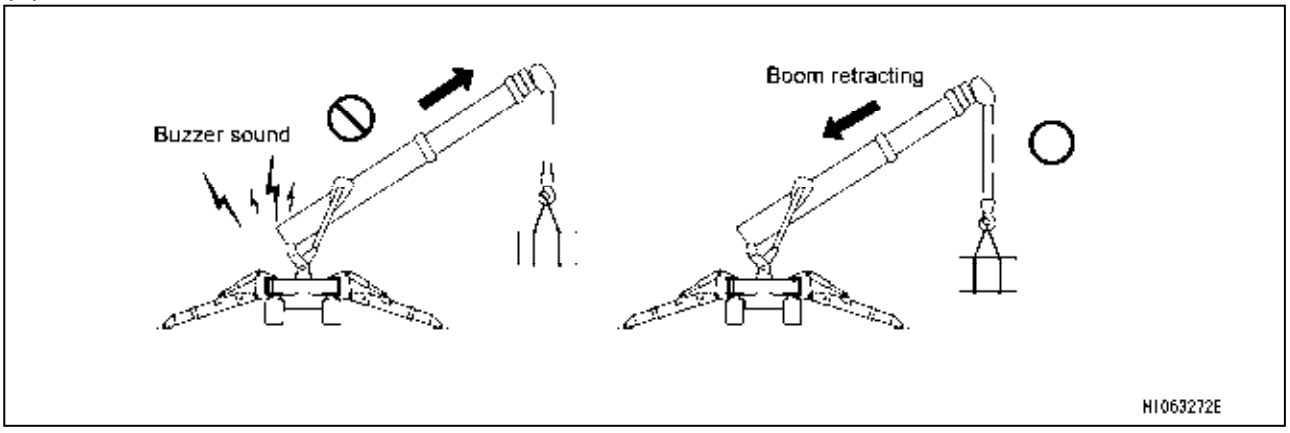

5. RECOVERY OPERATION BY USING BOOM LIFT BY-PASS SWITCH

⚠ CAUTION

Use the boom lift by-pass switch only when boom lowering operation or boom extending operation is automatically stopped due to overloading.
Never use this switch for lifting a load from the ground in normal situation. Using the boom lift by-pass switch to lift a load from the ground may cause critical danger due to tipping or breakage of the machine.

NOTES

- Boom raising operation using boom lift by-pass switch does not work by remote control. To use this switch, turn off the remote control and operate on the machine.
- While using this switch, machine condition becomes like the following.
  - Engine rotation slows down.
  - Continuous buzzer sounds.
  - Red rotary lamp lights.

In auto-stop condition, if you inevitably need to raise the boom, you can operate to raise the boom only while pushing the “Eco mode switch / Boom lift bypass switch”, or while touching the screen.

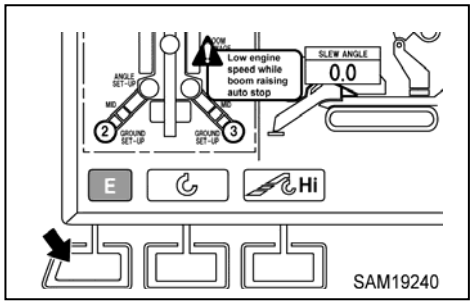

https://truckmanualshub.com/

1.5.4 MOMENT LIMITER SETTINGS

[1] NUMBER OF WIRE FALLS SELECTOR SWITCH

⚠ WARNING

As to the number of wire falls, check the actual number of wires, and set the correct value.
If the setting is incorrect, the crane fails to stop automatically even when the suspended load is approaching overload due to a warning alarm that fails to go off. This will result in a serious accident, such as damage to the crane, or overturning of the machine.

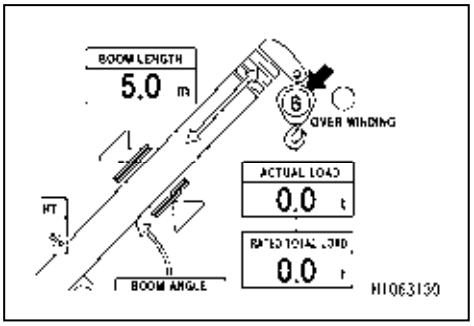

To change the number of wire falls, touch the setting switch on the monitor to display the User Initial Mode screen, which allows you to change the setting.
The value set for the number of wire falls is displayed in its corresponding field on the monitor.
Refer to section “OPERATION 1.2.1 [7] Setting switch” on how to switch the number of wire falls.

[2] BOOM ANGLE UPPER LIMIT SWITCH

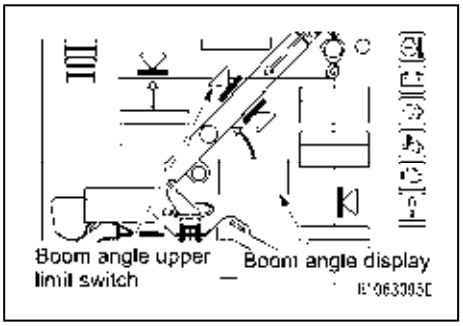

Use this switch to set or reset the boom angle upper limit value.

[Setting]

With no value being set for the upper limit angle, move the boom to an angle you want to set as an upper limit angle, and push and hold the switch for 2 seconds.
The boom angle at this time will be set as an upper limit angle.
At the same time, the illuminated blue indicator lamp on the switch turns orange to indicate that the upper limit angle has been set.
To enable this setting, turn the key switch to the “OFF” position and then turn it to the “ON” position again, or lower the boom with the engine running so that the boom angle becomes smaller than the set value by at least “10 degrees” to get out of the warning alarm zone.

NOTES

Before performing a practical operation, be sure to check if the boom automatically stops at the specified angle. If the boom does not stop, set the upper limit angle again by repeating the procedure mentioned above.

[Resetting]

To reset the upper limit angle that has been set (the indicator lamp is illuminated in orange), push and hold the switch for 5 seconds,
The currently effective upper limit angle will be reset. At the same time the illuminated orange indicator lamp at the switch turns blue to indicate that the upper limit angle has been reset.

NOTES

The setting and resetting of an upper limit angle cannot be performed consecutively even if the switch is touched and held for 2 seconds. To perform these operations consecutively, release your finger from the switch between each operation.

[3] BOOM ANGLE LOWER LIMIT SWITCH

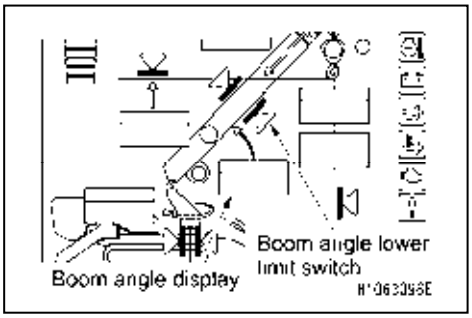

Use this switch to set or reset the boom angle lower limit.

[Setting]

With no value being set for the lower limit angle, move the boom to an angle you want to set as an upper limit angle, and push and hold the switch for 2 seconds.

The boom angle at this time will be set as a lower limit angle.

At the same time, the illuminated blue indicator lamp on the switch turns orange to indicate that the lower limit angle has been set.

To enable this setting, turn the key switch to the “OFF” position and then turn it to the “ON” position again, or raise the boom with the engine running so that the boom angle becomes larger than the set value by at least “7 degrees” to get out from the warning alarm zone.

NOTES
Before performing a practical operation, be sure to check if the boom automatically stops at the specified angle. If the boom does not stop, set the boom angle again by repeating the procedure mentioned above.

[Resetting]

To reset the lower limit angle that has been set (the indicator lamp is illuminating in orange), push and hold the switch for 5 seconds,

The currently effective lower limit angle will be reset. At the same time the illuminated orange indicator lamp at the switch turns blue to indicate that the set value for the lower limit angle has been reset.

NOTES
The setting and resetting operations cannot be performed in a row even if the switch is touched and held for 2 seconds. To perform these operations consecutively, release your finger from the switch between each operation.

[4] WORKING RADIUS LIMITER SWITCH

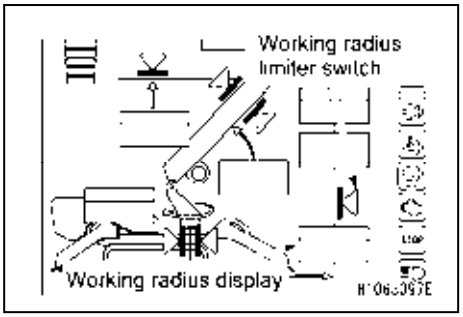

Use this switch to set or reset the upper limit for the working radius.

[Setting]

With no value being set for the upper limit, move the boom to a working radius you want to set, and push and hold the switch for 2 seconds.

The working radius at this time will be set as an upper limit.

At the same time, the illuminated blue indicator lamp on the switch turns orange to indicate that the upper limit for the working radius has been set.

To enable this setting, turn the key switch to the “OFF” position and then turn it to the “ON” position again, or move the boom with the engine running so that the working radius becomes smaller than the set value by at least “1.3 m” to get out of the boom from the warning alarm zone.

NOTES
Before performing a practical operation, be sure to check if the boom automatically stops at the specified working radius. If the boom does not stop, set the working radius again by repeating the above procedure.

[Resetting]

To reset the upper limit value that has been set (the indicator lamp is illuminating in orange), push and hold the switch for 5 seconds.

The currently effective upper limit value will be reset. At the same time the illuminated orange indicator lamp at the switch turns blue to indicate that the set value for the upper limit has been reset.

NOTES
The setting and resetting operations cannot be performed consecutively even if the switch is pressed and held for 2 seconds. To perform these operations consecutively, release your finger from the switch between each operation.

[5] LIFTING HEIGHT LIMITER SWITCH

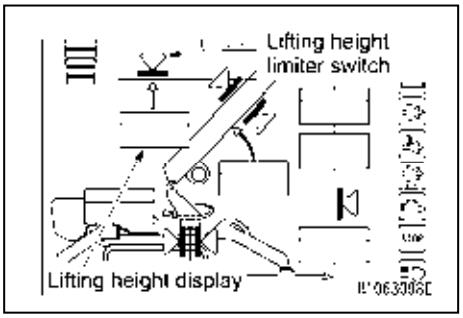

Use this switch to set or reset the upper limit value for the lifting height.

Though the lifting height limit is activated by detecting the height of the front end of the boom, the lifting height appears in the display field indicating the height of the hook when it is hoisted until over-winding is detected.

[Setting]

With no value being set for the upper limit angle, set the boom to a height you want to set as an upper limit for the lifting height, and push and hold the switch for 2 seconds.

The lifting height at this time will be set as an upper limit.

At the same time, the illuminated blue indicator lamp on the switch turns orange to indicate that the upper limit height has been set.

To enable this setting, turn the key switch to the “OFF” position and then turn it to the “ON” position again, or move the boom with the engine running so that the lifting height becomes smaller than the set value by at least “1.3 m” to get the boom out from the warning alarm zone.

NOTES
Before performing a practical operation, be sure to check if the boom automatically stops when it reaches the specified lifting height limit. If the boom does not stop, set the upper limit for the lifting height again by repeating the above procedure.

[Resetting]

To reset the upper limit value that has been set (the indicator lamp is illuminating in orange), push and hold the switch for 5 seconds. The currently effective upper limit angle will be reset. At the same time the orange indicator lamp at the switch section turns blue to indicate that the set value for the upper limit has been reset.

NOTES
The setting and resetting operations cannot be performed consecutively even if the switch is pressed and held for 2 seconds. To perform these operations consecutively, release your finger from the switch between each operation.

https://truckmanualshub.com/

[6] CLOCKWISE/COUNTER-CLOCKWISE SLEW ANGLE LIMITER SWITCHES

Use these switches to set or reset the upper limit angles for the boom slew angle.

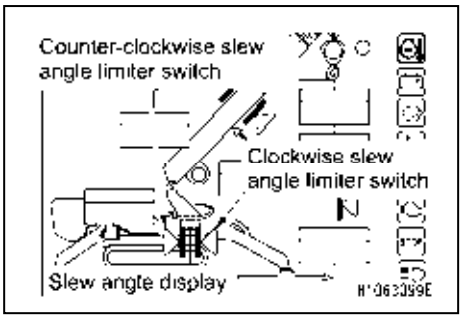

[Setting]

With no value being set for the upper limit angle, rotate the boom to an angle you want to set as an upper limit, and push and hold the switch for 2 seconds.

The slewing angle at this time will be set as an upper limit angle.

At the same time, the illuminated blue indicator lamp on the switch turns orange to indicate that the upper limit has been set.

To make this setting effective, either temporarily turn the key switch [OFF] and then back [ON] again; or, with the engine running, change the slew angle until you leave the warning alarm zone.

[Resetting]

To reset the upper limit angle that has been set (the indicator lamp is illuminated in orange), push and hold the switch for 5 seconds. The currently set upper limit angle will be reset. At the same time the illuminated orange indicator lamp at the switch turns blue to indicate that the upper limit angle has been reset.

NOTES
The setting and resetting operations cannot be performed consecutively even if the switch is pressed and held for 2 seconds. To perform these operations consecutively, release your finger from the switch between each operation.

1.5.5 MOMENT LIMITER FUNCTIONS

[1] OVERLOAD ALARM

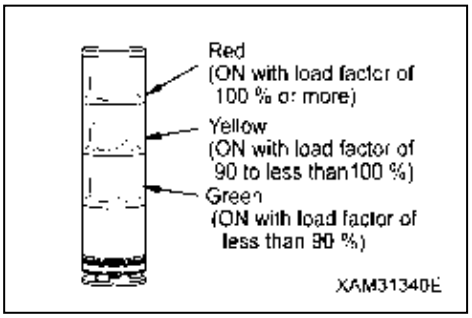

1. **Safety area (the Actual Load is smaller than 90% of the Rated Total Load)**
   - The tricolor revolving light illuminates in green.
2. **Warning alarm (the Actual Load is from 90 to less than 100 % of the Rated Total Load)**
   - The tricolor revolving light illuminates in yellow.
   - The alarm generates an intermittent buzzer sound, “peep, peep”.
3. **Limit alarm (the Actual Load is greater than or equal to 100% of the Rated Total Load)**
   - The tricolor revolving light illuminates in red.
   - The alarm generates continuous sound “peep”.
   - Operation of the crane’s danger side stops automatically.
4. **Resetting Limit Alarm Automatic Stop**

   When an automatic stop occurs, immediately recover from the overload.

   For recovery operations, refer to “OPERATION 1.5.3 [2] RECOVERY OPERATION FROM AUTOMATIC STOP”.

https://truckmanualshub.com/

[2] WORKING RADIUS LIMITER ALARM

When the boom is approaching the predetermined working radius limit, the alarm goes off to alert the operator and people around the machine.

The set values for the working radius limit will remain memorized even after the starter switch is set to the “OFF” position.

When the working radius limit is specified, the machine operation is as follows:

1. Safety area

- The indicator lamps of the respective working radii illuminate in orange.
- The tricolor revolving light illuminates in green.

2. Warning alarm

- The indicator lamps for the respective working ranges blink in orange.
- The alarm generates an intermittent buzzer sound, “peep, peep”.
- The tricolor revolving light illuminates in green.

3. Limit alarm

- The indicator lamps for the respective working ranges blink in orange.
- The tricolor revolving light illuminates in yellow.
- The alarm generates continuous sound “peep”.
- The alarm buzzer operates only when the operation lever is operated.
- Operation of the boom’s danger side stops automatically.

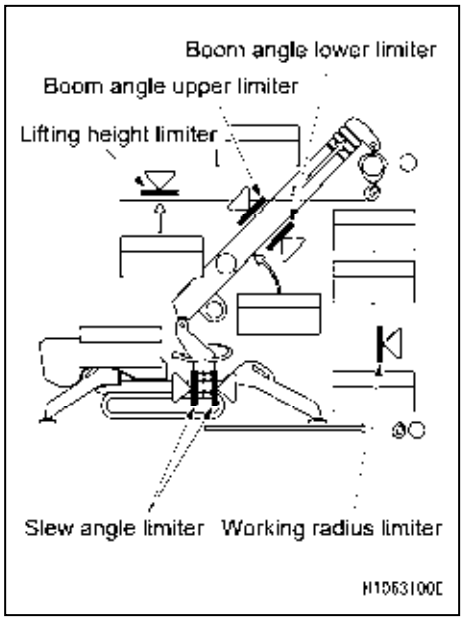

[3] OVER HOIST DETECTOR

CAUTION

When winding the hook, be careful of clearance between the hook and boom.
When the boom is extended, the hook is also wound up.
Be sure to always check the hook height while the boom is extended.

If the hook height becomes excessively high while it is wound or the boom is extended, the following occur:

- The “OVER WINDING” detection indicator lamp blinks in red.
- The alarm generates continuous sound “peep”.
- The ongoing operation, hook winging or boom extension, automatically stops.

When an automatic stop occurs, immediately recover from the stop.

To resume the operation, unwind the wire rope to lower the hook, or retract the boom.

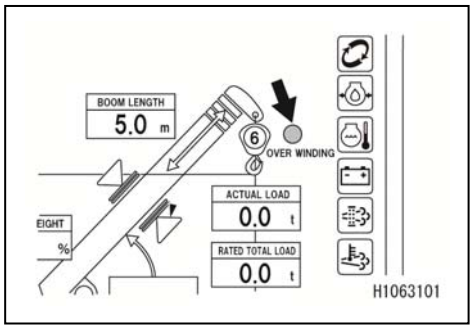

https://truckmanualshub.com/

[4] NUMBER OF EIRES HUNG CHANGE DISPLAY

⚠ WARNING

- **Before changing the number of wires hung with the switch for changing the number of wires hung, be sure to stop the ongoing crane operation. Changing the number of wires hung during crane operation may result in an unexpected accident.**
- **Before starting a crane operation, make sure that the number of wires hung set for the moment limiter agrees with the actual number. Mistaking the number of wires hung may cause serious accidents to occur.**

A safety load per one wire rope is specified.
The number of wires hung must be determined according to the maximum load to be lifted.
Always make sure that the number of wires hung indicated on the monitor agrees with the actual number.
To change the number of wires, switch to the User Initial Mode screen by pressing the settings switch on the monitor.
The set value for the number of wires hung will remain memorized even after the starter switch is set to the “OFF” position.

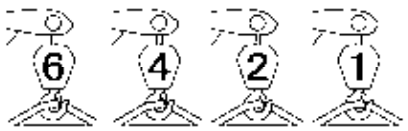

[5] BOOM UPPER LIMIT DETECTION

When the boom angle reaches approximately “77 degrees” while the boom is raised up in a boom derricking operation, the boom stops automatically.

[6] BOOM LOWER LIMIT DETECTION

When the boom angle reaches approximately “3 degrees” while the boom is lowered in a boom lowering operation, the boom stops automatically.

[7] OUTRIGGER EXTENSION DETECTION

The extension states of individual outriggers are detected with the four limiter switches installed on the respective outriggers. The Rated Total Load can be adjusted according to the indications, MIN, MID, or MAX, for the outrigger states.

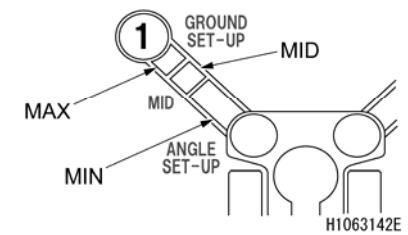

https://truckmanualshub.com/

[8] EXCESSIVE UNWIND DETECTOR

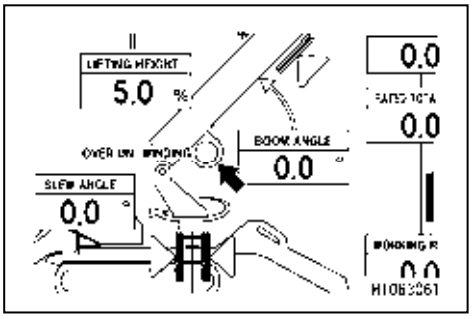

When the hook is unwound and the length of the wire rope remaining in the winch drum becomes short, the following occur:

- “OVER UNWINDING” indication blinks in red.
- When hook unwinding operation is performed, the alarm issues an intermittent sound “peep”.
- The hook unwinding action is automatically stopped.

When unwinding operation is automatically stopped, perform recovery operation promptly. To perform recovery operation, perform hook winding up operation.

1.5.6 MOMENT LIMITER START CONDITIONS

The moment limiter performs a check on the moment limiter functions for 2 seconds immediately after the starter switch is set to the “ON” position.

During the check,

- The tricolor revolving light illuminates in red.
- The horn sounds momentarily.

When the moment limiter function check is completed, if the moment limiter and the sensors are found to be normal, then the red revolving lights goes out and the green revolving lights illuminates to indicate that the machine is ready for operation.

CAUTION

After the moment limiter function check, if the red revolving lights do not go out, contact us or our sales service agent.

https://truckmanualshub.com/

1.5.7 OVERRIDE SWITCH

⚠ DANGER

Override switch has a function to disable the moment limiter.
For about 3 minutes from this switch is turned ON, the crane does not automatically stop with the moment limiter and is very dangerous. Any crane operation in such conditions may result in dropping of the hoisted load, breakage of crane boom, and/or machine tipping, and may cause a serious accident resulting in death or serious injury. Use this switch only when the moment limiter, which detects the crane conditions, fails or a load test of the crane is conducted. Key for the switch must be detached during normal operations.
In particular, never perform the following uses.

- Never wind up the hook to hoist a load while this switch is turned to the “ON” position.**Even if the weight of hoisted load exceeds the rated total load, the moment limiter cannot detect it, and could result in dropping of the hoisted load, boom breakage or machine tipping due to cutting of the winch wire rope.**
- **After the moment limiter detects that the rated total load is exceeded during crane operation and automatically stops the operation, do not perform hoisting operation, boom lowering operation and boom extension operation while the operation stop function is cancelled by turning this switch to the “ON” position. Such operation may cause boom breakage and machine tipping.**
- **Use the hook storage switch when stowing the hook. If this switch is turned ON to perform hook hoisting operation, automatic stop is not made in an over winding condition.**

Use this switch only when the moment limiter fails or a load test of the crane is conducted.

•ON : Insert the key into the switch. Turn the key clockwise to “ON” position once, and operation stop function is cancelled.

•OFF : The key can be removed or inserted at this position.

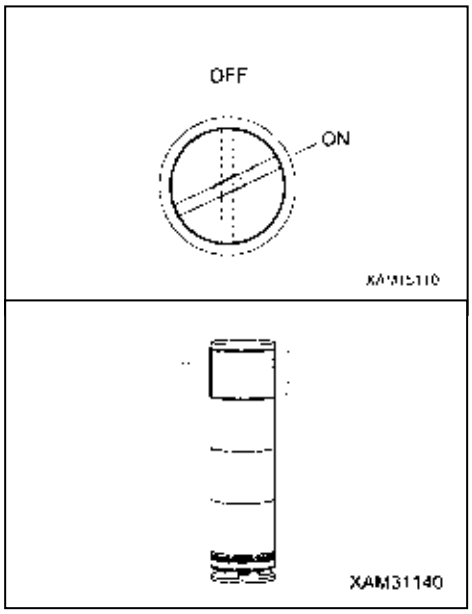

NOTES

The machine condition becomes like the following when the operation stop function is cancelled.

- The red lamp of the rotating warning lamp turns on.
- The LED of the switch box lights up.
- The buzzer sounds continuously.
- The icon will be displayed on the monitor.
- Boom lowering speed and boom extending speed slow down.

If the switch is turned to “ON” position once, the moment limiter function remain cancelled even the switch is returned to “OFF” position, unless 3 minutes is passed or engine key is turned to “OFF”.

However, these behaviors are subject to change depending on the status of the Machine body.

1.5.8 TROUBLESHOOTING FOR MOMENT LIMITER

If an abnormality occurs in the moment limiter, an error code appears on the monitor to alert the operator to the occurrence of an abnormality.

For details about the error codes, refer to “OPERATION 11.7 LIST OF ERROR CODES”.

https://truckmanualshub.com/

1.6 OVER HOIST DETECTOR

CAUTION

When winding the hook block, be careful of clearance between the hook block and boom.
Also, the hook block can be wound when the boom is extended.
Perform boom extension operation while always checking the hook block height.

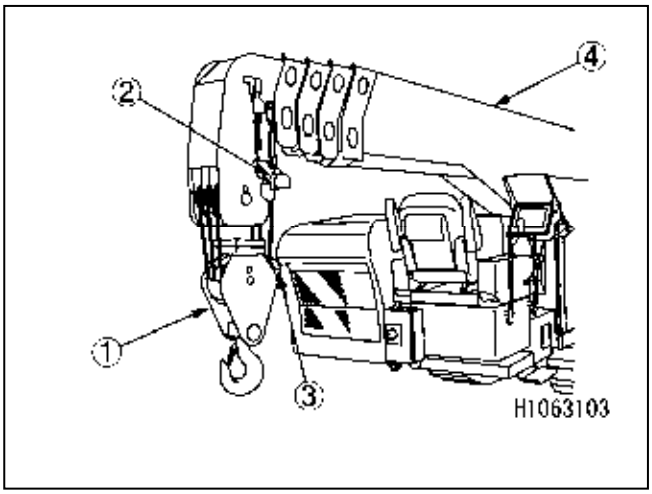

(1) Hook block
(2) Over hoist detector
(3) Weight
(4) Boom

The over winding detector alerts the operator to the occurrence of over winding with an intermittent buzzer sound, while the hook block (1) is wound or the boom (4) is extended, or when the weight (3) is pushed upward due to hook block (1) approaching the boom (4).
At the same time, the winding of the hook block (1) and the extension of the boom (4) stop automatically.
When you hear the alarm buzzer sound, immediately shift the right control lever to the “UNWIND”position, or shift the left control lever to the “RETRACT” position, in order to unwind the hook block (1).

NOTES

When this switch is in the “ON” position, the tricolor revolving light illuminates in red.

https://truckmanualshub.com/

1.7 OPERATOR SEAT

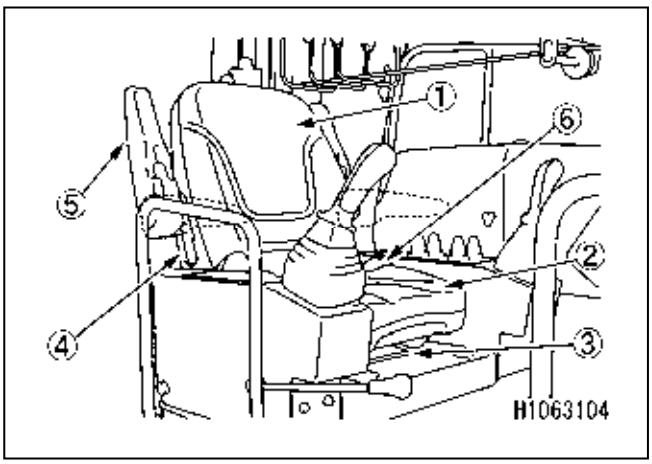

(1) Back seat
(2) Seat
(3) Slide adjustment lever
(4) Reclining adjustment lever
(5) Arm rest
(6) Seatbelt

⚠ WARNING

- **Before driving and operating the machine, be sure to adjust the operator seat. Be sure to adjust the operator seat particularly after use by other operators.**
- **Adjust the operator seat with your back against the operator seat so that you can effortlessly operate the accelerator pedal, crane control levers, and control levers.**
- **Never adjust the operator seat while driving the machine.**

[1] SEAT FORE-AND-AFT ADJUSTMENTS

Use the slide adjustment lever (3) to adjust the seat.

1. Move the seat (2) back and forth while pulling the slide adjustment lever (3) upward.
2. After adjusting seat (2) position, release your hand from the slide adjustment lever (3).
   The seat (2) will be fixed at that position.

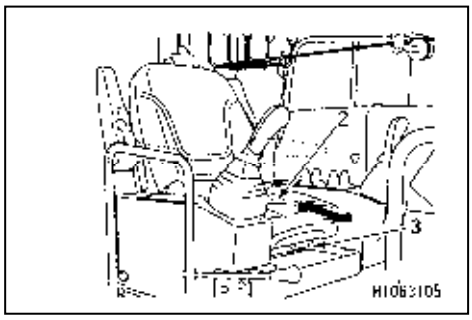

[2] RECLINING ADJUSTMENT

Use the reclining adjustment lever (4) to adjust the seat.

1. Fold the seat (1) forward and backward while pulling the reclining adjustment lever (4) forward.
2. After adjusting the reclining angle of the seat (1), release your hand from the reclining adjustment lever (4).
   The seat (1) will be fixed at that angle.

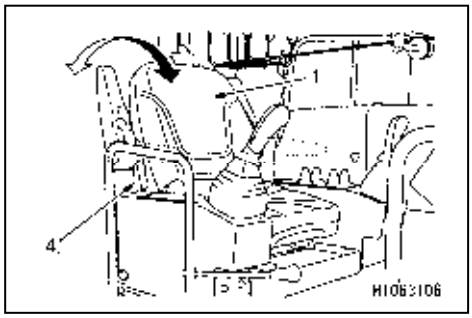

https://truckmanualshub.com/

[3] ARM REST

The arm rest (5) can be folded up towards the back of the seat (1).

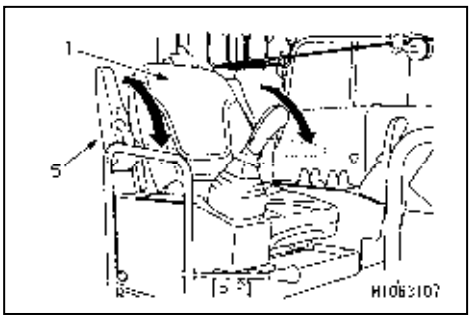

NOTES
Before getting in or off the machine, be sure to fold up the arm rest.

[4] SEATBELT

⚠ WARNING

- **Before wearing the seatbelt, check the seat belt and the seatbelt brackets for damage or defects.**
  A seatbelt that is damaged or worn out must be replaced with new one.
- **The seatbelt must be replaced once every three years even if its appearance does not show abnormalities.**
  To check the date of manufacture, see the back side of the seatbelt.
- **Always wear the seatbelt when you drive or operate the machine.**
- **Do not wear the seatbelt in a twisted state.**

Since a seatbelt tensioner is incorporated into the seatbelt unit, it is unnecessary to adjust the length of the seatbelt.

1. HOW TO WEAR SEATBELT

Hold the grip (2) and pull out the seatbelt from the belt tensioner (1). Make sure that the seat belt is not twisted, and securely insert the seat belt tongue (3) into the buckle (4).

At this time, pull the seatbelt lightly to make sure that it is securely locked.

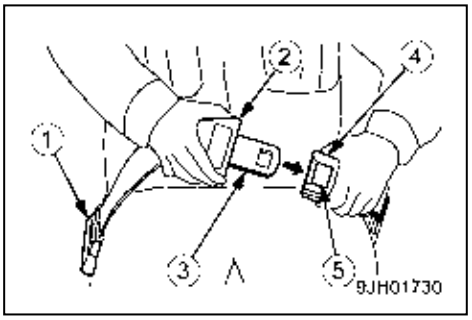

2. HOW TO UNFASTEN SEATBELT

When you push the button (5) on the buckle (4), the seat belt tongue (3) will come out from the buckle (4).

Since the seatbelt is automatically wound up, gently put the seatbelt back into the belt tensioner (1) by holding the grip (2).

https://truckmanualshub.com/

1.8 RADIATOR COVER

⚠ WARNING

- **Before removing the radiator cover, be sure to stop the engine and remove the key from the starter switch.**
- **Do not remove the radiator cover immediately after operation while the engine is still hot.**

[1] REMOVING RADIATOR COVER

Remove the radiator cover with the following procedure when performing inspection/maintenance inside the radiator cover.

1. Remove the fixing bolts (2) (4 bolts) of the radiator cover (1).
2. Remove the radiator cover (1).

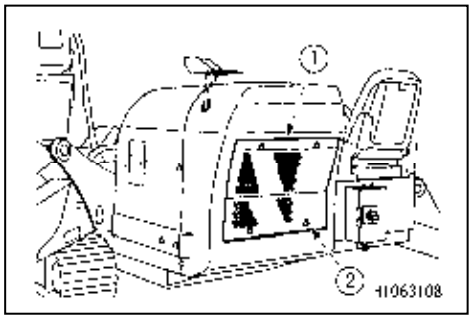

[2] INSTALLING RADIATOR COVER

When you are finished with inspection/maintenance inside the radiator cover, install the radiator cover in the following procedure:

1. Put back the radiator cover (1) into place.
2. Securely tighten the fixing bolts (2) (4 bolts) of the radiator cover (1).

https://truckmanualshub.com/

1.9 RADIATOR GRILLE

⚠ WARNING

- **Before removing the radiator grille, be sure to stop the engine and remove the key from the starter switch.**
- **Do not remove the radiator grille immediately after operation while the engine is still hot.**

⚠ CAUTION

Since the radiator grille is relatively big in size, and mounted high on the machine, the radiator grille must be removed or installed by two or more people.

[1] REMOVING RADIATOR GRILLE

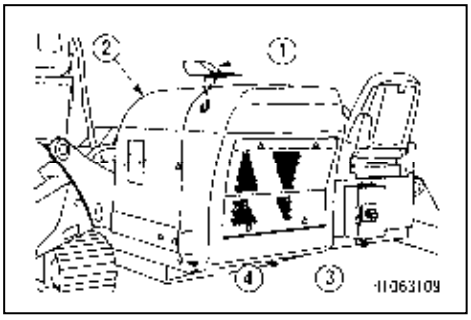

Remove the radiator grille with the following procedure when performing inspection/maintenance inside the radiator grille.

1. Remove the engine cover (2) by consulting “OPERATION 1.10 ENGINE COVER”.
2. Remove the front left camera (1).
3. Remove the fixing bolts (2 bolts) securing the operation side cover together with the radiator grille (3).
4. Remove the fixing bolts (4) (2 bolts) of the radiator grille (3).
5. Remove the radiator grille (3) by pulling it backward.

[2] INSTALLING RADIATOR GRILLE

When you are finished with inspection/maintenance inside the radiator grille, install the radiator grille in the following procedure:

1. Put back the radiator grille (3) into position.
2. Securely tighten the fixing bolts (4) (2 bolts) of the radiator grille (3).
3. Securely tighten the fixing bolts (2 bolts) securing the operation side cover together with the radiator grille (3).
4. Install the front left camera (1).
5. Install the engine cover by consulting “OPERATION 1.10 ENGINE COVER”.

https://truckmanualshub.com/

1.10 ENGINE COVER

⚠ WARNING

- **Before removing the engine cover, be sure to stop the engine and remove the key from the starter switch.**
- **Do not remove the engine cover immediately after the operation while the engine is still hot.**

⚠ CAUTION

Since the engine cover is relatively big in size, and mounted high on the machine, the engine cover must be removed or installed by two or more people.

[1] ENGINE COVER

Remove the engine cover with the following procedure when performing inspection/maintenance inside the engine cover.

1. Remove the fixing bolts (2) (10 bolts) of the engine cover (1).
2. Remove the engine cover (1).

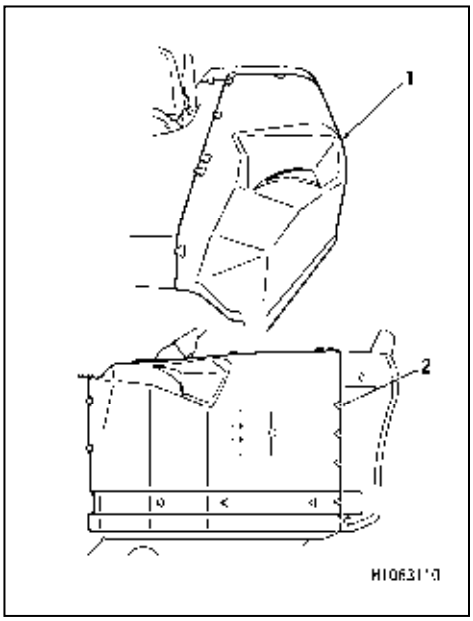

[2] INSTALLING ENGINE COVER

When you are finished with inspection/maintenance inside the engine cover, install the engine cover in the following procedure:

1. Put back the engine cover (1) into position.
2. Securely tighten the fixing bolts (2) (10 bolts) of the engine cover (1).

https://truckmanualshub.com/

1.11 MACHINERY COVER

⚠ WARNING

- **Before removing the machinery cover, be sure to stop the engine and remove the key from the starter switch.**
- **Do not remove the machinery cover immediately after operation while the engine is still hot.**

⚠ CAUTION

Since the machinery cover is relatively big in size, and mounted high on the machine, the machinery cover must be removed or installed by two or more people.

CAUTION

To facilitate the inspection/maintenance work, it is advisable to deploy the outriggers and lower the boom to some extent. This provides a larger work space than when the outriggers and boom are stowed.

[1] REMOVING MACHINERY COVER

Remove the machinery cover with the following procedure when performing inspection/maintenance inside the machinery cover.

1. Extend the front outrigger **1** and outrigger **4**.
2. Extend the rear outrigger **2** and outrigger **3**.
3. Remove the fixing bolts (3) (12 bolts) of the right-side machinery cover (1) and left-side machinery covers (2).

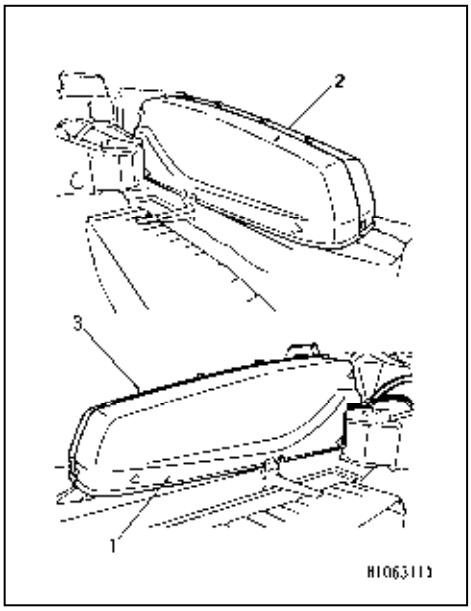

NOTES

The fixing bolts used are as follows: one on the front, three on the top, 2 for the joint fastening of the engine cover, 2 for the joint fastening of the operation side cover, and 4 (2 each) on the left and right sides of the machine.

4. Pull the left side machinery cover (1) to the side and remove it.
5. Pull the right side machinery cover (2) to the side and remove it.

[2] INSTALLING MACHINERY COVER

When you are finished with inspection/maintenance inside the machinery cover, install the machinery cover in the following procedure:

1. Put back the right-side machinery cover (2) into place.
2. Put back the left-side machinery cover (1) into place.
3. Securely tighten the fixing bolts (12 bolts) of the left machinery covers (1) and right machinery covers (2).
4. Turn all outrigger rotaries inside to stow them, by referring to “OPERATION 2.24 OUTRIGGER STOWAGE OPERATION”.

https://truckmanualshub.com/

1.12 OPERATION SIDE COVER

[1] REMOVING THE OPERATION SIDE COVER

Remove the operation side cover with the following procedure when performing inspection/maintenance inside the operation side cover:

1. Remove the 10 bolts (2) on the operation side cover (1).
2. Remove the operation side cover (1).

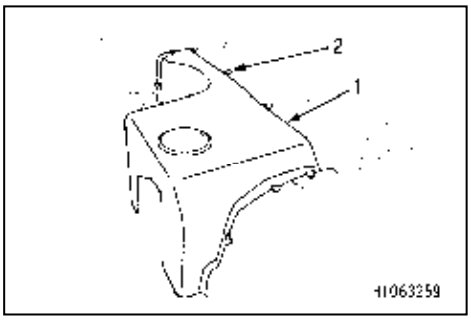

[2] INSTALLING THE OPERATION SIDE COVER HATCH

When you are finished with inspection/maintenance inside the operation side cover, install the operation side cover with the following procedure:

1. Put back the operation side cover (1) into position.
2. Securely tighten the fixing bolts (2) (10 bolts) of the operation side cover (1).

https://truckmanualshub.com/

1.13 POWER UNIT

1.13.1 NAMES OF POWER UNIT PARTS

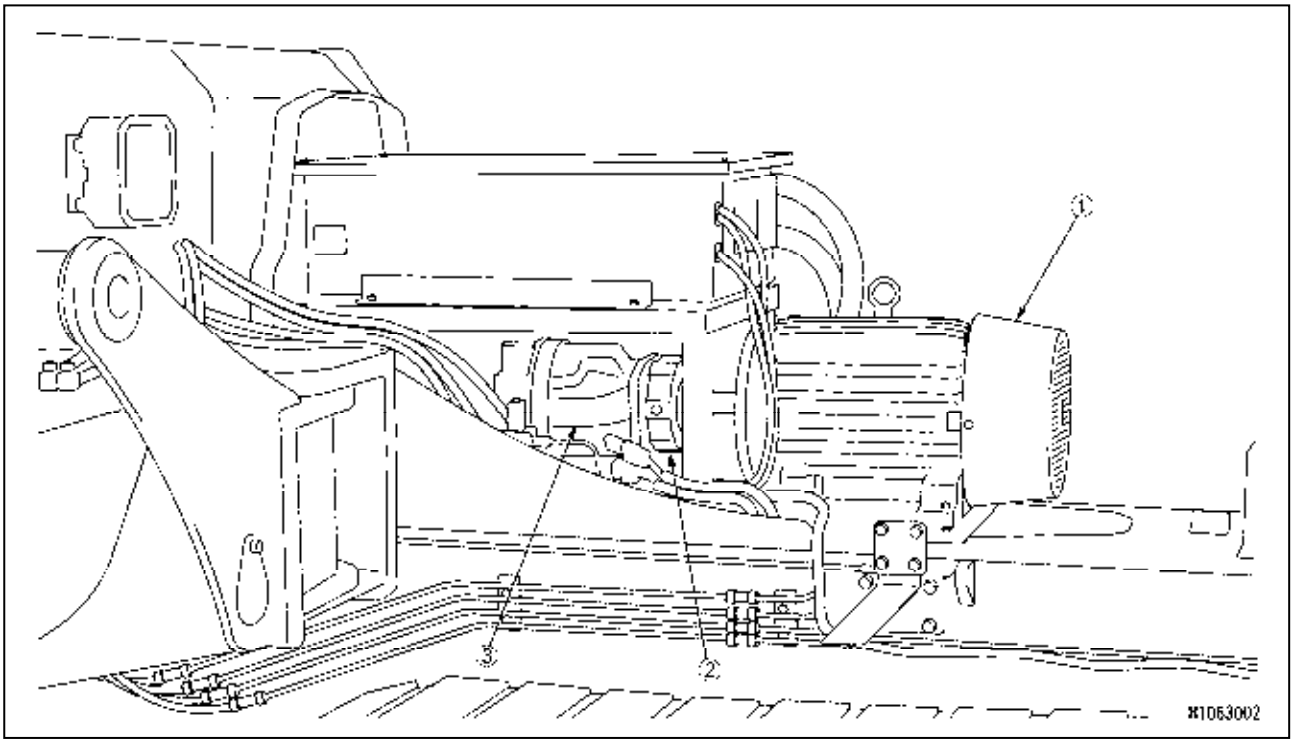

(1) Electric motor (2) Coupling (3) Hydraulic pump

1.13.2 NAMES OF POWER SUPPLY BOX PARTS

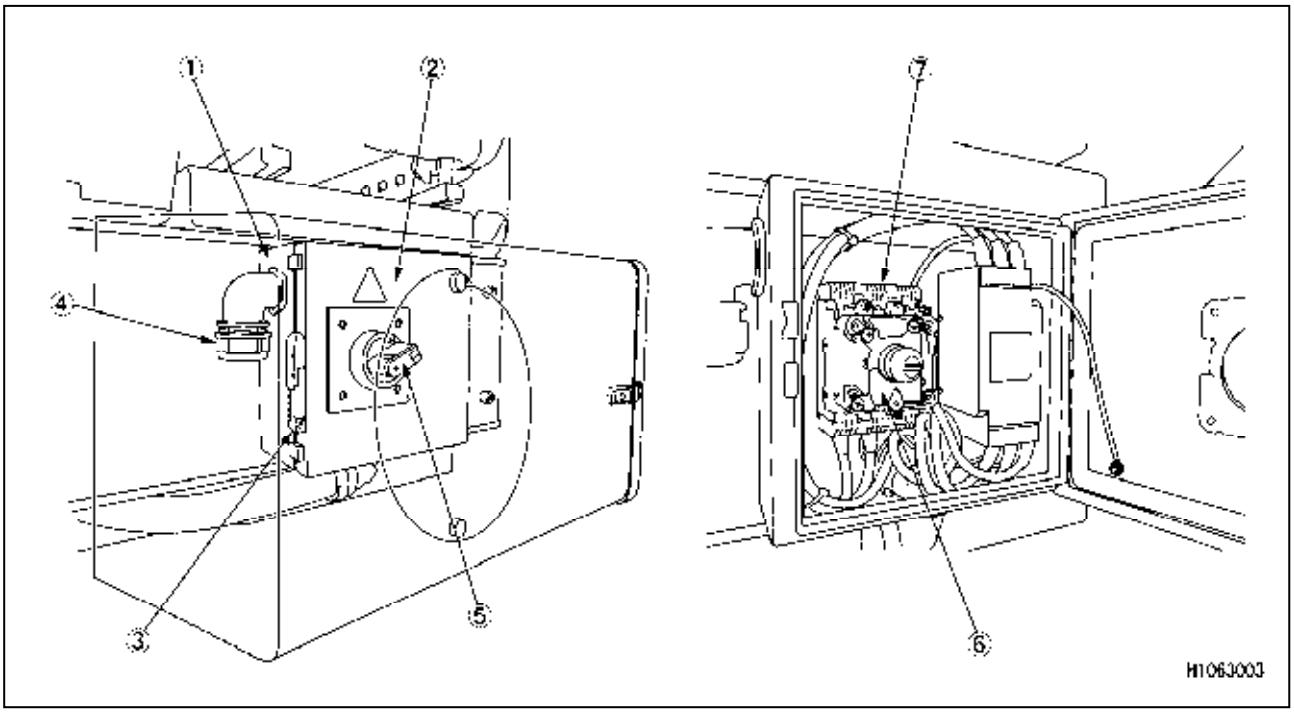

(1) Power supply box
(2) Power supply box door
(3) Power supply box handle
(4) Cable gland
(5) Breaker switch
(6) Breaker switch block
(7) Cover

https://truckmanualshub.com/

[1] BREAKER SWITCH

⚠ WARNING

- **Be sure to put the breaker switch into the "OFF" position if this machine is not connected to a power supply or after work has finished.**
- **If during operation, the breaker automatically enters the "OFF" position, a fault has occurred somewhere such as around the inverter panel, around the electric motor or the electric wiring. Be sure to check those places, and confirm that there is no burning smells or signs of burning. After that, request check/repair from our company or our company's sales service shop.**
- **Complete check/repair before turning the breaker switch "ON" to return power to the machine. If you return power to the machine without a check/repair, this may cause a fire or various parts to malfunction.**

The breaker switch (1) automatically disconnects the power, which is distributed from the inverter panel to the electric motor. When an overcurrent or over voltage occurs, the breaker switch (1) prevents fire or faults in various parts from occurring. Also, the breaker switch (1) controls power supply to the electric motor and inverter.

- ON: Power is supplied.
- OFF: Power is disconnected.

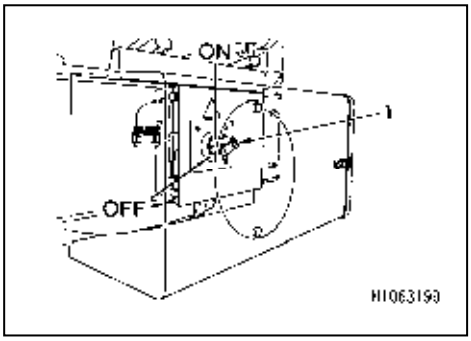

1.13.3 NAMES OF INVERTER PARTS

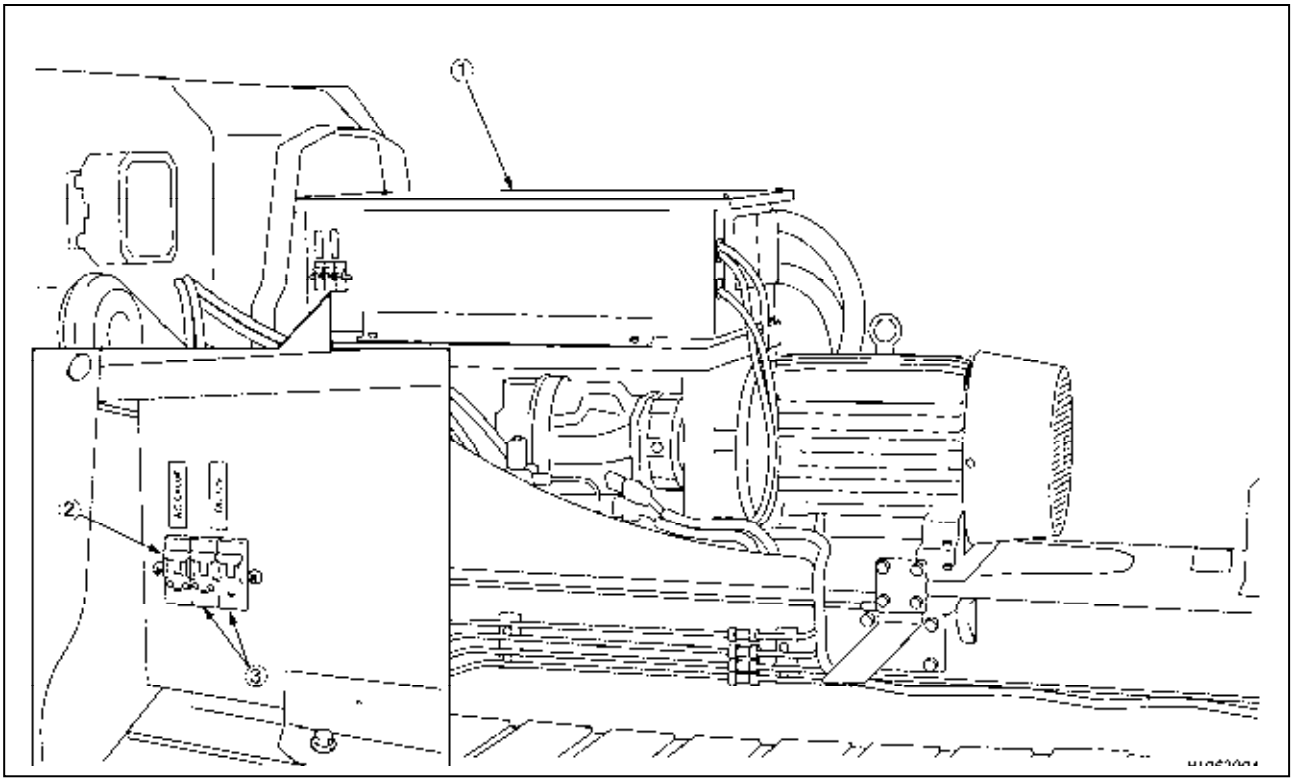

(1) Inverter panel box (2) AC power (3) DC power

https://truckmanualshub.com/

2. OPERATION

2.1 PRE-OPERATION INSPECTION

Before starting the day's work, perform the following checks:
For check items in the pre-operation inspection, refer to "INSPECTION AND MAINTENANCE 8. MAINTENANCE AND INSPECTION LIST".

2.1.1 VISIBLE CHECKS

Refer to "INSPECTION AND MAINTENANCE 9.1.1 CHECKING BEFORE STARTING ENGINE (VISUAL CHECKS)".

2.1.2 CHECKING BEFORE STARTING ENGINE

Refer to "INSPECTION AND MAINTENANCE 9.1.2 CHECKING BEFORE STARTING ENGINE".

2.1.3 INSPECTION AFTER STARTING ENGINE

Refer to "INSPECTION AND MAINTENANCE 9.1.4 CHECKING AFTER STARTING ENGINE".

https://truckmanualshub.com/

2.2 STARTING ENGINE

⚠ WARNING

- **Before starting the engine, make sure no personnel or impediments are close to the machine and honk the horn.**

2.2.1 NORMAL STARTING OF ENGINE

CAUTION

- **If the ambient temperature is too low to start the engine, try again by following the instructions described in "OPERATION 2.2.2 STARTING ENGINE IN COLD ENVIRONMENT".**
- **Do not keep the starter turned for more than 5 seconds. Doing so will accelerate the battery discharge.**
  If the engine fail to start, wait for 1 minute before retrying.
- **Verify that the fuel lever of the water separator pot is in the vertical position (open) before starting the engine.**
- **Make sure that the remote control transmitter is in the "OFF" position.**

1. Insert the key into the starter switch and turn the key to the "START" position.

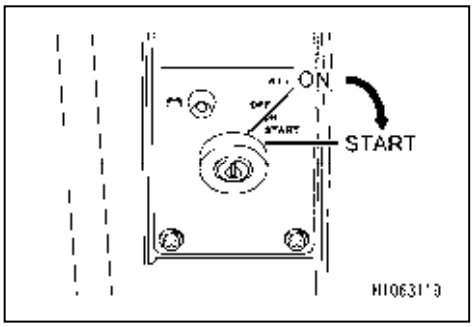

2. When the engine has started, release your hand from the key.
   The key automatically returns to the "ON" position.

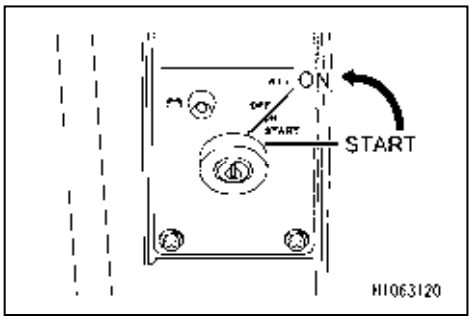

https://truckmanualshub.com/

2.2.2 STARTING ENGINE IN COLD ENVIRONMENT

CAUTION

- **Do not keep the starter turned for more than 5 seconds. Doing so will accelerate battery discharge.**
  If the engine fail to start, wait for 1 minute before retrying.
- **Verify that the fuel lever of the water separator pot is in the vertical position (open) before starting the engine.**
- **Make sure that the remote control transmitter is in the "OFF" position.**

Start the engine as follows when it is cold.

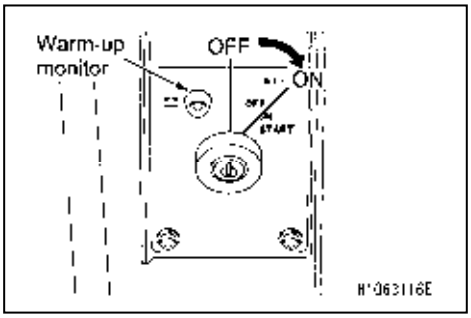

1. Insert the key into the starter switch, turn and hold the key in the "ON" position, and wait until the "WARM-UP MONITOR" indicator lamp goes out.

NOTES

When the starter switch key is turned to the "ON" position, the "WARM-UP MONITOR" indicator lamp lights up to indicate that the engine is being warmed up.
When the engine has been warmed up, the "WARM-UP MONITOR" indicator lamp goes out.

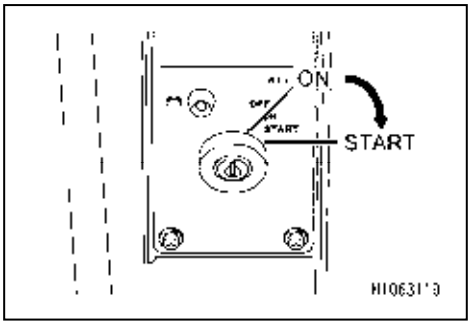

2. When the "WARM-UP MONITOR" lamp goes off, turn the key to the "START" position.

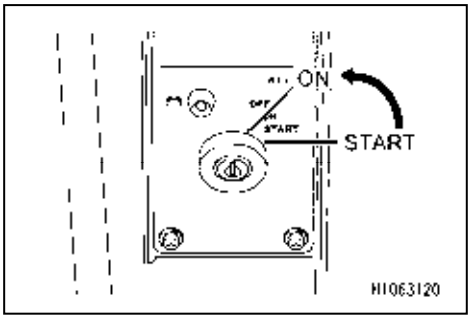

3. When the engine has started, release your hand from the key.
   The key automatically returns to the "ON" position.

https://truckmanualshub.com/

2.3 OPERATIONS AND CHECKS AFTER STARTING ENGINE

⚠ WARNING

Never refuel (diesel fuel) while the engine is in operation.
Always stop the engine before refilling fuel.

⚠ WARNING

- **If any abnormal condition occurs in the machine during engine warm-up, immediately push the engine emergency stop switch to bring the engine to an emergency stop. Then, turn the starter switch key to the "OFF" position. The power supply of the electric system is turned OFF.**
- **Always perform the warm-up operation. The motor needs adequate warm-up time especially in cold climates.**
  Failure to warm the motor may result in a serious accident on account of slow reaction of the travelling gear and crane from the operating levers.
- **Crane operational check is necessary after motor warm-up.**
  Keep the hook block away from the boom to avoid interference or collision.
- **Exercise caution to avoid contact between the boom, the operator and any personnel whilst slewing it.**
- **If crane operational check detects an abnormal event, make an emergency stop promptly and repair any relevant part.**
  A potential serious accident may occur if disregarded.

CAUTION

- **The appropriate temperature of the hydraulic oil is 50 to 80°C.**
  Even when operating at low temperature by necessity, increase the temperature of the hydraulic oil to about 20°C.
- **Do not raise engine speed suddenly until the warm-up operation is done.**
- **When the engine has started, check to see if the "Battery charge monitor" and "Engine hydraulic monitor" lamps are turned off.**
  Repair if any abnormality is found.
- **Do not run the engine at low or high idling for 20 minutes or longer.**
  If the engine requires idling, occasionally apply a load to the engine, or run the engine at a mid-speed idle.
  When using the engine at low speed, increase the engine speed for about 5 minutes once a day.

Perform the warm-up operation as follows once the engine has started.

1. Release the lock lever (1) slowly and shift it into the free (F) position.
2. With no load, let the engine idle for about 5 minutes.
3. Check if there is any abnormality with the engine exhaust gas color, noise, and vibration.
   Repair if any abnormality is found.

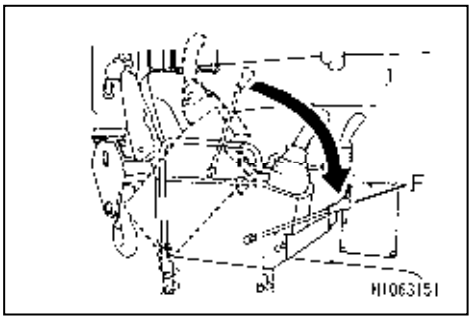

4. See "OPERATION 2.14 OUTRIGGER SETTING OPERATION" to set the outriggers.
5. See "OPERATION 2.16 OPERATION BEFORE CRANE WORK" to release the hook block from the stow position.

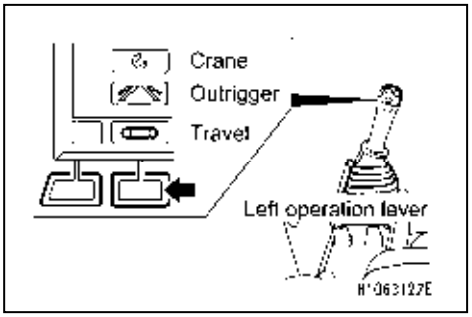

https://truckmanualshub.com/

6. Operate the right control lever (1) slowly right and left and move the derrick cylinder up and down until it reaches the stroke end while checking if there is any abnormality with the operation.
   Repair if any abnormality is found.

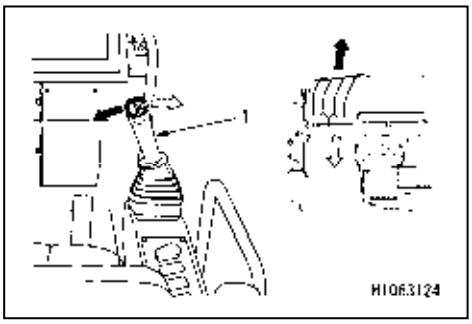

7. Operate the left control lever (2) slowly back and forth, and repeat extension and retraction of the boom until it reaches the stroke end while checking if there is any abnormality with the operation.
   Repair if any abnormality is found.

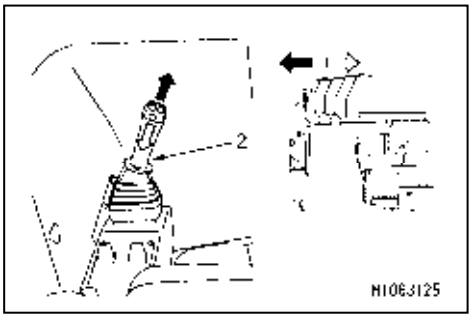

8. Operate the right control lever (1) slowly back and forth to check the following: the hook block is smoothly wound/unwound, the hook block immediately stops when the right control lever is shifted back to the “NEUTRAL” position, and irregular winding does not occur in the winch drum.
   Repair if any abnormality is found.

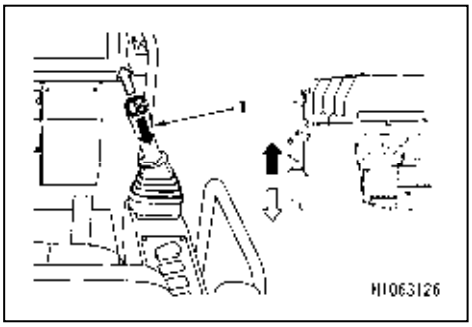

9. Operate the left control lever (2) slowly back and forth to check the following: the crane smoothly slews 360 degrees or more clockwise and counterclockwise, and the crane stops immediately when the left control lever is shifted back to the “NEUTRAL” position.
   Repair if any abnormality is found.

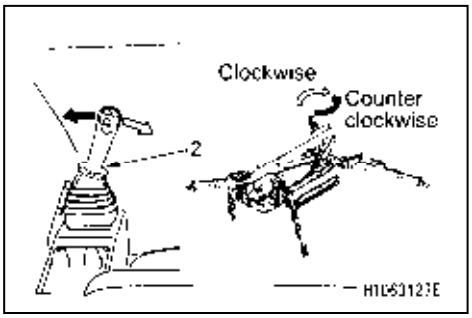

https://truckmanualshub.com/

2.4 BREAK-IN OPERATION

⚠ CAUTION

Perform break-in for the period of about the first “250 hours” (hours displayed on the service meter).
The service life of the machine shortens if heavy loads are applied to the operation or the engine before the break-in period for each section of the machine elapses.

While this machine is shipped after thorough adjustment and inspection, immediate difficult tasks will quickly degrade the functions and shorten the life of the engine and crane.
Perform break-in for the first “250 hours” (time displayed on the service meter).
Pay attention particularly to the following during the break-in period.

- Be sure to perform the warm-up operation and avoid idling away after the engine has started. See “OPERATION 2.3 OPERATIONS AND CHECKS AFTER STARTING ENGINE”.
- Avoid overloaded operation or tasks with high-speed operation.
- Avoid sudden starting, sudden acceleration, unnecessary sudden stop or sudden steering.
- The metal powder produced inside the engine through break-in increases in the engine oil and it deteriorates the oil, shortening the engine life.

2.5 MACHINE TRAVELLING POSTURE

⚠ WARNING

- **In principle, when you transport the machine on its own, the machine must retain a “travelling posture,” with its boom, hook block, and outriggers stowed.**
- **In cases where the machine is travelling with a suspended load, refer to “OPERATION 2.26 PICK&CARRY OPERATION”.**
  This will overturn the machine, causing serious injury and accidents.
- **Do not use this machine for any other purpose except the main purpose such as using it for carrying the load on the machine.**

In principle, the machine must retain the travelling posture shown on the right when it is transported.

1. See “OPERATION 2.23 CRANE STOWAGE OPERATION” to stow the crane, stow the hook block into its designated place.
2. See “OPERATION 2.24 OUTRIGGER STOWAGE OPERATION” to stow the outriggers.

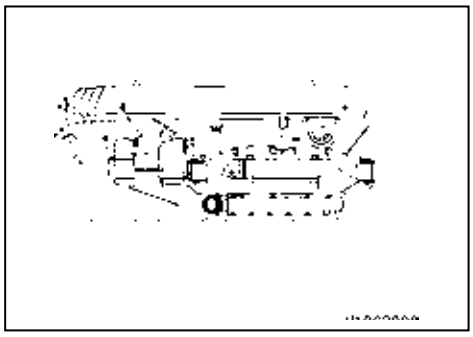

https://truckmanualshub.com/

2.6 START MOVING MACHINE

⚠ WARNING

- **Do not allow anyone around the machine.**
- **Clear away all the obstacles on the travelling path.**
  Check for projections and grooves on the ground surface where the machine travels especially when it travels backwards. Remove obstacles from the surface if required.
- **Check safety in the vicinity of the machine and honk the horn before starting to move the machine.**
- **To start the machine, control the engine at low speeds, manipulate the left and right control levers slowly at the same time, and check the machine for the travelling speed. Do not make a sudden start especially when you are going backward. This could cause a serious accident.**
- **Since a blind spot exists at the front and the left corner of the machine, be sure to check the monitor view while driving the machine.**
- **If you cannot verify the safety because the driving direction is out of view, stop driving and check the safety for the travelling direction. Assign a guide person if necessary depending on the worksite situation.**

[PREPARATION BEFORE STARTING]

1. Slowly and surely shift the lock lever (1) into a free (F) position.
2. Change the mode to Travel with the mode selector switch (1) (Travel/Outrigger/Crane) on the monitor, or with the left control lever.

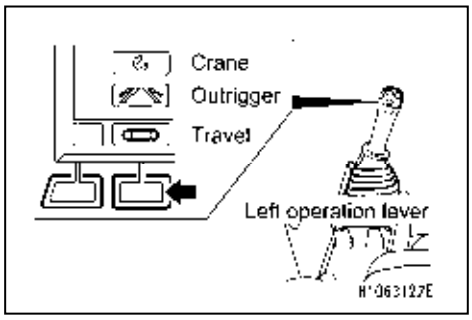

[1] MOVING FORWARD

Operate the left and right control levers at the same time.

- Push the left and right control levers slowly forward to start moving forward.

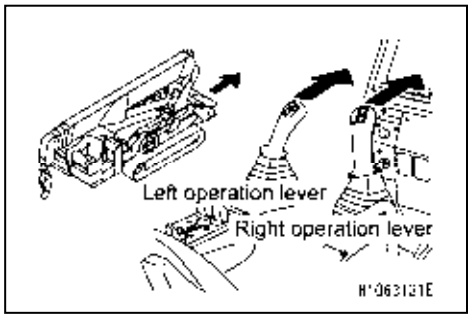

[2] MOVING BACKWARD

Operate the left and right control levers at the same time.

- Pull the left and right control levers toward you slowly to start moving backward.

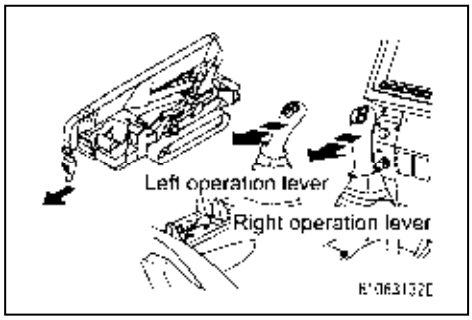

https://truckmanualshub.com/

2.7 CHANGING MACHINE TRAVELLING MODE

⚠ WARNING

- **Drive the machine at speeds appropriate for the ground or road conditions. Other than adjusting the amount that you shift the control lever, you can change the travelling speed by changing the position of the hi speed travelling change switch to "Hi Speed Travelling Mode" or "Low Speed Travelling Mode".**
- **When travelling on slopes, always set the hi speed travelling change switch to the "OFF" (Travelling Low) position. Travelling down a slope in Hi Speed Travelling Mode may cause the machine to overrun.**
- **Before changing the travelling speed mode, be sure to stop the machine.**

[1] CHANGING TRAVELING SPEED MODE

Change the travelling mode with the mode selector switch (2) (Travelling Hi/Low) on the monitor, or with the left control lever.

- Each touch of the mode selector switch (2) (Travelling Hi/Low) toggles the mode between "Travelling Hi" and "Travelling Low", and the monitor indication changes accordingly.

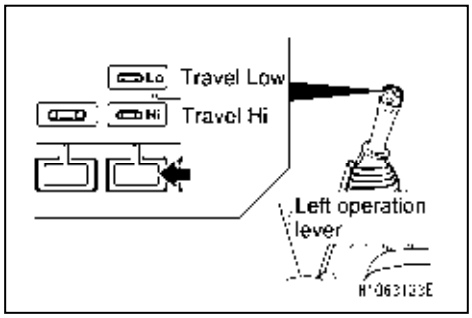

2.8 CHANGING DIRECTION OF THE MACHINE

⚠ WARNING

- **Sudden steering or unnecessary spin turns at high speeds not only damages the crawler belt or hydraulic devices, but also may result in a collision with other objects. Stop the machine, and then adjust the engine speed to low before performing the spin turns.**
- **Do not change the path on the slope. The machine may slip to the side. Be especially careful on soft ground and clay soil.**

[1] CHANGING MACHINE DIRECTION WHEN STOPPED

• LEFT TURN

Pushing the right control lever forward causes the machine to turn left in the forward direction.

Pulling the right control lever toward you causes the machine to turn left in the backward direction.

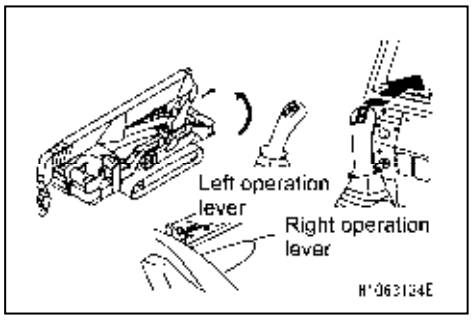

• RIGHT TURN

Pushing the left control lever forward causes the machine to turn right in the forward direction.

Pulling the left control lever toward you causes the machine to turn right in the backward direction.

https://truckmanualshub.com/

[2] SPIN TURNS

• LEFT SPIN TURN

Pushing the right control lever forward while pulling the left control lever toward you will rotate the crawler belts in opposing directions, allowing the machine to spin counter-clockwise.

• RIGHT SPIN TURN

Pushing the left control lever forward while pulling the right control lever toward you will rotate the crawler belts in opposing directions, allowing the machine to spin clockwise.

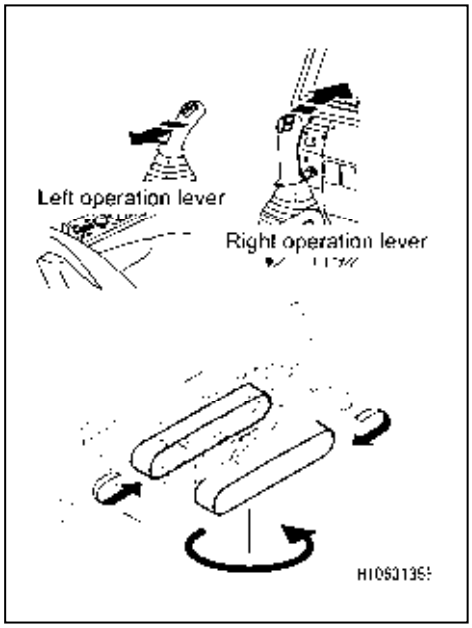

[3] CHANGING DIRECTION WHILE MOVING

• LEFT TURN WHILE MOVING FORWARD

While pushing the right control lever forward, return only the left control lever back to the “NEUTRAL” position.

• LEFT TURN WHILE MOVING BACKWARD

While pushing the right control lever toward you, move only the left control lever back to the “NEUTRAL” position.

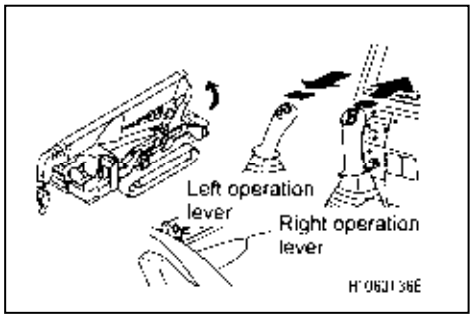

• RIGHT TURN WHILE MOVING FORWARD

While pushing the left control lever forward, move only the right control lever back to the “NEUTRAL” position.

• RIGHT TURN WHILE MOVING BACKWARD

While pulling the left control lever toward you, move only the right control lever back to the “NEUTRAL” position.

https://truckmanualshub.com/

2.9 STOPPING/PARKING THE MACHINE

⚠ WARNING

- **Avoid sudden stops and try to stop with a safety margin whenever possible.**
- **Choose a level and solid location for parking the machine.**
  If it is necessary to park on a slope, provide some blocks so that the machine will not move.
- **While the engine is running, careless contact with a control lever may result in serious accidents caused by sudden movement of the machine.**
  When parking the machine, be sure to shift the lock lever back into the Lock position.
- **When leaving the machine, be sure to stop the engine, remove the key from the starter switch, and take it with you.**

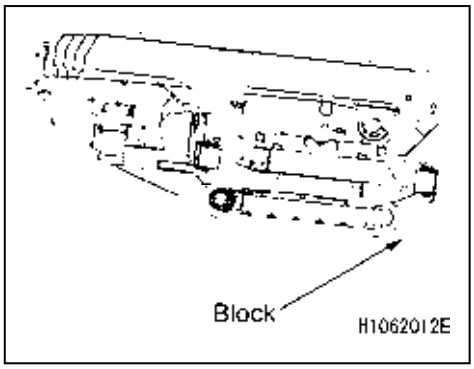

1. Shift the left and right control levers into the "NEUTRAL" position at the same time.
   The brake is automatically applied and the machine stops.

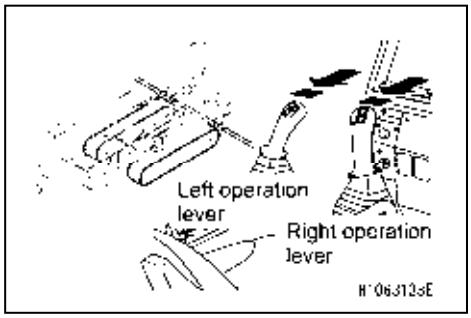

2. Shift the lock lever (1) into the lock (L) position.

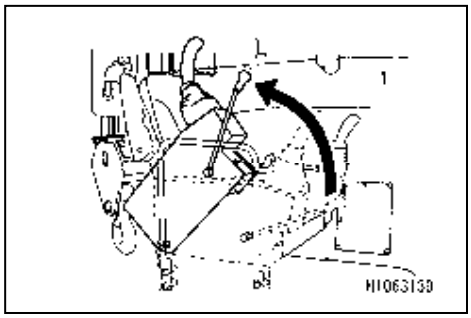

https://truckmanualshub.com/

2.10 STOPPING ENGINE

CAUTION

- **Stopping the engine before it sufficiently cools down may shorten the life of engine units. Do not stop the engine suddenly except for an emergency.**
- **When the engine is overheated, do not stop the engine suddenly.**
  Change the engine speed to low, and gradually cool down the engine before stopping.
- **Make sure that the main switch of the remote controller or the receiver is in the "OFF" position.**

1. Take your foot off the accelerator pedal (6), let the engine idle for about 5 minutes with no load applied.

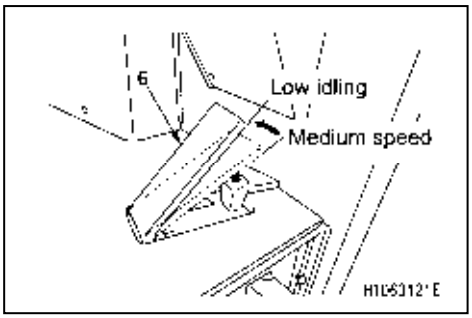

2. Turn the starter switch key to the "OFF" position.
   The engine stops.
3. Remove the starter switch key.

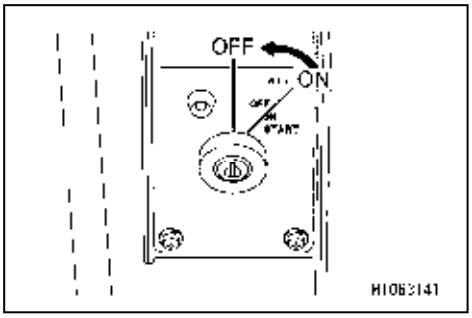

2.11 INSPECTION AFTER STOPPING ENGINE

1. Visibly check for oil leakage, fuel leakage, and water leakage, and check around the crawlers, crane, and exterior of the machine. If you find any leakage or abnormality, fix the problem.
2. Fill up the fuel tank to full.
3. Keep the area around the engine free of dead leaves and paper waste. A potential fire could occur if disregarded.
4. Clean off the crawlers and outriggers, removing mud.

https://truckmanualshub.com/

2.12 CAUTIONS IN DRIVING

⚠ WARNING

Not observing these cautions while driving will result in serious accidents.

[1] CAUTIONS IN DRIVING

Driving over boulder stones or a stump not only causes overturning of the machine, but also gives an impact to the machine (especially around crawlers), causing breakage.
Avoid or remove any obstacles do not travel over them whenever possible.
If you have to travel over obstacles, be sure to take the "travelling posture" to lower the center of gravity, and reduce the travelling speed as much as possible so that the machine will go over the obstacles at the center of the crawlers.

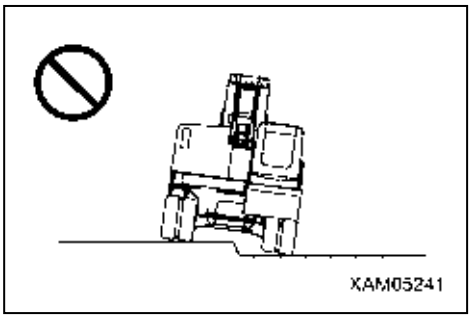

NOTES

See "OPERATION 2.5 MACHINE TRAVELLING POSTURE" for the travelling posture of the machine.

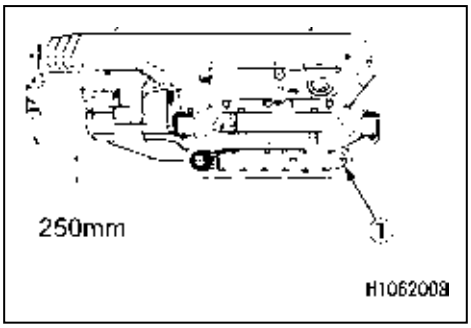

[2] ALLOWABLE WATER DEPTH

Keep water level below the center of the idler (1).

[3] CAUTIONS ON UPWARD/DOWNWARD SLOPE

⚠ WARNING

- **While the machine is travelling, if it tilts at an angle of "15 degrees" or greater towards the front, back, or either side of the slope, it may overturn. Do not travel on a slope of more inclination.**
- **When travelling on slopes, always set the travelling speed selector switch to the "OFF" (Traveling Low) position. Travelling down a slope in Hi Speed Travelling Mode may cause the machine to overrun.**

- Slopes inclined by 15 degrees or more present an overturning hazard. Do not travel on these slopes.
- When travelling on slopes, always set the travelling speed selector switch to the "Travelling Low" position. Failure to observe this may cause the machine to overrun.
- Never change the direction on the slope or drive parallel to the slope.
  Travel safely by going down to level ground and taking a detour.

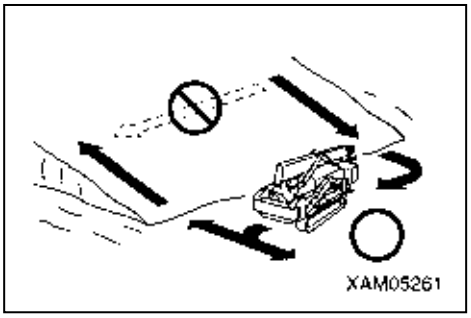

https://truckmanualshub.com/

- Drive the machine at as low a speed as possible when driving down a slope by operating the accelerator pedal and control levers.
  Shifting the control lever into the “NEUTRAL” position automatically brakes the machine; however, driving down a slope at high speed may cause the machine to overrun.
- When travelling on a slope, orient the machine so as to be square to the slope, and operate the machine in a manner that the operator seat is always located on the higher part of the slope.
- If the engine stops on a slope, shift the control lever back into the “NEUTRAL” position, and restart the engine.

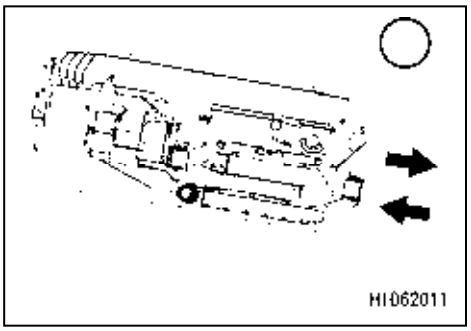

https://truckmanualshub.com/

2.13 OUTRIGGER/CRANE RELATED SAFETY DEVICES

⚠ WARNING

Before operating the crane, be sure to understand the following operating procedures, the alarm indications arising from the machine conditions detected by the safety devices, and the detailed actions of shutdown operations. Bearing the above in mind, always ensure safety when you operate the machine.

The table shown below explains the “indications and alarms” that may appear or go off under normal use, and how the safety devices work with them.

The normal use mentioned above is as follows:

[1] Checking before setting outriggers ⇒ [2] Setting outriggers ⇒ [3] Operating crane ⇒ [4] Stowing crane ⇒ [5] Stowing Outriggers ⇒ [6] Driving machine

The details of the table are as follows:

Standard operating procedures/ Machine conditions	Indication and Alarm	Operation of safety devices
This field describes the procedures for normal operations, the operating positions of the control levers and switches, and machine conditions.	This field lists the “indications” and “alarms” as the result of normal operations.	This field describes the safety devices and their actions to be taken as the preventive measures against abnormalities arising from the normal operations.

[1] CHECK OUTRIGGER PLACEMENT CONDITION

Standard operating procedures/ Machine conditions	Indication and Alarm	Operation of safety devices
• Starting engine • Lock lever position: Lock		
Check if the boom is in stow position • Boom is fully retracted • Boom is in horizontal stow position • Boom is in slewing stow position	• Crane stowage lamp lights up [Tricolor revolving light (red) lights up]	Outrigger Interlock • If the crane stowage lamp does not light up, all outrigger operations are brought to a stop

[2] OUTRIGGER SETTING OPERATION

Normal operating procedures/ Machine conditions	Indication and Alarm	Operation of safety devices
Setting outriggers. 1. Extending outriggers. • Rotate the outrigger rotaries and secure them with positioning pins to predetermined places. • Selecting outrigger mode • Outrigger extension switch [extension]	• Outrigger extension lamp lights up [Tricolor revolving light (red) lights up.]	Outrigger Interlock • If any one out of the four outrigger extension lamps does not light up, all outrigger operations are brought to a stop.
2. Setting the outriggers on the ground • Outrigger grounding switch (extension) • Check the surface for horizontal with a leveling instrument.	• Outrigger grounding lamp lights up. [Tricolor revolving light (red) lights up.]	
When the machine tilts at an angle of 3 degrees or more while outriggers are setting.	• Alarm buzzer constantly sounds	Machine tilt detection device activates

[3] CRANE STOWAGE OPERATION

Standard operating procedures/ Machine conditions	Indication and Alarm	Operation of safety devices
Operating the crane • Operating crane mode selector lever	• Crane stowage lamp lights up • One of the tricolor revolving lights, lights up according to the load capacity ratio being applied, after comparison between actual operation and Rated Total Load. • Load capacity ratio for tricolor revolving lights to light up • Load capacity ratio of less than 90 %: Tricolor revolving lights illuminates in green ・Load capacity ratio from 90 to less than 100%: tricolor revolving light illuminates in yellow, and an intermittent alarm sounds ・Load capacity ratio of 100% or larger: Tricolor revolving lights illuminates in red, and a continuous alarm sounds	Moment limiter • When load capacity ratio becomes 100 % or larger (overload), winding operation, boom extension and boom lowering are suspended
Even if only one out of four outriggers leaves the ground during crane operation	• Outrigger grounding lamp (red) blinks	Crane Interlock • Even if only one out of 8 lamps, outrigger extension lamps and outrigger grounding lamps, goes out, winding operation, boom extension and boom lowering are suspended.
For winch over winding	• Alarm buzzer constantly sounds	Over hoist detector activates Winch winding operation stops
For winch over unwinding	• Alarm buzzer constantly sounds	Over unwinding detector activates Winch unwinding operation stops
When the machine tilts at an angle of 3 degrees or more during crane operation	• Alarm buzzer constantly sounds	Machine tilt detection device activates

[4] CRANE STOWAGE OPERATION

Standard operating procedures/ Machine conditions	Indication and Alarm	Operation of safety devices
Bringing the machine into a boom stow position • Boom is fully retracted • Boom is in horizontal stow position • Boom is in slewing stow position	• Crane stowage lamp lights up	Outrigger Interlock • If crane stowage lamp (yellow) does not light up, all outrigger operations are brought to a stop

https://truckmanualshub.com/

[5] OUTRIGGER STOWAGE OPERATION

Standard operating procedures/ Machine conditions	Indication and Alarm	Operation of safety devices
Implementing outrigger stowage operation 1. Implementing outrigger ground stowage operation • Selecting outrigger mode • Turning on outrigger switch	• Outrigger grounding lamp (red) blinks [Tricolor revolving light (red) lights up.]	Crane Interlock • If any one of the 8 lamps, outrigger extension lamps and outrigger grounding lamps, does not light up (in green), all outrigger operations are brought to a stop.
2. Implementing extension stowage • Outrigger extension switch [ON] • Slewing (stowing) outrigger rotaries and securing them with positioning pins • Engine shutdown	• Outrigger extension lamp (red) blinks [Tricolor revolving light (red) lights up.]	
When the machine tilts at an angle of 3 degrees or more during outrigger stowage operation	• Alarm buzzer constantly sounds	Machine tilt detection device activates

[6] MACHINE TRAVELLING OPERATION

Standard operating procedures/ Machine conditions	Indication and Alarm	Operation of safety devices
Implementing travel control • Selecting Travel mode • Starting engine • Manipulating operation levers		
When the machine tilts at an angle of 15 degrees or more while driving machine	• Alarm buzzer constantly sounds	Machine tilt detection device activates

https://truckmanualshub.com/

2.14 OUTRIGGER SETTING OPERATION

⚠ WARNING

- **GROUND FOR SETTING OUTRIGGERS**
  Always place the outriggers on a level, stable and solid ground.
  Attempting to work with the crane without setting the outriggers may cause the machine to overturn.

- **OUTRIGGER SAFETY DEVICE**
  Before operating any outrigger, be sure to set the emergency stop switch to the “OFF” (cancel) position.
  Do not attempt to operate the machine when the emergency stop cancel switch is in the “ON” (cancel) position
  Do not turn the emergency stop cancel switch to the “ON” (cancel) position except in a safety device failure or in conducting a load test
  If the emergency stop cancel switch is turned to the “ON” (cancel) position, a warning buzzer sounds intermittently.

- **EXTENDING AND SETTING THE OUTRIGGERS**
  - Do not let people approach the machine when setting the outriggers.
    Close proximity to the machine may cause serious accidents such as getting caught between the outrigger and the machine main unit.
  - When setting the outriggers, the machine must be set level using the leveling instrument. If the machine tilts at an angle of “3 degrees” or more, the overturn warning buzzer sounds.
  - The outriggers must be set so as to provide a clearance of approx. 50 mm between the crawler belts and the ground.
    After setting, Make sure that all 4 outriggers are securely settled on the ground.
  - The machine can be operated in various situations due to the outriggers that can be freely set according to the shape of the surface where the machine is operated. However, if the machine cannot be operated with the “outriggers fully extended”, operate it by referring the values given in Rate Total Load Chart: “Rated Total Load Chart with outrigger extended medium” or “Rated Total Load Chart with outrigger extended minimum”.
  - When extending and setting the outriggers, be sure to maintain the outrigger rotaries at the extension position, and insert each positioning pin as far as it will go. Do not set the outriggers with the outrigger rotaries stowed.
  - There are 4 outriggers. Each outrigger has its own switch. Be careful not to confuse the outrigger switches when setting the outriggers. Check both the outrigger numbers indicated in the “control panel” of the switch and “number labels” attached to each outrigger. If these are mistakenly operated, it may cause a serious accident.
  - When you operate two outrigger switches at one time, only the two switches for the front outriggers ([(1)] and [(4)]), or the two for the rear outriggers ([(2)] and [(3)]) can be operated simultaneously. Simultaneous operation of the two switches for the outriggers on either left or right side will cause the outriggers on one side to leave the ground abruptly. This will result in overturning of the machine.
  - When providing a clearance between the machine and the ground, operate the outrigger switches independently so that individual outriggers can be equally extended and set in stages. If two outriggers on either left or right side rises abruptly at the same time, overturning of the machine may result.
  - During outrigger switching operation, always keep the engine at lower speed.
    When the engine is at high speed, the outriggers move too quickly which may result in serious accidents including tipping of the machine.
  - Do not “attempt to extend” any outriggers when they are grounded. Doing so may cause damage to outriggers due to the excessive force that is applied to them.
  - Before operating an outrigger, be sure to shift the lock lever into the free position.

CAUTION

- **Before operating an outrigger, be sure to move the boom to the “lowest, full retracted, and slewing stowage” position.**
  The outriggers cannot be operated unless the boom is completely stowed. (Make sure that the crane stowage lamp on the monitor is lit in yellow.)
- **After the outriggers are extended, check if all outriggers are securely settled on the ground.**
  All crane operations cannot be performed unless all outriggers are securely grounded. (Make sure that all outrigger extension lamps and outrigger grounding lamps on the monitor are lit in yellow.)

https://truckmanualshub.com/

⚠ WARNING

- **SELECTING LOCATION TO SET OUTRIGGERS**
  - When setting the outriggers on the structural objects such as construction site or concrete floor, verify in advance that the surface where the outriggers will be set has sufficient strength.
    Insufficient strength in the setting surface will result in machine overturning or falling due to the setting surface collapsing.
  - Outriggers may sink, leading to overturning hazard, if set in soft ground such as:
    - Road surface with low-cost pavement (Low-cost asphalt or thin concrete)
    - Surface with paving stones
    - Area reclaimed after excavation work
    - Landfill
    - Road shoulders or area close to a hole of excavation work
    - Deteriorated pavement surface
    - Areas where under the pavement surface is hollow due to water erosion and the top soil appears to be hard but soft in the ground
    - Slope

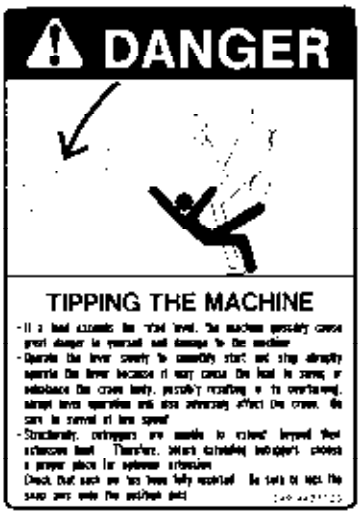

- **PROTECTING GROUND**
  - Place a sole plate of sufficient size with sufficient strength under the tray of all the outriggers on the soft ground to protect the ground.
  - If it is necessary to set the outriggers near the road shoulder, make sure to take precautions to prevent the collapse of the road shoulder.
  - Before operating the machine on a slope, level the ground of the working area so that the outrigger adapters and the crawler belts can be securely placed.
    Setting the outriggers with the tilted ground surface without leveling will cause the outriggers to slip or overturn, causing serious accidents.
  - If the ground can not be protected or if the outriggers sink even after protecting the ground, do not operate the crane.

Use of stable sole plate

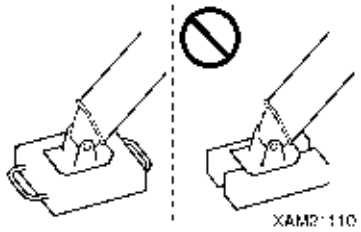

Road surface with low-cost pavement

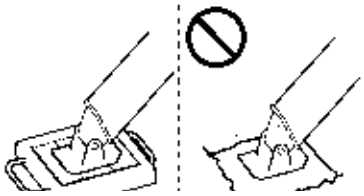

Surface with paving stones

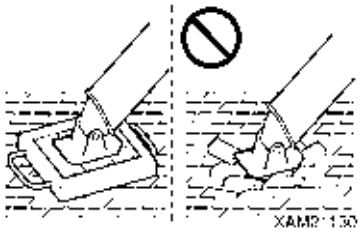

Landfill, etc.

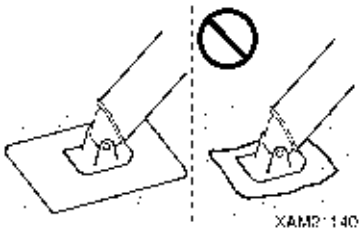

Site preparation of slopes

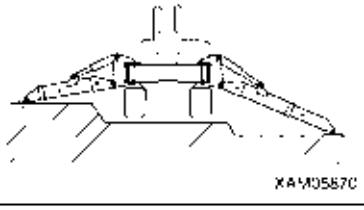

https://truckmanualshub.com/

2.14.1 OUTRIGGER COMPONENTS

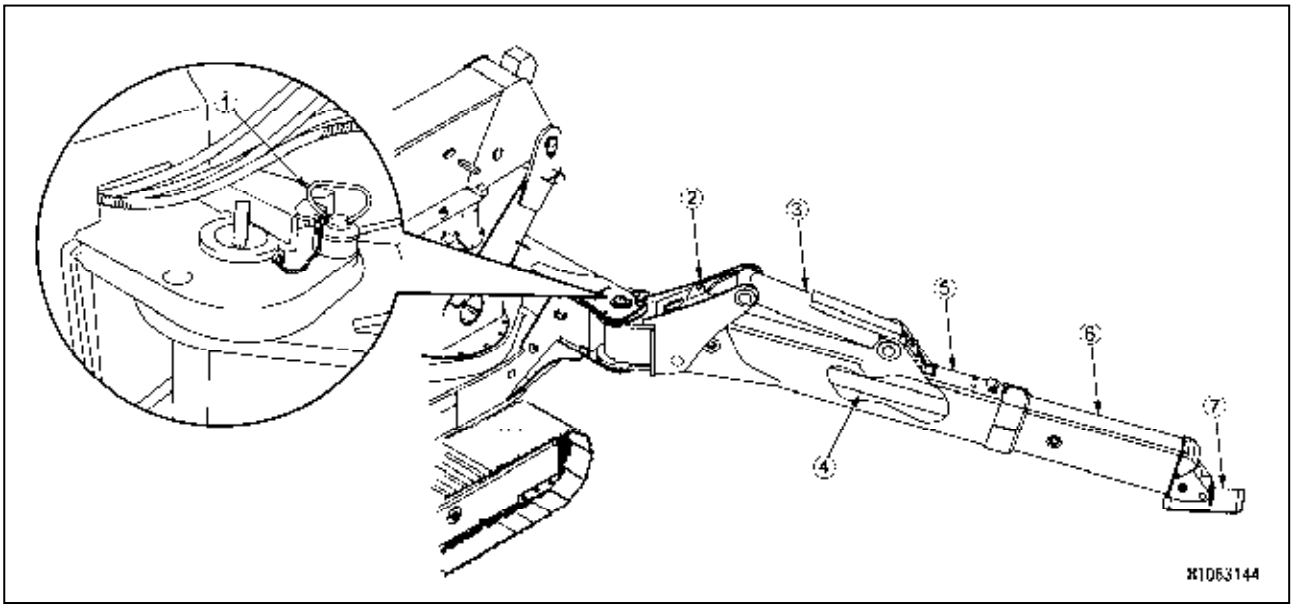

(1) Positioning pin
(2) Outrigger rotary
(3) Outrigger ground contact cylinder
(4) Outrigger extension cylinder
(5) Outer box
(6) Inner box
(7) Outrigger adapter (plate)

2.14.2 OUTRIGGER SETUP OPERATION

[1] TASKS TO BE PERFORMED BEFORE STARTING THE ENGINE

There are 4 outriggers installed on the machine.
The following explains the setting procedure for only one “OUTRIGGER (4)”. Repeat the same procedure for the other three outriggers.

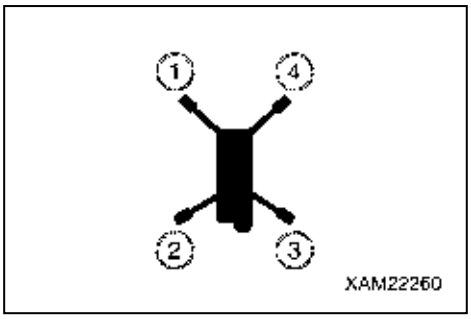

1. Shift the lock lever (1) into the lock (L) position.

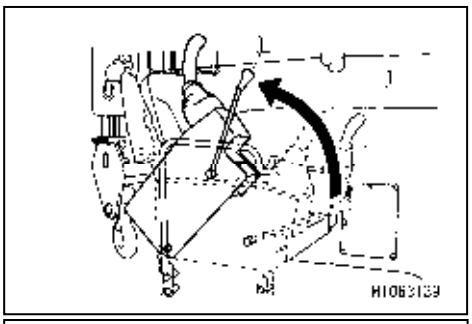

2. Turn the starter switch to the “ON” position.

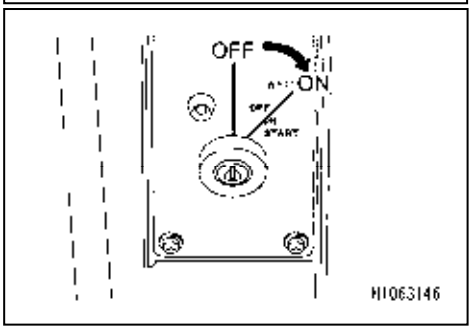

3. Change the mode to Outrigger mode with the mode selector switch (1) (Travel/Outrigger/Crane) on the monitor or the left control lever.

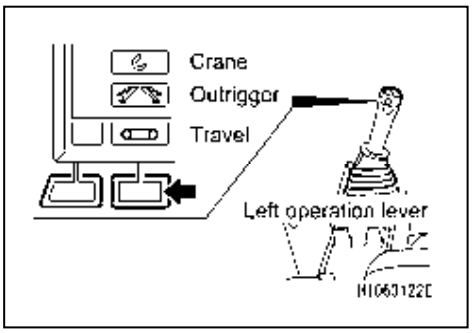

4. Make sure that the crane stowage (1) lamp on the monitor is lit in yellow.

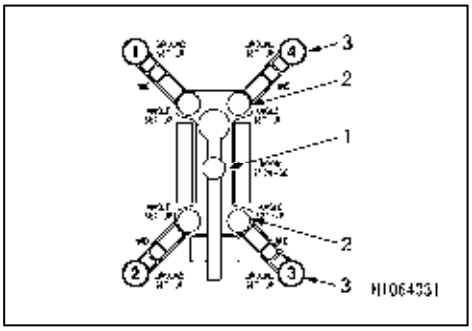

5. Select the Manual mode with the mode selector switch (3) (Manual/Auto) on the monitor or the left control lever.

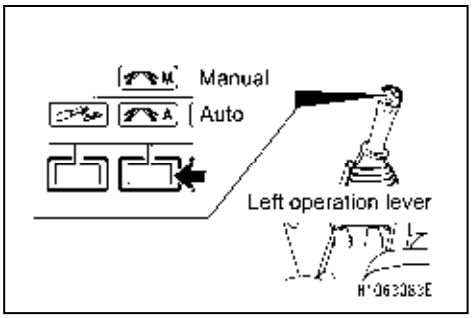

6. Pull the position pin (1) out of the outrigger rotary (2) and rotate the outrigger rotary outward.

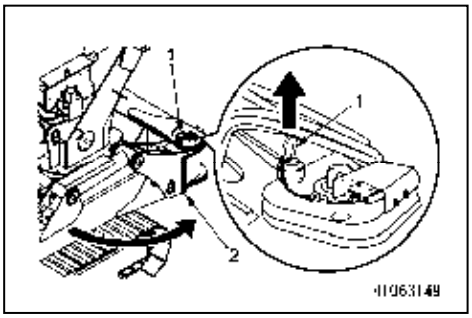

7. Rotate the outrigger rotary (2) outwards so that it can align with the pin hole, and insert the positioning pin (1) into the hole as far as it will go.

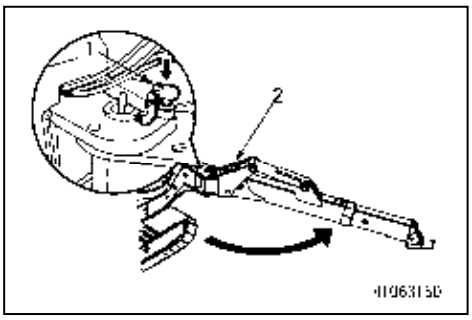

NOTES
The positioning pin (1) is equipped with a wire to prevent it from being lost.

8. Perform similar preparation work for the other 3 outriggers.

NOTES
When you are finished with the above preparation steps for other outriggers, check if the positioning pins (1) are securely inserted in place.

9. Make sure that all of the four outrigger extension lamps (2) on the monitor are lit in yellow.

NOTES
The crane stowage lamp (1) and four outrigger extension lamps (2) on the monitor stay on.

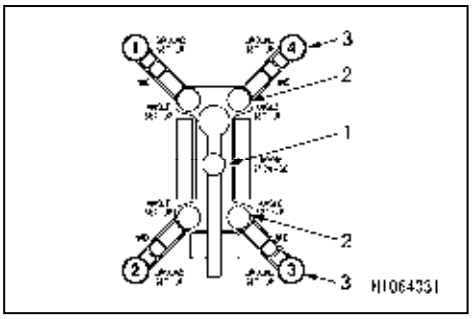

[2] OPERATIONS AFTER STARTING ENGINE

⚠ WARNING

If the machine tilts at an angle of “3 degrees” or more while the outriggers are set, the overturn warning buzzer sounds. Bring the machine to a horizontal position at which the warning buzzer stops by operating the appropriate outrigger switches.

1. See “OPERATION 2.2 STARTING ENGINE” to start the engine.
2. Slowly and surely shift the lock lever (1) into a free (F) position.

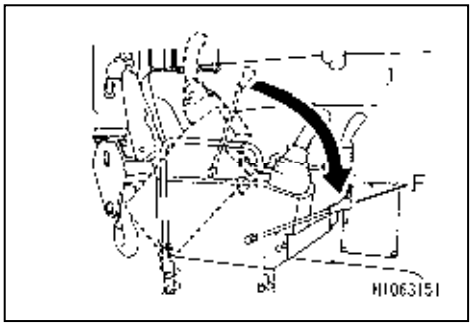

3. Select the Extension mode with the mode select switch (2) (Extension/Ground) on the monitor or the left control lever.

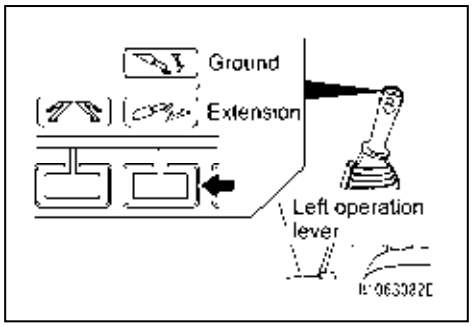

4. Identify the outrigger to be operated by checking the outrigger number shown on the operation nameplate attached to each outrigger switch on the outrigger operation panel.

5. Set two outrigger switches individually or simultaneously to the “Extension” position.
   When the inner boxes have reached the desired positions respectively with the corresponding outrigger extension cylinders extended, set the switch to the “NEUTRAL” position.
   Repeat the above steps for the other two switches to extend all four outriggers to the desired positions, and set the switches to the “NEUTRAL” position.

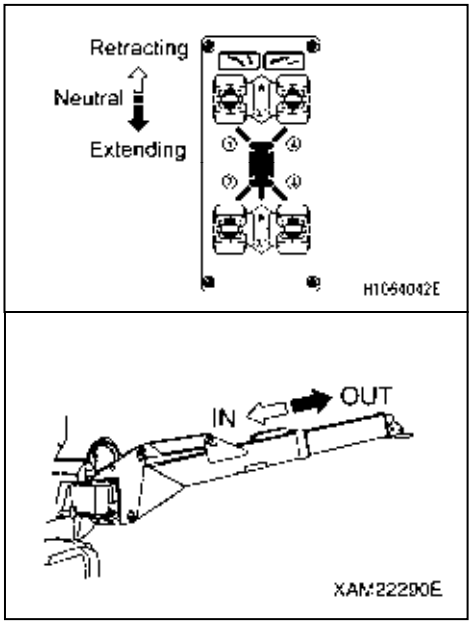

6. Select the Ground mode with the mode selector switch (2) (Extension/Ground) on the monitor or the left control lever.

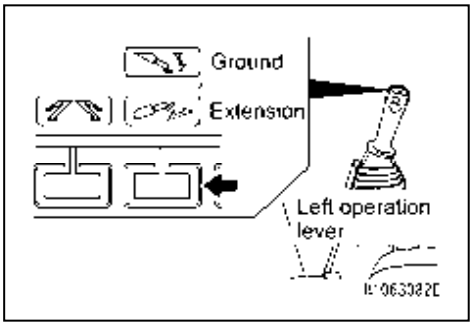

7. Set two outrigger switches individually or simultaneously to the “Extension” position.
   When the adapters have touched the ground, with the grounding cylinder extended, set the switch to the “NEUTRAL” position temporarily.
   Repeat the above steps for the other two switches to allow all four outrigger adapters to come into contact with the ground, and set the switches to the “NEUTRAL” position.

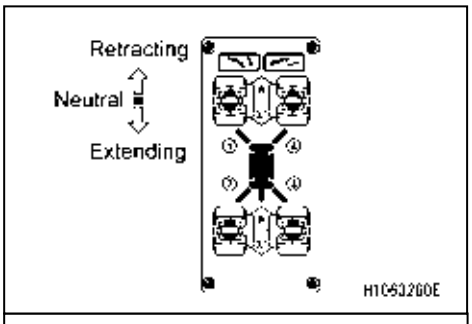

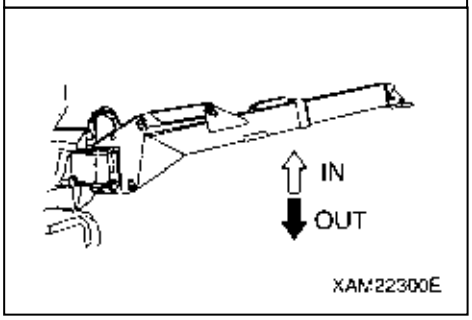

⚠ WARNING

When operating two outrigger switches at the same time, only two on the front side (outriggers [(1)] and [(4)]) or two on the rear side (outriggers [(2)] and [(3)]) can be operated at the same time. Simultaneous operation of the two switches for the outriggers on either left or right side will cause the outriggers on one side to leave the ground abruptly. This will result in overturning of the machine.

8. After all outrigger adapters have come into contact with the ground, set two outrigger switches individually or simultaneously to the “Extension” position.
   When a grounding cylinder extends and the machine slightly rises off the ground, set the switch to the “NEUTRAL” position temporarily.
   Repeat the above steps for the other two switches to allow the four outriggers to raise the machine from the ground at a constant height, and set the switches to the “NEUTRAL” position temporarily.
   Repeat the above steps to gradually raise the machine from the ground so that the crawler belts can be situated about 50 mm from the ground.

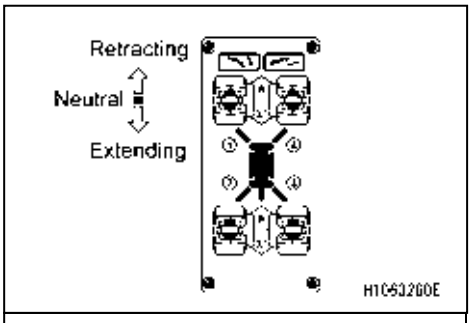

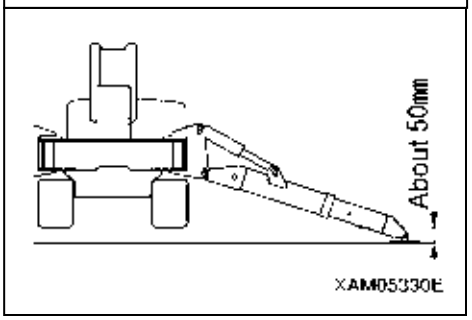

9. When the machine is raised up to a height of about 50 mm from the ground, adjust the machine so that the machine is in a horizontal position while checking the position of the yellow bubble in the leveling instrument. At this point, if “automatic” is selected for the mode selection switch (3), the machine is automatically leveled so that it is in horizontal condition.
10. When you are finished setting all outriggers, set all outrigger switches to the “NEUTRAL” position.

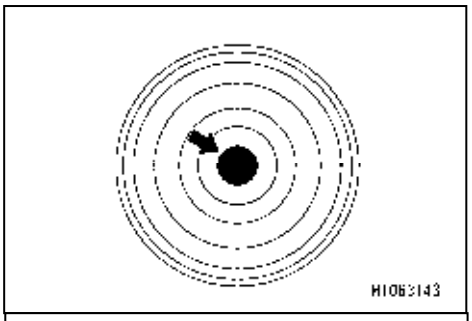

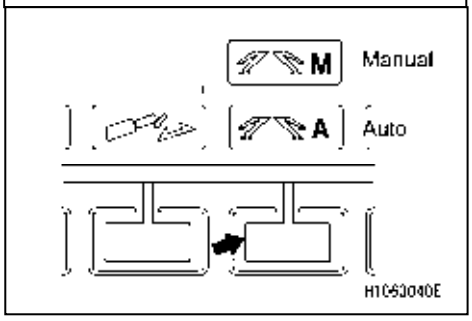

11. Make sure that all of the four outrigger grounding lamps (3) on the monitor are lit in yellow.

NOTES
All of the crane stowage lamp (1), the four outrigger extension lamps (2) and four outrigger grounding lamps (3) are lit in yellow.

CAUTION
If any of the outrigger grounding lamps (3) are blinking red, remove the cover (7) of the outrigger adapters (6) part and check them for foreign materials being caught in the bend sections.

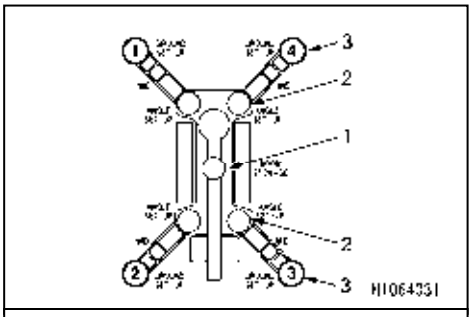

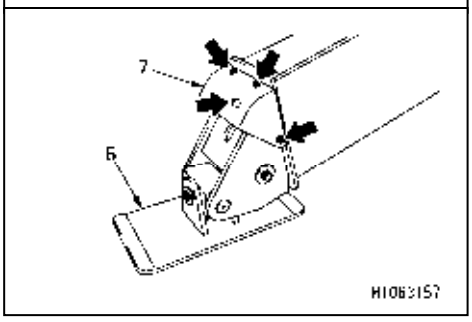

https://truckmanualshub.com/

2.15 CAUTIONS BEFORE CRANE OPERATION

⚠ WARNING

Not observing these cautions before operation may result in serious accidents.

- Make sure that the override switch is in the “OFF” position.
  The operation does not stop if the override switch is in the “ON” position.

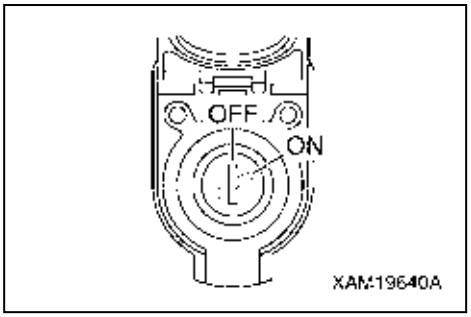

NOTES

When the override switch is set to the “ON” (cancel) position, a warning buzzer sounds intermittently.

- If the hook block is wound excessively high, the ongoing operation stops with the over winding detector alarm buzzer generated.
  When the warning buzzer sounds, immediately release your hand from the right control lever (1), and shift it into the “NEUTRAL” position to stop the winding operation.
  Then, push the right control lever (1) forward to lower the hook block.

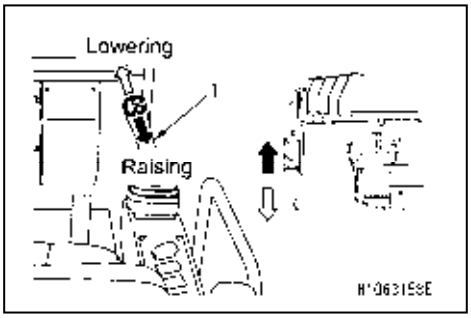

- When the boom is extended, the hook block is wound, and the over winding detector triggers the warning buzzer, bringing the ongoing operation to a stop.
  When the warning buzzer sounds, immediately release your hand from the right control lever (2), and shift the lever into the “NEUTRAL” position to stop the boom extension operation under execution.
  Then, pull the left control lever (2) toward you to retract the boom.

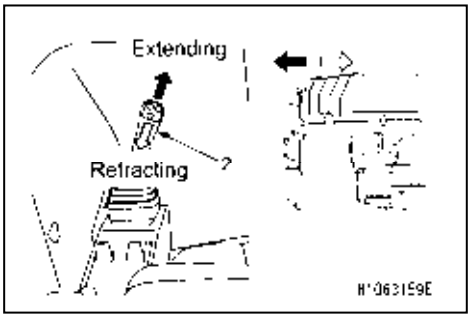

- During crane operation, if it is necessary to alert people around the machine to a hazard, use the horn switch at the right control lever to sound the horn.

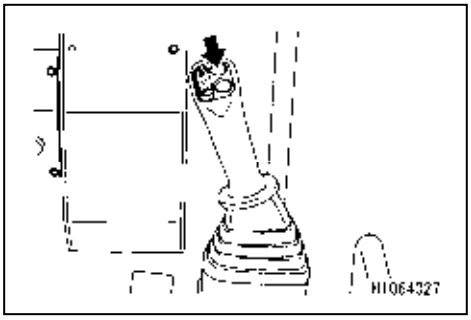

- Make sure that all outriggers have been extended.
  Crane operation cannot be performed if any one of the four outrigger extension lamps (2) and the four outrigger grounding lamps (3) on the monitor is blinking.

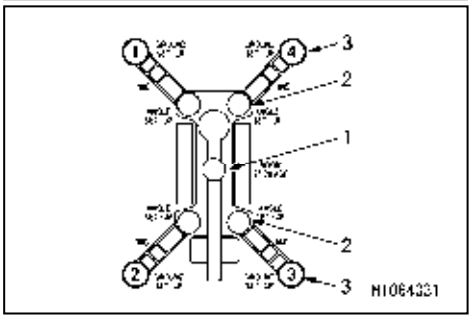

https://truckmanualshub.com/

2.16 OPERATION BEFORE CRANE WORK

CAUTION

- **Before operating the crane, make sure that all lamps on the outrigger indications are lit in green. Crane operation cannot be performed if any one of the four outrigger extension lamps and the four outrigger grounding lamps on the monitor is blinking.**
- **Before operating any control lever for the crane or the outrigger switches, be sure to set the lock lever to the lock position.**
- **When loosening the wire rope for the stowed hook block, be careful not to allow the entire hook block to fall sideways on the ground due to the wire rope being excessively loosened. Failure to observe this may result in an irregular winding of the wire rope in the winch drum.**
- **When loosening the wire rope for the stowed hook block, there is a danger that the swinging hook block could be damaged due to interference with peripheral devices. Pay thorough attention around the hook block.**

Perform the following operations before crane work.

1. Shift the lock lever (1) into the free (F) position.

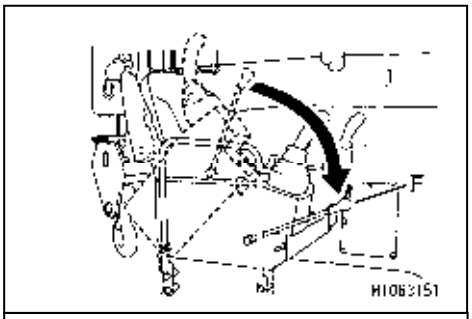

2. Change the mode to Crane with the mode selector switch (1) (Travel/Outrigger/Crane) on the monitor or the left control lever.

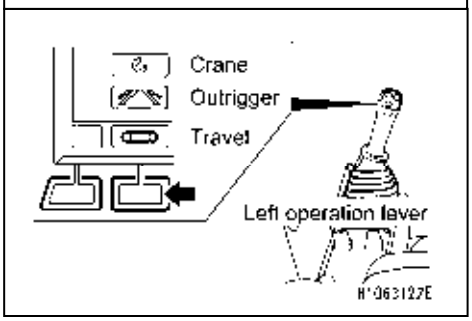

NOTES

In the event outriggers are not set, if you switch to crane mode, error code “EOR00” comes up, but this is not a failure. Set outriggers first, then switch to the crane mode.

3. Push the right control lever (1) forward to loosen the wire rope for the hook block from the stow position.

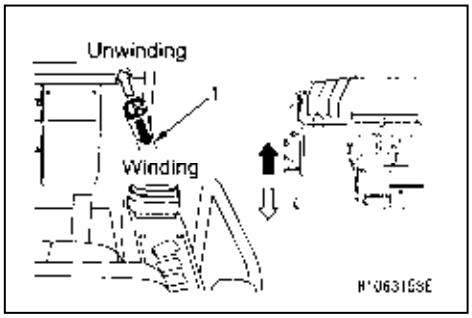

https://truckmanualshub.com/

2.17 CRANE OPERATION POSTURE

To proceed to the crane operation from the state mentioned in “OPERATION 2.16 OPERATION BEFORE CRANE WORK”, bring the crane into a state ready for operation by following the steps mentioned below.

1. Push the right control lever (1) forward to unwind the wire rope to an extent that the hook block does not come into contact with the ground.

NOTES
If the hook block is secured to the hook stowage wire, remove the hook block from the stowage wire.

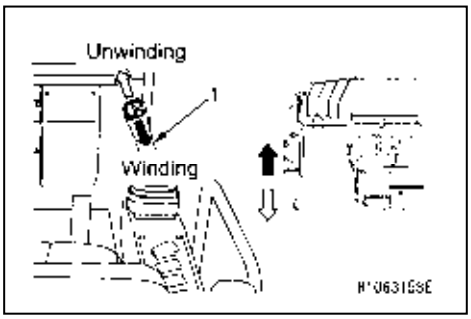

2. Push the right control lever (1) to the left to raise the boom to a position where the hook block is not over-wound and makes no contact with the ground.

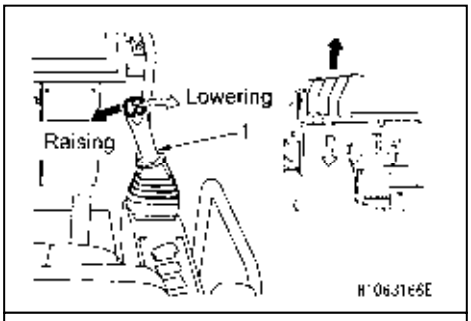

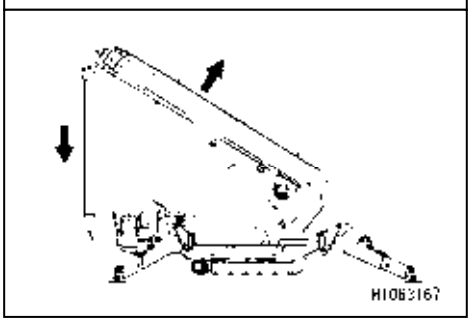

https://truckmanualshub.com/

2.18 WINDING AND UNWINDING

⚠ WARNING

- **With the boom deflection, the hoisted load slightly shifts forward. Notify the workers around such as slinging operators.**
- **If the hook block is wound excessively, over-winding is detected, and an alarm buzzer sounds. In such a case, immediately shift the right control lever (1) into the "NEUTRAL" position to stop winding the wire rope.**
- **When it is necessary to unwind a significant length of the wire rope to lower the hook in works such as underground works, at least 3 turns of the wire rope must be left on the winch drum.**

CAUTION

Do not let the hook block touch the ground.
The winch drum will wind irregularly, damaging the wire rope.

Operate the right operation lever (1) as follows:

- Unwinding: Push the lever forward.
- Neutral: Release your hand from the lever. The lever will return to the "NEUTRAL" position and the winding/unwinding of the hook block stops.
- Winding: Pull the lever backwards.

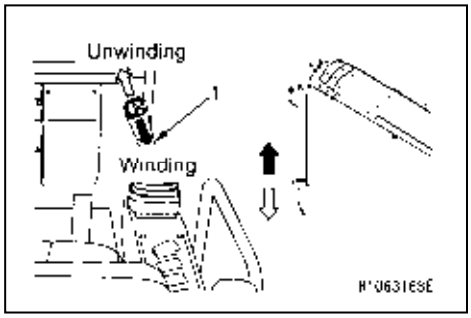

NOTES

Control the winding/unwinding speed of the winch drum with the right control lever and the stroke of the accelerator pedal.

2.19 BOOM DERRICKING OPERATION

⚠ WARNING

- **Operate the right control lever as slowly as possible.**
  Especially avoid sudden lever operations when the load is hoisted, which may cause the load to waggle and give a large impact to the Machine, and thus may damage the crane or trip the Machine.
- **When the boom is lowered, the working radius increases, and the rated total load that can be hoisted decreases. When operating the machine by derricking the boom, exercise caution so that the mass (weight) of the suspended load is not overloaded when the boom reaches the lowest position.**

Operate the right operation lever (1) as follows:

- Lowering: Push the lever forward.
- Neutral: Release your hand from the lever.
  The lever returns to the "NEUTRAL" position and the boom derricking stops.
- Raising: Pull the lever backwards.

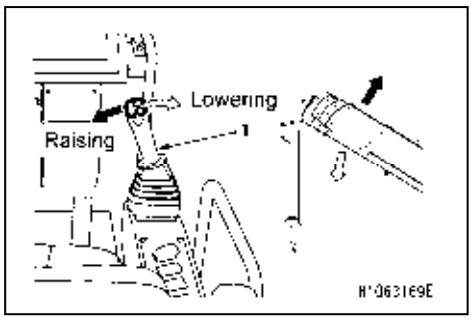

NOTES

Control the derricking speed with the right control lever and the stroke of the accelerator pedal.

https://truckmanualshub.com/

2.20 BOOM TELESCOPING OPERATION

⚠ WARNING

- **Operate the left control lever as slowly as possible.**
  Especially avoid sudden lever operations when the load is hoisted, which may cause the load to waggle and give a large impact to the Machine, and thus may damage the crane or trip the Machine.
- **Do not pull the load horizontally or pull in the load by telescoping the boom.**
- **When the boom is extended, the working radius increases, and the rated total load that can be hoisted decreases. When working while extending/retracting the boom, pay extra attention so that the mass (weight) of the load at the time the boom is lowered does not cause overloading.**
- **When the boom is extended, the hook block is wound.**
  If the over winding detector generates an alarm buzzer while the boom is extended, immediately shift the left control lever into the "NEUTRAL" position to stop the boom operation.

CAUTION

- **The hook block is wound or unwound while the boom is extended/retracted. Perform the winch operation at the same time to adjust the hook block height.**
- **When the boom is extended for a long time, the boom slightly retracts due to the temperature change in the hydraulic oil. In this case, extend the boom as needed.**

Operate the left control lever (2) as follows:

- Extending: Push the lever forward.
- Neutral: Release your hand from the lever.
  The lever returns to the "NEUTRAL" position and the boom telescoping stops.
- Retracting: Pull the lever backwards.

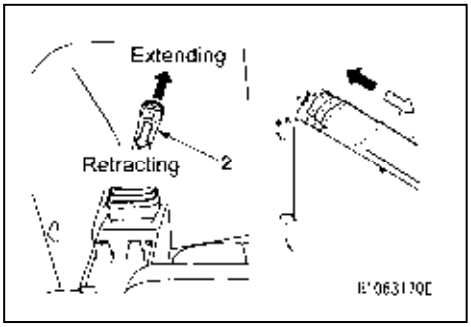

NOTES

Control the boom extension/retraction speed with the left control lever and the stroke of the accelerator pedal.

https://truckmanualshub.com/

2.21 SLEWING OPERATION

⚠ WARNING

- **Check it is safe in the vicinity and honk the horn before slewing.**
- **Operate the left control lever as slowly as possible.**
  Make sure to start smoothly, slew at low speed, and stop quietly.
  Especially avoid sudden lever operations when the load is hoisted, which may cause the load to waggle and cause the Machine to lose balance, and thus may damage the crane or trip the Machine.
- **Even if the outriggers are set correctly, the suspended load is slightly unstable in a specific direction. Exercise caution when slewing the boom with a suspended load.**
- **In some cases, depending on the configuration of the outriggers, the suspended load may hit the outriggers, resulting in damage to the crane or overturn of the machine. Exercise caution to prevent the suspended load from hitting outriggers.**

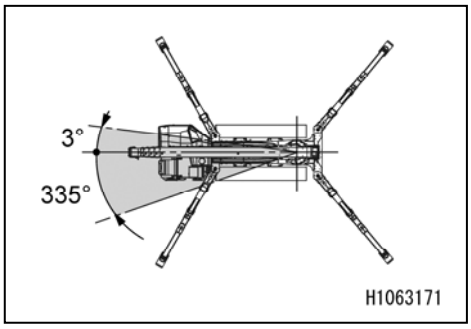

- **If the boom angle is less than 12 degrees, all boom slewing operations are disabled within the range between 335 to 3 degrees, to prevent it from hitting the operators. However, 360 degrees slewing can be operated with radio control, regardless of the boom angle.**

Operate the left control lever (2) as follows:
- Clockwise: Push the lever to the left.
- Neutral: Release your hand from the lever.
  The lever returns to the “NEUTRAL” position and the slewing stops.
- Counter clockwise: Push the lever to the right.

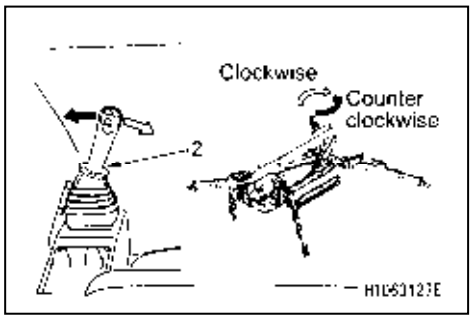

NOTES

Control the crane slewing speed with the left control lever and the stroke of the accelerator pedal.

2.22 ACCELERATOR OPERATION

⚠ WARNING

Accelerating the operation speed of the crane more than is necessary is dangerous.

CAUTION

Decrease the speed at the beginning and near the end of an operation. Change the speed to low or high according to the load.

Operate the accelerator pedal (6) as follows:
- Low idling: Take your foot off the pedal.
  The engine speed decreases, causing the operation speed of each crane component to decrease.
- Full speed: Fully depress the pedal.
  The engine speed increases, causing the operation speed of each crane part to increase.

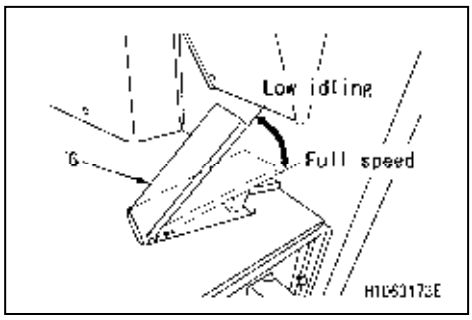

NOTES

Operate the machine by pressing down on the accelerator pedal according to the engine speed required for the work to be done.

https://truckmanualshub.com/

2.23 CRANE STOWAGE OPERATION

⚠ CAUTION

The hook stowage switch is used to cancel the automatic stop function of the over winding detector.
Take sufficient care not to trap hands or objects when stowing the hook block.

CAUTION

- **Before stowing the hook block, stop the hook block from swaying.**
- **When stowing the hook block, be careful not to allow the entire hook block to fall sideways on the ground due to the wire rope being excessively loosened. Failure to observe this may result in an irregular winding of the wire rope in the winch drum.**
- **The "Retract" operation of the boom will unwind the hook block. The "Lowering" operation of the boom also causes the hook block to move downward. Wind the hook at the same time so that the hook block will not touch the ground or interfere with the machine.**
- **Be sure to stow the boom in the designated position. After the boom has been stowed, make sure that the crane stowage lamp on the monitor is lit in yellow. If the crane stowage lamp is not lit in yellow, the outriggers cannot be stowed. If the crane stowage lamp is not lit, perform operations, such as lowering the boom to its lowest position, or slewing the boom, and check if the crane stowage lamp lights up in yellow.**

[Manual stowage]

1. Pull the left control lever (2) toward you to retract the boom completely.

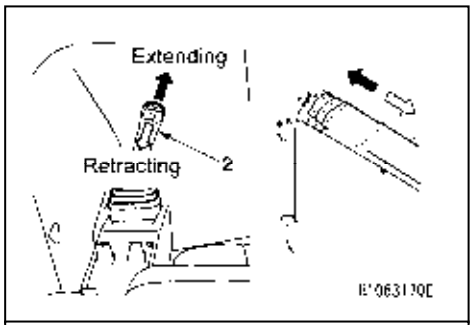

2. Push and hold the left control lever (2) to the left or right to slew the boom so that the slewing angle becomes 1 to 2 degrees.

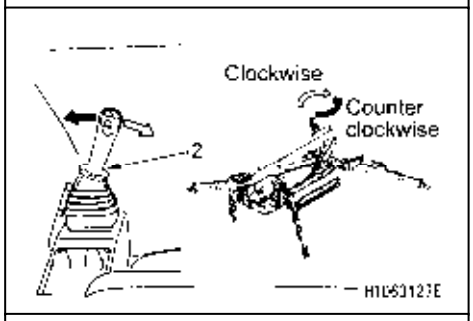

⚠ WARNING

If the boom angle is less than 12 degrees, the boom cannot be slewed between 335 to 3 degrees to prevent work directly above the operator.

3. Push and hold the right control lever (1) to the right until the boom stops automatically.

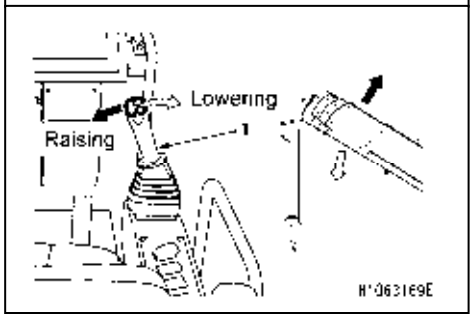

https://truckmanualshub.com/

4. Operate hook raising or hook lowering to adjust hook position and secure the hook block to the hook stowage wire.

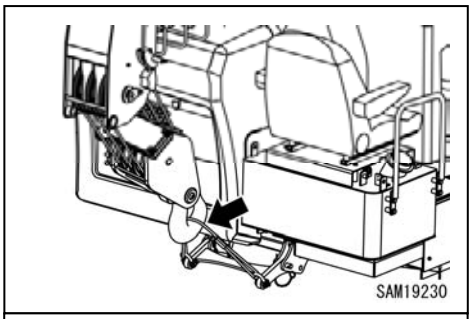

NOTES
If the hook block is excessively wound, the over hoist detector is activated, generating an alarm buzzer. This allows the winding operation to automatically stop.

5. Change the mode change switch (3) to “Hook stowage” on the monitor. The hook is wound automatically; stowing the hook (4).

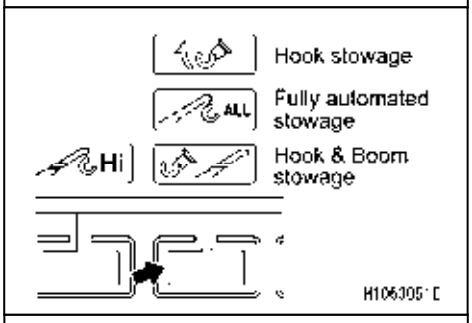

NOTES
In case of temporary stowage or short distance self-travelling, you can stow the hook block simply to the boom head, instead of stowing to the hook stowage wire.

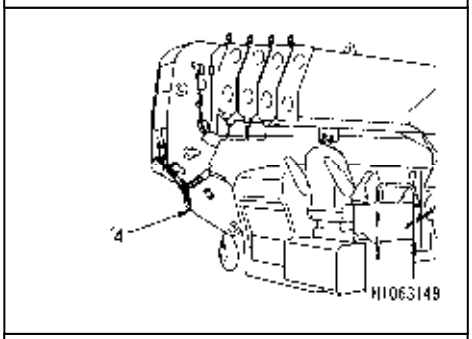

6. Make sure that the crane stowage lamp (1) on the monitor is lit in yellow.

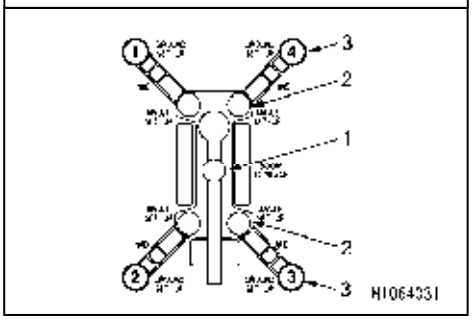

NOTES
If the crane stowage lamp (1) is not lit in yellow, perform again the said operation, fully retract and lower the boom, or slew the boom.

https://truckmanualshub.com/

[Automatic stowage]

⚠ WARNING

When automatically stowing the crane, check that there are no interfering objects in the surrounding area before doing so.
If you feel danger during automatic stowage, immediately stop the operation. Automatic stowage can be stopped by pressing the emergency stop switch, or by operating the monitor or crane.

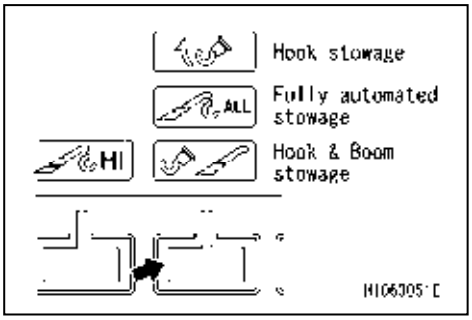

1. When the fully automated stowage switch on the monitor is pressed once, the message “Boom will be stowed. Make sure there is no obstacle around the boom.” will be displayed.
2. Pressing the fully automated stowage switch once more starts the automatic stowage operation according to the following procedure.
   (1) Hook is wound up until over winding is detected.
   (2) The boom is fully retracted.
   (3) The boom is raised to 30 degrees.
   (In case boom angle is below 30 degrees.)
   (4) The boom is slewed to a 2 degree slewing angle.
   (5) The boom is fully lowered.
   (6) The hook is stowed.
   This completes the automatic stowage.

NOTES

By using crane auto-stow function, hook block is stowed to the boom head. Use manual operation when stowing the hook block to the hook stowage wire.

https://truckmanualshub.com/

2.24 OUTRIGGER STOWAGE OPERATION

⚠ WARNING

- **Do not let people approach the machine when stowing the outriggers.**
  Close proximity to the machine may cause serious accidents such as getting caught between the outrigger and the machine main unit.
- **Before stowing the outriggers, check that there are no obstacles under the crawler belts.**
  If there is any object under the rubber tracks, the machine may overturn and cause serious accidents when stowing the outriggers.
- **During operations except those for extending/setting the outrigger cylinders, the engine must be kept shut down.**
  A person touching an outrigger switch may result in sudden movement of the outrigger cylinder, which may lead to serious accidents.
- **If a positioning pin is removed, the corresponding outrigger loses its support, resulting in slewing. Be sure to hold an outrigger with one hand when removing its positioning pins.**
- **Do not put hands or fingers around the gaps of movable areas when stowing the outriggers.**
  Otherwise, they may get caught, leading to serious accidents.
- **When stowing outriggers, insert each position pin completely to lock.**
- **There are 4 outriggers. Each outrigger has its own switch. Be careful not to confuse the outrigger switches when setting the outriggers.**
  Check both the outrigger numbers indicated in the "control panel" of the switch and "number labels" attached to each outrigger. A serious accident may result if the outrigger numbers are confused.
- **When you operate two outrigger switches at one time, only the two switches for the front outriggers ([(1)] and [(4)]), or the two for the rear outriggers ([(2)] and [(3)]) can be operated simultaneously. If two switches on either left or right side are operated at the same time, two outriggers on one side may be abruptly activated, causing the machine to overturn.**
- **During outrigger switching operation, always keep the engine at lower speed.**
  When the engine is controlled to high speed, outriggers move too quickly which may result in serious accidents including tipping of the machine.
- **When lowering the floating machine to make it rest on the ground, operate the four outriggers so that they are retracted equally in a step-by-step manner by using the eight outrigger switches. If the 2 outriggers on either the left or right side are suddenly retracted, the machine becomes unstable which may cause the machine to overturn.**
- **After the outriggers have been grounded, do not attempt to "extend" them. Doing so may cause damage to outriggers due to the excessive force that is applied to them.**
- **Before operating the outriggers, be sure to shift the travel lock lever into the free position.**

CAUTION

- **Before operating an outrigger, be sure to move the boom to the "lowest, fully retracted and slewing stowage" position. The outriggers cannot be operated unless the boom is completely retracted. (Make sure that the crane stowage lamp on the monitor is lit in yellow.)**
- **Set the mode selector switch on the outrigger operation panel to the "Outrigger" position.**

[1] TASKS TO BE PERFORMED AFTER STARTING THE ENGINE

The following explains the setting procedure for only one outrigger (4). Repeat the same procedure for the other three outriggers.

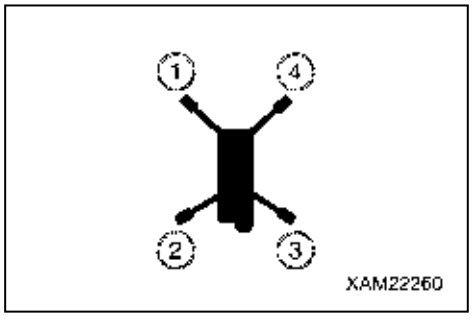

1. Shift the lock lever (1) into the free (F) position.

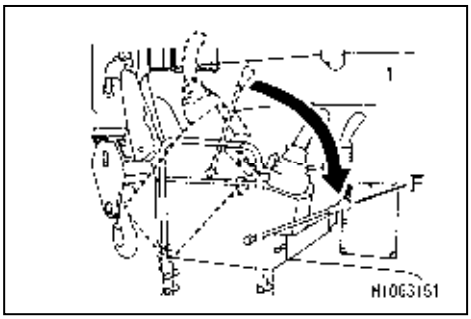

2. See “OPERATION 2.2 STARTING ENGINE” to start the engine.
3. Take your foot off the accelerator pedal (6) to allow the engine to run at idle.

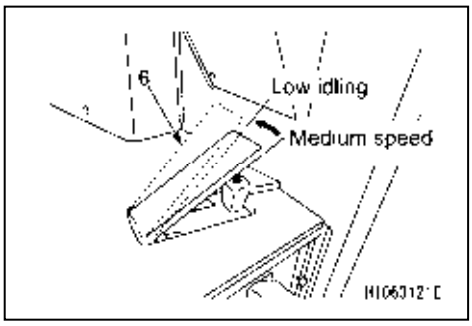

4. Change the mode to Outrigger mode with the mode selector switch (1) (Travel/Outrigger/Crane) on the monitor or the left control lever.

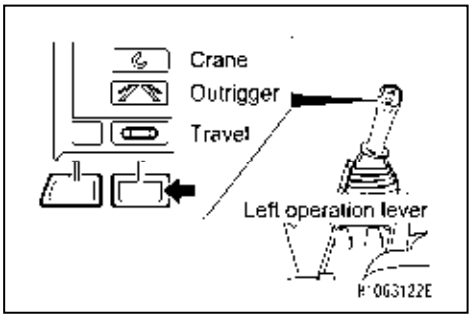

5. Make sure that the crane stowage lamp (1) on the monitor is lit in yellow.

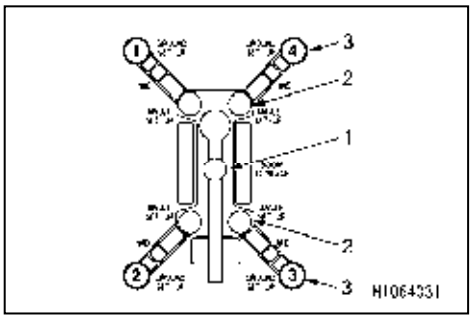

6. Select the Manual mode with the mode selector switch (3) (Manual/Auto) on the monitor or the left control lever.

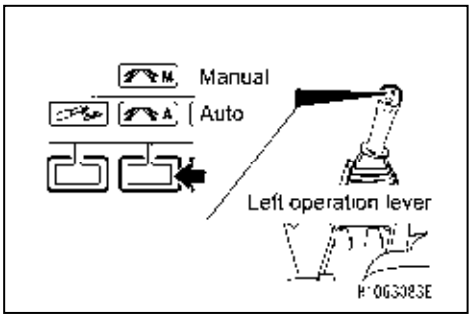

⚠ WARNING

When operating two outrigger switches at the same time, only two on the front side (outriggers [(1)] and [(4)]) or two on the rear side (outriggers [(2)] and [(3)]) can be operated at the same time. If two switches on either left or right side are operated at the same time, two outriggers on one side may be abruptly activated, causing the machine to overturn.

https://truckmanualshub.com/

7. Select the Ground mode with the mode selector switch (2) (Extension/Ground) in the monitor or the left control lever.

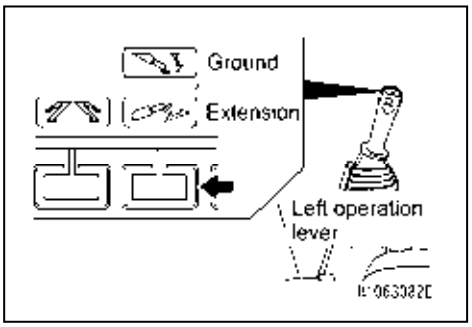

8. Identify the outrigger to be operated by checking the outrigger number shown on the operation nameplate attached to each outrigger switch on the outrigger operation panel.
9. Set the two outrigger switches individually or at the same time to the “Retraction” position.
   When the grounding cylinder begins to be retracted and the machine starts lowering, set the switch to the “NEUTRAL” position temporarily.
   Repeat the above steps for the other two switches to allow the four outriggers to lower the machine to a certain height, and set the switches to the “NEUTRAL” position temporarily.
   Repeat this operation to gradually lower the machine until the crawler belts are completely grounded.

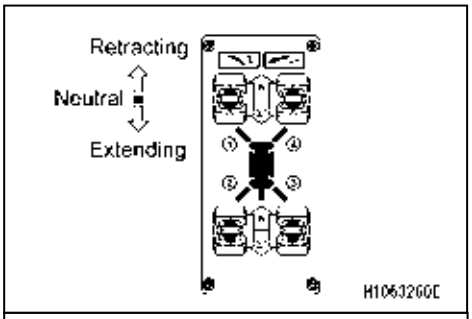

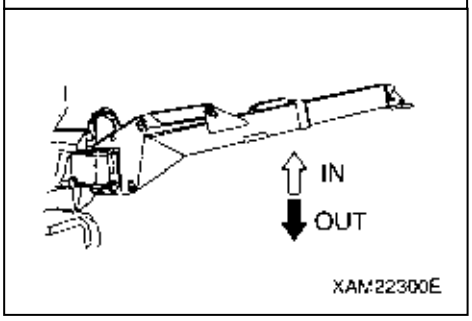

10. After the right and left crawler belts come into complete contact with the ground, press and hold two outrigger switches, individually or simultaneously, to the “Retract” position.
    When the grounding cylinder has been completely retracted and the top box is raised to the maximum height, release your finger from the outrigger switch.
11. Make sure that the four outrigger grounding lamps (3) on the outrigger indicator are blinking in red.

NOTES
On the monitor, the crane stowage lamp (1) is lit in yellow, and the four outrigger extension lamps (2) and the four outrigger grounding lamps (3) are blinking in red.

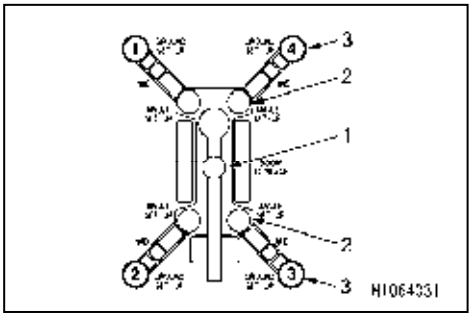

12. Select the extension mode by selecting the mode change switch (2) (extension/grounding) within the monitor, or operating the left lever.

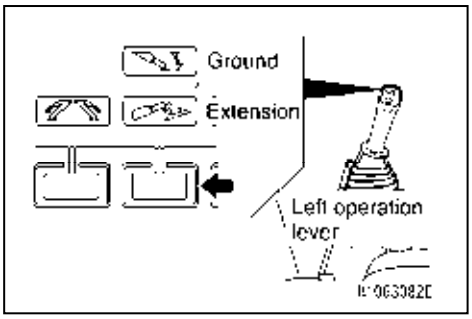

https://truckmanualshub.com/

13. Set the two outrigger switches individually or at the same time to the “Retraction” position.
    When the extension cylinder is completely retracted and the inner box reaches the shortest position, and set the switch to the “NEUTRAL” position.
    Repeat the above steps for other outriggers to bring the outrigger inner boxes to the shortest position, and set the switch to the “NEUTRAL” position.

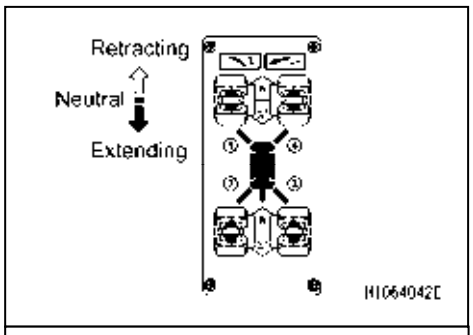

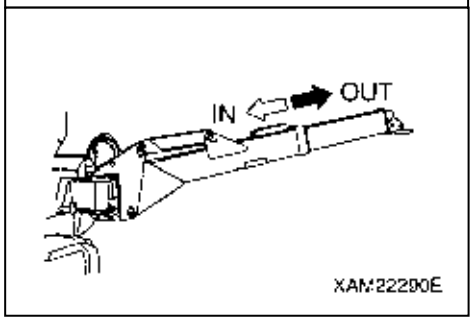

14. Turn the starter switch to the “OFF” position.
    The engine stops.

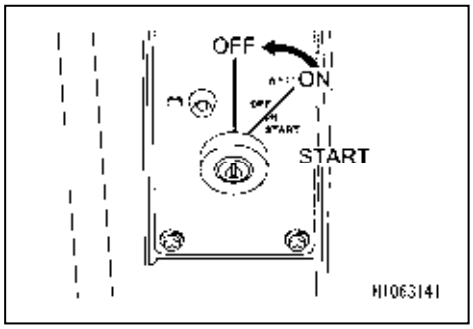

[2] PROCEDURES AFTER ENGINE SHUTOFF

1. Pull the positioning pin (1) out of the outrigger rotary (2), and rotate the outrigger rotary inwards.

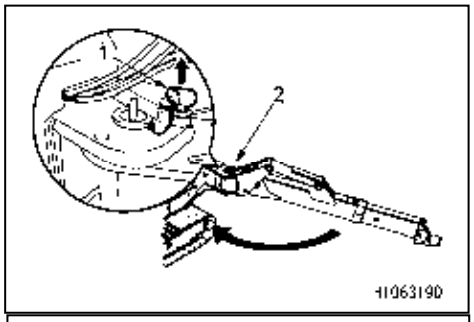

2. When the outrigger rotary (2) is aligned with the pin hole, fully insert the positioning pin (1) into the hole.

NOTES
The positioning pin (1) is equipped with a wire to prevent it from being lost.

3. Repeat the above steps to stow the other three outriggers.

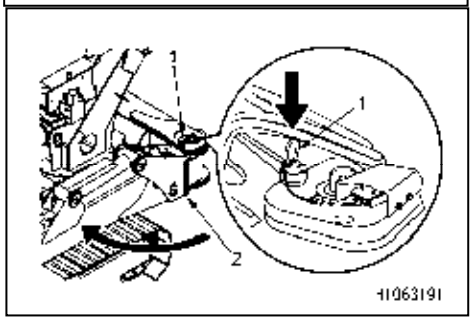

NOTES
After the outriggers have been stowed, make sure that each positioning pin (1) is securely inserted.

4. Make sure that the four outrigger extension lamps (2) in the outrigger indication are turned off.

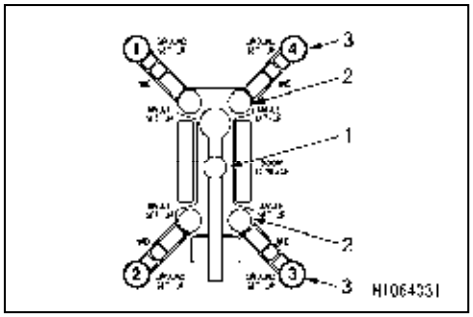

NOTES
On the monitor, the crane stowage lamp (1) is lit in yellow, and the four outrigger grounding lamps (3) and the four outrigger extending lamps (2) are blinking in red.

https://truckmanualshub.com/

2.25 PROHIBITED OPERATIONS DURING CRANE WORK

⚠ WARNING

- **Always set the outriggers on level, solid ground when performing the crane operations.**
- **Never perform travelling hoist or crane operations without setting the outriggers. The machine will be unstable and overturn, leading to serious accidents.**
- **See the cautions given in the "Safety" besides the do's and don'ts in this section.**

[1] DON'T OPERATE WITH SLEWING FORCE

Drawing in or lifting the load with slewing operation is prohibited.

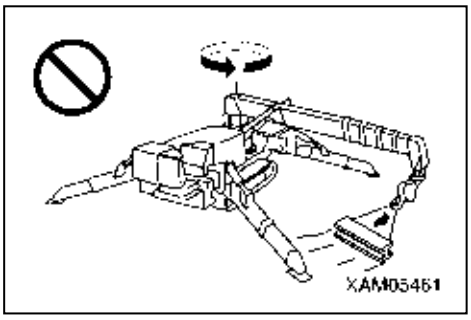

[2] DON'T OPERATE WITH DERRICKING FORCE

Drawing in or lifting the load with boom derricking operation is prohibited.

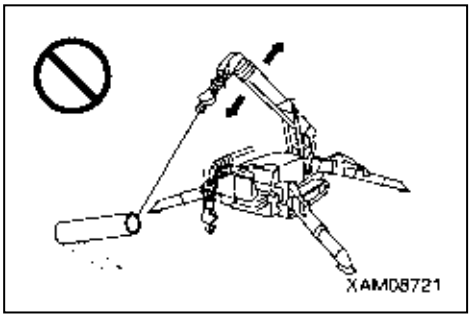

[3] DON'T PULL SIDEWARD, DRAW IN OR HOIST DIAGONALLY

Pulling the load sideways, drawing it in, or hoisting diagonally applies unreasonable force on the machine. It not only damages the machine body, but also is dangerous. Never operate in this way.

The hook must lift right above the center of gravity of the load hoisted.

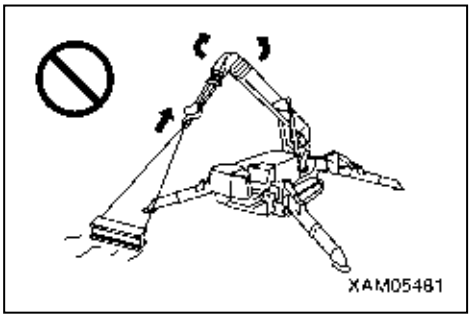

[4] DON'T OPERATE VIOLENTLY DURING WORK

Do not operate the lever suddenly.

Especially, "slewing", "boom lowering", and "unwinding" must be operated at low speeds.

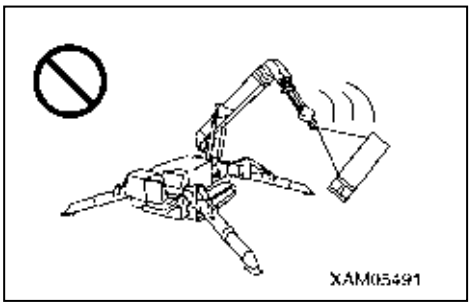

https://truckmanualshub.com/

[5] DON'T ALLOW ACCESS INTO WORKING RADIUS

Do not allow personnel to approach the working radius such as letting operators enter under a hoisted load.

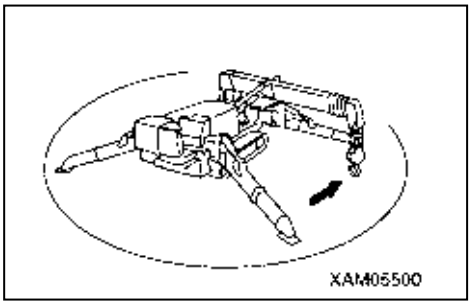

[6] DON'T USE FOR OTHER THAN MAIN APPLICATIONS

Do not move people up/down with the crane.

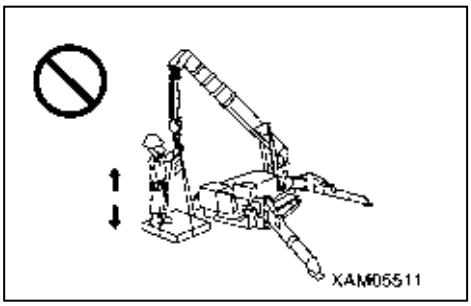

[7] DON’T PERFORM UNREASONABLE OPERATIONS

Operations requiring more than the machine performance can cause accidents.

Crane operations must always be carried out according to the rated total load chart.

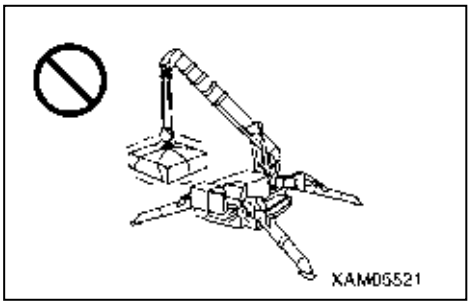

[8] DON'T WIND WIRE BY FORCE

Be careful not to hook the wire rope over a tree or steel beam while working.

If it gets stuck on something, do not forcibly wind the wire. Untangle and then wind the wire.

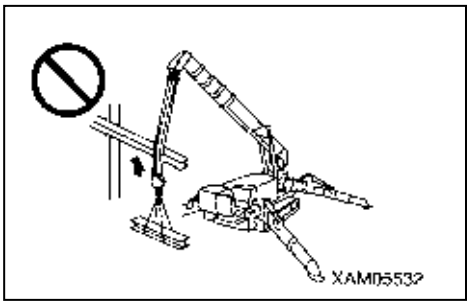

[9] DON’T OPERATE DURING PICK & CARRY

The load may swing or the machine may overturn during pick & carry operation.

Do not perform slewing operation or crane operations.

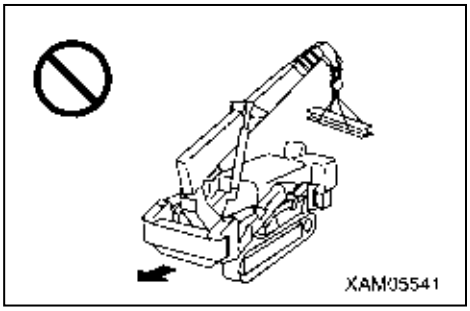

https://truckmanualshub.com/

2.26 PICK & CARRY OPERATION

2.26.1 CAUTIONS DURING PICK & CARRY OPERATION

⚠ DANGER

Pick & carry makes the machine very unstable and involves danger, and is not recommended.
If you have to perform pick & carry, the load must be within the values shown in the "Pick & carry rated total load chart" and the pick & carry posture must be strictly respected.
Not observing these cautions on pick & carry can cause serious accidents.

[1] RATED TOTAL LOAD AND WORKING RANGE CAUTION DURING PICK & CARRY

ALWAYS observe the rated total load in the following table and the working range in the right figure during pick & carry.

Item	Abstract
Boom slewing position	180±5 degrees
Boom length	Fully retracted
Boom angle range	60 to 77 deg
Rated total load	1090 kg (including 90 kg the hook mass)
Machine angle	0 degree

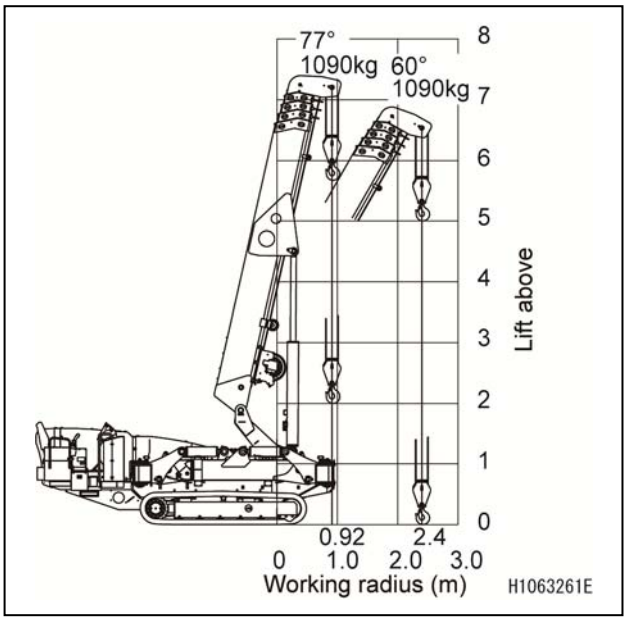

[2] CAUTIONS ON WORKSITE

The following ground and location present the machine overturning hazard. Do not approach those locations or perform pick & carry at those locations.
Check the condition of the road surface and ground in advance and have someone to guide you at the hazardous location or a location with poor vision.

- Slope, soft ground such as swamps, ground with many obstacles, ground with distinct irregularity such as river beds
- Near deep gullies and road shoulders
- Under water, shallow water, snowy area, frozen road

[3] CAUTIONS ON OPERATIONS

The following traveling operations involve the danger of overturning the machine. Never perform these operations.
Always remain seated on the operation seat and carefully perform the pick & carrying operation.

- Do not perform any crane operations while travelling. Keep the pick & carry posture.
- Do not hold the load high. Hold the load near the ground so that the load does not swing.
- Do not perform sudden starting, sudden stopping, or sudden steering. The load will swing and will be dangerous. Keep the engine at low speed and travel slowly.
- Do not go over an obstacle. The machine will topple over easily. Always travel on the path avoiding the obstacles.

https://truckmanualshub.com/

2.26.2 PICK & CARRY POSTURE

2.26.2.1 CHANGE TO PICK & CARRY POSTURE FROM TRAVELLING POSTURE

⚠ DANGER

When changing machine from travelling posture to pick & carry posture, be sure to carry it out on level and firm ground. Otherwise it may cause tipping of the machine.

1. Change the mode to Pick & Carry with the mode selector switch (3) (Pick & Carry) on the monitor or with the left control lever.

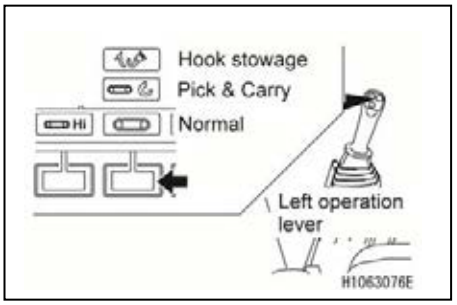

2. Lower the hook block until the overwind detector does not activate.

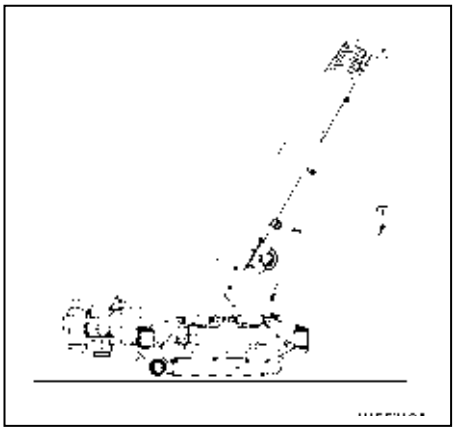

3. Raise the boom to more than 70 degrees.

NOTES

If the machine is inclined for more than 2 degrees, operation is restricted. In such case, place the machine on level and firm ground and try it again.

4. Slew the boom to 180±5 degrees.

NOTES

- Slewing operation is possible only when the boom is fully retracted, boom angle is more than 70 degrees and there is no load hoisted.
- While operating the slewing, other crane function cannot be operated.

5. When the Pick & Carry position lamp lights in yellow, pick & carry can be operated.
   If this is not lit, check the machine condition.

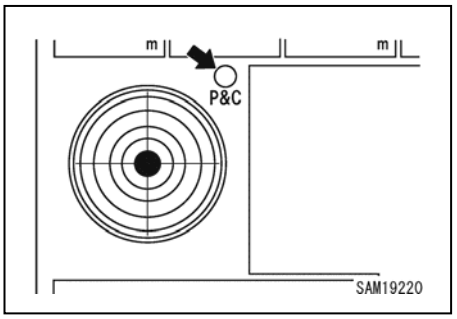

NOTES

Lighting condition of the Pick & Carry position lamp (lights up when all conditions are met)

- Boom is fully retracted
- Boom angle is more than 60 degrees
- Slew boom to 180±5 degrees
- No load hoisted

https://truckmanualshub.com/

2.26.2.2 CHANGE TO PICK & CARRY POSTURE FROM CRANE MODE POSTURE

1. If the machine is hoisting a load, unload and make no-load condition.

2. Set the crane to the below conditions
   - Boom is fully retracted
   - Boom angle is more than 60 degrees
   - Slew boom to within 180±5 degrees
   - No load hoisted

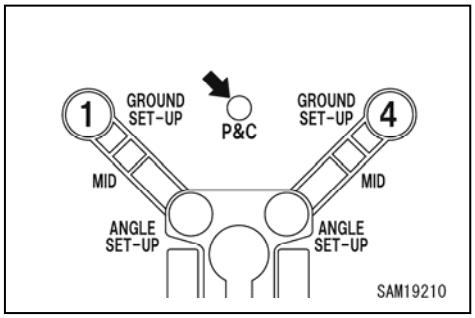

NOTES
If all the above conditions are met, the Pick & Carry position lamp lights in yellow and outriggers can be operated. If it is not lit in yellow, outrigger cannot be operated, so check the machine condition.

3. Change the mode to Outrigger with the mode selector switch (1) (Travel / Outrigger / Crane) on the monitor or with the left control lever.

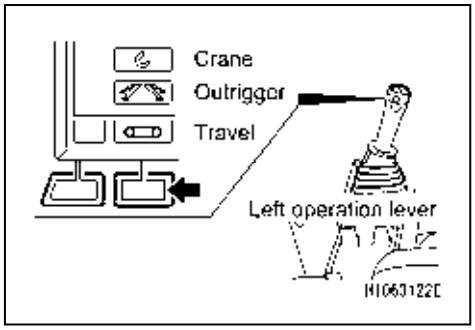

4. Refer to “OPERATION 2.24 OUTRIGGER STOWAGE OPERATION” in this manual and stow the outriggers.

NOTES
• Pick & carry is possible even though the outriggers are not completely stowed. However, it is recommended to have outriggers completely stowed for pick & carry operation. • If the machine inclines more than 3 degrees during outrigger operation, outrigger “IN” becomes restricted. Yet “OUT” operation is still available, so set the machine level and try again.

https://truckmanualshub.com/

2.26.3 PICK & CARRY OPERATIONS

⚠ DANGER

- **Read the items described in "OPERATION 2.26.1 CAUTIONS DURING PICK & CARRY OPERATION" when performing pick & carry duties for safe operation.**
- **Read "OPERATION 2.26.2 PICK & CARRY POSTURE" when to prepare pick & carry posture. Make sure to follow the process.**
- **Do not perform crane operations during pick & carry. The machine may topple over.**
- **Always remain seated in the operator's seat and carefully perform the pick & carry operation.**
- **Verify that it is safe around the machine and honk the horn before starting to move the machine.**
- **Verify that it is safe around the machine and honk the horn before switching moving forward/backward or steering.**
- **Keep the engine speed at low speed during travelling and travel slowly and carefully. Keep a safe distance so that the hoisted load or machine does not hit other machines or structures.**
- **When the machine tilts forward/backward/left/right during the crane operation and travelling, the overturning alarm buzzer sounds.**
  When the overturning alarm buzzer sounds, stop the work immediately. The machine may topple over.
  Strictly observe the values in the "Hoisted load rated total load" during the crane operation. Avoid slopes and obstacles while travelling.
- **If the machine is inclined more than 2 degrees, travelling cannot be operated.**

1. To perform crane operation, confirm if the mode is set to Pick & Carry mode now with the mode selector switch (3) (Pick & Carry) on the monitor or with the left control lever.
   Perform crane operation with this state.
   For crane operation, see "OPERATION 2.18 WINDING AND UNWINDING" and "OPERATION 2.19 BOOM DERRICKING OPERATION".
   Keep the hoisted load near the ground so that the load will not swing.

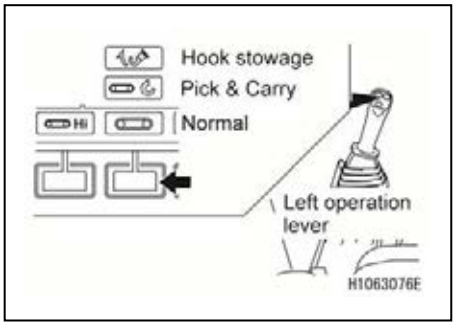

NOTES

- When the moment limiter is activated, the alarm buzzer sounds and hazardous boom and winch operations stop automatically.
- If the moment limiter was activated, see the items in "OPERATION 1.5.3 [2] RECOVERY OPERATION FROM AUTOMATIC STOP".
- In Pick & Carry mode, travel speed cannot be set to "Hi".

2. To travel this machine, shift to the normal Travel mode with the mode selector switch (3) (Pick & Carry) on the monitor or with the left control lever.
   For travel operation, see "OPERATION 2.6 STARTING MOVING MACHINE", "OPERATION 2.8 CHANGING DIRECTION OF THE MACHINE", and "OPERATION 2.9 STOPPING/PARKING THE MACHINE".

NOTES

- In Travel mode, the Pick & Carry position lamp may lights on and off depending on a load weight, but this is not a faulty condition.
- If travel cannot be operated, check if the machine is in Pick & Carry posture or in overload condition.

https://truckmanualshub.com/

2.26.4 CANCELING PICK & CARRY OPERATION POSTURE

NOTES
This process is for after the Pick & Carry operation. If the mode is not in Pick & Carry, shift the mode to Pick & Carry first.

2.26.4.1 HOW TO RETURN TO TRAVELLING POSTURE

1. If a load is suspended, unload the load, and make the crane into no-load condition.

2. Set the crane into below conditions.
   - Boom is fully retracted.
   - Boom angle is more than 70 degrees.
   - No load

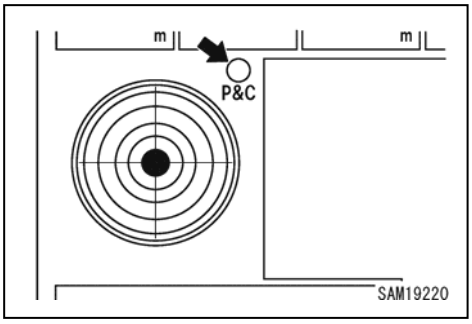

NOTES
If above conditions are not met, slewing operation is not possible other than the 180±5 degrees area.

3. Raise the hook block with right lever (1) by manipulating to your side until hook block automatically stops. (overwind condition)

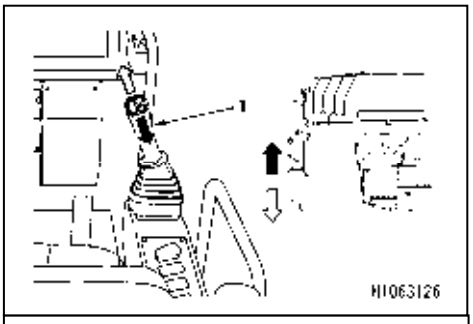

NOTES
If hook block is raised too much, overwind is detected and warning buzzer sounds and raising hook automatically stops.

4. Slew the boom to 1~2 degree position using left control lever (2) by manipulating to the right or left.

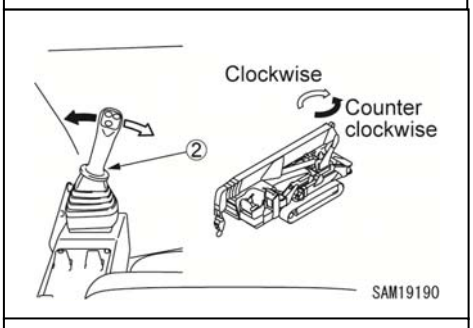

5. Lower the boom with right lever (1) by manipulating to the right until boom automatically stops.

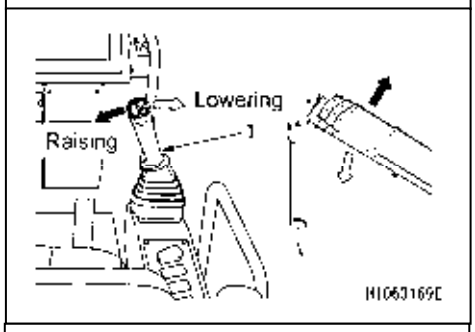

6. By changing the mode to Hook Stowage by mode selector switch (3) on the monitor, let the hook automatically be stowed.

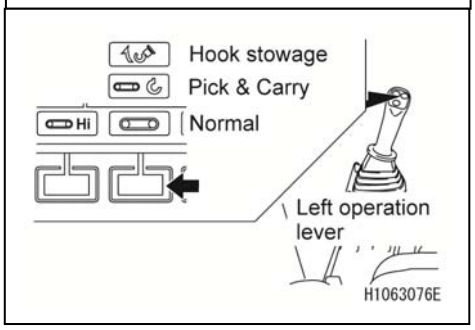

https://truckmanualshub.com/

7. Make sure the crane stowage lamp (1) (yellow) lights on the monitor.

NOTES
If the crane stowage lamp (1) (yellow) is not lit, fully retract or fully lower the boom, or operate slewing again.

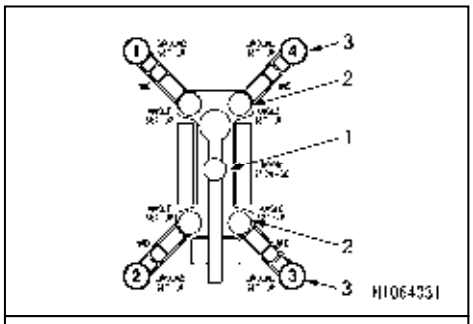

8. Shift to the normal Travel mode with the mode selector switch (3) (Pick & Carry) on the monitor or with the left control lever.

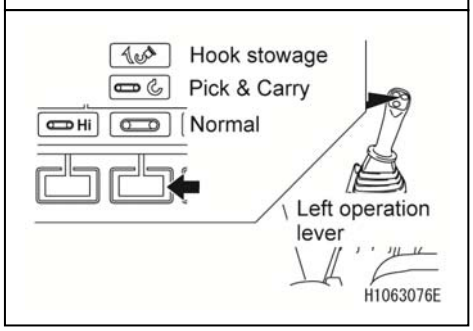

2.26.4.2 HOW TO RETURN TO CRANE POSTURE

1. If a load is suspended, unload the load, and make the crane into no-load condition.

2. Set the crane into below conditions.
   - Boom is fully retracted.
   - Boom angle is more than 60 degrees.
   - Slewing angle is within 180±5 degrees
   - No load

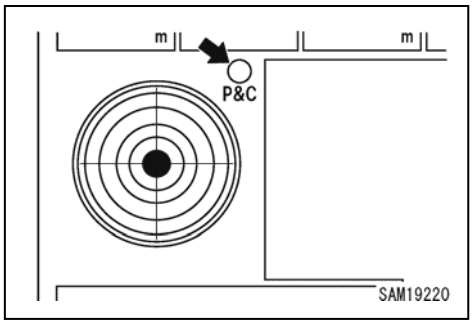

NOTES
If above conditions are met, the Pick & Carry position lamp lights and outriggers can be operated.

3. Change the mode to Outrigger with the mode selector switch (1) (Travel/Outrigger/Crane) on the monitor, or with the left control lever.

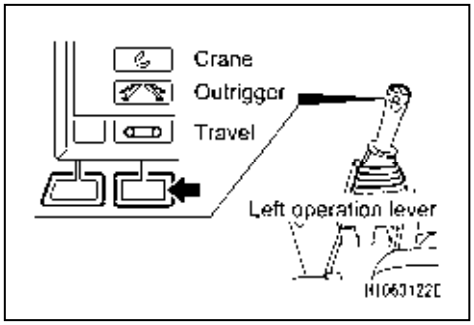

4. Refer to the section “OPERATION 2.14.2 OUTRIGGER SETUP OPERATION” and set the outriggers.

5. Change the mode to Crane with the mode selector switch (1) (travel/outrigger/crane) or with the left control lever.

https://truckmanualshub.com/

2. 27 DPF STATIONARY REGENERATION METHOD

⚠ DANGER

Take care of the following when carrying out DPF stationary regeneration.
- **Due to the burning / removal process, the temperature of the exhaust gas rises to about 600°C. Do not touch or come close to the DPF muffler, exhaust pipe or exhaust gas. There is the danger of being burnt.**
  Also, if there are flammable objects placed in the surroundings, there is the danger of a fire occurring.
- **Since there is the danger of carbon monoxide poisoning, do not carry out DPF regeneration in places with poor ventilation.**

CAUTION

- **The machine cannot be operated at all during DPF stationary regeneration. Regeneration takes about 25 to 30 minutes to finish.**
  Make preparations, such as securing the work environment and refueling, before starting regeneration.
- **The engine speed rises when regeneration begins in order to raise the exhaust gas temperature and is not a fault.**
- **If the machine is operated with the regeneration request lamp still lit on the monitor, there is a risk of DPF damage and fire.**

If the DPF regeneration request lamp is lit on the monitor, make sure to carry out manual stationary regeneration.

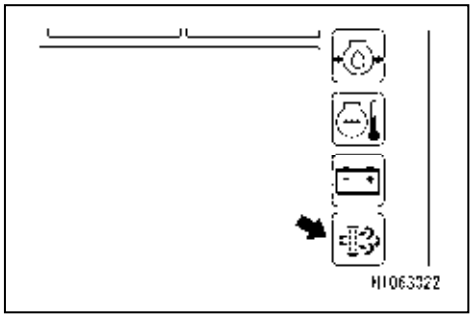

1. Start the engine and put it in idling condition.

2. Start regeneration by pressing the DPF stationary regeneration switch on the monitor.
   As regeneration is started, the engine speed rises to maximum and regeneration is carried out.

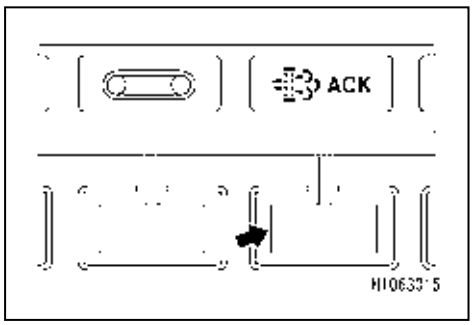

CAUTION

If DPF stationary regeneration needs to be stopped, carry out the following operations.
- **Press the DPF stationary regeneration switch again.**
- **Turn the engine key OFF.**

NOTES

During regeneration, the DPF regeneration lamp is lit on the monitor.
As the exhaust gas is being cleaned, the smell of the exhaust gas will differ from normal.

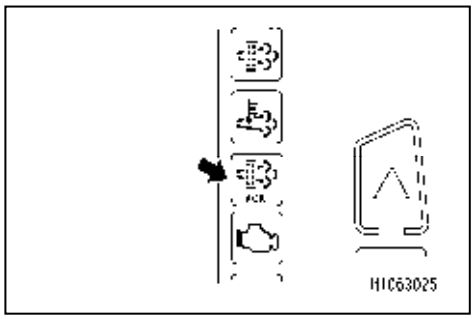

3. The engine speed returns to idling condition, the DPF regeneration lamp goes out and regeneration ends.

https://truckmanualshub.com/

3. OPERATION BY REMOTE CONTROL

⚠ WARNING

- **Never attempt to dismantle or modify the Transmitter and Receiver. Otherwise, an electric shock or fire may be caused.**
- **Avoid dropping or hitting the Transmitter. A damaged part of the enclosure allows water to enter inside that can cause trouble or failures and may result in a serious hazard, such as a malfunction or electrical shock.**
  In the event of dropping and damage, contact us or our sales service agency for repair.
- **Never wash the Transmitter and Receiver with water. That allows water to enter inside and can cause trouble or failures and may result in a serious hazard, such as a malfunction or electrical shock.**
- **Simultaneous remote control operation and manual operation of the crane are allowed.**
  To ensure safety, all manual operations are disabled while the machine is operated by the remote controller; however, the risk of serious accidents still exists due to unexpected crane movements. The Crane must be operated by one method only.
- **Before starting operation by using the remote controller, be sure to perform inspections on the transmitter and the receiver in accordance with "INSPECTION AND MAINTENANCE 9.1 PRE-OPERATION INSPECTION".**

3.1 CAUTIONS BEFORE OPERATION

1. To prevent the Transmitter from being accidentally dropped, wear the waist belt (1) around your waist and attach the Transmitter to the waist belt (1).

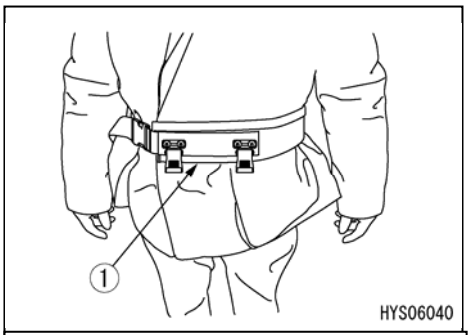

2. Be sure to perform inspections on the transmitter and the receiver in accordance with "INSPECTION AND MAINTENANCE 9.1 PRE-OPERATION INSPECTION".

3. After powering on the transmitter, before operating the crane, be sure to give an alarm sound (horn) to alert people at the work site.

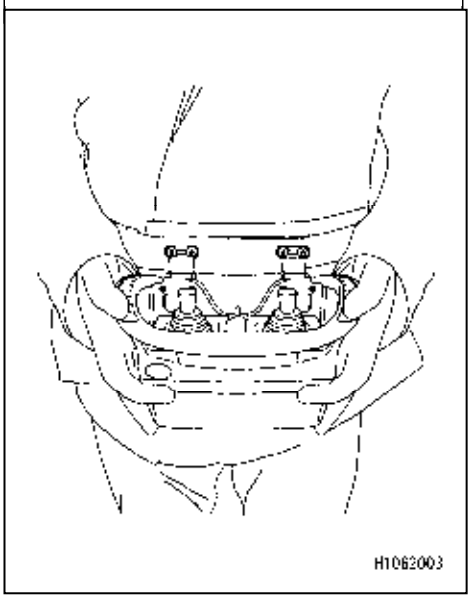

NOTES

- When the transmitter battery status bar has started illuminating in red, followed by an alarm sound, immediately replace the battery with a fully charged battery.
- In the case of the remote control system, radio waves may not be received even at close range due to jamming or depending on reflection conditions in the vicinity.
  Operate as close to the Receiver antenna as possible.
- In crane operation, when the transmitter has not been operated for a certain period of time after the last operation, it will be automatically turned "OFF". To resume operating the transmitter, press the start button on the transmitter twice to power "ON".

https://truckmanualshub.com/

3.2 POWERING ON

1. Press the remote controller power ON/OFF switch (3) once, and make sure that the power indicator on the upper left corner of the left display (M1) blinks in green. “Enter start sequence” appears on the right-side monitor (M2) when the remote controller is preparing to be powered ON.

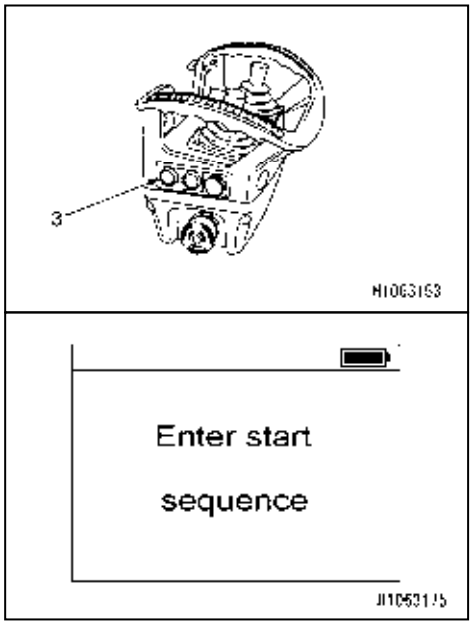

NOTES

When the controller is ready for power-on, performing one of the following operations will turn OFF the power to the controller:
- Press and hold the remote controller power ON/OFF switch (3).
- A switch other than the remote controller power ON/OFF switch (3) is pressed.
- The controller has been left un-operated for 5 second or longer.

2. When the controller is ready for power-on, pressing and holding the remote controller power ON/OFF switch (3) will change the display indication, and turn on the power.

CAUTION

If the controller does not power on, check the controller for the following:
- **Is the battery charged fully?**
- **Is the emergency stop/remote control power OFF switch (10) pressed?**

3. In order to make the crane operation possible, you need to press the ON/OFF switch (3) again when the controller power is on.

CAUTION

To make the crane operation possible with the controller, you need to press the remote controller power ON/OFF switch (3) for 3 times in total.

3.3 INDICATIONS OF DISPLAY

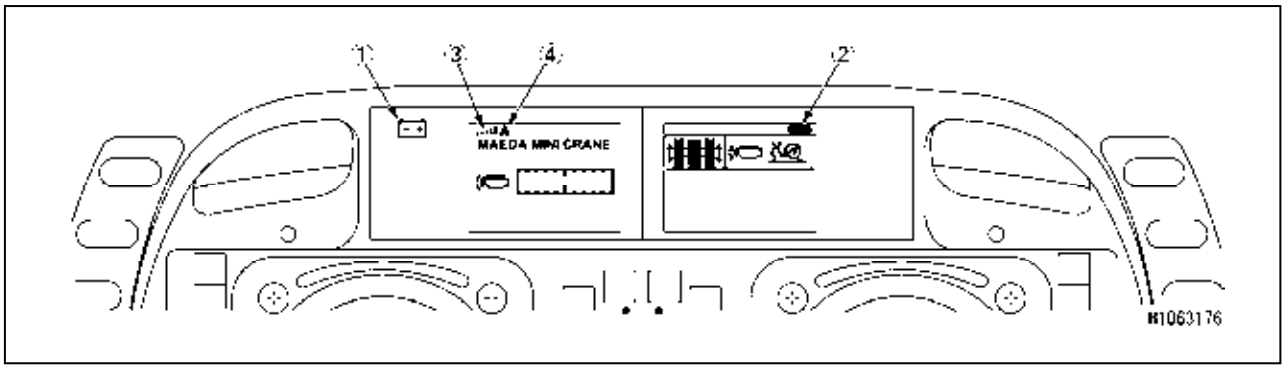

(1) Battery icon
Blinks in green when the power supply is in normal condition.

(2) Battery status bar
Indicates the remaining battery levels as follows:

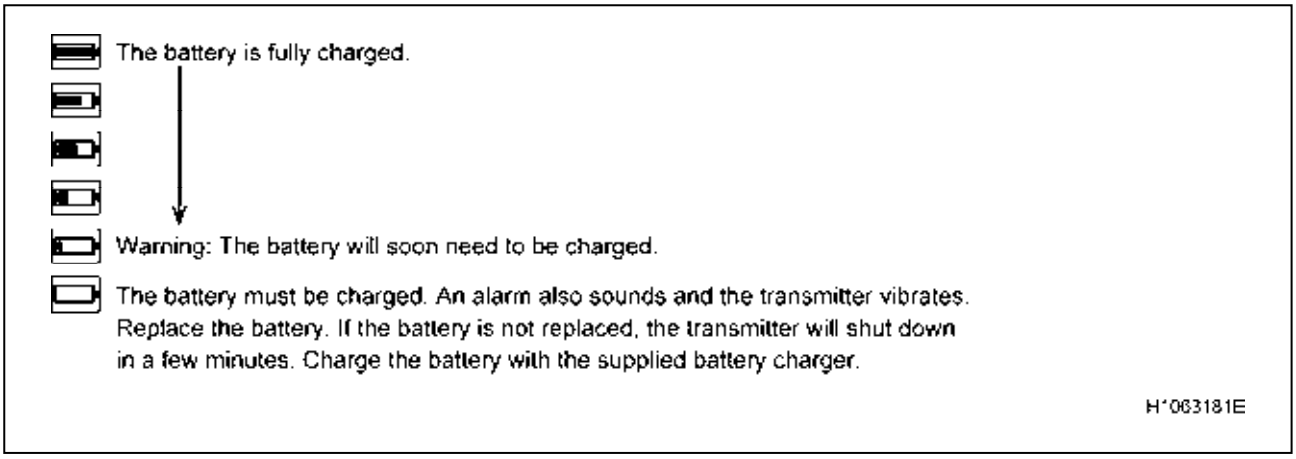

(3) Radio wave status bar
The intensity of radio waves are as follows:

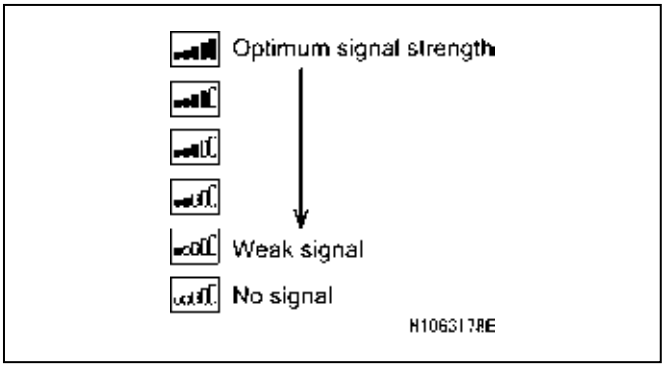

(4) Error icon
An icon appears when an error is detected.
Detailed information about the error icons can be checked from the remote control menu in the configuration menu.

https://truckmanualshub.com/

[Error indications]
If an error is detected, an error is displayed on the right display.
The details of the error can be checked from the radio controller menu inside the setting menu.

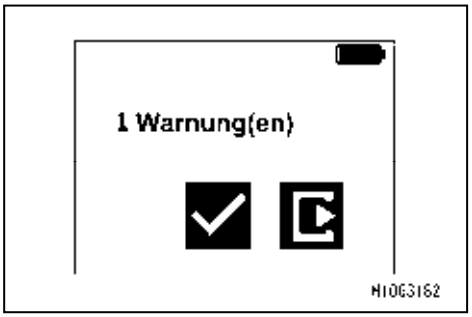

[Crane menu]
Pressing the operation mode selector switch (5) will automatically display the screen on the right-side monitor (M2), according to the operation to be performed.
The left-side monitor (M1) always displays the engine speed.

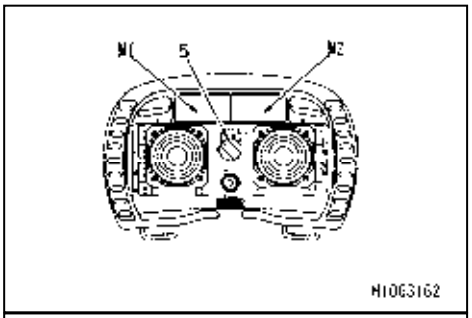

• Crane (white)
RTL: Displays the Rated Total Load
AL: Displays the Actual Load

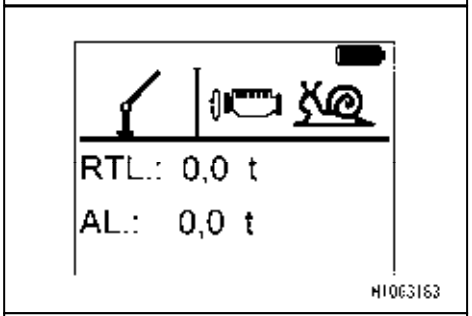

• Outrigger (F) (blue)

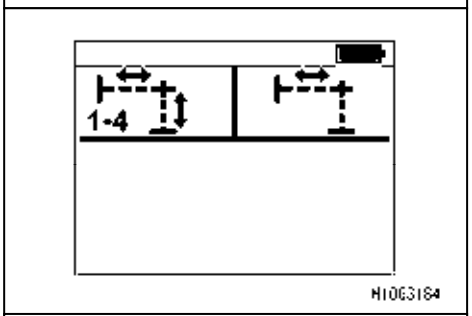

• Outrigger (R) (orange)

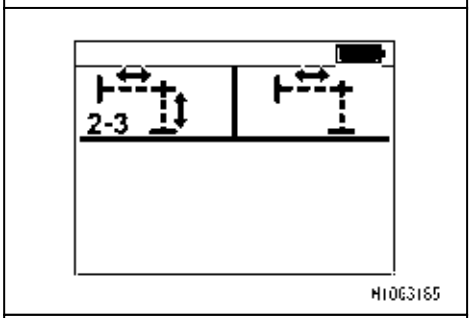

• Travel (red)

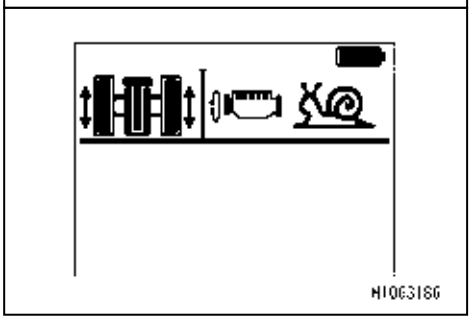

https://truckmanualshub.com/

[Settings menu]

When the crane menu is displayed, pressing the display operation switch (N1) changes the current menu to the settings menu.

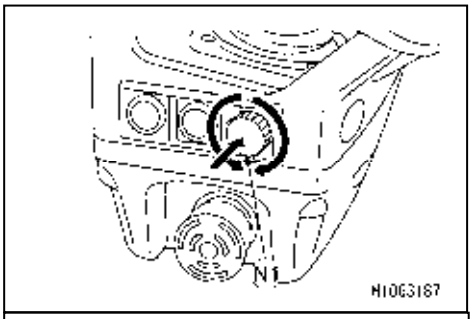

Turning the display operation switch (N1) allows you to select a desired menu.

Select a menu on the display, and press the display operation switch (N1) to determine the menu.

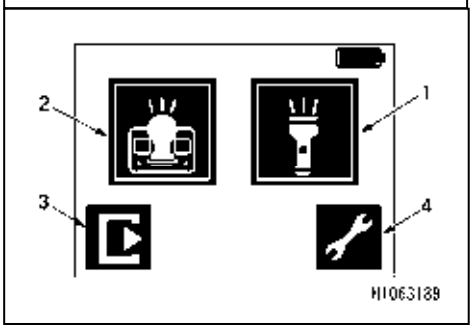

(1) LED light (front) ON/OFF

(2) LED light (operation panel) ON/OFF

(3) Return to the Crane mode

(4) To remote control menu

https://truckmanualshub.com/

• Remote control menu

Symbol	Name	Description
	HBC Menu	This menu can configure system settings. connection settings. and security settings and can display various information.
	Warnings	This submenu can be used to display warnings.
	Information	This submenu can be used to display the system information.
	Service address	This menu item can be used to display the hotline phone number and email address of our service office.
	Working hours	This menu item can be used to display the current working hours.
	Software/config	This menu item can be used to display the currently installed software version and the current display configuration.
	Information text	This menu item can be used to display the currently entered information text.
	Back	This soft key allows you to navigate through menu items to return to the previous item.
	Power info	This submenu can be used to display information about the remaining battery power.
	Battery level	This menu item can be used to display the current battery level.
	Back	This soft key allows you to navigate through menu items to return to the previous item.
	Personalize	This submenu allows you to personalize the system settings.
	Language	This menu item allows you to choose the display language.
	Backlight	This menu item can be used to adjust the backlight brightness of the display.
	Back	This soft key allows you to navigate through menu items to return to the previous item.
	Connections	This submenu allows you to configure connection settings
	Display configuration	This menu item allows you to configure the connection to PC.
	RF connection	This menu item allows you to establish the HF interface.
	Back	This soft key allows you to navigate through menu items to return to the previous item.
	Settings	This submenu allows you to configure device settings.
	Set information text	This menu item allows you to enter information texts.
	Master level	This menu item allows you to enable/disable the access to the master level.
	Back	This soft key allows you to navigate through menu items to return to the previous item.
	Safety functions	This submenu allows you to configure security settings.
	Safety features	This menu item allows you to adjust the sensitivity for radiomatic® zero-g and radiomatic® shock-off, which are provided to enhance security features.
	inclination switch	This menu item allows you to configure the settings for radiomatic® inclination switch, which is provided to enhance security features.
	APO/AMO	This menu item allows you to configure APO/AMO for the security features.
	Manage PIN	This menu item allows you to change the PIN from the current PIN to a new PIN.
	Reset PIN	This menu item allows you to reset the current PIN.
	Back	This soft key allows you to navigate through menu items to return to the previous item.
	Home	This soft key allows you to return to the main page of the customer menu.

https://truckmanualshub.com/

3.4 STARTING/STOPPING THE ENGINE

[STARTING THE ENGINE]

1. Raise the lock lever (1) to the lock position (L).

NOTES
Engine does not start unless the lock lever (1) is in lock position (L).

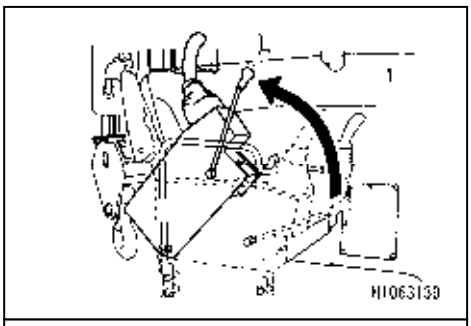

2. Pressing the engine start/stop switch (4) when the engine is stopped will allow the engine to start.

CAUTION
To start the engine, press and hold the engine start/stop switch (4) until it starts.

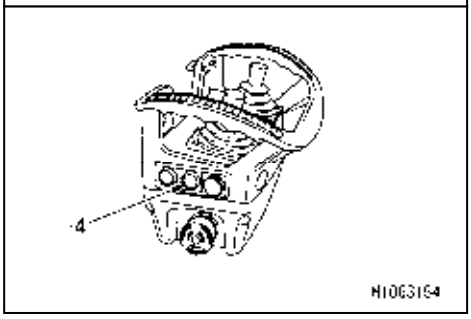

[STOPPING THE ENGINE]

Pressing the engine start/stop switch (4) when the engine is running will allow the engine to stop.

CAUTION
To stop the engine, press and hold the engine start/stop switch (4) until it stops.

3.5 OPERATION AFTER ENGINE IS STARTED

3.5.1 OPERATION BEFORE WORK

Before operating with controller, set the lock lever (1) to free position (F).

NOTES
Crane operation is not possible unless the lock lever (1) is in free position (F).

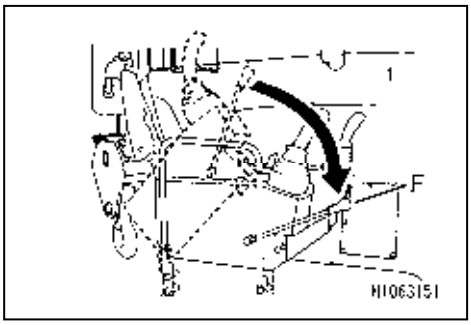

3.5.2 SWITCHING OPERATION MODE

Each press of the operation mode selector switch (5) changes the operation mode.

Each press of the operation switch also changes the screen accordingly. For the display (M1 and M2), refer to “OPERATION 3.3 INDICATIONS OF DISPLAY”.

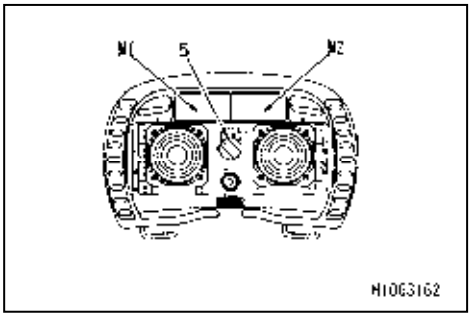

- Crane mode (white)
- Outrigger (F) mode (Blue)
- Outrigger (R) mode (Orange)
- Travel mode (red)

https://truckmanualshub.com/

3.6 TRAVEL OPERATION

1. Turn the starter switch on the machine to the “ON” position.

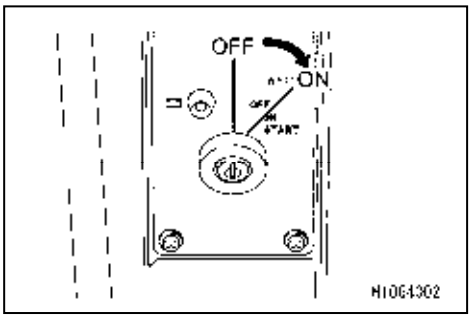

2. Press the power ON/OFF switch (3) for the remote control transmitter to supply power to the transmitter.
   For details about the power-on, refer to “OPERATION 3.2 POWERING ON”.

3. Set the operation mode selector switch (5) to Travel.

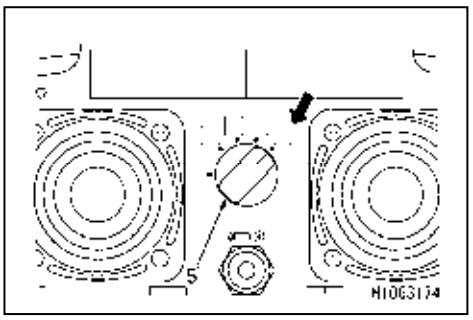

4. Press the engine start/stop switch (4) to start the engine.
   For details about the engine start, refer to “OPERATION 3.4 STARTING/STOPPING THE ENGINE”.

3.6.1 START MOVING MACHINE

⚠ WARNING

- **Do not allow anyone around the machine.**
- **Clear away all the obstacles on the travelling path.**
  Check for projections and grooves on the ground surface where the machine travels especially when it travels backwards. Remove obstacles from the surface if required.
- **Check for safety in the vicinity of the machine and honk the horn before starting to move the machine.**
- **To start the machine, control the engine at low speeds, manipulate the left and right control levers slowly at the same time, and check the machine for the travelling speed. Do not make a sudden start especially when you are going backward. This could cause a serious accident.**
- **If you cannot verify the safety because the driving direction is out of view, stop driving and check it is safe in the travelling direction. Assign a guide person if necessary depending on the worksite situation.**

[1] MOVING FORWARD

Operate the left and right control levers at the same time.

- Move forwards by slowly pushing the left operation lever (1) and right operation lever (2) forwards.

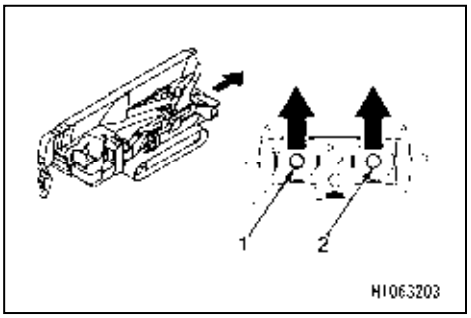

[2] MOVING BACKWARD

Operate the left and right control levers at the same time.

- Move backwards by slowly pulling the left operation lever (1) and right operation level (2) towards yourself.

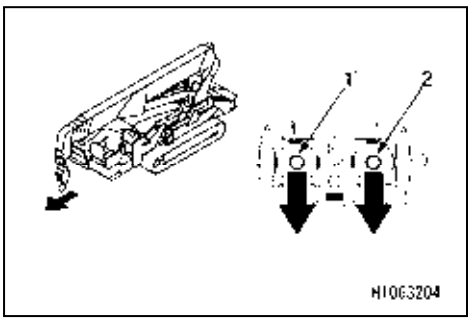

https://truckmanualshub.com/

3.6.2 CHANGING DIRECTION OF THE MACHINE

⚠ WARNING

- **Sudden steering or unnecessary spin turns at high speeds not only damages the crawler belt or hydraulic devices, but also may result in a collision with other objects. Stop the machine, and then adjust the engine speed to low before performing spin turns.**
- **Do not change direction on a slope. The machine may slip to the side. Be especially careful on soft ground and clay soil.**

[1] CHANGING MACHINE DIRECTION WHEN STOPPED

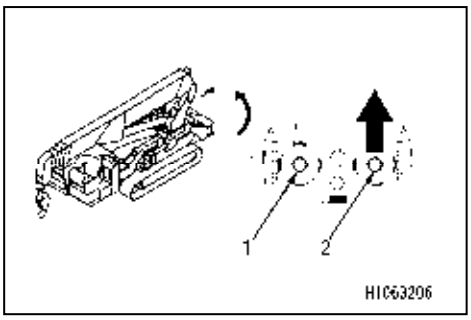

• LEFT TURN

Pushing the right control lever (2) forward causes the machine to turn left in the forward direction.
Pulling the right control lever (2) toward you causes the machine to turn left in the backward direction.

• RIGHT TURN

Pushing the left control lever (1) forward causes the machine to turn right in the forward direction.
Pulling the left control lever (1) toward you causes the machine to turn right in the backward direction.

[2] SPIN TURNS

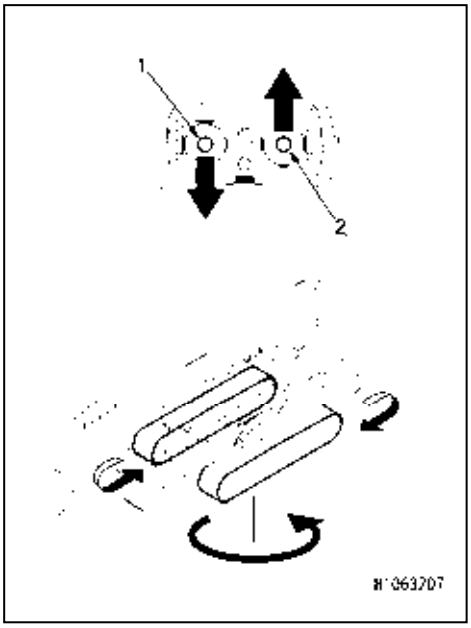

• LEFT SPIN TURN

Pushing the right control lever (2) forward while pulling the left control lever (1) toward you will rotate the crawler belts in opposing directions, allowing the machine to spin counter-clockwise.

• RIGHT SPIN TURN

Pushing the left control lever (1) forward while pulling the right control lever (2) toward you will rotate the crawler belts in opposing directions, allowing the machine to spin clockwise.

https://truckmanualshub.com/

[3] CHANGING DIRECTION WHILE MOVING

• LEFT TURN WHILE MOVING FORWARD

While pushing the right control lever (2) forward, move only the left control lever (1) back to the “NEUTRAL” position.

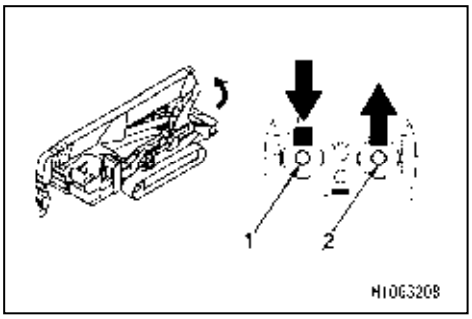

• LEFT TURN WHILE MOVING BACKWARD

While pulling the right control lever (2) toward you, move only the left control lever (1) back to the “NEUTRAL” position.

• RIGHT TURN WHILE MOVING FORWARD

While pushing the left control lever (1) forward, move only the right control lever (2) back to the “NEUTRAL” position.

• RIGHT TURN WHILE MOVING BACKWARD

While pulling the left control lever (1) toward you, move only the right control lever (2) back to the “NEUTRAL” position.

3.6.3 STOPPING/PARKING THE MACHINE

⚠ WARNING

- **Avoid sudden stops and try to stop with a safety margin whenever possible.**
- **Choose a level and solid location for parking the machine.**
  If it is necessary to park on a slope, provide some blocks so that the machine will not move.
- **When parking the machine, make sure to shift the lock lever into the lock position.**
- **When leaving the machine, be sure to stop the engine, remove the key from the starter switch, and take it with you.**

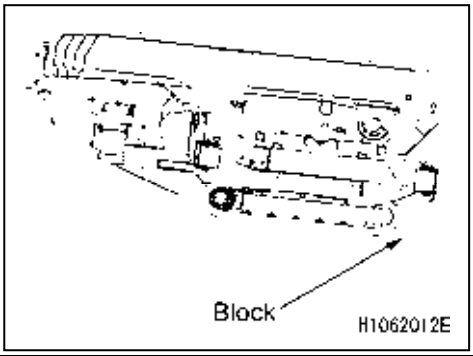

1. Shift the left control lever (1) and right control lever (2) into the “NEUTRAL” position at the same time. The brake is automatically applied and the machine stops.

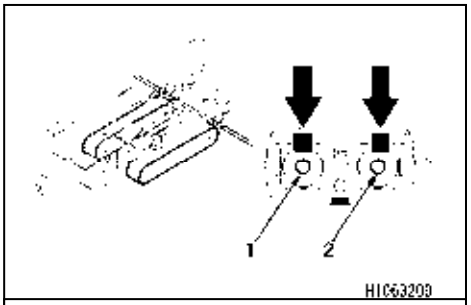

2. Shift the lock lever (1) into the lock (L) position.

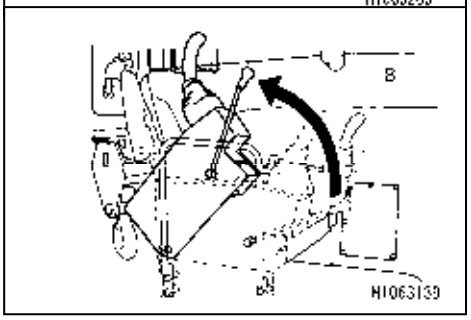

https://truckmanualshub.com/

3.7 OUTRIGGER OPERATION

⚠ WARNING

- **Check if the transmitter operation lever operates smoothly and returns to the Neutral position when your finger is released from it.**
- **The transmitter operation lever will stop due to the stopper when it is turned as far as it will go. When it is blocked, do not attempt to push further. Otherwise, it may damage the Transmitter and cause faults and result in a serious accident.**
- **Before operating outriggers, be sure to set the mode selector switch (5) to Outrigger (F), or Outrigger (R). In the Crane mode, the crane operates unexpectedly, which is very dangerous.**
- **When grounding outriggers or lifting them from the ground, reduce the engine speed. When the engine is running at high speeds, operating outriggers may cause them to move abruptly. This may result in a serious accident, such as overturn of the machine.**
- **When operating the outriggers, always configure the Crane to the stow position. In the condition that the boom is raised or any load is lifted, it may cause a serious accident, such as tipping of the Crane.**
- **When operating the outriggers, always ensure that the position pin of each outrigger is securely inserted. If any of the positioning pins come out during operation, a serious accident, such as overturning of the machine, may result.**

1. Turn the starter switch on the machine to the “ON” position.

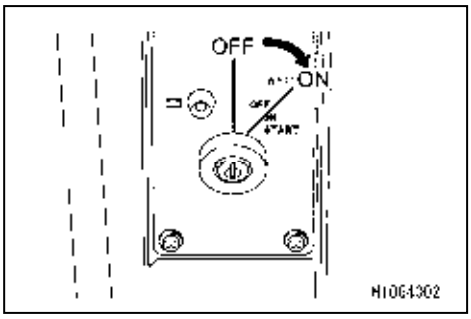

2. Press the power ON/OFF switch (3) for the remote control transmitter to supply power to the transmitter.
   For details about the power-on, refer to “OPERATION 3.2 POWERING ON”.

3. Set the mode selector switch (5) for the transmitter to Outrigger (F) or (R).
   - Outrigger (F) operates outriggers (1) and (4).
   - Outrigger (R) operates outriggers (2) and (3).

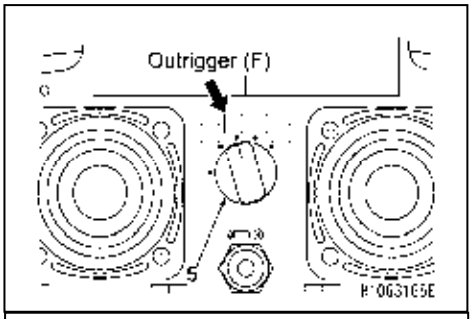

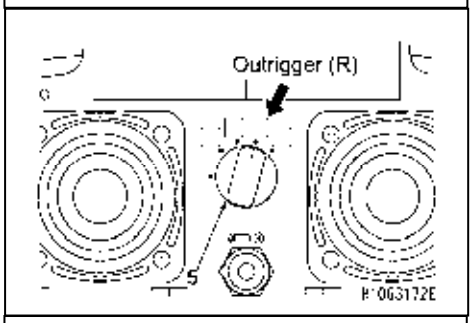

NOTE

When operating by radio controller, the 4 outriggers cannot be operated at the same time. Nor can the front and rear outriggers.

4. Press the engine start/stop switch (4) to start the engine.
   For details about the engine start, refer to “OPERATION 3.4 STARTING/STOPPING THE ENGINE”.

NOTES

The machine is equipped with four outriggers, which are numbered from (1) to (4) and identified by the number labels affixed on their respective bodies. These outrigger numbers individually correspond to those displayed in the monitor. (See the figure on the right)

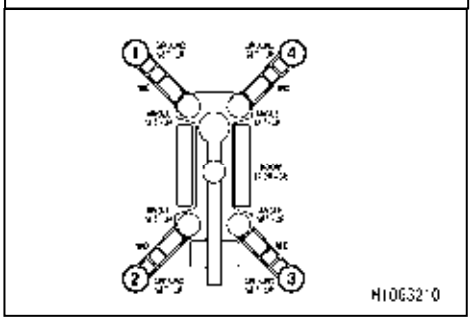

https://truckmanualshub.com/

3.7.1 OUTRIGGER SETTING OPERATION

⚠ WARNING

Before setting outriggers, read "OPERATION 2.14 OUTRIGGER SETTING OPERATION" and also the precautions described there.

1. See "OPERATION 3.4 STARTING/STOPPING THE ENGINE" to start the engine.
2. Change the mode to Extension with the Transmitter speed selector/Outrigger select switch (6) on the transmitter.

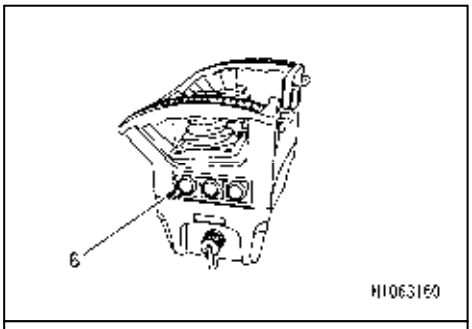

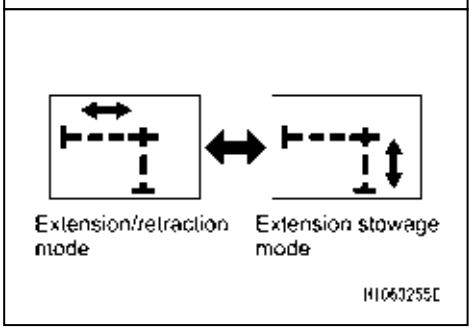

3. Operate the control levers to extend and set the outriggers.
   Repeat the above steps for the other two outriggers by operating the mode selector switch (5).
   Left lever: outrigger 1 or 2
   Right lever: outrigger 4 or 3

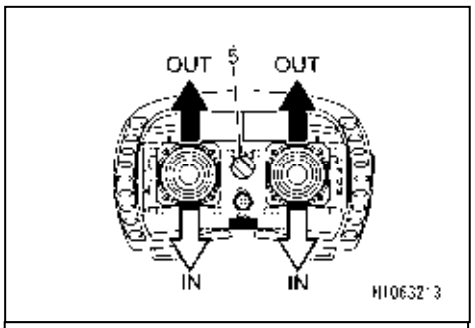

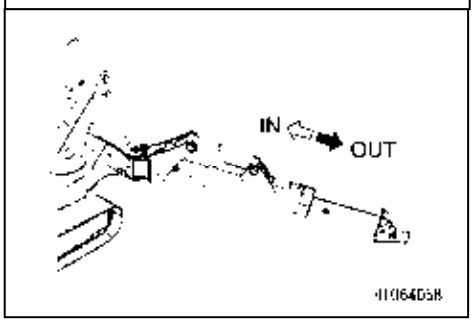

4. Change the mode to Extension stowage with the Speed selector/Outrigger select switch (6) on the transmitter.

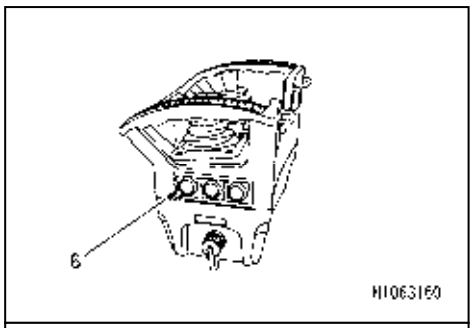

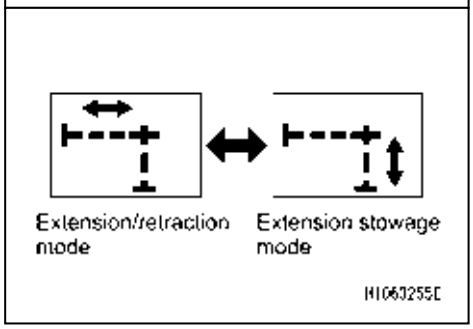

5. When the grounding cylinder is extended and the adapter is grounded by manipulating the control lever, release your hand from the operation lever.
6. Operate the above step for the other two outriggers with the mode selector switch (5) to allow them to make contact with the ground.
   Left lever: outrigger 1 or 2
   Right lever: outrigger 4 or 3

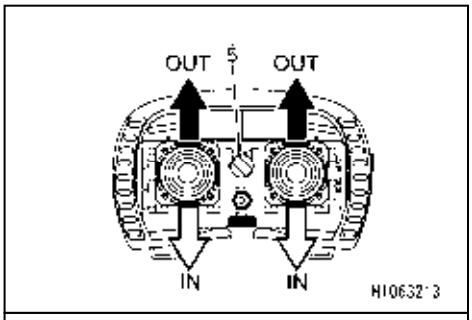

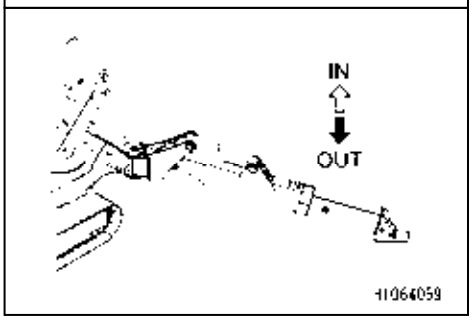

7. After all outrigger adapters have been grounded, when the grounding cylinders are extended by manipulating the control lever, and the machine is slightly raised up from the ground, release you hand from the switch.
   Repeat the above steps to gradually raise the machine from the ground so that the crawler belts position about 50 mm from the ground.

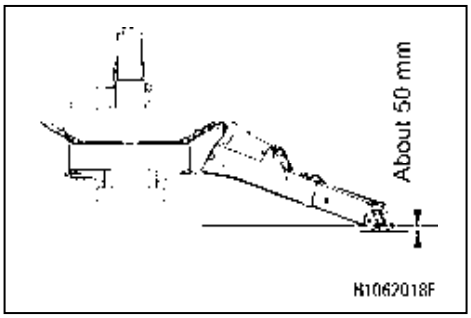

8. When the machine is raised up from the ground with a height of about 50 mm, manipulate the control lever while checking the position of the yellow bubble in the leveling instrument to keep the machine in a horizontal position.

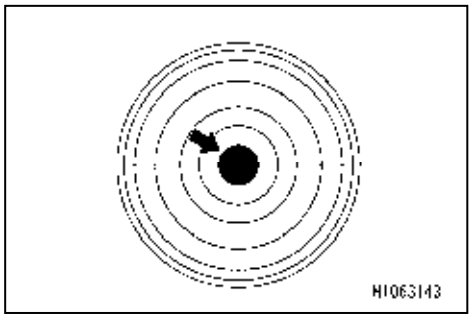

https://truckmanualshub.com/

9. Make sure that all of the four outrigger grounding lamps (3) on the monitor are lit in green.

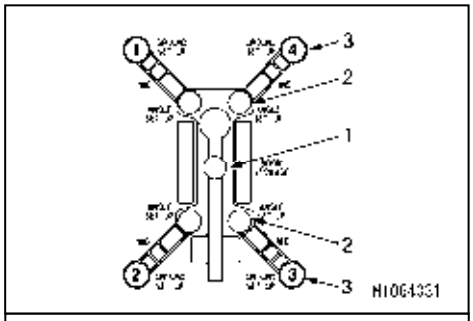

NOTES

All of the crane stowage lamp (1), the four outrigger extension lamps (2) and four outrigger grounding lamps (3) are lit in green.

CAUTION

If any of the outrigger grounding lamps (3) are blinking in red, remove the cover (7) of the outrigger adapters (6) part and check them for foreign materials being caught in the bend sections.

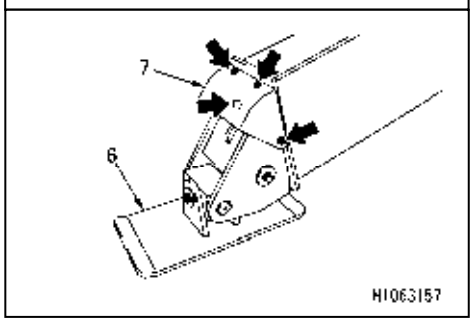

https://truckmanualshub.com/

3.7.2 OUTRIGGER STOWAGE OPERATION

⚠ WARNING

Before setting outriggers, read "OPERATION 2. 24 OUTRIGGER SETTING OPERATION" and also the precautions described there.

The following explains the setting procedure for only one outrigger (4). Repeat the same procedure for the other three outriggers.

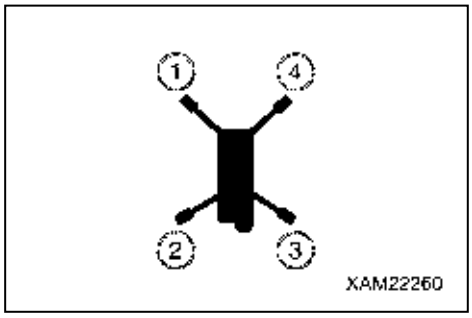

1. See "OPERATION 3.4 STARTING/STOPPING THE ENGINE" to start the engine.

2. Set the mode selector switch (5) for the transmitter to Outrigger (F) or (R).
   - Outrigger (F) operates outriggers (1) and (4).
   - Outrigger (R) operates outriggers (2) and (3).

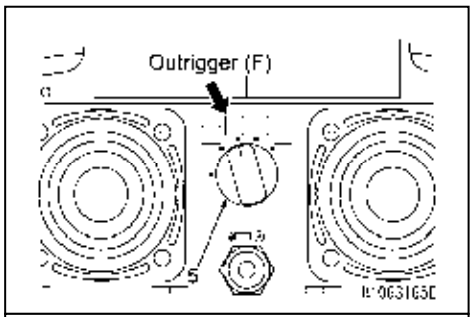

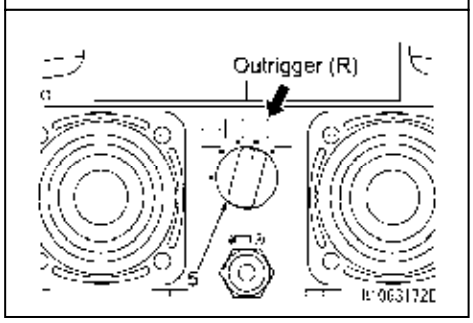

NOTES

When operating by radio controller, the 4 outriggers cannot be operated at the same time. Nor can the front and rear outriggers.

3. Make sure that the crane stowage lamp (1) on the monitor is lit in yellow.

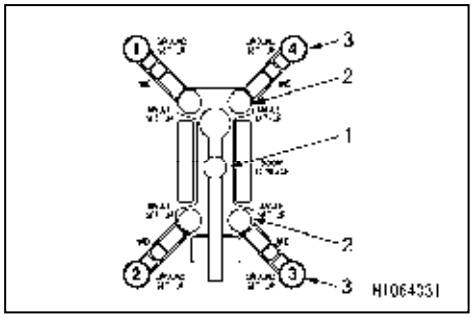

https://truckmanualshub.com/

4. Change the mode to Extension stowage with the Speed selector/Outrigger select switch (6) for the transmitter.

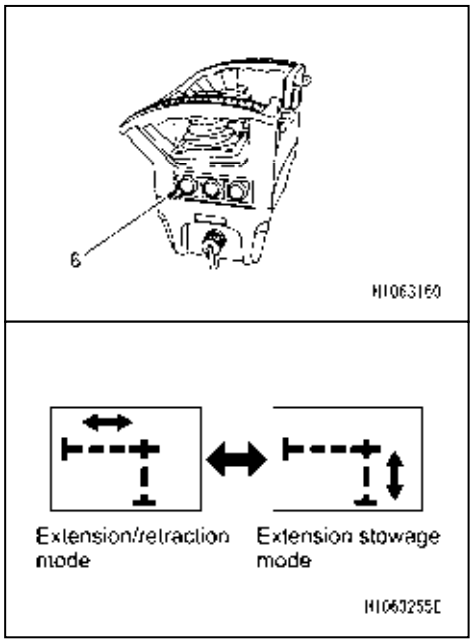

5. When the grounding cylinder has been extended and the adapter has been grounded by manipulating the control lever, release your hand from the operation lever.
   Repeat this step to gradually lower the machine until the crawler belts are completely grounded.

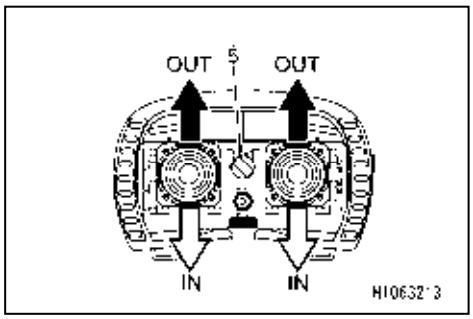

6. After the right and left crawler belts come to complete contact with the ground, further operate the control lever.
   When the grounding cylinder has been completely retracted and the top box is raised to the maximum height, release your finger from the outrigger switch.

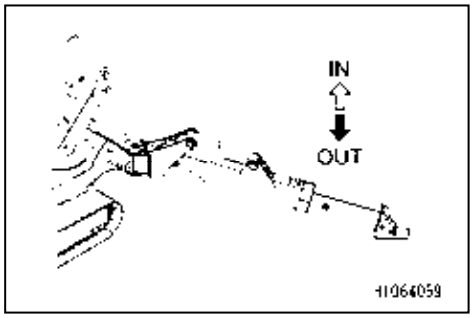

7. Make sure that the four outrigger grounding lamps (3) on the outrigger indicator are blinking in red.

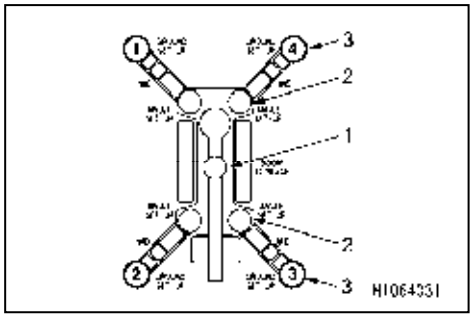

NOTES
On the monitor, the crane stowage lamp (1) is lit in yellow, and the four outrigger extension lamps (2) and the four outrigger grounding lamps (3) are blinking in red.

https://truckmanualshub.com/

8. Change the mode to Extension/retraction with the speed selector/Outrigger select switch (6) for the transmitter.

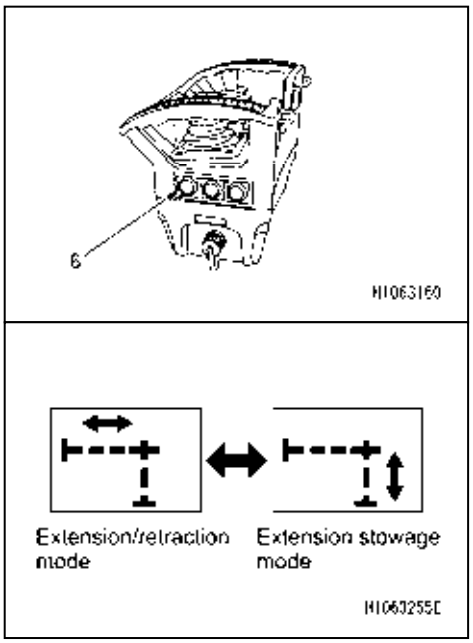

9. When the extension cylinder has been completely retracted and the inner box reaches the shortest position, release your finger from the operation lever. Repeat the above step for other outriggers to bring the outrigger inner boxes to the shortest position.

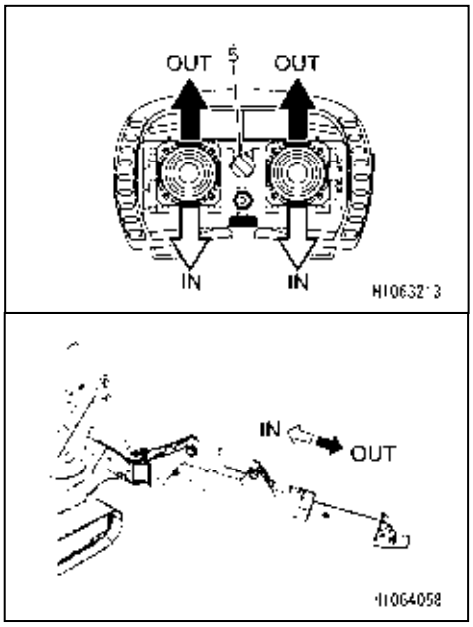

10. Turn the starter switch to the “OFF” position. The engine stops.

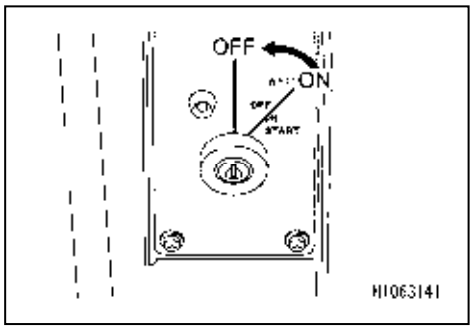

https://truckmanualshub.com/

3.8 CRANE OPERATION

⚠ WARNING

- **Ensure that all the outriggers are securely settled, before starting crane operations. Any crane operations where outriggers are improperly used may cause the crane to tip over or other serious accidents.**
- **During crane operations, always refer to the "Rated total load chart" and avoid over-loaded operations. Operations in over-loaded conditions may damage or tip the Crane, resulting in a serious hazard.**
- **Make sure the Transmitter operation levers all operate smoothly and return to the neutral position when you release your finger.**
- **Each operation lever of the Transmitter will be blocked by its stopper when it is pushed fully. When it is blocked, do not attempt to push further. Otherwise, it may damage the Transmitter and cause faults and result in a serious accident.**
- **Before operating the crane, set the mode selector switch (5) to Crane. In the Outrigger mode, the outrigger operates unexpectedly, which is very dangerous.**
- **Always actuate the operation lever with caution.**
  Make adjustments to achieve the optimal operation speed for crane operation to avoid abrupt movement.
  Any abrupt acceleration or deceleration especially while a load is hoisted will make a large impact to the Crane and may result in a serious hazard such as Crane tipping or damage.
- **While hoisting a load, do not attempt to perform multiple operations simultaneously. That may cause an abrupt change of the load condition and cause a serious hazard such as the Crane tipping or damage.**

1. Turn the starter switch on the machine to the "ON" position.

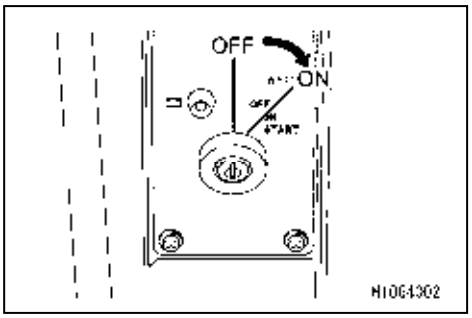

2. Press the power ON/OFF switch (3) for the remote control transmitter to supply power to the transmitter.
   For details about the power-on, refer to "OPERATION 3.2 POWERING ON".

3. Set the operation mode selector switch (5) for the transmitter to Travel.

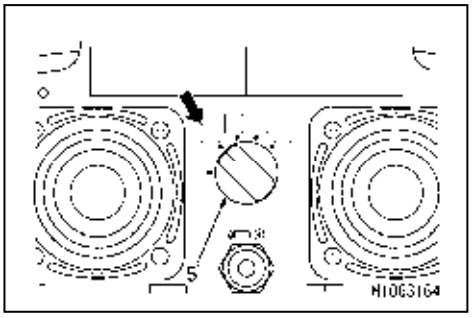

4. Press the engine start/stop switch (4) to start the engine.
   For details about the engine start, refer to "OPERATION 3.4 STARTING/STOPPING THE ENGINE".

https://truckmanualshub.com/

3.8.1 HOOK WINDING AND UNWINDING

⚠ WARNING

- **With the boom deflection, the hoisted load slightly shifts forward. Notify workers in the area such as slinging operators.**
- **If the hook block is wound excessively, over winding is detected, and an alarm buzzer sounds followed by a voice message, “Hook is over-hoisted”. In such a case, immediately shift the right control lever into the “NEUTRAL” position to stop winding the wire rope.**
- **When it is necessary to unwind a significant length of the wire rope to lower the hook in works such as underground works, at least 3 turns of the wire rope must be left on the winch drum.**

CAUTION

Do not let the hook block touch the ground.
The winch drum will wind irregularly, damaging the wire rope.

Operate the right control lever (2) as follows:

- Unwinding: Push the lever forward.
- Neutral: Release your hand from the lever.
  The lever will return to the “NEUTRAL” position and the winding/unwinding of the hook block stops.
- Winding: Pull the lever backwards.

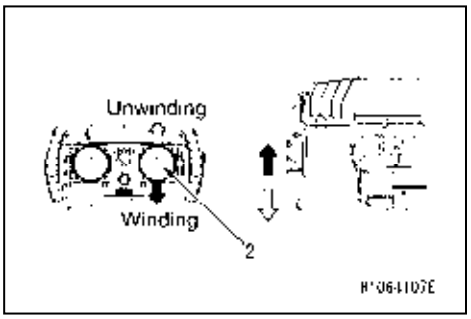

NOTES

Control the winding/unwinding speed of the winch drum with the right control lever and accelerator control switch.

3.8.2 BOOM DERRICKING OPERATION

⚠ WARNING

- **Operate the right control lever as slowly as possible.**
  Especially avoid sudden lever operations when the load is hoisted, which may cause the load to waggle and a give large impact to the Machine, and thus may damage the crane or trip the Machine.
- **When the boom is lowered, the working radius increases, and the rated total load that can be hoisted decreases. When operating the machine by derricking the boom, exercise caution so that the mass (weight) of the suspended load is not overloaded when the boom reaches the lowest position.**

Operate the right control lever (2) as follows:

- Lowering: Push the lever forward.
- Neutral: Release your hand from the lever.
  The lever returns to the “NEUTRAL” position and the boom derricking stops.
- Raising: Pull the lever backwards.

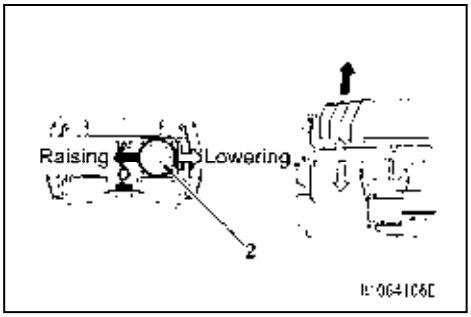

NOTES

Control the derricking speed with the right control lever and accelerator control switch.

https://truckmanualshub.com/

3.8.3 BOOM TELESCOPING OPERATION

⚠ WARNING

- **Operate the left control lever as slowly as possible.**
  Especially avoid sudden lever operations when the load is hoisted, which may cause the load to waggle and a give large impact to the Machine, and thus may damage the crane or tip the Machine.
- **Do not pull the load horizontally or pull in the load by telescoping the boom.**
- **When the boom is extended, the working radius increases, and the rated total load that can be hoisted decreases. When working while extending/retracting the boom, pay extra attention so that the mass (weight) of the load at the time the boom is most lowered does not cause overloading.**
- **When the boom is extended, the hook block is wound.**
  If the over winding detector generates an alarm buzzer while the boom is extended, immediately shift the left control lever into the "NEUTRAL" position to stop the boom operation.

CAUTION

- **The hook block is wound or unwound while the boom is extended/retracted. Perform the winch operation at the same time to adjust the hook block height.**
- **When the boom is extended for a long time, the boom slightly retracts due to the temperature change in the hydraulic oil. In this case, extend the boom as needed.**

Operate the left control lever (1) as follows:

- Extending: Push the lever forward.
- Neutral: Release your hand from the lever.
  The lever returns to the "NEUTRAL" position and the boom telescoping stops.
- Retracting: Pull the lever toward you.

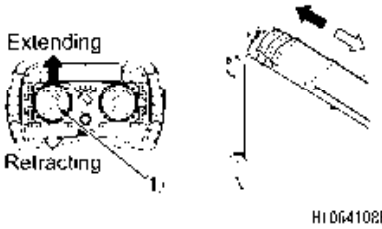

NOTES

Control the boom extending/retracting speed with the left control lever and accelerator control switch.

https://truckmanualshub.com/

3.8.4 SLEWING OPERATION

⚠ WARNING

- **Check for safety in the vicinity and honk the horn before slewing.**
- **Operate the left control lever as slowly as possible.**
  Make sure to start smoothly, slew at low speed, and stop quietly.
  Especially avoid sudden lever operations when the load is hoisted, which may cause the load to waggle and cause the Machine to lose balance, and thus may damage the crane or tip the Machine.
- **Even if the outriggers are set correctly, the suspended load is slightly unstable in a specific direction. Exercise caution when slewing the boom with a suspended load.**
- **In some cases, depending on the configuration of the outriggers, the suspended load may hit the outriggers, resulting in damage to the crane or overturning of the machine. Exercise caution to prevent the suspended load from hitting outriggers.**
- **If someone is sitting in the operator's seat, be careful so that the boom does not hit this person when slewing.**

Operate the left control lever (1) as follows:

- Clockwise: Push the lever to the left.
- Neutral: Release your hand from the lever.
  The lever returns to the "NEUTRAL" position and the slewing stops.
- Counter clockwise: Push the lever to the right.

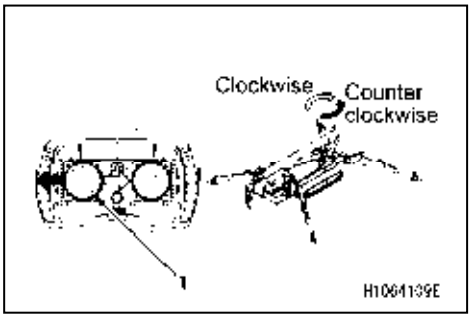

NOTES

Control the crane slewing speed with the left control lever and accelerator control switch.

https://truckmanualshub.com/

3.8.5 OPERATION WHILE TRAVELLING WITH A SUSPENDED LOAD

Only in Travel mode does it become possible to change the operation mode between Travel and Load carrying by pressing the Load carrying/Fly jib change switch (7).

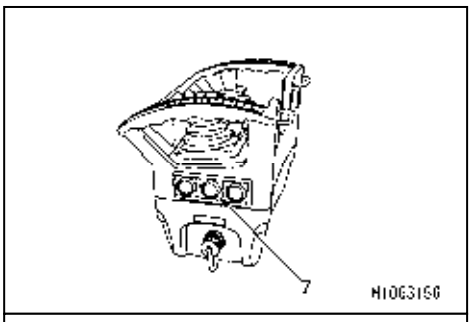

The mode can be changed in the same procedures as those for hoisting/lowering the hook and for derricking the boom.
For details, see “OPERATION 3.8.1 HOOK WINDING AND UNWINDING", and “3.8.2 BOOM DERRICKING OPERATION”.

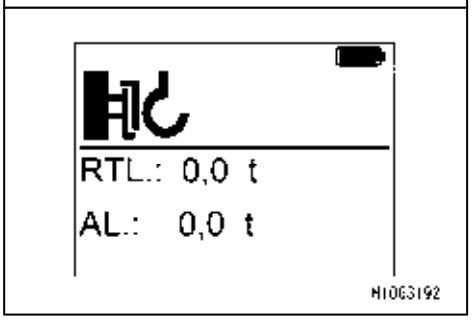

⚠ WARNING

- **In case of any abnormality in crane operations, immediately press the emergency stop switch or the remote controller power ON/OFF switch (10) on the transmitter to stop the engine. The abnormality mentioned above includes: continuation of crane operations even after the release of control levers, or unexpected crane movements before the control levers are used.**
- **In the event of an emergency stop of the engine, investigate the cause for the abnormality and repair the fault location.**
- **The emergency stop switch can also be used for turning OFF the power to the remote control transmitter or for stopping the engine.**

3.8.6 FLY JIB DERRICKING/TELESCOPING OPERATION

Only in Crane mode, does it become possible to change the operation mode between Boom and Fly jib by pressing the Load carrying/Fly jib change switch (7).

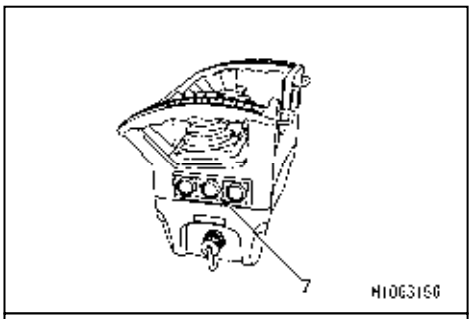

The mode can be changed in the same procedures as those for derricking/telescoping the boom.
For details, see “OPERATION 3.8.2 BOOM DERRICKING OPERATION” and “OPERATION 3.8.3 BOOM TELESCOPING OPERATION”.

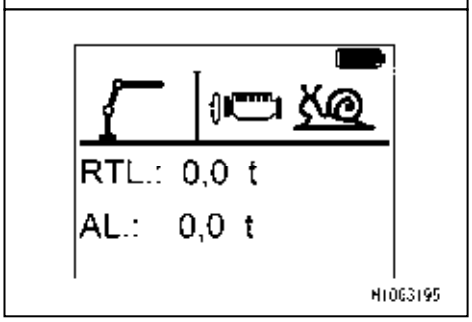

https://truckmanualshub.com/

3.9 OPERATING SPEED SELECTOR/OUTRIGGER SELECT SWITCH

Only in the Crane and Travel modes, does it become possible to switch the speed mode between High and Low by pressing Speed selector/Outrigger select switch (6).
In the outrigger mode, the outrigger operation mode can be switched between Extension and Extension stowage by pressing the Speed selector/Outrigger select switch (6).

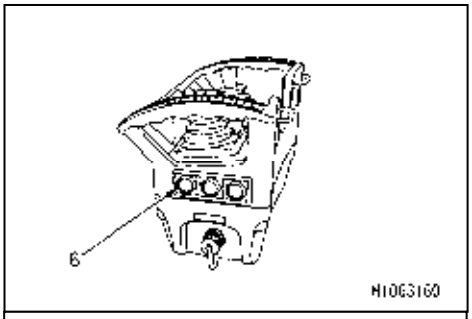

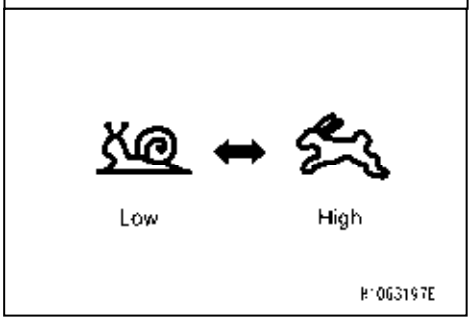

3.10 OPERATING ACCELERATOR CONTROL SWITCH

The accelerator control switch (8) allows you to control the maximum rpm of the engine.
The maximum rpm value appears on the left-side monitor (M1) when the crane menu is displayed.

+: Increases maximum rpm
-: Decreases maximum rpm

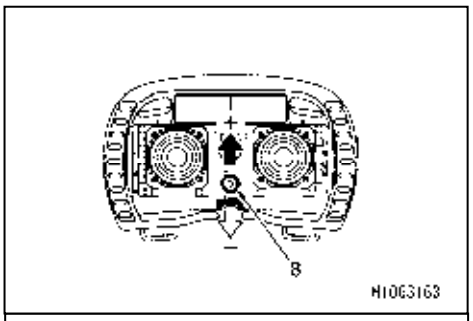

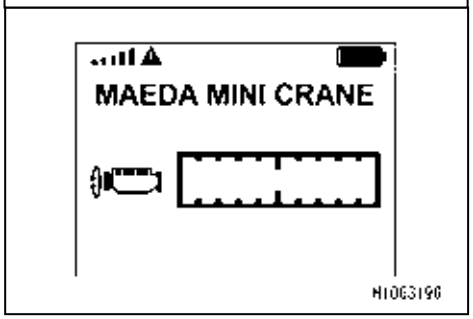

3.11 OPERATING HORM SWITCH

The horn keeps blowing while this switch (9) is pressed and held.

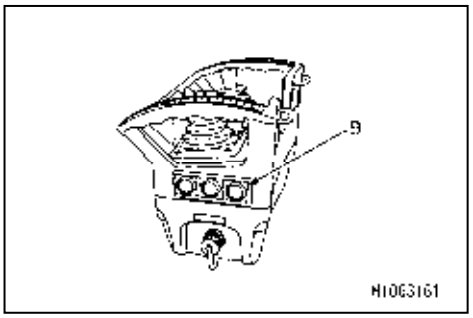

https://truckmanualshub.com/

3.12 EMERGENCYSTOP SWITCH OPERATION

⚠ WARNING

- **In case of any abnormality in crane operations, immediately press the Emergency stop/Remote controller power OFF switch (10) to stop the engine. The abnormality mentioned above includes: continuation of crane operations even after the release of control levers, or unexpected crane movements before the control levers are used.**
- **In the event of an emergency stop of the engine, investigate the cause for the abnormality and repair the fault location.**
- **The emergency stop switch can also be used for turning OFF the power to the remote control transmitter or for stopping the engine.**

Press the Emergency stop/Remote controller power OFF switch (10) when turning off the power to the transmitter, or in case of an abnormality in crane operations.
The power of the Transmitter turns OFF and the engine stops.

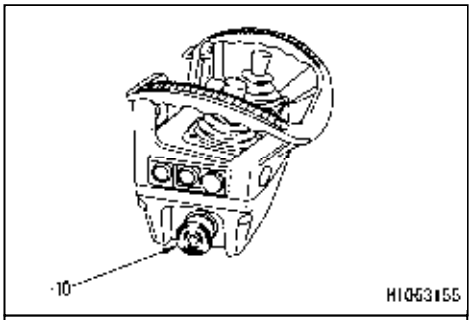

To cancel the emergency stop, turn the Emergency stop/Remote controller power OFF switch (10) to the right. The switch returns to the original position.

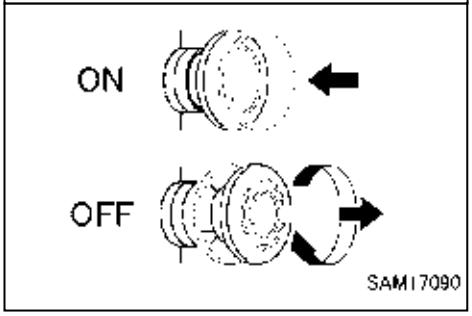

NOTES
To enable manual operation of the machine, press the Emergency stop/Remote control power OFF switch (10), and then return it to the original position.

3.13 LED LIGHT OPERATIONS

Selecting LED indicator in the settings menu enables the LED indicators to function.
For details about the settings menu, see “OPERATION 3.3 INDICATIONS OF DISPLAY [Settings menu]”.

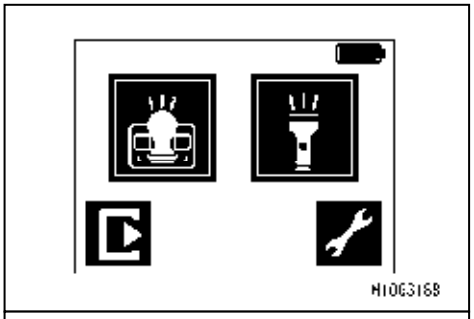

(1) LED light (front) ON/OFF

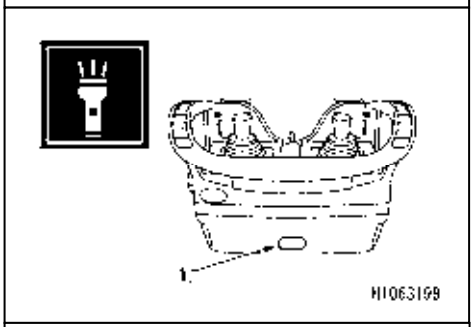

(2) LED light (operation panel) ON/OFF

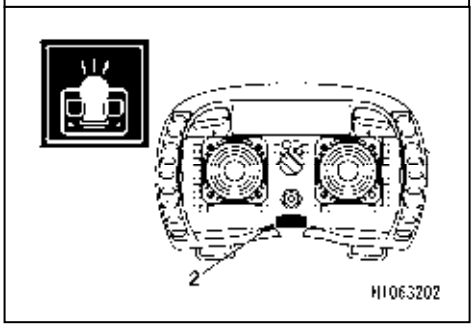

https://truckmanualshub.com/

3.14 CHECKING AFTER CRANE OPERATION

3.14.1 CRANE STOWAGE OPERATION

NOTES

· Crane stowage operation is recommended by using control levers on the crane.
Boom stowage can be operated with radio controller, but it may be difficult to set to the exact slew stowage position.
· Hook stowage cannot be operated with radio controller.
· Read "OPERATION 2.23 CRANE STOWAGE OPERATION" for how to opearate crane stowage.

3.14.2 STOPPING OPERATION BY RADIO CONTROL AND INSPECTION

⚠ WARNING

- **When the operation is finished, be sure to press the Emergency stop/Remote controller power OFF switch (10) on the transmitter to turn "OFF" the power.**
- **On no occasion except for Crane operations, must the power of the Transmitter be turned ON.**
  This could cause unexpected movement of the Crane resulting in a serious hazard, such that the Crane hitting someone or an object, or the Crane could tip.
- **When it is required to turn ON the Transmitter for the purpose of inspection or such, ensure that the engine is not running.**

1. Press the Emergency stop switch/Remote controller power OFF switch (10) on the transmitter to turn "OFF" the power.
   The engine also stops.

2. Turn the starter switch on the machine to the "OFF" position to shut off the power supply.

3. Check the transmitter and receiver.
   (1) Check operation levers and switches of the Transmitter for any faults.
   (2) Wipe off oil or dirt with a clean cloth.
   (3) Repair all cracks or damages without fail.

4. To store the transmitter, avoid places subject to wind, rain, direct sunlight, high temperatures and high humidity.

https://truckmanualshub.com/

4. OPERATING MACHINE WITH ENGINE & ELECTRIC MOTOR

4.1 POWER SUPPLY CONNECTION

⚠ WARNING

Omitting to follow these precautions may result in serious accidents.

- **Installation of this machine must comply with laws and regulations of your country. Contact us or our sales service agency if no laws and regulations are applied.**
- **Only personnel qualified according to laws and regulations of your country are allowed to establish power connection between power supply equipment and this machine.**
  Contact us or our sales service agency if no laws and regulations are applied.
- **Be sure to supply the machine specifications-compliant power to this machine.**

Power supply voltage (V)	Power current (A)	Power supply frequency (Hz)
380, 400	35	50

- **Use the cab tire cable that complies with the specifications of the machine.**

Motor voltage (V)	Cable spec. (sq)
380, 400	14

- **Always use a dry cabtire cable.**
  Potential electric shocks may occur if the cabtire cable terminal is wet or power connection is performed with moist hands.
- **Always turn "OFF" the main breakers of power supply equipment and this machine before connecting the cabtire cable to this machine.**
- **Keep the cabtire cable free of flaws and bends.**
  Be sure to replace a damaged cabtire cable with a new one.
- **Ensure that no sharp protrusion is present at an area where the cabtire cable is routed.**
  Failure to follow the above precaution may cause the cable to get snagged on a protrusion and become damaged or broken.
- **To connect the cabtire cable to the breaker switch block in the power supply box, torque the screw to the specified value. A potential fire or electric shock may occur if the screw comes loose and could develop a short circuit.**
- **To connect the cabtire cable to the breaker switch block in the power supply box, tighten the cable ground screw properly for the prevention of water entry and cable protection.**
- **The ground wire of the cabtire cable must be properly connected to the ground point in the power supply box.**
- **Always close the power supply box door completely after work, and attach the Inverter unit cover properly.**

Use the following procedure for establishing power connection between power supply equipment and this machine.

1. Make sure the breaker of power supply equipment is "OFF".
2. Turn the breaker switch (1) of the power supply box to the "OFF" position.
3. Attach the power plug (2).

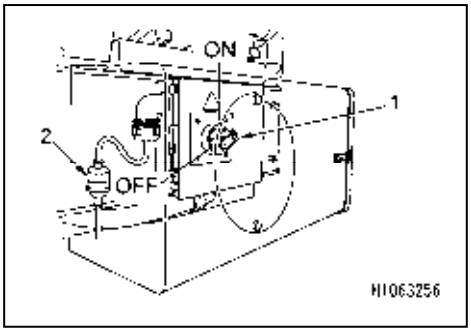

[If a power plug is not connected]

1. Remove the box (3). The box is attached from the inside with 4 bolts (4).

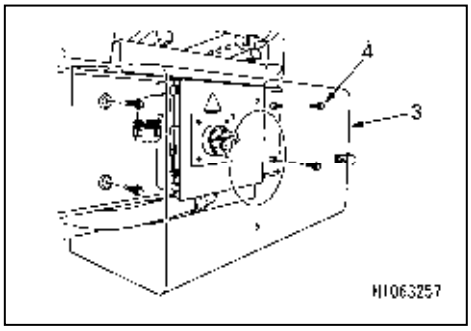

2. Check that the breaker on the power supply equipment side and the power supply box breaker switch (1) is in the “OFF” position.

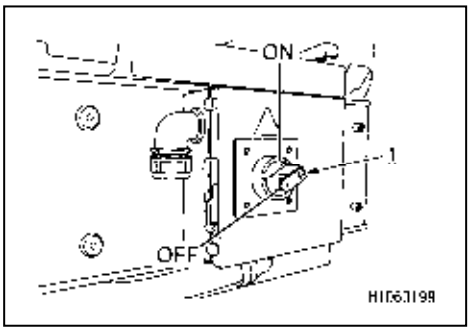

3. Pull the handle (4) toward you to unlock, and open the door (3) of the power supply box (2).

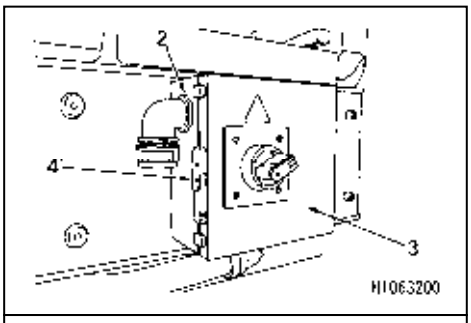

4. Inside the power supply box, remove the cover (6) for the breaker switch pedestal (5).

5. Insert the applicable cabtire cable (A) into the cable hole of the cable gland (7) under the power supply box, and connect it to the breaker switch block (5).

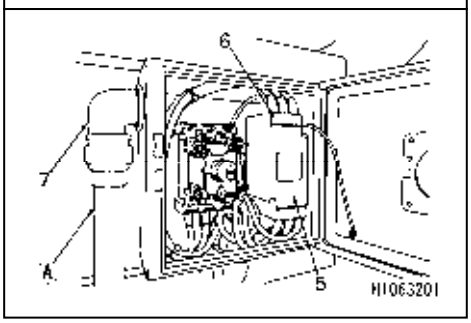

CAUTION

- **The length of a cabtire cable varies with cable specifications. Any cable length should conform to values listed below.**

Motor voltage (V)	Cable spec. (sq)
380, 400	14

- **Be sure to connect the grounding cable (8) of the cabtire cable to the ground point. As to the other three cables (9) except the grounding cable, they are for the inverter drive, and can be connected to any terminals, “L1, L2 and L3”.**

https://truckmanualshub.com/

6. When you are finished, put back the cover (6) of the breaker switch block (5) into place, and close the door (3) of the power supply box (2).

7. Attach the box (3). The box is attached using 4 bolts (4) inside.

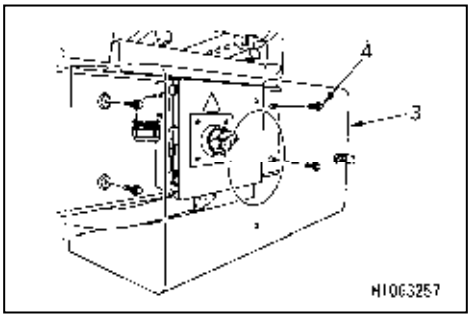

8. Connect power plug (2)

9. Turn the power supply box breaker switch (1) to the “ON” position.

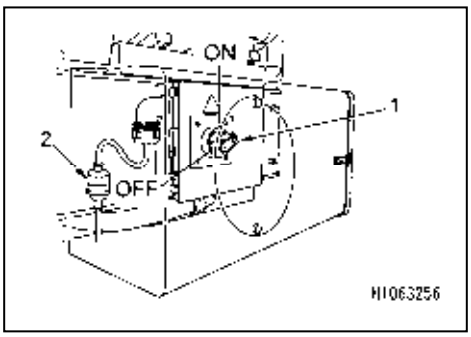

https://truckmanualshub.com/

4.2 OPERATION AND CHECKING AFTER POWER CONNECTION

⚠ WARNING

- **Before starting the electric motor, make sure no personnel or impediments are close to the machine and sound the horn.**
- **Always perform the warm-up operation. The motor needs adequate warm-up time especially in cold climates.**
  Failure to warm the motor may result in a serious accident on account of slow reaction of the travelling gear and crane from the operating lever.
- **Ensure that no abnormal noise, odor, or vibration is present in and around the Inverter unit and power unit during warm-up. If any abnormality occurs, immediately turn the starter switch to the "OFF" position to bring the machine to an emergency stop, and immediately turn the circuit breaker on the power supply unit to the "OFF" position to shut off the power supply.**
  Check the Inverter unit and electric motor, surrounding items and electric wiring for burning smells or damaged parts. Promptly contact us or our sales service agency to request inspection or repair.
- **Crane operational check is necessary after motor warm-up.**
  Keep the hook block away from the boom to avoid interference or collision.
- **Exercise caution to avoid contact between the boom, the operator and any personnel whilst slewing it.**
- **If crane operational check detects an abnormal event, make an emergency stop promptly and repair any relevant part.**
  A potential serious accident may occur if disregarded.
- **Exercise caution not to drive on or entangle the cabtire cable during crane travelling. A member of staff should guide the way as necessary and follow their lead.**
- **Keep the Inverter unit cover and its surroundings away from flammable materials.**
  The inside of the Inverter unit will rise in temperature and that could lead to fire if disregarded.

CAUTION

- **The appropriate temperature of the hydraulic oil is 50 to 80°C.**
  Even when operating at low temperature by necessity, increase the temperature of the hydraulic oil to about 20°C.

1. Insert the key into the starter switch and turn the key to the "ON" position.

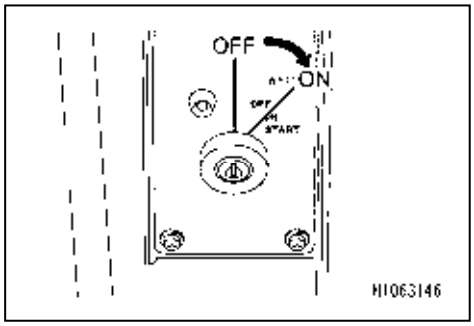

2. Set the Engine and electric motor switch to the "Electric motor" position.

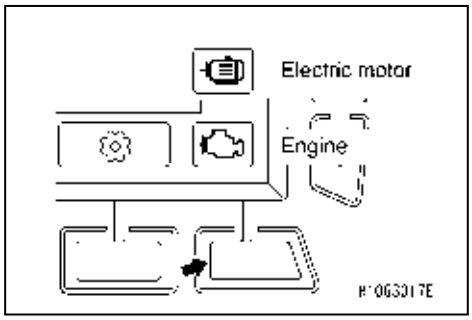

https://truckmanualshub.com/

3. Turn the key to the “START” position.

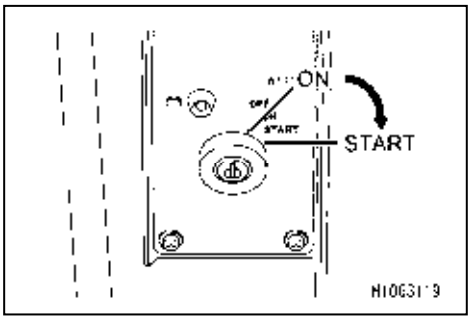

4. When the electric motor has started, release your hand from the key.
   The key automatically returns to the “ON” position.

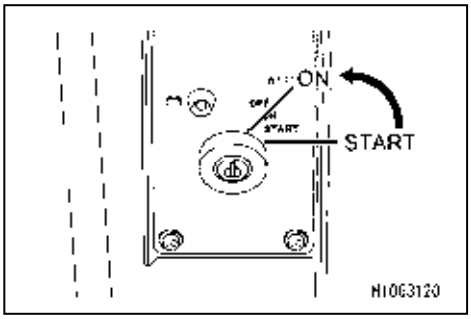

5. Conduct a 5-minute warm-up after the electric motor has started.

NOTES
This machine offersa power saving function, which is activated when the control levers have been left untouched for 5 minutes after the electric motor started. In the energy saving mode, the rotation speed of the electric motor significantly drops. To restore the speed, operate any of the levers. In addition, the electric motor will stop when the levers have been left untouched for further 30 minutes. To restart the engine, turn the starter switch to the “START” position again.

6. Use the following procedure for checking the power unit if an abnormal noise, odor, or vibration is present in or around the power unit.
   (1) Turn the starter switch key to the “OFF” position to stop the electric motor.

   (2) To remove the cover, see “OPERATION 1.11 MACHINERY COVER”.

   (3) Check the mounting bolts securing the electric motor (5) and hydraulic pump (6) for loose or missing bolts and check the coupling (7) for looseness.
   If checks find loose bolts, retighten the bolts to the specified torque value.

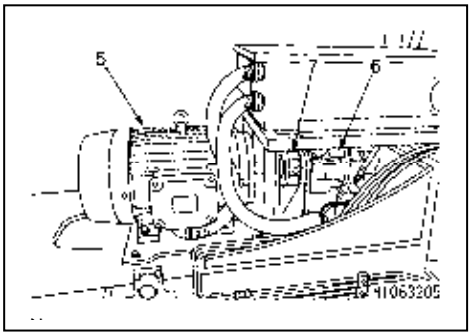

   (4) Keep the area around the power unit free of dead leaves, paper waste, and dust etc.
   Remove any dead leaves, paper, or dust etc.

   (5) To put back the cover into place after inspection or cleaning, see “OPERATION 1.11 MACHINERY COVER”.

https://truckmanualshub.com/

4.3 MACHINE OPERATION

CAUTION

After warm-up operation, before operating the crane, see from “OPERATION 2.5 MACHINE TRAVELLING POSTURE” to ”OPERATION 2.25 PROHIBITED OPERATIONS DURING CRANE WORK”.

4.4 MACHINE STOP AND CHECKS AFTER STOPPING MACHINE

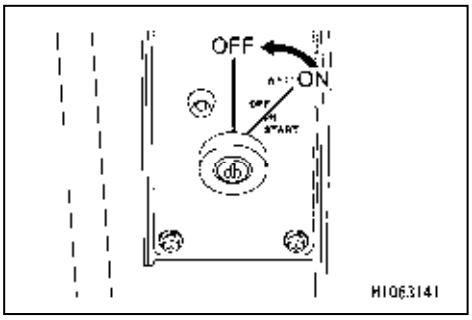

1. Turn the starter switch key to the “OFF” position.
   The electric motor stops.

2. Remove the starter switch key.

3. Visually check for oil leakage, and check around the crawlers, crane, and exterior of the machine. If you find any leakage or abnormality, fix the problem.

4. Clean off the crawlers and outriggers, removing mud.

5. Keep the area around the inverter unit free of dead leaves and paper waste. A potential fire could occur if disregarded.

https://truckmanualshub.com/

4.5 POWER SUPPLY SEPARATION

1. Turn “OFF” the power supply equipment breaker.

2. Turn the breaker switch (1) of the power supply box to the “OFF” position.

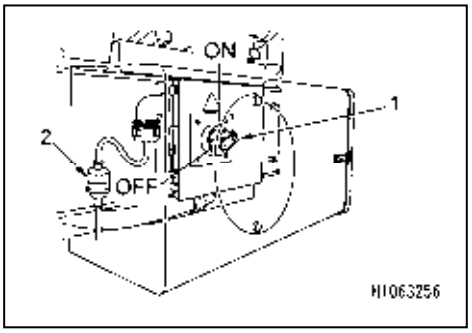

3. Remove the power plug (2).

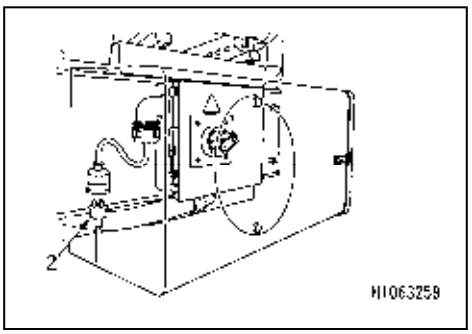

https://truckmanualshub.com/

5. HANDLING WIRE ROPE

5.1 CRITERIA FOR WIRE ROPE REPLACEMENT

CAUTION

- **The criteria for replacing wire ropes is common to all the wire ropes for winching, telescoping the boom, and slinging.**
- **The diameter of the wire rope is measured at points where the wire repeatedly runs through the sheave. A mean value needs to be determined through 3 way measurement.**
- **Do not use old wire rope regardless of the frequency of use.**
- **See "INSPECTION AND MAINTENANCE 9.2 [3] REPLACEMENT OF WINCH WIRE ROPE" for details.**
- **Contact us or our sales service agency for replacing or repairing the wire ropes.**

[1] WIRE ROPE NOMINAL DIMENSION

- Wire rope for winch: IWRC 6×Fi (29) 0/0 ø10 mm × 150 m
- Wire rope for extending boom No.5: IWRC 6×Fi (29) 0/0 ø12.5 mm × 8.96 m
- Wire rope for extending boom No.5: IWRC 6×Fi (29) 0/0 ø9 mm × 17.04 m

[2] CRITERIA FOR WIRE ROPE REPLACEMENT

A wire rope undergoes wear and tear over time.

Prompt replacement is required if any of the following appears in the wire rope.

- 10 % or more of strands (except a filler wire) in 1 twist (6 crests) of a wire rope are broken.

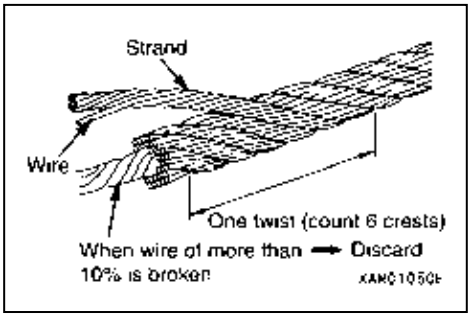

NOTES

When 9 strands or more for the winch, or 13 strands or more for the telescoping boom has been broken, replace them with new ones.

- When the amount of decrease in diameter due to abrasion damage reaches 7 % or more of the nominal diameter of the wire rope.

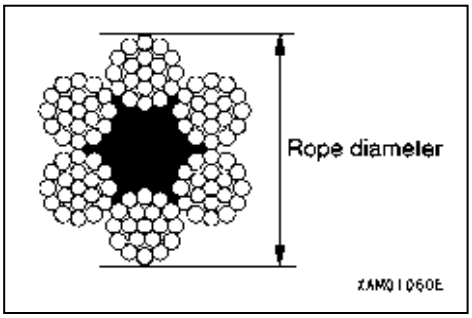

NOTES

- For a wire rope of which the diameter is ø9 mm, replace when its diameter becomes 8.4 mm.
- For a wire rope of which the diameter is ø10 mm, replace when its diameter becomes 9.3 mm.
- For a wire rope of which the diameter is ø12.5 mm, replace when its diameter becomes 11.7 mm.

- A kink is formed.
- Considerable deformation or corrosion is developed.
- A faulty end socket is used.

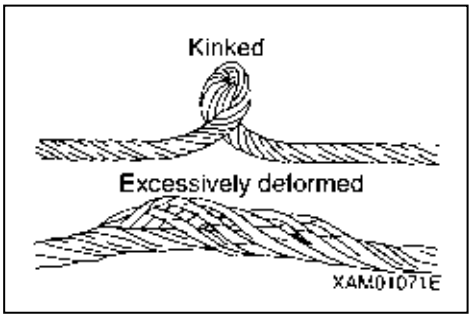

https://truckmanualshub.com/

5.2 CORRETIVE ACTIONS AGAINST TWISTED WIRE ROPE

⚠ WARNING

Be sure to wear thick leather work gloves when handling wire ropes.

CAUTION

On occasion, reverse the ends of the wire rope. Turn the rope end at the hook block side for the end at the winch drum side.
This practice helps to extend wire rope service life.

If the wire rope is twisted, eliminate the twist in the following steps:

1. Check the twisting direction and how many times the wire rope has been twisted.
2. Shift the right control lever into “Down” (push it forward) to rest the hook block on the ground.
   If the hook block cannot be unwound, shift the right control lever into the “Lower” side (push it to the right) to lower the boom, or shift the left control lever into the “Retraction” side (pull it toward you) to retract and lower the boom.

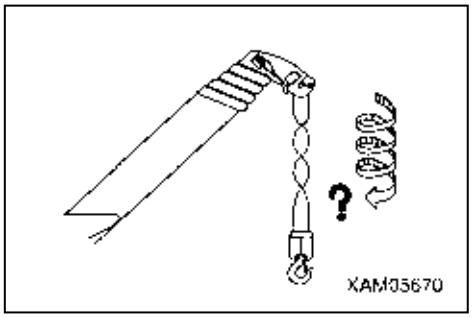

3. Turn the starter switch to the “OFF” position to stop the engine.

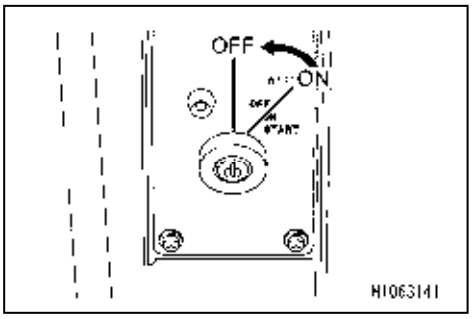

4. Remove the fixing pin (1) securing the wedge socket, and remove the wedge socket (2).

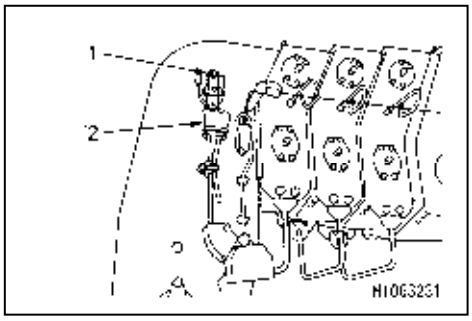

5. Hold the end of the wire rope, and forcibly twist it in the direction opposite to the twisting direction identified in step 1 (in the opposite direction from the direction in which the wire rope tends to twist by itself when the hands are released). Repeat this the predetermined number of times, which can be obtained by multiplying the number of twisted times by “n” (the number of wires hung). When you are finished, put back the wire rope into place.

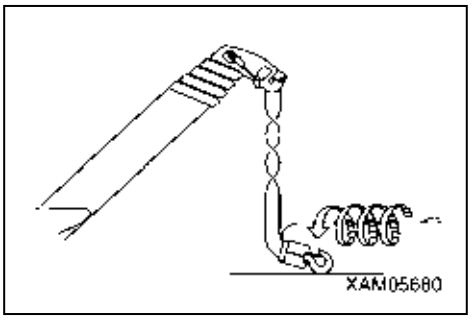

https://truckmanualshub.com/

6. Start the engine and shift the right control lever into the “Raise” position (push it to the left), and raise the boom until the maximum boom angle is reached.
7. Shift the left control lever into the “Extension” side (push it forward) to fully extend the boom.
8. Shift the right control lever into the “Up” or “Down” side, and repeat winding and unwinding the hook block several times.
9. Spool the wire rope tight and close together on the winch drum with tensioned wraps.
10. Repeat the above steps to minimize the twists in the wire rope.

If the above steps do not solve the problem, replace the twisted wire rope with new one.

https://truckmanualshub.com/

6. TRANSPORTATION

Observe the related regulations and exercise safety during transport.

6.1 LOADING/UNLOADING

⚠ WARNING

- **For dimensions and weight, see "SPECIFICATIONS 1. PRINCIPLE SPECIFICATIONS LIST".**
- **Ramps to be used must satisfy the following conditions:**
  - **Must have a length so that the set angle to the truck is 15 degrees or less.**
  - **Must have a width to accommodate the crawler belt.**
  - **Must have a thickness to provide sufficient strength to withstand the weight of the machine.**
- **Set the ramp to the truck so as to be square to the truck bed.**
  In addition, the centers of the right and left crawler belts should be aligned with the respective centers of the ramps.
  If the ramp board is bent or the crawler belt is lined up off the center of the ramp, it may fall from the ramp, resulting in a serious accident.
- **Always put the machine in the "travelling posture" when loading/unloading the machine. See "OPERATION 2.5 MACHINE TRAVELLING POSTURE" for details.**
- **Be sure to load the machine on to the truck by driving in reverse.**
  Loading by driving forward may cause the machine to overturn. A driver is requested always to be positioned on the load-carrying platform of a truck.
- **Be sure to unload the machine from the truck by driving the machine forward.**
  Unloading by driving in reverse may cause the machine to overturn. A driver is requested always to be positioned on the load-carrying platform of a truck.

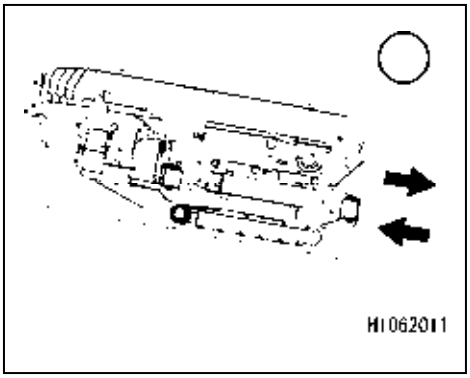

- **Be especially careful when loading or unloading the Machine because of the risks mentioned above.**
- **Select a location that is level and has firm road surface when loading or unloading the Machine.**
  In addition, keep enough distance from the roadside.
- **Remove mud and other substances from the footing to prevent the Machine from skidding over the ramps.**
  Remove the substances stuck on the ramps such as grease, oil or ice, and keep clean.
- **Never change direction over the ramp.**
  Temporarily leave the ramp before correcting the direction.

Put the machine in the "travelling posture" and always use ramp boards or forwarding blocks when loading/unloading the machine. Follow the procedure below.

1. Be sure to apply the truck brakes and use tire stoppers to prevent accidental movement.
2. Be sure to set the ramp so that the center of the truck is aligned with the center of the machine.

NOTES
Verify that the two ramp boards are at the same height.

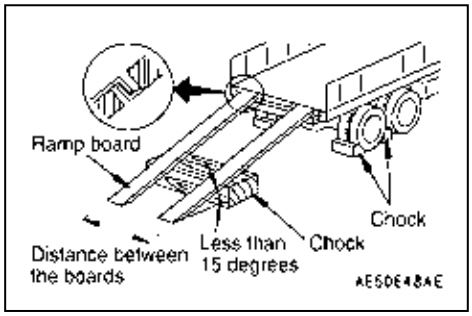

3. Control the accelerator pedal to keep the engine running at low speeds.

https://truckmanualshub.com/

4. To load/unload the machine, drive it slowly toward the ramp. At this time, exercise caution so that the boom does not hit the truck.
   Move backward to load the machine, and forward to unload the machine.
5. On the ramp, do not operate the levers for any purpose other than driving the machine.
6. Load the machine properly into the designated position on the truck.

6.2 HOISTING MACHINE

⚠ WARNING

- **Before lifting the machine, be sure to bring the crane into a stow state. The machine must be lifted by "4-leg bridle" using the specified lifting brackets (4). Failure to observe this will damage the machine, causing it to fall. This may result in a serious personal injury.**
  If lifting the machine in a manner other than mentioned above cannot be avoided, consult us or our sales service agency.
- **Only use a sling (e.g. wire rope and shackles) which is approved and capable of lifting the mass (weight) of the machine.**
- **Before lifting the machine, be sure to bring it into the "travelling posture", and securely insert the positioning pins (4) into the respective outrigger rotaries.**
  The center of gravity of the machine is determined when the machine is in the "travelling posture". See "OPERATION 2.5 MACHINE TRAVELLING POSTURE" for details.

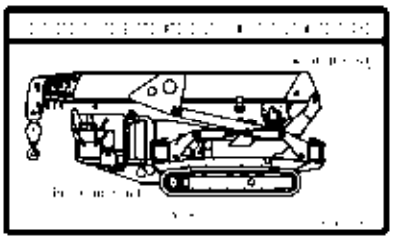

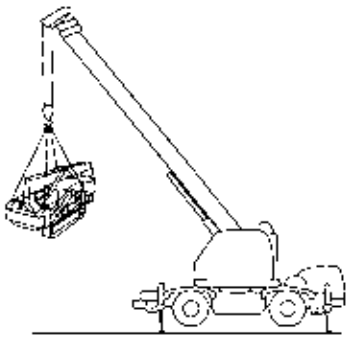

When hoisting the machine, perform the following on a firm, level ground.

1. See "OPERATION 2.5 MACHINE TRAVELLING POSTURE" to bring the machine into the "Travelling posture".
2. Make sure that the positioning pins are securely inserted into the joint portions of the respective outrigger rotaries.
3. Attach a shackle (1) to each hole (in 4 places) of the respective outrigger rotaries, and hang the sling (2) on the hook (3).
4. Immediately after the machine leaves the ground (lifted off the ground), stop hoisting it temporarily, and then slowly hoist it after it is stabilized.

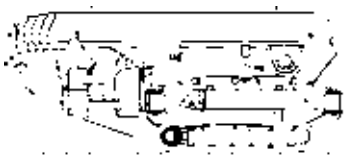

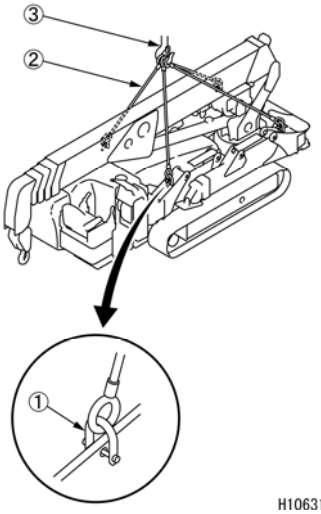

NOTES

★ Recommended sling
- 2 wire ropes (front): Breaking load of 14.6 tons or more
- 2 wire ropes (rear): Breaking load of 14.6 tons or more

https://truckmanualshub.com/

6.3 CAUTIONS WHEN LOADING MACHINE

⚠ WARNING

- **Select a location that is level and has firm road surface when loading or unloading the machine. In addition, keep enough distance from the roadside.**
- **After loading, please make sure if the hook block is secured to the hook stowage wire or to the truck deck. Otherwise, there may be a danger of serious injury due to falling of the machine or slewing of the boom.**

Load the machine to the specified position on the truck and secure the machine with the following procedure.

1. Stop the engine and remove the starter switch key.

2. Insert square timbers in the front and the back of each crawler belt to prevent accidental movement during transportation, and secure the machine with chains or wire ropes.
   Especially making sure it is properly secured so that it cannot move from side to side.

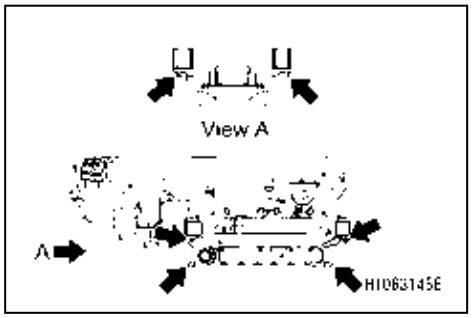

3. Please make sure if the hook block is secured to the hook stowage wire or to the truck deck.
   Even if it cannot be fixed directly to the truck deck, be sure to take measures to prevent the boom from slewing.

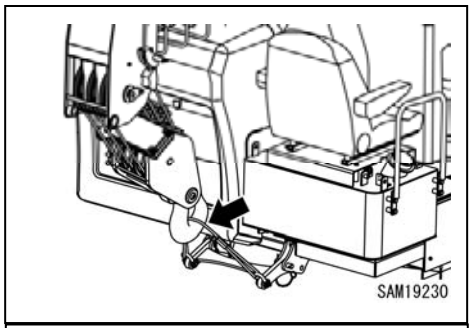

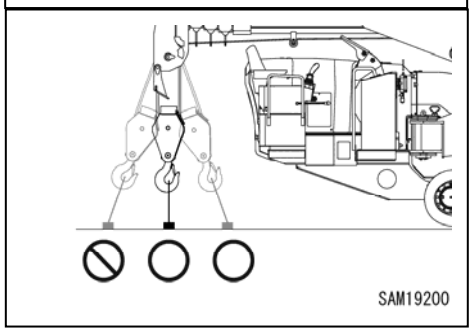

NOTES

- If you fix the hook block to the truck deck, fix the hook block vertically to the fixing surface. If it is difficult to fix vertically, tilt to the machine side and fix. Fixing by tilting to opposite side of the machine may damage wire rope.
- To lower the hook block from the stowed condition, select the crane mode from the pick & carry mode and lower it by unwinding operation.

6.4 CAUTIONS DURING TRANSPORTATION

⚠ WARNING

Take road width, height, and weight into consideration in determining the transportation route.

If there are any applicable local laws or regulations, observe them for safe transportation.

https://truckmanualshub.com/

7. HANDLING MACHINE IN COLD ENVIRONMENT

7.1 PREPARING FOR LOW TEMPERATURE

In cold conditions, the machine starts to have some difficulty in starting. Take the following actions.

[1] LUBRICATION

Change the lubricating oil to one with low viscosity.

See “INSPECTION AND MAINTENANCE 6.1 USE OF LUBRICATING OIL ACCORDING TO TEMPERATURES” for the specified viscosity.

[2] COOLANT

⚠ WARNING

Antifreezing fluid is inflammable. Do not put the fluid close to fire.
Do not smoke when handling antifreeze.

CAUTION

Never use antifreezing fluid with methanol, ethanol, and propanol.

See “INSPECTION AND MAINTENANCE 9.10 EVERY 1000 HOURS MAINTENANCE [1] CLEANING ENGINE COOLING SYSTEM” for the coolant replacement period and mixing rate of the antifreeze fluid.

[3] BATTERY

⚠ WARNING

- **The battery produces combustible gas and can be explosive. Do not put fire close to the battery.**
- **The battery fluid is a hazardous substance. Keep it away from your eyes and skin. Should it come into the contact with eyes or skin, wash the affected area with plenty of water and consult a physician immediately.**

The battery capacity drops when the temperature decreases.

In this condition, the battery fluid can freeze with low battery charging rate. Keep the charging rate as close to as 100%. Keep the battery warm in order to start the engine next morning.

NOTES

Measure the specific gravity of the battery fluid and convert it into the charging rate using the chart below.

		Fluid Temperature (°C)			
		20	0	-10	-20
Charging Rate (%)	100	1.28	1.29	1.30	1.31
	90	1.26	1.27	1.28	1.29
	80	1.24	1.25	1.26	1.27
	75	1.23	1.24	1.25	1.26

https://truckmanualshub.com/

[4] CAUTIONS AFTER COMPLETING THE OPERATION

Observe the following to prevent the machine from not being able to function the next morning because of deposits such as dirt and water and materials around the feet frozen.

- Remove dirt and water on the machine.
  Keep the hydraulic cylinder rod surfaces especially clean to prevent the seal from being damaged with dirt coming into the seals together with the water drops.
- Park the machine on solid and dry ground.
  If there is no such location to park, place a board on the ground to park the machine on the board. This prevents the ground around the feet of the machine from freezing and allows the machine to start moving quickly next morning.
- Remove the drain plug of the fuel tank to drain the water in the fuel system to prevent the water from freezing.
- The battery ability remarkably drops at low temperature.
  Cover the battery or remove the battery from the machine and keep it in a warm place to be installed next morning.
- If the electrolyte level is low, refill with distilled water next morning before starting the operation.
  Do not refill after the operation in order to prevent the water from freezing during the night.

[5] AFTER COLD WEATHER HAS PASSED

When the season changes and starts to get warm, take the following action.

- See “INSPECTION AND MAINTENANCE 6.1 USE OF LUBRICATING OIL ACCORDING TO TEMPERATURES” to change the oil in the system to one with the specified viscosity.

https://truckmanualshub.com/

8. LONG-TERM STORAGE

8.1 BEFORE STORING MACHINE

CAUTION

In order to protect the cylinder rods during long-term storage, the machine must be kept in the "travelling posture", with the cylinders fully retracted, as shown in the figure to the right. See "OPERATION 2.5 MACHINE TRAVELLING POSTURE" for details. (To prevent rust on the cylinder rod)

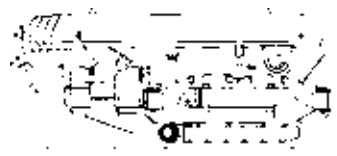

Store the machine as described below for long-term storage:

- Wash and clean each section of the machine and store indoor.
  If you have to leave it outdoors, select a flat location where the machine is not likely to be exposed to flood or other disasters and cover the machine.
- Refuel, grease, and change the oil without fail.
- As to the battery, turn OFF the disconnect switch, or remove it from the machine for storage.
- If the temperature will drop to 0 ºC or below, add antifreeze fluid. For the mixture of antifreeze solution, contact us or our sales service agency.
- For machines with engine & electric motor, cover the electric motor and the hydraulic pump in the power unit with a sheet, together with a dehumidifying agent to keep the machine as dry as possible.
- For machines with engine & electric motor, they need to be operated at no-load for about 5 minutes once in every 3 months.

8.2 DURING STORAGE

⚠ WARNING

If you have to perform antirust operation indoors, open the window and entrance for better ventilation to prevent gas poisoning.

Be sure to operate the machine once a month during the storage period to maintain the oil film at lubricating section. Charge the battery at the same time.

CAUTION

- **For the machines with engine & electric motor, it is necessary to measure the insulation resistance of the electric motor wiring once in every 3 months during long-term storage.**
  Contact us or our sales service agency to request inspection in the above event.
- **For machines with engine & electric motors, before they are used after long term storage, it is necessary to measure the insulation resistance of their electric motor wiring.**
  Contact us or our sales service agency to request inspection in the above event.

https://truckmanualshub.com/

8.3 AFTER STORAGE

⚠ WARNING

If you did not perform antirust operation monthly during the long-term storage, contact us or our sales service agency before using the machine.

Perform the following before using the machine after the long-term storage.

- Refuel, grease, and change the oil without fail.
- Remove the battery cover (install the battery if it is removed from the machine), and check the electrolyte level and specific gravity, and then connect the battery cable at the (+) side first.
- Remove the drain plug of the fuel tank, hydraulic oil tank, and engine oil pan to drain any water ingress.
- Carefully perform these checks before starting operation and perform warm-up operation. Carefully check the various parts of the machine.

https://truckmanualshub.com/

9. HANDLING BATTERY

Observe the following when handling the battery.

⚠ WARNING

- **Before inspecting or handling the battery, be sure to stop the engine, and turn the starter switch to the "OFF" position.**
- **Wipe off the dust accumulated on the top of the battery with a moistened cloth.**
- **The battery produces hydrogen gas, which may cause an explosion hazard. Do not put fire such as cigarettes close to the battery or take any actions that can cause sparks.**
- **The battery fluid is diluted sulfuric acid, which corrodes clothes and skin.**
  Should the battery fluid come into contact with your clothes or skin, wash the affected area immediately with plenty of water.
  Should it go into your eye, wash your eye immediately with clean water and consult a physician.
- **Wear goggles and rubber gloves when handling the battery.**
- **When removing the battery cable, disconnect the cable at the ground side (normally (-) terminal) first. To reinstall, connect it to the (+) terminal first.**
  Objects such as tools coming between (+) terminal and the machine body will cause sparks.
- **Slackened battery terminals can cause sparks due to poor contact, causing an explosion hazard. Tighten securely when installing the terminals.**

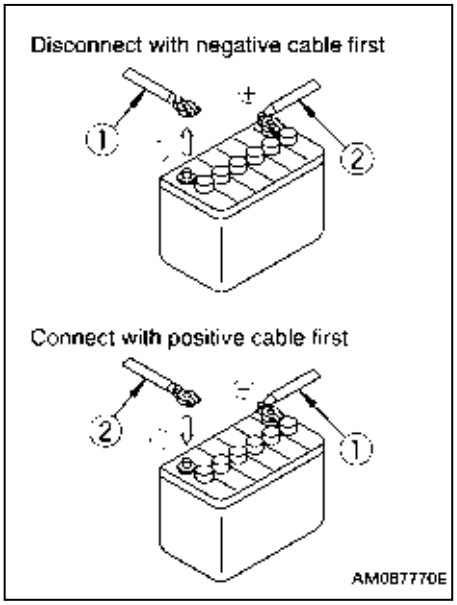

- **Secure the battery when changing it to prevent it from being displaced. If it is not secured, the terminals will slacken, causing sparks.**
- **Be sure not to confuse between the (+) terminal and the (-) terminal when removing or installing the battery cables.**

9.1 CAUTIONS IN HANDLING BATTERY

- Always try to keep the battery charged.
  The battery should not be charged in a rush after being discharged. Measure the specific gravity of the battery fluid in advance and charge the battery as needed.
  Keeping the battery in the best condition lengthens the life of the battery.
- Check the electrolyte level earlier than regular check and maintenance schedule during the hot season.
- The battery ability drops significantly during the cold season. Keep the charging rate as close to as 100 % and try to keep it warm for starting the operation next morning.
  Distilled water should be refilled before starting the work next morning to avoid freezing.

https://truckmanualshub.com/

9.2 REMOVING/INSTALLING BATTERY

CAUTION

Verify that the battery does not move after securing the battery. If it moves, secure it again.

[1] REMOVAL

1. Remove the floor mat (5) for the driver's seat.

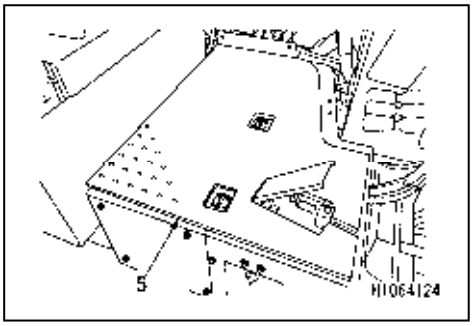

2. Remove the four mounting bolts (4) and then remove the battery cover (3).

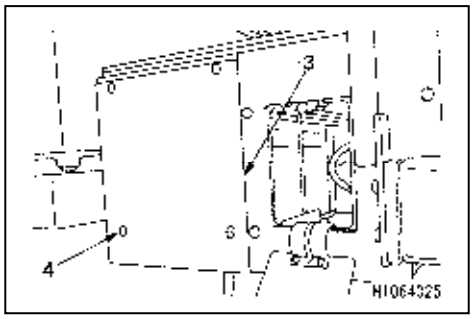

3. Remove the 2 bolts (6) and open the driver's seat floor cover (7).

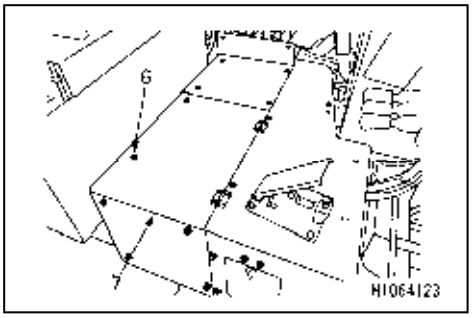

4. To remove the battery cable, disconnect it from the (-) terminal (8) first, and then disconnect it from the (+) terminal (9).
5. Remove the wing nuts (10) (2 pieces) and battery fixing brackets (11), and then remove the battery (12).

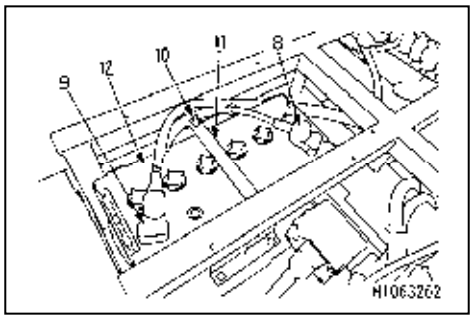

[2] INSTALLATION

• Install the battery in the reverse order of removal.

NOTES

Connect the (-) terminal (8) on the ground side last when connecting the battery.

https://truckmanualshub.com/

9.3 CAUTIONS IN CHARGING BATTERY

When charging the battery mounted to the machine

- Abnormal voltage may be applied to the alternator, resulting in a breakage. Disconnect the battery terminal wires before charging the battery.
- While charging, remove all the fluid plugs to release the gas generated.
- Stop charging when the battery becomes overheated (fluid temperature exceeded 45°C).
- Stop charging promptly once the charging is completed.
  Continuing to charge after reaching the fully charged state will cause;
  (1) Overheating of battery
  (2) Decrease in the battery fluid
  (3) Failures in battery

- When connecting battery cables, do not reverse the polarity [(+) terminal and (-) terminal]. Doing so can cause damage to the alternator.
- Remove the battery cable when handling the battery other than for battery electrolyte level check and specific gravity measurement.

https://truckmanualshub.com/

9.4 STARTING ENGINE WITH BOOSTER CABLE

Start the engine with booster cable as described below.

[1] CAUTIONS IN CONNECTING/DISCONNECTING BOOSTER CABLE

⚠ WARNING

- **Never let the (+) terminal and (-) terminal come into contact with the other when connecting the cable.**
- **Wear goggles and rubber gloves when starting the engine with the booster cable.**
- **Do not let the slave machine and machine in failure come into contact with each other.**
  Because the battery produces hydrogen gas, sparks around the battery can cause an explosion.
- **Do not make mistakes in connecting the booster cable. Note that there will be some sparks when making the last connection. Make this connection at the location as far as possible from the battery.**
- **Do not let the booster cable clips contact each other or the machine when disconnecting the booster cable.**

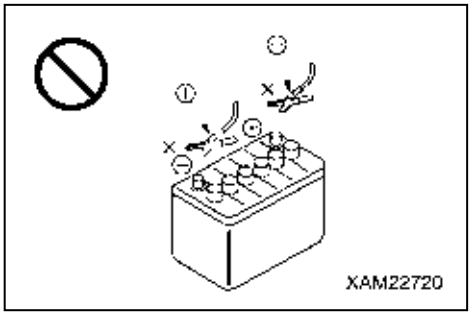

CAUTION

- **Use booster cable and clips of appropriate size for the battery size.**
- **The battery in the slave machine and machine in failure should be of the same capacity.**
- **Check that the cable and clips have no breakage or corrosion.**
- **Connect the clips securely.**
- **Verify that the operation levers of both the slave machine and machine in failure are in the "NEUTRAL" position.**

[2] CONNECTING BOOSTER CABLE

Connect the booster cables in the numerical order shown in the figure on the right.

1. For both slave and failed machines, keep the starter switches set in the "OFF" position.
2. Connect a clip of the booster cable (A) to the (+) terminal of the failed machine.
3. Connect the other clip of the booster cable (A) to the (+) terminal of the slave machine.
4. Connect a clip of the booster cable (B) to the (-) terminal of the slave machine.
5. Connect the other clip of the booster cable (B) to the engine block of the failed machine.

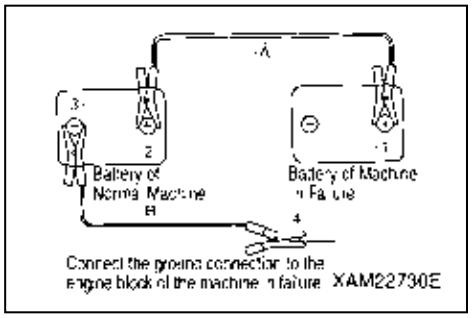

https://truckmanualshub.com/

[3] STARTING ENGINE

⚠ CAUTION

Verify that the operation levers of both the slave machine and machine in failure are at the "NEUTRAL" position. If the safety lock lever is equipped, also verify that it is at the lock position.

1. Verify that the clips are securely connected to the battery terminals.
2. Start the engine of the slave machine and increase the engine speed to full speed (highest speed).
3. Turn the starter switch of the failed machine to the "START" position to start the engine. If the engine does not start, wait for more than 2 minutes before re-trying.

NOTES

See "OPERATION 2.2 STARTING ENGINE" for how to start the engine.

[4] DISCONNECTING BOOSTER CABLE

When the engine has started, disconnect the booster cable in the reverse order of connecting the booster cable.

1. Disconnect the clip of the booster cable (B) connected to the engine block of the machine in failure.
2. Disconnect the clip of the booster cable (B) connected to the (-) terminal of the slave machine.
3. Disconnect the clip of the booster cable (A) connected to the (+) terminal of the slave machine.
4. Disconnect the clip of the booster cable (A) connected to the (+) terminal of the machine in failure.

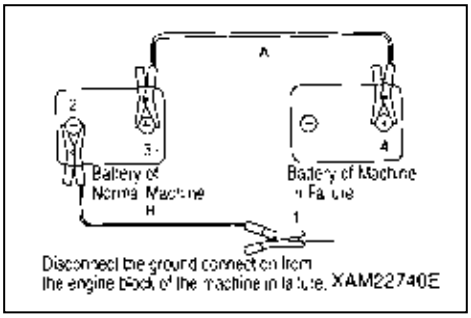

https://truckmanualshub.com/

10. HANDLING REMOTE CONTROLLER BATTERY

NOTES
The battery used for the Transmitter is an exclusive battery.

10.1 REPLACEMENT TIMING OF BATTERY

When the transmitter battery status bar illuminates in red followed by an alarm signal sound, immediately replace the battery with a charged one.
If the battery is not replaced, the Transmitter will stop in a few minutes.

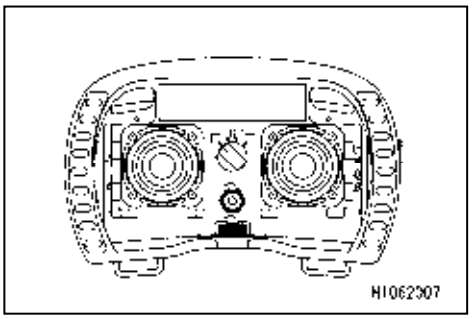

10.2 REPLACEMENT METHOD OF BATTERY

Replace the battery of the Transmitter in the procedure described below.

1. Turn “OFF” the power of the Transmitter.
   Pressing the Emergency stop/Remote controller power OFF switch (10) will turn “OFF” the power.

2. Lift the battery upward while pushing it. The battery comes off.

3. Insert a charged battery into the Transmitter while pushing it.

4. Make sure that the power turns “ON” when you press the Remote controller power ON/OFF switch (3).
   Press the remote controller power ON/OFF switch (3) twice, and verify that communication with the receiver is established.

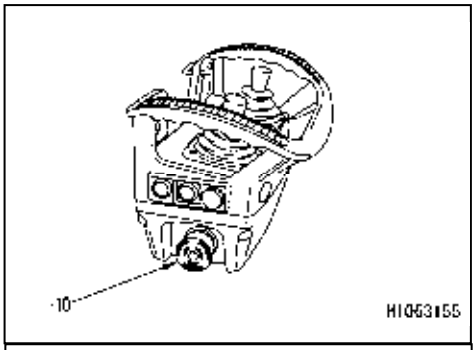

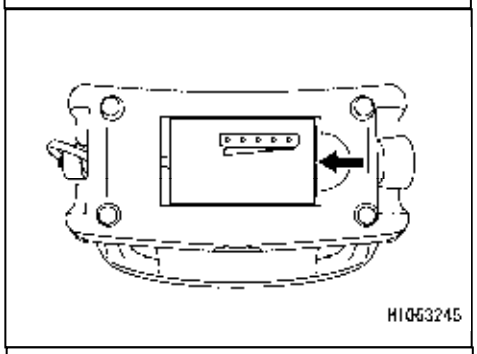

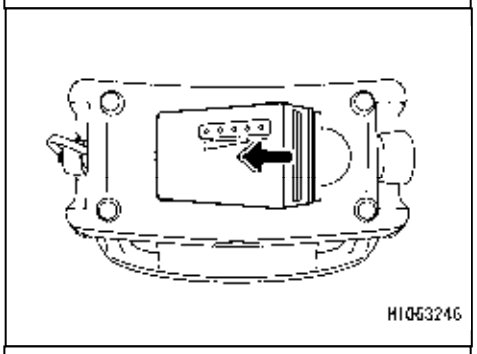

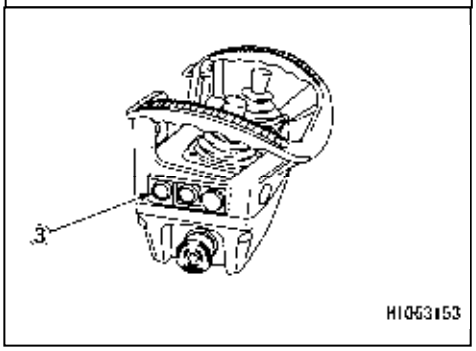

https://truckmanualshub.com/

10.3 CHARGING METHOD OF BATTERY

To charge the battery, use only the supplied battery charger.

⚠ WARNING

- **Use the battery charger only for charging of the battery described on the model label.**
- **Do not charge the battery in an explosion hazardous area under any circumstances.**
- **Use the battery charger with correct voltage: 100 to 240 VAC, 10 to 30 VDC.**
- **Do not use the battery charger outside the described temperature range.**
- **Protect the battery charger from overheat, dust, humidity, etc.**
- **Do not cover the battery charger with an object during charging.**
- **Pull the battery charger out of the power supply when not in use.**
- **If any damage is found on the battery charger body or its cord, stop using it at once.**
- **Do not modify or change the battery charger or cord.**

CAUTION

- **The battery capacity depends on the number of years used and environmental temperature. The capacity decreases when the battery becomes old. The battery capacity decreases significantly in extreme temperatures, below 0℃ or over 40°C.**
- **Before first use, or when at least six months have elapsed since the last use, be sure to charge the battery.**
- **Charge the battery at ambient temperatures between 0 to 40℃.**
  When the transmitter battery status bar illuminates in red followed by a signal alarm sound, immediately charge the battery.
  It is ideal to store the battery in a 30 to 50 % charged condition if it is going to be stored for a long period of time.
- **Keep the battery at room temperature.**
- **Use the supplied protective cap to store the battery. Never short out the battery.**
- **When the battery is correctly used, it can be charged at least 500 times.**
- **The battery can actually be charged more than 500 times, the maximum capacity, though, will be degraded.**
- **When charging a fully discharged battery, it takes about 5 hours to fully charge the battery.**

Charge the battery of the Transmitter in the procedure described below.

1. While pushing the battery (B2), put it into place in the charger case (B5).
   Connect the battery charger (B1) to the cord (B3), and insert the cord plug into the power outlet..
3. The battery status LED indicator (B4) on the charger starts blinking to indicate the charging has started.
4. When the battery becomes fully charged, the LED indicator (B4) is lit in green.
5. After charging is completed, disconnect the cord plug from the power supply.

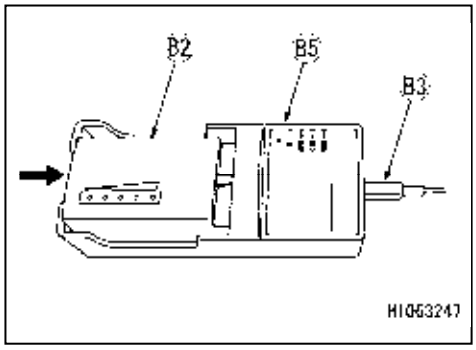

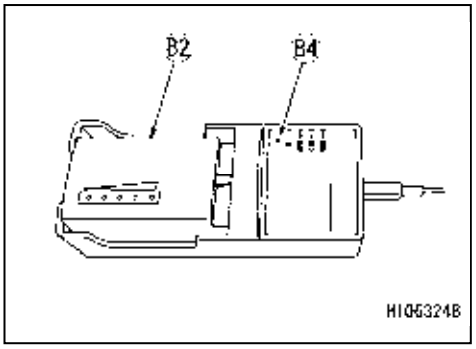

NOTES

The battery status indicator while charging is as follows:

- Lights in green: Charged
- Blinks in green: Charging
- Lights in red : Battery failure
- Blinks in red : Cannot be charged due to a battery temperature: below 0°C or above 45°C.

https://truckmanualshub.com/

The radio controller battery can be charged using the cigarette lighter port of the vehicle.

Set the charger case (B5) for radio controller battery under the override switch.

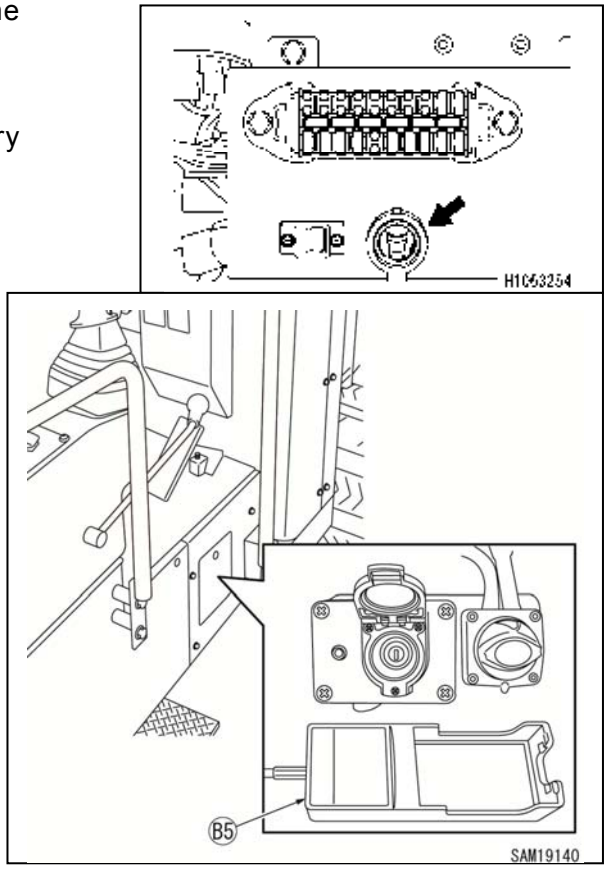

https://truckmanualshub.com/

11. TROUBLESHOOTING

11.1 ELECTRICAL COMPONENTS

- Make sure that you contact us or our sales service agent for the actions marked with in the table.
- Ask us or our sales service agency for repair if you suspect any other abnormalities or causes than those given below.

Abnormal Phenomenon	Major Cause(s)	Remedy
Dark light even at highest engine speed	• Defective wiring	★Check and repair slackened terminals and open circuits
Light blinks during engine operation	• Defective alternator • Defective wiring	★Replacement ★Inspection and repair
Battery status indicator does not go out even when the engine is running.	• Defective alternator • Defective wiring	★Replacement ★Inspection and repair
Abnormal noise from alternator	• Defective alternator	★Replacement
Starter not rotating even after the starter switch is turned	• Defective wiring • Insufficient battery charge	★Inspection and repair • Charge the battery
Starter pinion going out and in repeatedly (struggling)	• Insufficient battery charge	• Charge the battery
Starter key turning slow	• Insufficient battery charge • Defective starter	• Charge the battery ★Replacement
Starter disengaged before the engine starts	• Defective wiring • Insufficient battery charge	★Inspection and repair • Charge the battery
Camera view monitors display no image.	• Defective wiring • Defects in camera • Defects in monitor	★Check connectors for looseness, disconnection, and cable break. Repair if necessary. ★Replacement ★Replacement

https://truckmanualshub.com/

11.2 MACHINE BODY

- Make sure that you contact us or our sales service agent for the actions marked with ★ in the table.
- Ask us or our sales service agency for repair if you suspect any other abnormalities or causes than those given below.

Abnormal Phenomenon	Major Cause(s)	Remedy
Crane cannot be operated at all but can travel	• Mode selector switch is not set to “Crane”. • No outrigger is deployed.	• Set mode selector switch to “Crane”. • Deploy outriggers.
• Travelling speed, boom and hook block operation speed too slow • Abnormal noise from pump	• Insufficient hydraulic oil • Clogging in the hydraulic oil tank strainer and element	• Refill with hydraulic oil to the specified oil level, referring to the section “Check before operation” • Clean and replace the strainer and element according to periodic inspection.
Hydraulic oil temperature too high	• Insufficient hydraulic oil • Dust build-up on cooling fins	• Refill with hydraulic oil to the specified oil level, referring to the section “Check before operation” • Cleaning
• Crawler belt comes off. • Abnormal wear on the sprockets	• Crawler belt too loose.	• See “Check before operation” and adjust the tension
Outriggers cannot be operated.	• Mode selector switch is not set to “Outrigger”. • Crane is not stowed.	• Set mode selector switch to “Outrigger”. • Stow crane.
Crane or outrigger cannot be operated.	• Mode selector switch is set to any option other than “Crane” and “Outrigger mode”.	• Set mode selector switch to “Crane” or “Outrigger”.

https://truckmanualshub.com/

11.3 ENGINE

- Make sure that you contact us or our sales service agent for the actions marked with ★ in the table.
- Ask us or our sales service agency for repair if you suspect any other abnormalities or causes than those given below.

Abnormal Phenomenon	Major Cause(s)	Remedy
Engine does not start even after the starter key is turned	• Insufficient fuel • Insufficient battery charge • Insufficient compression	• See “Check before operation” and refuel • Charge the battery ★Inspection and replacement
Engine starts but stops right away	• Insufficient oil in oil pan	• See “Check before operation” and adjust oil level to appropriate one • See causes and actions for “Engine does not start”
Engine power is low, or the power gradually drops	• Air cleaner element clogged • Radiator fin clogged • Insufficient compression	• See “Regular Maintenance” for cleaning or replacement of the parts • Clean ★Inspection and replacement
Engine water temperature monitor illuminates while the engine is in operation	• Insufficient coolant • Water leakage from the cooling line • Slackened or broken fan belt • Radiator fin clogged	• See “Check before operation” and refill coolant. ★Inspection and repair • See “Periodical Maintenance” to check, adjust, or change the belt • Check and clean
Engine oil pressure monitor illuminates while the engine is in operation	• Insufficient engine oil • Engine oil filter clogged • Engine unit in failure	• See “Check before operation” and adjust oil level to appropriate one • See “Periodical Maintenance” to check or replace. ★Inspection and repair

https://truckmanualshub.com/

11.4 ELECTRIC MOTOR

- Make sure that you contact us or our sales service agent for the actions marked with ★ in the table.
- Ask us or our sales service agency for repair if you suspect any other abnormalities or causes than those given below.

Abnormal Phenomenon	Major Cause(s)	Remedy
Electric motor does not start even after turning switch to the “START” position.	• Improper wiring and power supply error • Inverter panel circuit breakers are set to “OFF” position. • A break in stator winding	• Check wiring according to “Engine & Electric Motor Spec. Operation”. • Set all circuit breakers to “ON” position. ★Inspection, repair, replacement ★Inspection, repair, replacement
The motor comes to a stop during use.	• Inverter unit error • Failure in the Inverter unit • Failure in the power unit	• Check the power supply source (voltage and phase interruption). ★Inspection, repair, replacement ★Inspection, repair, replacement
The power output of the motor reaches zero or undergoes gradual decrease.	• Phase interruption in the power source of power supply equipment • Slack in motor wiring	• Check the power source of power supply equipment (voltage and phase interruption). • Inspect connection with the motor Terminal block. ★Inspection, repair, replacement
The cabtire cable rises in temperature.	• Considerable voltage drop	• Ensure that the power supply voltage of power supply equipment is at a specified value. • Replace the cabtire cable with one adhering to specifications.
An abnormal noise and vibration are present in the power unit during operation.	• A break in motor winding • Loose fixing bolts on the motor and pump. • Loose coupling fixing bolts • Impurities on the coupling • Clogging in the hydraulic oil tank strainer and element	• Inspect the motor Terminal block. ★Inspection, repair, replacement • Perform inspection, repair, and cleaning according to “Engine & Electric Motor Spec. Operation”. ★Replacement • Clean and replace the strainer and element according to periodic inspection.

https://truckmanualshub.com/

Abnormal Phenomenon	Major Cause(s)	Remedy
The power unit rises in temperature during operation.	• High ambient temperature • Poor ventilation • Considerable voltage drop • Overload • High number of starts	• Make sure the power unit is complying with the environmental specifications. • Perform inspection and cleaning according to “Engine & Electric Motor Spec. Operation”. • Replace the cabtire cable with one adhering to specifications. • Reduce loads. • Reduce the number of starts.
The leak detector of the Inverter unit main breaker is tripped.	• High humidity • Presence of water droplets • Poor grounding • A break in stator winding	• Make sure the power unit is complying with the environmental specifications. • Attach the cover properly. • Adhere to grounding standards. ★Inspection, repair, replacement

https://truckmanualshub.com/

11.5 BEFORE REMOTE CONTROLLER FAILURE DISGNOSIS

“While the Crane operates perfectly from control on the machine body side, part or whole functions are inoperable from the remote control.” In the event of failure as above, perform the DIAGNOSIS shown in the following pages.

CAUTION

Before performing troubleshooting on the following page onward, check according to the inspection item order shown below.
Such an error may be occasionally fixed by simple practice, such as applying another operation procedure or replacing the battery.
If the faults persist after the following check items and troubleshooting on the following pages onward are performed, contact us or our sales service agent for repair.
In the case of an electric failure of this equipment, the crane can be operated with manual operation on the machine body side after the power is turned “OFF” with the emergency stop switch of the Transmitter.

Check item	Cause and Action
Does the crane operate with the operation on the machine body side?	If the crane operates, there is an abnormality in this equipment. If the crane does not operate, troubleshoot the machine body.
Is power supplied with transmitter and machine engine key set to ON position?	If the power is not turned ON, turn it ON.
Does the emergency stop switch remain ON?	Set emergency stop switches on transmitter and machine to “OFF” position.
Is Outrigger/Crane selector switch set to Neutral (N) position?	Change setting of Outrigger/Crane selector switch.
Is the battery mark of the Transmitter blinking in green?	If it is blinking in red, replace the battery.
Is the Transmitter deformed or broken?	If the Transmitter is deformed or broken, repair or replace it.
Is each operation lever of the Transmitter in the neutral position?	If the control levers or operation switches show any sign of a fault or malfunction, repair or replace them.
Is the fuse in the Receiver blown?	Check whether the fuse is blown or not; check the cause when blown, then replace with a new one.

https://truckmanualshub.com/

11.6 REMOTE CONTROLLER

- Make sure that you contact us or our sales service agent for the actions marked with ★ in the table.
- Ask us or our sales service agency for repair if you suspect any other abnormalities or causes than those given below.

Problem	Possible causes	Remedies
Power is not supplied to transmitter after power-on.	• No voltage supplied.	• Check battery for contact failure due to damage or dirt. • Set charged battery into battery compartment. • Fully charge the battery.
Low voltage alarm goes off immediately after start of operation.	• Battery contact failure due to damage or dirt. • Battery is not charged. • Battery has failed.	• Check battery for contact failure due to damage or dirt. • Fully charge battery. • Check if battery charging process is correct. • Check if transmitter functions correctly by using spare battery or fully charged battery.
Transmitter display illuminates but any control commands cannot be performed.	• Voltage is not applied to receiver. • Failure in connection for wireless communication.	• Check receiver cable for disconnection. • Check functionality with LED in receiver control light field.
Individual commands cannot be executed.	• Receiver has failed. • Connection to machine is interrupted.	• Check connection cable to receiver for disconnection.

If the problem is not solved after applying the suggested remedies above, contact us or our sal es service agent or HBC-radiomatic GmbH.

Symptom	Causes	Remedies
No response from transmitter even after it is powered on.	• The power is not supplied.	• Check the battery terminal for damage or dirt. • Install charged battery. • Fully recharge the battery.
Voltage drop alarm goes off immediately after power-on.	• Scratch or dirt on battery terminal. • Battery has not been charged. • Battery failure	• Check the battery terminal for damage or dirt. • Fully recharge the battery. • Check if the battery is charged properly. • Check transmitter functionality by using fully charged spare battery.
Some commands cannot be executed.	• Receiver failure • Wiring to transmitter is disconnected.	• Check receiver for wiring.

If the above measures do not solve the problem, contact us, our sales service agent or HBC-radiomatic GmbH.

https://truckmanualshub.com/

11.7 LIST OF ERROR CODES

Controller Error

Error Code	Error	Items to check
EC01	CPU Start-up error (system error)	• Check harness for controller • Check TTC540 controller
EC02	I/O unit ① communication error (TTC36X communication error)	• Check harness for CAN communication • Check TTC36X controller
EC03	I/O unit ② communication error (TTC30X communication error)	• Check harness for CAN communication • Check TTC30X controller
EC20	Radio controller communication error (radio control CAN communication error)	• Check harness for CAN communication • Check radio control receiver
EC50	Slope angle sensor communication error	• Check harness for CAN communication • Check slope angle sensor
EC00	Engine communication error	• Check harness for CAN communication • Check engine controller
EC30	Inverter communication error	• Check harness for CAN communication • Check inverter

Input Error

Error Code	Error	Items to check
EI01	Right joystick front-rear start position error	• If error occurs when you start with lever control in input condition, set the lever control to no-input condition and start again and check. • Check each joy stick. • Check harnesses of each input circuit.
EI01	Right joystick left-right start position error	
EI02	Left joystick front-rear start position error	
EI02	Left joystick left-right start position error	
EI03	OR1 joystick start position error	
EI04	OR2 joystick start position error	
EI05	OR3 joystick start position error	
EI06	OR4 joystick start position error	
EI01	Acceleration lever start position error	
ES12	Acceleration pedal start position error	• If error occurs when you start with pedal control in input condition, set the pedal to no-input condition and start again and check. • Check acceleration pedal • Check harness of pedal input circuit
EI01	Right JOY front-rear input error	• Check each joy stick • Check harnesses of each input circuit
EI01	Right JOY left-right input error	
EI02	Left JOY front-rear input error	
EI02	Left JOY left-right input error	

Error Code	Error	Items to check
EI03	OR１ JOY input error	• Check each joy stick • Check harnesses of each input circuit
EI04	OR2 JOY input error	
EI05	OR3 JOY input error	
EI06	OR4 JOY input error	
EI01	Acceleration lever input error	
ES12L	Acceleration pedal Lo input error	• Check acceleration pedal • Check harness of pedal input circuit
ES12H	Acceleration pedal Hi input error	
ES06	P1 pressure sensor input error	• Check P1 pressure sensor. • Check harness of P1 pressure sensor circuit
ES07	P2 pressure sensor input error	• Check P2 pressure sensor. • Check harness of P2 pressure sensor circuit
ES101	P1 hydraulic oil temperature sensor input error	• Check P1 hydraulic oil temperature sensor. • Check harness of P1 hydraulic oil temperature sensor circuit.
ES102	P2 hydraulic oil temperature sensor input error	• Check P2 hydraulic oil temperature sensor. • Check harness of P2 hydraulic oil temperature sensor circuit.
ES13	Fuel sender input error	• Check fuel sender • Check harness of fuel sender circuit
EV001	Battery pressure low error	• Check if battery pressure is lower than 11V. • Check fuse • Check harness of battery related circuit
ES103	Stow position LS input error	• Check limit switch • Check harness of stow position LS circuit
ES14	Slew angle input error	• Check slew potentiometer • Check harness of slew angle circuit
ES05L	Boom angle sensor input Lo error	• Check angle sensor • Check harness of angle sensor circuit
ES05H	Boom angle sensor input Hi error	
ES04L	Boom length sensor input Lo error	• Check angle sensor • Check harness of angle sensor circuit
ES04H	Boom length sensor input Hi error	
ES02	Pressure sensor ① input error	• Check derrick pressure sensor ① • Check harness of derrick pressure sensor ① circuit
ES03	Pressure sensor ② input error	• Check derrick pressure sensor ② • Check harness of derrick pressure sensor ② circuit
ES15	Fly jib angle sensor input error	• Check fly jib angle sensor • Check harness of fly jib angle sensor circuit
ES16	Fly jib length sensor input error	• Check fly jib length sensor • Check harness of fly jib length sensor circuit
ES17	Load cell input error	• Check load cell • Check harness of load cell circuit
EV20	Fly jib power pressure error	• Check harness of TTC30X controller power circuit

https://truckmanualshub.com/

Output Error

Error Code	Error	Items to check
EOP01H	Pilot SOL Hi error	• Check pilot solenoid • Check harness of pilot solenoid circuit
EOP01L	Pilot SOL Lo error	
EOH01H	Crane high speed SOL Hi error	• Check crane high speed solenoid Hi. • Check harness of crane high speed solenoid Hi
EOH01L	Crane high speed SOL Lo error	
EOC10L	Low pressure SOL Hi error	• Check low pressure solenoid. • Check harness of low pressure solenoid circuit
EOC10H	Low pressure SOL Lo error	
EO05L	Travel 2 speed SOL Hi error	• Check travel 2 speed solenoid Hi • Check travel 2 speed solenoid Hi circuit
EO05H	Travel 2 speed SOL Lo error	
EOS01L	OR grounding 1 SOL Hi error	• Check OR grounding 1 solenoid. • Check harness of OR grounding 1 solenoid circuit
EOS01H	OR grounding 1 SOL Lo error	
EOS02L	OR grounding 2 SOL Hi error	• Check OR grounding 2 solenoid. • Check harness of OR grounding 2 solenoid circuit
EOS02H	OR grounding 2 SOL Lo error	
EOS03L	OR grounding 3 SOL Hi error	• Check OR grounding 3 solenoid. • Check harness of OR grounding 3 solenoid circuit
EOS03H	OR grounding 3 SOL Lo error	
EOS04L	OR grounding 4 SOL Hi error	• Check OR grounding 4 solenoid. • Check harness of OR grounding 4 solenoid circuit
EOS04H	OR grounding 4 SOL Lo error	
EOT03L	Right front SOL Hi error	• Check right front solenoid • Check harness of right front solenoid circuit
EOT03H	Right front SOL Lo error	
EOT04L	Right rear SOL Hi error	• Check right rear solenoid • Check harness of right rear solenoid circuit
EOT04H	Right rear SOL Lo error	
EOT01L	Left front SOL Hi error	• Check left front solenoid • Check harness of left front solenoid circuit
EOT01H	Left front SOL Lo error	
EOT02L	Left rear SOL Hi error	• Check left rear solenoid • Check harness of left rear solenoid circuit
EOT02H	Left rear SOL Lo error	
EOO01L	OR1 IN SOL Hi error	• Check OR1 solenoid IN • Check harness of OR1 solenoid IN circuit
EOO01H	OR1 IN SOL Lo error	
EOO02L	OR1 OUT SOL Lo error	• Check OR1 solenoid OUT • Check harness of OR1 solenoid OUT circuit
EOO02H	OR1 OUT SOL Lo error	
EOO03L	OR2 IN SOL Hi error	• Check OR2 solenoid IN • Check harness of OR2 solenoid IN circuit
EOO03H	OR2 IN SOL Lo error	

Error Code	Error	Items to check
EOO04L	OR2 OUT SOL Hi error	• Check OR2 solenoid OUT • Check harness of OR2 solenoid OUT circuit
EOO04H	OR2 OUT SOL Lo error	
EOO05L	OR3 IN SOL Hi error	• Check OR3 solenoid IN • Check harness of OR3 solenoid IN circuit
EOO05H	OR3 IN SOL Lo error	
EOO06L	OR3 OUT SOL Hi error	• Check OR3 solenoid OUT • Check harness of OR3 solenoid OUT circuit
EOO06H	OR3 OUT SOL Lo error	
EOO07L	OR4 IN SOL Hi error	• Check OR4 solenoid IN • Check harness of OR4 solenoid IN circuit
EOO07H	OR4 IN SOL Lo error	
EOO08L	OR4 OUT SOL Hi error	• Check OR4 solenoid OUT • Check harness of OR4 solenoid OUT circuit
EOO08H	OR4 OUT SOL Lo error	
EOC01L	Boom extension SOL Hi error	• Check boom extension solenoid • Check harness of boom extension solenoid circuit
EOC01H	Boom extension SOL Lo error	
EOC02L	Boom retract SOL Hi error	• Check boom retract solenoid • Check harness of boom retract solenoid circuit
EOC02H	Boom retract SOL Lo error	
EOC03L	Boom raise SOL Hi error	• Check boom raise solenoid • Check harness of boom raise solenoid circuit
EOC03H	Boom raise SOL Lo error	
EOC04L	Boom lower SOL Hi error	• Check boom lower solenoid • Check harness of boom lower solenoid circuit
EOC04H	Boom lower SOL Lo error	
EOC05L	Winch up SOL Hi error	• Check winch up solenoid • Check harness of winch up solenoid circuit
EOC05H	Winch up SOL Lo error	
EOC06L	Winch lower SOL Hi error	• Check winch lower solenoid • Check harness of winch lower solenoid circuit
EOC06H	Winch lower SOL Lo error	
EOC08L	Right slew SOL Hi error	• Check right slew solenoid • Check harness of right slew solenoid circuit
EOC08H	Right slew SOL Lo error	
EOC07L	Left slew SOL Hi error	• Check left slew solenoid • Check harness of left slew solenoid circuit
EOC07H	Left slew SOL Lo error	
EO100H	Fan stop output Hi error	• Check harness of fan stop output solenoid circuit
EO100L	Fan stop output Lo error	
EO101H	Electric motor stop output Hi error	• Check harness of electric motor stop output circuit
EO101L	Electric motor stop output Lo error	

https://truckmanualshub.com/

Error Code	Error	Items to check
EO102H	Power start output Lo error	• Check harness of power start output circuit
EO102L	Power stop output Lo error	• Check harness of power stop output circuit
EO103L	Light output Lo error	• Check harness of light output circuit
EO104L	Audio power Lo error	• Check harness of audio power circuit
EO105L	Control power Lo error	• Check harness of control power circuit
EO13L	Winch brake Hi error	• Check harness of winch brake circuit
EO13H	Winch brake Lo error	
EO08L	Winch high speed Hi error	• Check harness of winch high speed circuit
EO08H	Winch high speed Lo error	
EOF01H	Fly jib shift SOL Hi error	• Check harness of fly jib shift solenoid circuit
EOF01L	Fly jib shift SOL Lo error	
EO106L	Boom light output Lo error	• Check harness of boom light output circuit
EO107L	Fly jib shift relay Lo error	• Check harness of fly jib shift relay circuit
EV10	Sensor power Lo error	• Check harness of TTC36X sensor power circuit
EV11	Rotary lamp power Lo error	• Check harness of rotary lamp power circuit
EOF02H	Fly jib derrick / telescopic shift SOL Hi error	• Check harness of fly jib derrick / telescopic shift solenoid circuit
EOF02L	Fly jib derrick / telescopic shift SOL Lo error	
EV21	Sensor power Lo error	• Check harness of TTC30X sensor power circuit

Engine Error

Error Code	Error	Items to check
EE00	Engine error (listed separately)	• For detailed judgment, special tools are needed. Please contact the dealer.

Other error

Error Code	Error	Items to check
EOR00	OR error	• This code is not an error. This appears when entering to crane mode with outriggers not set, so make sure to set the outrigger on the ground.

https://truckmanualshub.com/

This Page Intentionally Left Blank.

https://truckmanualshub.com/

INSPECTION AND MAINTENANCE

1. PRECAUTIONS FOR MAINTENANCE	246
2. BASIC MAINTENANCE	248
3. LEGAL INSPECTION	251
4. PERIODIC REPLACEMENT OF IMPORTANT COMPONENTS	252
5. CONSUMABLES	253
6. LUBRICATING OIL	254
7. ACCESSORY TOOLS AND STANDARD TIGHTENING TORQUE	255
8. INSPECTION AND MAINTENANCE LIST	257
9. MAINTENANCE PROCEDURES	260

https://truckmanualshub.com/

1. PRECAUTIONS FOR MAINTENANCE

Thorough understanding of the inspection and maintenance items is required to perform efficient inspection and maintenance that contributes to safe use of this machine.

⚠ WARNING

- **Do not perform any inspection or maintenance that is not described in this manual. Potential serious accident or machine failure may occur if it is performed at the discretion of the individual.**
  In the event that a judgment on the severity of a failure or malfunction is unable to be made, contact us or our sales service agent to request repair.
- **In the event that a failure or malfunction is encountered while the machine is in operation or found during an inspection, report it to your employer or supervisor immediately. Contact us or our sales service agent to request repair accordingly.**
- **Inspection and maintenance should be performed with the machine placed on a level and strong footing.**

[1] CHECK THE SERVICE METERS

Read the service meters daily to check for any maintenance item that reached the obligatory maintenance period.

[2] USE GENUINE PARTS FOR REPLACEMENT

Always use Maeda genuine parts as specified in the parts catalog for part replacement.

[3] USE DESIGNATED GREASE

Use the designated grease. The viscosity of grease must conform to specifications according to ambient temperature.

[4] USE CLEAN OIL AND GREASE

Always use clean oil or grease, and keep in a secure container to reduce contact with impurities.

[5] KEEP THE MACHINE CLEAN

Wash the machine clean to facilitate the detection of a malfunction. Especially keep the grease nipple, breather, and oil level gauge (oil access door) clean to prevent impurities from entering the machine.

[6] HANDLE WATER AND OIL AT ADEQUATE TEMPERATURE

Drainage, drain oil, and exhaust filter will be at elevated temperatures immediately after the machine is stopped. Replace drainage, drain oil, and filter only after they drop in temperature for safety.

On the contrary, if the oil is cold, raise the temperature of the oil (to approx. 20 – 40°C).

[7] CHECK DRAIN OIL AND OIL FILTER

For replacement of oil and filter, check the drain oil and exhaust filter to make sure no considerable amount of metal powder or foreign objects is present.

[8] CAUTIONS IN DRIVING

Do not remove the strainer to lubricate if it is attached to the lubrication opening.

[9] PROTECT OIL FROM IMPURITIES

Avoid dust when inspecting and replacing the oil to keep impurities out of the oil.

[10] ATTACH A WARNING TAG

When draining coolant and oil, always attach a warning tag to the travelling operation unit to prevent accidental engine ignition.

[11] FOLLOW SAFETY PRECAUTIONS

Safety precautions provided on the machine should always be followed when using the machine.

[12] CAUTIONS FOR WELD REPAIR

• Make sure the machine is turned off. (Turn the starter switch to the “OFF” position.)
• Do not continuously apply 400V or greater.
• Ground the machine within 1 meter from the welding point.
• Disconnect the connectors of the radio control receiver, controller and monitor display.
• Remove the negative (-) terminal of the battery.
• Make sure no sealing or bearing is present between the welding point and the grounding point. Potential damage to sealing may occur due to sparks if disregarded.
• Do not ground around the boom pin or the hydraulic cylinder. Potential damage to a plated section may occur due to sparks if disregarded.

[13] KEEP FROM FLAME

Always clean the parts with non-combustible cleaning agent or diesel fuel.
Keep the machine away from flame when using diesel fuel.

[14] KEEP THE ATTACHMENT SURFACE CLEAN

Be sure to clean the attachment surface after removing a part to which the Oring and gasket sealing are attached.
Replace the part with a new one with the O-ring and gasket reattached.

[15] EMPTY YOUR POCKETS

Always empty your pockets before performing inspection and maintenance of the machine in a downward direction with the cover opened.

[16] ASSURE SAFE RUBBER TRACK

When performing crane operation in a rocky location, make sure of no damage to the rubber track and no looseness, cracks or abrasion of bolts and nuts. Loosen the tension of the crawler tread more than usual.

[17] CAUTIONS FOR MACHINE WASH

• Do not direct a jet of steam to the electrical parts and connector.
• Keep the operation panel dry.
• Wash the machine with a clean cloth, rinsing off dirt and dust.

[18] PRE- AND POST-WORK INSPECTION

Before performing crane operation in muddy water, rain, snow or on the coast, always check for loose fitting plugs and valves. Post-operation inspection requires checks to all units for cracks and damage; looseness and falling of bolts and nuts, after the machine has been washed.
Carry out early greasing. Grease the operating pin that enters the muddy water on a daily basis.

[19] CAUTIONS FOR WORKING ON A DUSTY SITE

The following precautions should be observed when working on a dusty site.
• Frequently check the air cleaner for clogging.
• Clean and replace the fuel filter in a timely manner.
• Be sure to clean the electrical parts, especially the starter and alternator, to protect them from dust.

[20] DO NOT MIX OIL

Never mix oil of different brands and different types under any circumstance.
Replace the oil entirely when replenishing a different type of oil.
Always use Maeda genuine parts for part replacement.

https://truckmanualshub.com/

2. BASIC MAINTENANCE

[1] OIL HANDLING

- Oil is used under extremely harsh conditions (high temperature, high pressure) in the engine and working device, which causes the oil to undergo deterioration with operating time.
  Always use oil that meets requirements such as grade and operating temperature defined in the operation manual.
  Use the lubricant compliant to the CJ-4 (API category), E-6 (ACEA category) or DH-2 (JASO category) standard.
  Be sure to perform periodic replacement of oil irrespective of contamination in the oil.
- Oil is equivalent to human blood. Exercise due caution to handle oil, keeping impurities (such as water, metal powder or dust) out of oil. Most of mechanical failures are attributed to intrusion of impurities.
  Extra caution is required to prevent impurities entering during machine storage and lubrication.
- Do not mix oil with other oil of different grade or brand.
- Oil lubrication must conform to the designated quantity of oil.
  Failure to lubricate at adequate quantity can lead to a machine failure.
- In the event that oil used in the working device turns cloudy, potential intrusion of moisture or air into the oil may be considered.
  Contact us or our sales service agent.
- When replacing oil, always replace the relevant filter as well.
- “ISO VG32” is adopted for a hydraulic oil system as factory default.
  Do not use any other hydraulic oil that is not recommended by us. Failure to follow the instruction may cause the filters to get clogged.
  A small amount of oil remaining in piping and cylinders does not cause problems even when mixed with other oil.

[2] FUEL HANDLING

- The fuel pump is precision equipment that becomes inoperative if fuel containing moisture or impurities is used.
  Extra caution is required to prevent impurities from entering during machine storage and lubrication.
- Do not remove the strainer when replenishing fuel.
- Always use oil that meets the operating temperature defined in the operation manual.
- Ensure that the fuel tank is filled up after finishing daily work to prevent condensation of the humid air inside the fuel tank that will result in intrusion of moisture.
- Drain deposits and water out of the fuel tank before starting the engine or approximately 10 minutes after fuel replenishment.
- The air should be released from the circuit when the machine runs out of fuel or when the fuel filter is replaced.
- Clean the tank and fuel system if any foreign substances enter the fuel tank.
- Use the lubricant compliant to the EN590, ASTM D975 or JIS K2204 standard.
- For biofuel, use the oil compliant to the EN14214 or EN590, ASTM D6751 or D7467 or JIS K2390 standard.
- Use the fuel with sulfur content of less than 15 ppm (mass).
- Use natrium and zinc free fuel.
- Do not use kerosene.
- Do not fuel that is mixed with kerosene.

- Do not use any fuel stored in a drum can and such for a long period of time.
- Use only the fuel purchased from the authorized dealers.

[3] STOCKING AND STORAGE OF OIL AND FUEL

- Store oil and fuel indoors to keep impurities such as moisture or dust out of them.
- When storing oil and fuel in drums for a long time, line the drums horizontally aligning the drum bungs sideways (to store them away from moisture). Be sure to cover the drums with a waterproof sheet if unavoidably storing them outside.
- To prevent deterioration of oil and fuel resulted from long-term storage; employ the first-in first-out for using oil and fuel.

[4] GREASE HANDLING

- Grease is designed to prevent the joints from rattling and making noise.
- A nipple that is not described in the Periodic Maintenance chapter is used for overhauls, which requires no grease replenishment.
  Grease the nipple if a long-term use hinders its smoothness.
- Wipe off old grease squeezed out after greasing.
  Extra care is required to wipe a part that the adhesion of sands and dust accelerates the wearing away of the rotating part.

[5] FILTER HANDLING

- A filter is an extremely important part that keeps major equipment free from impurities in oil, fuel, and the air circuit, which prevents an associated failure. Periodic replacement of the filter is required in accordance with the Operation Manual.
  The replacement period should be shortened in responses to harsh operating environments or the amount of oil used.
- Do not reuse any washed filters (cartridge-typed ones) under any circumstances.
- After replacing an oil filter, check the used filter for any metal powder.
  If metal powder is found on the used filter, contact us or our sales service agent.
- Always unpack the replacement filter prior to its use.
- Always use Maeda genuine filters.

[6] COOLANT HANDLING

- The river water contains a large amount of calcium and impurities. Use of the river water results in accumulation of water stain in the engine and radiator, which causes heat exchange error leading to overheat.
  Do not use non-potable water.
- Always use antifreeze following precautions stated in the Operation Manual.
- Keep antifreeze from flame. Antifreeze is a flammable solution.
- The mixing proportion of antifreeze varies with outside air temperature.
  See “Maintenance 8.11 Every 1000 Hours Maintenance [2] Cleaning Engine Cooling System” for the mixing proportions.
- In the event of overheating, replenish coolant with the engine cold.
- The machine low in coolant may cause overheating and corrosion attributed to aeration.
- Use the lubricant compliant to one of the SAE J814, SAE J1034, ASTM D3306 or JIS K2234 standard.
- LLC (Long Life Coolant) must be mixed with soft water.
- The concentration of LLC should be 30 – 60 %.

- Replace the coolant every year.

[7] ELECTRICAL PART HANDLING

- A current leakage is developed if the electrical parts are wetted or have damaged coating, which causes the machine to go out of order and malfunction.
- Inspection and maintenance include the checking of belt tension, belt damage, and battery electrolyte level.
- Never remove and disassemble equipment (electrical parts) from the machine.
- Only optional electrical parts that accompany the machine can be installed.
- Keep the electrical parts away from water when the machine is washed and used in the rain.
- When using the machine on coastal areas, keep the electrical parts free of water and impurities to prevent corrosion.

[8] HYDRAULIC EQUIPMENT HANDLING

- Hydraulic equipment will be at elevated temperatures during and immediately after operation. Hydraulic equipment operates under high pressure.
  The following precautions should be observed when performing inspection and maintenance of hydraulic equipment.
  - Place the machine in travel position on a level surface to inhibit the application of pressure to the cylinder circuit.
  - Be sure to stop the engine.
  - Hydraulic oil and lubricating oil will be at elevated temperatures and high pressure immediately after equipment comes to a stop. Perform inspection and maintenance only after the oil drop in temperature for safety. An internal pressure may be exerted despite temperature drop. When removing the plugs, screws and hose joints, stand aside and provide gradual loosening to decompress.
  - Be sure to release the pressure by removing the air from the hydraulic oil tank before performing inspection and maintenance of the hydraulic circuit.
- Inspection and maintenance include hydraulic oil level check and replacement of the filters and hydraulic oil.
- Check the O-ring for scratches when removing the high-pressure hose. If scratches are found, replace it.
- Bleeding the air from the hydraulic circuit is required after the following tasks are performed: replacement and cleaning of the hydraulic oil filter element and strainer, repair and replacement of hydraulic equipment, and hydraulic piping removal.

https://truckmanualshub.com/

3. LEGAL INSPECTION

If periodic inspection for machine safety assurance is stipulated by laws and regulations of your country, perform inspection complying with the inspection items listed below.

1. Make sure no abnormal event is present in the safety devices.
2. Check the hoisting accessories including hook block for any abnormalities.
3. Check the winch wire rope end and wire clip for breakage.
4. If wire rope is damaged, replace immediately.
5. Check the hydraulic hose for oil leaks and friction flaws on the surface. Replace the hose if a surface flaw is detected.
6. Check the structural parts including the boom for cracks and deformations.
7. Check for loose or missing mounting bolts and joints.
8. Check if the booms perform proper operation and stop in extending, retracting, raising, lowering, and slewing.

If a malfunction is found as a result of inspection, contact us or our sales service agent.

https://truckmanualshub.com/

4. PERIODIC REPLACEMENT OF IMPORTANT COMPONENTS

To use your machine safely for a long period of time, replace the parts listed as important parts relating specially to safety and fire periodically.
These parts are susceptible to change in the quality, wear and deteriorate over time. Since it is difficult to determine their degrees in a regular maintenance, they should be replaced with the new ones after a certain period of time even if no abnormalities are detected to guarantee perfect and consistent functionality.
These parts need repair or replacement when any abnormality is detected, even before the exchange time comes.
For the hose part, if any distortions or cracks in the hose clamp or deteriorations of O-rings are found, please replace them.

LIST OF IMPORTANT COMPONENTS

No.	Parts to be replaced regularly	Q'ty	Replacement cycle
1	Fuel hose (fuel tank – pre-filter – pump – filter)	3	Every 2 years or every 4000 hours, whichever falls first
2	Fuel return hose (filter – fuel tank)	1	
3	Hydraulic hose (revolving part)	13	
4	Hydraulic hose (revolving part)	6	
5	Hydraulic hose (pump line)	11	
6	Hydraulic hose (tank, drain line)	9	
7	Hydraulic hose (travel line)	8	
8	Hydraulic hose (outrigger line)	24	
9	Seat belt	1	Replace every 3 years

https://truckmanualshub.com/

5. CONSUMABLES

Replace consumables such as a filter element and wire rope upon periodic maintenance or prior to the wear limit.
Proper replacement of consumables delivers increased economy in machine use.
Always use Maeda genuine parts for part replacement.
See the parts catalogue for part numbers when ordering parts.

LIST OF CONSUMABLES

Item	Replacement cycle
Hydraulic oil return filter element replacement	Initial 50 hrs & every 500 hrs
Hydraulic oil tank oil replacement	Initial 50 hrs & every 1000 hrs
Winch reduction gear case oil replacement	Initial 250 hrs & every 1000 hrs
Slewing device reduction gear case oil replacement	Initial 250 hrs & every 1000 hrs
Travel motor reduction gear case oil replacement	Initial 250 hrs & every 1000 hrs
Engine oil replacement	Every 500 hours
Engine oil filter replacement	Every 500 hours
Fuel pre-filter replacement	Every 500 hours
Hydraulic oil tank air filter replacement	Every 500 hours
Fuel main filter replacement	Every 500 hours
Air cleaner	Every 500 hours
Hydraulic oil suction filter replacement	As needed
Cylinder packing	★ Every 3 years
Boom slide plate	Every 3 years
Winch wire rope	★ Every 3 years
Boom extending wire rope	★ Every 3 years
Boom retracting wire rope	★ Every 3 years
Slewing ring mounting bolt	Every 7 years or every 7000 hours

★ The cycles marked with a “★” in Replacement cycle include a halt period.
★ Contact us or our sales service agent for part replacement.

6. LUBRICATING OIL

6.1 USE OF LUBRICATING OIL ACCORDING TO TEMPERATURES

Use of lubricating oil should vary with changes in temperature.

Lubricating place	Type of oil	Use by temperature (-22 -4 14 32 50 68 86 104 122°F / -30 -20 -10 0 10 20 30 40 50 °C)	Specified capacity (liter)	Volume to replace (liter)
Engine oil pan	Engine oil	SAE10WCD SAE10W-30CD SAE15W-40CD	7.4	7.4
Hydraulic oil tank	Hydraulic oil	ISO VG32 ISO VG46	110	100
Swing reducer	Gear oil	ISO VG320	1.5	1.5
Winch reducer		SAE90GL4	1.8	1.8
Travel motor reducer		SAE30CF	0.8	0.8
Fuel tank	Diesel fuel		70	—
Cooling system	Water	Nonfreezing fluid addition	6.3	—

- A specified oil quantity is defined as a total quantity of oil including that for unit piping, and a replacement oil quantity is defined as a quantity of oil to be replaced at inspection and maintenance.
- Always use SAE10W-CD, SAE10W-30CD, or SAE10W-40CD to start the engine with temperature at 0°C or below despite rise in diurnal temperature.
- Be sure to use our recommended abrasion-resistant hydraulic oil for the hydraulic oil system. ISO VG32 is used when the product was shipped.
- For adjustment of antifreeze concentrations in coolant with temperature at -10°C or below, see “INSPECTION AND MAINTENANCE 9.10 EVERY 1000 HOURS MAINTENANCE [1] CLEANING ENGINE COOLING SYSTEM”.

https://truckmanualshub.com/

7. ACCESSORY TOOLS AND STANDARD TIGHTENING TORQUE

7.1 LIST OF STANDARD TIGHTENING TORQUE

⚠ CAUTION

Please note that if you use other than the specified tightening torque, machine failure or malfunction might occur due to the damage or loosening of the connector.

Torque the metric bolts and nuts with no specific indication to the values shown in this table.
Adequate tightening torque is determined with respect to a width across flat **(b)** of a bolt or nut.

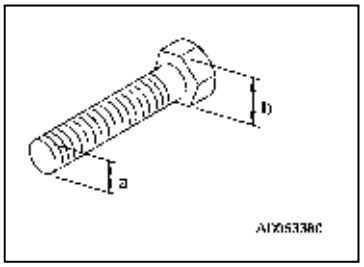

[Table 1]

Nominal size **a** (mm)	Width across flat **b** (mm)	**[1] Bolt marked with "8.8" (strength classification) on its head**		**[2] Bolt marked with "10.9" (strength classification) on its head**	
		Tightening torque {N•m (kgf•m)}		Tightening torque {N•m (kgf•m)}	
		Target value	Tolerance	Target value	Tolerance
6	10	7.8 (0.80)	6.8–9.0 (0.70–0.92)	11.0 (1.1)	9.4–12.7 (0.93–1.26)
8	13	19.0 (1.95)	16.5–21.9 (1.70–2.24)	27.0 (2.7)	23.0–31.1 (2.3–3.10)
10	17	37.5 (3.85)	32.6–43.1 (3.35–4.43)	53.0 (5.4)	45.0–61.0 (4.6–6.21)
12	19	65.5 (6.70)	57.0–75.3 (5.85–7.70)	93.0 (9.5)	79.0–107 (8.10–10.9)
14	22	104 (10.6)	90.4–120 (9.2–12.2)	148 (15.1)	126–170 (12.8–17.4)
16	24	163 (16.6)	142–187 (14.4–19.1)	231 (23.5)	196–266 (20.0–27.0)
18	27	224 (22.8)	195–258 (19.8–26.2)	317 (32.3)	269–365 (27.5–37.1)
20	30	318 (32.4)	277–366 (28.2–37.3)	450 (45.9)	383–518 (39.0–52.8)
22	32	432 (44.0)	376–497 (38.3–50.6)	612 (62.4)	520–704 (53.0–71.8)
24	36	549 (56.0)	477–631 (48.7–64.4)	778 (79.3)	661–895 (67.4–91.2)
27	41	804 (81.9)	699–925 (71.2–94.2)	1130 (116)	961–1300 (98.6–133)
30	46	1090 (111)	948–1250 (96.5–128)	1540 (158)	1310–1770 (134–182)
33	50	1485 (151)	1290–1710 (131–174)	2100 (214)	1790–2410 (182–246)
36	55	1910 (194)	1660–2200 (167–223)	2700 (275)	2300–3100 (234–316)

[Table 2]

Nominal size **a** (mm)	Width across flat **b** (mm)	**[3] Bolt marked with "12.9" (strength classification) on its head**		**[4] Any other bolts**	
		Tightening torque {N•m (kgf•m)}		Tightening torque {N•m (kgf•m)}	
		Target value	Tolerance	Target value	Tolerance
6	10	13.0 (1.30)	11.1–15.0 (1.11–1.50)	3.0 (0.30)	2.6–3.5 (0.26–0.35)
8	13	31.5 (3.20)	26.8–36.2 (2.72–3.70)	7.5 (0.75)	6.5–8.6 (0.65–0.85)
10	17	62.5 (6.40)	53.1–71.9 (5.44–7.35)	14.5 (1.45)	12.6–16.7 (1.25–1.65)
12	19	109 (11.1)	92.7–125 (9.44–12.8)	25.0 (2.55)	21.7–28.8 (2.20–2.95)
14	22	174 (17.7)	148–200 (15.0–20.4)	40.0 (4.10)	34.8–46.0 (3.55–4.70)
16	24	271 (27.7)	230–312 (23.5–31.9)	62.5 (6.40)	54.3–71.9 (5.55–7.35)
18	27	373 (38.1)	317–429 (32.4–43.8)	86.0 (8.75)	74.8–98.9 (7.60–10.0)
20	30	529 (54.0)	450–608 (45.9–62.1)	122 (12.4)	106–140 (10.8–14.3)
22	32	720 (73.4)	612–828 (62.4–84.4)	166 (16.9)	144–191 (14.7–19.4)
24	36	915 (93.3)	778–1050 (79.3–107)	211 (21.5)	183–243 (18.7–24.7)
27	41	1340 (136)	1140–1540 (116–156)	309 (31.4)	269–355 (27.3–36.1)
30	46	1820 (185)	1550–2090 (157–213)	419 (42.6)	364–482 (37.0–49.0)
33	50	2470 (252)	2100–2840 (214–290)	570 (58.0)	495–656 (50.4–66.7)
36	55	3180 (324)	2700–3660 (275–373)	732 (74.5)	636–842 (64.8–85.7)

7.2 LIST OF HOSE TIGHTENING TORQUE

Nominal number	Width across flats **a** (mm)	Tightening torque {N•m (kgf•m)}	
		Target value	Tolerance
02	19	44 (4.5)	35–54 (3.5–5.5)
03	22	74 (7.5)	54–93 (5.5–9.5)
	24	78 (8.0)	59–98 (6.0–10.0)
04	27	103 (10.5)	84–132 (8.5–13.5)
05	32	157 (16.0)	128–186 (13.0–19.0)
06	36	216 (22.0)	177–245 (18.0–25.0)

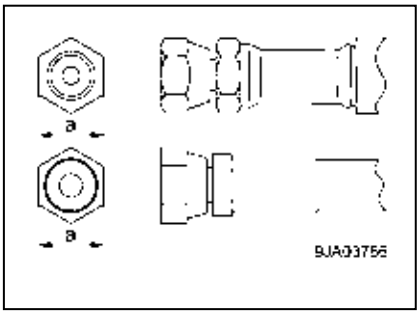

https://truckmanualshub.com/

8. INSPECTION AND MAINTENANCE LIST

Inspection and maintenance items	Page
9.1 PRE-OPERATION INSPECTION	260
9.1.1 INSPECTION BEFORE STARTING ENGINE (PATROL)	260
[1] INSPECTION AROUND CRANE	261
[2] INSPECTION OF WIRE ROPE	261
[3] INSPECTION OF HOOK BLOCK	261
[4] INSPECTION AROUND OUTRIGGER	261
[5] INSPECTION AROUND SAFE RUBBER TRACK	262
[6] INSPECTION AROUND CARRIER	262
[7] INSPECTION AROUND ENGINE	262
[8] INSPECTION AROUND CARRIER AND CRANE	262
9.1.2 INSPECTION BEFORE STARTING ENGINE	263
[1] CHECKING/REFILLING ENGINE COOLANT	263
[2] CHECKING OIL LEVEL AND REFILLING OIL IN ENGINE OIL PAN	264
[3] CHECKING FUEL LEVEL AND REFILLING IN FUEL TANK	265
[4] CHECKING/CLEANING FUEL PRE-FILTER	266
[5] CHECKING OIL LEVEL AND REFILLING OIL IN HYDRAULIC OIL TANK	267
[6] CHECKING OIL LEVEL AND REFILLING OIL IN SLEWING REDUCTION GEAR CASE	268
[7] CHECKING/REFILLING OIL IN TRAVELLING MOTOR REDUCTION GEAR CASE	269
[8] INSPECTING/CLEANING OF RADIATOR AND OIL COOLER FINS	270
[9] INSPECTING/REFILLING OF BATTERY ELECTROLYTE LEVEL	271
[10] CHECKING HORN FOR OPERATION	272
[11] CHECKING HEADLIGHTS FOR OPERATION	272
[12] INSPECTION OF FUSE	273
[13] INSPECTION OF OUTRIGGER DISPLAY	273
[14] ADJUSTING OPERATOR SEAT	274
9.1.3 INSPECTION BEFORE STARTING ENGINE (RADIO CONTROL)	275
[1] CHECKING PRIOR TO TURNING ON THE TRANSMITTER	275
[2] CHECKING AFTER TURNING ON THE TRANSMITTER	276
[3] CHECKING OF RECEIVER	277
9.1.4 INSPECTION AFTER STARTING ENGINE	278
[1] INSPECTION OF OUTRIGGER SAFETY EQUIPMENT OPERATION	278
[2] CHECKING OUTRIGGER OPERATION	281
[3] CHECKING CRANE OPERATIONS	282
[4] INSPECTION OF OVER HOIST DETECTOR	283
[5] INSPECTION OF MOMENT LIMITER	283
[6] INSPECTION OF OUTRIGGER EXTENSION POSITION	284
[7] CHECKING ENGINE EXHAUST GAS COLOUR, NOISE AND VIBRATION	284
9.1.5 INSPECTION OF ENGINE START AND STOP OPERATION (RADIO CONTROL)	285
[1] INSPECTION OF ENGINE START OPERATION	285
[2] INSPECTION OF ENGINE STOP OPERATION	285
[3] INSPECTION OF OUTRIGGER MODE OPERATION	286

[4] INSPECTION OF CRANE MODE OPERATION	287
9.2 IRREGULAR MAINTENANCE	289
[1] INSPECTION/ADJUSTMENT OF RUBBER TRACK TENSION	289
[2] INSPECTION/ADJUSTMENT OF RUBBER TRACK SHOE BOLT	290
[3] REPLACEMENT OF WINCH WIRE ROPE	291
[4] INSPECTION/ADJUSTMENT OF BOOM TELESCOPING WIRE ROPE	295
[5] REPLACEMENT OF HYDRAULIC OIL SUCTION FILTER	298
9.3 INITIAL 10 HOUR MAINTENANCE	300
[1] GREASING MACHINE UNITS	300
9.4 INITIAL 50 HOUR MAINTENANCE	300
[1] OIL REPLACEMENT IN HYDRAULIC OIL TANK	300
[2] REPLACEMENT OF HYDRAULIC OIL RETURN FILTER	300
[3] CHECKING/ADJUSTMENT ALTERNATOR BELT TENSION	300
9.5 INITIAL 250 HOURS MAINTENANCE	300
[1] OIL REPLACEMENT IN SLEWING REDUCTION GEAR CASE	300
[2] OIL REPLACEMENT OIL IN WINCH REDUCTION GEAR CASE	300
[3] OIL REPLACEMENT OIL IN TRAVELLING MOTOR REDUCTION GEAR CASE	300
9.6 EVERY 50 HOURS MAINTENANCE	301
[1] DRAINING OF CONTAMINANT WATER/DEPOSITS IN FUEL TANK	301
[2] DRAINING OF CONTAMINANT WATER/DEPOSITS IN FUEL PRE-FILTER	302
[3] GREASING OF MACHINE UNITS	303
9.7 EVERY 100 HOURS MAINTENANCE	305
[1] INSPECTING/REFILLING OF OIL LEVEL IN SLEWING REDUCTION GEAR CASE	305
9.8 EVERY 250 HOURS MAINTENANCE	306
[1] INSPECTION/CLEANING OF AIR CLEANER	306
[2] INSPECTION/ADJUSTMENT OF ALTERNATOR BELT TENSION	308
[3] CHECKING/REFILLING OIL IN TRAVELLING MOTOR REDUCTION GEAR CASE	309
9.9 EVERY 500 HOURS MAINTENANCE	310
[1] REPLACEMENT ENGINE OIL AND ENGINE OIL FILTER CARTRIDGE	310
[2] REPLACEMENT OF AIR CLEANER	312
[3] REPLACEMENT OF FUEL PRE-FILTER	313
[4] REPLACEMENT OF FUEL FILTER CARTRIDGE	314
[5] REPLACEMENT HYDRAULIC OIL RETURN FILTER CARTRIDGE	315
[6] REPLACEMENT OF HYDRAULIC OIL TANK AIR FILTER	316
[7] INSPECTION OF SLEWING RING MOUNTING BOLT	317
9.10 EVERY 1000 HOURS MAINTENANCE	318
[1] CLEANING OF ENGINE COOLING SYSTEM	318
[2] OIL REPLACEMENT IN HYDRAULIC OIL TANK	321
[3] OIL REPLACEMENT IN SLEWING REDUCTION GEAR CASE	323
[4] OIL REPLACEMENT IN WINCH REDUCTION GEAR CASE	324
[5] OIL REPLACEMENT IN TRAVELLING MOTOR REDUCTION GEAR CASE	325
[6] INSPECTION/ADJUSTMENT ENGINE VALVE CLEARANCE	325

https://truckmanualshub.com/

Inspection and maintenance items	Page
9.11 EVERY 1500 HOURS MAINTENANCE	326
[1] INSPECTION/CLEANING/TESTING OF FUEL INJECTOR	326
[2] INSPECTION OF CRANKCASE BREATHER EQUIPMENT	326
9.12 EVERY 2000 HOURS MAINTENANCE	326
[1] INSPECTION/REPAIR OF VALVE SEAT	326
[2] CHECKING ALTERNATOR AND STARTER	326
9.13 EVERY 3000 HOURS MAINTENANCE	327
[1] INSPECTION OF ECU AND RELATED SENSOR AND ACTUATOR	327
[2] INSPECTION/CLEANING/TESTING OF EGR VALVE	327
[3] CLEANING OF EGR COOLER (CLEANING OF WATER SIDE/EXHAUST PASSAGE BLOWER)	327
[4] INSPECTION OF DPF DOC	327
[5] INSPECTION OF INLET THROTTLE VALVE OPERATION	327
[6] INSPECTION OF EXHAUST THROTTLE VALVE OPERATION	327
[7] INSPECTION AND CLEANING OF INJECTOR	327

https://truckmanualshub.com/

9. MAINTENANCE PROCEDURES

9.1 PRE-OPERATION INSPECTION

9.1.1 INSPECTION BEFORE STARTING ENGINE (PATROL)

⚠ WARNING

- **This machine is equipped with a diesel engine.**
  If you smell fuel around the engine, it may be leaking. Carefully check for cracks on the fuel hose or fuel hose connections.
- **Build up of combustibles and oil leakage around the hot engine section such as engine and muffler and around the battery can cause fire in the machine.**
  Carefully check around these areas. If there is any abnormality, be sure to fix it or contact us or our sales service agency.

Conduct patrol check of the followings in this section before starting the work every day.

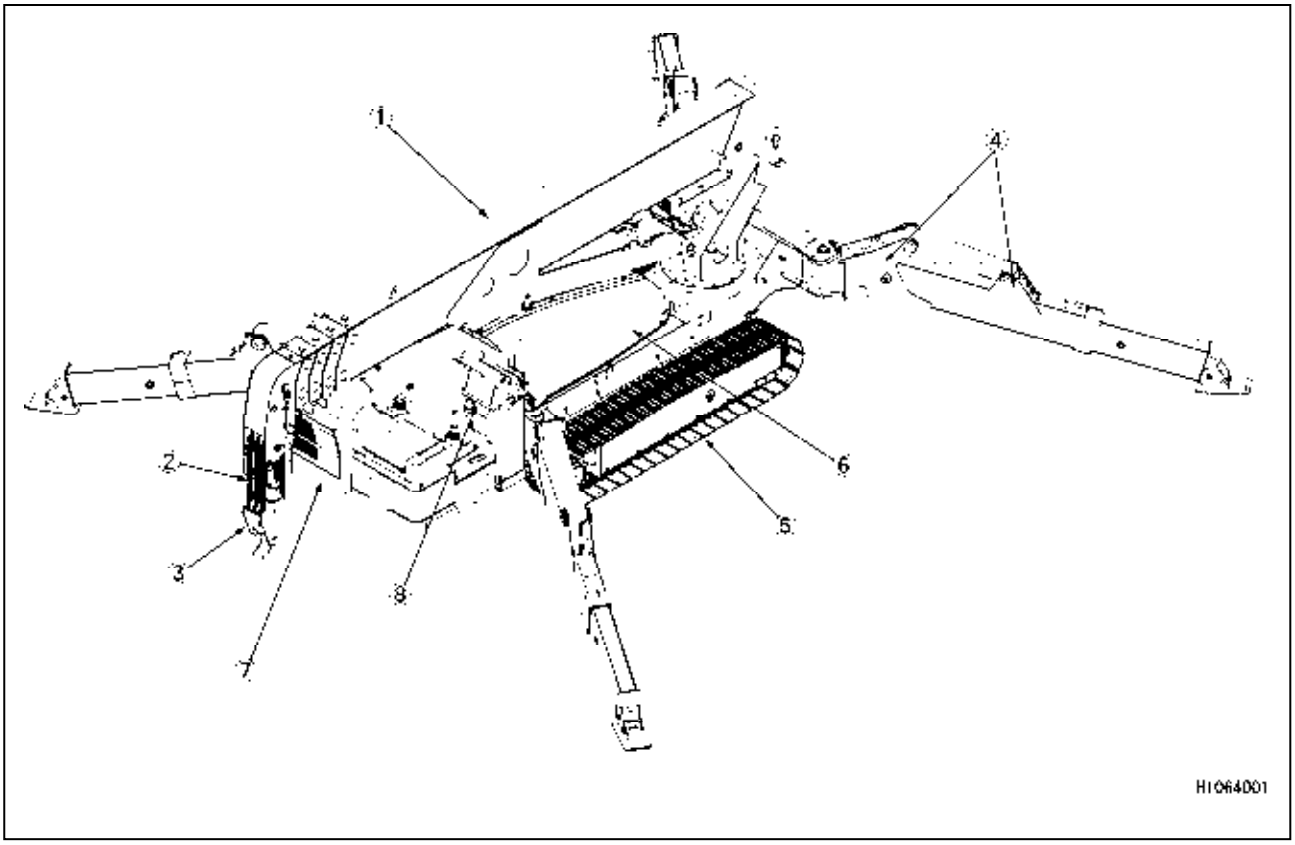

(1) Around crane
(2) Wire rope
(3) Hook block
(4) Outrigger
(5) Around safe rubber track
(6) Carrier
(7) Engine
(8) Carrier and crane control

https://truckmanualshub.com/

[1] INSPECTION AROUND CRANE

- Look around and under the boom or post for oil leak. Especially, check the bottom of winch motor around the derricking cylinder or the post. Repair if any abnormality is found.
- Check for cracks or significant deformation or dirt in each post. Check for loose, lost or damaged bolts, nuts, pins or pipe connectors. Especially, check for loose mounting bolts of the post, slewing ring and reducing machine of slewing equipment. Repair if any abnormality is found.
- Check for any cracks, significant deformation or dirt in each boom. Check for loose, lost or damaged bolts, nuts, pins or pipe connectors. Especially, check the boom support pin or derricking cylinder support pin for any significant wears or damages. Repair if any abnormality is found.
- Check the wire ropes for over hoist weight in the boom tip of the hoist alarm equipment for significant damages or deformation and if any abnormality is found, replace it. Repair if any abnormality is found.
- Check for slack wiring, loose connections or any trace of burning. Repair if any abnormality is found.

[2] INSPECTION OF WIRE ROPE

★ See “OPERATION 5. HANDLING WIRE ROPE” for details on wire rope.

- Check wire ropes for damage, deformation, wear, twist, kink and corrosion. Replace if any abnormality is found.
- Check the connection of wire rope ends. Replace if any loose wire rope ends are found.
- Check for any irregular winding of wire rope (winch drum part). If you find irregular winding, rewind it.

[3] INSPECTION OF HOOK BLOCK

- Check whether the latch of hook block (1) function properly. Repair if any abnormality is found.
- Rotate the hook to see if it rotates smoothly and if any noise comes out from the trunnion part.
  Repair if any abnormality is found.
- Check for any cracks or significant deformation on hooks.
  Repair if any abnormality is found.
- Replace the hook when the dimension **a** between punch marka imprinted on the hook becomes 122.4 mm or greater or the hook bottom dimension **b** becomes less than 70.8 mm.

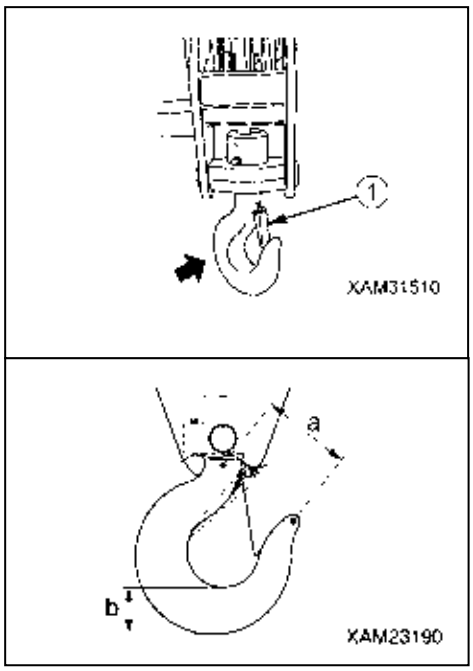

[4] INSPECTION AROUND OUTRIGGER

- Look around the bottom of outriggers for oil leak. Especially, check the bottom of outrigger cylinder carefully. Repair if any abnormality is found.
- Check for any cracks or significant deformation or dirt in each outrigger rotary, outrigger, tray and outrigger cylinder. Check for loose, lost or damaged bolts, nuts, pins or pipe connectors. Repair if any abnormality is found.

- Check for slack wiring, loose connections or any trace of burning. Repair if any abnormality is found.
- Pull out the position pin of each outrigger and rotate the outrigger rotary to see if it operates smoothly. Repair if any abnormality is found.

[5] INSPECTION AROUND SAFE RUBBER TRACK

Check for any cracks, significant deformation or dirt in frame, rubber track, each roller, idler and sprocket. Check for loose, lost or damaged bolts, nuts or pins.
Repair if any abnormality is found.

[6] INSPECTION AROUND CARRIER

- Look around and under the machine for loose, lost or damaged bolts, nuts, pins or piping connectors. Repair if any abnormality is found.
- Look around and under the machine to see if any oil is leaking. Especially, check the bottom of the hydraulic tank, carrier, crane controls and carrier motor. Repair if any abnormality is found.
- Look around and under the machine for any damage, significant deformation or dirt in lights such as the headlights and working status lamp. Repair if any abnormality is found.
- Look around and under the machine for slack wiring, loose connections or any trace of burning. Repair if any abnormality is found.
- Check for any cracks, significant deformation or dirt in the frame, machinery cover or engine hood. Repair if any abnormality is found.

[7] INSPECTION AROUND ENGINE

- Check for fuel, oil or water leakage from the engine. Repair if any abnormality is found.
- Check for any accumulation or deposits of inflammable items including fallen leaves, wastepaper, dust, oil or grease in high temperature areas such as engine muffler and around batteries. If any accumulation or deposits are found, remove them.
- Check for slack wiring, loose connections or any trace of burning around the starter, alternator or battery. Repair if any abnormality is found.

[8] INSPECTION AROUND CARRIER AND CRANE

- Check whether each operation lever, lock lever and acceleration pedal operates smoothly and it goes back to the neutral position if you release it.
  Repair if any abnormality is found.
- Check the monitor panel for any damage or dirt. Repair if any abnormality is found. Clean as necessary.
- Check whether each switch for the outrigger control panel and monitor operates smoothly.
  Repair if any abnormality is found.
- Check for slack wiring, loose connections or any trace of burning. Repair if any abnormality is found.

https://truckmanualshub.com/

9.1.2 INSPECTION BEFORE STARTING ENGINE

Check the following in this section without starting the engine and before the work every day.

[1] CHECKING/REFILLING ENGINE COOLANT

⚠ WARNING

Do not check or refill the coolant with the radiator cap removed. Always check and refill in the reserve tank. Heated coolant may spout, causing burns.

1. Place the machine on a level surface.
2. See “OPERATION 1.8 RADIATOR COVER” and remove the radiator cover.
3. Check the coolant level in the reserve tank (1) to see if it is between “LOW” and “FULL”.

   [When the coolant level is lower than the “LOW” level]

   Use the following procedure to refill tap water.

   (1) Remove the cap (2) of the reserve tank (1) and fill the water from the filler opening to the level “FULL”.

   (2) After refilling coolant, securely re-install the cap (2) of the reserve tank (1).

   [When the reserve tank is empty]

   Follow the steps below.

   (1) See “OPERATION 1.10 ENGINE COVER” and remove the engine cover.

   (2) Remove the radiator cap (3) and check the coolant level in the radiator.

   (3) If the coolant level in the radiator was low, check the radiator, radiator hose, and engine for water leakage.

   (4) Fill coolant from the radiator filler opening and securely install the radiator cap (3).

   (5) Remove the cap (2) of the reserve tank (1) and fill the water from the filler opening to the level “FULL”.

   (6) After refilling coolant, securely re-install the cap (2) of the reserve tank (1).

   (7) See “OPERATION 1.10 ENGINE COVER” and install the engine cover.
4. See “OPERATION 1.8 RADIATOR COVER” and install the radiator cover.

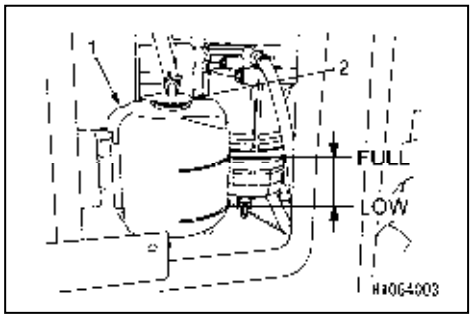

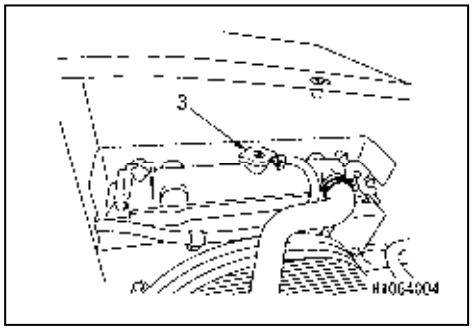

https://truckmanualshub.com/

[2] CHECKING OIL LEVEL AND REFILLING OIL IN ENGINE OIL PAN

⚠ CAUTION

Securely install the oil level gauge and filler cap after checking the oil level and refilling the oil. If the oil level gauge falls during the operation, the hot oil may spout out of the pan, causing burns.

CAUTION

- **See "INSPECTION AND MAINTENANCE 6.1 USE OF LUBRICATING OIL ACCORDING TO TEMPERATURES" for the oil to be used. Using oil other than those specified may shorten the life of the engine. Be sure to refill the specified oil.**
- **Keep the engine oil at an appropriate level.**
  The oil level being too high will result in too much oil consumption and this tends to increase the oil temperature, deteriorating the oil faster. The oil level being too low may burn out the engine.
- **Be careful not to let any foreign substance go into the filler opening when refilling the oil.**

[Checking oil level]

1. Place the machine on a level surface.
2. Open the inspection cover (1) of the engine cover.
3. Pull the oil level gauge **(G)** out and wipe the oil with a disposable cloth.
4. Insert the oil level gauge **(G)** into the gauge guide and pull it out.

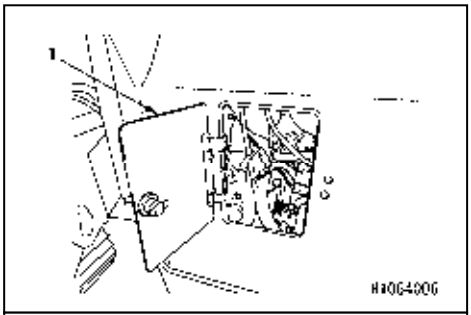

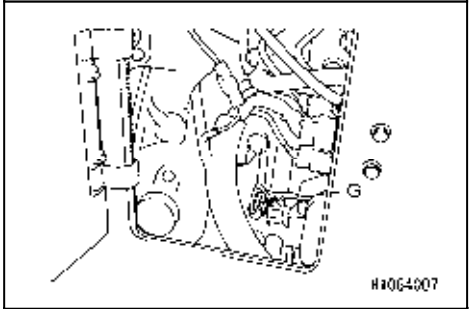

5. If the oil level is between the "**H**" mark and "**L**" mark on the oil level gauge **(G)**, the oil level is normal.
6. If the oil level is lower than the "**L**" mark, refill the engine oil from the filler opening.

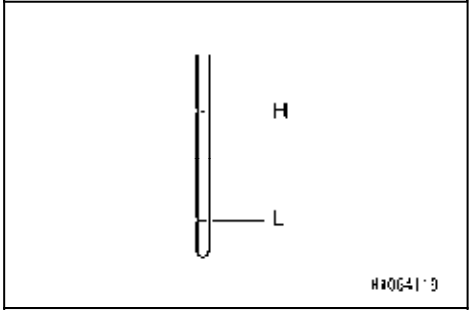

[Refilling oil]

1. See "OPERATION 1.10 ENGINE COVER" and remove the engine cover.
2. Remove the oil filler cap **(F)** and refill the engine oil from the filler opening.

NOTES

Refill the engine oil up to the midpoint between marks "**H**" and "**L**" on the oil level gauge **(G)**.

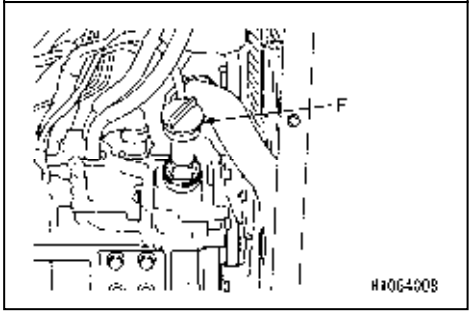

3. Securely re-install the oil level gauge **(G)** and filler cap **(F)** after refilling the oil.
4. See "OPERATION 1.10 ENGINE COVER" and install the engine cover.

https://truckmanualshub.com/

[3] CHECKING FUEL LEVEL AND REFILLING FUEL IN FUEL TANK

⚠ DANGER

- **See “INSPECTION AND MAINTENANCE 6.1 USE OF LUBRICATING OIL ACCORDING TO TEMPERATURES” for the fuel to be used.**
- **Be extremely careful with fire such as cigarettes.**
- **Always stop the engine before refilling fuel. Refilling the fuel when engine is running may cause leaked fuel to draw fire from hot silencer or other substance.**
- **Be careful not to let any foreign substance go into the filler opening when refueling.**
- **Overfilling the fuel results in spillage and is dangerous. Refuel to the level slightly lower than the specified upper limit level.**
  Always wipe away cleanly whenever the fuel spills.
- **Securely close the tank cap after refuelling.**

1. Turn “ON” the starter switch.

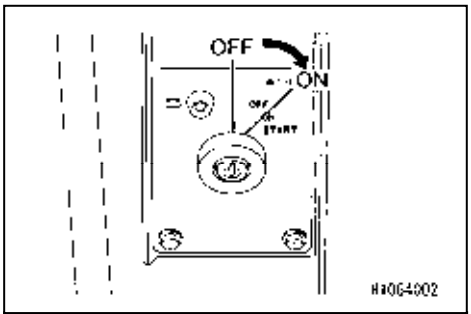

2. Looking at the fuel gauge on the monitor panel, check if the fuel is filled to almost full (around “**F**”).

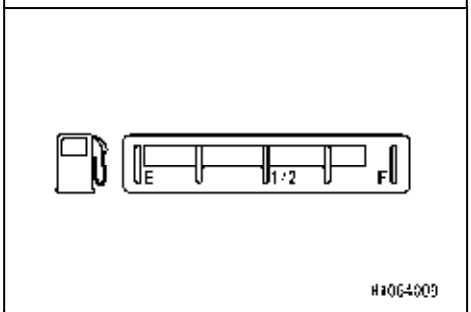

3. If there is not enough fuel left, pull up the lock lever (1) to open the console box R (2).

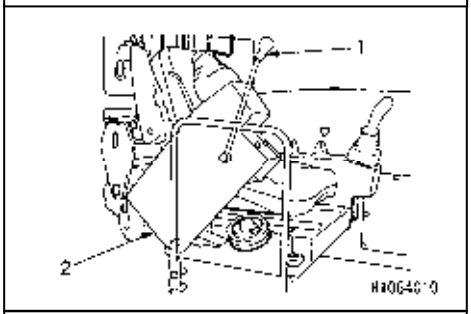

⚠ WARNING

Remember to set the lock bar (3) so that the console box R (2) does not fall while refilling oil. If you do not set the lock bar, your hand may get caught.

4. Remove the tank cap **(F)** and refuel from the filler opening while keeping an eye on the fuel gauge.
5. Securely turn and close the tank cap **(F)** after refilling.

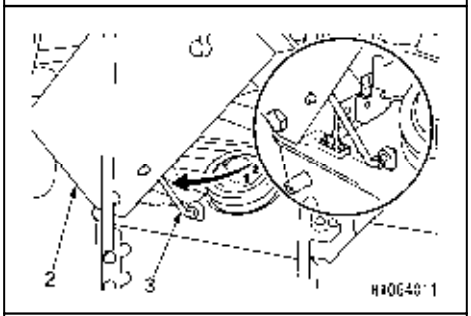

NOTES

Fill the fuel tank to full at the end of the work for the day.

6. When finished, pull down the lock lever (1) and close the console box R (2).

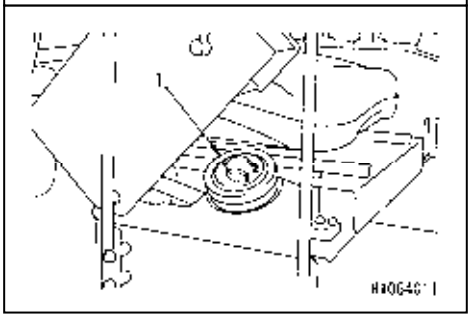

https://truckmanualshub.com/

[4] CHECKING/CLEANING FUEL PRE-FILTER

⚠ WARNING

- **The fuel pre-filter has fuel (diesel fuel) inside. Be extremely careful of fire such as cigarettes when cleaning the fuel pre-filter.**
- **If the fuel spills when the fuel pre-filter is removed, thoroughly wipe it off.**

CAUTION

- **Water or dust accumulated inside the fuel pre-filter will cause engine failure. Check inside the pot and remove any water or dust accumulated inside.**
- **If water accumulates in the fuel pre-filter, it is assumed that water is also mixed in the fuel tank. See "INSPECTION AND MAINTENANCE 9.6 EVERY 50 HOURS MAINTENANCE" to remove the water or dust inside the fuel tank.**

1. Place the machine on a level surface.
2. See "OPERATION 1.8 RADIATOR COVER" and remove the radiator cover.
3. Check the fuel pre-filter (1) for any water or dust that is accumulated inside and verify if the red float (2) in the pot has not come up from the bottom.
   The red float (2) in the fuel pre-filter (1) coming up indicates that the water has mixed in.

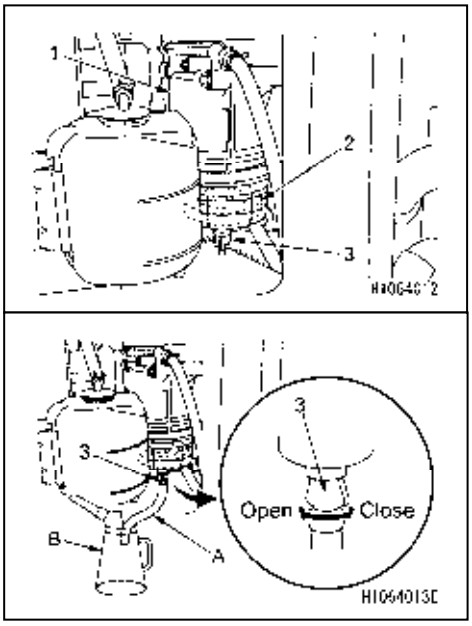

4. If there is water accumulated in the fuel pre-filter (1), remove it using the following procedure.
   (1) Connect a hose **(A)** to the outlet of the valve (3) at the bottom of the fuel pre-filter (1) and then connect it to the container **(B)** collecting the drained fuel.
   (2) Turn the valve at the bottom of the pot (1) to the left to loosen and drain the fuel until the red float (2) inside the fuel pre-filter (1) sinks to the bottom.
   (3) When draining is finished, turn the valve (3) at the bottom of the fuel pre-filter (1) to the right to close.
   (4) Disconnect the hose **(A)** connected to the outlet of the valve (3).
5. See "OPERATION 1.8 RADIATOR COVER" and remove the radiator cover.

https://truckmanualshub.com/

[5] CHECKING OIL LEVEL AND REFILLING OIL IN HYDRAULIC OIL TANK

⚠ WARNING

- **The oil may spout out when the cap of the hydraulic oil tank is removed. Remove the cap to relieve internal pressure by slowly rotating it first.**
- **Do not refill oil exceeding the level gauge (H) (upper limit). When the oil goes beyond this level, it may spout out from the air breather during traveling or crane operation, causing burns.**
- **Be careful not to let any foreign substance go into the filler opening when refilling the oil.**
- **Securely close the tank cap after refilling. If the tank cap falls during the operation, the hot oil may spout out of the pan, causing burns.**

CAUTION

- **See "INSPECTION AND MAINTENANCE 6.1 USE OF LUBRICATING OIL ACCORDING TO TEMPERATURES" for the oil to be used.**
- **Be sure to put the machine in the travelling posture when checking the oil level. Checking the oil level in the working position will cause overfilling since the oil in the cylinders has not returned to the tank.**

1. Place the machine on a level surface.
2. Check the oil level gauge **(G)** in the front side of the operation side cover and ensure that the oil level is between "**H**" and "**L**".
3. If there is not sufficient oil, refill the hydraulic oil according to the following procedure.
   (1) Turn "ON" (release) the override switch.

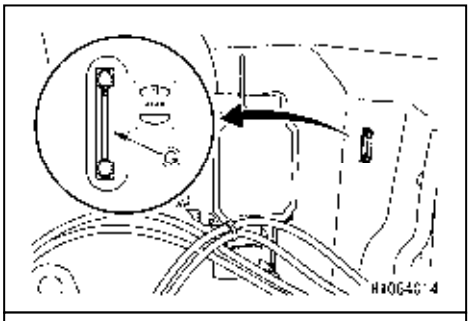

NOTES

When the override switch is turned to the "ON" (release) position, a warning buzzer sounds intermittently.

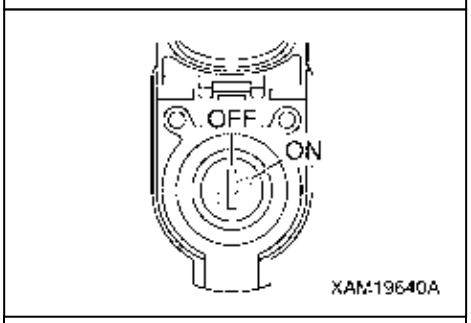

   (2) See "OPERATION 2.19 BOOM DERRICKING OPERATION" and raise the boom to the appropriate height for operation and stop the engine.
   (3) Remove the mounting bolts (2) (2 bolts) and then remove the inspection cover (1).
   (4) Remove the filler cap **(F)** at the top of the hydraulic oil tank.
   (5) Refill the hydraulic oil from the filler opening **(F)** while keeping an eye on the oil level gauge **(G)**.
   (6) Securely close the filler cap **(F)** after refilling.
   (7) Place the cover (1) on the original position and tighten the mounting bolts (2) (2 bolts) securely.

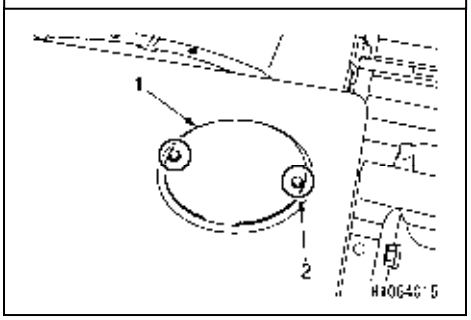

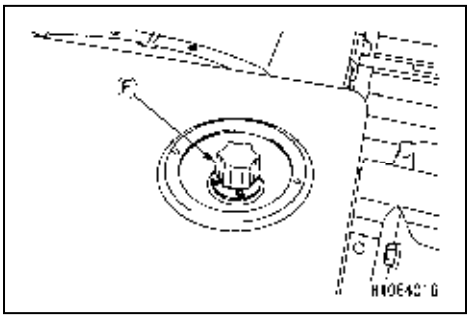

https://truckmanualshub.com/

[6] CHECKING OIL LEVEL AND REFILLING OIL IN SLEWING REDUCTION GEAR CASE

CAUTION

- **See "INSPECTION AND MAINTENANCE 6.1 USE OF LUBRICATING OIL ACCORDING TO TEMPERATURES" for the oil to be used.**
- **Use seal tape, etc. at the thread of the filler plug to stop the oil leak and securely tighten the plug after refilling the oil.**

1. Place the machine on a level surface.
2. Check the sight gauge **(G)** for checking the oil level of the slewing reduction gear case by entering below the machine. Check that the oil is filled up to the center point of the sight gauge **(G)**.

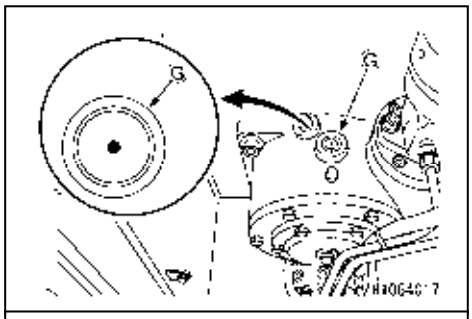

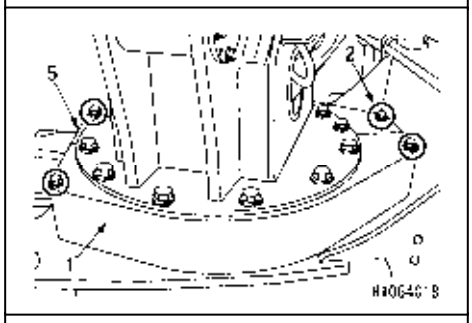

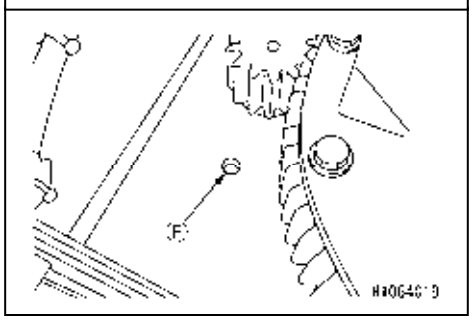

3. If there is not sufficient oil, refill the gear oil according to the following procedure.
   (1) See "OPERATION 2.14 OUTRIGGER SETTING OPERATION" to rotate the outrigger rotary of "outrigger **1** and outrigger **4**" to outward.
   (2) Remove the mounting bolts (2) (4 bolts) and then remove covers (3) and (5) on the post.
   (3) Remove the filler plug **(F)** on the rear part of the post and refill the gear oil from the filler opening.

NOTES

Refill the oil up to the center point of the sight gauge **(G)**.

   (4) Securely tighten the filler plug **(F)** after refilling the oil.
   (5) Install the covers on the post.
   (6) See "OPERATION 2.24 OUTRIGGER STOWAGE OPERATION" and store the outrigger rotary of "outrigger **1** and outrigger **4**".

https://truckmanualshub.com/

[7] CHECKING/REFILLING OIL IN TRAVELLING MOTOR REDUCTION GEAR CASE

CAUTION

- **See “INSPECTION AND MAINTENANCE 6.1 USE OF LUBRICATING OIL ACCORDING TO TEMPERATURES” for the oil to be used.**
- **Use seal tape, etc. at the thread of the oil level check plug to stop the oil leak and securely tighten the plug after checking/refilling the oil.**

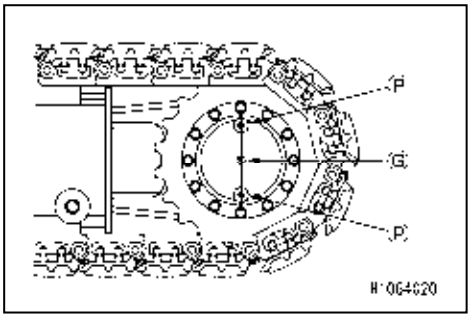

1. 1. Move the machine back and forth so that one of two drain plugs **(P)** of the traveling motor reduction gear case will come directly underneath.
2. Remove the oil level check plug **(G)** of the traveling motor reduction gear case to check if the oil comes out of the plug hole.
3. If the oil level is low, remove the upper drain plug **(P)** and refill the gear oil from the plug hole.

NOTES

Pour in the gear oil until the oil comes out of the hole of the oil level check plug **(G)**.

4. After checking/refilling the oil, install the oil level check plug **(G)** and upper drain plug **(P)** and securely tighten them.

https://truckmanualshub.com/

[8] INSPECTING/CLEANING OF RADIATOR AND OIL COOLER FINS

⚠ WARNING

Dust may blow in all directions when compressed air is used. Always wear goggles and mask.

CAUTION

- **To prevent damage on the fins during the use of the compressed air, keep the pressure of the compressed air to 0.19 MPa (1.9 kg/cm² and apply it away from the fins.) Damage on the fins will cause water leakage or overheating.**
- **At a dusty worksite, check the fins every day and clean as needed.**

1. Place the machine on a level surface.
2. Remove the mounting bolts (2) (4 bolts) and then remove the radiator cover (1).

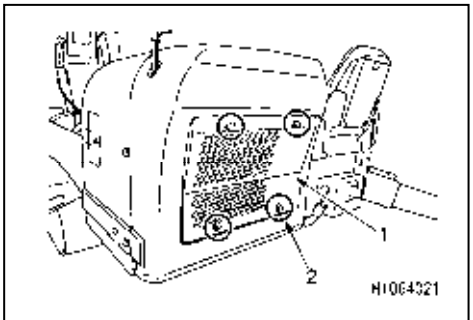

3. Apply the compressed air (less than 0.19 MPa {1.9 kg/cm²}) to the oil cooler (3) and radiator (4) to remove the mud and dust clogged in the fins.
4. After cleaning, place the radiator cover (1) on the original position and tighten the mounting bolts (2) (4 bolts) securely.

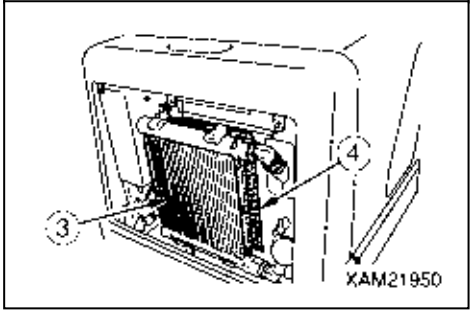

https://truckmanualshub.com/

[9] INSPECTING/REFILLING OF BATTERY ELECTROLYTE LEVEL

⚠ WARNING

- **The battery produces combustible gas and can be explosive. Do not put fire close to the battery.**
- **The battery fluid is a hazardous substance. Avoid contact with eyes or skin. Should it come into contact with eyes or skin, wash the affected area with plenty of water and consult a physician.**
- **Do not refill the electrolyte above the “Maximum level line”.**
  The fluid leakage can cause fire.

CAUTION

- **Wipe the top of the battery with a moist cloth to keep it clean.**
- **Distilled water should be refilled before starting the work next day to avoid freezing.**

[Electrolyte level inspection]

1. Place the machine on a level surface.
2. Open the inspection cover (1).
3. Verify the electrolyte you can see through the side of the battery case from the inspection hole of the machinery cover.

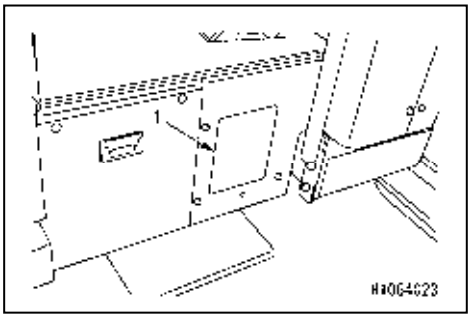

NOTES

Wipe the battery case clean if it is dirty.

4. Verify that the surface of the electrolyte is at the maximum level line (1).
5. Close the inspection cover after checking.

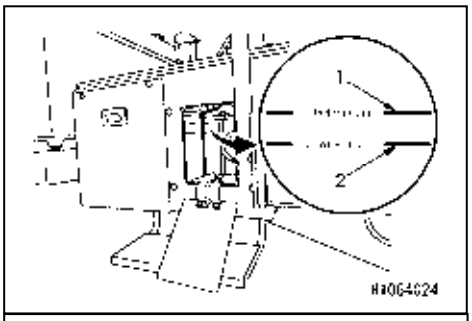

[Refilling electrolyte]

If the surface of the electrolyte is not at the maximum level (1), refill distilled water following the procedure below.

1. Remove the floor mat (5) of the driver’s seat.
2. Remove the mounting bolts (4) (4 bolts) and then remove the battery cover (3).

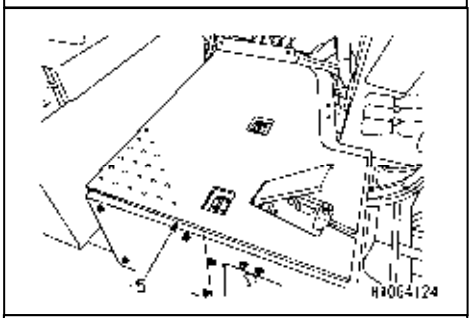

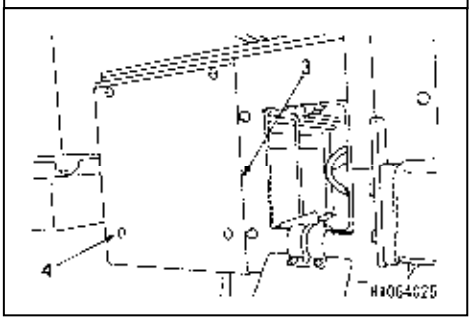

3. Remove the 2 attachment bolts (6) and remove the driver seat floor cover (7).
4. Remove all the battery caps (8) (6 caps) and refill distilled water up to the maximum level (1).

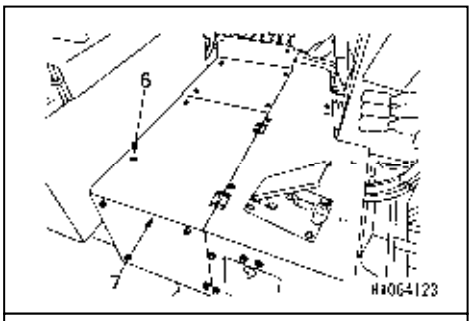

NOTES
If electrolyte is spilled, pour diluted sulfuric acid.

5. Check the breather hole of the battery cap (8) and clean if it is clogged before tightening the cap securely.
6. After refilling the battery electrolyte, close the driver seat floor cover (7), set the 2 attachment bolts (6) and battery cover (3) back into their original positions, and securely tighten the 4 attachment bolts (4).

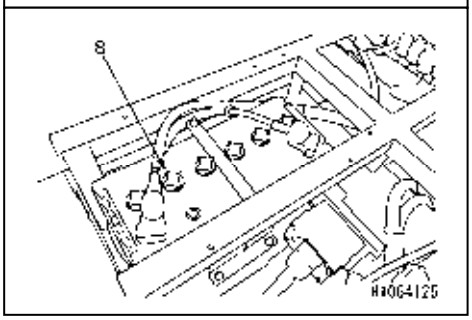

[10] CHECKING HORN FOR OPERATION

1. Turn “ON” the starter switch and conduct the following inspection.

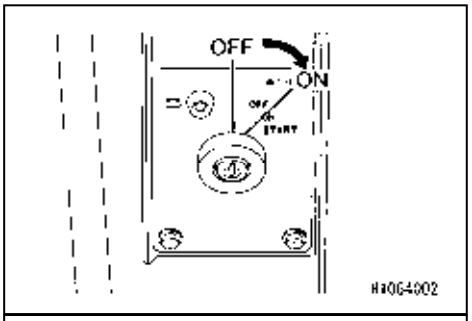

2. Press the horn switch to verify that the horn sounds.
   If not, the horn may be faulty or the circuit may be open. Ask us or our sales service agency for repair.

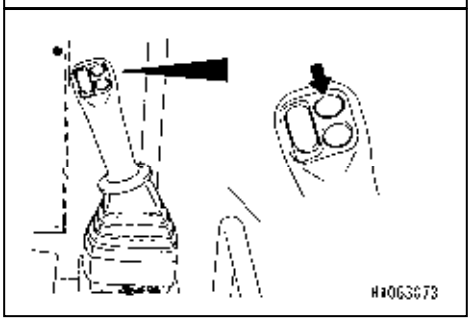

[11] CHECKING HEADLIGHTS FOR OPERATION

1. Turn “ON” the starter switch and conduct the following inspection.

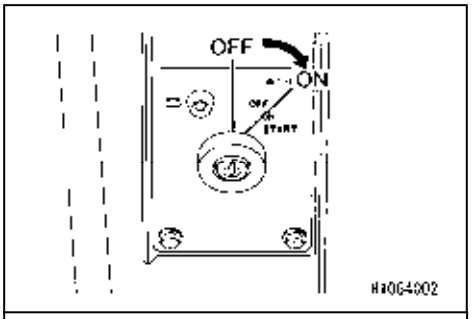

2. Press the light switch and check that the indicator of monitor and the headlight on the front of the machine turns on.
   If it does not, a blown bulb or wiring failure is likely. Contact us or our sales service agency for repair.

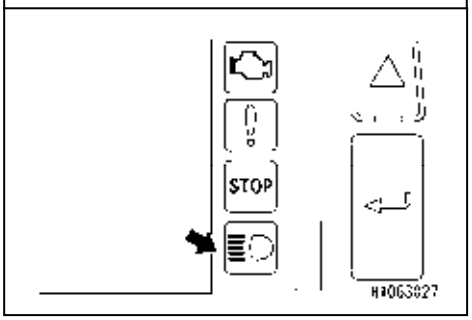

[12] INSPECTION OF FUSE

⚠ WARNING

If fuses are blown frequently or if you find the trace of a short circuit created in the electrical wiring, be sure to find the cause and fix the problem.

1. Remove the mounting bolts (1) (5 bolts) and then remove the inspection cover (2) of the operation side cover.
2. Check the fuse for damage and meltdown and if the fuse of the specified capacity is being used.
   If the fuse has melted down or the trace of an open/short circuit is found in the electrical wiring, ask us or our sales service agency for repair.

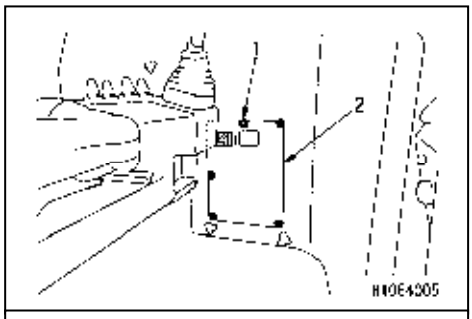

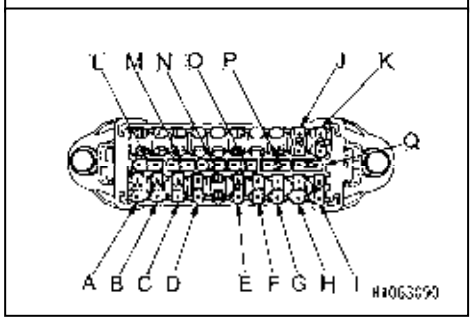

[13] INSPECTION OF OUTRIGGER DISPLAY

1. Turn “ON” the starter switch.

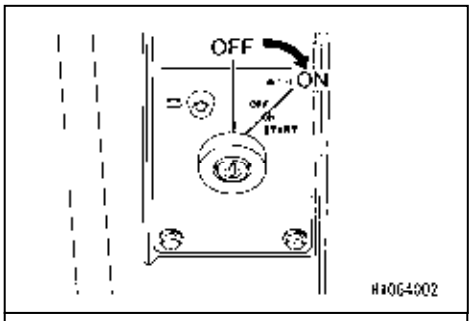

2. Press the mode switch (1) of the monitor or touch the screen to enter the “outrigger mode”.

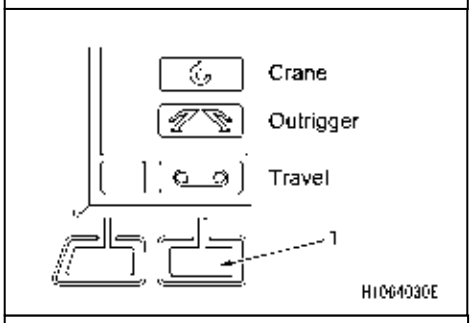

3. Check to see that each lamp turns on and off in the order described below.
   (1) All of: crane stowage position lamp (1), extension lamp (2) and contact lamp (3) turn on, then turn off.
   (2) The crane stowage position lamp (1) turns on (green), and the extension lamp (2) and the contact lamp (3) turn on in red at the same time.

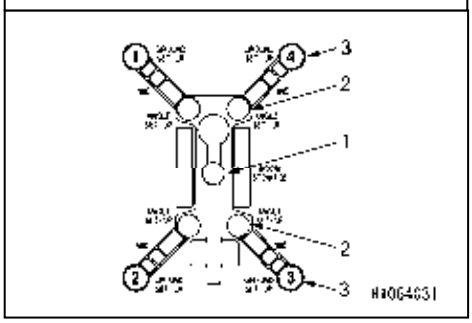

NOTES
If any of these lamps do not turn on, it is likely that the limit switch, etc. is broken. Ask us or our sales service agency for repair.

4. Check to see that the red rotating light of the work status lamp turns on.

https://truckmanualshub.com/

[14] ADJUSTING OPERATOR SEAT

⚠ WARNING

- **Adjust the operator seat before operation or when the operator changes.**
- **Adjust the seat so that the accelerator pedal can be fully stepped in with the operator's back fitting to the back of operator's seat.**

[Adjusting seat back and forth]

1. Set the seat to the appropriate position while lifting up the slide adjustment lever (1).
2. Release your hand from the lever (1).

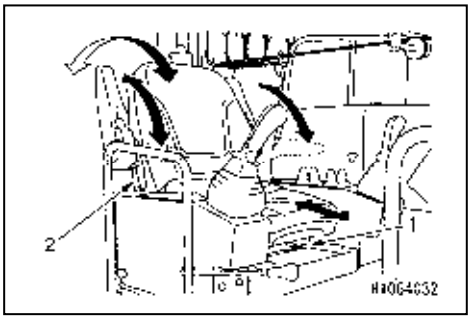

NOTES

The fine tuning range by back/forth slide is 160 mm and can be adjustable.

[Adjusting reclining]

CAUTION

When you recline the back seat, adjust the angle while paying attention to the back space.

1. Set the back seat to the appropriate angle while pressing forward the reclining adjusting lever (2).
2. Release your hand from the reclining adjusting lever (1).

https://truckmanualshub.com/

9.1.3 INSPECTION BEFORE STARTING ENGINE (RADIO CONTROL)

⚠ WARNING

Check the following in this section before starting the work every day.
Omitting these inspections may cause serious bodily accidents.
See "OPERATION 2.1.2 CHECKING BEFORE STARTING ENGINE" to inspect the main body of the machine also.
If there is any abnormality, be sure to fix it or contact us or our sales service agency.

[1] CHECKING PRIOR TO TURNING ON THE TRANSMITTER

⚠ WARNING

When checking before turning ON the transmitter, ensure that the engine starter switch is in the "OFF" position.
Otherwise, the engine may unexpectedly start during inspection of the transmitter and cause serious bodily injury.

Perform the following inspections while the transmitter power is "OFF":

- Check the control levers, operation switches and exterior for oily dirt or other contaminants.
  Scrub away any dirt with a clean cloth.
- Also check for small particles such as stones, grit or sand that may have been caught in small gaps near the control levers and/or operation switches.
  If found, remove such particles completely. In the event where offending particles are caught in the small openings near the control levers and/or operation switches, they may disturb correct operations, causing unexpected movement of the Crane and resulting in a serious accident.
- Check for any cracks and/or damage to the transmitter enclosure, or impairment to the rubber cover of the control levers and operation switches.
  If cracks or damage is found, repair immediately.
  Cracks or damage to the transmitter may allow water to enter inside, causing a malfunction and creating a serious hazard.
- Make sure the control levers and operation switches all operate smoothly and properly, and return to the original position (neutral position) automatically when you release your finger.
  If the control levers or operation switches show any sign of a fault or malfunction, repair immediately.
  Failure to repair faults may cause unexpected movement of the Crane which result in a serious hazard.
- Open the battery cover and check that the battery is installed in the correct direction.
  If the battery is not installed correctly, install it again. If it is not installed correctly, internal devices of the transmitter may malfunction, causing the Crane to perform unexpected operation and resulting in a serious accident.
- Check if there is any foreign matter such as a metal or paper in the electrode of the battery.
  If found, remove such particles completely. Otherwise, an electric shock or fire may be caused.

https://truckmanualshub.com/

[2] CHECKING AFTER TURNING ON THE TRANSMITTER

Perform the following inspections while the transmitter power is “ON”:

[CHECKING DISPLAY AFTER TURNING THE POWER ON]

Press the remote controller power ON/OFF switch (3) twice when the control lever of the transmitter is in the neutral position. Check that the power is turned on and the display is functioning properly.

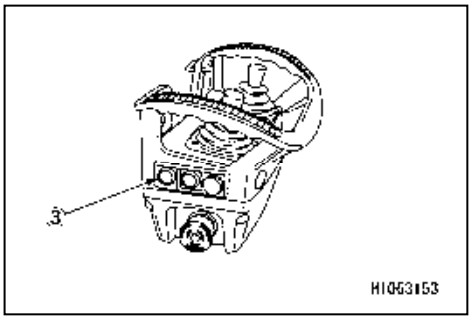

[3] CHECKING OF RECEIVER

Perform the following inspections.

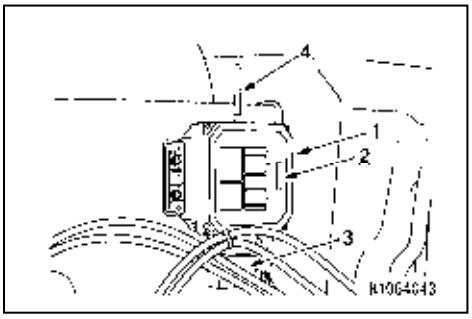

- Check the control box (1), monitor LED (2), connector (3) and antenna (4) for oily dirt.
  Scrub away any dirt with a clean cloth.

- Check the control box (1), monitor LED (2), connector (3) and antenna (4) for cracks, damage, looseness, etc.
  If cracks, damage or looseness is found, repair immediately.
  Cracks or damage to the Receiver may allow water to enter inside, causing a malfunction and creating a serious hazard.

- Operate “ON/OFF” of the main starter switch and check that the power of the Receiver is turned ON or OFF.
  LED ON (yellow) on the uppermost part of the monitor LED (2) comes ON.

- When pressing theremote controller power ON/OFF switch (3) of the transmitter twice and operating the power to the “ON” position, check that two locations of the monitor LED (2) shown in the figure below come ON.

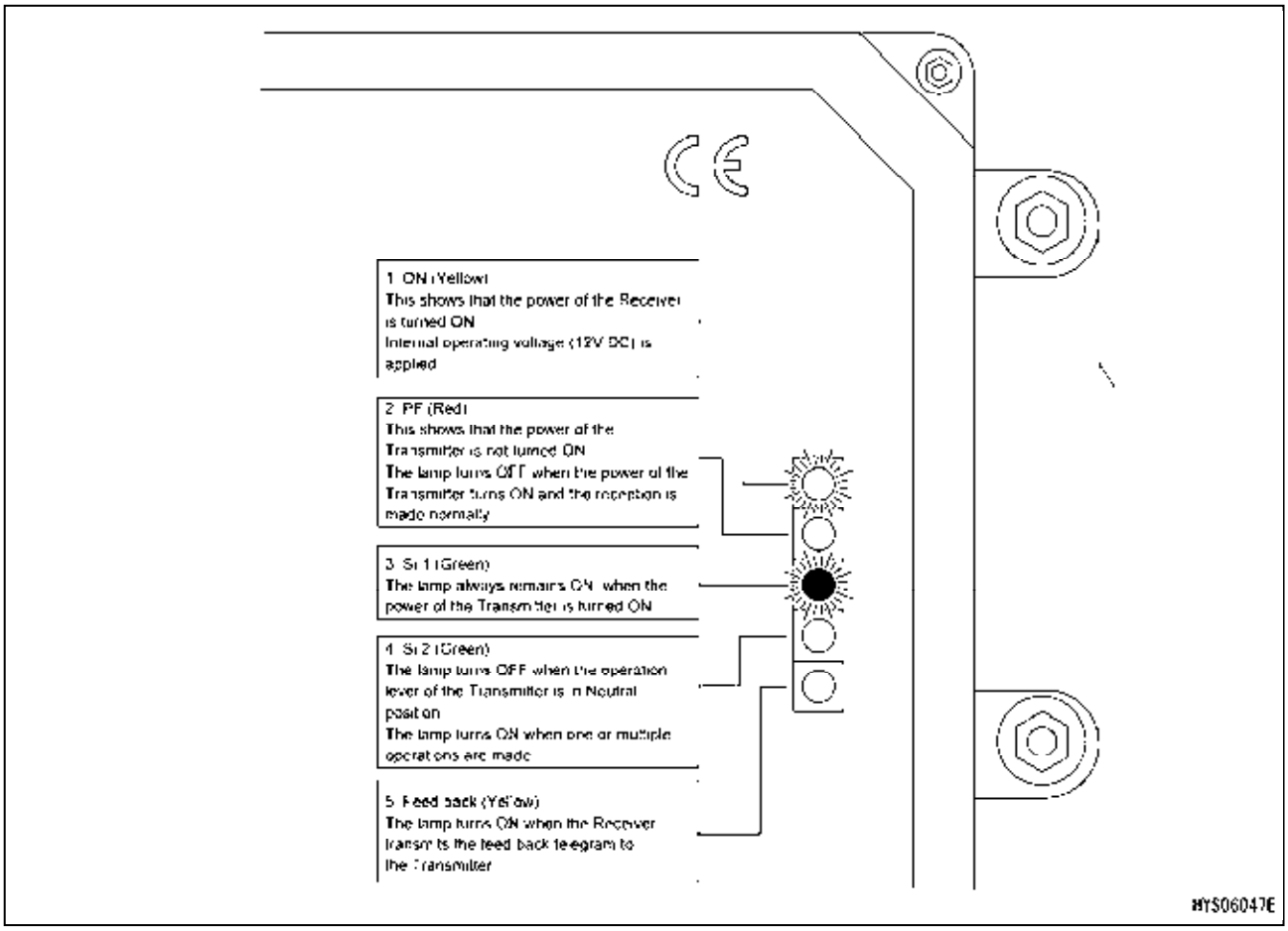

https://truckmanualshub.com/

9.1.4 INSPECTION AFTER STARTING ENGINE

Check the following in this section after starting the engine and before starting the work every day.

CAUTION

The checkups described in this section should be carried out after starting the machine. See "OPERATION 2.2 STARTING ENGINE" and later to execute the engine start up, traveling operations, outrigger operations and crane operations.

[1] INSPECTION OF OUTRIGGER SAFETY EQUIPMENT OPERATION

[Checking operation of crane interlock]

1. Turn "ON" the starter switch.

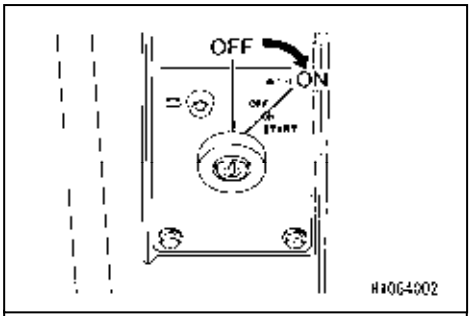

2. Press the mode switch (1) of the monitor or touch the screen to enter the "outrigger mode".

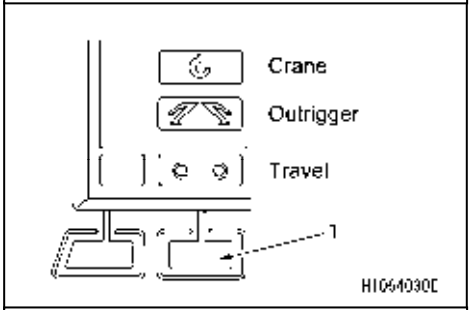

3. Check that only the crane stowage position lamp (1) of the monitor is eventually lit in green.

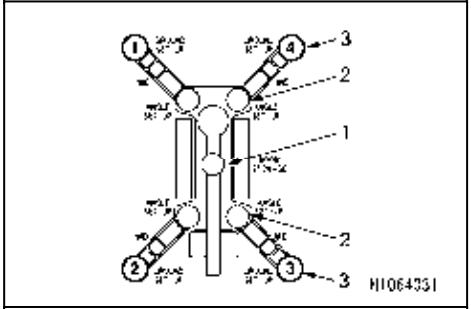

4. Insert the position pins (4) securely by rotating outward the outrigger rotary of all four outriggers. Check that all the extension lamps (2) of the monitor are lit.

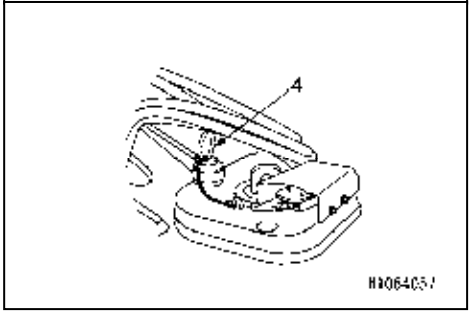

NOTES

After operating the outrigger rotary extension, make sure that the position pins (4) are correctly inserted and secured.

5. Press the mode switch (5) of the monitor or touch the screen to enter the “contact” mode.
6. Press the mode switch (6) of the monitor or touch the screen to enter the “manual” mode.
7. Contact the trays securely by turning the outrigger contact switch (7) on the outrigger control panel to “Out” position and make all four outriggers grounded.
   Check that all the contact lamps (3) of the monitor are lit.

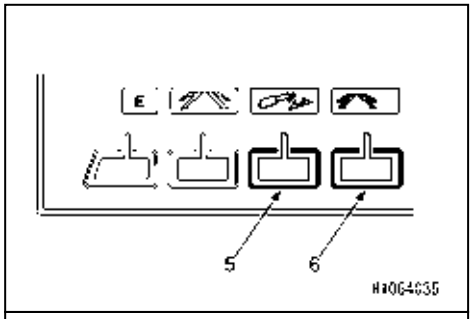

CAUTION

If any of the contact lamps (3) is flashing in red, check any foreign objects in the bending part by removing the cover (9) of the outrigger tray (8) part.

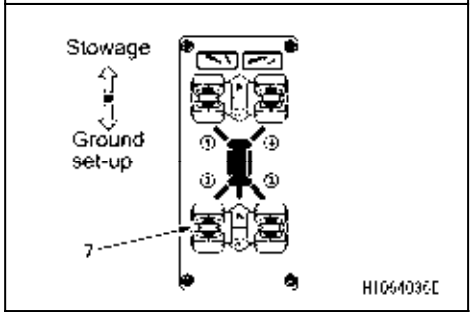

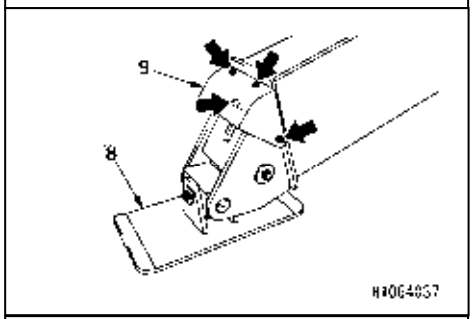

8. Turn one of the four outriggers’ outrigger contact switch (7) to “On” position to move the tray of outrigger above the ground.
9. Press the mode switch of the monitor or touch the screen to enter the “crane mode”.
10. Move the operation lever on the right to the right direction (rise) and check that the crane does not move.

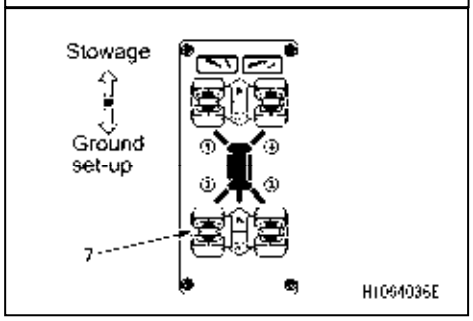

NOTES

Perform the operation starting from section 8 to 10 for all four outriggers.

[Checking operation of outrigger interlock]

1. Install all four outriggers.
2. Press the mode switch (6) of the monitor or touch the screen to enter the “crane mode”.

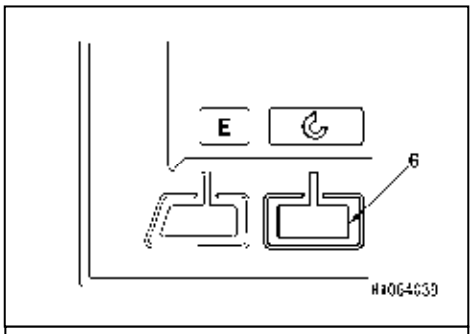

3. Move the operation lever on the right to the right direction (rise) and raise the boom until the crane stowage position lamp (1) of the monitor turns off.

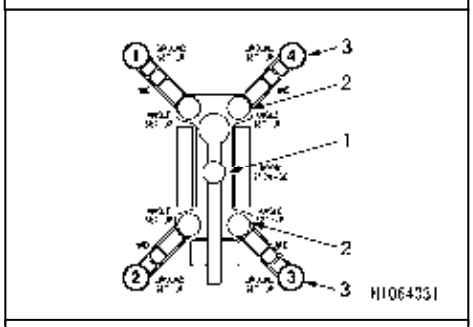

4. Press the mode switch of the monitor or touch the screen to enter the “outrigger mode”.

5. Press the mode switch (5) of the monitor or touch the screen to enter the “contact” mode.
6. Press the mode switch (6) of the monitor or touch the screen to enter the “manual” mode.

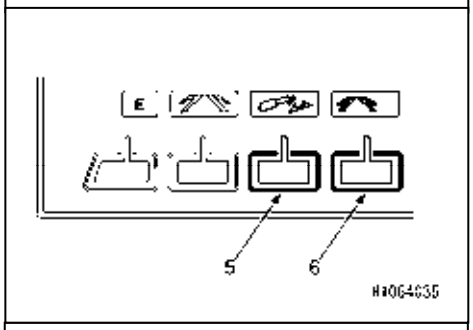

7. Turn the outrigger contact switch (7) on the outrigger control panel to “In” position and make sure the outrigger does not operate.

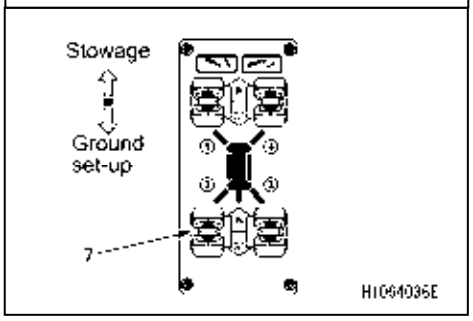

https://truckmanualshub.com/

[2] CHECKING OUTRIGGER OPERATION

⚠ WARNING

When performing an operation check of the outriggers, be sure to see “OPERATION 2.14 OUTRIGGER SETTING OPERATION”, “OPERATION 2.24 OUTRIGGER STOWAGE OPERATION” and observe the procedure and precautions.

1. Move the outrigger extension switch to “Out” position and see whether the outrigger inner box extends smoothly. Also, move the outrigger extension switch to “In” position and see whether the outrigger inner box retracts smoothly.
   At this time, check if abnormal noise is generated from various parts of the outriggers.
   Continue to check other switches for their operation.
   Repair if any abnormality is found.

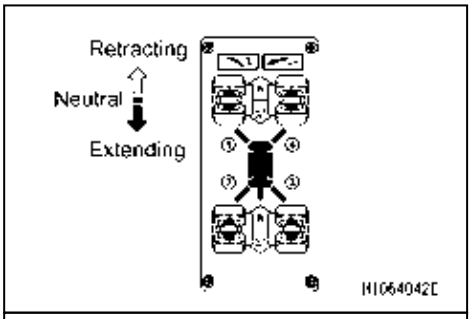

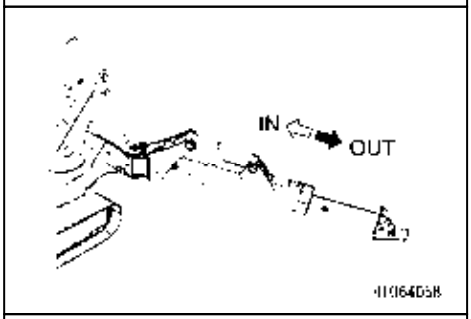

2. Move the outrigger contact switch to “Out” position and see whether the outrigger lowers smoothly. Also, move the outrigger contact switch to “In” position and see whether the outrigger rises smoothly.
   At this time, check if abnormal noise is generated from various parts of the outriggers.
   Continue to check other switches for their operation.
   Repair if any abnormality is found.

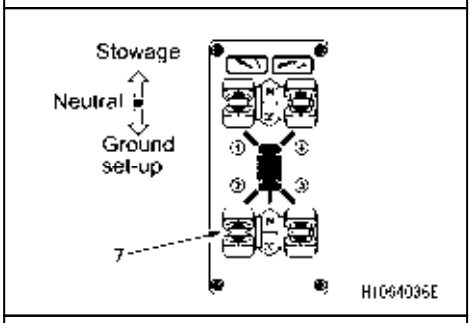

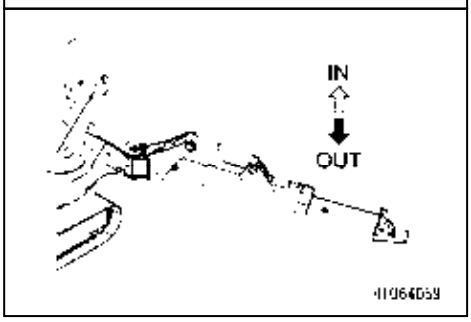

https://truckmanualshub.com/

[3] CHECKING CRANE OPERATIONS

⚠ WARNING

To check the operation of the crane, see “OPERATION 2.14 OUTRIGGER SETTING OPERATION” and make sure to set the outriggers to maximum.
To check the operation of the crane, see “OPERATION 2.15 CAUTIONS BEFORE CRANE OPERATION” to “OPERATION 2.23 CRANE STOWAGE OPERATION” and observe the procedure and precautions.

1. Pull the operation lever on the right inward and check that the boom rises smoothly. Also, push the operation lever on the right outward and check that the boom lowers smoothly. At this time, check if abnormal noise is generated from the parts of the boom or boom derricking cylinder. Repair if any abnormality is found.

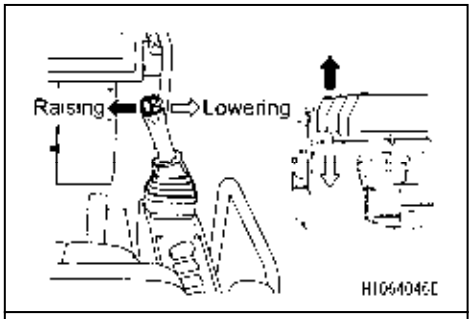

2. Push the operation lever on the left forward and check that the boom extends smoothly. Also, pull the operation lever on the left backward and check that the boom retracts smoothly. At this time, check if abnormal noise is generated from the parts of the boom or boom telescoping cylinder. Repair if any abnormality is found.

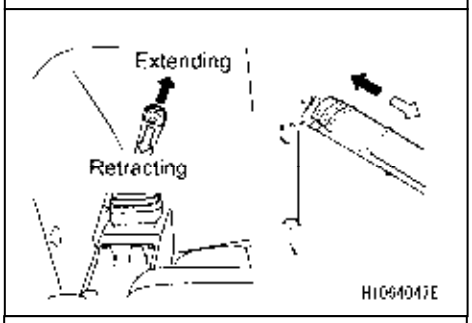

3. Push the operation lever on the right forward and check that the hook is unwound smoothly. Also, pull the operation lever on the right backward and check that the hook is wound smoothly. At this time, check if abnormal noise is generated from various parts of the boom and winch motor. Repair if any abnormality is found.

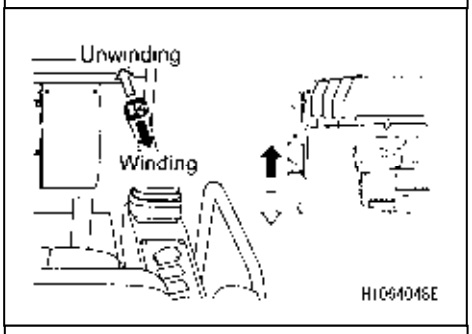

4. Push the operation lever on the left outward and check that the crane rotates counterclockwise smoothly. Also, pull the operation lever on the left inward and check that the crane rotates clockwise smoothly. At this time, check if abnormal noise is generated from around the post. Repair if any abnormality is found.

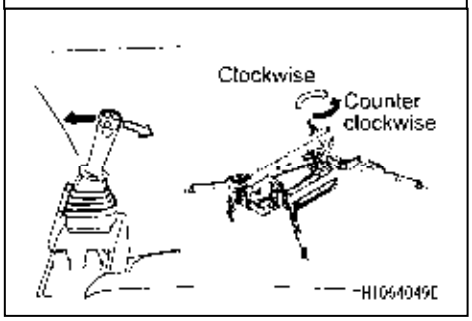

[4] INSPECTION OF OVER HOIST DETECTOR

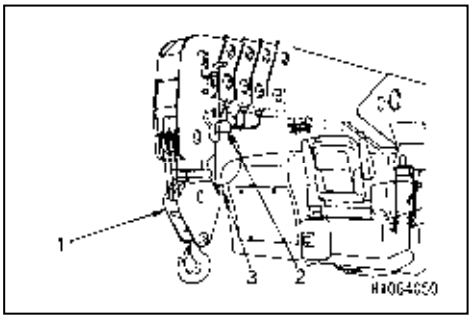

When the winch is wound and the boom is extended with the hook block (1) over hoisted, check if the buzzer sounds and windingof the winch and extension of the boom are stopped. If the above does not occur, the over hoist detector may be faulty.
If the alarm does not stop sounding, the over hoist detector may be faulty or the circuit may be open.
Ask us or our sales service agency for repair.

[5] INSPECTION OF MOMENT LIMITER

⚠ WARNING

When an abnormality occurs in the moment limiter, immediately contact us or our sales service agent.

1. Turn “ON” the starter switch.
2. Check the work status lamp. All the colors of the work status lamp should be lit for three seconds, and then the green rotating light is lit.
3. Check that there is no error code displayed on the “Rated total load” in the moment limiter monitor.
4. Start the engine and operate the crane as follows. Then, check if the monitor display of the moment limiter is correct.

Crane operation and display item	Monitor display value of moment limiter
Displayed value of “boom length” when the boom length is minimum	5.5 m
Displayed value of “boom length” when the boom length is maximum	19.4 m
The displayed values on the angle indicator and “boom angle” should be the same.	Values on the angle indicator
Display value of “Actual Load” when a weight whose mass is known is hoisted ★Must be equal to combined mass of a weight and lifting component ★However, some error may be generated depending on the boom condition.	Actual load

https://truckmanualshub.com/

[6] INSPECTION OF OUTRIGGER EXTENSION POSITION

Start the engine and extend the outriggers to “medium” and “maximum” positions, and check if the monitor display of the moment limiter is correct.

NOTES
To adjust the outrigger extension, check the sticker (medium, maximum) on the top side of inner box.

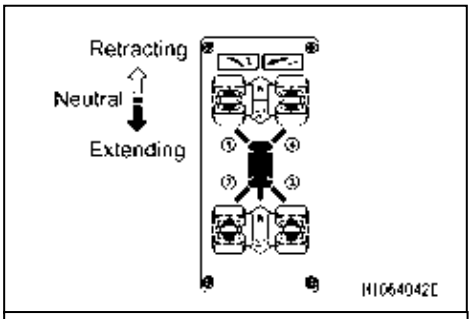

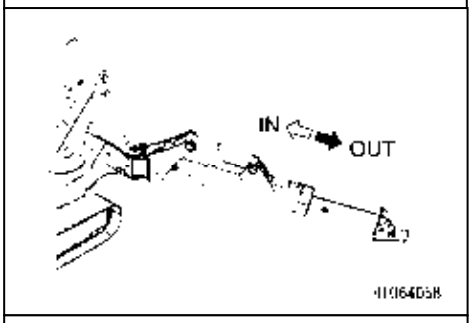

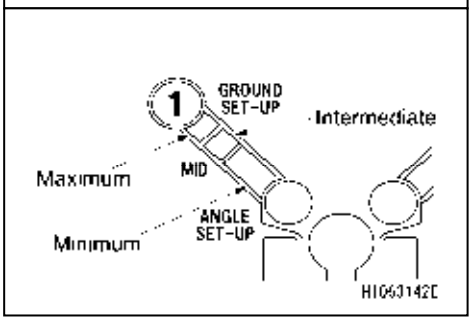

[7] CHECKING ENGINE EXHAUST GAS COLOUR, NOISE AND VIBRATION

1. Release the acceleration pedal **(6)** to low idling position so that the engine is kept in no load operation for 5 minutes.
2. Verify that the engine exhaust gas color is either transparent or slightly blue. Also, check for abnormal noises and vibrations.
   Repair if any abnormality is found.

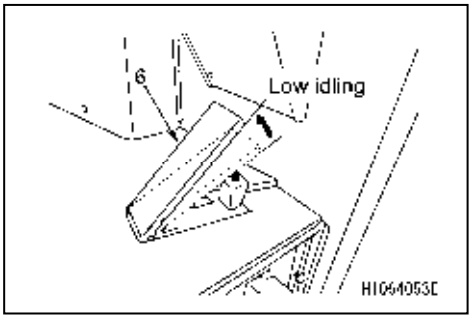

https://truckmanualshub.com/

9.1.5 INSPECTION OF ENGINE START AND STOP OPERATION (RADIO CONTROL)

⚠ WARNING

Ensure that the boom and outriggers are all stowed in the correct positions.
If they are not in the correct positions, use the applicable levers on the machine side to stow them correctly.
Otherwise, the transmitter operation may cause damage to the Crane or tipping that results in serious injury.

[1] INSPECTION OF ENGINE START OPERATION

1. Turn “ON” the main starter switch on the machine side.

2. Press the “start/stop radio control button” (3) of the transmitter twice to turn the power “ON”.

3. Press the horn switch (7) and check that the horn sounds.

4. Push down the “Engine start/stop switch (4)” to the start side and check that the engine starts.

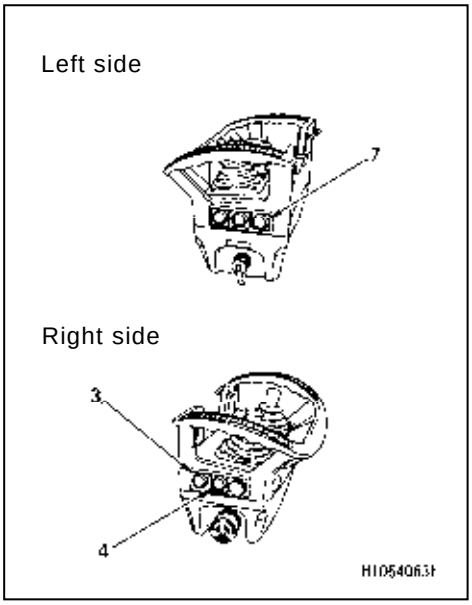

[2] INSPECTION OF ENGINE STOP OPERATION

1. After the engine has started as above [1], push down the Engine start/stop switch (4) and check that the engine stops.

2. After the engine has started as above [1], push the Emergency stop switch (11) and check that the engine stops.

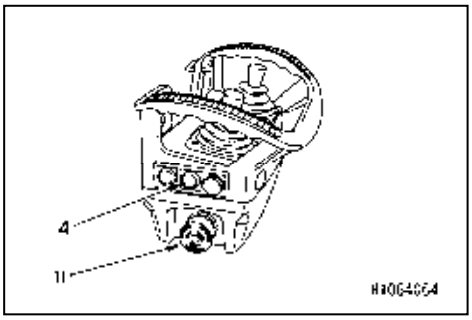

[3] INSPECTION OF OUTRIGGER MODE OPERATION

1. Turn “ON” the main starter switch on the machine side.
2. Press the “start/stop radio control button” (3) of the transmitter twice to turn the power “ON”.
3. Using the mode selector switch (8) of the transmitter, set the operation mode to the “Outrigger mode”.

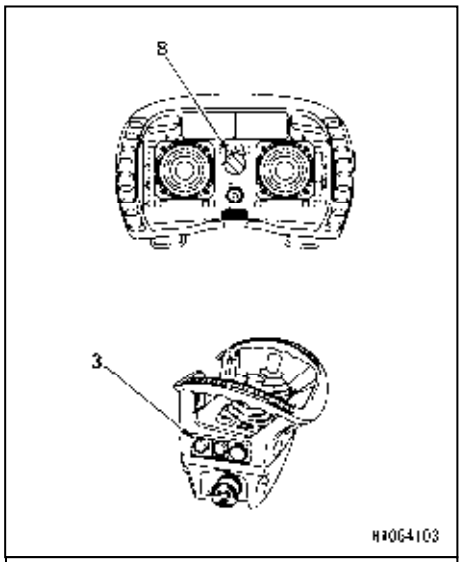

⚠ WARNING

When operating the outriggers, perform the steps 1 to 3 above and be sure to check that the outrigger mode is set.

NOTES

There are two types in “Outrigger mode”: forward (1.4 Outrigger) and backward (2.3 Outrigger).

4. Push the Engine start/stop switch (4) to start the engine.

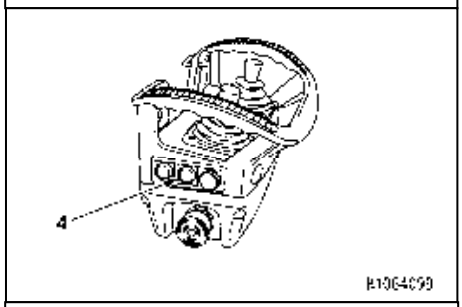

5. Operate the operating levers (1, 2) to the “Extend” side and “Retract” side and check that the outrigger corresponds to the operation levers.

NOTES

Slowly push the operation levers (1, 2) up and down and check that the outrigger operates at a speed responding to an operation amount of the operation levers.

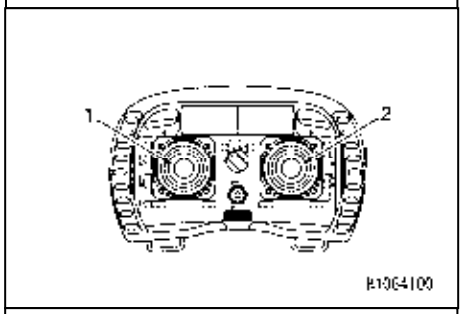

6. Press the speed/outrigger switch (5) to change from the outrigger retraction to extension/stowage. Also, check that the monitor display changes accordingly at this time.

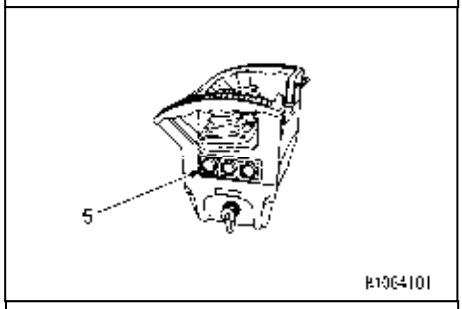

7. Operate the operation levers (1, 2) to the “Extend” and “Retract” side, and check that the outrigger corresponds to the operation levers.

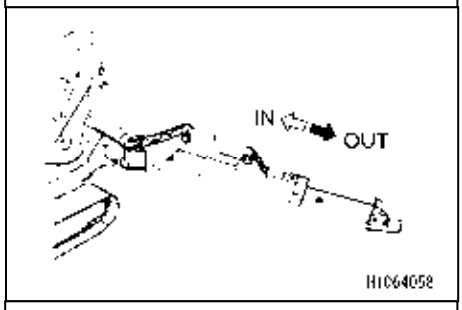

8. Perform the checks above for all outriggers for forward (1.4 Outrigger) and backward (2.3 Outrigger).

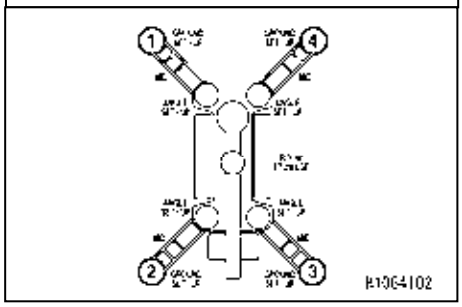

https://truckmanualshub.com/

[4] INSPECTION OF CRANE MODE OPERATION

⚠ WARNING

- **Ensure that all the outriggers are securely settled, before starting crane operations. Any crane operations where outriggers are improperly used may cause the crane to tip over or other serious accidents.**
  If there is any abnormality, be sure to fix it or contact us or our sales service agency.

1. Use the main starter switch on the machine side to start the engine.
2. See “OPERATION 2.16 OPERATION BEFORE CRANE WORK” to “OPERATION 2.17 CRANE OPERATION POSTURE” to position the crane as the figure on the right using the levers in the crane operation control.

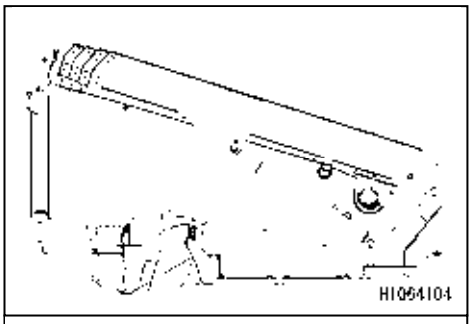

3. Press the “start/stop radio control button” (3) of the transmitter twice to turn the power “ON”.
4. Using the mode selector switch (8) of the transmitter, set the operation mode to the “Crane mode”.

⚠ WARNING

When operating the crane, perform the steps from 1 to 4 above and be sure to check that the crane mode is set.

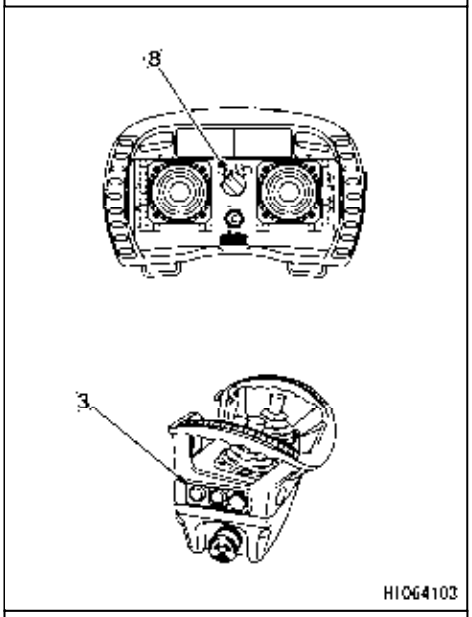

5. Move the operation lever (2) to “LOWER” and “RAISE” side and check that the boom follows the lever operation.

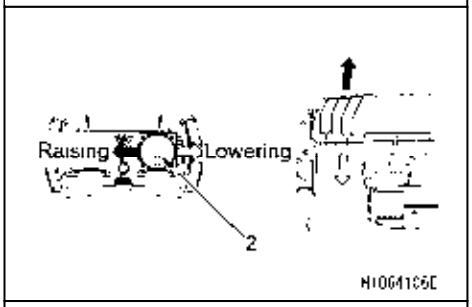

6. Move the operation lever (2) to “UNWINDING” (push it up) and “WINDING” (push it down)” side, and check that the hook follows the lever operation.

7. Move the operation lever (2) to “WINDING” (push it up) side and check that the hook stops by over hoist detector.

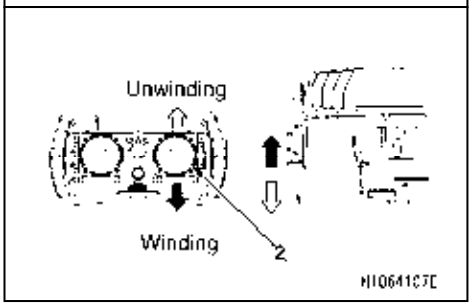

CAUTION

Be careful not to allow the winch wire to slack during hook operation. If it is wound irregularly, the wire may be damaged and the roller may be broken.

https://truckmanualshub.com/

8. Move the operation lever (1) to “EXTENDING” and “RETRACTING” side and check that the main boom follows the lever operation.

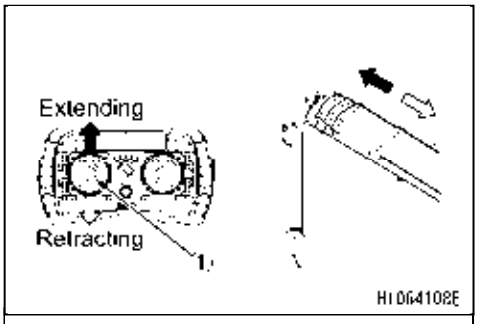

9. Move the operation lever (1) to “LEFT” and “RIGHT” side and check that the crane follows the lever operation.
   In addition, practice a slew around “360 degrees” or more to check for any abnormal conditions.

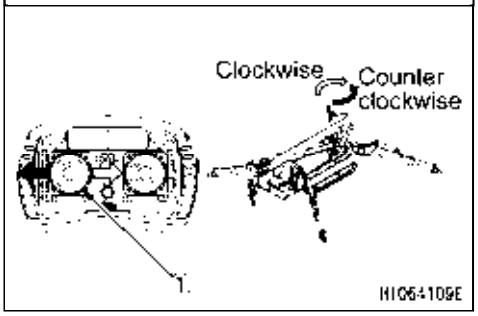

10. Set the “Acceleration adjustment switch” (9) (maximum engine speed) to any position. (The maximum engine speed can be set to increase on the + side).
    Check that when each operation lever is pushed down, the crane speed increases according to the operation amount and the engine speed increases also.

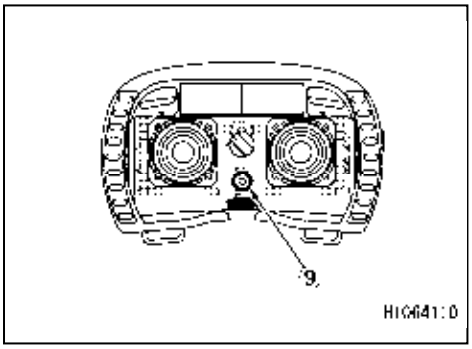

NOTES

- When the Acceleration adjustment switch (9) is set to the maximum and each operation lever is pushed down to the maximum, the crane speed becomes the maximum (engine speed becomes the maximum).
- When the Acceleration adjustment switch (9) is set to the minimum, then even if each operation lever is pushed down to the maximum, the engine speed stays the same.

https://truckmanualshub.com/

9.2 IRREGULAR MAINTENANCE

[1] INSPECTION/ADJUSTMENT OF RUBBER TRACK TENSION

The wear condition of pins and bushes around safe rubber track varies depending on the working condition and the soil quality. Check the tension of rubber track time to time to maintain the standard tension.

Perform the inspection and adjustment on hard and level ground.

[Inspection]

1. Set the engine to the low idling mode and forward by the contact length and stop slowly.
2. Place a lumber (3) on the rubber track across the idler (1) to the upper track roller (2).
3. Measure the maximum slack between the upper side of the rubber track and the lower side of the lumber.
   Standard slack **(a)**: 10 – 20 mm.

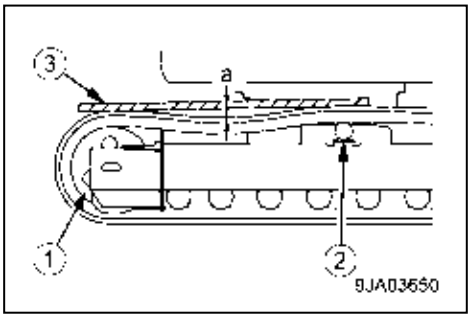

[Adjustment]

If the result was lower than standard tension, make adjustments as below.

[To increase tension]

• Have a grease pump ready.

1. Inject grease from the grease nipple (1) using grease pump.
2. Set the engine to the low idling mode and forward by the contact length and stop slowly to check that the tension condition is appropriate.
3. Check the tension of rubber track again.
   If the tension is not appropriate, make another adjustment.

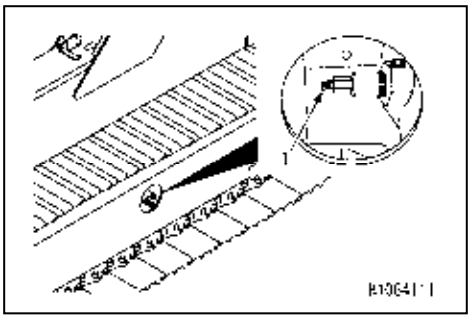

CAUTION

Grease injection is effective up to the point the dimension (S) is 0 mm, but if it is still loose, wear of pins and bushes increases.
Rotating or replacing pins and bushes are required. Ask us or our sales service agency for repair.

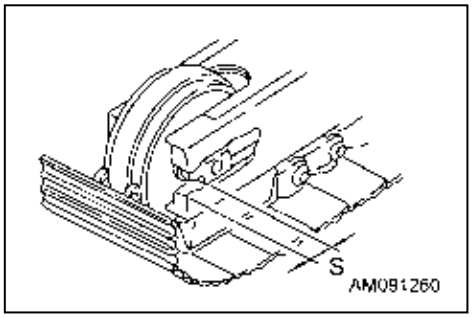

[To decrease tension]

⚠ WARNING

It is highly dangerous if you drain the grease not following the procedure below. If the rubber track is not loosened, ask us or our sales service agency for repair.

1. Loosen the plug (1) little by little to drain the grease.
   If the grease is not drained smoothly, move the machine back and forth a little.

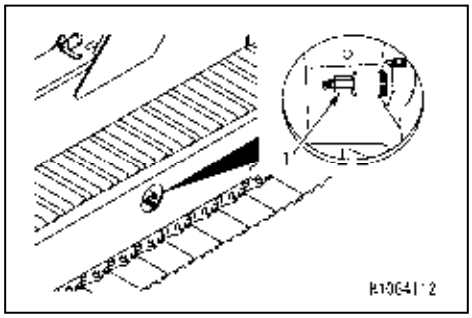

⚠ WARNING

- **Do not loosen the plug (1) for more than one rotation. If it is loosened more than one rotation, the plug (1) can pop out due to the high-pressured grease inside.**
  Do not loosen any other parts than the plug (1).
  Also, make sure you are not facing the mounting direction of the plug (1).
- **If the rubber track is not loosened after performing the procedures above, ask us or our sales service agency for repair.**

2. Tighten the plug (1).
3. Set the engine to the low idling mode and forward by the contact length and stop slowly to check that the tension condition is appropriate.
4. Check the tension of rubber track again.
   If the tension is not appropriate, make another adjustment.

[2] INSPECTION/ADJUSTMENT OF RUBBER TRACK SHOE BOLT

If you use the loose rubber track shoe bolt (1), it might break off. Please re-tighten it immediately if any loosening is detected.

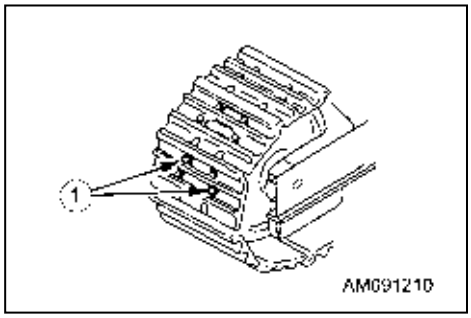

[Re-tightening method]

1. Tighten with 137±19.6 N•m {14±2 kgf•m} first and check that the nut and the shoe adhere to the link mating surface.
2. After checking, re-tighten with the angle of 90±10 degrees.

[Tightening order]

The bolts should be tightened in the order described in the figure on the right.
Tighten first and check that the nut and the shoe adhere to the link mating surface.

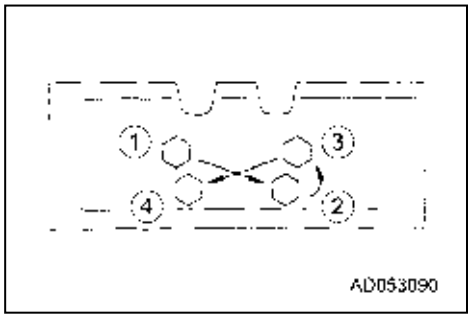

https://truckmanualshub.com/

[3] REPLACEMENT OF WINCH WIRE ROPE

⚠ WARNING

Always put on thick leather work gloves when replacing the wire rope.

CAUTION

- **The diameter of the wire rope is measured at points where the wire repeatedly runs through the sheave. A mean value needs to be determined through 3 way measurement. (A measurement should be performed not only at one point but at several points, spacing between the points.)**
- **Do not use old wire rope regardless of the frequency of use.**

[CRITERIA FOR WIRE ROPE REPLACEMENT]

A wire rope undergoes wear and tear over time.

Prompt replacement is required if any of the following appears in the wire rope.

- 10 % or more of strands (except a filler wire) in 1 twist of a wire rope (6 crests) are broken.

NOTES

9 strands or greater for winch. Replace the boom telescoping wire rope when 13 or more wires are broken.

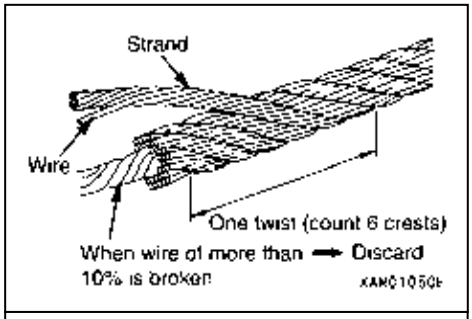

- Wear equivalent to 7 % or more of a nominal diameter occurred in the wire rope diameter.

NOTES

- Replace the 9 mm diameter wire rope when reduced to 8.4 mm
- Replace the 10 mm diameter wire rope when reduced to 9.3 mm
- Replace the 12.5 mm diameter wire rope when reduced to 11.7 mm

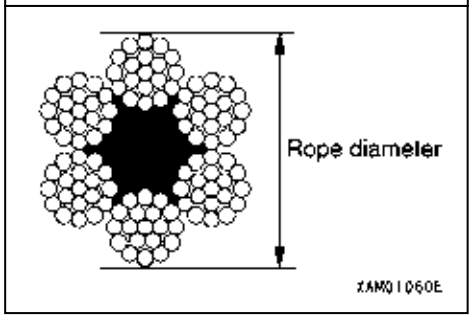

- A kink is formed.
- Considerable deformation or corrosion is developed.
- A faulty end socket is used.

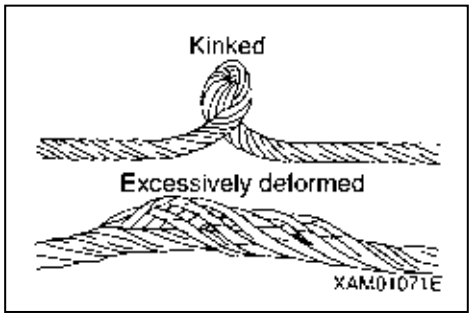

https://truckmanualshub.com/

[REMOVAL OF WINCH WIRE ROPE]

Use the following procedure to remove the wire rope.

1. Place the machine on a level and firm surface.
2. Extend the boom slightly by pushing the left operation lever forward.
3. Push down the right operation lever forward to lower the hook block on the ground.
4. Remove the wedge socket fixing bolt (2), then remove the wedge socket (3) by pulling out the wedge socket pin (1).
5. Remove the wire clip (4).

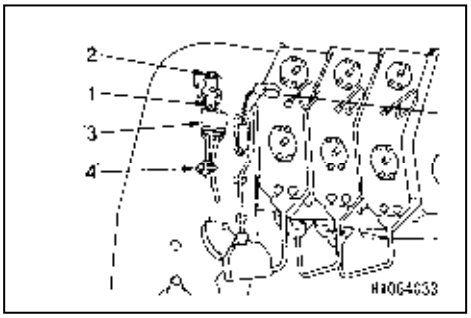

6. Pull the wire rope (5) out of the wedge socket (3), following the procedure provided below.
   (1) Bring a 4 to 6 mm round bar (6) into contact with the rope wedge (7).
   (2) Remove the rope wedge (7) by lightly tapping the round bar (6) with a hammer in the direction indicated by the arrow **(a)**.
7. Push down the right operation lever forward to wind up the wire rope (5) from the winch drum.

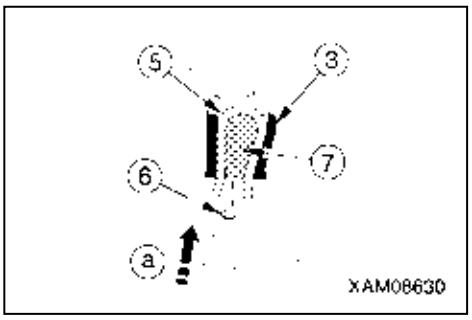

8. After winding up the wire rope from the winch drum, detach the end of the wire rope (5) fixed to the winch drum (8) by following the procedure provided below.
   (1) Bring a 4 to 6 mm round bar (6) into contact with the rope wedge (9).
   (2) Remove the rope wedge (9) by lightly tapping the round bar (6) with a hammer in the direction indicated by the arrow **(b)**.
9. Wind up the remaining wire rope (5) completely.

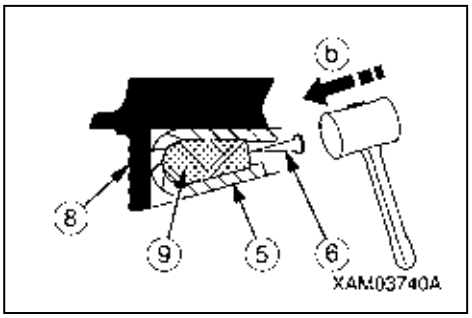

Removal of the winch wire rope is completed.

https://truckmanualshub.com/

[INSTALLATION OF WINCH WIRE ROPE]

⚠ WARNING

- **Always wear thick leather working gloves when handling the wire rope.**
- **Be sure to attach the rope wedge properly to secure the wire rope. Serious accidents may occur if the wire rope is detached during crane operations.**

CAUTION

- **Avoid irregular winding of the wire rope on the winch drum.**
- **Always hoist an object (2.9 to 4.9 kN {300 to 500 kg}) with the boom and jib extended and raised fully immediately after attaching a new rope. Repeat winding and unwinding the hook several times until the new rope conforms.**
- **The wire rope is coiled. Exercise caution not to form a kink in the rope when winding it up. Be sure to unravel by rotating the rope to pull it out of the winch drum.**

Use the following procedure to attach the wire rope.

1. With the end of the wire rope held, draw the wire rope (5) through the weight of the over hoist detector (11), load sheave (11) at the jib end, wire guide (12) of booms Nos. 2, 3 and 4, roller sheave (13), sheave inside the boom derricking cylinder mounting bracket (14) and slide sheave (15).

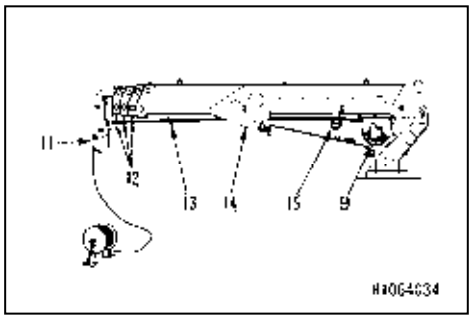

2. Draw the wire rope (5) through the rope attachment hole of the winch drum (9). Secure the wire rope (5) to the winch drum (9), following the procedure provided below.
   (1) Draw the slackened wire rope (5) through the winch drum (9).
   (2) The rope wedge (10) should be in position **(a)**. Pass the wire rope (5) around the rope wedge and yank at the rope in the direction indicated by the arrow.
   Adjust the length of the wire rope (5) to keep the end of the wire rope from protruding from the narrow hole in the winch drum (9).

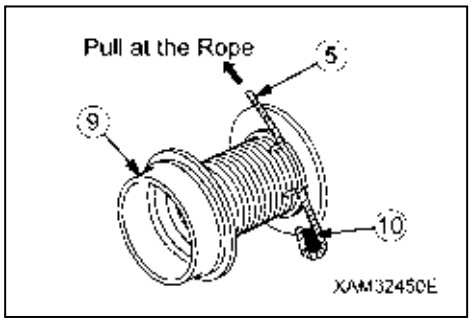

3. Operate the right operation lever to “UP” (push it toward you) to wind up the wire rope (5) on to the winch drum (9).
   Leave about 10 m of wire rope from the boom tip.

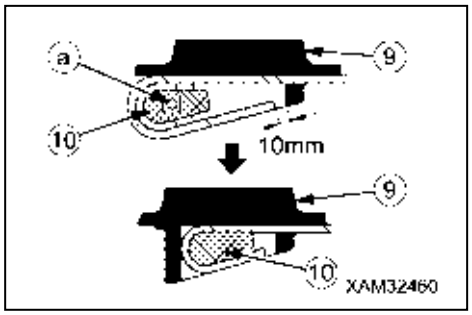

CAUTION

To prevent irregular winding, apply a tension of approx. 1.47 kN (150 kg) especially to the first to third windings.

4. According to the number of falls of the wire rope, draw the wire rope through the load sheave of the boom tip and the hook block sheave as shown in the figure below.

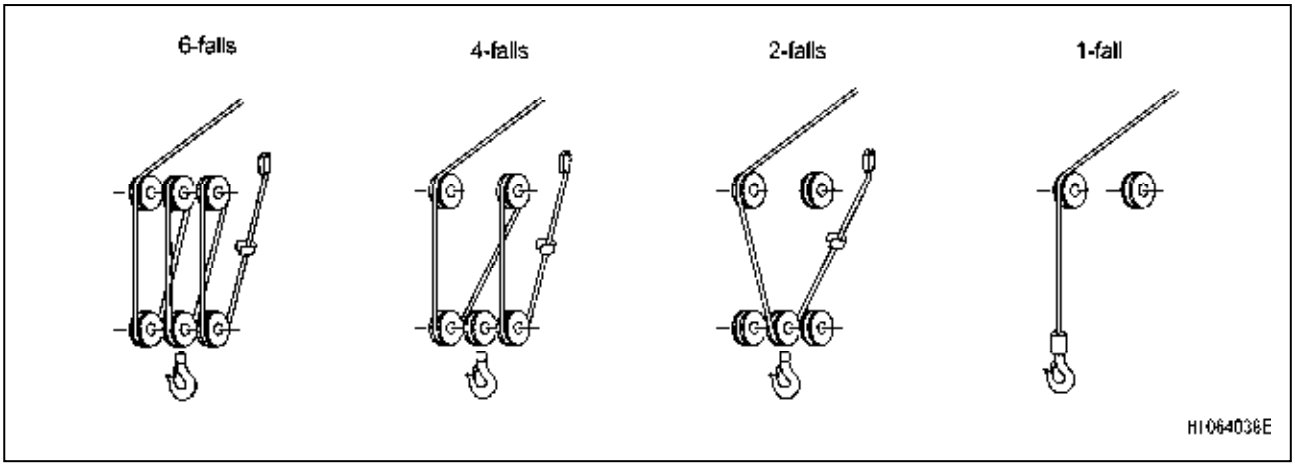

5. Draw the end of wire rope (5) through the weight of over hoist detector.
6. Secure the end of the wire rope (5) to the wire socket (3), following the procedure below.
   (1) Draw the wire rope (5) through the wire socket (3) as shown in the figure to the right.
   (2) The rope wedge (6) should be in position **(a)**, and yank at the wire rope (5) in the direction indicated by the arrow.
7. Attach the wire clip (4) to the wire rope (5) according to the dimension described in the figure to the right.
8. Secure the wire socket (3) to the boom with the wire socket pin (2), and tighten the wire socket pin mounting bolt (1).
9. Pull the right operation lever inward or push down the left operation lever forward to raise the hook block.

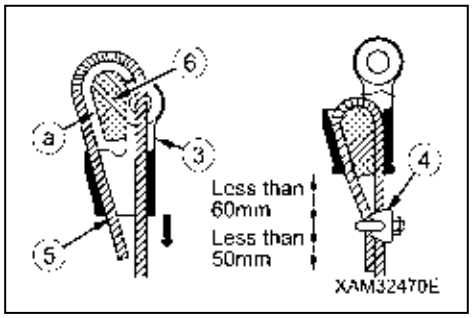

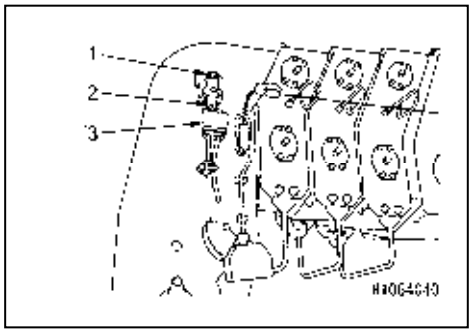

NOTES
Winch operation is allowed only after the hook block is raised.

10. Make sure the boom is fully extended and raised.
11. With the wire rope (5) held under tension, operate the right operation lever to “UP” (pull it toward you) to wind up the wire rope (5) on to the winch drum (9).

https://truckmanualshub.com/

[4] INSPECTION/ADJUSTMENT OF BOOM TELESCOPING WIRE ROPE

[INSPECTION OF BOOM TELESCOPING WIRE ROPE]

When the boom extending wire rope shows a condition as shown in the figure below, adjust as follows:

1. Make sure the boom is fully retracted.
2. Remove the mounting bolts (1) (4 bolts) on the boom tip and then remove the cover (2).

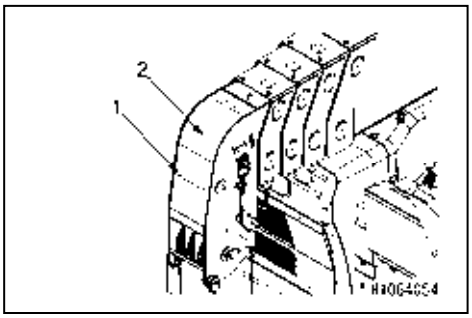

3. Remove the lock bolt (6) on the tip of extension cylinder inside the boom and turn the boom extending wire adjusting bolt (9) clockwise.
   The tension of the boom extending wire (8) is normal, if the No.5 boom is extended when the adjusting bolt (9) is turned.
   If the No.5 boom is not extended, refer to the section, “Adjustment of Wire Rope” and adjust it.

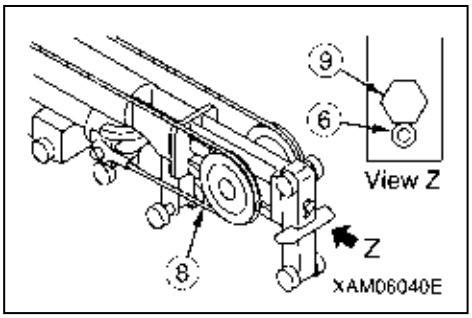

4. Check for a 5 mm or more gap between booms No.4 and 5 when the booms are fully retracted in **a** horizontal position.
   If there is a clearance of 5 mm or more, perform proper adjustment according to “Adjustment of Wire Rope”.

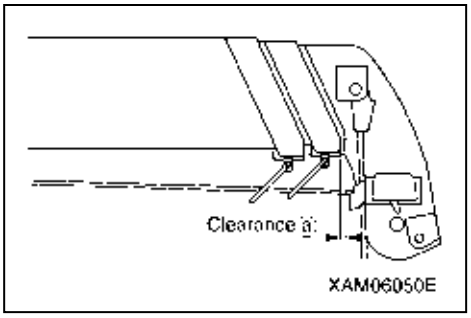

https://truckmanualshub.com/

[ADJUSTMENT OF BOOM TELESCOPING WIRE ROPE]

CAUTION

When adjusting each wire rope, be careful of overtension of the wire ropes.

One boom extending wire rope and one retracting wire rope are used in this machine. Adjustment of these two wire ropes must conform to the specified procedure. Be sure to follow the following adjustment procedure.

1. With the booms fully retracted in a horizontal position, extend the telescoping booms for approx. 2 m.

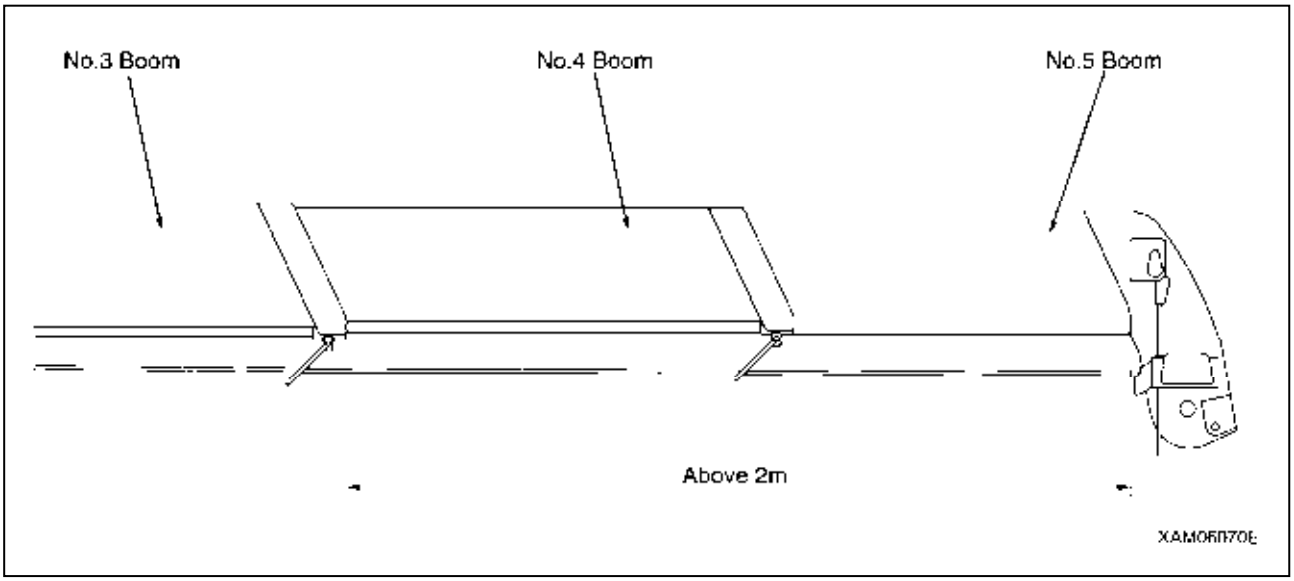

2. Retract the booms slowly and completely.
   Measure the clearance **(a)** in this condition to check the following for proper adjustment.
   - If the clearance **(a)** is 5 mm or more, adjust the No.5 boom retracting wire rope (5).
   - If the clearance **(a)** is “0 (zero)”, adjust according to step 5 “Adjustment of No.5 boom extending wire rope (8)”.

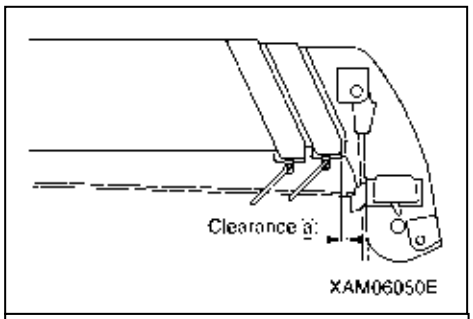

3. Remove the mounting bolts (1) (3 bolts) on the boom tip and then remove the cover (2).
   When it sags, refer to the section, “Adjustment of Wire Rope”.

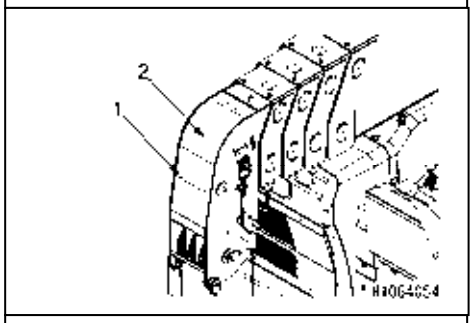

4. Adjustment of No.5 boom retracting wire rope (5)
   (1) With the lock nut (3) loose, tighten the right and left adjusting nuts (4) evenly in a direction where the retracting wire rope (5) becomes tight (clockwise) until the clearance **(a)** is closed.
   (2) If the clearance **(a)** is 5 mm or more, or the retracting wire rope is slacked after performing operation and measurement in steps 1 and 2, readjustment is required.

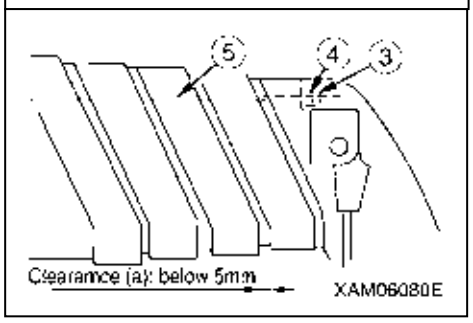

https://truckmanualshub.com/

5. Adjustment of No.5 boom extending wire rope (8)
   (1) With the lock nut (6) loose, tighten the right and left adjusting nuts (9) evenly in a direction where the No.5 boom extending wire rope (8) becomes tight (clockwise) until just before the No.5 boom begins to extend.
   (2) Re-tighten both the right and left adjusting nuts (4) of the No.5 boom retracting wire rope (5).
   (3) Fix the adjustment nuts (4) of the No.5 boom retracting wire rope (5) with the lock nut (3).
   (4) Fix the adjustment bolts (9) of the No.5 boom extending wire rope (8) with the lock bolt (6).

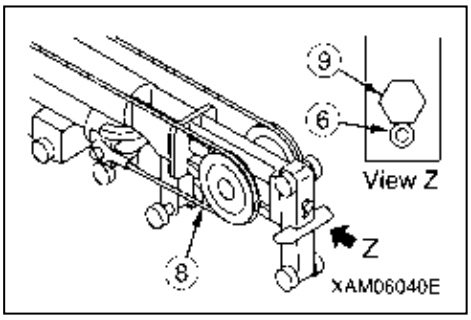

6. Install the cover (2) on the boom tip with the mounting bolts (1) (3 bolts) after adjustment.

https://truckmanualshub.com/

[5] REPLACEMENT OF HYDRAULIC OIL SUCTION FILTER

⚠ WARNING

- **Various parts are at elevated temperatures immediately after engine operation. Do not replace the filter immediately. Wait until the oil is cooled.**
- **The oil may spout out when the filler cap of the hydraulic oil tank is removed. Remove the filler cap to relieve internal pressure by slowly rotating it first.**
- **Securely close the filler cap after refilling. If the filler cap falls during the operation, hot oil may spout out of the pan, causing burns.**

CAUTION

- **See "INSPECTION AND MAINTENANCE 6.1 USE OF LUBRICATING OIL ACCORDING TO TEMPERATURES" for the oil to be used.**
- **Be sure to put the machine in the travelling posture when checking the oil level. If you check the oil level in the working posture, you judge the oil level to be low and feed the oil excessively.**
- **After replacing the filter of hydraulic oil, do not start the engine for a while until piping and hydraulic equipment are filled with the oil.**
- **Do not refill oil exceeding the level gauge (H) (upper limit). When the oil goes beyond this level, it may spout out from the air breather during traveling or crane operation.**
- **Be careful not to let any foreign substance go into the filler opening when refilling the oil.**

1. Place the machine on a level surface.
2. See "OPERATION 2.14 OUTRIGGER SETTING OPERATION" to set all the outriggers.

NOTES

After installing the outrigger, raise the machine body slightly.

3. See "OPERATION 1.12 OPERATION SIDE COVER" and remount the operation side cover.

4. Remove the mounting bolts (4) (6 bolts) of the flange (3) at the top of the hydraulic oil tank.
5. Remove the flange (3) and suction filter (5) at the top of the hydraulic oil tank.
6. Install a new suction filter (5) inside the tank.
7. Place the flange (3) on the original position and apply liquid packing to the O-ring (6), and tighten the mounting bolts (4) (6 bolts) securely.

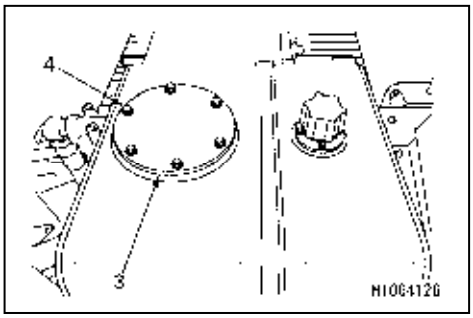

NOTES

Wipe away cleanly whenever the oil spills.

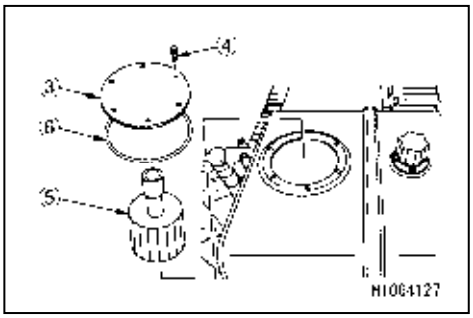

https://truckmanualshub.com/

8. See “OPERATION 9.1.2 INSPECTION BEFORE STARTING ENGINE” to inspect and refill the oil inside the hydraulic tank.
9. See “OPERATION 1.12 OPERATION SIDE COVER” and install the operation side cover.
10. See “OPERATION 2.19 BOOM DERRICKING OPERATION” and lower the boom to the stowage position and stop the engine.
11. Bleed the air according to the following sequence.
    (1) Start the engine only after piping and hydraulic equipment are filled with oil.
    After engine start, continue to run the engine at low idle for 10 minutes.
    (2) While keeping the engine speed low, slightly operate each control lever to operate each cylinder and winch motor slowly.
    Do not operate the boom hoisting cylinder and telescopic boom cylinder to the stroke end, stop them at a position approximately 100 mm before the stroke end.
    Repeat this 4 to 5 times.
    (3) See “OPERATION 2.14 OUTRIGGER SETTING OPERATION” and make the outrigger cylinder telescope in the condition that the machine does not float.
    When making the outrigger cylinder telescope, do not operate it to the stroke end, but stop it at a position approximately 100 mm before the stroke end.
    Repeat this 4 to 5 times.
12. See “OPERATION 2.24 OUTRIGGER STOWAGE OPERATION” to stow all the outriggers.

9.3 INITIAL 10 HOUR MAINTENANCE

The following maintenance should be performed after 10 hours of operation, limited to the 1st maintenance of a new machine.

[1] GREASING MACHINE UNITS

See “9.6 EVERY 50 HOURS MAINTENANCE” for details on the place and method of maintenance.

9.4 INITIAL 50 HOUR MAINTENANCE

The following maintenance should be performed after 50 hours of operation, limited to the 1st maintenance of a new machine.

[1] OIL REPLACEMENT IN HYDRAULIC OIL TANK

See “9.10 EVERY 1000 HOURS MAINTENANCE” for details on the place and method of maintenance.

[2] REPLACEMENT OF HYDRAULIC OIL RETURN FILTER

See “9.9 EVERY 500 HOURS MAINTENANCE” for details on the place and method of maintenance.

[3] CHECKING/ADJUSTING ALTERNATOR BELT TENSION

See “9.8 EVERY 250 HOURS MAINTENANCE” for details on the place and method of maintenance.

9.5 INITIAL 250 HOURS MAINTENANCE

The following maintenance should be performed after 250 hours of operation, limited to the 1st maintenance of a new machine.

[1] OIL REPLACEMENT IN SLEWING REDUCTION GEAR CASE

See “9.10 EVERY 1000 HOURS MAINTENANCE” for details on the place and method of maintenance.

[2] OIL REPLACEMENT IN WINCH REDUCTION GEAR CASE

See “9.10 EVERY 1000 HOURS MAINTENANCE” for details on the place and method of maintenance.

[3] OIL REPLACEMENT IN TRAVELLING MOTOR REDUCTION GEAR CASE

See “9.10 EVERY 1000 HOURS MAINTENANCE” for details on the place and method of maintenance.

https://truckmanualshub.com/

9.6 EVERY 50 HOURS MAINTENANCE

[1] DRAINING OF CONTAMINANT WATER/DEPOSITS IN FUEL TANK

⚠ WARNING

- **Be extremely careful with fire such as cigarettes.**
- **Always stop the engine before draining fuel.**
  Potential ignition may occur through spilled fuel if disregarded.
- **Always put the drain plug of the fuel tank and secure it tight after draining fuel.**
- **The drain plug of the fuel tank is located directly below the operator seat.**
  Place the outriggers as necessary and raise the machine from the ground so you can go under the machine. If the machine is unstable and sways, place supports (stands) under the front and rear sides of the machine to stabilize it.

• Fuel drain pan: Prepare a container of sufficient size according to the amount of residual fuel.

1. Place the machine on a level surface.

2. Place a container to collect the drained fuel directly underneath the drain plug **(P)** of the fuel tank.
3. Drain fuel by turning the drain plug **(P)** slowly to avoid splashing fuel on yourself.

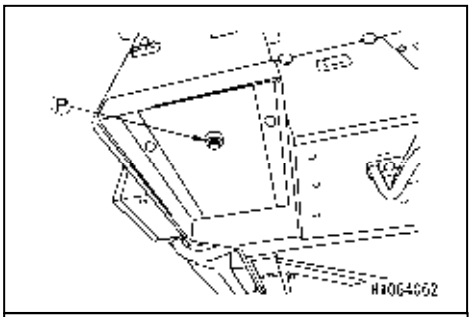

NOTES

Remove the fuel tank cap **(F)** if normal or smooth fuel draining fails.

4. After draining the fuel, install and tighten the drain plug **(P)** securely.

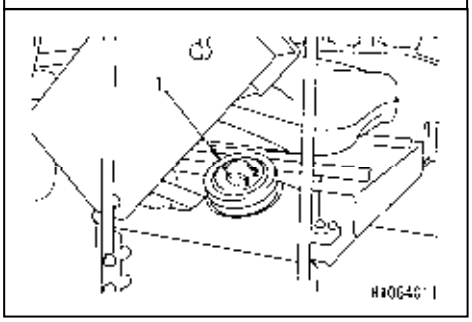

NOTES

Wipe off the oil spills completely.

https://truckmanualshub.com/

[2] DRAINING OF CONTAMINANT WATER/DEPOSITS IN FUEL PRE-FILTER

⚠ WARNING

- **Remember to stop the engine when refilling.**
- **The fuel pre-filter has fuel (diesel fuel) inside. Be extremely careful of fire such as cigarettes when cleaning the fuel pre-filter**
- **If the fuel spills when the fuel pre-filter is removed, thoroughly wipe it off.**

CAUTION

Water or dust accumulated inside the fuel pre-filter will cause engine failure. Check inside the pot and remove any water or dust accumulated inside with the pan under the container.

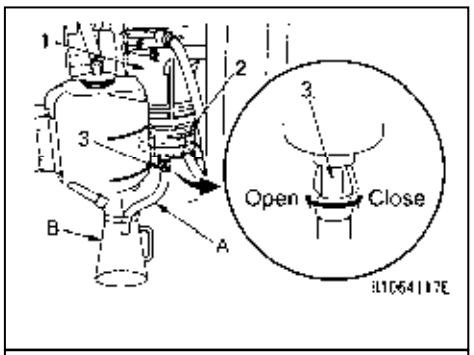

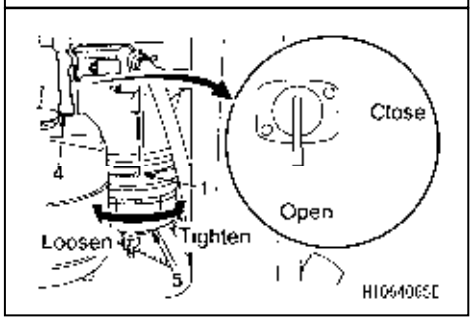

1. Place the machine on a level surface.
2. See “OPERATION 1.8 RADIATOR COVER” and remove the radiator cover.
3. Turn the fuel lever (4) of the fuel pre-filter (1) to the horizontal position (closed) to shut off the fuel.
4. Connect a hose **(A)** to the outlet of the valve (3) at the bottom of the fuel pre-filter (1) and connect it to the container **(B)** collecting the drained fuel.
5. Turn the valve (3) at the bottom of the fuel pre-filter (1) to the left to loosen and drain the fuel until the red float (2) inside the fuel pre-filter (1) sinks to the bottom.
6. When draining is finished, turn the valve (3) at the bottom of the fuel pre-filter (1) to the right to close.
7. Disconnect the hose **(A)** connected to the valve (3) drainage.
8. Turn the fuel lever (4) to the vertical position (open).

NOTES

Wipe off the oil spills completely.

9. Bleed the air from the fuel system according to the following sequence.
   (1) Turn the starter switch to “ON” position and wait for 10 to 15 seconds until the fuel is filled up inside the fuel pre-filter (1).
   (2) Turn the starter switch to “OFF” position after the fuel is filled up inside the fuel pre-filter (1).

CAUTION

If you start the engine without bleeding the air, air may mixed in causing burning out of the supply pump or injector.

NOTES

After bleeding the air from the fuel system, verify that the red float (2) in the pot has not come up from the bottom. The red float (2) in the fuel pre-filter (1) coming up indicates that the water has mixed in.

10. See “OPERATION 1.8 RADIATOR COVER” and install the radiator cover.

https://truckmanualshub.com/

[3] GREASING OF MACHINE UNITS

CAUTION

- **Grease type varies with greasing points. Failure to grease properly may shorten the machine life. Follow the table "Grease type" below.**
- **Greasing a new machine is required once every 10 hours until the machine attains the first 100 hours of operation that initial fit emerges.**

• Use proper grease specified below according to the greasing points.

No.	Greasing point		Grease type
1	Greasing of the boom mounting pin	1 place	Lithium grease
2	Greasing of the derricking cylinder bottom mounting pin	1 place	
3	Greasing of the derricking cylinder rod mounting pin	1 place	
4	Greasing of the outrigger rotary shaft	4 places	
5	Greasing of the outrigger contact cylinder bottom mounting pin	4 places	
6	Greasing of the outrigger contact cylinder rod mounting pin	4 places	
7	Greasing of the slewing gear	1 place	
8	Greasing of the sheave	1 place	
9	Greasing of the hook block	1 place	
10	Greasing of the boom top slide plate	8 places	Neo grease (grease for boom)
11	Greasing of the boom bottom slide plate	8 places	
12	Greasing of both sides and underside of the boom	Each boom	
13	Greasing of the boom extending and retracting wire ropes	2 pieces	Rope oil
14	Greasing of the winch wire rope	1 piece	

1. Using the grease gun, inject grease through corresponding grease plugs indicated in the arrow (see next page) of the above table "No.1 – 9".
2. Wipe off old grease squeezed out after greasing.
3. Place the outriggers when greasing the outrigger cylinders.
4. Pull the right operation lever inward to raise the boom slightly for greasing the derricking cylinder mounting pin and slide plate located on the top surface of the boom.
5. Push the left operation lever forward to extend the boom for greasing both sides and underside of the boom and wire rope.
6. Apply red rope grease to prevent wire rope abrasion and rust formation.
   With the rope surface cleaned, grease the rope with a brush.

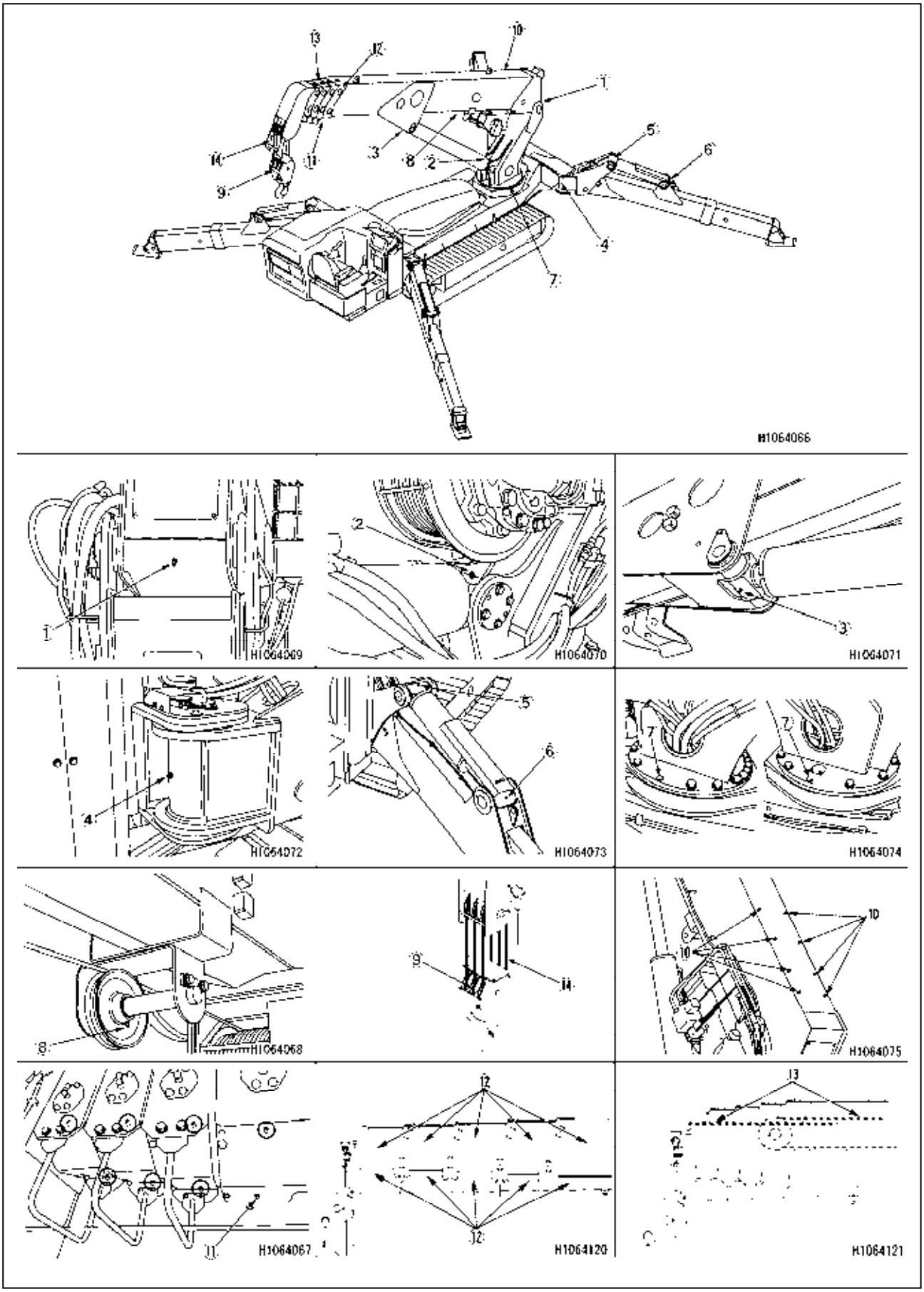
H1064066
H1064069
H1064070
H1064071
H1064072
H1064073
H1064074
H1064068
H1064075
H1064067
H1064120
H1064121

https://truckmanualshub.com/

9.7 EVERY 100 HOURS MAINTENANCE

Perform this maintenance along with maintenance every 50hours.

[1] INSPECTING/REFILLING OF OIL LEVEL IN SLEWING REDUCTION GEAR CASE

⚠ WARNING

- **Various parts are at elevated temperatures immediately after engine operation. Do not check the oil level immediately. Wait until the oil is cooled.**
- **Oil or plug may pop out due to the remnant pressure inside the case. Release the pressure by loosening the plug slowly.**

CAUTION

- **See "INSPECTION AND MAINTENANCE 6.1 USE OF LUBRICATING OIL ACCORDING TO TEMPERATURES" for the oil to be used.**
- **Use seal tape, etc. at the thread of the oil level check plug to stop the oil leak and securely tighten the plug after checking/refilling the oil.**

- Prepare a container to drain the oil.
- Have an Allen key ready.

1. Place the machine on a level and firm surface and raise the boom to approx. 80 degrees.
2. Remove the oil level check plug **(G)** using the Allen key. It is normal if the oil flows out of the plug hole.
3. If the oil level is low, refill the oil from the plug hole of the filler plug **(F)**.

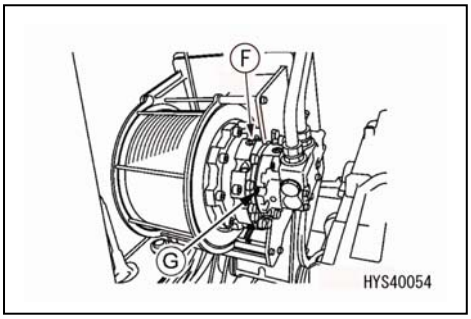

NOTES

- Pour in the oil until it flows out of the oil level check plug hole **(G)**.
- Wipe off the oil that spilled during replenishment completely.

4. Securely tighten the filler plug **(F)** and the oil level check plug **(G)** after checking/refilling the oil.

https://truckmanualshub.com/

9.8 EVERY 250 HOURS MAINTENANCE

Perform this maintenance along with maintenance every 50/100 hours.

[1] INSPECTION/CLEANING OF AIR CLEANER

⚠ WARNING

- **Do not clean or replace the air cleaner when the engine is in rotation. Such action may cause damage to the engine.**
- **Use of compressed air when cleaning the element causes particles to become airborne. Always wear protective goggles to prevent damage to eyes.**

CAUTION

- **Clean the air cleaner every 250 hours as a guideline. Assure pre- or post-work cleaning when using the machine in a dusty site.**
- **Do not tap and bump the element while cleaning it.**
- **Avoid the use of an element if the groove, gasket, or sealing is damaged.**
- **Be sure to replace the element after 5 cleanings or a lapse of 1 year from initial use.**
- **Always use Maeda genuine elements.**

1. See “OPERATION 1.9 RADIATOR GRILL” and remove the radiator grill. See “OPERATION 1.12 OPERATION SIDE COVER” and remove the operator side cover.
2. Disengage the clamps (1) (3 places) and remove the dust pan (2).

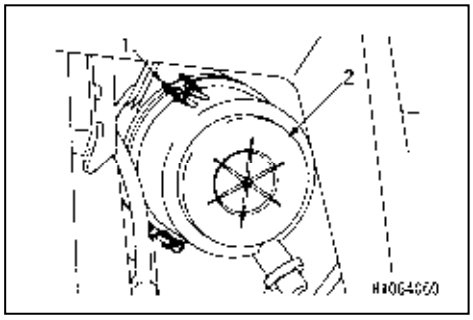

3. Pull out the outer element **(3)** only.

NOTES

- The inner element (5) should be removed only when the element clogging occurs soon after replacing the outer element (3) with a new one.
- The inner element (5) is for backup to prevent engine troubles caused by missing or damaged outer element (3).

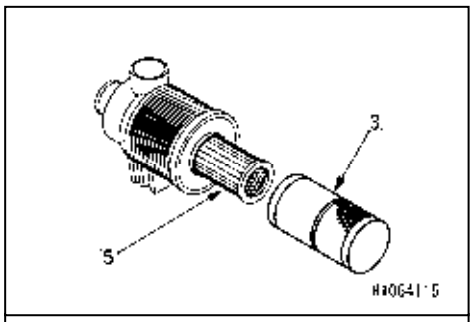

4. Cover the duct entrance located at the back of the air cleaner body (4) with a clean cloth or tape, to keep impurities out of the duct entrance.
5. Clean inside the air cleaner body (4).

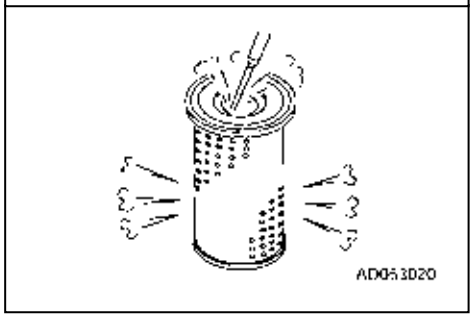

6. Apply dry pressured air {less than 0.29 – 0.49 MPa (3–5 kg/cm^2)} from the inner side of the element along the fold.
   Blow compressed air on the outside of the element along the grooves, and re-blow the air on the inside.

https://truckmanualshub.com/

7. Check the inside of the element by illuminating with a light bulb and if any pores or thinned parts are found, replace the element.

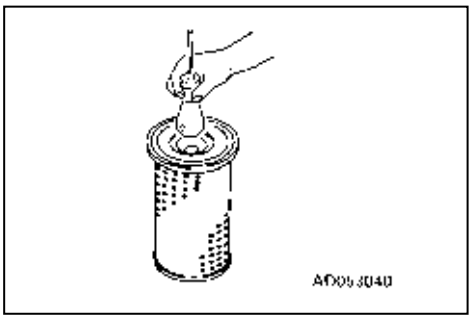

8. Clean inside the dust pan (2) and the rubber cup (5).

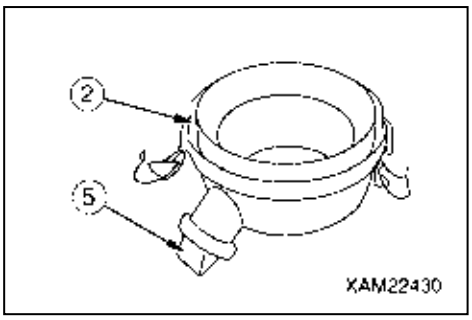

9. Remove the cloth or tape from the air connector at the back of the air cleaner body (4).
10. Insert the cleaned element (3) into the air cleaner body (4).
11. Mount the dust pan (2) by matching the arrow to the mating mark on the air cleaner body (4).
12. Secure the clamps (1) (3 places).
13. See “OPERATION 1.9 RADIATOR GRILL” and install the radiator grill. See “OPERATION 1.12 OPERATION SIDE COVER” and install the operation side cover.

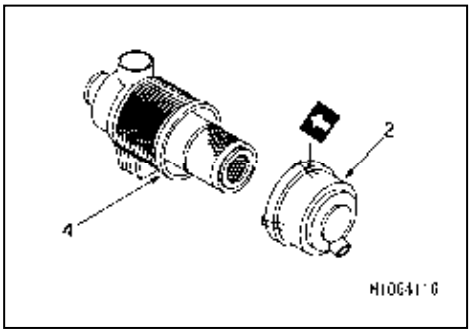

https://truckmanualshub.com/

[2] CHECKING/ADJUSTING ALTERNATOR BELT TENSION

⚠ WARNING

Remember to stop the engine when working.

[TENSION CHECK]

1. See “OPERATION 1.10 ENGINE COVER” and remove the engine cover.
2. Press between the belt (3) and pulley with your finger (approx. 98 N {10 kgf}) and check that the slacking (tension) is within the range of standard.

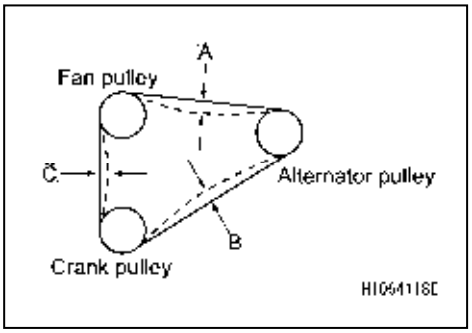

NOTES

- There are three locations to check (A, B and C), but you can check in one location where you can check easily.
- When checking the belt tension, also check for damage to pulleys, wearing of V-groove and belt. Especially check if the V-belt is touching the bottom of the V-groove, and if it is, replace the belt.

Standard slack of belt in use (mm)		
(A)	(B)	(C)
10–14	7–10	9–13

NOTES

“Belt in use” refers to the belt attached to the engine and operated for more than five minutes.

3. If the belt (3) slack is not within the range of standard slack, adjust the slack (tension) of the belt (3) by referring to the “Tension adjustment” section.

[TENSION ADJUSTMENT]

1. Loosen the mounting nut of the alternator bottom (1), mounting bolt of belt adjuster (2) and tightening bolt of belt adjuster (3).

2. Loosen the lock nut (4) and adjust the tension by turning the adjuster bolt (5).

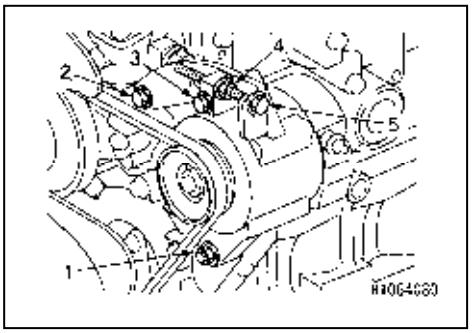

Standard slack of new belt (mm)		
(A)	(B)	(C)
8–12	5–8	7–11

Standard slack of new belt (mm)		
(A)	(B)	(C)
10–14	7–10	9–13

3. After adjusting with the adjuster bolt (5), tighten in order of the belt adjuster tightening bolt (3), belt adjuster mounting bolt (2), mounting nut (1) of the alternator bottom and finally the lock nut (4).

NOTES

- Turning adjuster bolt (5) clockwise increases the tension.
- If the belt has elongated to the extent that the adjusting allowance is lost or if it has a scar or crack on it, replace it with a new one.

4. See “OPERATION 1.10 ENGINE COVER” and install the engine cover.

[3] CHECKING/REFILLING OIL IN TRAVELLING MOTOR REDUCTION GEAR CASE

⚠ WARNING

- **Various parts are at elevated temperatures immediately after engine operation. Do not check the oil level immediately. Wait until the oil is cooled.**
- **Oil or plug may pop out due to the remnant pressure inside the case. Release the pressure by loosening the plug slowly.**

CAUTION

- **See “INSPECTION AND MAINTENANCE 6.1 USE OF LUBRICATING OIL ACCORDING TO TEMPERATURES” for the oil to be used.**
- **Tighten the plug securely paying attention to the engagement of the O-ring of the plug after checking and refilling the oil.**

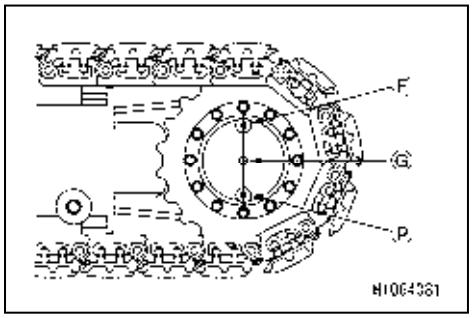

- Prepare a container to drain the oil.
- Have an Allen key ready.

1. Move the machine back and forth so that the drain plug **(P)** comes directly underneath.
2. Place a container to collect the drained fuel underneath the drain plug **(P)**.
3. Remove the oil level check plug **(G)** using an Allen key. It is normal if the oil is filled up to right below the plug hole.
4. If the oil level is low, refill the oil from the plug hole of the filler plug **(F)**.

NOTES

- Pour in the gear oil until it flows out of the oil level check plug hole **(G)**.
- Wipe off the oil that spilled during replenishment completely.

5. Securely tighten the filler plug **(F)** and the oil level check plug **(G)** after checking/refilling the oil.

★Tightening torque

Filler plug (G3/8): 48±3 N•m {5±0.3 kgf•m}

Oil checking plug (G1/8): 15±3 N•m {1.5±0.3 kgf•m}

https://truckmanualshub.com/

9.9 EVERY 500 HOURS MAINTENANCE

Perform this maintenance along with maintenance every 50/100/250 hours.

[1] REPLACEMENT ENGINE OIL AND ENGINE OIL FILTER CARTRIDGE

⚠ WARNING

- **Remember to stop the engine when refilling.**
- **The drain plug of the engine oil pan is located directly underneath the machine. When draining engine oil, install outriggers as necessary to raise the machine. Always place timbers beneath right and left crawlers and ground for safety.**
- **Securely tighten the oil level gauge after checking/refilling the oil. If the oil level gauge falls during the operation, the hot oil may spout out of the pan, causing burns.**
- **Various parts are at elevated temperatures immediately after engine operation. Do not proceed with oil or filter cartridge replacement immediately but wait for the engine to cool to the extent that you can touch it with your hand.**

CAUTION

- **Make sure that old packing is not stuck to filter base. If it is, it can cause oil leakage.**
- **See "INSPECTION AND MAINTENANCE 6.1 USE OF LUBRICATING OIL ACCORDING TO TEMPERATURES" for the oil to be used. Using oil other than those specified may shorten the life of the engine. Be sure to refill the specified oil.**
- **Keep the engine oil at an appropriate level.**
- **When the engine is cold, oil cannot be drained completely. Drain the oil in a condition in which the engine is warmed up just to the extent that it can be touched by hands.**
- **Be careful not to let any foreign substance go into the filler opening when refilling the oil.**

• Oil drain pan: Prepare a container for at least 10 liters.

• Volume of oil actually to be replaced in the oil pan: 7.4 L

1. Place the machine on a level surface.
2. See "OPERATION 2.14 OUTRIGGER SETTING OPERATION" to set the outriggers to raise the machine when necessary.

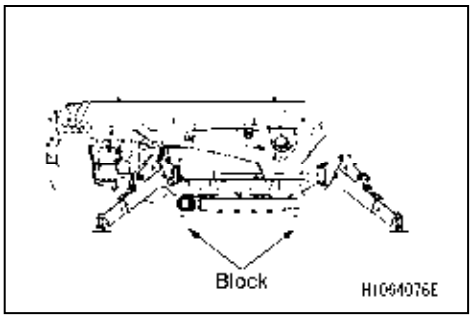

⚠ WARNING

Check the following before you enter under the machine.

- **Using a level, check to make sure that the machine is installed on a level surface.**
- **When using the outriggers, place them at their "maximum extension".**
- **Then, place a firm block between the ground and the crawler to prevent the machine from lowering.**

3. Go under the machine and place a container to collect the drained fuel directly underneath the drain plug **(P)**.
4. Turn the drain plug **(P)** slowly to avoid splashing oil on yourself, and drain oil.
5. Check the drained oil and if it contains an unacceptable amount of metal particles or foreign matter, contact us or our sales service agent.
6. Install and tighten the drain plug **(P)** securely.

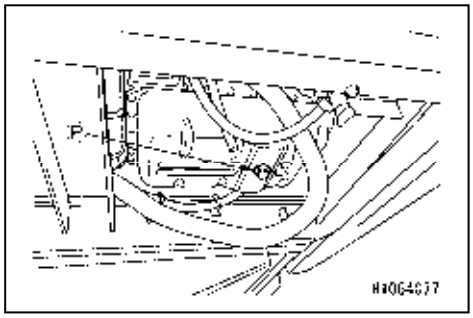

https://truckmanualshub.com/

7. When the outriggers are used, see “OPERATION 2.24 OUTRIGGER STOWAGE OPERATION” to stow the outriggers.
8. See “OPERATION 1.10 ENGINE COVER” and remove the engine cover.
9. Using a filter wrench, turn the filter cartridge **(3)** to the left to remove it.

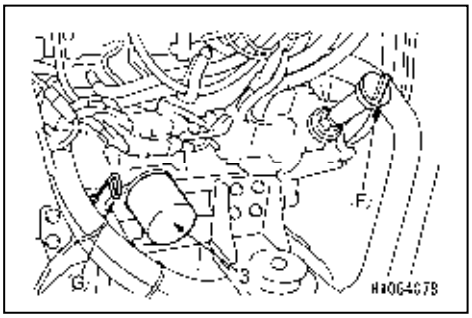

NOTES
Wait for about 10 minutes before removing the filter cartridge (3), because plenty of oil comes out if it is done immediately after stopping the engine.

10. Clean the filter mounting surface and reinstall a new filter cartridge after lightly coating the surface of its packing with clean engine oil.

NOTES
• To install the filter cartridge (3), tighten it with your hand until the seat surface hits the mounting surface. • After the seat surface touches the mounting surface, tighten with a filter wrench to the specified tightening torque. Tightening torque 19.6–23.5 N•m (2.0–2.4 kgf•m)

11. Check around the filter cartridge (3) for oil leaks and wipe off spilled oil.
12. After replacing the filter cartridge (3), feed engine oil through filler port **(F)** to the specified level.
13. Pull the oil level gauge **(G)** out and wipe the oil with a disposable cloth.
14. Insert the oil level gauge **(G)** into the gauge guide and pull it out.
15. Make sure that the oil level is between the markings “H” and “L” on the oil level gauge **(G)**.
16. Securely re-install the oil level gauge **(G)** and filler cap **(F)** after refilling the oil.
17. Start and run the engine at idle for approx. 5 minutes and stop the engine.
18. Check the oil level again and make sure that the oil level is between the markings “H” and “L” on the oil level gauge **(G)**.
19. See “OPERATION 1.10 ENGINE COVER” and install the engine cover.

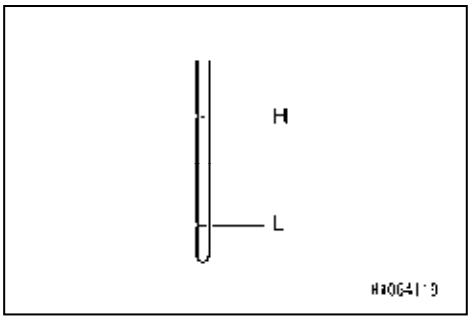

https://truckmanualshub.com/

[2] REPLACEMENT OF AIR CLEANER

⚠ WARNING

Do not clean and replace the air cleaner element when the engine is in rotation. Such action may cause damage to the engine.

CAUTION

- **Avoid the use of an element if the groove, gasket, or sealing is damaged.**
- **Always use Maeda genuine elements.**

1. Place the machine on a level surface.
2. See “OPERATION 1.9 RADIATOR GRILL” and install the radiator grill. See “OPERATION 1.12 OPERATION SIDE COVER” and remove the operation side cover.
3. Disengage the clamps (1) (3 places) and remove the dust pan (2).

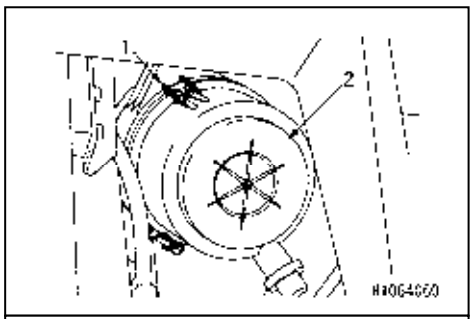

4. Pull out the outer element **(3)** only.

NOTES

- The inner element (5) should be removed only when the element clogging occurs soon after replacing the outer element (3) with a new one.
- The inner element (5) is for backup to prevent engine troubles caused by missing or damaged outer element (3).

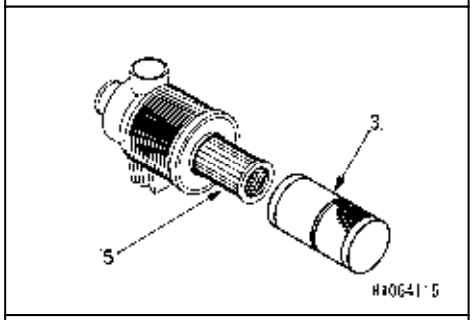

5. Cover the duct entrance located at the back of the air cleaner body (4) with a clean cloth or tape, to keep impurities out of the duct entrance.
6. Clean inside the air cleaner body (4).
7. Clean inside the dust pan (2) and the rubber cup (5).
8. Remove the cloth or tape from the air connector at the back of the air cleaner body (4).
9. Insert a new element (3) into the air cleaner body (4).
10. Mount the dust pan (2) by matching the arrow to the mating mark on the air cleaner body (4).
11. Secure the clamps (1) (3 places).
12. See “OPERATION 1.9 RADIATOR GRILL” and install the radiator grill. See “OPERATION 1.12 OPERATION SIDE COVER” and install the operation side cover.

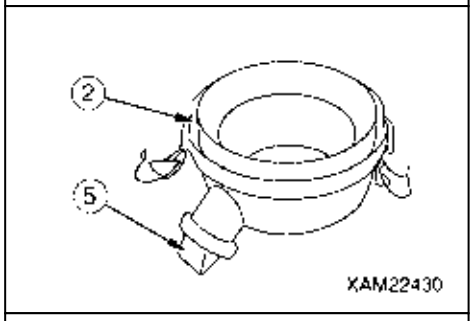

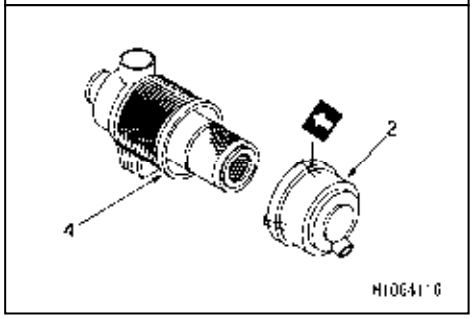

https://truckmanualshub.com/

[3] REPLACEMENT OF FUEL PRE-FILTER

⚠ WARNING

- **Remember to stop the engine and turn the engine key to OFF, when replacing the filter.**
- **Be extremely careful of fire such as cigarettes when replacing the fuel pre-filter.**
- **Various parts are at elevated temperatures immediately after engine operation. Do not proceed with fuel pre-filter element replacement immediately but wait for the engine to cool down to the extent that you can touch it with your hand.**

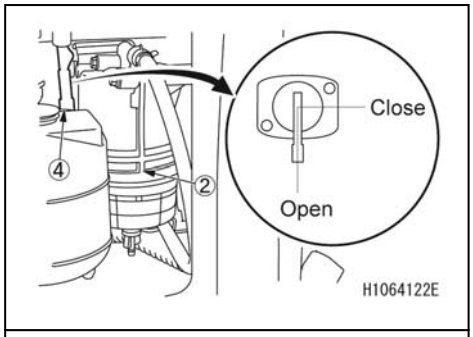

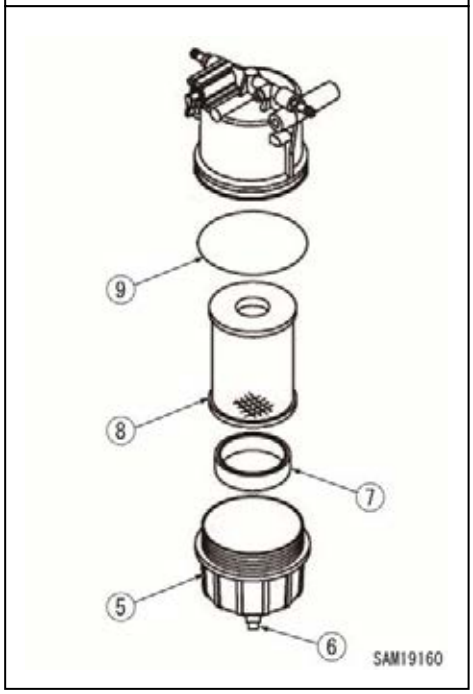

1. Place the machine on a level surface.
2. See “OPERATION 1.8 RADIATOR COVER” and remove the radiator cover.
3. Turn the fuel lever (4) of the fuel pre-filter (2) to the horizontal position (closed) to shut off the fuel.
4. Place an oil pan beneath the drain cock (6), and loosen the drain cock (6) and drain the fuel and contaminants.
5. Remove the cup (5) by turning to left.

NOTES

Wipe off the oil spills completely.

6. Remove the float (7) from the cup (5).
7. Remove the element (8).
8. Wash inside the cup (5) with new fuel oil.
9. Check condition of the Oring (9), and replace if necessary.
10. Set the float (7) inside the cup (5), and attach the Oring (9) and new element (8).

NOTES

Tightening torque of the cup (5) is as below.
Tightening torque : 1.0~2.0 N•m (0.1~0.2 kgf•m)

11. Close the drain cock (6).
12. Turn the fuel lever (4) of the fuel pre-filter (2) to the vertical position (opened).
13. Bleed air from the fuel system in following process.
    (1) Turn the starter switch to ON position and hold at the position for 10~15 seconds, and wait until fuel is filled inside the fuel pre-filter (2).
    (2) When fuel is filled inside the fuel pre-filter (2), turn the starter switch to OFF position.

CAUTION

If you start the engine without bleeding the air, air may be mixed in, causing burning out of the supply pump or the injector.

https://truckmanualshub.com/

[4] REPLACEMENT OF FUEL FILTER CARTRIDGE

⚠ WARNING

- **Remember to stop the engine and turn the engine key to OFF, when replacing the filter.**
- **Be extremely careful of fire such as cigarettes when replacing the fuel filter.**
- **Various parts are at elevated temperatures immediately after engine operation. Do not proceed with fuel filter element replacement immediately but wait for the engine to cool down to the extent that you can touch it with your hand.**

1. Place the machine on a level surface.
2. See “OPERATION 1.8 RADIATOR COVER” and remove the radiator cover.
3. Turn the fuel lever (4) of the fuel pre-filter (2) to the horizontal position (closed) to shut off the fuel.
4. See “OPERATION 1.10 ENGINE COVER” and remove the engine cover.
5. Using a filter wrench, turn the filter cartridge (1) to the left to remove it.
6. Clean the filter mounting surface and reinstall a new filter cartridge after lightly coating the surface of its packing with fuel.

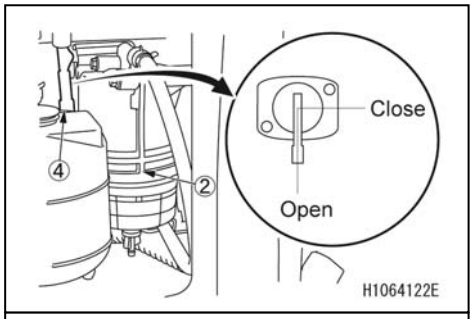

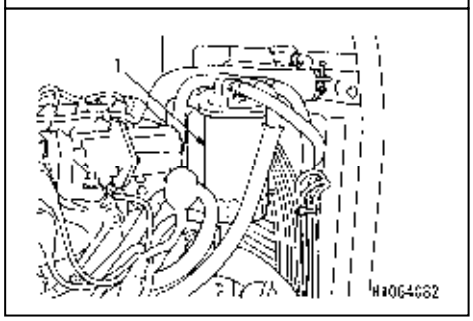

NOTES

- To install the filter cartridge (1), tighten it with your hand until the seat surface hits the mounting surface.
- After the seat surface touches the mounting surface, tighten with a filter wrench to the specified tightening torque.
  Tightening torque: 19.6–23.5 N•m
  (2.0–2.4 kgf•m)

7. Bleed the air from the fuel system according to the following sequence.
   (1) Turn the starter switch to “ON” position and wait for 10 to 15 seconds till the fuel is filled up inside the fuel pre-filter (2).
   (2) Turn the starter switch to “OFF” position and after the fuel is filled up inside the fuel pre-filter (2).

CAUTION

If you start the engine without bleeding the air, air may mixed in causing burning out of the supply pump or injector.

NOTES

After bleeding air from the fuel system, check that the red float in the fuel pre-filter (2) has not come up from the bottom. The red float in the fuel pre-filter (2) coming up indicates that the water has mixed in.

8. Check around the filter cartridge (1) for fuel leaks and wipe off the spilled fuel.
9. See “OPERATION 1.10 ENGINE COVER” and install the engine cover.
10. See “OPERATION 1.8 RADIATOR COVER” and install the radiator cover.

https://truckmanualshub.com/

[5] REPLACEMENT HYDRAULIC OIL RETURN FILTER

⚠ WARNING

- **Various parts are at elevated temperatures immediately after engine operation. Do not replace the filter immediately. Wait until the oil is cooled.**
- **The oil may spout out when the air filter of the hydraulic oil tank is removed. Remove the air filter to relieve internal pressure by slowly rotating it first.**
- **Securely close the air filter after refilling. If the air filter falls during the operation, hot oil may spout out of the pan, causing burns.**

CAUTION

- **See "INSPECTION AND MAINTENANCE 6.1 USE OF LUBRICATING OIL ACCORDING TO TEMPERATURES" for the oil to be used.**
- **Be sure to put the machine in the travelling posture when checking the oil level. If you check the oil level in the working posture, you judge the oil level to be low and feed the oil excessively.**
- **After replacing the filter of hydraulic oil, do not start the engine for a while until piping and hydraulic equipment are filled with the oil.**
- **Do not refill oil exceeding the level gauge (H) (upper limit). When the oil goes beyond this level, it may spout out from the air filter during traveling or crane operation.**
- **Be careful not to let any foreign substance go into the filler opening when refilling the oil.**

1. Place the machine on a level surface.
2. See "OPERATION 1.10 ENGINE COVER" and remove the engine cover.
3. Remove the air filter **(F)** to relieve internal pressure.
4. Using a filter wrench, turn the filter cartridge (3) to the left to remove it.
5. Clean the filter base and reinstall a new filter cartridge (3) after coating its packing and threaded portion with clean engine oil (or lightly with grease).

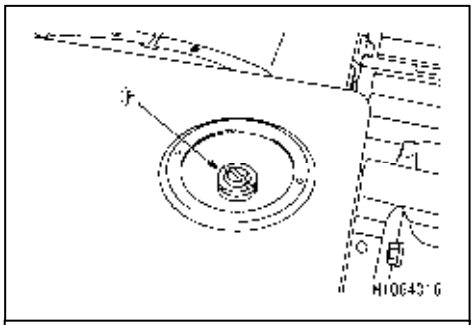

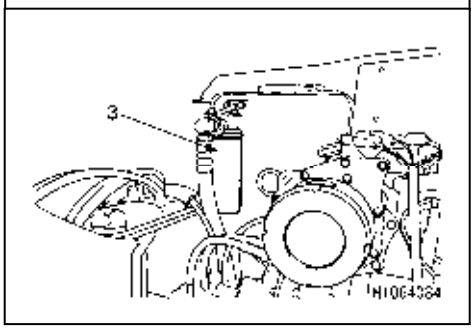

NOTES

When reinstalling the filter cartridge, tighten it 1/2 to 3/4 of a turn after the packing surface touches the sealing surface of the filter base.
Be sure to do it manually.

6. Start and run the engine at low idle for 10 minutes and stop the engine to bleed the air.
7. Check around the filter cartridge (3) for oil leaks and wipe off spilled oil.
8. See "INSPECTION AND MAINTENANCE 9.1.2 INSPECTION BEFORE STARTING ENGINE" to inspect the oil level inside the hydraulic tank.
   If there is not sufficient oil, refill it.
9. Mount the air filter (F).
10. See "OPERATION 1.10 ENGINE COVER" and install the engine cover.

https://truckmanualshub.com/

[6] REPLACEMENT HYDRAULIC OIL TANK AIR FILTER

⚠ WARNING

- **Various parts are at elevated temperatures immediately after engine operation. Do not replace the filter immediately. Wait until the oil is cooled.**
- **The oil may spout out when the air filter of the hydraulic oil tank is removed. Remove the air filter to relieve internal pressure by slowly rotating it first.**
- **Securely close the air filter after refilling. If the air filter falls during the operation, hot oil may spout out of the pan, causing burns.**

1. Place the machine on a level surface.

2. Remove 2 pieces of mounting bolts (2), and remove the inspection cover (1).

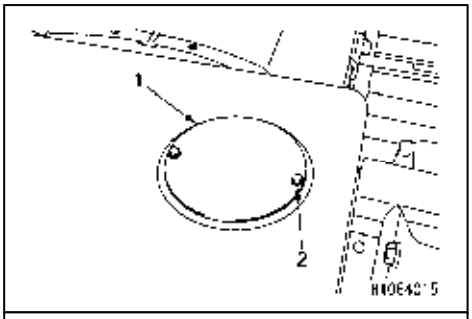

3. Remove the air filter (F) and replace with new one.

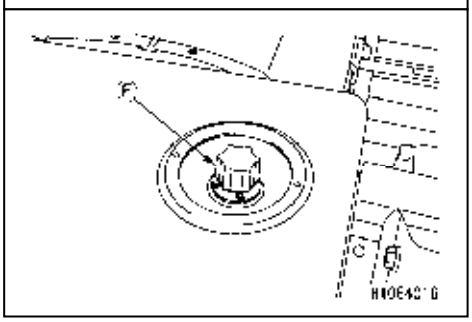

NOTES

The air filter (F) is cap-integrated type, so replace with the cap.

4. Mount the inspection cover (1) with the mounting bolts (2).

https://truckmanualshub.com/

[7] INSPECTION OF SLEWING RING MOUNTING BOLT

⚠ WARNING

- **If any loose mounting bolt on the slewing ring breaks off, the upper part of the crane comes off and falls, causing serious injury. Remember to check the slewing ring mounting bolt and re-tighten with the specified tightening torque if any loose bolts are found.**
- **Remember to replace the slewing ring mounting bolt regularly. Replace them every seven years or every 7000 hours, whichever comes first.**

★Tightening torque of slewing ring mounting bolt

No.	Mounting position	Dimension	Number of bolt to be used	Tightening torque
(1)	Bearing inner ring side	M22	31	612–828 N•m
(2)	Bearing outer ring side	M22	15	612–828 N•m

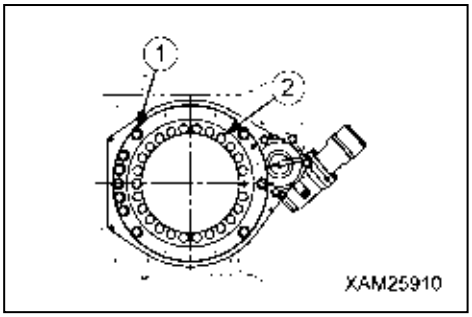

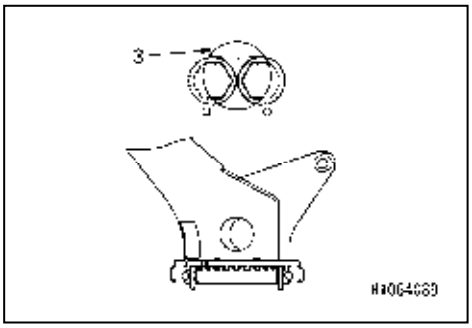

Check the inner ring mounting bolt (2) following the procedure below.

1. Remove the mounting bolts (4) (2 bolts) and then remove the inspection cover (3) on the right of rotating post.
2. Rotate the post so that the mounting bolt (2) on the bearing inner ring side comes to the center of the inspection opening **(A)** and check all the mounting bolts (2) for loosening, loss or damage.
3. If any loose bolts are found, re-tighten with the tightening torque in the above table. If any damages are found, replace it with a new one.
4. After the inspection, reinstall the inspection cover (3) to the original position.

Check the outer ring mounting bolt (1) following the procedure below.

1. Rotate the post so that the mounting bolt (1) on the bearing outer ring side comes to the side of machine body and check all the mounting bolts (1) for loosening, loss or damage.
2. If any loose bolts are found, re-tighten with the tightening torque in the above table. If any damages are found, replace it with a new one.

https://truckmanualshub.com/

9.10 EVERY 1000 HOURS MAINTENANCE

Perform this maintenance along with maintenance every 50/100/250/500 hours.

[1] CLEANING ENGINE COOLING SYSTEM

⚠ WARNING

- **Coolant will be at elevated temperatures immediately after engine operation. If you drain the coolant immediately, you may suffer a burn. Always drain the coolant after the engine has cooled down.**
- **Do not remove the radiator cap if radiator coolant is hot. Hot water may spout out if disregarded. Cap removal is allowed when the water drops in temperature. Be sure to relieve internal pressure by slowly rotating the filler cap before cap removal.**
- **Do not stand in front of and behind the machine when starting the engine for cooling system cleaning. Failure to stand aside of the machine may pose a danger in the event of a sudden movement of the machine.**
- **Keep antifreeze away from flame. Antifreeze is a flammable solution.**
  Do not smoke when handling antifreeze.

CAUTION

- **Always use tap water (soft water) for coolant. Contact us or our sales service agent if river water, well water, or water through the small water-supply system is necessarily substituted for tap water.**
- **Use a lubricant compliant to one of the SAE J814, SAE J1034, ASTM D3306 or JIS K2234 standard.**
- **Replace the coolant every year.**
- **A mixing ratio of antifreeze is recommended to be controlled by the antifreeze concentration meter.**

Cooling system cleaning and antifreeze replacement should conform to the cycles specified in the following table.

Antifreeze type	Cooling system cleaning and antifreeze replacement
Anti-corrosive all-season type	Every 2 years or every 2000 hours, whichever falls first

Stop the machine on a level place and perform cooling system cleaning and antifreeze replacement.

A mixing ratio of antifreeze varies with temperature. Antifreeze as a volume ratio should be 30–60% to yield anti-corrosive effect.

The mixing ratio between water (soft water) and antifreeze is to be determined with respect to past minimum temperatures, in accordance with “Mixing ratio between water and antifreeze” shown below. For actual mixing, set temperature approx. 10 degrees lower than minimum temperature.

[MIXING RATIO BETWEEN WATER AND ANTIFREEZE]

Min. temperature (°C) / Mixed quantity (L)	Min. -15	-20	-25
Antifreeze amount	2.0	2.1	2.8
Water amount	4.3	4.2	3.5

• Antifreeze-mixed water drain pan: 7 L container
• Have a water filling hose available.

1. Place the machine on a level surface.
2. See “OPERATION 1.10 ENGINE COVER” and “OPERATION 1.9 RADIATOR GRILL” and remove the engine cover and radiator grill.
3. Turn the radiator cap (3) slowly until it comes into contact with the stopper to relieve internal pressure from the radiator.
4. With no pressure in the radiator, give further turning of the radiator cap (3) until it reaches the stopper while holding it down. Remove the radiator cap (3).
5. Place a drain pan under the drain valve (8) lying below the radiator to receive coolant (antifreeze-mixed water).
6. Open the drain valve (8) to drain coolant. Close the drain valve (8) upon completion of draining.
7. Supply tap water to the radiator through the radiator supply port. The radiator needs to be filled up to the supply port.
8. Start the engine with the drain valve (8) open, and ensure the engine runs at low idle. Conduct a 10 minute cleaning with running water.

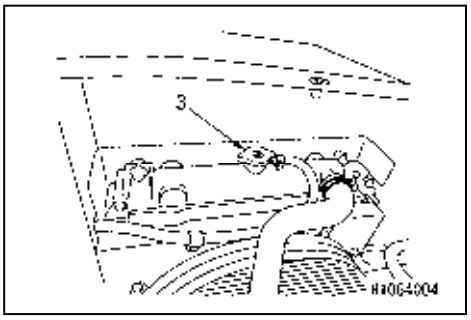

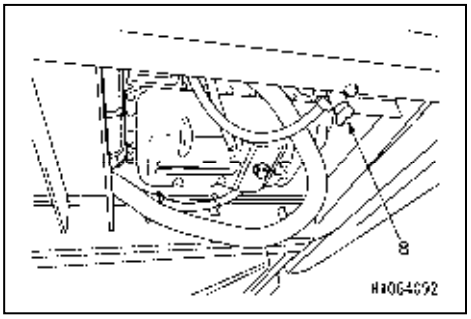

CAUTION

- **The radiator is to retain a high water level during cleaning with running water. Adjust the quantities of water supplied and drained as necessary.**
- **Ensure that the water filling hose stays connected to the radiator supply port properly during cleaning with running water.**

9. After cleaning with running water, stop the engine and water supply and drain tap water. Close the drain valve (8) upon completion of draining.
10. Clean it with the cleaning agent.

NOTES

Cleaning with the cleaning agent must conform to instructions provided on the cleaning agent.

11. Open the drain valve (8) to drain the cleaning agent after cleaning with the agent. Close the drain valve (8) upon completion of draining.
12. Supply tap water to the radiator through the radiator supply port. The radiator needs to be filled up to the supply port.

https://truckmanualshub.com/

13. Start the engine with the drain valve (8) open, and ensure the engine runs at low idle. Conduct a cleaning with running water until clean water flows out of the radiator.

CAUTION

- **The radiator is to retain a high water level during cleaning with running water. Adjust the quantities of water supplied and drained as necessary.**
- **Ensure that the water filling hose stays connected to the radiator supply port properly during cleaning with running water.**

14. Once clean water has flowed out, stop the engine and water supply and drain water. Close the drain valve (8) upon completion of draining.
15. Supply coolant mixed of antifreeze and tap water (soft water) to the radiator through the radiator supply port. The radiator needs to be filled up to the supply port.

NOTES

See the above-mentioned table, “Mixing ratio between water and antifreeze”, for the mixing ratio of antifreeze and tap water (soft water).

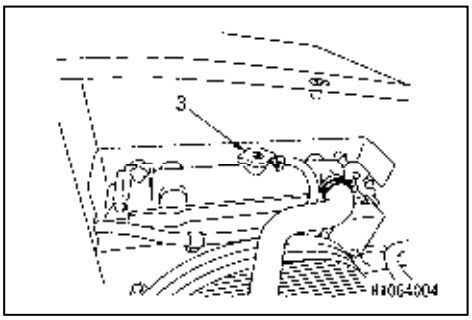

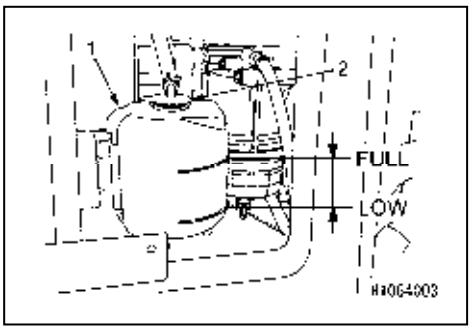

16. Start the engine with the radiator cap (3) removed, and ensure that the engine runs at low idle for 5 minutes. Release air from the cooling system with the engine at high idle for another 5 minutes.
17. Wait for approx. 3 minutes after stopping the engine. Supply tap water (soft water) to the radiator through the radiator supply port, up to the supply port. Close the radiator cap (3).
18. Remove the reserve tank (1). Clean the inside of the reserve tank with coolant drained from the tank.
19. Put the reserve tank (1) in the original place, supply tap water (soft water) through the supply port to “FULL”. Install the cap (2) properly.
20. See “OPERATION 1.10 ENGINE COVER” and “OPERATION 1.9 RADIATOR GRILL” and install the engine cover and radiator grill.

https://truckmanualshub.com/

[2] OIL REPLACEMENT IN HYDRAULIC OIL TANK

⚠ WARNING

- **Various parts are at elevated temperatures immediately after engine operation. Do not change the oil immediately. Wait until the oil is cooled.**
- **The oil may spout out when the air filter of the hydraulic oil tank is removed. Remove the air filter to relieve internal pressure by slowly rotating it first.**
- **Securely close the air filter after refilling. If the air filter falls during the operation, hot oil may spout out of the pan, causing burns.**

CAUTION

- **See "INSPECTION AND MAINTENANCE 6.1 USE OF LUBRICATING OIL ACCORDING TO TEMPERATURES" for the oil to be used.**
- **Be sure to put the machine in the travelling posture when checking the oil level. If you check the oil level in the working posture, you judge the oil level to be low and feed the oil excessively.**
- **After replacing the hydraulic oil, do not start the engine for a while until piping and hydraulic equipment are filled with the oil.**
- **Do not refill oil exceeding the level gauge (H) (upper limit). When the oil goes beyond this level, it may spout out from the air filter during traveling or crane operation.**
- **Be careful not to let any foreign substance go into the filler opening when refilling the oil.**

- Oil drain pan: Prepare a container for at least 120 liters.
- Quantity of oil in hydraulic oil tank for replacement: 110 L

1. Place the machine on a level surface.
2. See "OPERATION 2.14 OUTRIGGER SETTING OPERATION" to set all the outriggers.

NOTES

After installing the outrigger, raise the machine body slightly.

3. See "OPERATION 2.19 BOOM DERRICKING OPERATION" and raise the boom to the appropriate height for operation and stop the engine.
4. Remove the mounting bolts (2) (2 bolts) and then remove the inspection cover (1).
5. Remove the air filter **(F)** at the top of the hydraulic oil tank.

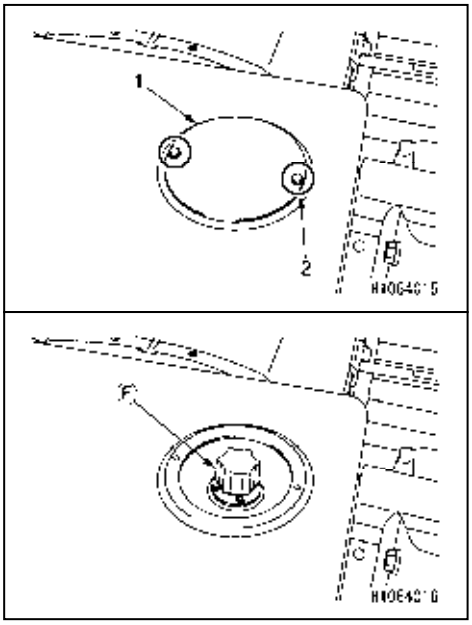

6. Place a drain pan directly underneath the drain plug **(P)** to receive drained oil.
7. Turn the drain plug **(P)** slowly to avoid splashing oil on yourself, and drain oil.
8. Check the drained oil and if it contains an unacceptable amount of metal particles or foreign matter, contact us or our sales service agent.
9. Install and tighten the drain plug **(P)** securely.
10. Feed hydraulic oil through the filler port to the level where you can see the oil on the oil level gauge (G).
11. Securely close the air filter **(F)** after refilling.

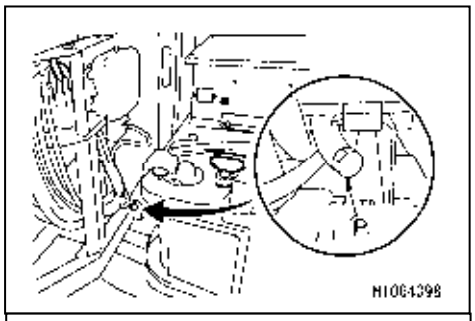

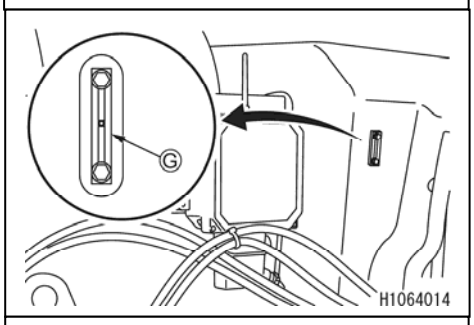

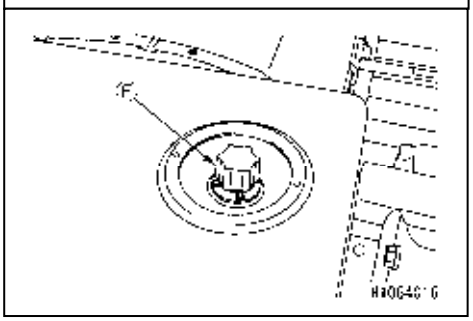

NOTES
Wipe away cleanly whenever the oil spills.

12. Place the cover (1) on the original position and tighten the mounting bolts (2) (3 bolts) securely.
13. See “OPERATION 2.19 BOOM DERRICKING OPERATION” and lower the boom to the stowage position and stop the engine.

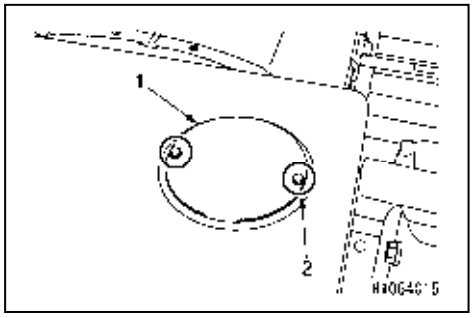

14. Bleed the air according to the following sequence.
    (1) Start the engine only after piping and hydraulic equipment are filled with oil.
    After engine start, continue to run the engine at low idle for 10 minutes.
    (2) While keeping the engine speed low, slightly operate each control lever to operate each cylinder and winch motor slowly.
    Do not operate the boom hoisting cylinder and telescopic boom cylinder to the stroke end, but stop them at a position approximately 100 mm before the stroke end.
    Repeat this 4 to 5 times.
    (3) See “OPERATION 2.14 OUTRIGGER SETTING OPERATION” and make the outrigger cylinder telescope in a condition that the machine does not float.
    When making the outrigger cylinder telescope, do not operate it to the stroke end, but stop it at a position approximately 100 mm before the stroke end.
    Repeat this 4 to 5 times.

15. See “OPERATION 2.24 OUTRIGGER STOWAGE OPERATION” to stow all the outriggers.

https://truckmanualshub.com/

[3] OIL REPLACEMENT IN SLEWING REDUCTION GEAR CASE

⚠ WARNING

The drain plug of the slewing reduction gear case is located directly underneath the machine.
When draining oil, install outriggers as necessary to raise the machine, and go under the machine. If the machine is unstable and sways, place supports (stands) under the front and rear sides of the machine to stabilize it.

CAUTION

- **See "INSPECTION AND MAINTENANCE 6.1 USE OF LUBRICATING OIL ACCORDING TO TEMPERATURES" for the oil to be used.**
- **Use seal tape, etc. at the thread of the drain plug and filler plug to stop the oil leak and securely tighten the plugs after changing the oil.**

- Oil drain pan: Prepare a container for at least 2 liters.
- Oil replacement quantity in slewing reduction gear case: 1.5 L

1. Place the machine on a level surface.
2. See "OPERATION 2.14 OUTRIGGER SETTING OPERATION" to set the outriggers to raise the machine when necessary.

⚠ WARNING

Check the following before you enter under the machine.
- **Using a level, check to make sure that the machine is installed on a level surface.**
- **When using the outriggers, place them at their "maximum extension".**
- **Then, place a firm block between the ground and the crawler to prevent the machine from lowering.**

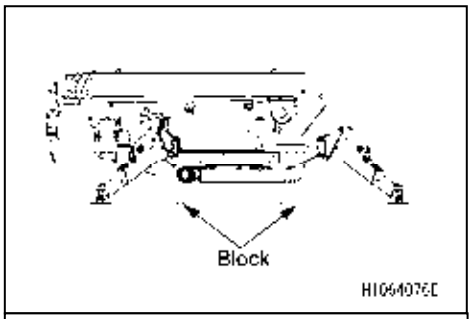

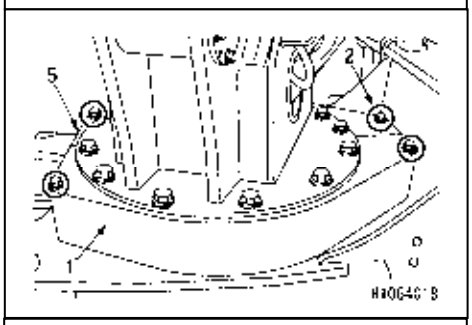

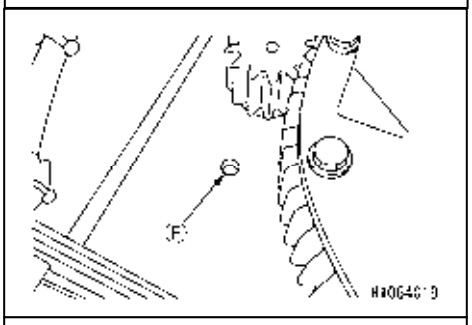

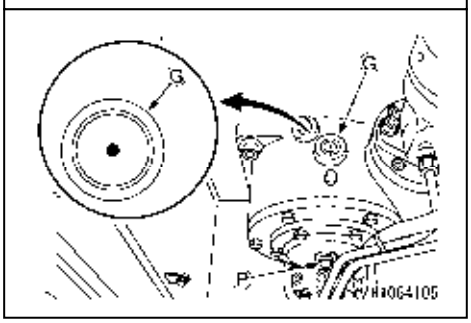

3. Remove the slewing ring cover.
4. Remove the filler plug **(F)** of slewing reduction gear case.
5. Go under the machine and place a drain pan directly underneath the drain plug **(P)** of the slewing reduction gear case to receive drained oil.
6. Turn the drain plug **(P)** slowly to avoid splashing oil on yourself, and drain oil.
7. Check the drained oil and if it contains an unacceptable amount of metal particles or foreign matter, contact us or our sales service agent.
8. Install and tighten the drain plug **(P)** securely.
9. Inject the gear oil from the filler plug **(F)** hole of the slewing reduction gear case.

NOTES

Refill the oil up to the center point of the sight gauge **(G)**.

10. Securely tighten the filler plug **(F)** after changing the oil.
11. Install the slewing ring cover.
12. When the outriggers are used, see "OPERATION 2.24 OUTRIGGER STOWAGE OPERATION" to stow all the outriggers.

https://truckmanualshub.com/

[4] OIL REPLACEMENT IN WINCH REDUCTION GEAR CASE

⚠ WARNING

- **Various parts are at elevated temperatures immediately after engine operation. Do not check the oil level immediately. Wait until the oil is cooled.**
- **Oil or plug may pop out due to the remnant pressure inside the case. Release the pressure by loosening the plug slowly.**

CAUTION

- **See "INSPECTION AND MAINTENANCE 6.1 USE OF LUBRICATING OIL ACCORDING TO TEMPERATURES" for the oil to be used.**
- **Use seal tape at the thread of the plug to prevent the oil leak and securely tighten the plug after changing the oil.**

- Volume of oil actually to be replaced in the oil pan: 1.8 L
- Prepare a container to drain the oil.
- Have an Allen key ready.

1. Place the machine on a level and firm surface and raise the boom to approx. 80 degrees.
2. Place a container to collect the drained fuel underneath the drain plug **(P)**.
3. Remove the filler plug **(F)**, oil level checking plug **(G)** and drain plug **(P)** using an Allen key and drain the oil.
4. Install and tighten the drain plug **(P)** securely after draining.
5. Refill the oil of the exchange amount from the filler plug **(F)** hole.
6. If the oil is flowing out from the oil level check plug **(G)** hole, securely tighten the oil level check plug **(G)** and filler plug **(F)**.

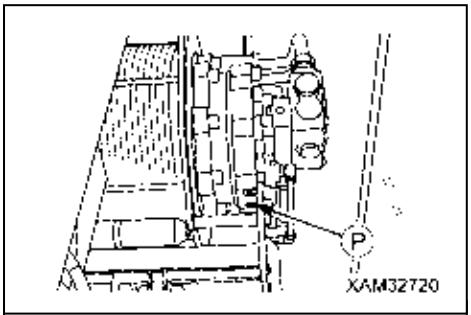

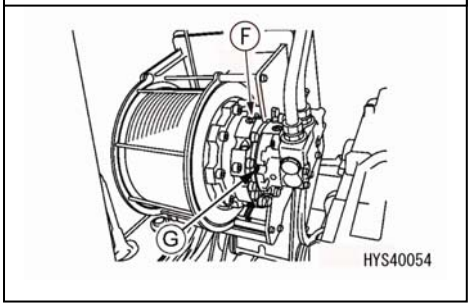

https://truckmanualshub.com/

[5] OIL REPLACEMENT IN TRAVELLING MOTOR REDUCTION GEAR CASE

⚠ WARNING

- **Various parts are at elevated temperatures immediately after engine operation. Do not change the oil immediately. Wait until the oil is cooled.**
- **Oil or plug may pop out due to the remnant pressure inside the case. Release the pressure by loosening the plug slowly.**

CAUTION

- **See "INSPECTION AND MAINTENANCE 6.1 USE OF LUBRICATING OIL ACCORDING TO TEMPERATURES" for the oil to be used.**
- **Tighten the plug securely paying attention to the engagement of the O-ring of the plug after changing the oil.**

- Oil replacement quantity: 0.8 L each for left and right
- Prepare a container to drain the oil.
- Have an Allen key ready.

1. Move the machine back and forth so that the filler plug **(F)** and drain plug **(P)** are perpendicular to the ground.
2. Place a container to collect the drained fuel underneath the drain plug **(P)**.
3. Remove the filler plug **(F)**, oil level checking plug **(G)** and drain plug **(P)** using an Allen key and drain the oil.
4. Install and tighten the drain plug **(P)** securely after draining.
5. Refill the oil of the exchange amount from the filler plug **(F)** hole.
6. If the oil is flowing out from the oil level check plug **(G)** hole, securely tighten the oil level check plug **(G)** and filler plug **(F)**.

   ★ Tightening torque

   Drain, filler plug (G3/8): 48±3 N•m {5±0.3 kgf•m}

   Oil checking plug (G1/8): 15±3 N•m {1.5±0.3 kgf•m}

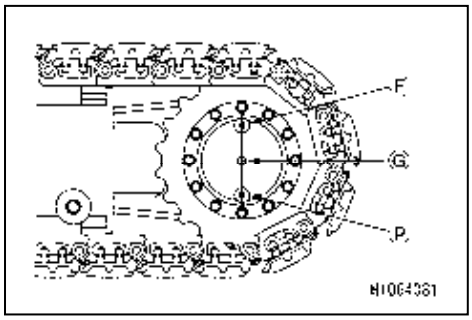

[6] INSPECTION/ADJUSTMENT ENGINE VALVE CLEARANCE

Inspection and adjustment of valve clearance require special tools. Contact us or our sales service agent to request inspection and repair.

9.11 EVERY 1500 HOURS MAINTENANCE

Perform this maintenance along with maintenance every 50/100/250/500/1000 hours.

[1] INSPECTION/CLEANING/TESTING OF FUEL INJECTOR

Inspection, cleaning and testing of fuel injector require special tools. Contact us or our sales service agent to request inspection and repair.

[2] INSPECTION OF CRANKCASE BREATHER EQUIPMENT

Inspection of crankcase breather requires special tools. Contact us or our sales service agent to request inspection and repair.

9.12 EVERY 2000 HOURS MAINTENANCE

Perform this maintenance along with maintenance every 50/100/250/500/1000 hours.

[1] INSPECTION/REPAIR OF VALVE SEAT

Inspection and repair of valve seat require special tools. Contact us or our sales service agent to request inspection and repair.

[2] CHECKING ALTERNATOR AND STARTER

CAUTION

Inspection every 1000 hours is recommended in case of frequent engine starting.

There may be a wearing down of the brush and insufficient grease. Contact us or our sales service agent to request inspection and repair.

9.13 EVERY 3000 HOURS MAINTENANCE

Perform this maintenance along with maintenance every 50/100/250/500/1000/1500/2000 hours.

[1] INSPECTION OF ECU AND RELATED SENSOR AND ACTUATOR

Inspection of ECU and related sensor and actuator require special tools. Contact us or our sales service agent to request inspection and repair.

[2] INSPECTION/CLEANING/TESTING OF EGR VALVE

Inspection, cleaning and testing of EGR valve require special tools. Contact us or our sales service agent to request inspection and repair.

[3] CLEANING OF EGR COOLER (CLEANING OF WATER SIDE/EXHAUST PASSAGE BLOWER)

Cleaning of EGR cooler (cleaning water side/exhaust passage blower) requires special tools. Contact us or our sales service agent to request inspection and repair.

[4] INSPECTION OF DPF DOC

Inspection of DPF DOC requires special tools. Contact us or our sales service agent to request inspection and repair.

[5] INSPECTION OF INLET THROTTLE VALVE OPERATION

Testing of inlet throttle valve requires special tools. Contact us or our sales service agent to request inspection and repair.

[6] INSPECTION OF EXHAUST THROTTLE VALVE OPERATION

Testing of exhaust throttle valve requires special tools. Contact us or our sales service agent to request inspection and repair.

[7] INSPECTION AND CLEANING OF INJECTOR

Inspection and cleaning of injector requires special tools. Contact us or our sales service agent to request inspection and repair.

https://truckmanualshub.com/

This Page Intentionally Left Blank.

https://truckmanualshub.com/

SPECIFICATIONS

1. PRINCIPAL SPECIFICATIONS LIST	330
2. SPECIFICATION DIMENSIONAL DRAWING	333
3. DIMENSIONAL DRAWING OF OUTRIGGER WIDTH	334
4. RATED TOTAL LOAD CHART	335
5. WORKING RADIUS/LIFTING HEIGHT	347
6. WORKING RADIUS and LIFTING HEIGHT (DURING PICK & CARRY)	348

https://truckmanualshub.com/

1. PRINCIPAL SPECIFICATIONS LIST

Equipment/Item		MC815CWM
Weight and dimensions	Machine mass	9460 kg
	Overall length × width × height	5900 mm × 1670 mm × 2490 mm
	Distance between center idler and sprocket	2245 mm
	Track gauge	1270 mm
	Width of crawler	400 mm
Performance	Maximum rated total load × working radius	8.09 t × 2.4 m
	Maximum working radius	18.8 m
	Maximum lifting height above ground	19.6 m
Winch system	Type	2 gear hydraulic motor with automatic brake (differential planetary reduction gear with grooved drum)
	Hook hoist speed	20.6 m/min (4 layers, 6 parts of line)
	Hoist wire rope	IWRC 6 × Fi (29), ø10 × 150 m
Telescoping system	Type	3 x sequentially telescoping hydraulic cylinder + 1 x wire rope with in-built sheave (with automated hydraulic locking device)
	Type of boom	Automatic hydraulic 5-section pentagonal telescopic (Stages 2 and 3: Sequential telescoping; Stages 4 and 5: Simultaneous telescoping)
	Boom length	5.52 m - 8.99 m - 12.46 m - 15.93 m - 19.40 m
	Boom telescoping stroke / time	13.88 m/52 sec
Boom hoist system	Type	Hydraulic double acting cylinder, direct acting type × 1 (with automated hydraulic locking device)
	Derricking angle	0 to 80 degrees/22.9 sec
Slewing system	Type	Swing bearing support, hydraulic motor driven, Reducer: worm + spur gear reduction, Brake: worm self-lock
	Slewing angle	360 degrees continuous / 2.5 min^{-1}
Outrigger System	Type	Extension/grounding: hydraulic cylinder direct acting type (with automated hydraulic locking device)
	Max. extended width (left to right)	(Front) 6300 mm (Rear) 6520 mm
	Max. extended width (front to rear)	6770 mm
Travelling system	Type	2 speed hydraulic motor driven, Step-less speed changer, built-in brake
	Travel speed	Forward / reverse 0 to 3.2 km/h
	Grade ability	23 degrees
	Ground pressure	52 kPa (0.53 kgf/cm^2)
Hydraulic system	Hydraulic pump	Twin variable piston pump
	Hydraulic oil tank capacity	157 L
Engine	Model	Yanmar 4TNV88C-NMB
	Type	Vertical type inline 4 valve, water cooled, 4 cycle (direct injection type)
	Displacement	2. 189 L (2189 cc)
	Rated output (continuous)	30.5 kW/2500 min-1 (41.5 PS/2500 rpm)
	Fuel used/fuel tank capacity	Diesel / 70 L
Battery	Model	120E41R (12 VDC × 1)
Safety device	Over hoist detector / automatic stop device, over-unwinding detector, hydraulic pressure automatic lock device, wire rope slinging latch, alarm buzzer, level, machine body inclination alarm, lock lever, travel/outrigger/crane selector switch, outrigger safety device (outrigger interlock, crane interlock), moment limiter, rotary lamp, radio controller transmitter load display, working radius limiter (with slewing radius limiter), EMO switch	
Classification	Mobile crane ISO4301/2 Group A1	

Equipment/Item		MC815CWME (machines with engine & electric motor)
Weight and dimensions	Machine mass	9700 kg
	Overall length × width × height	5900 mm × 1670 mm × 2490 mm
	Distance between center idler and sprocket	2245 mm
	Track gauge	1270 mm
	Width of crawler	400 mm
Performance	Maximum rated total load × working radius	8.09 t × 2.4 m
	Maximum working radius	18.8 m
	Maximum lifting height above ground	19.6 m
Winch system	Type	2 gear hydraulic motor with automatic brake (differential planetary reduction gear with grooved drum)
	Hook hoist speed	20.6 m/min (4 layers, 6 parts of line)
	Hoist wire rope	IWRC 6 × Fi (29), ø10 × 150 m
Telescoping system	Type	3 x sequentially telescoping hydraulic cylinder + 1 x wire rope with in-built sheave (with automated hydraulic locking device)
	Type of boom	Automatic hydraulic 5-section pentagonal telescopic (Stages 2 and 3: Sequential telescoping; Stages 4 and 5: Simultaneous telescoping)
	Boom length	5.52 m - 8.99 m - 12.46 m - 15.93 m - 19.40 m
	Boom telescoping stroke / time	13.88 m/52 sec
Boom hoist system	Type	Hydraulic double acting cylinder, direct acting type × 1 (with automated hydraulic locking device)
	Derricking angle	0 to 80 degrees/22.9 sec
Slewing system	Type	Swing bearing support, hydraulic motor driven, Reducer: worm + spur gear reduction, Brake: worm self-lock
	Slewing angle	360 degrees continuous / 2.5 min^{-1}
Outrigger System	Type	Extension / grounding: hydraulic cylinder direct acting type (with automated hydraulic locking device)
	Max. extended width (left to right)	(Front) 6300 mm (Rear) 6520 mm
	Max. extended width (front to rear)	6770 mm
Travelling system	Type	2 speed hydraulic motor driven, Step-less speed changer, built-in brake
	Travel speed	Forward / reverse 0 to 3.2 km/h
	Grade ability	23 degrees
	Ground pressure	53 kPa (0.54 kgf/cm^2)
Hydraulic system	Hydraulic pump	Twin variable piston pump
	Hydraulic oil tank capacity	157 L
Engine	Model	Yanmar 4TNV88C-NMB
	Type	Vertical type inline 4 valve, water cooled, 4 cycle (direct injection type)
	Displacement	2. 189 L (2189 cc)
	Rated output (continuous)	30.5 kW/2500 min^{-1} (41.5 PS/2500 rpm)
	Fuel used/fuel tank capacity	Diesel / 70 L
Battery	Model	120E41R (12 VDC × 1)
Electric motor	Motor specifications	Three-phase induction motor 380 V 15 kW
	Starting method	Inverter-controlled (30 Hz to 60 Hz), energy saving mode equipped (In crane mode: When not operated for 5 minutes, runs at 10Hz , automatically turns off after 30 minutes)
Safety device	Over hoist detector / automatic stop device, over-unwinding detector, hydraulic pressure automatic lock device, wire rope slinging latch, alarm buzzer, level, machine body inclination alarm, lock lever, travel/outrigger/crane selector switch, outrigger safety device (outrigger interlock, crane interlock), moment limiter, rotary lamp, radio controller transmitter load display, working radius limiter (with slewing radius limiter), EMO switch	
Classification	Mobile crane ISO4301/2 Group A1	

Equipment/Item		Remote control
Radio frequency		2402-2480 MHz band
Transmission output		100mW
Channel spacing		1MHz
Reachable range of radio waves		100m or longer (under a good condition where there is no radio interference)
Unique address		Extracted and set from 1 million or more addresses at the time of shipment from factory
Waterproof		IP65
Transmitter antenna		Built-in type
Operating status display	Status LED	Battery status display
		No reception display
	Monitor LED	Receiver power status display
		Transmitter power status display
		Feedback
		Telegram display
Safety device		Emergency stop switch
		Misoperation avoidance function during interruption of remote control
		Automatic power OFF device (Auto power off device)
		Transmitter stop function when battery capacity decreases
		Alarm switch
Transmitter voltage		Battery BA405000 (6 VDC at 1500 mAh)
Receiver voltage		Power of crane main body (12 VDC)
Continuous operating hours of Transmitter		Approximately 20 hours (Changes depending on usage environment)
Ambient operating temperature		-20 C to +70 C
Transmitter mass		Approx. 1.8 kg (including battery)
Operation items of Transmitter	Operation lever	Main boom derricking
		Hook raising, lowering
		Main boom expansion
		Outrigger expansion
		Outrigger extension / stowage
		Slewing
	Push button switch	Radio controller power ON / OFF switch
		Engine start/stop switch
		Speed selector/outrigger select switch
		Load carrying/fly jib change switch
		Horn
		Emergency stop switch / radio controller power OFF switch
	Toggle switch	Accelerator control switch
	Rotary switch	Operation mode selector switch
	Dial switch	Display operation switch

2. SPECIFICATION DIMENSIONAL DRAWING

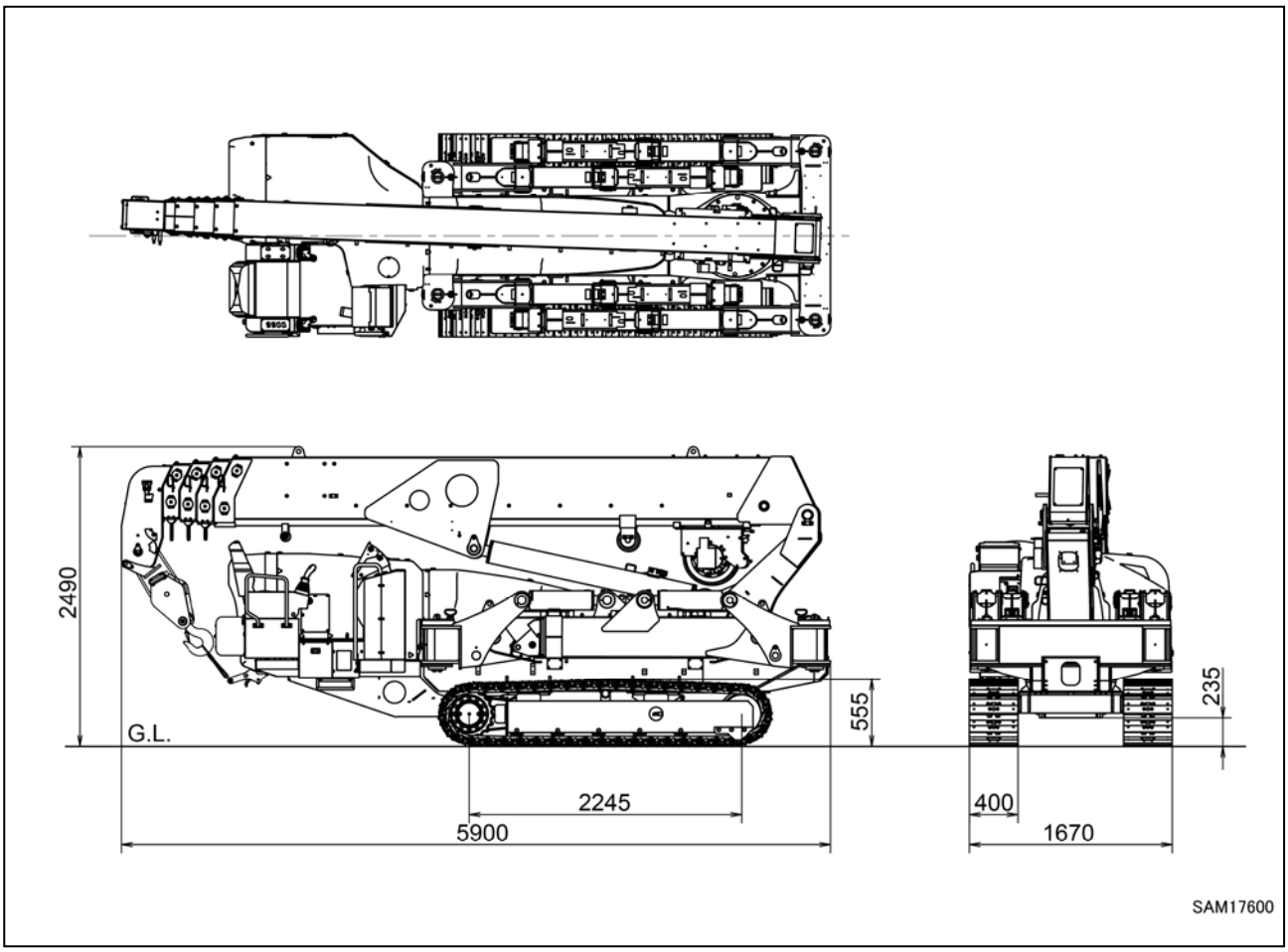

3. DIMENSIONAL DRAWING OF OUTRIGGER WIDTH

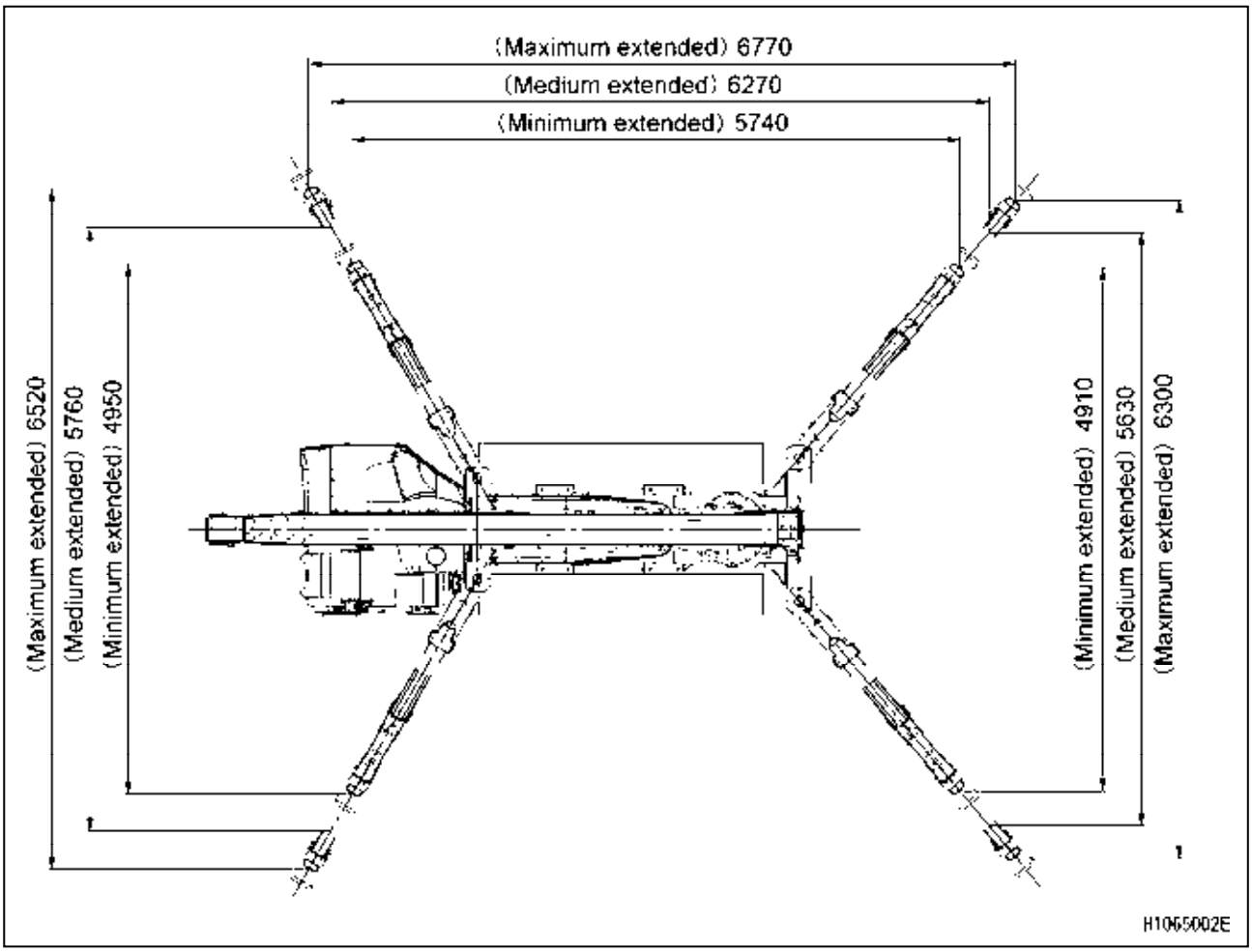

4. RATED TOTAL LOAD CHART

4.1 6 FALL HOOK

【 6 FALL HOOK , OUTRIGGER MAXIMUM EXTENSION 】

In the following table, the numbers for the boom length for the following conditions.

(1)	5.52m boom → boom fully retracted
(1)+(2)	8.99m boom → boom length over 5.52m, less than 8.99m
(1)+(2)+(3)	12.46m boom → boom length over 8.99m, less than 12.46m
(1)+(2)+(3)+(4)	15.93m boom → boom length over 12.46m, less than 15.93m
(1)+(2)+(3)+(4)+(5)	19.40m boom → boom length over 15.93m

Outrigger maximum extension										
Boom length	(1)		(1)+(2)		(1)+(2)+(3)		(1)+(2)+(3)+(4)		(1)+(2)+(3)+(4)+(5)	
Working Radius (m)	Mode N	Mode P	Mode N	Mode P	Mode N	Mode P	Mode N	Mode P	Mode N	Mode P
2.40	8090	8090	6390	6390	4690	4690	—	—	—	—
2.50	7690	7690	6390	6390	4690	4690	3390	3390	—	—
3.00	6390	6390	6390	6390	4690	4690	3390	3390	—	—
3.50	5490	5490	5490	5490	4690	4690	3390	3390	2390	2390
4.00	4790	4790	4790	4790	4690	4690	3390	3390	2390	2390
4.50	4190	4190	4190	4190	4090	4090	3390	3390	2390	2390
4.92	3790	3790	3790	3790	3690	3690	3390	3390	2390	2390
5.00	—	—	3790	3790	3690	3690	3390	3390	2390	2390
6.00	—	—	3190	3190	3090	3090	2790	2790	2390	2390
7.00	—	—	2690	2690	2590	2590	2390	2390	1990	1990
8.00	—	—	2290	2290	2090	2190	2090	2090	1690	1690
8.39	—	—	2090	2090	1890	1990	1890	1990	1590	1590
9.00	—	—	—	—	1690	1890	1690	1890	1490	1490
10.00	—	—	—	—	1290	1490	1290	1490	1290	1390
11.00	—	—	—	—	1040	1190	1040	1190	1040	1190
11.86	—	—	—	—	890	1040	890	1040	890	1040
12.00	—	—	—	—	—	—	890	1040	890	1040
13.00	—	—	—	—	—	—	840	990	840	990
14.00	—	—	—	—	—	—	740	840	740	840
15.00	—	—	—	—	—	—	640	740	640	740
15.33	—	—	—	—	—	—	590	690	590	690
16.00	—	—	—	—	—	—	—	—	590	690
17.00	—	—	—	—	—	—	—	—	490	590
18.00	—	—	—	—	—	—	—	—	440	540
18.80	—	—	—	—	—	—	—	—	340	440

Hook mass: 90 kg

【 6 FALL HOOK , OUTRIGGER MEDIUM EXTENSION 】

In the following table, the numbers for the boom length for the following conditions.

(1)	5.52m boom → boom fully retracted
(1)+(2)	8.99m boom → boom length over 5.52m, less than 8.99m
(1)+(2)+(3)	12.46m boom → boom length over 8.99m, less than 12.46m
(1)+(2)+(3)+(4)	15.93m boom → boom length over 12.46m, less than 15.93m
(1)+(2)+(3)+(4)+(5)	19.40m boom → boom length over 15.93m

Outrigger medium extension										
Boom length	(1)		(1)+(2)		(1)+(2)+(3)		(1)+(2)+(3)+(4)		(1)+(2)+(3)+(4)+(5)	
Working Radius (m)	Mode N	Mode P	Mode N	Mode P	Mode N	Mode P	Mode N	Mode P	Mode N	Mode P
2.40	6290	6290	6290	6290	4590	4590	—	—	—	—
2.50	6290	6290	6290	6290	4590	4590	3290	3290	—	—
3.00	6290	6290	6290	6290	4590	4590	3290	3290	—	—
3.50	5290	5290	5290	5290	4590	4590	3290	3290	2290	2290
4.00	4590	4590	4590	4590	4590	4590	3290	3290	2290	2290
4.50	3990	3990	3990	3990	3990	3990	3290	3290	2290	2290
4.92	3690	3690	3690	3690	3690	3690	3290	3290	2290	2290
5.00	—	—	3590	3590	3590	3590	3290	3290	2290	2290
6.00	—	—	2990	2990	2990	2990	2690	2690	2290	2290
7.00	—	—	2090	2190	2090	2090	2090	2090	1990	1990
8.00	—	—	1690	1790	1690	1790	1690	1690	1690	1690
8.39	—	—	1490	1590	1490	1590	1490	1490	1490	1490
9.00	—	—	—	—	1390	1490	1390	1490	1390	1390
10.00	—	—	—	—	990	1090	990	1090	990	1090
11.00	—	—	—	—	790	890	790	890	790	890
11.86	—	—	—	—	590	690	590	690	590	690
12.00	—	—	—	—	—	—	590	690	590	690
13.00	—	—	—	—	—	—	490	590	540	640
14.00	—	—	—	—	—	—	440	540	490	590
15.00	—	—	—	—	—	—	390	490	440	540
15.33	—	—	—	—	—	—	340	440	390	490
16.00	—	—	—	—	—	—	—	—	390	490
17.00	—	—	—	—	—	—	—	—	340	390
18.00	—	—	—	—	—	—	—	—	290	340
18.80	—	—	—	—	—	—	—	—	240	290

Hook mass: 90 kg

【 6 FALL HOOK , OUTRIGGER MINIMUM EXTENSION 】

In the following table, the numbers for the boom length for the following conditions.

(1)	5.52m boom → boom fully retracted
(1)+(2)	8.99m boom → boom length over 5.52m, less than 8.99m
(1)+(2)+(3)	12.46m boom → boom length over 8.99m, less than 12.46m
(1)+(2)+(3)+(4)	15.93m boom → boom length over 12.46m, less than 15.93m
(1)+(2)+(3)+(4)+(5)	19.40m boom → boom length over 15.93m

Outrigger minimum extension										
Boom length	(1)		(1)+(2)		(1)+(2)+(3)		(1)+(2)+(3)+(4)		(1)+(2)+(3)+(4)+(5)	
Working Radius (m)	Mode N	Mode P	Mode N	Mode P	Mode N	Mode P	Mode N	Mode P	Mode N	Mode P
2.40	6190	6190	6190	6190	4590	4590	—	—	—	—
2.50	6190	6190	6190	6190	4590	4590	3090	3090	—	—
3.00	6190	6190	6190	6190	4590	4590	3090	3090	—	—
3.50	5290	5290	5290	5290	4590	4590	3090	3090	2190	2190
4.00	4590	4590	4590	4590	4590	4590	3090	3090	2190	2190
4.50	3990	3990	3990	3990	3990	3990	3090	3090	2190	2190
4.92	3090	3090	3090	3090	3090	3090	3090	3090	2190	2190
5.00	—	—	3090	3090	3090	3090	3090	3090	2190	2190
6.00	—	—	2190	2290	2190	2190	2190	2190	2190	2190
7.00	—	—	1490	1590	1490	1590	1490	1490	1490	1490
8.00	—	—	1190	1290	1190	1290	1190	1290	1190	1190
8.39	—	—	1090	1190	1090	1190	1090	1190	1090	1090
9.00	—	—	—	—	990	1090	990	1090	990	1090
10.00	—	—	—	—	690	790	690	790	690	790
11.00	—	—	—	—	490	590	490	590	540	640
11.86	—	—	—	—	390	490	390	490	490	590
12.00	—	—	—	—	—	—	390	490	490	590
13.00	—	—	—	—	—	—	340	440	440	540
14.00	—	—	—	—	—	—	290	390	390	490
15.00	—	—	—	—	—	—	240	340	340	440
15.33	—	—	—	—	—	—	240	290	290	390
16.00	—	—	—	—	—	—	—	—	290	390
17.00	—	—	—	—	—	—	—	—	240	290
18.00	—	—	—	—	—	—	—	—	190	240
18.80	—	—	—	—	—	—	—	—	140	190

Hook mass: 90 kg

4.2 4 FALL HOOK

【 4 FALL HOOK , OUTRIGGER MAXIMUM EXTENSION 】

In the following table, the numbers for the boom length for the following conditions.

(1)	5.52m boom → boom fully retracted
(1)+(2)	8.99m boom → boom length over 5.52m, less than 8.99m
(1)+(2)+(3)	12.46m boom → boom length over 8.99m, less than 12.46m
(1)+(2)+(3)+(4)	15.93m boom → boom length over 12.46m, less than 15.93m
(1)+(2)+(3)+(4)+(5)	19.40m boom → boom length over 15.93m

Outrigger maximum extension										
Boom length	(1)		(1)+(2)		(1)+(2)+(3)		(1)+(2)+(3)+(4)		(1)+(2)+(3)+(4)+(5)	
Working Radius (m)	Mode N	Mode P	Mode N	Mode P	Mode N	Mode P	Mode N	Mode P	Mode N	Mode P
2.40	6090	6090	6090	6090	4690	4690	—	—	—	—
2.50	6090	6090	6090	6090	4690	4690	3390	3390	—	—
3.00	6090	6090	6090	6090	4690	4690	3390	3390	—	—
3.50	5490	5490	5490	5490	4690	4690	3390	3390	2390	2390
4.00	4790	4790	4790	4790	4690	4690	3390	3390	2390	2390
4.50	4190	4190	4190	4190	4090	4090	3390	3390	2390	2390
4.92	3790	3790	3790	3790	3690	3690	3390	3390	2390	2390
5.00	—	—	3790	3790	3690	3690	3390	3390	2390	2390
6.00	—	—	3190	3190	3090	3090	2790	2790	2390	2390
7.00	—	—	2690	2690	2590	2590	2390	2390	1990	1990
8.00	—	—	2290	2290	2090	2190	2090	2090	1690	1690
8.39	—	—	2090	2090	1890	1990	1890	1990	1590	1590
9.00	—	—	—	—	1690	1890	1690	1890	1490	1490
10.00	—	—	—	—	1290	1490	1290	1490	1290	1390
11.00	—	—	—	—	1040	1190	1040	1190	1040	1190
11.86	—	—	—	—	890	1040	890	1040	890	1040
12.00	—	—	—	—	—	—	890	1040	890	1040
13.00	—	—	—	—	—	—	840	990	840	990
14.00	—	—	—	—	—	—	740	840	740	840
15.00	—	—	—	—	—	—	640	740	640	740
15.33	—	—	—	—	—	—	590	690	590	690
16.00	—	—	—	—	—	—	—	—	590	690
17.00	—	—	—	—	—	—	—	—	490	590
18.00	—	—	—	—	—	—	—	—	440	540
18.80	—	—	—	—	—	—	—	—	340	440

Hook mass: 90 kg

【 4 FALL HOOK , OUTRIGGER MEDIUM EXTENSION 】

In the following table, the numbers for the boom length for the following conditions.

(1)	5.52m boom → boom fully retracted
(1)+(2)	8.99m boom → boom length over 5.52m, less than 8.99m
(1)+(2)+(3)	12.46m boom → boom length over 8.99m, less than 12.46m
(1)+(2)+(3)+(4)	15.93m boom → boom length over 12.46m, less than 15.93m
(1)+(2)+(3)+(4)+(5)	19.40m boom → boom length over 15.93m

Outrigger medium extension										
Boom length	(1)		(1)+(2)		(1)+(2)+(3)		(1)+(2)+(3)+(4)		(1)+(2)+(3)+(4)+(5)	
Working Radius (m)	Mode N	Mode P	Mode N	Mode P	Mode N	Mode P	Mode N	Mode P	Mode N	Mode P
2.40	6090	6090	6090	6090	4590	4590	—	—	—	—
2.50	6090	6090	6090	6090	4590	4590	3290	3290	—	—
3.00	6090	6090	6090	6090	4590	4590	3290	3290	—	—
3.50	5290	5290	5290	5290	4590	4590	3290	3290	2290	2290
4.00	4590	4590	4590	4590	4590	4590	3290	3290	2290	2290
4.50	3990	3990	3990	3990	3990	3990	3290	3290	2290	2290
4.92	3690	3690	3690	3690	3690	3690	3290	3290	2290	2290
5.00	—	—	3590	3590	3590	3590	3290	3290	2290	2290
6.00	—	—	2990	2990	2990	2990	2690	2690	2290	2290
7.00	—	—	2090	2190	2090	2090	2090	2090	1990	1990
8.00	—	—	1690	1790	1690	1790	1690	1690	1690	1690
8.39	—	—	1490	1590	1490	1590	1490	1490	1490	1490
9.00	—	—	—	—	1390	1490	1390	1490	1390	1390
10.00	—	—	—	—	990	1090	990	1090	990	1090
11.00	—	—	—	—	790	890	790	890	790	890
11.86	—	—	—	—	590	690	590	690	590	690
12.00	—	—	—	—	—	—	590	690	590	690
13.00	—	—	—	—	—	—	490	590	540	640
14.00	—	—	—	—	—	—	440	540	490	590
15.00	—	—	—	—	—	—	390	490	440	540
15.33	—	—	—	—	—	—	340	440	390	490
16.00	—	—	—	—	—	—	—	—	390	490
17.00	—	—	—	—	—	—	—	—	340	390
18.00	—	—	—	—	—	—	—	—	290	340
18.80	—	—	—	—	—	—	—	—	240	290

Hook mass: 90 kg

【 4 FALL HOOK , OUTRIGGER MINIMUM EXTENSION 】

In the following table, the numbers for the boom length for the following conditions.

(1)	5.52m boom → boom fully retracted
(1)+(2)	8.99m boom → boom length over 5.52m, less than 8.99m
(1)+(2)+(3)	12.46m boom → boom length over 8.99m, less than 12.46m
(1)+(2)+(3)+(4)	15.93m boom → boom length over 12.46m, less than 15.93m
(1)+(2)+(3)+(4)+(5)	19.40m boom → boom length over 15.93m

Outrigger minimum extension										
Boom length	(1)		(1)+(2)		(1)+(2)+(3)		(1)+(2)+(3)+(4)		(1)+(2)+(3)+(4)+(5)	
Working Radius (m)	Mode N	Mode P	Mode N	Mode P	Mode N	Mode P	Mode N	Mode P	Mode N	Mode P
2.40	6090	6090	6090	6090	4590	4590	—	—	—	—
2.50	6090	6090	6090	6090	4590	4590	3090	3090	—	—
3.00	6090	6090	6090	6090	4590	4590	3090	3090	—	—
3.50	5290	5290	5290	5290	4590	4590	3090	3090	2190	2190
4.00	4590	4590	4590	4590	4590	4590	3090	3090	2190	2190
4.50	3990	3990	3990	3990	3990	3990	3090	3090	2190	2190
4.92	3090	3090	3090	3090	3090	3090	3090	3090	2190	2190
5.00	—	—	3090	3090	3090	3090	3090	3090	2190	2190
6.00	—	—	2190	2290	2190	2190	2190	2190	2190	2190
7.00	—	—	1490	1590	1490	1590	1490	1490	1490	1490
8.00	—	—	1190	1290	1190	1290	1190	1290	1190	1190
8.39	—	—	1090	1190	1090	1190	1090	1190	1090	1090
9.00	—	—	—	—	990	1090	990	1090	990	1090
10.00	—	—	—	—	690	790	690	790	690	790
11.00	—	—	—	—	490	590	490	590	540	640
11.86	—	—	—	—	390	490	390	490	490	590
12.00	—	—	—	—	—	—	390	490	490	590
13.00	—	—	—	—	—	—	340	440	440	540
14.00	—	—	—	—	—	—	290	390	390	490
15.00	—	—	—	—	—	—	240	340	340	440
15.33	—	—	—	—	—	—	240	290	290	390
16.00	—	—	—	—	—	—	—	—	290	390
17.00	—	—	—	—	—	—	—	—	240	290
18.00	—	—	—	—	—	—	—	—	190	240
18.80	—	—	—	—	—	—	—	—	140	190

Hook mass: 90 kg

4.3 2 FALL HOOK

【 2 FALL HOOK , OUTRIGGER MAXIMUM EXTENSION 】

In the following table, the numbers for the boom length for the following conditions.

(1)	5.52m boom → boom fully retracted
(1)+(2)	8.99m boom → boom length over 5.52m, less than 8.99m
(1)+(2)+(3)	12.46m boom → boom length over 8.99m, less than 12.46m
(1)+(2)+(3)+(4)	15.93m boom → boom length over 12.46m, less than 15.93m
(1)+(2)+(3)+(4)+(5)	19.40m boom → boom length over 15.93m

Outrigger maximum extension										
Boom length	(1)		(1)+(2)		(1)+(2)+(3)		(1)+(2)+(3)+(4)		(1)+(2)+(3)+(4)+(5)	
Working Radius (m)	Mode N	Mode P	Mode N	Mode P	Mode N	Mode P	Mode N	Mode P	Mode N	Mode P
2.40	3090	3090	3090	3090	3090	3090	—	—	—	—
2.50	3090	3090	3090	3090	3090	3090	3090	3090	—	—
3.00	3090	3090	3090	3090	3090	3090	3090	3090	—	—
3.50	3090	3090	3090	3090	3090	3090	3090	3090	2390	2390
4.00	3090	3090	3090	3090	3090	3090	3090	3090	2390	2390
4.50	3090	3090	3090	3090	3090	3090	3090	3090	2390	2390
4.92	3090	3090	3090	3090	3090	3090	3090	3090	2390	2390
5.00	—	—	3090	3090	3090	3090	3090	3090	2390	2390
6.00	—	—	3090	3090	3090	3090	2790	2790	2390	2390
7.00	—	—	2690	2690	2590	2590	2390	2390	1990	1990
8.00	—	—	2290	2290	2090	2190	2090	2090	1690	1690
8.39	—	—	2090	2090	1890	1990	1890	1990	1590	1590
9.00	—	—	—	—	1690	1890	1690	1890	1490	1490
10.00	—	—	—	—	1290	1490	1290	1490	1290	1390
11.00	—	—	—	—	1040	1190	1040	1190	1040	1190
11.86	—	—	—	—	890	1040	890	1040	890	1040
12.00	—	—	—	—	—	—	890	1040	890	1040
13.00	—	—	—	—	—	—	840	990	840	990
14.00	—	—	—	—	—	—	740	840	740	840
15.00	—	—	—	—	—	—	640	740	640	740
15.33	—	—	—	—	—	—	590	690	590	690
16.00	—	—	—	—	—	—	—	—	590	690
17.00	—	—	—	—	—	—	—	—	490	590
18.00	—	—	—	—	—	—	—	—	440	540
18.80	—	—	—	—	—	—	—	—	340	440

Hook mass: 90 kg

【 2 FALL HOOK , OUTRIGGER MEDIUM EXTENSION 】

In the following table, the numbers for the boom length for the following conditions.

(1)	5.52m boom → boom fully retracted
(1)+(2)	8.99m boom → boom length over 5.52m, less than 8.99m
(1)+(2)+(3)	12.46m boom → boom length over 8.99m, less than 12.46m
(1)+(2)+(3)+(4)	15.93m boom → boom length over 12.46m, less than 15.93m
(1)+(2)+(3)+(4)+(5)	19.40m boom → boom length over 15.93m

Outrigger medium extension										
Boom length	(1)		(1)+(2)		(1)+(2)+(3)		(1)+(2)+(3)+(4)		(1)+(2)+(3)+(4)+(5)	
Working Radius (m)	Mode N	Mode P	Mode N	Mode P	Mode N	Mode P	Mode N	Mode P	Mode N	Mode P
2.40	3090	3090	3090	3090	3090	3090	—	—	—	—
2.50	3090	3090	3090	3090	3090	3090	3090	3090	—	—
3.00	3090	3090	3090	3090	3090	3090	3090	3090	—	—
3.50	3090	3090	3090	3090	3090	3090	3090	3090	2290	2290
4.00	3090	3090	3090	3090	3090	3090	3090	3090	2290	2290
4.50	3090	3090	3090	3090	3090	3090	3090	3090	2290	2290
4.92	3090	3090	3090	3090	3090	3090	3090	3090	2290	2290
5.00	—	—	3090	3090	3090	3090	3090	3090	2290	2290
6.00	—	—	2990	2990	2990	2990	2690	2690	2290	2290
7.00	—	—	2090	2190	2090	2090	2090	2090	1990	1990
8.00	—	—	1690	1790	1690	1790	1690	1690	1690	1690
8.39	—	—	1490	1590	1490	1590	1490	1490	1490	1490
9.00	—	—	—	—	1390	1490	1390	1490	1390	1390
10.00	—	—	—	—	990	1090	990	1090	990	1090
11.00	—	—	—	—	790	890	790	890	790	890
11.86	—	—	—	—	590	690	590	690	590	690
12.00	—	—	—	—	—	—	590	690	590	690
13.00	—	—	—	—	—	—	490	590	540	640
14.00	—	—	—	—	—	—	440	540	490	590
15.00	—	—	—	—	—	—	390	490	440	540
15.33	—	—	—	—	—	—	340	440	390	490
16.00	—	—	—	—	—	—	—	—	390	490
17.00	—	—	—	—	—	—	—	—	340	390
18.00	—	—	—	—	—	—	—	—	290	340
18.80	—	—	—	—	—	—	—	—	240	290

Hook mass: 90 kg

【 2 FALL HOOK , OUTRIGGER MINIMUM EXTENSION 】

In the following table, the numbers for the boom length for the following conditions.

(1)	5.52m boom → boom fully retracted
(1)+(2)	8.99m boom → boom length over 5.52m, less than 8.99m
(1)+(2)+(3)	12.46m boom → boom length over 8.99m, less than 12.46m
(1)+(2)+(3)+(4)	15.93m boom → boom length over 12.46m, less than 15.93m
(1)+(2)+(3)+(4)+(5)	19.40m boom → boom length over 15.93m

Outrigger minimum extension										
Boom length	(1)		(1)+(2)		(1)+(2)+(3)		(1)+(2)+(3)+(4)		(1)+(2)+(3)+(4)+(5)	
Working Radius (m)	Mode N	Mode P	Mode N	Mode P	Mode N	Mode P	Mode N	Mode P	Mode N	Mode P
2.40	3090	3090	3090	3090	3090	3090	—	—	—	—
2.50	3090	3090	3090	3090	3090	3090	3090	3090	—	—
3.00	3090	3090	3090	3090	3090	3090	3090	3090	—	—
3.50	3090	3090	3090	3090	3090	3090	3090	3090	2190	2190
4.00	3090	3090	3090	3090	3090	3090	3090	3090	2190	2190
4.50	3090	3090	3090	3090	3090	3090	3090	3090	2190	2190
4.92	3090	3090	3090	3090	3090	3090	3090	3090	2190	2190
5.00	—	—	3090	3090	3090	3090	3090	3090	2190	2190
6.00	—	—	2190	2290	2190	2190	2190	2190	2190	2190
7.00	—	—	1490	1590	1490	1590	1490	1490	1490	1490
8.00	—	—	1190	1290	1190	1290	1190	1290	1190	1190
8.39	—	—	1090	1190	1090	1190	1090	1190	1090	1090
9.00	—	—	—	—	990	1090	990	1090	990	1090
10.00	—	—	—	—	690	790	690	790	690	790
11.00	—	—	—	—	490	590	490	590	540	640
11.86	—	—	—	—	390	490	390	490	490	590
12.00	—	—	—	—	—	—	390	490	490	590
13.00	—	—	—	—	—	—	340	440	440	540
14.00	—	—	—	—	—	—	290	390	390	490
15.00	—	—	—	—	—	—	240	340	340	440
15.33	—	—	—	—	—	—	240	290	290	390
16.00	—	—	—	—	—	—	—	—	290	390
17.00	—	—	—	—	—	—	—	—	240	290
18.00	—	—	—	—	—	—	—	—	190	240
18.80	—	—	—	—	—	—	—	—	140	190

Hook mass: 90 kg

4.4 SINGLE FALL HOOK

【 SINGLE FALL HOOK , OUTRIGGER MAXIMUM EXTENSION 】

In the following table, the numbers for the boom length for the following conditions.

(1)	5.52m boom → boom fully retracted
(1)+(2)	8.99m boom → boom length over 5.52m, less than 8.99m
(1)+(2)+(3)	12.46m boom → boom length over 8.99m, less than 12.46m
(1)+(2)+(3)+(4)	15.93m boom → boom length over 12.46m, less than 15.93m
(1)+(2)+(3)+(4)+(5)	19.40m boom → boom length over 15.93m

Outrigger maximum extension										
Boom length	(1)		(1)+(2)		(1)+(2)+(3)		(1)+(2)+(3)+(4)		(1)+(2)+(3)+(4)+(5)	
Working Radius (m)	Mode N	Mode P	Mode N	Mode P	Mode N	Mode P	Mode N	Mode P	Mode N	Mode P
2.40	1520	1520	1520	1520	1520	1520	—	—	—	—
2.50	1520	1520	1520	1520	1520	1520	1520	1520	—	—
3.00	1520	1520	1520	1520	1520	1520	1520	1520	—	—
3.50	1520	1520	1520	1520	1520	1520	1520	1520	1520	1520
4.00	1520	1520	1520	1520	1520	1520	1520	1520	1520	1520
4.50	1520	1520	1520	1520	1520	1520	1520	1520	1520	1520
4.92	1520	1520	1520	1520	1520	1520	1520	1520	1520	1520
5.00	—	—	1520	1520	1520	1520	1520	1520	1520	1520
6.00	—	—	1520	1520	1520	1520	1520	1520	1520	1520
7.00	—	—	1520	1520	1520	1520	1520	1520	1520	1520
8.00	—	—	1520	1520	1520	1520	1520	1520	1520	1520
8.39	—	—	1520	1520	1520	1520	1520	1520	1520	1520
9.00	—	—	—	—	1520	1520	1520	1520	1420	1420
10.00	—	—	—	—	1220	1420	1220	1420	1220	1320
11.00	—	—	—	—	970	1120	970	1120	970	1120
11.86	—	—	—	—	820	970	820	970	820	970
12.00	—	—	—	—	—	—	820	970	820	970
13.00	—	—	—	—	—	—	770	920	770	920
14.00	—	—	—	—	—	—	670	770	670	770
15.00	—	—	—	—	—	—	570	670	570	670
15.33	—	—	—	—	—	—	520	620	520	620
16.00	—	—	—	—	—	—	—	—	520	620
17.00	—	—	—	—	—	—	—	—	420	520
18.00	—	—	—	—	—	—	—	—	370	470
18.80	—	—	—	—	—	—	—	—	270	370

Hook mass: 20 kg

【 SINGLE FALL HOOK , OUTRIGGER MEDIUM EXTENSION 】

In the following table, the numbers for the boom length for the following conditions.

(1)	5.52m boom → boom fully retracted
(1)+(2)	8.99m boom → boom length over 5.52m, less than 8.99m
(1)+(2)+(3)	12.46m boom → boom length over 8.99m, less than 12.46m
(1)+(2)+(3)+(4)	15.93m boom → boom length over 12.46m, less than 15.93m
(1)+(2)+(3)+(4)+(5)	19.40m boom → boom length over 15.93m

Outrigger medium extension										
Boom length	(1)		(1)+(2)		(1)+(2)+(3)		(1)+(2)+(3)+(4)		(1)+(2)+(3)+(4)+(5)	
Working Radius (m)	Mode N	Mode P	Mode N	Mode P	Mode N	Mode P	Mode N	Mode P	Mode N	Mode P
2.40	1520	1520	1520	1520	1520	1520	—	—	—	—
2.50	1520	1520	1520	1520	1520	1520	1520	1520	—	—
3.00	1520	1520	1520	1520	1520	1520	1520	1520	—	—
3.50	1520	1520	1520	1520	1520	1520	1520	1520	1520	1520
4.00	1520	1520	1520	1520	1520	1520	1520	1520	1520	1520
4.50	1520	1520	1520	1520	1520	1520	1520	1520	1520	1520
4.92	1520	1520	1520	1520	1520	1520	1520	1520	1520	1520
5.00	—	—	1520	1520	1520	1520	1520	1520	1520	1520
6.00	—	—	1520	1520	1520	1520	1520	1520	1520	1520
7.00	—	—	1520	1520	1520	1520	1520	1520	1520	1520
8.00	—	—	1520	1520	1520	1520	1520	1520	1520	1520
8.39	—	—	1420	1520	1420	1520	1420	1420	1420	1420
9.00	—	—	—	—	1320	1420	1320	1420	1320	1320
10.00	—	—	—	—	920	1020	920	1020	920	1020
11.00	—	—	—	—	720	820	720	820	720	820
11.86	—	—	—	—	520	620	520	620	520	620
12.00	—	—	—	—	—	—	520	620	520	620
13.00	—	—	—	—	—	—	420	520	470	570
14.00	—	—	—	—	—	—	370	470	420	520
15.00	—	—	—	—	—	—	320	420	370	470
15.33	—	—	—	—	—	—	270	370	320	420
16.00	—	—	—	—	—	—	—	—	320	420
17.00	—	—	—	—	—	—	—	—	270	320
18.00	—	—	—	—	—	—	—	—	220	270
18.80	—	—	—	—	—	—	—	—	170	220

Hook mass: 20 kg

【 SINGLE FALL HOOK , OUTRIGGER MINIMUM EXTENSION 】

In the following table, the numbers for the boom length for the following conditions.

(1)	5.52m boom → boom fully retracted
(1)+(2)	8.99m boom → boom length over 5.52m, less than 8.99m
(1)+(2)+(3)	12.46m boom → boom length over 8.99m, less than 12.46m
(1)+(2)+(3)+(4)	15.93m boom → boom length over 12.46m, less than 15.93m
(1)+(2)+(3)+(4)+(5)	19.40m boom → boom length over 15.93m

Outrigger minimum extension										
Boom length	(1)		(1)+(2)		(1)+(2)+(3)		(1)+(2)+(3)+(4)		(1)+(2)+(3)+(4)+(5)	
Working Radius (m)	Mode N	Mode P	Mode N	Mode P	Mode N	Mode P	Mode N	Mode P	Mode N	Mode P
2.40	1520	1520	1520	1520	1520	1520	—	—	—	—
2.50	1520	1520	1520	1520	1520	1520	1520	1520	—	—
3.00	1520	1520	1520	1520	1520	1520	1520	1520	—	—
3.50	1520	1520	1520	1520	1520	1520	1520	1520	1520	1520
4.00	1520	1520	1520	1520	1520	1520	1520	1520	1520	1520
4.50	1520	1520	1520	1520	1520	1520	1520	1520	1520	1520
4.92	1520	1520	1520	1520	1520	1520	1520	1520	1520	1520
5.00	—	—	1520	1520	1520	1520	1520	1520	1520	1520
6.00	—	—	1520	1520	1520	1520	1520	1520	1520	1520
7.00	—	—	1420	1520	1420	1520	1420	1420	1420	1420
8.00	—	—	1120	1220	1120	1220	1120	1220	1120	1120
8.39	—	—	1020	1120	1020	1120	1020	1120	1020	1020
9.00	—	—	—	—	920	1020	920	1020	920	1020
10.00	—	—	—	—	620	720	620	720	620	720
11.00	—	—	—	—	420	520	420	520	470	570
11.86	—	—	—	—	320	420	320	420	420	520
12.00	—	—	—	—	—	—	320	420	420	520
13.00	—	—	—	—	—	—	270	370	370	470
14.00	—	—	—	—	—	—	220	320	320	420
15.00	—	—	—	—	—	—	170	270	270	370
15.33	—	—	—	—	—	—	170	220	220	320
16.00	—	—	—	—	—	—	—	—	220	320
17.00	—	—	—	—	—	—	—	—	170	220
18.00	—	—	—	—	—	—	—	—	120	170
18.80	—	—	—	—	—	—	—	—	70	120

Hook mass: 20 kg

5. WORKING RADIUS/LIFTING HEIGHT

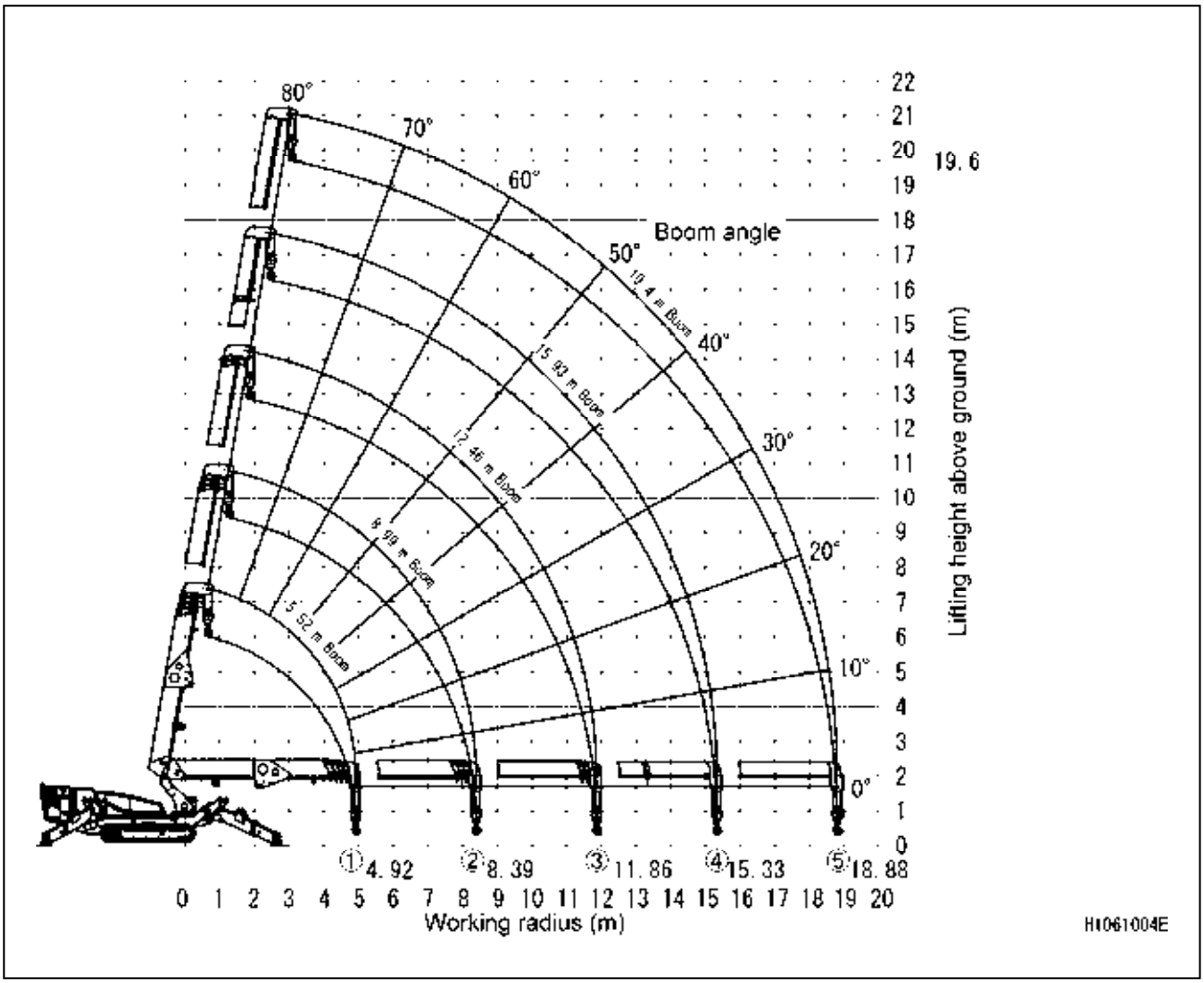

6. WORKING RADIUS AND LIFTING HEIGHT (DURING PICK & CARRY)

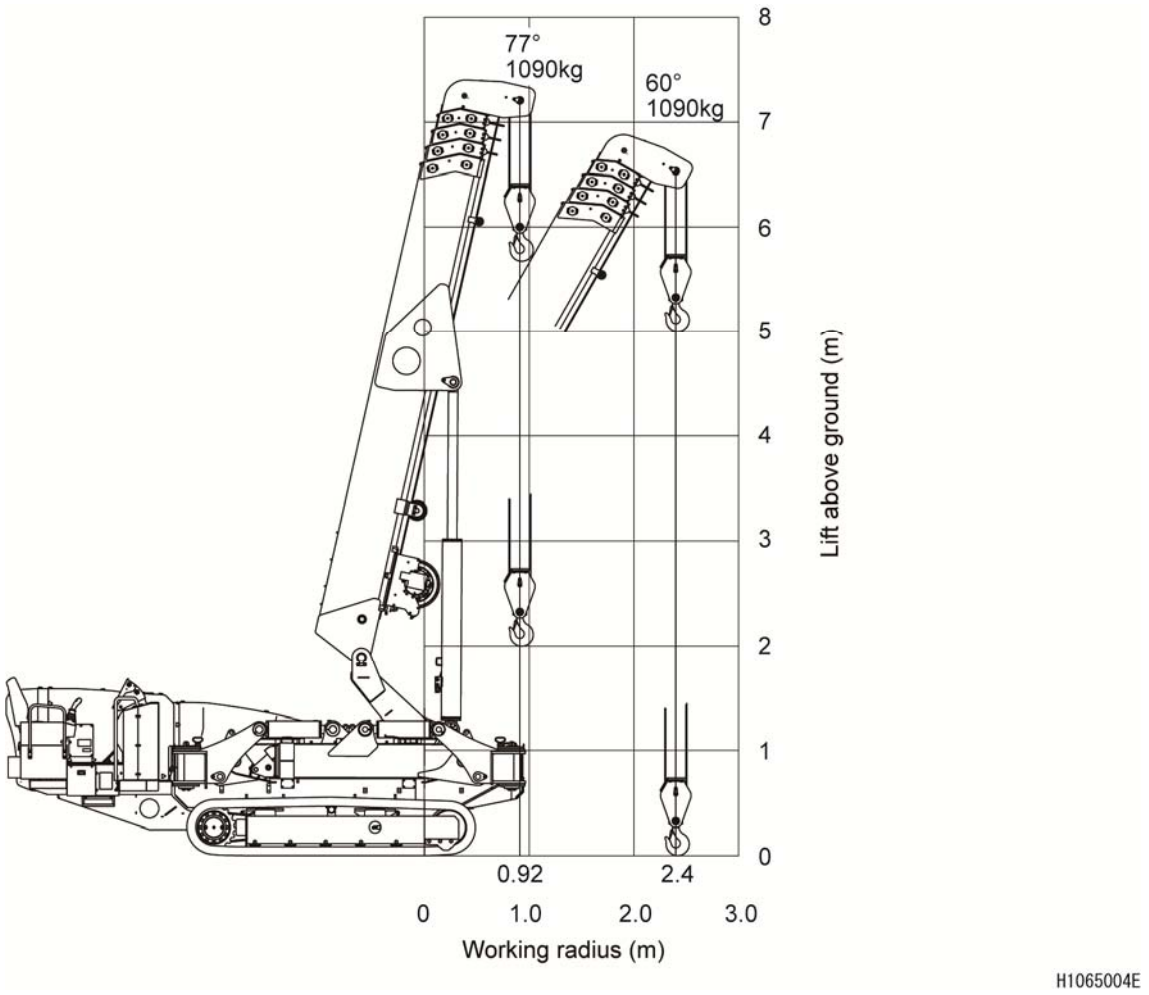

⚠ DANGER

When using pick & carry duties, follow these rules to prevent machine from tipping over.
1. Do not travel on a slope, soft grond or uneven ground.
2. Do not slew. Avoid any sharp movements when stopping or starting.
3. When traveling with a load, keep it low to the ground as possible.
4. If the load swings, stop traveling until the load is still.

https://truckmanualshub.com/

FLY JIB

Item	Page
1. CAUTIONS IN USING FLY JIB	350
2. MOUNT POSITION OF FLY JIB SAFETY LABELS	351
3. NAME OF EACH SECTION OF FLY JIB	355
4. MOUNTING AND STOWING FLY JIB	356
5. HANDLING MONITOR AND MOMENT LIMITER	373
6. OPERATION	378
7. TROUBLESHOOTING	379
8. INSPECTION AND MAINTENANCE	381
9. SPECIFICATION	385

https://truckmanualshub.com/

1. CAUTIONS IN USING FLY JIB

⚠ WARNING

- **A fly jib is attached to the main boom with 4 position pins. The angle of the fly jib is adjusted by the derrick cylinder and the wire rope. If the wire rope is faulty due to the external damage or incorrect maintenance, the fly jib may fall, causing a serious accident.**
- **When mounting a fly jib, be sure to disconnect the electric wires from the over-hoist detector on the main boom side and reconnect them to the fly jib side. If the wires are not connected correctly, the moment limiter or over-hoist detector will not function properly, causing a serious accident.**
- **When using a fly jib, check that the actual number of fly jib boom sections and the displayed number of fly jib boom sections on the moment limiter are the same, before start working. Serious accidents such as damage of fly jib or overturn of machine might occur.**
- **When using a fly jib, remember to set the engine in an idling mode and work with a crane in a slow speed. If you operate a lever in an sudden motion, the fly jib might break due to the excess force, causing a serious accident.**
- **If you make an error in a fly jib operation, the fly jib might fall due to the bracket deformation or a crack on the welded section. Remember to check each part of a fly jib and make sure there are no deformation or cracks on the welded section.**
- **Fly jibs are attached and stowed to the main boom with three position pins. Please check that all three position pins are correctly inserted and tightened securely by a linchpin before start moving. If the position pin comes off, the fly jib may fall, causing a serious accident.**
- **When stowing a fly jib, be sure to disconnect the electric wires on the fly jib side and reconnect them to the over-hoist detector on the main boom side beforehand. If the wires are not connected correctly, the moment limiter or over-hoist detector will not function properly, causing a serious accident.**
- **This manual assumes that a fly jib is attached to the main body.**
  To remove a fly jib from the body, changing the setting of the moment limiter is necessary, so please contact our sales service agent. If you remove a fly jib from the body and use the machine without changing the moment limiter setting, damage or overturn of the machine might occur causing a serious accident.
- **See “Safety” section for the safety precautions that are not provided in this section.**

CAUTION

- **Mass of the machine varies depending on the specification.**
  The figure on the right shows the weight table for weight of standard vehicles and the additional weight of each accessory unit.

MC815CWM MACHINE WEIGHT

Component	Weight
Main Unit	9460kg
Electric Unit	+240kg
Fly jib	+490kg
Searcher Hook	+60kg
Rubber Pads	+220kg

106-4718500

- **The fly jib angle can be changed between 0 and 60 degrees.**
  When using a fly jib, perform crane operations with the main boom angle in the range of “50 degrees or more”.
  In the following conditions, the moment limiter issues an overload alarm and the crane operation is disabled.
  - **The main boom angle is in the range of “50 degrees or less”, and the main boom length is “6.1 m or more”.**
  - **The main boom angle is in the range of “50 degrees or less”, and the main boom length is “6.0 m or less” but a load is on the hoist.**
  - **The main boom angle is in the range of “50 degrees or more”, and it is overloaded exceeding the rated total load.**

  However, when the boom length is “less than 6.0 m” with no load hoisted, the moment limiter does not issue an overload alarm.

2. MOUNT POSITION OF FLY JIB SAFETY LABELS

CAUTION

In this section, the safety labels of the fly jib specification, different from the standard specification are described. See “Safety Safety Label Locations” for the safety labels that are not described in this section.

Please keep these safety labels clean so you can read them correctly.

If any safety labels become damaged, lost or unreadable, please replace them with new ones.

There are other labels than safety labels shown below and treat them in the same manner.

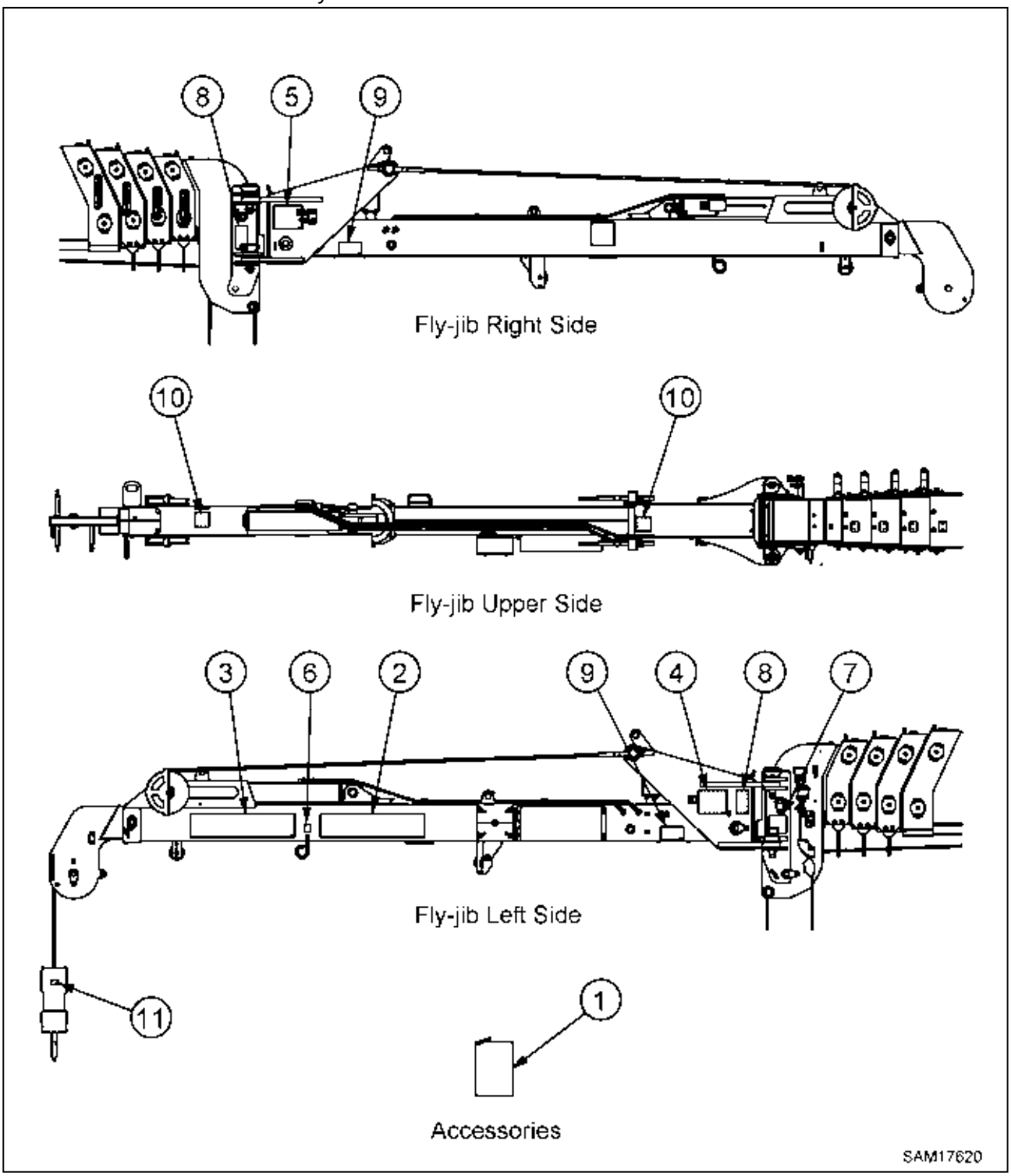

(1) Diagram of fly jib working range chart (106-2189200)

MINI-CRAWLER CRANE MC815C

Working Range Chart and Rated Total Load Chart (for Fly-Jib)

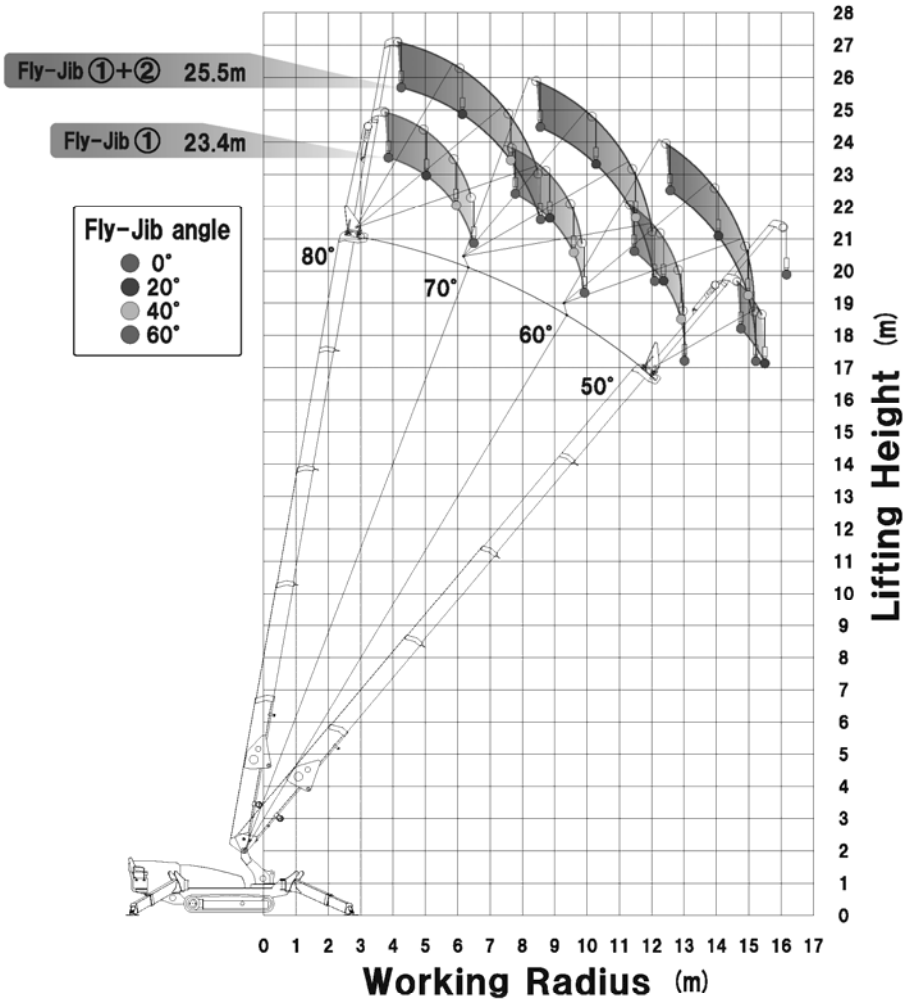

With outrigger extended to maximum					
Fly-Jib angle \ Mainboom angle		80°	70°	60°	50°
Fly-Jib ①+②	0°	1020	820	320	120
	20°	620	420	220	
	40°	420	320	120	
	60°	320	220		
Fly-Jib ①	0°	1520	1020	420	170
	20°	820	620	420	120
	40°	720	520	320	
	60°	620	420		

(Kg)

With outrigger extended to medium				
Fly-Jib angle \ Mainboom angle		80°	70°	60°
Fly-Jib ①+②	0°	1020	820	
	20°	620	320	
	40°	420	120	
	60°	320		
Fly-Jib ①	0°	1520	1020	120
	20°	820	620	
	40°	720	520	
	60°	620	420	

(Kg)

With outrigger extended to minimum			
Fly-Jib angle \ Mainboom angle		80°	70°
Fly-Jib ①+②	0°	1020	520
	20°	620	
	40°	420	
	60°	320	
Fly-Jib ①	0°	1520	720
	20°	820	120
	40°	720	
	60°	620	

(Kg)

GENERAL RULE TO OBSERVE

1. The working radius shown is based on the actual value including boom deflection. Always work in accordance with these values.
2. The working range chart does not take boom deflection under load into account.
3. The rated total load includes the weight of hook block. (20kg)
4. Rough operation of crane is setemely dangerous. Stick to safe operation.
5. Stationary load only.
6. When using fly-jib, Moment limiter of must be set to fly-jib mode.

106-2189200

(2) Notice on mounting fly jib (106-3401300)

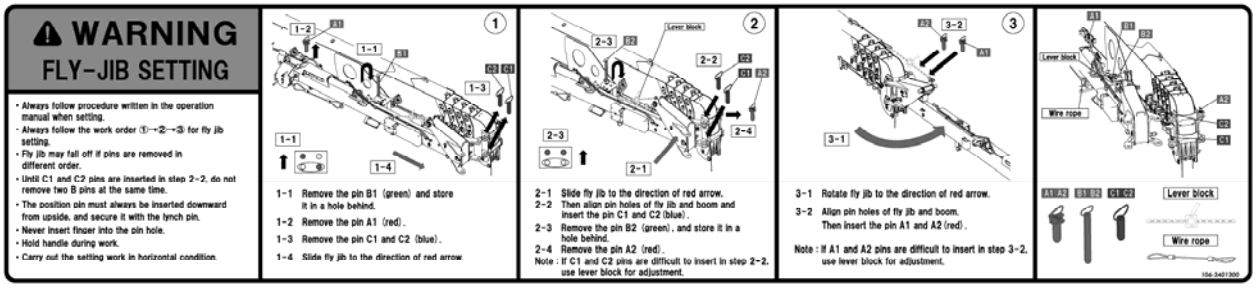

(3) Notice on stowing fly jib (106-3401400)

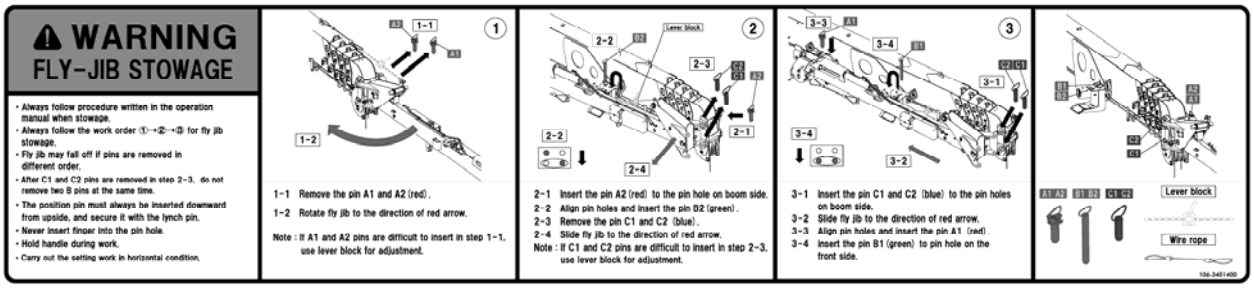

(4) Notice on exchanging fly jib harness (106-3401000)

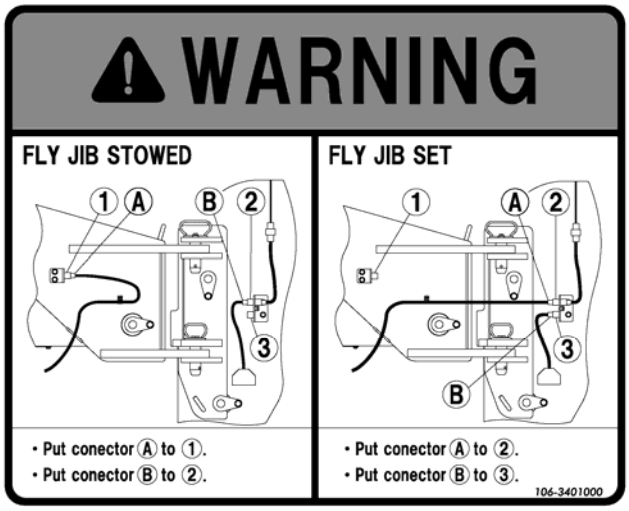

(5) Notice on exchanging fly jib hydraulic hose (106-3401100)

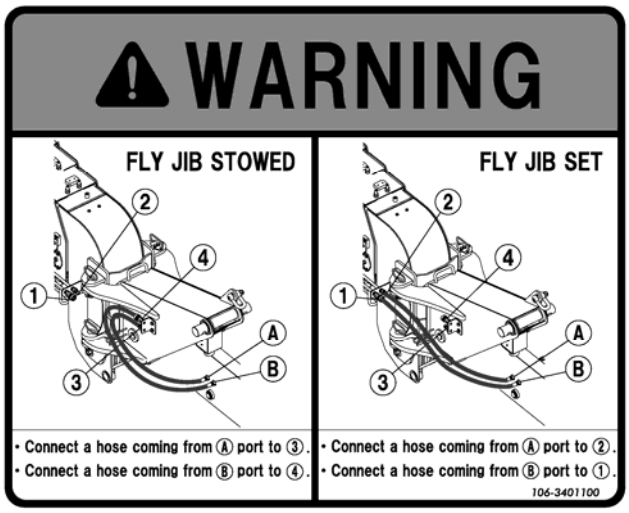

(6) Notice for hoisting ban (556-4580700)

(7) Division pin description (585-3558700)

(8) Notice for pin holes (CL000100001)
(2 locations)

(9) Caution against being caught (CL000120011)
(2 locations)

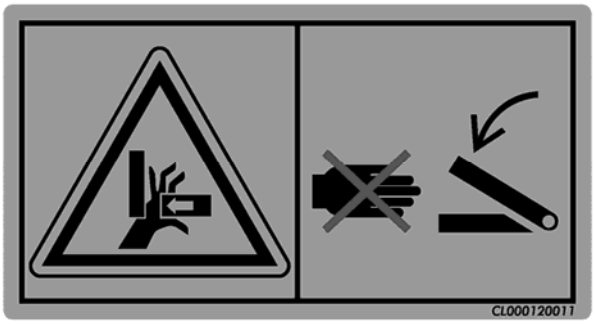

(10) Hoisting position (585-4714800) (2 locations)

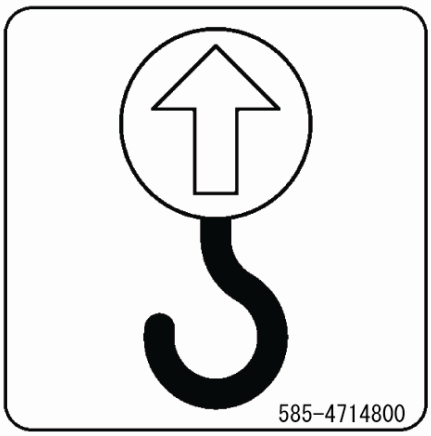

(11) Maximum rated total load (106-4719500)
(2 locations)

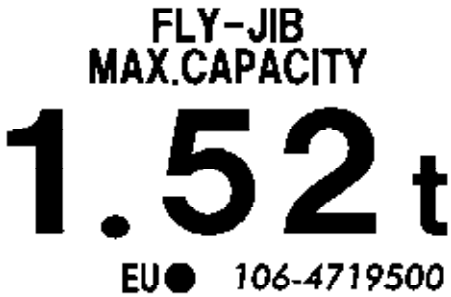

3. NAME OF EACH SECTION OF FLY JIB

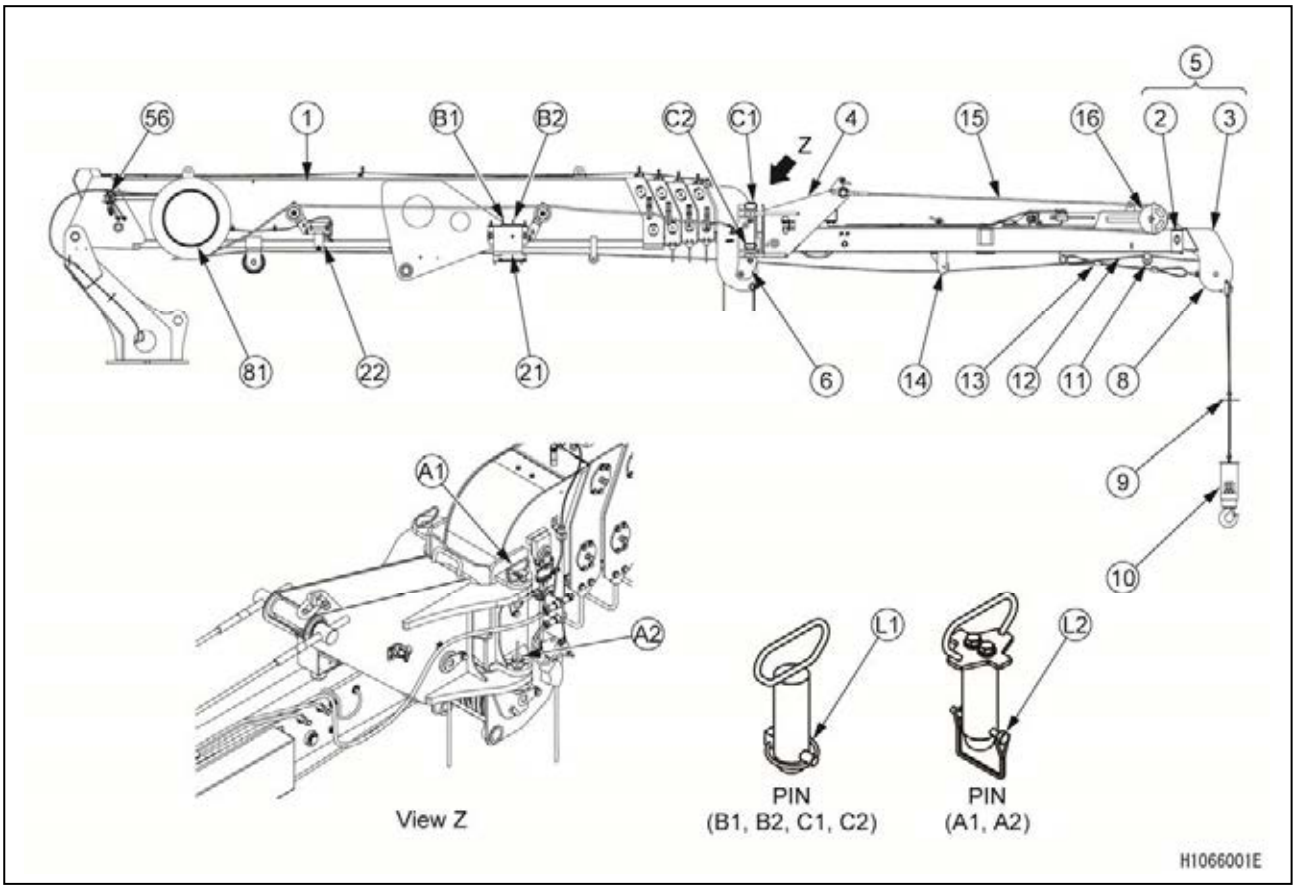

(1) Main boom
(2) No. 1 fly jib
(3) No. 2 fly jib
(4) Fly jib base
(5) Fly jib
(6) Fly jib mounting bracket
(8) Sheave
(9) Over hoist detector weight
(10) Single hook
(11) Snap sheave
(12) Wire rope
(13) Wire
(14) Guide sheave
(15) Derricking wire rope
(16) Derricking sheave
(21) Stowage bracket A
(22) Stowage bracket B
(56) Fly jib switching valve
(81) Hose reel
(A1) Position pin A1
(A2) Position pin A2
(B1) Position pin B1
(B2) Position pin B2
(C1) Position pin C1
(C2) Position pin C2
(L1) Linchpin
(L2) Shaft lock pin

https://truckmanualshub.com/

4. MOUNTING AND STOWING FLY JIB

⚠ WARNING

- **We recommend to mount or stow a fly jib with two persons. They must fully check the work content mutually and perform the operation based on the designated signals. If the signals are insufficient, they may contact a moving part, which can cause a serious accident.**
- **Stop the engine before mounting or stowing a fly jib.**
  Otherwise, malfunction of the electric wires or hydraulic equipment may occur, causing unexpected operations or serious accidents.
- **Mounting and stowing a fly jib should be conducted on a leveled and firm ground. Otherwise, a fly jib can rotate by its own weight causing a serious accident.**
- **Mounting and stowing a fly jib should be conducted on a stable work table with sufficient height. If you use an unstable work table, a fly jib can fall from a high place. causing a serious accident.**
- **When mounting or stowing a fly jib, make sure the main boom is in a horizontal position. Otherwise, a fly jib can rotate by its own weight causing a serious accident.**
- **A fly jib is attached to the main boom with 4 position pins. Insert four position pins in the correct positions and tighten them securely with a linchpin and shaft lock pin. If the position pin comes off, the fly jib may fall, causing a serious accident.**
- **When mounting a fly jib, be sure to disconnect the electric wires from the over-hoist detector on the main boom side and reconnect them to the fly jib side. If the wires are not connected correctly, the moment limiter or over-hoist detector will not function properly, causing a serious accident.**
- **Fly jibs are attached and stowed to the main boom with three position pins. Please check that the three position pins are correctly inserted and tightened securely by a linchpin. If the position pin comes off, the fly jib may fall, causing a serious accident.**
- **When stowing a fly jib, be sure to disconnect the electric wires on the fly jib side and reconnect them to the over-hoist detector on the main boom side beforehand. If the wires are not connected correctly, the moment limiter or over-hoist detector will not function properly, causing a serious accident.**

CAUTION

The enclosed lever block (23) should be used to mount/stow a fly jib as necessary.
Refer to the enclosed instruction manual for how to use the lever block.
★Lever block: Used load 1 t

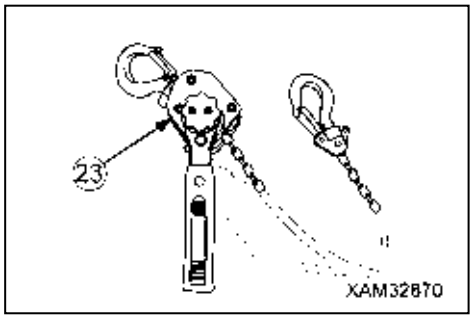

When mounting or stowing the fly jib, extend the outrigger and position the boom as shown in the right figure.

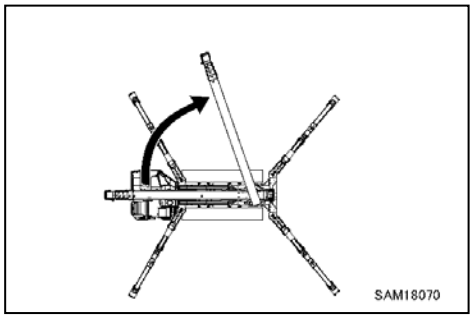

https://truckmanualshub.com/

4.1 MOUNTING FLY JIB

⚠ WARNING

Never perform any work riding on the crawler. You might slip and fall causing a serious accident. To work in a high place, be sure to install a stable work table.

To mount a fly jib stowed in the right section of the main boom on the tip of the main boom, follow the procedure below.
If the fly jib mounting bracket is already installed on the tip of the main boom, start from step 5.

1. Remove the fly jib mounting bracket (6) fixed with the eye bolt (34) and washer (35) to the stowage bracket (33) at the front of the vehicle.

NOTES
As the weight of the fly jib mounting bracket (6) is approximately 30 kg, hoist it using a crane.

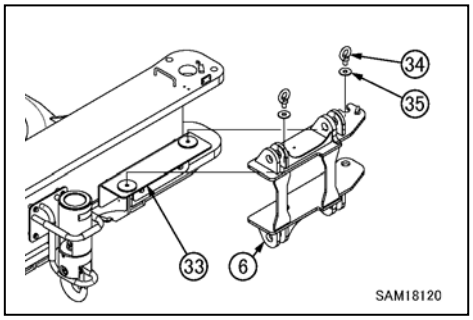

2. Remove the nut (32), the plate (31) and the collar (29) and pull out the head pin (28) completely so that the fly jib mounting bracket (6) can be inserted.

NOTES
The head pin (28) does not need to be pulled out completely, as long as the fly jib mounting bracket (6) can be attached. The collar (29) will not be used, so please keep it and do not lose it.

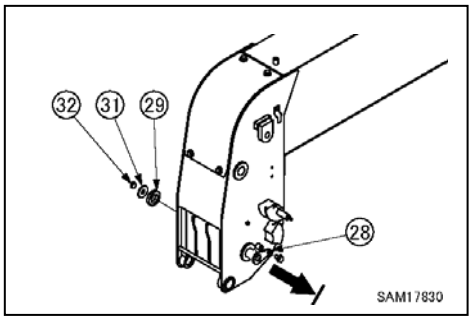

3. Attach the fly jib mounting bracket (6) and insert the point pin (30) to fix it.

4. Put back the head pin (28) you have pulled out in step 2, and fasten using the plate (31) and the nut (32).

NOTES
When mounting the fly jib mounting bracket (6), the collar (29) removed in step 2 is not used.

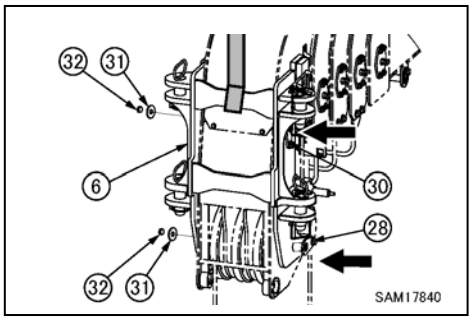

5. Pull out the linchpin of the position pin (B1) of the stowage bracket A (21) to pull out the position pin (B1).
   Insert the position pin (B1) you have just pulled out into the hole for storing a pin on the back of the fly jib bracket A (21).
   After you insert it, lock securely with a linchpin.

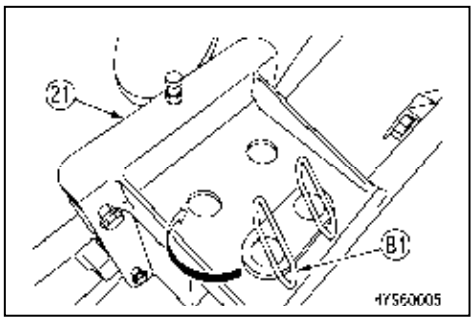

6. Pull out the shaft lock pin of the position pin (A1) of the stowage bracket B (22) to pull out the position pin (A1) completely.

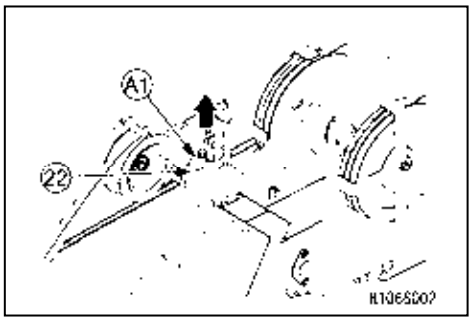

NOTES
You need this position pin (A1) you have just pulled out to connect the fly jib and the left section of the fly jib mounting bracket (27).

7. Pull out the position pins (C1, C2) from the right section of the fly jib mounting bracket (26).

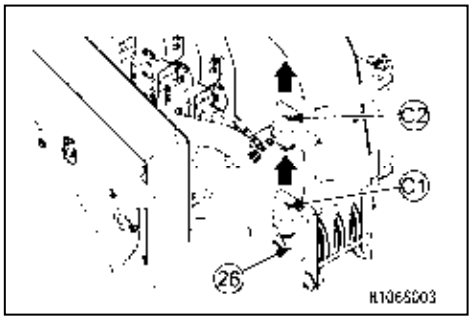

NOTES
You need these position pins (C1, C2) you have just pulled out to connect the fly jib and the right section of the fly jib mounting bracket (26).

8. Using the position pin (B2) of the stowage bracket A (21) as a pivot point, pull out the fly jib base (4) to the main boom tip side by holding its handle (H4) and align the holes (A, B) of the right section of the fly jib mounting bracket (26) with the hole of the fly jib (4).

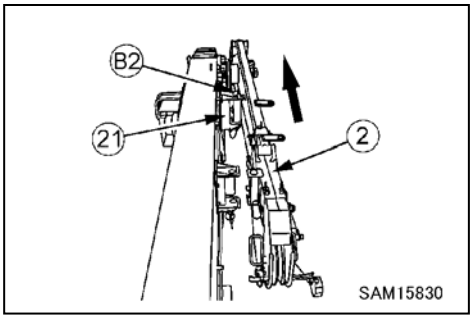

⚠ CAUTION
When you pull out the fly jib, do not hold the pin hole, but hold the handle (H4).

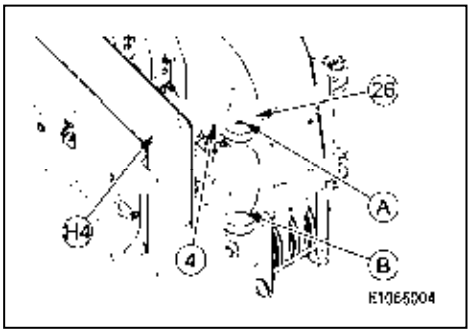

9. After aligning the holes (A, B) on the right section of the fly jib mounting bracket (26) with the hole on the fly jib base (4), insert the position pins (C1, C2) to the hole and insert a linchpin. Remember to turn the ring back to lock it securely.

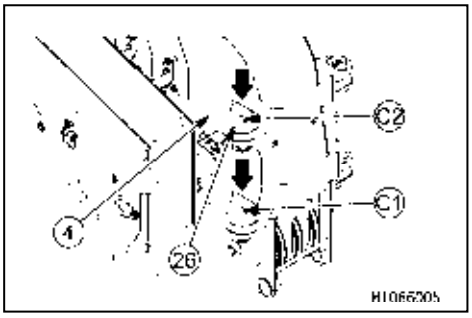

⚠ WARNING

- **Do not remove the position pin (B2) from the mounting bracket A (21), until the position pins (C1, C2) are securely inserted into the hole on the right section of the fly jib mounting bracket (26). If you remove, it may cause a serious accident.**
- **The position pin (C1, C2) must be inserted from above facing downwards. Otherwise, the position pin might come off, and the fly jib may fall causing a serious accident.**

CAUTION

Do not perform extend/retract operation with the position pins (B2, C1, C2) inserted into both the holes on the right section of the fly jib mounting bracket (26) and the stowage bracket A (21). If you perform the above, the fly jib and the main boom might be seriously damaged.

10. Attach the lever block (23) to the No.1 fly jib (2) and the fly jib base (4) to prevent the fly jib from falling.

NOTES
The lever block (23) should be attached with a tension so that the No.1 fly jib (2) is slightly lifted.

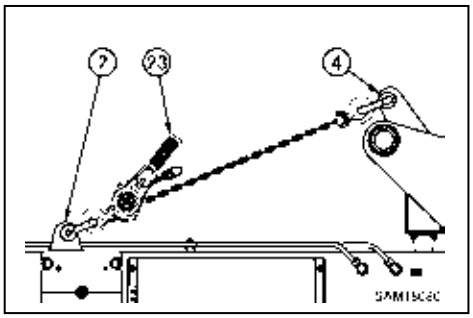

11. Pull out the linchpin of the position pin (B2) of the stowage bracket A (21) and pull out the position pin (B2).

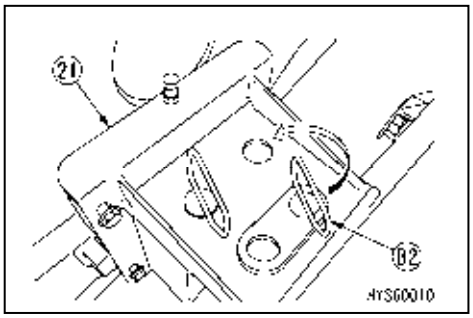

12. Pull out the shaft lock pin of the position pin (A2) on the left section of the fly jib mounting bracket (27) and pull out the position pin (A2).

NOTES
You need this position pin (A2) you have just pulled out to connect the fly jib and the left section of the fly jib mounting bracket (27).

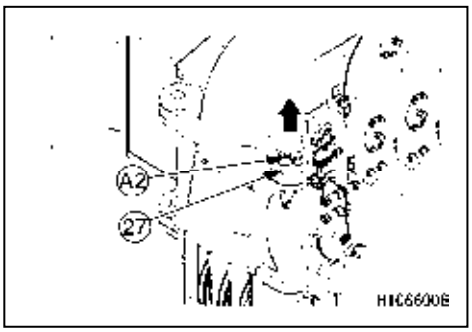

13. Pull out the No. 1 fly jib (2) toward you using the position pins (C1, C2) of the right section of the fly jib mounting bracket as pivot points and rotate it forward of the main boom.

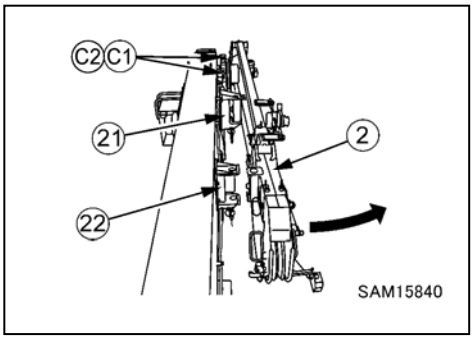

⚠ WARNING

When pulling out the fly jib, do not enter the area in the direction of pulling it out.

14. Align the holes (C, D) on the left section of the fly jib mounting bracket (27) with the hole of the fly jib base (4).

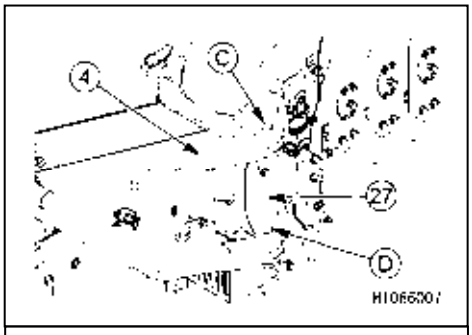

15. Insert the position pin (A1) to the hole (D), then insert the shaft lock pin. When doing so, be sure to lock the pin securely with the retaining latch.
Then, remove the lever block (23) attached to the No.1 fly jib (2) and the fly jib base (4) to prevent the fly jib from falling.

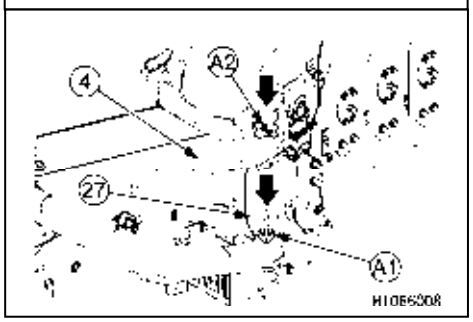

16. Attach the wire (13) and the lever block (23) to the main boom and the fly jib base (4).

CAUTION

When attaching the wire (13) and the lever block (23), pay attention not to damage any electric wires in the vicinity.

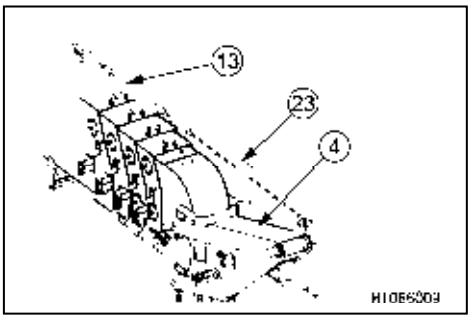

17. Align the positions of the hole (C) on the left side of the fly jib mounting bracket (27) and the hole of the fly jib base (4) using the lever block and insert the position pin (A2) to the hole, then push in the shaft lock pin. When doing so, be sure to lock the pin securely with the retaining latch.

⚠ WARNING

The position pin (A1, A2) must be inserted from above facing downwards. Otherwise, the position pin might come off, and the fly jib may fall causing a serious accident.

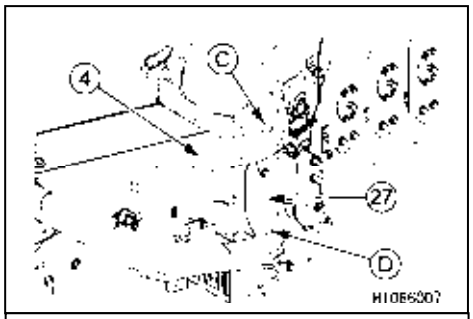

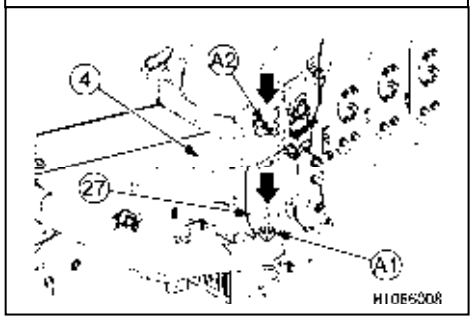

NOTES

If you have any difficulties inserting the position pins (A1, A2), try changing the order of pins to insert.

18. Reconnect the left section of the main boom tip and the harness of the left section of the fly jib base, following the procedure below.
    (1) Disconnect the plug of the dummy connector (E3).
    (2) Disconnect the connector B (E5) from the connector (E2) on the main boom side and reconnect the connector B (E5) to the dummy connector (E3).
    (3) Disconnect the connector A (E4) from the connector on the fly jib side (E1) and reconnect the connector A (E4) to the connector on the main boom side (E2).
    (4) Connect the plug to the connector on the fly jib side (E1).

CAUTION

- **The fly jib will not function unless you reconnect the harness. Make sure to reconnect it.**
- **Check that the connector of the reconnected harness is securely inserted.**
- **Use plugs on the unconnected ends to protect connectors.**

FLY JIB STOWED

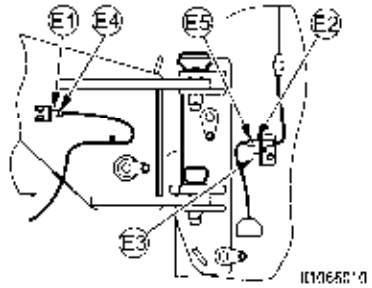

FLY JIB SET

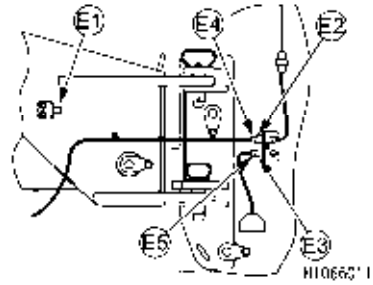

19. Reconnect the hydraulic hoses on the right section of the main boom tip and on the right section of the fly jib base, following the procedure below.

    (1) Remove the cap of the couplers 1 (F1) and 2 (F2).
    (2) Disconnect the coupler 3 (F3) of the hydraulic hose A (F5) stowed in the fly jib side and reconnect it to the coupler 2 (F2) on the main boom side.
    (3) Disconnect the coupler 4 (F4) of the hydraulic hose B (F6) stowed in the fly jib side and reconnect it to the coupler 1 (F1) on the main boom side.
    (4) Attach the cap to the couplers 3 (F3) and 4 (F4).

CAUTION

- **The fly jib will not function unless you reconnect the hydraulic hose. Make sure to reconnect it.**
- **If the coupler is dirty, attach the coupler after cleaning it.**
- **Check that the coupler is securely inserted to the reconnected hydraulic hose.**

FLY JIB STOWED

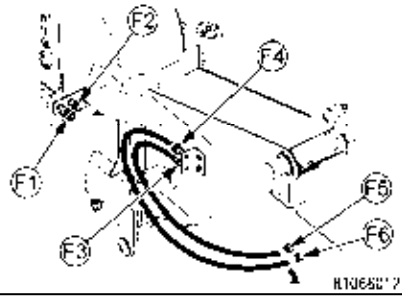

FLY JIB SET

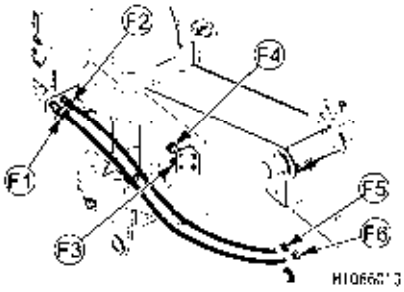

20. Remove the wire rope (12) connected to the hook block, following the procedure below.

CAUTION

- **Be careful not to wind the wire ropes irregularly.**
- **Do not unwind after the hook block touches the ground, since the wire ropes are wound irregularly inside the winch drum when the hook is lowered further to the ground.**

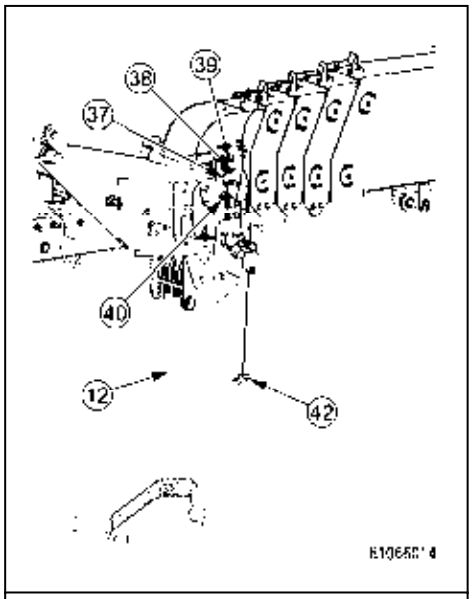

(1) Make the main boom fully retracted and make sure the main boom angle is approx. 20 degrees.

(2) Operate the winch lever to lower the hook block so that it is barely touching the ground.

(3) Lower the hook to the ground by lowering the boom.

(4) Remove the bolt (39) and pull out the wedge socket pin (38) to remove the wedge socket (37) from the main boom.

(5) Remove the wire clip (40).

(6) Remove the rope wedge (41) by preparing a cylindrical rod (A) of 6 to 8 mm and lightly tapping the rope wedge with a hammer in the direction indicated by the arrow (a).

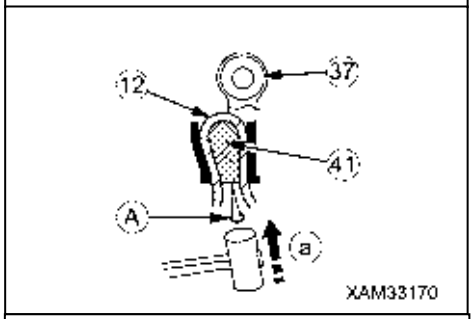

(7) Pull out the wire rope (12) from the hook.

(8) Pull the wire rope (12) out of the weight (42) of the over-hoist detector.

(9) Pull out all the wire ropes (12) from three sheaves on the main boom tip.

(10) Hang the over-hoist detector weight (42) on the weight hanger (25) on the left side (27) of the fly jib mounting bracket.

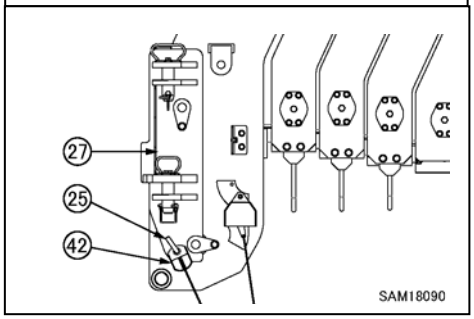

21. Take the wire rope (12) you have removed in step 20 and draw it through the sheave (44) at the center of the main boom tip, and pull it out to the fly jib side.

CAUTION

When drawing the wire rope (12) through the sheave (44), make sure it is running along the grooves of the sheave (44).

22. Draw the wire rope (12) you have just passed through the sheave (44) through in the order of the guide sheave (14), the snap sheave (11) and the sheave (8).

⚠ WARNING

Attach the wire rope correctly. If the wire rope is threaded through a wrong route, it might be damaged causing a serious accident.

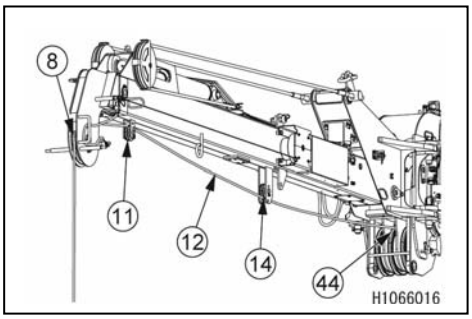

23. Remove the over hoist detector weight (9) from the weight hanger (46) on the right side of the No. 1 fly jib (2).

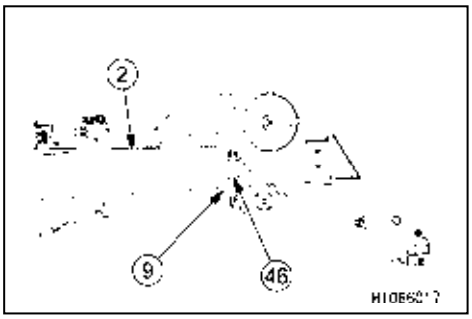

24. Draw the wire rope (12) through the circle of the over-hoist detector weight (9).

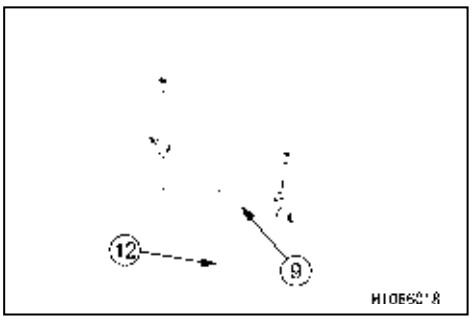

25. Pull the wire rope (12) through the wire socket (37) removed in step 20 as shown in the figure on the right and put the rope wedge (41) in the position (a), and yank the wire rope (12) in the direction indicated by the arrow.

26. Attach the rope clip (40) to the wire rope (12).
See the figure on the right for the position to attach the rope clip (40).

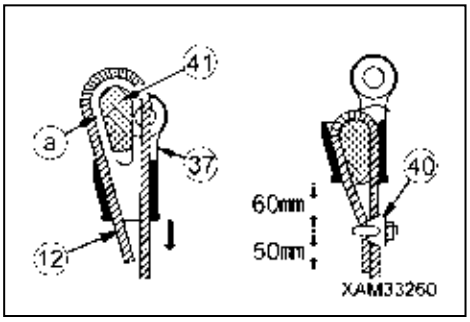

27. Hold the wire socket (37) and insert it so that the pin hole (a) inside the hook block is aligned with the hole (b) of the wire socket (37). Insert the wedge socket pin (49) into the aligned hole and align the wedge socket pin (49) fixing hole (d) with the wedge socket (37) fixing hole (c) and fasten them with a spring washer (51) and bolt (50).

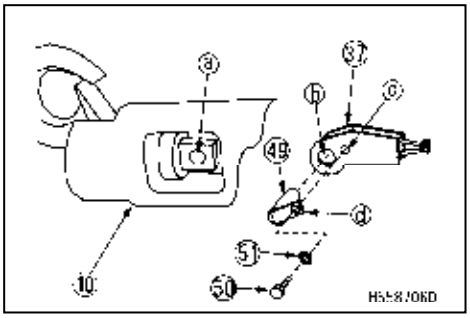

https://truckmanualshub.com/

28. Remove the lever block (23) and the wire (13) that were mounted to position the pins.

CAUTION

The main boom body, the fly jib body, the lever block (23) or the wire (13) might be damaged when the main boom is extended with the lever block (23) mounted.

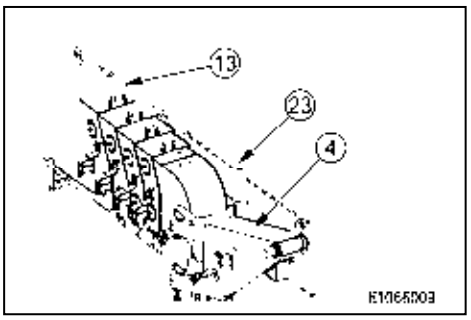

29. The monitor display changes for the fly jib automatically, when the fly jib is mounted.
Refer to “Fly jib 5. Handling monitor and moment limiter” section for details on monitor display.

https://truckmanualshub.com/

4.2 STOWING FLY JIB

⚠ WARNING

Never perform any work riding on the crawler. You might slip and fall causing a serious accident. To work in a high place, be sure to install a stable work table.

NOTES

When stowing the main boom, retract the main boom fully, then make the fly jib angle to 0 degree and the number of boom sections to 1 (fully retracted).

When stowing the fly jib mounted on the main boom tip, to the right section of the main boom, follow the procedure below.

1. Install the outrigger.
   For outrigger setup, see “Operation 2.14 Outrigger setting operation”.

2. Remove the wire rope connected to the single hook, following the procedure below.

CAUTION

- **Be careful not to wind the wire ropes irregularly.**
- **Do not unwind after the hook block touches the ground, since the wire ropes are wound irregularly inside the winch drum when the hook is lowered further to the ground.**

(1) Make the main boom fully retracted and make sure the main boom angle is approx. 20 degrees.
(2) Operate the winch lever to lower the single hook (10) so that it is barely touching the ground.
(3) Lower the single hook (10) to the ground by lowering the boom.
(4) Remove the bolt (50) and the washer (51) and pull out the wedge socket pin (49) to remove the wedge socket (37) from the single hook (10).
(5) Remove the wire clip.
(6) Prepare a cylindrical rod (A) of 6 to 8 mm and place it on the rope wedge (41) and remove the rope wedge (41) from the wedge socket (37) by tapping the rod gently with a hammer in the direction of the arrow (a) and remove the wire rope (12).
(7) Pull out all the wire ropes (12) to the sheave on the main boom tip.

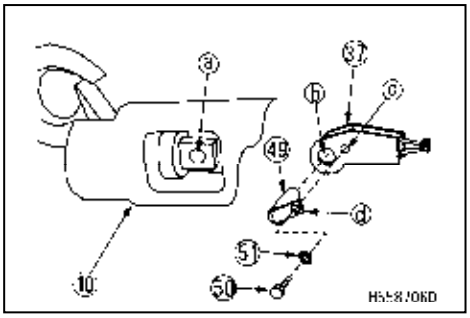

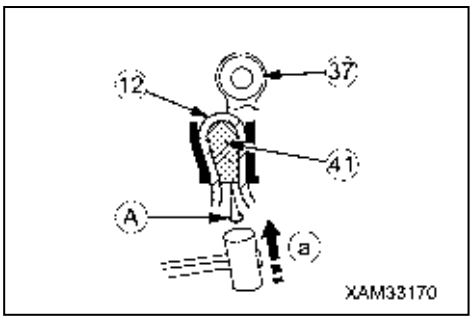

3. Attach the wire rope to the hook block, following the procedure below.
   (1) According to the number of falls of the wire rope, draw the wire rope through the sheave of the boom tip and the hook block sheave as shown in the figure below.

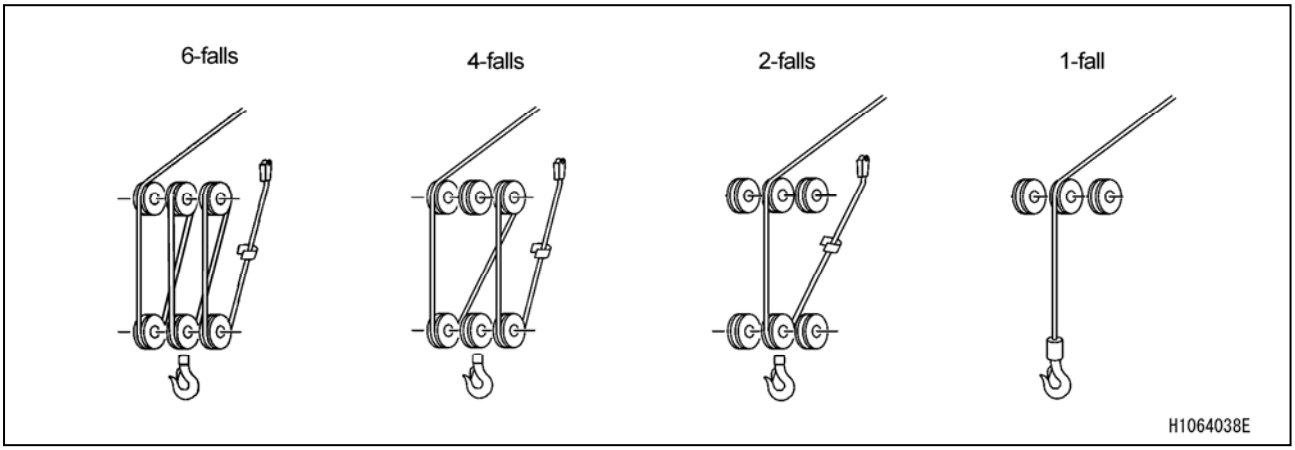

   (2) Draw the tip of the wire rope (12) through the weight of over-hoist detector (42) of the over-winding detector.
   (3) Draw the wire rope (12) through the wedge socket (37).
   (4) The rope wedge (41) should be in position (a), and yank at the wire rope (12) in the direction indicated by the arrow.
   (5) Fix a wire clip (40) to the wire rope (12) according to the dimensions specified in the sketch at the right.
   (6) Secure the wedge socket (37) to the boom with the wedge socket pin (38), and tighten the wedge socket pin (38) and the bolt (39).

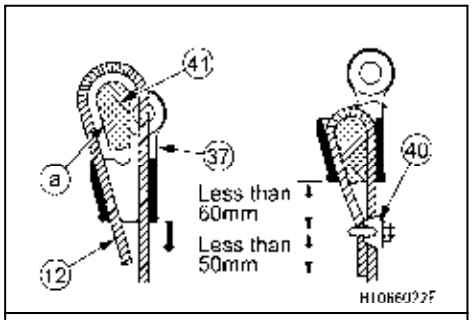

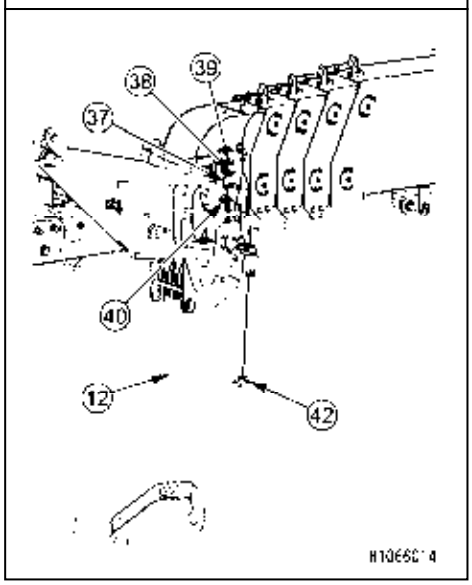

NOTES
When lifting the hook block from the grounding surface, the boom should be in a raising operation. Do not operate the winch lever since it will cause irregular winding.

4. Stow the over-hoist detector weight (9) to the weight hanger (46) on the right section of the No. 1 fly jib (2).

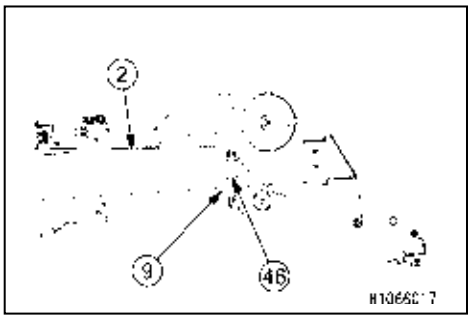

5. Stow the single hook (10) you have removed in the stowage bracket (36) at the front of vehicle.

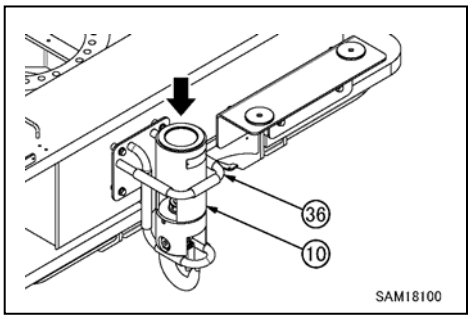

6. Reconnect the left section of the main boom tip and the harness of the left section of the fly jib base, following the procedure below.

   (1) Remove the plug from the connector (E1) on the fly jib side.
   (2) Disconnect the connector A (E4) from the connector (E2) on the main boom side and connect the connector B (E5) to the connector (E3) on the fly jib side.
   (3) Disconnect the connector B (E5) from the dummy connector (E3) and reconnect the connector B (E5) to the connector (E2) on the main boom side.
   (4) Connect the plug to the dummy connector (E3).

CAUTION

- **The machine will not function unless you reconnect the harness. Make sure to reconnect it.**
- **Check that the connector of the reconnected harness is securely inserted.**
- **Use plugs on the unconnected ends to protect connectors.**

FLY JIB SET

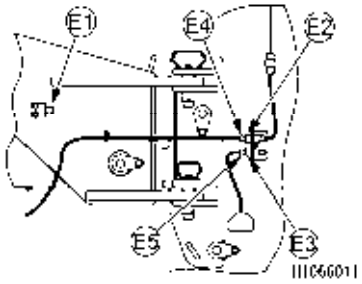

FLY JIB STOWED

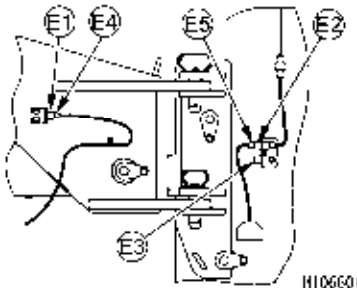

7. Reconnect the hydraulic hoses on the right section of the main boom tip and on the right section of the fly jib base, following the procedure below.

   (1) Remove the caps from the couplers 3 (F3) and 4 (F4).
   (2) Remove the coupler (F2) of the hydraulic hose A (F5) connected to the main boom side and reconnect it to the stowage coupler 3 (F3) on the fly jib side.
   (3) Remove the coupler 1 (F1) of the hydraulic hose B (F6) connected to the main boom side and reconnect it to the coupler 4 (F4) on the fly jib side.
   (4) Attach the caps to the couplers 1 (F1) and 2 (F2).

CAUTION

- **Be sure to reconnect the hydraulic hose. Otherwise, the hose might be bent and damaged.**
- **If the coupler is dirty, attach the coupler after cleaning it.**
- **The coupler cap should be attached to prevent foreign objects to be mixed in.**

FLY JIB SET

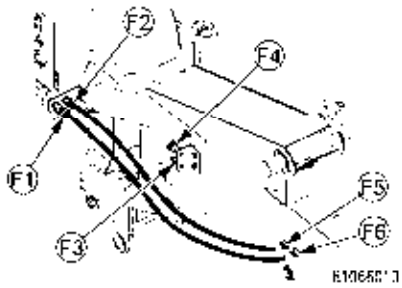

FLY JIB STOWED

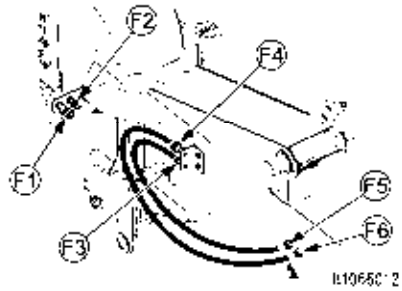

8. Attach the lever block (23) and the wire (13) to the main boom and the fly jib base (4) to adjust the position using the lever block (23).
   Pull out the shaft lock pins of the position pins (A1, A2) on the left section of the fly jib mounting bracket (27) and pull out the position pin A2 first, then A1 from the left section of the fly jib mounting bracket (27).

NOTES

One of the position pins (A1, A2) is used to fix the fly jib later, and another is stowed.

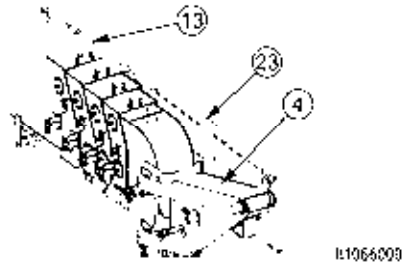

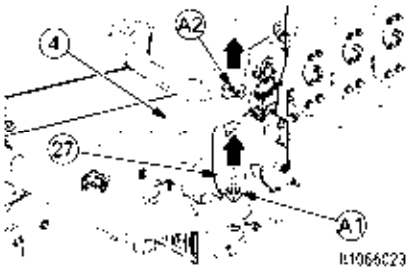

9. Remove the wire (13) and the lever block (23) from the main boom and the fly jib base (4) and mount the lever block (23) to the No.1 fly jib (2) and the fly jib base (4) so that the bracket can be stowed easily.

NOTES

The lever block (23) should be attached with a tension so that the No.1 fly jib (2) is slightly lifted.

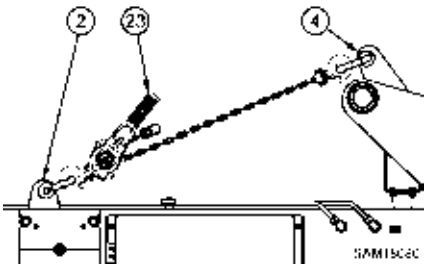

10. Rotate the No.1 fly jib (2) using the position pins (C1, C2) on the right section of the fly jib mounting bracket as pivot points.

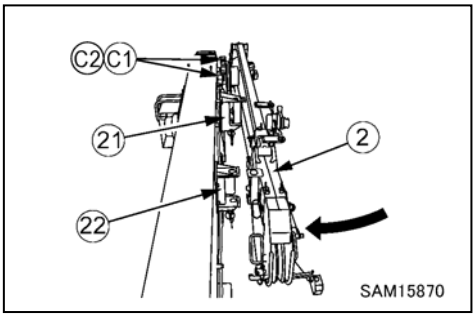

NOTES
To rotate the No. 1 fly jib (2), pull the tip of the No. 1 fly jib (2). Also, if the No. 1 fly jib (2) rotation speeds up, prevent it from doing so.

11. Insert the position pin (A2) to the bracket (27) on the left section of the main boom tip. When doing so, attach the shaft lock pin to prevent pins from falling.

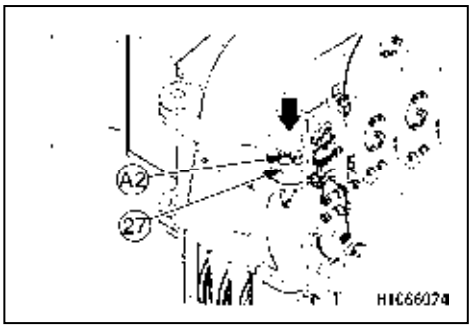

NOTES
You need this position pin (A1) later to fix the fly jib.

12. Put the No.1 fly jib (2) rotated in step 10 on top of the fly jib stowage bracket A (21) and align the holes.

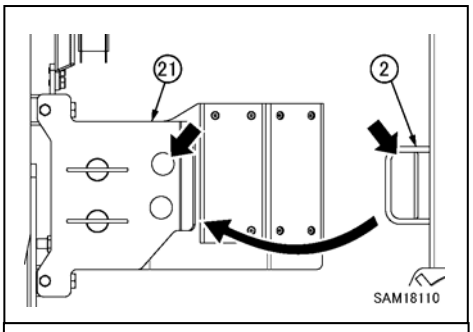

13. After aligning the hole on the No. 1 fly jib (2) connection section with the hole on the fly jib stowage bracket A (21), insert the position pin (B2) into the hole and insert the linchpin. Remember to turn the ring back to lock it securely.

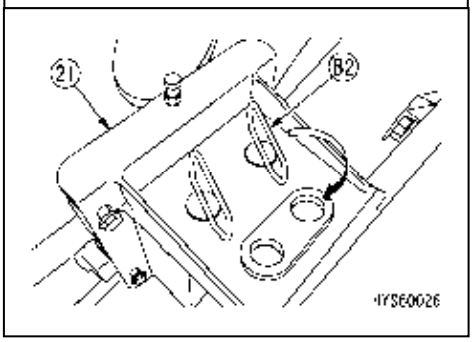

⚠ WARNING

- **Do not remove the position pins (C1, C2) from the right section of the fly jib mounting bracket (26), until the position pin (B2) is securely inserted into the hole of stowage bracket A (21) and the fly jib is fixed. If you remove, it may cause a serious accident.**
- **The position pin (B2) must be inserted from above facing downwards. Otherwise, the position pin might come off, and the fly jib may fall causing a serious accident.**

CAUTION

Do not perform extend/retract operation with the position pins (B2, C1, C2) inserted into both the holes on the right section of the fly jib mounting bracket (26) and the stowage bracket A (21). If you perform the above, the fly jib and the main boom might be seriously damaged.

14. Loosen the lever block (23) attached to the No.1 fly jib (2) and the fly jib base (4) to remove the linchpins of the position pins (C1, C2) attached to the hole on the right section of the fly jib mounting bracket (26), and pull out the position pins (C1, C2).
    After pulling out the position pins (C1, C2), remove the lever block (23).

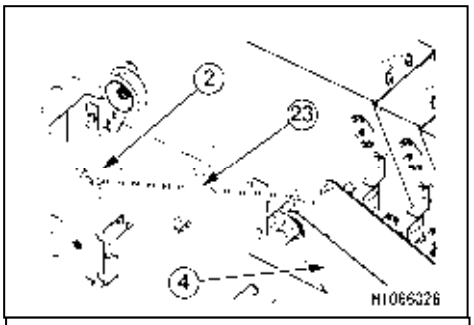

NOTES
Stow the position pins (C1, C2) you have just pulled out later.

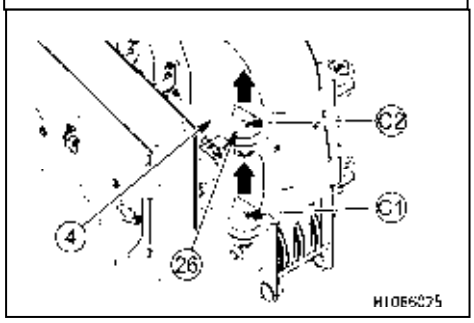

15. Slide the fly jib horizontally while holding the handle (H4) of the fly jib base (4) to separate it from the right section of the fly jib mounting bracket (26).

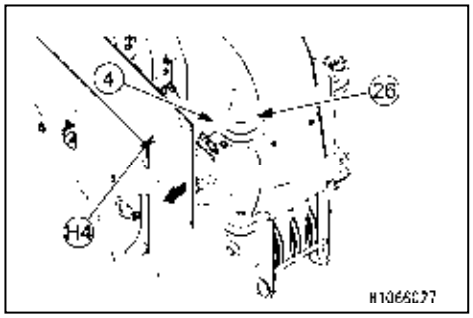

16. Insert the position pins (C1, C2) to the right section of the fly jib mounting bracket (26). When doing so, be sure to turn the ring of the linchpin back to lock it securely.

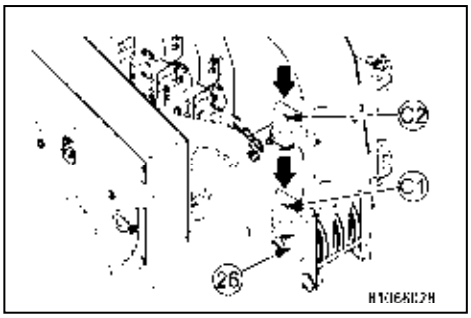

17. Hold the handle (H3) of the fly jib (5) and pull it to the tip side.

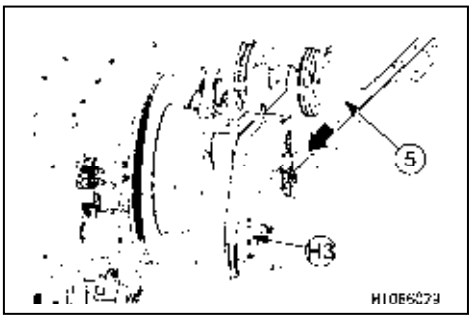

18. Push the fly jib into the stowage bracket B (22) and insert the position pin (A1) to the hole of the stowage bracket B (22) and insert the linchpin. When doing so, attach the shaft lock pin to prevent pins from falling.

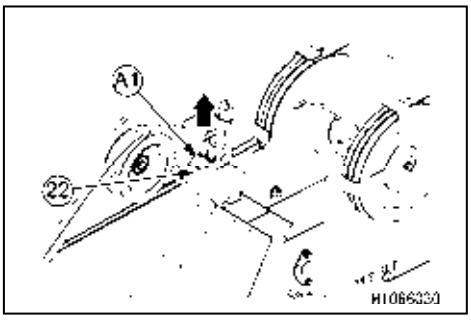

⚠ WARNING

The position pin (A1) must be inserted from above facing downwards. Otherwise, the position pin might come off, and the fly jib may fall causing a serious accident.

19. Pull out the linchpin of the position pin (B1) stowed in the stowage bracket A (21) to pull out the position pin (B1). Insert the position pin (B1) to the front hole and insert the linchpin. Remember to turn the ring back to lock it securely.

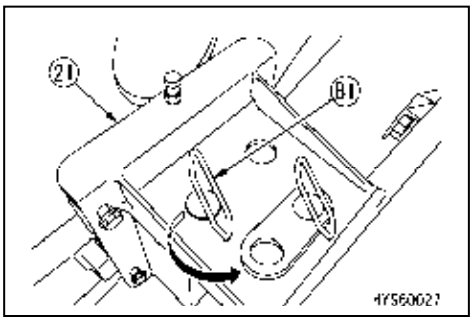

CAUTION

The monitor display changes as the figure below, when the fly jib is stowed.

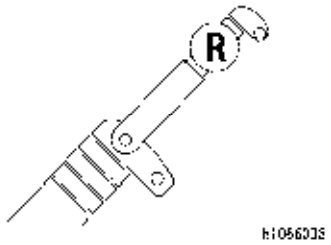

Remove the fly jib mounting bracket as necessary.

20. Hang a sling on the upper part of the fly jib mounting bracket (6) and remove the nut (32) and the plate (31), and pull out the head pin (28) from the fly jib mounting bracket (6) completely.

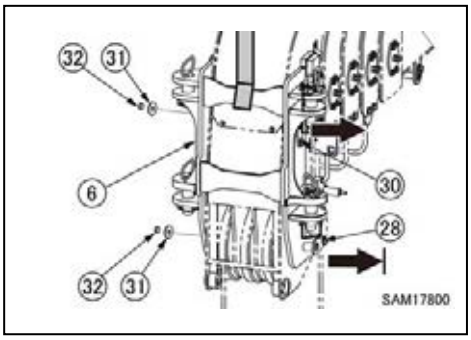

NOTES

The head pin (28) does not need to be pulled out completely, as long as the fly jib mounting bracket (6) can be removed.

21. Remove the nut (32) and the plate (31), and pull out the point pin (30) to remove the fly jib mounting bracket (6).

22. Put back the head pin (28) you have pulled out in step 20, and fasten the tip using the collar (29), the plate (31) and the nut (32).

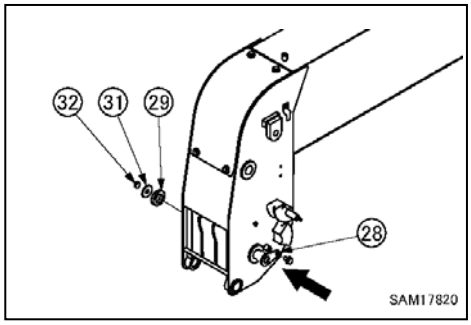

NOTES

Do not forget to mount the collar (29) which was removed when mounting the fly jib mounting bracket (6).

23. Secure the fly jib mounting bracket (6) you have removed in step 21 with the eye bolt (34) and the washer (35) to the stowage bracket (33) at the front of vehicle and stow it.

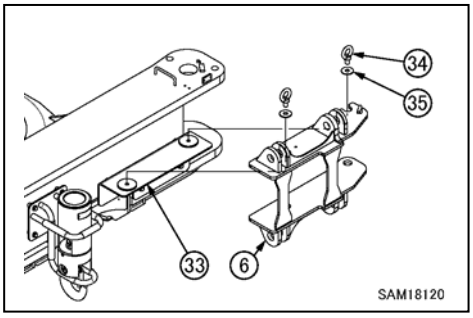

5. HANDLING MONITOR AND MOMENT LIMITER

⚠ WARNING

Do not perform any work with the override switch on.
If you perform, it will result in dropping of hoisted load, breakage of the boom and the fly jib, and crane overturn causing a serious accident resulting in death or serious injury.

CAUTION

In this section, only the equipment with the fly jib specification, different from the standard specification is described.
See “Operation 1.5 Moment limiter (overload detector)” for the devices that are not described in this section.

5.1 NAME OF MONITOR DISPLAY

5.1.1 MONITOR DISPLAY IN FLY JIB MODE

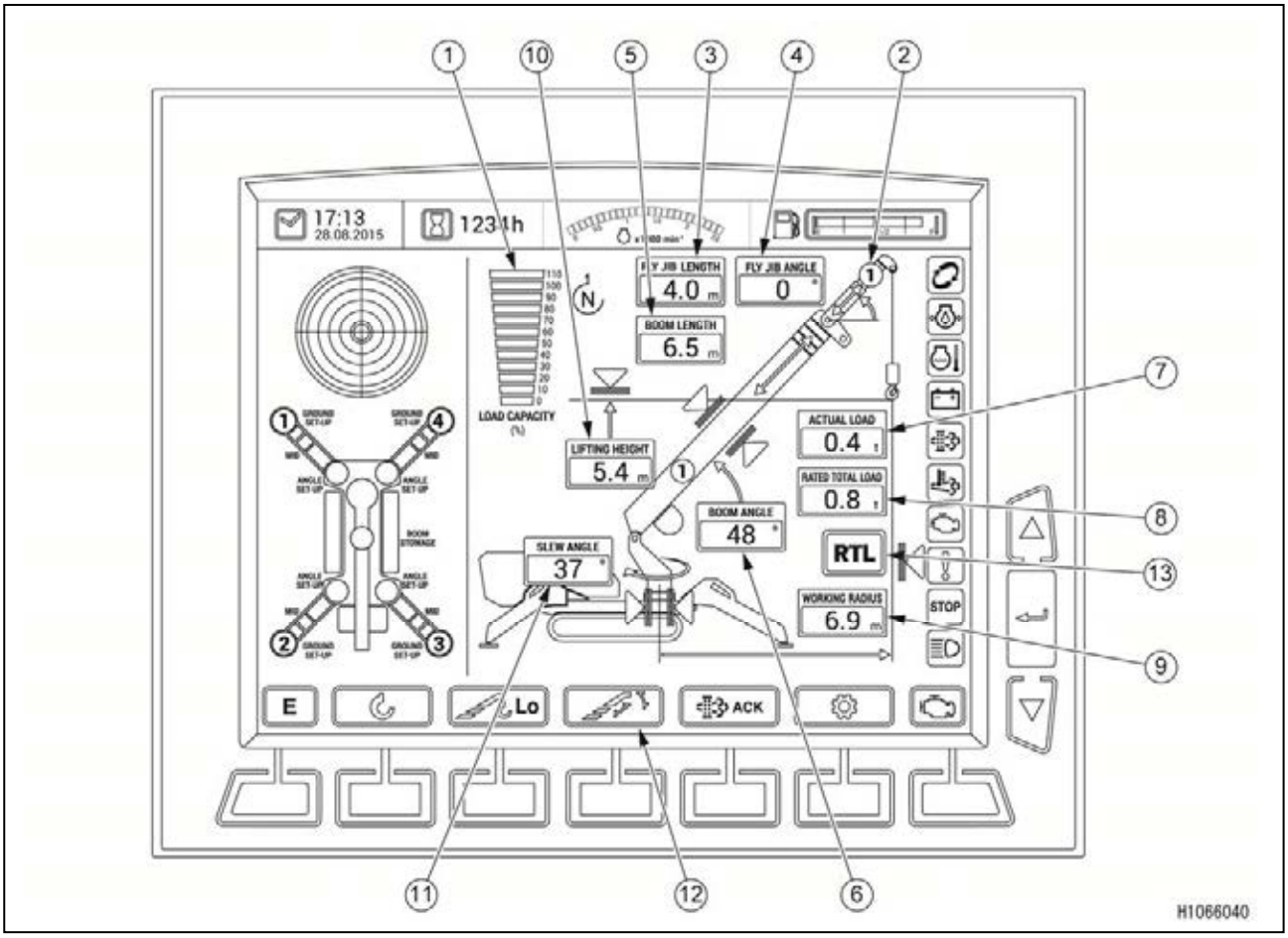

(1) Load capacity ratio display
(2) Number of fly jib boom section display
(3) Fly jib length display
(4) Fly jib angle display
(5) Boom length display
(6) Boom angle display
(7) Actual load display
(8) Rated total load display
(9) Working radius display
(10) Lifting height display
(11) Slew angle display
(12) Boom/fly jib operation selector switch
(13) Rated total load display

CAUTION

It is automatically switched to the fly jib mode when the fly jib is attached to the tip of main boom.

[Description of monitor indication]

[2] Number of fly jib boom section display

When the fly jib is stowed, “R” is shown.

When the fly jib is attached and it is fully retracted, “1” is shown.

When the fly jib is extended, “2” is shown.

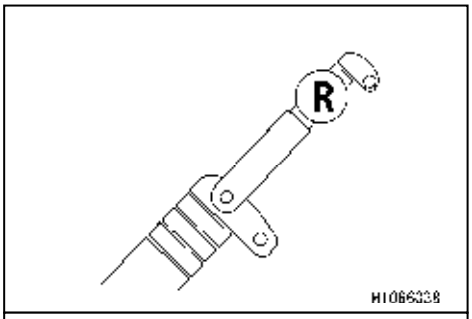

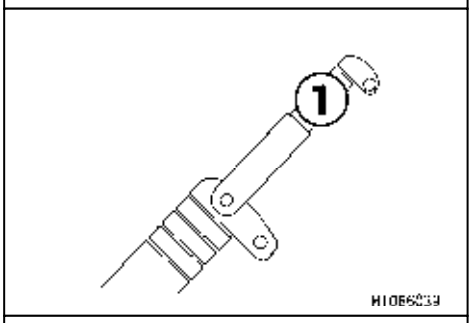

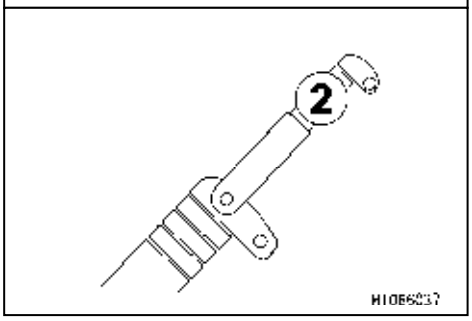

[3] Fly jib length display

Continually shows the current fly jib length during crane operations.

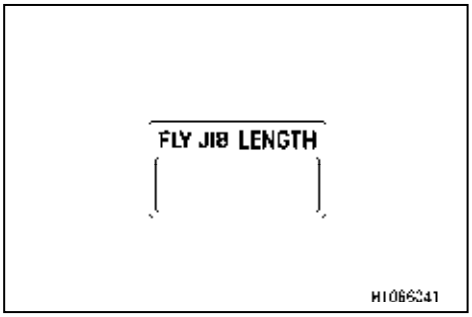

[4] Fly jib angle display

Continually shows the current fly jib angle during crane operations.

The angle of the fly jib is 0 degree, when it is parallel to the main boom. As the fly jib is lowered, the degree increases.

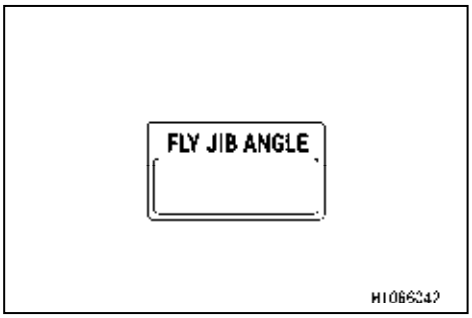

NOTES

The angle of the fly jib indicates the angle toward the main boom, so it is not affected by derricking the main boom.

https://truckmanualshub.com/

[12] Boom/Fly jib operation selector switch

Using this switch, you can switch between the main boom and the fly jib operation during crane operations.

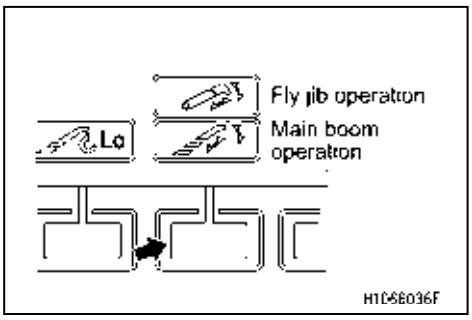

NOTES
If you are switched to the fly jib operation, you cannot perform the extend/retract operation and the derrick operation at the same time. Either of the preceding operation is executed.

[13] Rated total load display

The rated total load of the fly jib is shown when you touch “RTL” on the monitor display.

Touch again to return to the original display.

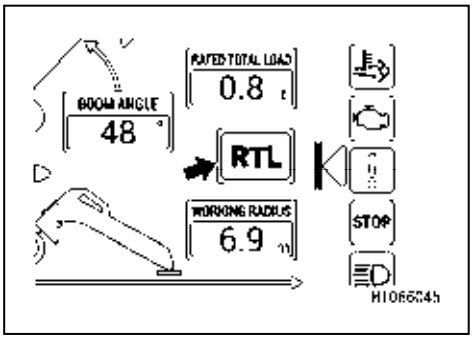

5.1.2 MONITOR DISPLAY IN FLY JIB STOWAGE MODE

When the fly jib is stowed, the monitor display returns to the normal crane mode.

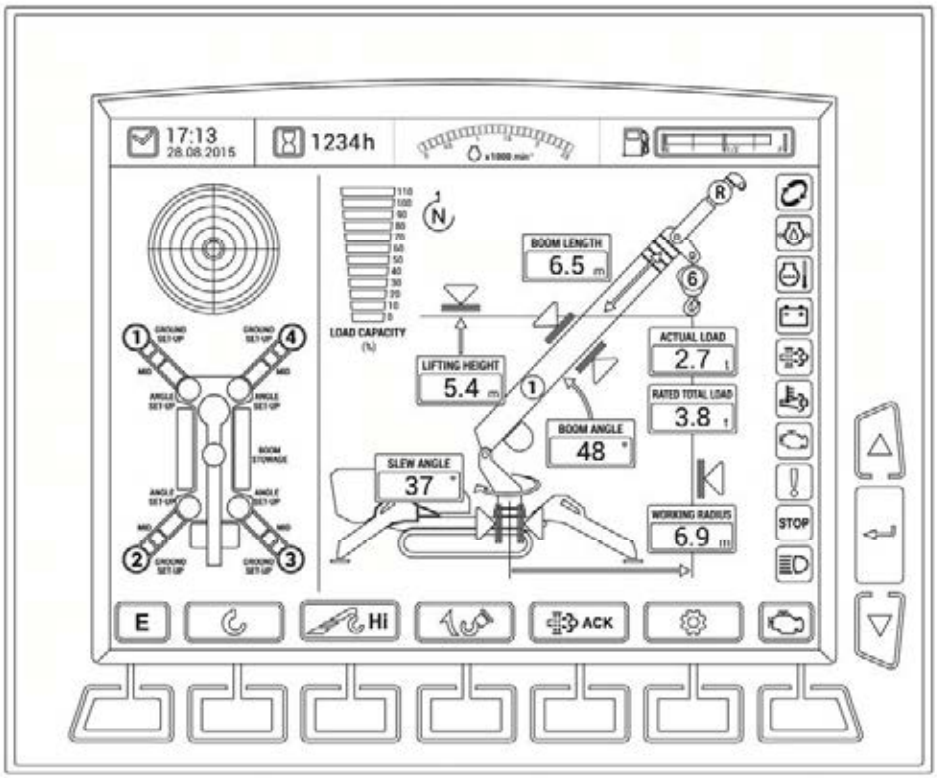

H1066043

NOTES
When the fly jib is stowed, the monitor display changes as follows: • The number of fly jib boom sections is shown as “R”. • The fly jib length is not shown. • The fly jib angle is not shown. • The position of each status indication is adjusted. • Boom/fly jib operation selector switch changes to the mode selector switch.

5.2 MOMENT LIMITER FUNCTIONS

CAUTION

When the fly jib is attached to the main boom tip, the mode changes to the fly jib mode, and the moment limiter and the machine operate as follows:

- **The rated total load value shown in the monitor is switched to the value for a fly jib.**
- **The crane operation is fixed to “Crane Low”.**
- **The hook sling number is fixed to “one hook sling”.**
- **The “P mode” hoisting mode is disabled.**
- **The fly jib angle will not be lower than the level to the ground.**
- **The fly jib and crane operation are disabled when the main boom angle is in the range shown in the table below.**
  Also, the angle cannot be in the range in the table below, unless the main boom length is less than “6.0 m” and with “no load”.

Outrigger extension	Main boom angle
Maximum	More than 0 degree and less than 50 degrees
Medium	More than 0 degree and less than 70 degrees
Minimum	More than 0 degree and less than 70 degrees

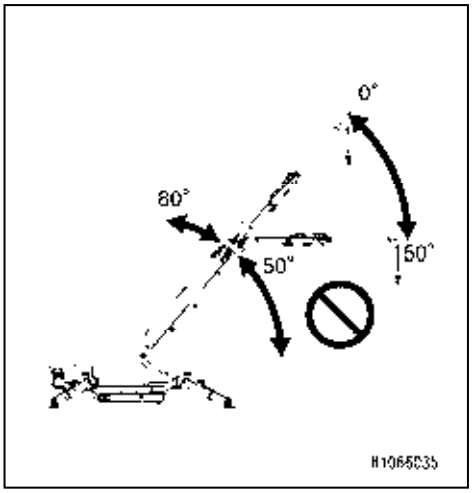

5.3 RECOVERY OPERATION FROM AUTOMATIC STOP

Refer to the “OPERATION 1.5.3 [2] RECOVERY OPERATION FROM AUTOMATIC STOP” for more information about recovery operation.

https://truckmanualshub.com/

6. OPERATION

⚠ WARNING

When using a crane, remember to set the engine in low idling mode and work in a speed as low as possible. If you operate a lever in a sudden motion, the fly jib might break due to the excess force, causing a serious accident.

CAUTION

In this section, only the operations in the fly jib specification different from the standard specification are described.
See "Operation 2. Operation" for details on the operation of the machine not described here.

When operating the fly jib, push the monitor operation switch to change to the fly jib operation.

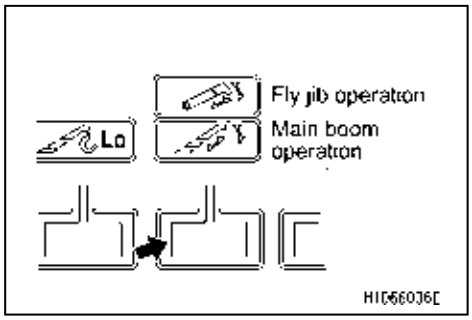

6.1 FLY JIB DERRICKING OPERATION

Operate the right operation lever (1) as follows:

- Lower : Push the lever forward.
- Neutral: Release your hand from the lever.
  The lever returns to the NEUTRAL position and the fly jib derricking stops.
- Raise : Pull the lever to the rear side.

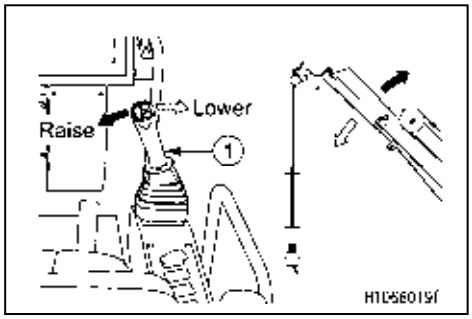

6.2 FLY JIB RETRACT/EXTEND OPERATION

Operate the left control lever (2) as follows:

- Extension : Push the lever forward.
- Neutral : Release your hand from the lever.
  The lever returns to the NEUTRAL position and the fly jib telescoping stops.
- Retraction: Pull the lever toward you.

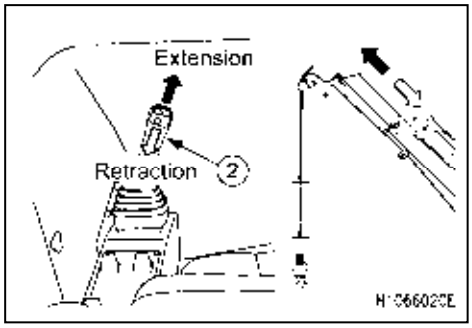

NOTES

- To move the fly jib, you need to change the boom/fly jib operation selector on the monitor. For details on the switch, see "Fly jib 5.1.1 Monitor display in fly jib mode".
- You cannot perform the extend/retract operation and the derrick operation of the fly jib at the same time. Either of the preceding operation is executed. The rotation and winch operations can be performed simultaneously.

https://truckmanualshub.com/

7. TROUBLESHOOTING

7.1 LIST OF ERROR CODE

The following are the fly jib related errors indicated on the monitor.

If any error codes other than the following are shown, the failure other than in a fly jib is possible, so see “Operation 11.7 List of error codes”.

Error code	Details of failure	Check items when failure occurs
ES15	Fly-jib angle sensor input error	• Check fly-jib angle sensor • Check harness of fly-jib angle sensor related circuit
ES16	Fly-jib length sensor input error	• Check fly-jib length sensor • Check harness of fly-jib length sensor related circuit
ES17	Load cell input error	• Check load cell • Check load cell amplifier • Check harness of load cell related circuit
EV20	Fly jib power supply voltage error	• Check converter 24V → 12V • Check power supply related circuit
EOF02H	Fly jib derricking/ Extend/retract switching SOL Hi error	• Check switch valve • Check harness of switch valve related circuit
EOF02L	Fly jib derricking/ Extend/retract switching SOL Lo error	
EV21	Sensor power supply Lo error	• Check harness of related circuit

If any errors occur that does not have error codes, see “Fly jib 7.2 When these phenomena happen”.

https://truckmanualshub.com/

7.2 WHEN THESE PHENOMENA HAPPEN

- Make sure that you contact our sales service agent for the actions marked with ★ in the table.
- Ask our sales service agency for repair if you suspect any other abnormalities or causes than those given below.

[1] When fly jib is not attached to vehicle body

Abnormal Phenomenon	Major cause(s)	Remedy
Monitor display switched to fly jib mode	• Incorrect setting change	★Change setting

[2] Fly jib is attached to vehicle body and stowed (fly jib mode)

Abnormal Phenomenon	Major cause(s)	Remedy
"1 or 2" is shown as the number of fly jib boom sections, instead of "R"	• Malfunction of stowage limit switch • Defective wiring	★Check limit switch and replace ★Check for disconnected wire and repair
"Fly jib length and fly jib angle" is shown		
"Boom/fly jib operation selector switch" is shown		

[3] When fly jib is attached to vehicle body and extended (fly jib mode)

Abnormal Phenomenon	Major cause(s)	Remedy
"R" is shown as the number of fly jib boom sections, instead of "1 or 2"	• Out of place connector, not exchanged • Malfunction of stowage limit switch • Defective wiring	• Check connector condition ★Check limit switch and replace ★Check for disconnected wire and repair
"Mode selector switch" is shown		
Wiring error shown on monitor	• Out of place connector, not exchanged	• Check connector condition
Monitor display does not switch to fly jib mode	• Incorrect setting change	★Change setting

https://truckmanualshub.com/

8. INSPECTION AND MAINTENANCE

CAUTION

In this section, only the equipment with the fly jib specification, different from the standard specification is described.
See “Inspection and maintenance” for details on the machine not described in this section.

8.1 PRE-OPERATION INSPECTION

Check the following in this section before starting the work after attaching a fly jib every day.

[1] Check around fly jib

- Check for any cracks or significant deformation or dirt in parts of a fly jib. Also, check for the loosened, missing or damaged bolts, nuts, and pins. Especially check each position pin for any significant wear and damage. Repair if any abnormality is found.
- Check the sheave and guide roller for any significant wear. Replace the parts if any abnormality is found.
- Check wire rope for over hoist detector weight of the over hoist detector on the fly jib tip for any significant damage or deformation. Repair if any abnormality is found.
- Check code reel on the left side of fly jib for any significant damage or deformation. Also, check for any damage on the code reel cables and make sure they operate smoothly. Repair if any abnormality is found.
- Check for slack wiring, lose connections and any trace of burning. Repair if any abnormality is found.

[2] INSPECTION OF HOOK BLOCK

- Check that the wire rope latch (1) is working properly. Repair if any abnormality is found.
- Rotate the hook and check that it rotates smoothly and there is no noise coming from the trunnion.
  Repair if any abnormality is found.
- Check the hook for any cracks, significant deformation or dirt.
  Repair if any abnormality is found.

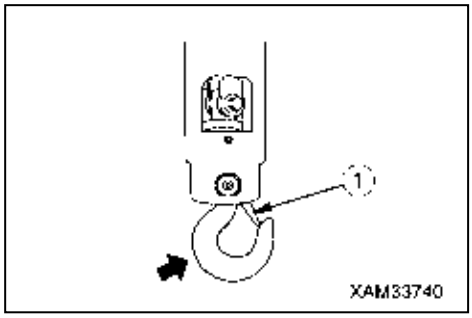

[3] INSPECTION AND ADJUSTMENT OF DERRICK WIRE ROPE

[Inspection of derrick wire rope]

1. Fully extend the fly jib derrick cylinder.

2. Make sure the fly jib base surface (P) and No.1 fly jib surface (Q) are parallel.
   If these are not parallel, refer to the section “Adjustment of derrick wire rope” and adjust to parallel.

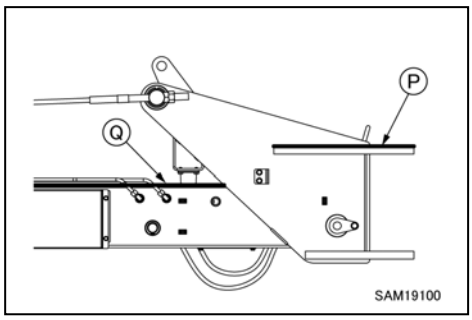

[Adjustment of derrick wire rope]

1. Fully extend the fly jib derrick cylinder.

2. Loosen 4 pieces of bolt (51) of the boom stopper (50).

3. Loosen the lock nut (52), and adjust wire rope by the adjusting nut (53), and set No.1 fly jib to horizontal.
   - If No.1 fly jib is lower than horinzontal.
     Tighten (clockwise) the adjusting nut (53).
   - If No.1 fly jib is higher than horinzontal.
     Loosen (counterclockwise) the adjusting nut (53).

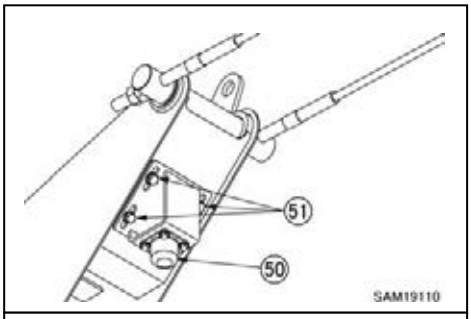

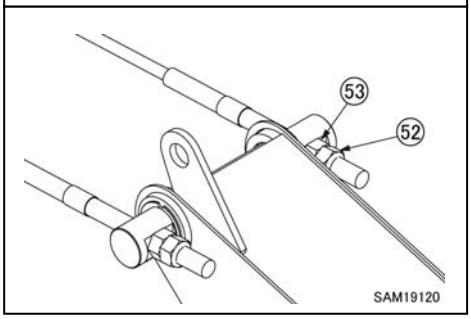

NOTES
There are adjusting nuts (53) on both left and right sides, but derrick wire rope is connected to just either one, so you can adjust to horinzontal by using either one.

[4] INSPECTION OF MOMENT LIMITER

⚠ WARNING

When an abnormality occurs in the moment limiter, immediately contact us or our sales service agent.

1. Start the engine.

2. Check the tricolor revolving lights. All lights of the revolving lights are lit, then the green light turns on.

3. Check that no error codes are displayed on the monitor.

4. Operate the fly jib as the following, and check if the monitor display is correct.

Posture of fly jib and display item	Monitor display
“Number of fly jib boom sections” display when fly jib is stowed	R
“Number of fly jib boom sections” display when fly jib is fully retracted	1
“Number of fly jib boom sections” display when fly jib is fully extended	2
“Fly jib angle” display when fly jib is fully raised	0
“Fly jib angle” display when fly jib is fully lowered	60

5. Start the engine and operate the crane as follows. Then, check if the monitor display of the moment limiter is correct.

Crane operation	Moment limiter operation
When the main boom is lowered from the condition with the main boom length of 6.1 m or greater, the fly jib angle of 0 degree and the main boom angle of 50 degrees or more.	• Overload alarm is issued and the buzzer sounds intermittently • Winding up hook, extending/lowering the main boom, extending/retracting fly jib and derricking fly jib operations are automatically stopped
When load is hoisted with the condition with the main boom length of 6.0 m or less, and the main boom angle of less than 50 degrees.	• Overload alarm is issued and the buzzer sounds intermittently • Operations other than winding down hook is stopped.

https://truckmanualshub.com/

8.2 PERIODIC REPLACEMENT OF CRITICAL PARTS

To use your machine safely for a long period of time, replace the parts listed as important parts relating specially to safety and fire periodically.

These parts are susceptible to change in the quality, wear and deteriorate over time. Since it is difficult to determine their degrees in a regular maintenance, they should be replaced with the new ones after a certain period of time even if no abnormalities are detected to guarantee perfect and consistent functionality.

These parts need repair or replacement when any abnormality is detected, even before the exchange time comes.

As to the hoses, if any distortions or cracks in hose clamps or deteriorations in O-rings, replace them also.

LIST OF IMPORTANT COMPONENTS

No.	Parts to be replaced regularly	Qty.	Replacement cycle
1	Hose for hose reel	2	Every 2 years or every 4000 hours, whichever falls first
2	Fly jib hose (switch valve)	2	

8.3 CONSUMABLES

Replace consumables such as wire rope upon periodic maintenance or prior to the wear limit.

Proper replacement of consumables delivers increased economy in machine use.

Always use Maeda genuine parts for part replacement.

See the parts catalogue for part numbers when ordering parts.

LIST OF CONSUMABLES

Item	Replacement cycle
Wire rope for fly jib derricking	Per replacement criteria
Cylinder packing	★Every 3 years
SLIDE PLATE	Every 3 years

★ The cycles marked with a "★" in Replacement cycle include a halt period.

★ Contact our sales service agent for part replacement.

[1] WIRE ROPE NOMINAL DIMENSION

- Wire rope for fly jib derricking IWRC 6 × Fi (29) 0/0 ⌀ 14 mm × 8.67 m

[2] CRITERIA FOR WIRE ROPE REPLACEMENT

For details on replacement criteria, refer to "Operation 5.1 Criteria for wire rope replacement".

NOTES
The wire rope of which 7% or more of the nominal diameter is decreased due to wear should be replaced. • Replace the wire rope with a new one when the diameter of the 14 mm wire rope becomes 13.0 mm.

https://truckmanualshub.com/

8.4 MAINTENANCE EVERY 50 HOURS

[1] Greasing

CAUTION

- **Greasing a new machine is required once every 10 hours until the machine completes the first 100 hours of operation for the initial breaking-in period.**
- **If you hear any noise on the greasing point, grease immediately regardless of the inspection and maintenance time.**

Use proper grease specified below according to the greasing points.

No.	Greasing point		Grease type
1	Greasing hook block	2 places	Lithium grease
2			
3	Greasing fly jib foot pin	1 place	
4	No.2 fly jib, slide plate touching surface	Both sides	Boom grease
5		Lower side	
6	No.1 fly jib, slide roller touching surface	Each part	

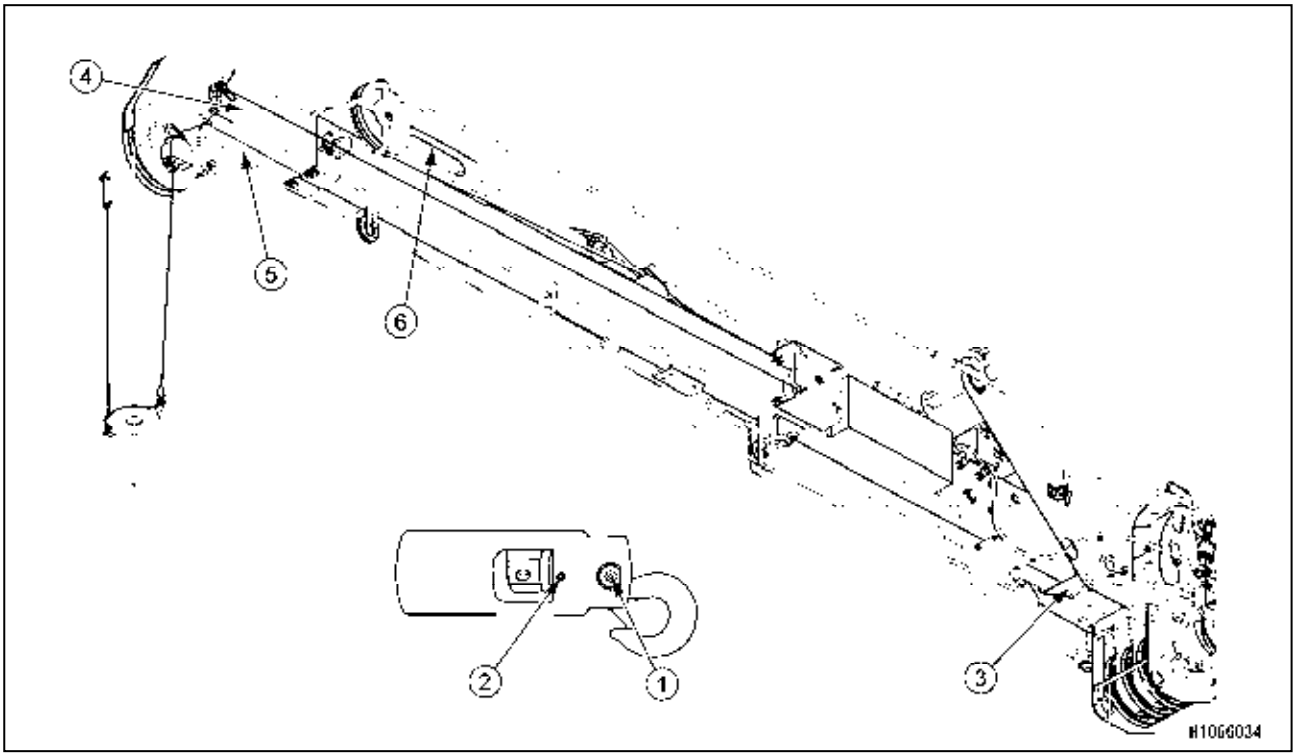

1. Grease the grease fittings using a grease pump.

2. Wipe off old grease squeezed out after greasing.

3. Use a brush or a roller to apply the boom grease.

9. SPECIFICATION

9.1 SPECIFICATION TABLE

CAUTION

In this section, only the specifications for the fly jib specification different from standard specification are described.
For other specifications, see “Specification” section.

Equipment / Item		MC815C FLY-JIB
Weight and dimensions	Body mass	9950 kg
	Overall length × width × height	6200 mm × 1740 mm × 2490 mm

9.2 SPECIFICATION DIMENSIONAL DRAWING

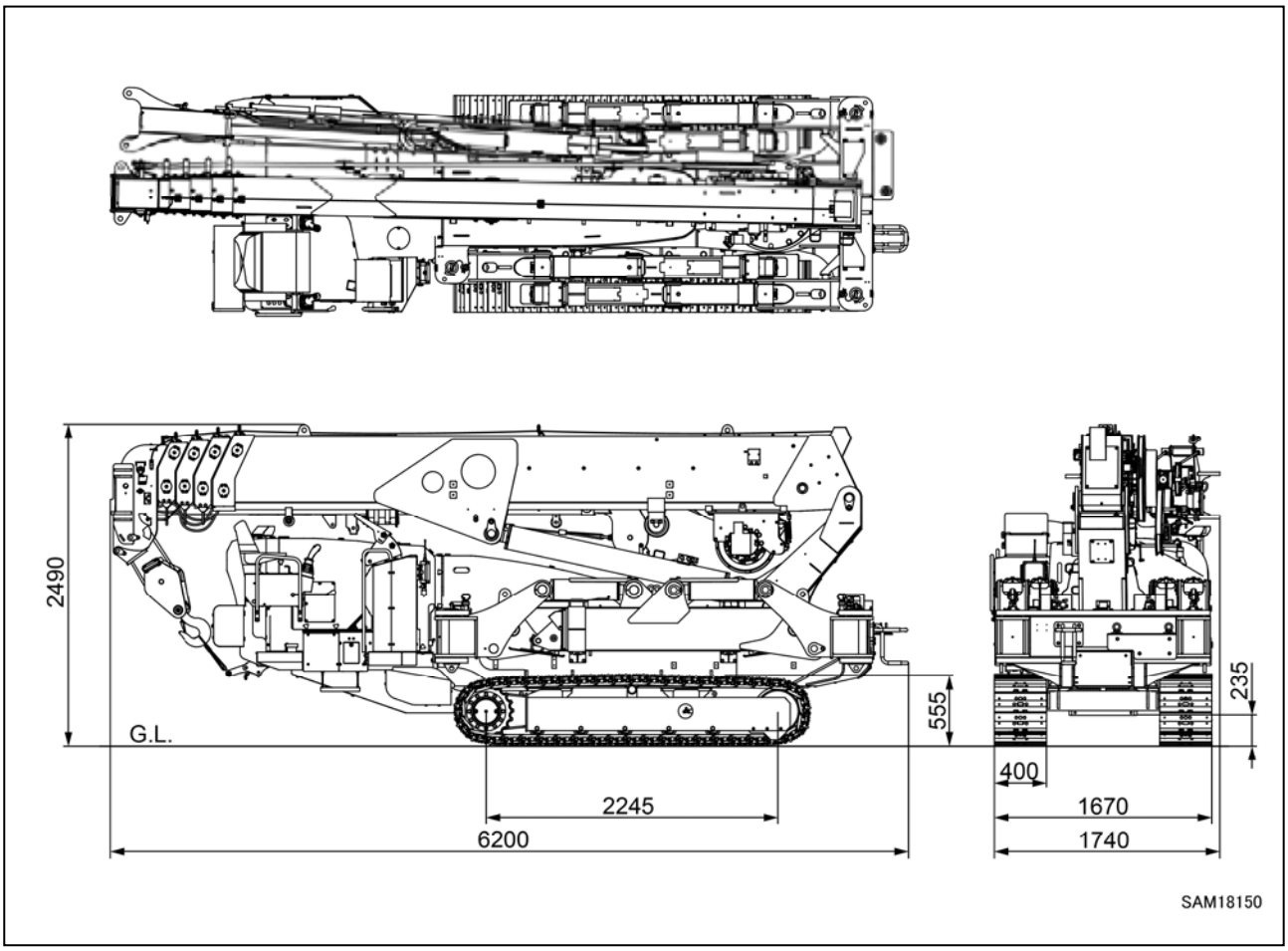

https://truckmanualshub.com/

9.3 RATED TOTAL LOAD CHART

CAUTION

- **The rated total load includes hook block mass (20 kg).**
- **When the fly jib is used, the available range and the rated total load vary depending on the outrigger extension, the fly jib angle and the number of boom sections. Check the available range in the rated total load chart before operating.**
- **Hoisting operation is not possible when the main boom angle is less than 50 degrees.**

With outrigger extended to maximum — Unit: kg

Main boom Angle	One jib section				Two jib sections			
	0 degree	20 degrees	40 degrees	60 degrees	0 degree	20 degrees	40 degrees	60 degrees
80 degrees	1520	820	720	620	1020	620	420	320
70 degrees	1020	620	520	420	820	420	320	220
60 degrees	420	420	320		320	220	120	
50 degrees	170	120			120			

With outrigger extended to medium — Unit: kg

Main boom Angle	One jib section				Two jib sections			
	0 degree	20 degrees	40 degrees	60 degrees	0 degree	20 degrees	40 degrees	60 degrees
80 degrees	1520	820	720	620	1020	620	420	320
70 degrees	1020	620	520	420	820	320	120	
60 degrees	120							
50 degrees								

With outrigger extended to minimum — Unit: kg

Main boom Angle	One jib section				Two jib sections			
	0 degree	20 degrees	40 degrees	60 degrees	0 degree	20 degrees	40 degrees	60 degrees
80 degrees	1520	820	720	620	1020	620	420	320
70 degrees	720	120			520			
60 degrees								
50 degrees								

★The rated total load chart represents the load including the mass of hanging tools (mass of one hanger hook: 20 kg).

https://truckmanualshub.com/

9.4 WORKING RADIUS/LIFTING HEIGHT

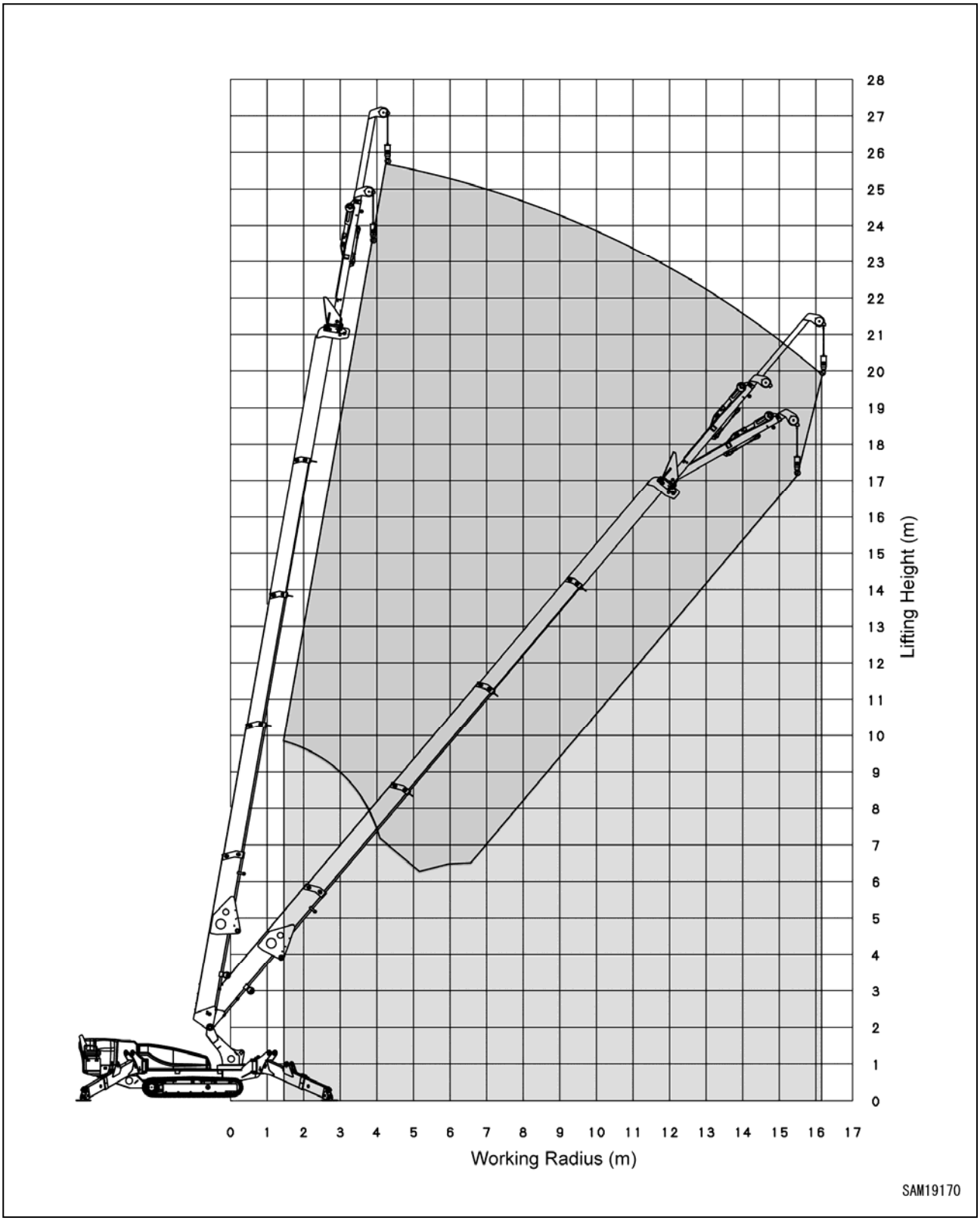

https://truckmanualshub.com/

This Page Intentionally Left Blank.

https://truckmanualshub.com/

SEARCHER HOOK

Item	Page
1. CAUTIONS IN USING SEARCHER HOOK	390
2. SEARCHER HOOK SAFETY LABEL LOCATIONS	391
3. NAMES OF SEARCHER HOOK PARTS	394
4. MOUNTING AND STOWING SEARCHER HOOK	395
5. HANDLING MONITOR AND MOMENT LIMITER	405
6. OPERATION	409
7. TROUBLESHOOTING	410
8. INSPECTION AND MAINTENANCE	411
9. SPECIFICATION	412

https://truckmanualshub.com/

1. CAUTIONS IN USING SEARCHER HOOK

⚠ WARNING

- **Be sure to change to the searcher hook mode on the monitor when the searcher hook is mounted. If you use the machine without changing the mode, damage to or overturn of the machine might occur causing a serious accident.**
- **When using a searcher hook, remember to set the engine in an idling mode and work with a crane in a slow speed. If you operate a lever in a sudden motion, the searcher hook might break due to the excess force, causing a serious accident.**
- **If you make an error in a searcher hook operation, the searcher hook might fall due to the bracket deformation or a crack on the welded section. Remember to check each part of a searcher hook and make sure there are no deformation or cracks on the welded section.**
- **When changing the angle of the searcher hook, never put your fingers into the pin hole. It may cause a serious accident.**
- **When changing the angle of the searcher hook, change the displayed angle on the monitor according to the actual angle. If you use the machine without changing the mode, damage to or overturn of the machine might occur causing a serious accident.**
- **See “Safety” section for the safety precautions that are not provided in this section.**

CAUTION

- **Mass of the machine varies depending on the specification.**
  The figure on the right shows the weight table for weight of standard vehicles and the additional weight of each accessory unit.

MC815CWM MACHINE WEIGHT

Component	Weight
Main Unit	9460kg
Electric Unit	+240kg
Fly jib	+490kg
Searcher Hook	+60kg
Rubber Pads	+220kg

106-4718500

- **The angle of searcher hook can be switched manually to six different patterns.**

2. SEARCHER HOOK SAFETY LABEL LOCATIONS

CAUTION

In this section, the safety labels of the searcher hook specification, different from the standard specification are described. See “Safety Safety Label Locations” for the safety labels that are not described in this section.

Please keep these safety labels clean so you can read them correctly.

If any safety labels become damaged, lost or unreadable, please replace them with new ones.

There are other labels than safety labels shown below and treat them in the same manner.

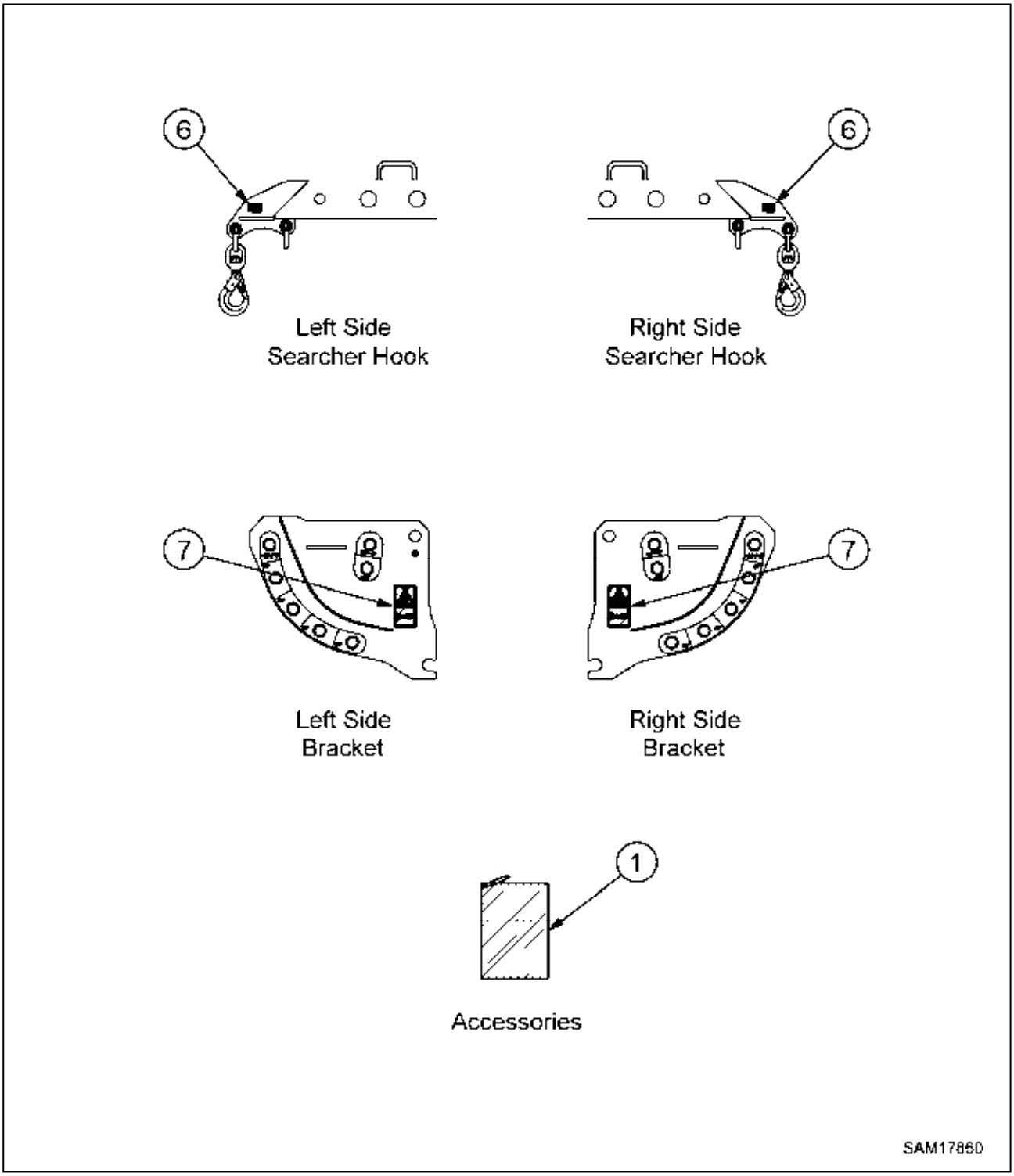

(1) Searcher hook working range diagram (106-2189200)

MINI-CRAWLER CRANE MC815C

Working Range Chart and Rated Total Load Chart (for Searcher Hook)

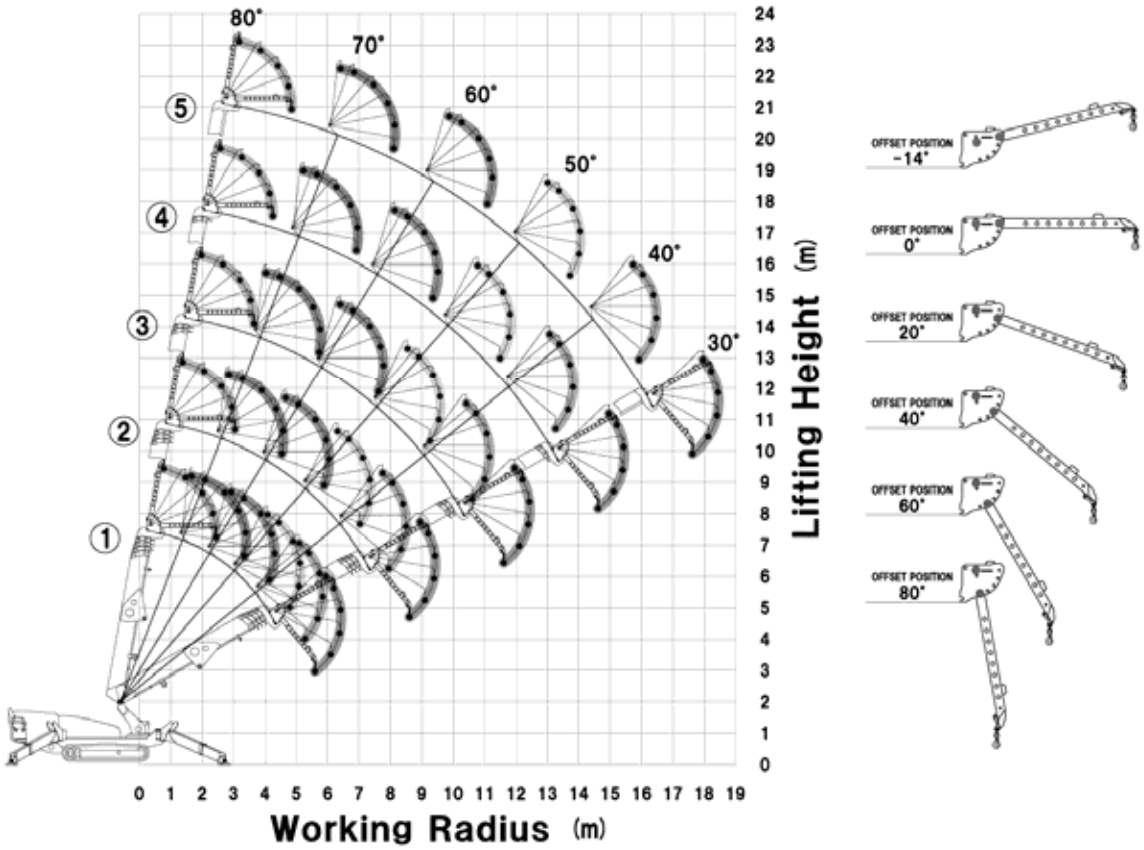

With outrigger extended to maximum

Mainboom \ Working Radius (m)	7.22	9.0	10.0	10.69	11.0	12.0	13.0	14.0	14.16	15.0	16.0	17.0	17.63	18.0	19.0
①	1060														
①+②		1060	960	710											
①+②+③		1060	960		710	610	560	460	410						
①+②+③+④		1060	960		710	610	560	460		410	360	260	210		
①+②+③+④+⑤		1060	960		710	610	560	460		410	360	260		210	160

(Kg)

With outrigger extended to medium

Mainboom \ Working Radius (m)	7.22	8.0	9.0	10.0	10.69	11.0	12.0	13.0	14.0	14.16	15.0
①	1060										
①+②		1060	1010	710	510						
①+②+③		1060	1010	710		510	360	260	210	160	
①+②+③+④		1060	1010	710		510	360	260	210		160
①+②+③+④+⑤		1060	1010	710		510	360	260	210		160

(Kg)

With outrigger extended to minimum

Mainboom \ Working Radius (m)	6.0	7.0	7.22	8.0	9.0	10.0	10.69	11.0	12.0	13.0
①	1060	1010	760							
①+②	1060	1010		760	710	460	260			
①+②+③	1060	1010		760	710	460		260	210	160
①+②+③+④	1060	1010		760	710	460		260	210	160
①+②+③+④+⑤	1060	1010		760	710	460		260	210	160

(Kg)

GENERAL RULE TO OBSERVE

1. The working radius shown is based on the actual value including boom deflection. Always work in accordance with these values.
2. The working range chart does not take boom deflection under load into account.
3. The rated total includes the weight of Searcher Hook. (60kg)
4. Rough operation of crane is setemely dangerous. Stick to safe operation.
5. Stationary load only.
6. When using searcher hook, Moment limiter of must be set to searcher hook mode, and select searcher hook offset position.
7. Before start working, always make sure moment limiter is correctly set to the actual working condition.
8. Do not use searcher hook and main hoist hook block/ball simultaneously to hoist load.
9. Rated total loads shown on the chart do not include weight of main crane hook block.

(6) Maximum rated total load (106-4716100)
(2 locations)

(7) Notice on pin holes (CL000100001)
(2 locations)

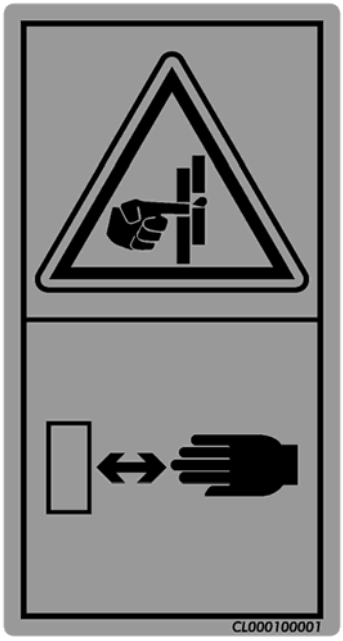

https://truckmanualshub.com/

3. NAMES OF SEARCHER HOOK PARTS

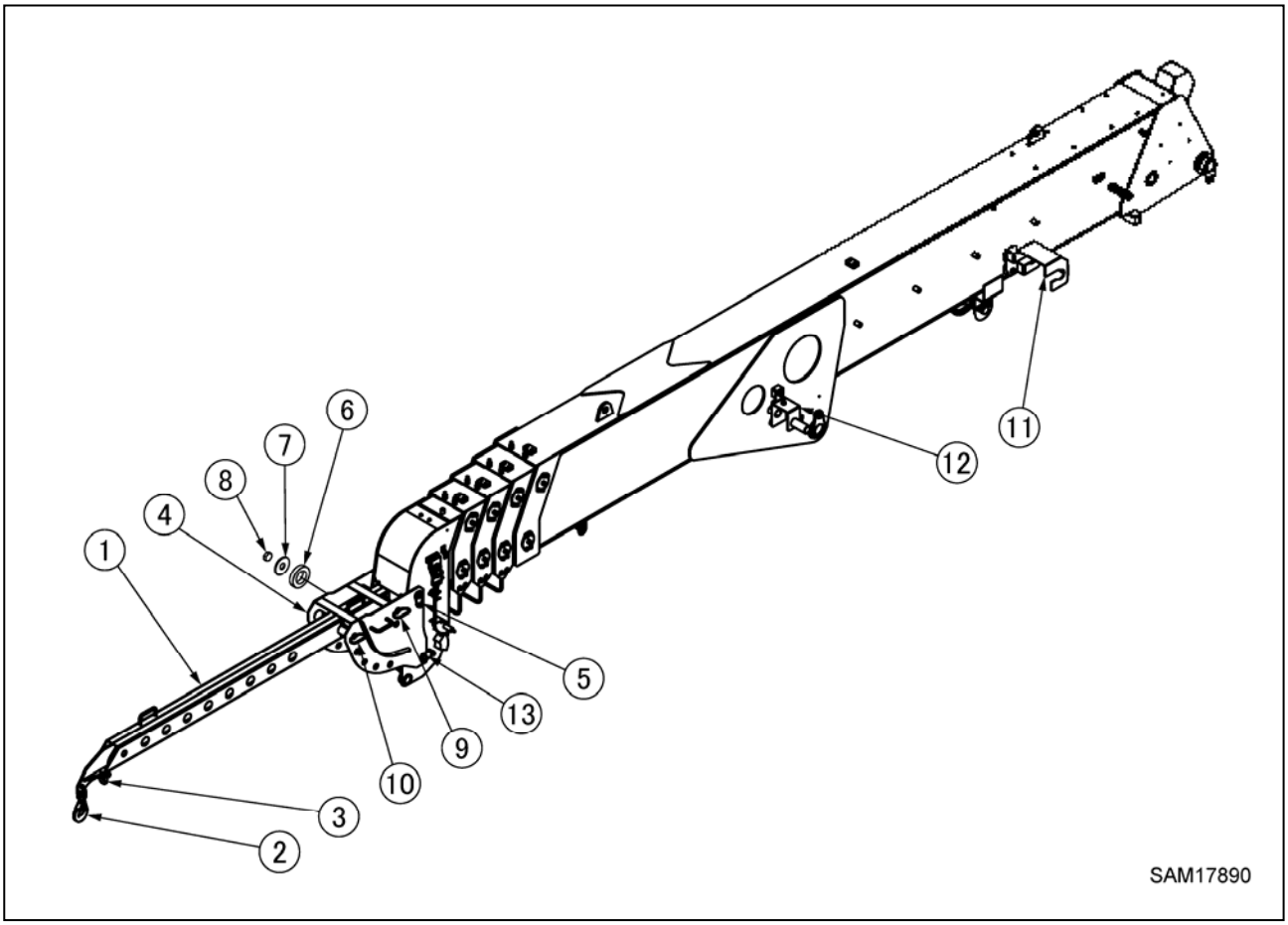

(1) Searcher hook boom
(2) Swivel hook
(3) Shackle
(4) Searcher hook bracket
(5) Point pin
(6) Collar
(7) Plate
(8) Nut
(9) Pin A
(10) Pin B
(11) Stowage bracket A
(12) Stowage bracket B
(13) Head pin

https://truckmanualshub.com/

4. MOUNTING AND STOWING SEARCHER HOOK

⚠ WARNING

- **We recommend mounting or stowing a searcher hook with two persons. They must fully check the work content mutually and perform the operation based on the designated signals. If the signals are insufficient, they may contact a moving part, which can cause a serious accident.**
- **Mounting and stowing a searcher hook should be conducted on a stable work table with sufficient height. If you use an unstable work table, a searcher hook can fall from a high place, causing a serious accident.**
- **When mounting or stowing a searcher hook, make sure that the main boom is in a horizontal position. Otherwise, a searcher hook can lose a balance and fall, causing a serious accident.**
- **The searcher hook is attached to the tip of the main boom with two position pins. Insert two position pins in the correct positions and tighten them securely with a linchpin. If the position pin comes off, the searcher hook may fall, causing a serious accident.**
  Never put your fingers into the pin hole.
- **A searcher hook is attached and stowed to the left section of the main boom with two position pins. Insert the position pins for fixing in the correct positions and tighten them securely with linchpins. If the position pin comes off, the searcher hook may fall, causing a serious accident.**
- **Be sure to change to the searcher hook mode on the monitor when the searcher hook is mounted.**
  If you do not switch to the searcher hook mode, the moment limiter will not function properly, causing a serious accident. Also, when you stow or remove the searcher hook, cancel the searcher hook mode.
- **When using with the hook block installed, make sure that the winch settings in searcher hook mode is turned ON, on the monitor.**

4.1 MOUNTING SEARCHER HOOK

To mount a searcher hook stowed in the left section of the main boom, on the tip of the main boom, follow the procedure below.

If the searcher hook bracket is already installed on the tip of the main boom, start from step 6.

1. Remove the searcher hook bracket (4) stowed in the stowage bracket (14) at the front of vehicle, fixed with the eye bolt (15) and the washer (16).

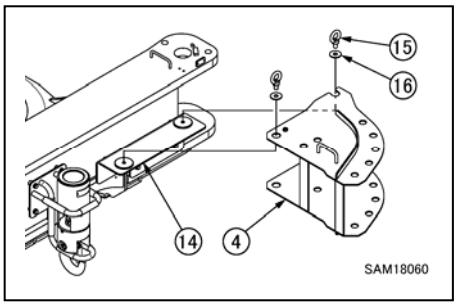

2. Loosen the nut (8) on the tip side of the head pin (13).

3. Adjust the position of the searcher hook bracket (4) by hanging it from the head pin (13) and insert the point pin (5) to secure it.

NOTES
The searcher hook bracket (4) should be hung from the head pin (13) by its design; slide in from the front to attach it.

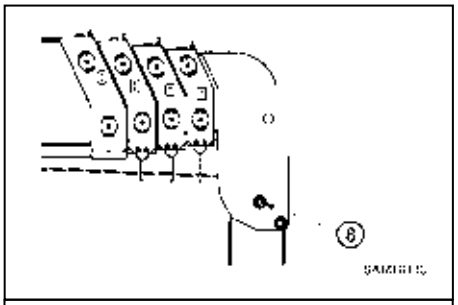

4. Attach the collar (6), the plate (7) and the nut (8) to the tip side of the point pin (5).

5. Tighten the nut (8) you loosened in step 2.

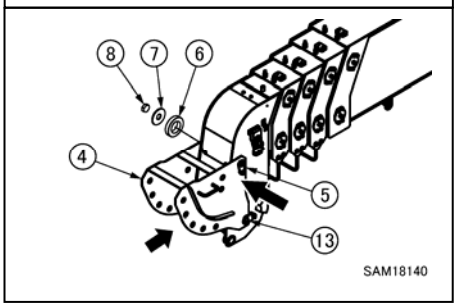

6. Pull out the stowed pin A (9).

7. Pull out the pin B (10) from the stowage bracket B (12) and slide the searcher hook boom (1) horizontally to remove it from the stowage bracket A (11).

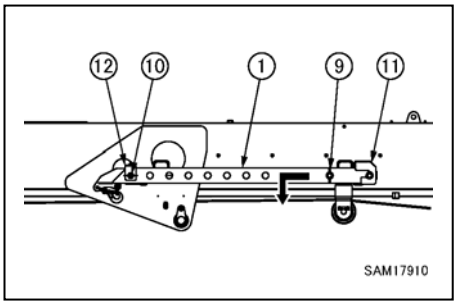

⚠ WARNING
The searcher hook boom (1) will fall when the pin B (10) is pulled out; be sure to support the boom and pull the pin out slowly. Do not work on top of the crawler.

NOTES
You need these pins you have just pulled out (pin A (9) and pin B (10)) to attach the searcher hook boom (1) to the searcher hook bracket.

https://truckmanualshub.com/

8. Align the hole (H1) of the searcher hook boom (1) with the hole (H2) of the searcher hook bracket (4) on the main boom tip.

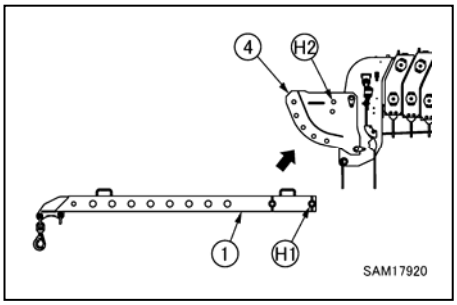

9. Insert the pin A (9) to the aligned hole from the left side and attach the retaining pin.

10. In the same manner, insert the pin B (10) from the left side and attach the retaining pin.

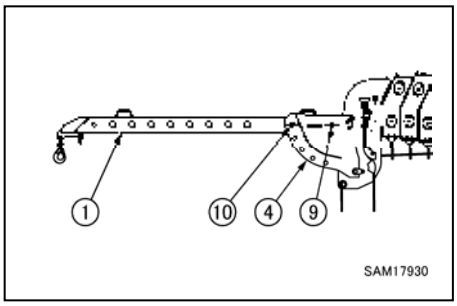

NOTES
The pin A (9) and the pin B (10) are the same parts, so either of them can be inserted.

11. Remove the hook block and the wire rope (12), following the procedure below.

CAUTION

- **Be careful not to wind the wire ropes irregularly.**
- **Do not unwind after the hook block touches the ground, since the wire ropes are wound irregularly inside the winch drum when the hook is lowered further to the ground.**

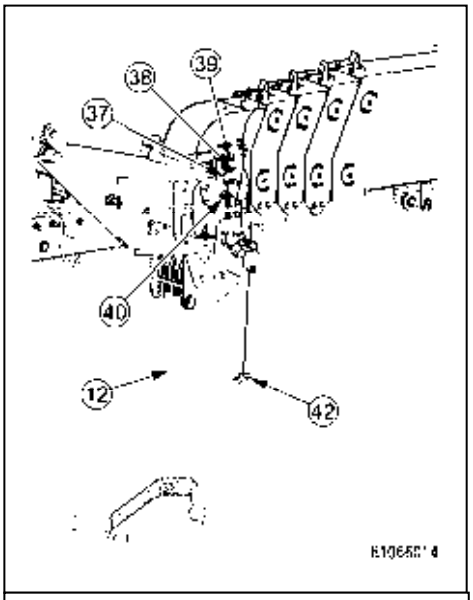

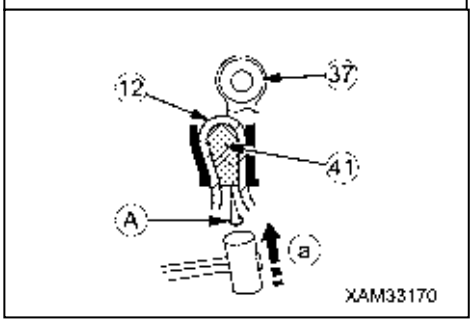

(1) Make the main boom fully retracted and make sure the main boom angle is approx. 20 degrees.

(2) Operate the winch lever to lower the hook block so that it is barely touching the ground.

(3) Lower the hook to the ground by lowering the boom.

(4) Remove the bolt (39) and pull out the wedge socket pin (38) to remove the wedge socket (37) from the main boom.

(5) Remove the wire clip (40).

(6) Remove the rope wedge (41) by preparing a cylindrical rod of 6 to 8 mm and lightly tapping the rope wedge (41) with a hammer in the direction indicated by the arrow (a).

(7) Pull out the wire rope (12) from the hook.

(8) Pull the wire rope (12) out of the weight (42) of the over-hoist detector.

(9) Pull out all the wire ropes (12) from three sheaves on the main boom tip.

(10) Wind up the wire rope (12) up to the winch drum and tie the tip to the winch case guard.

https://truckmanualshub.com/

4.2 STOWING SEARCHER HOOK

When stowing the searcher hook mounted on the main boom tip, to the left section of the main boom, follow the procedure below.

1. Pull out the pin B (10) and the pin A (9) in that order from the searcher hook bracket (4) to remove the searcher hook boom (1).

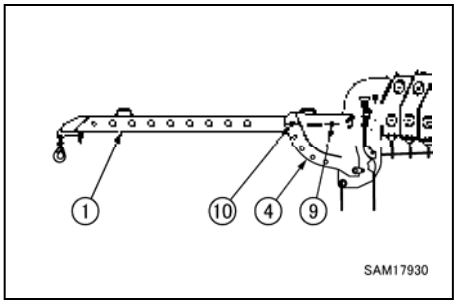

⚠ WARNING

The searcher hook boom (1) will fall when the pin A (9) is pulled out; be sure to support the boom and pull the pin out slowly. Do not work on top of the crawler.

NOTES

You need these pins you have just pulled out (pin A (9) and pin B (10)) to attach the searcher hook boom (1) to the stowage bracket.

2. Align the searcher hook boom (1) with the stowage position of the stowage bracket A (11) on the left section of the main boom.

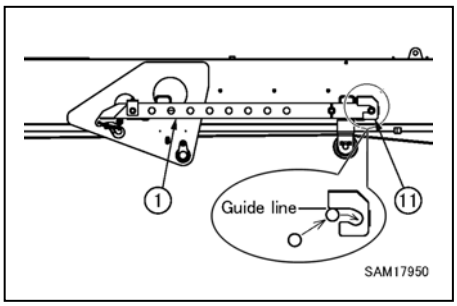

NOTES

Position the searcher hook boom (1) according to the guide line on the stowage bracket A (11).

3. Align the searcher hook boom (1) with the stowage bracket B (12) and insert the pin B (10) to attach the retaining pin.

4. Stow the pin A (9) and attach the retaining pin.

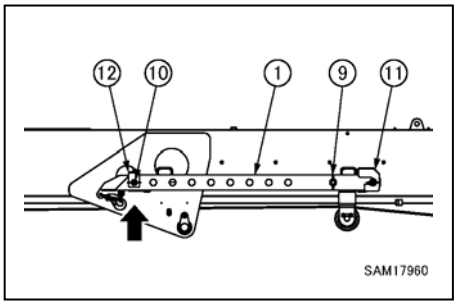

NOTES

The pin A (9) and the pin B (10) are the same parts, so either of them can be inserted.

5. Stow the swivel hook (2) hanging it to the shackle (3).

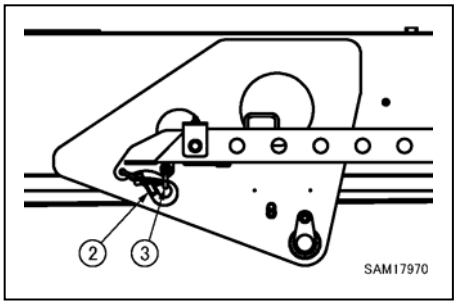

6. Tighten the nut (8) on the tip side of the head pin (13).

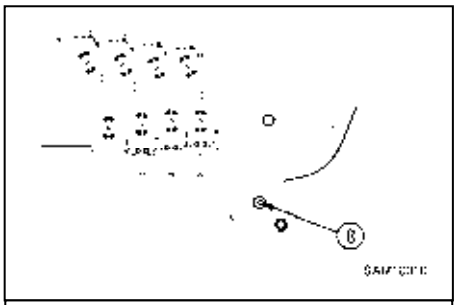

7. Remove the nut (8), the plate (7) and the collar (6) on the tip side of the point pin (5) and pull out the point pin (5) to remove the searcher hook bracket (4).

⚠ WARNING

The searcher hook bracket (4) will fall when the point pin (5) is pulled out; be sure to support the bracket and pull the pin out slowly.

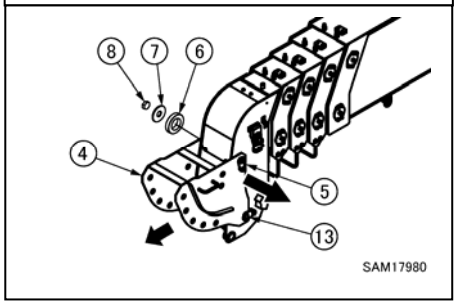

NOTES

The searcher hook bracket (4) should be hung from the head pin (13) by its design; remove by pulling it out toward you.

8. Tighten the nut (8) you loosened in step 6.

9. Secure the searcher hook bracket (4) you have removed with the eye bolt (15) and the washer (16) to the stowage bracket (14) on the front of vehicle and stow it.

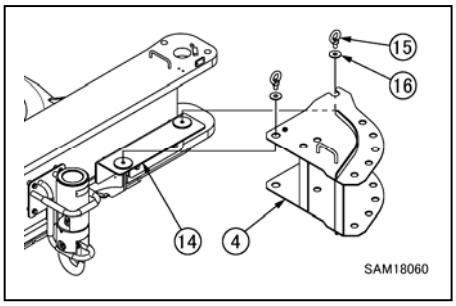

https://truckmanualshub.com/

4.3 REMOVING SEARCHER HOOK (CHANGING TO STANDARD SPECIFICATION)

4.3.1 REMOVING SEARCHER HOOK BOOM

[When searcher hook boom is stowed]

1. Pull out the stowed pin A (9).

2. Pull out the pin B (10) from the stowage bracket B (12) and slide the searcher hook boom (1) horizontally to remove it from the stowage bracket A (11).

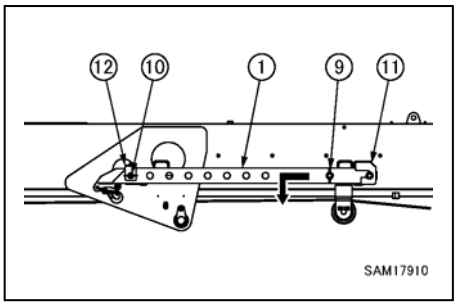

⚠ WARNING

The searcher hook boom (1) will fall when the pin B (10) is pulled out; be sure to support the boom and pull the pin out slowly.

[When searcher hook boom is mounted]

1. Pull out the pin B (10) and the pin A (9) in that order from the searcher hook bracket (4) to remove the searcher hook boom (1).

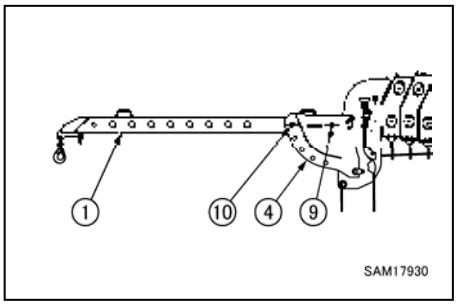

⚠ WARNING

The searcher hook boom (1) will fall when the pin A (9) is pulled out; be sure to support the boom and pull the pin out slowly.

4.3.2 REMOVING BRACKET

First of all, check that the searcher hook boom is removed.

If the searcher hook boom is mounted, remove it referring to “4.3.1 Removing searcher hook boom”.

[Removing searcher hook bracket]

1. Tighten the nut (8) on the tip side of the head pin (13).

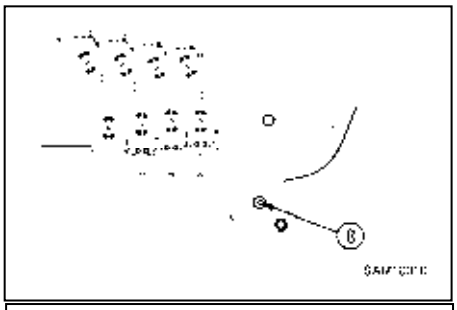

2. Remove the nut (8), the plate (7) and the collar (6) on the tip side of the point pin (5) and pull out the point pin (5) to remove the searcher hook bracket (4).

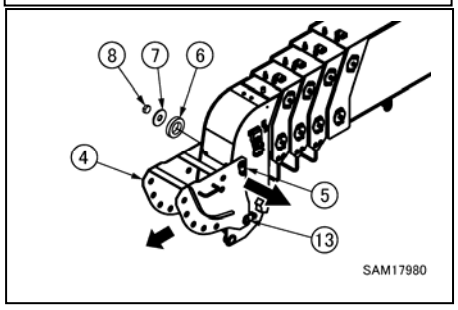

⚠ WARNING

The searcher hook bracket (4) will fall when the point pin (5) is pulled out; be sure to support the bracket and pull the pin out slowly.

NOTES

The searcher hook bracket (4) should be hung from the head pin (13) by its design; remove by pulling it out toward you.

3. Tighten the nut (8) you loosened in step 1.

[Removing stowage bracket]

1. Loosen two bolts of the stowage bracket A (11) and remove them from the main boom.

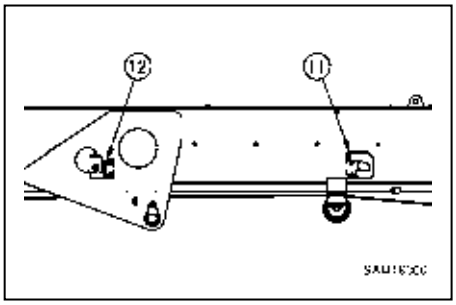

2. Loosen two bolts of the stowage bracket B (12) and remove them from the main boom.

https://truckmanualshub.com/

4.4 MOUNTING SEARCHER HOOK (CHANGING TO SEARCHER HOOK SPECIFICATION)

4.4.1 MOUNTING SEARCHER HOOK BOOM

First of all, check that the bracket is attached.

If it is not attached, mount the searcher hook boom after attaching the bracket referring to “4.4.2 Attaching bracket”.

[To attach to stowage bracket]

1. Align the searcher hook boom (1) with the stowage position of the stowage bracket A (11) on the left section of the main boom.

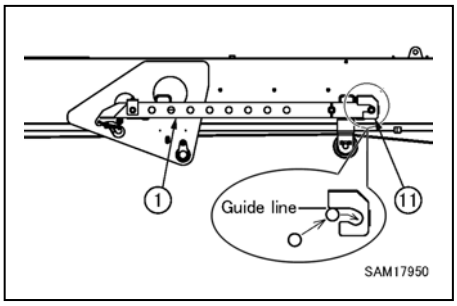

NOTES
Position the searcher hook boom (1) according to the guide line on the stowage bracket A (11).

2. Align the searcher hook boom (1) with the stowage bracket B (12) and insert the pin B (10) to attach the retaining pin.

3. Stow the pin A (9) and attach the retaining pin.

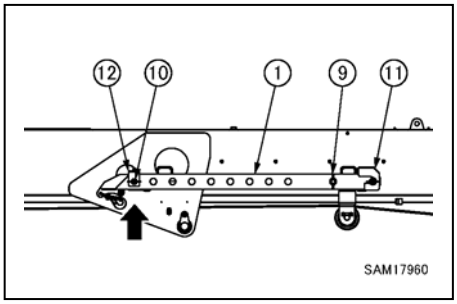

NOTES
The pin A (9) and the pin B (10) are the same parts, so either of them can be inserted.

[To attach to searcher hook bracket]

1. Align the hole (H1) of the searcher hook boom (1) with the hole (H2) of the searcher hook bracket (4) on the main boom tip.

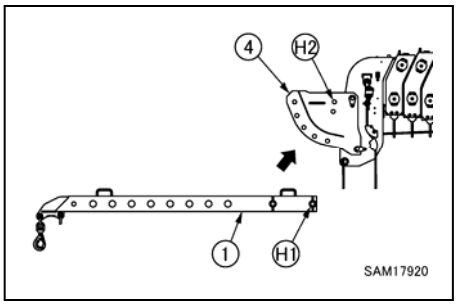

2. Insert the pin A (9) to the aligned hole from the left side and attach the retaining pin.

3. In the same manner, insert the pin B (10) from the left side and attach the retaining pin.

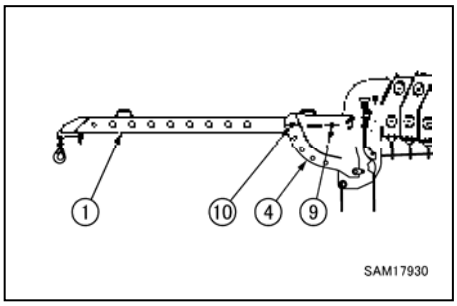

NOTES
The pin A (9) and the pin B (10) are the same parts, so either of them can be inserted.

https://truckmanualshub.com/

4.4.2 ATTACHING BRACKET

[Attaching searcher hook bracket]

1. Tighten the nut (8) on the tip side of the head pin (13).

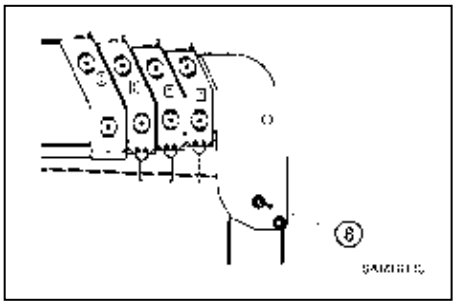

2. Adjust the position of the searcher hook bracket (4) by hanging it from the head pin (13) and insert the point pin (5) to secure it.

NOTES
The searcher hook bracket (4) should be hung from the head pin (13) by its design; slide in from the front to attach it.

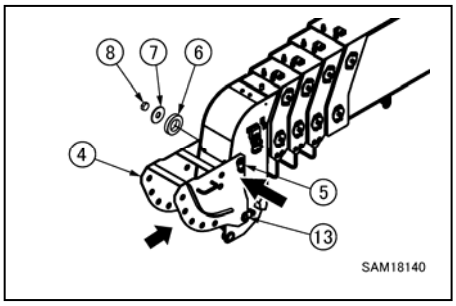

3. Attach the collar (6), the plate (7) and the nut (8) to the tip side of the point pin (5).

4. Tighten the nut (8) you loosened in step 1.

[Attaching stowage bracket]

1. Fasten the stowage bracket A (11) with two bolts to the left section of the main boom.

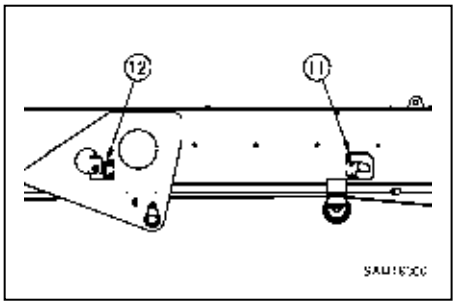

2. Fasten the stowage bracket B (12) with two bolts to the left section of the main boom.

5. HANDLING MONITOR AND MOMENT LIMITER

⚠ WARNING

Do not perform any work with the override switch on.
It will result in fall of hoisted load due to overload, breakage of the boom and the bracket, and crane overturn causing a serious accident resulting in death or serious injury.

CAUTION

In this section, only the equipment with the searcher hook specification, different from the standard specification is described.
See “Operation 1.5 Moment limiter (overload detector)” for the devices that are not described in this section.

5.1 NAME OF MONITOR DISPLAY

5.1.1 MONITOR DISPLAY IN SEARCHER HOOK MODE

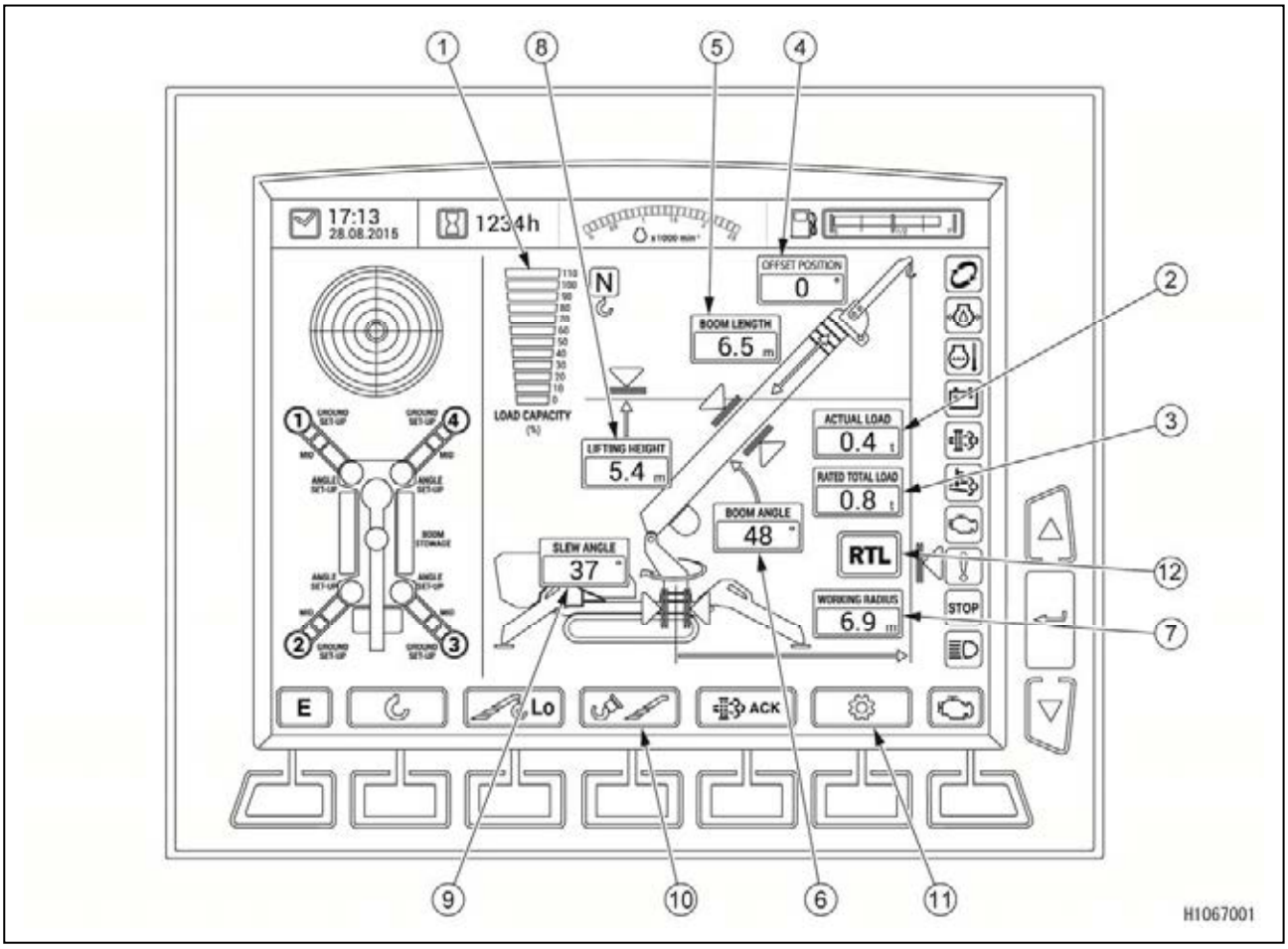

(1) Load capacity ratio display
(2) Actual load display
(3) Rated total load display
(4) Offset position display
(5) Boom length display
(6) Boom angle display
(7) Working radius display
(8) Lifting height display
(9) Slew angle display
(10) Mode selector switch (Full automatic stowage)
(11) Setting switch (user mode)
(12) Rated total load display

CAUTION

To change to the searcher hook mode, manually switch after mounting the searcher hook to the main boom tip.

[Description of monitor indication]

[4] Offset position display

The indication changes to six different patterns by manually switching according to the actual angle set for the searcher hook.

Expand the pull-down menu by touching the monitor screen to select the appropriate positions.

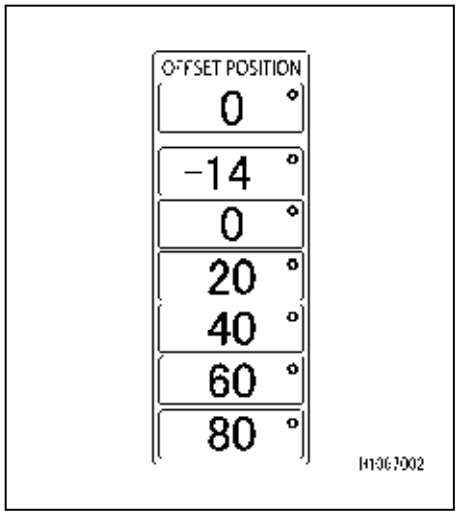

[10] Mode selector switch (full automatic stowage)

The procedure for full automatic stowage is the same as the standard specification except for winding up the hook.

When the winch settings are turned OFF in searcher hook mode, the winch will not move during full automatic stowage. In addition, hook stowage cannot be selected.

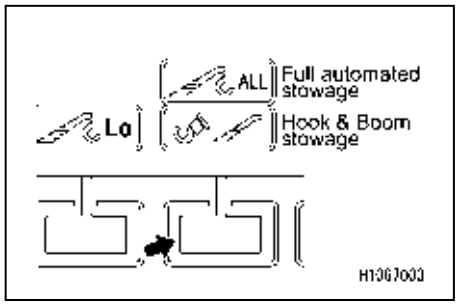

NOTES
The main boom cannot be lowered when Offset Position 60 or 80 degrees are selected.

[11] Setting switch (user mode)

The setting procedure for the user mode is the same as the standard specification.

To change to the searcher hook mode, you need to switch manually in the user mode.

For details on how to set the searcher hook mode, refer to “5.1.2 Changing searcher hook mode”.

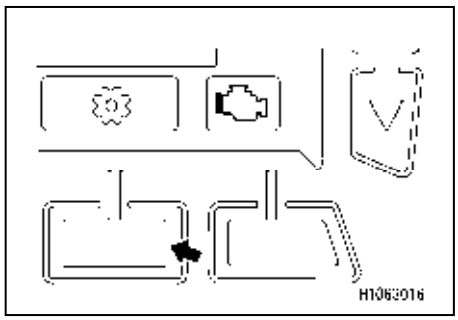

[12] Rated total load display

The rated total load of the searcher hook is shown when you touch “RTL” on the monitor display.

Touch again to return to the original display.

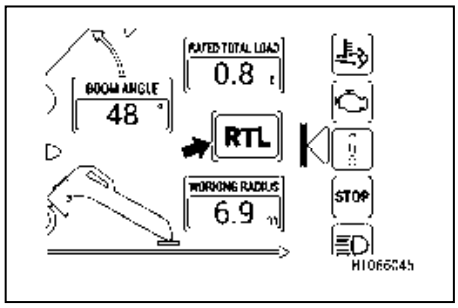

https://truckmanualshub.com/

5.1.2 CHANGING SEARCHER HOOK MODE

CAUTION

You can change the searcher hook mode in the user mode.

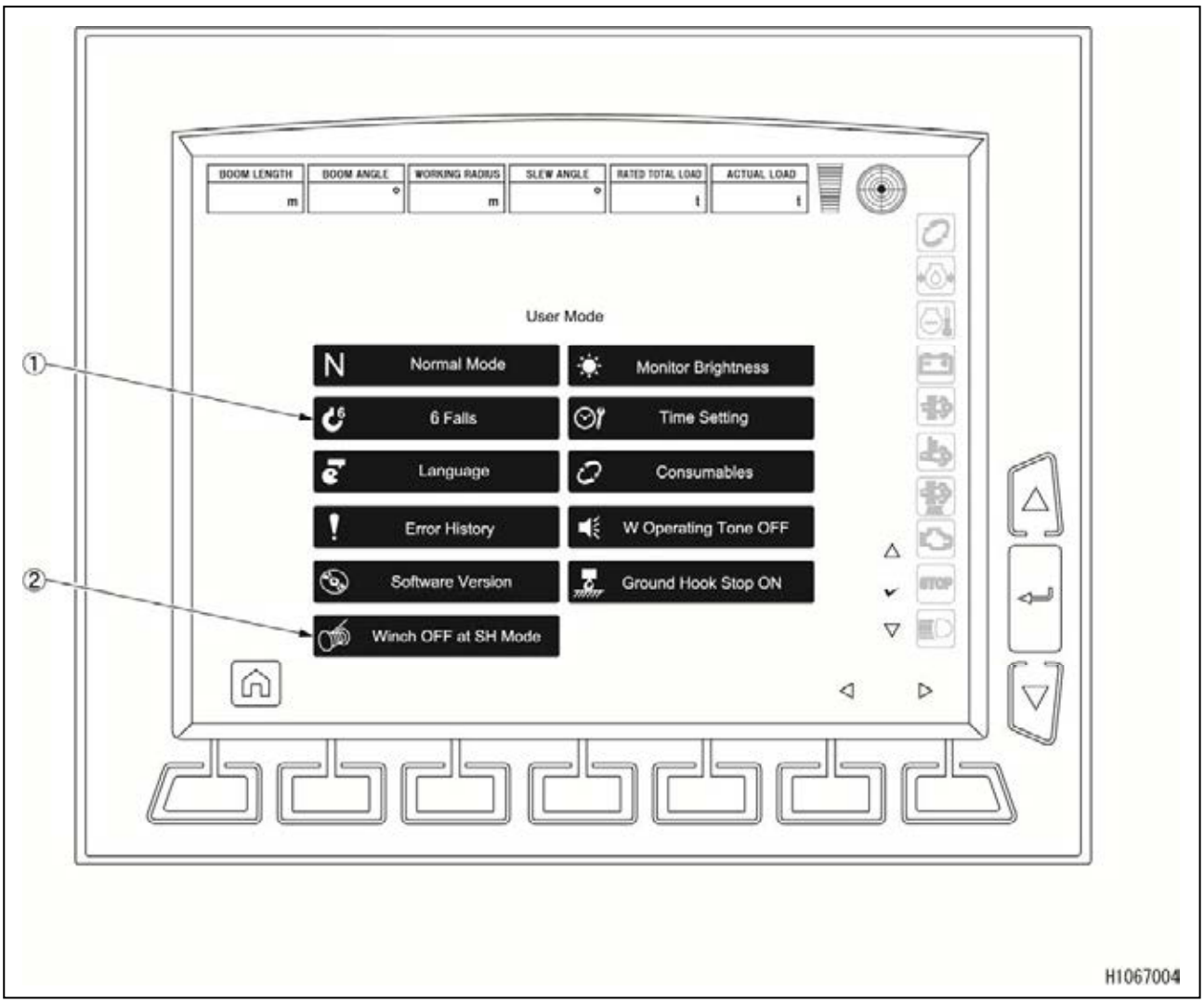

(1) Changing hook sling number/searcher hook

(2) Winch settings in searcher hook mode

[1] Changing hook sling number/searcher hook

You can change it by touching the monitor screen to show the searcher hook.

NOTES

When you select the number of wire falls, it goes back to the standard crane mode from the searcher hook mode.

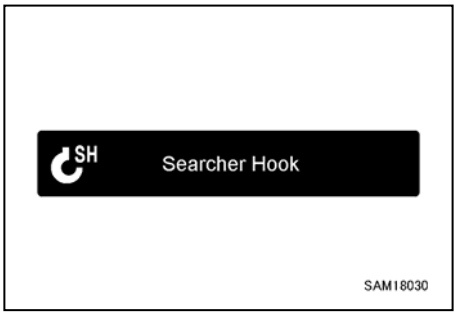

[2] Winch settings in searcher hook mode

Winch movement in searcher hook mode can be switched.

- SH Mode Winch ON –
  Winch can be controlled in searcher hook mode.
- SH Mode Winch OFF –
  Winch cannot be controlled in searcher hook mode.

https://truckmanualshub.com/

5.2 MOMENT LIMITER FUNCTIONS

CAUTION

When a searcher hook is mounted to the main boom tip and you change it to the searcher hook mode, the moment limiter and the machine operate as follows.

- **The rated total load value shown in the monitor is changed to the value for a searcher hook.**
- **The main boom angle cannot be 60° or more when Offset Position is -14°.**
- **When overloaded, the raising operation is prohibited in addition to the general banned operations.**
- **The winch operation is prohibited.**

5.3 RECOVERY OPERATION FROM AUTOMATIC STOP

Refer to the “OPERATION 1.5.3 [2] RECOVERY OPERATION FROM AUTOMATIC STOP” for more information about recovery operation.

https://truckmanualshub.com/

6. OPERATION

⚠ WARNING

When using a crane, remember to set the engine in low idling mode and work in a speed as low as possible. If you operate a lever in a sudden motion, the searcher hook might break due to the excess force, causing a serious accident.

CAUTION

In this section, only the operation procedure for the searcher hook specification that is different from the standard specification is described.
The normal crane operation is the same as the standard specification. For details, refer to "Operation 2. Operation".

6.1 CHANGING SEARCHER HOOK ANGLE

⚠ WARNING

- **Never put your fingers into the pin hole. If you remove, it may cause a serious bodily accident.**
- **When changing the angle, the searcher hook boom might fall suddenly after pin is pulled out, so be sure to support the boom before changing pins.**
- **After changing the angle of the searcher hook, change "OFFSET POSITION" on the monitor according to the actual angle. If you use the machine without changing the mode, damage to or overturn of the machine might occur causing a serious accident.**

To change the searcher hook angle, follow the procedure below. The following procedure assumes the starting point is "Offset Position 0°".

[When Offset Position is -14°]

1. Keep the pin B (10) in the Offset Position 0° status, and move the pin A (9) to the hole on one level down.

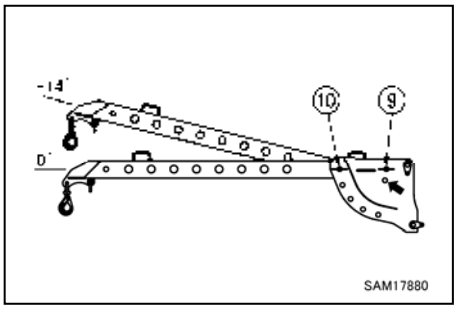

[When Offset Position is 20°, 40°, 60°, 80°]

1. Keep the pin A (9) in the Offset Position 0° status, and move the pin B (10) to the hole for the desired angle.

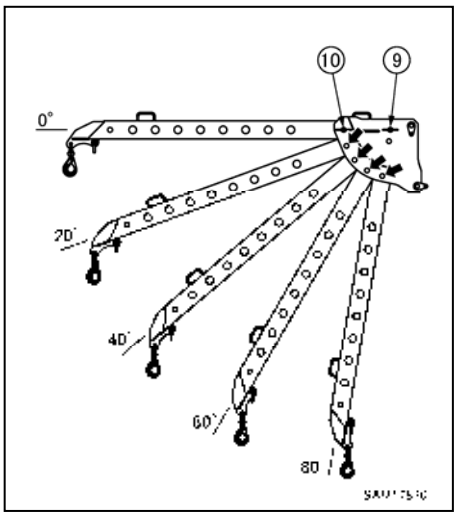

https://truckmanualshub.com/

7. TROUBLESHOOTING

- Make sure that you contact our sales service agent for the actions marked with ★ in the table.
- Ask our sales service agency for repair if you suspect any other abnormalities or causes than those given below.

[1] When searcher hook is not mounted to vehicle

Abnormal Phenomenon	Major cause(s)	Remedy
Indication on monitor changes to searcher hook mode	• Searcher hook mode is selected in user mode	• Change away from searcher hook mode
	• Incorrect setting change	★Change setting

[2] When searcher hook is mounted to vehicle and stowed

Abnormal Phenomenon	Major cause(s)	Remedy
Indication on monitor changes to searcher hook mode (“OFFSET POSITION” is shown)	• Searcher hook mode is selected in user mode	• Change away from searcher hook mode

[3] When searcher hook is mounted to vehicle and extended

Abnormal Phenomenon	Major cause(s)	Remedy
Indication on monitor does not change to searcher hook mode (“OFFSET POSITION” is not shown)	• Searcher hook mode is not selected in user mode	• Change to searcher hook mode
Cannot select searcher hook mode	• Incorrect setting change	★Change setting

https://truckmanualshub.com/

8. INSPECTION AND MAINTENANCE

CAUTION

In this section, only the equipment with the searcher hook specification, different from the standard specification is described.
See “Inspection and maintenance” for details on the machine not described in this section.

8.1 PRE-OPERATION INSPECTION

Check the following before starting work after mounting a searcher hook every day.

[1] Inspection of searcher hook boom and bracket

Check for any cracks, significant deformation or dirt in searcher hook boom and bracket.
Also, check for loose, missing or damaged check pins. Repair or replace if any abnormality is found.

[2] Inspection of swivel hook

Check that there is no deformation of the swivel hook (2) or noise coming from bearings and the hook latch (S) functions correctly.
Also, check the shackle (3) attaching the swivel hook (2).

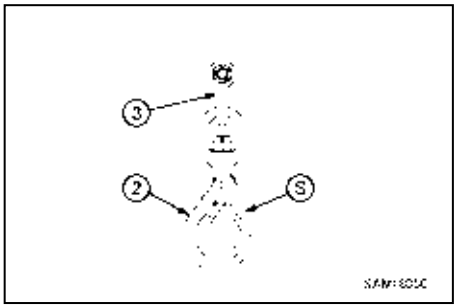

[3] Inspection of moment limiter (searcher hook mode)

CAUTION

In this section, only the equipment with the searcher hook specification, different from the standard specification is described.
See “Inspection and maintenance” for details on the machine not described in this section.

Check that the monitor indicates the searcher hook mode and “OFFSET POSITION” can be changed freely.

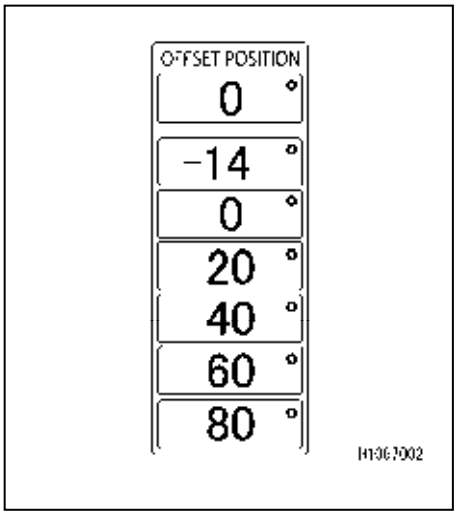

9. SPECIFICATION

9.1 SPECIFICATION TABLE

CAUTION

In this section, only the searcher hook specification, different from the standard specification is described.
For other specifications, see “Specification” section.

Equipment / Item		MC815C SEARCHER HOOK
Weight and dimensions	Body mass	9520 kg
	Overall length × width × height	6550 mm × 1670 mm × 2490 mm

9.2 SPECIFICATION DIMENSIONAL DRAWING

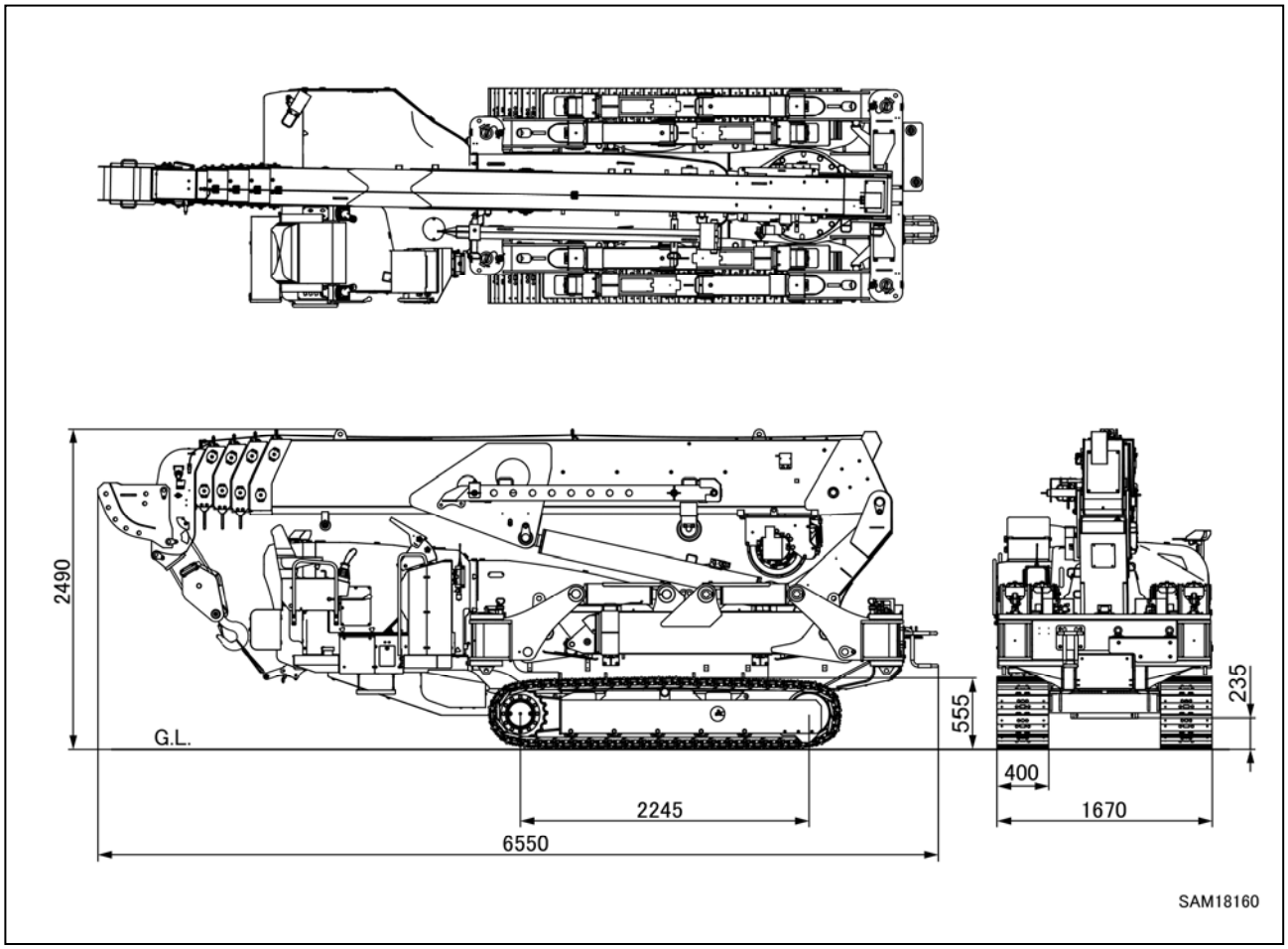

9.3 RATED TOTAL LOAD CHART

CAUTION

- **The rated total load includes searcher hook mass (60 kg).**
- **When the searcher hook is used, the rated total load varies depending on the outrigger extension, the number of main boom sections, and the working radius. Check the available range in the rated total load chart before operating.**
- **Hoisting operation is not possible when the boom angle is less than 30 degrees in the 5th stage of the main boom.**

With outrigger extended to maximum

Mainboom \ Working Radius (m)	7.22	9.0	10.0	10.69	11.0	12.0	13.0	14.0	14.16	15.0	16.0	17.0	17.63	18.0	19.0
①	1060														
①+②		1060	960	710											
①+②+③		1060	960		710	610	560	460	410						
①+②+③+④		1060	960		710	610	560	460		410	360	260	210		
①+②+③+④+⑤		1060	960		710	610	560	460		410	360	260		210	160

(Kg)

With outrigger extended to medium

Mainboom \ Working Radius (m)	7.22	8.0	9.0	10.0	10.69	11.0	12.0	13.0	14.0	14.16	15.0
①	1060										
①+②		1060	1010	710	510						
①+②+③		1060	1010	710		510	360	260	210	160	
①+②+③+④		1060	1010	710		510	360	260	210		160
①+②+③+④+⑤		1060	1010	710		510	360	260	210		160

(Kg)

With outrigger extended to minimum

Mainboom \ Working Radius (m)	6.0	7.0	7.22	8.0	9.0	10.0	10.69	11.0	12.0	13.0
①	1060	1010	760							
①+②	1060	1010		760	710	460	260			
①+②+③	1060	1010		760	710	460		260	210	160
①+②+③+④	1060	1010		760	710	460		260	210	160
①+②+③+④+⑤	1060	1010		760	710	460		260	210	160

(Kg)

★ The rated total load chart indicates the load including the mass of hoisting accessories (searcher hook mass: 60 kg).

9.4 WORKING RADIUS/LIFTING HEIGHT

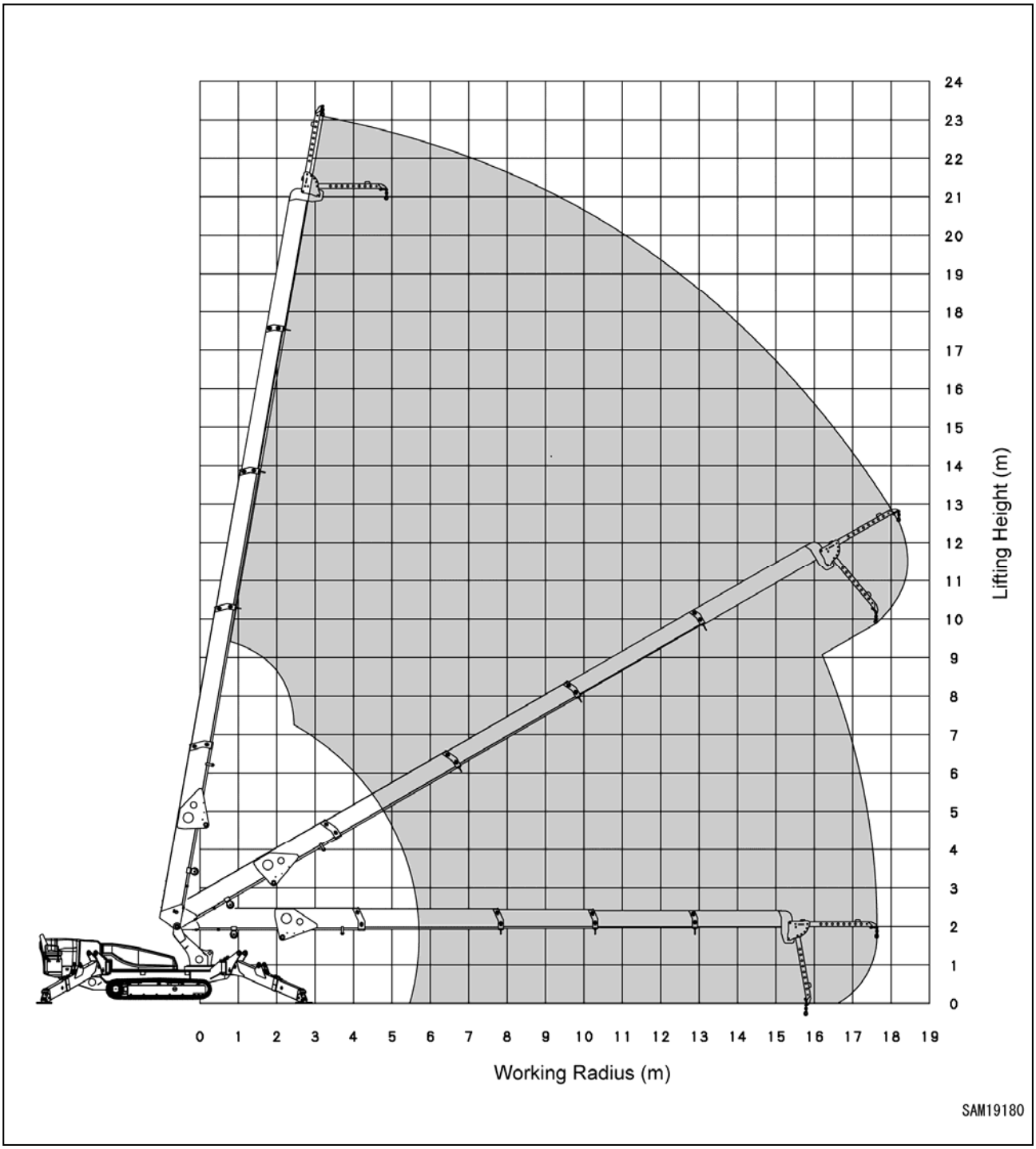

https://truckmanualshub.com/

Daily Pre-Use Checklist
Maeda Mini Crane

Northern (Head Office) **Tel: +44 (0)1482 227333**
Central Tel: +44 (0)1302 341659
Western Tel: +44 (0)1384 900388
Southern Tel: +44 (0)203 174 0658
www.hird.co.uk

Machine Model: **Maeda MC815**		Site Name:
Date Week Commencing:	Fleet No:	Address:
Inspected by:		

	Daily Pre-use Checks	**M**	**T**	**W**	**T**	**F**	**S**	**S**	**COMMENTS**
1	Are all operators manuals present and readable								
2	Is the Report of Thorough Examination (LOLER) in date								
3	Complete a visual walk around / Inspection for any noticeable defects								
4	Are all safety information decals present and readable								

Check the following components or areas for damage, or missing parts & unauthorised modifications:

5	Fuel Level								
6	Engine oil Level								
7	Hydraulic oil level								
8	Gauges and switches								
9	Electrical components, wiring, connectors,								
10	Hydraulic hoses								
11	Nut, bolts & other fasteners								
12	Tracks								
13	Outriggers								
14	Outrigger Pads								
15	Winch Cable serviceable								
16	Drivers cabin in servicable condition								
17	Horn								
18	Audible / Visual warnings (Alarms & Beacons)								
19	Controls, Buttons, Joysticks, Remote Control								
20	Boom sections free from defects or debris								
21	Fly Jib free from defects (where applicable)								
22	Hook in serviceable condition								
23	SLI unit operational								
24	Drive function test								
25	Crane function test								
26	Emergency Stop button(s) function								
27	Carry out full function test								

Is the machine safe to use? (please circle)	YES / NO	YES / NO	YES / NO	YES / NO	YES / NO	YES / NO	YES / NO	
Operator's Initials								

Result of Inspections: List defects or state "No Defects"

Signature:	**Name:**	**Date:**