https://truckmanualshub.com/

TEREX | FUCHS

MHL 350D

MATERIAL HANDLER

ENGINE	198 hp (148 kW)
WEIGHTS	70,548 - 78,264 lbs (32 - 35.5 t)
REACHES	52'/49'/46' (16/15/14 m)

SCRAP RECYCLING MACHINE

MHL 350D

- High-performance 198 hp (148 kW) turbocharged diesel engine (COM III / TIER III)
- Operating weights from 70,548 - 78,264 lbs (32 to 35.5 t)
- Cost-saving dual circuit hydraulic system
- Multi-functional display
- Improved lifting capacities
- Larger-sized undercarriage
- Reduced sound power levels

The machine can be fitted with optional equipment

https://truckmanualshub.com/

READY FOR ANY

CLASS LEADING EFFICIENCY, OUTSTANDING LIFTING CAPACITIES, RAPID POWER CYCLES AND OPERATOR COMFORT.

- Larger-sized undercarriage (3.0 m) for improved performance
- 198 hp (148 KW) engine with exceptionally low emission values and sound levels
- Dual circuit hydraulic system for smooth power cycles
- Optimized kinematics design provides higher lifting capacities
- Electronic engine control (EMR III) system for superior engine management
- Multi color display in the cab allows monitoring essential engine data
- Up-to-date design of counterweight, headlamps and fairings

https://truckmanualshub.com/

TEREX | FUCHS

CHALLENGE

LIFTING CAPACITIES SPECS AT A GLANCE

- Greater lifting capacities and outreach due to new dimensions of undercarriage (width 3.0 m) and optimized lifting kinematics
- Increased maximum operating weight

WIDER STABILIZING SYSTEM

Larger outrigger cylinders and wider stabilizer support beams provide for increased stability and higher lifting capacities.

NEW KINEMATICS

The new loading attachment kinematics system, combined with a new boom design, enables higher lifting capacities across the full operating range. In addition to the working attachments with a reach of 14 m and 15 m, a 16 m version is now available.

https://truckmanualshub.com/

A BETTER

POWER TO SPARE

The MHL 350D is powered at 2,000 rpm by a 198 hp (148 kW) fuel-efficient Deutz engine that meets COM III and Tier III emissions requirements.

EASY ON THE EARS

The engine is phenomenally easy on the ears – sound levels have been lowered by more than 3db on the MHL350D. A low-noise pump and a separate cooling-system, large radiator and low fan speed contribute to the quiet operation of the machine.

LOAD SENSING CONTROL

The MHL350D is equipped with a state-of-the-art load sensing control system which ensures optimum engine performance in every speed range and protects against overload.

CAB SPECS AT A GLANCE

- Excellent visibility
- Ergonomically designed operator environment
- Comfortable air cushioned seat
- Air conditioning standard
- Adjustable steering column

ENGINE SPECS AT A GLANCE

- 198 hp (148 kW) strong turbo-charged Deutz engine
- Low noise emission
- Optimum performance utilization in every speed range

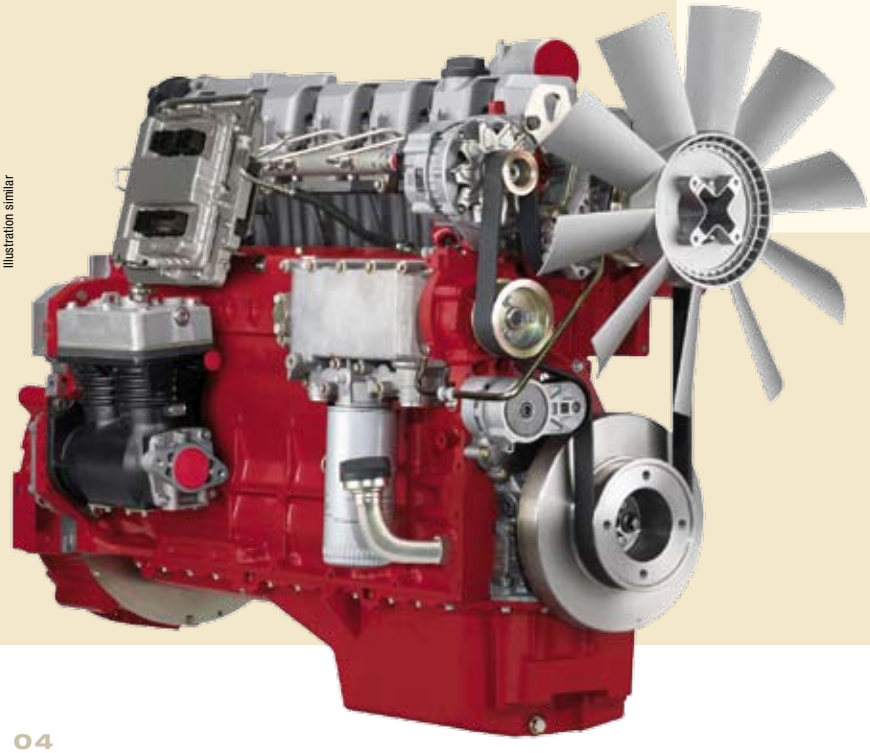

Illustration similar

Terex Fuchs has taken great care to develop a cab that integrates a variety of operators' suggestions as standard.

https://truckmanualshub.com/

PERSPECTIVE

KEEPING OPERATOR FATIGUE TO A MINIMUM

- Hydraulically elevating cab provides an excellent view of both the task at hand and equipment.
- Light and spacious interior
- Ergonomically designed operator cab puts everything right where you need it

COMFORT YOU'D EXPECT AT HOME

Contoured air cushioned seat with lumbar support, arm and headrests help keep you at your best

https://truckmanualshub.com/

A NEW KIND OF EFFICIEN

MORE EFFECTIVE. MORE PRODUCTIVE. MORE WITH LESS.

OPTIMUM POWER

Whether you're dealing with rapid power cycles or unwieldy loads – hydraulic performance is consistent and matched to the task at hand, allowing for excellent fuel efficiency and lower operating costs.

GRACE UNDER PRESSURE

Proportional control and overlapping work motions allow for smooth operability, even with the heaviest of loads.

INNOVATIVE DUAL CIRCUIT HYDRAULIC SYSTEM PROVIDES BOTH HIGH PRECISION HANDLING AND FREEDOM IN WORK MOTIONS

https://truckmanualshub.com/

TEREX | FUCHS

CY

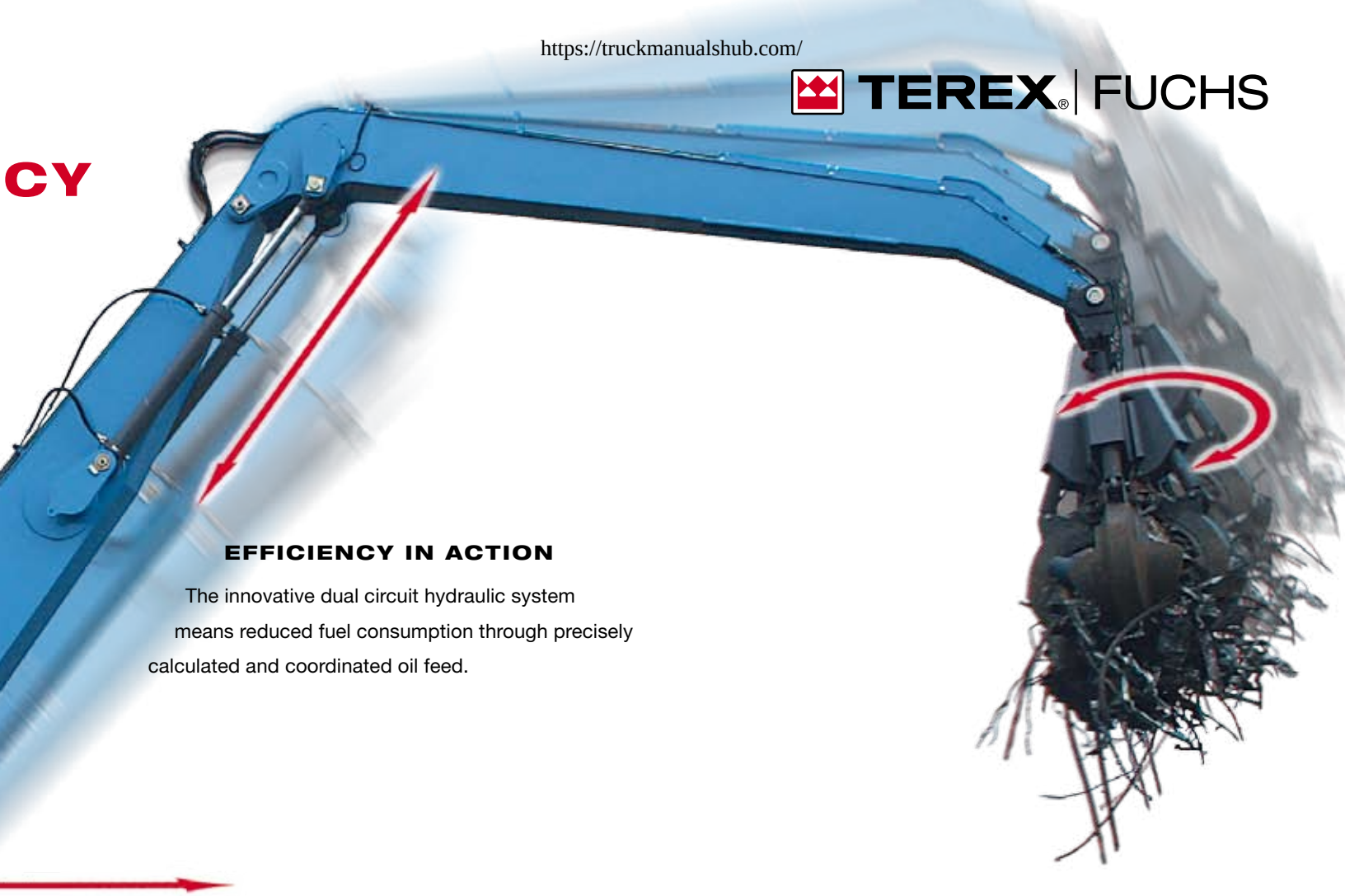

EFFICIENCY IN ACTION

The innovative dual circuit hydraulic system means reduced fuel consumption through precisely calculated and coordinated oil feed.

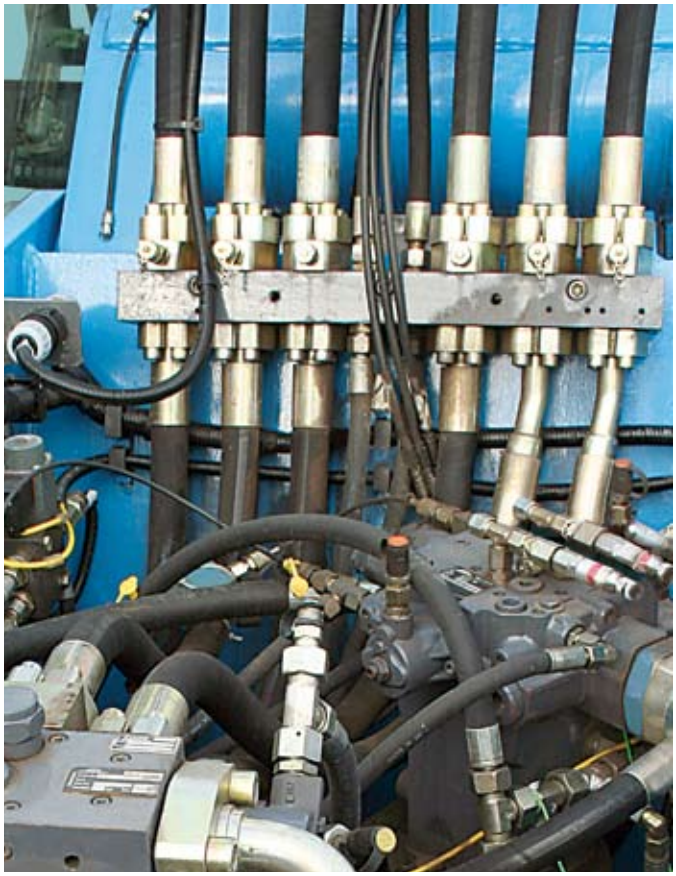

HYDRAULIC SYSTEM SPECS AT A GLANCE

- Dual circuit hydraulic system provides ultra high efficiency
- Dipperstick/grab and dipperstick/boom movements either singly or in smoothly blended combination
- Power loss kept to a minimum when actuators vary
- Fast working cycles

https://truckmanualshub.com/

SERVICE WITH A SMILE

EASY TO SERVICE

The easily accessible maintenance platform facilitates servicing substantially; components are located within easy view and reach. Platform access is via side-mounted maintenance access steps. Radiator, intercooler and oil-cooler are within easy reach from the ground.

KEEP YOUR COOL

AT A GLANCE

- The separate cooling system insures optimum temperatures during operation.
- Operating temperatures up to 50°C ambient air temperature
- Excellent cooling performance and low noise emissions
- Hydrostatically driven oil-cooling fan
- Thermostatically controlled oil cooling fan speeds
- Fan drive via viscous coupling in water/charge-air cooling system

https://truckmanualshub.com/

TEREX | FUCHS

PRODUCTIVITY AT A GLANCE

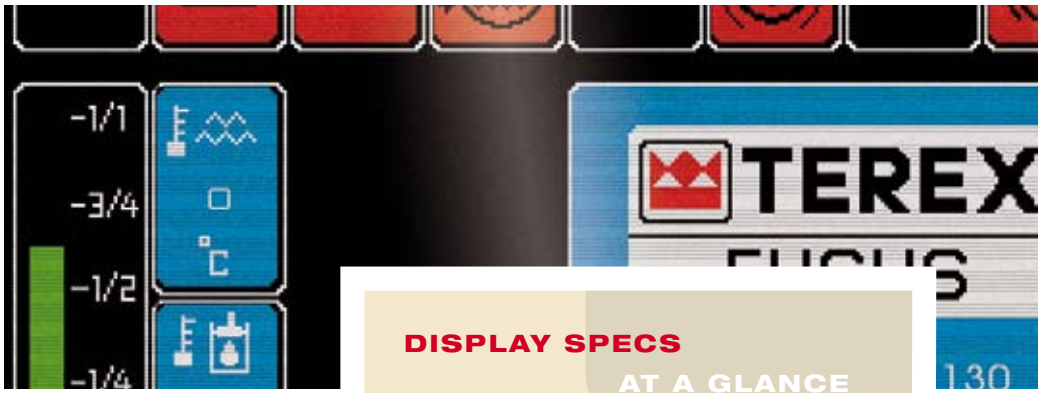

All relevant equipment data is constantly within view on the new, high-resolution color display. You maintain constant awareness of essential operating conditions, such as fuel remaining, coolant temperature and hydraulic oil temperature.

DISPLAY SPECS AT A GLANCE

- Easy-to-scan color display
- Servicing and maintenance made easier via rapid screening of all operationally relevant data
- Comfortable user-interface with intuitive symbols and user friendly text messages

https://truckmanualshub.com/

WORKING DIAGRAM

MHL 350D REACH 52” (16 m)

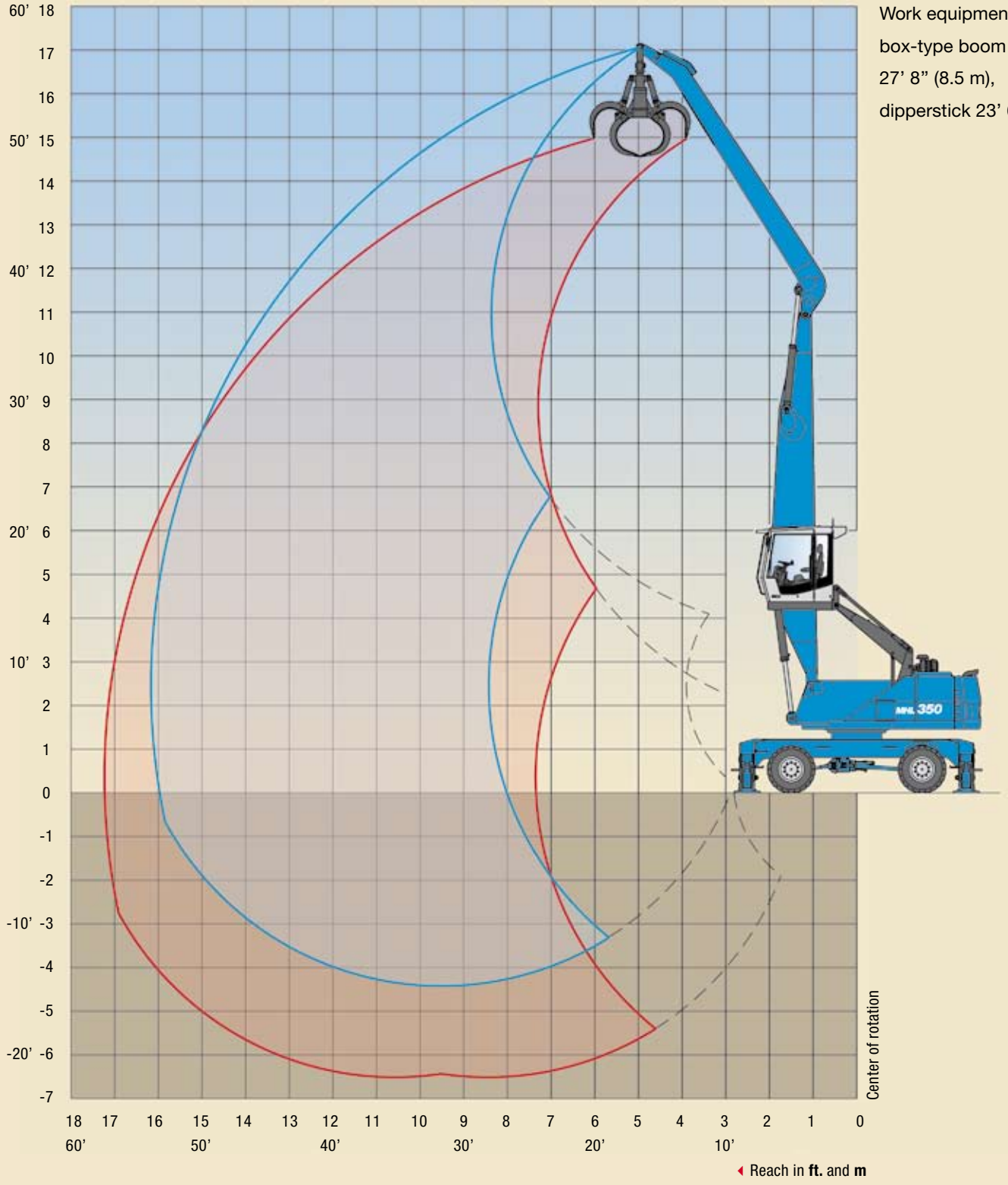

Work equipment:
box-type boom
27’ 8” (8.5 m),
dipperstick 23’ 6” (7.2 m)

https://truckmanualshub.com/

TEREX | FUCHS

LIFTING CAPACITY

MHL 350D REACH 52' (16 m)

HEIGHT ft.	UNDERCARRIAGE STABILIZERS	REACHES ft. 15	20	25	30	35	40	45	50
55	non supported		(9,360*)						
	4-pt. supported		9,360* (9,360*)						
50	non supported			(10,310*)	(7,380*)				
	4-pt. supported			10,310* (10,310*)	7,380* (7,380*)				
45	non supported				(10,380*)	(7,720*)			
	4-pt. supported				10,380* (10,380*)	7,720* (7,720*)			
40	non supported				(11,940*)	(9,620)	(7,230*)		
	4-pt. supported				11,940* (11,940*)	10,150* (10,150*)	7,230* (7,230*)		
35	non supported				(12,670)	(9,660)	(7,520)	(5,830*)	
	4-pt. supported				13,110* (13,110*)	11,770* (11,770*)	9,570* (9,570*)	5,830* (5,830*)	
30	non supported				(12,500)	(9,550)	(7,470)	(5,910)	
	4-pt. supported				13,810* (13,810*)	12,410* (12,410*)	11,250* (11,250*)	8,290* (8,290*)	
25	non supported			(16,040*)	(12,140)	(9,310)	(7,320)	(5,840)	(4,670)
	4-pt. supported			16,040* (16,040*)	14,250* (14,250*)	12,660* (12,660*)	11,370* (11,370*)	9,500 (10,100*)	6,330* (6,330*)
20	non supported			(15,680)	(11,610)	(8,950)	(7,080)	(5,690)	(4,610)
	4-pt. supported			17,370* (17,370*)	14,890* (14,890*)	13,030* (13,030*)	11,390 (11,560*)	9,350 (10,330*)	7,790 (8,360*)
15	non supported	(22,280*)	(20,840)	(14,610)	(10,930)	(8,500)	(6,780)	(5,500)	(4,510)
	4-pt. supported	22,280* (22,280*)	23,410* (23,410*)	18,730* (18,730*)	15,650* (15,650*)	13,460* (13,460*)	11,080 (11,770*)	9,150 (10,390*)	7,680 (9,120*)
10	non supported	(28,740)	(18,620)	(13,380)	(10,180)	(8,020)	(6,460)	(5,300)	(4,390)
	4-pt. supported	37,430* (37,430*)	26,000* (26,000*)	20,050* (20,050*)	16,370* (16,370*)	13,180 (13,830*)	10,730 (11,930*)	8,930 (10,390*)	7,550 (8,980*)
5	non supported	(11,850*)	(16,590)	(12,220)	(9,450)	(7,540)	(6,150)	(5,090)	(4,270)
	4-pt. supported	11,850* (11,850*)	27,660* (27,660*)	20,850* (20,850*)	15,906 (16,840*)	12,670 (14,040*)	10,400 (11,950*)	8,710 (10,260*)	7,420 (8,700*)
0	non supported	(8,450*)	(15,210)	(11,320)	(8,850)	(7,140)	(5,880)	(4,920)	(4,180)
	4-pt. supported	8,450* (8,450*)	20,370* (20,370*)	19,830 (21,060*)	15,240 (16,860*)	12,240 (13,940*)	10,110 (11,740*)	8,530 (9,920*)	7,320 (8,170*)
-5	non supported	(8,610*)	(14,490)	(10,740)	(8,430)	(6,840)	(5,680)	(4,800)	(4,130)
	4-pt. supported	8,610* (8,610*)	15,840* (15,840*)	19,180 (20,230*)	14,780 (16,280*)	11,920 (13,410*)	9,890 (11,180*)	8,400 (9,250*)	7,250* (7,250*)
-10	non supported		(14,240)	(10,470)	(8,200)	(6,670)	(5,570)	(4,750)	
	4-pt. supported		15,060* (15,060*)	18,390* (18,390*)	14,530 (14,970*)	11,730 (12,330*)	9,780 (10,130*)	8,100* (8,100*)	

The values are stated in tons (t). The pump pressure for this table is 5,221 psi (360 bar). The values amount to 75% of the static tipping load or 87% of the hydraulic lifting force (marked *), in accordance with ISO 10567. When the machine is standing on solid and level ground, these values apply to slewing operations through 360°. The values in brackets apply in the lengthwise direction of the undercarriage. The values specified "non-supported" only apply when the load is hoisted above the front or rear axle. The weight of the attached load hoisting implement (grab, magnet, load hook) must be deducted from the carrying capacity values. If the Terex Fuchs quick-attach system is mounted on the boom, carrying capacity values are reduced by 660 lbs. (300 kg). Load holding valves on the lift cylinders and an overload warning device are required for crane operations.

https://truckmanualshub.com/

WORKING DIAGRAM

MHL 350D REACH 49’ (15 m)

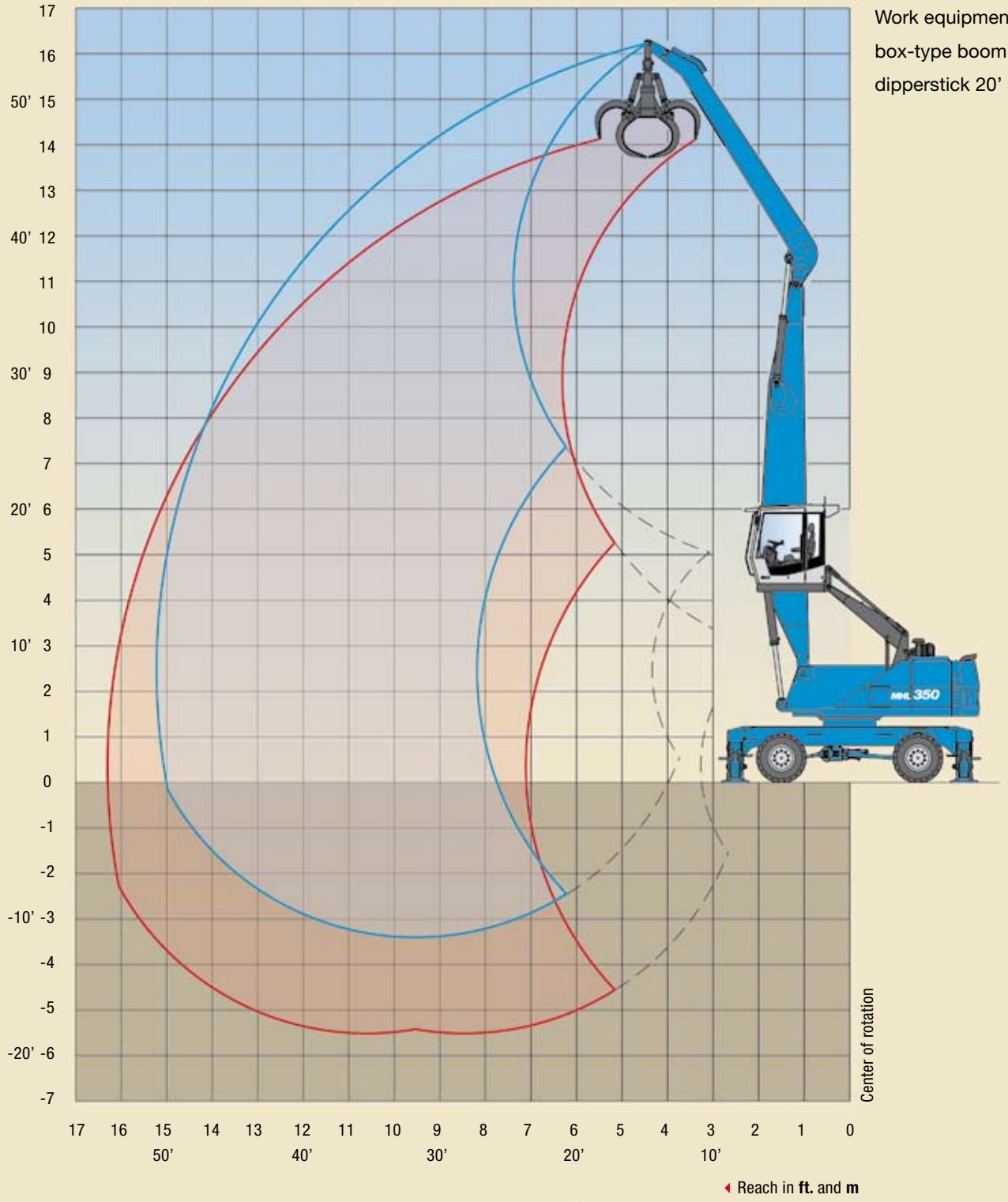

Work equipment:

box-type boom 27’ 8” (8.5 m),

dipperstick 20’ 3” (6.2 m)

https://truckmanualshub.com/

TEREX | FUCHS

LIFTING CAPACITY

MHL 350D REACH 49' (15 m)

HEIGHT ft.	UNDERCARRIAGE STABILIZERS	REACHES ft. 15	20	25	30	35	40	45	50
50	non supported		(12,110*)	(8,280*)					
	4-pt. supported		12,110* (12,110*)	8,280* (8,280*)					
45	non supported			(12,590*)	(9,590*)				
	4-pt. supported			12,590* (12,590*)	9,590* (9,590*)				
40	non supported			(14,520*)	(12,110)	(9,150)			
	4-pt. supported			14,520* (14,520*)	12,630* (12,630*)	9,530* (9,530*)			
35	non supported			(15,940*)	(12,170)	(9,270)	(7,170)		
	4-pt. supported			15,940* (15,940*)	14,610* (14,610*)	12,360* (12,360*)	8,520* (8,520*)		
30	non supported			(16,290)	(12,020)	(9,200)	(7,190)	(5,650)	
	4-pt. supported			16,950* (16,950*)	14,780* (14,780*)	13,130* (13,130*)	11,410* (11,410*)	5,900* (5,900*)	
25	non supported			(15,770)	(11,670)	(8,980)	(7,080)	(5,650)	
	4-pt. supported			17,670* (17,670*)	15,200* (15,200*)	13,350* (13,350*)	11,380 (11,870*)	9,060* (9,060*)	
20	non supported		(21,400)	(14,960)	(11,160)	(8,660)	(6,880)	(5,550)	
	4-pt. supported		23,160* (23,160*)	18,740* (18,740*)	15,800* (15,800*)	13,670* (13,670*)	11,170 (12,010*)	9,190 (10,600*)	
15	non supported	(30,660)	(19,530)	(13,910)	(10,520)	(8,250)	(6,830)	(5,410)	(4,440)
	4-pt. supported	36,010* (36,010*)	25,560* (25,560*)	19,980* (19,980*)	16,460* (16,460*)	13,430 (14,000*)	10,900 (12,140*)	9,030 (10,580*)	6,450* (6,450*)
10	non supported	(14,190*)	(17,470)	(12,790)	(9,850)	(7,830)	(6,360)	(5,240)	(4,370)
	4-pt. supported	14,190* (14,190*)	27,610* (27,610*)	21,010* (21,010*)	16,320 (16,990*)	12,970 (14,240*)	10,610 (12,180*)	8,860 (10,460*)	7,520* (7,520*)
5	non supported		(15,840)	(11,820)	(9,240)	(7,430)	(6,100)	(5,090)	(4,310)
	4-pt. supported		22,860* (22,860*)	20,380 (21,430*)	15,650 (17,180*)	12,540 (14,250*)	10,340 (12,030*)	8,700 (10,170*)	7,460* (7,460*)
0	non supported		(14,930)	(11,150)	(8,770)	(7,120)	(5,900)	(4,970)	(4,280)
	4-pt. supported		15,510* (15,510*)	19,610 (20,930*)	15,130 (16,830*)	12,200 (13,880*)	10,120 (11,580*)	8,580 (9,580*)	6,270* (6,270*)
-5	non supported		(14,450*)	(10,780)	(8,480)	(6,910)	(5,770)	(4,910)	
	4-pt. supported		14,450* (14,450*)	19,210* (19,210*)	14,820 (15,780*)	11,970 (13,000*)	9,980 (10,710*)	8,510 (8,510*)	
-10	non supported			(10,680)	(8,370)	(6,830)			
	4-pt. supported			16,810* (16,810*)	13,930* (13,930*)	11,460* (11,460*)			

The values are stated in tons (t). The pump pressure for this table is 5,221 psi (360 bar). The values amount to 75% of the static tipping load or 87% of the hydraulic lifting force (marked *), in accordance with ISO 10567. When the machine is standing on solid and level ground, these values apply to slewing operations through 360°. The values in brackets apply in the lengthwise direction of the undercarriage. The values specified "non-supported" only apply when the load is hoisted above the front or rear axle. The weight of the attached load hoisting implement (grab, magnet, load hook) must be deducted from the carrying capacity values. If the Terex Fuchs quick-attach system is mounted on the boom, carrying capacity values are reduced by 660 lbs. (300 kg). Load holding valves on the lift cylinders and an overload warning device are required for crane operations.

https://truckmanualshub.com/

WORKING DIAGRAM

MHL 350D REACH 46’ (14 m)

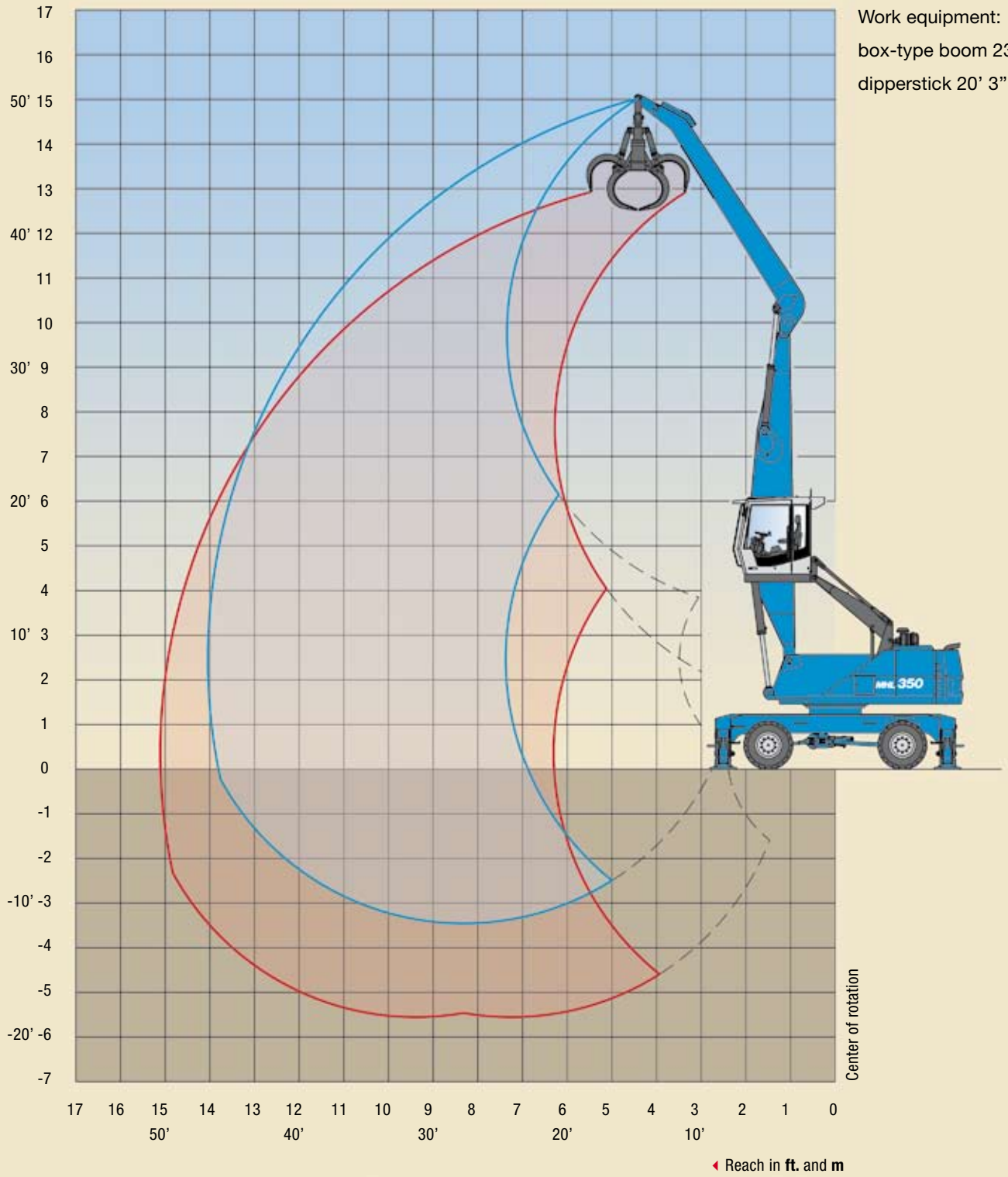

Work equipment:
box-type boom 23’ 9” (7.3 m),
dipperstick 20’ 3” (6.2 m)

https://truckmanualshub.com/

TEREX | FUCHS

LIFTING CAPACITY

MHL 350D REACH 46’ (14 m)

HEIGHT m	UNDERCARRIAGE STABILIZERS	REACHES ft. 15	20	25	30	35	40	45
45	non supported			(8,960*)				
	4-pt. supported			8,960* (8,960*)				
40	non supported			(12,900*)	(9,600*)			
	4-pt. supported			12,900* (12,900*)	9,600* (9,600*)			
35	non supported			(14,770*)	(12,210)	(8,960*)		
	4-pt. supported			14,770* (14,770*)	12,660* (12,660*)	8,960* (8,960*)		
30	non supported			(16,200*)	(12,220)	(9,380)	(6,910*)	
	4-pt. supported			16,200* (16,200*)	14,710* (14,710*)	11,940* (11,940*)	6,910* (6,910*)	
25	non supported			(16,230)	(12,050)	(9,300)	(7,340)	
	4-pt. supported			17,380* (17,380*)	15,510* (15,510*)	13,990* (13,990*)	10,090* (10,090*)	
20	non supported			(15,700)	(11,710)	(9,100)	(7,240)	(5,540*)
	4-pt. supported			18,450* (18,450*)	16,110* (16,110*)	14,290* (14,290*)	11,510 (12,421*)	6,280* (6,280*)
15	non supported	(24,490*)	(21,180)	(14,930)	(11,240)	(8,810)	(7,080)	(5,780)
	4-pt. supported	24,490* (24,490*)	24,380* (24,380*)	19,910* (19,910*)	16,900* (16,900*)	13,970 (14,680*)	11,330 (12,900*)	8,740* (8,740*)
10	non supported	(30,280)	(19,510)	(14,030)	(10,700)	(8,480)	(6,880)	(5,690)
	4-pt. supported	38,810* (38,810*)	27,410* (27,410*)	21,430* (21,430*)	17,200 (17,680*)	13,620 (15,040*)	11,130 (12,960*)	9,300 (10,150*)
5	non supported	(20,800*)	(17,940)	(13,150)	(10,180)	(8,150)	(6,690)	(5,600)
	4-pt. supported	20,800* (20,800*)	29,540* (29,540*)	21,800 (22,500*)	18,620 (18,180*)	13,270 (15,180*)	10,920 (12,820*)	9,200 (10,550*)
0	non supported	(13,060*)	(16,860)	(12,480)	(9,750)	(7,890)	(6,540)	(5,540)
	4-pt. supported	13,060* (13,060*)	29,570* (29,570*)	21,040 (22,670*)	16,150 (18,130*)	12,980 (14,910*)	10,760 (12,310*)	9,140 (9,620*)
-5	non supported	(12,710*)	(16,320)	(12,070)	(9,470)	(7,710)	(6,450)	
	4-pt. supported	12,710* (12,710*)	25,910* (25,910*)	20,580 (21,630*)	15,840 (17,280*)	12,790 (14,020*)	10,660 (11,200*)	
-10	non supported		(16,190)	(11,920)	(9,360)	(7,650)		
	4-pt. supported		23,850* (23,850*)	19,180* (19,180*)	15,370 (15,370*)	12,210* (12,210*)		

The values are stated in tons (t). The pump pressure for this table is 5,221 psi (360 bar). The values amount to 75% of the static tipping load or 87% of the hydraulic lifting force (marked *), in accordance with ISO 10567. When the machine is standing on solid and level ground, these values apply to slewing operations through 360°. The values in brackets apply in the lengthwise direction of the undercarriage. The values specified ”non-supported” only apply when the load is hoisted above the front or rear axle. The weight of the attached load hoisting implement (grab, magnet, load hook) must be deducted from the carrying capacity values. If the Terex Fuchs quick-attach system is mounted on the boom, carrying capacity values are reduced by 660 lbs. (300 kg.) Load holding valves on the lift cylinders and an overload warning device are required for crane operations.

https://truckmanualshub.com/

TECHNICAL DATA

MHL 350D

OPERATING WEIGHT	
	Basic machine with work attachment 70,548 lbs - 78,264 lbs (32 t - 35.5 t)

DIESEL ENGINE	
MANUFACTURER AND MODEL	Deutz TCD 2013 L06 2V
DESIGN	6 Cylinder Inline
ENGINE CONTROL	EMR III
TYPE	4-stroke diesel engine, direct common-rail fuel-injection, turbocharger with intercooling
ENGINE OUTPUT	198 HP 148 kW
NOMINAL SPEED	2,000 min^{-1}
DISPLACEMENT	436 cu in (7.2 L)
COOLING SYSTEM	Liquid cooling, thermostatically controlled and charge air cooling
EMISSION STANDARDS	COM III and EPA Tier III
AIR FILTER DESIGN	Two-stage filter with safety valve
FUEL CAPACITY (USABLE)	100.6 US gal (383 L)

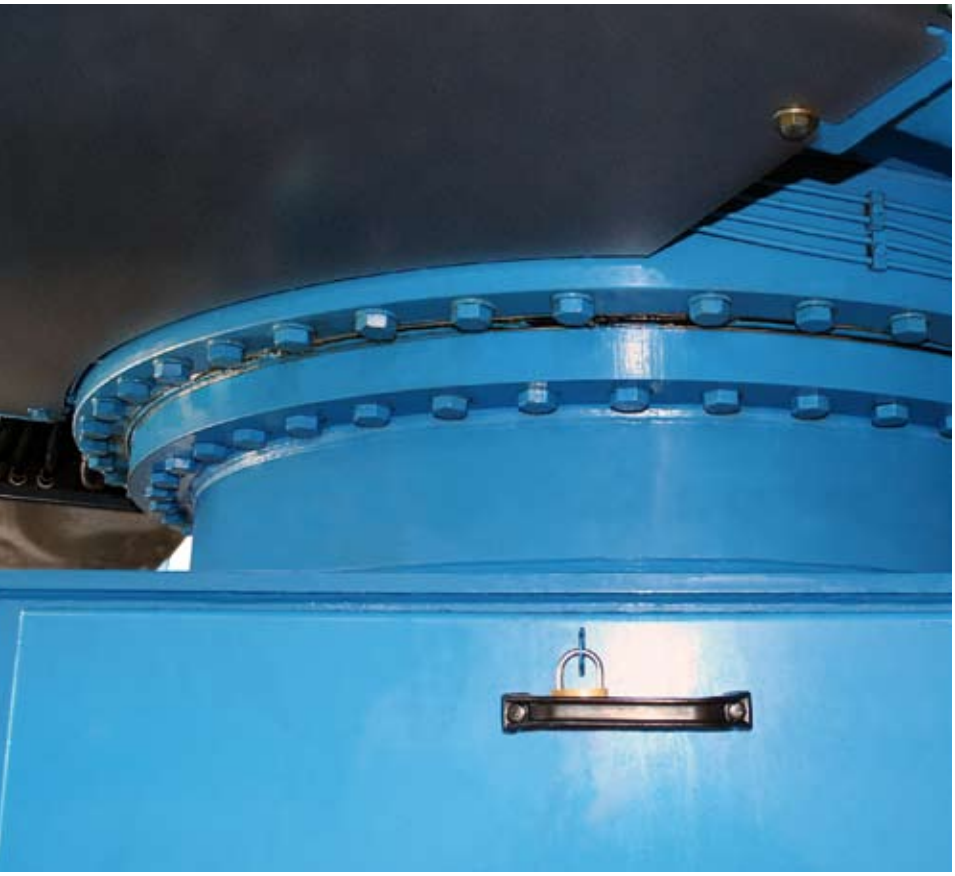

ELECTRICAL SYSTEM	
OPERATING VOLTAGE	24 V
BATTERIES	2 x 12 V / 100 Ah / 760 A (in accordance with EN)
LIGHTING SET	1 dipper-stick-mounted floodlight, 1 headlight mounted to upper carriage, 1 floodlight attached to cabin floor, rear side-marker and turn signal lamps
OPTION	Magnet system 13 kW or 20 kW

TRAVEL DRIVE	
	Hydrostatic drive through infinitely variable axial piston motor and directly mounted travel brake valves, two-speed power shift gear, 4-wheel drive
TRAVEL SPEED 1ST GEAR	max. 3.1 mph (5 km/h)
TRAVEL SPEED 2ND GEAR	max. 12.4 mph (20 km/h)
GRADEABILITY	max. 45%
TURNING RADIUS	28’ 2” (8.6 m)

SWING SYSTEM	
RING GEAR	Internally toothed ball ring gear (double row)
DRIVE	Three-stage planetary gear with integrated multi-disc brake
UPPER CARRIAGE SWING SPEED	infinitely variable from 0 - 8 min^{-1}
PIVOT BRAKE	Electrically operated

UNDERCARRIAGE	
FRONT AXLE	Planetary drive axle with integrated drum brake, rigidly mounted, max. steering angle: 27°
REAR AXLE	Oscillating planetary drive rear axle with integrated drum brake and selectable oscillating axle lock
STABILIZERS	4-point-stabilizers
TIRES	Solid rubber, elastic tires 8-fold 12.00 - 20

BRAKE SYSTEM	
SERVICE BRAKE	Hydraulic single-circuit braking system, acting on all four wheel pairs
PARKING BRAKE	Electrically operated disc brake, acting on both front and rear axle

https://truckmanualshub.com/

HYDRAULIC SYSTEM	
	LINDE mobile hydraulic system with load limit control and fuel conserving power demand control. Separate oil cooler with large cooling surface, temperature controlled fan speed.
HYDRAULIC OIL FILTER	Hydraulic oil filter integrated in the oil tank; maintenance interval: 3.000 operating hrs. Central lubricating system
MAX. PUMP CAPACITY	2 x 84.6 US gal/min (2 x 320 L/min)
MAX. OPERATING PRESSURE	4,640/5,221 psi (320/360 bar)
HYDRAULIC OIL TANK	102.5 US gal (389 L)
CAB	
	Infinitely variable hydraulically height-adjustable with max. eye level of 19’ 6” (5.8 m), elastically supported, sound-deadened,heat-insulated panoramic windows for excellent visibility, windshield with pull-down sunblind that slides under cab roof, viewing window in cab roof, sliding window in cab door, steering column height and tilt adjustable
HEATING	Infinitely variable hot water heating with 3-speed fan, 4 adjustable defroster nozzles
OPERATOR’S SEAT	Air-cushioned comfort-seat with integrated headrest, safety-belt and lumbar support, seat-heating optional. Seat position, seat inclination and seat cushion multi-adjustable in line with position of armrests and pilot control units, allowing provides excellent comfort.
MONITORING	Ergonomic instrument layout, automatic monitoring, warning and storage of deviating operating conditions, e.g. filter pressure w. warning indicator and shutdown of pilot controls, warning indicator resp. shutdown of pilot controls when exceeding hydraulic oil temperature limits.
AIR CONDITIONING	Automatic
ACOUSTIC POWER LEVEL	(guaranteed) in accordance with guideline 2000/14 EG = 102 dB(A) – required in accordance with 2000/14 EG = 104 dB(A)
OFFICIAL HOMOLOGATION	
	Certification according to CE-regulations

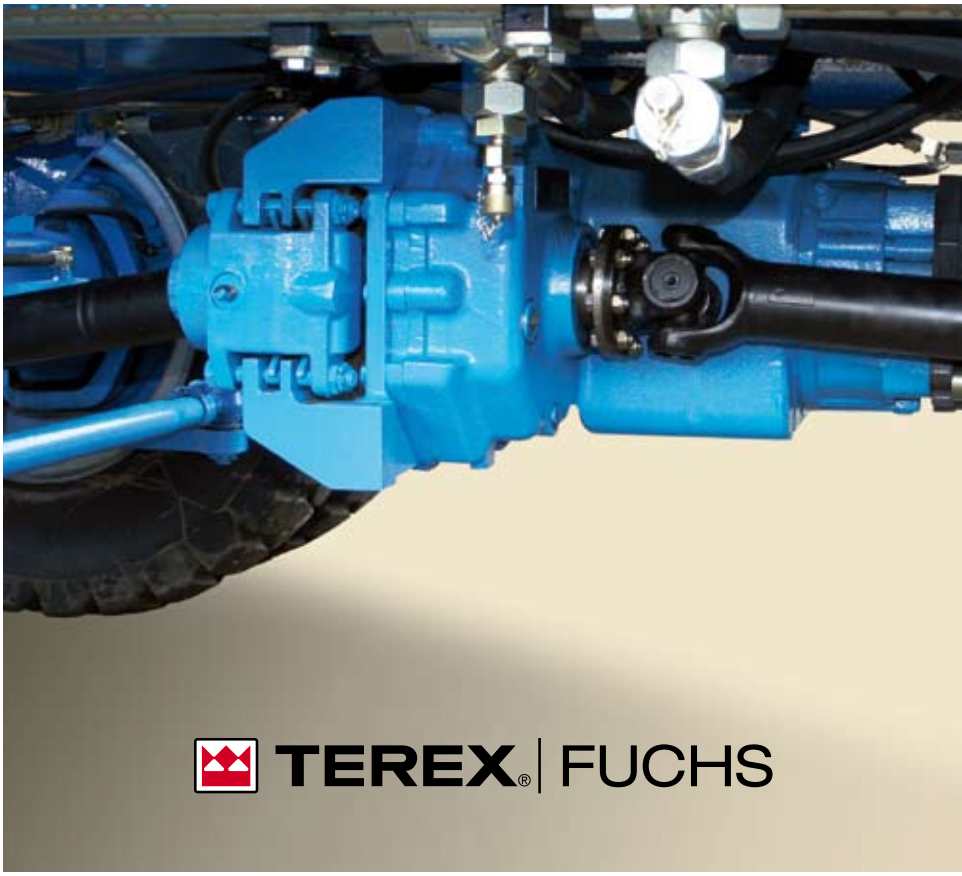

https://truckmanualshub.com/

EQUIPMENT

MHL 350D

ENGINE	STANDARD	OPTION
Turbocharger	●	
Intercooling	●	
Direct electronic fuel injection/Common Rail	●	
Automatic idle	●	
Engine pre-heating		●
Interface for engine diagnosis	●	
Fan drive temperature controlled	●	

UNDERCARRIAGE	STANDARD	OPTION
2-speed power-shift transmission	●	
4-point stabilizers	●	
4-point stabilizers individually controllable		●
Stabilizer (outrigger) cylinders with integrated two-way check valves	●	
All-wheel drive	●	
Piston rod protection on stabilizer cylinder	●	
Stabilizer (outrigger) plate 17” x 24” (430 x 600 mm)	●	
Rear axle oscillating lock	●	
Dozer blade in addition to 4-point stabilizers		●
Special paint		●
Drum brakes	●	
Tool box	●	

UPPERCARRIAGE	STANDARD	OPTION
Electrical refueling pump		●
Lighting protection		●
Maintenance hood, actuated by gas spring, with mechanical locking device	●	
Lockable cleaning access openings on radiator	●	
Separate radiator system for ambient temperatures up to 50°C	●	
Separate oil cooler with temperature controlled fan drive	●	
Automatic central lubrication system	●	
Back-up alarm	●	
Special paint		●

CAB	STANDARD	OPTION
Lift-up skylight in cabin roof	●	
Air cushioned operator’s seat with headrest, safety belt and lumbar-support	●	
FOPS-Protective guard		●
Up and over type front windshield	●	
Front-windows shatter-proof (LEXAN)		●
Cab elevation, 3’ 3” (1 m), rigid		●
Cab system, height adjustable	●	
Air conditioning, automatic	●	
Steering column, height and tilt adjustable	●	
Multi function display	●	
Bulletproof glass, front and top		●
Fire extinguisher, dry powder		●
Preparation for radio		●
Rotating beacon	●	
Sliding window in cab door	●	
Safety glass	●	
Seat heating		●
Auxiliary heating		●
Stereo cassette radio		●
Stereo CD radio	●	
Windscreen washer system	●	

EQUIPMENT	STANDARD	OPTION
Floodlight, attached to cab floor	●	
Floodlight, mounted to superstructure	●	
Floodlight, dipper-stick mounted	●	
Hydraulic oil preheating		●
Close proximity range limiter for dipperstick	●	
Coolant and hydraulic oil monitoring system	●	
Load holding protection for boom cylinder	●	
Load holding protection for lift cylinder	●	
Dipper stick shock protection	●	
Lubrication of grab suspension by central lubrication system	●	
Overload warning / shut-off installation		●
XENON-floodlight on dipper stick		●
XENON-floodlight on superstructure		●
XENON-floodlight on cab roof		●
Quick release coupling on the dipperstick	●	

https://truckmanualshub.com/

TEREX | FUCHS

RECOMMENDED ATTACHMENTS

MHL 350D

WORK ATTACHMENT 16.0 m	
LOAD HOOK	11 ton (10 t)
TEREX Fuchs CACTUS GRAB 0.6 m³	Open or half-shell tines
TEREX Fuchs MAGNET PLATE MP 1150	diameter = 45.2” (1150 mm) with 13 kW magnet installation
TWO-SHELL GRAB 1.0 m³	Material density up to 1,348 lbs/yd³ (800 kg/m³)

WORK ATTACHMENT 15.0 m	
LOAD HOOK	11 ton (10 t)
TEREX Fuchs CACTUS GRAB 0.6 m³	Open or half-shell tines
TEREX Fuchs CACTUS GRAB 0.8 m³	Open or half-shell tines
TEREX Fuchs MAGNET PLATE MP 1250	diameter = 49.2” (1,250 mm) with 20 kW magnet installation
TWO-SHELL GRAB 1.0 m³	Material density up to 2,697 lbs/yd³ (1,600 kg/m³)
TWO-SHELL GRAB 1.6 m³	Material density up to 1,348 lbs/yd³ (800 kg/m³)

WORK ATTACHMENT 14.0 m	
LOAD HOOK	11 ton (10 t)
TEREX Fuchs CACTUS GRAB 0.6 m³	Open or half-shell tines
TEREX Fuchs CACTUS GRAB 0.8 m³	Open or half-shell tines
TEREX Fuchs MAGNET PLATE MP 1250	diameter = 49.2” (1,250 mm) with 20 kW magnet installation
TWO-SHELL GRAB 1.4 m³	Material density up to 2,697 lbs/yd³ (1,600 kg/m³)
TWO-SHELL GRAB 2.0 m³	Material density up to 1,348 lbs/yd³ (800 kg/m³)

https://truckmanualshub.com/

Material Handler - MHL 350D

DIMENSIONS

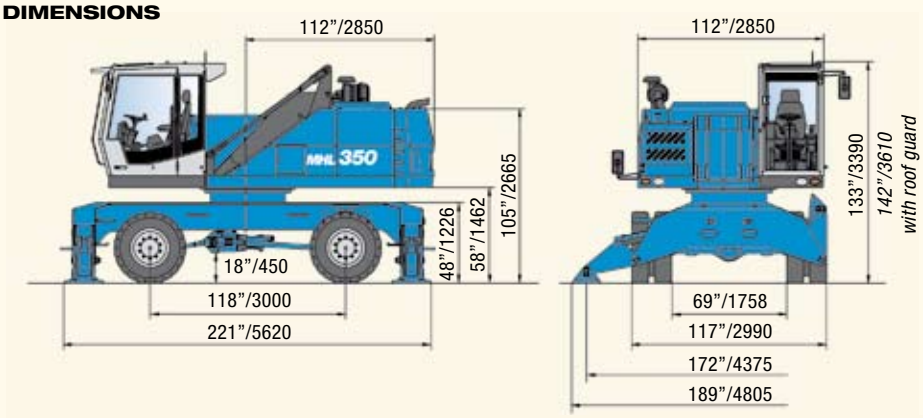

TRANSPORT DIMENSIONS

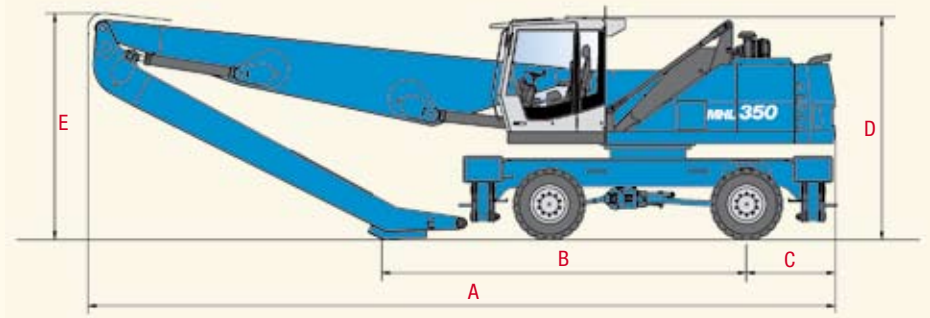

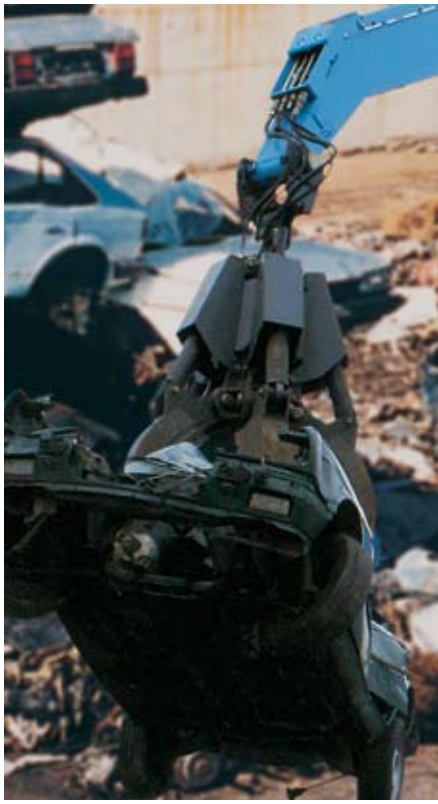

DIMENSIONS	REACH 46’ (14.0 m)	REACH 49’ (15.0 m)	REACH 52’ (16.0 m)
A	448” (11,375 mm)	496” (12,610 mm)	495” (12,565 mm)
B	215” (5,465 mm)	254” (6,445 mm)	221” (5,605 mm)
C	53” (1,350 mm)	53” (1,350 mm)	(1,350 mm) 53”
D	133” (3,390 mm) *142” (* 3,610 mm)*	3,390 mm (133”) ** 3,610 mm (142”)*	133” (3,390 mm) *(* 3,610 mm) 142”*
E	136” (3,445 mm)	3,020 mm (119”)	142” (3,600 mm)

** with roof guard*

TEREX®

For more information, product demonstration, or details on purchase, lease and rental plans, please contact your local Terex Fuchs Distributor.

Terex Fuchs

8800 Rostin Road
Southaven, MS 38671
USA

TEL 662-393-1800
SALES 866-837-3923
FAX 662-393-1700
WEB www.terex.com
EMAIL sales@terexca.com

Effective date: August 15, 2006. For further information, please contact your local distributor or the Terex sales office listed. Product specifications are subject to change without notice or obligation. The photographs and drawings in this brochure are for illustrative purposes only. Refer to the appropriate Operator’s Manual for instructions on the proper use of this equipment. Failure to follow the appropriate Operator’s Manual when using our equipment or to otherwise act irresponsibly may result in serious injury or death. Prices and specifications subject to change without notice. The only warranty applicable is the standard written warranty applicable to the particular product and sale. Terex makes no other warranty, expressed or implied. Products and services listed may be trademarks, service marks or trade-names of Terex Corporation and/or its subsidiaries in the USA and other countries and all rights are reserved. “Terex” is a Registered Trademark of Terex Corporation in the USA and many other countries. Copyright ©2007 Terex Corporation

MHL350D 2.5K 0407A Part #127534