SPEED CONTROL

TABLE OF CONTENTS

page

SPEED CONTROL
DESCRIPTION 1
OPERATION 2
DIAGNOSIS AND TESTING
DIAGNOSIS AND TESTING - VACUUM SUPPLY TEST 2
DIAGNOSIS AND TESTING - ROAD TEST 3
SPECIFICATIONS
TORQUE - SPEED CONTROL 3
CABLE
DESCRIPTION 3
OPERATION 3
REMOVAL 3
INSTALLATION 6
SERVO
DESCRIPTION 6
OPERATION 7
REMOVAL 7
INSTALLATION 7
SWITCH
DESCRIPTION 8
OPERATION 8
REMOVAL 9
INSTALLATION 9
VACUUM RESERVOIR
DESCRIPTION 9
OPERATION 9
DIAGNOSIS AND TESTING - VACUUM RESERVOIR 9
REMOVAL 10
INSTALLATION 10

SPEED CONTROL

DESCRIPTION

All 3.7L/4.7L/5.9L/8.0LGas Engines and/or Diesel With Automatic Trans.

The speed control system is operated by the use of a cable and a vacuum controlled servo. Electronic control of the speed control system is integrated into the Powertrain Control Module (PCM). The controls consist of two steering wheel mounted switches. The switches are labeled: ON/OFF, RES/ACCEL, SET, COAST, and CANCEL.

The system is designed to operate at speeds above 30 mph (50 km/h).

WARNING: THE USE OF SPEED CONTROL IS NOT RECOMMENDED WHEN DRIVING CONDITIONS DO NOT PERMIT MAINTAINING A CONSTANT SPEED, SUCH AS IN HEAVY TRAFFIC OR ON ROADS THAT ARE WINDING, ICY, SNOW COVERED, OR SLIPPERY.

5.7L Gas

The speed control system is fully electronically controlled by the Powertrain Control Module (PCM). **A cable and a vacuum controlled servo are not used. This is a servo-less system.** The controls consist of two steering wheel mounted switches. The switches are labeled: ON/OFF, RES/ACCEL, SET, COAST, and CANCEL.

The system is designed to operate at speeds above 30 mph (50 km/h).

WARNING: THE USE OF SPEED CONTROL IS NOT RECOMMENDED WHEN DRIVING CONDITIONS DO NOT PERMIT MAINTAINING A CONSTANT SPEED, SUCH AS IN HEAVY TRAFFIC OR ON ROADS THAT ARE WINDING, ICY, SNOW COVERED, OR SLIPPERY.

5.9L Diesel With Manual Trans.

The speed control system is fully electronically controlled by the Engine Control Module (ECM). **A cable and a vacuum controlled servo are not used if the vehicle is equipped with a manual transmission and a diesel engine. This is a servo-less system.** The controls consist of two steering wheel mounted switches. The switches are labeled: ON/OFF, RES/ACCEL, SET, COAST, and CANCEL.

The system is designed to operate at speeds above 30 mph (50 km/h).

WARNING: THE USE OF SPEED CONTROL IS NOT RECOMMENDED WHEN DRIVING CONDITIONS DO NOT PERMIT MAINTAINING A CONSTANT SPEED, SUCH AS IN HEAVY TRAFFIC OR ON ROADS THAT ARE WINDING, ICY, SNOW COVERED, OR SLIPPERY.

SPEED CONTROL (Continued)

OPERATION

When speed control is selected by depressing the ON switch, the PCM (the ECM with a diesel engine) allows a set speed to be stored in its RAM for speed control. To store a set speed, depress the SET switch while the vehicle is moving at a speed between 35 and 85 mph. In order for the speed control to engage, the brakes cannot be applied, nor can the gear selector be indicating the transmission is in Park or Neutral.

The speed control can be disengaged manually by:

- Stepping on the brake pedal
- Depressing the OFF switch
- Depressing the CANCEL switch.
- Depressing the clutch pedal (if equipped).

NOTE: Depressing the OFF switch or turning off the ignition switch will erase the set speed stored in the PCM (the ECM with a diesel engine).

For added safety, the speed control system is programmed to disengage for any of the following conditions:

- An indication of Park or Neutral
- A rapid increase rpm (indicates that the clutch has been disengaged)
- Excessive engine rpm (indicates that the transmission may be in a low gear)
- The speed signal increases at a rate of 10 mph per second (indicates that the coefficient of friction between the road surface and tires is extremely low)
- The speed signal decreases at a rate of 10 mph per second (indicates that the vehicle may have decelerated at an extremely high rate)

Once the speed control has been disengaged, depressing the RES/ACCEL switch (when speed is greater than 30 mph) restores the vehicle to the target speed that was stored in the PCM (the ECM with a diesel engine).

While the speed control is engaged, the driver can increase the vehicle speed by depressing the RES/ACCEL switch. The new target speed is stored in the PCM (the ECM with a diesel engine) when the RES/ACCEL is released. The PCM also has a ″tap-up″ feature in which vehicle speed increases at a rate of approximately 2 mph for each momentary switch activation of the RES/ACCEL switch.

A “tap down” feature is used to decelerate without disengaging the speed control system. To decelerate from an existing recorded target speed, momentarily depress the COAST switch. For each switch activation, speed will be lowered approximately 1 mph.

DIAGNOSIS AND TESTING

DIAGNOSIS AND TESTING - VACUUM SUPPLY TEST

3.7L / 4.7L / 5.9L / 8.0L Gas Powered Engines

3.7L/4.7L/5.9L/8.0L gas powered engines: actual engine vacuum, a vacuum reservoir, a one-way check valve and vacuum lines are used to supply vacuum to the speed control servo.

(1) Disconnect vacuum hose at speed control servo and install a vacuum gauge into the disconnected hose.

(2) Start engine and observe gauge at idle. Vacuum gauge should read at least ten inches of mercury.

(3) If vacuum is less than ten inches of mercury, determine source of leak. Check vacuum line to engine for leaks. Also check actual engine intake manifold vacuum. If manifold vacuum does not meet this requirement, check for poor engine performance and repair as necessary.

(4) If vacuum line to engine is not leaking, check for leak at vacuum reservoir. To locate and gain access to reservoir, refer to Vacuum Reservoir Removal/Installation in this group. Disconnect vacuum line at reservoir and connect a hand-operated vacuum pump to reservoir fitting. Apply vacuum. Reservoir vacuum should not bleed off. If vacuum is being lost, replace reservoir.

(5) Verify operation of one-way check valve and check it for leaks.

(a) Locate one-way check valve. The valve is located in vacuum line between vacuum reservoir and engine vacuum source. Disconnect vacuum hoses (lines) at each end of valve.

(b) Connect a hand-operated vacuum pump to reservoir end of check valve. Apply vacuum. Vacuum should not bleed off. If vacuum is being lost, replace one-way check valve.

(c) Connect a hand-operated vacuum pump to vacuum source end of check valve. Apply vacuum. Vacuum should flow through valve. If vacuum is not flowing, replace one-way check valve. Seal the fitting at opposite end of valve with a finger and apply vacuum. If vacuum will not hold, diaphragm within check valve has ruptured. Replace valve.

5.7 Gas

Vacuum is not used for any part of the speed control system if equipped with a 5.7L V-8 engine.

5.9L Diesel Engine With Manual Trans.

Vacuum is not used for any part of the speed control system if equipped with a diesel engine and a manual transmission.

SPEED CONTROL (Continued)

5.9L Diesel Engines With Automatic Trans.

If equipped with a diesel powered engine and an automatic transmission, an electric vacuum pump and vacuum lines are used to supply vacuum to the speed control servo. A vacuum reservoir is not used.

DIAGNOSIS AND TESTING - ROAD TEST

Perform a vehicle road test to verify reports of speed control system malfunction. The road test should include attention to the speedometer. Speedometer operation should be smooth and without flutter at all speeds.

Flutter in the speedometer indicates a problem which might cause surging in the speed control system. The cause of any speedometer problems should be corrected before proceeding. Refer to Instrument Cluster for speedometer diagnosis.

If a road test verifies a system problem and the speedometer operates properly, check for:

- A Diagnostic Trouble Code (DTC). If a DTC exists, conduct tests per the Powertrain Diagnostic Procedures service manual.
- A misadjusted brake (stop) lamp switch. This could also cause an intermittent problem.
- Loose, damaged or corroded electrical connections at the servo (if used). Corrosion should be removed from electrical terminals and a light coating of Mopar MultiPurpose Grease, or equivalent, applied.
- Leaking vacuum reservoir (if used).
- Loose or leaking vacuum hoses or connections (if used).
- Defective one-way vacuum check valve (if used).
- Secure attachment of both ends of the speed control servo cable (if used).
- Smooth operation of throttle linkage (if used) and throttle body air valve.
- Failed speed control servo (if used). Do the servo vacuum test.

CAUTION: When test probing for voltage or continuity at electrical connectors, care must be taken not to damage connector, terminals or seals. If these components are damaged, intermittent or complete system failure may occur.

SPECIFICATIONS

TORQUE - SPEED CONTROL

DESCRIPTION	N-m	Ft. Lbs.	In. Lbs.
Servo Mounting Bracket-to-Servo Nuts	7	-	60
Servo Mounting Bracket-to-Battery Tray Screws	4	-	30
Speed Control Switch Mounting Screws	1.7	-	15
Vacuum Reservoir Mounting Nuts	3	-	20

CABLE

DESCRIPTION

The speed control servo cable is connected between the speed control vacuum servo diaphragm and the throttle body control linkage. This cable is used with 3.7L/4.7L/5.9L/8.0L gas powered engines only. It is also used if equipped with a 5.9L diesel engine equipped with an automatic transmission.

A speed control servo cable **is not used** if equipped with either a 5.9L diesel engine equipped with a manual transmission, or any 5.7L engine/transmission combinations.

OPERATION

This cable causes the throttle control linkage to open or close the throttle valve in response to movement of the vacuum servo diaphragm.

REMOVAL

3.7L / 4.7L GAS

(1) Disconnect negative battery cable at battery.

(2) Remove air intake tube at top of throttle body.

The accelerator cable must be partially removed to gain access to speed control cable.

CABLE (Continued)

(3) Hold throttle in wide open position. While held in this position, slide throttle cable pin (Fig. 1) from throttle body bellcrank.

(4) Using a pick or small screwdriver, press release tab (Fig. 2) to release plastic cable mount from bracket. **Press on tab only enough to release cable from bracket. If tab is pressed too much, it will be broken.** Slide plastic mount (Fig. 2) towards right side of vehicle to remove throttle cable from throttle body bracket.

(5) Using finger pressure only, disconnect servo cable connector (Fig. 3) at throttle body bellcrank pin by pushing connector off bellcrank pin towards front of vehicle. **DO NOT try to pull connector off perpendicular to the bellcrank pin. Connector will be broken.**

(6) Slide speed control cable plastic mount towards right of vehicle to remove cable from throttle body bracket (Fig. 4).

(7) Remove servo cable from servo. Refer to Servo Removal/Installation.

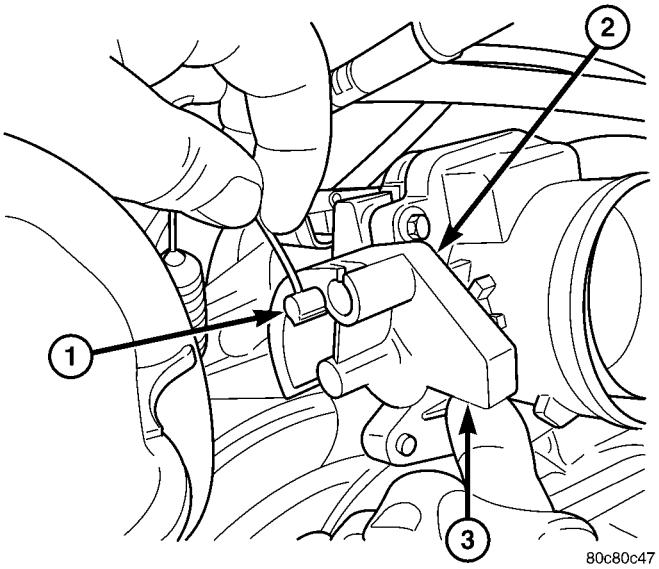

Fig. 1 THROTTLE CABLE PIN - 3.7L / 4.7L

1 - THROTTLE CABLE PIN
2 - THROTTLE BODY BELLCRANK
3 - PUSH UP HERE

5.9L Gas

(1) Disconnect negative battery cable at battery.

(2) Remove air intake tube at top of throttle body.

(3) Using finger pressure only, remove speed control cable connector at bellcrank by pushing connector rearward off the bellcrank pin (Fig. 5). **DO NOT try to pull connector off perpendicular to the bellcrank pin. Connector will be broken.**

(4) Squeeze 2 tabs on sides of speed control cable at throttle body mounting bracket (locking plate) and push out of bracket.

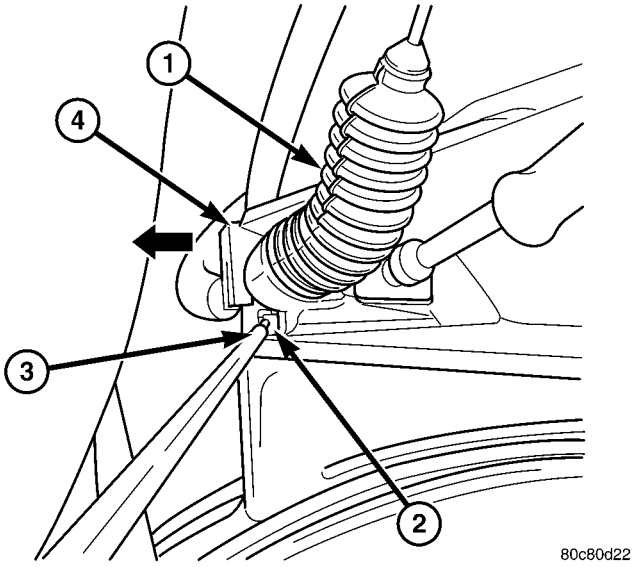

Fig. 2 THROTTLE CABLE RELEASE TAB - 3.7L / 4.7L

1 - THROTTLE CABLE
2 - RELEASE TAB
3 - PICK OR SCREWDRIVER
4 - PLASTIC CABLE MOUNT

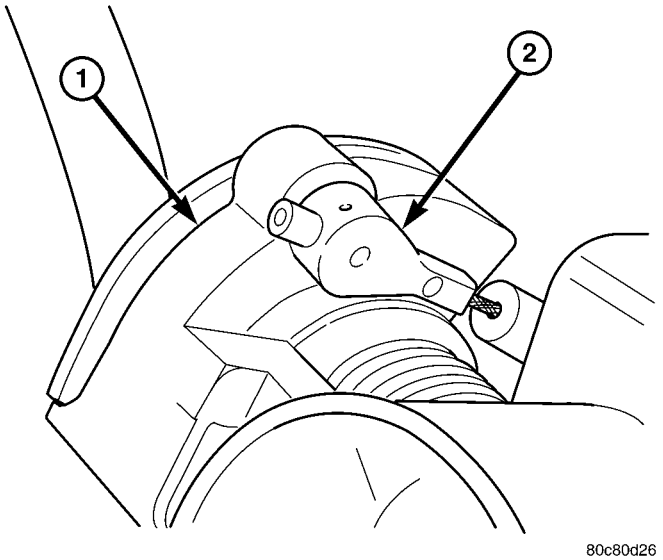

Fig. 3 SPEED CONTROL CABLE AT BELLCRANK - 3.7L / 4.7L

1 - THROTTLE BODY BELLCRANK
2 - SPEED CONTROL CABLE CONNECTOR

(5) Remove servo cable from servo. Refer to Speed Control Servo Removal/Installation in this group.

CABLE (Continued)

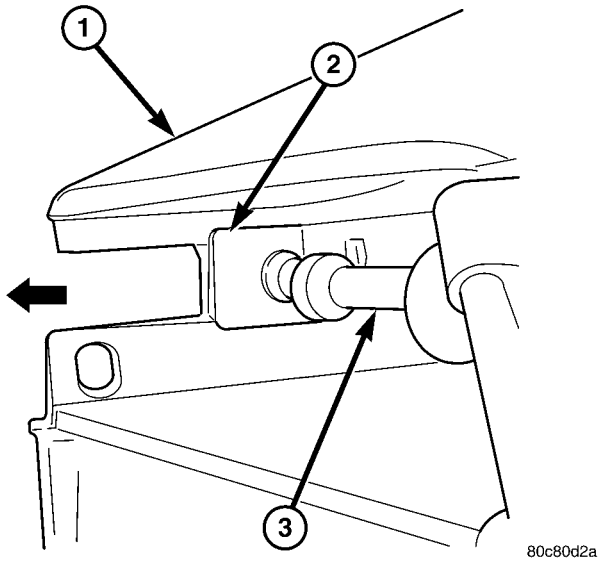

Fig. 4 SPEED CONTROL CABLE AT BRACKET - 3.7L / 4.7L

1 - THROTTLE CABLE BRACKET
2 - PLASTIC CABLE MOUNT
3 - SPEED CONTROL CABLE

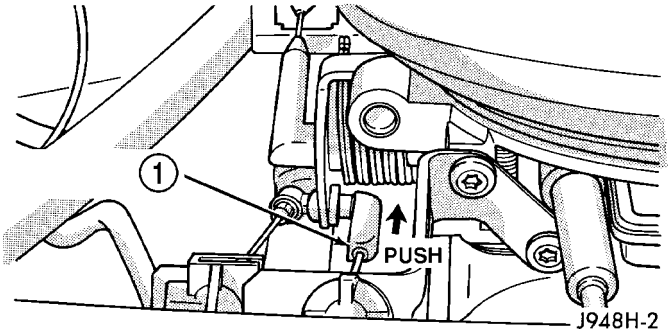

Fig. 5 SERVO CABLE AT THROTTLE BODY - 5.9L GAS

1 - VEHICLE SPEED CONTROL CABLE

8.0L Gas

(1) Disconnect negative battery cable at battery.

(2) Using finger pressure only, remove speed control cable connector at bellcrank by pushing connector off the bellcrank pin (Fig. 6). **DO NOT try to pull connector off perpendicular to the bellcrank pin. Connector will be broken.**

(3) Squeeze 2 tabs on sides of speed control cable at throttle body mounting bracket (locking plate) and push out of bracket.

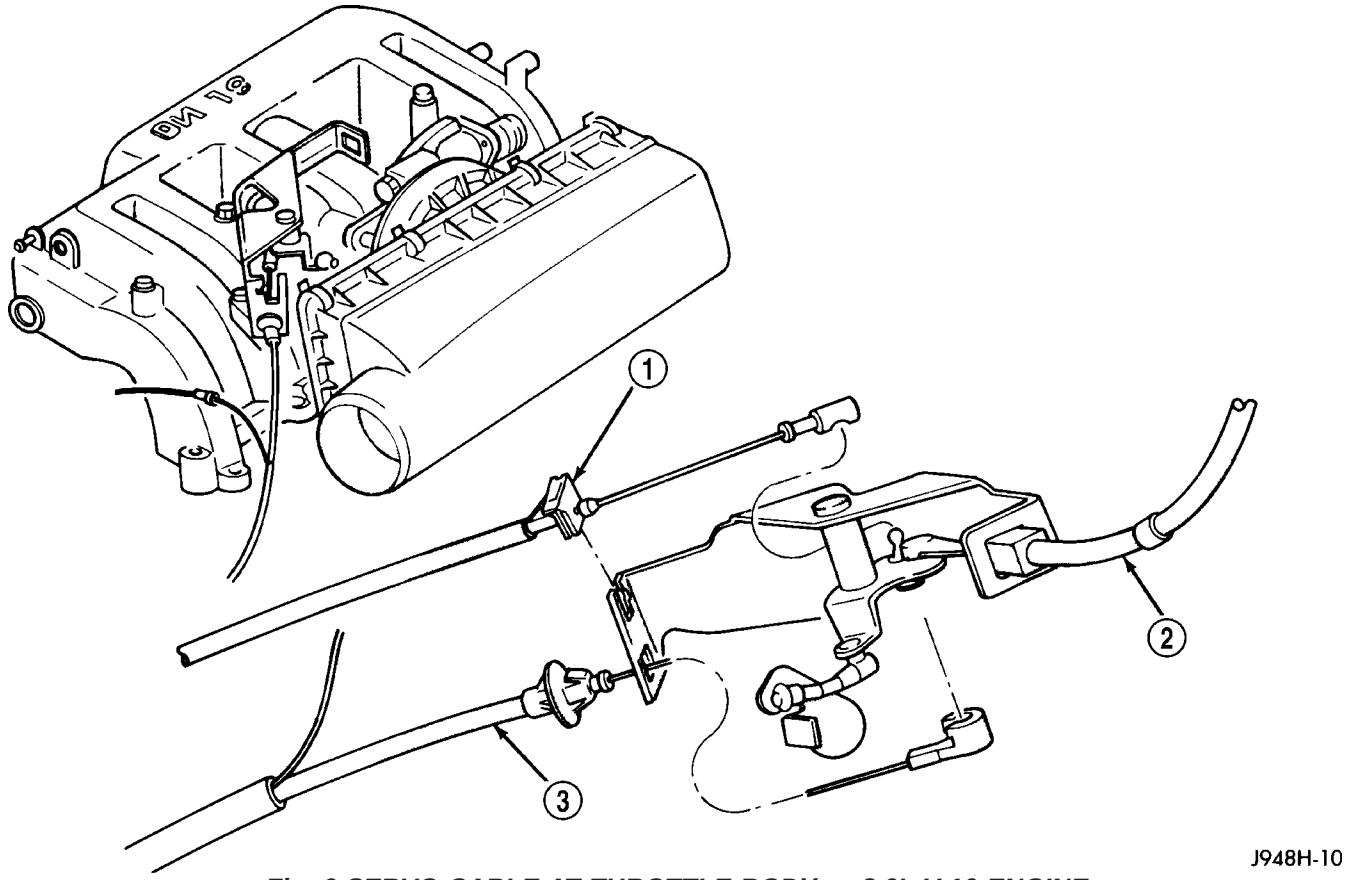

Fig. 6 SERVO CABLE AT THROTTLE BODY — 8.0L V-10 ENGINE

1 - THROTTLE CABLE
2 - THROTTLE VALVE CABLE
3 - SPEED CONTROL SERVO CABLE

CABLE (Continued)

(4) Remove servo cable from servo. Refer to Speed Control Servo Removal/Installation in this group.

5.9L Diesel — Auto. Trans.

(1) Disconnect both negative battery cables at both batteries.

(2) Remove cable/lever/linkage cover. Refer to Speed Control Servo Removal/Installation.

(3) Remove (disconnect) servo cable from servo. Refer to Speed Control Servo Removal/Installation.

(4) Using finger pressure only, disconnect end of servo cable from throttle lever pin by pulling forward on connector while holding lever rearward (Fig. 7). **DO NOT try to pull connector off perpendicular to lever pin. Connector will be broken.**

(5) Squeeze 2 pinch tabs (Fig. 7) on sides of speed control cable at mounting bracket and push cable rearward out of bracket.

(6) Remove cable from vehicle.

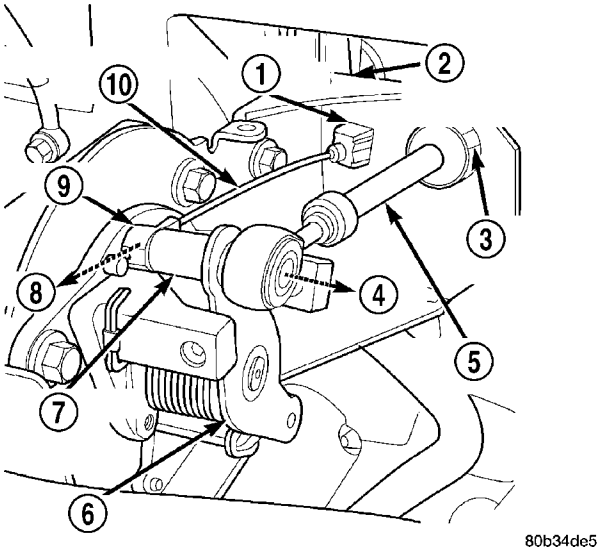

Fig. 7 SERVO CABLE AT THROTTLE LEVER — 5.9L DIESEL

1 - PINCH (2) TABS
2 - CABLE MOUNTING BRACKET
3 - PINCH TABS (2)
4 - OFF
5 - THROTTLE CABLE
6 - THROTTLE LEVER
7 - THROTTLE LEVER PIN
8 - OFF
9 - CONNECTOR
10 - SPEED CONTROL CABLE

INSTALLATION

3.7L / 4.7L Gas

(1) Install end of cable to speed control servo. Refer to Servo Removal/Installation.

(2) Slide speed control cable plastic mount into throttle body bracket.

(3) Install speed control cable connector onto throttle body bellcrank pin (push rearward to snap into location).

(4) Slide throttle (accelerator) cable plastic mount into throttle body bracket. Continue sliding until cable release tab is aligned to hole in throttle body mounting bracket.

(5) While holding throttle to wide open position, place throttle cable pin into throttle body bellcrank.

(6) Install air intake tube to top of throttle body.

(7) Connect negative battery cable at battery.

(8) Before starting engine, operate accelerator pedal to check for any binding.

5.9L / 8.0L Gas

(1) Install end of cable to speed control servo. Refer to Speed Control Servo Removal/Installation.

(2) Install cable into throttle body mounting bracket. Cable snaps into bracket.

(3) Install speed control cable connector at throttle body bellcrank pin. Connector snaps onto pin.

(4) Install air intake tube to top of throttle body (except 8.0L).

(5) Connect negative battery cable to battery.

(6) Before starting engine, operate accelerator pedal to check for any binding.

5.9L Diesel — Auto. Trans.

(1) Install (connect) end of speed control servo cable to speed control servo. Refer to Speed Control Servo Removal/Installation.

(2) Install cable through mounting hole on mounting bracket. Cable snaps into bracket.

(3) Connect servo cable to throttle lever by pushing cable connector rearward onto lever pin while holding lever forward.

(4) Connect negative battery cables to both batteries.

(5) Before starting engine, operate accelerator pedal to check for any binding.

(6) Install cable/lever cover.

SERVO

DESCRIPTION

A speed control servo is not used with any 5.7L V-8 engine, or with the 5.9L diesel engine when equipped with a manual transmission.

The speed control servo is attached to the bottom of the battery tray.

The servo unit consists of a solenoid valve body, and a vacuum chamber. The solenoid valve body contains three solenoids:

- Vacuum
- Vent
- Dump

SERVO (Continued)

The vacuum chamber contains a diaphragm with a cable attached to control the throttle linkage.

OPERATION

A speed control servo is not used with any 5.7L V-8 engine, or with the 5.9L diesel engine when equipped with a manual transmission.

The Powertrain Control Module (PCM) controls the solenoid valve body. The solenoid valve body controls the application and release of vacuum to the diaphragm of the vacuum servo. The servo unit cannot be repaired and is serviced only as a complete assembly.

Power is supplied to the servo's by the PCM through the brake switch. The PCM controls the ground path for the vacuum and vent solenoids.

The dump solenoid is energized anytime it receives power. If power to the dump solenoid is interrupted, the solenoid dumps vacuum in the servo. This provides a safety backup to the vent and vacuum solenoids.

The vacuum and vent solenoids must be grounded at the PCM to operate. When the PCM grounds the vacuum servo solenoid, the solenoid allows vacuum to enter the servo and pull open the throttle plate using the cable. When the PCM breaks the ground, the solenoid closes and no more vacuum is allowed to enter the servo. The PCM also operates the vent solenoid via ground. The vent solenoid opens and closes a passage to bleed or hold vacuum in the servo as required.

The PCM duty cycles the vacuum and vent solenoids to maintain the set speed, or to accelerate and decelerate the vehicle. To increase throttle opening, the PCM grounds the vacuum and vent solenoids. To decrease throttle opening, the PCM removes the grounds from the vacuum and vent solenoids. When the brake is released, if vehicle speed exceeds 30 mph to resume, 35 mph to set, and the RES/ACCEL switch has been depressed, ground for the vent and vacuum circuits is restored.

REMOVAL

The speed control servo assembly is attached to the bottom of the battery tray (Fig. 8).

(1) Disconnect negative battery cable at battery (both cables at both batteries if diesel).

(2) To gain access to servo, remove plastic wheelhouse splash shield over left-front wheel.

(3) Disconnect vacuum line at servo (Fig. 8).

(4) Disconnect electrical connector at servo (Fig. 8).

(5) Remove 3 servo mounting screws (Fig. 8). Depending on engine application, different sets of mounting lugs (Fig. 8) are used to support servo to battery tray. While removing, note proper lugs.

(6) Disconnect servo cable at throttle body. Refer to Servo Cable Removal/Installation.

(7) Remove 2 mounting nuts holding servo cable sleeve to bracket (Fig. 9).

(8) Pull speed control cable sleeve and servo away from servo mounting bracket to expose cable retaining clip (Fig. 9) and remove clip. Note: The servo mounting bracket displayed in (Fig. 9) is a typical bracket and may/may not be applicable to this model vehicle.

(9) Remove servo from mounting bracket. While removing, note orientation of servo to bracket.

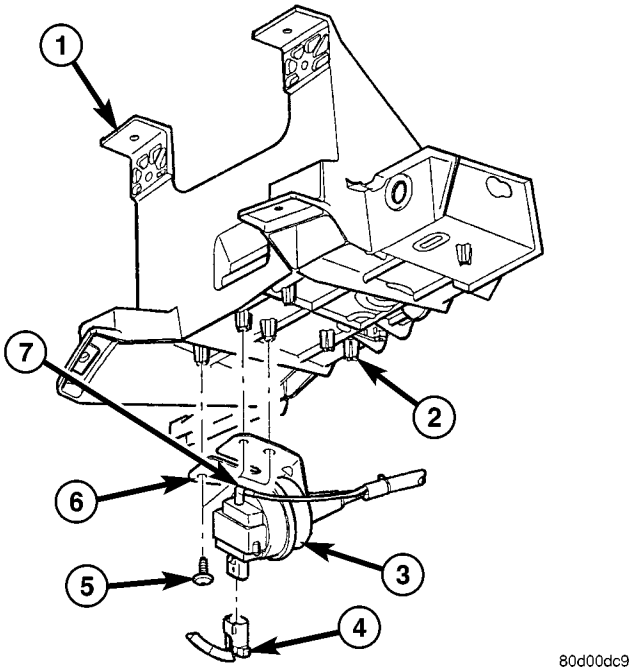

Fig. 8 SPEED CONTROL SERVO LOCATION

1 - BATTERY TRAY
2 - MOUNTING LUGS
3 - SERVO
4 - ELEC. CONNEC.
5 - MOUNTING SCREWS (3)
6 - MOUNTING BRACKET
7 - VACUUM LINE

INSTALLATION

(1) Position servo to mounting bracket (Fig. 9).

(2) Align hole in cable connector with hole in servo pin. Install cable-to-servo retaining clip (Fig. 9).

(3) Insert servo mounting studs through holes in servo mounting bracket.

(4) Install 2 servo-to-mounting bracket nuts and tighten. Refer to torque specifications.

(5) Position servo assembly to correct mounting lugs on battery tray (Fig. 8) and install 3 screws. Tighten 3 screws. Refer to torque specifications.

(6) Connect vacuum line at servo.

(7) Connect electrical connector at servo.

SERVO (Continued)

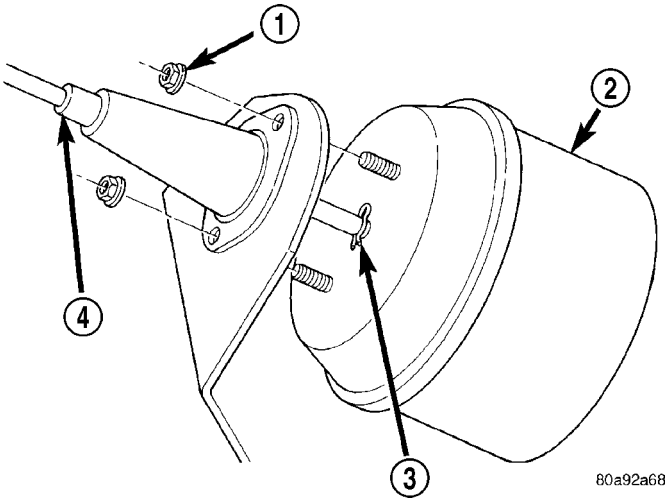

Fig. 9 SERVO CABLE CLIP REMOVE/INSTALL — TYPICAL

1 - SERVO MOUNTING NUTS (2)
2 - SERVO
3 - CABLE RETAINING CLIP
4 - SERVO CABLE AND SLEEVE

(8) Connect servo cable to throttle body. Refer to servo Cable Removal/Installation.

(9) Install left-front wheel-well liner.

(10) Connect negative battery cable to battery (connect both cables if diesel).

(11) Before starting engine, operate accelerator pedal to check for any binding.

SWITCH

DESCRIPTION

Two separate switch pods operate the speed control system. The steering-wheel-mounted switches use multiplexed circuits to provide inputs to the PCM (to the ECM for diesel) for ON, OFF, RESUME, ACCELERATE, SET, DECEL and CANCEL modes. Refer to the owner's manual for more information on speed control switch functions and setting procedures.

The individual switches cannot be repaired. If one switch fails, the entire switch module must be replaced.

Depending on engine control computer (JTEC having a 3– plug connector or NGC having a 4– plug connector), 2 types of switches are used. Both types of switches are internally and externally different. The switch used with the NGC system has an attached pigtail lead. The switch used with the JTEC system does not have an attached pigtail lead.

OPERATION

When speed control is selected by depressing the ON, OFF switch, the PCM (ECM for diesel) allows a set speed to be stored in its RAM for speed control. To store a set speed, depress the SET switch while the vehicle is moving at a speed between approximately 35 and 85 mph. In order for the speed control to engage, the brakes cannot be applied, nor can the gear selector be indicating the transmission is in Park or Neutral.

The speed control can be disengaged manually by:

- Stepping on the brake pedal
- Depressing the OFF switch
- Depressing the CANCEL switch.

The speed control can be disengaged also by any of the following conditions:

- An indication of Park or Neutral
- The VSS signal increases at a rate of 10 mph per second (indicates that the co-efficient of friction between the road surface and tires is extremely low)
- Depressing the clutch pedal.
- Excessive engine rpm (indicates that the transmission may be in a low gear)
- The VSS signal decreases at a rate of 10 mph per second (indicates that the vehicle may have decelerated at an extremely high rate)
- If the actual speed is not within 20 mph of the set speed

The previous disengagement conditions are programmed for added safety.

Once the speed control has been disengaged, depressing the ACCEL switch restores the vehicle to the target speed that was stored in the PCM's RAM (ECM for diesel).

NOTE: Depressing the OFF switch will erase the set speed stored in the PCM's RAM.

If, while the speed control is engaged, the driver wishes to increase vehicle speed, the PCM (ECM for diesel) is programmed for an acceleration feature. With the ACCEL switch held closed, the vehicle accelerates slowly to the desired speed. The new target speed is stored in the PCM's RAM when the ACCEL switch is released. The PCM also has a ″tap-up″ feature in which vehicle speed increases at a rate of approximately 2 mph for each momentary switch activation of the ACCEL switch.

The PCM also provides a means to decelerate without disengaging speed control. To decelerate from an existing recorded target speed, depress and hold the COAST switch until the desired speed is reached. Then release the switch. The ON, OFF switch operates two components: the PCM's ON, OFF input, and the battery voltage to the brake switch.

SWITCH (Continued)

REMOVAL

Depending on engine control computer (JTEC having a 3–plug connector or 5.7L V-8 NGC having a 4–plug connector), 2 types of switches are used. Both types of switches are internally and externally different. The switches used with the NGC system have attached pigtail leads (Fig. 11). The switch used with the JTEC system does not have an attached pigtail lead.

(1) Remove switch mounting screw (Fig. 10). or (Fig. 11)

(2) Pull switch from steering wheel.

(3) Unplug electrical connector from switch (Fig. 10), or, switch pigtail wire harness from steering wheel wire harness (Fig. 11) and remove switch.

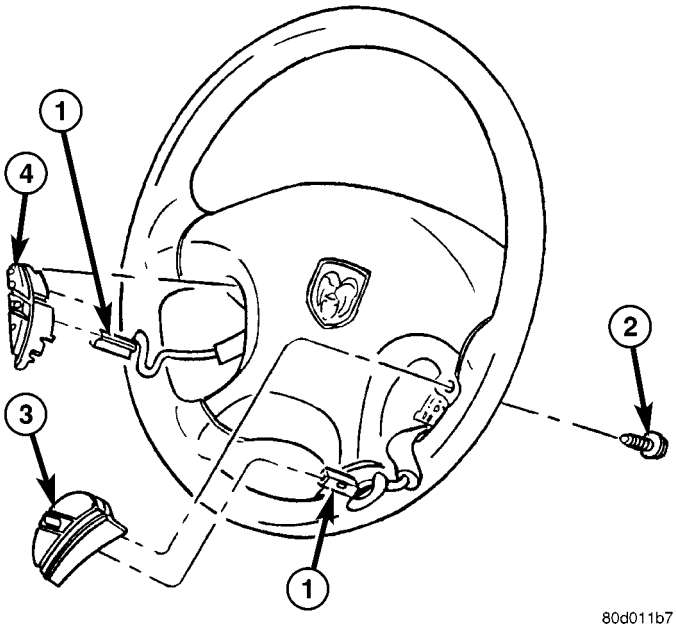

Fig. 10 SPEED CONTROL SWITCHES (EXCEPT 5.7L V-8 ENGINE)

1 - ELECTRICAL CONNECTORS
2 - MOUNTING SCREWS
3 - RIGHT SWITCH
4 - LEFT SWITCH

INSTALLATION

(1) Plug electrical connector into switch (Fig. 10), or connect pigtail wire harness to steering wheel wire harness (Fig. 11). Be sure wires are not pinched.

(2) Position switch to steering wheel.

(3) Install switch mounting screw and tighten. Refer to torque specifications.

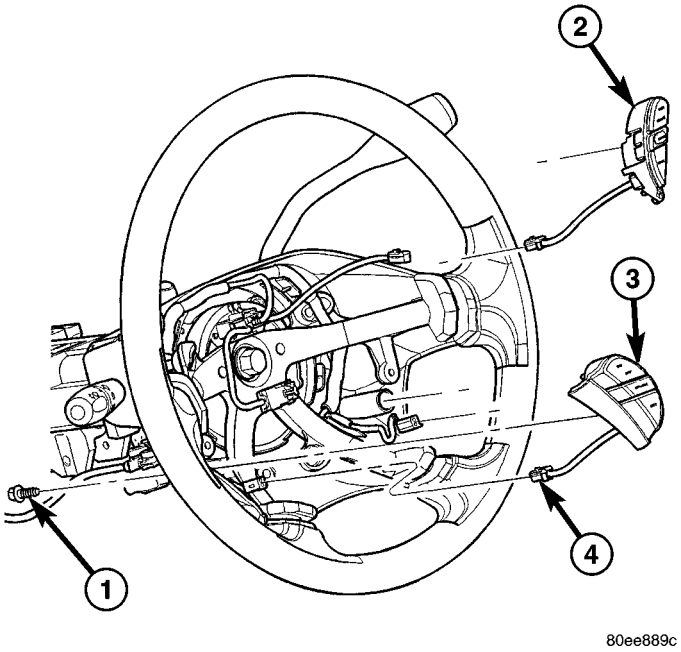

Fig. 11 SPEED CONTROL SWITCHES (WITH 5.7L V-8 ENGINE)

1 - MOUNTING SCREWS
2 - RIGHT SWITCH
3 - LEFT SWITCH
4 - PIGTAIL LEADS

VACUUM RESERVOIR

DESCRIPTION

The vacuum reservoir is a plastic storage tank connected to an engine vacuum source by vacuum lines. A vacuum reservoir is not used with diesel engines or the 5.7L gas powered engine.

OPERATION

The vacuum reservoir is used to supply the vacuum needed to maintain proper speed control operation when engine vacuum drops, such as in climbing a grade while driving. A one-way check valve is used in the vacuum line between the reservoir and the vacuum source. This check valve is used to trap engine vacuum in the reservoir. On certain vehicle applications, this reservoir is shared with the heating/air-conditioning system. The vacuum reservoir cannot be repaired and must be replaced if faulty.

DIAGNOSIS AND TESTING - VACUUM RESERVOIR

(1) Disconnect vacuum hose at speed control servo and install a vacuum gauge into the disconnected hose.

VACUUM RESERVOIR (Continued)

(2) Start engine and observe gauge at idle. Vacuum gauge should read at least ten inches of mercury.

(3) If vacuum is less than ten inches of mercury, determine source of leak. Check vacuum line to engine for leaks. Also check actual engine intake manifold vacuum. If manifold vacuum does not meet this requirement, check for poor engine performance and repair as necessary.

(4) If vacuum line to engine is not leaking, check for leak at vacuum reservoir. To locate and gain access to reservoir, refer to Vacuum Reservoir Removal/Installation in this group. Disconnect vacuum line at reservoir and connect a hand-operated vacuum pump to reservoir fitting. Apply vacuum. Reservoir vacuum should not bleed off. If vacuum is being lost, replace reservoir.

(5) Verify operation of one-way check valve and check it for leaks. **Certain models may be equipped with 2 check-valves.**

(a) Locate one-way check valve. The valve is located in vacuum line between vacuum reservoir and engine vacuum source. Disconnect vacuum hoses (lines) at each end of valve.

(b) Connect a hand-operated vacuum pump to reservoir end of check valve. Apply vacuum. Vacuum should not bleed off. If vacuum is being lost, replace one-way check valve.

(c) Connect a hand-operated vacuum pump to vacuum source end of check valve. Apply vacuum. Vacuum should flow through valve. If vacuum is not flowing, replace one-way check valve. Seal the fitting at opposite end of valve with a finger and apply vacuum. If vacuum will not hold, diaphragm within check valve has ruptured. Replace valve.

REMOVAL

The vacuum reservoir is located in the engine compartment under the fresh air cowl grill panel (Fig. 12).

(1) Remove wiper blades and arms. Refer to Wiper Arm Removal / Installation in the Wipers / Washers section.

(2) Remove fresh air cowl grill. Refer to Cowl Grill Removal / Installation.

(3) Disconnect vacuum line at reservoir (Fig. 13).

(4) Remove 2 reservoir mounting nuts (Fig. 13).

(5) Remove reservoir from cowl.

INSTALLATION

(1) Position reservoir onto 2 weld studs (Fig. 13).

(2) Install 2 mounting nuts and tighten. Refer to torque specifications.

(3) Connect vacuum line to reservoir fitting.

(4) Install cowl grill. Refer to Cowl Grill Removal / Installation.

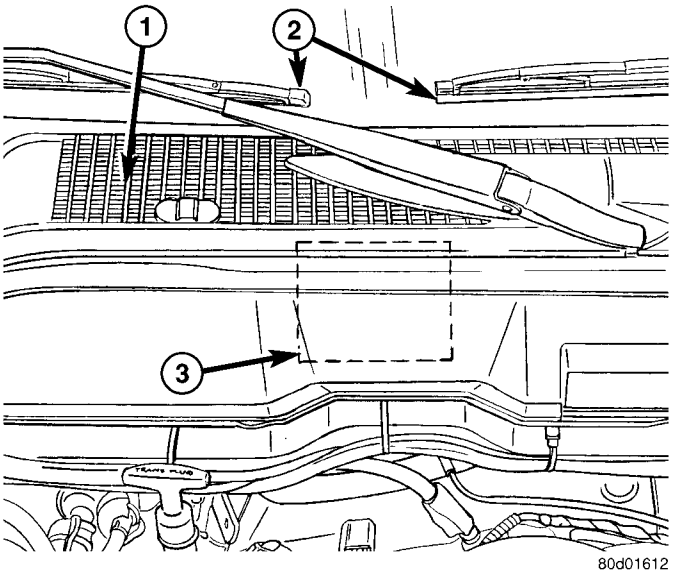

Fig. 12 VACUUM RESERVOIR LOCATION

1 - COWL GRILL
2 - WIPER ARMS / BLADES
3 - VACUUM RESERVOIR

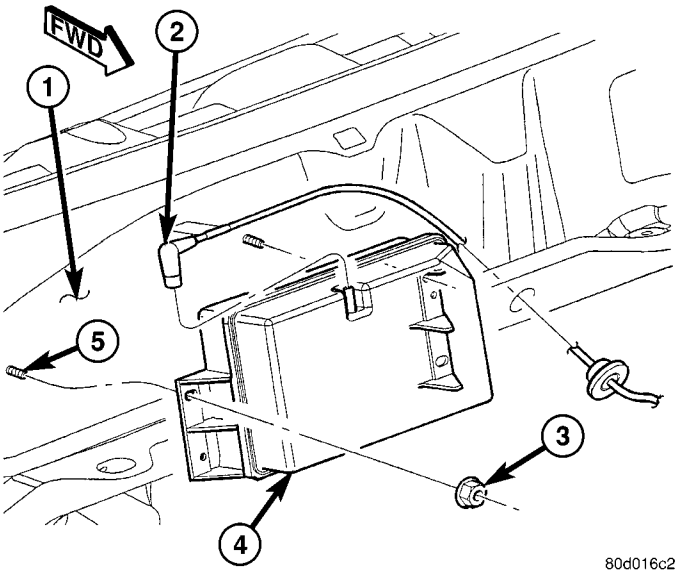

Fig. 13 VACUUM RESERVOIR REMOVAL / INSTALLATION

1 - COWL (BELOW WIPER ARMS)
2 - VACUUM LINE CONNECTION
3 - MOUNTING NUTS (2)
4 - VACUUM RESERVOIR
5 - WELDED STUDS

(5) Install wiper arms / blades. Refer to Wiper Arm Removal / Installation.